• LINCOLN CONTINENTAL • MERCURY • METEOR • COMET

1960-64 MASTER PARTS CATALOG

GROUP 16,000 THRU 60,000

COPYRIGHT 1964
FORD MOTOR COMPANY
DEARBORN, MICHIGAN
ALL RIGHTS RESERVED

Revised November, 1964
Form No. Ford LM-8281-B-64
LITHO IN U.S.A.

Quick Reference Index

group		page
16000	CHASSIS SHEET METAL	1
17000	BUMPERS AND WINDSHIELD WIPERS	41
18000	SHOCK ABSORBERS, HEATERS, RADIO AND ANTENNAS	121
19000	LUBRICANTS & AIR CONDITIONING	
00120	BODY	255
04300	INSTRUMENT PANEL	411
10000	FLOOR PARTS	449
20100 THRU 24299	FRONT DOOR AND RELATED PARTS / FRONT DOOR WINDOW REGULATOR	477
24300 THRU 27799	CENTER PILLAR AND REAR DOORS / REAR DOOR WINDOW REGULATOR	585
27800	QUARTER PANELS	64[illegible]
40000	LUGGAGE COMP. AND REAR END	725
50000	TOP AND ROOF	827
60000	SEATS, RELATED PARTS	927

GENERAL INFORMATION

This Parts Catalog containing service replacement parts information for the 1960-64 Mercury, 1962-63 Meteor, 1960-64 Comet and 1960-64 Lincoln-Continental has been developed for your convenience in locating, identifying and ordering service replacement parts.

Best results in the use of this parts catalog will be obtained by thoroughly reviewing the instructions and arrangement of information explained in detail on the following pages.

PARTS INFORMATION

The information contained in this Parts Catalog is arranged in basic Group sequence and includes the following:

1. Basic Group.
2. Part Number.
3. Part Name, including description and dimensions necessary for proper identification of parts.
4. Quantity used per vehicle.
5. Application — by Model, Engine Cubic Inch Displacement, Transmission Type, etc.
6. Vehicle Code.
7. Year Part is used.

VEHICLE APPLICATION CODES

The service part vehicle application identified by vehicle codes listed in the "Vehicle Code" column of the catalog text pages are interpreted as follows:

A—1960-64	Mercury
B—1962-63	Meteor
C—1960-64	Comet
D—1960-64	Lincoln-Continental

HOW TO LOCATE PARTS

Parts are listed in numerical sequence according to their basic group, excepting instances where part functions agree and basic part numbers differ. These particular parts have been cataloged according to function, and appear in a group headed by the latest basic number released for a specific function. To assist you in locating information pertinent to these items, cross-reference groups have been inserted in numerical sequence in the catalog text. The use of these groups is defined in the paragraph below headed "Numerical Cross Reference Groups."

NOTE:

All carburetor assemblies and component service parts are presented in chart form. Refer to the 1960–64 catalog containing group 1000 thru 15000, page 687 titled "Carburetor Charts General Information" for details.

The basic part number relates the part to an area of the vehicle and to a specific application within that area. Body parts, seven digit numbers, are in sequence according to the last five (5) digits.

Example: 5827846

If the basic number is known, the complete part number for a specific vehicle can be quickly located by referring to the basic part number group according to its numerical order.

If the basic number is not shown, the part can be located under its Noun Name in the Alphabetical Index.

Basic numbers may also be located in the illustrations of various areas of the vehicle. Illustrations precede the group to which they apply.

EXPANDED PART NUMBERS

Ford Motor Company has used two different systems to expand basic number series that are exhausted.

The first system, introduced in 1949, was the addition of a numerical digit to the front of the basic number.

Examples:	22000	33000	44000	55000
	66000	77000	88000	99000

These parts actually belong in the basic number groups indicated by the last four (4) digits and that is where they appear in the catalog.

The Basic Part Number Group is listed as 2-2000, 3-3000, 4-4000, etc., and follow regular four (4) digit Basic Part Number Groups in numerical sequence. The second expansion system was introduced with some of the 1959 model parts and was in full effect with 1960 model parts. This system superseded the first system which will be discontinued. Under this new method basic number series are expanded by the addition of an alphabetical character between the Group and Detail portions of the basic part numbers.

Examples: 7A100, 16A573, 57432A06, etc. This expansion character will also be disregarded in the parts catalog and the parts will be listed in sequence according to the numerical portion of the basic number.

For instance, basic part number 7A100 will follow basic number 7100.

PART NUMBERS ASSIGNED BY THE L-M AND FORD PARTS AND ACCESSORIES DEPARTMENT

Parts and Accessories Part Numbers are assigned to convert Engineering Part Numbers to a basic number that may be more easily located according to the parts function. Parts and Accessories Part Numbers appear in numerical sequence throughout this catalog in the conventional part number column.

PARTS HAVE MULTIPLE FUNCTIONS

Parts may have multiple functions or operations. When this occurs, the various functions will be described in the description column immediately following the part number. All applications will also appear in the Alphabetical Index.

ILLUSTRATIONS

Illustrations show the construction of individual parts as well as assemblies. Wherever possible, the exact shape or detail is indicated. In some cases, illustrations cover "typical" constructions and will be so designated. The purpose of typical illustrations is to identify parts performing the same or similar functions. Parts are identified on each illustration by Basic Part Number Group. Parts that are not identified by a Basic Part Number Group are designated by a symbol which is explained by a footnote on the illustration. Standard parts are identified by the standard part number.

Illustrations which were originally developed for, or used in the 1963 or 1964 loose leaf catalogs will indicate not serviced parts with a star (★). Part numbers that are serviced in a kit or assembly but not serviced separately will not be called out with a basic group number or star (★).

ALPHABETICAL INDEX

Reference to any part by Noun Name is provided in the Alphabetical Index. This index is an alphabetical listing of all parts showing Noun Name cross referenced to the Basic Number Group.

ORDERING PARTS FOR SERVICE

When ordering service replacement parts, always give the complete part number (not Basic Part Number) and part name. After this has been determined, refer to the Master Price and Reference List, Form MD-4230, for current "service" status of selected parts. If the parts do not appear in Form MD-4230, refer to the Obsoleted-Superseded-Interchangeable Catalog, Form Number MD-8235.

Instructions for the use of Stock Order Pads and Order Forms are printed therein. When ordering Soft Trim Items, always follow this procedure:

1. Refer to the Soft Trim Section of the Master Price and Reference List, Form MD-4230 for part numbers desired.
2. Use Form FD-419-L, Dealers' Parts Order.
3. Furnish all necessary Patent Plate data.
4. Attach a piece of trim material to the order form.

Right Hand (R.H.) and Left Hand (L.H.) parts are so designated from the driver's position when seated in the car.

STANDARD PARTS

Standard Parts in this catalog are listed immediately following the parts with which they are used and are referenced to the major part with which they are used by a small letter. This letter appears in brackets( ) in the "Description, Size, Etc." column following the major part number, and in the "Model Or Engine Cubic Inch Displacement" column following the standard part number. Thus, all standard parts coded with an (a) are used with the major parts coded with an (a).

Conventional Standard Parts have no prefix but carry the suffix "S" followed by numbers which designate the finish. They are not assigned a Basic Part Number Group.

The following chart defines standard part suffix codes in respect to finish.

SUFFIX	FINISH	SUFFIX	FINISH
S	Plain	S28	Sterile coating
S2	Raven finish, oil or waxed	S29	Clear enamel over bright zinc
S3	Black paint	S30	Gold tinted enamel over bright zinc
S4	Raven finish & black paint	S31	Cadmium with zinc
S5	Copper plate	S32	Phosphate coat and paint
S6	Nickel plate	S33	Case hardened raven finish
S7	Cadmium plate	S34	Case hardened cadmium finish
S8	Zinc plate	S35	Zinc plate
S8B	Zinc plate	S36	Zinc plate and dichromate
S10	Tinned	S37	Chrome plated
S12	Lacquer to match trim	S38	Raven finish without oil or wax
S13	Chrome plated	S39	Cadmium plated
S14	Nickel plate-Butler finish	S40	Zinc plate
S15	Oxidized	S41	Pre-galvanized coat
S16	Lead	S42	Zinc or Cadmium plate—black
S18	Case hardened	S91	O-Ring material—oil resistant
S19	Brass plate	S92	O-Ring material—gasoline resistant
S20	Cement coated	S93	O-Ring material—non-mineral oil resistant
S21	Lacquer for identification	S94	O-Ring material—transmission fluid resistant
S22	Chrome plate-Butler finish	S100	Special
S23	Rustless steel-head polished		
S24	Hot tin coated		
S26	Cadmium or zinc plated and enamel		

TYPICAL 1960 PATENT PLATE INFORMATION

The Patent Plate is riveted to the front body pillar between the front door hinges. The Patent Plate includes information relative to the type of engine, axle, transmission, trim (exterior and interior), and body style of the vehicle. It also ncludes the date (day, month and year) and place of manufacture.

★ When a numerical suffix is placed after the trim code, the Deviation Trim Set *is not serviced,* and if an alphabetical suffix is placed after the trim code the Deviation Trim Set *is* to be serviced.

PATENT PLATE DIAGRAM

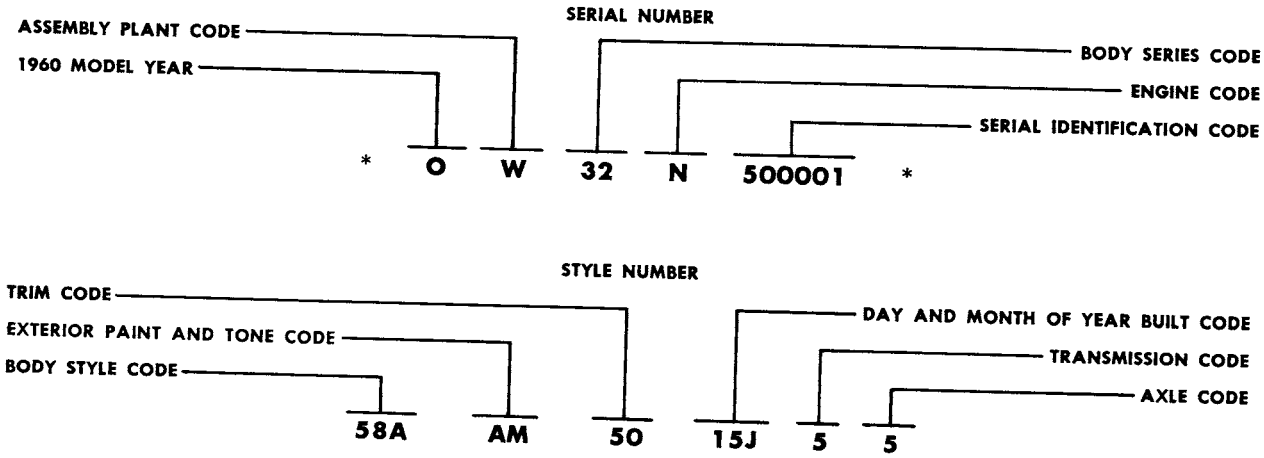

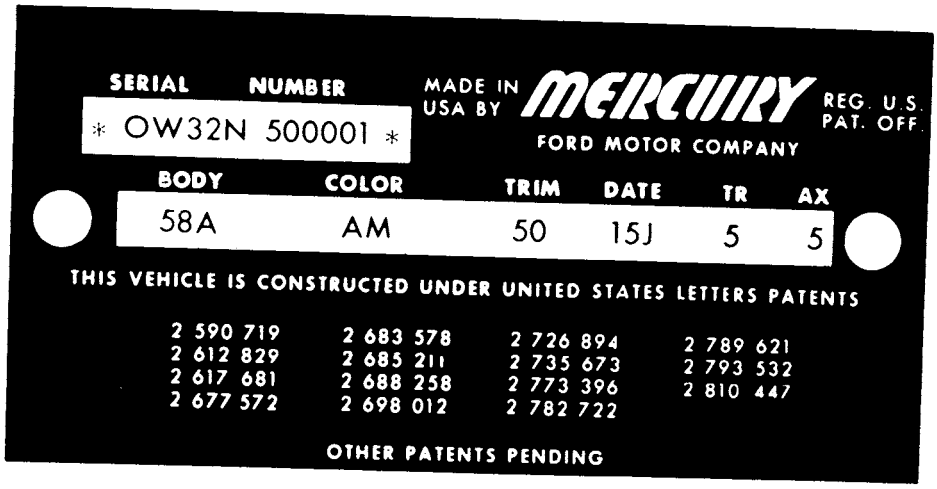

★ NS-TRIM CODE **22-I**

★ SERVICED TRIM CODE **22-A**

THE FOLLOWING DEFINES THE VARIOUS CODES USED ON THE PATENT PLATE:

ASSEMBLY PLANT CODES

CODE	ASSEMBLY PLANT	CODE	ASSEMBLY PLANT
H	Lorain	W	Wayne
J	Los Angeles	Y	Wixom
K	Kansas City	Z	St. Louis
T	Metuchen		

SOFT TRIM SCHEME CODES

REFER TO: The Master Price & Reference List, Form MD-4230

1960 MERCURY MODEL IDENTIFICATION

MONTEREY
2-DOOR OR 4-DOOR

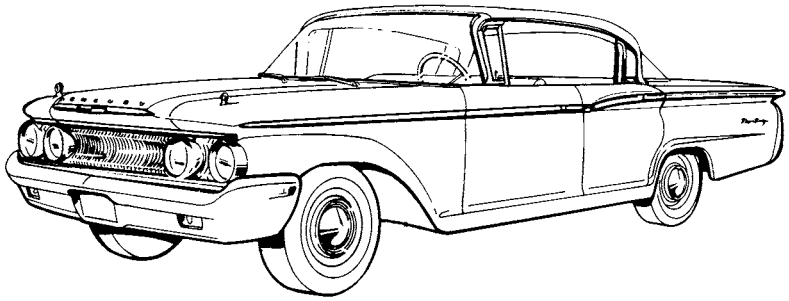

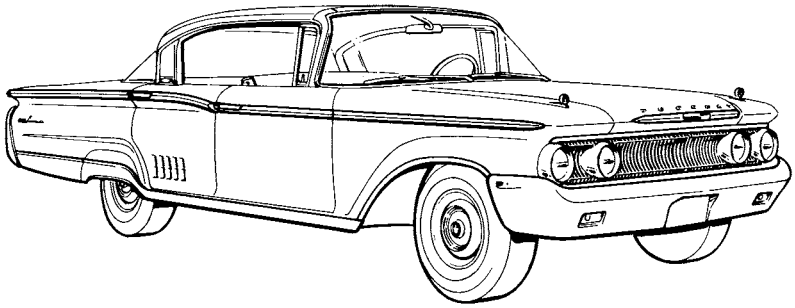

PARKLANE
OR MONTCLAIR
2-DOOR OR 4-DOOR

COLONY PARK
OR COMMUTER

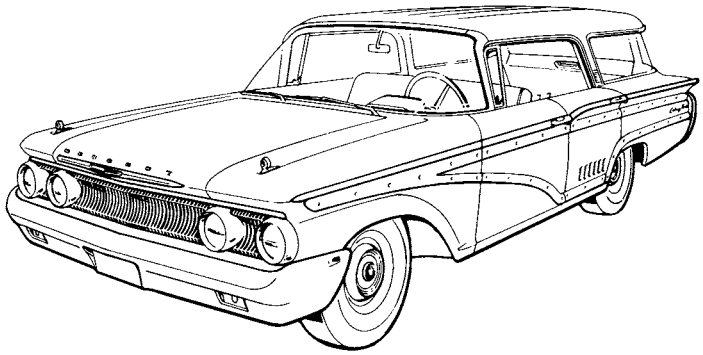

BODY CODE	BODY STYLE	BODY CODE	BODY STYLE
57A	Monterey 4-Door Phaeton Sedan	63F	Parklane 2-Door Phaeton Coupe
57B	Montclair 4-Door Phaeton Sedan	64A	Monterey 2-Door Sedan
57F	Parklane 4-Door Phaeton Sedan	76A	Monterey 2-Door Convertible
58A	Monterey 4-Door Sedan	76D	Parklane 2-Door Convertible
58B	Montclair 4-Door Sedan	77A	Commuter 4-Door Station Wagon (6 or 8-Passenger)
63A	Monterey 2-Door Phaeton Coupe		
63B	Montclair 2-Door Phaeton Coupe	77B	Colony Park 4-Door Station Wagon (6 or 8-Passenger)

1960 MERCURY PATENT PLATE INFORMATION

The following breakdown of Codes will appear on the Patent Plate according to the build-up of each vehicle.

ENGINE CODES

CODE	TYPE OF ENGINE
M	430 C.I.D. 8 Cyl. 2-V Carburetor
N	383 C.I.D. 8 Cyl. 2-V Carburetor
P	312 C.I.D. 8 Cyl. 2-V Carburetor

AXLE CODES

CODE	TYPE OF AXLE
1	3.56:1 For S/T, 312 C.I.D.
3	3.10:1 For A/T, S/R, 312 C.I.D.
5	2.71:1 For A/T, D/R, 383 C.I.D.
6	2.91:1 For A/T, S/R, 383 C.I.D.
7	2.71:1 For A/T, D/R, 430 C.I.D.
8	2.91:1 For A/T, S/R, 430 C.I.D.

BODY STYLE CODES

STYLE CODE	SERIES CODE	BODY STYLE
57A	34	Monterey Phaeton Sedan (4-Door Hardtop)
58A	32	Monterey 4-Door Sedan
63A	33	Monterey Phaeton Coupe (2-Door Hardtop)
64A	31	Monterey 2-Door Sedan
76A	35	Monterey 2-Door Convertible
57B	44	Montclair Phaeton Sedan (4-Door Hardtop)
58B	42	Montclair 4-Door Sedan
63B	43	Montclair Phaeton Coupe (2-Door Hardtop)
57F	54	Park Lane Phaeton Sedan (4-Door Hardtop)
63F	53	Park Lane Phaeton Coupe (2-Door Hardtop)
76D	55	Park Lane 2-Door Convertible
77A	37	Commuter 4-Door Station Wagon (6 or 8-Passenger)
77B	57	Colony Park 4-Door Station Wagon (6 or 8-Passenger)

TRANSMISSION CODES

CODE	TYPE OF TRANSMISSION
1	Standard Transmission
3	PBM Automatic Transmission S/R
4	PBL Automatic Transmission D/R
5	PBL Automatic Transmission S/R
6	PBB Automatic Transmission D/R
7	PBB Automatic Transmission S/R

VEHICLE DATE CODES

CODE	MONTH
A	January
B	February
C	March
D	April
E	May
F	June
G	July
H	August
J	September
K	October
L	November
M	December
Day of month precedes month Code Letter	

EXTERIOR PAINT CODES

CODE	COLOR	SPEC. NBR.
A	Tuxedo Black	M30J-1724
M	Sultana White	M30J-524
T	Valley Green Metallic (Medium)	M30J-1273
F	Inlet Blue (Light)	M30J-1226
E	Cote D'Azur Blue Metallic (Medium)	M30J-1225
J	Signal Red	M30J-1232
Z	Cloud Silver Metallic	M30J-1287
R	Sun Haze Yellow	M30J-1275
N	Polynesian Beige	M30J-1249
H	Javelin Bronze Metallic (Medium)	M30J-1230
U	Mountain Rose Metallic	M30J-1266
V	Summer Rose (Light)	M30J-1265
X	Tucson Turquoise Metallic (Light)	M30J-1271
D	Aztec Turquoise Metallic (Medium)	M30J-1070
B	Marine Blue Metallic (Dark)	M30J-1270

1960 COMET MODEL IDENTIFICATION

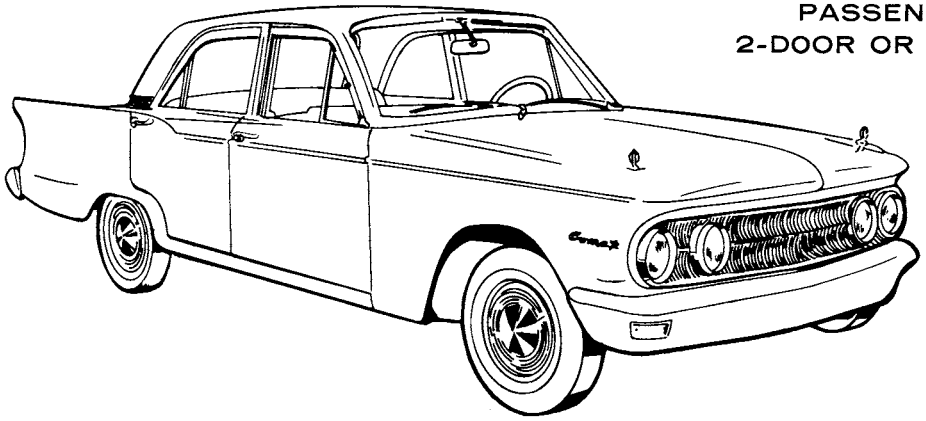

PASSENGER
2-DOOR OR 4-DOOR

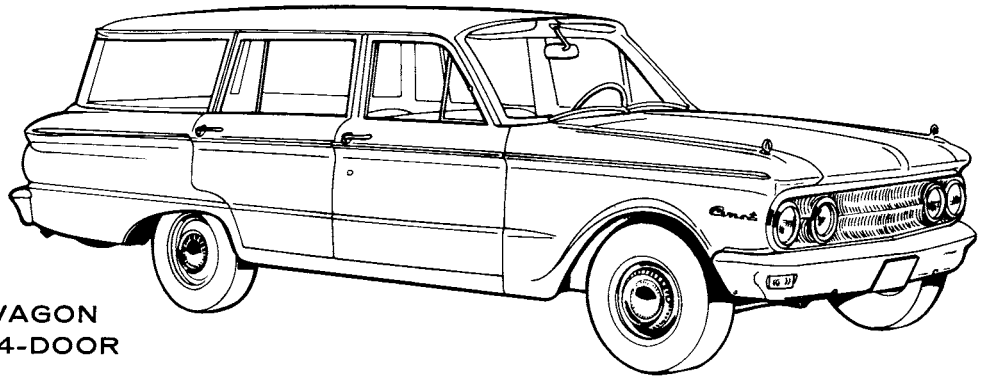

STATION WAGON
2-DOOR OR 4-DOOR

BODY CODE	BODY STYLE
54A	4-Door Sedan
59A	2-Door Station Wagon
62A	2-Door Sedan
71A	4-Door Station Wagon

1960 COMET PATENT PLATE INFORMATION

The following breakdown of codes will appear on the Patent Plate according to the build-up of each vehicle

BODY STYLE CODES

SERIES CODE	BODY CODE	BODY STYLE
01	62A	2-Door Sedan
02	54A	4-Door Sedan
06	59A	2-Door Station Wagon
07	71A	4-Door Station Wagon

EXTERIOR PAINT CODES

CODE	COLOR	SPEC. NBR.
A	Tuxedo Velvet	M30J-1724
C	Crystal Turquoise	M30J-1139
E	Cote D'Azure Blue Metallic	M30J-1225
F	Inlet Blue	M30J-1226
H	Javelin Bronze Metallic	M30J-1230
J	Signal Red	M30J-1232
K	Twilight Turquoise Metallic	M30J-1233
M	Sultana White	M30J-1238
T	Valley Green Met.	M30J-1273
W	Cameo Green	M30J-1274
Z	Cloud Silver Metallic	M30J-1287

TRANSMISSION CODES

CODE	TRANSMISSION TYPE
1	Standard
3	Automatic (Single Range)

VEHICLE DATA CODES

CODE	*CODE	MONTH
A	N	January
B	P	February
C	Q	March
D	R	April
E	S	May
F	T	June
G	U	July
H	V	August
J	W	September
K	X	October
L	Y	November
M	Z	December

*To be used if 1960 models exceed 12 months

REAR AXLE CODES

CODE	RATIO
1	3.56:1
2	3.89:1
3	3.10:1
J	3.50:1

ENGINE CODES

CODE	ENGINE TYPE
S	6 Cyl. OHV 144 Cubic Inch
D	6 Cyl. OHV 144 Cubic Inch Low Compression (84 Octane)

1960 LINCOLN MODEL IDENTIFICATION

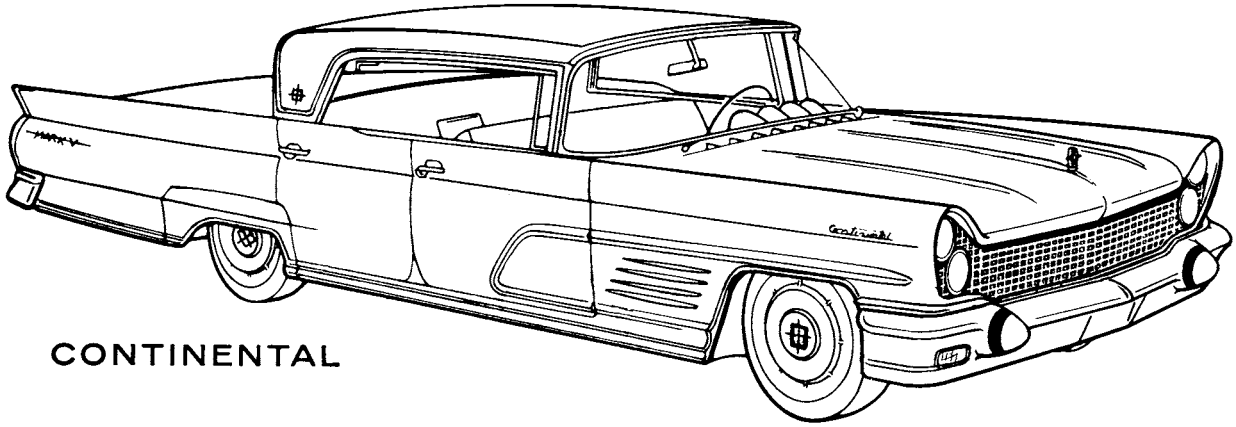

CONTINENTAL

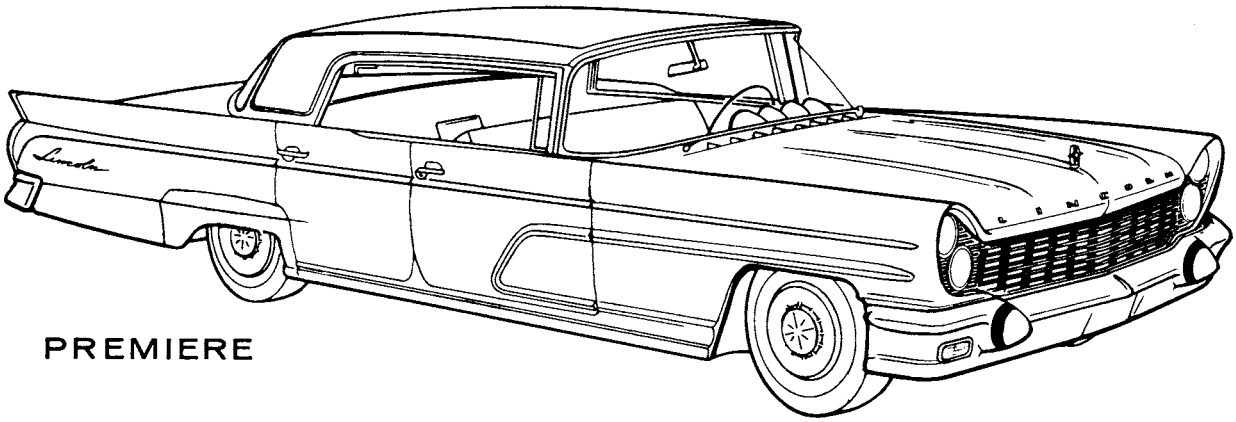

PREMIERE

BODY CODE	BODY STYLE	BODY CODE	BODY STYLE
53A	LINCOLN 4-DOOR SEDAN	63A	LINCOLN 2-DOOR COUPE
53B	PREMIERE 4-DOOR SEDAN	63B	PREMIERE 2-DOOR COUPE
54A	CONTINENTAL 4-DOOR SEDAN	65A	CONTINENTAL 2-DOOR COUPE
57A	LINCOLN 4-DOOR LANDAU	68A	CONTINENTAL 2-DOOR CONVERTIBLE
57B	PREMIERE 4-DOOR LANDAU	75A	CONTINENTAL 4-DOOR LANDAU

1960 LINCOLN PATENT PLATE INFORMATION

BODY STYLE CODES

BODY CODE	SERIES CODE	BODY STYLE
57A	62	Lincoln 4-Door Landau
63A	63	Lincoln 2-Door Coupe
53A	64	Lincoln 4-Door Sedan
53B	72	Premiere 4-Door Sedan
63B	73	Premiere 2-Door Coupe
57B	74	Premiere 4-Door Landau
54A	82	Continental 4-Door Sedan
65A	83	Continental 2-Door Coupe
75A	84	Continental 4-Door Landau
68A	85	Continental 2-Door Convertible

ENGINE CODE

CODE	ENGINE TYPE
H	430 C.I.D. 8 CYL.-2V

TRANSMISSION CODE

CODE	TRANSMISSION TYPE
4	AUTOMATIC DUAL RANGE

REAR AXLE CODE

NON-LOCKING DIFF.	RATIO	LOCKING DIFF.
7	2.89:1	G

EXTERIOR PAINT CODES

(A "No Punch" in the paint color space indicates Special Paint)

CODE LETTER	COLOR NAME	SPEC. NUMBER
A	Presidential Black	(M-30J-1724)
B	Marine Blue Poly	(M-30J-1270)
D	Sapphire Poly	(M-30J-1070)
E	Electric Blue Poly	(M-30J-1269)
F	Blue Crystal	(M-30J-1226)
G	Tawney Beige	(M-30J-1262)
I	Pale Turquoise	(M-30J-1271)
J	Cherokee Red	(M-30J-1232)
L	Gold Dust Poly	(M-30J-1276)
M	Polaris White	(M-30J-1238)
N	Platinum	(M-30J-921)
Q	Copper Poly	(M-30J-824)
R	Pastel Yellow	(M-30J-1275)
S	Deerfield Green Poly	(M-30J-1272)
T	Terre Veree Green Poly	(M-30J-1273)
U	Metallic Rose Glow Poly	(M-30J-1266)
V	Twilight Pink	(M-30J-1265)
W	Killarney Green	(M-30J-1274)
X	Maple Leaf Poly	(M-30J-1264)
Y	Spartan Gray Poly	(M-30J-1267)
Z	Silver Poly	(M-30J-1287)

VEHICLE DATE CODES

CODE	*CODE	MONTH
A	N	January
B	P	February
C	Q	March
D	R	April
E	S	May
F	T	June
G	U	July
H	V	August
J	W	September
K	X	October
L	Y	November
M	Z	December

**To be used if 1960 model exceeds 12 months.*

TYPICAL 1961 PATENT PLATE INFORMATION

The Patent Plate is riveted to the front body pillar between the front door hinges on the Lincoln and Mercury. The Comet Patent Plate is riveted to the left front door below the door lock. The Patent Plate includes information relative to the type of engine, axle, transmission, trim (exterior and interior), and body style of the vehicle. It also includes the date (day, month and year) and place of manufacture.

★ When a numerical suffix is placed after the trim code, the Deviation Trim Set *is not serviced,* and if an alphabetical suffix is placed after the trim code the Deviation Trim Set *is* to be serviced.

PATENT PLATE DIAGRAM

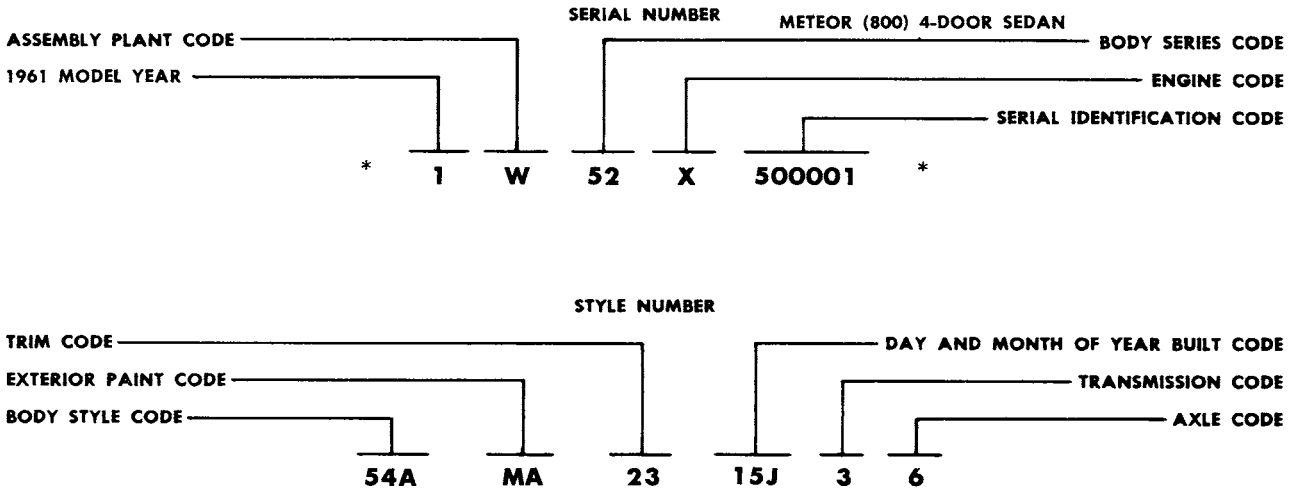

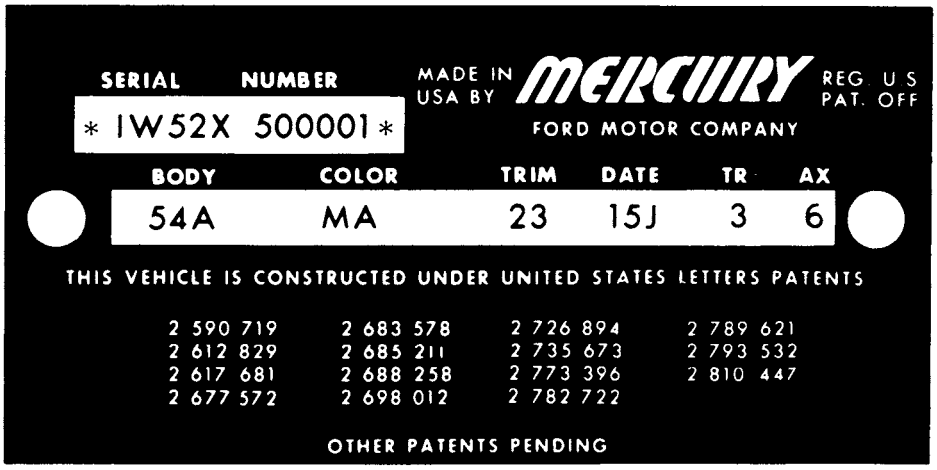

★NS TRIM CODE
23-1

★SERVICED TRIM CODE
23-A

THE FOLLOWING DEFINES THE VARIOUS CODES USED ON THE PATENT PLATE.

ASSEMBLY PLANT CODES

CODE	ASSEMBLY PLANT	CODE	ASSEMBLY PLANT
E	Mahwah	W	Wayne
H	Lorain	Y	Wixom
J	Los Angeles	Z	St. Louis
K	Kansas City		
R	San Jose		

SOFT TRIM SCHEME CODES

REFER TO: The Master Price & Reference List, Form MD-4230

1961 MERCURY MODEL IDENTIFICATION

MONTEREY
2-DOOR OR 4-DOOR

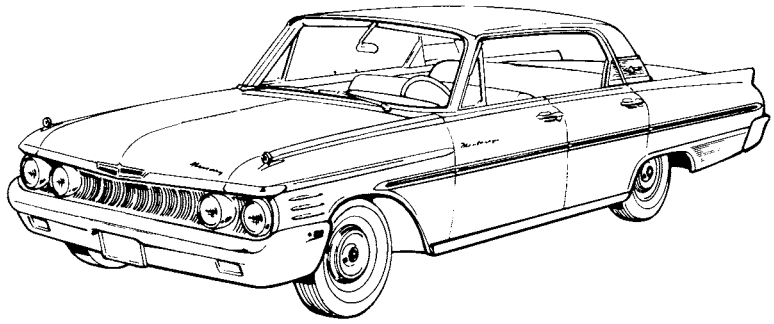

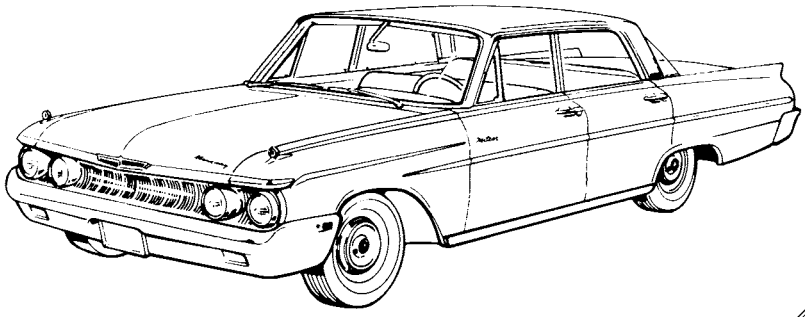

METEOR
2-DOOR OR 4-DOOR

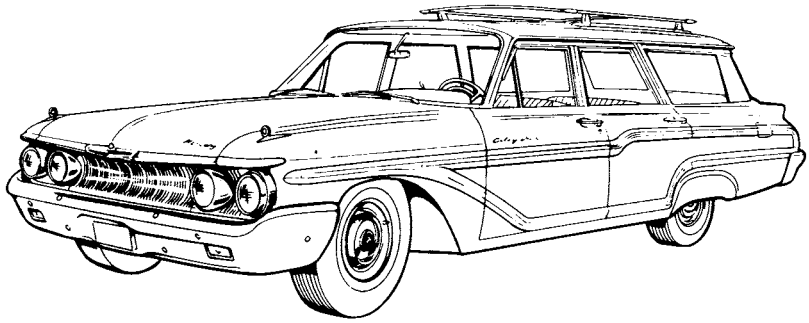

COLONY PARK
OR COMMUTER

BODY CODE	BODY STYLE	BODY CODE	BODY STYLE
54A	Meteor (800) 4-Door Sedan	75A	Meteor (800) 4-Door Hardtop
54B	Monterey 4-Door Sedan	75B	Monterey 4-Door Hardtop
58A	Meteor (600) 4-Door Sedan	76A	Monterey 2-Door Convertible
62A	Meteor (800) 2-Door Sedan	71A	Commuter 4-Door Sta. Wagon (6 or 9 Passenger)
64A	Meteor (600) 2-Door Sedan		
65A	Meteor (800) 2-Door Hardtop	71B	Colony Park 4-Door Sta. Wagon (6 or 9 Passenger)
65B	Monterey 2-Door Hardtop		

1961 MERCURY PATENT PLATE INFORMATION

The following breakdown of Codes will appear on the Patent Plate according to the build-up of each vehicle.

EXTERIOR PAINT CODES

(A "No Punch" in Paint Code space designates special paint)

CODE	COLOR	SPEC. NBR.
A	Presidential Black	M30J-1724
C	Turquoise Mist	M30J-1139
D	Blue Haze	M30J-1361
E	Saxon Green Metallic	M30J-1364
F	Sunburst Yellow	M30J-1366
G	Tawny Beige	M30J-1262
H	Empress Blue Metallic	M30J-1367
J	Signal Red	M30J-1232
L	Gold Dust Metallic	M30J-1276
M	Sultana White	M30J-1238
Q	Sheffield Gray Metallic	M30J-1371
R	Columbia Blue Haze	M30J-1372
S	Green Frost	M30J-1373
V	Summer Rose	M30J-1265
W	Regency Turquoise Metallic	M30J-1385

VEHICLE DATE CODES

CODE	*CODE	MONTH
A	N	January
B	P	February
C	Q	March
D	R	April
E	S	May
F	T	June
G	U	July
H	V	August
J	W	September
K	X	October
L	Y	November
M	Z	December

*2 Year Code Letters To Be Used if 1961 Models Exceed 12 Months.

TRANSMISSION CODES

CODE	TRANSMISSION TYPE	
1	Standard	(S/T)
2	Overdrive	(O/D)
3	Two Speed Automatic	(2/S)
4	Dual Range Automatic	(D/R)
C	Single Range Automatic	(S/R)

BODY STYLE CODES

STYLE CODE	SERIES CODE	BODY STYLE
54A	52	Meteor 4-Door Sedan (800)
54B	62	Monterey 4-Door Sedan
58A	42	Meteor 4-Door Sedan (600)
62A	51	Meteor 2-Door Sedan (800)
64A	41	Meteor 2-Door Sedan (600)
65A	57	Meteor 2-Door Hardtop (800)
65B	67	Monterey 2-Door Hardtop
75A	54	Meteor 4-Door Hardtop (800)
75B	64	Monterey 4-Door Hardtop
76A	65	Monterey Convertible
71A	74	Commuter 4-Door (6 or 9 Passenger)
71B	76	Colony Park 4-Door (6 or 9 Passenger)

AXLE CODES

NON-LOCKING DIFF.	RATIO	LOCKING DIFF.
1	3.56:1	A
2	3.89:1	B
3	3.10:1	C
6	3.00:1	F
8	2.91:1	—

ENGINE CODES

CODE	ENGINE TYPE
V	223—C.I.D. 6 Cyl., 1-V Carb.
W	292—C.I.D. 8 Cyl., 2-V Carb.
X	352—C.I.D. 8 Cyl., 2-V Carb.
Z	390—C.I.D. 8 Cyl., 4-V Carb.
T	292—C.I.D. 8 Cyl., 2-V Carb. (Low Comp. 84 Oct.)
R	390—C.I.D. 8 Cyl., 4-V Carb. (Low Comp. 84 Oct.)

1961 COMET MODEL IDENTIFICATION

PASSENGER
2-DOOR OR 4-DOOR

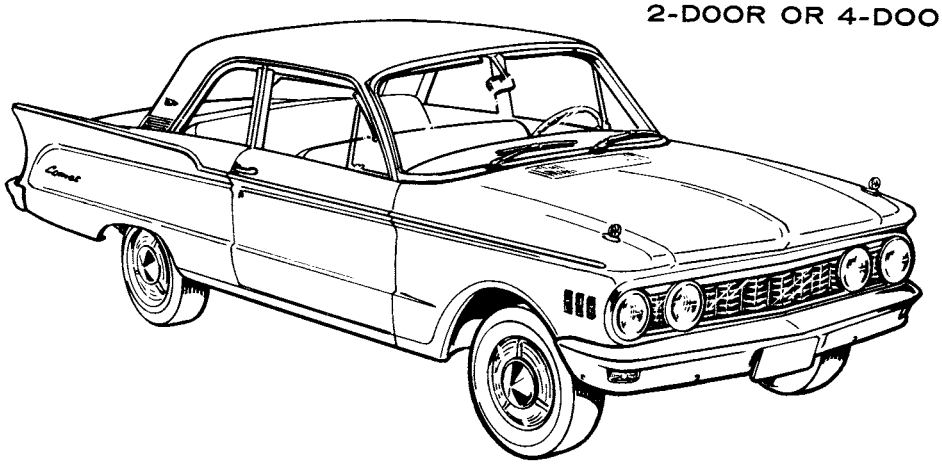

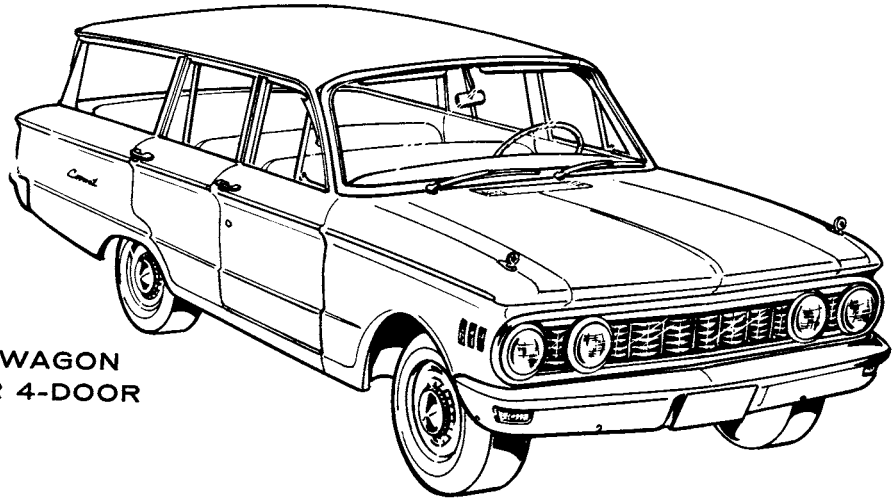

STATION WAGON
2-DOOR OR 4-DOOR

BODY CODE	BODY STYLE
54A	4-Door Sedan
59A	2-Door Station Wagon
62A	2-Door Sedan
71A	4-Door Station Wagon
62A	2-Door Sedan (S-22)

1961 COMET PATENT PLATE INFORMATION

The following breakdown of Codes will appear on the Patent Plate according to the build-up of each vehicle.

BODY STYLE CODES

BODY CODE	SERIES CODE	BODY STYLE
62A	11	2-Door Sedan
54A	12	4-Door Sedan
62A	17	2-Door Sedan (S-22)
59A	21	2-Door Station Wagon
71A	22	4-Door Station Wagon

VEHICLE DATE CODES

CODE	*CODE	MONTH
A	N	January
B	P	February
C	Q	March
D	R	April
E	S	May
F	T	June
G	U	July
H	V	August
J	W	September
K	X	October
L	Y	November
M	Z	December

*2 year code letters to be used if 1961 models exceed 12 months

ENGINE CODES

CODE	ENGINE TYPE
S	6 Cyl. OHV 144 C.I.D.
D	6 Cyl. OHV 144 C.I.D. (Comp. 84 Octane)
E	6 Cyl. 170 C.I.D. (Low Comp. 84 Octane)
U	6 Cyl. OHV 170 C.I.D.

EXTERIOR PAINT CODES

(A "No Punch" In Paint Code Space Designates Special Paint)

CODE	COLOR	SPEC. NBR.
A	Presidential Black	M30J-1724
C#	Turquoise Mist	M30J-1139
D	Blue Haze	M30J-1361
E*	Saxon Green Metallic	M30J-1364
H	Empress Blue Metallic	M30J-1367
J	Signal Red	M30J-1232
K#	Golden Bronze Metallic	M30J-1369
M	Sultana White	M30J-1238
Q	Sheffield Gray Metallic	M30J-1371
R	Columbia Blue Metallic	M30J-1372
S*	Green Frost	M30J-1373
W	Regency Turquoise Metallic	M30J-1385

(All Colors Used On All Models Except As Noted)
*Use On All Models Except 62A (S-22)
Used on Model 62A (S-22) Only

TRANSMISSION CODES

CODE	TRANSMISSION TYPE
1	Standard
3	Automatic

REAR AXLE CODES

CODE	RATIO
3	3.10:1
4	4.00:1
5	3.20:1
J	3.50:1

1961 LINCOLN CONTINENTAL MODEL IDENTIFICATION

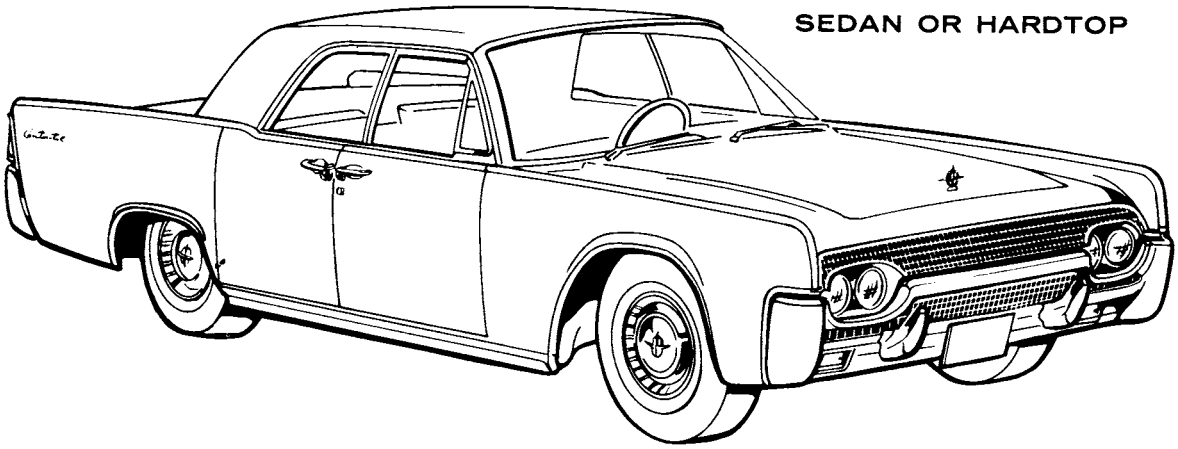

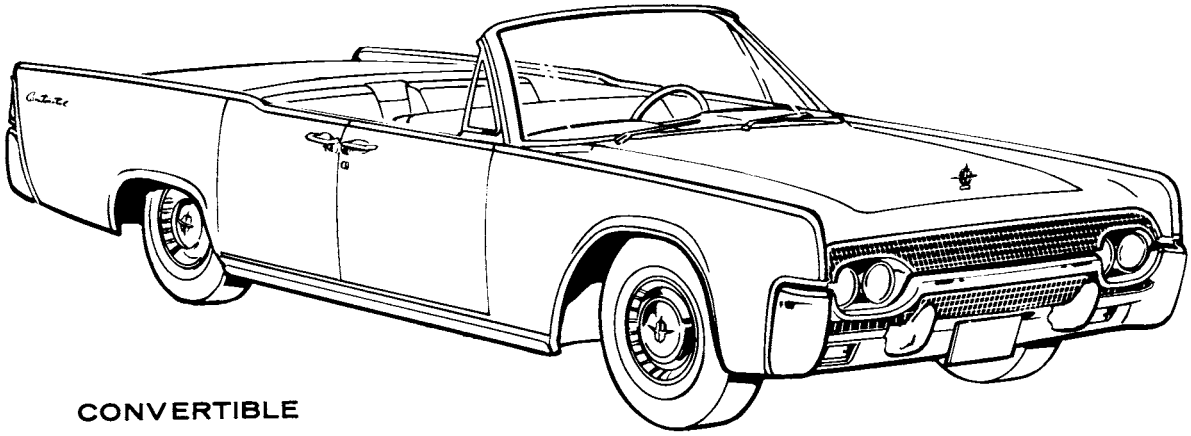

BODY CODE	BODY STYLE
53A	Lincoln Continental 4-Door Sedan
74A	Lincoln Continental 4-Door Convertible

1961 LINCOLN CONTINENTAL PATENT PLATE INFORMATION

The following breakdown of Codes will appear on the Patent Plate according to the build-up of each vehicle

BODY STYLE CODES

BODY CODE	SERIES CODE	BODY STYLE
53A	82	Lincoln Continental 4-Door Sedan
57C	84	Lincoln Continental 4-Door Hardtop
74A	86	Lincoln Continental 4-Door Convertible

TRANSMISSION CODE

CODE	TRANSMISSION TYPE
4	AUTOMATIC DUAL RANGE

REAR AXLE CODE

NON-LOCKING DIFF.	RATIO	LOCKING DIFF.
7	2.89:1	G

VEHICLE DATE CODES

CODE	*CODE	MONTH
A	N	January
B	P	February
C	Q	March
D	R	April
E	S	May
F	T	June
G	U	July
H	V	August
J	W	September
K	X	October
L	Y	November
M	Z	December

**To be used if 1961 model exceeds 12 months.*

EXTERIOR PAINT CODES

(A "No Punch" in the paint color space indicates Special Paint)

CODE	COLOR	SPEC. NBR.
A	Presidential Black	M-30J-1724
B	Royal Red Metallic	M-30J-1368
C	Turquoise Mist	M-30J-1139
D	Blue Haze	M-30J-1361
E	Saxon Green Metallic	M-30J-1364
F	Sunburst Yellow	M-30J-1366
H	Empress Blue Metallic	M-30J-1367
K	Crystal Green	M-30J-1430
M	Sultana White	M-30J-1238
N	Platinum	M-30J-921
I	Green Velvet Metallic	M-30J-1426
P	Executive Gray Metallic	M-30J-1370
Q	Sheffield Gray Metallic	M-30J-1371
R	Columbia Blue Haze	M-30J-1372
T	Honey Beige	M-30J-1383
U	Rose Glow Metallic	M-30J-1266
V	Summer Rose	M-30J-1265
W	Regency Turquoise Metallic	M-30J-1385
X	Black Cherry	M-30J-1444
Y	Briar Brown Metallic	M-30J-1425
Z	Desert Frost	M-30J-1427

ENGINE CODE

CODE	ENGINE TYPE
H	430 C.I.D. 8 CYL.-2V
K	430 C.I.D. 8 CYL.-2V-LOW COMP. 84 OCTANE

TYPICAL 1962 PATENT PLATE INFORMATION

The Patent Plate is riveted to the front body pillar between the front door hinges on the Lincoln and Mercury. The Comet Patent Plate is riveted to the left front door below the door lock. The Patent Plate includes information relative to the type of engine, axle, transmission, trim (exterior and interior), and body style of the vehicle. It also includes the date (day, month and year), place manufactured, and the code number of the district ordering the unit.

★ When a numerical suffix is placed after the trim code (see patent plate illustration), the Deviation Trim Set *is not serviced,* and if an alphabetical suffix is placed after the trim code the Deviation Trim Set *is* to be serviced.

PATENT PLATE DIAGRAM

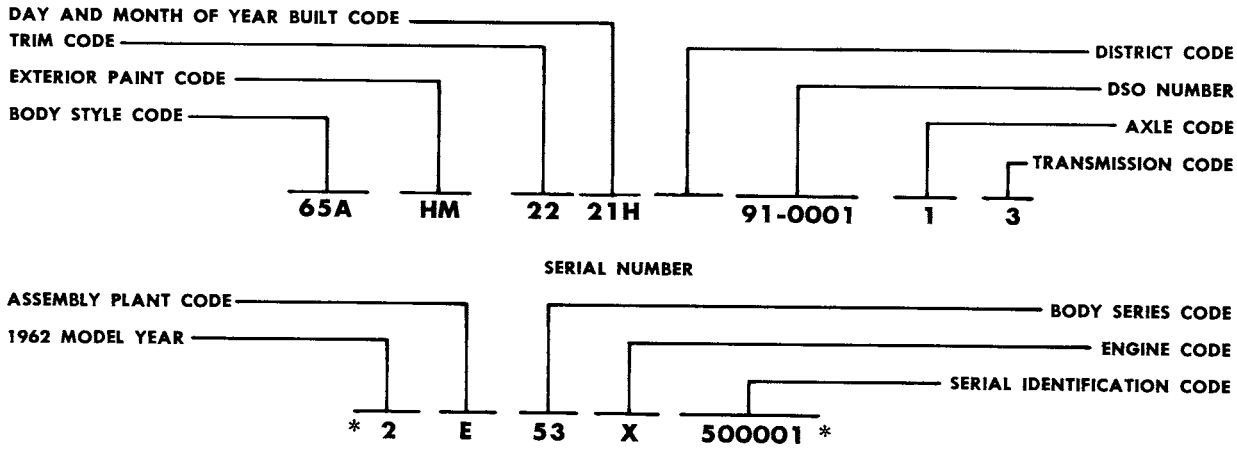

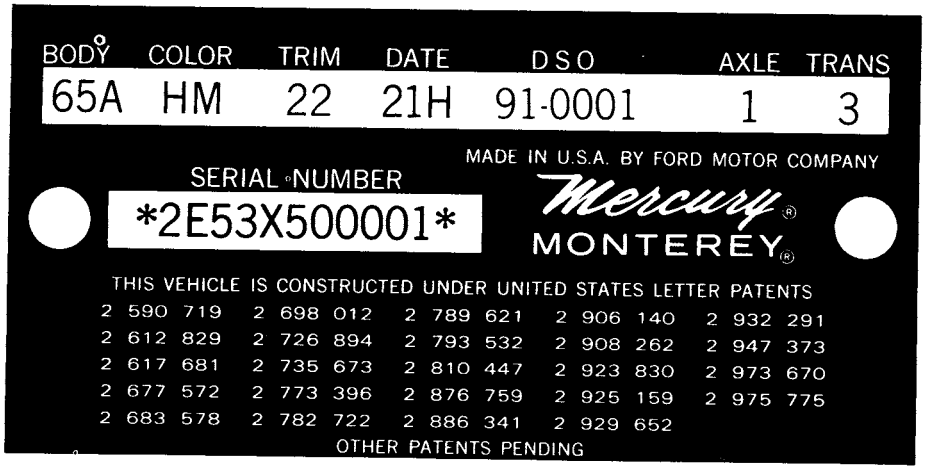

★
NS TRIM CODE
22 1

★
SERVICED TRIM CODE
22 A

THE FOLLOWING DEFINES THE VARIOUS CODES USED ON THE PATENT PLATE:

ASSEMBLY PLANT CODES

CODE	ASSEMBLY PLANT	CODE	ASSEMBLY PLANT
E	Mahwah	R	San Jose
F	Dearborn	T	Metuchen
H	Lorain	W	Wayne
J	Los Angeles	Y	Wixom
K	Kansas City	Z	St. Louis

SOFT TRIM SCHEME CODES

REFER TO: The Master Price & Reference List Form MD-4230

DISTRICT CODE

Effective February 1962 the Code Number of the District ordering the unit will be reflected in the DSO space on all units.

Refer to: The Master Price & Reference List Form MD-4230 for District Reference Number.

1962 MERCURY MODEL IDENTIFICATION

MERCURY
2-DOOR

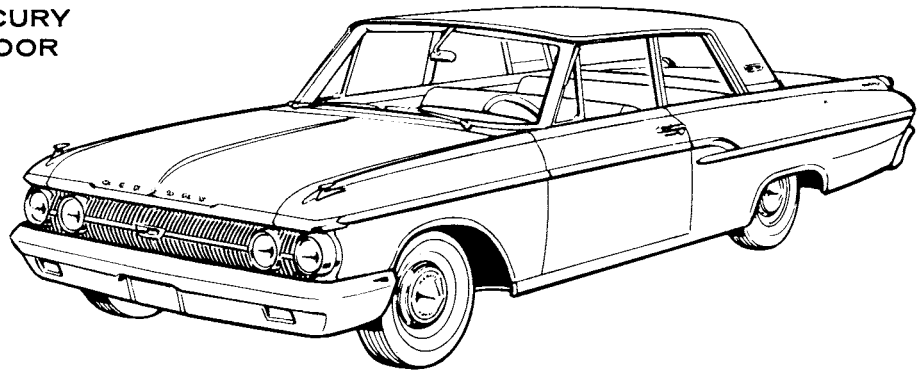

MERCURY
4-DOOR

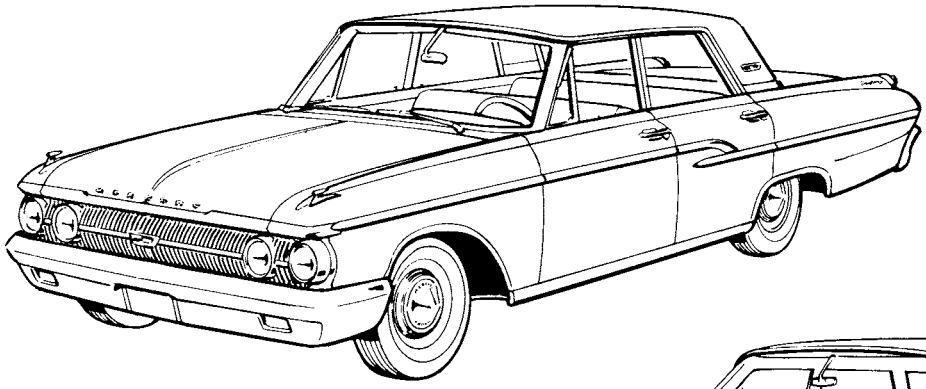

COLONY PARK
OR
COMMUTER

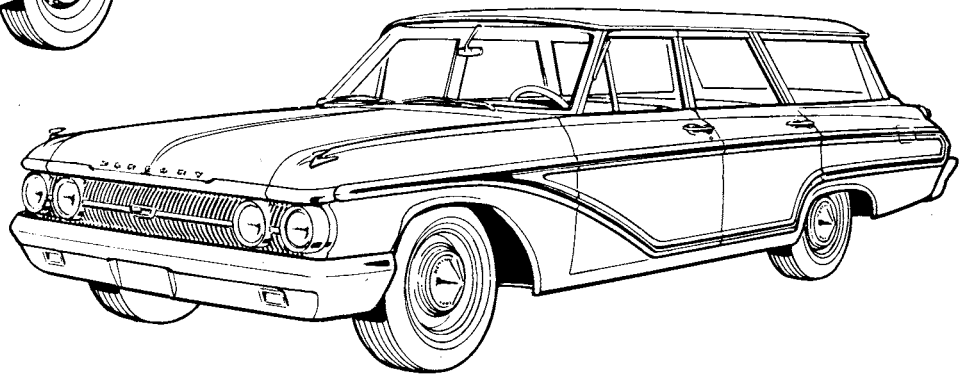

BODY CODE	BODY STYLE	BODY CODE	BODY STYLE
54A	4-Door Sedan	71A	4-Door Commuter Station Wagon (6-Passenger)
54B	4-Door Sedan—Custom		
62A	2-Door Sedan	71B	4-Door Colony Park Station Wagon (6 Passenger)
65A	2-Door Sedan Hardtop		
65B	2-Door Sedan Hardtop—Custom		
65C	2-Door "S-55" Hardtop	71C	4-Door Commuter Station Wagon (9 Passenger)
75A	4-Door Sedan Hardtop		
75B	4-Door Sedan Hardtop—Custom		
76A	2-Door Convertible	71D	4-Door Colony Park Station Wagon (9 Passenger)
76B	2-Door "S-55" Convertible		

1962 MERCURY PATENT PLATE INFORMATION

The following breakdown of Codes will appear on the Patent Plate according to the build-up of each vehicle.

EXTERIOR PAINT CODES

(A "No Punch" In Paint Code Space Designates Special Paint)

CODE	COLOR	SPEC. NBR.
A	Presidential Black	M30J—1724
B	Medium Turquoise	M30J—1613
D	Ocean Turquoise	M30J—1451
E	Pacific Blue Metallic	M30J—1448
F	Sea Blue	M30J—1449
H	Blue Satin	M30J—1447
I	Castilian Gold	M30J—1459
J	Carnival Red	M30J—1515
K	Light Aqua	M30J—1452
L	Teaberry	M30J—1458
M	Sultana White	M30J—1238
P	Scotch Green	M30J—1454
Q	Sheffield Gray Metallic	M30J—1371
R	Jamaica Yellow	M30J—1456
T	Champagne	M30J—1543
U	Velvet Turquoise	M30J—1450
X	Black Cherry	M30J—1444
Z	Desert Frost	M30J—1427

TRANSMISSION CODES

CODE	TRANSMISSION TYPE	
1	Standard (3-Speed)	(S/T)
2	Overdrive	(O/D)
3	Two Speed Automatic	(2/S)
4	Dual Range Automatic	(D/R)
5	Standard (4-Speed)	(4/S)

ENGINE CODES

CODE	ENGINE TYPE
V	223—C.I.D. 6 Cyl., 1-V Carb.
W	292—C.I.D. 8 Cyl., 2-V Carb.
X	352—C.I.D. 8 Cyl., 2-V Carb.
Z	390—C.I.D. 8 Cyl., 4-V Carb.
P	390—C.I.D. 8 Cyl., 4-V Carb. Interceptor RPO
T	292—C.I.D. 8 Cyl., 2-V Carb. (Low Comp. 84 Oct.)
R	390—C.I.D. 8 Cyl., 4-V Carb. (Low Comp. 84 Oct.)
B	406—C.I.D. 8 Cyl., 4-V Carb.
G	406—C.I.D. 8 Cyl., 6-V Carb.

BODY STYLE CODES

BODY CODE	SERIES CODE	BODY STYLE
54A	52	4-Door Sedan—C/P
54B	62	4-Door Sedan—Custom—C/P
62A	51	2-Door Sedan
65A	53	2-Door Hardtop
65B	63	2-Door Hardtop—Custom
65C	67	2-Door "S-55" Hardtop
75A	54	4-Door Hardtop
75B	64	4-Door Hardtop—Custom
76A	65	2-Door Convertible
76B	69	2-Door "S-55" Convertible
71A	72	4-Door Commuter Station Wagon (6 Passenger)
71B	76	4-Door Colony Park Station Wagon—Custom (6 Passenger)
71C	72	4-Door Commuter Station Wagon (9 Passenger)
71D	76	4-Door Colony Park Station Wagon—Custom (9 Passenger)

REAR AXLE CODES

NON-LOCKING DIFF.	RATIO	LOCKING DIFF.
1	3.00:1	A
5	3.50:1	
6	3.56:1	B
7	3.80:1	
8	3.89:1	F

VEHICLE DATE CODES

CODE	*CODE	MONTH
A	N	January
B	P	February
C	Q	March
D	R	April
E	S	May
F	T	June
G	U	July
H	V	August
J	W	September
K	X	October
L	Y	November
M	Z	December

*2 Year Code Letters To Be Used if 1962 Models Exceed 12 Months.

1962 METEOR MODEL IDENTIFICATION

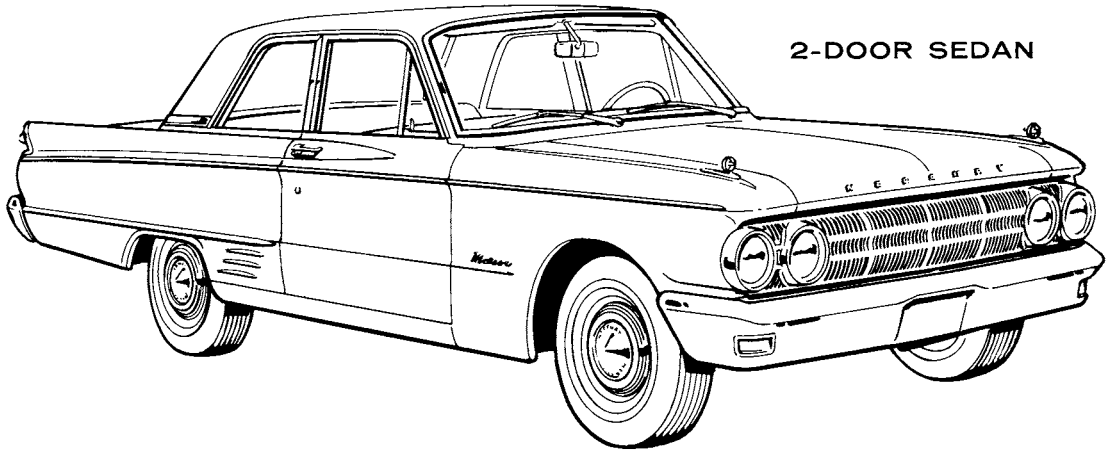

2-DOOR SEDAN

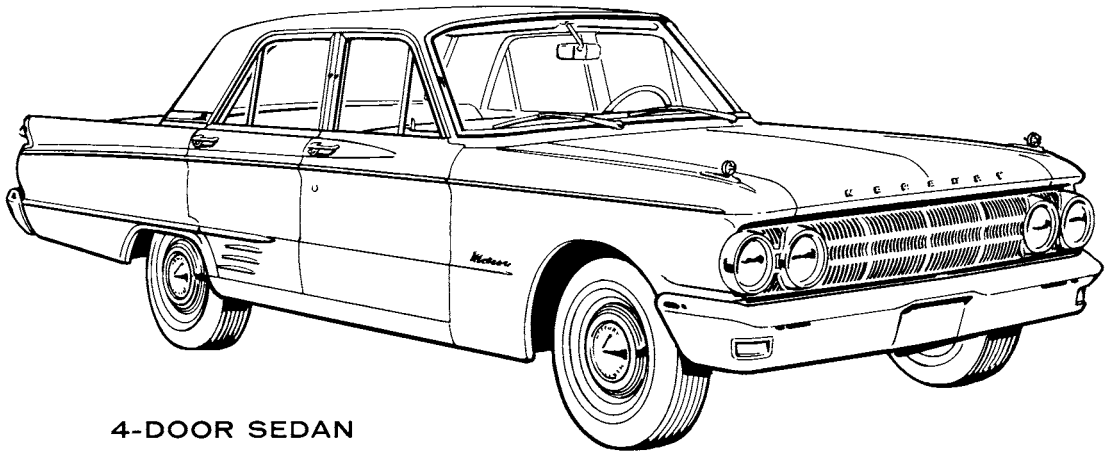

4-DOOR SEDAN

BODY CODE	BODY STYLE
54A	4-Door Sedan
54B	4-Door Sedan—Custom
62A	2-Door Sedan
62B	2-Door Sedan—Custom
62C	2-Door Sedan—(S-33)

1962 METEOR PATENT PLATE INFORMATION

The following breakdown of Codes will appear on the Patent Plate according to the build-up of each vehicle.

BODY STYLE CODES

STYLE CODE	SERIES CODE	BODY STYLE
54A	32	4 Door Sedan
54B	42	4 Door Sedan—Custom
62A	31	2 Door Sedan
62B	41	2 Door Sedan—Custom
62C	47	2 Door Sedan—(S-33)

ENGINE CODES

CODE	ENGINE TYPE
U	6 CYL. OHV 170 C.I.D. 1V
E	6 CYL. OHV 170 C.I.D. 1V (Low Comp.)
L	8 CYL. OHV 221 C.I.D. 2-V
C	8 CYL. OHV 221 C.I.D. 2-V (Low Comp.)
F	8 CYL. OHV 260 C.I.D. 2V

TRANSMISSION CODES

CODE	TRANSMISSION TYPE
1	Standard
2	Overdrive
3	Automatic

REAR AXLE CODES

CODE	RATIO
1	3.00:1
4	3.25:1
5	3.50:1

EXTERIOR PAINT CODES

(A "No Punch" In Paint Code Space Designates Special Paint)

CODE	COLOR	SPEC. NBR.
A	Presidential Black	M30J-1724
B	Medium Turquoise	M30J-1613
D	Ocean Turquoise Metallic	M30J-1451
E	Pacific Blue Metallic	M30J-1448
F	Sea Blue	M30J-1449
J	Carnival Red	M30J-1515
K	Light Aqua	M30J-1452
H	Blue Satin Metallic	M30J-1447
I	Castilian Gold	M30J-1459
M	Sultana White	M30J-1238
P	Scotch Green	M30J-1454
Q	Sheffield Gray Metallic	M30J-1371
R	Jamaica Yellow	M30J-1456
T	Champagne	M30J-1543
X	Black Cherry Metallic	M30J-1444
Z	Desert Frost Metallic	M30J-1427

VEHICLE DATE CODES

CODE	*CODE	MONTH
A	N	January
B	P	February
C	Q	March
D	R	April
E	S	May
F	T	June
G	U	July
H	V	August
J	W	September
K	X	October
L	Y	November
M	Z	December

*2 year code letters to be used if 1962 models exceed 12 months

1962 COMET MODEL IDENTIFICATION

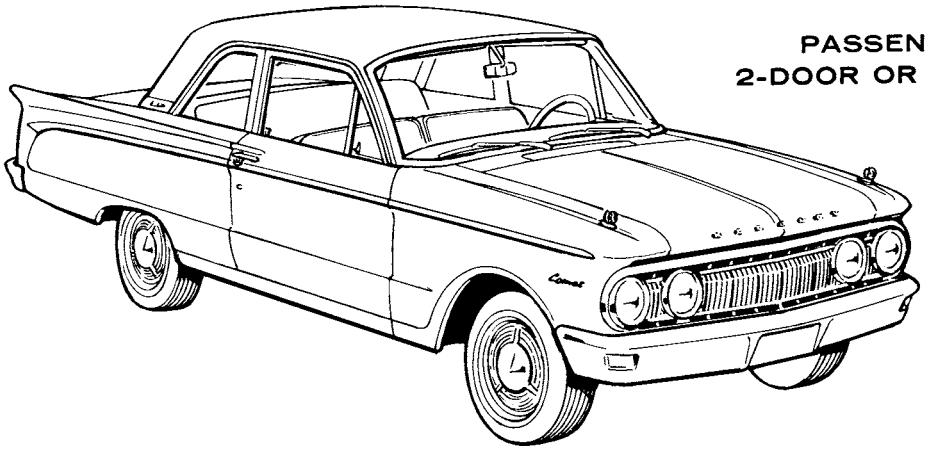

PASSENGER
2-DOOR OR 4-DOOR

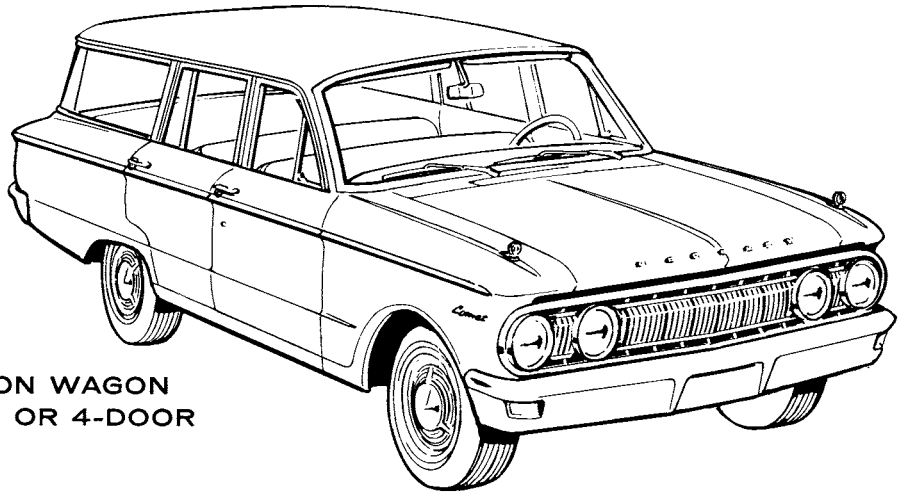

STATION WAGON
2-DOOR OR 4-DOOR

BODY CODE	BODY STYLE
54A	4-Door Sedan
54B	4-Door Sedan—Custom
62A	2-Door Sedan
62B	2-Door Sedan—Custom
62C	2-Door Sedan—Special (S-22)
59A	2-Door Station Wagon
59B	2-Door Station Wagon—Custom
71A	4-Door Station Wagon
71B	4-Door Station Wagon—Custom
71C	4-Door Station Wagon—Villager
71D	4-Door Station Wagon—Villager Bucket Seat

1962 COMET PATENT PLATE INFORMATION

The following breakdown of Codes will appear on the Patent Plate according to the build-up of each vehicle.

BODY STYLE CODES

BODY CODE	SERIES CODE	BODY STYLE
54A	02	4 Door Sedan—C/P
54B	12	4 Door Sedan—Custom—C/P
62A	01	2 Door Sedan—C/P
62B	11	2 Door Sedan—Custom—C/P
62C	17	2 Door Sedan—Special (S-22)
59A	21	2 Door Station Wagon
59B	23	2 Door Station Wagon—Custom
71A	22	4 Door Station Wagon
71B	24	4 Door Station Wagon—Custom
71C	26	4 Door Station Wagon—Villager
71D	26	4 Door Station Wagon—Villager Bucket Seat

ENGINE CODES

CODE	ENGINE TYPE
S	6 CYL. OHV 144 C.I.D.
D	6 CYL. OHV 144 C.I.D. (Low Comp.)
E	6 CYL. OHV 170 C.I.D. (Low Comp.)
U	6 CYL. OHV 170 C.I.D.

TRANSMISSION CODES

CODE	TRANSMISSION TYPE
1	Standard
3	Automatic

REAR AXLE CODES

CODE	RATIO
3	3.20:1
5	3.50:1
9	4.00:1

EXTERIOR PAINT CODES

(A "No Punch" In Paint Code Space Designates Special Paint)

CODE	COLOR	SPEC. NBR.
A	Presidential Black	M30J-1724
B	Medium Turquoise	M30J-1613
D	Ocean Turquoise Metallic	M30J-1451
E	Pacific Blue Metallic	M30J-1448
F	Sea Blue	M30J-1449
J	Carnival Red	M30J-1515
K	Light Aqua	M30J-1452
H	Blue Satin Metallic	M30J-1447
I	Castilian Gold	M30J-1459
M	Sultana White	M30J-1238
P	Scotch Green	M30J-1454
Q	Sheffield Gray Metallic	M30J-1371
R	Jamaica Yellow	M30J-1456
T	Champagne	M30J-1543
X	Black Cherry Metallic	M30J-1444
Z	Desert Frost Metallic	M30J-1427

VEHICLE DATE CODES

CODE	*CODE	MONTH
A	N	January
B	P	February
C	Q	March
D	R	April
E	S	May
F	T	June
G	U	July
H	V	August
J	W	September
K	X	October
L	Y	November
M	Z	December

*2 year code letters to be used if 1962 models exceed 12 months

1962 LINCOLN CONTINENTAL MODEL IDENTIFICATION

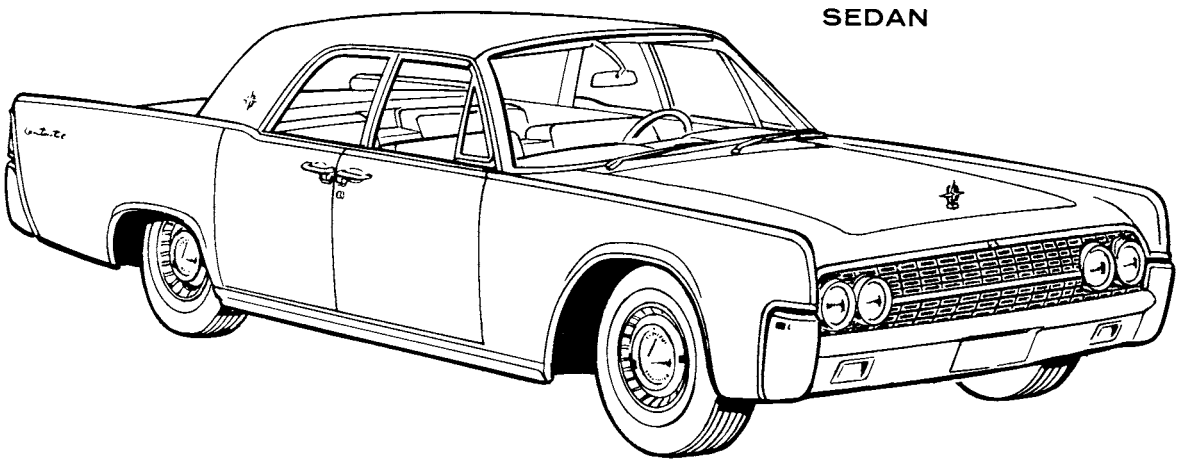

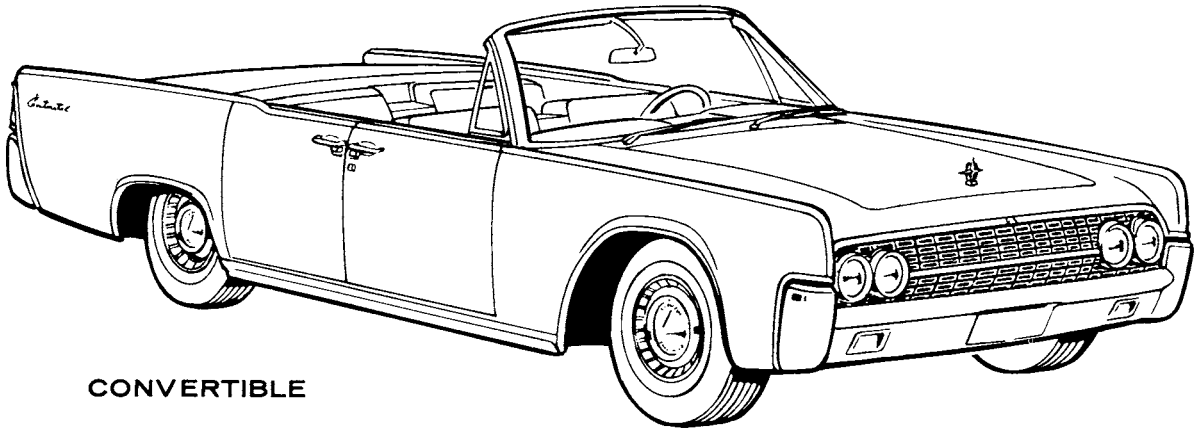

BODY CODE	BODY STYLE
53	Lincoln Continental 4-Door Sedan
74	Lincoln Continental 4-Door Convertible

1962 LINCOLN CONTINENTAL PATENT PLATE INFORMATION

The following breakdown of Codes will appear on the Patent Plate according to the build-up of each vehicle

BODY STYLE CODES

BODY CODE	SERIES CODE	BODY STYLE
53A	82	Lincoln Continental 4-Door Sedan
74A	86	Lincoln Continental 4-Door Convertible

TRANSMISSION CODE

CODE	TRANSMISSION TYPE
4	AUTOMATIC DUAL RANGE

REAR AXLE CODE

NON-LOCKING DIFF.	RATIO	LOCKING DIFF.
I	2:89:1	A

VEHICLE DATE CODES

CODE	*CODE	MONTH
A	N	January
B	P	February
C	Q	March
D	R	April
E	S	May
F	T	June
G	U	July
H	V	August
J	W	September
K	X	October
L	Y	November
M	Z	December

**To be used if 1962 model exceeds 12 months*

EXTERIOR PAINT CODES

(A "No Punch" in the paint color space indicates Special Paint)

CODE	COLOR	SPEC. NBR.
A	Presidential Black	M30J-1724
B	Royal Red	M30J-1368
C	Oxford Gray	M30J-1445
D	Riviera Turquoise	M30J-1070
E	Bermuda Blue	M30J-1269
F	Powder Blue	M30J-1226
G	Silver Mink	M30J-1446
H	Nocturne Blue	M30J-1544
I	Castilian Gold	M30J-1459
L	Teaberry	M30J-1458
M	Sultana White	M30J-1238
N	Platinum	M30J-921
P	Scotch Green	M30J-1454
R	Jamaica Yellow	M30J-1456
S	Highlander Green	M30J-1453
T	Champagne	M30J-1543
U	Velvet Turquoise	M30J-1450
V	Chestnut	M30J-1470
X	Black Cherry	M30J-1444
Z	Desert Frost	M30J-1427

ENGINE CODE

CODE	ENGINE TYPE
H	430 C.I.D. 8 CYL.-2V
K	430 C.I.D. 8 CYL.-2V-LOW COMPRESSION 84 OCTANE

TYPICAL 1963 WARRANTY PLATE INFORMATION

The Warranty Plate is riveted to the left front door below the door lock. The Warranty Plate includes information relative to the type of engine, axle, transmission, trim (exterior and interior), and body style of the vehicle. It also includes the date (day, month and year) and place of manufacture.

★When a numerical suffix is placed after the trim code (see Warranty Plate illustration), the Deviation Trim Set *is not serviced,* and if an alphabetical suffix is placed after the trim code the Deviation Trim Set *is* to be serviced.

WARRANTY PLATE DIAGRAM

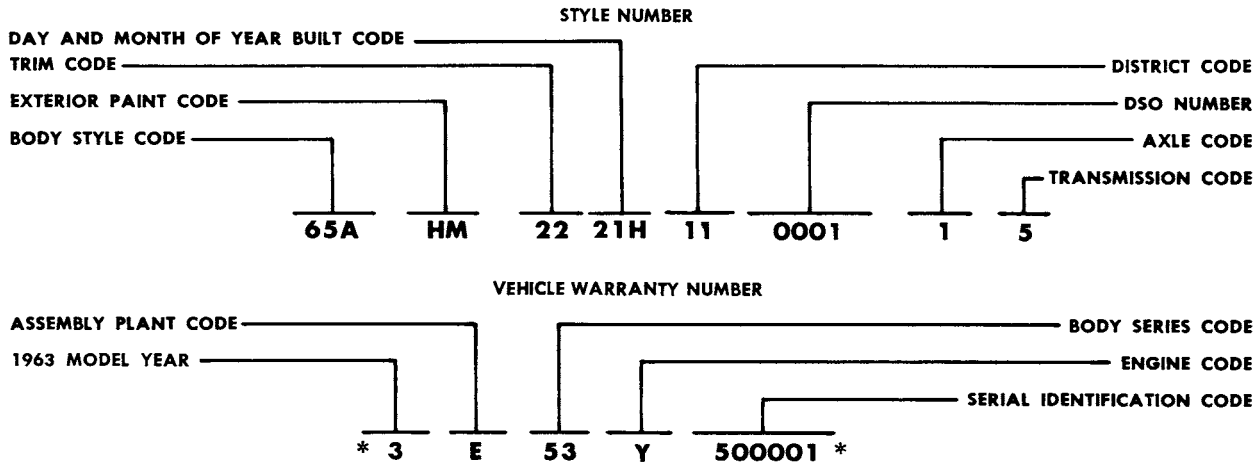

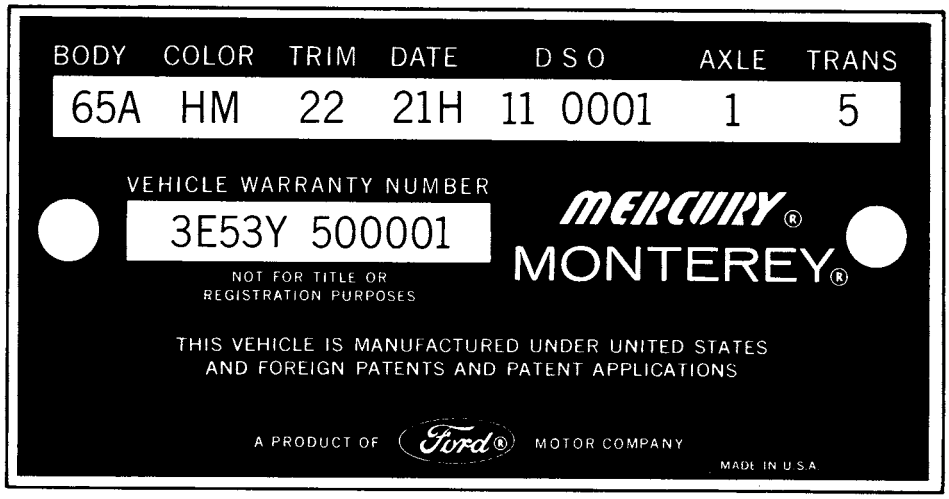

★
NS TRIM CODE
22 1

★
SERVICED TRIM CODE
22 A

ASSEMBLY PLANT CODES

CODE	ASSEMBLY PLT.	CODE	ASSEMBLY PLT.
E	Mahwah	R	San Jose
F	Dearborn	T	Metuchen
H	Lorain	W	Wayne
J	Los Angeles	Y	Wixom
K	Kansas City	Z	St. Louis

SOFT TRIM SCHEME CODES

REFER TO: The Master Price & Reference List, Form MD-4230

DISTRICT CODES

Refer to: Soft Trim Section of Master Price & Reference List Form MD-4230.

1963 MERCURY MODEL IDENTIFICATION

PASSENGER
2-DOOR OR 4-DOOR

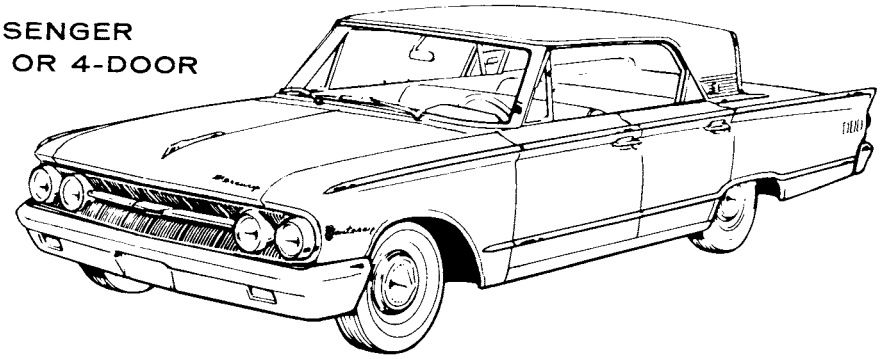

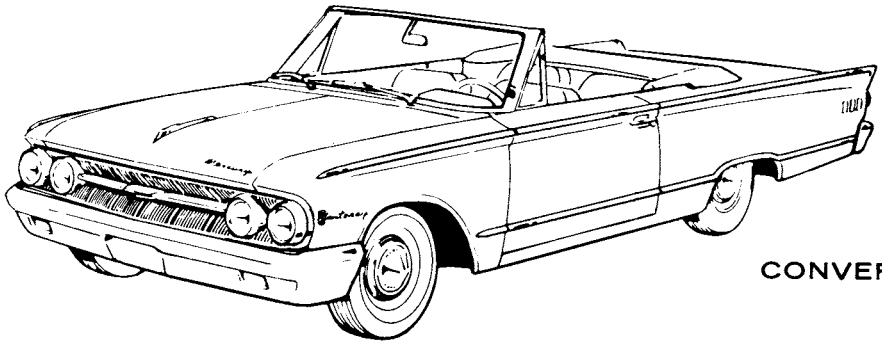

CONVERTIBLE

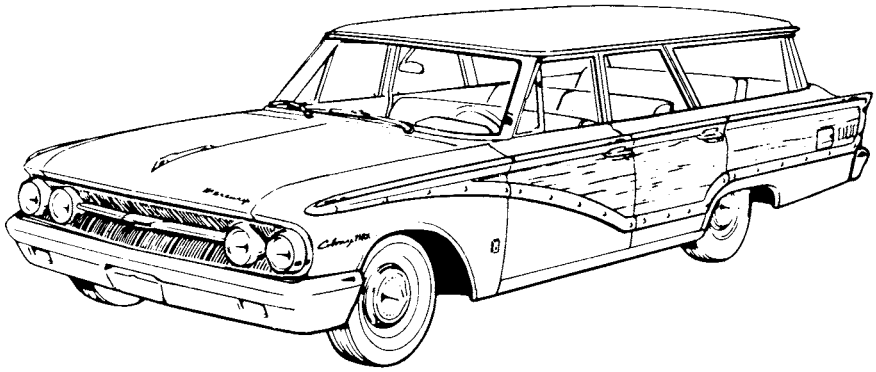

STATION WAGON

BODY CODE	BODY STYLE	BODY CODE	BODY STYLE
54A	4-Door Sedan	71B	4-Door Colony Park Station Wagon (6 Passenger)
54B	4-Door Sedan—Custom	71D	4-Door Colony Park Station Wagon (9 Passenger)
62A	2-Door Sedan	75A	4-Door Sedan Hardtop
63B	2-Door Fastback Hardtop—Custom	75B	4-Door Sedan Hardtop—Custom
63C	2-Door "S-55" Fastback Hardtop	75C	4-Door "S-55" Hardtop
65A	2-Door Sedan Hardtop	76A	2-Door Convertible
65B	2-Door Sedan Hardtop—Custom	76B	2-Door "S-55" Convertible
65C	2-Door "S-55" Hardtop		

1963 MERCURY WARRANTY PLATE INFORMATION

The following breakdown of Codes will appear on the Warranty Plate according to the build-up of each vehicle.

EXTERIOR PAINT CODES

(A "No Punch" In Paint Code Space Designates Special Paint)

CODE	COLOR	*SPEC. NBR.
A	Presidential Black	M30J-1724
B	Peacock Turquoise	M30J-1613
D	Ocean Turquoise	M30J-1451
E	Pacific Blue Metallic	M30J-1448
H	Blue Satin	M30J-1447
I	Castilian Gold	M30J-1459
J	Carnival Red	M30J-1515
M	Sultana White	M30J-1238
P	Scotch Green	M30J-1454
R	Jamaica Yellow	M30J-1456
T	Champagne	M30J-1543
W	Pink Frost	M30J-1555
X	Black Cherry	M30J-1444
Y	Cascade Blue	M30J-1553
Z	Desert Frost	M30J-1427

*M-32J Acrylic Enamel is Alternate with M-30J Enamel

TRANSMISSION CODES

CODE	TRANSMISSION TYPE	
1	Standard (3-Speed)	(3/S)
4	Dual Range Automatic	(D/R)
5	Standard (4-Speed)	(4/S)

ENGINE CODES

CODE	ENGINE TYPE
Y	8 Cyl.—390 C.I.D., 2-V Carb.
Z	8 Cyl.—390 C.I.D., 4-V Carb.
P	8 Cyl.—390 C.I.D., 4-V Carb. Interceptor
9	8 Cyl.—390 C.I.D., 4-V Carb. (Low Comp.)
B	8 Cyl.—406 C.I.D., 4-V Carb.
G	8 Cyl.—406 C.I.D., 6-V Carb.
Q	8 Cyl.—427 C.I.D., 4-V Carb.
R	8 Cyl.—427 C.I.D., 8-V Carb.

BODY STYLE CODES

BODY CODE	SERIES CODE	BODY STYLE
54A	52	4-Door Sedan—C/P
54B	62	4-Door Sedan—Custom—C/P
62A	51	2-Door Sedan
63B	66	2-Door Fastback Hardtop—Custom
63C	68	2-Door "S-55" Fastback Hardtop
65A	53	2-Door Hardtop
65B	63	2-Door Hardtop—Custom
65C	67	2-Door "S-55" Hardtop
75A	54	4-Door Hardtop
75B	64	4-Door Hardtop—Custom
75C	60	4-Door "S-55" Hardtop
76A	65	2-Door Convertible
76B	69	2-Door "S-55" Convertible
71B	76	4-Door Colony Park Station Wagon—Custom (6 Passenger)
71D	76	4-Door Colony Park Station Wagon—Custom (9 Passenger)

REAR AXLE CODES

NON-LOCKING DIFF.	RATIO	LOCKING DIFF.
1	3.00:1	A
5	3.50:1	E
8	3.89:1	H
9	4.11:1	I

VEHICLE DATE CODES

CODE	*CODE	MONTH
A	N	January
B	P	February
C	Q	March
D	R	April
E	S	May
F	T	June
G	U	July
H	V	August
J	W	September
K	X	October
L	Y	November
M	Z	December

*2 Year Code Letters To Be Used if 1963 Models Exceed 12 Months.

1963 METEOR MODEL IDENTIFICATION

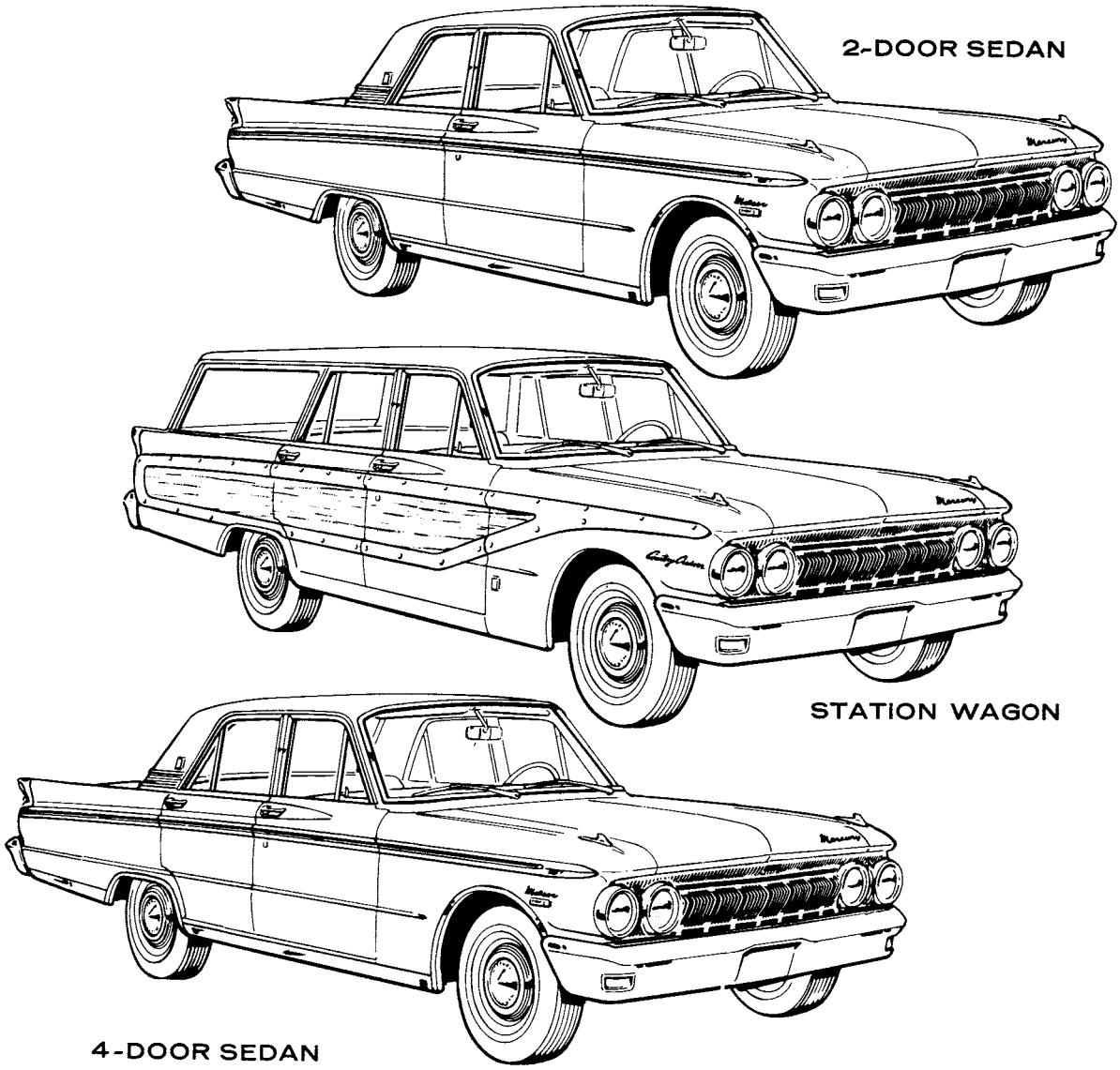

BODY CODE	BODY STYLE	BODY CODE	BODY STYLE
54A	4-Door Sedan	71B	4-Door Station Wagon—6 Passenger
54B	4-Door Sedan—Custom	71C	4-Door Station Wagon—8 Passenger
62A	2-Door Sedan	71D	4-Door Station Wagon—Country Cruiser—6 Passenger
62B	2-Door Sedan—Custom		
65A	2-Door Hardtop—Custom	71E	4-Door Station Wagon—Custom—6 Passenger
65B	2-Door "S33" Hardtop—Custom		
71A	4-Door Station Wagon—Custom—8 Passenger	71F	4-Door Station Wagon—Country Cruiser—8 Passenger

1963 METEOR WARRANTY PLATE INFORMATION

The following breakdown of Codes will appear on the Warranty Plate according to the build-up of each vehicle.

BODY STYLE CODES

BODY CODE	SERIES CODE	BODY STYLE
54A	32	4 Door Sedan
54B	42	4 Door Sedan—Custom
62A	31	2 Door Sedan
62B	41	2 Door Sedan—Custom
65A	43	2 Door Hardtop—Custom
65B	47	2 Door "S-33" Hardtop—Custom
71A	48	4 Door Station Wagon—Custom (8 Passenger)
71B	38	4 Door Station Wagon (6 Pass.)
71C	38	4 Door Station Wagon (8 Pass.)
71D	49	4 Door Station Wagon—Country Cruiser (6 Passenger)
71E	48	4 Door Station Wagon—Custom (6 Passenger)
71F	49	4 Door Station Wagon—Country Cruiser (8 Passenger)

ENGINE CODES

CODE	ENGINE TYPE
U	6 CYL.—170 C.I.D., 1-V CARB.
4	6 CYL.—170 C.I.D., 1-V CARB. (Low Comp.)
T	6 CYL.—200 C.I.D., 1-V CARB.
L	8 CYL.—221 C.I.D., 2-4 CARB.
3	8 CYL.—221 C.I.D., 2-V CARB. (Low Comp.)
F	8 CYL.—260 C.I.D., 2-V CARB.
8	8 CYL.—260 C.I.D., 2-V CARB. (Low Comp.)

TRANSMISSION CODES

CODE	TRANSMISSION TYPE
1	Standard (3 Speed) (3/S)
2	Overdrive (O/D)
3	Automatic (2 Speed) (2/S)
5	Standard (4 Speed) (4/S)

REAR AXLE CODES

CODE	RATIO
1	3.00:1
4	3.25:1
5	3.50:1
7	3.80:1

EXTERIOR PAINT CODES

(A "No Punch" In Paint Code Space Designates Special Paint)

CODE	COLOR	*SPEC. NBR.
A	Presidential Black	M30J-1724
B	Peacock Turquoise	M30J-1613
D	Ocean Turquoise Metallic	M30J-1451
E	Pacific Blue Metallic	M30J-1448
F	Sea Blue	M30J-1449
J	Carnival Red	M30J-1515
K	Light Aqua	M30J-1452
H	Blue Satin Metallic	M30J-1447
I	Castilian Gold	M30J-1459
M	Sultana White	M30J-1238
P	Scotch Green	M30J-1454
Q	Sheffield Gray Metallic	M30J-1371
R	Jamaica Yellow	M30J-1456
T	Champagne	M30J-1543
W	Pink Frost	M30J-1555
X	Black Cherry Metallic	M30J-1444
Y	Cascade Blue	M30J-1553
Z	Desert Frost Metallic	M30J-1427

**M-32J Acrylic Enamel is alternate with M-30J Enamel*

VEHICLE DATE CODE

CODE	*CODE	MONTH
A	N	January
B	P	February
C	Q	March
D	R	April
E	S	May
F	T	June
G	U	July
H	V	August
J	W	September
K	X	October
L	Y	November
M	Z	December

*2 year code letters to be used if 1963 models exceed 12 months

1963 COMET MODEL IDENTIFICATION

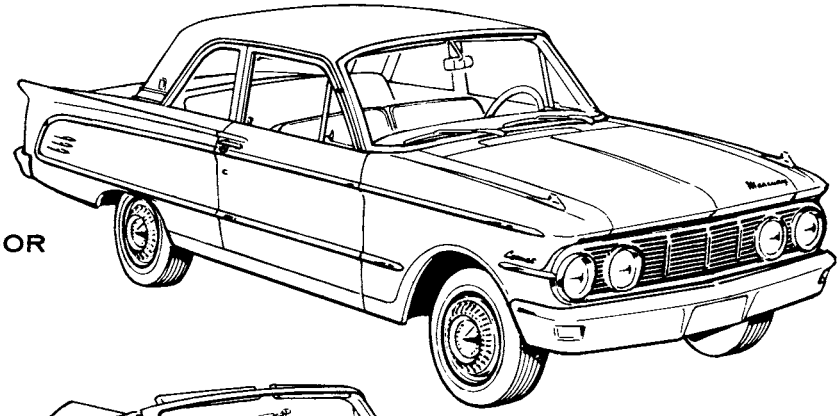

PASSENGER
2-DOOR OR 4-DOOR

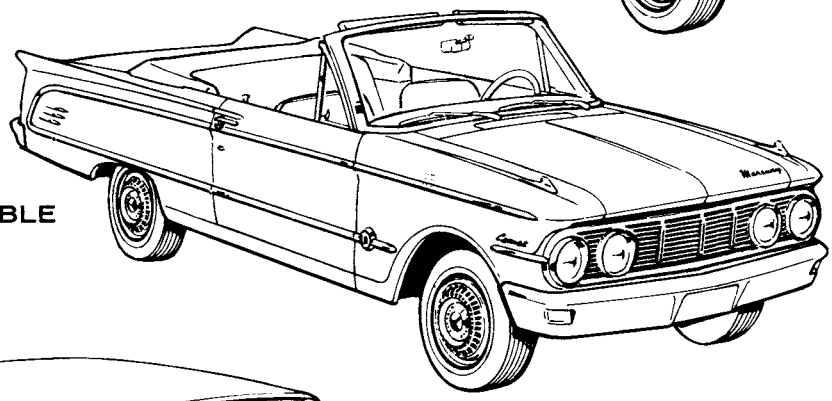

CONVERTIBLE

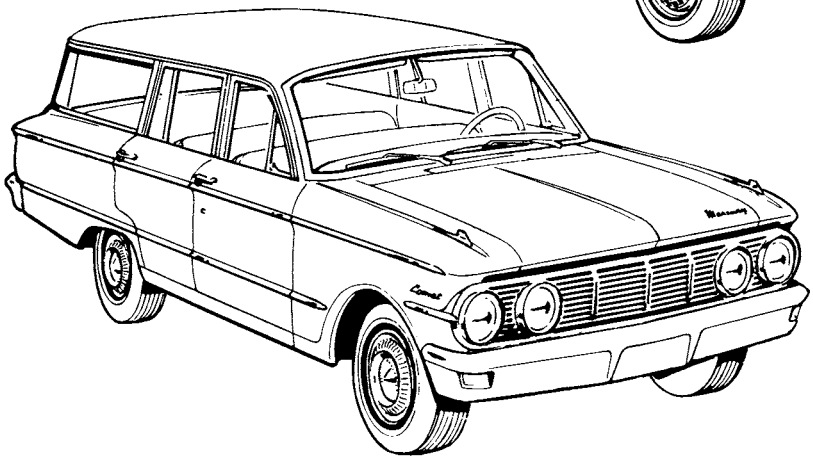

STATION WAGON
2-DOOR OR 4-DOOR

BODY CODE	BODY STYLE	BODY CODE	BODY STYLE
54A	4-Door Sedan	59A	2-Door Station Wagon
54B	4-Door Sedan—Custom	59B	2-Door Station Wagon—Custom
62A	2-Door Sedan	71A	4-Door Station Wagon
62B	2-Door Sedan—Custom	71B	4-Door Station Wagon—Custom
62C	2-Door "S-22" Sedan	71C	4-Door Station Wagon—Villager
63B	2-Door Hardtop	71D	4-Door Station Wagon—Villager Bucket Seat
63C	2-Door "S-22" Hardtop		
76A	2-Door Convertible		
76B	2-Door "S-22" Convertible		

1963 COMET WARRANTY PLATE INFORMATION

The following breakdown of Codes will appear on the Warranty Plate according to the build-up of each vehicle.

BODY STYLE CODES

BODY CODE	SERIES CODE	BODY STYLE
54A	02	4 Door Sedan
54B	12	4 Door Sedan—Custom
59A	21	2 Door Station Wagon
59B	23	2 Door Station Wagon—Custom
62A	01	2 Door Sedan
62B	11	2 Door Sedan—Custom
62C	17	2 Door "S-22" Sedan
63B	17	2 Door Hardtop
63C	17	2 Door "S-22" Hardtop
71A	22	2 Door Station Wagon
71B	24	2 Door Station Wagon—Custom
71C	26	4 Door Station Wagon—Villager
71D	26	4 Door Station Wagon—Villager Bucket Seat
76A	15	2 Door Convertible
76B	15	2 Door "S-22" Convertible

ENGINE CODES

CODE	ENGINE TYPE
S	6 CYL.—144 C.I.D., 1-V CARB.
2	6 CYL.—144 C.I.D., 1-V CARB. (Low Comp.)
U	6 CYL.—170 C.I.D., 1-V CARB.
4	6 CYL.—170 C.I.D., 1-V CARB. (Low Comp.)
F	8 CYL.—260 C.I.D., 2-V CARB.

TRANSMISSION CODES

CODE	TRANSMISSION TYPE
1	Standard (3-Speed) (3/S)
3	Automatic (2-Speed) (2/S)
5	Standard (4-Speed) (4/S)

REAR AXLE CODES

CODE	RATIO	CODE	RATIO
1	3.00:1	5	3.50:1
2	3.10:1	7	3.80:1
3	3.20:1	9	4.00:1
4	3.25:1		

EXTERIOR PAINT CODES

(A "No Punch" In Paint Code Space Designates Special Paint)

CODE	COLOR	*SPEC. NBR.
A	Presidential Black	M30J-1724
B	Peacock Turquoise	M30J-1613
D	Ocean Turquoise Metallic	M30J-1451
E	Pacific Blue Metallic	M30J-1448
J	Carnival Red	M30J-1515
H	Blue Satin Metallic	M30J-1447
I	Castilian Gold	M30J-1459
M	Sultana White	M30J-1238
P	Scotch Green	M30J-1454
T	Champagne	M30J-1543
W	Pink Frost	M30J-1555
X	Black Cherry Metallic	M30J-1444
Y	Cascade Blue	M30J-1553
Z	Desert Frost Metallic	M30J-1427

*M-32J Acrylic Enamel is alternate with M-30J Enamel.

VEHICLE DATE CODES

CODE	*CODE	MONTH
A	N	January
B	P	February
C	Q	March
D	R	April
E	S	May
F	T	June
G	U	July
H	V	August
J	W	September
K	X	October
L	Y	November
M	Z	December

*2 year code letters to be used if 1963 models exceed 12 months

1963 LINCOLN CONTINENTAL MODEL IDENTIFICATION

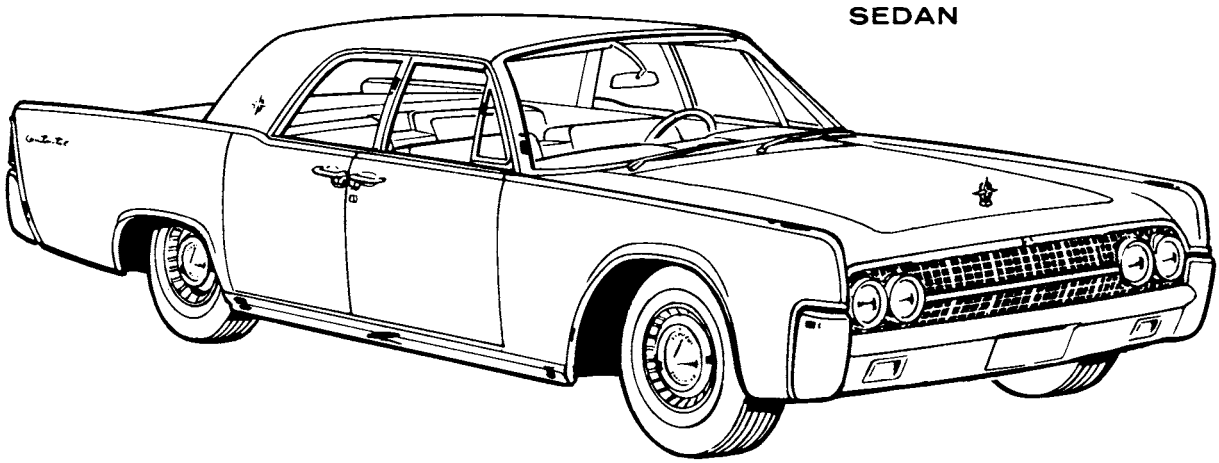

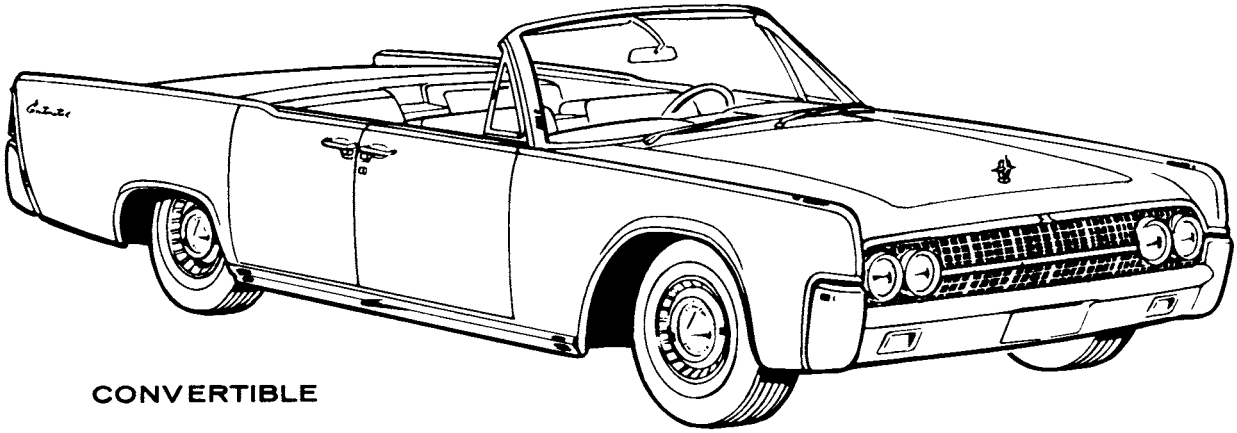

BODY CODE	BODY STYLE
53	Lincoln Continental 4-Door Sedan
74	Lincoln Continental 4-Door Convertible

1963 LINCOLN CONTINENTAL WARRANTY PLATE INFORMATION

The following breakdown of Codes will appear on the Warranty Plate: according to the build-up of each vehicle

BODY STYLE CODES

BODY CODE	SERIES CODE	BODY STYLE
53	82	Lincoln Continental 4-Door Sedan
74	86	Lincoln Continental 4-Door Convertible

TRANSMISSION CODE

CODE	TRANSMISSION TYPE
4	AUTOMATIC DUAL RANGE

REAR AXLE CODE

NON-LOCKING DIFF.	RATIO	LOCKING DIFF.
I	2:89:1	A

VEHICLE DATE CODES

CODE	*CODE	MONTH
A	N	January
B	P	February
C	Q	March
D	R	April
E	S	May
F	T	June
G	U	July
H	V	August
J	W	September
K	X	October
L	Y	November
M	Z	December

**To be used if 1963 model exceeds 12 months*

EXTERIOR PAINT CODES

(A "No Punch" in the paint color space indicates Special Paint)

CODE	COLOR	*SPEC. NBR.
A	Black Satin	M30J-1724
C	Oxford Gray	M30J-1445
D	Riviera Turquoise	M30J-1070
E	Bermuda Blue	M30J-1269
G	Silver Mink	M30J-1446
H	Nocturne Blue	M30J-1544
I	Polynesian Gold	M30J-1459
L	Teaberry	M30J-1458
M	Ermine White	M30J-1238
N	Platinum	M30J-921
O	Inverness Green	M30J-1554
P	Scotch Green	M30J-1454
Q	Spanish Red	M30J-1552
R	Premier Yellow	M30J-1456
S	Highlander Green	M30J-1453
T	Nassau Beige	M30J-1543
W	Rose Metallic	M30J-1555
X	Burgundy Frost	M30J-1444
Z	Autumn Frost	M30J-1427

**M-32J Acrylic Enamel is alternate with M-30J Enamel*

ENGINE CODE

CODE	ENGINE TYPE
N	430 C.I.D. 8 CYL.-4-V CARB.
7	430 C.I.D. 8 CYL.-4-V CARB. LOW COMPRESSION

TYPICAL 1964 WARRANTY PLATE INFORMATION

The Warranty Plate is riveted to the left front door below the door lock. The Warranty Plate includes information relative to the type of engine, axle, transmission, trim (exterior and interior), and body style of the vehicle. It also includes the date (day, month and year) and place of manufacture.

★When a numerical suffix is placed after the trim code (see Warranty Plate illustration), the Deviation Trim Set *is not serviced,* and if an alphabetical suffix is placed after the trim code the Deviation Trim Set *is* to be serviced.

WARRANTY PLATE DIAGRAM

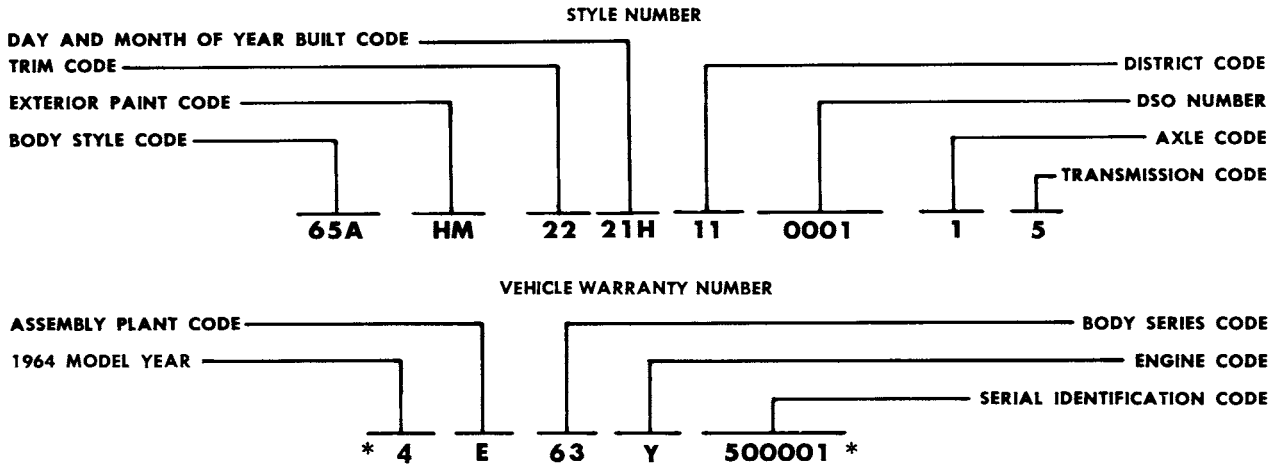

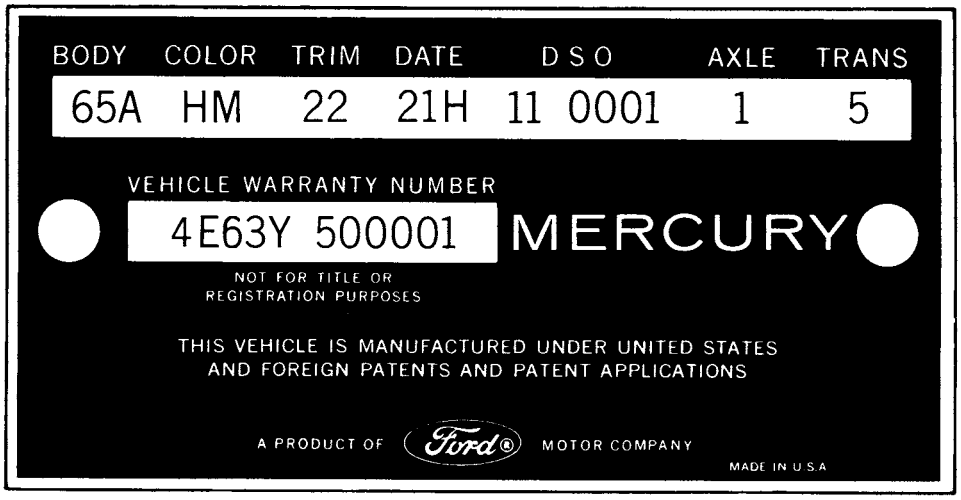

★
NS TRIM CODE
22 1

★
SERVICED TRIM CODE
22 A

ASSEMBLY PLANT CODES

CODE	ASSEMBLY PLT.	CODE	ASSEMBLY PLT.
E	Mahwah	R	San Jose
F	Dearborn	T	Metuchen
H	Lorain	W	Wayne
J	Los Angeles	Y	Wixom
K	Kansas City	Z	St. Louis

SOFT TRIM SCHEME CODES

REFER TO: The Master Price & Reference List, Form MD-4230

DISTRICT CODES

Refer to: Soft Trim Section of Master Price & Reference List Form MD-4230.

1964 MERCURY MODEL IDENTIFICATION

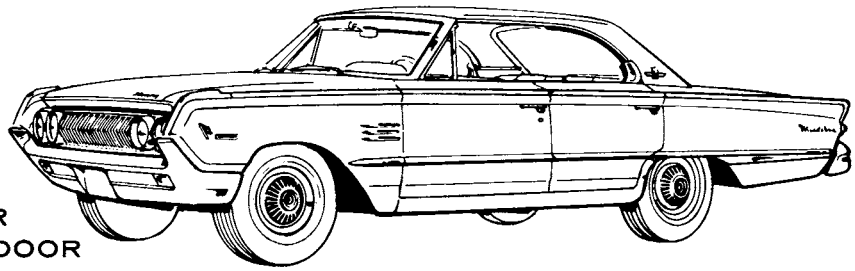

MARAUDER
2-DOOR OR 4-DOOR

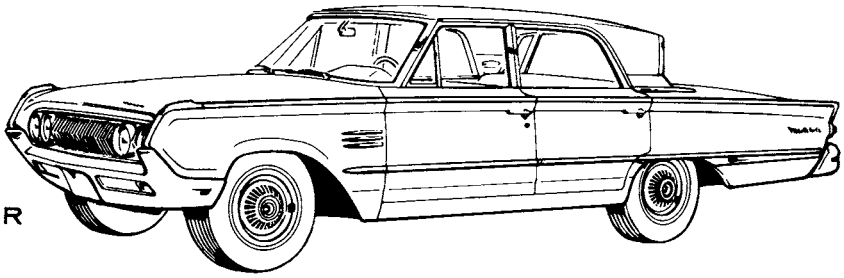

PASSENGER
2-DOOR OR 4-DOOR

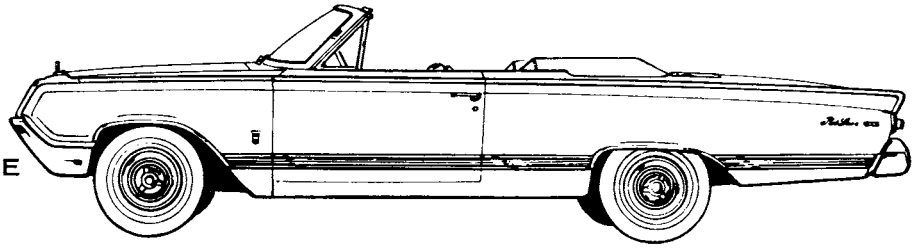

CONVERTIBLE
2-DOOR

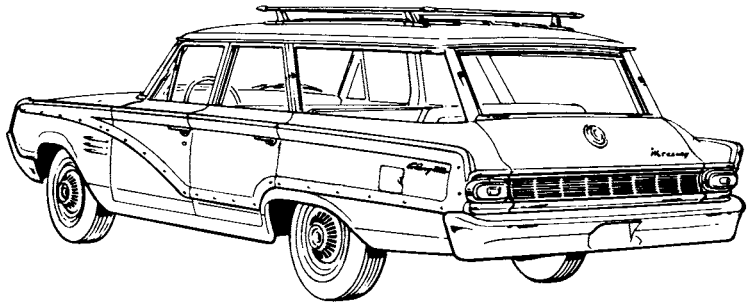

STATION WAGON
4-DOOR

BODY CODE	BODY STYLE CODES	BODY CODE	BODY STYLE CODES
54A	4-Door Sedan (Monterey)	65A	2-Door Hardtop—Monterey
54B	4-Door Sedan (Montclair)	65B	2-Door Hardtop—Montclair
54F	4-Door Sedan (Parklane)	65C	2-Door Hardtop—Parklane (Bucket Seat)
57A	4-Door Hardtop-Fastback—Monterey	65F	2-Door Hardtop—Parklane
57C	4-Door Hardtop-Fastback—Parklane Marauder (Bucket Seat)	71A	4-Door—Commuter Station Wagon (6 passenger)
57D	4-Door Hardtop-Fastback—Montclair Marauder	71B	4-Door—Colony Park Station Wagon (6 passenger)
57F	4-Door Hardtop-Fastback—Parklane Marauder	71C	4-Door—Commuter Station Wagon (9 passenger)
62A	2-Door Sedan Monterey	71D	4-Door—Colony Park Station Wagon (9 passenger)
63A	2-Door Hardtop-Fastback—Monterey	75F	4-Door Hardtop—Parklane
63C	2-Door Hardtop-Fastback—Parklane Marauder (Bucket Seat)	76A	2-Door Convertible—Monterey
63D	2-Door Hardtop-Fastback—Montclair Marauder	76C	2-Door Convertible—Parklane (Bucket Seat)
63F	2-Door Hardtop-Fastback—Parklane Marauder	76F	2-Door Convertible—Parklane

1964 MERCURY WARRANTY PLATE INFORMATION

The following breakdown of Codes will appear on the Warranty Plate according to the build-up of each vehicle.

EXTERIOR PAINT CODES

(A "No Punch" In Paint Code Space Designates Special Paint)

CODE	COLOR	*SPEC. NBR.
A	Onyx	M30J-1724
B	Peacock	M30J-1638
D	Silver Turquoise	M30J-1625
F	Pacific Blue	M30J-1622
G	Palomino	M30J-1636
I	Aztec Gold	M30J-1635
J	Carnival Red	M30J-1515
K	Anniversary Silver	M30J-1621
L	Bittersweet	M30J-1637
M	Polar White	M30J-1619
P	Pecan Frost	M30J-1738
R	Yellow Mist	M30J-1633
T	Fawn	M30J-1631
V	Maize	M30J-1729
W	Pink Frost	M30J-1555
X	Burgundy	M30J-1632
Y	Glacier Blue	M30J-1623
Z	Platinum Beige	M30J-1630

*M-32J Acrylic Enamel is Alternate with M-30J Enamel

TRANSMISSION CODES

CODE	TRANSMISSION TYPE	
1	Standard (3-speed)	(3/S)
2	Standard (3-Speed) O/D	(O/D)
4	Dual Range Automatic	(D/R)
5	Standard (4-Speed)	(4/S)

ENGINE CODES

CODE	ENGINE TYPE
Y	8 Cyl.—390 C.I.D., 2-V Carb. (Regular)
H	8 Cyl.—390 C.I.D., 2-V Carb (Special)
Z	8 Cyl.—390 C.I.D., 4-V Carb.
P	8 Cyl.—390 C.I.D., 4-V Carb. Police Special
P	8 Cyl.—390 C.I.D., 4-V Carb. (Interceptor) *(Identified by Chrome Dress-up)*
9	8 Cyl.—390 C.I.D., 4-V Carb. (Low Comp.)
M	8 Cyl.—396 C.I.D., 4-V Carb.
Q	8 Cyl.—427 C.I.D., 4-V Carb.
R	8 Cyl.—427 C.I.D., 8-V Carb.

BODY STYLE CODES

BODY CODE	SERIES CODE	BODY STYLE CODES
54A	42	4-Door Sedan (Monterey)
54B	52	4-Door Sedan (Montclair)
54F	62	4-Door Sedan (Parklane)
57A	48	4-Door Hardtop-Fastback—Monterey
57C	68	4-Door Hardtop-Fastback—Parklane Marauder
57D	58	4-Door Hardtop-Fastback—Montclair Marauder
57F	68	4-Door Hardtop-Fastback—Parklane Marauder
62A	41	2-Door Sedan—Monterey
63A	47	2-Door Hardtop-Fastback—Monterey
63C	67	2-Door Hardtop-Fastback—Parklane Marauder (Bucket Seat)
63D	57	2-Door Hardtop-Fastback—Montclair Marauder
63F	67	2-Door Hardtop-Fastback—Parklane Marauder
65A	43	2-Door Hardtop—Monterey
65B	53	2-Door Hardtop—Montclair
65C	63	2-Door Hardtop—Parklane (Bucket Seat)
65F	63	2-Door Hardtop—Parklane
71A	72	4-Door—Commuter Station Wagon (6 passenger)
71B	76	4-Door—Colony Park Station Wagon (6 passenger)
71C	72	4-Door—Commuter Station Wagon (9 passenger)
71D	76	4-Door—Colony Park Station Wagon (9 passenger)
75F	64	4-Door Hardtop—Parklane
76A	45	2-Door Convertible—Monterey
76C	65	2-Door Convertible—Parklane (Bucket Seat)
76F	65	2-Door Convertible—Parklane

REAR AXLE CODES

NON-LOCKING DIFF.	RATIO	LOCKING DIFF.
1	3.00:1	NOTE: Equa Lock Ratio's are identified by the comparable alphabetical equivalent of the numeric used on the regular Axle Ratio's i.e., 1=A, 5=E, Etc.
4	3.25 to 1	
5	3.50:1	
8	3.89:1	
9	4.11:1	

VEHICLE DATE CODES

CODE	*CODE	MONTH
A	N	January
B	P	February
C	Q	March
D	R	April
E	S	May
F	T	June
G	U	July
H	V	August
J	W	September
K	X	October
L	Y	November
M	Z	December

*2 Year Code Letters To Be Used if 1964 Models Exceed 12 Months.

1964 COMET MODEL IDENTIFICATION

HARDTOP
2-DOOR

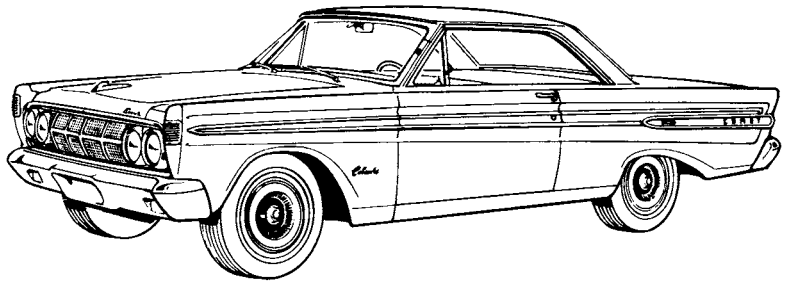

PASSENGER
2-DOOR OR 4-DOOR

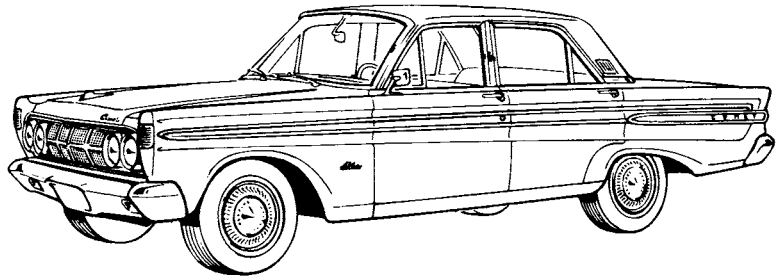

CONVERTIBLE

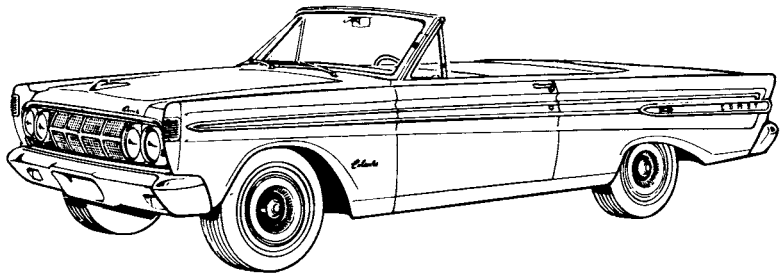

STATION WAGON
4-DOOR

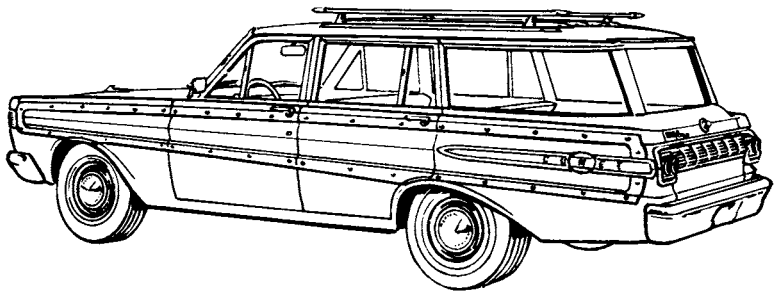

BODY CODE	BODY STYLE	BODY CODE	BODY STYLE
54A	4-Door Sedan—202	63C	2-Door Hardtop—Caliente (Bucket Seat)
54B	4-Door Sedan—404	63D	2-Door Hardtop—Caliente
54C	4-Door Sedan—Caliente (Bucket Seat)	71A	4-Door Station Wagon—202
54D	4-Door Sedan—Caliente	71B	4-Door Station Wagon—404
62A	2-Door Sedan—202	71C	4-Door Station Wagon—404 (Wood Rail)
62B	2-Door Sedan—404	76B	2-Door Convertible—Caliente (Bucket Seat)
62C	2-Door Sedan—404 (Bucket Seat)	76D	2-Door Convertible—Caliente

1964 COMET WARRANTY PLATE INFORMATION

The following breakdown of Codes will appear on the Warranty Plate according to the build-up of each vehicle.

BODY STYLE CODES

BODY CODE	SERIES CODE	BODY STYLE
54A	02	4-Door Sedan—202
54B	12	4-Door Sedan—404
54C	22	4-Door Sedan—Caliente (Bucket Seat)
54D	22	4-Door Sedan—Caliente
62A	01	2-Door Sedan—202
62B	11	2-Door Sedan—404
62C	11	2-Door Sedan—404 (Bucket Seat)
63C	23	2-Door Hardtop—Caliente (Bucket Seat)
63D	23	2-Door Hardtop—Caliente
63E	27	2-Door Hardtop—Cyclone (Bucket Seats)
71A	32	4-Door Station Wagon—202
71B	34	4-Door Station Wagon—404
71C	36	4-Door Station Wagon—404 (Wood Rail)
76B	25	2-Door Convertible—Caliente (Bucket Seat)
76D	25	2-Door Convertible—Caliente

ENGINE CODES

CODE	ENGINE TYPE
U	6 CYL.—170 C.I.D., 1-V CARB.
4	6 CYL.—170 C.I.D., 1-V CARB. (Low Comp.)
T	6 CYL.—200 C.I.D., 1V CARB.
F	8 CYL.—260 C.I.D., 2-V CARB.
6	8 CYL.—260 C.I.D., 2V CARB. (Low Comp.)
D	8 CYL.—289 C.I.D., 4V CARB. (Special Performance) (Identified by Transistorized Ignition System)
K	8 CYL.—289 C.I.D., 4V CARB. (Cyclone) (Identified by Chrome Dress-up)

REAR AXLE CODES

CODE	RATIO	CODE	RATIO
1	3.00:1	5	3.50:1
3	3.20:1	6	2.80:1
4	3.25:1		

NOTE: Equa Lock Ratios are identified by the comparable alphabetical equivalent of the numeric used on the regular Axle Ratios i.e., 1 = A, 5 = E, etc.

TRANSMISSION CODES

CODE	TRANSMISSION TYPE
1	Standard (3-Speed) (3/S)
3	Automatic (2-Speed) (2/S)
5	Standard (4-Speed) (4/S)
6	Automatic (3-Speed) (D/R)—(XP)

EXTERIOR PAINT CODES

(A "No Punch" In Paint Code Space Designates Special Paint)

CODE	COLOR	*SPEC. NBR.
A	Onyx	M30J-1724
B	Peacock	M30J-1638
D	Silver Turquoise	M30J-1625
F	Pacific Blue	M30J-1622
G	Palomino	M30J-1636
J	Carnival Red	M30J-1515
K	Anniversary Silver	M30J-1621
M	Polar White	M30J-1619
R	Yellow Mist	M30J-1633
T	Fawn	M30J-1631
X	Burgundy	M30J-1632
Y	Glacier Blue	M30J-1623
Z	Platinum Beige	M30J-1630

*M-32J Acrylic Enamel is alternate with M-30J Enamel.

VEHICLE DATE CODES

CODE	*CODE	MONTH
A	N	January
B	P	February
C	Q	March
D	R	April
E	S	May
F	T	June
G	U	July
H	V	August
J	W	September
K	X	October
L	Y	November
M	Z	December

*2 year code letters to be used if 1964 models exceed 12 months

1964 LINCOLN CONTINENTAL MODEL IDENTIFICATION

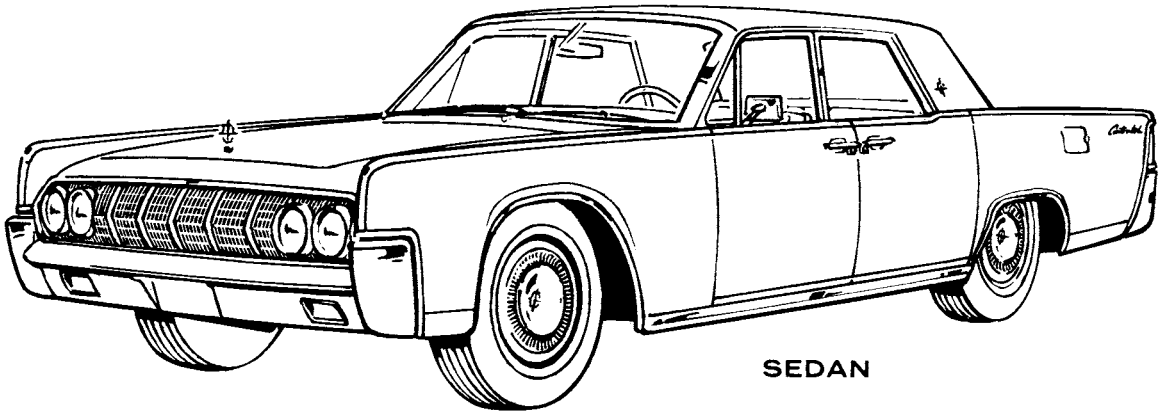

SEDAN

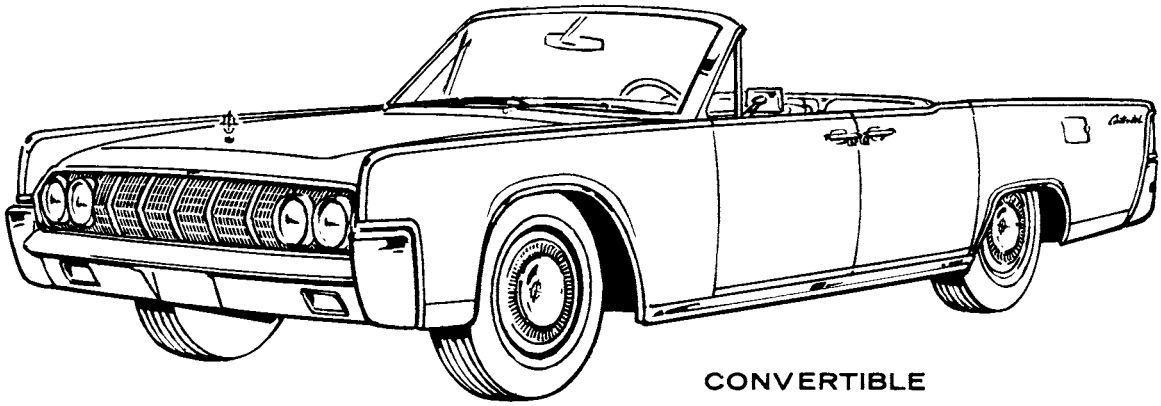

CONVERTIBLE

BODY CODE	BODY STYLE
53A	Lincoln Continental 4-Door Sedan
74A	Lincoln Continental 4-Door Convertible

1964 LINCOLN CONTINENTAL WARRANTY PLATE INFORMATION

The following breakdown of Codes will appear on the Warranty Plate: according to the build-up of each vehicle

BODY STYLE CODES

BODY CODE	SERIES CODE	BODY STYLE
53A	82	Lincoln Continental 4-Door Sedan
74A	86	Lincoln Continental 4-Door Convertible

TRANSMISSION CODE

CODE	TRANSMISSION TYPE
4	AUTOMATIC DUAL RANGE

REAR AXLE CODE

NON-LOCKING DIFF.	RATIO	LOCKING DIFF.
1	2.89:1	NOTE: Equa Lock Ratios are identified by the comparable alphabetical equivalent of the numeric used on the regular Axle Ratios i.e., 1=A, 5=E, etc.
3	3.11:1	

VEHICLE DATE CODES

CODE	*CODE	MONTH
A	N	January
B	P	February
C	Q	March
D	R	April
E	S	May
F	T	June
G	U	July
H	V	August
J	W	September
K	X	October
L	Y	November
M	Z	December

**To be used if 1964 model exceeds 12 months*

EXTERIOR PAINT CODES

(A "No Punch" in the paint color space indicates Special Paint)

CODE	COLOR	*SPEC. NBR.
A	Black Satin	M32J-1724
C	Princeton Gray	M32J-1620
E	Silver Blue	M32J-1446
F	Powder Blue	M32J-1226
G	Buckskin	M32J-1636
H	Nocturne Blue	M32J-1544
J	Fiesta Red	M32J-1515
M	Arctic White	M32J-1619
N	Platinum	M32J- 921
O	Silver Green	M32J-1629
P	Burnish Bronze	M32J-1738
Q	Huron Blue	M32J-1624
R	Encino Yellow	M32J-1633
S	Highlander Green	M32J-1453
T	Desert Sand	M32J-1631
U	Regal Turquoise	M32J-1070
W	Rose	M32J-1555
X	Royal Maroon	M32J-1632
Z	Silver Sand	M32J-1630

ENGINE CODE

CODE	ENGINE TYPE
N	8 CYL. 430 C.I.D.—4-V CARB.
7	8 CYL. 430 C.I.D.—4-V CARB. LOW COMPRESSION

ABBREVIATIONS

accel. .....accelerator
A/cond. or A/C.....air conditioner
adj. .....adjusting
alum. .....aluminum
AM .....amplitude modulation
amp. .....ampere
approx. .....approximately
AR .....as required
assy. .....assembly
A/T .....automatic transmission
auto. .....automatic
aux. .....auxiliary
b. hd. .....button head
brg. .....bearing
brkt. .....bracket
bshg. .....bushing
B/U lamp .....back-up lamp
bump. .....bumper
cap. .....capacity
carb. .....carburetor
C.I. .....cast iron
C.I.D. .....engine cubic inch displacement
comm. .....commercial
comp. .....compression
compt. .....compartment
conn. .....connecting
conntr. .....connector
coup. or cplg.....coupling
C.P. .....candle power
c/p .....concealed pillar
c/pin .....cotter pin
c/shaft .....crankshaft
cyl. .....cylinder
D/A .....double action
D.C. .....double contact
def. .....defroster
defl. .....deflector
dia. .....diameter
diaph. .....diaphragm
diff. .....differential
dist. .....distributor
dr. .....door
D/R .....dual range transmission
econ. .....economizer
elect. .....electric
emer. .....emergency
equip. .....equipment
exh. .....exhaust
ext. .....extension
ext. .....external
fill. hd. .....fillister head
fl. hd. .....flat head
FM .....frequency modulation
fr. or frt. .....front
ft. .....foot or feet
ga. .....gauge
gal. .....gallon
gen. .....generator
gov. .....governor
grmt. .....grommet

ABBREVIATIONS - Continued

ret.	retainer
R.H. or R	right hand
R.H.D.	right hand drive
RPM	revolutions per minute
R.P.O.	regular production option
rr.	rear
S.A.	service in assembly
S/A	single action
S.C.	single contact
S.D.	service details
sec.	secondary
spdl.	spindle
spec.	special
spec. hd.	special head
sprg.	spring
sq.	square
sq. hd.	square head
S/R	single range transmission
S/T	standard transmission
std.	standard
strg.	steering
supp.	support
susp.	suspension
S/W or sta. wagon	station wagon
tap.	tapping
T'bird	Thunderbird
temp.	temperature
thrd. or thd.	thread
trans.	transmission
univ.	universal
univ./jt.	universal joint
U/S	undersize
V	V-belt
vac.	vacuum
vent	ventilator
w/	with
w/o	without
W/S	windshield
wshr.	washer
2/S	two speed transmission
3/S	three speed transmission
4/S	four speed transmission
1V	one venturi
2V	two venturi
4V	four venturi
6V	six venturi

Alphabetical Index

Part Name	Group Number
A	
ABSORBER-BODY BOLT	00154-5
ABSORBER-COWL SIDE PANEL SOUND-UPPER	02422
ABSORBER-DASH PANEL STEERING COLUMN OPENING COVER SOUND	01708
ABSORBER-DASH PANEL UPPER SOUND	01492
ABSORBER-DASH SOUND	01670-1
ABSORBER-FLOOR PANS-SOUND	11654
ABSORBER-HOOD SOUND	16738
ABSORBER-INSTRUMENT PANEL BOTTOM EXTENSION INNER SOUND	044A58
ABSORBER-INSTRUMENT PANEL BOTTOM EXTENSION OUTER SOUND	044A66-7
ABSORBER-INSTRUMENT PANEL LOWER CENTER EXTENSION OUTER SOUND	044A64
ABSORBER-INSTRUMENT PANEL LOWER OUTER EXTENSION SOUND-CENTER	044B68
ABSORBER-INSTRUMENT PANEL LOWER OUTER EXTENSION SOUND-INNER	044A56
ABSORBER-INSTRUMENT PANEL LOWER OUTER EXTENSION SOUND-OUTER	044A62
ABSORBER-REAR BUMPER ARM IMPACT BAR	17A924
ABSORBER-WINDSHIELD WIPER MOTOR MOUNTING BRACKET SOUND	17453
ACTUATOR-A/COND. EVAPORATOR DOOR CONTROL	19780
ACTUATOR-FRONT DOOR VACUUM LOCK	218A42-3
ACTUATOR-FRONT SEAT ADJUSTER-HORIZONTAL	618A36-7
ACTUATOR-FRONT SEAT ADJUSTER-VERTICAL	618A12-3
ACTUATOR-LUGGAGE COMPARTMENT DOOR LOCK VACUUM	43232
ACTUATOR-REAR DOOR COURTESY LAMP SWITCH	24636
ACTUATOR-REAR DOOR VACUUM LOCK	26594-5
ADAPTOR-A/COND. SIDE COWL DUCT-R.H.	19A882
ADAPTOR-MULTIPLE LUBRICATOR VACUUM HOSE TO BODY	19543
ADAPTOR REAR SEAT BELT MOUNTING KIT	61156
ADAPTOR-SPEEDOMETER	17294
ADAPTOR-WINDSHIELD WASHER CONTROL CABLE	17A607
ADAPTOR-WINDSHIELD WIPER CONTROL CABLE	17A538
ADAPTOR-WINDSHIELD WIPER COORDINATOR	17A474
A/COND. COMPRESSOR GASKET REPAIR KIT	19B684
A/COND.EXTRA COOLING KIT	19B969
A/COND. KIT	19700
ANTENNA MOUNTING INSTALLATION KIT	18917
ANTI-RATTLER-LUGGAGE COMPARTMENT DOOR	45028
ANTI-RATTLER-REAR SEAT BACK FLOOR EXTENSION PANEL	61325
ANTI-RATTLER-REAR SEAT BACK LATCH HANDLE	61336
ANTI-RATTLER-SPARE WHEEL COVER PANEL	47017
ANTI-RATTLER-TAILGATE LOCK RELEASE	431C70
ANTI-RATTLER-TAILGATE SUPPORT ON PILLAR	44454
ANTI-SQUEAK-REAR CORNER PILLAR	41078
APRON-FRONT FENDER	16054-5
ARM-A/COND.& HEATER VACUUM MOTOR CONTROL	19A783
ARM-A/COND. VENT AIR OUTLET DOOR	18A444
ARM & BRACKET-REAR VIEW INSIDE MIRROR	17069
ARM & BRACKET-VISOR	04144-5
ARM & LINK-WINDSHIELD WIPER	17A464
ARM & PIVOT SHAFT-WINDSHIELD WIPER MOUNTING	17B432-3
ARM & PIVOT SHAFT-WINDSHIELD WIPER MOUNTING	17566-7
ARM & PLATE-FRONT DOOR WINDOW REGULATOR	23234-5
ARM-ANTENNA DRIVE TENSION SPRING	19044
ARM ASSEMBLY-LUGGAGE COMPARTMENT DOOR LIFT TO BODY	42850-1
ARM ASSEMBLY-WINDSHIELD WIPER MOUNTING	17540
ARM ASSEMBLY-WINDSHIELD WIPER OUTPUT	17A436
ARM-AUXILIARY SEAT BACK FLOOR PIVOT	60830-1
ARM-AUXILIARY SEAT CUSHION WELL FLOOR PIVOT	60834
ARM-BACK WINDOW REGULATOR	40805
ARM-FRONT BUMPER-INNER	17766-7
ARM-FRONT BUMPER-INNER	17A873-4
ARM-FRONT BUMPER-INTERMEDIATE	17A782-3
ARM-FRONT BUMPER-LOWER	17782-3
ARM-FRONT BUMPER-OUTER	17754-5
ARM-FRONT BUMPER-UPPER	17770-1
ARM-FRONT VIBRATION DAMPER	11022-3
ARM-FRONT VIBRATION DAMPER RESTRAINER	11034-5
ARM-GLOVE COMPARTMENT DOOR CHECK	06117
ARM-REAR BUMPER-INNER	17787-8
ARM-REAR BUMPER-OUTER	17795-6
ARM-REAR VIBRATION DAMPER	11010-1
ARM-REAR VIBRATION DAMPER RESTRAINER	11044
ARM-REAR VIEW INSIDE MIRROR	17690
ARM-SPARE WHEEL FLOOR PIVOT	45842-3
ARM-WINDSHIELD WIPER	17526-7
ARM-WINDSHIELD WIPER DRIVE	17B545
ARMATURE & GEAR ASSEMBLY WINDSHIELD WIPER KIT	17C437
ARMATURE-WINDSHIELD WIPER MOTOR	17A485
B	
BAFFLE-A/COND.EVAPORATOR CASE	19A999
BAFFLE & RETAINER-SPEEDOMETER LAMP	17A321
BAND-A/COND. BLOWER MOTOR MOUNTING	19A991
BAR-BACK WINDOW DIVISION	42040-1
BAR-FRONT BUMPER IMPACT	17756-7
BAR-FRONT BUMPER IMPACT-LOWER	17802

Alphabetical Index—Continued

Part Name	Group Number
BAR-FRONT BUMPER IMPACT-UPPER	17762
BAR-FRONT DOOR VENT WINDOW DIVISION	22298-9
BAR-FRONT SEAT TRACK EQUALIZER-HORIZONTAL	61842
BAR-FRONT SEAT TRACK EQUALIZER-VERTICAL	61832
BAR-HOOD HINGE TORSION	16A605-6
BAR-LUGGAGE COMPARTMENT DOOR & TAILGATE TORSION	44890-1
BAR-REAR BUMPER IMPACT	17906
BAR-REAR BUMPER IMPACT-CENTER	17866
BAR-REAR BUMPER IMPACT-OUTER	17862-3
BAR-REAR DOOR WINDOW DIVISION	26900-1
BAR-REAR SEAT BACK FLOOR SUPPORT TIE	605A52
BAR-REAR SEAT CUSHION TORQUE	606A38-9
BASE-COAT HOOK	290B58
BASE-FOLDING TOP MAIN PIVOT SUPPORT	506A44-5
BASE-JACK	17088
BASE-RADIO ANTENNA	18936
BASE-WINDSHIELD WIPER COORDINATOR MOUNTING	17A473
BEARING-BACK WINDOW REGULATOR HANDLE HOUSING	40940
BEARING-FRONT DOOR VENT WINDOW PIVOT	22330
BEARING-FRONT SEAT ADJUSTER HORIZONTAL REGULATOR SCREW	60582
BEARING-FRONT SEAT ADJUSTER REGULATOR HOUSING	617A18
BEARING-FRONT SEAT ADJUSTER REGULATOR NEEDLE THRUST	617A26
BEARING-FRONT SEAT ADJUSTER REGULATOR SCREW	617A20
BEARING-REAR SEAT BACK LATCH HANDLE	61346
BEARING-REAR VIEW OUTSIDE MIRROR BALL STUD	17A711
BELLCRANK-REAR DOOR LOCK	26448-9
BELT-HEATER & A/COND. TEMPERATURE REGULATOR CONTROL	18A501
BELT-HEATER TEMPERATURE REGULATOR CONTROL POINTER-LARGE	18B398
BEZEL-A/COND. INSTRUMENT PANEL REGISTER	19649
BEZEL-A/COND. INSTRUMENT PANEL REGISTER	19670
BEZEL-A/COND. INSTRUMENT PANEL REGISTER DOOR TRIM	19B820
BEZEL-A/COND. REGULATOR	19A832
BEZEL-FRONT DOOR LOCK CONTROL	218A82
BEZEL-GLOVE COMPARTMENT LOCK	060A12
BEZEL-HEATER & A/COND. BLOWER SWITCH	18598
BEZEL-HEATER BLOWER CONTROL INNER	18B404
BEZEL-HEATER CONTROL	18A668
BEZEL-HEATER TEMPERATURE REGULATOR CONTROL	18A502
BEZEL-RADIO ANTENNA	19103
BEZEL-RADIO CONTROL	18A802
BEZEL-RADIO CONTROL	18806
BEZEL-RADIO CONTROL	18842
BEZEL-RADIO RECEIVER	18A910
BEZEL-SPEEDOMETER	17A260
BEZEL-VENT AIR VALVE CONTROL INNER	18B405
BEZEL-WINDSHIELD DEFROSTER OUTLET	18A639
BLADE INSERT-WINDSHIELD WIPER LESS FRAME	17593
BLADE-WINDSHIELD WIPER	17528
BLOCK-HEATER & A/COND. TEMPERATURE REGULATOR CONTROL HOSE CONNECTOR	18A525
BLOWER-A/COND.	19924
BLOWER-HEATER & A/COND.	18456
BODY-FRONT FENDER-LOWER	16B144-5
BODY-MULTIPLE LUBRICATOR	19536
BODY ROCKER PANEL MOULDING KIT	10146
BODY-VENT AIR VALVE	01854
BODY-WINDSHIELD WIPER-AUXILIARY DRIVE	17579
BOLT-A/COND.DEHYDRATOR TANK MOUNTING	19B938
BOLT-BUMPER BAR TO ARM	17758
BOLT-DOOR CHECK LINK	22846
BOLT-FOLDING TOP HYDRAULIC LIFT RESERVOIR ATTACHING	53453
BOLT-FOLDING TOP SIDE LINK	50618
BOLT-FRONT SEAT BACK PIVOT ARM	60392
BOLT-FRONT SHOCK ABSORBER MOUNTING	18047
BOLT-SEAT BELT ANCHOR FRONT SEAT INSTALLATION	61212
BOLT-TAILGATE OUTSIDE LOWER MOULDING RETAINING	425A36
BOOT-FRONT SEAT BELT	61140
BOOT-TAILGATE RELEASE HANDLE	431D60
BOOT-WINDSHIELD WIPER TERMINAL SEAL	17C440
BOW-FOLDING TOP-NO. 1	53038
BOW-FOLDING TOP-NO. 2	51274
BOW-FOLDING TOP-NO. 3	51269
BOW-FOLDING TOP-NO. 4	51278
BOW-FOLDING TOP-REAR OUTER-LESS GLASS	51406-7
BOX & SNUFFER-ASH RECEPTACLE	04821
BRACE-A/COND. BLOWER MOTOR	19B559
BRACE ASSEMBLY-LOWER BACK PANEL TO FLOOR OUTER	403A98-9
BRACE-BRAKE PEDAL SUPPORT	01524
BRACE-CENTER FLOOR INNER SIDE MEMBER	104A44-5
BRACE-DASH TO FRAME	01714-5
BRACE-FOLDING TOP MAIN PIVOT BRACKET SUPPORT	53152-3
BRACE-FRONT BUMPER IMPACT BAR-INNER	17A984-5
BRACE-FRONT BUMPER MOUNTING BRACKET	17B765-6
BRACE-FRONT BUMPER-END	17A820-2
BRACE-FRONT FENDER APRON & RADIATOR SUPPORT	16152-3
BRACE-FRONT FENDER APRON TO COWL TOP-FRONT	16B232-3
BRACE-FRONT FENDER APRON TO COWL TOP-REAR	16B234-5
BRACE-FRONT FENDER APRON TO DASH	16A052-3
BRACE-FRONT FENDER APRON TO FENDER LOWER-REAR	16044-5
BRACE-FRONT FENDER APRON TO RADIATOR SUPPORT	16A125
BRACE-FRONT FENDER TO FRAME	16B134-5

Alphabetical Index—Continued

Part Name	Group Number
BRACE-FRONT FENDER TO FRONT FENDER APRON & RADIATOR SUPPORT	16A023-4
BRACE-FRONT FENDER TO UPPER APRON REINFORCEMENT	16B214-5
BRACE-FRONT SUSPENSION TO SIDE MEMBER	10376
BRACE-GLOVE COMPARTMENT DOOR LOCK STRIKER	017A64
BRACE-HOOD LOCK SUPPORT	16A626
BRACE-HOOD LOCK SUPPORT	16747
BRACE-INSTRUMENT PANEL FLANGE TO COWL INNER PANEL	04672
BRACE-INSTRUMENT PANEL TO STEERING COLUMN	04055
BRACE-INSTRUMENT PANEL-UPPER HALF TO LOWER HALF	04488
BRACE-LOWER BACK PANEL	40396-7
BRACE-LOWER BACK PANEL-TO FLOOR	40274
BRACE-LOWER BACK PANEL-UPPER FLANGE TO FLOOR	403A40-1
BRACE-QUARTER LOCK PILLAR TO FLOOR	28198-9
BRACE-QUARTER LOCK PILLAR TO INNER FLOOR SIDE MEMBER-CENTER	28262
BRACE-QUARTER LOCK PILLAR TO INNER FLOOR SIDE MEMBER-UPPER	28278
BRACE-QUARTER LOCK PILLAR TO OUTER FLOOR SIDE MEMBER	29388-9
BRACE-QUARTER LOCK PILLAR TO SIDE MEMBER-OUTER	29386-7
BRACE-QUARTER PANEL TO WHEELHOUSE	27800-1
BRACE-REAR BUMPER-END	17789
BRACE-REAR BUMPER IMPACT BAR END OUTER	17A797-8
BRACE-REAR BUMPER MOUNTING BRACKET TO CROSSMEMBER	17A906-7
BRACE-REAR BUMPER MOUNTING BRACKET TO FLOOR	17208
BRACE-REAR BUMPER OUTER ARM SUPPORT TO SIDE MEMBER	17A856-7
BRACE-SPARE WHEEL INNER PANEL	47000
BRACKET-A/COND. & HEATER CONTROL MOUNTING	19A884
BRACKET-A/COND. BLOWER HOUSING SUPPORT	19A623
BRACKET-A/COND. CONDENSOR MOUNTING	19709
BRACKET-A/COND. EVAPORATOR CASE SUPPORT	19A785
BRACKET-A/COND. EVAPORATOR SUPPORT	19A804-5
BRACKET-A/COND. EVAPORATOR TO INSTRUMENT PANEL MOUNTING	19A637
BRACKET-A/COND. INSTRUMENT PANEL REGISTER	19A840-1
BRACKET-A/COND. MOTOR SUPPORT	19A992
BRACKET-A/COND. MUFFLER SUPPORT	19B692
BRACKET-A/COND. REGISTER LOCK ROLLER SUPPORT MOUNTING	19B933
BRACKET-A/COND. REGISTER THERMOSTAT MOUNTING	19A949
BRACKET & GUSSET ASSEMBLY-FRONT BUMPER MOUNTING	17B792-3
BRACKET & HINGE-QUARTER WINDOW-ON BODY	29976-7
BRACKET & PIVOT-VISOR	04090-1
BRACKET & SCREW ROOF & DECK MOUNTING LUGGAGE CARRIER KIT	55078
BRACKET & WIRING-VANITY MIRROR LAMP	18233
BRACKET-ANTENNA MOUNTING	18939
BRACKET-AUTOMATIC SHIFT MOUNTING PLATE	045B80
BRACKET-AUXILIARY FLOOR SUPPORT	111A00-1
BRACKET-BACK WINDOW EQUALIZER ARM	42018
BRACKET-BACK WINDOW-LOWER STOP	42325
BRACKET-BACK WINDOW REGULATOR EQUALIZING ARM GUIDE	40833
BRACKET-CENTER BODY PILLAR-LOWER	24436-7
BRACKET-CENTER BODY UPPER PILLAR TO ROOF	24574-5
BRACKET-CONSOLE COMPARTMENT DOOR CHECK ARM	060A10
BRACKET-CONSOLE MOUNTING-FRONT	045B32
BRACKET-CONSOLE MOUNTING-REAR	045B34
BRACKET-CONSOLE MOUNTING-UPPER	045C46
BRACKET-COWL SIDE TRIM PANEL	02092
BRACKET-COWL TOP PANEL TO FRONT FENDER APRON	02294-5
BRACKET-COWL TOP VENTILATOR GRILLE RETAINING	02224
BRACKET-DASH AT STEERING COLUMN-SUPPORT REINFORCEMENT	016B12
BRACKET-DOME LAMP MOUNTING	51496
BRACKET-DOOR ARM REST MOUNTING	24116
BRACKET-DOOR VENTILATOR WINDOW FRAME STABILIZER BAR	22288-9
BRACKET-DOOR WINDOW STOP	21760-1
BRACKET-FLOOR PAN TO REAR SEAT BACK STRAINER	11456
BRACKET-FLOOR SIDE MEMBER INNER FRONT EXTENSION TO DASH	10054
BRACKET-FOLDING TOP BALANCE LINK ADJUSTING	50478-9
BRACKET-FOLDING TOP BALANCE LINK PIVOT	50450
BRACKET-FOLDING TOP LIFT MOTOR MOUNTING	50747
BRACKET-FOLDING TOP LIFT TO BRACE	50808
BRACKET-FOLDING TOP LIFT TO FLOOR	50804
BRACKET-FOLDING TOP LIFT TO FLOOR	50800-1
BRACKET-FOLDING TOP MAIN PIVOT	53118-9
BRACKET-FOLDING TOP MAIN PIVOT SUPPORT TO WHEEL HOUSE-INNER	501A28-9
BRACKET-FOLDING TOP MAIN PIVOT SUPPORT TO WHEEL HOUSE-OUTER	501A30-1
BRACKET-FOLDING TOP NO. 1 BOW MOTOR MOUNTING	514A14
BRACKET-FOLDING TOP NO. 3 BOW	53144-5
BRACKET-FRONT BUMPER MOUNTING	17A793-4
BRACKET-FRONT BUMPER TO FENDER	17A869
BRACKET-FRONT DOOR HINGE SPRING	228A10
BRACKET-FRONT DOOR LOCK OPERATING	218A74-5
BRACKET-FRONT DOOR OPENING FRONT WINDLACE & RETAINER	02619
BRACKET-FRONT DOOR VENTILATOR WINDOW GLASS RUN LOWER-INNER	22912
BRACKET-FRONT DOOR VENTILATOR WINDOW-LOWER PIVOT	22954

Alphabetical Index—Continued

Part Name	Group Number
BRACKET-FRONT DOOR VENTILATOR WINDOW-UPPER PIVOT	21464-5
BRACKET-FRONT DOOR WINDOW GLASS RUN-LOWER	222A06
BRACKET-FRONT DOOR WINDOW-LOWER STOP	21790
BRACKET-FRONT DOOR WINDOW REGULATOR PLATE	23124
BRACKET-FRONT FENDER APRON WIRING HARNESS RETAINER	16B116
BRACKET-FRONT FENDER REAR-REINFORCEMENT	16C118-9
BRACKET-FRONT FENDER TO DASH	16144-5
BRACKET-FRONT FENDER TO FRONT FENDER APRON	16A204-5
BRACKET-FRONT FENDER TO PILLAR MOUNTING	16022-3
BRACKET-FRONT FENDER WIRING HARNESS RETAINING-REAR	16B118-9
BRACKET-FRONT SEAT ADJUSTER TUBE	618A88-9
BRACKET-FRONT SEAT CUSHION SIDE SHIELD-FRONT	62256
BRACKET-FRONT SEAT CUSHION SIDE SHIELD-REAR	62262
BRACKET-FRONT SEAT TRACK ASSIST SPRING	61804
BRACKET-FRONT SHOCK ABSORBER MOUNTING	18069
BRACKET-FRONT SHOCK ABSORBER MOUNTING-LOWER	18072
BRACKET-FRONT SHOCK ABSORBER MOUNTING-REAR	18A058
BRACKET-FRONT SHOCK ABSORBER-UPPER	18A017
BRACKET-FRONT SIDE MEMBER EXTENSION	103A32-3
BRACKET-FRONT VIBRATION DAMPER	11024
BRACKET-GLOVE COMPARTMENT DOOR LOCK MOUNTING	06136
BRACKET-GLOVE COMPARTMENT HINGE	06192
BRACKET-HEATER & A/COND.CONTROL MOUNTING	18531-2
BRACKET-HEATER & A/COND. HOSE SUPPORT	18481
BRACKET-HEATER & A/COND.WATER CONTROL VALVE MOUNTING	18A635
BRACKET-HOOD CONTROL	16930
BRACKET-HOOD HINGE ON HOOD	16698-9
BRACKET-HOOD LOCK TO DASH MOUNTING	16726
BRACKET-INSTRUMENT PANEL CENTER GUSSET MOUNTING	04559
BRACKET-INSTRUMENT PANEL CLOCK OPENING COVER MOUNTING	04396
BRACKET-INSTRUMENT PANEL GUSSET MOUNTING	04886
BRACKET-INSTRUMENT PANEL MOUNTING-UPPER	044B52-3
BRACKET-INSTRUMENT PANEL TO COWL SIDE	04366-7
BRACKET-INSTRUMENT PANEL VENT AIR CONTROL MOUNTING	04516-7
BRACKET-LUGGAGE COMPARTMENT DOOR BUMPER	40130
BRACKET-LUGGAGE COMPARTMENT DOOR HINGE TO WHEELHOUSE-LOWER	42744-5
BRACKET-LUGGAGE COMPARTMENT DOOR HINGE TO WHEELHOUSE-UPPER	42738-9
BRACKET-LUGGAGE COMPARTMENT DOOR HINGE TO WHEELHOUSE-UPPER	42704-5
BRACKET-LUGGAGE COMPARTMENT DOOR HYDRAULIC LIFT TO FLOOR	406A00
BRACKET-LUGGAGE COMPARTMENT DOOR LOCK NUT MOUNTING	40650-1
BRACKET-LUGGAGE COMPARTMENT DOOR LOCK RELEASE CONTROL VALVE	43384
BRACKET-LUGGAGE COMPARTMENT DOOR LOCK SOLENOID MOUNTING	43266
BRACKET-LUGGAGE COMPARTMENT DOOR LOCK STRIKER	43235
BRACKET-LUGGAGE COMPARTMENT DOOR OPENING SIDE REINFORCEMENT TO WHEELHOUSE	403B14-5
BRACKET-MULTIPLE LUBRICATOR PUMP MOUNTING	19A521
BRACKET-MULTIPLE LUBRICATOR RESERVOIR	19B523
BRACKET-PACKAGE TRAY PANEL ANCHOR-INNER	46684-5
BRACKET-PACKAGE TRAY PANEL TO INNER ROOF RAIL	46632-3
BRACKET-PACKAGE TRAY STRAINER TO WHEELHOUSE	46608-9
BRACKET-QUARTER ARM REST ATTACHING-FRONT	31822-3
BRACKET-QUARTER LOCK PILLAR TO ROOF RAIL	28360-1
BRACKET-QUARTER PANEL FUEL FILLER OPENING LID BUMPER	28641
BRACKET-QUARTER PANEL LOWER RUN EXTENSION	280A52
BRACKET-QUARTER PANEL TO CORNER PILLAR UPPER-REINFORCEMENT	29346-7
BRACKET-QUARTER PANEL TO WHEELHOUSE	29298-9
BRACKET-QUARTER PANEL WHEEL OPENING COVER-FRONT	28000-1
BRACKET-QUARTER PANEL WHEEL OPENING COVER-REAR	28002-3
BRACKET-QUARTER TRIM UPPER REAR TO ARM REST PANEL	31158
BRACKET-QUARTER TRIM WATER SHIELD TO WHEELHOUSE SUPPORT	31800
BRACKET-QUARTER WHEELHOUSE TO SIDE MEMBER GUSSET	279B84
BRACKET-QUARTER WINDOW FRONT GUIDE-LOWER	298A36
BRACKET-QUARTER WINDOW FRONT GUIDE-UPPER	298A30
BRACKET-QUARTER WINDOW GLASS RUN RETAINING	30046
BRACKET-QUARTER WINDOW GUIDE SUPPORT TO MEMBER FLOOR SIDE	30012
BRACKET-QUARTER WINDOW HINGE-ON BODY	29906-7
BRACKET-QUARTER WINDOW HINGE-ON BODY	29932-3
BRACKET-QUARTER WINDOW-LOWER STOP	29982-3
BRACKET-QUARTER WINDOW REGULATOR PANEL TO WHEELHOUSE	28014-5
BRACKET-QUARTER WINDOW STOP MOUNTING	30560
BRACKET-QUARTER WINDOW UPPER GLASS-RUN SUPPORT	30169
BRACKET-QUARTER WINDOW-UPPER STOP	29998-9
BRACKET-RADIO REAR SEAT SPEAKER	19080
BRACKET-REAR BUMPER MOUNTING	17A750-1
BRACKET-REAR BUMPER SUPPORT TO FRAME	17A909
BRACKET-REAR DOOR ARM REST ATTACHING-FRONT	27534
BRACKET-REAR DOOR ARM REST ATTACHING-REAR	31824
BRACKET-REAR DOOR HINGE STRAP	268A36-7

Alphabetical Index—Continued

Part Name	Group Number
BRACKET-REAR DOOR LOCK CONTROL REAR BELLCRANK PIVOT	26484-5
BRACKET-REAR DOOR LOCK CONTROL SOLENOID MOUNTING	26652
BRACKET-REAR DOOR WINDOW CENTER GUIDE ANCHOR	26192-3
BRACKET-REAR DOOR WINDOW FRONT GUIDE ADJUSTING LOWER	25470
BRACKET-REAR DOOR WINDOW FRONT RUN ADJUSTING	270A14
BRACKET-REAR DOOR WINDOW GUIDE ADJUSTMENT	26096
BRACKET-REAR DOOR WINDOW REAR GUIDE ADJUSTING-LOWER	25442
BRACKET-REAR DOOR WINDOW REGULATOR BY-PASS SWITCH ACTUATING	270A16-7
BRACKET-REAR SEAT BACK FLOOR EXTENSION PANEL ROLLER	61314
BRACKET-REAR SEAT BACK SPRING SUPPORT PANEL TO WHEELHOUSE-FRONT	605A90-1
BRACKET-REAR SEAT BACK SPRING SUPPORT PANEL TO WHEELHOUSE-REAR	605A92-3
BRACKET-REAR SEAT BACK STOP TO WHEELHOUSE	631A03
BRACKET-REAR SEAT CUSHION PIVOT	60520-1
BRACKET-REAR SEAT CUSHION TORQUE BAR INNER TO FLOOR	606A40
BRACKET-REAR SEAT CUSHION TORQUE BAR OUTER TO FLOOR	606A42
BRACKET-REAR SEAT SPEAKER	18960
BRACKET-REAR VIBRATION DAMPER ARM	11012-3
BRACKET-REAR VIEW INSIDE MIRROR	17684
BRACKET REAR VIEW INSIDE MIRROR KIT	17698
BRACKET-REAR WHEEL SPLASH SHIELD	16288
BRACKET-RELAY SWITCH TO FLOOR PAN MOUNTING SIDE	111B14-5
BRACKET-ROOF INTERIOR REAR LAMP MOUNTING	51616
BRACKET-ROOF SIDE REAR OUTER RAIL TO WHEELHOUSE	513A56-7
BRACKET-ROOF SIDE REAR OUTER RAIL TO WHEELHOUSE-LOWER	51670-1
BRACKET-ROOF SIDE REAR OUTER RAIL TO WHEELHOUSE-UPPER	51668-9
BRACKET-ROOF TRIM SIDE PANEL TO QUARTER WINDOW REGULATOR PANEL	50575
BRACKET-SHOCK ABSORBER MOUNTING-REAR	18132-3
BRACKET-SPARE WHEEL MOUNTING	47076
BRACKET-SPEEDOMETER HOUSING BEZEL MOUNTING	17A283
BRACKET-TAILGATE COUNTERBALANCE SPRING	430A06
BRACKET-UPPER BACK PANEL LIFT TO FLOOR	46720
BRACKET-UPPER BACK PANEL MOUNTING	40520
BRACKET-VENT AIR VALVE CONTROL MOTOR MOUNTING	01402
BRACKET-VENT AIR VALVE DAMPER CONTROL MOTOR	01804-5
BRACKET-VENT AIR VALVE DAMPER CONTROL WIRE	01822-3
BRACKET-VISOR CLIP MOUNTING	04131-2
BRACKET-WINDOW REGULATOR EQUALIZER ARM	23230-1
BRACKET-WINDSHIELD DEFROSTER MOUNTING	01420-1
BRACKET-WINDSHIELD WASHER RESERVOIR	17614
BRACKET-WINDSHIELD WASHER RESERVOIR MOUNTING	17651
BRACKET-WINDSHIELD WIPER CONTROL	17C443
BRACKET-WINDSHIELD WIPER MOTOR MOUNTING	17496
BRUSH & PLATE-WINDSHIELD WIPER MOTOR	17B595
BRUSH & TERMINAL ASSEMBLY-WINDSHIELD WIPER MOTOR	17B566
BUMPER ASSEMBLY-AUXILIARY SEAT BACK FLOOR PIVOT ARM	61507
BUMPER ASSEMBLY-FOLDING TOP NO. 1 BOW LOCK	514A66
BUMPER ASSEMBLY-REAR SEAT CUSHION PANEL	60578
BUMPER-AUXILIARY SEAT BACK FLOOR PANEL	605A18
BUMPER-AUXILIARY SEAT BACK FLOOR PIVOT	61506
BUMPER-BACK WINDOW STOP-LOWER	440A06
BUMPER-DOOR ARM REST ASH RECEPTACLE LID	24205
BUMPER-DOOR HINGE	23567
BUMPER-DOOR LOCK REMOTE CONTROL ROD LEVER	26608
BUMPER-DOOR TO PILLAR	23036-8
BUMPER-DOOR WINDOW STOP	21762
BUMPER-FRONT DOOR ASSIST SPRING	228A20
BUMPER-FRONT DOOR-UPPER	23030
BUMPER-FRONT DOOR VENTILATOR WINDOW UPPER	21774-5
BUMPER-FRONT LICENSE PLATE	17A388
BUMPER-FRONT SEAT BACK ASH RECEPTACLE RETAINER COVER	62893
BUMPER-FRONT SEAT TRACK ADJUSTING REGULATOR	61887
BUMPER-FUEL FILLER OPENING LID	405A22
BUMPER-GLOVE COMPARTMENT DOOR CHECK ARM	06115
BUMPER-HOOD LOCK CAM	16993
BUMPER-HOOD TO COWL TOP	16763
BUMPER-HOOD TO FENDER,REAR SEAT & LUGGAGE COMPARTMENT	16758
BUMPER-INSTRUMENT PANEL ASH RECEPTACLE	04870
BUMPER-LUGGAGE COMPARTMENT	43634
BUMPER-LUGGAGE COMPARTMENT DOOR HINGE	427A62
BUMPER-QUARTER WINDOW REGULATOR STOP	29844
BUMPER-QUARTER WINDOW STOP-LOWER	29986
BUMPER-QUARTER WINDOW STOP-UPPER	29994
BUMPER-REAR DOOR-AT BELT	27224-5
BUMPER-REAR DOOR WINDOW-LOWER REAR	27130
BUMPER-REAR SEAT BACK	62430
BUMPER-REAR SEAT BACK FLOOR SUPPORT RIGHT HAND	605A73
BUMPER-REAR SEAT BACK LATCH HANDLE STOP PIN	61339
BUMPER-ROOF HOLD DOWN CLAMP LEVER	50524
BUMPER-SPARE WHEEL WELL COVER PANEL	40639
BUMPER-TAILGATE	40426

Alphabetical Index—Continued

Part Name	Group Number
BUMPER-TAILGATE LATCH	431B62-3
BUMPER-TAILGATE LOCK STRIKER PLATE	431A88
BUMPER-TAILGATE ON PILLAR	439A00-1
BUMPER-TAILGATE SUPPORT	44482
BUMPER-UPPER BACK PANEL	40526
BUSHING-DOOR HINGE	22841
BUSHING-DOOR WINDOW REGULATOR PINION GEAR-ELECTRIC	23437
BUSHING-FOLDING TOP BALANCE LINK TO CENTER SIDE RAIL	50636
BUSHING-FOLDING TOP CENTER RAIL	50471
BUSHING-FOLDING TOP CONTROL LINK TO SIDE RAIL	50474
BUSHING-FOLDING TOP FRONT SIDE RAIL JOINT	531A06
BUSHING-FOLDING TOP HYDRAULIC LIFT	50678
BUSHING-FOLDING TOP LOWER POWER LINK	50453
BUSHING-FOLDING TOP MAIN CONTROL REAR	50487
BUSHING-FOLDING TOP NO. 2 BOW REAR LINK TO SIDE RAIL	50493
BUSHING-FOLDING TOP REAR BOW CONTROL LINK UPPER TO REAR BOW OUTER	50472
BUSHING-FOLDING TOP REAR SIDE RAIL	50473
BUSHING-FOLDING TOP REAR SIDE RAIL TO POWER CYLINDER	50412
BUSHING-FOLDING TOP TO REAR SIDE RAIL	50472
BUSHING-FRONT DOOR HINGE SPRING	228A16
BUSHING-FRONT DOOR LOCK PAWL	21801
BUSHING-FRONT DOOR VENTILATOR WINDOW-LOWER PIVOT	22960
BUSHING-FRONT SEAT ADJUSTER	618A67
BUSHING-FRONT SEAT REGULATOR TO REGULATOR SUPPORT	60864
BUSHING-LUGGAGE COMPARTMENT DOOR LIFT	427A42
BUSHING-REAR ROOF LOCK MOUNTING BOLT	53916
BUSHING-ROOF LIFT MOUNTING BOLT	53938
BUSHING-SHOCK ABSORBER	18198
BUTTON-A/COND. REGISTER LOCK RELEASE	19B848
BUTTON & LOCK CYLINDER-FRONT DOOR OUTSIDE HANDLE-WITH KEYS	22408-9
BUTTON & PIN DOOR OUTSIDE HANDLE KIT	22454
BUTTON & PIN-REAR DOOR OUTSIDE HANDLE	26686-7
BUTTON & STRAP-SEAT TRIM	63500
BUTTON ASSEMBLY-WINDSHIELD WASHER CONTROL	17A604
BUTTON-DOOR ACCESS HOLE	22285-6
BUTTON-FLOOR PAN BODY BOLT HOLE-PLUG	11574-5
BUTTON-FRONT DOOR OUTSIDE HANDLE	22460-1
BUTTON-FRONT DOOR TRIM PANEL	237A14
BUTTON-FRONT SEAT BACK & DASH PANEL ASH RECEPTACLE	62895
BUTTON-QUARTER WINDOW GUIDE	30278
BUTTON-QUARTER WINDOW STABILIZER	30474
BUTTON-REAR CORNER INNER PILLAR HOLE PLUG	410A10
BUTTON-REAR DOOR OUTSIDE HANDLE	26602-3
BUTTON-REAR DOOR WINDOW	25894
BUTTON-REAR DOOR WINDOW-FRONT GUIDE	25886
BUTTON-REAR DOOR WINDOW GUIDE-LOWER REAR	25472
BUTTON-REAR DOOR WINDOW-REAR GUIDE	26894-5
BY-PASS-HEATER & A/COND. CORE WATER	18B595
C	
CABLE & CORE ASSEMBLY-SPEEDOMETER	17260
CABLE-FRONT SEAT ADJUSTER-FRONT VERTICAL ACTUATOR	617B10-1
CABLE-FRONT SEAT ADJUSTER-HORIZONTAL ACTUATOR	617B14-5
CABLE-FRONT SEAT ADJUSTER MOTOR DRIVE	617A86
CABLE-FRONT SEAT ADJUSTER-REAR VERTICAL ACTUATOR	617B12-3
CABLE-GLOVE COMPARTMENT DOOR CHECK	060A08
CABLE-GLOVE COMPARTMENT DOOR CHECK	06206
CABLE-HOOD LATCH CONTROL	16916
CABLE-RADIO ANTENNA LEAD-IN	18812
CABLE-WINDSHIELD WASHER CONTROL	17A611
CABLE WINDSHIELD WIPER PIVOT SHAFT KIT	17B495
CAM REPLACEMENT ELECTRIC WINDSHIELD WIPER KIT	17A500
CAM-WINDSHIELD WIPER	17A461
CAM-WINDSHIELD WIPER ARM	17B434-5
CAP-CENTER BODY PILLAR FINISH	24442-3
CAP-FRONT FENDER LOWER FRONT MOULDING	16B038-9
CAP-HEATER & A/COND.MOTOR MOUNTING	18A587
CAP-QUARTER TRIM PANEL-UPPER FRONT	31490-1
CAP-QUARTER WHEELHOUSE TRIM PANEL MOULDING	290B60-1
CAP-RADIO FOOT CONTROL SWITCH	18937
CAP-ROOF HEADLINING SUPPORT	52126
CAP-ROOF LUGGAGE CARRIER RAIL FINISH	55182
CARRIER ROOF LUGGAGE WITH COVER KIT	55062
CARRIER-SKI-LESS SIDE RAILS	55004
CASE-A/COND. EVAPORATOR	19A626
CASE-A/COND. EVAPORATOR & HEATER	19897
CASE & CYLINDER ASSEMBLY-LUGGAGE COMPARTMENT DOOR LOCK-WITH KEYS	43279
CASE & INSULATOR-HEATER & A/COND. CORE	18A603
CASE-HEATER & A/COND. CORE	18A542-3
CASE-SPEEDOMETER	17289
CASING & CABLE ASSEMBLY-LUGGAGE COMPARTMENT DOOR LOCK DRIVE	40670
CASING & CABLE-FOLDING TOP LOCK DRIVE	53506
CASING & CABLE-UPPER BACK PANEL LIFT DRIVE	46754
CATCH-GLOVE COMPARTMENT DOOR LOCK	06064

Alphabetical Index—Continued

Part Name	Group Number
CATCH-STOWAGE COMPARTMENT LOCK	11550
CEMENT-REAR VIEW MIRROR	17B678
CHAIN-SPARE WHEEL WELL PANEL CHECK	45836
CHANNEL-BACK WINDOW GLASS	422A08
CHANNEL-FRONT DOOR WINDOW GLASS	21458-9
CHANNEL-QUARTER WINDOW GLASS	29900-1
CHANNEL-QUARTER WINDOW-LOWER	29958-9
CHANNEL-QUARTER WINDOW-UPPER	29962
CHANNEL-REAR DOOR WINDOW GLASS-LOWER	26228-9
CHASSIS-RADIO RECEIVER	18810
CHECK-FRONT DOOR	23552
CHOKE-RADIO RECEIVER SUPPRESSION CONSTANT VOLTAGE REGULATOR	18A952
CLAMP-A/COND. & HEATER AIR INLET DUCT SLEEVE	18753
CLAMP-A/COND. DEHYDRATOR TANK	19838
CLAMP-A/COND. DUCT TO INSTRUMENT PANEL REGISTER	19B866
CLAMP-A/COND. EVAPORATOR EXPANSION VALVE BULB	19A634
CLAMP & STRAP-SKI CARRIER	55006
CLAMP-COWL TOP INNER PANEL DRAIN TUBE	02270
CLAMP-DECK MOUNT LUGGAGE	55008
CLAMP-FOLDING TOP LOCK CABLE	53559
CLAMP-FRONT DOOR VENT WINDOW-LOWER PIVOT COUPLER	222A68
CLAMP-HEATER & A/COND. BLOWER TO HEATER ASSEMBLY	18B658
CLAMP-HEATER CONTROL CABLE RETAINING	18B555
CLAMP-HEATER CONTROL MOUNTING	18580
CLAMP-HOT WATER HEATER HOSE	18572
CLAMP-JACK HOLD DOWN	17091
CLAMP-LUGGAGE COMPARTMENT DOOR LIFT VALVE	427A10
CLAMP-RADIO ANTENNA HOSE	18954
CLAMP-ROOF HOLD DOWN	50508
CLAMP-SPEEDOMETER CABLE	17264
CLIP-CONSOLE PANEL UPPER MOULDING	044B26
CLIP-DOOR ARM REST	24146
CLIP-DOOR LOCK & TAILGATE CONTROL-LINK RETAINING	431C56
CLIP-DOOR LOCK CONTROL LINK-RETAINING	26458-9
CLIP-DOOR LOCK ROD	21952
CLIP-DOOR OUTSIDE BELT MOULDING	20946
CLIP-DOOR OUTSIDE UPPER MOULDING CENTER RETAINING	20808
CLIP-DOOR OUTSIDE UPPER MOULDING REAR RETAINING	20810
CLIP-FRONT & REAR DOOR OUTSIDE MOULDING	254A70
CLIP-FRONT DOOR LOCK CONTROL LINK RETAINING	21954-5
CLIP-FRONT DOOR LOCK PUSH BUTTON ROD-RETAINING	218A16
CLIP-FRONT DOOR LOCK VACUUM HOSE-RETAINING	218A48
CLIP-FRONT FENDER SIDE MOULDING REAR RETAINER	16A110
CLIP-FRONT SEAT ADJUSTER REGULATOR NUT SOLENOID COVER	62516
CLIP-FRONT SEAT BACK MOULDING RETAINING	60804
CLIP-HEATER CORE CASE	19A779
CLIP-HEATER INLET DUCT TO CORE CASE	18A339
CLIP-HEATER REGULATOR CONTROL WIRE	18A347
CLIP-HOOD LOCK LATCH CABLE	16917
CLIP-INSTRUMENT PANEL PAD RETAINING-UPPER	044B96
CLIP-INSTRUMENT PANEL PAD RETAINING UPPER MOULDING	04439
CLIP-INSTRUMENT PANEL RADIO GRILLE-RETAINING	04484
CLIP-JACK HOLD DOWN SPRING RETAINING	17145
CLIP-LUGGAGE COMPARTMENT DOOR LOCK LINK	43569
CLIP-LUGGAGE COMPARTMENT SIDE LINING BOARD-RETAINING	45128
CLIP-QUARTER ARM REST	31662
CLIP-QUARTER WINDOW FRONT-OUTER	29100
CLIP-REAR SEAT RISER CARPET-RETAINING	63409
CLIP-ROOF HEADLINING SIDE RETAINING STRIP	51054
CLIP-SKI CARRIER HOLD DOWN CLAMP RETAINER	55020
CLIP-SPARE WHEEL WELL COVER PANEL-UPPER	47154
CLIP-SPEEDOMETER BEZEL MOUNTING	17A284
CLIP-TAILGATE LATCH RELEASE LEVER KNOB RETAINING	431B72
CLIP-WINDSHIELD OUTSIDE TOP MOULDING	03180
CLIP-WINDSHIELD SIDE MOULDING-RETAINING	03254
CLIP-WINDSHIELD WIPER ADAPTOR & CONNECTOR ARM	17531
CLIP-WINDSHIELD WIPER TUBING	17B473
CLUTCH-FRONT SEAT ADJUSTER REGULATOR	617A36
COLLAR & CONNECTOR-HEATER INLET	18A566
COLLAR-COWL TOP INNER PANEL	02254
COLLAR-FUEL FILLER OPENING	405A98
COMPARTMENT-GLOVE	06010
COMPASS	19A548
COMPRESSOR-A/COND.	19703
CONDENSER-A/COND.	19710
CONDENSER-RADIO-VOLTAGE REGULATOR	18832
CONNECTOR-A/COND. BLOWER TO EVAPORATOR	19A584
CONNECTOR-A/COND. DEFROSTER NOZZLE-R.H.	19A883
CONNECTOR-A/COND. REGISTER	19A932
CONNECTOR-A/COND. REGISTER LOCK ACTUATOR ROD TO EXTENSION	19B850
CONNECTOR-ANTENNA LEAD-IN	19045
CONNECTOR-DEFROSTER NOZZLE TO SIDE COWL	18A439
CONNECTOR-HEATER & A/COND. CHAMBER TO REAR SEAT DUCT	18B641
CONNECTOR-HEATER & A/COND. PLENUM CHAMBER TO DEFROSTER NOZZLE	18A619
CONNECTOR-HEATER AIR INLET DUCT	18A442
CONNECTOR-HEATER BLOWER TO AIR DUCT	18489
CONNECTOR-HEATER SIDE COWL DUCT	18B354

Alphabetical Index—Continued

Part Name	Group Number
CONNECTOR-HEATER VACUUM HOSE	18B250
CONNECTOR & PLATE-HEATER & AIR/COND.	18A594
CONNECTOR-VACUUM FRONT DOOR LOCK	22035
CONNECTOR-WINDSHIELD WASHER VACUUM HOSE	17A612
CONNECTOR-WINDSHIELD WIPER MOTOR HOSE	17C472
CONTACT-ANTENNA GROUND	19254
CONTACT-MULTIPLE LUBRICATOR INDICATOR	19596
CONTROL-A/COND.	19980
CONTROL-A/COND. REGISTER	19A653
CONTROL CABLES-HEATER & A/COND.	18518
CONTROL-FRONT DOOR LOCK REMOTE	21818-9
CONTROL-HEATER	18549
CONTROL-HEATER REGULATOR	18561
CONTROL-RADIO REAR SEAT SPEAKER VOLUMN	18972
CONTROL-REAR DOOR LOCK REMOTE	26404-5
CONTROL-TAILGATE LOCK RELEASE	43170
CONTROL-VENT AIR OUTLET DUCT	01890-1
CONTROL-WINDSHIELD WIPER	17470
COORDINATOR-WINDSHIELD WASHER	17601
CORE-A/COND. CONDENSER	19712
CORE-A/COND. EVAPORATOR	19860
CORE & SEAL ASSEMBLY-HEATER & A/COND.	18476
CORE & TUBE-A/COND. EVAPORATOR	19A684
CORE-HEATER & A/COND.	18476-7
COUPLER-FRONT DOOR VENT WINDOW LOWER PIVOT	22240
COUPLING-A/COND. SELF-SEALING-EXTERNAL	19B595
COUPLING-A/COND. SELF-SEALING-INTERNAL	19B596
COUPLING-DOOR WINDOW & SEAT REGULATOR MOTOR	23440
COUPLING-FOLDING TOP NO. 1 BOW DRIVE	514A58
COUPLING-FRONT DOOR VENTILATOR WINDOW DRIVESHAFT	23624
COUPLING-FRONT SEAT ADJUSTER MOTOR TO SHAFT	60487
COUPLING-FRONT SEAT ADJUSTER TRANSMISSION DRIVE	618A59
COUPLING-FRONT SEAT REGULATOR DRIVE SHAFT & ADJUSTING SCREW	60408
COUPLING-FRONT SEAT TRACK REGULATOR DRIVE	619A32
COUPLING-HEATER & A/COND. TEMPERATURE REGULATOR CONTROL HOSE	18A513
COUPLING-SEAT REGULATOR MOTOR	23279
COVER-A/COND. & HEATER CONTROL MOTOR	19A271
COVER-A/COND. BLOWER HOUSING	19B871
COVER-A/COND. CONTROL MOTOR ACCESS	19C608
COVER-A/COND. EVAPORATOR TEMPERATURE CONTROL THERMOSTAT	18694
COVER-A/COND.EVAPORATOR TRIM	19828
COVER-ANTENNA ACTUATOR HOUSING	19094
COVER-BACK WINDOW GARNISH MOULDING JOINT	42458
COVER-BACK WINDOW GARNISH UPPER MOULDING JOINT	42353
COVER-BACK WINDOW HOUSING	42094
COVER-BACK WINDOW-OUTSIDE MOULDING JOINT	42460-1
COVER-BACK WINDOW-OUTSIDE UPPER MOULDING JOINT	42450
COVER-BACK WINDOW REGULATOR HANDLE-ELECTRIC	44028
COVER-CONSOLE ARM REST REAR	044D00
COVER-COWL SIDE HEATER OPENING	02136
COVER-DASH PANEL HEATER OPENING	01846
COVER-DOOR WINDOW REGULATOR CONTROL OPENING	23876
COVER-DOOR WINDOW REGULATOR HANDLE OPENING	22626
COVER-FLOOR OUTER SIDE MEMBER WIRE HARNESS	101A08-11
COVER-FOLDING TOP BALANCE LINK	53996
COVER-FOLDING TOP LOCK NUT HOUSING	53542-3
COVER-FOLDING TOP LOCK TRANSMISSION	53547
COVER-FOLDING TOP SIDE RAIL-LESS LATCHES	54700-1
COVER-FRONT BUMPER STONE DEFLECTOR MOULDING	17B859
COVER-FRONT DOOR LOCK CYLINDER KEY HOLE	21942
COVER-FRONT DOOR TRIM PANEL SUPPORT-FRONT	237A42-3
COVER-FRONT DOOR VENTILATOR WINDOW REGULATOR GEAR	23408
COVER-FRONT DOOR WIRING SHIELD	20798-9
COVER-FRONT SEAT ADJUSTER REGULATOR HOUSING	60481
COVER-FRONT SEAT ADJUSTER REGULATOR HOUSING	617A16
COVER-FRONT SEAT BACK OUTER HINGE PIN	63174
COVER-FRONT SEAT BACK PIVOT SIDE-INNER	61692-3
COVER-FRONT SEAT BACK PIVOT SIDE-INNER-VINYL	61692-3
COVER-FRONT SEAT BACK PIVOT SIDE-OUTER	61694-5
COVER-FRONT SEAT BACK PIVOT SIDE-OUTER-VINYL	61694-5
COVER-FRONT SEAT TRACK ADJUSTER TRANSMISSION	617B82
COVER-FRONT SEAT TRACK MOTOR	618B76
COVER-FRONT SIDE MEMBER FRONT EXTENSION OPENING	103A54
COVER-FUEL GAUGE ACCESS HOLE	11290
COVER-GLOVE COMPARTMENT	06128
COVER-GLOVE COMPARTMENT FUSE PANEL OPENING	06156
COVER-HEATER & A/COND. HOUSING	18B447
COVER-HEATER HOSE OPENING	01700
COVER-HEATER MOTOR DASH PANEL OPENING	18A475
COVER-HEATER TEMPERATURE REGULATOR CONTROL OPENING	18A465
COVER-HOOD FRONT LOWER MOULDING JOINT	16A009
COVER-INSTRUMENT PANEL CLOCK OPENING	04428
COVER-INSTRUMENT PANEL HEATER CONTROL OPENING	04496
COVER-INSTRUMENT PANEL LOWER OUTER EXTENSION	044A14
COVER-INSTRUMENT PANEL PAD DEFROSTER-OPENING	045B52
COVER-INSTRUMENT PANEL PAD DEFROSTER OPENING FLANGE	045B53
COVER-INSTRUMENT PANEL RADIO OPENING	04371
COVER-INSTRUMENT PANEL RADIO OPENING-UPPER	045C68
COVER-INSTRUMENT PANEL REAR WINDOW CONTROL OPENING	045B12
COVER-LUGGAGE COMPARTMENT DOOR LOCK ACCESS HOLE	43125

Alphabetical Index—Continued

Part Name	Group Number
COVER-LUGGAGE COMPARTMENT DOOR LOCK KEY HOLE	43516
COVER-LUGGAGE COMPARTMENT FLOOR	45494-5
COVER-QUARTER BELT REAR GARNISH MOULDING	290B38-9
COVER-QUARTER OUTSIDE BELT MOULDING JOINT	28810-1
COVER-QUARTER STATIONARY WINDOW GARNISH MOULDING JOINT-UPPER REAR	29326-7
COVER-QUARTER TRIM PANEL JOINT	31050
COVER-QUARTER WINDOW WEATHERSTRIP RETAINER JOINT	30276
COVER-REAR DOOR ASH RECEPTACLE	27448
COVER-REAR DOOR HINGE SPRING	268A38-9
COVER-REAR QUARTER WHEELHOUSE OPENING-INNER	279A58-9
COVER-REAR SEAT BACK STOP SUPPORT	62292
COVER-REAR SEAT BACK STOP TO WHEELHOUSE	631A05
COVER-ROOF DRIP MOULDING FRONT CORNER JOINT	51762
COVER-ROOF DRIP SIDE FINISH MOULDING JOINT	51792
COVER-SPARE WHEEL WELL	47042
COVER-STOWAGE COMPARTMENT DOOR LOCK	11598
COVER-STOWAGE WELL FLOOR PANEL LOCK KEY HOLE	11680
COVER-TAILGATE LOCK ACCESS	43114
COVER-TAILGATE LOCK KEYHOLE	40803
COVER-TRANSMISSION BAND ACCESS HOLE	12168
COVER-TRANSMISSION BAND ADJUSTMENT ACCESS HOLE	12129
COVER-UPPER BACK PANEL TO SEAT BACK OPENING	40546
COVER-VENT AIR INLET DUCT BLOWER OPENING	01449
COVER-WINDSHIELD GARNISH LOWER MOULDING JOINT	03086
COVER-WINDSHIELD OUTSIDE BELT MOULDING JOINT	03094
COVER-WINDSHIELD OUTSIDE TOP MOULDING JOINT	03152
COVER-WINDSHIELD WASHER JAR	17616
COVER-WINDSHIELD WASHER RESERVOIR	17632
COVER-WINDSHIELD WIPER GEAR	17A511
COVER-WINDSHIELD WIPER MOTOR GEAR	17A526
CREST BASE-DOOR SCUFF PLATE	13205
CRYSTAL-CITIZENS BAND MATCHED CHANNEL	18A986
CUP & MAGNET ASSEMBLY-WINDSHIELD WIPER MOTOR	17B584
CUP-REAR DOOR HINGE SPRING LUBRICANT	268A40
CYLINDER-FRONT DOOR LOCK-WITH KEYS	21984-5
CYLINDER-LUGGAGE COMPARTMENT & TAILGATE-WITH KEYS	43505
CYLINDER-MULTIPLE LUBRICATOR VACUUM PUMP	19538
CYLINDER-STOWAGE COMPARTMENT LOCK	11663
CYLINDER-TAILGATE LOCK WITH KEYS	43815
D	
DAMPER-FRONT & REAR VIBRATION	11002-3
DAMPER-VENT AIR VALVE	01862
DECAL-FRONT & REAR DOORS, FENDERS & QUARTER PANELS	20748
DECAL-FUSE BLOCK INSTRUCTION	04683
DEFLECTOR ASSEMBLY-FOLDING TOP NO. 1 BOW-WATER	51505
DEFLECTOR-FOLDING TOP REAR RAIL-LOWER	53988-9
DEFLECTOR-FRONT BUMPER STONE	17779
DEFLECTOR-FRONT FLOOR CROSSMEMBER STONE	17A998
DEFLECTOR-HEATER INLET DUCT-AIR	18669
DEFLECTOR-REAR BUMPER STONE	17808
DEFLECTOR-REAR BUMPER STONE-END	17836-7
DEFLECTOR-REAR CORNER PILLAR-WATER	410A08
DEFLECTOR-STONE-FRAME TO ROCKER PANEL	17A752
DEFLECTOR-UNDER FRONT FLOOR CARPET-HEAT	11480-1
DEFLECTOR-UNDER REAR FLOOR CARPET-HEAT	11482
DEFLECTOR-VENT AIR VALVE-AIR	018A67
DEHYDRATOR & RECEIVER TANK-A/COND.	19959
DE-ICER-WINDSHIELD	19C544
DIAL-A/COND. REGULATOR CONTROL	19B652
DIAL-HEATER & A/COND. TEMPERATURE REGULATOR CONTROL	18A407
DISC-RADIO ANTENNA SWITCH	18A969
DISC-RADIO TONE CONTROL	18830
DOOR & ACTUATOR-AIR CONDITIONER INSTRUMENT PANEL REGISTER	19C576
DOOR & HINGE-HEATER AIR VENTILATION	18A646
DOOR-FRONT-LESS HINGES	20124-5
DOOR-GLOVE COMPARTMENT	06024
DOOR-GLOVE OR CONSOLE COMPARTMENT-VINYL COVERED	06024
DOOR LOCK CYLINDER COVER & SPRING KIT	21942-3
DOOR-LUGGAGE COMPARTMENT	40110
DOOR OUTSIDE REAR EDGE MOULDING KIT	20910
DOOR POCKET KIT	20130
DOOR-REAR-LESS HINGES	24630-1
DOVETAIL-REAR DOOR WINDOW	262A28-9
DOWEL-FOLDING TOP NO. 1 BOW	03458
DRIVE-BACK WINDOW REGULATOR	40964
DRIVE GEAR FRONT DOOR VENTILATOR WINDOW REGULATOR MOTOR KIT	23496
DRIVE-WINDOW REGULATOR	23394-5
DUCT-A/COND. EVAPORATOR TO INSTRUMENT PANEL REGISTER	19B680
DUCT-A/COND. EVAPORATOR TO INSTRUMENT PANEL REGISTER	19926
DUCT-A/COND.EVAPORATOR-LOWER	19C620
DUCT-A/COND. RECIRCULATING AIR	19C590
DUCT & DEFLECTOR-A/COND. EVAPORATOR TO INSTRUMENT PANEL	19A842
DUCT & INSULATOR-A/COND. & HEATER INLET	18A628-9
DUCT-HEATER & A/COND. SIDE COWL	18A461-2
DUCT-HEATER & A/COND. CHAMBER TO REAR SEAT	18633
DUCT-HEATER INLET	18457

Alphabetical Index—Continued

Part Name	Group Number
DUCT-VENT AIR OUTLET	01934-5
E	
ELBOW-HOT WATER HEATER & A/COND. CONNECTION	18599
EMBLEM-DOOR ARM REST ORNAMENT	20804
ESCUTCHEON-DOOR INSIDE HANDLE	22620
ESCUTCHEON-FLOOR MAT AT STEERING COLUMN	13012
ESCUTCHEON-FRONT DOOR LOCK CYLINDER	21936
ESCUTCHEON-GLOVE COMPARTMENT DOOR LOCK	06095
ESCUTCHEON-INSIDE DOOR HANDLE	303A20
ESCUTCHEON-OUTSIDE REAR VIEW MIRROR CONTROL HANDLE	17167
ESCUTCHEON-REAR SEAT BACK FLOOR PANEL STOP	606A24
ESCUTCHEON-REAR SEAT BACK STOP LOOP	61307
ESCUTCHEON-REAR VIEW OUTSIDE MIRROR ARM	17158
EXTENSION-A/COND. BLOWER SWITCH FEED	19B660
EXTENSION ASSEMBLY-ROOF PANEL-REAR SIDE	502A81
EXTENSION ASSEMBLY-ROOF SIDE REAR RAIL TO WHEELHOUSE	513A86-7
EXTENSION-BACK BELT MOULDING	41402-3
EXTENSION-BACK BELT MOULDING-FRONT	41408-9
EXTENSION-BACK WINDOW HEADER	413A00-1
EXTENSION-BACK WINDOW OUTSIDE MOULDING	424A16-7
EXTENSION-BACK WINDOW UPPER FRAME-LOWER CORNER	42250-1
EXTENSION-BODY ROCKER PANEL-FRONT	10108-9
EXTENSION-BODY ROCKER PANEL MOULDING	10258-9
EXTENSION-CENTER BODY OUTER FRONT PILLAR	24580-1
EXTENSION-CENTER FLOOR PAN	11162-3
EXTENSION-COWL SIDE PANEL	02062-3
EXTENSION-DOOR LOCK CONTROL ROD LEVER	22112
EXTENSION-FLOOR SIDE INNER MEMBER-FRONT	10066-7
EXTENSION-FLOOR SIDE INNER MEMBER TO LOWER MEMBER	10478-9
EXTENSION-FLOOR SIDE MEMBER TO FRONT SIDE MEMBER-FRONT	103A28-9
EXTENSION-FLOOR SIDE MEMBER TO FRONT SIDE MEMBER REINFORCEMENT	101A96-7
EXTENSION-FOLDING TOP BALANCE LINK TO SUPPORT	506A70-1
EXTENSION-FOLDING TOP MAIN PIVOT BRACKET	531A18
EXTENSION-FRONT BODY PILLAR LOWER GUSSET	02530
EXTENSION-FRONT BODY UPPER INNER PILLAR	02518-9
EXTENSION-FRONT BODY UPPER OUTER PILLAR	02562-3
EXTENSION-FRONT BUMPER IMPACT BAR	17A900-1
EXTENSION-FRONT DOOR OUTSIDE BELT MOULDING	20858-9
EXTENSION-FRONT FENDER APRON UPPER OUTER REINFORCEMENT	16B002-3
EXTENSION-FRONT FENDER REAR SPLASH SHIELD-UPPER	16B570-3
EXTENSION-FRONT FLOOR CROSS MEMBER NO. 2	101A98
EXTENSION-FRONT ROOF RAIL-OUTER	513A62-3
EXTENSION-FRONT SEAT CUSHION SIDE SHIELD-VINYL	62198-9
EXTENSION-FRONT SIDE INNER MEMBER	10556-7
EXTENSION-FRONT SIDE MEMBER	10062-3
EXTENSION-FRONT SIDE MEMBER-FRONT	101A22
EXTENSION-FRONT SIDE OUTER MEMBER	10644-5
EXTENSION-FRONT SIDE OUTER MEMBER-FRONT	10074-5
EXTENSION-HOOD PANEL FRONT	16A800
EXTENSION-INSTRUMENT PANEL LOWER	04644-5
EXTENSION-INSTRUMENT PANEL LOWER-CENTER	04640
EXTENSION-INSTRUMENT PANEL LOWER-CENTER	04638
EXTENSION-INSTRUMENT PANEL LOWER-OUTER	044A38-9
EXTENSION-LOWER BACK PANEL	40330-1
EXTENSION-LUGGAGE COMPARTMENT DOOR LOCK	43283
EXTENSION-LUGGAGE COMPARTMENT DOOR OPENING UPPER REINFORCEMENT	44820-1
EXTENSION-PACKAGE TRAY TO QUARTER PANEL	46534-5
EXTENSION-QUARTER PANEL LOCK SIDE-OUTER REINFORCEMENT	28238-9
EXTENSION-QUARTER PANEL-REAR	28058-9
EXTENSION-QUARTER PANEL REAR-UPPER	28072-3
EXTENSION-QUARTER PANEL UPPER TO REAR CORNER PILLAR LOWER REINFORCEMENT	28206-7
EXTENSION-QUARTER PILLAR-LOWER	28234-5
EXTENSION-QUARTER PILLAR UPPER INNER TO BELT RAIL	28308-9
EXTENSION-QUARTER WHEELHOUSE-FRONT	27950-1
EXTENSION-QUARTER WINDOW FRONT GUIDE TO ACTUATOR GUIDE	29979
EXTENSION-QUARTER WINDOW GUIDE BRACE	30416
EXTENSION-QUARTER WINDOW OUTSIDE FRONT MOULDING	290A06-7
EXTENSION-QUARTER WINDOW OUTSIDE UPPER MOULDING	290A34-5
EXTENSION-QUARTER WINDOW REAR GLASS RUN BRACKET	29644-5
EXTENSION-QUARTER WINDOW REGULATOR PANEL TO QUARTER WINDOW GUIDE	30598
EXTENSION-REAR CORNER PILLAR-LOWER	410A29
EXTENSION-REAR CORNER PILLAR REINFORCEMENT-TO INNER QUARTER PANEL	40985
EXTENSION-REAR DOOR INSIDE PANEL TO OUTSIDE PANEL FRONT	24702-3
EXTENSION-REAR DOOR-INSIDE UPPER REAR	24744-5
EXTENSION-REAR DOOR OUTSIDE BELT MOULDING	25566-7
EXTENSION-REAR DOOR-OUTSIDE UPPER REAR	24740-1
EXTENSION-REAR FLOOR CROSS SILL TO INNER QUARTER PANEL	10796-7
EXTENSION-REAR FLOOR PAN	11252-3
EXTENSION-REAR FLOOR PAN TO QUARTER PANEL	11250-1
EXTENSION-REAR FLOOR REAR SILL PANEL	10838

Alphabetical Index—Continued

Part Name	Group Number
EXTENSION-REAR QUARTER INSIDE PANEL-FRONT	27994-5
EXTENSION-REAR SEAT BACK SUPPORT	40590-1
EXTENSION-REAR SIDE MEMBER TO FLOOR SIDE MEMBER	10784-5
EXTENSION-ROOF BACK WINDOW UPPER INNER FRAME	50282-3
EXTENSION-ROOF DRIP SIDE FINISH MOULDING	517A10-1
EXTENSION-ROOF DRIP SIDE MOULDING-FRONT	51858-9
EXTENSION-ROOF DRIP SIDE MOULDING-REAR	517A42-3
EXTENSION-ROOF HEADLINING SUPPORT	52133
EXTENSION-ROOF OUTER REAR RAIL TO WHEELHOUSE	513A44-5
EXTENSION-ROOF PANEL-REAR	50847
EXTENSION-ROOF PANEL REAR SIDE	50866-7
EXTENSION-ROOF SIDE INNER MOULDING-FRONT	61542-3
EXTENSION-ROOF SIDE INNER RAIL TO BACK WINDOW HEADER INNER RAIL	51116-7
EXTENSION-ROOF SIDE INNER REAR RAIL	513A34-5
EXTENSION-ROOF SIDE OUTER RAIL TO BACK WINDOW HEADER OUTER RAIL	51114-5
EXTENSION-ROOF SIDE-INNER REAR RAIL	51220-1
EXTENSION-ROOF SIDE OUTER REAR RAIL	51206-7
EXTENSION SHAFT & RETAINER-FRONT DOOR VENTILATOR WINDOW REGULATOR	23442
EXTENSION-SPARE WHEEL WELL PANEL-LOWER	47020
EXTENSION-SPARE WHEEL WELL SIDE LOWER-RIGHT REAR	47120
EXTENSION-TAILGATE LOCK CYLINDER	431A66
EXTENSION-UPPER BACK PANEL	403A06-7
EXTENSION-WINDSHIELD HEADER-INNER PANEL	03420-1
EXTENSION-WINDSHIELD HEADER-OUTER PANEL	03452-3
EYE BOLT-FRONT SEAT TRACK TIE ROD	61730
F	
FAN-A/COND. EVAPORATOR	19A643
FAST DRY ENAMEL 3 OZ. CAN KIT	19503
FASTENER ASSEMBLY-ROOF LUGGAGE CARRIER	55014
FASTENER-BODY FINISH PANEL	290B32
FASTENER-BODY OUTSIDE FINISH RAIL	50108
FASTENER-CENTER BODY PILLAR-INSIDE FINISH PANEL	24495
FASTENER-DOOR INNER PANEL BOTTOM DRAIN SEAL	20807
FASTENER-DOOR LOCK STRIKER SHIELD	264A76
FASTENER-DOOR WINDOW REGULATOR MOTOR BRACKET TO DOOR	50108
FASTENER-FOLDING TOP COMPARTMENT DRAIN SCREEN	54668
FASTENER-FOLDING TOP TO ROOF SIDE RAIL FRONT	53044-5
FASTENER-ROOF LUGGAGE CARRIER SUPPORT	55180
FENDER-FRONT	16005-6
FILLER ASSEMBLY-QUARTER PANEL LOWER EXTENSION TO REAR FLOOR CROSS SILL	27762-3
FILLER-CENTER BODY PILLAR UPPER FRONT AT BELT	24290-1
FILLER-CENTER BODY PILLAR UPPER REAR AT BELT	24294-5
FILLER-COWL SIDE TRIM-LOWER	020A06-7
FILLER-DOOR GLASS RUN	22216
FILLER-DOOR VENTILATOR WINDOW WEATHERSTRIP TO VENT FRAME	222A42
FILLER-FLOOR SIDE INNER MEMBER REINFORCEMENT	10432-3
FILLER-FLOOR SIDE OUTER MEMBER FRONT-END	10170-1
FILLER-FOLDING TOP BOW	514A76
FILLER-FOLDING TOP SIDE RAIL COVER TO QUARTER WINDOW	54746
FILLER-FRONT BUMPER IMPACT BAR	17A780
FILLER-FRONT FENDER APRON SPLASH	16A026
FILLER FRONT-QUARTER WINDOW OPENING-REAR CORNER UPPER	29650-1
FILLER-FRONT SUSPENSION NO. 1 CROSSMEMBER-END	10678-9
FILLER-INSTRUMENT PANEL END-VINYL COVERED	04500-1
FILLER-QUARTER PANEL EXTENSION TO REAR CORNER PILLAR	28376-7
FILLER-QUARTER PANEL LOWER EXTENSION TO REAR FLOOR CROSS SILL	28024-5
FILLER-QUARTER PANEL REAR	278A80-1
FILLER-QUARTER PANEL-REAR	28436-7
FILLER-QUARTER PANEL-UPPER FRONT	28060-1
FILLER-QUARTER PANEL-UPPER REAR TO LOWER REAR EXTENSION	279A56-7
FILLER-QUARTER TRIM PANEL TO REAR SEAT CUSHION	31106-7
FILLER-QUARTER TRIM PANEL TO WHEELHOUSE	31234-5
FILLER-QUARTER WINDOW FRAME	29432
FILLER-QUARTER WINDOW OUTSIDE FRONT MOULDING-LOWER	29888-9
FILLER-REAR CORNER PILLAR OUTSIDE REAR MOULDING	41892-3
FILLER-REAR CORNER PILLAR-UPPER	41050-1
FILLER-REAR FLOOR CROSS SILL TO INNER QUARTER PANEL EXTENSION	10802
FILLER-REAR FLOOR TO QUARTER PANEL	11228-9
FILLER-REAR QUARTER WINDOW OPENING-FRONT CORNER LOWER	29436-7
FILLER-REAR QUARTER WINDOW OPENING-REAR CORNER LOWER	29458-9
FILLER-WINDSHIELD GARNISH MOULDING-LOWER CORNER	03642
FILLER-WINDSHIELD OUTSIDE BELT MOULDING	03006-7
FILTER A/COND. EXPANSION VALVE KIT	19B698
FIRE EXTINGUISHER & BRACKET KIT	19B540
FIRE EXTINGUISHER RECHARGE KIT	19C505
FITTING ASSEMBLY-A/COND.	19C705
FLANGE-A/COND. AIR INLET DUCT TO DASH PANEL	18759
FLUID-AUTOMATIC TRANSMISSION	19582
FLUSH FENDER SHIELD KIT	27964
FRAME & DIVISION BAR-FRONT DOOR VENT WINDOW-LESS WEATHERSTRIP	22204-5

Alphabetical Index—Continued

Part Name	Group Number
FRAME & DIVISION BAR-FRONT DOOR VENTILATOR WINDOW	21616-7
FRAME & FIELD-WINDSHIELD WIPER MOTOR	17B597
FRAME & GLASS-FRONT DOOR VENTILATOR WINDOW	21406-7
FRAME & VENTILATOR WINDOW-FRONT DOOR-LESS GLASS HANDLE	22248-9
FRAME-BACK WINDOW GLASS	422A06
FRAME-BACK WINDOW-INNER SIDE UPPER	42278-9
FRAME-BACK WINDOW-LOWER SIDE	41974-5
FRAME-BACK WINDOW LOWER-SIDE	422A04-5
FRAME-BACK WINDOW-UPPER	42208
FRAME-FRONT DOOR GLASS	22220-1
FRAME-FRONT DOOR VENTILATOR WINDOW	21608-9
FRAME-FRONT DOOR VENTILATOR WINDOW-LESS GLASS	22206-7
FRAME-QUARTER WINDOW	30504-5
FRAME-REAR DOOR GLASS-UPPER	26220-1
FRAME-REAR DOOR GLASS-UPPER	26242
FRAME-REAR SEAT BACK-UPPER	613A04
FRONT FENDER MOULDING RETAINER KIT	16A170
FRONT SEAT BELT BOOT & RETAINER KIT	611A32

G

Part Name	Group Number
GASKET-A/COND. BLOWER HOUSING COVER	19B776
GASKET-A/COND. BLOWER MOTOR MOUNTING	19B556
GASKET-A/COND. COMPRESSOR BASE PLATE	19B651
GASKET-A/COND. COMPRESSOR CRANKSHAFT BEARING HOUSING	19698
GASKET-A/COND. COMPRESSOR VALVE PLATE	19B994
GASKET-A/COND. EVAPORATOR CASE TO CONTROL PANEL	18A262
GASKET-A/COND. EVAPORATOR CASE TO DASH PANEL	19B861-2
GASKET-A/COND. EVAPORATOR HOSE	19A613
GASKET-A/COND. REGISTER TO INSTRUMENT PANEL	19648
GASKET-A/COND. VALVE BODY TO COMPRESSOR	19664
GASKET-A/COND.WINDSHIELD DEFROSTER NOZZLE-OUTLET	18A638
GASKET-ANTENNA LEAD-IN CONNECTOR	19096
GASKET-ANTENNA LEAD-IN CONNECTOR TO TUBE	18898
GASKET-DEFROSTER NOZZLE-L.H.	18A386
GASKET-FOLDING TOP MOTOR & RESERVOIR KIT	50745
GASKET-FRONT DOOR LOCK VACUUM CONTROL CONNECTOR	219A22
GASKET-FRONT SEAT ADJUSTER REGULATOR COVER	60467
GASKET-HEATER & A/COND.AIR DAMPER DOOR	18A321
GASKET-HEATER & A/COND.BLOWER HOUSING TO DASH	18A685
GASKET-HEATER & A/COND.BLOWER MOTOR MOUNTING	18583
GASKET-HEATER & A/COND.CORE CASE TO DASH PANEL	18388
GASKET-HEATER & A/COND. TO DASH	18570
GASKET-HEATER AIR DUCT	18B249
GASKET-HEATER BLOWER MOTOR MOUNTING PLATE	18A477
GASKET-HEATER PLENUM CHAMBER TO SIDE COWL PANEL	18A693
GASKET-HEATER TEMPERATURE REGULATOR CONTROL HOSE CONNECTOR BLOCK	18B413
GASKET-INSTRUMENT PANEL RADIO OPENING-COVER	04457
GASKET-RADIO REAR SEAT SPEAKER	18889
GASKET-REAR VIEW OUTSIDE MIRROR	17724
GASKET-RESISTOR HEATER BLOWER	18B311
GASKET-SPEEDOMETER CASE	17303
GASKET-VACUUM HOSE CONNECTOR BLOCK	18A521
GASKET-VENT AIR INLET DUCT TO COWL TOP PANEL	01999
GASKET-VENT AIR VALVE TO DASH	018A70-1
GASKET-WINDSHIELD DEFROSTER NOZZLE OUTLET	18A676
GASKET-WINDSHIELD WIPER GEAR COVER	17471
GASKET-WINDSHIELD WIPER MOTOR SEAL	17C430
GATE ASSEMBLY-TAIL	40709
GEAR & PINION-WINDSHIELD WIPER MOTOR	17A479
GEAR & PULLEY-RADIO ANTENNA CONTROL CABLE	18A809
GEAR & SHAFT ASSEMBLY-WINDSHIELD WIPER OUTPUT	17A434
GEAR & SHAFT-FOLDING TOP NO. 1 BOW SECTOR	514A42
GEAR & SHAFT-FRONT DOOR VENTILATOR WINDOW REGULATOR	234A02-3
GEAR & STOP ASSEMBLY-WINDSHIELD WIPER OUTPUT	17A556
GEAR-ANTENNA ACTUATOR DRIVE	18A870
GEAR-FRONT DOOR VENTILATOR WINDOW DRIVE	23626-7
GEAR-FRONT SEAT ADJUSTER REGULATOR	617A15
GEAR-FRONT SEAT ADJUSTER TRANSMISSION	617B80-1
GEAR-SPEEDOMETER DRIVE	17285
GEAR-SPEEDOMETER DRIVEN	17271
GEAR-WINDSHIELD WIPER INPUT	17A479
GLASS-BACK WINDOW	42006
GLASS-BACK WINDOW-SIDE	42024
GLASS-FRONT DOOR VENTILATOR WINDOW	21412-3
GLASS-FRONT DOOR WINDOW	21410-1
GLASS-QUARTER WINDOW	29710
GLASS-QUARTER WINDOW STATIONARY	29726
GLASS-REAR DOOR	25712-3
GLASS-REAR DOOR STATIONARY WINDOW	25723
GLASS-WINDSHIELD	03100
GRILLE-A/COND. AIR INTAKE	19742
GRILLE ASSEMBLY-FRONT FENDER FRONT ORNAMENT	16C230-1
GRILLE-COWL SIDE VENT	01416-7
GRILLE-COWL TOP VENT	02228
GRILLE-HEATER SIDE COWL DUCT REGISTER	18B340-1
GRILLE-INSTRUMENT PANEL RADIO	04454
GRILLE-REAR SEAT BACK RADIO SPEAKER	66649
GRILLE-REAR SEAT SPEAKER	18978
GRILLE-VENT AIR OUTLET	18A499
GROMMET-ANTENNA LEAD-IN SEAL	18912
GROMMET-DOOR LOCK KNOB	21999

Alphabetical Index—Continued

Part Name	Group Number
GROMMET-FLOOR CARPET DIMMER SWITCH	10267
GROMMET-FOLDING TOP HYDRAULIC PUMP MOUNTING	50763
GROMMET-GLOVE COMPARTMENT DOOR CHECK ARM	06122
GROMMET-LUGGAGE COMPARTMENT DOOR LOCK VACUUM CONTROL	432A92
GROMMET-ROOF SIDE RAIL WIRING OPENING-LOWER	513B08-9
GROMMET-SPEEDOMETER CASE	17304
GROMMET-VENT AIR VALVE DAMPER SHAFT	01527
GROMMET-WINDOW REGULATOR MOTOR MOUNTING	23283
GROMMET-WINDSHIELD WIPER MOTOR MOUNTING BRACKET	17C431
GUARD-FRONT BUMPER	17996-7
GUARD-REAR BUMPER	17984-5
GUIDE & RUN ASSEMBLY-REAR DOOR WINDOW-FRONT	262A56-7
GUIDE-FOLDING TOP NO. 1 BOW LOCKING HOOK	514A48-9
GUIDE-HOOD LOCK DOWEL SPRING	16927
GUIDE-QUARTER WINDOW	29764-5
GUIDE-QUARTER WINDOW ACTUATOR	303A30-1
GUIDE-QUARTER WINDOW-FRONT	29752-3
GUIDE-QUARTER WINDOW REGULATOR EQUALIZER ARM	30298-9
GUIDE-REAR DOOR WINDOW-CENTER	26392-3
GUIDE-REAR DOOR WINDOW-FRONT	26216-7
GUIDE-REAR DOOR WINDOW-REAR	26222-3
GUIDE-TAILGATE COUNTERBALANCE TORQUE BAR	41956
GUIDE-WINDSHIELD WIPER CONTROL CABLE	17A544
GUSSET-COWL SIDE TO FRONT PILLAR-LOWER	02426-7
GUSSET-COWL SIDE TO UPPER DASH PANEL	020A40-1
GUSSET-DASH PANEL END	01792-3
GUSSET-DASH PANEL TO FLOOR SIDE MEMBER	021A14-5
GUSSET-DASH PANEL UPPER TO PANEL COWL TOP-OUTER	016A81
GUSSET-FLOOR SIDE MEMBER TO FRONT SIDE MEMBER REINFORCEMENT	10048-9
GUSSET-FLOOR SIDE MEMBER TO REAR SIDE MEMBER	10196-7
GUSSET-FLOOR SIDE MEMBER TO WHEELHOUSE-INNER	103A20-1
GUSSET-FLOOR SIDE MEMBER TO WHEELHOUSE-INNER FRONT	103A22-3
GUSSET-FLOOR SIDE MEMBER TO WHEELHOUSE-UPPER	103A18-9
GUSSET-FLOOR SIDE OUTER MEMBER	10208
GUSSET-FLOOR SIDE UPPER TO FLOOR SIDE LOWER MEMBER-FRONT	10570-1
GUSSET-FRONT BODY PILLAR LOWER	025A32-3
GUSSET-FRONT BODY UPPER OUTER PILLAR	025A36-7
GUSSET-FRONT FENDER APRON TO RADIATOR SUPPORT SIDE	16B142-3
GUSSET-FRONT FLOOR LOWER CROSSMEMBER	109A76-7
GUSSET-FRONT FLOOR UPPER CROSSMEMBER	10968-9
GUSSET-FRONT SEAT TRACK SUPPORT TO SIDE MEMBER	62030-1
GUSSET-FRONT SIDE INNER MEMBER TO FRONT SUSPENSION-NO. 1 CROSSMEMBER	10536-7
GUSSET-QUARTER BELT RAIL TO WHEELHOUSE	290B42-3
GUSSET-QUARTER PILLAR REINFORCEMENT	278A86-7
GUSSET-QUARTER PILLAR REINFORCEMENT-CENTER	231A32-3
GUSSET-QUARTER PILLAR REINFORCEMENT-LOWER	278B00-1
GUSSET-QUARTER PILLAR REINFORCEMENT-LOWER	278B20-1
GUSSET-QUARTER WHEELHOUSE TO SIDE MEMBER	279B86-7
GUSSET-REAR CORNER PILLAR	40364-5
GUSSET-REAR FLOOR REAR CROSSMEMBER	10776
GUSSET-REAR FLOOR SIDE INNER MEMBER TO CENTER FLOOR REAR CROSSMEMBER	101A58-9
GUSSET-REAR FLOOR SIDE MEMBER TO REAR FLOOR CROSSMEMBER	102A40-1
GUSSET-REAR SEAT RISER FRONT PANEL TO CENTER FLOOR EXTENSION	63482
GUSSET-WHEELHOUSE INNER TO REAR FLOOR FRONT CROSSMEMBER	28354-5
GUSSET-WHEELHOUSE TO DRAIN TROUGH	278B06-7

H

Part Name	Group Number
HANDLE & KNOB-BACK WINDOW REGULATOR	44008
HANDLE ASSEMBLY-BACK WINDOW REGULATOR	44009
HANDLE-BACK WINDOW REGULATOR-LESS ORNAMENT	44038
HANDLE-DOOR INSIDE	22600-1
HANDLE-DOOR OUTSIDE	22400-5
HANDLE-DOOR PULL	26656
HANDLE-DOOR WINDOW & QUARTER WINDOW REGULATOR	23342
HANDLE-FRONT DOOR VENTILATOR WINDOW	22916-7
HANDLE-FRONT SEAT BACK ASSIST	62578-9
HANDLE-FRONT SEAT TRACK ADJUSTING	61753-5
HANDLE-HEATER DOOR & AIR VENT DUCT KIT	18B578
HANDLE-HOOD LATCH CONTROL CABLE	16914
HANDLE-LUGGAGE COMPARTMENT DOOR	43500
HANDLE-LUGGAGE COMPARTMENT DOOR LOCK RELEASE CONTROL VALVE	43385
HANDLE-REAR DOOR INSIDE ASSIST	24648
HANDLE-REAR DOOR-OUTSIDE	26600-1
HANDLE-REAR SEAT BACK LATCH	62418-9
HANDLE-REAR VIEW OUTSIDE MIRROR CONTROL SHAFT	17156
HANDLE-TAILGATE LATCH	44449
HANDLE-TAILGATE LOCK RELEASE	431C62
HARDWARE REAR DECK LUGGAGE RACK KIT	55196
HARNESS-MULTIPLE LUBRICATOR	19A513-5
HEATER & DEFROSTER KIT	18455
HINGE-A/COND. INSTRUMENT PANEL REGISTER DOOR	19652
HINGE & CHECK-FRONT DOOR-LOWER	22806-7
HINGE & CHECK-REAR DOOR	26802-3
HINGE ASSEMBLY-FUEL FILLER OPENING LID	405A08
HINGE ASSEMBLY-UPPER BACK FINISH PANEL	403A62

Alphabetical Index—Continued

Part Name	Group Number
HINGE-AUXILIARY SEAT BACK FLOOR	60928
HINGE-DOOR VENTILATOR WINDOW-PIVOT ON GLASS FRAME	21490-1
HINGE-FRONT DOOR-LOWER	22810-1
HINGE-FRONT DOOR-UPPER	22800-1
HINGE-GLOVE COMPARTMENT DOOR	06050
HINGE-HOOD	16796-7
HINGE-INSTRUMENT PANEL ASH RECEPTACLE	048A30
HINGE-LUGGAGE COMPARTMENT DOOR	42700-1
HINGE-REAR DOOR-UPPER	26800-1
HINGE-TAILGATE	43000-1
HINGE-UPPER BACK PANEL	46724
HOOD-LESS HINGES	16612
HOOK ASSEMBLY-SEAT BELT TO FLOOR-ATTACHING	61280
HOOK-COAT	29025-6
HOOK-FRONT SEAT TRACK RELEASE CABLE	619A02
HOOK-HOOD AUXILIARY LATCH	16892
HOOK-HOOD LOCK	16929
HOOK-JACK	17A003
HOSE-A/COND.& HEATER BLOWER HOUSING TO BLOWER MOTOR	19A786
HOSE-A/COND. & HEATER CONTROL VACUUM SUPPLY	19B649
HOSE-A/COND. COMPRESSOR TO CONDENSER	19972
HOSE-A/COND. EVAPORATOR DRAIN	19858
HOSE-A/COND. EVAPORATOR INLET TO COUPLING	19A709
HOSE-A/COND. EVAPORATOR OUTLET TO COUPLING	19A717
HOSE ASSEMBLY-LUGGAGE COMPARTMENT DOOR LIFT-LOWER	406A06
HOSE ASSEMBLY-LUGGAGE COMPARTMENT DOOR LIFT-LOWER TO PUMP	406A08
HOSE ASSEMBLY-LUGGAGE COMPARTMENT DOOR LIFT-UPPER TO PUMP	406A07
HOSE-BACK WINDOW HOUSING DRAIN	42326
HOSE-FOLDING TOP HYDRAULIC LIFT	53456
HOSE-FOLDING TOP LIFT	53390-2
HOSE-HEATER	18472
HOSE-HEATER & A/COND. DEFROSTER	18556
HOSE-HEATER & A/COND. TEMPERATURE REGULATOR CONTROL	18A520
HOSE-HEATER AIR DISCHARGE	18A672
HOSE-HEATER TEMPERATURE CONTROL VACUUM OUTLET	18668
HOSE-LUGGAGE COMPARTMENT DOOR LOCK VACUUM CONTROL	43240
HOSE-VACUUM DOOR LOCK	21927
HOSE-WINDSHIELD WASHER	17A605
HOSE-WINDSHIELD WIPER,WASHER,HEATER & A/COND. VACUUM CONTROL	17543
HOUSING-A/COND. & HEATER BLOWER	18A544
HOUSING-A/COND. BLOWER	19924
HOUSING-A/COND. BLOWER	19930-1
HOUSING-ANTENNA ACTUATOR	19093
HOUSING ASSEMBLY-TAILGATE LOCK CYLINDER-ELECTRIC	440A34
HOUSING-BACK WINDOW	42090
HOUSING-DOOR ARM REST WINDOW REGULATOR SWITCH PLATE	24038-9
HOUSING-FOLDING TOP HYDRAULIC PUMP	53395
HOUSING-FOLDING TOP LOCK NUT	53514
HOUSING-FRONT SEAT ADJUSTER REGULATOR	617A30
HOUSING-FRONT SEAT ADJUSTER TRANSMISSION	617B84
HOUSING-FUEL TANK FILLER PIPE	11310
HOUSING-FUEL TANK FILLER PIPE	40328
HOUSING-HEATER & A/COND.	18A484
HOUSING-HEATER & A/COND.TEMPERATURE REGULATOR CONTROL	18A507
HOUSING-REAR DOOR ASH RECEPTACLE	27470-1
HOUSING-WINDSHIELD WIPER MOTOR	17A431
HOUSING-WINDSHIELD WIPER PIVOT SHAFT	17554-5
I	
INSERT-BACK WINDOW GLASS UPPER SIDE RUN	40781
INSERT-BACK WINDOW OUTSIDE SIDE MOULDING	423A54
INSERT-DOOR INSIDE HANDLE INNER ESCUTCHEON	22644
INSERT-DOOR LOCK STRIKER PLATE	22040
INSERT-FRONT DOOR OUTSIDE UPPER MOULDING	20860
INSERT-FRONT FENDER SIDE MOULDING	16B108-9
INSERT-FRONT SEAT BACK-CENTER	61622
INSERT-QUARTER OUTSIDE UPPER MOULDING	290B26
INSERT-QUARTER WINDOW OUTSIDE UPPER MOULDING	29519
INSERT-REAR DOOR OUTSIDE UPPER MOULDING	254A58
INSTRUMENT PANEL SAFETY PAD ATTACHING KIT	04200
INSULATOR-ANTENNA MAST TO TUBE-LOWER	19110
INSULATOR-ANTENNA MOUNTING	18897
INSULATOR-ANTENNA OUTER MAST	19116
INSULATOR-FAN SHROUD TO RADIATOR	47009
INSULATOR-FRONT SHOCK ABSORBER-LOWER	18A018
INSULATOR-WINDSHIELD WIPER SWITCH	17A527
J	
JACK-BUMPER	17080
JET & BRACKET-WINDSHIELD WASHER	17603
JET-WINDSHIELD WASHER NOZZLE	17A602
JEWEL-HEATER & A/COND. BLOWER INDICATOR	18B691

Alphabetical Index—Continued

Part Name	Group Number
K	
KEY BLANK-LUGGAGE & GLOVE COMPARTMENT DOOR LOCK	43562
KEY-DOOR & IGNITION LOCK	22053
KEY-FRONT DOOR VENTILATOR WINDOW HANDLE-LOCKING	22920
KEY-FRONT SEAT ADJUSTER REGULATOR	60490
KIT-A/COND.	19700
KIT-A/COND. COMPRESSOR GASKET REPAIR	19B684
KIT-A/COND.-EXTRA COOLING	19B969
KIT-ADAPTOR-REAR SEAT BELT MOUNTING	61156
KIT-ANTENNA MOUNTING INSTALLATION	18917
KIT-ARMATURE & GEAR ASSEMBLY WINDSHIELD WIPER	17C437
KIT-BODY ROCKER PANEL MOULDING	10146
KIT-BRACKET & SCREW-ROOF & DECK MOUNTING-LUGGAGE CARRIER	55078
KIT-BRACKET-REAR VIEW INSIDE MIRROR	17698
KIT-BUTTON & PIN-DOOR OUTSIDE HANDLE	22454
KIT-CABLE WINDSHIELD WIPER PIVOT SHAFT	17B495
KIT-CAM REPLACEMENT ELECTRIC WINDSHIELD WIPER	17A500
KIT-CARRIER ROOF LUGGAGE-WITH COVER	55062
KIT-DOOR LOCK CYLINDER COVER & SPRING	21942-3
KIT-DOOR OUTSIDE REAR EDGE MOULDING	20910
KIT-DOOR POCKET	20130
KIT-DRIVE GEAR-FRONT DOOR VENTILATOR WINDOW REGULATOR MOTOR	23496
KIT-FAST DRY ENAMEL 3 OZ. CAN	19503
KIT-FILTER-A/COND. EXPANSION VALVE	19B698
KIT-FIRE EXTINGUISHER & BRACKET	19B540
KIT-FIRE EXTINGUISHER RECHARGE	19C505
KIT-FLUSH FENDER SHIELD	27964
KIT-FRONT FENDER MOULDING RETAINER	16A170
KIT-FRONT SEAT BELT BOOT & RETAINER	611A32
KIT-GASKET FOLDING TOP MOTOR & RESERVOIR	50745
KIT-HANDLE-HEATER DOOR & AIR VENT DUCT	18B578
KIT-HARDWARE-REAR DECK LUGGAGE RACK	55196
KIT-HEATER & DEFROSTER	18455
KIT-INSTRUMENT PANEL SAFETY PAD-ATTACHING	04200
KIT-LICENSE PLATE FRAME	17A387
KIT-LOCK-STOWAGE COMPARTMENT DOOR	47026
KIT-MOTOR & PLATE-FOLDING TOP HYDRAULIC LIFT	533A00
KIT-MOULDING FRONT DOOR OUTSIDE-CLIP	20834
KIT-MOULDING QUARTER OUTSIDE UPPER-CLIP	290A93
KIT-MOULDING RETAINER OUTSIDE BELT	500308
KIT-NOZZLE REPAIR-WINDSHIELD WASHER	17A638
KIT-O RING AND WASHER HYDRAULIC WINDSHIELD WIPER	17B480
KIT-PAD & RETAINER-ROOF & DECK MOUNTING LUGGAGE RACK	55156
KIT-PLATE & ROTOR-FOLDING TOP HYDRAULIC LIFT PUMP	53442
KIT-PLATE-FRONT LICENSE PLATE OPENING COVER	17A391
KIT-PUMP-FOLDING TOP HYDRAULIC LIFT	53337
KIT-RADIO ANTENNA	18813
KIT-RADIO REAR SEAT SPEAKER	18875
KIT-RADIO RECEIVER	18805
KIT-RADIO REVERBERATION SPEAKER FOOT CONTROL	19A001
KIT-REAR BUMPER-STEP	17B820
KIT-REAR DOOR OUTSIDE MOULDING-RETAINER	25418
KIT-REAR VIEW OUTSIDE MIRROR	17696
KIT-REGULATOR-DRIVE & COUPLING-ELECTRIC REAR DOOR WINDOW	27002-3
KIT-REGULATOR-DRIVE & COUPLING-QUARTER WINDOW ELECTRIC	30302-3
KIT-REGULATOR-DRIVE & COUPLING-FRONT DOOR WINDOW	23204-5
KIT-REMOTE CONTROL LUGGAGE COMPARTMENT DOOR LOCK RELEASE	432A00
KIT-RESERVOIR-FOLDING TOP HYDRAULIC LIFT	53376
KIT-RETAINER-DOOR OUTSIDE MOULDING-FRONT	20832
KIT-RETAINER-QUARTER PANEL OUTSIDE UPPER MOULDING	290A92
KIT-ROOF & DECK LID LUGGAGE CARRIER	55100
KIT-SEAT BELT	610A88-9
KIT-SEAT BELT	61200-1
KIT-SEAT BELT RETRACTOR	611A06
KIT-SEAT CUSHION SPRING HELPER	63186
KIT-SHOCK ABSORBER & BUSHING-FRONT	18124
KIT-SHOCK ABSORBER & BUSHING-REAR	18125
KIT-SHOCK ABSORBER INSULATOR REPAIR	18198
KIT SOLENOID & PLUNGER REPAIR-FRONT SEAT ADJUSTING	61925
KIT-SPARE WHEEL MOUNTING-RELOCATING	47044
KIT-SPEEDOMETER CABLE CORE REPLACEMENT	17262
KIT-SPEEDOMETER CABLE TIP REPLACEMENT	17A254
KIT-STRAP ASSEMBLY-ROOF CARRIER HOLD DOWN	55196
KIT-TACHOMETER	17A326
KIT-TACHOMETER BRACKET	17368
KIT-TIRE INFLATOR & SEALANT	19C543
KIT-TISSUE DISPENSER	19A549
KIT-TOUCH-UP PAINT-1 OZ.TUBE	19503
KIT-TOUCH-UP PAINT-6 OZ.SPRAY CAN	19503
KIT-TOUCH-UP PAINT-QUARTS	19503
KIT-VENT AIR VALVE CONTROL MOTOR MOUNTING SEAL	01440
KIT-WEATHERSTRIP FRONT DOOR FRONT-AT BELT	20340-1
KIT-WINDSHIELD WASHER	17A603
KIT-WINDSHIELD WIPER MOTOR KICKER & SHUTTLE	17B483
KNOB-A/COND. CONTROL	19A640
KNOB-A/COND. REGISTER AIR OUTLET DOOR	19B674
KNOB-A/COND. REGISTER CONTROL	19A962
KNOB-A/COND. REGISTER HORIZONTAL LOUVER ACTUATOR	19A852

Alphabetical Index—Continued

Part Name	Group Number
KNOB-AIR CONTROL	18611
KNOB-DOOR LOCKING CONTROL ROD	21850
KNOB-DOOR WINDOW REGULATOR HANDLE	23352
KNOB-HEATER & A/COND. BLOWER SWITCH	18513
KNOB-HEATER & A/COND. REGULATOR CONTROL	18519
KNOB-QUARTER ASH RECEPTACLE	30710
KNOB-RADIO ANTENNA CONTROL	18911
KNOB-RADIO CONTROL	18817
KNOB-RADIO REAR SEAT SPEAKER FADER CONTROL	18958
KNOB-REAR VIEW MIRROR REMOTE CONTROL	17B718
KNOB-TAILGATE LATCH RELEASE LEVER	431A76
KNOB-WINDSHIELD WIPER CONTROL	17513
L	
LATCH ASSEMBLY-AUXILIARY SEAT BACK FLOOR-R.H.	61142
LATCH-FOLDING TOP SIDE RAIL COVER-FRONT	54734-5
LATCH-FOLDING TOP SIDE RAIL COVER-REAR	54738-9
LATCH-GLOVE COMPARTMENT DOOR LOCK	06002
LATCH-RIGHT REAR SEAT	61382
LATCH-TAILGATE	43187
LEAD-WINDSHIELD WIPER MOTOR	17A499
LENS-A/COND. CONTROL	19B892
LENS & BEZEL-WINDSHIELD WIPER CONTROL	17B470
LENS-HEATER CONTROL	18B396
LENS-VANITY MIRROR LAMP	18263
LETTER-BODY OUTSIDE	29255
LETTER-HOOD FRONT	16606
LETTERS-LOWER BACK PANEL	40282
LEVER-FRONT DOOR LOCK ACTUATING ROD	22384-5
LEVER-FRONT DOOR LOCK OPERATING	21970-1
LEVER-REAR DOOR LOCK ACTUATING ROD	26452
LEVER-WINDSHIELD WIPER PARK SWITCH	17B549
LICENSE PLATE FRAME KIT	17A387
LID-FUEL FILLER OPENING	405A26
LIFT ASSEMBLY-LUGGAGE COMPARTMENT DOOR	406A10
LIFT ASSEMBLY-UPPER BACK FINISH PANEL-LESS MOTOR	403A52
LIFT-FOLDING TOP HYDRAULIC	50600
LIFT-JACK	17115
LIFT-UPPER BACK PANEL	46538-9
LINK-A/COND. EVAPORATOR DOOR CONTROL	19B783
LINK & VERTICAL STRAINER-REAR SEAT BACK CENTER ARM REST	67210
LINK-FOLDING TOP BALANCE	50454-5
LINK-FOLDING TOP BALANCE-LOWER	506A14-5
LINK-FOLDING TOP BALANCE TO EXTENSION	506A68-9
LINK-FOLDING TOP BALANCE-UPPER	506A16-7
LINK-FOLDING TOP CONTROL	50316-7
LINK-FOLDING TOP LOWER POWER	506A38-9
LINK-FOLDING TOP NO.2 BOW CONTROL	51302-3
LINK-FOLDING TOP NO.4 BOW	53174-5
LINK-FOLDING TOP POWER	50352-3
LINK-FOLDING TOP UPPER POWER	506A52
LINK-FRONT DOOR LOCK CONTROL	21928
LINK-FRONT DOOR LOCK CONTROL	21980
LINK-FRONT DOOR LOCK CONTROL AUXILIARY BELLCRANK TO SOLENOID	22100-1
LINK-FRONT DOOR LOCK REMOTE CONTROL	21940-1
LINK-FRONT DOOR LOCK REMOTE CONTROL BELLCRANK TO LOCK	21662
LINK-FRONT SEAT TRACK REGULATOR TO HORIZONTAL EQUALIZING BAR	62003
LINK-FRONT SEAT TRACK VERTICAL ADJUSTER BAR	61854
LINK-LUGGAGE COMPARTMENT DOOR HINGE TORSION BAR ADJUSTER	44896
LINK-LUGGAGE COMPARTMENT DOOR LOCK	43226
LINK-LUGGAGE COMPARTMENT DOOR LOCK SOLENOID	43483
LINK-PACKAGE TRAY LIFT ASSEMBLY TO MOTOR	46593
LINK-REAR DOOR CHECK ON HINGE	26804-5
LINK-REAR DOOR LOCK AUXILIARY BELLCRANK TO SOLENOID	26636
LINK-REAR DOOR LOCK CONTROL-REAR	26490
LINK-REAR DOOR LOCK CONTROL ROD	26420-1
LINK-REAR DOOR LOCK REMOTE CONTROL	26442-3
LINK-REAR DOOR LOCK REMOTE CONTROL-REAR	26498
LINK-TAILGATE LOCK RELEASE	431A50
LOCK-A/COND. REGISTER	19B785
LOCK ASSEMBLY-TAILGATE	43150-1
LOCK-FOLDING TOP NO.1 BOW-LESS MOTOR	514A62
LOCK-FRONT DOOR	21812-3
LOCK-GLOVE COMPARTMENT DOOR	06081
LOCK-HOOD	16700-1
LOCK-LUGGAGE COMPARTMENT DOOR	43200
LOCK-REAR DOOR	26412-3
LOCK SET-DOOR & IGNITION	22050
LOCK SET-LUGGAGE,TAILGATE & GLOVE COMPARTMENT DOOR	43507
LOCK STOWAGE COMPARTMENT DOOR KIT	47026
LOOP-REAR SEAT BACK FLOOR EXTENSION STOP	605A48
LOOP-REAR SEAT BACK STOP	61099-0
LUBRICANT-ADDITIVE POWER STEERING & AUTOMATIC TRANSMISSION	19C548
LUBRICANT-BALL JOINT GREASE	19590
LUBRICANT-DIFFERENTIAL GEAR & WASHERS	19580
LUBRICANT-DISTRIBUTOR CAM	19D530
LUBRICANT-DOUBLE CARDAN CENTERING BALL	19586

Alphabetical Index—Continued

Part Name	Group Number
LUBRICANT-HYPOID ADDITIVE	19B546
LUBRICANT-LOCK	19587
LUBRICANT-LUBRIPLATE-WHITE GREASE-WATERPROOF	19584
LUBRICANT-MULTIPLE LUBRICATOR	19577
LUBRICANT-OIL CONDITIONER	19579
LUBRICANT-REAR AXLE HYPOID	19580
LUBRICANT-RU-GLYDE	19583
LUBRICANT-SILICONE	19553
LUBRICANT-SPECIAL PURPOSE	19589
LUBRICANT-SPEEDOMETER CABLE	19581
LUBRICANT-STANDARD TRANSMISSION	19C547
LUBRICANT-STEERING GEAR	19578
LUBRICANT-STEERING LINKAGE	19B545
LUBRICANT-U-JOINT	19586
LUBRICANT-WATER PUMP & RUST INHIBITOR	19546
LUBRICANT-WATER PUMP-STOP-LEAK & RUST INHIBITOR	19554
LUBRICANT-WHEEL BEARING GREASE	19585
M	
MASK-A/COND. & HEATER CONTROL	18B395
MAST-ANTENNA	19107-9
MAST-RADIO ANTENNA	18A886
MEDALLION-A/COND.REGISTER	19A551
MEDALLION-FUEL FILLER DOOR ORNAMENT	40580
MEDALLION-REAR SEAT BACK ORNAMENT	66633
MEMBER-CENTER FLOOR CROSS-UPPER	10848-9
MEMBER-CENTER FLOOR FRONT CROSS-LOWER	10850-1
MEMBER-CENTER FLOOR FRONT CROSS-UPPER	10972
MEMBER-CENTER FLOOR SIDE-INNER	10442-3
MEMBER-FLOOR CROSS NO.3-UPPER	10734-5
MEMBER-FLOOR SIDE	102A18-9
MEMBER-FLOOR SIDE-INNER	10116-7
MEMBER-FLOOR SIDE-OUTER	10120-1
MEMBER-FLOOR SIDE-REAR	10124-5
MEMBER-FRONT CROSS	10852
MEMBER-FRONT FLOOR CROSS NO. 1	10692-3
MEMBER-FRONT FLOOR CROSS NO. 2	10728
MEMBER-FRONT FLOOR CROSS-LOWER	10812-3
MEMBER-FRONT FLOOR CROSS-UPPER	10672
MEMBER-FRONT SIDE	10462-3
MEMBER-FRONT SIDE-INNER	10008-9
MEMBER-FRONT SIDE-OUTER	10218-9
MEMBER-FRONT SUSPENSION	10300
MEMBER-FRONT SUSPENSION-NO. 1 CROSS	10018
MEMBER-FRONT SUSPENSION-NO. 2 CROSS	10010
MEMBER-FRONT SUSPENSION SIDE	10302-3
MEMBER-REAR FLOOR CROSS-FRONT	10786
MEMBER-REAR FLOOR CROSS FUEL TANK FRONT SUPPORT	11368
MEMBER-REAR FLOOR CROSS-REAR	10780
MEMBER-REAR FLOOR SIDE-INNER	10290-1
MEMBER-REAR SHOCK ABSORBER MOUNTING	18A000
MEMBER-REAR SHOCK ABSORBER MOUNTING MEMBER	18A073
MIRROR & ARM-REAR VIEW OUTSIDE	17025
MIRROR & CABLE-REAR VIEW OUTSIDE	17A708
MIRROR GLASS-REAR VIEW OUTSIDE	17A700
MIRROR GLASS-REAR VIEW OUTSIDE	17723
MIRROR-REAR VIEW INSIDE	17700
MIRROR-REAR VIEW OUTSIDE	17682
MIRROR-SPOTLIGHT	18153
MIRROR-VISOR VANITY	17A679
MOTOR-A/COND. & HEATER VACUUM CONTROL	18A318
MOTOR-A/COND. BLOWER	19805
MOTOR & BRACKET ASSEMBLY-LUGGAGE COMPARTMENT DOOR LOCK	432A24
MOTOR & BRACKET-UPPER BACK PANEL LIFT	46752
MOTOR & COVER-FRONT DOOR VENTILATOR WINDOW REGULATOR GEAR-ELECTRIC	23406-7
MOTOR & HOUSING-ANTENNA	18A819
MOTOR & PLATE FOLDING TOP HYDRAULIC LIFT KIT	533A00
MOTOR & TUBE-RADIO ANTENNA	18850
MOTOR & WHEEL-A/COND. BLOWER	19846
MOTOR-ANTENNA DRIVE	19112
MOTOR-HEATER & A/COND. BLOWER	18527
MOTOR-WINDSHIELD WIPER	17508
MOULDING-A/COND. REGISTER UPPER-L.H.	19A856
MOULDING ASSEMBLY-FRONT FENDER FRONT SIDE TIP	16C102-3
MOULDING ASSEMBLY-LOWER BACK PANEL END-WITH ATTACHING PARTS	423A08-9
MOULDING-BACK BELT	40242
MOULDING-BACK BELT-CENTER	423A20-1
MOULDING-BACK BELT-SIDE	423A18-9
MOULDING-BACK WINDOW DIVISION BAR-INSIDE	42442-3
MOULDING-BACK WINDOW DIVISION BAR-OUTSIDE	42402-3
MOULDING-BACK WINDOW DIVISION BAR-OUTSIDE	42420-1
MOULDING-BACK WINDOW GARNISH-LOWER	42456-7
MOULDING-BACK WINDOW GARNISH-LOWER CORNER	42454-5
MOULDING-BACK WINDOW GARNISH-SIDE	42416-7
MOULDING-BACK WINDOW GARNISH-UPPER	42410-1
MOULDING-BACK WINDOW GLASS-TOP	422A28
MOULDING-BACK WINDOW LOWER GARNISH	42304
MOULDING-BACK WINDOW-OUTSIDE LOWER	42404-5
MOULDING-BACK WINDOW-OUTSIDE LOWER CENTER	423A28
MOULDING-BACK WINDOW-OUTSIDE LOWER CORNER	42406-7
MOULDING-BACK WINDOW-OUTSIDE SIDE	42492-3
MOULDING-BACK WINDOW OUTSIDE SIDE-LOWER	44680-1
MOULDING-BACK WINDOW OUTSIDE SIDE-UPPER	41844-5

Alphabetical Index—Continued

Part Name	Group Number
MOULDING-BACK WINDOW-OUTSIDE UPPER	42430-1
MOULDING-BACK WINDOW OUTSIDE-UPPER CORNER	42376-7
MOULDING-BODY ROCKER PANEL CURB BUFFER	10176-7
MOULDING-BODY ROCKER PANEL-REAR	101A04-5
MOULDING-CENTER BODY PILLAR OUTSIDE-LOWER	24470-1
MOULDING-CENTER BODY PILLAR OUTSIDE-UPPER	24458-9
MOULDING-CONSOLE COMPARTMENT PANEL FRONT	045B24-5
MOULDING-CONSOLE COMPARTMENT PANEL REAR	04736
MOULDING-CONSOLE COMPARTMENT PANEL SIDE-FRONT	04578-9
MOULDING-CONSOLE COMPARTMENT PANEL SIDE-REAR	045B70-1
MOULDING-CONSOLE PANEL SIDE	045C26-7
MOULDING-DOOR ARM REST	24166
MOULDING-DOOR ARM REST	24190-1
MOULDING-DOOR OUTSIDE APPLIQUE	208A10-1
MOULDING EXTENSION-FRONT FENDER MOULDING	16B052-3
MOULDING-FOLDING TOP NO.1 BOW-OUTSIDE	517A70
MOULDING-FOLDING TOP REAR BOW OUTSIDE-CENTER	51416
MOULDING-FOLDING TOP REAR BOW OUTSIDE-SIDE	51476-7
MOULDING-FRONT BUMPER STONE DEFLECTOR	17B812
MOULDING-FRONT DOOR-OUTSIDE	20938-9
MOULDING-FRONT DOOR-OUTSIDE BELT	20934-5
MOULDING FRONT DOOR OUTSIDE CLIP KIT	20834
MOULDING-FRONT DOOR OUTSIDE-LOWER	20878-9
MOULDING-FRONT DOOR OUTSIDE LOWER FINISH RAIL	20866-7
MOULDING-FRONT DOOR-OUTSIDE UPPER	20932-3
MOULDING-FRONT DOOR OUTSIDE UPPER FINISH RAIL	20864
MOULDING-FRONT DOOR TRIM	20920-1
MOULDING-FRONT DOOR TRIM	20970-1
MOULDING-FRONT DOOR TRIM-BELT	22370-1
MOULDING-FRONT DOOR TRIM-CENTER	20958-9
MOULDING-FRONT DOOR TRIM-LOWER	20956-7
MOULDING-FRONT DOOR TRIM-UPPER	21110-1
MOULDING-FRONT DOOR TRIM-UPPER FRONT	20914-5
MOULDING-FRONT DOOR WINDOW FRAME-OUTSIDE FRONT	20442-3
MOULDING-FRONT DOOR WINDOW FRAME-OUTSIDE REAR	20982-3
MOULDING-FRONT DOOR WINDOW FRAME-OUTSIDE TOP	20492-3
MOULDING-FRONT DOOR WINDOW GARNISH	20904-5
MOULDING-FRONT FENDER AT GRILLE OPENING	16C218-9
MOULDING-FRONT FENDER FINISH RAIL-LOWER	16B042-3
MOULDING-FRONT FENDER FINISH RAIL-UPPER	16B082-3
MOULDING-FRONT FENDER-FRONT	16164-5
MOULDING-FRONT FENDER LOWER FRONT	16A192-3
MOULDING-FRONT FENDER SIDE	16003-4
MOULDING-FRONT FENDER SIDE	16036-7
MOULDING-FRONT FENDER-UPPER	16C038-9
MOULDING-FRONT FENDER WHEEL OPENING	16038-9
MOULDING-FRONT FENDER WHEEL OPENING-REAR	16A078-9
MOULDING-FRONT QUARTER WINDOW GARNISH-REAR	290A56-7
MOULDING-FRONT QUARTER WINDOW GARNISH-UPPER	290A54
MOULDING-FRONT SEAT BACK	60788
MOULDING-FRONT SEAT BACK	65206
MOULDING-FRONT SEAT BACK REAR TRIM PANEL	61670
MOULDING-FRONT SEAT BACK SIDE SHIELD	61402-3
MOULDING-FRONT SEAT CUSHION SIDE SHIELD	61400-1
MOULDING-FUEL FILLER DOOR OPENING-LOWER	405A96
MOULDING-FUEL FILLER LID	405A48
MOULDING-FUEL FILLER LID FINISH RAIL	405A52
MOULDING-GLOVE COMPARTMENT DOOR	04773
MOULDING-GLOVE COMPARTMENT DOOR	04792
MOULDING-HOOD FRONT	16856-7
MOULDING-HOOD FRONT EXTENSION	16A708
MOULDING-INSTRUMENT PANEL	04388
MOULDING-INSTRUMENT PANEL END-LOWER	044B54-5
MOULDING-INSTRUMENT PANEL END UPPER COVER RETAINING	04287
MOULDING-INSTRUMENT PANEL END UPPER RETAINING	04264
MOULDING-INSTRUMENT PANEL-INTERMEDIATE	04446
MOULDING-INSTRUMENT PANEL LOWER	04652
MOULDING-INSTRUMENT PANEL PAD RETAINING-END	04518-9
MOULDING-INSTRUMENT PANEL PAD RETAINING-TOP	04522-3
MOULDING-INSTRUMENT PANEL PAD RETAINING TOP CENTER	044B40
MOULDING-INSTRUMENT PANEL UPPER-PAD RETAINING	04296-7
MOULDING-INSTRUMENT PANEL UPPER PAD RETAINING CENTER	04772
MOULDING-INSTRUMENT PANEL-VINYL COVERED	04388
MOULDING-LOWER BACK FINISH PANEL-LOWER	42370
MOULDING-LOWER BACK FINISH PANEL-UPPER	42368-9
MOULDING-LOWER BACK PANEL	423A14
MOULDING-LOWER BACK PANEL	423A58
MOULDING-LOWER BACK PANEL APPLIQUE	423A48
MOULDING-LOWER BACK PANEL CENTER FINISH-WITH ATTACHING PARTS	423A12-3
MOULDING-LUGGAGE COMPARTMENT DOOR	42509-12
MOULDING-LUGGAGE COMPARTMENT DOOR-LOWER CENTER	40104-5
MOULDING-LUGGAGE COMPARTMENT DOOR-LOWER END	40108-9
MOULDING-PACKAGE TRAY FINISH-CENTER	465A02
MOULDING-PACKAGE TRAY FINISH-END	465A04-5
MOULDING-PACKAGE TRAY FINISH-INTERMEDIATE	465A00
MOULDING-PACKAGE TRAY-REAR	46530-1
MOULDING PANEL-FRONT FENDER SIDE FRONT	16550-1
MOULDING-QUARTER ARM REST	31796-7
MOULDING-QUARTER ARM REST-UPPER	31782
MOULDING-QUARTER BELT GARNISH	29380-1
MOULDING-QUARTER BELT GARNISH-REAR	290B36-7
MOULDING-QUARTER INSIDE UPPER REAR TRIM PANEL	290A30
MOULDING-QUARTER OUTSIDE BELT	29034-5
MOULDING-QUARTER OUTSIDE BELT	29042-3

Alphabetical Index—Continued

Part Name	Group Number
MOULDING-QUARTER OUTSIDE BELT-REAR	29138-9
MOULDING-QUARTER OUTSIDE FINISH PANEL-REAR	291A50-1
MOULDING-QUARTER OUTSIDE-FRONT	291A34-5
MOULDING-QUARTER OUTSIDE LOWER FINISH RAIL	291A76-7
MOULDING-QUARTER OUTSIDE-LOWER FRONT	29076-7
MOULDING-QUARTER OUTSIDE-LOWER FRONT	291B20-1
MOULDING-QUARTER OUTSIDE-LOWER REAR	29066-7
MOULDING-QUARTER OUTSIDE REAR	29038-9
MOULDING-QUARTER OUTSIDE-REAR	29396-7
MOULDING-QUARTER OUTSIDE REAR FINISH RAIL	290B06-7
MOULDING-QUARTER OUTSIDE-SPEAR	290C24-5
MOULDING-QUARTER OUTSIDE SPEAR-LOWER	290C32
MOULDING-QUARTER OUTSIDE SPEAR-TIP	290C34-5
MOULDING-QUARTER-OUTSIDE UPPER	29028-9
MOULDING-QUARTER OUTSIDE UPPER	29140-1
MOULDING-QUARTER OUTSIDE-UPPER CENTER	290B35
MOULDING QUARTER OUTSIDE UPPER CLIP KIT	290A93
MOULDING-QUARTER OUTSIDE UPPER FINISH RAIL	291A78
MOULDING-QUARTER OUTSIDE UPPER FINISH RAIL-FRONT	291A81
MOULDING-QUARTER OUTSIDE UPPER FINISH RAIL-REAR	291A83
MOULDING-QUARTER OUTSIDE-UPPER FRONT	29068-9
MOULDING-QUARTER OUTSIDE-UPPER REAR	291A48
MOULDING-QUARTER OUTSIDE UPPER REAR CORNER	291A42
MOULDING-QUARTER OUTSIDE UPPER REAR END	29246-7
MOULDING-QUARTER PANEL LOWER REAR EDGE	27766-7
MOULDING-QUARTER PANEL LOWER REAR EXTENSION	29368-9
MOULDING-QUARTER PANEL OUTSIDE REAR END	290B02-3
MOULDING-QUARTER SPEAR TO FUEL FILLER CAP-LOWER FRONT	291B91
MOULDING-QUARTER SPEAR TO FUEL FILLER CAP-LOWER REAR	291B93
MOULDING-QUARTER SPEAR TO FUEL FILLER CAP-UPPER REAR	291B89
MOULDING-QUARTER SPEAR-UPPER	291B86-7
MOULDING-QUARTER STATIONARY WINDOW GARNISH-FRONT	29306-7
MOULDING-QUARTER STATIONARY WINDOW GARNISH-LOWER	29094-5
MOULDING-QUARTER STATIONARY WINDOW GARNISH-LOWER REAR	29084-5
MOULDING-QUARTER STATIONARY WINDOW GARNISH-REAR	29262-3
MOULDING-QUARTER TRIM	290A42-3
MOULDING-QUARTER TRIM	31162-3
MOULDING-QUARTER TRIM BELT	31322-3
MOULDING-QUARTER TRIM-CENTER	290A24-5
MOULDING-QUARTER TRIM FRONT	31204
MOULDING-QUARTER TRIM LOWER	290A28-9
MOULDING-QUARTER TRIM-REAR	290A44-5
MOULDING-QUARTER TRIM-REAR	31140
MOULDING-QUARTER TRIM-UPPER FRONT	290A22-3
MOULDING-QUARTER TRIM-UPPER REAR	290A26-7
MOULDING-QUARTER WHEEL OPENING COVER	29050-1
MOULDING-QUARTER WHEEL OPENING COVER FRONT	31294-5
MOULDING-QUARTER WHEEL OPENING COVER-REAR	31358-9
MOULDING-QUARTER WHEELHOUSE LOWER EXTENSION COVER-REAR	31460-1
MOULDING-QUARTER WHEELHOUSE TRIM PANEL	290B22-3
MOULDING-QUARTER WHEELHOUSE TRIM PANEL-FRONT	290B40-1
MOULDING-QUARTER WINDOW GARNISH-LOWER	29002-3
MOULDING-QUARTER WINDOW GARNISH-UPPER	29007
MOULDING-QUARTER WINDOW GARNISH-UPPER FRONT	29014-5
MOULDING-QUARTER WINDOW GARNISH-UPPER REAR	28994-5
MOULDING-QUARTER WINDOW-OUTSIDE FRONT	290A66-7
MOULDING-QUARTER WINDOW-OUTSIDE FRONT OUTER	290B92-3
MOULDING-QUARTER WINDOW-OUTSIDE REAR	290B52-3
MOULDING-QUARTER WINDOW OUTSIDE-UPPER	290A60-1
MOULDING-QUARTER WINDOW OUTSIDE UPPER	290A64-5
MOULDING-REAR CORNER PILLAR OUTSIDE UPPER	410A06-7
MOULDING-REAR DOOR ARM REST & QUARTER-SUPPORT	25406-7
MOULDING-REAR DOOR GLASS WEATHERSTRIP RETAINER	254A88-9
MOULDING-REAR DOOR-OUTSIDE	25532-3
MOULDING-REAR DOOR OUTSIDE APPLIQUE	254A78
MOULDING-REAR DOOR OUTSIDE BELT	25554-5
MOULDING-REAR DOOR OUTSIDE-LOWER	25556-7
MOULDING-REAR DOOR OUTSIDE LOWER FINISH RAIL	254A48-9
MOULDING-REAR DOOR OUTSIDE LOWER FINISH RAIL-FRONT	254A26-7
MOULDING-REAR DOOR OUTSIDE-TOP	25542-3
MOULDING-REAR DOOR OUTSIDE TOP FRONT-SNAP-ON	254A12-3
MOULDING-REAR DOOR-OUTSIDE TOP REAR	25522-3
MOULDING-REAR DOOR-OUTSIDE UPPER	25540-1
MOULDING-REAR DOOR OUTSIDE UPPER FINISH RAIL	254A50-1
MOULDING-REAR DOOR OUTSIDE-UPPER FRONT	25586-7
MOULDING-REAR DOOR OUTSIDE UPPER REAR EXTENSION	24990-1
MOULDING-REAR DOOR OUTSIDE UPPER REAR EXTENSION	25018-9
MOULDING-REAR DOOR TRIM	25558-9
MOULDING-REAR DOOR TRIM-BELT	26024-5
MOULDING-REAR DOOR TRIM-CENTER	25502-3
MOULDING-REAR DOOR TRIM-FRONT	25504-5
MOULDING-REAR DOOR TRIM-LOWER	25578-9
MOULDING-REAR DOOR TRIM-REAR	25546-7
MOULDING-REAR DOOR WINDOW FRAME-OUTSIDE REAR	254A04-5
MOULDING-REAR DOOR WINDOW GARNISH	25514-5
MOULDING-REAR FLOOR PAN SIDE	111A08-9
MOULDING-REAR QUARTER STATIONARY WINDOW GARNISH UPPER	290A14-5

Part Name	Group Number
MOULDING-REAR QUARTER WINDOW GARNISH-FRONT	291A60-1
MOULDING-REAR QUARTER WINDOW GARNISH-LOWER FRONT	29122-3
MOULDING-REAR QUARTER WINDOW GARNISH-LOWER REAR	291A88-9
MOULDING-REAR QUARTER WINDOW GARNISH-REAR	291A84-5
MOULDING-REAR QUARTER WINDOW-INSIDE UPPER CORNER	291A30-1
MOULDING-REAR QUARTER WINDOW-OUTSIDE FRONT	291A10-1
MOULDING-REAR QUARTER WINDOW-OUTSIDE REAR	291A32-3
MOULDING-REAR QUARTER WINDOW-OUTSIDE UPPER	290A62-3
MOULDING-REAR SEAT BACK	601A54-5
MOULDING-REAR SEAT BACK TOP	61138-9
MOULDING-REAR SEAT BACK-UPPER	61040-1
MOULDING-REAR WHEEL OPENING	29164-5
MOULDING RETAINER OUTSIDE BELT KIT	500308
MOULDING-ROOF DRIP FINISH-FRONT	51718-9
MOULDING-ROOF DRIP FINISH-REAR	517A46
MOULDING-ROOF DRIP FINISH-SIDE	51726-9
MOULDING-ROOF DRIP-REAR CORNER	517A82-3
MOULDING-ROOF DRIP-SIDE	51700-1
MOULDING-ROOF DRIP SIDE-BELT	51686-7
MOULDING-ROOF DRIP SIDE FINISH-FRONT	517A54-5
MOULDING-ROOF DRIP SIDE FINISH-LOWER REAR	51804-5
MOULDING-ROOF DRIP SIDE FINISH-REAR & REAR CORNER	51728-9
MOULDING-ROOF DRIP SIDE FINISH-REAR CORNER	517A48-9
MOULDING-ROOF DRIP SIDE-REAR	51720-1
MOULDING-ROOF OUTSIDE BELT	517A04-5
MOULDING-ROOF OUTSIDE REAR-CENTER	50044
MOULDING-ROOF OUTSIDE REAR-SIDE	517A02-3
MOULDING-ROOF OUTSIDE SIDE-FRONT	50062-3
MOULDING-ROOF OUTSIDE SIDE-REAR	50070-1
MOULDING-ROOF SIDE	51628-9
MOULDING-ROOF SIDE INNER	51752-3
MOULDING-ROOF SIDE INNER-REAR	51754-5
MOULDING-ROOF SIDE RAIL-INNER	513B42-3
MOULDING-ROOF SIDE RAIL-OUTSIDE	50020-1
MOULDING-TAILGATE-LOWER	40719
MOULDING-TAILGATE OUTSIDE	425A22
MOULDING-TAILGATE OUTSIDE BELT	40242
MOULDING-TAILGATE OUTSIDE-BELT SIDE	40738-9
MOULDING-TAILGATE OUTSIDE FINISH PANEL	425A04
MOULDING-TAILGATE OUTSIDE FINISH PANEL-LOWER	425A18
MOULDING-TAILGATE OUTSIDE LOWER	425A30
MOULDING-TAILGATE OUTSIDE PANEL-END	42576-7
MOULDING-TAILGATE OUTSIDE-UPPER & LOWER	41018
MOULDING-TAILGATE-OUTSIDE UPPER CENTER	423A96
MOULDING-TAILGATE OUTSIDE UPPER END	423A92-3
MOULDING-UPPER BACK PANEL	42512
MOULDING-WINDSHIELD GARNISH-LOWER	03626-7
MOULDING-WINDSHIELD GARNISH-SIDE	03598-9
MOULDING-WINDSHIELD GARNISH-SIDE LOWER	03680-1
MOULDING-WINDSHIELD GARNISH-SIDE UPPER	03622-3
MOULDING-WINDSHIELD GARNISH-UPPER	03606-7
MOULDING-WINDSHIELD OUTSIDE-BELT	03148-9
MOULDING-WINDSHIELD OUTSIDE-SIDE	03136-7
MOULDING-WINDSHIELD OUTSIDE-TOP	03144-5
MOULDING-WINDSHIELD OUTSIDE-UPPER CORNER	03220-1
MUD & STONE DEFLECTOR-STATION WAGON	16D576
N	
NAME PLATE-QUARTER PANEL	28818
NOZZLE-BACK WINDOW HOUSING DRAIN	42312
NOZZLE REPAIR-WINDSHIELD WASHER KIT	17A638
NOZZLE-WINDSHIELD DEFROSTER	18490-1
NOZZLE-WINDSHIELD WASHER	17665
NUT-AIR CONTROL MOUNTING	018A10
NUT & HOUSING ASSEMBLY-LUGGAGE COMPARTMENT DOOR LOCK	432A34
NUT-ANTENNA DOME	18865
NUT ASSEMBLY-LUGGAGE COMPARTMENT DOOR LOCK	53510
NUT-DOOR LOCK CONTROL	19B512
NUT-FRONT DOOR LOCK CONTROL SWITCH	218A80
NUT-FRONT SEAT ADJUSTER REGULATOR-LESS SOLENOID	60432
NUT-HEATER & A/COND. REGULATOR CONTROL BEZEL MOUNTING	18A508
NUT-HEATER BLOWER SWITCH	18545
NUT-HOOD LOCK DOWEL SPRING RETAINING	16B750
NUT-LUGGAGE COMPARTMENT DOOR LOCK RELEASE CONTROL	43387
NUT-RADIO ANTENNA CONTROL SWITCH	18A996
NUT-REAR VIEW OUTSIDE MIRROR	17B719
NUT-WINDSHIELD WIPER CONTROL	17512
O	
O RING-A/COND. HOSE COUPLING	19B979
O RING & WASHER HYDRAULIC WINDHSIELD WIPER KIT	17B480
ORNAMENT & MEDALLION-QUARTER OUTSIDE	291B26
ORNAMENT-DOOR ARM REST SUPPORT	20812-5
ORNAMENT-DOOR ARM REST SUPPORT	24158-9
ORNAMENT-DOOR TRIM PANEL	20802
ORNAMENT-FRONT DOOR ARM REST SUPPORT-REAR	24162-3
ORNAMENT-FRONT DOOR INSIDE PANEL	20988
ORNAMENT-FRONT FENDER SIDE-FRONT	16A096-7

Alphabetical Index—Continued

Part Name	Group Number
ORNAMENT-FRONT FENDER SIDE-FRONT	16188
ORNAMENT-FRONT FENDER SIDE-LOWER	16300-1
ORNAMENT-FRONT FENDER SIDE-REAR	16B150
ORNAMENT-FRONT FENDER-TOP	16178-9
ORNAMENT-FUEL FILLER DOOR	405A86
ORNAMENT-GLOVE COMPARTMENT DOOR	060A14
ORNAMENT-HOOD FRONT	16607
ORNAMENT-HOOD TOP	16850
ORNAMENT-INSTRUMENT PANEL-CENTER	044B30
ORNAMENT-LOWER BACK-INNER	403B86
ORNAMENT-LOWER BACK-OUTER	403B94
ORNAMENT-LOWER BACK PANEL	40316-7
ORNAMENT-LOWER BACK PANEL-SIDE	424A04-5
ORNAMENT-LUGGAGE COMPARTMENT DOOR	43504
ORNAMENT-PACKAGE TRAY	46768
ORNAMENT-QUARTER OUTSIDE	28032-3
ORNAMENT-REAR DOOR & QUARTER-OUTSIDE LOWER	25404-5
ORNAMENT-REAR DOOR OUTSIDE-UPPER	26008-9
ORNAMENT-REAR DOOR TRIM-UPPER	254A74-5
ORNAMENT-ROOF OUTSIDE-REAR	502A00-1
ORNAMENT-ROOF OUTSIDE-SIDE	517A20-1
ORNAMENT-ROOF OUTSIDE SIDE-UPPER	50284-5
ORNAMENT-ROOF OUTSIDE SIDE-UPPER	50286-7
ORNAMENT-ROOF SIDE & FENDER-OUTER	50286-7
ORNAMENT-ROOF SIDE-INNER	50266-7
ORNAMENT-ROOF SIDE-INNER	50274-5
ORNAMENT-ROOF SIDE-LOWER	517A30-1
ORNAMENT-SEAT BACK	64824
ORNAMENT-TAILGATE-LESS CYLINDER	43500
ORNAMENT-UPPER BACK PANEL	40562-3
OUTLET-HEATER REAR SEAT DUCT	18C262

P

Part Name	Group Number
PACKAGE-A/COND. HOSE COUPLING	19A715
PAD-A/COND. INSTRUMENT PANEL REGISTER	19B964
PAD & RETAINER ROOF & DECK MOUNTING LUGGAGE RACK KIT	55156
PAD-BACK WINDOW REGULATOR HANDLE	44011
PAD-DOOR OUTSIDE HANDLE-LARGE	22428-9
PAD-DOOR OUTSIDE HANDLE-LARGE	26640
PAD-DOOR OUTSIDE HANDLE-SMALL	22448-9
PAD-FRONT BUMPER GUARD	17A465
PAD-HOOD ON COWL	16740
PAD-LOWER BACK FINISH PANEL	42598
PAD-LUGGAGE COMPARTMENT DOOR LOCK CYLINDER SLEEVE	43625
PAD-LUGGAGE COMPARTMENT DOOR ORNAMENT	42543
PAD-NO. 1 BOW TO FLOOR	50348-9
PAD-QUARTER OUTSIDE UPPER REAR END MOULDING	291A16
PAD-REAR BUMPER-STEP	17B821
PAD-REAR DOOR INSIDE ASSIST HANDLE	24650
PAD-REAR SHOCK ABSORBER UPPER PLATE	18A110
PAD-ROOF LUGGAGE CARRIER SLAT	55147
PAD-SKI CARRIER BOTTOM SUPPORT	55028
PAD-STEERING COLUMN OPENING COVER PLATE	01771
PAN-A/COND. EVAPORATOR DRIP	19859
PAN-CENTER FLOOR	11160
PAN-FRONT FLOOR	11135
PAN-REAR FLOOR	11215
PAN-REAR FLOOR SIDE	112A22-3
PANEL-A/COND. EVAPORATOR CASE	19802
PANEL-A/COND. EVAPORATOR CASE-REAR	19A612
PANEL-A/COND. EVAPORATOR CASE TOP	19A998
PANEL & BOX-INSTRUMENT PANEL ASH RECEPTACLE	04894-5
PANEL & RETAINER-HEATER & A/COND. CONTROL	18A651
PANEL ASSEMBLY-LEFT REAR SEAT SUPPORT	60718-9
PANEL ASSEMBLY-QUARTER INSIDE	280A54-5
PANEL ASSEMBLY-REAR BUMPER OPENING FINISH	17224-5
PANEL ASSEMBLY-ROOF-WELDED	50212
PANEL-AUXILIARY FLOOR-LESS COVER	11564
PANEL-AUXILIARY SEAT BACK FLOOR FRONT FINISH	605A00
PANEL-AUXILIARY SEAT BACK FLOOR FRONT-LESS COVER	60940
PANEL-AUXILIARY SEAT BACK FLOOR REAR-LESS COVER	60942
PANEL-AUXILIARY SEAT BACK FLOOR-UPPER	60997
PANEL-BACK WINDOW REGULATOR MOUNTING	40932
PANEL-BODY ROCKER	10128-31
PANEL-CENTER BODY PILLAR INSIDE FINISH-LOWER	24346-7
PANEL-CENTER BODY PILLAR INSIDE FINISH-UPPER	24356-7
PANEL-CONSOLE	045A36
PANEL-CONSOLE COMPARTMENT FRONT	045A74
PANEL-CONSOLE COMPARTMENT REAR	045A12
PANEL-COWL SIDE	02038-9
PANEL-COWL SIDE HEATER UNIT MOUNTING	18A662-3
PANEL-COWL TOP	02010
PANEL-COWL TOP OUTER	02012
PANEL-COWL TOP OUTER-CENTER	02230
PANEL-COWL TOP OUTER-SIDE	02232-3
PANEL CONTROL-A/COND. EVAPORATOR	19B568
PANEL-DASH	01610
PANEL-DASH-UPPER	016A50
PANEL-DOOR ARM REST FINISH	24168
PANEL-FOLDING TOP MOTOR,PUMP,& RELAY PANEL MOUNTING	533A04
PANEL-FOLDING TOP NO. 1 BOW-INNER	514A34
PANEL-FRONT DOOR AIR DUCT	202A08-9

Alphabetical Index—Continued

Part Name	Group Number
PANEL-FRONT DOOR EXTENSION OUTSIDE UPPER MOULDING	20210-1
PANEL-FRONT DOOR OUTSIDE	20200-1
PANEL-FRONT DOOR OUTSIDE APPLIQUE	20206-7
PANEL-FRONT DOOR TRIM-FINISH	21216-7
PANEL-FRONT FENDER APPLIQUE-REAR	16A132-3
PANEL-FRONT FENDER OUTSIDE APPLIQUE	16410-1
PANEL-FUEL FILLER OPENING LID APPLIQUE	40513
PANEL-GLOVE COMPARTMENT DOOR APPLIQUE	060A20
PANEL-GLOVE COMPARTMENT DOOR APPLIQUE-LOWER	060A18
PANEL-GLOVE COMPARTMENT DOOR FINISH	06036
PANEL-GLOVE COMPARTMENT FRONT	06012
PANEL-INSTRUMENT	04320-1
PANEL-INSTRUMENT PANEL A/COND OPENING COVER	04474
PANEL-INSTRUMENT PANEL APPLIQUE-CENTER	045C38
PANEL-INSTRUMENT PANEL APPLIQUE END	044B74
PANEL-INSTRUMENT PANEL ASH RECEPTACLE	04817
PANEL-INSTRUMENT PANEL AT CLUSTER FINISH-LOWER	04774-5
PANEL-INSTRUMENT PANEL END	04316-7
PANEL-INSTRUMENT PANEL EXTENSION-BOTTOM	044A42-3
PANEL-INSTRUMENT PANEL FINISH	04338-9
PANEL-INSTRUMENT PANEL FINISH	044B78-9
PANEL-INSTRUMENT PANEL FINISH-CENTER	04302-3
PANEL-INSTRUMENT PANEL FINISH-END	04392-3
PANEL-INSTRUMENT PANEL FINISH-INTERMEDIATE	044B56
PANEL-INSTRUMENT PANEL FINISH-UPPER	044B28-9
PANEL-INSTRUMENT PANEL RADIO LOWER COVER FINISH	045C70
PANEL-INSTRUMENT PANEL RADIO SUPPORT UPPER	045B46
PANEL-INSTRUMENT-UPPER	04634
PANEL-INSTRUMENT-VINYL COVERED	04320
PANEL-LOWER BACK	40324
PANEL-LOWER BACK-CENTER FINISH	423A38
PANEL-LOWER BACK FINISH	403A76-7
PANEL-LOWER BACK FINISH	423A42
PANEL-LOWER BACK-INNER FINISH	423A30-3
PANEL-LOWER BACK-OUTER FINISH	423A36-7
PANEL-LUGGAGE COMPARTMENT DOOR OUTSIDE FINISH	425A02
PANEL-PACKAGE TRAY	46506
PANEL-PACKAGE TRAY END	46514-5
PANEL-PACKAGE TRAY TRIM	46668
PANEL-QUARTER	27846-7
PANEL-QUARTER INSIDE TO FLOOR PAN	27858-9
PANEL-QUARTER LOWER REAR EXTENSION FINISH	291B40-1
PANEL-QUARTER OUTSIDE FINISH	290B10-1
PANEL-QUARTER OUTSIDE FINISH-FRONT	290B12-3
PANEL-QUARTER OUTSIDE FINISH LOWER	28036-7
PANEL-QUARTER OUTSIDE REAR END FINISH	291B46
PANEL-QUARTER OUTSIDE UPPER REAR END MOULDING-FINISH	29056-7
PANEL-QUARTER PILLAR-UPPER INNER	28188-9
PANEL-QUARTER PILLAR UPPER-OUTER	28152-3
PANEL-QUARTER SPEAR APPLIQUE	290C50-1
PANEL-QUARTER TRIM FINISH	310A02-3
PANEL-QUARTER UPPER	27854-5
PANEL-QUARTER-UPPER FRONT	280A00-1
PANEL-QUARTER-UPPER REAR	27854-5
PANEL-QUARTER WHEEL OPENING-COVER	27974-5
PANEL-QUARTER WHEEL OPENING COVER FINISH	28520-1
PANEL-QUARTER WHEELHOUSE-INNER	27886-7
PANEL-QUARTER WHEELHOUSE-OUTER	27894-5
PANEL-QUARTER WINDOW REGULATOR	27870-1
PANEL-REAR CORNER INNER FINISH-LOWER	40462-3
PANEL-REAR CORNER-OUTER	41230-1
PANEL-REAR DOOR EXTENSION TO OUTSIDE UPPER MOULDING	24780-1
PANEL-REAR DOOR INSIDE-UPPER REAR EXTENSION FINISH	25400-1
PANEL-REAR DOOR OUTSIDE	24700-1
PANEL-REAR DOOR OUTSIDE APPLIQUE	24730-1
PANEL-REAR DOOR TRIM FINSIH	254A74-5
PANEL-REAR DOOR UPPER REAR EXTENSION	247A02-3
PANEL-REAR DOOR UPPER REAR EXTENSION-INNER	24814-5
PANEL-REAR FLOOR CROSSMEMBER	10823
PANEL-REAR FLOOR REAR SILL	11323
PANEL-REAR QUARTER INSIDE	27924-5
PANEL-REAR SEAT BACK FLOOR EXTENSION FINISH	60747
PANEL-REAR SEAT BACK FLOOR EXTENSION-LESS COVER	60629
PANEL-REAR SEAT BACK FLOOR EXTENSION SUPPORT	60601
PANEL-REAR SEAT BACK FLOOR-LESS COVER	61390-1
PANEL-REAR SEAT BACK SPRING SUPPORT	60700
PANEL-REAR SEAT CUSHION FLOOR-LESS COVER	60512-3
PANEL-REAR SEAT RISER	63476
PANEL-REAR SEAT RISER-UPPER	63478
PANEL-REAR SEAT SUPPORT	60724-5
PANEL-ROOF	50202
PANEL-ROOF OUTSIDE SIDE ORNAMENT	517A32-3
PANEL-ROOF SIDE REAR EXTENSION	50206-7
PANEL-ROOF TRIM-SIDE	51978-9
PANEL-SPARE WHEEL WELL FLOOR-LESS COVER	47007
PANEL-SPARE WHEEL WELL SIDE-INNER	47028
PANEL-SPARE WHEEL WELL SIDE-LOWER	47030
PANEL-SPARE WHEEL WELL-UPPER	47032
PANEL-STOWAGE WELL FLOOR-LESS COVER	45806
PANEL-TAILGATE INSIDE BELT FINISH GARNISH MOULDING	425A20
PANEL-TAILGATE-INSIDE COVER	40705
PANEL-TAILGATE-OUTSIDE FINISH	40713
PANEL-TAILGATE OUTSIDE UPPER FINISH	40712

Alphabetical Index—Continued

Part Name	Group Number
PANEL-UPPER BACK	40310
PANEL-UPPER BACK FINISH	403A78
PANEL-VENT AIR-FRONT	01990
PANEL-VENT AIR-REAR	01992
PANEL-WINDSHIELD DEFROSTER OPENING FINISH-FRONT	044B82-3
PANEL-WINDSHIELD DEFROSTER OPENING FINISH-REAR	044B84-5
PANEL-WINDSHIELD HEADER	03408
PILLAR & COWL SIDE-FRONT BODY	02042-3
PILLAR-BODY FRONT-UPPER	02504-5
PILLAR-CENTER BODY	24300-1
PILLAR-CENTER BODY INNER-LOWER	24326-7
PILLAR-CENTER BODY INNER-UPPER	24312-3
PILLAR-CENTER BODY-OUTER	24316-7
PILLAR-CENTER BODY-OUTER FRONT	24342-3
PILLAR-FRONT BODY LOWER	02500-1
PILLAR-FRONT BODY-UPPER INNER	02522-3
PILLAR-FRONT BODY-UPPER OUTER	02536-7
PILLAR-FRONT BODY UPPER OUTER CORNER	02616-7
PILLAR-QUARTER LOCK	28160-1
PILLAR-QUARTER LOCK-UPPER	28324-5
PILLAR-QUARTER WHEELHOUSE TO ROOF-INNER	278A36-7
PILLAR-QUARTER WHEELHOUSE TO ROOF INNER-UPPER	279B02-3
PILLAR-QUARTER WHEELHOUSE TO ROOF-OUTER	278A38-9
PILLAR-REAR CORNER-INNER FRONT LOWER	41228-9
PILLAR-REAR CORNER-INNER FRONT UPPER	41210-1
PILLAR-REAR CORNER-LOWER	41022-3
PILLAR-REAR CORNER-OUTER	41032-3
PILLAR-REAR CORNER-UPPER INNER	412A06-7
PIN-A/COND. INSTRUMENT PANEL DOOR STOP CAM	19B801
PIN-A/COND. INSTRUMENT PANEL REGISTER DOOR PIVOT	19B829
PIN-BACK WINDOW REGULATOR HANDLE HINGE-INNER	40874
PIN-BUMPER JACK LIFT	17A028
PIN-FOLDING TOP CENTER SIDE RAIL-FRONT	50492
PIN-FOLDING TOP CONTROL LINK	50345
PIN-FRONT DOOR HINGE SPRING	228A14
PIN-FRONT SEAT TRACK HORIZONTAL BAR LINK PIVOT	61731
PIN-FUEL FILLER OPENING LID HINGE	28616
PIN-INSIDE VISOR ANCHOR	04114
PIN-LUGGAGE COMPARTMENT DOOR HINGE PIVOT	42848
PIN-QUARTER WINDOW FRAME HINGE	30556
PIN-REAR DOOR HINGE	26832
PIN-REAR DOOR HINGE	43030
PIN-REAR DOOR WINDOW CONTROL SWITCH TRIGGER	27154
PIN-RIGHT REAR SEAT BACK PIVOT	63036
PIN-TAILGATE COUNTERBALANCE SPRING	430A08
PIN-TAILGATE COUNTERBALANCE STRAP TENSION	430A24
PIN-WINDSHIELD WIPER MOTOR	17B563
PIN-WINDSHIELD WIPER MOTOR CONTACT OPERATING	17B564
PIVOT-BACK WINDOW REGULATOR HANDLE-ELECTRIC	44034-5
PIVOT-DOOR VENTILATOR WINDOW-LOWER	22908-9
PIVOT-FRONT DOOR VENTILATOR WINDOW-UPPER	22952-3
PLATE-A/COND. BLOWER INLET	19B661-2
PLATE-A/COND. BLOWER MOTOR MOUNTING	19A598
PLATE-A/COND. COMPRESSOR VALVE	19656
PLATE-A/COND. CONTROL NAME	18619
PLATE-A/COND.CONTROL PANEL TRIM	19A647
PLATE-A/COND.EVAPORATOR TRIM	19A646
PLATE & BELLCRANK-FRONT DOOR LOCK REMOTE CONTROL	22062-3
PLATE & ROTOR FOLDING TOP HYDRAULIC LIFT PUMP KIT	53442
PLATE & SWITCH-WINDSHIELD WIPER MOTOR BRUSH	17B583
PLATE-AUXILIARY SEAT BACK FLOOR PIVOT ANCHOR	60873
PLATE-AUXILIARY SEAT BACK FLOOR SPRING COVER	60963
PLATE-AUXILIARY SEAT BACK FLOOR STOP ANCHOR	60814
PLATE-AUXILIARY SEAT CUSHION SCUFF	60652
PLATE-AUXILIARY SEAT CUSHION WELL FLOOR PIVOT ARM MOUNTING	60872
PLATE-BACK WINDOW HOUSING ANCHOR	422A98
PLATE-BACK WINDOW HOUSING DRAIN TUBE	42440
PLATE-BACK WINDOW REGULATOR HANDLE ANCHOR	44048
PLATE-CENTER BODY UPPER TO LOWER PILLAR	24572-3
PLATE-CENTER FLOOR WELDING ACCESS HOLE COVER	11190-1
PLATE-COMPASS MOUNTING	19D503
PLATE-CONSOLE GLOVE COMPARTMENT DOOR HINGE-ANCHOR	06116
PLATE-COWL TOP PANEL ACCESS HOLE COVER	02256
PLATE-DASH PANEL HEATER VALVE OPENING COVER	01742
PLATE-DOOR & WINDOW REGULATOR HANDLE	23370
PLATE-DOOR ARM REST FINGERTIP	24142
PLATE-DOOR LOCK STRIKER	22008-9
PLATE-DOOR LOCK STRIKER-AUXILIARY	22014-5
PLATE-DOOR OUTSIDE NAME	20978
PLATE-DOOR VENTILATOR WINDOW MOUNTING ACCESS OPENING COVER	20348-9
PLATE-DOOR WINDOW UPPER STOP ANCHOR	21782
PLATE-FLOOR TRANSMISSION-COVER	12110
PLATE-FLOOR TRANSMISSION COVER ADAPTOR	12120
PLATE-FOLDING TOP HYDRAULIC LIFT RESERVOIR END	53388
PLATE-FOLDING TOP MAIN PIVOT BRACKET SUPPORT MOUNTING	53084-5
PLATE-FOLDING TOP NO. 1 BOW SCUFF	514A32-3
PLATE-FOLDING TOP REAR SIDE RAIL TO LUGGAGE COMPARTMENT DOOR BUMPER	54014-5
PLATE-FOLDING TOP SIDE RAIL COVER REAR LATCH STRIKER	54730
PLATE-FRAME HOIST	00304

Alphabetical Index—Continued

Part Name	Group Number
PLATE-FRONT BUMPER ARM ADJUSTING	17B856
PLATE-FRONT DOOR INSIDE PANEL COVER	21122-3
PLATE-FRONT DOOR LOCK STRIKER ANCHOR	22024
PLATE-FRONT DOOR NAME-INSIDE	20816
PLATE-FRONT DOOR SCUFF	13208-9
PLATE-FRONT FENDER NAME	16098-9
PLATE-FRONT FLOOR LOWER CROSSMEMBER	10962
PLATE-FRONT FLOOR PAN ACCESS HOLE COVER	111A74
PLATE-FRONT FLOOR PAN ACCESS HOLE COVER	112A64-5
PLATE-FRONT FLOOR PAN NAME	11608
PLATE-FRONT LICENSE PLATE OPENING COVER KIT	17A391
PLATE-FRONT-NAME	16604
PLATE-FRONT SEAT ADJUSTER RETAINER	618A46
PLATE-FRONT SEAT BACK SCUFF	61642-3
PLATE-FRONT SEAT CUSHION SIDE SHIELD-NAME	62221
PLATE-FRONT SIDE MEMBER TO FRONT SUSPENSION HOUSING COVER	10280-1
PLATE-GLOVE COMPARTMENT FUSE ACCESS OPENING COVER	06127
PLATE-GLOVE COMPARTMENT LOCK CATCH ANCHOR	06150
PLATE-HEATER HOUSING CORE	18A487
PLATE-HEATER MOTOR MOUNTING	18581
PLATE-HEATER SERVO CONTROL SUB-DIAL TRIM	18B397
PLATE-HOOD AUXILIARY LATCH STRIKER	16918
PLATE-INSTRUMENT PANEL-NAME	04460
PLATE-INSTRUMENT PANEL RADIO OPENING COVER MOUNTING	04588
PLATE-INSTRUMENT PANEL RADIO SPEAKER-MOUNTING	044C44
PLATE-LEFT REAR SEAT SUPPORT PANEL	61373
PLATE-LUGGAGE COMPARTMENT DOOR LOCK REMOTE CONTROL	43352
PLATE-QUARTER PANEL NAME	25622
PLATE-QUARTER PANEL NAME	291A36
PLATE-QUARTER WINDOW HINGE RETAINING	30344-5
PLATE-QUARTER WINDOW OUTSIDE SUPPORT	29876-7
PLATE-RADIO MOUNTING	19A004
PLATE-REAR DOOR INSIDE PANEL COVER	24766-7
PLATE-REAR DOOR LOCK STRIKER	26592-3
PLATE-REAR DOOR OUTSIDE UPPER REAR EXTENSION	255A06-7
PLATE-REAR DOOR SCUFF	13228-9
PLATE-REAR DOOR WINDOW CONTROL SWITCH-ACCESS HOLE COVER	27148
PLATE-REAR DOOR WINDOW STABILIZER ARM MOUNTING	270A04
PLATE-REAR DOOR WINDOW UPPER REAR STOP-ANCHOR	26050
PLATE-REAR FLOOR FUEL TANK VENT UPPER TUBE SEAL-RETAINING	10742
PLATE-REAR SEAT BACK	666A24
PLATE-REAR SEAT BACK STOP ANCHOR	61328-9
PLATE-REAR SEAT BACK SUPPORT ANCHOR	61372
PLATE-REAR SEAT BACK SUPPORT ANCHOR-FRONT	61371
PLATE-REAR SEAT CUSHION TORQUE BAR INNER BRACKET ANCHOR	606A44
PLATE-REAR VIEW OUTSIDE MIRROR REMOTE CONTROL	17B733
PLATE-RIGHT REAR SEAT LATCH STRIKER	61381
PLATE-ROOF HOLD DOWN CLAMP LATCH	50530-1
PLATE-ROOF LUGGAGE CARRIER SUPPORT	55177
PLATE-SHOCK ABSORBER-REAR	18192
PLATE-SPEEDOMETER MOUNTING	17289
PLATE-STEERING COLUMN OPENING COVER	01698-9
PLATE-STEERING COLUMN OPENING COVER-UPPER	01811
PLATE-STOWAGE WELL FLOOR COVER LATCH STRIKER	11686
PLATE-STOWAGE WELL FLOOR PANEL LOCK COVER	11676
PLATE-TAILGATE COUNTERBALANCE TORQUE BAR MOUNTING	430A28
PLATE-TAILGATE,DECK LID OR HOOD OUTSIDE-NAME	42528
PLATE-TAILGATE INNER PANEL LOCK ACCESS OPENING COVER	43116
PLATE-TAILGATE LATCH STRIKER	431A72
PLATE-TAILGATE LOCK STRIKER-WITH BUMPER	431A94-5
PLATE-TAILGATE SPRING ACCESS HOLE COVER	111A06
PLATE-TAILGATE SUPPORT TO PILLAR ANCHOR	444A00-1
PLATE-TRADE NAME	017A06
PLATE-UPPER BACK PANEL LIFT TO FLOOR BRACKET ANCHOR	46748
PLATE-WINDOW REGULATOR ACCESS HOLE COVER	40790
PLATE-WINDSHIELD HEADER DOWEL STRIKER	03474
PLATE-WINDSHIELD WIPER MOTOR MOUNTING	17B517-8
PLATE-WINDSHIELD WIPER MOTOR PRESSURE REGULATOR VALVE ANCHOR	17B505
PLATE-WINDSHIELD WIPER MOTOR SEAL	17C429
PLENUM CHAMBER-A/COND.	19740
PLENUM CHAMBER-HEATER & A/COND.	18471
PLUG-ANTENNA LEAD-IN CABLE	18A904
PLUG-DOOR GLASS RUN ACCESS	22300
PLUG-DOOR VENTILATOR WINDOW	22304
PLUG-FLOOR PAN SEAT BELT	10034
PLUG-FOLDING TOP HYDRAULIC LIFT RESERVOIR FILLER HOLE	53450
PLUG-WINDSHIELD WIPER TUBE TO MANIFOLD CONNECTOR	17A459
PLUNGER-BACK WINDOW REGULATOR HANDLE LOCKING	40877
POINTER & SHAFT-HEATER & A/COND. TEMPERATURE REGULATOR CONTROL	18A402
POINTER-HEATER REGULATOR CONTROL	18A377
PULLEY-ANTENNA ACTUATOR DRIVE	18A823
PULLEY-HEATER TEMPERATURE REGULATOR CONTROL	18B385
PUMP-FOLDING TOP HYDRAULIC LIFT KIT	53337
PUMP-WINDSHIELD WASHER	17664

Alphabetical Index—Continued

Part Name	Group Number
R	
RACE-FRONT SEAT ADJUSTER REGULATOR NEEDLE THRUST BEARING	617A22
RADIO ANTENNA KIT	18813
RADIO REAR SEAT SPEAKER KIT	18875
RADIO RECEIVER KIT	18805
RADIO REVERBERATION SPEAKER FOOT CONTROL KIT	19A001
RAIL & REINFORCEMENT-FOLDING TOP-REAR SIDE	53192-3
RAIL-BACK WINDOW HEADER	41302
RAIL-BELT SIDE	41732-3
RAIL-FOLDING TOP-SIDE CENTER & FRONT SIDE INTERMEDIATE	51154-5
RAIL-FOLDING TOP-SIDE FRONT	53104-5
RAIL-FOLDING TOP-SIDE REAR	53138-9
RAIL-FOLDING TOP-SIDE REAR-INTERMEDIATE	514A02-3
RAIL-FRONT DOOR OUTSIDE FINISH-LOWER	20868-9
RAIL-FRONT DOOR OUTSIDE FINISH-UPPER	20960-1
RAIL-FRONT FENDER FINISH	16212-3
RAIL-FUEL FILLER LID-LESS INSERT	405A83
RAIL-QUARTER BELT-FRONT	28714-5
RAIL-QUARTER BELT-REAR	28716-7
RAIL-QUARTER OUTSIDE FINISH	28712-3
RAIL-QUARTER OUTSIDE FINISH	290A72-3
RAIL-QUARTER OUTSIDE FINISH-LOWER	290A68-9
RAIL-QUARTER OUTSIDE FINISH-UPPER	290A40-1
RAIL-QUARTER OUTSIDE FINISH-UPPER FRONT	291A97
RAIL-QUARTER PANEL EXTENSION OUTSIDE FINISH-LOWER	29000-1
RAIL-QUARTER PANEL EXTENSION OUTSIDE FINISH-UPPER	28530-1
RAIL-REAR DOOR OUTSIDE FINISH-LOWER	25300-1
RAIL-REAR DOOR OUTSIDE FINISH-UPPER	254A00-1
RAIL-ROOF LUGGAGE CARRIER-FRONT	55106
RAIL-ROOF LUGGAGE CARRIER-REAR	55138
RAIL-ROOF LUGGAGE CARRIER-SIDE	55114
RAIL-ROOF SIDE-INNER-CENTER LOWER	513A50-1
RAIL-ROOF SIDE-INNER-CENTER UPPER	513A36-7
RAIL-ROOF SIDE-INNER FRONT	513A38-9
RAIL-ROOF SIDE-INNER REAR	513A18-21
RAIL-ROOF SIDE INNER-REAR UPPER	513B24-5
RAIL-ROOF SIDE-OUTER FRONT	513A12-3
RAIL-ROOF SIDE-OUTER REAR	513A16-7
RAIL-TAILGATE OUTSIDE FINISH-LOWER	42564
RAIL-TAILGATE OUTSIDE FINISH-UPPER	423A70
REAR BUMPER STEP KIT	17B820
REAR DOOR OUTSIDE MOULDING RETAINER KIT	25418
REAR VIEW OUTSIDE MIRROR KIT	17696
RECEPTACLE-CONSOLE PANEL ASH	04821
RECEPTACLE-DOOR ASH	23980
RECEPTACLE-FRONT SEAT BACK ASH	62876
RECEPTACLE-INSTRUMENT PANEL ASH	04810
RECEPTACLE-QUARTER ASH	30702-3
RECEPTACLE-REAR DOOR ASH	24726
REFLECTOR-FLAGS	19E500
REFRIGERANT-A/COND.	19B519
REGISTER & CONTROL-A/COND. INSTRUMENT PANEL	19A934
REGISTER-A/COND. AIR INLET	19A810
REGISTER-A/COND.EVAPORATOR	19A671
REGISTER-A/COND. EVAPORATOR FRONT CENTER	19B577
REGISTER-A/COND. REAR	19A868
REGISTER ASSEMBLY-A/COND. INSTRUMENT PANEL	19893
REGISTER-FRONT DOOR ARM REST VENT AIR OUTLET	67346
REGISTER-HEATER AIR	18B388-9
REGISTER-VENT AIR	01820
REGULATOR-BACK WINDOW	40830
REGULATOR-DOOR WINDOW-ELECTRIC	23208-9
REGULATOR DRIVE & COUPLING ELECTRIC REAR DOOR WINDOW KIT	27002-3
REGULATOR DRIVE & COUPLING FRONT DOOR WINDOW KIT	23204-5
REGULATOR DRIVE & COUPLING QUARTER WINDOW ELECTRIC KIT	30302-3
REGULATOR-FRONT DOOR VENTILATOR WINDOW	23402-3
REGULATOR-FRONT DOOR WINDOW	23200-3
REGULATOR-FRONT SEAT ADJUSTER	617A01
REGULATOR-FRONT SEAT ADJUSTING	60473
REGULATOR-QUARTER WINDOW-ELECTRIC	30380-1
REGULATOR-QUARTER WINDOW-MANUAL	30306-7
REGULATOR-REAR DOOR WINDOW-ELECTRIC	27008-9
REGULATOR-REAR DOOR WINDOW-MANUAL	27000-1
REINFORCEMENT & SUPPORT-FRONT FENDER APRON & RADIATOR-UPPER	16057
REINFORCEMENT-BACK WINDOW GLASS TOP RUN RETAINER	42080
REINFORCEMENT-CENTER BODY PILLAR-LOWER	24426-7
REINFORCEMENT-CENTER BODY PILLAR TO FLOOR SIDE MEMBER	24320-1
REINFORCEMENT-CENTER BODY PILLAR-UPPER	24382-5
REINFORCEMENT-CENTER BODY WEATHERSTRIP-UPPER	24395
REINFORCEMENT-CENTER FLOOR AT PINION BUMPER-INNER	112A08
REINFORCEMENT-CENTER FLOOR EXTENSION INNER MEMBER	111A42-3
REINFORCEMENT-CENTER FLOOR INNER SIDE MEMBER	104A46-7
REINFORCEMENT-CENTER FLOOR PAN TO SEAT BACK STRAINER	11192
REINFORCEMENT-CONSOLE COMPARTMENT PANEL-FRONT	044B90
REINFORCEMENT-CONSOLE COMPARTMENT PANEL REAR	04300
REINFORCEMENT-COWL SIDE PANEL TO FLOOR	02042-3

Alphabetical Index—Continued

Part Name	Group Number
REINFORCEMENT-COWL SIDE PANEL TO FLOOR	02916-7
REINFORCEMENT-COWL TOP RADIATOR SUPPORT BRACE	03742-3
REINFORCEMENT-DASH FRAME BRACE TO FLOOR SIDE MEMBER	016A12-3
REINFORCEMENT-DASH PANEL	016A22-3
REINFORCEMENT-DASH PANEL GUSSET TO FLOOR SIDE MEMBER	016A34-5
REINFORCEMENT-DOOR INSIDE PANEL AT WINDOW REGULATOR	202A46-7
REINFORCEMENT-DOOR LOCK STRIKER ANCHOR PLATE	22142-3
REINFORCEMENT-FLOOR PAN AT MAIN PIVOT BRACKET	10718
REINFORCEMENT-FLOOR PAN SEAT TRACK	11248
REINFORCEMENT-FLOOR PLATE TRANSMISSION COVER	12110
REINFORCEMENT-FLOOR SIDE INNER MEMBER	10418-9
REINFORCEMENT-FLOOR SIDE MEMBER	10498-9
REINFORCEMENT-FLOOR SIDE MEMBER-INNER	10460-1
REINFORCEMENT-FLOOR SIDE MEMBER TO FRONT SIDE MEMBER	10002-3
REINFORCEMENT-FLOOR SIDE MEMBER TO FRONT SIDE MEMBER	10042-3
REINFORCEMENT-FLOOR SIDE MEMBER TO FRONT SIDE MEMBER	10262-3
REINFORCEMENT-FLOOR SIDE MEMBER TO FRONT SIDE MEMBER-REAR	10156-7
REINFORCEMENT-FLOOR SIDE OUTER MEMBER	10132
REINFORCEMENT-FLOOR SIDE REAR INNER MEMBER	10522-3
REINFORCEMENT-FLOOR TRANSMISSION COVER-PLATE	12118
REINFORCEMENT-FOLDING TOP MAIN PIVOT SUPPORT BASE MOUNTING	506A60-1
REINFORCEMENT-FOLDING TOP REAR BOW TRACK	51522-3
REINFORCEMENT-FRONT BODY UPPER INNER PILLAR-UPPER	02694-5
REINFORCEMENT-FRONT BODY UPPER OUTER PILLAR	02524-5
REINFORCEMENT-FRONT BUMPER IMPACT BAR-CENTER	17A792
REINFORCEMENT-FRONT BUMPER OUTER ARM	17A871-2
REINFORCEMENT-FRONT FENDER APRON UPPER-OUTER	16B044-5
REINFORCEMENT-FRONT FLOOR PAN	111A44-5
REINFORCEMENT-FRONT FLOOR PAN CROSS	111B08
REINFORCEMENT-FRONT FLOOR PAN-REAR	11144-5
REINFORCEMENT-FRONT FLOOR PAN TO SIDE MEMBER	111B10-1
REINFORCEMENT-FRONT SEAT BELT ANCHOR OR SEAT TRACK TO FLOOR PAN	61216
REINFORCEMENT-FRONT SEAT TO FLOOR PAN	617B00
REINFORCEMENT-FRONT SIDE MEMBER GUSSET TO FRONT SUSPENSION NO. 1 CROSSMEMBER-LOWER	101A56-7
REINFORCEMENT-FRONT SUSPENSION NO. 1 CROSSMEMBER	10892
REINFORCEMENT-FRONT SUSPENSION NO. 1 CROSS MEMBER-OUTER	10228-9
REINFORCEMENT-FRONT SUSPENSION NO. 2 CROSS MEMBER-UPPER OUTER	10546-7
REINFORCEMENT-HEATER & A/COND. BLOWER MOTOR MOUNTING	18A323
REINFORCEMENT-LUGGAGE COMPARTMENT DOOR OPENING SIDE	279A62-3
REINFORCEMENT-LUGGAGE COMPARTMENT DOOR OPENING REAR CORNER DRAIN TROUGH	44808-9
REINFORCEMENT-LUGGAGE COMPARTMENT DOOR OPENING FRONT CORNER DRAIN TROUGH	44822-3
REINFORCEMENT-LUGGAGE COMPARTMENT DOOR OPENING REAR DRAIN TROUGH AT LOWER BACK PANEL	44806
REINFORCEMENT-LUGGAGE COMPARTMENT DOOR OPENING SIDE FRONT	40628-9
REINFORCEMENT-LUGGAGE COMPARTMENT DOOR OPENING UPPER	44802
REINFORCEMENT-QUARTER LOCK PILLAR-LOWER	28128-9
REINFORCEMENT-QUARTER LOCK UPPER PILLAR	28136-7
REINFORCEMENT-QUARTER PANEL LOCK SIDE	28200-1
REINFORCEMENT-QUARTER PANEL LOCK SIDE-LOWER	28216-7
REINFORCEMENT-QUARTER PANEL LOCK SIDE-UPPER	28208-9
REINFORCEMENT-QUARTER PANEL-UPPER FRONT	28486-7
REINFORCEMENT-QUARTER PILLAR-INNER	278A82-3
REINFORCEMENT-QUARTER PILLAR REAR	281A16-7
REINFORCEMENT-QUARTER WHEELHOUSE PILLAR TO ROOF-OUTER	279B00-1
REINFORCEMENT-QUARTER WHEELHOUSE TO SEAT BACK BRACKET	28022-3
REINFORCEMENT-RADIO ANTENNA	18A954
REINFORCEMENT-REAR BUMPER IMPACT BAR	17912
REINFORCEMENT-REAR BUMPER IMPACT BAR-CENTER	17A914
REINFORCEMENT-REAR BUMPER LICENSE PLATE OPENING	17A778
REINFORCEMENT-REAR CORNER PILLAR-LOWER	41058-9
REINFORCEMENT-REAR DOOR GLASS FRAME-LOWER REAR	26286
REINFORCEMENT-REAR DOOR GLASS FRAME-UPPER FRONT	26290
REINFORCEMENT-REAR DOOR LOCK STRIKER ANCHOR PLATE	26482-3
REINFORCEMENT-REAR FLOOR FRONT RISER	12000
REINFORCEMENT-REAR FLOOR REAR CROSSMEMBER	10760
REINFORCEMENT-REAR LAMP OPENING	27970-1
REINFORCEMENT-REAR LAMP OPENING-REAR	27996-7
REINFORCEMENT-REAR WHEEL OPENING	28006
REINFORCEMENT-ROOF PANEL	50222
REINFORCEMENT-ROOF PANEL-REAR SIDE EXTENSION	502C18
REINFORCEMENT-ROOF SIDE OUTER REAR RAIL	513B34-5
REINFORCEMENT-SEAT TRACK STABILIZER	61844
REINFORCEMENT-SHOCK ABSORBER-REAR	18A024-5
REINFORCEMENT-TAILGATE COUNTERBALANCE SPRING BRACKET	430A10-1

Alphabetical Index—Continued

Part Name	Group Number
REINFORCEMENT-WINDSHIELD OPENING-LOWER SIDE	03468-9
RELAY-HEATER & A/COND. MOTOR CONTROL	18A656
REMOTE CONTROL LUGGAGE COMPARTMENT DOOR LOCK RELEASE KIT	432A00
REMOTE CONTROL-REAR VIEW MIRROR	17B676
RESERVOIR & COVER-WINDSHIELD WASHER	17A616
RESERVOIR-DOOR LOCK VACUUM CONTROL	219A02
RESERVOIR-FOLDING TOP HYDRAULIC LIFT KIT	53376
RESERVOIR-INSTRUMENT PANEL ASH RECEPTACLE	04812
RESERVOIR-WINDSHIELD WASHER	17618
RESISTOR-A/COND. BLOWER MOTOR	19A706
RESISTOR-HEATER & A/COND. SWITCH TO BLOWER MOTOR	18591
RESTRICTOR-MULTIPLE LUBRICATOR	19A529
RETAINER & BRACKET-REAR DOOR STATIONARY WINDOW WEATHERSTRIP	26084
RETAINER & CLIP-UPPER BACK PANEL TO SEAT BACK OPENING COVER	40554
RETAINER & MOULDING ASSEMBLY-BACK WINDOW GLASS RUN-TOP	422A54
RETAINER & RECEPTACLE-FRONT SEAT BACK ASH-LESS LIGHTER	62866
RETAINER-A/COND. EVAPORATOR INLET TUBE TO FRAME	19823
RETAINER-A/COND. EVAPORATOR REGISTER	19B635
RETAINER-ANTENNA CONTROL CABLE	19104
RETAINER-ANTENNA DRIVE TENSION SPRING	19121
RETAINER ASSEMBLY-QUARTER PAD CASE	52884
RETAINER-AUXILIARY FLOOR MAT	13192-3
RETAINER-AUXILIARY SEAT BACK FLOOR PANEL LATCH	605A66
RETAINER-AUXILIARY SEAT CUSHION STOWAGE FRONT	63626
RETAINER-BACK BELT MOULDING	40248
RETAINER-BACK WINDOW DIVISION BAR OUTSIDE MOULDING	42296
RETAINER-BACK WINDOW GLASS RUN-UPPER	42372
RETAINER-BACK WINDOW GLASS RUN-UPPER SIDE	42374-5
RETAINER-BACK WINDOW GLASS TOP RUN	42074
RETAINER-BACK WINDOW OUTSIDE LOWER CENTER MOULDING	423A26
RETAINER-BACK WINDOW OUTSIDE LOWER MOULDING	42487
RETAINER-BACK WINDOW OUTSIDE UPPER MOULDING	42435
RETAINER-BACK WINDOW OUTSIDE UPPER MOULDING END	42909
RETAINER-BACK WINDOW REGULATOR HANDLE HINGE PIN	40938
RETAINER-BACK WINDOW SIDE GLASS BELT WEATHERSTRIP-REAR	42028-9
RETAINER-BACK WINDOW SIDE GLASS BELT WEATHERSTRIP-FRONT	42124-5
RETAINER-BACK WINDOW-CENTER	42280
RETAINER-BACK WINDOW-OUTSIDE UPPER MOULDING	42413
RETAINER-BACK WINDOW-SIDE	42284-5
RETAINER-BACK WINDOW SIDE GLASS-UPPER	42020-1
RETAINER-BODY BOLT ABSORBER-LOWER	00151
RETAINER-BODY BOLT ABSORBER-LOWER	00157
RETAINER-BODY BOLT ABSORBER-UPPER	00163
RETAINER-BODY ROCKER PANEL CURB BUFFER MOULDING	10182
RETAINER-CENTER BODY PILLAR FINISH PANEL-UPPER	24376
RETAINER-CENTER BODY PILLAR INSIDE FINISH UPPER PILLAR INSERT	243A16
RETAINER-CONSOLE COMPARTMENT	04684-5
RETAINER-CONSOLE COMPARTMENT PANEL REAR MOULDING	045A96
RETAINER-CONSOLE SIDE FRONT MOULDING	045C60
RETAINER-COWL TOP INNER PANEL DRAIN TUBE	02212-3
RETAINER-COWL TRIM PANEL	02354-5
RETAINER-DASH PANEL EXTENSION-DRAIN	016A60
RETAINER-DOOR LOCK STRIKER ANCHOR PLATE	22021-2
RETAINER-DOOR OPENING WINDLACE	02614
RETAINER-DOOR OUTSIDE BELT MOULDING	20880
RETAINER-DOOR OUTSIDE FINISH RAIL MOULDING	20872
RETAINER-DOOR OUTSIDE LOWER MOULDING	21066
RETAINER-DOOR OUTSIDE LOWER MOULDING-FRONT	20884
RETAINER-DOOR OUTSIDE LOWER MOULDING-REAR	20954
RETAINER DOOR OUTSIDE MOULDING FRONT KIT	20832
RETAINER-DOOR OUTSIDE UPPER MOULDING	20842
RETAINER-DOOR OUTSIDE UPPER MOULDING-INTERMEDIATE	21069
RETAINER-DOOR OUTSIDE UPPER MOULDING-FRONT	20894
RETAINER-DOOR OUTSIDE UPPER MOULDING-REAR	20852
RETAINER-DOOR UPPER MOULDING-OUTSIDE	25034
RETAINER-EVAPORATOR LOWER REGISTER	19B581
RETAINER-FENDER,DOORS,QUARTERS,ROOF & LOWER BACK PANEL	40368
RETAINER-FOLDING TOP BOW LISTING	50156
RETAINER-FOLDING TOP COMPARTMENT TRIM SIDE-FRONT	54624-5
RETAINER-FOLDING TOP COMPARTMENT TRIM-CENTER	54677
RETAINER-FOLDING TOP COMPARTMENT TRIM-REAR	54674-5
RETAINER-FOLDING TOP COMPARTMENT TRIM-SIDE REAR	54672-3
RETAINER-FOLDING TOP NO 1 BOW REAR WEATHERSTRIP END	54704-5
RETAINER-FOLDING TOP NO. 1 BOW MOULDING END	50350
RETAINER-FOLDING TOP NO. 1 BOW OUTSIDE MOULDING CENTER	50363
RETAINER-FOLDING TOP NO. 1 BOW REAR WEATHERSTRIP	51352-3
RETAINER-FOLDING TOP NO. 1 BOW WEATHERSTRIP	514A26
RETAINER-FOLDING TOP NO.4 BOW ZIPPER	52542
RETAINER-FOLDING TOP SIDE RAIL COVER TO QUARTER WINDOW FILLER	54748

Alphabetical Index—Continued

Part Name	Group Number
RETAINER-FRONT & REAR DOOR MOULDING-OUTSIDE	29316
RETAINER-FRONT & REAR DOORS, TAILGATE & QUARTER PANEL MOULDINGS	407A12
RETAINER-FRONT BUMPER STONE DEFLECTOR MOULDING	17B858
RETAINER-FRONT DOOR ASH RECEPTACLE-LESS RECEPTACLE	23806-7
RETAINER-FRONT DOOR GLASS RUN LOCK SIDE	222A00-1
RETAINER-FRONT DOOR LOCK CYLINDER	22023
RETAINER-FRONT DOOR OUTSIDE FINISH RAIL MOULDING	20892
RETAINER-FRONT DOOR OUTSIDE FRONT MOULDING	21645
RETAINER-FRONT DOOR OUTSIDE HANDLE BUTTON	22442-3
RETAINER-FRONT DOOR OUTSIDE LOWER MOULDING-FRONT	20952
RETAINER-FRONT DOOR OUTSIDE MOULDING	21060
RETAINER-FRONT DOOR OUTSIDE UPPER MOULDING	20232
RETAINER-FRONT DOOR OUTSIDE UPPER MOULDING	20876
RETAINER-FRONT DOOR OUTSIDE UPPER MOULDING-CENTER	20850
RETAINER-FRONT DOOR TRIM PANEL	21032-3
RETAINER-FRONT DOOR TRIM PANEL-LOWER	23761
RETAINER-FRONT DOOR TRIM PANEL-UPPER	23762-3
RETAINER-FRONT DOOR WEATHERSTRIP	20586
RETAINER-FRONT DOOR WEATHERSTRIP-BOTTOM	20712
RETAINER-FRONT FENDER FINISH RAIL UPPER FRONT MOULDING-FRONT	16C086
RETAINER-FRONT FENDER FINISH RAIL UPPER FRONT MOULDING-REAR	16C088
RETAINER-FRONT FENDER FRONT MOULDING	16A089
RETAINER-FRONT FENDER SIDE MOULDING	16A076
RETAINER-FRONT FENDER SIDE MOULDING-REAR	16A048
RETAINER-FRONT FENDER TO BUMPER SPLASH SHIELD	16D574
RETAINER-FRONT FENDER TO PILLAR	16584
RETAINER-FRONT FLOOR MAT TO SEAT TRACK	13190
RETAINER-FRONT SEAT BACK ASH RECEPTACLE	62868
RETAINER-FRONT SEAT BACK PIVOT SIDE OUTER COVER	61638-9
RETAINER-FRONT SEAT BACK SIDE SHIELD-LOWER	62182
RETAINER-FRONT SEAT CUSHION SHIELD MOULDING	61420
RETAINER-FRONT SEAT TRACK REGULATOR TO HORIZONTAL EQUALIZING BAR LINK	62004
RETAINER-FRONT SIDE RAIL WEATHERSTRIP	513B00-1
RETAINER-GLOVE COMPARTMENT COVER	06208
RETAINER-GLOVE COMPARTMENT DOOR LOCK ESCUTCHEON	04417
RETAINER-HOOD FRONT MOULDING	16A746
RETAINER-HOOD LOCK RELEASE CABLE	16125
RETAINER-HOOD PAD ON COWL	16A669
RETAINER-HOOD SOUND ABSORBER	16B706
RETAINER-INSTRUMENT PANEL ASH RECEPTACLE BOX	04826-7
RETAINER-INSTRUMENT PANEL ASH RECEPTACLE-VINYL COVERED	04826
RETAINER-INSTRUMENT PANEL CENTER FINISH PANEL	04784
RETAINER-INSTRUMENT PANEL COVER-SIDE	04590-1
RETAINER-INSTRUMENT PANEL END MOULDING	044B66
RETAINER-INSTRUMENT PANEL PAD	04878
RETAINER-INSTRUMENT PANEL RADIO OPENING COVER PLATE	04456
RETAINER-LOWER BACK APPLIQUE PANEL-INNER	423A62
RETAINER-LOWER BACK FINISH PANEL	423A64
RETAINER-LOWER BACK FINISH PANEL APPLIQUE	42444
RETAINER-LOWER BACK INNER FINISH PANEL	423A34-5
RETAINER-LOWER BACK PANEL APPLIQUE	41015
RETAINER-LOWER BACK PANEL APPLIQUE JOINT	423A80
RETAINER-LOWER BACK PANEL-CENTER FINISH MOULDING	423A76
RETAINER-LOWER BACK PANEL LOWER MOULDING	28506
RETAINER-LOWER BACK PANEL-LOWER MOULDING & QUARTER PANEL	42364
RETAINER-LOWER BACK PANEL MOULDING	42331
RETAINER-LUGGAGE COMPARTMENT DOOR HINGE OPENING SEAL	427A22
RETAINER-LUGGAGE COMPARTMENT DOOR LOCK SLEEVE	43241
RETAINER-LUGGAGE COMPARTMENT DOOR MOULDING	42527
RETAINER-LUGGAGE COMPARTMENT DOOR WEATHERSTRIP	438A10
RETAINER-LUGGAGE COMPARTMENT DOOR WEATHERSTRIP FRONT	438A16-7
RETAINER-LUGGAGE COMPARTMENT DOOR WEATHERSTRIP OUTER	438A12
RETAINER-LUGGAGE COMPARTMENT DOOR WEATHERSTRIP SIDE	438A18
RETAINER-LUGGAGE COMPARTMENT SIDE LINING BOARD	45619
RETAINER-OUTSIDE BELT MOULDING	29128
RETAINER-OUTSIDE MOULDINGS	21094
RETAINER-PACKAGE TRAY BALANCE LINK OPENING SEAL VINYL COVER	465A08-9
RETAINER-PACKAGE TRAY-INTERMEDIATE FINISH MOULDING	465A26
RETAINER-QUARTER ARM REST TO PILLAR	31684
RETAINER-QUARTER ASH RECEPTACLE	30714-5
RETAINER-QUARTER BELT RAIL TRIM PANEL	31481
RETAINER-QUARTER, FRONT & REAR DOOR OUTSIDE UPPER MOULDING-FRONT	290A96
RETAINER-QUARTER LOWER REAR EXTENSION	291B76
RETAINER-QUARTER OUTSIDE BELT REAR MOULDING	291A26
RETAINER-QUARTER OUTSIDE BELT REAR MOULDING-INTERMEDIATE	291A20
RETAINER-QUARTER OUTSIDE BELT REAR MOULDING-REAR	291A28
RETAINER-QUARTER OUTSIDE BELT REAR MOULDING-REAR	29421

Alphabetical Index—Continued

Part Name	Group Number
RETAINER-QUARTER OUTSIDE FINISH PANEL	28507
RETAINER-QUARTER OUTSIDE FINISH PANEL	291A66
RETAINER-QUARTER OUTSIDE FINISH PANEL MOULDING	290B78
RETAINER-QUARTER OUTSIDE FINISH REAR PANEL LOWER	290C68-9
RETAINER-QUARTER OUTSIDE FRONT BELT MOULDING	290A70
RETAINER-QUARTER OUTSIDE FRONT MOULDING-REAR	29040
RETAINER-QUARTER OUTSIDE LOWER CENTER MOULDING	29532
RETAINER-QUARTER OUTSIDE LOWER MOULDING	290B82
RETAINER-QUARTER OUTSIDE LOWER REAR CORNER MOULDING	29302
RETAINER-QUARTER OUTSIDE LOWER REAR MOULDING	29124
RETAINER-QUARTER OUTSIDE LOWER REAR MOULDING-REAR	291B70
RETAINER-QUARTER OUTSIDE MOULDING	29120
RETAINER-QUARTER OUTSIDE REAR BELT MOULDING	29176
RETAINER-QUARTER OUTSIDE REAR END MOULDING	29185
RETAINER-QUARTER OUTSIDE REAR MOULDING	290A09
RETAINER-QUARTER OUTSIDE UPPER MOULDING	29108
RETAINER-QUARTER OUTSIDE UPPER MOULDING-REAR	290A08
RETAINER-QUARTER OUTSIDE UPPER REAR END MOULDING	291A46
RETAINER QUARTER PANEL OUTSIDE UPPER MOULDING KIT	290A92
RETAINER-QUARTER PILLAR WINDLACE-LOWER	31346-7
RETAINER-QUARTER, REAR DOOR & FRONT FENDER OUTSIDE MOULDING	29144
RETAINER-QUARTER, REAR DOOR & FRONT FENDER OUTSIDE UPPER MOULDING	29192
RETAINER-QUARTER SPEAR FRONT MOULDING	290C64
RETAINER-QUARTER STATIONARY WINDOW-FRONT	30140-1
RETAINER-QUARTER STATIONARY WINDOW LOWER-FRONT	30134-5
RETAINER-QUARTER STATIONARY WINDOW LOWER-REAR	30132-3
RETAINER-QUARTER TRIM BELT MOULDING	31320
RETAINER-QUARTER TRIM PANEL	31066-7
RETAINER-QUARTER TRIM PANEL TO FLOOR SIDE OUTER MEMBER	31232-3
RETAINER-QUARTER TRIM WATER SHIELD	31240-1
RETAINER-QUARTER WHEEL OPENING COVER FRONT MOULDING	20783
RETAINER-QUARTER WHEEL OPENING COVER MOULDING	29534
RETAINER-QUARTER WHEEL OPENING MOULDING-FRONT	291B66
RETAINER-QUARTER WHEEL OPENING MOULDING-REAR	291B68
RETAINER-QUARTER WHEELHOUSE TRIM PANEL	31494-5
RETAINER-QUARTER WINDOW-FRONT MOULDING	291A94
RETAINER-QUARTER WINDOW GUIDE	30426-9
RETAINER-QUARTER WINDOW GUIDE BUTTON	30370
RETAINER-QUARTER WINDOW LOWER FRONT MOULDING	291A90-1
RETAINER-QUARTER WINDOW LOWER REAR MOULDING	291A92-3
RETAINER-QUARTER WINDOW STATIONARY GLASS-UPPER FRONT	30130
RETAINER-REAR BUMPER STONE DEFLECTOR	17879
RETAINER-REAR CORNER INNER FINISH-LOWER PANEL	41876
RETAINER-REAR CORNER INNER FINISH-LOWER PANEL	423A78
RETAINER-REAR CORNER PILLAR OUTSIDE MOULDING	410A30
RETAINER-REAR CORNER PILLAR OUTSIDE REAR MOULDING	41068
RETAINER-REAR DOOR ASH RECEPTACLE	27608-9
RETAINER-REAR DOOR GLASS RUN-FRONT	25796-7
RETAINER-RFAR DOOR GLASS RUN LOCK SIDE	25804-5
RETAINER-REAR DOOR OUTSIDE FINISH RAIL MOULDING	254A64
RETAINER-REAR DOOR OUTSIDE HANDLE BUTTON	26432
RETAINER-REAR DOOR OUTSIDE LOWER MOULDING	25553
RETAINER-REAR DOOR OUTSIDE LOWER MOULDING-REAR	255A04
RETAINER-REAR DOOR OUTSIDE UPPER MOULDING	254A34
RETAINER-REAR DOOR TRIM PANEL	27588-1
RETAINER-REAR DOOR TRIM UPPER FRONT	23798
RETAINER-REAR DOOR WEATHERSTRIP	247A30
RETAINER-REAR DOOR WINDOW DOVETAIL	262A90-1
RETAINER-REAR DOOR WIRING ON QUARTER PILLAR	281A44-5
RETAINER-REAR DOOR WIRING ON WHEELHOUSE	278B16-7
RETAINER-REAR FLOOR PAN REAR CORNER COVER	112A54-5
RETAINER-REAR QUARTER WINDOW OUTSIDE FRONT MOULDING	291A12
RETAINER-REAR QUARTER WINDOW-UPPER REAR	29620-1
RETAINER-REAR SEAT BACK FLOOR SUPPORT TO FLOOR	61386-7
RETAINER-REAR SEAT BACK RADIO SPEAKER GRILLE MO	60184-5
RETAINER-REAR VIEW OUTSIDE MIRROR ADJUSTING CABLE	17B721
RETAINER-REAR WHEEL OPENING REAR MOULDING	29106
RETAINER-ROOF HEADLINING-NO. 1,2 & 3	52146
RETAINER-ROOF HEADLINING-SIDE FRONT	52136-7
RETAINER-ROOF HEADLINING SIDE LOWER	52138-9
RETAINER-ROOF HEADLINING SIDE REAR	52148-9
RETAINER-ROOF HEADLINING SUPPORT	52180
RETAINER-ROOF OUTSIDE COVER	53729
RETAINER-ROOF OUTSIDE COVER-FRONT	53716
RETAINER-ROOF OUTSIDE COVER-FRONT CORNER	53730-1
RETAINER-ROOF OUTSIDE COVER-SIDE	53728
RETAINER-ROOF OUTSIDE SIDE MOULDING	50004
RETAINER-ROOF SIDE INNER MOULDING	51756
RETAINER-ROOF SIDE RAIL FRONT WEATHERSTRIP-REAR	513B02-3
RETAINER-ROOF SIDE RAIL-REAR LOWER	513B48-9
RETAINER-ROOF SIDE RAIL REAR UPPER WEATHERSTRIP	51470-1
RETAINER-ROOF SIDE RAIL WEATHERSTRIP	513A66-7
RETAINER-ROOF SIDE REAR TRIM FOUNDATION	519A16
RETAINER-ROOF SIDE WEATHERSTRIP CAP	513B36-7
RETAINER-SKI	55052

Alphabetical Index—Continued

Part Name	Group Number
RETAINER-SPARE WHEEL COVER	47248
RETAINER-SPARE WHEEL WELL FLOOR WING SCREW	47126
RETAINER-SPEEDOMETER BEZEL MOUNTING CLIP	17A285
RETAINER-SPEEDOMETER CASE GROMMET	17305
RETAINER-SPEEDOMETER DRIVEN GEAR	17292
RETAINER-TAILGATE COUNTERBALANCE TORQUE BAR-INNER	41948-9
RETAINER-TAILGATE FINISH PANEL UPPER MOULDING	42586
RETAINER-TAILGATE LOCK ACCESS HOLE COVER	431C98
RETAINER-TAILGATE LOWER WEATHERSTRIP	402A06
RETAINER-TAILGATE OUTSIDE BELT MOULDING	425A00
RETAINER-TAILGATE OUTSIDE FINISH PANEL LOWER MOULDING	42537
RETAINER-TAILGATE OUTSIDE FINISH PANEL UPPER MOULDING	42525
RETAINER-TAILGATE OUTSIDE FINISH PANEL UPPER MOULDING	425A25
RETAINER-TAILGATE-OUTSIDE LOWER MOULDING	425A16
RETAINER-TAILGATE OUTSIDE MOULDING	40740
RETAINER-TAILGATE OUTSIDE UPPER MOULDING	425A14
RETAINER-TAILGATE PANEL COVER	407A10
RETAINER-TOP SIDE QUARTER COVER-LOWER	52728-9
RETAINER-UPPER BACK PANEL FRONT WEATHERSTRIP-CENTER	41944
RETAINER-UPPER BACK PANEL FRONT WEATHERSTRIP-OUTER	41943
RETAINER-UPPER BACK PANEL MOULDING	425A26
RETAINER-UPPER BACK PANEL TO SEAT BACK OPENING COVER	40558
RETAINER-WHEELHOUSE SIDE TRIM PANEL-REAR	28078-9
RETAINER-WINDSHIELD OUTSIDE BELT MOULDING	03407
RETAINER-WINDSHIELD OUTSIDE BELT MOULDING JOINT COVER	03013
RETAINER-WINDSHIELD OUTSIDE TOP MOULDING	03178
RETAINER-WINDSHIELD WASHER CONTROL BUTTON	17548
RETAINER-WINDSHIELD WEATHERSTRIP	03106-7
RISER-LEFT REAR SEAT CUSHION SUPPORT	60669
RISER-REAR FLOOR-FRONT	12004
RISER-REAR SEAT FRONT	60650-1
RISER-RIGHT REAR SEAT CUSHION FLOOR PANEL SUPPORT	60692
RIVET-DOOR VENTILATOR WINDOW DIVISION BAR WEATHERSTRIP	21524
ROD-A/COND. REGISTER LOCK ACTUATOR	19B849
ROD & CONNECTOR-RADIO ANTENNA	18A848
ROD-AUXILIARY SEAT CUSHION	63636
ROD-DOOR LOCK ACTUATING	22152-3
ROD-DOOR LOCK ACTUATING-OUTER	218A24-5
ROD-FRONT DOOR LOCK ACTUATING	22381
ROD-FRONT DOOR LOCK CONTROL TO CYLINDER	22134-5
ROD-FRONT DOOR LOCK PUSH BUTTON	21852-3
ROD-FRONT DOOR LOCK PUSH BUTTON TO CYLINDER	21294
ROD-FRONT SEAT TRACK LATCH TIE	61726
ROD-HOOD SUPPORT	16826
ROD-REAR DOOR LOCK ACTUATING	264A64-5
ROD-REAR DOOR LOCK-PUSH BUTTON	26460-1
ROD-REAR SEAT BACK LATCH HANDLE	61332
ROD-TAILGATE LOCK CONTROL	43880-1
ROD-TAILGATE LOCK TRIGGER RELEASE	43894
ROLLER-A/COND. INSTRUMENT PANEL DOOR STOP CAM	19B800
ROLLER-QUARTER WINDOW GUIDE	29824
ROLLER-REAR DOOR WINDOW CONTROL SWITCH TRIGGER PIN	27156
ROLLER-REAR DOOR WINDOW FRONT GUIDE	262A32
ROLLER-REAR DOOR WINDOW FRONT GUIDE-LOWER	25750
ROLLER-REAR DOOR WINDOW FRONT GUIDE-UPPER	25776
ROLLER-REAR SEAT BACK FLOOR EXTENSION FINISH PANEL	61312
ROLLER-WINDOW REGULATOR ARM	23240
ROOF & DECK LID LUGGAGE CARRIER KIT	55100
RUN & BRACKET-FRONT DOOR VENTILATOR WINDOW DIVISION BAR GLASS	21538-9
RUN & BRACKET-REAR DOOR STATIONARY WINDOW DIVISION BAR GLASS	262A02-3
RUN & MOULDING ASSEMBLY-BACK WINDOW GLASS-TOP	422A66
RUN & MOULDING-BACK WINDOW GLASS-SIDE UPPER	422A24-5
RUN & RETAINER-REAR DOOR GLASS-HINGE SIDE	262A16-7
RUN & WEATHERSTRIP-REAR DOOR GLASS-REAR	26000-1
RUN-BACK WINDOW GLASS	420A12
RUN-BACK WINDOW GLASS SIDE	40744-5
RUN-BACK WINDOW GLASS-SIDE-LOWER	40746-7
RUN-BACK WINDOW GLASS-SIDE LOWER	422A20-1
RUN-BACK WINDOW GLASS-TOP	422A36
RUN-BACK WINDOW GLASS-UPPER SIDE	422A38-9
RUN-DOOR & QUARTER GLASS	21550
RUN-DOOR GLASS TOP	25766
RUN-FRONT DOOR GLASS-LOCK SIDE	21508-9
RUN-FRONT DOOR GLASS-TOP	21596
RUN-FRONT DOOR VENTILATOR WINDOW DIVISION BAR GLASS	21546
RUN-QUARTER WINDOW GLASS-FRONT	30104-5
RUN-QUARTER WINDOW GLASS-REAR	30008-9
RUN-QUARTER WINDOW GLASS-UPPER	30010
RUN-QUARTER WINDOW GLASS-UPPER REAR	30022
RUN-REAR DOOR GLASS	25764
RUN-REAR DOOR GLASS-LOCK SIDE	25748
RUN-REAR DOOR GLASS-LOWER HINGE SIDE	25852
RUN-REAR DOOR GLASS-REAR	262A36-7

Alphabetical Index—Continued

Part Name	Group Number
RUN-REAR DOOR GLASS-REAR INNER	25754
RUN-REAR DOOR GLASS-REAR OUTER	25742-3
S	
SCREEN-A/COND. AIR INTAKE	19745
SCREEN-A/COND. COMPRESSOR SUCTION FITTING	19672
SCREEN-COWL TOP VENT	018A16
SCREEN-REAR SEAT SPEAKER	18821
SCREEN-REAR WINDOW-STATION WAGON	40040
SCREW ASSEMBLY-FRONT SEAT ADJUSTER REGULATOR-HORIZONTAL	617A02
SCREW ASSEMBLY-FRONT SEAT ADJUSTING REGULATOR-VERTICAL	617A06
SCREW-FOLDING TOP BALANCE LINK VERTICAL ADJUSTING	50491
SCREW-FOLDING TOP LOCK	54601
SCREW-FRONT SEAT ADJUSTING REGULATOR-VERTICAL	60449
SCREW-WINDSHIELD WIPER MOTOR SHAFT STOP	17A549
SCUFF PLATE-FRONT SEAT BACK FRAME-INNER	61182
SEAL-A/COND. & HEATER BLOWER TO DASH	18A491
SEAL-A/COND. BLOWER MOTOR PANEL OPENING	19A797
SEAL-A/COND. COMPRESSOR CRANKSHAFT	19655
SEAL-A/COND. EVAPORATOR CASE	19A672
SEAL-A/COND. EVAPORATOR DRAIN HOSE TO FLOOR	19A989
SEAL-A/COND. HOSE COUPLING-ADAPTOR	19A593
SEAL-A/COND. TUBES TO DASH PANEL	19B588
SEAL-BACK WINDOW GLASS	420A28
SEAL-BACK WINDOW GLASS-TOP	422A76
SEAL-BACK WINDOW HOUSING COVER	422B04
SEAL-BACK WINDOW HOUSING-UPPER	42380
SEAL-BACK WINDOW OUTSIDE LOWER CENTER MOULDING	423A98
SEAL-BACK WINDOW OUTSIDE LOWER MOULDING RETAINER	42469
SEAL-BLOWER HEATER CHAMBER TO A/COND. CHAMBER	18A324
SEAL-CENTER FLOOR ACCESS HOLE COVER PLATE	111A32
SEAL-DASH PANEL HEATER OPENING COVER	01810
SEAL-DASH PANEL HOOD RELEASE CABLE OPENING	016A24
SEAL-DOOR INNER PANEL BOTTOM DRAIN	20700
SEAL-DOOR INNER PANEL BOTTOM DRAIN	20788
SEAL-DOOR OUTSIDE HANDLE PUSH BUTTON	22478-9
SEAL-DOOR VENTILATOR WINDOW ADJUSTMENT OPENING AT BELT	222A78
SEAL-FOLDING TOP COMPARTMENT OPENING	546A02
SEAL-FRONT BODY PILLAR HEAT DUCT	025A16
SEAL-FRONT DOOR AIR DUCT PANEL	202A20
SEAL-FRONT DOOR OUTSIDE PANEL TO VENTILATOR WINDOW FRONT	21622-3
SEAL-FRONT DOOR UPPER HINGE TO DOOR	228A06
SEAL-FRONT FENDER APRON SHIELD SPLASH	16A070
SEAL-FRONT FENDER APRON SPLASH SHIELD	16B564
SEAL-FRONT FENDER APRON TO FRAME	16240
SEAL-FRONT FENDER APRON TO FRONT SUSPENSION	16A230-1
SEAL-FRONT FENDER APRON UPPER REINFORCEMENT TO FENDER	16B208
SEAL-FRONT FENDER LOWER FRONT TO HEADLAMP SUPPORT	16C000
SEAL-FRONT FENDER SPLASH SHIELD-REAR	16A582
SEAL-FRONT FENDER TO BUMPER	16304
SEAL-FRONT FENDER TO FRONT BODY PILLAR	16246
SEAL-FRONT FENDER TO RADIATOR SUPPORT	16A572
SEAL-FUEL TANK FILLER PIPE CENTER HOUSING INNER	405B28
SEAL-HEATER & A/COND.TEMPERATURE REGULATOR CONTROL	18A509
SEAL-HEATER CASE TO CORE SUPPORT REINFORCEMENT	16295
SEAL-HEATER CORE TO CASE	18658
SEAL-HEATER CORE TUBE	18596
SEAL-HEATER MOTOR DASH PANEL COVER	18A476
SEAL-HEATER WATER CONTROL VALVE	19460
SEAL-LUGGAGE COMPARTMENT DOOR HINGE	427A20
SEAL-PACKAGE TRAY UPPER TRIM PANEL TO QUARTER	46910-1
SEAL-QUARTER HINGE PILLAR-LOWER	281A60-1
SEAL-QUARTER LOCK PILLAR TO WINDOW FRAME	28182
SEAL-QUARTER PANEL EXTENSION TO REAR LAMP DOOR	27802
SEAL-QUARTER PANEL LOWER EXTENSION TO REAR FLOOR CROSS SILL	28009
SEAL-QUARTER PANEL OUTSIDE REAR MOULDING	29155
SEAL-QUARTER PANEL TO PACKAGE TRAY PANEL	27738-9
SEAL-QUARTER WHEEL OPENING COVER	27986-7
SEAL-QUARTER WHEEL OPENING COVER-FRONT	27906
SEAL-QUARTER WINDOW OUTSIDE REAR MOULDING	291B14
SEAL-RADIATOR SUPPORT TO HOOD	16A238
SEAL-REAR BUMPER TO LOWER BACK PANEL	17A953
SEAL-REAR DOOR-FRONT EXTENSION UPPER	24998
SEAL-REAR DOOR FRONT EXTENSION-UPPER	25412-3
SEAL-REAR DOOR INSIDE PANEL AT BELT-REAR	25410-1
SEAL-REAR DOOR LOWER HINGE	268A62
SEAL-REAR DOOR OUTSIDE HANDLE-PUSH BUTTON	25482
SEAL-REAR DOOR OUTSIDE UPPER MOULDING RETAINER	254A68
SEAL-REAR DOOR UPPER REAR EXTENSION	24896-7
SEAL-REAR DOOR WINDOW FRONT-UPPER	247A10-1
SEAL-REAR FLOOR PAN EXTENSION DRAIN	11202
SEAL-REAR SEAT BACK FINISH PANEL TO PACKAGE TRAY	60796
SEAL-ROOF SIDE INNER REAR MOULDING	517B30
SEAL-ROOF SIDE ORNAMENT	517A74
SEAL-SPEEDOMETER DRIVE GEAR OIL	17298
SEAL-STEERING COLUMN OPENING COVER PLATE	01738

Alphabetical Index—Continued

Part Name	Group Number
SEAL-TAILGATE HINGE TO COVER	430A38-9
SEAL-TAILGATE HINGE TO INNER PANEL	430A46
SEAL-TAILGATE LOWER CORNER	43708-9
SEAL-UPPER BACK FINISH PANEL & UPPER BACK PANEL	46640-1
SEAL-VENT AIR INLET DUCT	01998
SEAL-VENT AIR INLET DUCT TO BLOWER	02869
SEAL-VENT AIR INLET DUCT TO COWL TOP INNER PANEL	018A30
SEAL-WINDSHIELD DEFROSTER OUTLET BEZEL	18A640
SEAL-WINDSHIELD WIPER	17B500
SEAL-WINDSHIELD WIPER AUXILIARY DRIVE	17B502
SEAL-WINDSHIELD WIPER PIVOT SHAFT TO COWL TOP	17541
SEAT BELT KIT	610A88-9
SEAT BELT KIT	61200-1
SEAT BELT RETRACTOR KIT	611A06
SEAT CUSHION SPRING HELPER KIT	63186
SHAFT-A/COND. AIR OUTLET DOOR	18A497
SHAFT-FOLDING TOP LOCK DRIVE	50622
SHAFT-FRONT SEAT ADJUSTER MOTOR	618B68
SHAFT-FRONT SEAT ADJUSTER REGULATOR WORM GEAR	617A17
SHAFT-FRONT SEAT ADJUSTER TRANSMISSION	618A60
SHAFT-FRONT SEAT TRACK PIVOT-FRONT	61857
SHAFT-FRONT SEAT TRACK PIVOT-REAR	61853
SHAFT-HEATER TEMPERATURE REGULATOR CONTROL	18A518
SHAFT-LUGGAGE COMPARTMENT DOOR LOCK CYLINDER	43867
SHAFT-WINDSHIELD WIPER OUTPUT	17A435
SHIELD-A/COND. BLOWER MOTOR SWITCH	18B606
SHIELD-A/COND. EVAPORATOR CASE TO FLOOR	19B561
SHIELD-BRAKE & FUEL LINE	102A20
SHIELD-CONTROL NAME PLATE LAMP	19B576
SHIELD-DOOR TRIM-WATER	20318
SHIELD-DOOR WIRING	20770
SHIELD-FRONT CROSSMEMBER TO BUMPER-SPLASH	16F550
SHIELD-FRONT CROSSMEMBER TO SIDE RAIL SPLASH	16102
SHIELD-FRONT DOOR VENTILATOR WINDOW RAIN	222A20-1
SHIELD-FRONT DOOR WIRING	20768-9
SHIELD-FRONT FENDER APRON SUSPENSION OPENING-SPLASH	16B562
SHIELD-FRONT FENDER FRONT LOWER EXTENSION-SPLASH	16D572
SHIELD-FRONT FENDER LOWER EXTENSION TO BUMPER SPLASH	16D550
SHIELD-FRONT FENDER SPLASH-FRONT	16A573-4
SHIELD-FRONT FENDER SPLASH-REAR	16102-3
SHIELD-FRONT FENDER TO BUMPER-SPLASH	16B564
SHIELD-FRONT SEAT ADJUSTER-VINYL	62116-7
SHIELD-FRONT SEAT BACK	60762
SHIELD-FRONT SEAT BACK-SIDE	61616-7
SHIELD-FRONT SEAT CUSHION-CENTER	62102
SHIELD-FRONT SEAT CUSHION-SIDE	62186-7
SHIELD-FRONT SEAT CUSHION SIDE-VINYL	62186-7
SHIELD-FRONT SEAT TRACK-BUCKET SEATS-VINYL	62162-3
SHIELD-FUEL FILLER OPENING SPLASH	405B32
SHIELD-FUEL FILLER OVERFLOW SPLASH	28622
SHIELD-INSTRUMENT PANEL ASH RECEPTACLE	048A38
SHIELD-LUGGAGE COMPARTMENT DOOR LIFT	427A52-3
SHIELD-LUGGAGE COMPARTMENT DOOR LOCK-INSIDE	43208
SHIELD-LUGGAGE COMPARTMENT DOOR LOCK STRIKER	432A70
SHIELD-QUARTER ASH RECEPTACLE	30716
SHIELD-QUARTER, FRONT & REAR DOOR TRIM WATER	31091
SHIELD-QUARTER TRIM WATER	31090
SHIELD-REAR DOOR WIRING	24784-7
SHIELD-REAR LICENSE PLATE LAMP	40427
SHIELD-REAR SEAT BACK END	61352-3
SHIELD-REAR WHEEL SPLASH	16281
SHIELD-TAILGATE HANDLE LOCK RELEASE WATER	431D50
SHIELD-TAILGATE INSIDE COVER PANEL DUST	407A18
SHIELD-WINDSHIELD WIPER CABLE	17A536
SHIM-AUXILIARY SEAT CUSHION WELL FLOOR PIVOT ARM	608A02
SHIM-DOOR LOCK STRIKER PLATE	22058
SHIM-FRONT BUMPER IMPACT BAR	17A799
SHIM-FUEL FILLER OPENING LID	40497
SHIM-REAR BUMPER BRACKET TO REAR CROSSMEMBER	10918
SHIM-REAR DOOR LOCK STRIKER PLATE	265A06
SHIM-TAILGATE LATCH STRIKER PLATE	431A61
SHIM-TAILGATE LOCK STRIKER PLATE	43152
SHIM-TAILGATE SUPPORT	44553
SHOCK ABSORBER & BUSHING FRONT KIT	18124
SHOCK ABSORBER & BUSHING REAR KIT	18125
SHOCK ABSORBER INSULATOR REPAIR-KIT	18198
SIGHT GLASS-A/COND EVAPORATOR LIQUID-INDICATOR	19B673
SLAT ASSEMBLY-ROOF LUGGAGE CARRIER-OUTER	55022
SLAT-FOLDING TOP NO. 4 BOW	50340-1
SLAT-ROOF LUGGAGE CARRIER-INNER	55150
SLAT-ROOF LUGGAGE CARRIER-OUTER	55152
SLEEVE & CYLINDER ASSEMBLY-LUGGAGE COMPARTMENT DOOR LOCK	43600
SLEEVE-BUMPER ARM BOLT	17841
SLEEVE-FRONT SEAT BACK HINGE PIVOT-INNER	61696
SLEEVE-FRONT SEAT BACK HINGE PIVOT-OUTER	61697
SLEEVE-FUEL FILLER OPENING LID-STOP	28627
SLEEVE-HOOD LATCH CONTROL	16877
SLEEVE-REAR ROOF LOCK MOUNTING BOLT	53917
SLEEVE-ROOF LIFT MOUNTING BOLT BUSHING	53939
SLEEVE-VACUUM PUMP TUBE RETAINER	17A451
SLEEVE-WINDSHIELD WIPER MOTOR SWITCH	17C428

Alphabetical Index—Continued

Part Name	Group Number
SLIDE-DOOR INSIDE HANDLE OPENING	22622-3
SLIDE-FRONT SEAT TRACK	62588
SLIDE-REAR DOOR WINDOW BUTTON-FRONT	263A20
SLIDE-REAR DOOR WINDOW BUTTON-REAR	26342
SLIDE-REAR DOOR WINDOW STABILIZER ARM	25808
SLIDE-REAR DOOR WINDOW STABILIZER ARM	29824
SLINGER-WINDSHIELD WIPER OUTPUT SHAFT	17C455
SOCKET & WIRE-HEATER & A/COND. CONTROL LAMP	18541
SOCKET & WIRING-CONTROL NAME PLATE LAMP	19B569
SOCKET-BACK WINDOW REGULATOR STEM	44017
SOLENOID & PLUNGER REPAIR FRONT SEAT ADJUSTING KIT	61925
SPACER-A/COND. INSTRUMENT PANEL L. H. REGISTER	19B696
SPACER-BACK WINDOW GARNISH MOULDING	40828
SPACER-BACK WINDOW GLASS-LOWER	420A22
SPACER-BACK WINDOW OUTSIDE-SIDE MOULDING	42552
SPACER-BODY ROCKER PANEL MOULDING	102A78
SPACER-BODY TO FRAME	11520
SPACER-COMPRESSOR MOUNTING SUPPORT BRACKET	19576
SPACER-CONSOLE COMPARTMENT PANEL FRONT	045A68
SPACER-DOOR SCUFF PLATE	13204
SPACER-DOOR VENTILATOR WINDOW FRAME	22215
SPACER-DOOR WINDOW GARNISH MOULDING	20922
SPACER-FOLDING TOP LIFT MOTOR SUPPORT	53382
SPACER-FOLDING TOP NO. 1 BOW REAR WEATHERSTRIP	50687
SPACER-FRONT BUMPER GUARD-PAD	17A472
SPACER-FRONT DOOR OUTSIDE MOULDING	20886
SPACER-FRONT DOOR UPPER TRIM SUPPORT PANEL	22364-5
SPACER-FRONT DOOR VENT WINDOW MOTOR MOUNTING BRACKET	20973
SPACER-FRONT DOOR VENTILATOR WINDOW REGULATOR	23446
SPACER-FRONT DOOR WINDOW REGULATOR DRIVE WORM	23590
SPACER-FRONT FENDER TO COWL TOP	16354
SPACER-FRONT FENDER TOP ORNAMENT	16B138
SPACER-FRONT SEAT ADJUSTER MOTOR BRACKET	618B60
SPACER-FRONT SEAT BACK PIVOT ARM	60394
SPACER-FRONT SEAT BACK PIVOT QUARTER COVER	61610
SPACER-FRONT SEAT REGULATOR MOTOR TO REGULATOR HOUSING	61924
SPACER-FRONT SEAT UPPER TO CUSHION FRAME SUPPORT	61782
SPACER-FRONT SHOCK ABSORBER MOUNTING BRACKET-LOWER	18A010
SPACER-HEATER PLENUM CHAMBER MOUNTING	18A650
SPACER-HOOD HOOK SUPPORT	16A900
SPACER-INSTRUMENT PANEL RADIO GRILLE REAR	045B64
SPACER-LOWER BACK INNER FINISH PANEL	424A06
SPACER-LOWER BACK PANEL ORNAMENT	40307
SPACER-LOWER BACK PANEL SIDE MOULDING	424A22
SPACER-LUGGAGE COMPARTMENT DOOR LOCK CYLINDER	43565
SPACER-LUGGAGE COMPARTMENT DOOR LOCK STRIKER BRACKET	432A02
SPACER-OUTSIDE FINISH RAIL	20774
SPACER-QUARTER UPPER TRIM SUPPORT PANEL WITH WEATHERSTRIP	31312-3
SPACER-REAR BUMPER ARM TO REAR BUMPER HOUSING SUPPORT	17A761
SPACER-REAR DOOR UPPER TRIM SUPPORT	26012-3
SPACER-REAR FLOOR REAR CROSSMEMBER	10904
SPACER-SPEEDOMETER GEAR	17288
SPACER-TAILGATE OUTSIDE FINISH RAIL	40924
SPACER-WINDSHIELD OUTSIDE SIDE MOULDING	03201
SPACER-WINDSHIELD WIPER MOUNTING	17519-0
SPACER-WINDSHIELD WIPER MOUNTING OUTER	17514-5
SPACER-WINDSHIELD WIPER OUTPUT SHAFT	17A558
SPACER-WINDSHIELD WIPER PIVOT SHAFT INNER	17B588
SPARE WHEEL MOUNTING RELOCATING KIT	47044
SPEAKER-RADIO RECEIVER	18808
SPEEDOMETER	17255
SPEEDOMETER CABLE CORE REPLACEMENT KIT	17262
SPEEDOMETER CABLE TIP REPLACEMENT KIT	17A254
SPRING-A/COND. INSTRUMENT PANEL DOOR STOP	19B797
SPRING-A/COND. INSTRUMENT PANEL REGISTER DOOR	19B828
SPRING-A/COND. REGISTER LOCK ACTUATOR ROD	19B796
SPRING-A/COND. REGISTER LOCK LATCH	19B788
SPRING-A/COND.REGISTER LOUVER TENSION	19A896
SPRING & ROLLER-HEATER AIR CONTROL POINTER BELT	18B394
SPRING & ROLLER-HEATER REGULATOR CONTROL	18B391-2
SPRING-ANTENNA DRIVE	18A962
SPRING-ANTENNA DRIVE TENSION	19118
SPRING-ASH RECEPTACLE RETAINER COVER TENSION-FRONT, REAR DOORS & QUARTER	30728-9
SPRING ASSEMBLY-WINDSHIELD WIPER CAM RETURN	17A501
SPRING-AUXILIARY SEAT BACK FLOOR LATCH	61004
SPRING-BACK WINDOW REGULATOR COUNTERBALANCE	40867
SPRING-BACK WINDOW REGULATOR HANDLE	44036
SPRING-BACK WINDOW REGULATOR HANDLE LOCKING PLUNGER	40865
SPRING-BACK WINDOW REGULATOR HANDLE PAWL	44016
SPRING-BACK WINDOW REGULATOR HANDLE RETAINING	40866
SPRING-CONSOLE COMPARTMENT DOOR CHECK ARM	06114
SPRING-CONSOLE COMPARTMENT DOOR HINGE	06069
SPRING-DOOR INSIDE HANDLE	22624
SPRING-DOOR LOCK REMOTE CONTROL	21910
SPRING-DOOR OUTSIDE HANDLE PUSH BUTTON	22462
SPRING-DOOR VENTILATOR WINDOW HANDLE	22986
SPRING-FRONT DOOR HINGE	228A12
SPRING-FRONT DOOR LOCK CYLINDER KEY HOLE COVER	22006-7

Alphabetical Index—Continued

Part Name	Group Number
SPRING-FRONT DOOR LOCK OPERATING LEVER RETAINER	22075
SPRING-FRONT DOOR VENTILATOR WINDOW PIVOT	22926
SPRING-FRONT DOOR VENTILATOR WINDOW STABILIZER	22328
SPRING-FRONT SEAT TRACK ASSIST	61828
SPRING-FRONT SEAT TRACK LATCH	61883
SPRING-FUEL FILLER OPENING LID	28615
SPRING-FUEL FILLER OPENING LID HINGE	405A24-5
SPRING-HEATER TEMPERATURE REGULATOR CONTROL BELT TENSION	18A516
SPRING-HOOD AUXILIARY CATCH	16897
SPRING-HOOD HINGE	16789
SPRING-HOOD LOCK	16925
SPRING-HOOD LOCK CAM	16767
SPRING-HOOD LOCK TRIGGER	16921
SPRING-HOOD SUPPORT ROD	16832
SPRING-INSTRUMENT PANEL ASH RECEPTACLE RETAINER COVER	04834-5
SPRING-JACK HOLD DOWN	17119
SPRING-LIFTGATE LATCH	43196
SPRING-LUGGAGE COMPARTMENT DOOR HINGE	42892
SPRING-LUGGAGE COMPARTMENT DOOR LOCK KEYHOLE COVER	43567-8
SPRING-QUARTER WINDOW REGULATOR COUNTERBALANCE	30351
SPRING-REAR DOOR CHECK ON LOWER HINGE	26833
SPRING-REAR DOOR HINGE	268A34
SPRING-REAR DOOR WINDOW REGULATOR-COUNTER BALANCE	27048
SPRING-REAR SEAT BACK FLOOR PANEL COUNTER-BALANCE	605A76
SPRING-REAR SEAT BACK FLOOR SUPPORT	605A54
SPRING-REAR SEAT BACK LATCH HANDLE	61097-8
SPRING-REAR VIEW OUTSIDE MIRROR	17A714
SPRING-RIGHT REAR SEAT LATCH	61378
SPRING-SEAT BELT RETRACTORS	610A98
SPRING-SPEEDOMETER RETAINING	17A263
SPRING-STEERING COLUMN RETAINING COVER	017A30
SPRING-TAILGATE COUNTERBALANCE	430A00
SPRING-TAILGATE LATCH	431B50
SPRING-TAILGATE LOCK KEYHOLE COVER	40881
SPRING-TAILGATE LOCK PAWL	431C76
SPRING-VISOR ARM CLIP	04134
SPRING-WINDOW REGULATOR COUNTERBALANCE	23318
SPRING-WINDSHIELD WASHER CONTROL BUTTON	17548
SPRING-WINDSHIELD WIPER MOTOR BRUSH	17B599
STABILIZER-FRONT & REAR DOOR	235A18
STABILIZER-QUARTER WINDOW GLASS FRAME	30470-1
STABILIZER-REAR DOOR WINDOW	26322
STANCHION-RADIO ANTENNA	18919
STEM-FRONT DOOR WINDOW REGULATOR HANDLE	23358
STOP ASSEMBLY-REAR SEAT BACK	62426-7
STOP-AUXILIARY SEAT BACK FLOOR	606A22
STOP-BACK WINDOW-LOWER	42308
STOP-DOOR VENTILATOR WINDOW PIVOT	22992
STOP-DOOR WINDOW	21768
STOP-DOOR WINDOW UPPER	222A24
STOP-DOOR WINDOW-UPPER	25780
STOP-FRONT DOOR STABILIZER	235A22
STOP-FRONT DOOR WINDOW-UPPER	21756
STOP-FRONT SEAT BACK	61064
STOP-FRONT SEAT TRACK	61938
STOP-QUARTER WINDOW REGULATOR ARM	29822
STOP-QUARTER WINDOW-LOWER	29805-6
STOP-QUARTER WINDOW-UPPER	303A00-1
STOP-QUARTER WINDOW UPPER-FRONT	29814-5
STOP-REAR DOOR WINDOW	262A20-1
STOP-REAR DOOR WINDOW-LOWER	27070
STOP-REAR DOOR WINDOW-LOWER FRONT	26056-9
STOP-REAR DOOR WINDOW-REAR UPPER	25816
STOP-REAR DOOR WINDOW-UPPER REAR	262A84-5
STRAINER-PACKAGE TRAY TO FLOOR	46610-1
STRAINER-QUARTER PANEL BELT TO FLOOR	28788-9
STRAINER-QUARTER PANEL BELT TO SPARE TIREWELL	28534
STRAINER-QUARTER PANEL-FRONT	280A50
STRAINER-QUARTER WHEELHOUSE	28242
STRAINER-REAR SEAT BACK SUPPORT TO FLOOR	62482-3
STRAINER-UPPER QUARTER PANEL REINFORCEMENT-TO FLOOR FRONT	280A32
STRAINER-UPPER QUARTER PANEL REINFORCEMENT-TO FLOOR REAR	280A34
STRAP-A/COND. MUFFLER SUPPORT	19B695
STRAP ASSEMBLY ROOF CARRIER HOLD DOWN KIT	55196
STRAP-HEATER & A/COND.	19594
STRAP-HOOD GROUND	16A600
STRAP-TAILGATE COUNTERBALANCE SPRING	430A14
STRIKER-CONSOLE COMPARTMENT DOOR	06157
STRIKER-LUGGAGE COMPARTMENT DOOR LOCK	43252
STRIKER-REAR DOOR LOCK	265A04
STRIKER-REAR DOOR WINDOW DOVETAIL	262A30-1
STRIKER-REAR SEAT BACK LATCH	62440-1
STRIKER-TAILGATE LOCK	43146
STRIP-BELT TACKING-CENTER	41745
STRIP-BELT TACKING-SIDE FRONT	41772-3
STRIP-BELT TACKING-SIDE REAR	41782-3
STRIP-CENTER BODY PILLAR OUTSIDE FINISH	24302-3
STRIP-CENTER BODY PILLAR OUTSIDE FINISH	243A11
STRIP-CONSOLE PANEL SIDE FLANGE BREAKER	045B88
STRIP-FRONT DOOR BELT INSIDE PANEL-REAR FINISH	21108

Alphabetical Index—Continued

Part Name	Group Number
STRIP-FRONT DOOR VENTILATOR WINDOW BAR GLASS RUN	21638
STRIP-QUARTER WINDOW INSIDE FRONT FINISH	29890-1
STRIP-REAR DOOR BELT INNER PANEL-FINISH	25690-1
STRIP-REAR DOOR WINDOW INSIDE FINISH-FRONT	254A08-9
STRIP-REAR FLOOR AT WHEELHOUSE SIDE-FINISH	13210-1
STRIP-ROOF HEADLINING CORNER FRONT TACKING	50812
STRIP-ROOF HEADLINING-FRONT TACKING	50964
STRIP-ROOF HEADLINING HEADER RETAINING	52202
STRIP-ROOF HEADLINING HEADER TACKING	51016-7
STRIP-ROOF HEADLINING-SIDE FRONT TACKING	50994
STRIP-ROOF HEADLINING-SIDE REAR TACKING	50996
STRIP-ROOF HEADLINING SIDE RETAINER-REAR UPPER	52122
STRIP-ROOF HEADLINING SIDE RETAINING-FRONT	50936-7
STRIP-ROOF HEADLINING SIDE RETAINING-REAR	50940-1
STRIP-ROOF HEADLINING SIDE RETAINING-REAR LOWER	50900-1
STRIP-ROOF HEADLINING SIDE RETAINING-REAR-LOWER	52194
STRIP-TAILGATE INSIDE COVER PANEL	407A16-7
STRIP-TAILGATE SKID	44432
STRIP-UPPER BACK PANEL TO SEAT BACK OPENING COVER	40572-3
STUD-A/COND. EVAPORATOR SUPPORT	19A982
STUD ASSEMBLY-A/COND. EVAPORATOR SUPPORT	19B686
STUD-FOLDING TOP SIDE RAIL COVER FRONT LATCH	54706
STUD-FRONT FENDER COWL TOP SPACER	16C092
STUD-FRONT SEAT ADJUSTER PIVOT	618A66
STUD-QUARTER WINDOW-GUIDE ROLLER	29825
STUD-REAR SHOCK ABSORBER MOUNTING	18A044-6
STUD-REAR SHOCK ABSORBER-MOUNTING	18196
SUB-DIAL-HEATER SERVO CONTROL	18B393
SUPPORT-AUXILIARY FLOOR SIDE	11500
SUPPORT-AUXILIARY SEAT BACK	600A76-7
SUPPORT-BACK WINDOW GARNISH MOULDING	424A24
SUPPORT-BACK WINDOW GARNISH SIDE MOULDING LOWER	424A30
SUPPORT-BACK WINDOW HOUSING-UPPER	42338
SUPPORT-BACK WINDOW REGULATOR MOTOR MOUNTING	40892
SUPPORT-BRAKE PEDAL	01508
SUPPORT-CONSOLE COMPARTMENT	045B56
SUPPORT-CONSOLE COMPARTMENT DOOR LOCK	06152
SUPPORT-COWL SIDE A/COND. MOUNTING TRAY	02250-1
SUPPORT-COWL SIDE HEATER UNIT MOUNTING PANEL	18A664
SUPPORT-DOOR SCUFF PLATE	13218
SUPPORT-FOLDING TOP COMPARTMENT SIDE TRIM RETAINER	54646-7
SUPPORT-FOLDING TOP LIFT TO FLOOR	506A58
SUPPORT-FOLDING TOP MAIN PIVOT BRACKET	53156-9
SUPPORT-FOLDING TOP MAIN PIVOT BRACKET TO WHEELHOUSE	53088-9
SUPPORT-FOLDING TOP MOTOR & PUMP MOUNTING PANEL	53316
SUPPORT-FRONT BUMPER STONE DEFLECTOR	17790
SUPPORT-FRONT DOOR ARM REST	24160
SUPPORT-FRONT DOOR ARM REST-LESS TRIM	24022-3
SUPPORT-FRONT DOOR VENTILATOR WINDOW REGULATOR	23630-1
SUPPORT-FRONT FENDER APRON & RADIATOR	16138
SUPPORT-FRONT FENDER APRON & RADIATOR	16A198
SUPPORT-FRONT FENDER APRON & RADIATOR-SIDE	16A174-5
SUPPORT-FRONT SEAT ADJUSTER-LOWER	618A24-5
SUPPORT-FRONT SEAT ADJUSTER MOTOR & TRANSMISSION	618B14
SUPPORT-FRONT SEAT ADJUSTER-UPPER	618A28-9
SUPPORT-FRONT SEAT BACK SIDE SHIELD-LOWER	62296-7
SUPPORT-FRONT SEAT CUSHION SIDE SHIELD-CENTER	62190
SUPPORT-FRONT SEAT CUSHION SIDE SHIELD-FRONT	62168-9
SUPPORT-FRONT SEAT CUSHION SIDE SHIELD-REAR	62194-5
SUPPORT-FRONT SIDE MEMBER TO APRON REINFORCEMENT-LOWER	102A16-7
SUPPORT-FRONT SIDE MEMBER TO APRON REINFORCEMENT-UPPER	102A06-7
SUPPORT-HOOD BUMPER TO COWL TOP OUTER PANEL	16A670
SUPPORT-HOOD LATCH DOWEL	16716
SUPPORT-HOOD LOCK DOWEL	16728
SUPPORT-HOOD LOCK HOOK	16707
SUPPORT-INSTRUMENT PANEL A/COND.MOUNTING	045C12-3
SUPPORT-INSTRUMENT PANEL LOWER CENTER EXTENSION	04664
SUPPORT-INTERIOR GARNISH MOULDINGS	517A80
SUPPORT-LUGGAGE COMPARTMENT DOOR LOCK CYLINDER SHAFT	43612
SUPPORT-LUGGAGE COMPARTMENT DOOR LOCK STRIKER BRACKET	432A42
SUPPORT-LUGGAGE COMPARTMENT DOOR OPENING UPPER CORNER DRAIN TROUGH-LOWER	451A08-9
SUPPORT-LUGGAGE COMPARTMENT DOOR OPENING UPPER CORNER DRAIN TROUGH-UPPER	451A06-7
SUPPORT-LUGGAGE COMPARTMENT DOOR OPENING UPPER REINFORCEMENT	44838-9
SUPPORT-LUGGAGE COMPARTMENT SIDE LINING BOARD	45530
SUPPORT-PACKAGE TRAY TO REAR ROOF RAIL INNER	52566-7
SUPPORT-PACKAGE TRAY TRIM PANEL	46802
SUPPORT-PARKING BRAKE BRACKET TO COWL SIDE	02246
SUPPORT-QUARTER OUTSIDE LOWER REAR MOULDING	29032
SUPPORT-QUARTER PANEL UPPER EXTENSION-TO WHEELHOUSE OUTER	280A12-3
SUPPORT-QUARTER TRIM WATER SHIELD	31152-3
SUPPORT-QUARTER WINDOW GARNISH MOULDING-REAR	29186
SUPPORT-RADIO RECEIVER	18888
SUPPORT-REAR BUMPER ARM	17A858
SUPPORT-REAR BUMPER MOUNTING BRACKET	17A863
SUPPORT-REAR DOOR ARM REST	274A08-9

Alphabetical Index—Continued

Part Name	Group Number
SUPPORT-REAR DOOR ARM REST	27538-9
SUPPORT-REAR FLOOR PAN TO REAR SIDE MEMBER	111A34-5
SUPPORT-REAR SEAT BACK	62332
SUPPORT-REAR SEAT BACK FLOOR	605A50-1
SUPPORT-REAR SEAT BACK SIDE MOULDING	62454-5
SUPPORT-REAR SEAT BACK STOP	62286-7
SUPPORT-REAR SEAT CUSHION FLOOR	60552-3
SUPPORT-REAR SEAT-FRONT CENTER	60044
SUPPORT-REAR SEAT-REAR CENTER	60040
SUPPORT-REAR SEAT TO FLOOR	61118-9
SUPPORT-RIGHT REAR SEAT	63160
SUPPORT-ROOF HEADLINING RETAINING	52101-7
SUPPORT-ROOF LUGGAGE CARRIER	55140
SUPPORT-STOWAGE COMPARTMENT LOCK STRIKER	11510
SUPPORT-TAILGATE	44400-1
SUPPORT-UPPER BACK PANEL LIFT TO FLOOR BRACKET	40540-1
SUPPORT-VENT AIR OUTLET DUCT	018A56
SUPPORT-WHEELHOUSE STRAINER TO REAR FLOOR CROSSMEMBER	28357
SUPPORT-WINDSHIELD GARNISH MOULDING-LOWER	03638
SWITCH-A/COND. BLOWER	19986
SWITCH-A/COND. CONTROL	19A642
SWITCH-A/COND. DAMPER DOOR	19B888
SWITCH-A/COND. TEMPERATURE CONTROL	19A945
SWITCH & CONTROL ASSEMBLY-WINDSHIELD WIPER	17B479
SWITCH & COVER-WINDSHIELD WIPER	17A511
SWITCH-ELECTRIC RADIO ANTENNA	18863
SWITCH-HEATER & A/COND.	18578
SWITCH-HEATER & A/COND.TEMPERATURE	18A270
SWITCH-LUGGAGE COMPARTMENT DOOR LOCK	19B514
SWITCH-RADIO FOOT CONTROL	18608
SWITCH VACUUM-A/COND. BLOWER MOTOR GROUNDING	19B914
SWITCH-WINDSHIELD WASHER CONTROL	17A625
SWITCH-WINDSHIELD WIPER CONTROL	17A555
T	
TACHOMETER & HOUSING ASSEMBLY	17360
TACHOMETER BRACKET KIT	17368
TACHOMETER KIT	17A326
TANK & BRACKET-HEATER VACUUM RESERVOIR	18A522
TANK & BRACKET-VACUUM RESERVE	19A566
TEE-WINDSHIELD WASHER HOSE	17A601
TENSIONER-QUARTER WINDOW GUIDE ROLLER	29899
THERMOSTAT-A/COND. EVAPORATOR TEMPERATURE CONTROL	19618
THERMOSTAT-A/COND. EVAPORATOR TEMPERATURE CONTROL	19819
TIP-ANTENNA MAST	19298
TIP-BACK WINDOW DIVISION BAR INSIDE MOULDING	42471
TIP-BACK WINDOW DIVISION BAR OUTSIDE MOULDING	42470
TIP-REAR BOW BINDING	514A00-1
TIRE INFLATOR & SEALANT KIT	19C543
TISSUE DISPENSER KIT	19A549
TOOL-ELECTRICAL TERMINAL CRIMPING	17018
TOOL KIT	17003
TOP-FOLDING-LESS TRIM	53000
TOUCH-UP PAINT-1 OZ. TUBE KIT	19503
TOUCH-UP PAINT-6 OZ.SPRAY CAN KIT	19503
TOUCH-UP PAINT-QUARTS KIT	19503
TRACK-FRONT SEAT	61704-5
TRANSMISSION ASSEMBLY-LUGGAGE COMPARTMENT DOOR LOCK-LESS CASING & CABLE	427A44-5
TRANSMISSION-FOLDING TOP LOCK	53540-1
TRAP-A/COND. EVAPORATOR DRAIN	19998
TRAY-COWL SIDE A/COND. UNIT MOUNTING	02264-5
TRIGGER-TAILGATE LOCK RELEASE	40854
TROUGH ASSEMBLY-LUGGAGE COMPARTMENT DOOR OPENING-UPPER DRAIN	45102
TROUGH-BACK WINDOW SIDE DRAIN	45004-5
TROUGH-BELT SIDE DRAIN	41758-9
TROUGH-DOOR VENTILATOR WINDOW DRAIN	22910-1
TROUGH-FRONT BODY UPPER PILLAR-DRAIN	025A10-1
TROUGH-FRONT DOOR GLASS CHANNEL DRAIN	21566-7
TROUGH-LUGGAGE COMPARTMENT DOOR OPENING DRAIN-SIDE	45114-5
TROUGH-LUGGAGE COMPARTMENT DOOR OPENING-LOWER CORNER DRAIN	45118-9
TROUGH-LUGGAGE COMPARTMENT DOOR OPENING-UPPER CORNER DRAIN	45120-1
TROUGH-UPPER BACK PANEL END DRAIN	44842-3
TUBE-A/COND. BLOWER HOUSING TO BLOWER MOTOR	19B918
TUBE-A/COND. COMPRESSOR DISCHARGE	19659
TUBE-A/COND. DEHYDRATOR TO EVAPORATOR	19835-7
TUBE-A/COND. EVAPORATOR INLET	19A704
TUBE-A/COND. EVAPORATOR INLET & OUTLET	19A834
TUBE-A/COND. EVAPORATOR OUTLET	19A705
TUBE-A/COND. EVAPORATOR TO COMPRESSOR SHUT-OFF VALVE	19867
TUBE-A/COND. RECEIVER TANK TO CONDENSER	19948
TUBE & CLIP-VACUUM PUMP TO WINDSHIELD WIPER MOTOR HOSE	17A452
TUBE & LINK-FRONT SEAT TRACK EQUALIZING	61946
TUBE-BACK WINDOW HOUSING DRAIN	42327
TUBE-COWL TOP INNER PANEL DRAIN	02207
TUBE-DASH PANEL EXTENSION-DRAIN	016A58
TUBE-FRONT SEAT ADJUSTER-FRONT VERTICAL ACTUATOR	618A90-1

Alphabetical Index—Continued

Part Name	Group Number
TUBE-FRONT SEAT ADJUSTER-HORIZONTAL ACTUATOR	618A92-3
TUBE-FRONT SEAT ADJUSTER MOTOR DRIVE	618B62
TUBE-FRONT SEAT ADJUSTER-REAR VERTICAL ACTUATOR	618A98-9
TUBE-HEATER & A/COND. WATER OUTLET	18663
TUBE-MULTIPLE LUBRICATOR RESERVOIR TO PUMP	19B630
TUBE-TAILGATE DRAIN	40743
TUBE-WINDSHIELD WIPER MOTOR TO VALVE-PRESSURE	17B475
TUBE-WINDSHIELD WIPER MOTOR TO VALVE-RETURN	17B476
TUBE-WINDSHIELD WIPER PRESSURE FEED	17B474
TUBE-WINDSHIELD WIPER VALVE TO MOTOR-CONTROL	17B477
TUBING-FREON A/COND.	19C708
TURNBUCKLE-FRONT FENDER APRON TO COWL TOP	16B248
V	
VALVE-A/COND. & HEATER TEMPERATURE REGULATOR	18502
VALVE-A/COND.& HEATER VACUUM CHECK	19A563
VALVE-A/COND. COMPRESSOR	19752
VALVE-A/COND. EVAPORATOR EXPANSION	19849
VALVE-BODY ROCKER PANEL DRAIN	103A58
VALVE-DOOR LOCK VACUUM CONTROL	219A00
VALVE-DOOR LOCK VACUUM CONTROL CHECK	219A18
VALVE-HEATER & A/COND. WATER CONTROL	18495
VALVE-HEATER TEMPERATURE CONTROL	18A545
VALVE-LUGGAGE COMPARTMENT DOOR LOCK RELEASE CONTROL	43382
VALVE-VENT AIR	01850-1
VALVE-WINDSHIELD WASHER	17615
VALVE-WINDSHIELD WASHER CONTROL	17A614
VALVE-WINDSHIELD WIPER MOTOR PRESSURE REGULATOR	17B468
VALVE-WINDSHIELD WIPER MOTOR VACUUM CHECK	17522
VENT AIR VALVE CONTROL MOTOR MOUNTING SEAL KIT	01440
W	
WASHER-DOOR VENTILATOR WINDOW HANDLE	22982
WASHER-DOOR VENTILATOR WINDOW PIVOT FRICTION	22963
WASHER-FRONT BUMPER IMPACT BAR MOUNTING BOLT	17B786
WASHER-FRONT DOOR ASSIST SPRING	228A22
WASHER-INSTRUMENT PANEL PAD RETAINER	044D14
WASHER-REAR SHOCK ABSORBER	18054
WASHER-SHOCK ABSORBER INSULATOR	18041
WASHER-SPRING	53211
WASHER-TRANSMISSION ASSEMBLY LUGGAGE COMPARTMENT VACUUM DOOR LOCK	43366
WASHER-WINDSHIELD WIPER MOTOR THRUST	17B550
WEATHERSTRIP & RETAINER-QUARTER WINDOW-UPPER	29920-1
WEATHERSTRIP ASSEMBLY-ROOF SIDE RAIL-FRONT	513B16-7
WEATHERSTRIP ASSEMBLY-ROOF SIDE RAIL-REAR	513A68-9
WEATHERSTRIP-BACK WINDOW	42084
WEATHERSTRIP-BACK WINDOW CENTER GLASS INNER & OUTER-LESS RETAINER	42060
WEATHERSTRIP-BACK WINDOW CENTER GLASS-INNER WITH RETAINER	42066
WEATHERSTRIP-BACK WINDOW GLASS AT BELT	420A00
WEATHERSTRIP-BACK WINDOW GLASS-INNER	42072
WEATHERSTRIP-BACK WINDOW GLASS-OUTER	42082
WEATHERSTRIP-BACK WINDOW-SIDE	42042-3
WEATHERSTRIP-BACK WINDOW SIDE GLASS	42052-3
WEATHERSTRIP-CENTER BODY PILLAR AT BELT-REAR	243A08-9
WEATHERSTRIP-CENTER BODY PILLAR-UPPER	243A04-5
WEATHERSTRIP-CENTER BODY PILLAR UPPER FRONT	24560-1
WEATHERSTRIP-CENTER BODY PILLAR UPPER REAR	24566-7
WEATHERSTRIP-FOLDING TOP FRONT SIDE RAIL	53986-7
WEATHERSTRIP-FOLDING TOP NO. 1 BOW	514A28
WEATHERSTRIP-FOLDING TOP NO. 1 BOW-FRONT	51338
WEATHERSTRIP-FOLDING TOP NO. 1 BOW-REAR	51325
WEATHERSTRIP-FOLDING TOP NO. 4 BOW TO QUARTER PANEL	51556-7
WEATHERSTRIP-FOLDING TOP REAR SIDE RAIL	54000-1
WEATHERSTRIP-FOLDING TOP SIDE FRONT RAIL-INTERMEDIATE	53928-9
WEATHERSTRIP-FOLDING TOP SIDE RAIL-CENTER	51564-5
WEATHERSTRIP-FOLDING TOP SIDE RAIL-FRONT	51562-3
WEATHERSTRIP-FOLDING TOP SIDE RAIL-REAR	51566-7
WEATHERSTRIP-FOLDING TOP SIDE REAR RAIL-INTERMEDIATE	53900-1
WEATHERSTRIP-FRONT & REAR DOOR GLASS CHANNEL	21510
WEATHERSTRIP-FRONT BODY UPPER PILLAR	03198-9
WEATHERSTRIP-FRONT DOOR	20530-1
WEATHERSTRIP-FRONT DOOR-AT BELT	20568-9
WEATHERSTRIP FRONT DOOR FRONT AT BELT KIT	20340-1
WEATHERSTRIP-FRONT DOOR-FRONT EDGE	20532-3
WEATHERSTRIP-FRONT DOOR GLASS AT BELT-INNER	21456-7
WEATHERSTRIP-FRONT DOOR GLASS AT BELT-OUTER	21452-3
WEATHERSTRIP-FRONT DOOR VENTILATOR WINDOW DIVISION BAR	21450-1
WEATHERSTRIP-FRONT DOOR VENTILATOR WINDOW-FRONT	21448-9
WEATHERSTRIP-FRONT FENDER APRON SPLASH PANEL	16170
WEATHERSTRIP-FRONT FENDER APRON SPLASH PANEL	16B552
WEATHERSTRIP-FRONT FENDER APRON SPLASH SHIELD	16B558
WEATHERSTRIP-FRONT FENDER APRON SPLASH TO FRAME-REAR	16254
WEATHERSTRIP-FRONT FENDER APRON TO FRAME-FRONT	16252
WEATHERSTRIP-LUGGAGE COMPARTMENT DOOR	43720-1
WEATHERSTRIP-QUARTER WINDOW-FRONT	30146-7
WEATHERSTRIP-QUARTER WINDOW FRONT LOWER CORNER	29748-9

Alphabetical Index—Continued

Part Name	Group Number
WEATHERSTRIP-QUARTER WINDOW GLASS AT BELT-INSIDE	29744-5
WEATHERSTRIP-QUARTER WINDOW GLASS CHANNEL	29724
WEATHERSTRIP-QUARTER WINDOW GLASS-OUTER	29732-3
WEATHERSTRIP-QUARTER WINDOW INNER-LOWER	30257-9
WEATHERSTRIP-QUARTER WINDOW STATIONARY GLASS	29904-5
WEATHERSTRIP-REAR DOOR	24992-3
WEATHERSTRIP-REAR DOOR	25324-5
WEATHERSTRIP-REAR DOOR GLASS AT BELT-INSIDE	25860-1
WEATHERSTRIP-REAR DOOR GLASS AT BELT-OUTSIDE	25596-7
WEATHERSTRIP-REAR DOOR GLASS-FRONT	25824-5
WEATHERSTRIP-REAR DOOR GLASS RUN-REAR	25476
WEATHERSTRIP-REAR DOOR INSIDE UPPER REAR EXTENSION	25478-9
WEATHERSTRIP-REAR DOOR LOCK STRIKER	264A78-9
WEATHERSTRIP-REAR DOOR-OUTSIDE UPPER REAR EXTENSION	25474-5
WEATHERSTRIP-REAR DOOR STATIONARY WINDOW	26894
WEATHERSTRIP-REAR DOOR UPPER REAR EXTENSION CORNER	25432-3
WEATHERSTRIP-REAR DOOR WINDOW	26374
WEATHERSTRIP-REAR DOOR WINDOW STABILIZER-REAR	26030-1
WEATHERSTRIP-ROOF SIDE RAIL	51222-3
WEATHERSTRIP-ROOF SIDE RAIL-FRONT	51440-1
WEATHERSTRIP-ROOF SIDE RAIL-REAR	51468-9
WEATHERSTRIP-TAILGATE	41608
WEATHERSTRIP-TAILGATE-INNER PANEL TO BELT REINFORCEMENT	407A26-7
WEATHERSTRIP-TAILGATE-LOWER GLASS CHANNEL	41662
WEATHERSTRIP-TAILGATE OUTER PANEL TO BELT REINFORCEMENT	41610
WEATHERSTRIP-TAILGATE-UPPER CORNER ON BODY	43994-5
WEATHERSTRIP-UPPER BACK FINISH PANEL & UPPER BACK PANEL	46740
WEATHERSTRIP-UPPER BACK PANEL-FRONT	41940
WEATHERSTRIP-WINDSHIELD	03110
WEATHERSTRIP-WINDSHIELD OUTSIDE UPPER MOULDING	03154-5
WELT-CENTER BODY PILLAR	243A00
WELT-CENTER BODY PILLAR	31466
WELT-QUARTER OUTSIDE LOWER REAR MOULDING	29030
WELT-WINDSHIELD GARNISH MOULDING	03127
WHEEL-A/COND. BLOWER	19834
WHEEL-HEATER & A/COND. BLOWER	18504-5
WHEELHOUSE-QUARTER	27882-3
WINDOW-FRONT DOOR VENTILATOR	21604-5
WINDSHIELD WASHER KIT	17A603
WINDSHIELD WIPER MOTOR KICKER & SHUTTLE KIT	17B483
WIRE-WINDSHIELD WIPER SWTICH TO IGNITION SWITCH	17A460
WIRING-A/COND. BLOWER SWITCH FEED	19945
WIRING-A/COND. COMPRESSOR CLUTCH FEED	19A565
WIRING-A/COND. FEED	19B579
WIRING-A/COND. THERMOSTAT TO CLUTCH	19A885
WIRING-ANTENNA MOTOR FEED	18A917
WIRING-LUGGAGE COMPARTMENT LAMP TO SWITCH	19B520
WIRING-MULTIPLE LUBRICATOR	19B503
WIRING-RADIO RECEIVER TO REAR SEAT SPEAKER	18A900
WIRING-WASHER COORDINATOR FEED	17A631
WIRING-WINDSHIELD WASHER SWITCH TO MOTOR	17A622
WIRING-WINDSHIELD WIPER SWITCH TO WINDSHIELD WIPER MOTOR-EXTENSION	17B587
WORM & COUPLING-FRONT DOOR WINDOW REGULATOR DRIVE-ELECTRIC	23580
WORM-FRONT DOOR VENTILATOR WINDOW REGULATOR	23460
WRENCH-WHEEL & JACK HANDLE	17032
Y	
YOKE & ROLLER-FRONT SEAT ADJUSTER REGULATOR	617A76
YOKE-FOLDING TOP HYDRAULIC LIFT PISTON SHAFT	50632
YOKE-FRONT SEAT ADJUSTER REGULATOR CLUTCH	60510
YOKE-HEATER TEMPERATURE REGULATOR CONTROL	18A510

Illustration Index

TITLE	VEHICLE CODE AND PAGE NO. A	B	C	D
A				
Air Conditioner Clutches	182		182	182
Air Conditioner Compressor	183		183	183
Air Conditioner Compressor & Clutches	155 181	155 181	155 181	155 181
Air Conditioner Condenser & Hoses				179 180
Air Conditioner Condenser & Hoses - Deluxe	168			
Air Conditioner Condenser & Hoses - Economy	169			
Air Conditioner Condenser & Hoses - 6 Cylinder Engine			175 177	
Air Conditioner Condenser & Hoses - 8 Cylinder Engine			178	
Air Conditioner Condenser & Related Parts	165 166 167	170 171 172 173	174 176	
Air Conditioner Controls				162
Air Conditioner Controls & Ducts				161
Air Conditioner Controls & Registers - Deluxe	145			
Air Conditioner Controls & Related Parts	141 143			
Air Conditioner Ducts & Registers				164
Air Conditioner Evaporator & Ducts - Deluxe	146			
Air Conditioner Evaporator & Heater				157
Air Conditioner Evaporator & Related Parts	142 144			158 159 160 163
Air Conditioner - Hang-on Type	147 148 153	149	153 154	
Air Conditioner Hang-on Type - Deluxe	151	151		
Air Conditioner Hang-on Type - Economy	152	152	152	
Air Conditioner Hang-on Type "Mercury Emblem"	150	150	150	
Air Vent & Related Parts			425	425 426
Air Vent Duct - & Related Parts	423	424	424	
Antenna				187 190
Antenna - Electric				191
Ash Tray & Receptacle - Front Seat Back	943			
Auxiliary Seat & Floor Panels		960		

TITLE	VEHICLE CODE AND PAGE NO. A	B	C	D
B				
Back Window & Exterior Moulding - Model 53				734
Back Window & Exterior Mouldings - Models 53,57				734
Back Window & Exterior Mouldings - Models 53,57,63				733
Back Window & Exterior Mouldings - Models 54,62		730	731 732	
Back Window & Exterior Mouldings - Models 54, 62,65,75	727			
Back Window & Exterior Mouldings - Model 57	730			
Back Window & Exterior Mouldings - Models 57,63	726			
Back Window & Exterior Mouldings - Models 58,64	725 726			
Back Window & Exterior Mouldings - Model 63			732	
Back Window & Exterior Mouldings - Model 65		731		733
Back Window & Exterior Mouldings - Weatherstrip Installation - Model 63	728			
Back Window - Glass Mechanism				735
Back Window Interior Mouldings - Models 54, 62,65,75	728			
Body Sheet Metal - Model 53				301 303
Body Sheet Metal - Models 53,57				296
Body Sheet Metal - Model 54		277	281 285 291	
Body Sheet Metal - Models 54,58	260			
Body Sheet Metal - Models 54,75	266 271			300
Body Sheet Metal - Model 57	254 272			
Body Sheet Metal - Model 58	255			
Body Sheet Metal - Model 59			283 289	
Body Sheet Metal - Model 62		278	282 286 292	
Body Sheet Metal - Models 62,65	267 273			
Body Sheet Metal - Model 63	256 268 274		287 293	297
Body Sheet Metal - Model 64	257			
Body Sheet Metal - Model 65	262	279		298
Body Sheet Metal - Model 68				299

Illustration Index - Continued

TITLE	VEHICLE CODE AND PAGE NO. A	B	C	D
Body Sheet Metal - Model 71	265 270 276	280	284 290	
Body Sheet Metal - Model 74				302 304
Body Sheet Metal - Model 75	263			
Body Sheet Metal - Model 76	258 264 269 275		288 294	
Body Sheet Metal - Model 77	259			
Body Sheet Metal - Station Wagon			295	
Body Side Interior - Less Doors - Models 54,62			841	
Body Side Interior - Less Doors - Model 59			840	
Body Side Interior - Less Doors - Model 71			842	
Body Side Interior - Model 71		839		
Bucket Seat Mechanism - Manual & 4-Way	935			
Bucket Seat Mouldings & Side Shield				951
Bucket Seat - 6-Way Mechanism				950
Bucket Seats - All Models Except 76B			945	
Bucket Seats - Model 76B			945	
C				
Center Body Pillar & Related Parts	605			606
Console Compartment	427	428 429	429	430
Convertible Top Back Window & Lift Mechanism				864
Convertible Top Hydraulic Pump & Lift				866
Convertible Top - Less Trim	856 858 859 860		861 862	867
Convertible Top Lift Mechanism	857			
Convertible Top Rails				863 865
Convertible Top Trim & W/Strips	851			
Convertible Top W/Strips & Belt Mouldings	852		853	
Convertible Top W/Strips & Mouldings				854 855
D				
Door Lock & Handle				510 511
Door Lock, Handles & Controls	506		509	512
Door Lock Handles & Controls - Models 54,59, 62,71			508	
Door Lock Handles & Controls - Models 63,76			508	
Door Lock Handles & Related Parts	507			513
Doors & Quarter Trim Panels, W/Strips, Handles & Bumpers			503	
E				
Exterior Mouldings - All Models				374 375
Exterior Mouldings - Back Window & Lower Rear - Station Wagon		740		
Exterior Mouldings - Lower Rear & Fuel Filler Door				745
Exterior Mouldings - Lower Rear - Passenger	736 737 738 739	740	741	
Exterior Mouldings - Lower Rear - Station Wagon	736 737 738 739		741	
Exterior Mouldings - Models 53,57				370
Exterior Mouldings - Model 54		339 341	346 350 355	
Exterior Mouldings - Models 54,75				373
Exterior Mouldings - Model 54A			361	
Exterior Mouldings - Models 54A,57A	328			
Exterior Mouldings - Models 54A,58A,75A	309			
Exterior Mouldings - Models 54A,75A	316 322			
Exterior Mouldings - Model 54B			364	
Exterior Mouldings - Models 54B,75B	311 318			
Exterior Mouldings - Models 54B,75B,75C	325			
Exterior Mouldings - Models 54C,D			367	
Exterior Mouldings - Models 54D,57D	330			
Exterior Mouldings - Models 54F,75F - Parklane	331			
Exterior Mouldings - Model 57	305			

Illustration Index - Continued

TITLE	VEHICLE CODE AND PAGE NO. A	B	C	D
Exterior Mouldings - Models 57C,F	332			
Exterior Mouldings - Model 58	306			
Exterior Mouldings - Model 59			348 352 358	
Exterior Mouldings - Model 62		340 342	347 351	
Exterior Mouldings - Models 62A,B			356	
Exterior Mouldings - Models 62A,63A,65A,76A	329			
Exterior Mouldings - Models 62A,64A,65A	310			
Exterior Mouldings - Models 62A,65A	317 323			
Exterior Mouldings - Model 62B			365	
Exterior Mouldings - Models 62C,63,76			357	
Exterior Mouldings - Model 63	307			371
Exterior Mouldings - Models 63,76	324			
Exterior Mouldings - Models 63C,D,76B,D			366	
Exterior Mouldings - Models 63C,F,76C,F	333			
Exterior Mouldings - Model 63D	334			
Exterior Mouldings - Model 63E			368	
Exterior Mouldings - Model 65		343		
Exterior Mouldings - Models 65,68				372
Exterior Mouldings - Model 65B	312 335			
Exterior Mouldings - Models 65B,C	326			
Exterior Mouldings - Models 65B,76A	319			
Exterior Mouldings - Models 65C,F	336			
Exterior Mouldings - Model 71	320		349	
Exterior Mouldings - Model 71A	313		362	
Exterior Mouldings - Models 71A,B			353 359	
Exterior Mouldings - Models 71A,B,C,E		344		
Exterior Mouldings - Models 71A,C	337			
Exterior Mouldings - Model 71B	314		363	
Exterior Mouldings - Model 77B	308			
Exterior Mouldings, Rails & Decals - Models 71C,D			354	
Exterior Mouldings, Rails & Panels - Model 71	327			
Exterior Mouldings, Rails & Panels - Models 71C,D			360	
Exterior Mouldings, Rails & Panels - Model 71D,F		345		
Exterior Rails, Panels & Mouldings - Station Wagon	321			
Exterior Rails & Panels - Station Wagon	315			
Exterior Wood Rails & Panels - Model 71	338		369	

F

TITLE	A	B	C	D
Floor Pan Plugs & Buttons	449			
Front & Rear Door W/Strips & Inside Handles	502			
Front Bumper & Related Parts	41 42 43 45	46 47	48 49	51 53
Front Door Arm Rest & Related Parts				515 516
Front Door Electrical Regulators - Type A - Hupp				501
Front Door Electrical Regulators - Type B - Dura				501
Front Door Handle & Lock	504 505			
Front Door Inside Panel & Related Parts	514		514	517 518
Front Door Ventilator Window - Models 54,58, 62,64,71	497			
Front Door Ventilator Window - Models 54,62,71	498			
Front Door Ventilator Window - Models 65,75,76	497 498			
Front Door Window & Related Parts				494 495 496
Front Door Window & Related Parts - Models 54,58,71	479			
Front Door Window & Related Parts - Models 54,59,62,71			492	
Front Door Window & Related Parts - Models 54,62,71		490		
Front Door Window & Related Parts - Models 54,71	482 484 489			

Illustration Index - Continued

TITLE	VEHICLE CODE AND PAGE NO. A	B	C	D
Front Door Window & Related Parts - Models 57,63,64,76,77	477			
Front Door Window & Related Parts - Models 57,63,65,75,76	487			
Front Door Window & Related Parts - Model 58	476			
Front Door Window & Related Parts - Model 62	483 485 488			
Front Door Window & Related Parts - Models 62,64	480			
Front Door Window & Related Parts - Models 63,65,75,76	486			
Front Door Window & Related Parts - Models 63,76			493	
Front Door Window & Related Parts - Model 64	478			
Front Door Window & Related Parts - Model 65		491		
Front Door Window & Related Parts - Models 65,75,76	481			
Front Fender & Related Parts	2 3 4 5	1	7 8	9 10
Front Fender & Related Parts - Models 54,62		6		
Front Seat Back & Cushion	938 941	941	946	
Front Seat Back & Cushion - Full	936			
Front Seat Back, Cushion, Mouldings & Sideshields - Bucket Seats	937			
Front Seat - Bucket - Manual Control - Models 62A (S-22),62C			944	
Front Seat - Bucket - Manual Control - Model 62C		939		
Front Seat - Bucket - Manual Control - Model 65B		940		
Front Seat - Full - Manual Control				947
Front Seat - Manual & Electric Control - Models 65C,76B	934			
Front Seat - Manual Control	926 927 928			
Front Seat - Manual Control - Except Models 62A(S-22), 62C			942	
Front Seat Mouldings & Side Shields				951
Front Shock Absorbers	120 121	122	123	124 125
Fuel Filler Lid & Shield	745			
H				
Heater, Air Conditioner Controls & Ducts				156
Heater & Defroster Controls				140
Heater & Related Parts	127 128 129	130 131	132 133	134 135 137
Heater Control & Ducts				136 138
Heater Ducts & Defroster				139
Hood & Related Parts	11 12 13 14		15 16	17 18
I				
Instrument Panel			418	419 420
Instrument Panel & Pad	411 412 413	416	417	421
Instrument Panel & Related Parts				422
Instrument Panel - Sound Absorbers				430 431 432
Instrument Panel With A/cond.	415			
Instrument Panel Without A/cond.	414			
Interior Mouldings & Ornaments				843 844
Interior Mouldings - Models 57,63	834			
Interior Mouldings - Roof Side & Back Window				845
Interior Mouldings - Roof Side & Back Window - Model 57	838			
Interior Mouldings - Roof Side & Back Window - Model 63	837			
Interior Mouldings - Station Wagon	835			

Illustration Index - Continued

TITLE	VEHICLE CODE AND PAGE NO. A	B	C	D
L				
Landau Top			850	
Landau Top - Model 54	849			
Landau Top - Model 63	849			
Lower Back Panel - Mouldings				742 743 744
Luggage Compartment Door & Folding Top Lift Mechanism - Model 74				765
Luggage Compartment Door & Related Parts				763
Luggage Compartment Door & Related Parts - Model 53				764
Luggage Compartment Door Lock Mechanism	755 756	757	758 759	760 761 762
Luggage Compartment Door Upper Back Finish Panel - Mechanism				766
Luggage Compartment Door Vacuum Lock & Related Parts				762
Luggage Compartment Door Weatherstrips - Model 74				764
P				
Power Seat, 4-Way Electrical Diagram	931			
Power Seat, 4-Way Mechanism	930 932			948
Power Seat 6-Way Mechanism	933			933 949
Q				
Quarter Ash Receptacle & Retainer				663
Quarter Stationary Window - Models 59,71			657	
Quarter Stationary Window - Model 71	654	656		
Quarter Stationary Window - Model 77	654			
Quarter Window & Related Parts - Model 62	651		657	
Quarter Window & Related Parts - Model 63	652		658	
Quarter Window & Related Parts - Model 65	653	655		
Quarter Window & Related Parts - Model 76			659	
Quarter Window Electric Regulator - Models 63,65				662
Quarter Window Electric Regulator - Model 68				662
Quarter Window Parts - Model 62		656		
Quarter Window Parts - Models 62,64	648			
Quarter Window Parts - Model 63	646			
Quarter Window Parts - Models 63,65				661
Quarter Window Parts - Model 64	647			
Quarter Window Parts - Model 65	649			
Quarter Window Parts - Model 68				660
Quarter Window Parts - Model 76	650			
R				
Radio & Speakers				189 192
Radio Antenna & Speakers	185		186	188
Radio Antenna & Studio Sonic Sound System	184	184	184	
Rear Bumper & Related Parts	41 45	46	49 50	52 53
Rear Bumper & Related Parts - Except Station Wagon	42			
Rear Bumper & Related Parts - Passenger	44	47		
Rear Bumper & Related Parts - Station Wagon	43	48		
Rear Door Window & Related Parts				601
Rear Door Window & Related Parts - Model 53				602
Rear Door Window & Related Parts - Model 54			596 598	
Rear Door Window & Related Parts - Models 54,58,71	587			
Rear Door Window & Related Parts - Models 54,71	589 590 592	595		
Rear Door Window & Related Parts - Model 57	584 593			
Rear Door Window & Related Parts - Model 58	585			
Rear Door Window & Related Parts - Model 71			597 599	
Rear Door Window & Related Parts - Model 74				603
Rear Door Window & Related Parts - Model 75	588 591 594			
Rear Door Window & Related Parts - Model 77	586			

Illustration Index - Continued

TITLE	VEHICLE CODE AND PAGE NO. A	B	C	D
Rear Door Window Electric Regulator - Type A Hupp				604
Rear Door Window Electric Regulator - Type B Dura				604
Rear Door Window Parts - Models 57,75				600
Rear Seat Back Mouldings & Radio Speaker Grille	952			
Rear Shock Absorbers	120 121	122	123	124 125 126
Remote Control Mirror				81
Retractable Back Window Mechanism	729			
Roof Bows				848
Roof Bows - Models 54,62,65,75	846			
Roof Bows - Model 63	846			
Roof Bows - Model 71	847			
Roof Headlining Supports			847	
Roof Interior Trim - Model 63			848	
Roof Luggage Carrier - Station Wagon	868	868	868	
Roof Side & Rear Quarter Interior Mouldings & Ornaments	836			
Roof Side Rail & W/Strips	827			832
Roof Side W/Strips & Mouldings - Model 53				833
Roof Side W/Strips, Mouldings & Ornaments - Model 53				831
Roof Side W/Strips, Mouldings & Ornaments - Models 54,75	828 829 830			
Roof Side W/Strips, Mouldings & Ornaments - Models 62,65	828 829 830			
Roof Side W/Strips, Mouldings & Ornaments Model 63	831			
Roof Ski Carrier	868		868	868
Roof - Vinyl Covered - Model 53				850
S				
Scuff Plates & Fillers			456	
Seat - Full - Front - Manual Control			943	
Seat - Full - Manual	929			
Seats - 8 Passenger - Station Wagon	958			
Seats - Folded - 6 Passenger - Station Wagon	953 955 956			
Seats - Folded - 8 Passenger - Station Wagon	954 957			
Seats - Folded - Station Wagon		959	961	
Spare Tire Mount & Jack		80		84
Spare Tire Mount & Jack - Passenger Car	77 79		82 83	81
Spare Tire Mount & Jack - Station Wagon	78 79 80		82	
T				
Tailgate & Related Parts			754	
Tailgate & Related Parts - Model 71	749			
Tailgate Handle - Electric	757	757		
Tailgate Handle - Manual	756	756		
Tailgate Handles - Manual & Electrical			760	
Tailgate, Related Parts & Glass Runs	748			
Tailgate W/Strips & Retainers - Station Wagon		752		
Tailgate W/Strips & Trim			754	
Tailgate Window & Related Parts - Station Wagon		751		
Tailgate Window Mechanism	750		753	
Tailgate Window Regulator - Electric	747			
Tailgate Window Regulator - Manual	746			
U				
Underbody - All Models		450	451 452	453 454 455
V				
Vacuum Door Lock Controls				519 520 521
Vent Window - Electric				499 500
Ventilator Window, Electric Motor & Drive				499
Ventilator Window, Regulator & Drive				193 500
W				
Windshield & Related Parts		382	382	383 384 385
Windshield & Related Parts Convertible	377 379			
Windshield & Related Parts Except Convertible	376 378			

Illustration Index - Continued

TITLE	VEHICLE CODE AND PAGE NO. A	B	C	D
Windshield & Related Parts - Models 54,62,65,71,75	380			
Windshield & Related Parts - Models 57,63,76	381			
Windshield Washer & Related Parts	69 70 71	65	72 73	74 75 76
Windshield Wiper				54 67 68

TITLE	VEHICLE CODE AND PAGE NO. A	B	C	D
Windshield Wiper Motor	54 57	57		
Windshield Wiper Motor - Single Speed	59 61	59	59 61	
Windshield Wipers & Related Parts	55 56 58 60	66	62 63 64	

MEMO

MEMO

MEMO

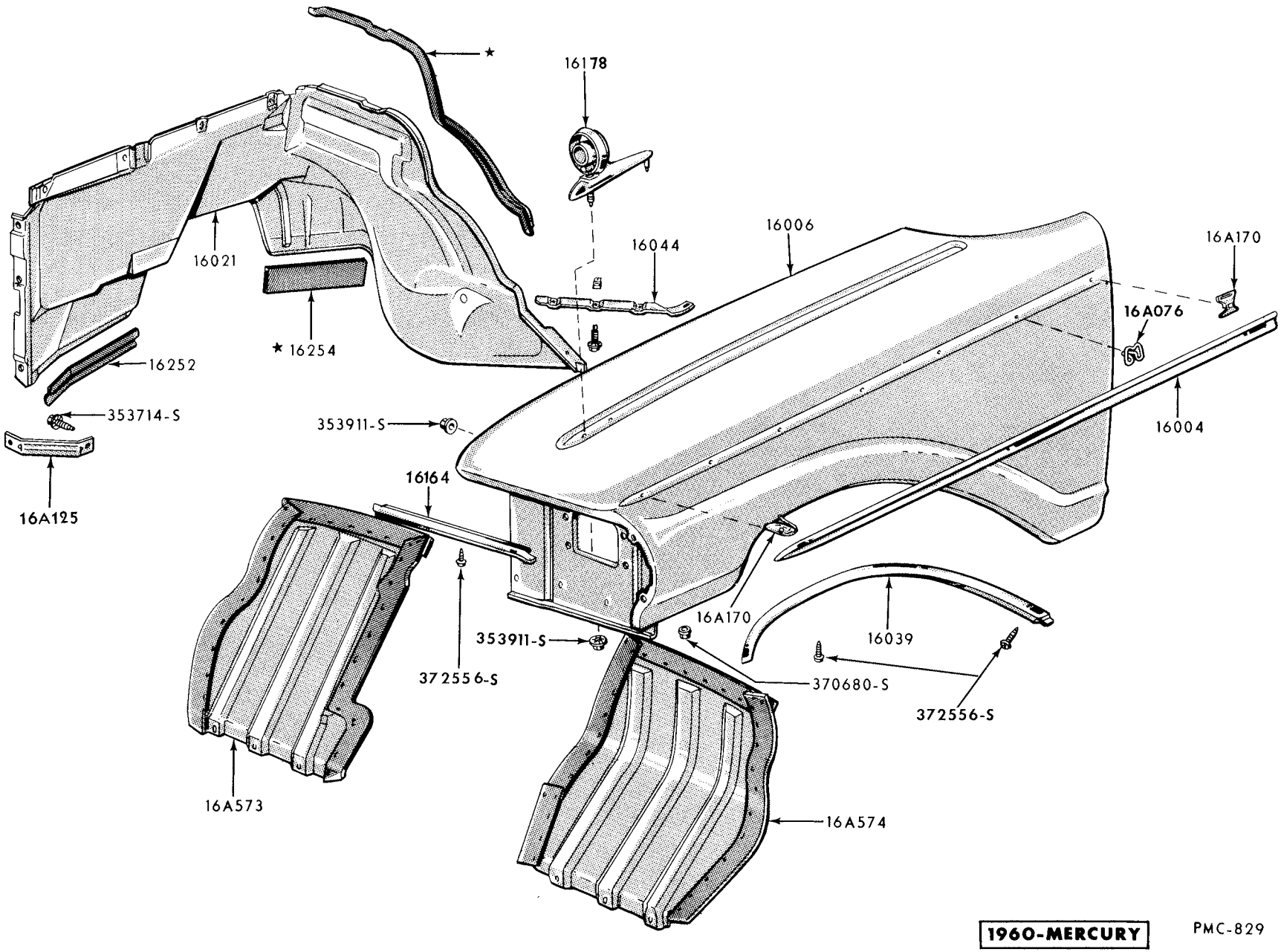

FRONT FENDER and RELATED PARTS

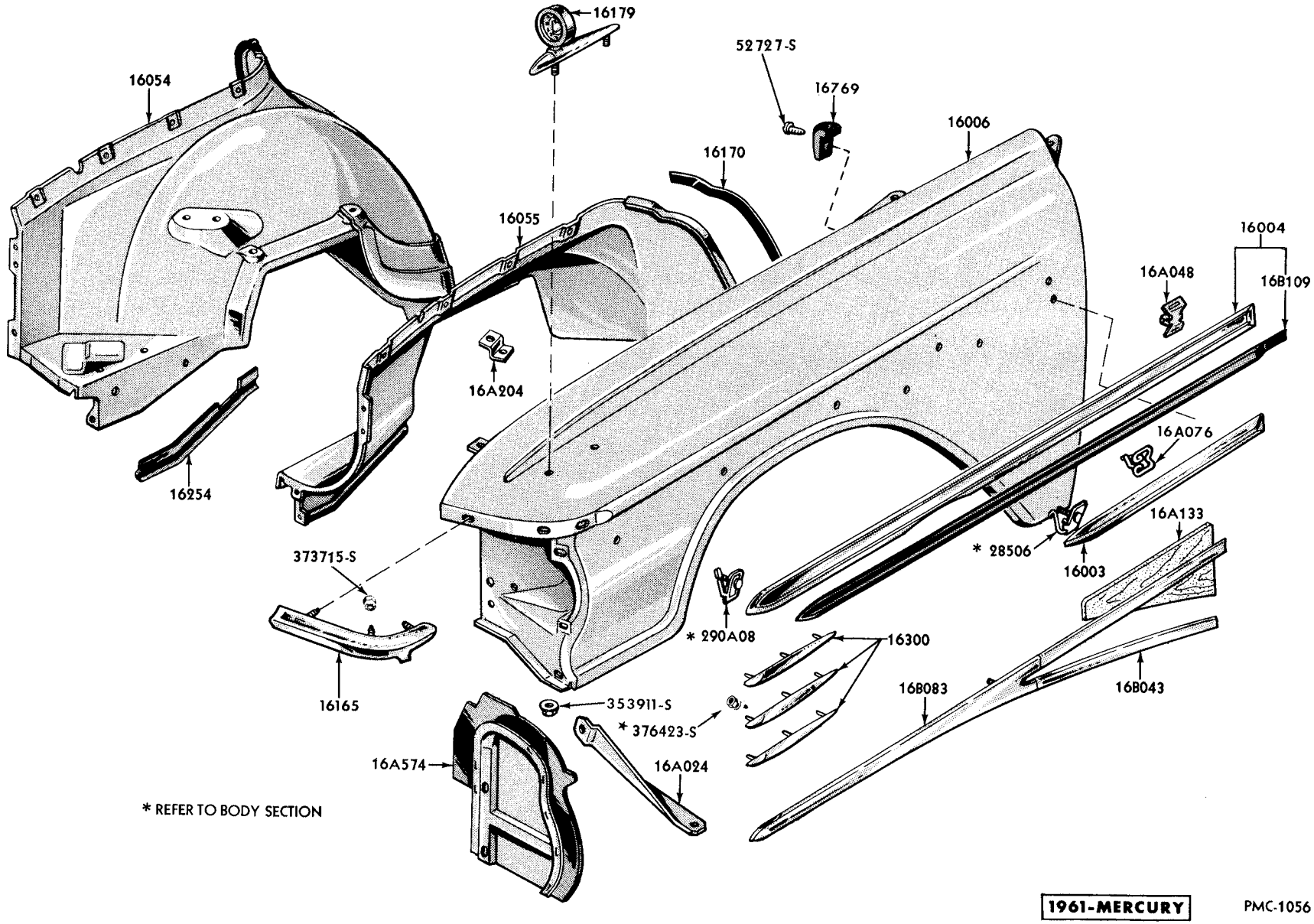

FRONT FENDER and RELATED PARTS

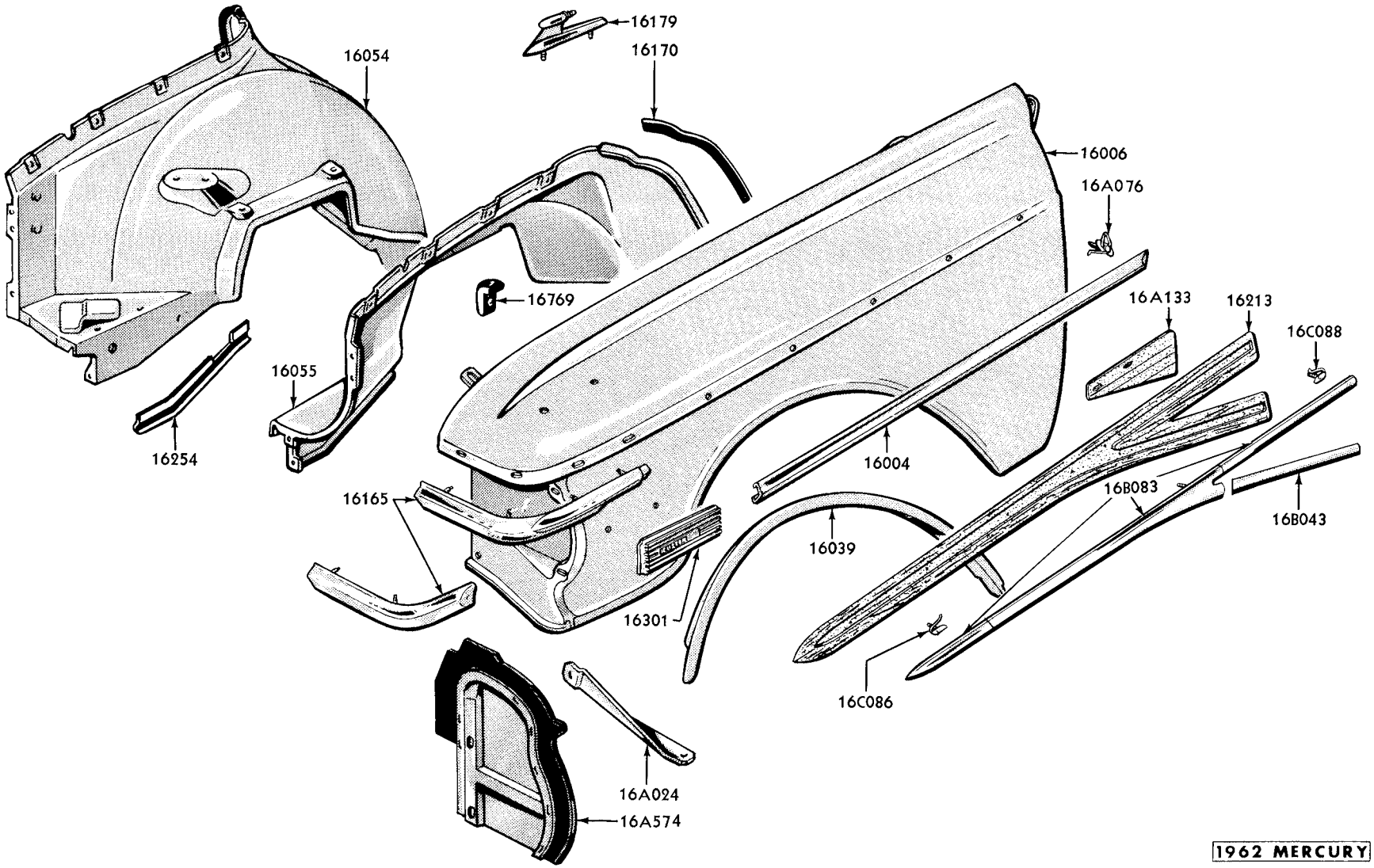

FRONT FENDER and RELATED PARTS

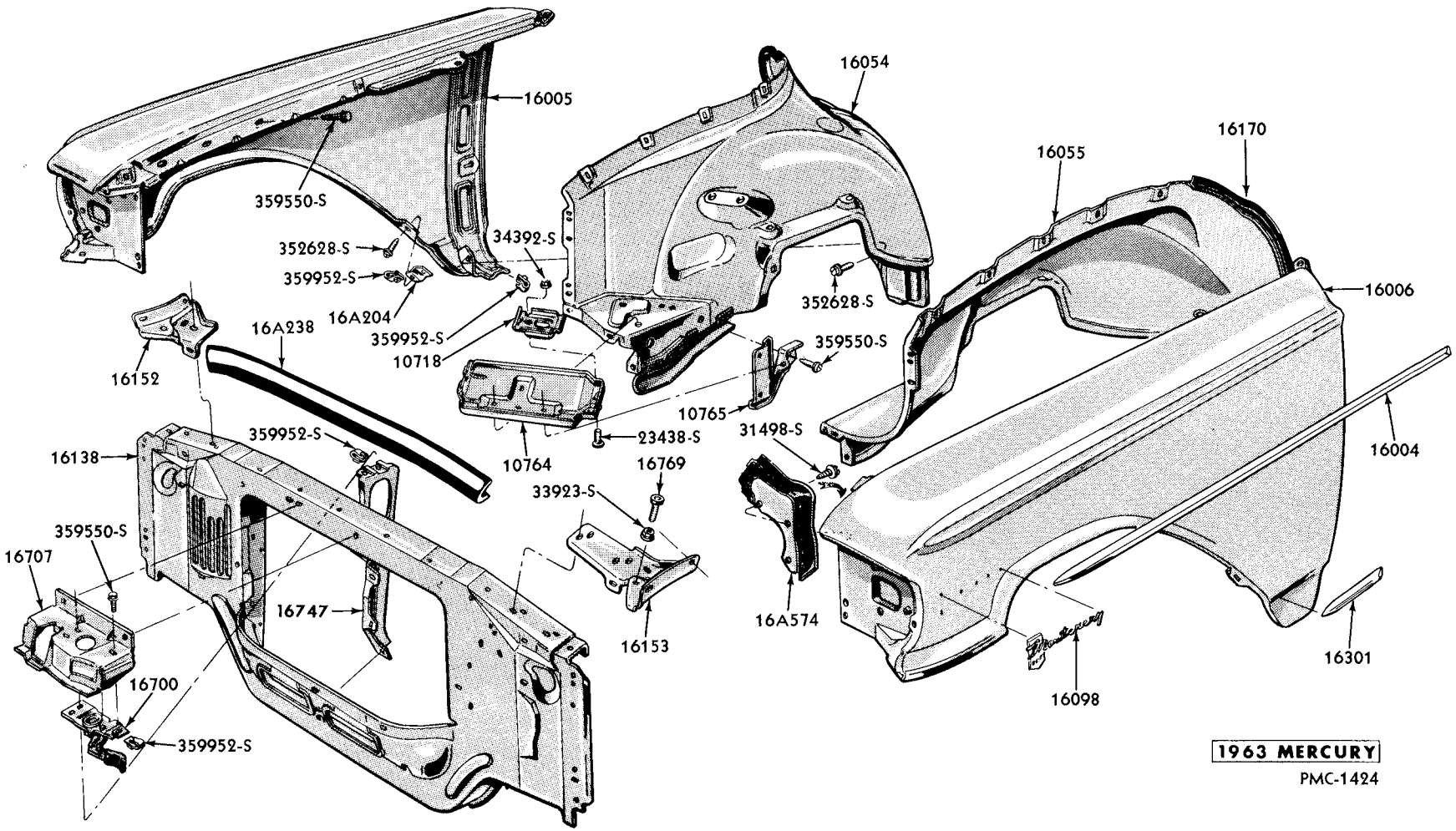

FRONT FENDER and RELATED PARTS

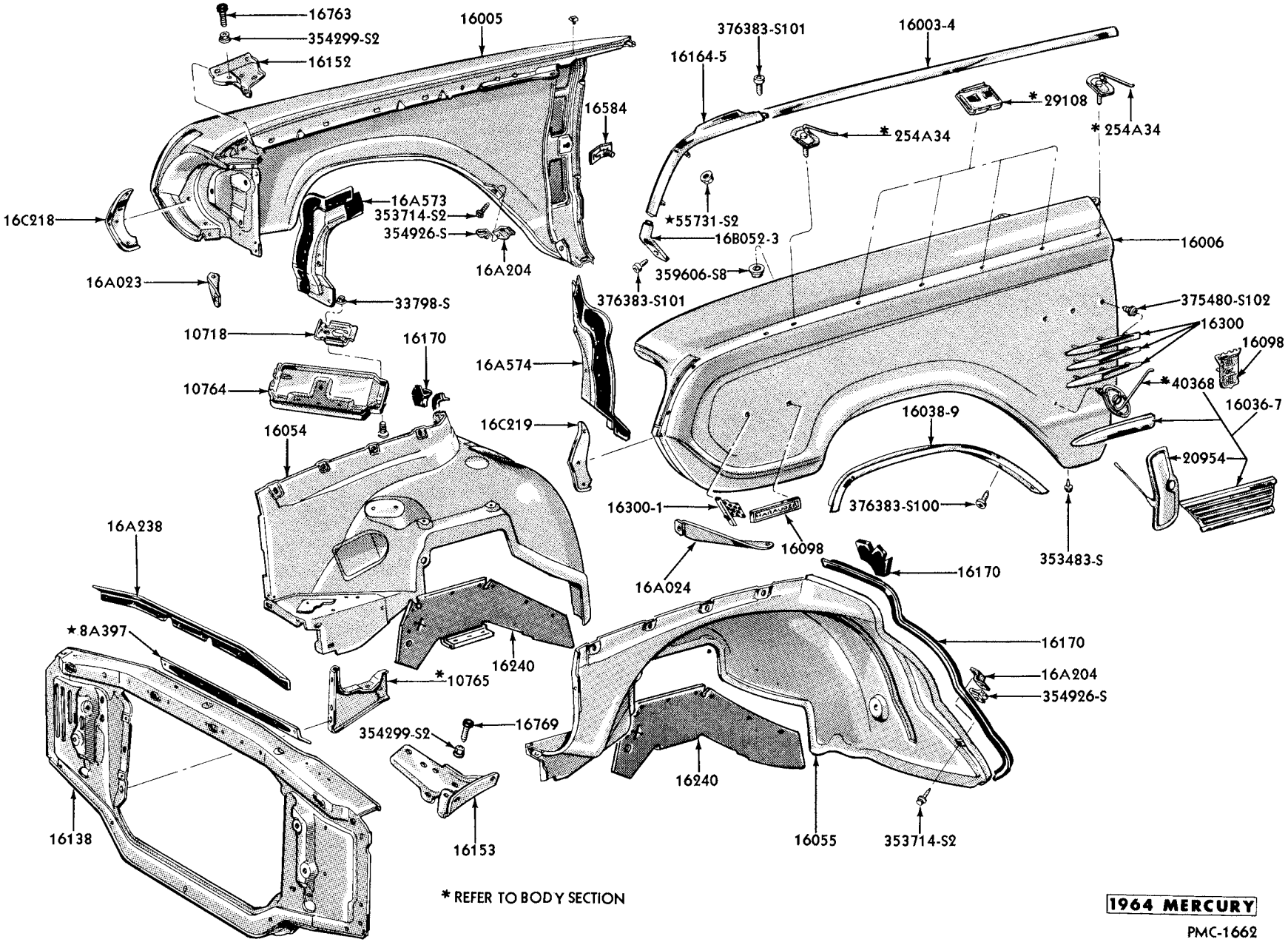

FRONT FENDER and RELATED PARTS

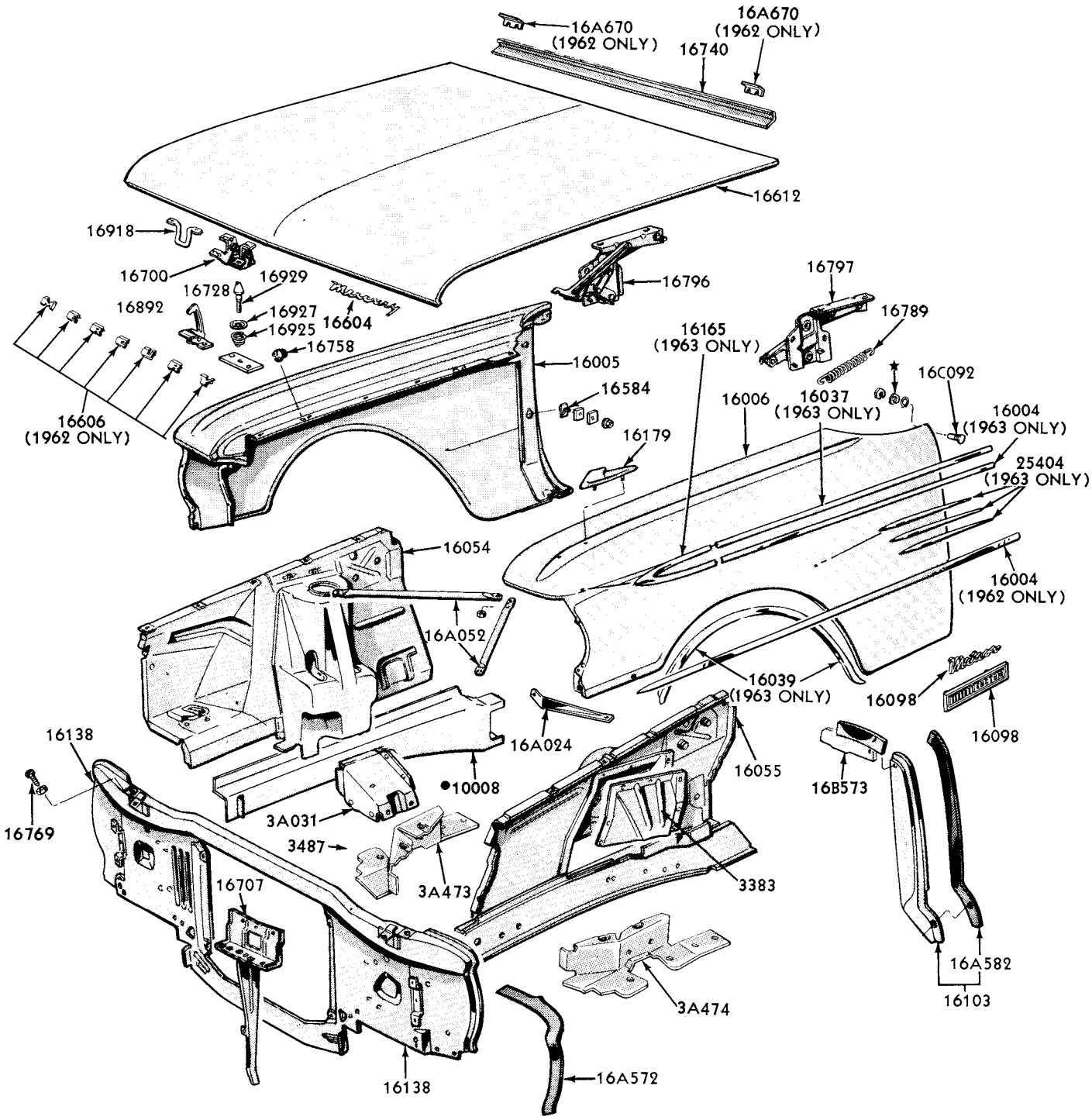

•REFER TO BODY SECTION OF THE PARTS CATALOG

1962-63 METEOR

PYC-1475

FRONT FENDER and RELATED PARTS- MODELS 54, 62

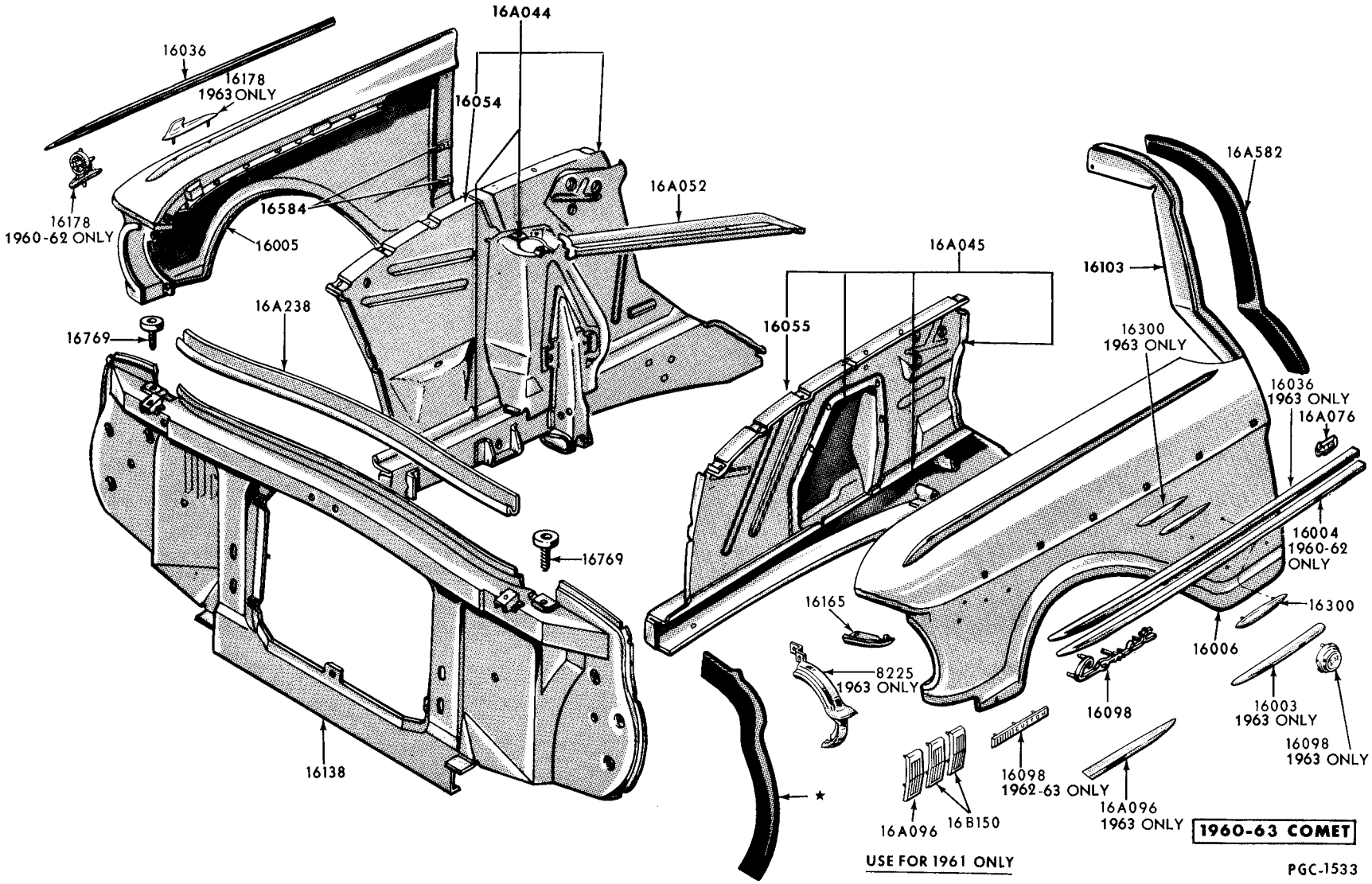

FRONT FENDER and RELATED PARTS

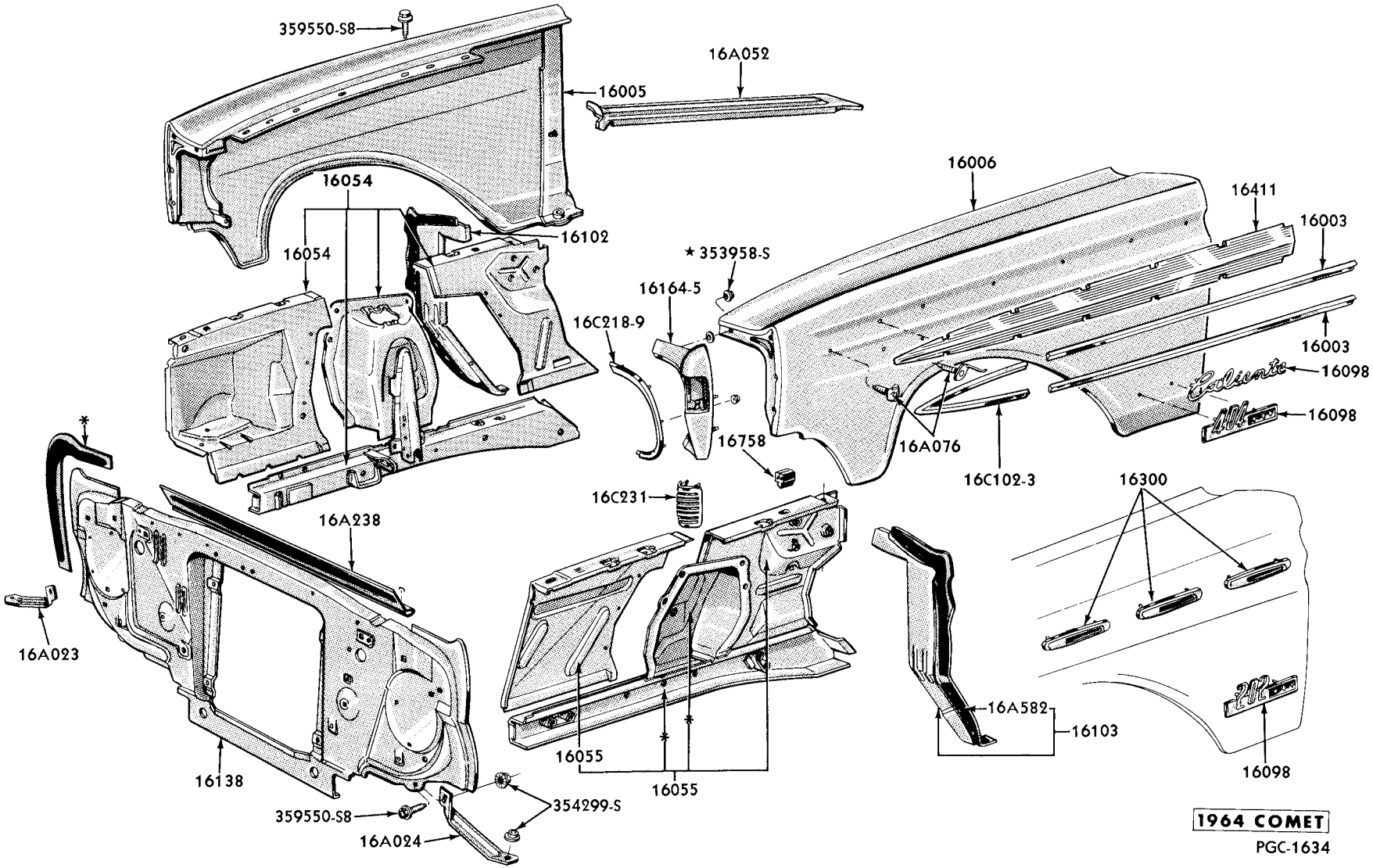

FRONT FENDER and RELATED PARTS

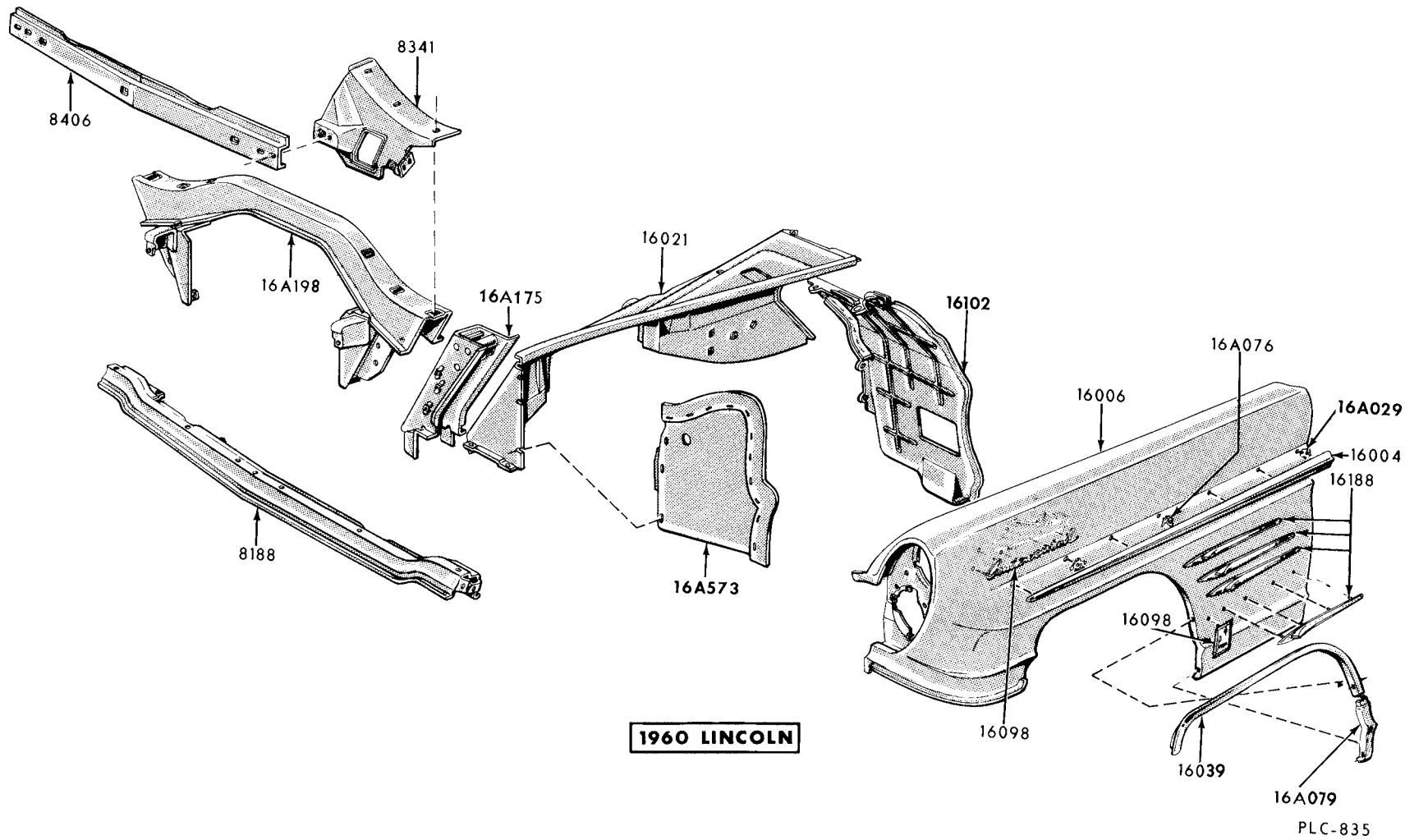

FRONT FENDER and RELATED PARTS

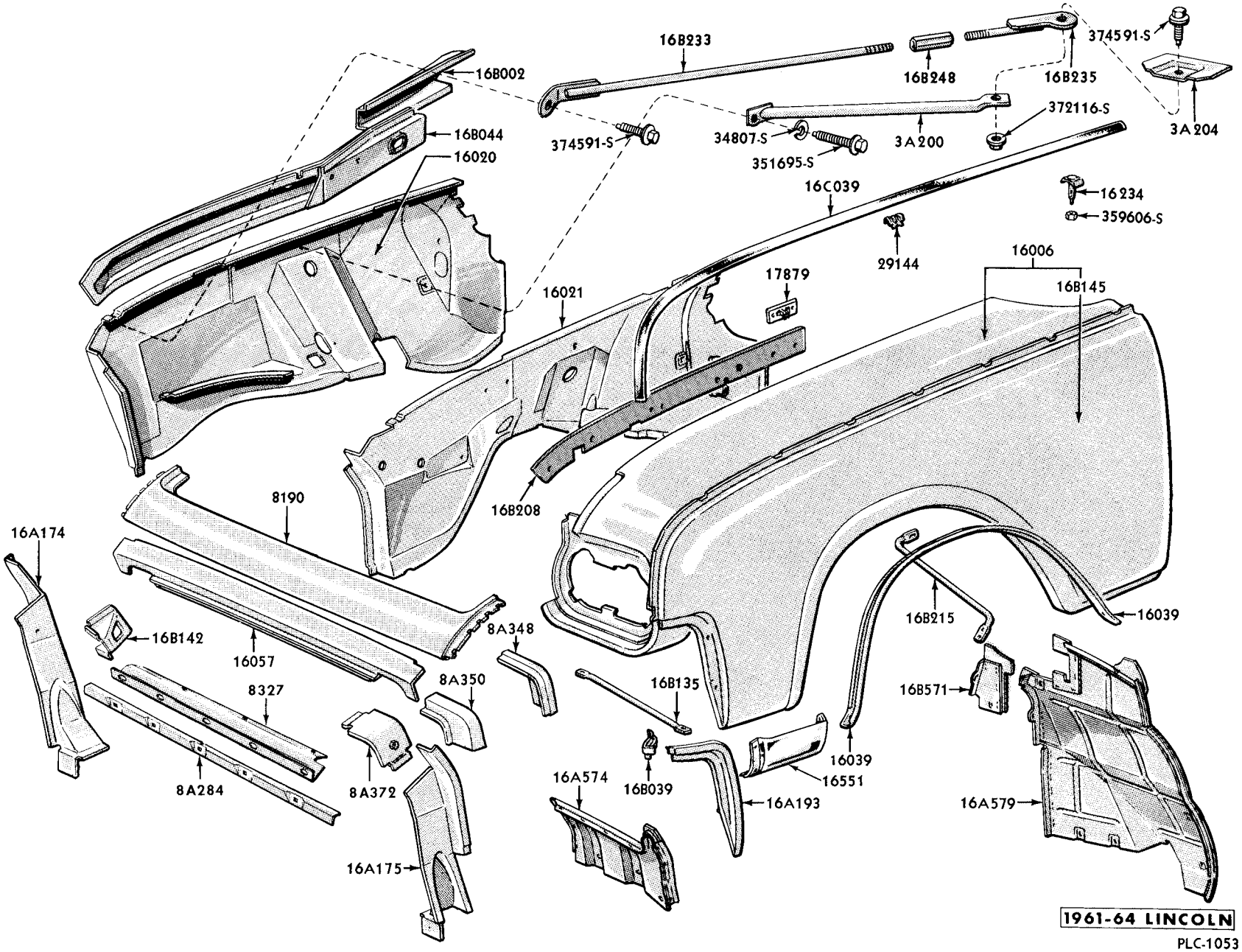

FRONT FENDER and RELATED PARTS

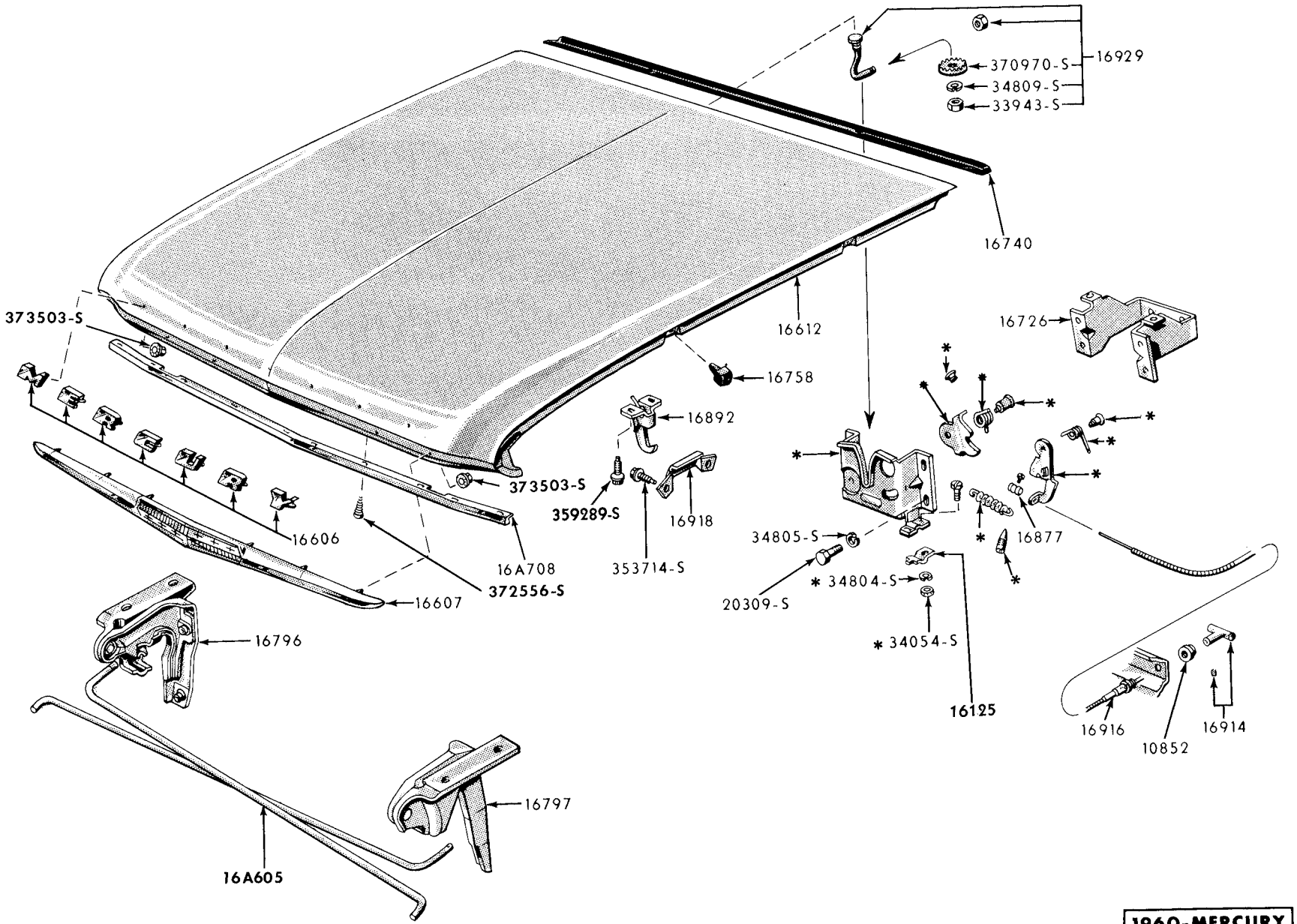

* SERVICED IN 16700 ASSEMBLY

HOOD and RELATED PARTS

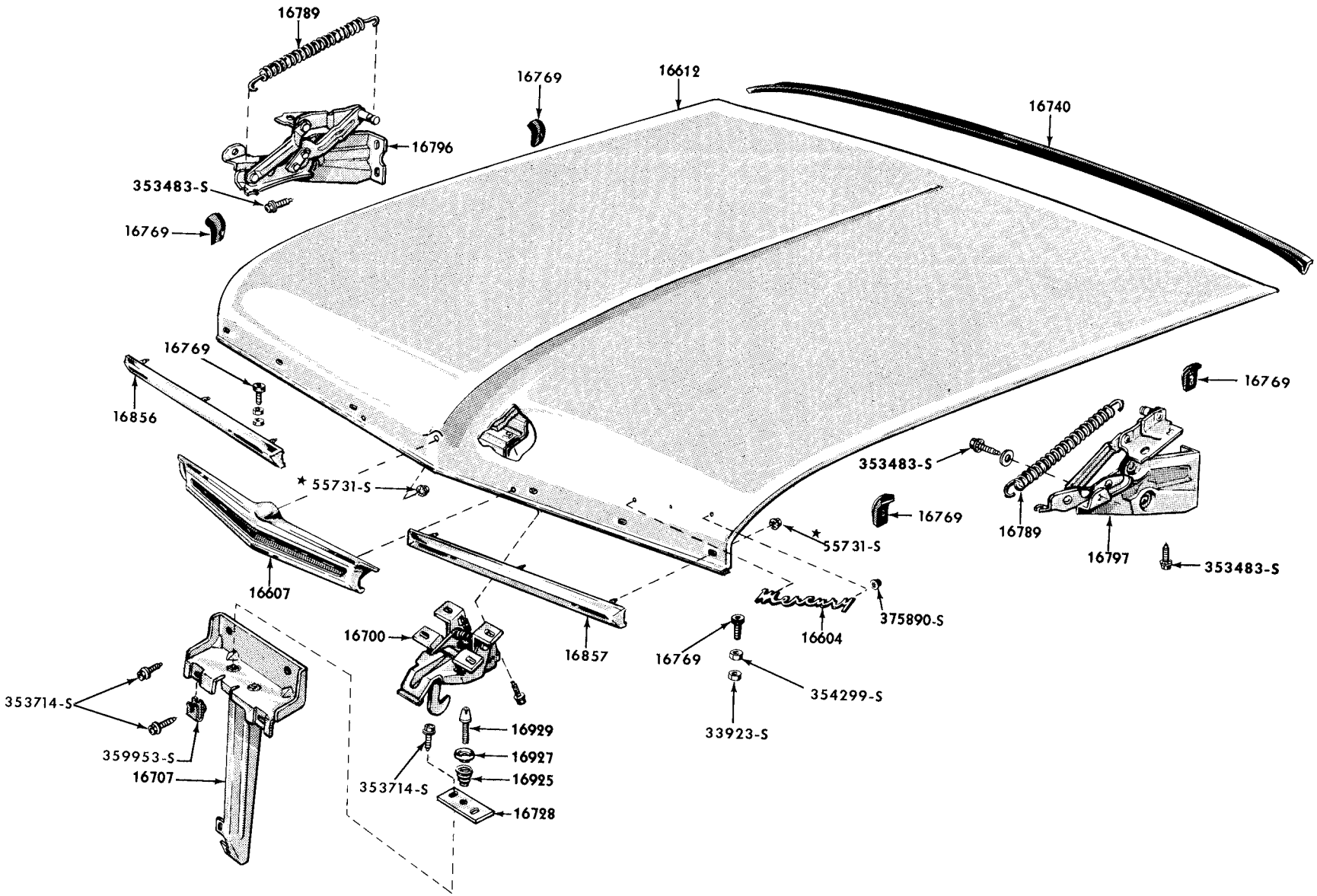

1961-MERCURY
PMC-1055

HOOD and RELATED PARTS

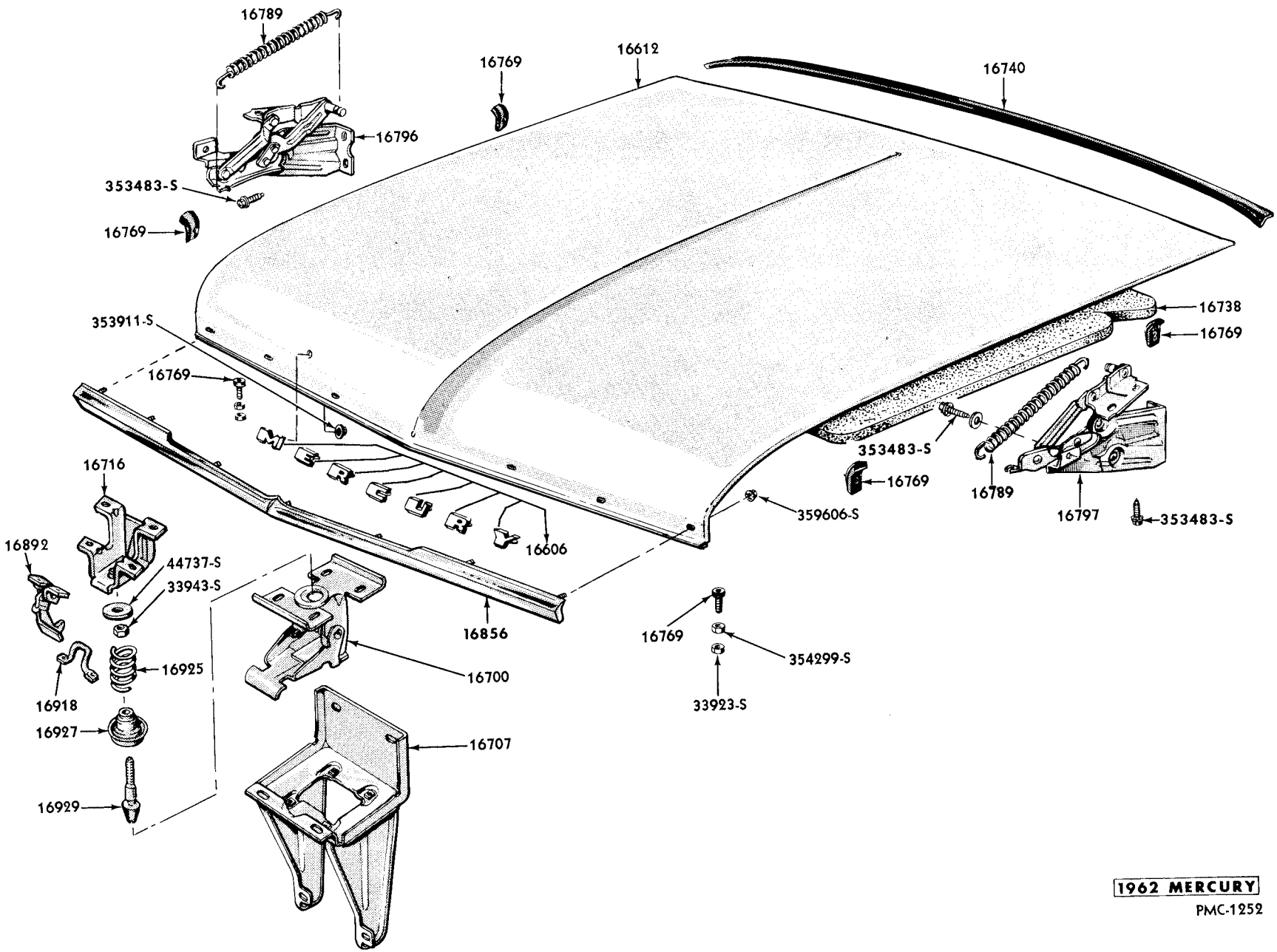

HOOD and RELATED PARTS

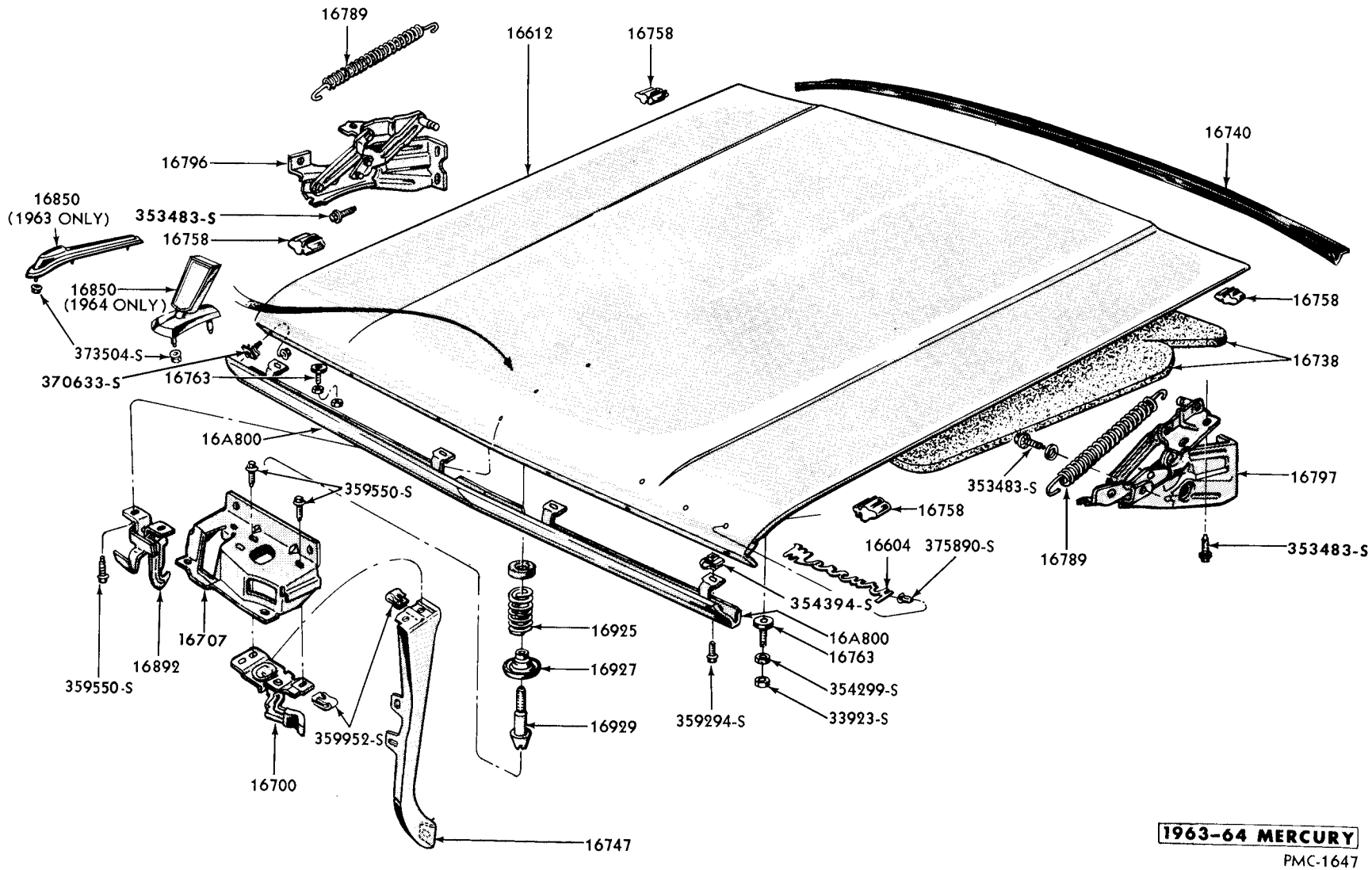

HOOD and RELATED PARTS

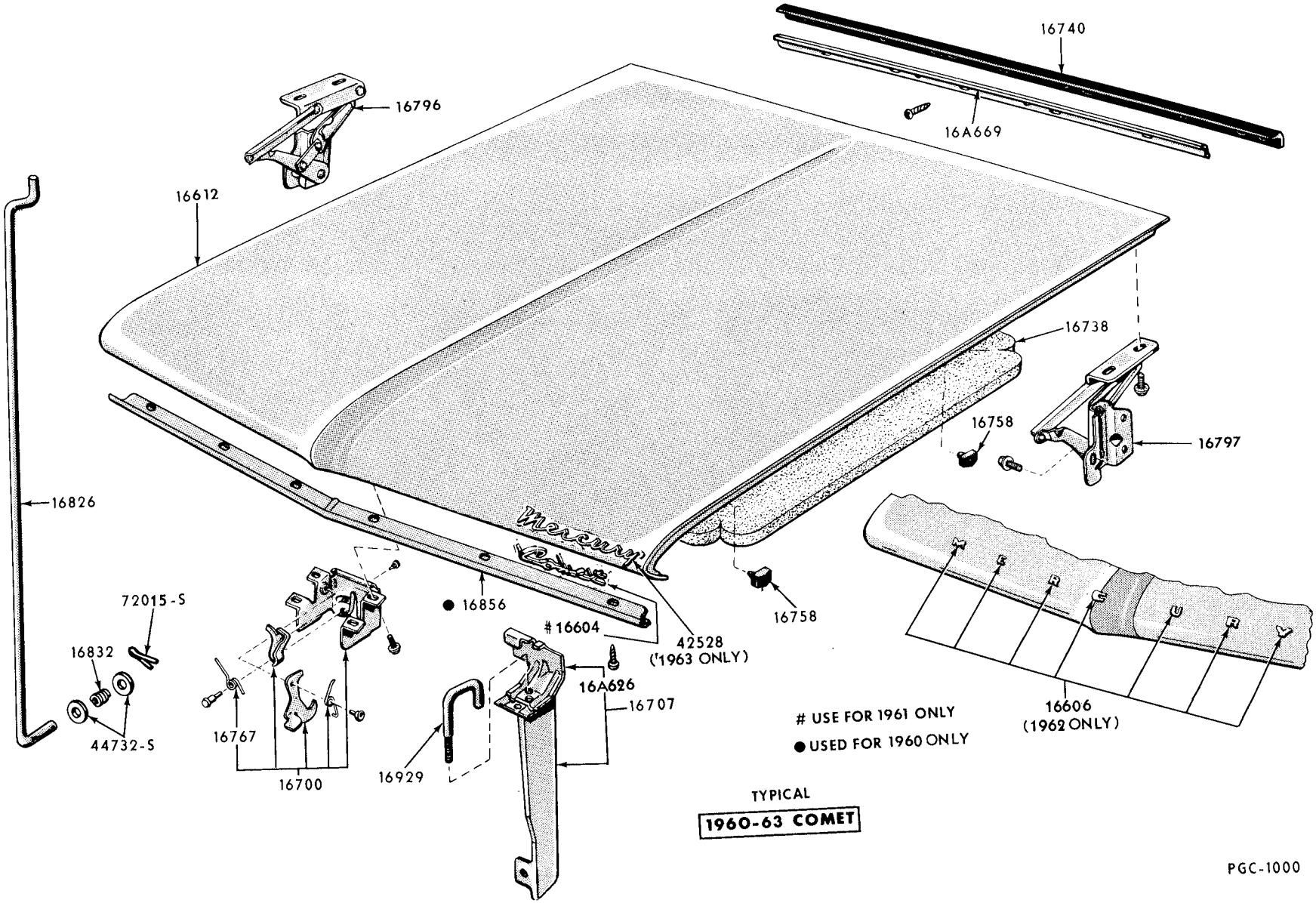

HOOD and RELATED PARTS

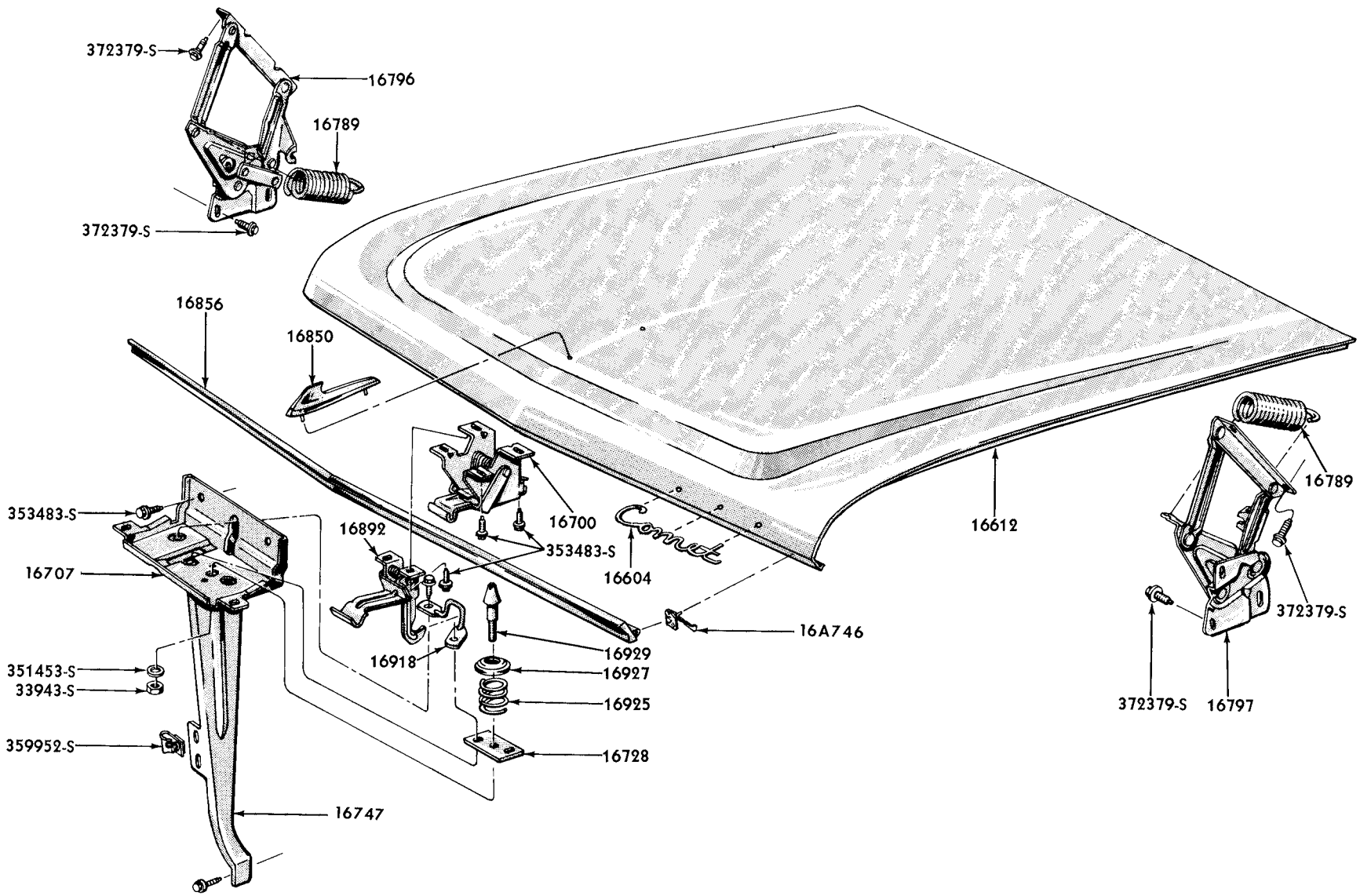

1964 COMET
PGC-1625

HOOD and RELATED PARTS

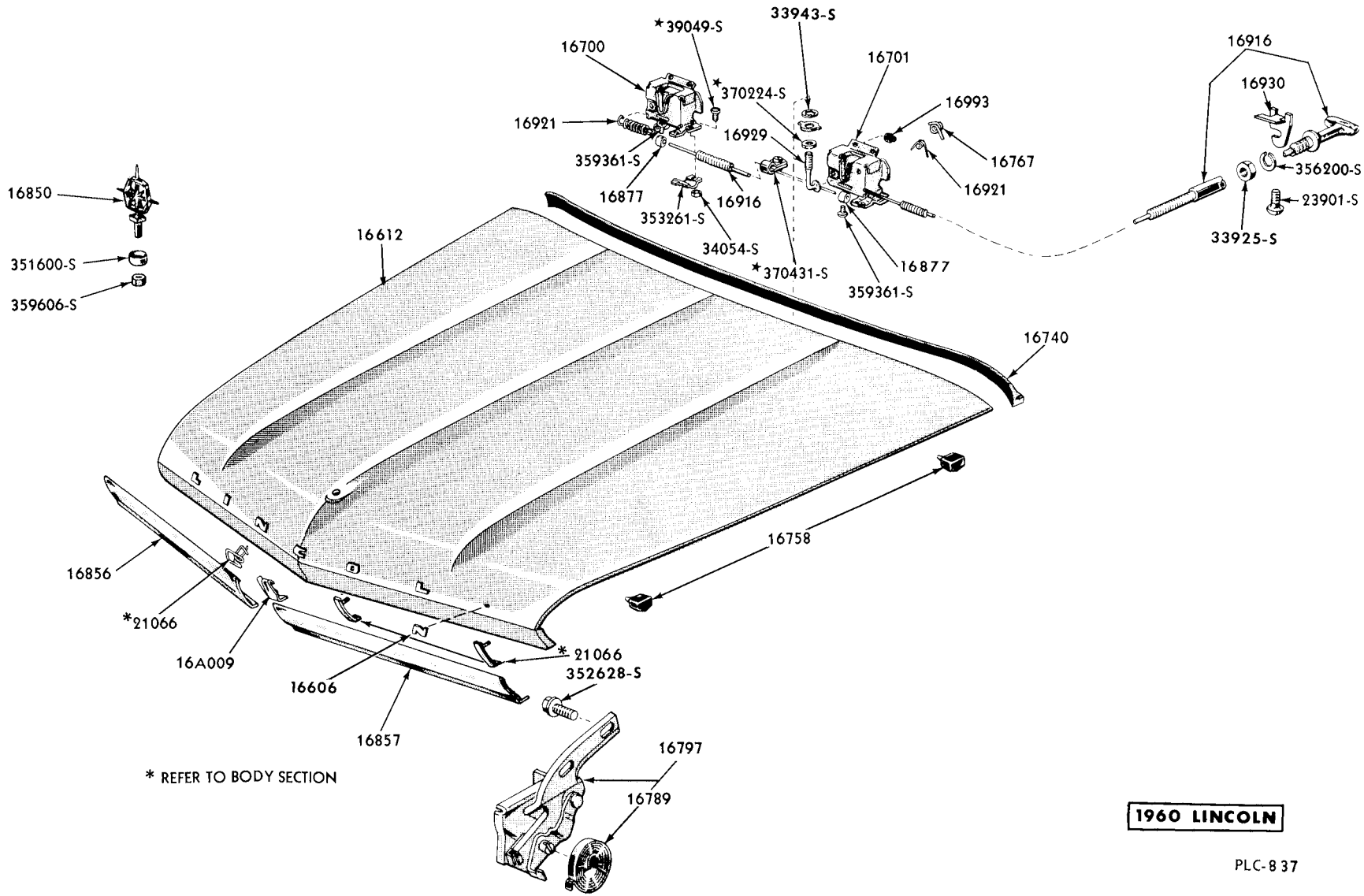

HOOD and RELATED PARTS

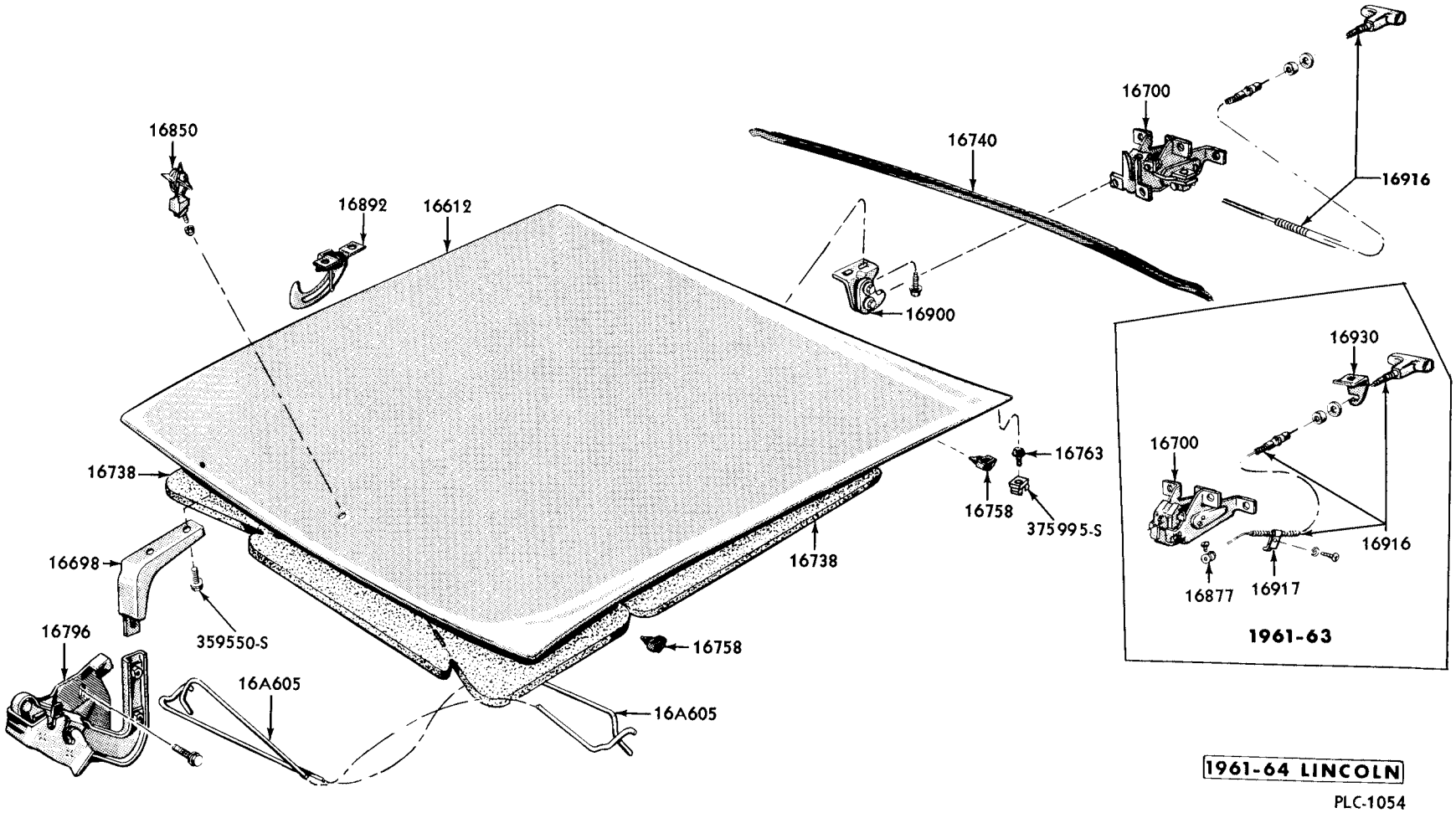

HOOD and RELATED PARTS

Fenders

GROUP AND PART NUMBER	DESCRIPTION, SIZE, ETC.		NO. REQ'D	MODEL OR ENGINE CUBIC INCH DISPLACEMENT	VEHICLE CODE	YEAR 19____
16C000	SEAL (FRONT FENDER LOWER FRONT TO HEADLAMP SUPPORT)					
C1VB 16C000-A			2	All	D	61/64
16B002-3	EXTENSION (FRONT FENDER APRON UPPER OUTER REINFORCEMENT)					
C1VY 16B002-A	R.H.		1	All	D	61/64
C1VY 16B003-A	L.H.		1	All	D	61/64
16003-4	MOULDING (FRONT FENDER SIDE)					
COMB 16003-A	R.H. - 60-63/64" long	(a)	1	All	A	60
COMB 16004-A	L.H. - 60-63/64" long	(a)	1	All	A	60
C1MB 16003-A	(1) for R.H. and (1) for L.H. - 20-7/8" long -		2	All except 54B, 65B, 71B, 75B, 76	A	61
Package also includes -						
(1) B8E-5728506-A retainer	(3) C1AZ-6421094-C retainer		(1) 353911-S nut and washer			
C1MB 16B068-B	R.H. - 52-15/32" long -	(Δ)	1	54B, 65B, 75B, 76A	A	61
C1MB 16B069-B	L.H. - 52-15/32" long -	(Δ)	1	54B, 65B, 75B, 76A	A	61
(Δ) Package also includes -						
(2) C1MB-16A048-A retainer	(3) C1AB-6221094-A retainer		(4) 353911-S nut and washer			
(1) C2GY-16A076-B retainer						
C2MY 16003-A	R.H.-	(§)	1	All except 71B, D	A	62
C2MY 16004-A	L.H. -	(§)	1	All except 71B, D	A	62
§ Package also includes -						
	(5) C2MY-16A027-A retainer					
C3MY 16003-A	R.H. - 53-3/4" long -	(‡)	1	All	A	63
C3MY 16004-A	L.H. - 53-3/4" long -	(‡)	1	All	A	63
‡ Package also includes -						
(3) C3MY-16A076-A retainer	(3) B9AB-7150108-A fastener		(3) 375872-S7 nut assy. -No.10-24			
(4) C3MY-6229108-A retainer	(2) 359606-S8 nut-No.10-24		(3) 376908-S40 screw and washer			
(3) C3MY-7129192-A retainer						
C4MY 16003-A	R.H. - upper	(††)	1	All	A	64
C4MY 16004-A	L.H. - upper	(††)	1	All	A	64
†† Package also includes -						
(2) C3MY-54254A34-A retainer	(4) C3MY-6229108-A retainer		(2) 359606-S8 nut-No. 10-24			
C2YY 16003-A	R.H. -	(†)	1	All	B	62
C2YY 16004-A	L.H. -	(†)	1	All	B	62
† Package also includes -						
(4) C2GY-16A076-A retainer	(1) C2DZ-16A076-C retainer		(2) 359606-S8 nut			
(1) C2GY-16A076-B retainer						
C3YY 16003-A	R.H. - 39.82" long -	(ΔΔ)	1	All except 71D, F	B	63
C3YY 16004-A	L.H. - 39.82" long -	(ΔΔ)	1	All except 71D, F	B	63
ΔΔ Package also includes -						
(1) C2DZ-16A076-C retainer	(4) C2OZ-16A076-A retainer		(1) 359606-S8 nut-No. 10-24			
C1KB 16003-D	R.H.		1	All	C	60/61
C1KB 16004-D	L.H.		1	All	C	60/61
C2GB 16003-A	R.H. - 52-1/8" long -	(§§)	1	All except 71C, D	C	62
C2GB 16004-A	L.H. - 52-1/8" long -	(§§)	1	All except 71C, D	C	62
§§ Package also includes -						
(4) C2GY-16A076-A retainer	(2) C2GY-16A076-B retainer		(2) 359606-S8 nut-No. 10-24			
C3GY 16003-A	R.H. and L.H. -		2	All except 71C, D	C	63
Package also includes -						
(1) C2DZ-16A076-C retainer	(2) C2OZ-16A076-A retainer		(1) 359606-S8 nut-No. 10-24			
C4GY 16003-A	R.H. lower - L.H. upper - 43-1/2"	(‡‡)	2	54B, C, D, 62B, C, 63C, D, 71B, 76B, D	C	64
C4GY 16004-A	R.H. upper - L.H. lower - 43-1/2"	(‡‡)	2	54B, C, D, 62B, C, 63C, D, 71B, 76B, D	C	64
‡‡ Package also includes -						
(1) C3OZ-16A076-A retainer	(4) C4DB-16A076-A retainer		(1) 376792-S nut-No. 10-24			

CONTINUED ON NEXT PAGE

Fenders

GROUP AND PART NUMBER	DESCRIPTION, SIZE, ETC.	NO. REQ'D	MODEL OR ENGINE CUBIC INCH DISPLACEMENT	VEHICLE CODE	YEAR 19____
16003-4	MOULDING (FRONT FENDER SIDE) CONTINUED				
COLB 16003-A	R.H. (b)	1	53,63	D	60
COLB 16004-A	L.H. (b)	1	53, 63	D	60
COLY 16A170-A	Kit-retainer	AR	b		
COMY 16A170-A	Kit-retainer	AR	a		
16005-6	FENDER (FRONT)				
COMB 16005-D	R.H.	1	All	A	60
COMB 16006-D	L.H.	1	All	A	60
C1MY 16005-A	R.H.	1	All	A	61
C1MY 16006-A	L.H.	1	All	A	61
C2MY 16005-A	R.H.	1	All	A	62
C2MY 16006-A	L.H.	1	All	A	62
C3MY 16005-A	R.H.	1	All	A	63
C3MY 16006-A	L.H.	1	All	A	63
C4MY 16005-A	R.H.	1	All	A	64
	Consists of the following -				
(1) C4MB-16A030-K fender	(1) C4MB-16C154-C extension				
C4MY 16006-A	L.H.	1	All	A	64
	Consists of the following -				
(1) C4MB-16A031-K fender	(1) C4MB-16C155-C extension				
C2YY 16005-A	R.H.	1	All	B	62/63
C2YY 16006-A	L.H.	1	All	B	62/63
C3GY 16005-B	R.H.	1	All	C	60/63
C3GY 16006-A	L.H.	1	All	C	60/63
C4GY 16005-A	R.H.	1	All	C	64
C4GY 16006-A	L.H.	1	All	C	64
COLB 16005-A	R.H.	1	All	D	60
COLB 16006-A	L.H.	1	All	D	60
C1VY 16005-T	R.H.	1	All	D	61
C1VY 16006-T	L.H.	1	All	D	61
C3VY 16005-A	R.H.	1	All	D	62/64
C2VY 16006-A	L.H.	1	All	D	62/64
16A009	COVER (HOOD FRONT LOWER MOULDING JOINT)				
COLB 16A009-B		1	All	D	60
16020-1	REFER TO GROUP 16054-5				
16B020-1	REFER TO GROUP 16164-5				
16022-3	BRACKET (FRONT FENDER TO PILLAR MOUNTING)				
PB9M 16022-A	R.H.	1	All	A	60
PB9M 16023-A	L.H.	1	All	A	60
16A023-4	BRACE (FRONT FENDER TO FRONT FENDER APRON & RADIATOR SUPPORT)				
C1AB 16A023-A	R.H.	1	All	A	61/63
C1AB 16A024-A	L.H.	1	All	A	61/63
C1AZ 16A023-A	R.H.	1	All	A	64
C1AZ 16A024-A	L.H.	1	All	A	64
C2YB 16A023-A	R.H.	1	All	B	62/63
C2YB 16A024-A	L.H.	1	All	B	62/63
C4DZ 16A023-A	R.H.	1	All	C	64
C4DZ 16A024-A	L.H.	1	All	C	64
16A026	FILLER (FRONT FENDER APRON SPLASH)				
B9MY 16A026-A	Use with a/cond. only	1	All	A	60

Fenders

GROUP AND PART NUMBER	DESCRIPTION, SIZE, ETC.	NO. REQ'D	MODEL OR ENGINE CUBIC INCH DISPLACEMENT	VEHICLE CODE	YEAR 19___
16A027	REFER TO GROUP 16A076				
16A029	REFER TO GROUP 16A076				
16036-7	MOULDING (FRONT FENDER SIDE)				
C4MY 16036-A	R.H. and L.H. - lower - 14-4/5" approximate length	2	54B, 57D, 63D, 65B	A	64
Package also includes -					
(1) C3MY-16A076-A retainer	(1) C4MY-5420842-A retainer		(3) 359606-S8 nut		
C4MY 16036-B	R.H. - lower - 9-1/4" approximate length (§)	1	54A, 57A, 62A, 63A, 65A, 71A, C, 76A	A	64
C4MY 16037-B	L.H. - lower - 9-1/4" approximate length (§)	1	54A, 57A, 62A, 63A, 65A, 71A, C, 76A	A	64
§ Package also includes -					
(2) C2OZ-6240368-A retainer	(2) 359606-S8 nut				
C4MY 16036-D	R.H. - lower - 12-7/16" approximate length (†)	1	54F, 57C, F, 63C, F, 65C, F, 75F, 76C, F	A	64
C4MY 16037-D	L.H. - lower - 12-7/16" approximate length (†)	1	54F, 57C, F, 63C, F, 65C, F, 75F, 76C, F	A	64
† Package also includes -					
(2) C4MY-5420954-B retainer	(2) 359606-S8 nut				
C3YY 16036-A	R.H. - upper (Δ)	1	All except 71D, F	B	63
C3YY 16037-A	L.H. - upper (Δ)	1	All except 71D, F	B	63
Δ Package also includes -					
(4) C2GY-16A076-A retainer	(1) C2GY-16A076-B retainer		(1) 359606-S8 nut-No. 10-24		
C3GY 16036-A	R.H. and L.H. - upper	2	All except 71C, D	C	63
Package also includes -					
(2) C2DZ-16A076-C retainer	(4) C2OZ-16A076-A retainer		(2) 359606-S8 nut-No. 10-24		
16038-9	MOULDING (FRONT FENDER WHEEL OPENING)				
COMB 16038-A	R.H. - 47-1/2" long (a)	1	All except 77B	A	60
COMB 16039-A	L.H. - 47-1/2" long (a)	1	All except 77B	A	60
C2MY 16038-A	R.H. - 44" long (Δ)	1	54B, 65B, 75B, 76	A	62
C2MY 16039-A	L.H. - 44" long (Δ)	1	54B, 65B, 75B, 76	A	62
Δ Package also includes -					
	(7) 372010-S100 screw				
C4MY 16038-A	R.H. (†)	1	54F, 57C, F, 63C, F, 65C, F, 75F, 76C, F	A	64
C4MY 16039-A	L.H. (†)	1	54F, 57C, F, 63C, F, 65C, F, 75F, 76C, F	A	64
† Package also includes -					
	(6) 376387-S101 screw-No. 8-18 x .38"				
C3YY 16038-A	R.H. (§)	1	54B, 62B, 65, 71A, E	B	63
C3YY 16039-A	L.H. (§)	1	54B, 62B, 65, 71A, E	B	63
§ Package also includes -					
	(7) 376378-S101 screw				
C4GY 16038-A	R.H. (§§)	1	63E	C	64
C4GY 16039-A	L.H. (§§)	1	63E	C	64
§§ Package also includes -					
	(7) 376387-S101 screw-No. 8-18 x 3/8"				
COLB 16076-A	R.H. - front	1	54, 65, 68, 75	D	60
COLB 16077-A	L.H. - front	1	54, 65, 68, 75	D	60
C1VB 16038-D	R.H. (‡)	1	All	D	61/64
C1VB 16039-D	L.H. (‡)	1	All	D	61/64
‡ Package also includes -					
	(7) 376361-S100 screw-No. 8-15 x .62"				
372556-S	Screw-truss hd.-No. 8-18 x 3/8"	8	a		

Fenders

GROUP AND PART NUMBER	DESCRIPTION, SIZE, ETC.		NO. REQ'D	MODEL OR ENGINE CUBIC INCH DISPLACEMENT	VEHICLE CODE	YEAR 19__
16B038-9	CAP (FRONT FENDER LOWER FRONT MOULDING)					
C1VB 16B038-E	R.H.	(Δ)	1	All	D	61
C1VB 16B039-E	L.H.	(Δ)	1	All	D	61
C2VY 16B038-A	R.H. - 3-1/2" long	(Δ)	1	All	D	62/64
C2VY 16B039-A	L.H. - 3-1/2" long	(Δ)	1	All	D	62/64

Δ Package also includes -

(1) 372020-S100 screw-pan hd. -No. 8-18 (1) 375592-S100 screw-rd. hd. -No. 8-15 x 1"

16C038-9	MOULDING (FRONT FENDER) UPPER					
C1VY 16C038-A	R.H. - 68-1/2" long -	(Δ)	1	All	D	61/64
C1VY 16C039-A	L.H. - 68-1/2" long -	(Δ)	1	All	D	61/64

Δ Package also includes -

(3) C2VY-16234-A retainer (6) C1VY-5729144-A retainer (3) 359606-S8 nut &wshr.-No.10-24

16B042-3	MOULDING (FRONT FENDER FINISH RAIL) LOWER					
C1MB 16B042-A	R.H.		1	71B	A	61
C1MB 16B043-A	L.H.		1	71B	A	61
C2MB 16B042-A	R.H. - 18-3/4" long	(a)	1	71B, D	A	62
C2MB 16B043-A	L.H. - 18-3/4" long	(a)	1	71B, D	A	62
C1MY 7120872-A	Retainer		1	a		
C1MY 7120892-A	Retainer		2	a		
B9AB 7150108-A	Fastener		2	a		
34655-S8	Nut and washer-No. 10-24 hex.		1	a		
50555-S8	Screw-pan hd. cr. rec. -No. 10-32 x 1"		2	a		

16044-5	BRACE (FRONT FENDER APRON TO FENDER LOWER) REAR					
PB9M 16044-A	R.H.		1	All	A	60
PB9M 16045-A	L.H.		1	All	A	60

16A044-5 REFER TO GROUP 16054-5

16B044-5	REINFORCEMENT (FRONT FENDER APRON UPPER) OUTER					
C1VY 16B044-C	R.H.		1	All	D	61/64
C1VY 16B045-C	L.H.		1	All	D	61/64

16A048	RETAINER (FRONT FENDER SIDE MOULDING) REAR					
C1MB 16A048-A			4	54B, 65B, 75B, 76A	A	61
C1MB 16A048-D			2	54A, 58A, 62A, 64A, 71A, 75A	A	61

16A052-3	BRACE (FRONT FENDER APRON TO DASH)					
C2OZ 16A052-A			2	All	B	62/63
CODZ 16A052-C	R.H. - use on vehicles built prior to 1-7-63		1	All	C	60/63
CODZ 16A053-B	L.H. - use on vehicles built prior to 1-7-63		1	All	C	60/63
C3DZ 16A052-B	R.H. - use on vehicles built after 1-6-63		1	All	C	63/64
C3DZ 16A053-B	L.H. - use on vehicles built after 1-6-63		1	All	C	63/64

16B052-3	MOULDING EXTENSION (FRONT FENDER MOULDING)					
C4MY 16B052-A	R.H.	(Δ)	1	All	A	64
C4MY 16B053-A	L.H.	(Δ)	1	All	A	64

Δ Package also includes -

(1) 376383-S101 screw-No. 8-18 x .38"

Fenders

GROUP AND PART NUMBER	DESCRIPTION, SIZE, ETC.	NO. REQ'D	MODEL OR ENGINE CUBIC INCH DISPLACEMENT	VEHICLE CODE	YEAR 19____
16054-5	APRON (FRONT FENDER)				
COMB 16020-D	R.H. - with a/cond. - has inspection cover attached	1	All	A	60
COMB 16020-E	R.H.	1	All	A	60
COMY 16055-B	L.H. - includes weatherstrip and seals	1	All	A	60
C1AB 16054-D	R.H.	1	All	A	61/62
C1AZ 16055-A	L.H.	1	All	A	61/62
C3AZ 16054-A	R.H.	1	All	A	63
C3AZ 16055-A	L.H.	1	All	A	63
C4AZ 16054-A	R.H.	1	All	A	64
C4AZ 16055-A	L.H.	1	All	A	64
C2OZ 16055-A	L.H. - includes housing	1	All	B	62
C3OZ 16054-A	R.H. - includes housing	1	All	B	62/63
C3OZ 16055-A	L.H. - includes housing	1	All	B	63
C3OZ 16054-B	R.H. - front only	1	All	B	63
C3OZ 16055-B	L.H. - front only	1	All	B	63
C1KB 16020-B	R.H. - assembly less inner side member	1	All	C	60/62
C1KB 16021-B	L.H. - assembly less inner side member	1	All	C	60/62
C3GY 16A044-A	R.H. - assembly includes inner side member - (a) use on vehicles built prior to 1-7-63	1	All	C	60/63
C3GY 16A044-C	R.H. - assembly includes inner side member - use on vehicles built after 1-6-63	1	All	C	63
C3GY 16A045-B	L.H. - assembly includes inner side member - (a) use on 6 cylinder engines	1	All	C	60/63
C3GY 16A045-C	L.H. - includes inner side member - use on 8 cylinder engines	1	All	C	63
C2GY 16054-A	R.H. - front only - use on vehicles built prior (b) to 1-7-63	1	All	C	60/63
C3GY 16054-A	R.H. - front only - use on vehicles built after (b) 1-6-63	1	All	C	63
C2GY 16055-A	L.H. - front only (b)	1	All	C	60/63
C4DZ 16054-A	R.H. - assembly includes inner side member	1	All	C	64
C4DZ 16055-A	L.H. - assembly includes inner side member	1	All	C	64
C4DZ 16054-B	R.H. - front only	1	All	C	64
C4DZ 16055-B	L.H. - front only	1	All	C	64
COLB 16020-C	R.H.	1	All	D	60
COLB 16021-E	L.H.	1	All	D	60
C1VY 16020-C	R.H.	1	All	D	61/62
C1VY 16021-D	L.H.	1	All	D	61/64
C3VY 16020-A	R.H.	1	All	D	63/64
C1SB 63044B26-A	Clip - use to attach shield 3A257 to 16020-1	10	All	D	61/62
353714-S2	Hex. washer hd. screw-5/16"-24 x 1"-attach apron to front fender	AR	a		
359952-S2	Nut-retainer-5/16"-24	AR	a		
376966-S	Plug-button-5/8"-plug holes in apron assembly	AR	b		
16057	REINFORCEMENT & SUPPORT (FRONT FENDER APRON & RADIATOR) UPPER				
C2VY 16057-A		1	All	D	61/64
16A063	REFER TO GROUP 16A076				
16B068-9	REFER TO GROUP 16003-4				
16A070	SEAL (FRONT FENDER APRON SHIELD SPLASH)				
B9MB 16A070-A	Rubber	1	All	A	60
16076-7	REFER TO GROUP 16038-9				

Fenders

GROUP AND PART NUMBER	DESCRIPTION, SIZE, ETC.	NO. REQ'D	MODEL OR ENGINE CUBIC INCH DISPLACEMENT	VEHICLE CODE	YEAR 19__
16A076	RETAINER (FRONT FENDER SIDE MOULDING)				
COMB 16A063-A	(2) for R.H. and (2) for L.H. - also serviced in COMY-16A170-A kit	4	All	A	60
C1MB 16242-A		2	54A, 58A, 62A, 64A, 65A, 71A, 75A	A	61
C2MY 16A027-A	Front fender	10	All except 71B,D	A	62
		2	54B,65B,C,75B,76	A	63
	Rear door	4	54,71A,C,75	A	62
		2	54B,75B	A	63
	Quarter panel	4	62, 65, 76	A	62
		4	65B,C,76	A	63
C3MY 16A076-A	Upper moulding - rear	AR	All	A	63/64
	Front fender - (2) R.H. and (2) L.H.	4	All except 71	A	63
	Front fender - (3) R.H. and (3) L.H.	6	71	A	63
	Front fender	AR	All	A	64
	Quarter panel - (6) R.H. and (6) L.H.	12	All except 71	A	63
	Quarter panel - (2) R.H. and (2) L.H.	4	71	A	63
	Quarter panel	AR	All except 71A, C	A	64
	Tailgate	AR	71	A	64
C2DZ 16A076-C	Quarter panel	AR	54A, 58A, 64A, 65A, 71A,75A	A	61
	Rear door moulding	4	75	A	63
	Quarter panel	AR	All except 71D, F	B	62/63
	Front fender	AR	All except 71D, F	B	62/63
	Front door	AR	All except 71D, F	B	63
	Rear door	AR	All except 71D, F	B	63
	Quarter panel	AR	59, 71	C	60
	Quarter panel	8	All	C	62
	Quarter panel	AR	All except 71C, D	C	63
	Lower back panel	2	All	C	62
	Deck lid	7	All	C	62
	Front fender	AR	All except 71C, D	C	63
	Front door	AR	All except 71C, D	C	63
	Rear door	AR	All except 71C, D	C	63
C2GY 16A076-B	Front fender	AR	54B, 65B, 75B, 76	A	61
	Front fender	AR	All except 71D, F	B	62/63
	Quarter panel	AR	All except 71D, F	B	62/63
	Quarter panel	2	59, 71	C	60/62
C2GY 16A076-A	Quarter panel, front door and rear door	AR	54B, 65B, C, 75B, C, 76	A	63
	Front fender, quarter panel, front door and rear door tailgate	AR	All	B	62/63
		AR	All	C	62
	Use to attach rocker panel moulding to body	18	63E	C	64
C2OZ 16A076-A	Front fender, front door, rear door and quarter panel	AR	All except 71D, F	B	63
		AR	All except 71C, D	C	63
		AR	All	A	64
C3YY 16A076-A	Front - (1) R.H. and (1) L.H.	2	All	B	63
C4DZ 16A076-A	Use on front fender, front door, rear door and tailgate	AR	54B, C, 62B, C, 63C, D, 71A, B, C, 76B, D	C	64
C4GY 16A076-A	R.H. and L.H. - front fender side front moulding	2	54B,62B,C,63E,71B,76C	C	64
C4OZ 16A076-A	Use on quarter panel R.H. and L.H.	2	71	C	64
COLB 16A029-A	Rear	6	53, 63	D	60
COLB 16A076-B	Front	8	53,63	D	60
C2VY 16234-A	Upper moulding	AR	All	D	61/64
	Quarter upper front moulding	AR	All	D	61/64
16A078-9	MOULDING (FRONT FENDER WHEEL OPENING) REAR				
B9LB 16A078-A	R.H.	1	54,65,68,75	D	60
B9LB 16A079-A	L.H.	1	54,65,68,75	D	60

Fenders

GROUP AND PART NUMBER	DESCRIPTION, SIZE, ETC.	NO. REQ'D	MODEL OR ENGINE CUBIC INCH DISPLACEMENT	VEHICLE CODE	YEAR 19____
16B082-3	MOULDING (FRONT FENDER FINISH RAIL) UPPER				
C1MB 16B082-A	R.H.	1	71B	A	61
C1MB 16B083-A	L.H.	1	71B	A	61
C2MY 16B082-A	R.H. - assembly - approximately 49-5/8" long (a)	1	71B, D	A	62
C2MY 16B083-A	L.H. - assembly - approximately 49-5/8" long (a)	1	71B, D	A	62
C2MY 16C086-A	Retainer	2	a		
C2MY 16C088-A	Retainer	1	a		
C1MY 7120892-A	Retainer	2	a		
B9AB 7150108-A	Fastener	2	a		
34655-S8	Nut and washer-No. 10-24-hex.	3	a		
50555-S8	Screw-pan hd. cr. rec. -No. 10-32 x 1"	2	a		
16C086	RETAINER (FRONT FENDER FINISH RAIL UPPER FRONT MOULDING) FRONT				
C2MY 16C086-A		2	71B	A	62
16C088	RETAINER (FRONT FENDER FINISH RAIL UPPER FRONT MOULDING) REAR				
C2MY 16C088-A		2	71B, D	A	62
16A089	RETAINER (FRONT FENDER FRONT MOULDING)				
COMB 16A089-A	(4) for R.H. and (4) for L.H. - also serviced in COMY-16A170-A kit	8	All	A	60
16C092	STUD (FRONT FENDER COWL TOP SPACER)				
C2OZ 16C092-A		4	All	B	62/63
16A096-7	ORNAMENT (FRONT FENDER SIDE) FRONT				
C1GB 16A096-A	(a)	2	All	C	61
C3GY 16A096-A	R.H. - 10.58" long (b)	1	All	C	63
C3GY 16A097-A	L.H. - 10.58" long (b)	1	All	C	63
359298-S32	Clip-tubular-3/16"	AR	a		
376782-S2	Nut and washer-1/4"-20	AR	b		
16098-9	PLATE (FRONT FENDER NAME)				
C2MY 16098-A	R.H. - "S-55" (§)	1	65C, 76B	A	62
C2MY 16098-B	L.H. - "S-55" (§)	1	65C, 76B	A	62
§ Package also includes - (3) 373503-S7 nut					
C2MB 16098-C	R.H. and L.H. - COLONY PARK - use on (Δ) quarter panel	2 2	71B 71B, D	A A	62 64
C2MB 16098-D	R.H. and L.H. - COMMUTER - use on (Δ) quarter panel	2 2	71A 71A, C	A A	62 64
Δ Package also includes - (4) 353577-S2 sleeve nut					
C3MY 16098-A	R.H. - MONTEREY CUSTOM	1	54B, 65B, 75B, 76A	A	63
C3MY 16099-A	L.H. - MONTEREY CUSTOM	1	54B, 65B, 75B, 76A	A	63
C3MY 16098-C	R.H. and L.H. - COLONY PARK	2	71	A	63
C3MY 16098-D	R.H. - MARAUDER (a)	1	63B, C	A	63
C3MY 16099-D	L.H. - MARAUDER (a)	1	63B, C	A	63
C3MY 16098-B	R.H. and L.H. - MONTEREY Use on quarter panel	2 2	54A, 62A, 65A, C, 75A, 76B 54A, 57A, 62A, 63A, 65A, 76A,	A A	63 64
C4MY 16098-A	R.H. and L.H. - PARK LANE	2	54F, 57C, F, 63C, F, 65C, F, 75F, 76C, F	A	64
Package also includes - (2) 375890-S100 nut-sleeve-1/8"					

CONTINUED ON NEXT PAGE

GROUP AND PART NUMBER	DESCRIPTION, SIZE, ETC.	NO. REQ'D	MODEL OR ENGINE CUBIC INCH DISPLACEMENT	VEHICLE CODE	YEAR 19____
16098-9	PLATE (FRONT FENDER NAME) CONTINUED				
C4MY 16098-B	R.H. and L.H. - MARAUDER	2	57D, 63D	A	64
	Package also includes -				
	(2) 375480-S100 nut-sleeve-3/16"				
C2YY 16098-A	METEOR (b)	2	All	B	62
C2YY 16098-B	"S-33"	2	62C	B	62
	Package also includes -				
	(2) 375890-S100 nut				
C3YY 16098-A	R.H. and L.H. - METEOR	2	All except 71D, F	B	63
C3YY 16098-B	R.H. and L.H. - COUNTRY CRUISER	2	71D, F	B	63
C2GY 16098-A	CUSTOM (b)	2	54B, 62B	B	62
		2	54B, 62B, 65A, B, 71A, E	B	63
		2	54B, 62B, 59B, 71B	C	62
		2	54B, 59B, 62B, 71B, 76A	C	63
C1KB 16098-A	COMET (a)	2	All	C	60&62
	Quarter panel	2	All	C	61
	☆ (2) req'd. - for all except 71C, D	AR	All☆	C	63
	☆ (1) req'd. - for 71C, D				
C3GY 16098-A	Ornament - "S-22"	2	62C, 76B	C	63
C3GY 16098-B	R.H. - VILLAGER	1	71C, D	C	63
C3GY 16099-A	L.H. - VILLAGER	1	71C, D	C	63
C4GY 16098-A	R.H. and L.H. - VILLAGER	2	71C	C	64
	Package also includes -				
	(4) 375480-S100 nut-sleeve-3/16"				
C4GY 16098-C	R.H. and L.H. - CALIENTE	2	54C, D, 63C, D, 76B, D	C	64
	Package also includes -				
	(3) 378362-S102 nut-sleeve-3/32"				
C4GY 16098-D	R.H. and L.H. - "202" (‡)	2	54A, 62A, 71A	C	64
C4GY 16098-E	R.H. and L.H. - "404" (‡)	2	54B, 62B, C, 71B	C	64
C4GY 16098-F	R.H. and L.H. - CYCLONE (‡)	2	63E	C	64
	‡ Package also includes -				
	(2) 378362-S102 nut-sleeve-3/32"				
B9BL 14205-A	LINCOLN - use on quarter panel	2	53, 63	D	60
B9LB 16098-B	PREMIER	2	53B, 63B	D	60
COLB 16098-A	CONTINENTAL	2	54, 65, 68, 75	D	60
353577-S2	Nut-sleeve-1/8"	4	a		
375890-S100	Nut-sleeve-1/8"	4or6	b		
16102	SHIELD (FRONT CROSSMEMBER TO SIDE RAIL SPLASH)				
C3YY 16102-A	Use with 8 cylinder only	1	All	B	63
16102-3	SHIELD (FRONT FENDER SPLASH) REAR				
C2OZ 16102-A	R.H.	1	All	B	62/63
C2OZ 16103-A	L.H.	1	All	B	62/63
CODZ 16102-A	R.H. - use on 6 cylinder engines	1	All except 63B, C, 76	C	60/62
CODZ 16103-A	L.H. - use on 6 cylinder engines	1	All except 63B, C, 76	C	60/62
C3DZ 16102-A	R.H. - use on 8 cylinder engines	1	All	C	63
	Also use on 6 cylinder engines	1	63B, C, 76	C	63
C3DZ 16103-A	L.H. - use on 8 cylinder engines	1	All	C	63
	Also use on 6 cylinder engines	1	63B, C, 76	C	63
C3DZ 16102-B	R.H. - lower	1	All except 63, 76	C	63
C3DZ 16103-B	L.H. - lower	1	All except 63, 76	C	63
C4DZ 16102-B	R.H. - use on 6 cylinder or 8 cylinder engines	1	All	C	64
C4DZ 16103-B	L.H. - use on 6 cylinder or 8 cylinder engines	1	All	C	64
COLB 16A578-A	R.H. - rear	1	All	D	60
PB9L 16103-A	L.H. - rear	1	All	D	60
C1VB 16A578-A	R.H.	1	All	D	61/62
C3VY 16A578-A	R.H.	1	All	D	63/64
C1VB 16A579-A	L.H.	1	All	D	61/64

Fenders

GROUP AND PART NUMBER	DESCRIPTION, SIZE, ETC.	NO. REQ'D	MODEL OR ENGINE CUBIC INCH DISPLACEMENT	VEHICLE CODE	YEAR 19____
16C102-3	MOULDING ASSEMBLY (FRONT FENDER FRONT SIDE TIP)				
C4GY 16C102-A	R.H. - "V" shape	1	54B, C, D, 62B, C, 63C, D, 71B, 76B, D	C	64
C4GY 16C103-A	L.H. - "V" shape	1	54B, C, D, 62B, C, 63C, D, 71B, 76B, D	C	64
16B108-9	INSERT (FRONT FENDER SIDE MOULDING)				
C1MB 16B108-B	R.H.	1	54B, 65B, 75B, 76A,	A	61
C1MB 16B109-B	L.H.	1	54B, 65B, 75B, 76A	A	61
16A110	CLIP (FRONT FENDER SIDE MOULDING REAR RETAINER)				
COMB 16A110-A	(1) for R.H. and (1) for L.H. - also serviced in COMY-16A170-A kit	2	All	A	60
16B116	BRACKET (FRONT FENDER APRON WIRING HARNESS RETAINER)				
C1VB 16B116-A	Located on quarter panel	4	53	D	61/63
	Located on quarter panel	2	74	D	61/63
		2	All	D	64
C1VB 16B116-C	Front fender front	2	All	D	61/62
C3VY 16B116-A		2	All	D	63
16B118-9	BRACKET (FRONT FENDER WIRING HARNESS RETAINING) REAR				
C1VB 16B118-C	R.H.	1	All	D	61/64
C1VB 16B119-C	L.H.	1	All	D	61/64
16C118-9	BRACKET (FRONT FENDER REAR) REINFORCEMENT				
C3DZ 16C118-A	R.H. - use on all 8 cylinders and on 6 cylinders for models 63 and 76	1	All	C	63
C3DZ 16C119-A	L.H. - use on all 8 cylinders and on 6 cylinders for models 63 and 76	1	All	C	63
16125	RETAINER (HOOD LOCK RELEASE CABLE)				
PB9M 16125-A		1	All	A	60
16A125	BRACE (FRONT FENDER APRON TO RADIATOR SUPPORT)				
COMB 16A125-A		2	All	A	60
16A132-3	PANEL (FRONT FENDER APPLIQUE) REAR				
C1MB 16A132-A	R.H.	1	71B	A	61
C1MB 16A133-A	L.H.	1	71B	A	61
C2MB 16A132-A	R.H.	1	71B	A	62
C2MB 16A133-A	L.H.	1	71B	A	62
C3MY 16A132-A		2	71	A	63
16B134-5	BRACE (FRONT FENDER TO FRAME)				
C1VB 16B134-A	R.H.	1	All	D	61/63
C1VB 16B135-A	L.H.	1	All	D	61/63
C4VY 16B134-A	R.H.	1	All	D	64
C4VY 16B135-A	L.H.	1	All	D	64
16138	SUPPORT (FRONT FENDER APRON & RADIATOR)				
COMB 16138-A	(a)	1	All	A	60
C2AB 16138-A		1	All	A	61/62
C3AZ 16138-A		1	All	A	63
C4AZ 16138-A		1	All	A	64
C2YY 16138-A		1	All	B	62
C3OZ 16138-B		1	All	B	63

CONTINUED ON NEXT PAGE

Fenders

GROUP AND PART NUMBER	DESCRIPTION, SIZE, ETC.	NO. REQ'D	MODEL OR ENGINE CUBIC INCH DISPLACEMENT	VEHICLE CODE	YEAR 19____
16138	SUPPORT (FRONT FENDER APRON & RADIATOR) CONTINUED				
C3GY 16138-A	Use on vehicles built prior to 1-7-63	1	All	C	60/63
C3GY 16138-B	Use on vehicles built after 1-6-63	1	All	C	63
C4GY 16138-A	(b)	1	All	C	64
34444-S8	Nut-3/8"-16	2	a		
359634-S8	Bolt-3/8"-16 x 2"	2	a		
373388-S	Lockwasher-15/32" I. D. x 1. 43" O. D.	2	a		
377678-S	Plug-button-1" diameter	2	b		
16B138	SPACER (FRONT FENDER TOP ORNAMENT)				
C2YY 16B138-A		4	All	B	62
C1KB 16B138-A	Rubber	2	All	C	60/62
16B142-3	GUSSET (FRONT FENDER APRON TO RADIATOR SUPPORT SIDE)				
C3VY 16B142-A	R. H.	1	All	D	61/64
C1VB 16B143-A	L. H.	1	All	D	61/64
16144-5	BRACKET (FRONT FENDER TO DASH)				
PB9M 16144-A	R. H.	1	All	A	60
PB9M 16145-A	L. H.	1	All	A	60
16B144-5	BODY (FRONT FENDER) LOWER				
C1VB 16B144-D	R. H.	1	All	D	61/64
C1VB 16B145-D	L. H.	1	All	D	61/64
16B150	ORNAMENT (FRONT FENDER SIDE) REAR				
C1GB 16B150-A	(a)	4	All	C	61
359298-S32	Clip-tubular-3/16"	AR	a		
16152-3	BRACE (FRONT FENDER APRON & RADIATOR SUPPORT)				
COMB 16152-B	R. H.	1	All	A	60
COMB 16153-B	L. H.	1	All	A	60
C1AB 16152-B	R. H.	1	All	A	61/62
C1AB 16153-B	L. H.	1	All	A	61/62
C4AZ 16152-A	R. H.	1	All	A	63/64
C3AZ 16153-A	L. H.	1	All	A	63
C4AZ 16153-A	L. H.	1	All	A	64
16160-1	REFER TO GROUP 16164-5				
16164-5	MOULDING (FRONT FENDER) FRONT				
COMB 16B020-A	R. H. - 14" long - extension (b)	1	All	A	60
COMB 16B021-A	L. H. - 14" long - extension (b)	1	All	A	60
C1MB 16160-A	R. H. (a)	1	All	A	61
C1MB 16161-A	L. H. (a)	1	All	A	61
C2MB 16160-A	R. H. - 22-1/2" long (Δ)	1	All except 71B	A	62
C2MB 16161-A	L. H. - 22-1/2" long (Δ)	1	All except 71B	A	62
	Δ Package also includes -				
	(4) 358610-S8 nut-No. 10-24				
C2MB 16160-B	R. H. - 13-3/4" long (§)	1	71B, D	A	62
C2MB 16161-B	L. H. - 13-3/4" long (§)	1	71B, D	A	62
	§ Package also includes -				
	(3) 358610-S8 nut-No. 10-24				

CONTINUED ON NEXT PAGE

Fenders

GROUP AND PART NUMBER	DESCRIPTION, SIZE, ETC.	NO. REQ'D	MODEL OR ENGINE CUBIC INCH DISPLACEMENT	VEHICLE CODE	YEAR 19____
16164-5	MOULDING (FRONT FENDER) FRONT (CONTINUED)				
C4MY 16164-A	R.H. - side front - use on vehicles with top mounted front fender turn signals (†)	1	All except 71B, D	A	64
C4MY 16165-A	L.H. - side front - use on vehicles with top mounted front fender turn signals (†)	1	All except 71B, D	A	64
C4MY 16164-B	R.H. - side front - use on vehicles with top mounted front fender turn signals (†)	1	71B, D	A	64
C4MY 16165-B	L.H. - side front - use on vehicles with top mounted front fender turn signals (†)	1	71B, D	A	64
C4MY 16164-C	R.H. - side front - use on vehicles without top mounted front fender turn signals (†)	1	All except 71B, D	A	64
C4MY 16165-C	L.H. - side front - use on vehicles without top mounted front fender turn signals (†)	1	All except 71B, D	A	64
† Package also includes -					
(2) 55731-S2	nut and washer-No. 10-24	(1) 376383-S101	screw-No. 10-16 x 1/2"		
C3YY 16164-A	R.H. - 10.80" long	1	All except 71D, F	B	63
C3YY 16165-A	L.H. - 10.80" long	1	All except 71D, F	B	63
C1KB 16164-A	R.H. - rustless steel	1	All	C	60
C1KB 16165-A	L.H. - rustless steel	1	All	C	60
C4GY 16164-A	R.H. - upper - paint to match body color (‡)	1	All	C	64
C4GY 16165-A	L.H. - upper - paint to match body color (‡)	1	All	C	64
‡ Package also includes -					
(4) 373070-S	washer-flat-1/4"	(4) 353958-S100	nut-1/4"-20		
34655-S8	Nut and washer-No. 10-24	AR	a		
372556-S	Screw-truss hd.-No. 8-18 x 3/8"	6	b		
16170	WEATHERSTRIP (FRONT FENDER APRON SPLASH PANEL)				
B9MB 16170-B	Rubber 44" long - cut to 39" long	AR	All	A	61/62
C3MY 16170-A	(1) R.H. and (1) L.H. - top	2	All	A	63/64
B9MB 16170-A	38" long	2	All	A	64
16A170	KIT (FRONT FENDER MOULDING RETAINER)				
COMY 16A170-A		2	All	A	60
Consists of the following -					
(2) COMB-16A063-A	clip	(1) COMB-16A110-A	clip	(4) 353911-S100	nut
(4) COMB-16A089-A	retainer				
COLY 16A170-A	Side	2	53, 63	D	60
Consists of the following -					
(3) COLB-16A029-A	retainer	(4) COLB-16A076-B	retainer	(4) 354397-S100	nut and washer
16A174-5	SUPPORT (FRONT FENDER APRON & RADIATOR) SIDE				
BAK 16424-A	R.H.	1	All	D	60
BAK 16425-A	L.H.	1	All	D	60
C1VY 16A174-A	R.H.	1	All	D	61/64
C1VB 16A175-B	L.H.	1	All	D	61/64
16178-9	ORNAMENT (FRONT FENDER) TOP				
COMB 16178-E	(a)	2	All	A	60
C1MB 16178-A	R.H. (Δ)	1	All	A	61
C1MB 16179-A	L.H. (Δ)	1	All	A	61
C2MY 16178-B	R.H. (Δ)	1	All	A	62
C2MY 16179-B	L.H. (Δ)	1	All	A	62
Δ Package also includes -					
		(2) 373457-S8	nut-No. 10-24		

CONTINUED ON NEXT PAGE

Fenders

GROUP AND PART NUMBER	DESCRIPTION, SIZE, ETC.	NO. REQ'D	MODEL OR ENGINE CUBIC INCH DISPLACEMENT	VEHICLE CODE	YEAR 19....
16178-9	ORNAMENT (FRONT FENDER) TOP (CONTINUED)				
C2YY 16178-A	R. H. (b)	1	All	B	62
C2YY 16179-A	L. H. (b)	1	All	B	62
C3YY 16178-A	R. H. (§)(b)	1	All	B	63
C3YY 16179-A	L. H. (§)(b)	1	All	B	63
§ Package also includes - (2) C1DB-16A158-A pad					
C1GY 16178-B	R. H.	1	All	C	60/62
C1GY 16179-B	L. H.	1	All	C	60/62
C3GY 16178-A	(b)	2	All	C	63
353911-S	Nut-No. 10-24	4	a		
354479-S7	Nut-No. 10-24	AR	b		
16186	REFER TO GROUP 8124				
16188	ORNAMENT (FRONT FENDER SIDE) FRONT				
COLB 16188-A		8	54, 65, 68, 75	D	60
16A192-3	MOULDING (FRONT FENDER LOWER FRONT)				
C1VB 16A192-D	R. H. (‡)	1	All	D	61/64
C1VB 16A193-D	L. H. (‡)	1	All	D	61/64
‡ Package also includes - (2) C1VB-16B128-A support (3) 52720-S screw (2) 372029-S screw					
16A198	SUPPORT (FRONT FENDER APRON & RADIATOR)				
B9LB 16A198-A	Upper	1	All	D	60
16A204-5	BRACKET (FRONT FENDER TO FRONT FENDER APRON)				
C1AB 16A204-A		2	All	A	61/62
C3AZ 16A204-A		2	All	A	63
C4AZ 16A204-A	R. H.	1	All	A	64
C4AZ 16A205-A	L. H.	1	All	A	64
16B208	SEAL (FRONT FENDER APRON UPPER REINFORCEMENT TO FENDER)				
C1VB 16B208-A	Rubber (a)	2	All	D	61/64
C1VB 17879-A	Retainer	AR	a		
16212-3	RAIL (FRONT FENDER FINISH)				
COMB 16212-B	R. H. - fiberglas - 56-13/16" long - OAK GRAIN	1	77B	A	60
COMB 16213-B	L. H. - fiberglas - 56-13/16" long - OAK GRAIN	1	77B	A	60
C1MY 16212-A	R. H. - OAK GRAIN	1	71B	A	61
C1MY 16213-A	L. H. - OAK GRAIN	1	71B	A	61
C2MY 16212-B	R. H. - fiberglas - OAK GRAIN	1	71B, D	A	62
C2MY 16213-B	L. H. - fiberglas - OAK GRAIN	1	71B, D	A	62
C3MY 16212-A	R. H. (Δ)	1	71	A	63
C3MY 16213-A	L. H. (Δ)	1	71	A	63
C4MY 16212-A	R. H. (Δ)	1	71B, D	A	64
C4MY 16213-A	L. H. (Δ)	1	71B, D	A	64

Δ Package also includes -

(3) C3MY-16A076-A retainer	(1) 358403-S100	retainer washer	(3) 375872-S7	nut and washer - No. 10-24
(2) C3MY-7129192-A retainer	(5) 358404-S	cap	(1) 376382-S101	screw - No. 10-16 x 3/4"
(7) B9AB-7150108-A fastener	(4) 373702-S100	screw and washer - No. 10-32 x 1-1/4"	(AR) 376908-S40	screw and washer - No. 10-32

CONTINUED ON NEXT PAGE

GROUP AND PART NUMBER	DESCRIPTION, SIZE, ETC.		NO. REQ'D	MODEL OR ENGINE CUBIC INCH DISPLACEMENT	VEHICLE CODE	YEAR 19____
16212-3	RAIL (FRONT FENDER FINISH) CONTINUED					
C3YY 16212-A	R. H.		1	71D, F	B	63
C3YY 16213-A	L. H.		1	71D, F	B	63
C2GY 16212-A	R. H. - fiberglas - OAK GRAIN	(§)	1 1	71C 71C, D	C C	62 63
C2GY 16213-A	L. H. - fiberglas - OAK GRAIN	(§)	1 1	71C 71C, D	C C	62 63
§ Package also includes -						
(6) 358404-S cap	(6) 373702-S screw and washer			(6) C2DZ-71290B32-A fastener		
C4GY 16212-A	R. H.	(†)	1	71C	C	64
C4GY 16213-A	L. H.	(†)	1	71C	C	64
† Package also includes -						
(11) C1AZ-71290B32-A fastener (1) 358403-S100 retainer	(12) 358404-S cap (11) 373702-S100 screw and wshr. No. 10-32			(1) 376592-S102 screw-No. 10-16 x . 88"		
16B214-5	BRACE (FRONT FENDER TO UPPER APRON REINFORCEMENT)					
C1VB 16B214-A	R. H.		1	All	D	61/64
C1VB 16B215-A	L. H.		1	All	D	61/64
16C218-9	MOULDING (FRONT FENDER AT GRILLE OPENING)					
C4MY 16C218-A	R. H.	(b)	1	All	A	64
C4MY 16C219-A	L. H.	(b)	1	All	A	64
C4GY 16C218-A	R. H. - ornament	(a)	1	All	C	64
C4GY 16C219-A	L. H. - ornament	(a)	1	All	C	64
373503-S35	Nut		AR	a		
376366-S102	Nut		AR	b		
16A230-1	SEAL (FRONT FENDER APRON TO FRONT SUSPENSION)					
COMB 16A230-A	R. H. - rubber 23-3/16" long - use on vehicles built prior to 12-19-59		1	All	A	60
COMB 16A231-A	L. H. - rubber 23-3/16" long - use on vehicles built prior to 12-19-59		1	All	A	60
COMB 16A230-B	R. H. - use on vehicles built after 12-18-59		1	All	A	60
COMB 16A231-B	L. H. - use on vehicles built after 12-18-59		1	All	A	60
16C230-1	GRILLE ASSEMBLY (FRONT FENDER FRONT ORNAMENT)					
C4GY 16C230-A	R. H.	(a)	1	All	C	64
C4GY 16C231-A	L. H.	(a)	1	All	C	64
359606-S8	Nut-No. 10-24		AR	a		
16B232-3	BRACE (FRONT FENDER APRON TO COWL TOP) FRONT					
C1VY 16B232-A	R. H.		1	74	D	61/64
C1VY 16B233-A	L. H.		1	74	D	61/64
16234	REFER TO GROUP 16A076					
16B234-5	BRACE (FRONT FENDER APRON TO COWL TOP) REAR					
C1VY 16B234-A	R. H.		1	74	D	61/64
C1VY 16B235-A	L. H.		1	74	D	61/64
16A238	SEAL (RADIATOR SUPPORT TO HOOD)					
C1AB 16A238-B	Rubber - 34" long		1	All	A	61/63
C4AZ 16A238-A			1	All	A	64

CONTINUED ON NEXT PAGE

Fenders

GROUP AND PART NUMBER	DESCRIPTION, SIZE, ETC.	NO. REQ'D	MODEL OR ENGINE CUBIC INCH DISPLACEMENT	VEHICLE CODE	YEAR 19____
16A238	SEAL (RADIATOR SUPPORT TO HOOD) CONTINUED				
C1KB 16A238-A	Rubber - 38-41/64" long Use on all 6 cylinders with H and A single venturi carburetors built prior to 1-7-63	1	All	C	60/63
	Cut to 21-1/4" long for fender to radiator support	2	All	C	60/62
C3GY 16A238-A	Without a/cond. on all 6 cylinder vehicles built after 1-6-63	1	All	C	63
C4GY 16A238-A		1	All	C	64
16240	SEAL (FRONT FENDER APRON TO FRAME)				
C3AZ 16240-A	R.H.	1	All except 427	A	63
C3AZ 16240-C	R.H.	1	427	A	63
C3AZ 16240-B	L.H.	1	All	A	63
C4AZ 16240-A	R.H.	1	All	A	64
C4AZ 16240-B	L.H.	1	All	A	64
16242	REFER TO GROUP 16A076				
16246	SEAL (FRONT FENDER TO FRONT BODY PILLAR)				
BD 16246-A		2	All	A	60
	NS-improvise locally	2	All	A	61
16B248	TURNBUCKLE (FRONT FENDER APRON TO COWL TOP)				
C1VY 16B248-A		2	74	D	61/64
16252	WEATHERSTRIP (FRONT FENDER APRON TO FRAME) FRONT				
PB9M 16252-A		2	All	A	60
16254	WEATHERSTRIP (FRONT FENDER APRON SPLASH TO FRAME) REAR				
BA 16254-C	Cut to 11-27/32" long - front	1	All	A	61/63
16281	SHIELD (REAR WHEEL SPLASH)				
C1DB 16281-A	L.H.	1	59, 71	C	60/63
C4DZ 16281-A	L.H. - use on vehicles built prior to 12-20-63	1	71	C	64
C4DZ 16281-B	L.H. - use on vehicles built after 12-19-63	1	71	C	64
16288	BRACKET (REAR WHEEL SPLASH SHIELD)				
C1DB 16288-A	L.H.	1	59, 71	C	60/64
16295	SEAL (HEATER CASE TO CORE SUPPORT REINFORCEMENT)				
FFC 16295-A	R.H. and L.H. - for a/cond.	2	All	D	60
16300-1	ORNAMENT (FRONT FENDER SIDE) LOWER				
C2MY 16300-A	R.H. - CUSTOM	1	54B, 65B, 75B, 76A	A	62
C2MY 16301-A	L.H. - CUSTOM	1	54B, 65B, 75B, 76A	A	62
C3MY 16300-A	R.H. - rear - moulding (Δ)	1	54B, 63B, C, 65B, C, 75B, C, 76	A	63
C3MY 16301-A	L.H. - rear - moulding - length 9.55" (Δ)	1	54B,63B,C,65B,C,75B,C,76	A	63
	Δ Package also includes - (1) C2MY-16A027-A retainer (1) C2AB-6242527-K retainer (1) 359606-S8 nut - No. 10-24				
C3MY 16300-B	R.H. - FLAG (b)	1	63B, C	A	63
C3MY 16301-B	L.H. - FLAG (b)	1	63B, C	A	63
C4MY 16300-A	(3) req'd. - for R.H. - (3) req'd. - for L.H. (b)	6	54A, B, F, 57A, D, 62, 63A, D, 65A, B, F, 71, 75F, 76A, F	A	64
C3GY 16300-A	Front fender - (3) R.H. and (3) L.H.	6	54A, 62A, 65A, 71A, 75A	A	61
	Front fender - (3) R.H. and (3) L.H.	6	59B, 71B	C	63
	Quarter panel - (3) R.H. and (3) L.H.	6	54B, 62B, C, 63B, C, 76	C	63

CONTINUED ON NEXT PAGE

Fenders

GROUP AND PART NUMBER	DESCRIPTION, SIZE, ETC.	NO. REQ'D	MODEL OR ENGINE CUBIC INCH DISPLACEMENT	VEHICLE CODE	YEAR 19____
16300-1	ORNAMENT (FRONT FENDER SIDE) LOWER (CONTINUED)				
C4MY 16300-B	R. H. - FLAG (b)	1	57, 63	A	64
		1	63E	C	64
C4MY 16301-B	L. H. - FLAG (b)	1	57, 63	A	64
		1	63E	C	64
C4GY 16300-A	Rear - (3) req'd. - for R. H. - (3) req'd. - for L. H.	6	54A, 62A, 71A, C	C	64
375480-S100	Nut-3/16" sleeve	AR	b		
376423-S100	Nut-3/16" crown-furnished with part	2	a		
16304	SEAL (FRONT FENDER TO BUMPER)				
C4MY 16304-A	R. H. and L. H.	2	All	A	64
16354	SPACER (FRONT FENDER TO COWL TOP)				
BAF 16354-A	Rubber - used for fan shroud on 383 and 410 with a/cond. - 12" long	2	All	A	60
16410-1	PANEL (FRONT FENDER OUTSIDE APPLIQUE)				
C4GY 16410-A	R. H. - aluminum - 52-1/3" long	1	54C, D, 63C, D, 76B, D	C	64
C4GY 16411-A	L. H. - aluminum - 52-1/3" long	1	54C, D, 63C, D, 76B, D	C	64
16424-5	REFER TO GROUP 16A174-5				
16550-1	MOULDING PANEL (FRONT FENDER SIDE FRONT)				
C4VY 16550-A	R. H. (Δ)	1	All	D	64
C4VY 16551-A	L. H. (Δ)	1	All	D	64
	Δ Package also includes -				
(1) C3AZ-62290B82-A	retainer (3) 376379-S101 screw				
16D550	SHIELD (FRONT FENDER LOWER EXTENSION TO BUMPER SPLASH)				
C1VB 16D550-A	Rubber	2	All	D	61
16F550	SHIELD (FRONT CROSSMEMBER TO BUMPER) SPLASH				
C4OZ 16F550-A		1	221, 260	B	63
16B552	WEATHERSTRIP (FRONT FENDER APRON SPLASH PANEL)				
COMB 16B552-B	Rubber - 18-1/2" long	2	All	A	60
16B558	WEATHERSTRIP (FRONT FENDER APRON SPLASH SHIELD)				
COMB 16B558-A	Rubber - 19-1/2" long	2	All	A	60
16B562	SHIELD (FRONT FENDER APRON SUSPENSION OPENING) SPLASH				
COLB 16B562-A	Rubber	2	All	D	60
16B564	SEAL (FRONT FENDER APRON SPLASH SHIELD)				
COMB 16B564-A	Rubber	2	All	A	60
16B564	SHIELD (FRONT FENDER TO BUMPER) SPLASH				
C2YY 16B564-B	L. H.	1	All	B	62
16B570-3	EXTENSION (FRONT FENDER REAR SPLASH SHEILD) UPPER				
C2OB 16B572-A	R. H.	1	All	B	62/63
C2OB 16B573-A	L. H.	1	All	B	62/63
C1VB 16B570-A	R. H.	1	All	D	61/64
C1VB 16B571-A	L. H.	1	All	D	61/64
16A572	SEAL (FRONT FENDER TO RADIATOR SUPPORT)				
C2OZ 16A572-A	Rubber	2	All	B	62/63

Fenders

GROUP AND PART NUMBER	DESCRIPTION, SIZE, ETC.	NO. REQ'D	MODEL OR ENGINE CUBIC INCH DISPLACEMENT	VEHICLE CODE	YEAR 19____
16D572	SHIELD (FRONT FENDER FRONT LOWER EXTENSION) SPLASH				
C2VY 16D572-A		2	All	D	62/64
16A573-4	SHIELD (FRONT FENDER SPLASH) FRONT				
COMB 16A573-A	R. H.	1	All	A	60
COMB 16A574-A	L. H.	1	All	A	60
C1MB 16A573-A	R. H.	1	All	A	61/62
C1MB 16A574-A	L. H.	1	All	A	61/62
C3MY 16A573-A	R. H.	1	All	A	63
C3MY 16A574-A	L. H.	1	All	A	63
C4MY 16A573-A	R. H.	1	All	A	64
C4MY 16A574-A	L. H.	1	All	A	64
B9LB 16A573-A	(1) R. H. and (1) L. H.	2	All	D	60
C1VY 16A573-A	R. H.	1	All	D	61/64
C1VY 16A574-A	L. H.	1	All	D	61/64
16D574	RETAINER (FRONT FENDER TO BUMPER SPLASH SHIELD)				
C2YY 16D574-A		2	All	B	62
16D576	MUD & STONE DEFLECTOR (STATION WAGON)				
C4RZ 16D576-A		1	All	A C	64
C4RZ 16D576-B	BLACK	1	All	A C	60/63
		1	All	B	63
C4RZ 16D576-C	WHITE	1	All	A C	60/63
		1	All	B	63
16A578-9	REFER TO GROUP 16102-3				
16A582	SEAL (FRONT FENDER SPLASH SHIELD) REAR				
C2OZ 16A582-A		2	All	B	62
CODB 16A582-A	Rubber	2	All	C	60/63
C4DZ 16A582-A	Rear - use on 6 cylinder engines only	2	All except 63, 76	C	64
C4DZ 16A582-B	Rear - use on all 8 cylinder engines and on models 63, 76 with 6 cylinder engines	2	All	C	64
16584	RETAINER (FRONT FENDER TO PILLAR)				
C2MY 16584-A		AR	All	A B C	60/64
		4	All	D	64

Hood

GROUP AND PART NUMBER	DESCRIPTION, SIZE, ETC.	NO. REQ'D	MODEL OR ENGINE CUBIC INCH DISPLACEMENT	VEHICLE CODE	YEAR 19____
16A600	STRAP (HOOD GROUND)				
COMF 16A600-A	Spring tempered bronze	1	All	A	60
16604	PLATE (FRONT) NAME				
C1MY 16604-B	"MERCURY" - located on hood	1	All	A	61&63/64
	Also use on lower back panel	1	All except 71	A	61
	Located on luggage compartment door	1	All except 71	A	62&64
	Located on luggage compartment door	1	All	B	62
	Located on hood	1	All	B	63
	Located on tailgate	1	59, 71	C	62
	Package also includes - (3) 375890-S102 nut-1/8"				
C1GB 16604-A	"COMET" - located on hood	1	All	C	61
	Package also includes - (2) 374566-S nut				
C4GY 16604-A	"COMET" - located on hood	1	All	C	64
	Package also includes - (4) 375890-S100 nut				

Hood

GROUP AND PART NUMBER	DESCRIPTION, SIZE, ETC.	NO. REQ'D	MODEL OR ENGINE CUBIC INCH DISPLACEMENT	VEHICLE CODE	YEAR 19____
16A605-6	BAR (HOOD HINGE TORSION)				
COMB 16A605-C		2	All	A	60
C1VB 16A605-A	R.H. - one end YELLOW	1	All	D	61/64
C1VB 16A606-A	L.H.	1	All	D	61/64
16606	LETTER (HOOD FRONT)				
COMB 16606-G	Letter "M" has (2) mounting studs (a)	1	All	A	60
COMB 16606-H	Letter "E" has (2) mounting studs (a)	1	All	A	60
COMB 16606-J	Letter "R" has (2) mounting studs (a)	2	All	A	60
COMB 16606-K	Letter "C" has (2) mounting studs (a)	1	All	A	60
COMB 16606-L	Letter "U" has (2) mounting studs (a)	1	All	A	60
COMB 16606-M	Letter "Y" has (2) mounting studs (a)	1	All	A	60
C2MY 16606-D	Letter "C" (Δ)	1	All	A	62
C2MY 16606-A	Letter "M" (Δ)	1	All	A B C	62
C2MY 16606-B	Letter "E" (Δ)	1	All	A B C	62
C2MY 16606-C	Letter "R" (Δ)	2	All	A B C	62
C2MY 16606-E	Letter "U" (Δ)	1	All	A B C	62
C2MY 16606-F	Letter "Y" (Δ)	1	All	A B C	62
C2YY 16606-A	Letter "C" (Δ)	1	All	B	62
C2GY 16606-A	Letter "C" (Δ)	1	All	C	62
Δ Package also includes - (1) 353911-S100 nut					
B9LB 16606-A	"L"	2	53,63	D	60
B9LB 16606-B	"I"	1	53,63	D	60
B9LB 16606-C	"N"	2	53,63	D	60
B9LB 16606-D	"C"	1	53,63	D	60
B9LB 16606-E	"O"	1	53,63	D	60
373503-S7	Nut-self-threading-3/16"	AR	a		
16607	ORNAMENT (HOOD FRONT)				
COMB 16607-D	(c)	1	All	A	60
C1MB 16607-C		1	All	A	61
Package also includes - (3) 55731-S2 nut-hex. lock					
373503-S7	Nut-self-threading-3/16"	6	c		
16607	REFER TO GROUP 16850				
16612	HOOD (LESS HINGES)				
COMB 16612-H		1	All	A	60
C1MY 16612-F		1	All	A	61
C2MY 16612-A		1	All	A	62
C3MY 16612-A		1	All	A	63
C4MY 16612-A	Less extension	1	All	A	64
C2YY 16612-B		1	All	B	62/63
C2GY 16612-A		1	All	C	60/63
C4GY 16612-A		1	All	C	64
COLB 16612-A		1	All	D	60
C1VY 16612-B		1	All	D	61/64
16A626	BRACE (HOOD LOCK SUPPORT)				
C1KB 16A626-A		1	All	C	60/62
16A669	RETAINER (HOOD PAD ON COWL)				
CODB 16A669-B		1	All	C	60/61
16A670	SUPPORT (HOOD BUMPER TO COWL TOP OUTER PANEL)				
CODB 16A670-A		2	All	C	62/64
		2	All	B	62

Hood

GROUP AND PART NUMBER	DESCRIPTION, SIZE, ETC.	NO. REQ'D	MODEL OR ENGINE CUBIC INCH DISPLACEMENT	VEHICLE CODE	YEAR 19____
16698-9	BRACKET (HOOD HINGE ON HOOD)				
C1VB 16698-C	R. H.	1	All	D	61/64
C1VB 16699-C	L. H.	1	All	D	61/64
16700-1	LOCK (HOOD)				
PB9M 16700-A	Dual trigger	1	All	A	60
C1MB 16700-D		1	All	A	61
C2MB 16700-A		1	All	A	62
C3MY 16700-A		1	All	A	63
C4MY 16700-A		1	All	A	64
C2YB 16700-A		1	All	B	62
C3YY 16700-A		1	All	B	63
C1DB 16700-D		1	All	C	60/61
C2GY 16700-A		1	All	C	62/63
C4GY 16700-A		1	All	C	64
BAK 16700-C	R. H. (a)	1	All	D	60
COLB 16701-A	L. H. (a)	1	All	D	60
C1VB 16700-F		1	All	D	61/64
34054-S8	Nut-hex.-No.12-24	AR	a		
16B706	RETAINER (HOOD SOUND ABSORBER)				
C2OZ 16B706-A	Use with 8 cylinder with a/cond.	2	All	B	62/63
16707	SUPPORT (HOOD LOCK HOOK)				
C1MB 16707-B		1	All	A	61
C2MB 16707-A		1	All	A	62
C4MY 16707-A	Necessary to drill holes for 1963	1	All	A	63/64
C2YB 16707-A		1	All	B	62/63
C3GY 16707-A		1	All	C	60/63
C4GY 16707-A	Top	1	All	C	64
16A708	MOULDING (HOOD FRONT EXTENSION)				
COMB 16A708-A	43-3/16" long (a)	1	All	A	60
372556-S	Screw-truss hd.-No.8-18 x 3/8"	AR	a		
16716	SUPPORT (HOOD LATCH DOWEL)				
C2MB 16716-A		1	All	A	62
16726	BRACKET (HOOD LOCK TO DASH MOUNTING)				
PB9M 16726-A		1	All	A	60
16728	SUPPORT (HOOD LOCK DOWEL)				
C2YY 16728-A		1	All	A	61
		1	All	B	62/63
		1	All	C	64
16738	ABSORBER (HOOD SOUND)				
COMB 16738-A	Fiberglas	1	57F, 63F, 76D	A	60
C3AZ 16738-A	Fiberglas	1	All	A	61/64
C3OZ 16738-A	Fiberglas	1	All	B	62/63
C2DZ 16738-A	Fiberglas	1	All	C	60/63
C4GY 16738-A	Fiberglas	1	All	C	64
BAK 14254-A	Fiberglas - center front	1	All	D	60
BAK 16738-A	R.H. - fiberglas	1	All	D	60
BAK 16753-A	L.H. - fiberglas	1	All	D	60
BAK 16782-A	Fiberglas - center rear	1	All	D	60
C1VY 16738-C	Fiberglas	1	All	D	61/64

Hood

GROUP AND PART NUMBER	DESCRIPTION, SIZE, ETC.	NO. REQ'D	MODEL OR ENGINE CUBIC INCH DISPLACEMENT	VEHICLE CODE	YEAR 19____
16740	PAD (HOOD ON COWL)				
BAE 16740-C	41-3/4" long	1	All	A	60
COAB 16740-A	50-23/64" long	1	All	A	61/62
C3AZ 16740-A	50.36" long	1	All	A	63/64
C3OZ 16740-A		1	All	B	63
C2DZ 16740-A	42-1/2" long	1	All	B C	62
		1	All	C	63
CODB 16740-B		1	All	C	60/61
C4DZ 16740-A	45.48" long	1	All	C	64
BAK 16740-A	Rubber - 50-13/16" long	1	All	D	60
C1VB 16740-A		1	All	D	61/64
16A746	RETAINER (HOOD FRONT MOULDING)				
C4GY 16A746-A		8	All	C	64
16747	BRACE (HOOD LOCK SUPPORT)				
C3AZ 16747-A		1	All	A	63
C4AZ 16747-A		1	All	A	64
C4GY 16747-A		1	All	C	64
16B750	NUT (HOOD LOCK DOWEL SPRING RETAINING)				
C3AZ 16B750-A		1	All	A	63/64
16753	REFER TO GROUP 16738				
16758	REFER TO GROUP 16763				
16758	BUMPER (HOOD TO FENDER, REAR SEAT & LUGGAGE COMPARTMENT)				
C3AZ 16758-A		4	All	A	63/64
B7A 16758-A		4	All	A	60
		4	All	C	60/63
C2OB 16758-A		4	All	B	62
C3OZ 16758-A		4	All	B	63
C4DZ 16758-A	Hood	4	All	C	64
BAK 16758-A	Rubber - 1" x 1-1/4" square	4	All	D	60/64
	NOTE - Also refer to group 16769				
16763	BUMPER (HOOD TO COWL TOP)				
B5A 16769-A	Luggage compartment	2	All except 71	A	61
C1MB 16763-A	Hood	4	All	A	61/62
	Tailgate overslam bumper	2	71	A	63/64
C2OB 16763-A		2	All	B	62
	Located at radiator support front (a)	2	All except 71	A B	63
	(a)	2	All	A	64
B9A 16769-A	5/16"-32 stud - located at radiator support - front (a)	2	All	A	60/62
	☆ R.H. and L.H. rear seat stop	2	71,77	A	60/61
	☆ Note - use on vehicles built after 11-30-59				
	Located at radiator support - front	2	All	C	60/64
C1TZ 16758-A	Hood	2	All	A	60
	Use at luggage compartment	2	All except 77	A	60
	☆ R.H. rear seat stop	1	71, 77	A C	60&62
	☆ Note - use on vehicles built prior to 12-1-59				
	Use in rear seat mounting only	2	59, 71	C	60/61
	Use at luggage compartment	2	54, 62	C	61/62
	Rear seat	AR	59, 71	C	63/64
	Use at hood and luggage compartment	2	All	D	60
	Use for folding top	1	68	D	60

CONTINUED ON NEXT PAGE

Hood

GROUP AND PART NUMBER	DESCRIPTION, SIZE, ETC.	NO. REQ'D	MODEL OR ENGINE CUBIC INCH DISPLACEMENT	VEHICLE CODE	YEAR 19____
16763	BUMPER (HOOD TO COWL TOP) CONTINUED				
C3OZ 16763-A	Located at cowl (a)	2	All	B	63
	Located at deck lid opening (b)	2	All except 71	C	64
C4SZ 16763-A	Use with steel nut	2	All	D	60/61
	Luggage compartment door	2	53	D	63/64
		2	All except 74	D	61/62
C3VY 16763-A	1" x 1.10" - includes steel retainer	2	All	D	63/64
C1VY 16763-A	Use with nylon nut 5/16" insert - 1-3/4" long (c)	2	All	D	62/64
33923-S8	Nut-hex. jam-5/16"-24	2	a		
52727-S8	Screw-pan hd. tap. -No. 10-12 x 1/2"	2	b		
354299-S2	Nut-hex. lock-5/16"-24	2	a		
375995-S	Nut-5/16" nylon	2	c		
16767	SPRING (HOOD LOCK CAM)				
CODB 16767-B		1	All	C	60/63
B7A 16767-A	4.2 coils	2	All	D	60
16769	REFER TO GROUP 16763				
16782	REFER TO GROUP 16738				
16789	SPRING (HOOD HINGE)				
C1MY 16789-A		2	All	A	61/64
C2OZ 16789-A		2	All	B	62
	Use on vehicles with counterbalanced hinge	2	All	C	63
C3OZ 16789-A		2	All	B	63
		2	All	C	64
BAK 16789-A	Flat wire - 3 coils	2	All	D	60
16790-1	REFER TO GROUP 16856-7				
16796-7	HINGE (HOOD)				
COMB 16796-B	R.H.	1	All	A	60
COMB 16797-B	L.H.	1	All	A	60
C3AZ 16796-A	R.H. - less spring (a)	1	All	A	61/64
C3AZ 16797-A	L.H. - less spring (a)	1	All	A	61/64
C2OZ 16796-A	R.H.	1	All	B	62
C2OZ 16797-A	L.H.	1	All	B	62
C3OZ 16796-A	R.H.	1	All	B	63
		1	All	C	64
C3OZ 16797-A	L.H.	1	All	B	63
		1	All	C	64
C2DZ 16796-A	R.H.	1	All	C	60/62
	Conventional - not counterbalanced	1	All	C	63
C2DZ 16797-A	L.H.	1	All	C	60/62
	Conventional - not counterbalanced	1	All	C	63
C3DZ 16796-A	R.H. - less spring - use on vehicles with counterbalanced hinge	1	All	C	63
C3DZ 16797-A	L.H. - less spring - use on vehicles with counterbalanced hinge	1	All	C	63
B8LY 16796-A	R.H. (b)	1	All	D	60
B8LY 16797-A	L.H. (b)	1	All	D	60
C1VB 16796-B	R.H. - use on vehicles built prior to 4-3-61	1	All	D	61
C1VB 16797-B	L.H. - use on vehicles built prior to 4-3-61	1	All	D	61
C1VB 16796-C	R.H. - use on vehicles built after 4-2-61	1	All	D	61/64
C1VB 16797-C	L.H. - use on vehicles built after 4-2-61	1	All	D	61/64
352628-S2	Screw and washer-5/16"-24 x 7/8"	4	b		
353483-S2	Screw and washer-5/16"-24 x 1-1/8"-attach hinge to hood	4	a		

Hood

GROUP AND PART NUMBER	DESCRIPTION, SIZE, ETC.	NO. REQ'D	MODEL OR ENGINE CUBIC INCH DISPLACEMENT	VEHICLE CODE	YEAR 19____
16A800	EXTENSION (HOOD PANEL FRONT)				
C3MY 16A800-A	(a)	1	All	A	63/64
370633-S2	Retainer-1/4"-20 x 5/8"	6	a		
16826	ROD (HOOD SUPPORT)				
CODB 16826-A		1	All	C	60/63
16832	SPRING (HOOD SUPPORT ROD)				
8A 16832-A		1	All	C	60/63
16850	ORNAMENT (HOOD TOP)				
C3MY 16853-A		1	All	A	63
C4MY 16850-A	(b)	1	54F, 57F, 65C, F, 75F, 76C, F	A	64
C4GY 16607-A	(b)	1	All	C	64
PB9L 16850-A	Star type - 8 points (a)	1	53,63	D	60
C1VB 16850-B		1	54,65,68,75	D	60
		1	All	D	61/64
351600-S8	Cup-spacer	1	a		
359606-S8	Nut and washer-hex. -No. 10-24	1	a,b		
16853	REFER TO GROUP 16850				
16856-7	MOULDING (HOOD FRONT)				
C1MB 16790-A	R.H. (Δ)	1	All	A	61
C1MB 16791-A	L.H. (Δ)	1	All	A	61
Δ Package also includes -	(3) 55731-S nut-hex.-10-24				
C2MY 16790-A	55-39/64" long (b)	1	All	A	62
C1KB 16856-B	Rustless steel	1	All	C	60
C4GY 16856-A	46-11/16" long	1	All	C	64
Package also includes -					
(8) C4GY-16A746-A retainer	(8) 55731-S2 nut				
PB9L 16856-B	R.H. (a)	1	All	D	60
PB9L 16857-A	L.H. (a)	1	All	D	60
BAM 5721066-F	Retainer-1-11/32" long-attach moulding to hood	AR	a		
359606-S8	Nut and washer-No. 10-24	AR	b		
16877	SLEEVE (HOOD LATCH CONTROL)				
16H 16877-B		1	All	A	60
		2	All	D	60
		1	All	D	61/62
16892	HOOK (HOOD AUXILIARY LATCH)				
C2MB 16892-A		1	All	A	62
C3MY 16892-A		1	All	A	63/64
BAF 16892-A	(a)	1	All	A	60
		1	All	D	61/64
C2YY 16892-A		1	All	B	62
C3YY 16892-A		1	All	B	63
C4GY 16892-A		1	All	C	64
359289-S8	Screw and washer-1/4"-20 x 3/4" long	AR	a		
16897	SPRING (HOOD AUXILIARY CATCH)				
C2MB 16897-A		1	All	A	62
16900	REFER TO GROUP 16929				

Hood

GROUP AND PART NUMBER	DESCRIPTION, SIZE, ETC.	NO. REQ'D	MODEL OR ENGINE CUBIC INCH DISPLACEMENT	VEHICLE CODE	YEAR 19____
16A900	SPACER (HOOD HOOK SUPPORT)				
C1GB 16A900-A		AR	All	C	60/64
16914	HANDLE (HOOD LATCH CONTROL CABLE)				
PB9M 16914-A		1	All	A	60
16916	CABLE (HOOD LATCH CONTROL)				
B9MB 16916-C		1	All	A	60
BAK 14207-A	Remote control	1	All	D	60
C1VB 16916-C		1	All	D	61/63
C4VY 16916-A		1	All	D	64
16917	CLIP (HOOD LOCK LATCH CABLE)				
C1VB 16917-B		1	All	D	61/62
16918	PLATE (HOOD AUXILIARY LATCH STRIKER)				
B7A 16918-A		1	All	A	60
C2MB 16918-A		1	All	A	62
C2YB 16918-A		1	All	B	62/63
C4GY 16918-A		1	All	C	64
16921	SPRING (HOOD LOCK TRIGGER)				
B6A 16921-A	2" long	1	All	D	60
B7A 16921-A	3.2 coils	2	All	D	60
16925	SPRING (HOOD LOCK)				
B5S 16925-A		1	All	A	61
PB9E 16925-A		1	All	A	62
C3AZ 16925-A		1	All	A	63/64
C2YB 16925-A		1	All	B	62
C3YY 16925-A		1	All	B	63
		1	All	C	64
16927	GUIDE (HOOD LOCK DOWEL SPRING)				
C2DZ 16927-A		1	All	A	62/64
COAB 16927-A		1	All	A	61
		1	All	B	62
C3YY 16927-A		1	All	B	63
		1	All	C	64
16929	HOOK (HOOD LOCK)				
COMB 16900-A		1	All	A	60
B5S 16929-A		1	All	A	61
C2MB 16929-A		1	All	A	62/64
		1	All	B	63
		1	All	C	64
C2YB 16929-A		1	All	B	62
C1KB 16929-A		1	All	C	60/63
BAK 16929-C	(a)	2	All	D	60
C1VY 16900-A		1	All	D	61/64
33943-S8	Nut-hex.jam-1/2"-20	2	a		
16930	BRACKET (HOOD CONTROL)				
COLB 16930-A		1	All	D	60
C1VB 16930-C		1	All	D	61/63
16993	BUMPER (HOOD LOCK CAM)				
B7A 16993-A	Rubber	2	All	D	60

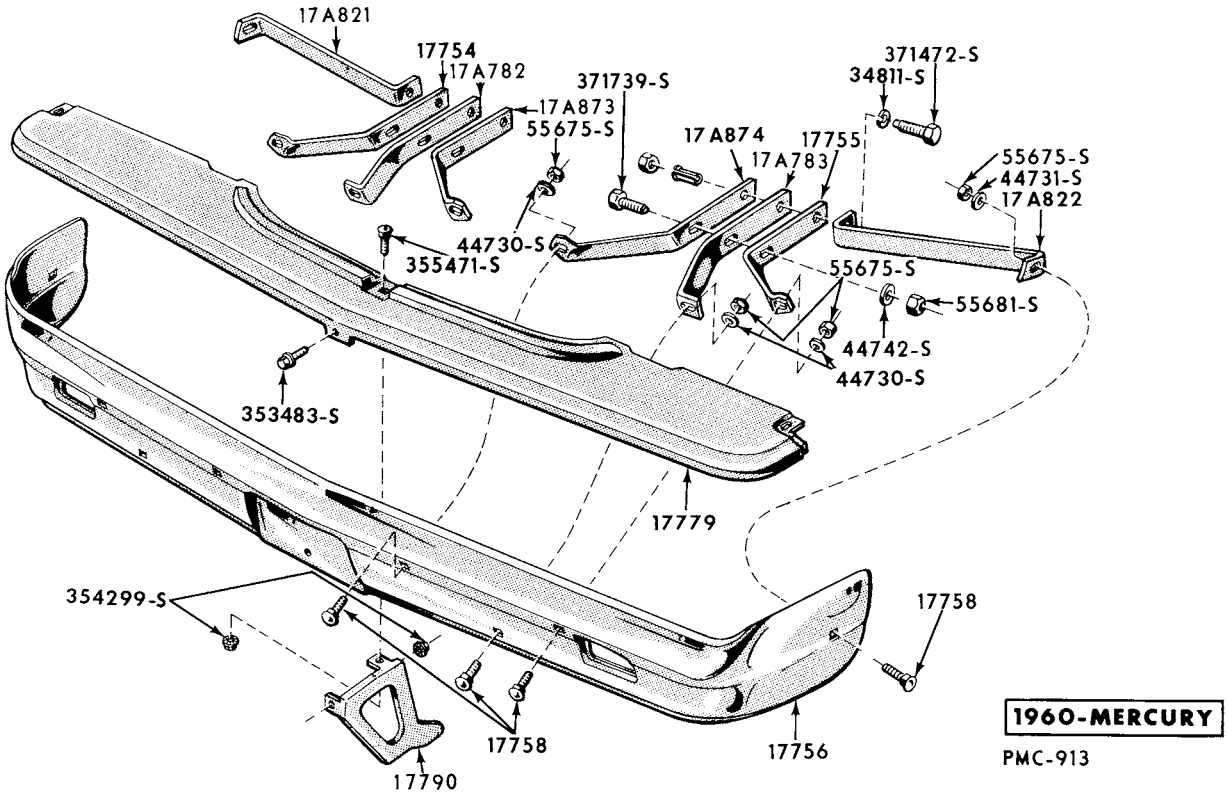

FRONT BUMPER and RELATED PARTS

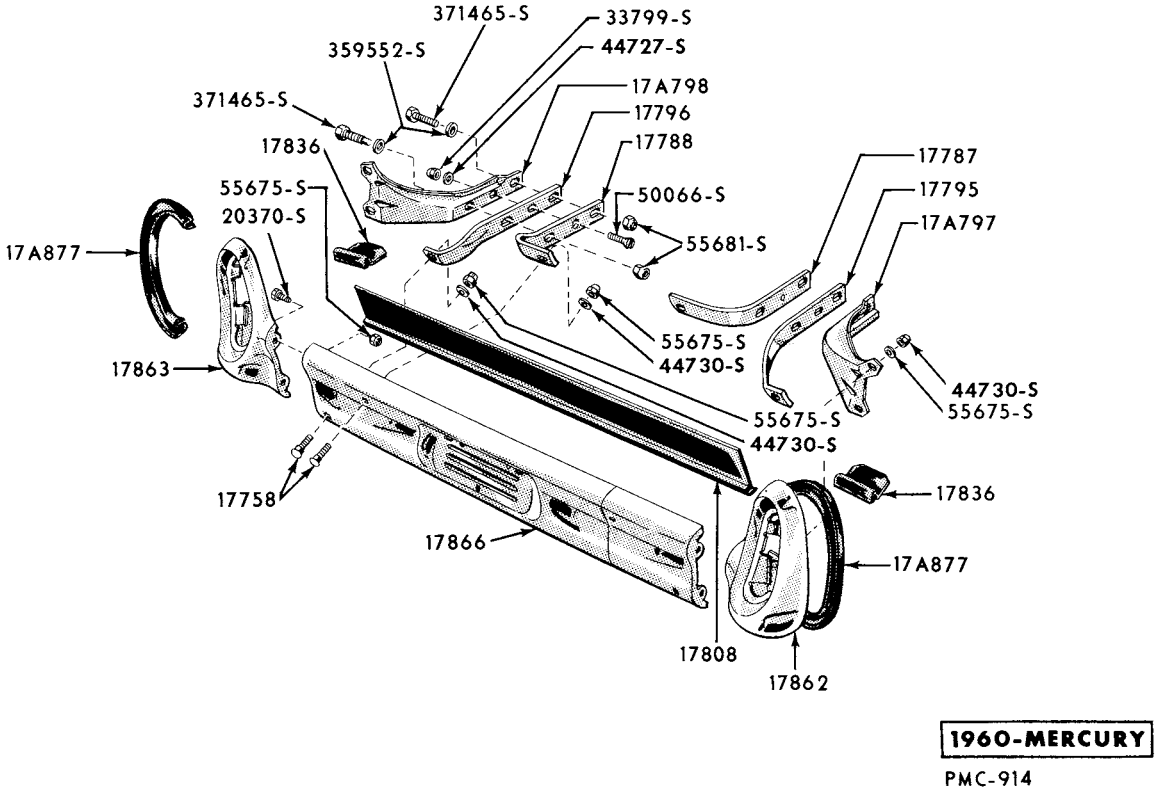

REAR BUMPER and RELATED PARTS

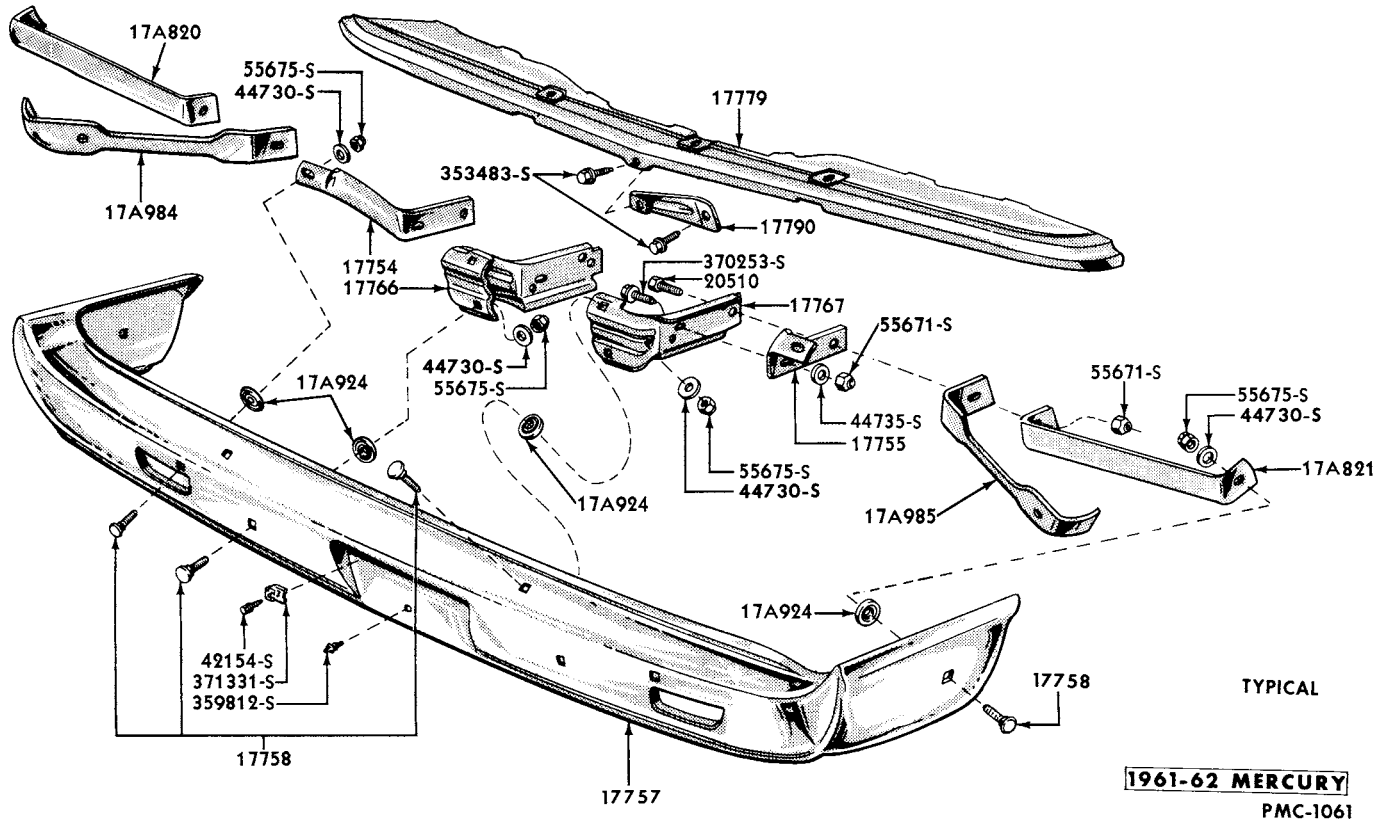

FRONT BUMPER and RELATED PARTS

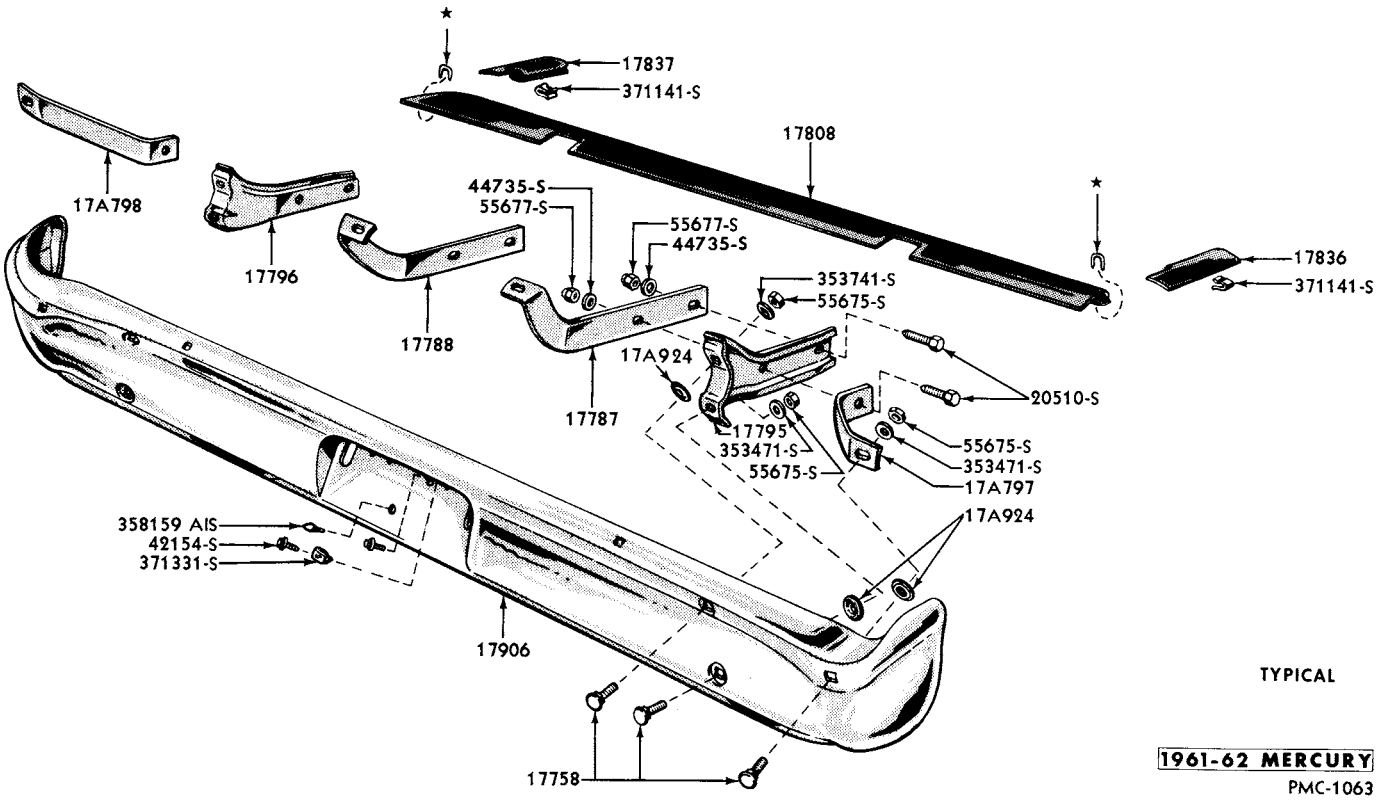

REAR BUMPER and RELATED PARTS - EXCEPT STATION WAGON

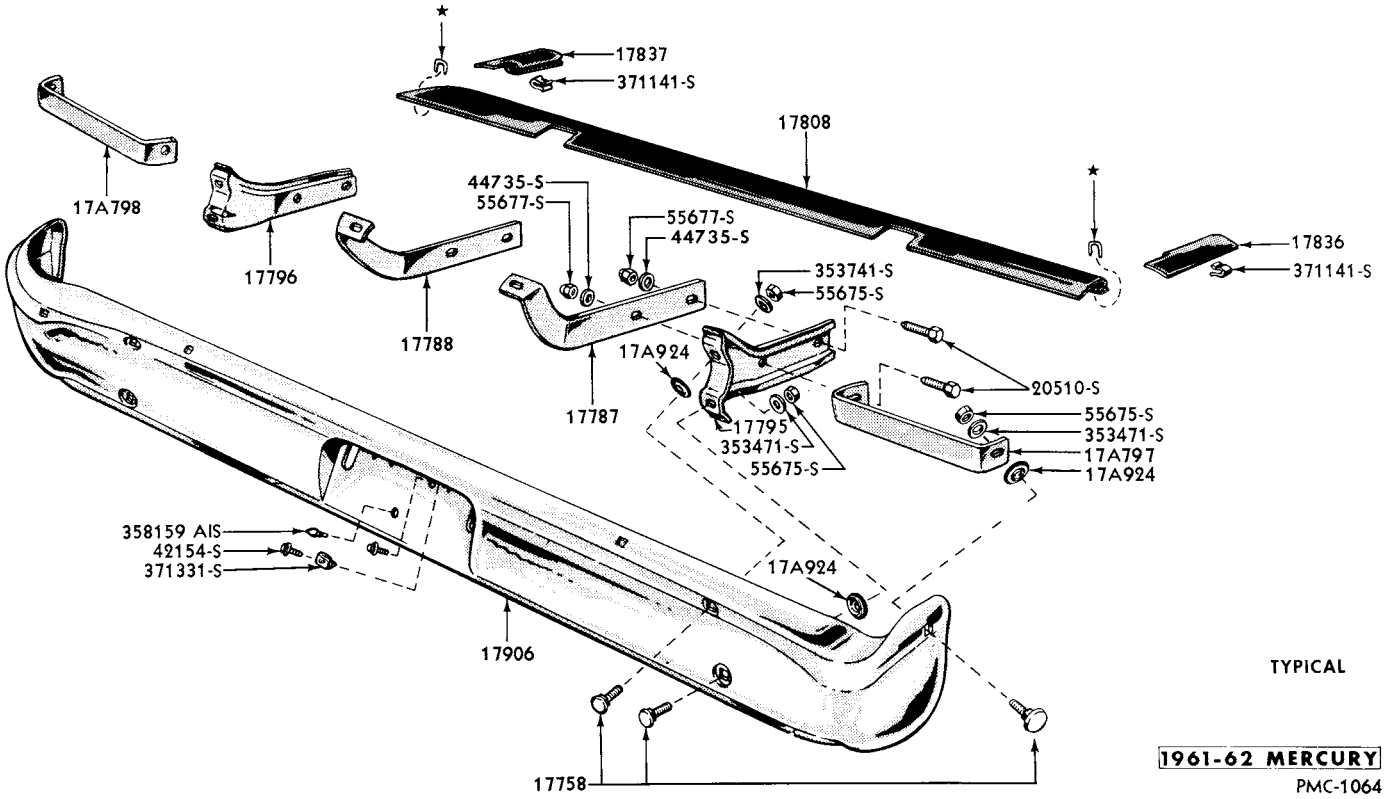

REAR BUMPER and RELATED PARTS - STATION WAGON

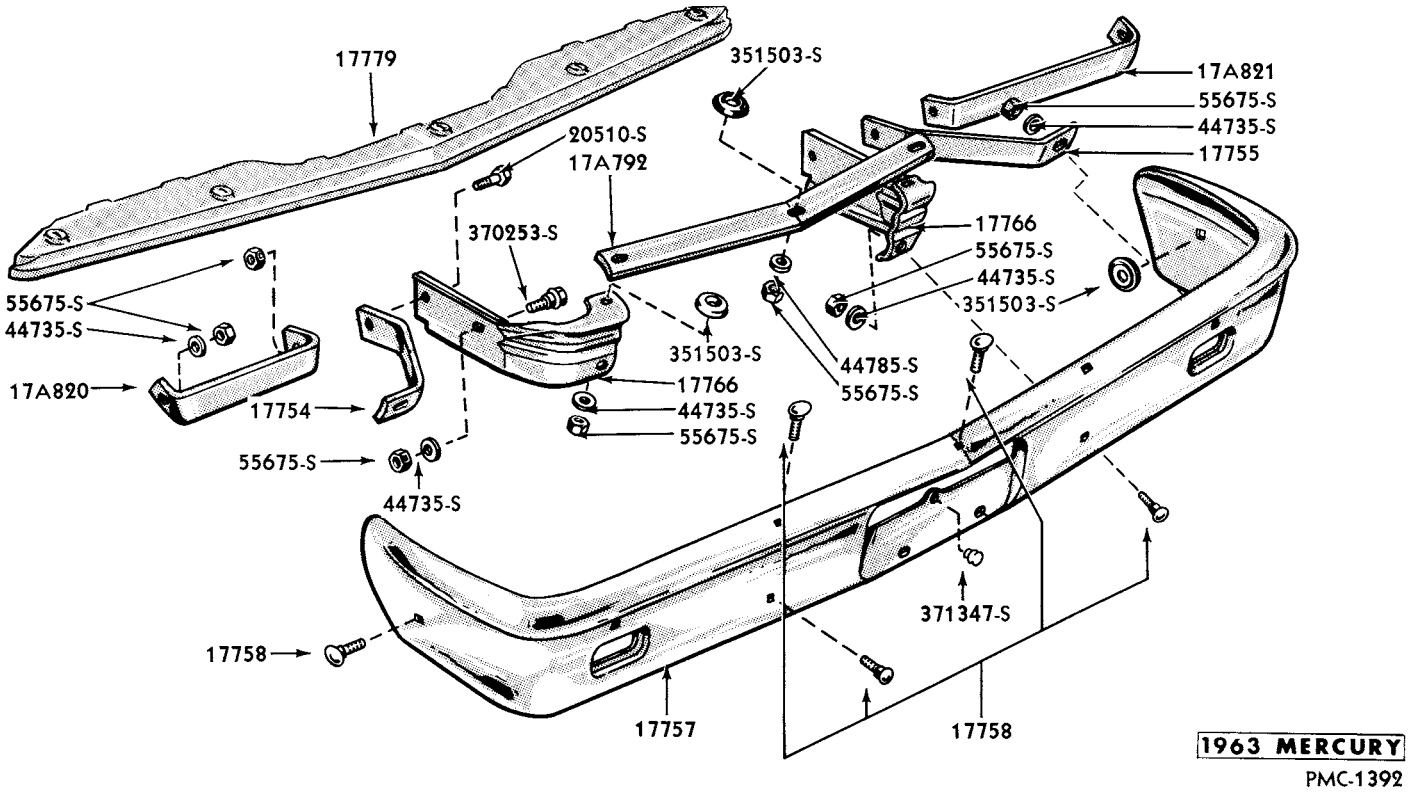

FRONT BUMPER and RELATED PARTS

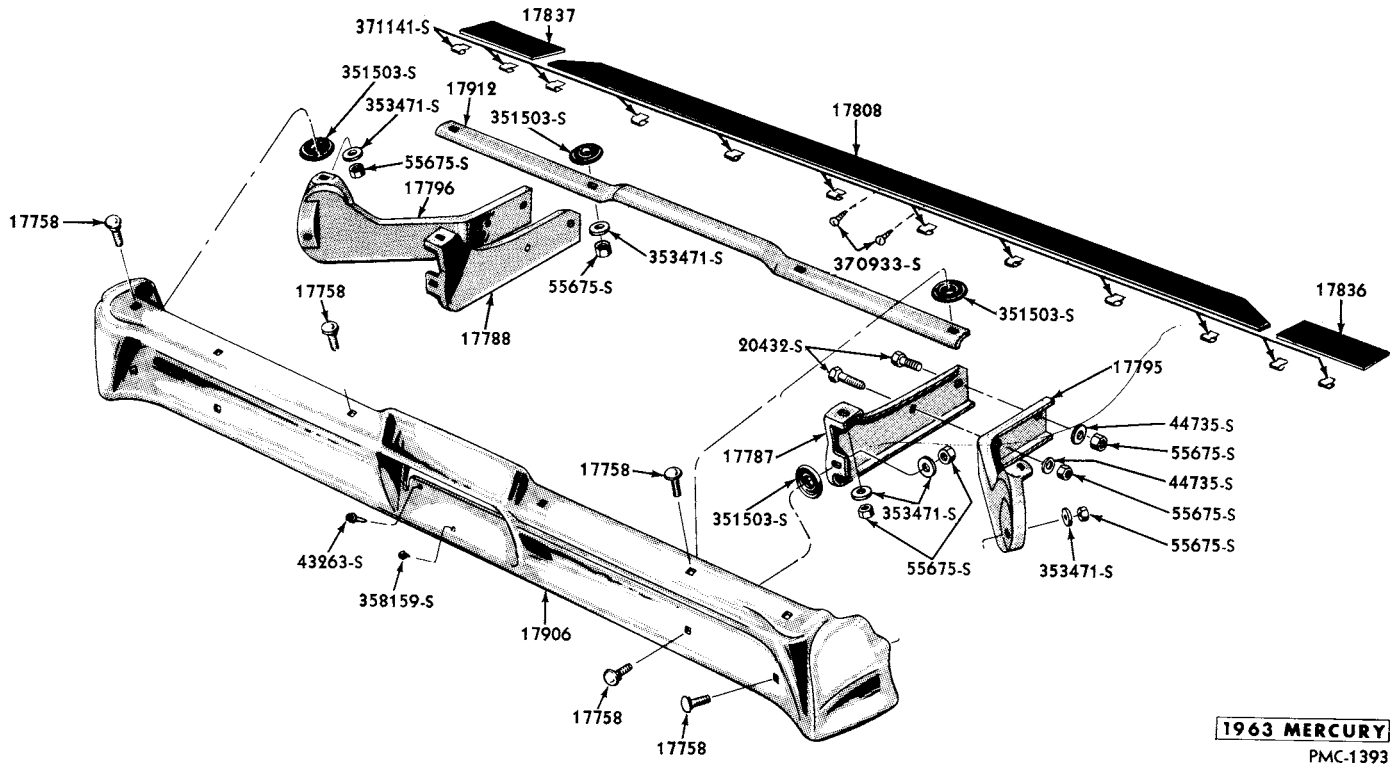

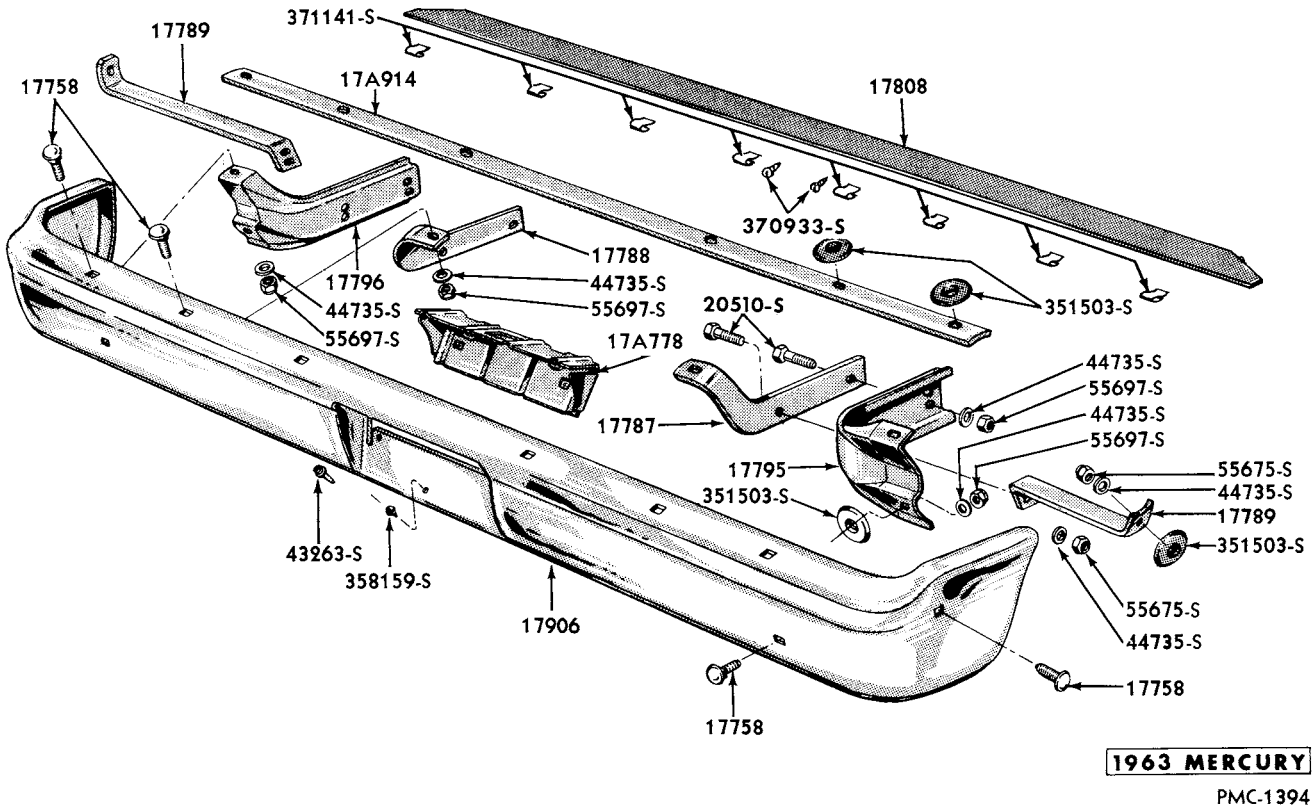

REAR BUMPER and RELATED PARTS - PASSENGER

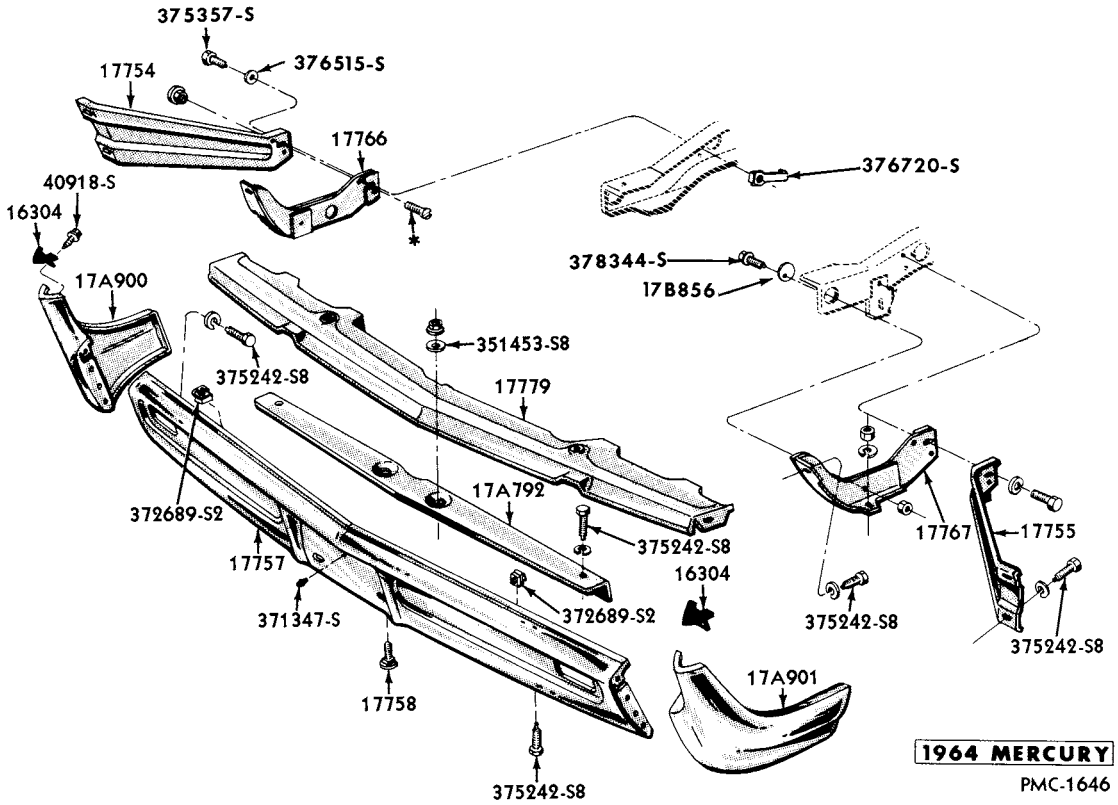

FRONT BUMPER and RELATED PARTS

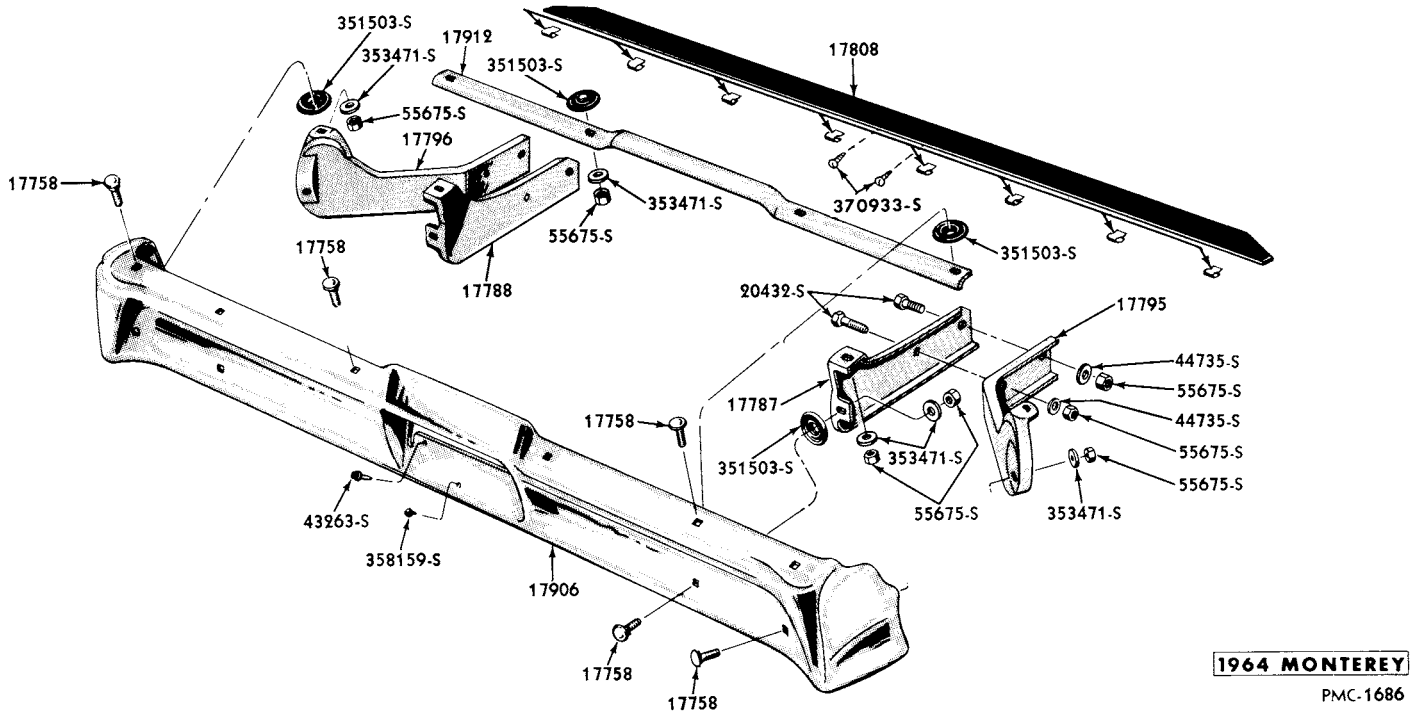

REAR BUMPER and RELATED PARTS

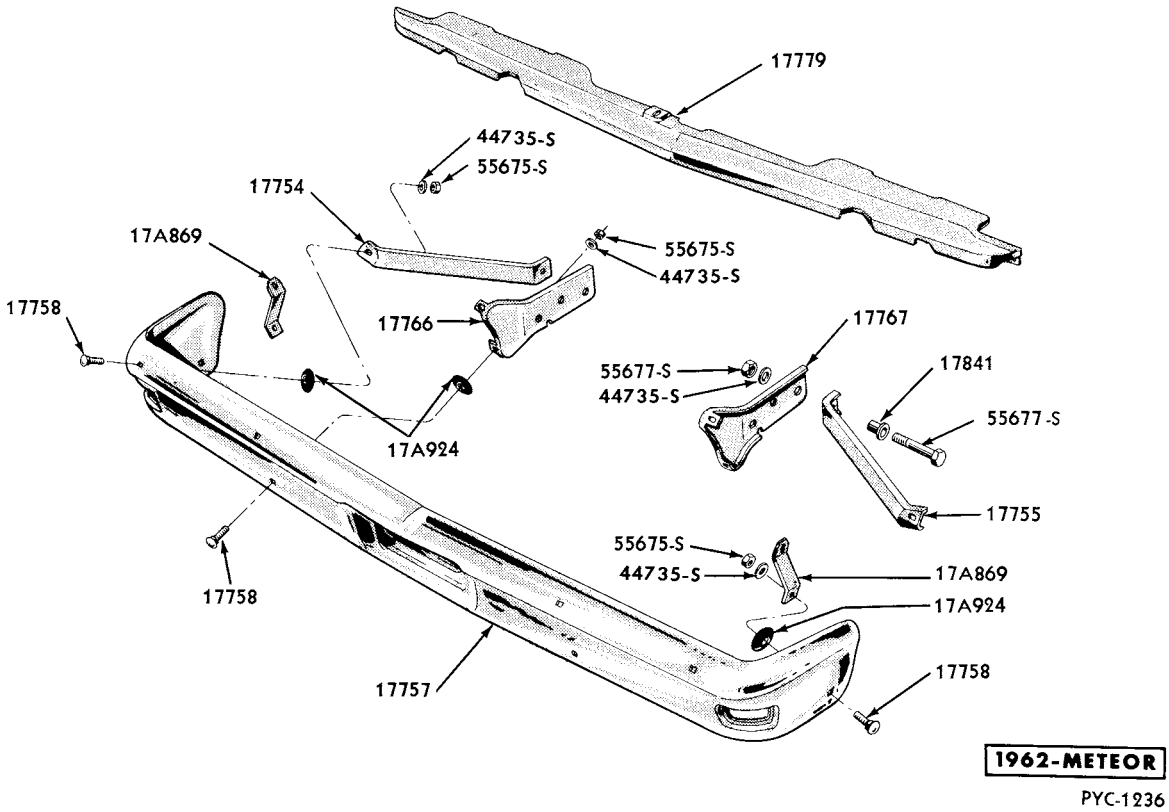

FRONT BUMPER and RELATED PARTS

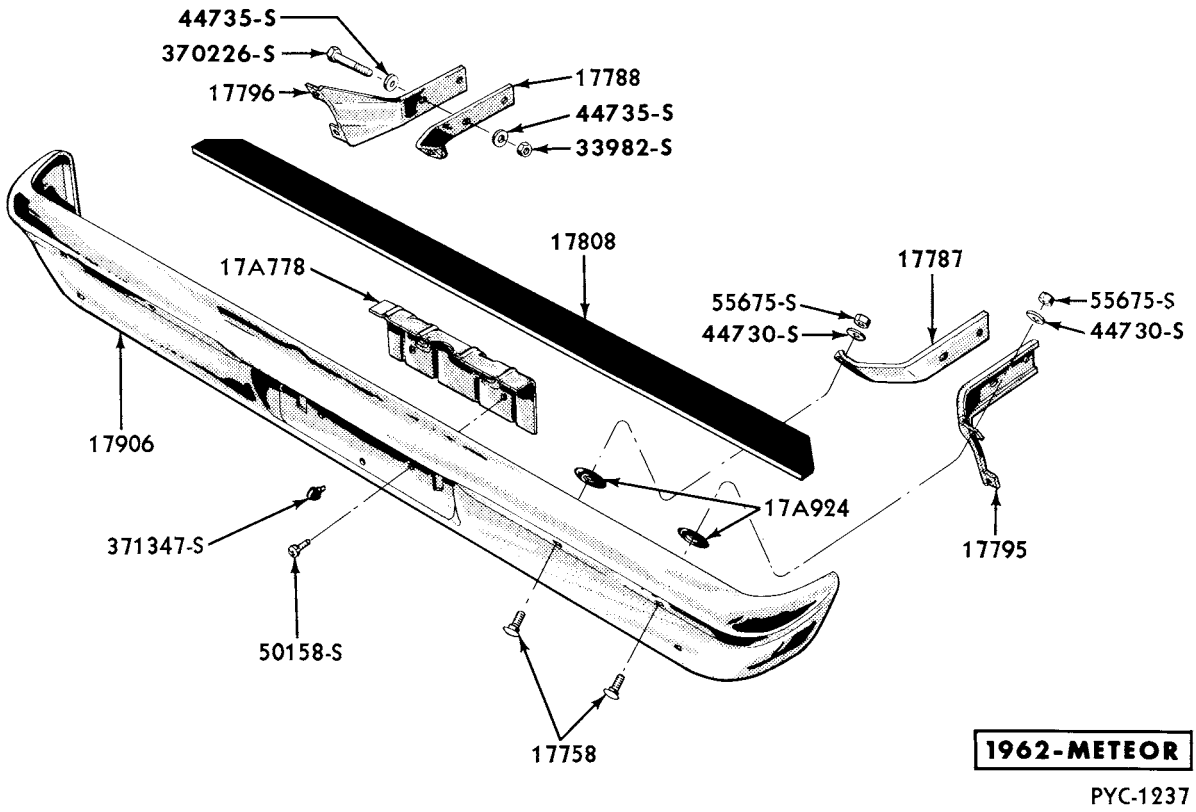

REAR BUMPER and RELATED PARTS

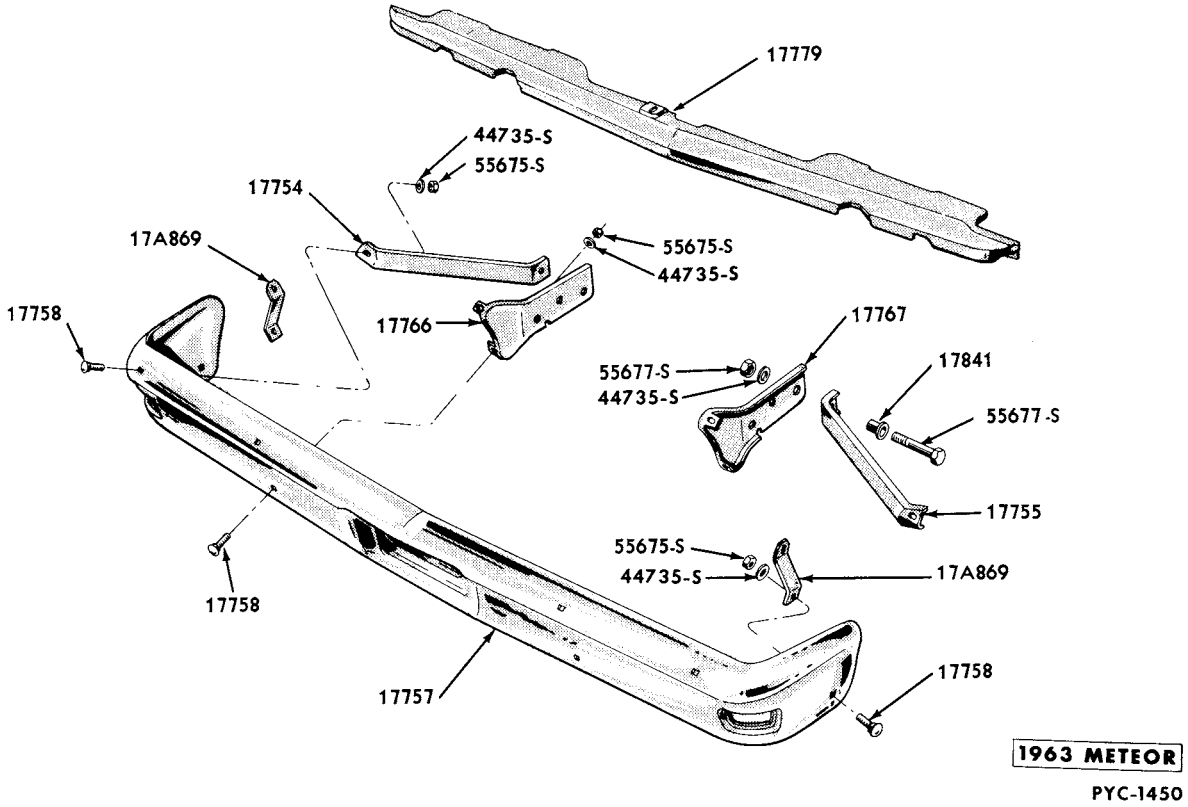

FRONT BUMPER and RELATED PARTS

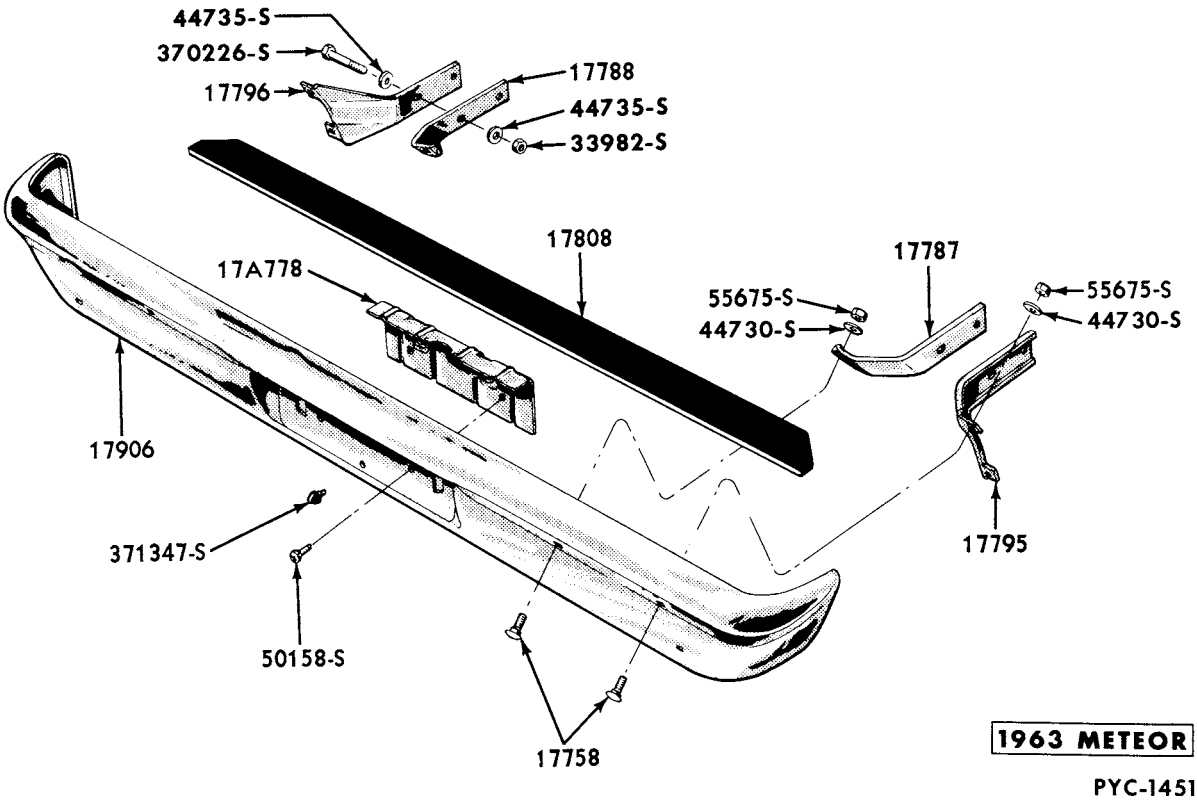

REAR BUMPER and RELATED PARTS - PASSENGER

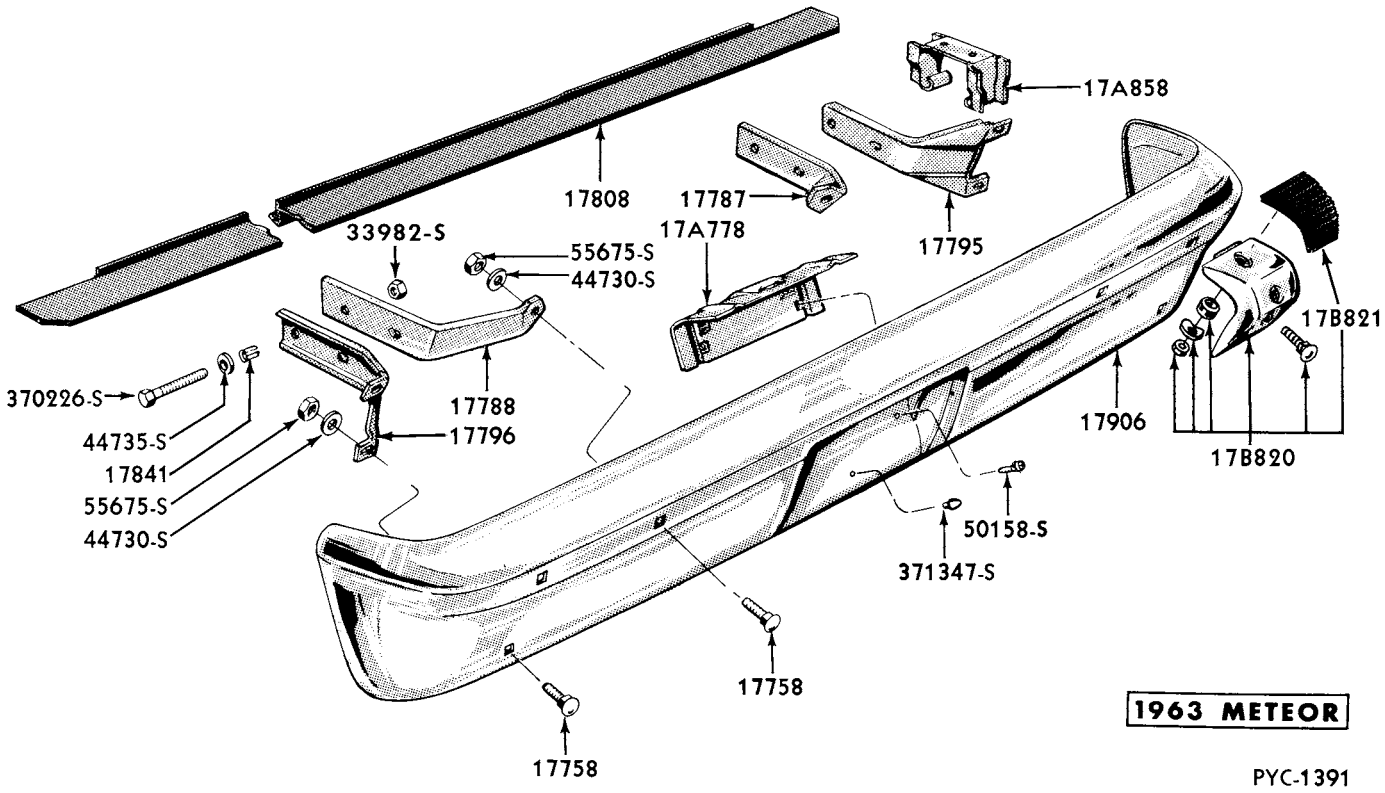

REAR BUMPER and RELATED PARTS - STATION WAGON

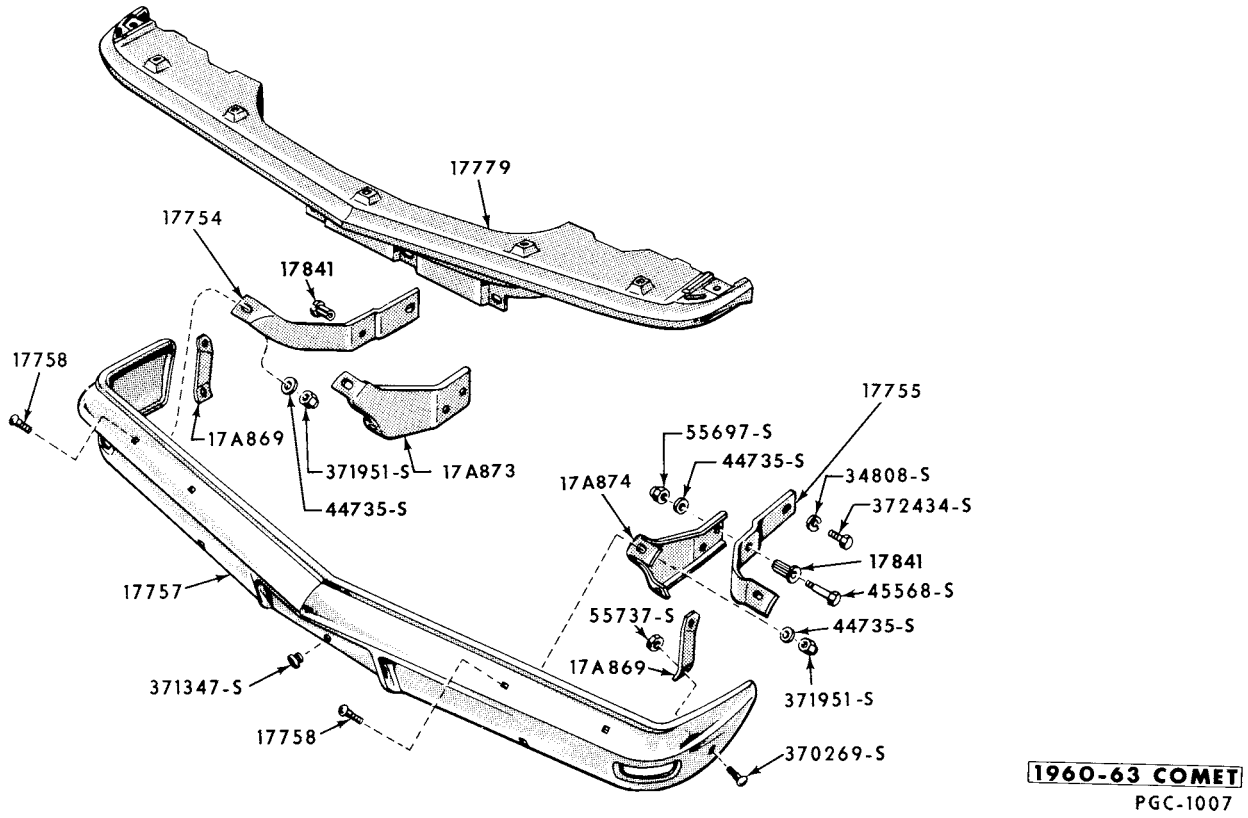

FRONT BUMPER and RELATED PARTS

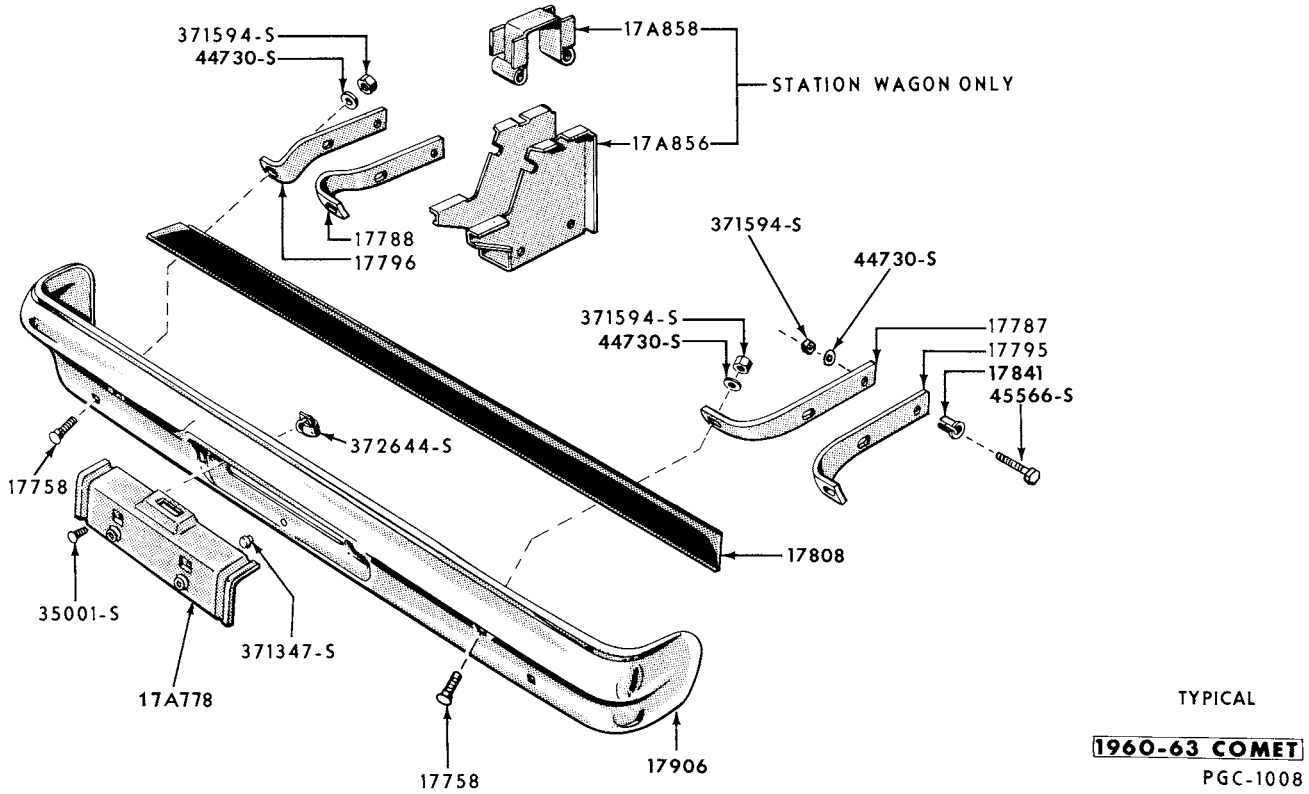

REAR BUMPER and RELATED PARTS

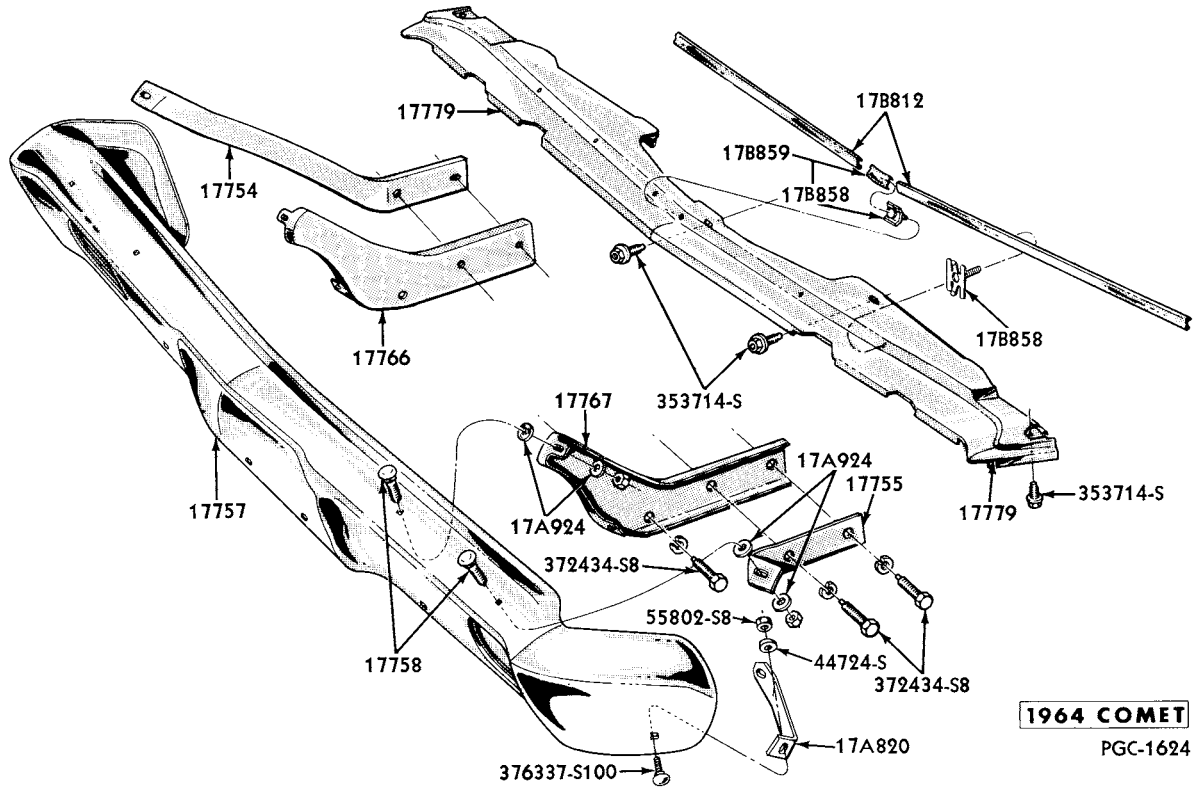

FRONT BUMPER and RELATED PARTS

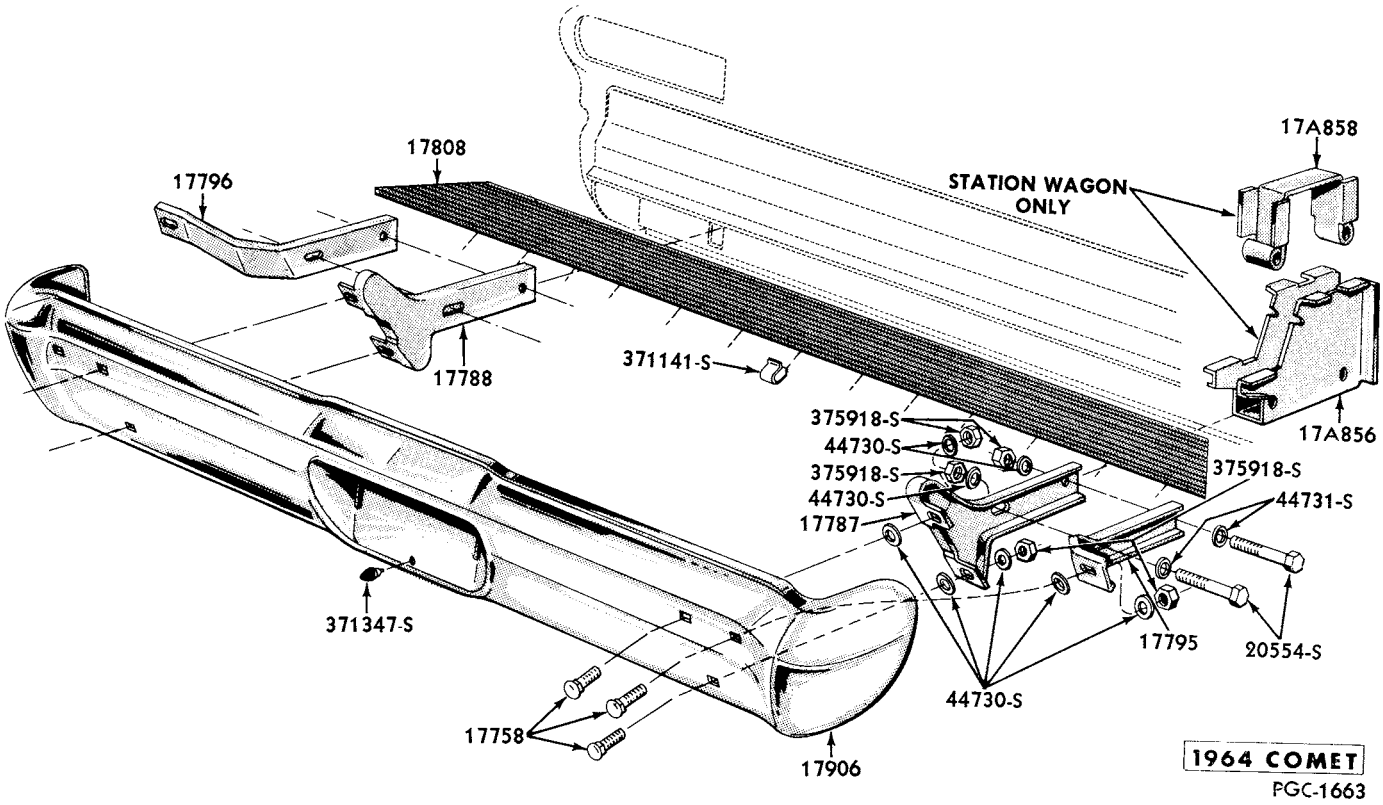

REAR BUMPER and RELATED PARTS

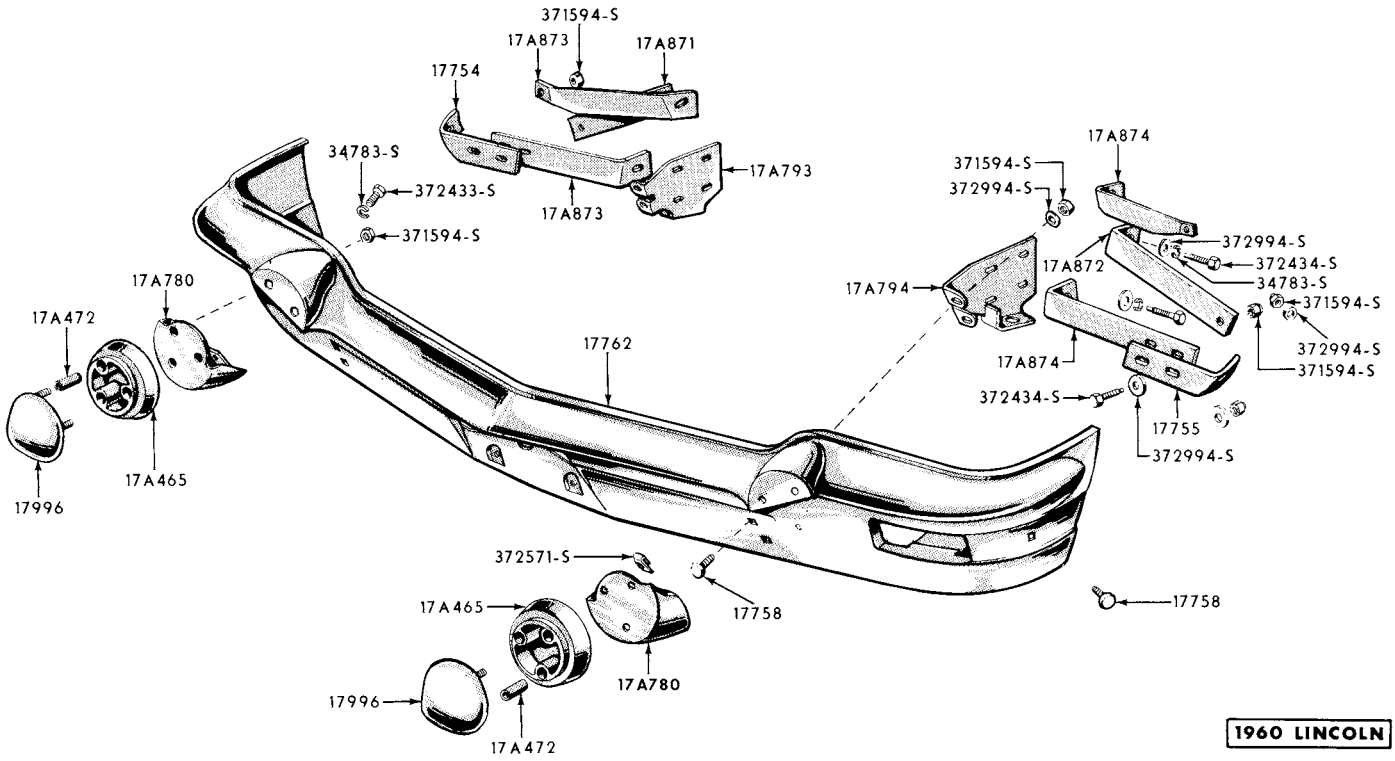

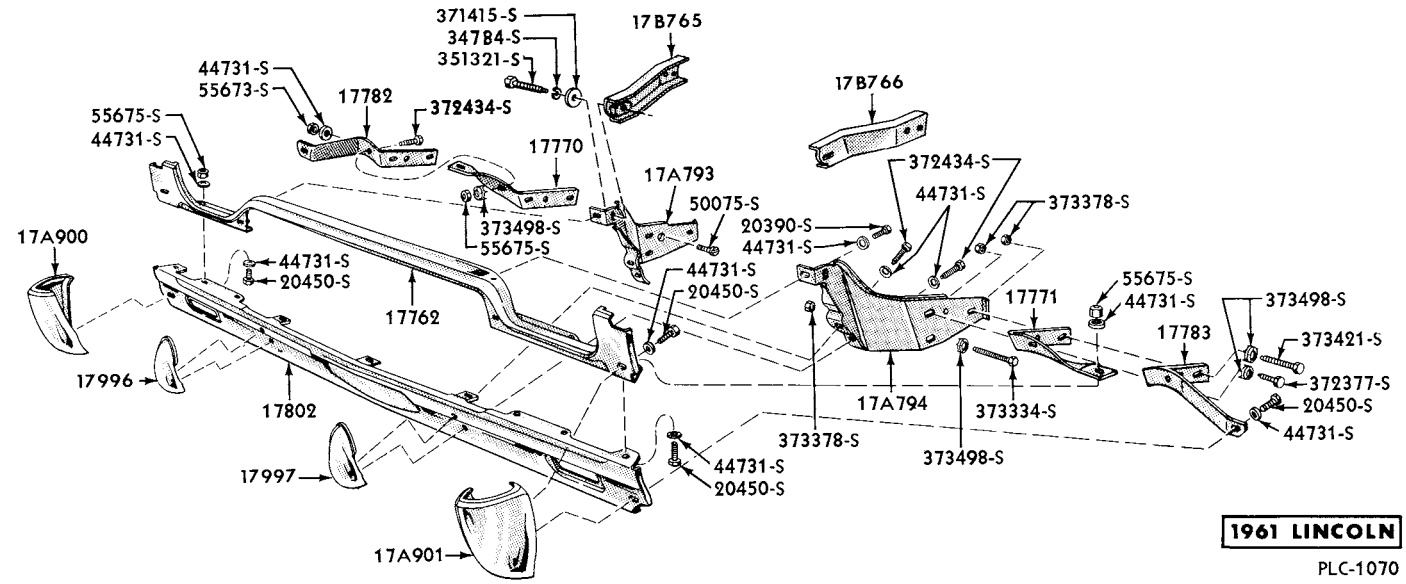

FRONT BUMPER and RELATED PARTS

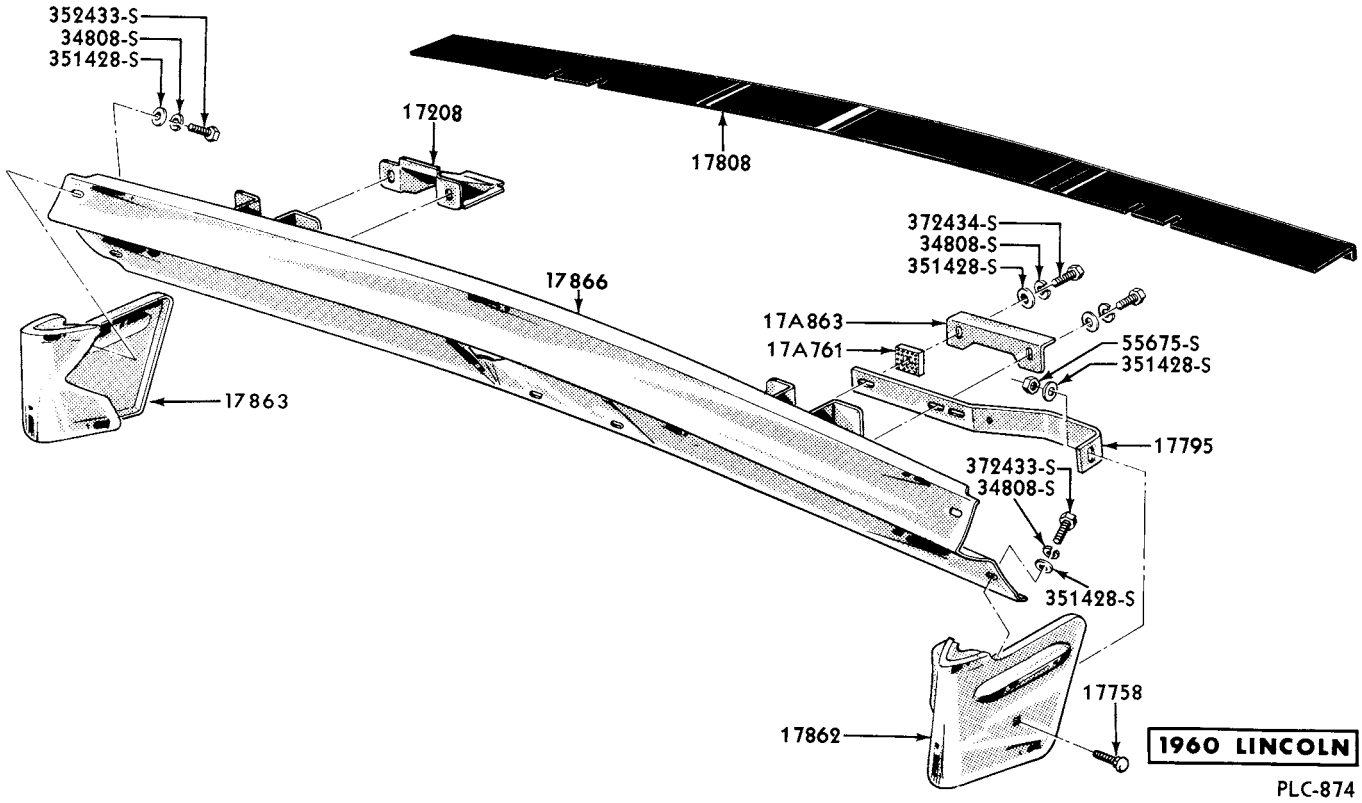

REAR BUMPER and RELATED PARTS

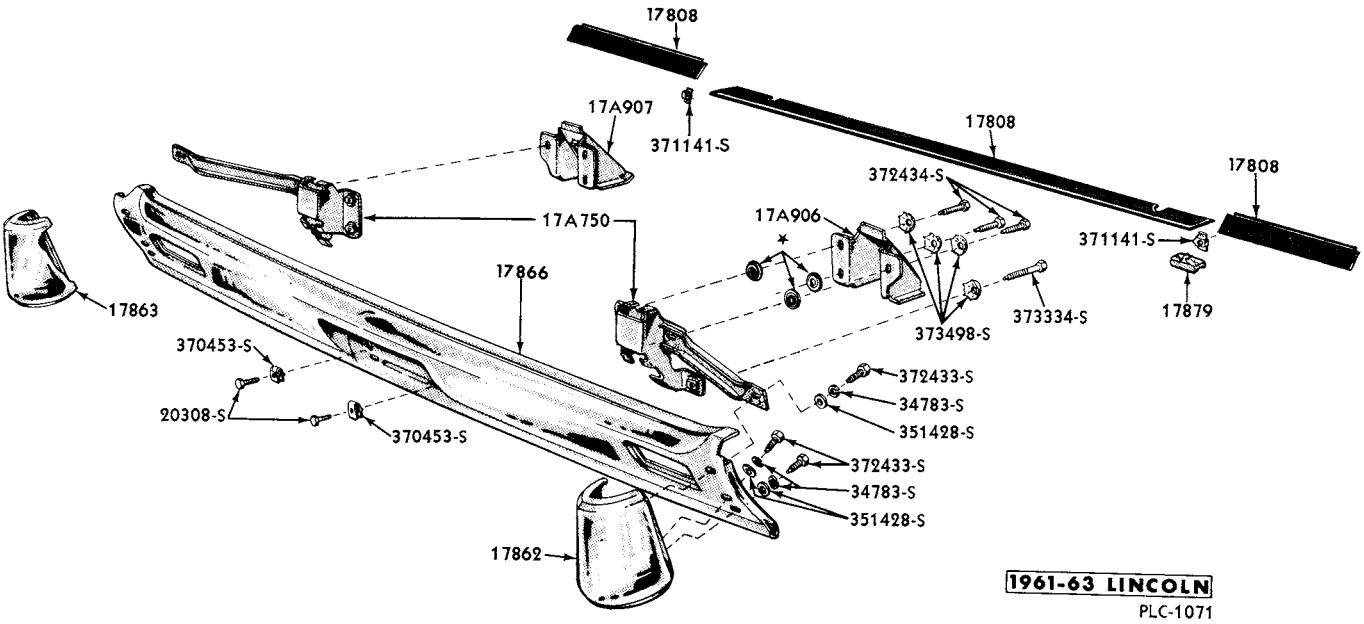

REAR BUMPER and RELATED PARTS

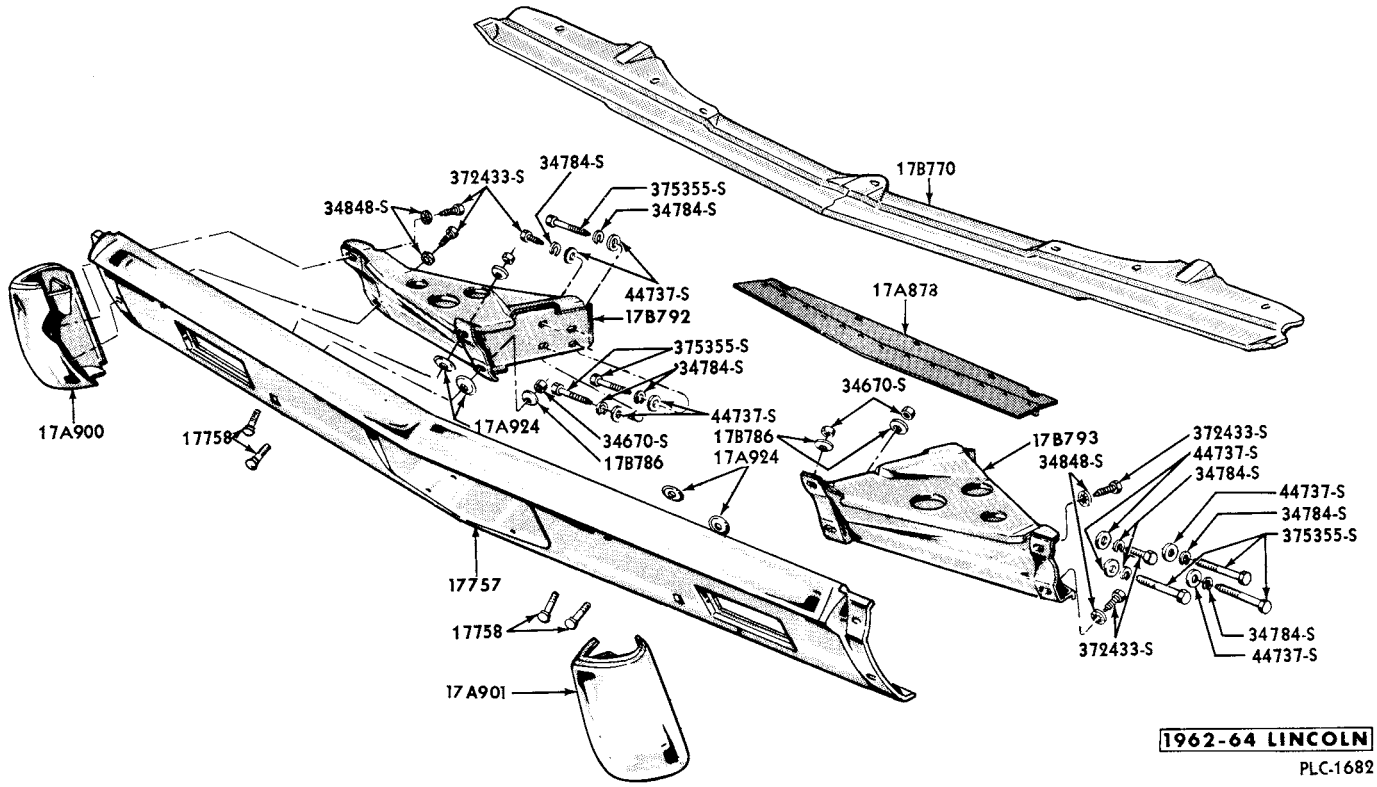

FRONT BUMPER and RELATED PARTS

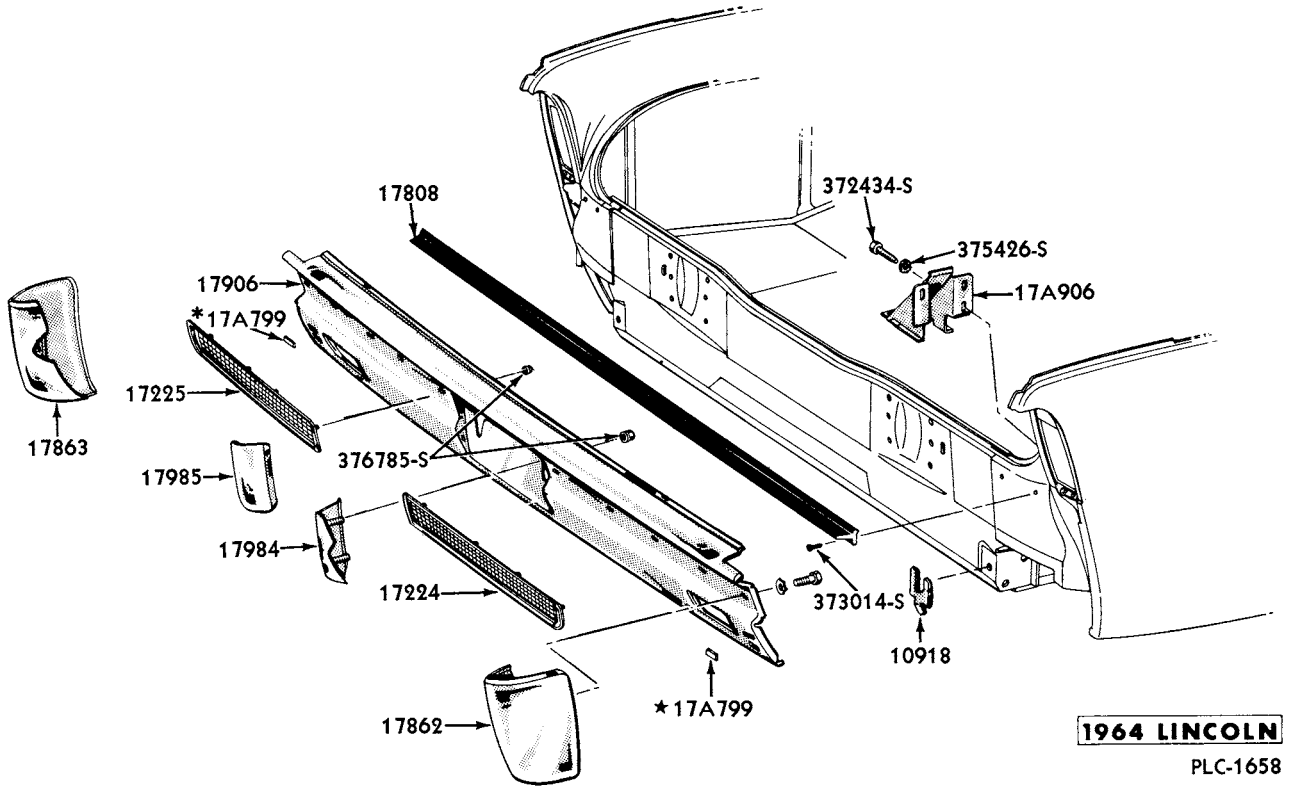

REAR BUMPER and RELATED PARTS

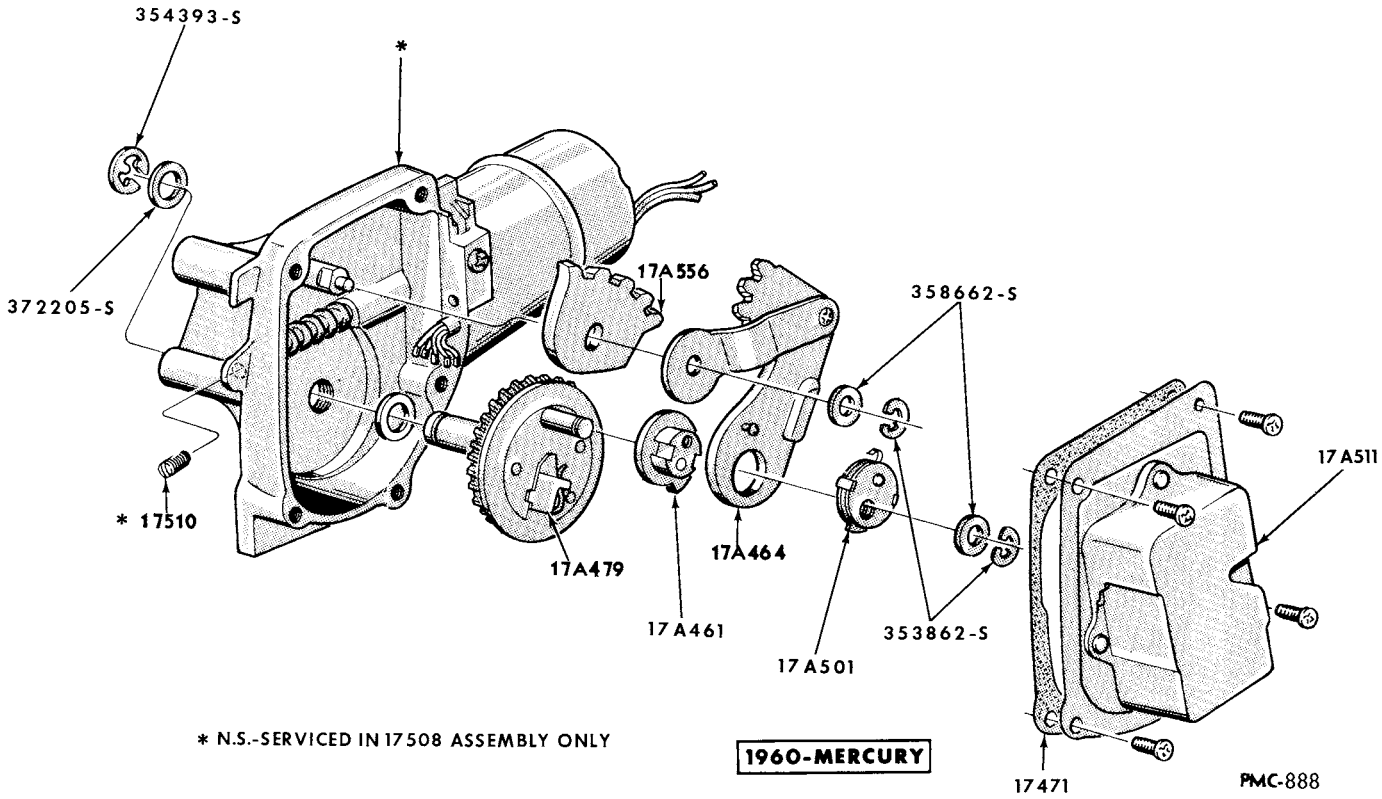

WINDSHIELD WIPER MOTOR

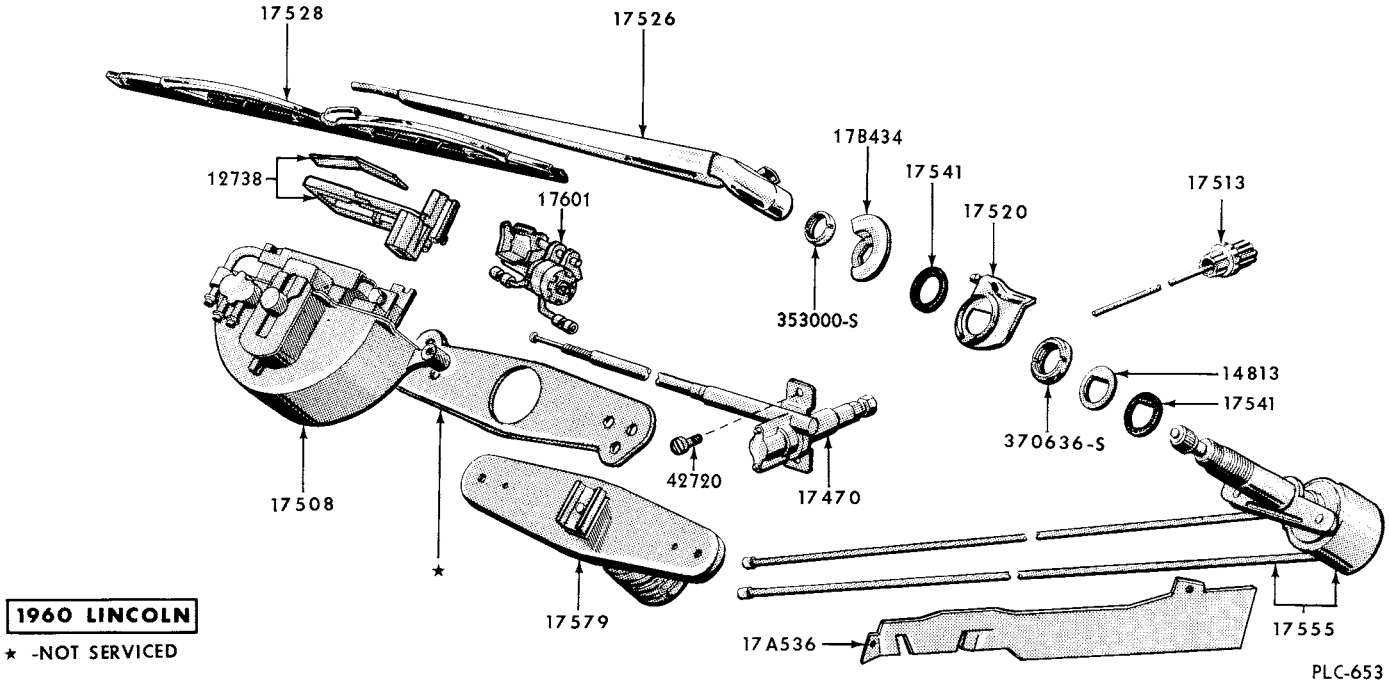

WINDSHIELD WIPER

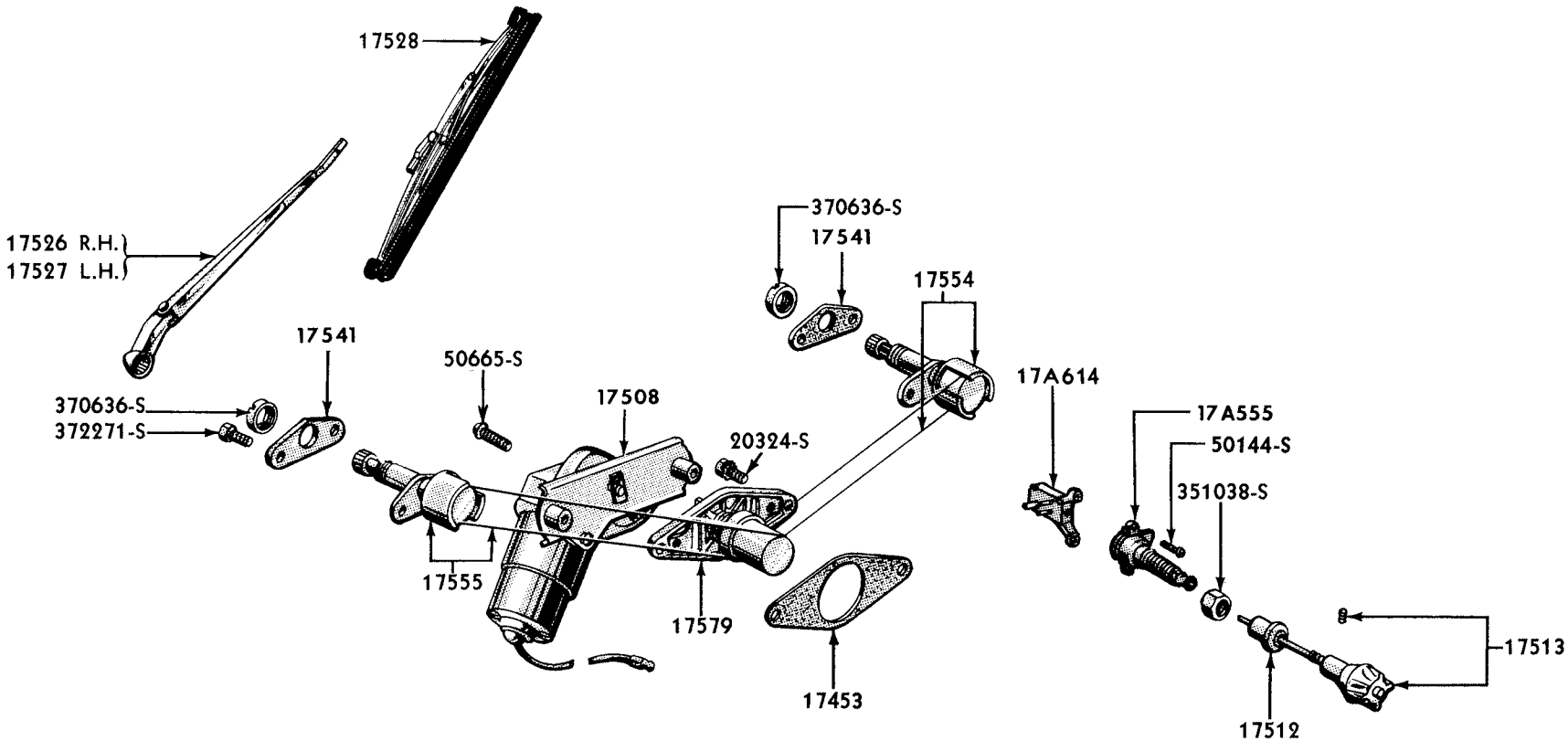

1960-MERCURY

PMC-921

WINDSHIELD WIPERS and RELATED PARTS

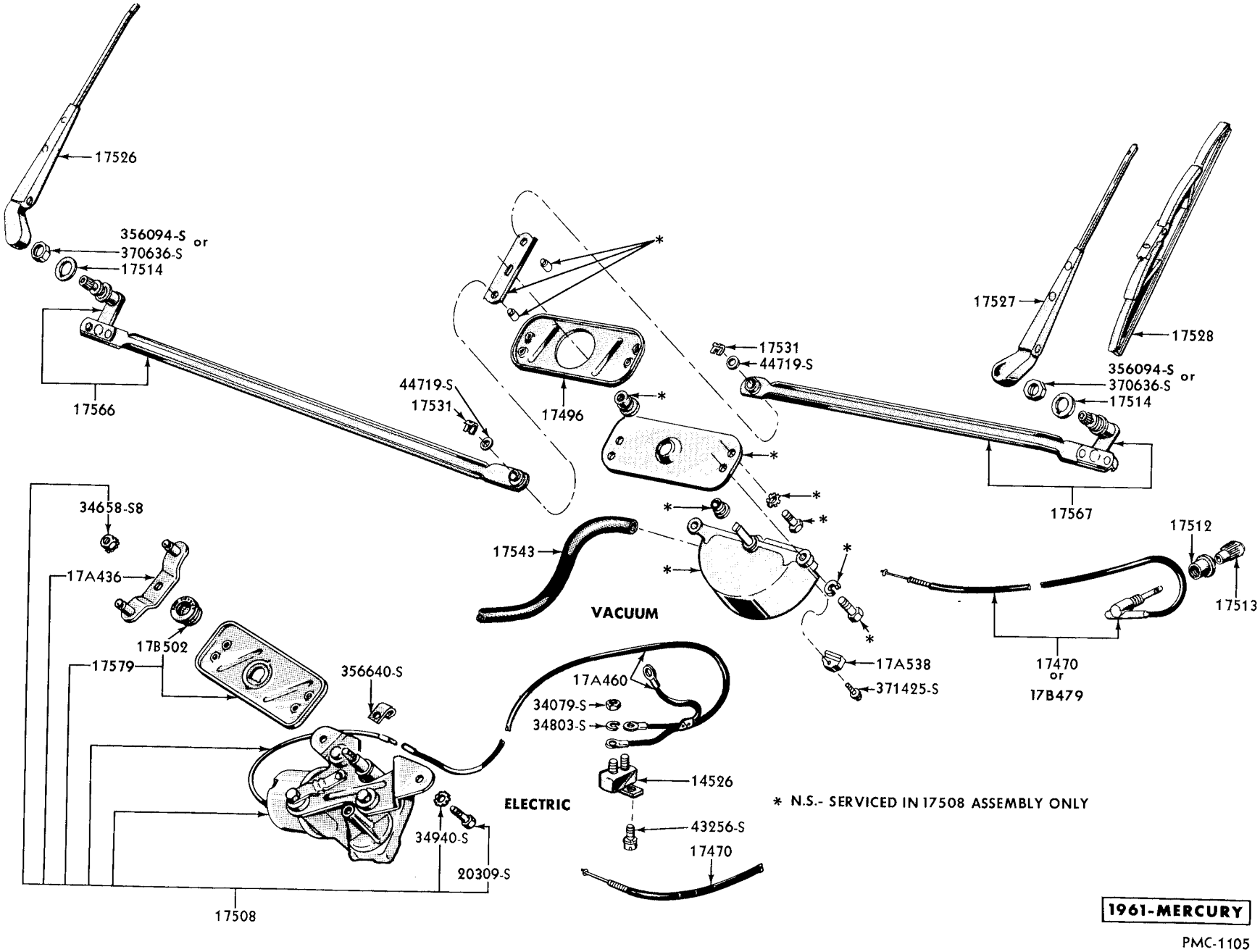

WINDSHIELD WIPERS and RELATED PARTS

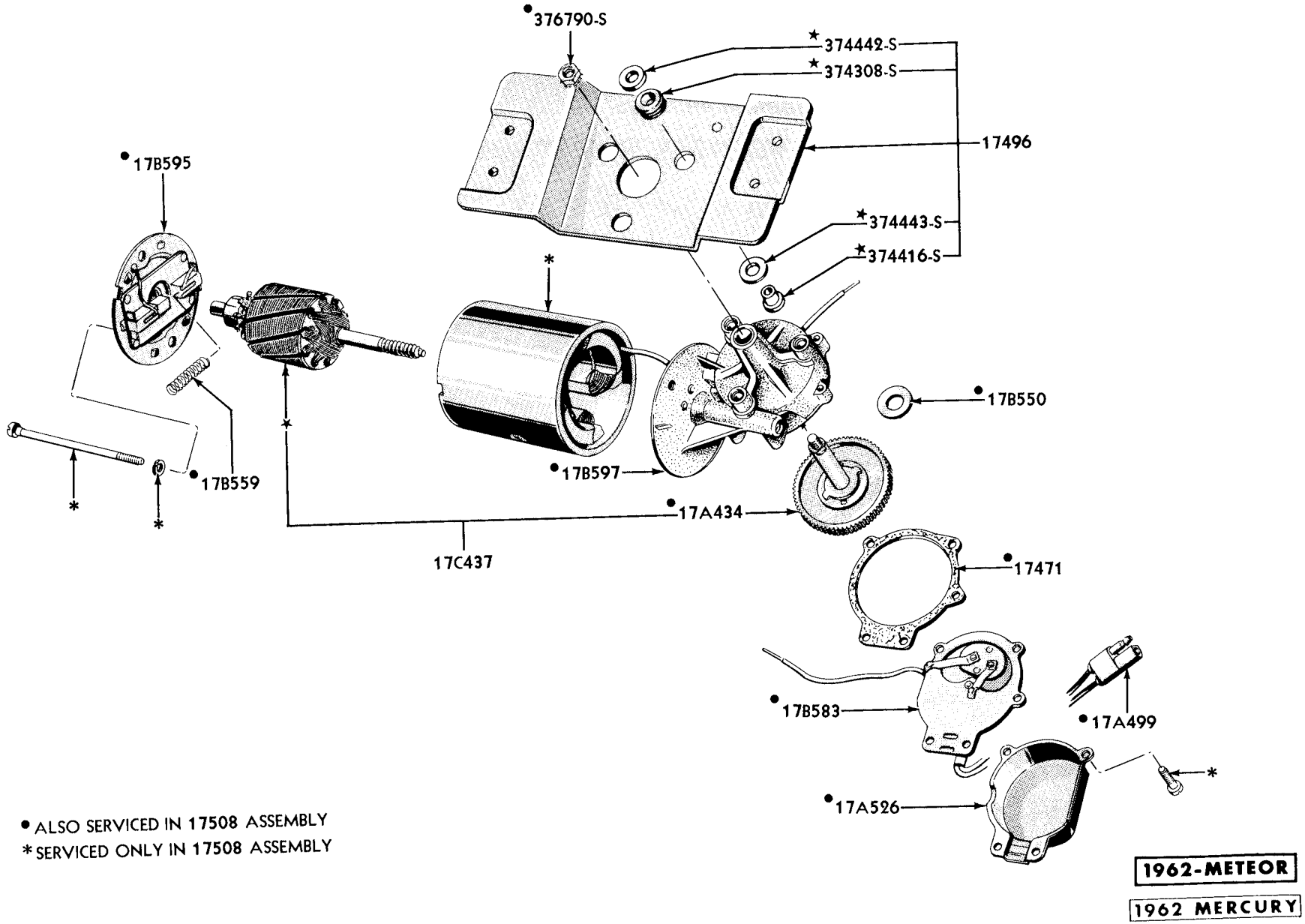

• ALSO SERVICED IN 17508 ASSEMBLY
* SERVICED ONLY IN 17508 ASSEMBLY

WINDSHIELD WIPER MOTOR

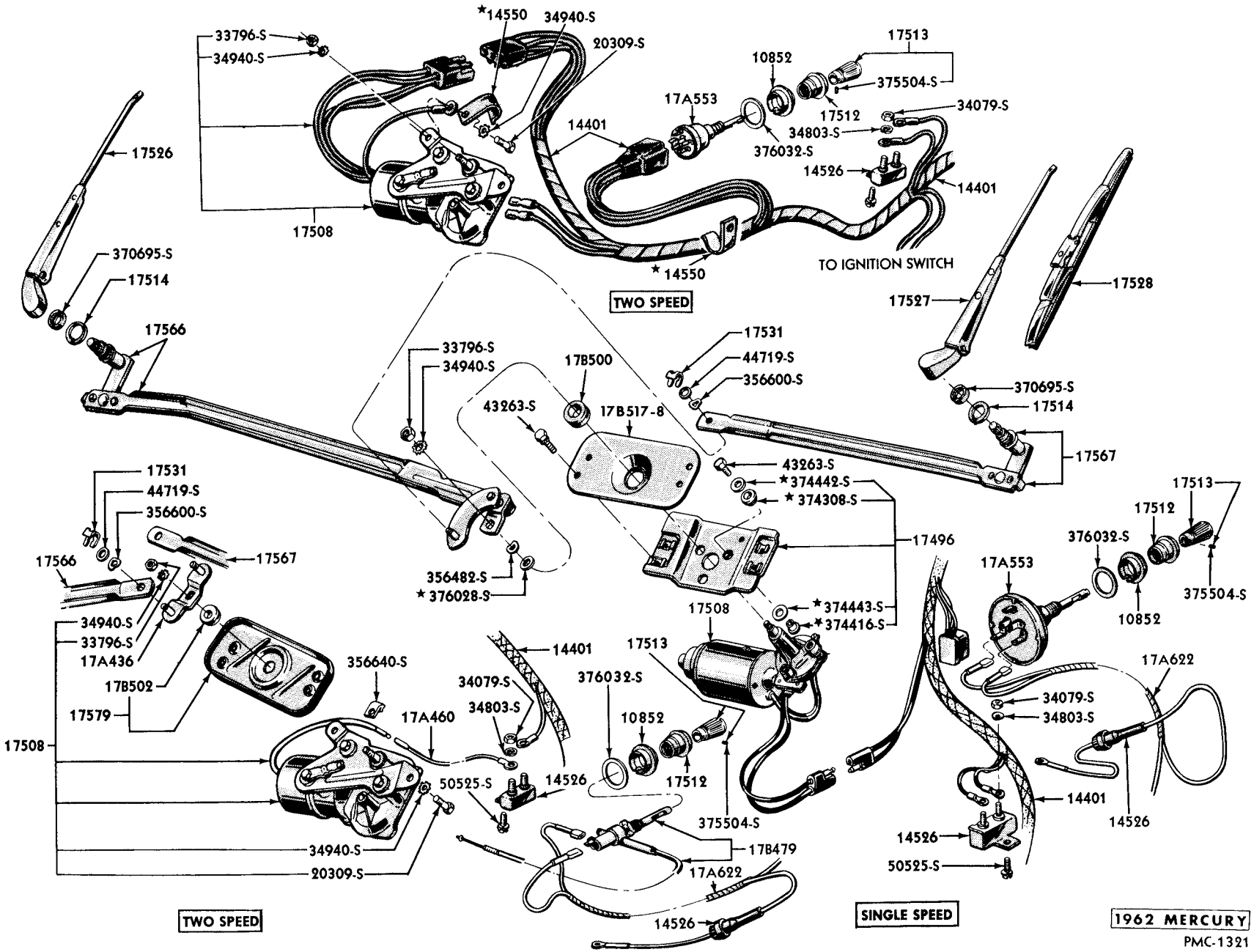

WINDSHIELD WIPER and RELATED PARTS

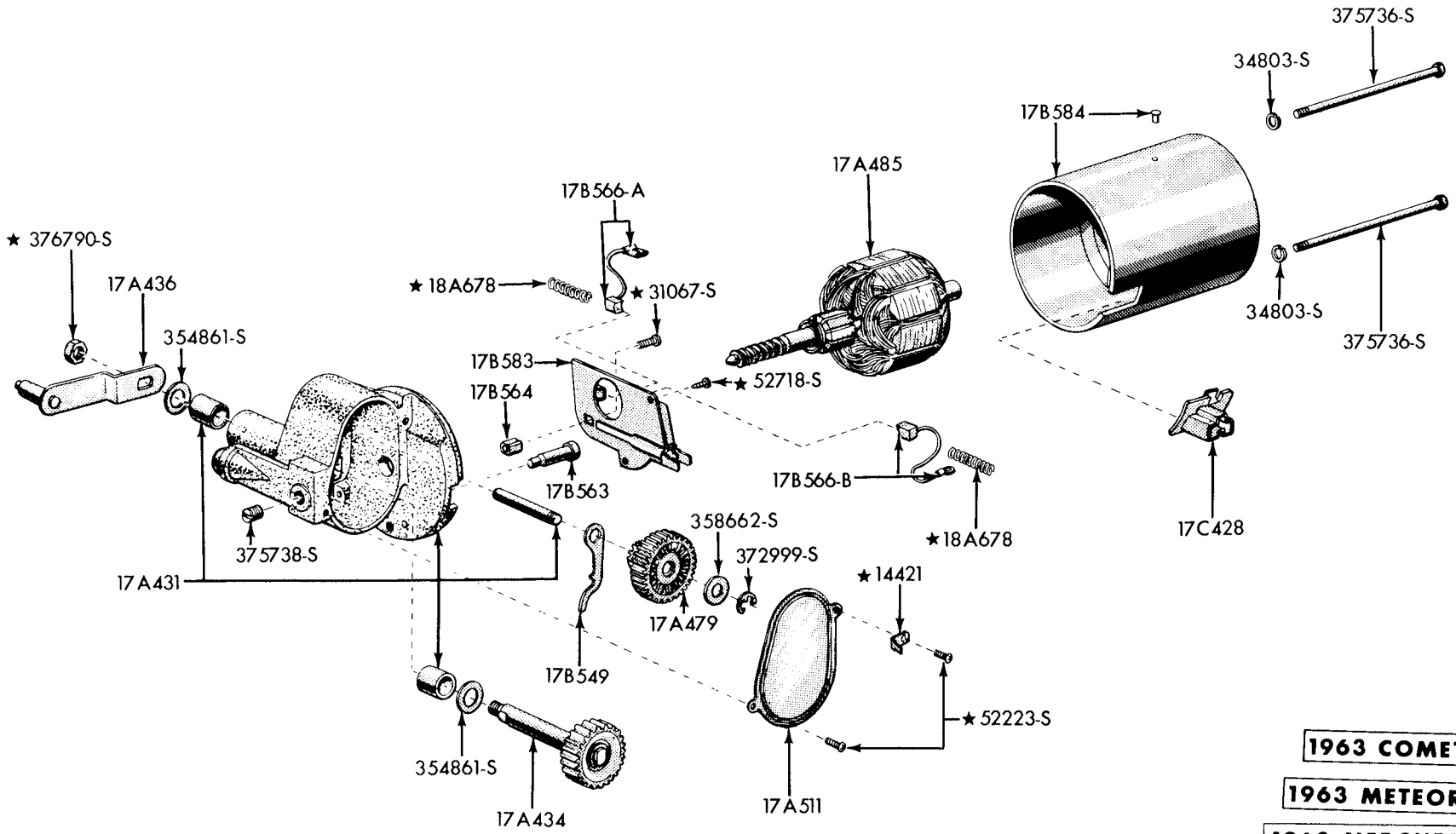

1963 COMET

1963 METEOR

1963 MERCURY

PMC-1502

WINDSHIELD WIPER MOTOR - SINGLE SPEED

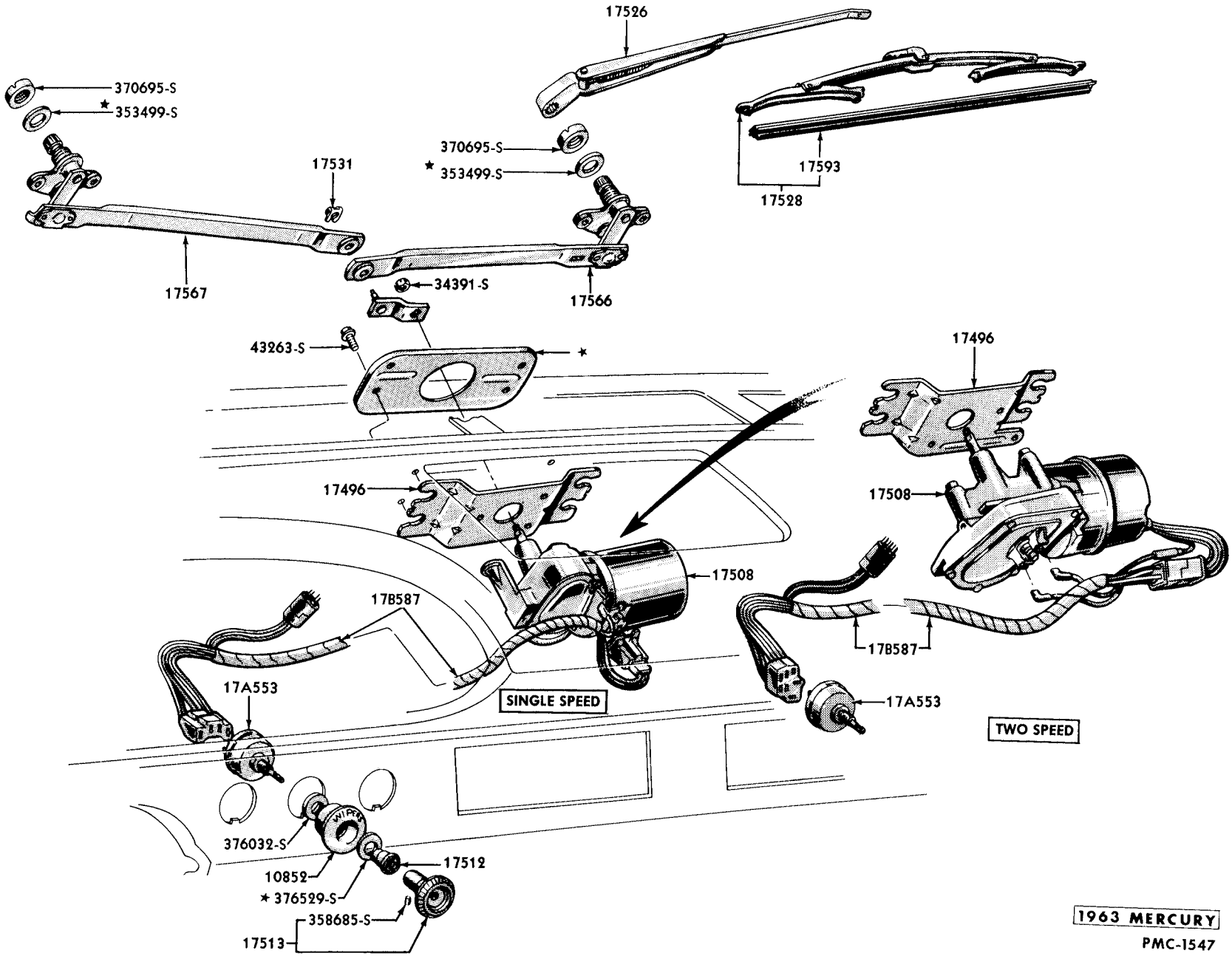

WINDSHIELD WIPER and RELATED PARTS

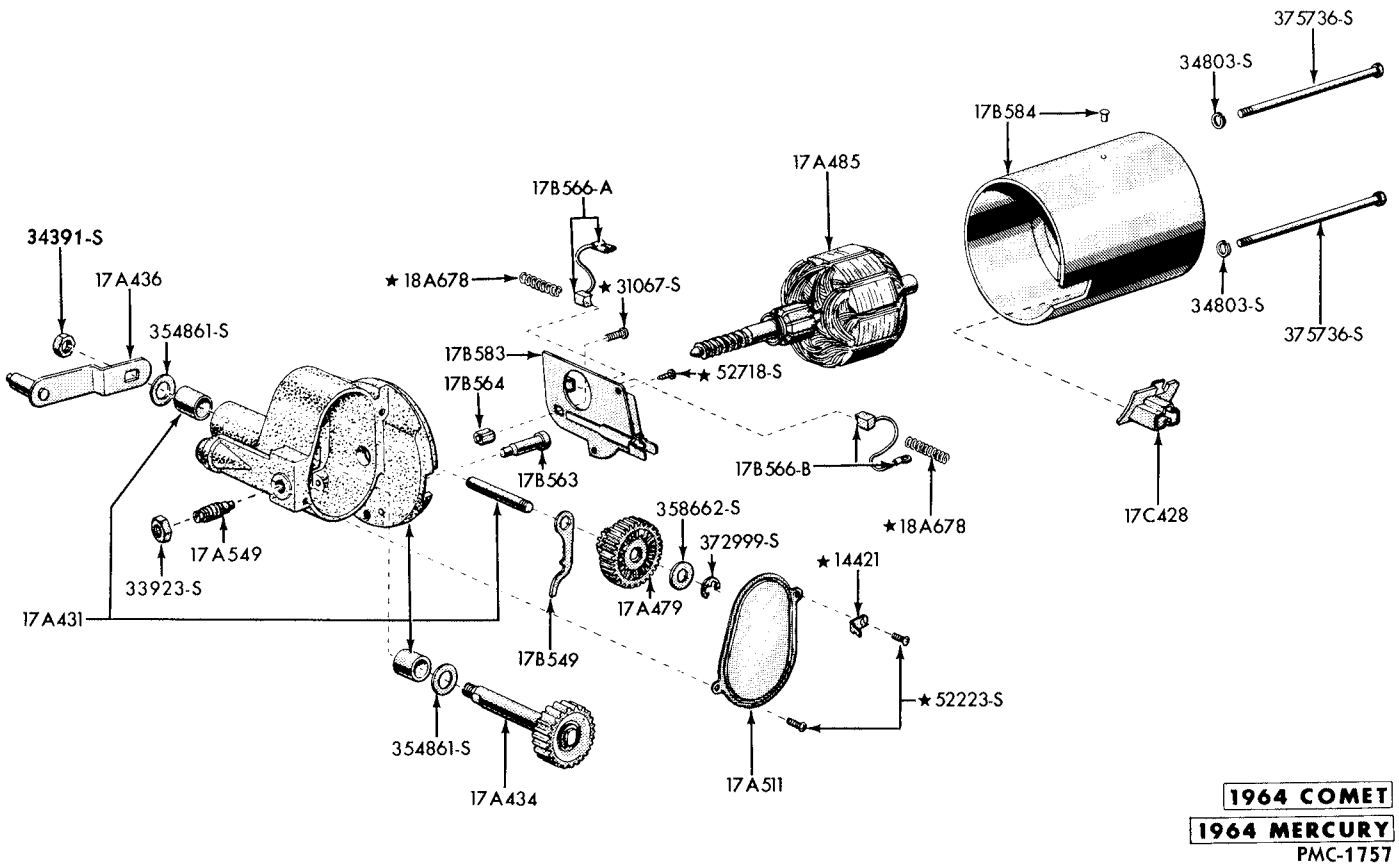

WINDSHIELD WIPER MOTOR - SINGLE SPEED

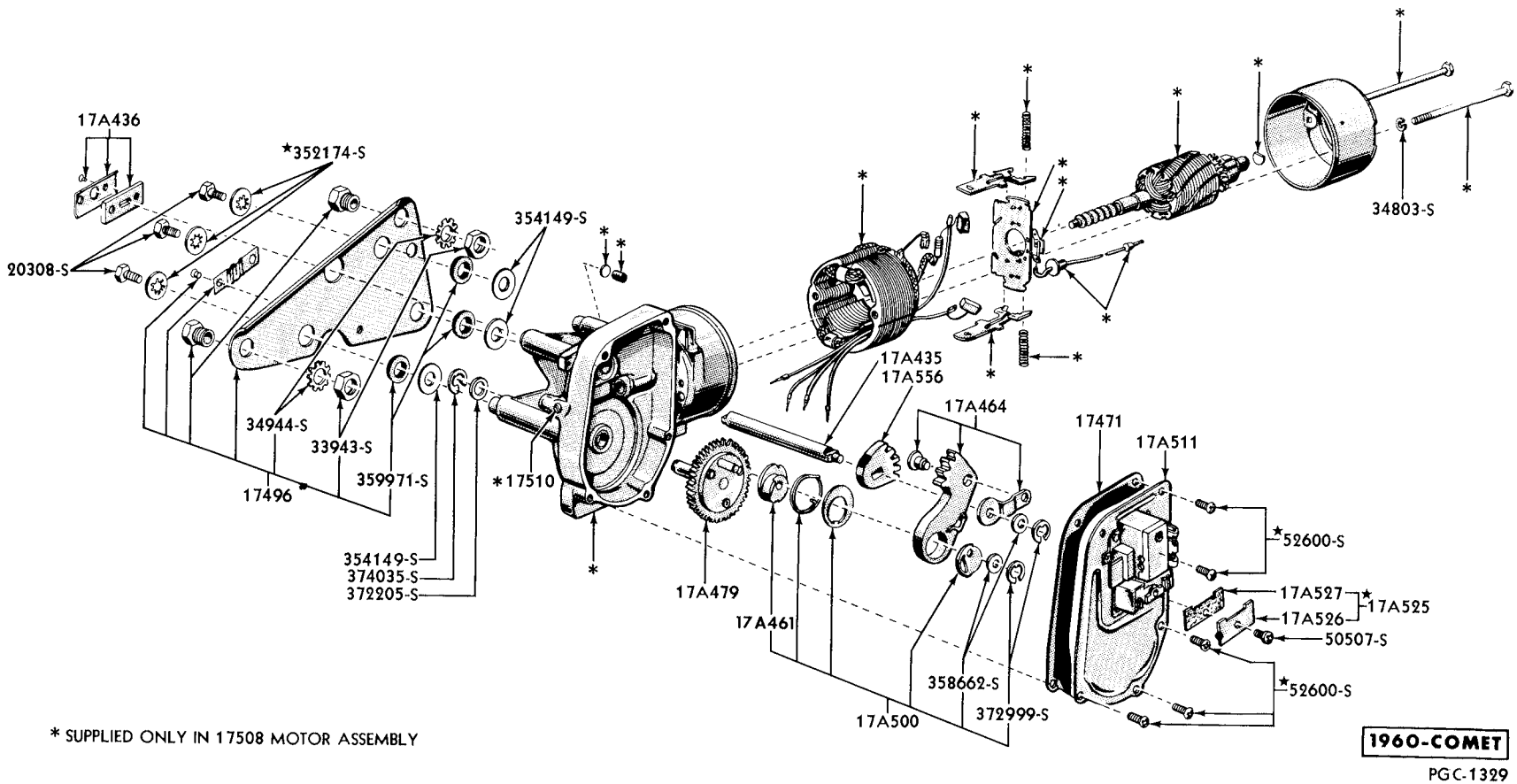

* SUPPLIED ONLY IN 17508 MOTOR ASSEMBLY

WINDSHIELD WIPER and RELATED PARTS

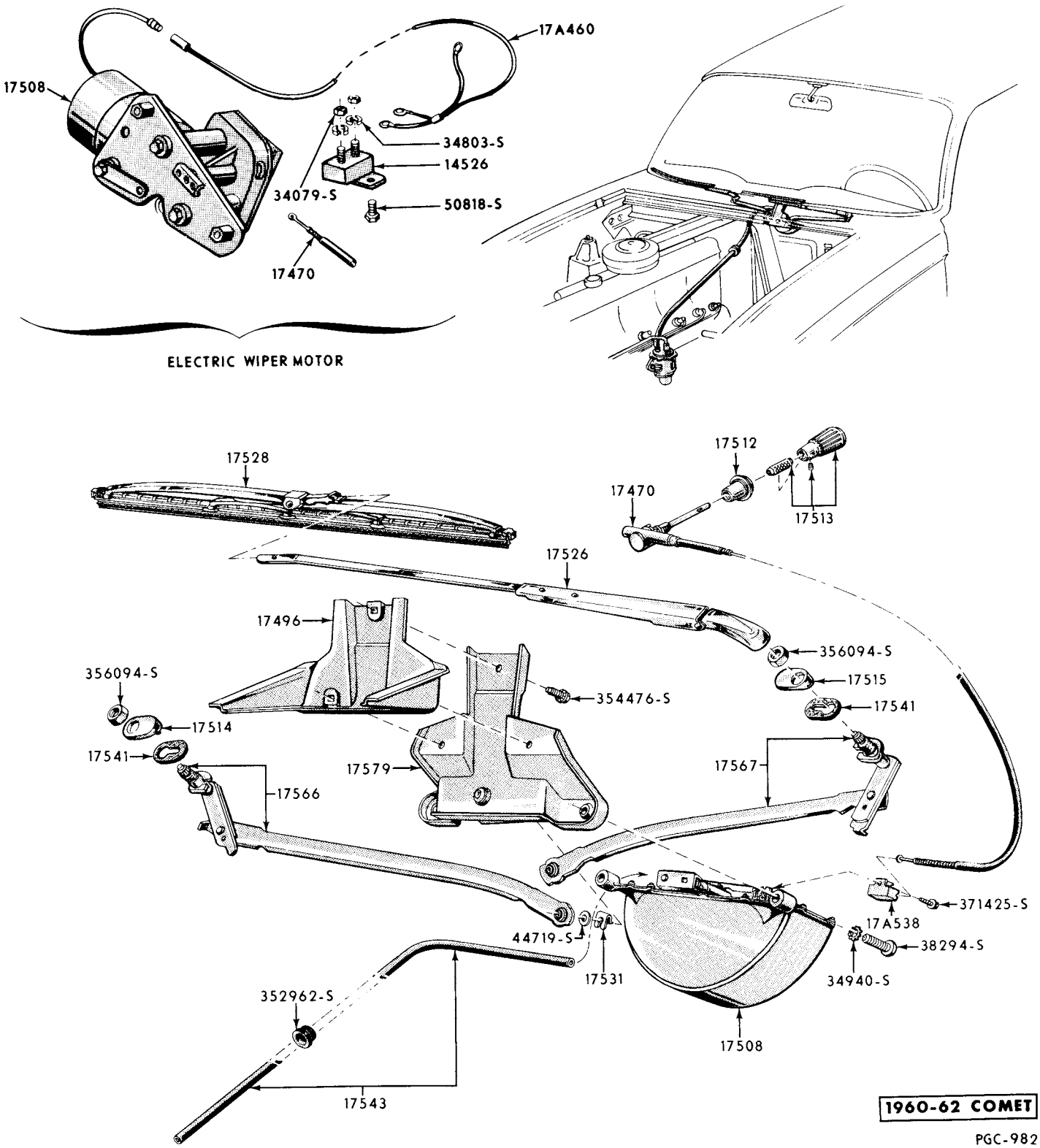

WINDSHIELD WIPERS and RELATED PARTS

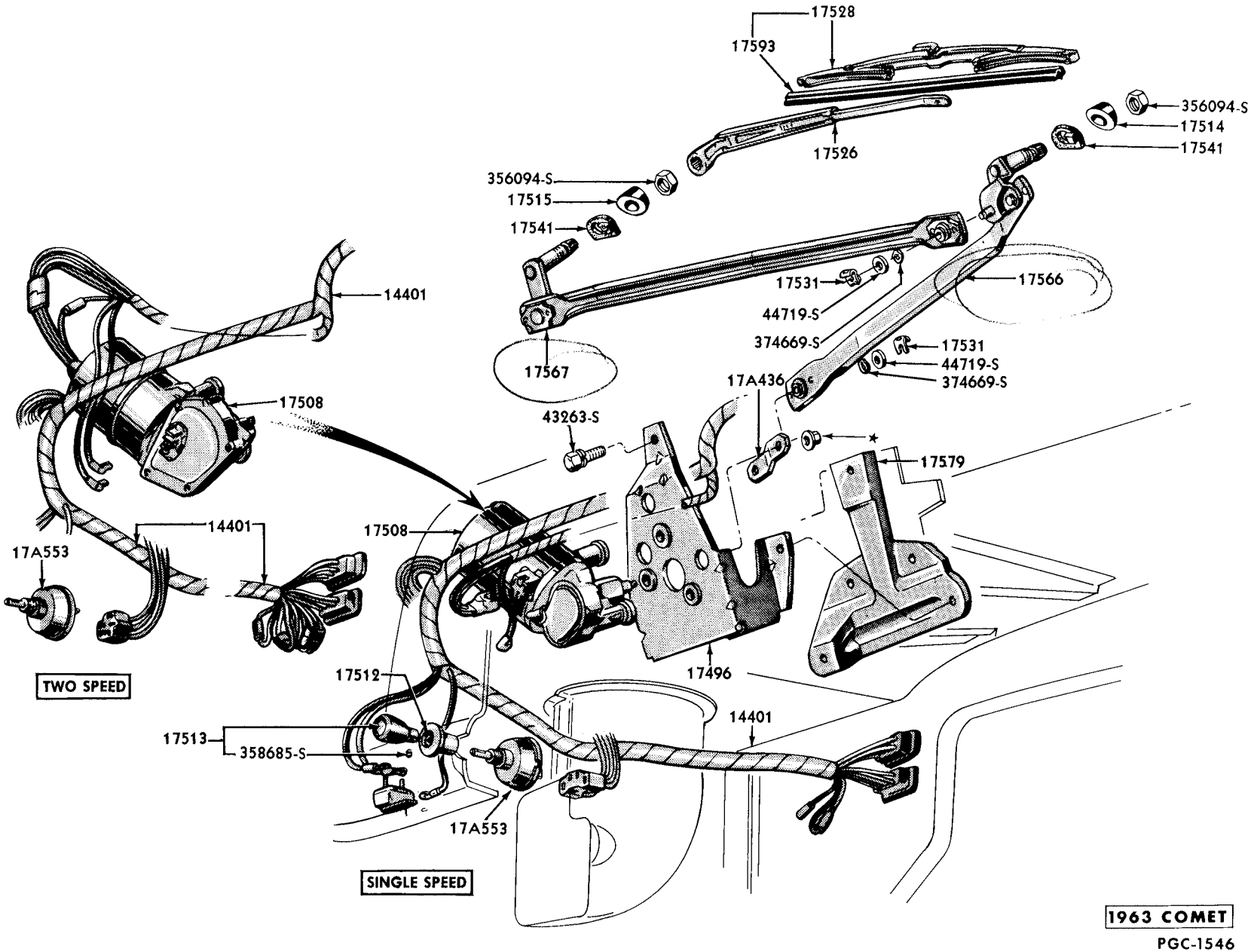

WINDSHIELD WIPER and RELATED PARTS

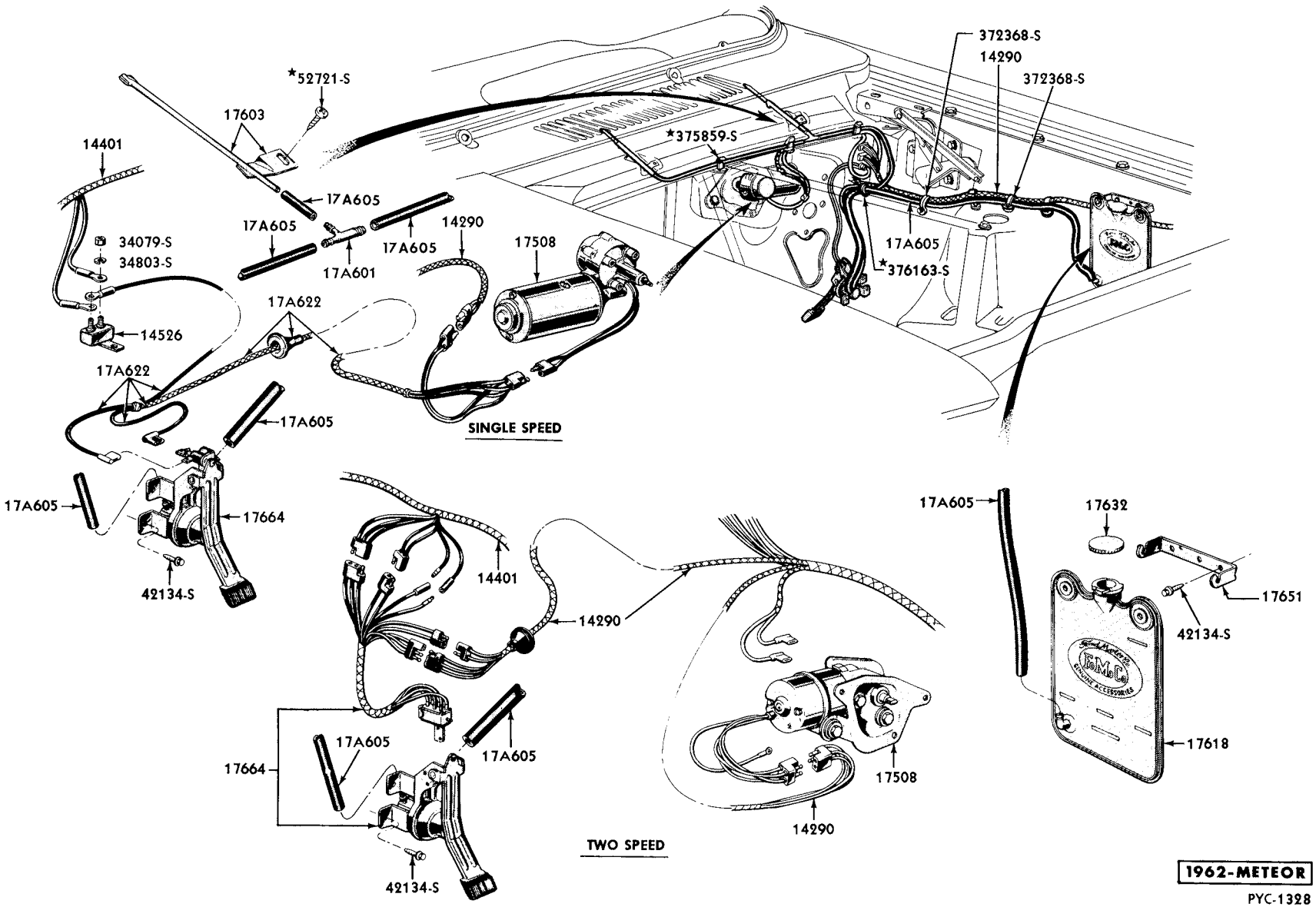

WINDSHIELD WASHER and RELATED PARTS

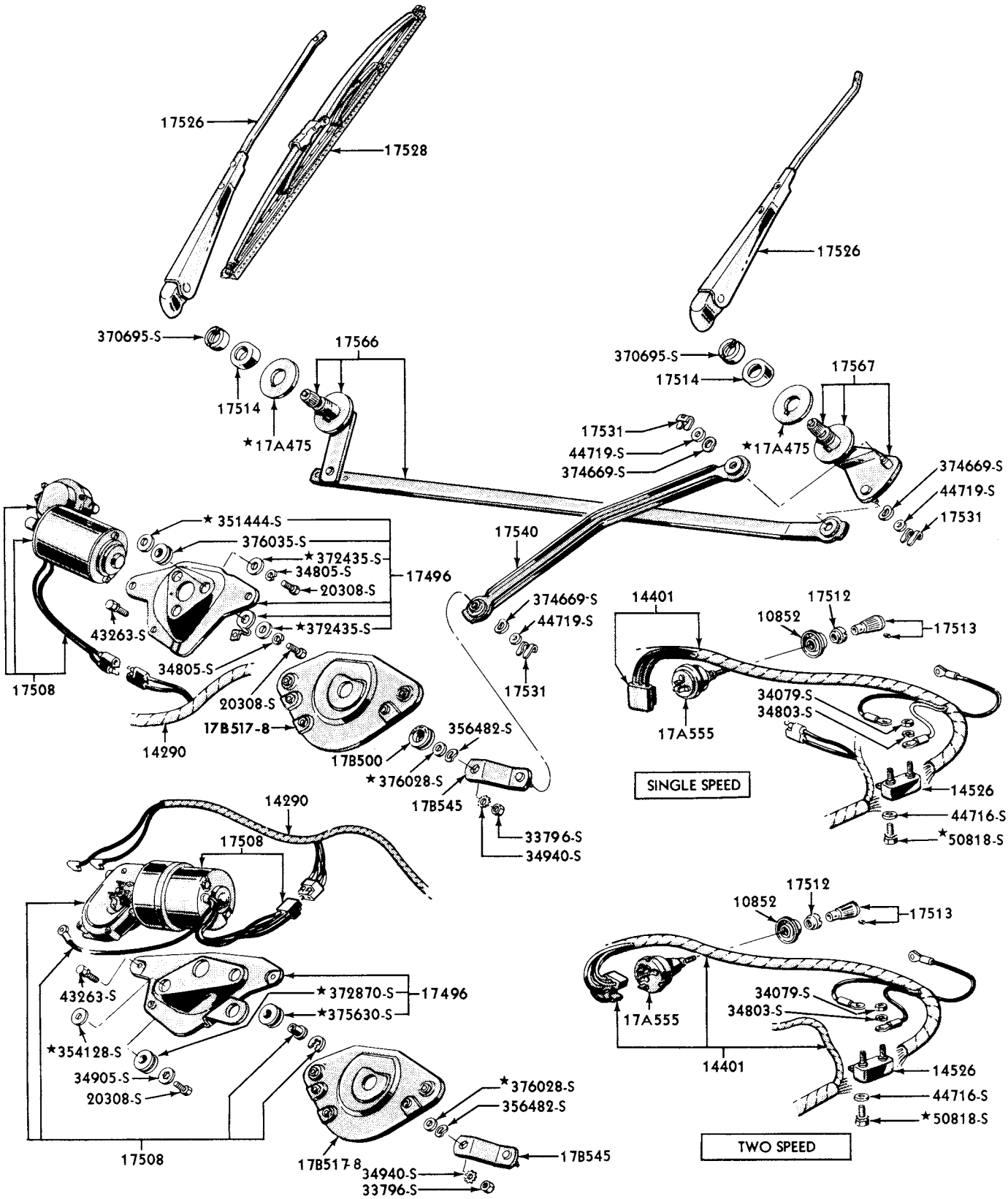

1962-63 METEOR

PYC-1322

WINDSHIELD WIPER and RELATED PARTS

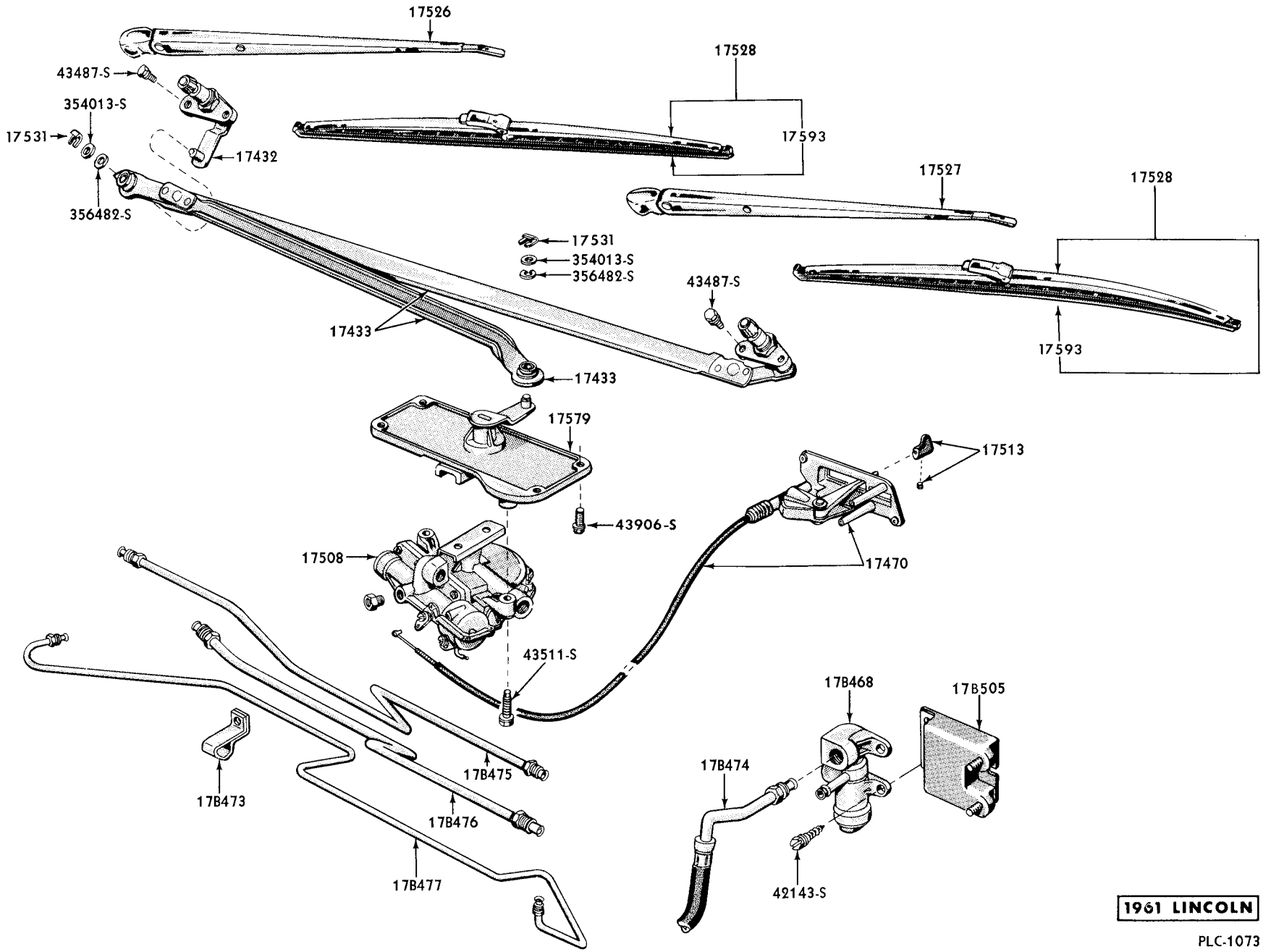

WINDSHIELD WIPER

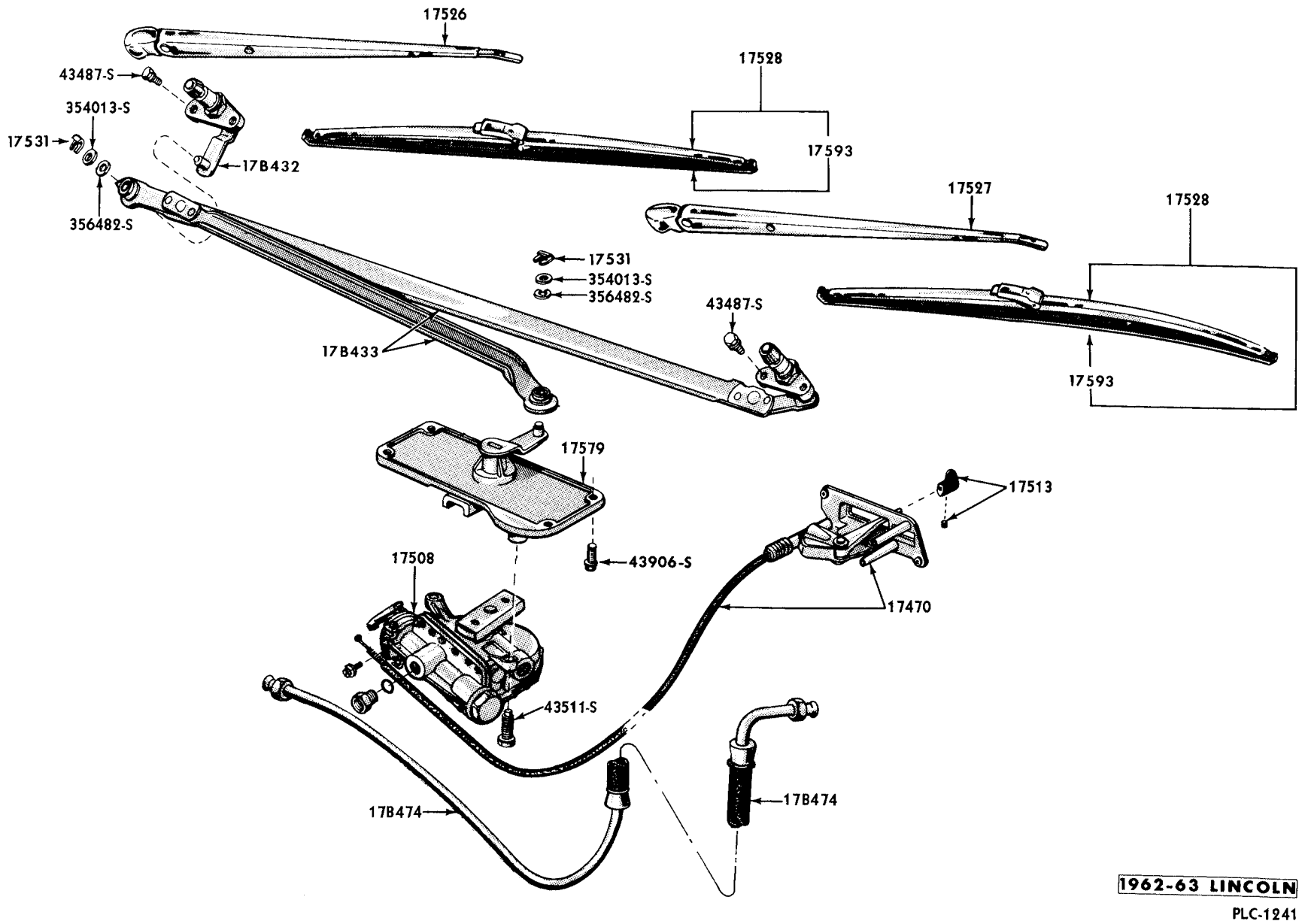

WINDSHIELD WIPER

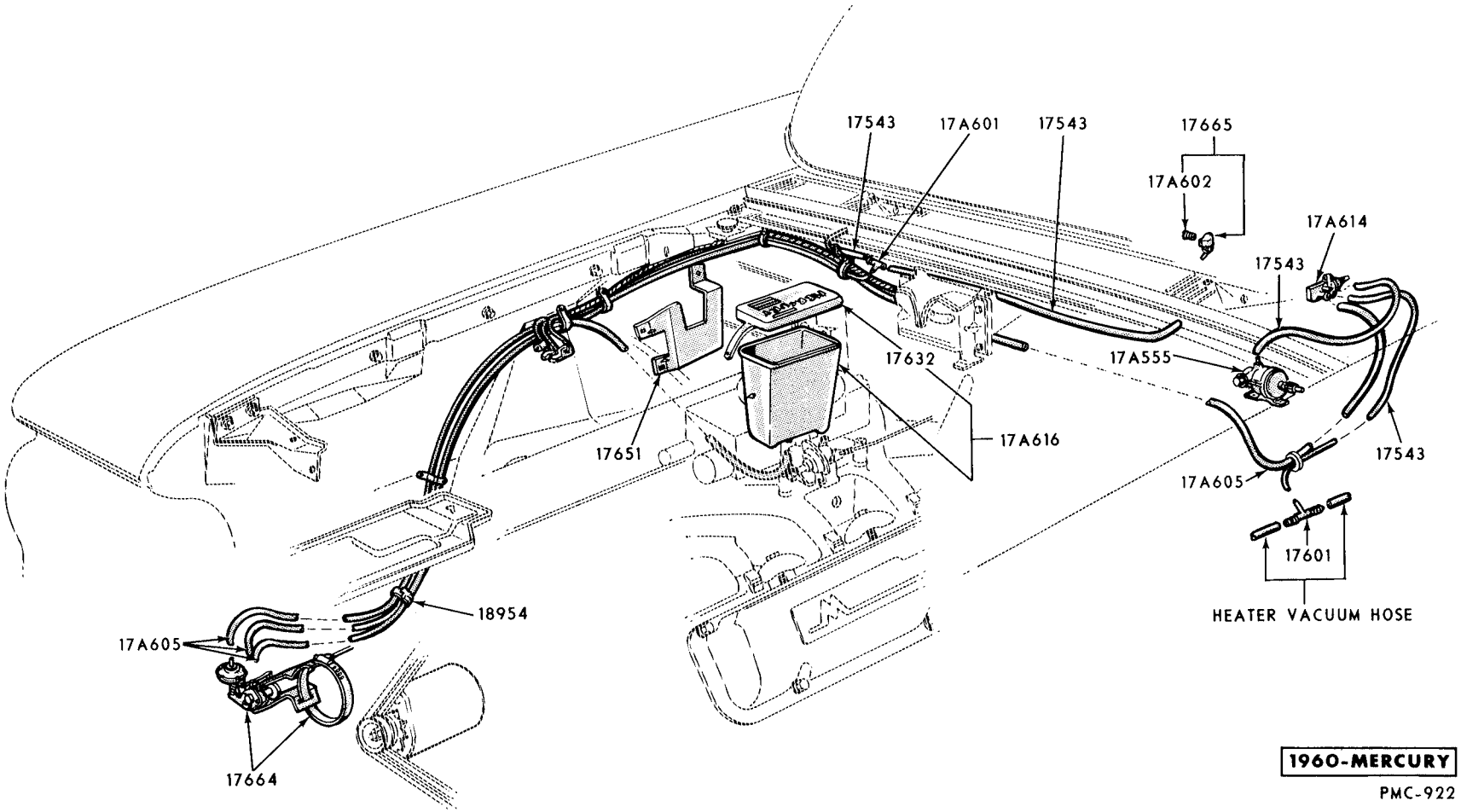

WINDSHIELD WASHER and RELATED PARTS

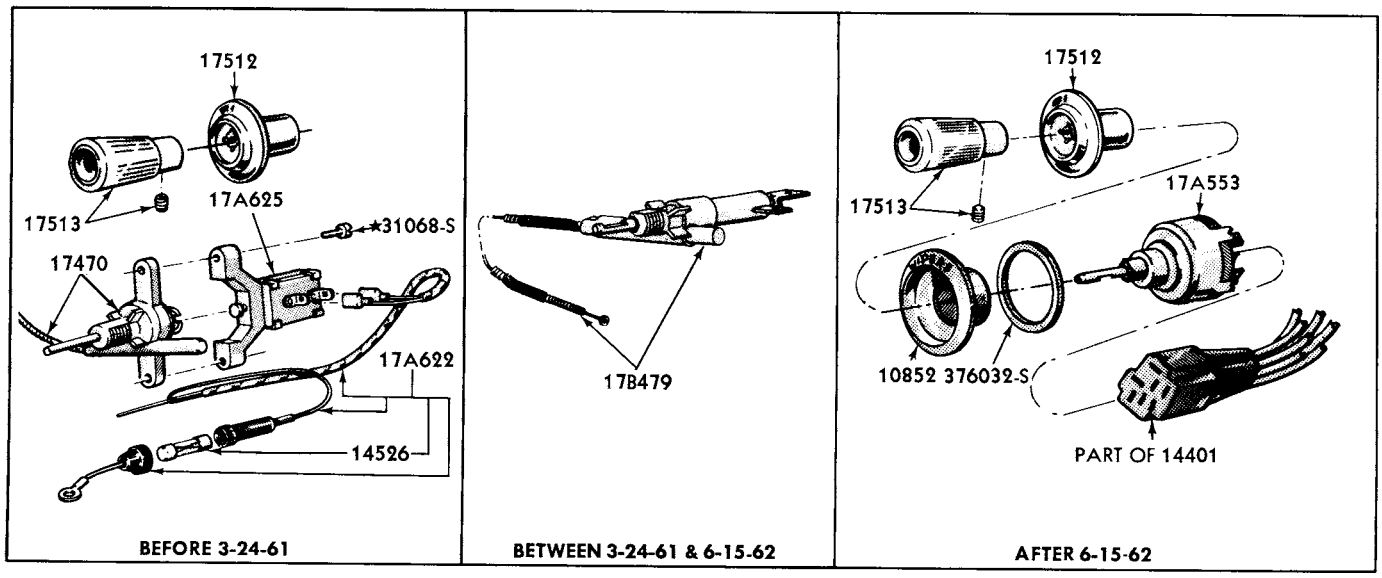

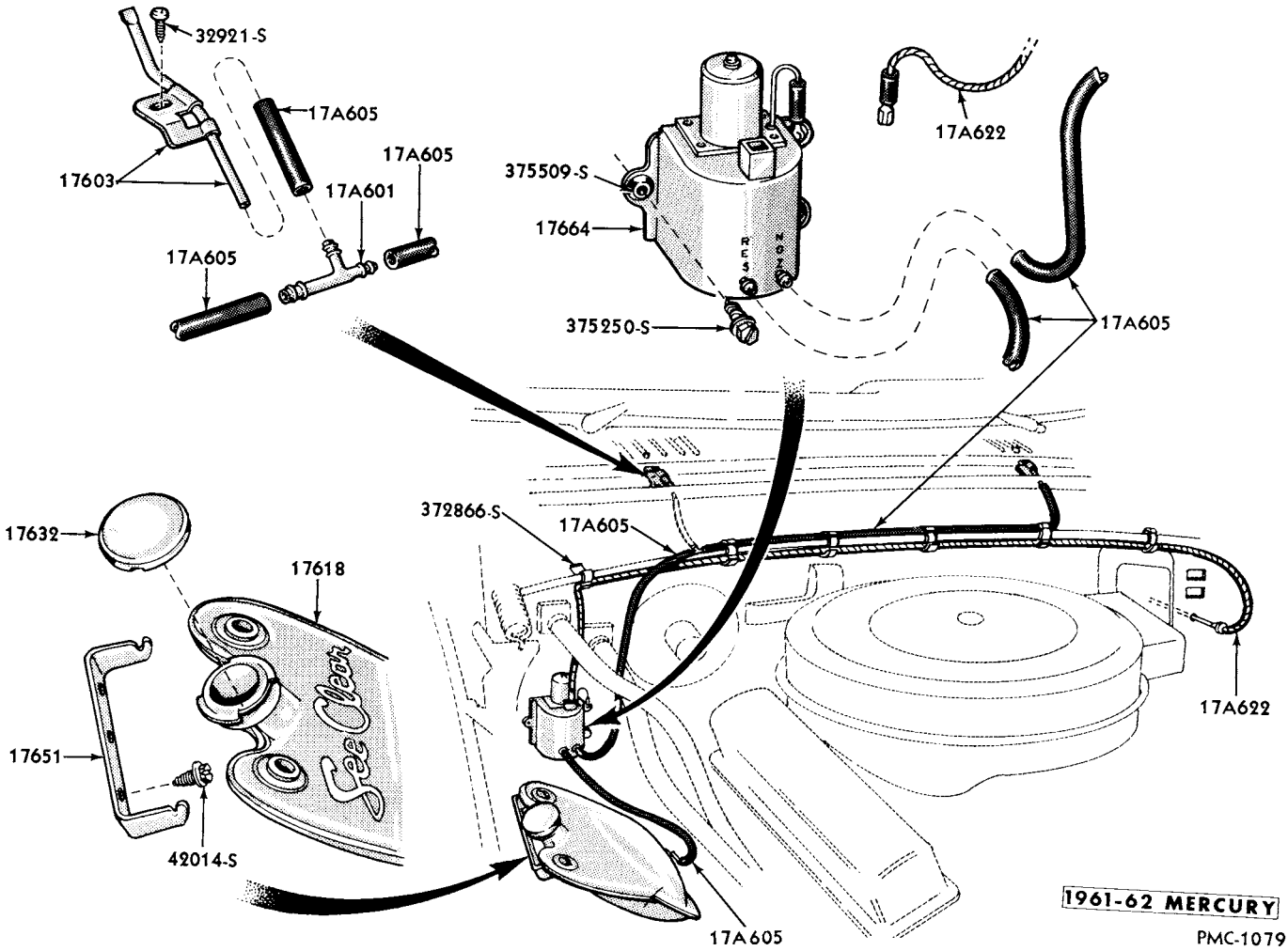

WINDSHIELD WASHER and RELATED PARTS

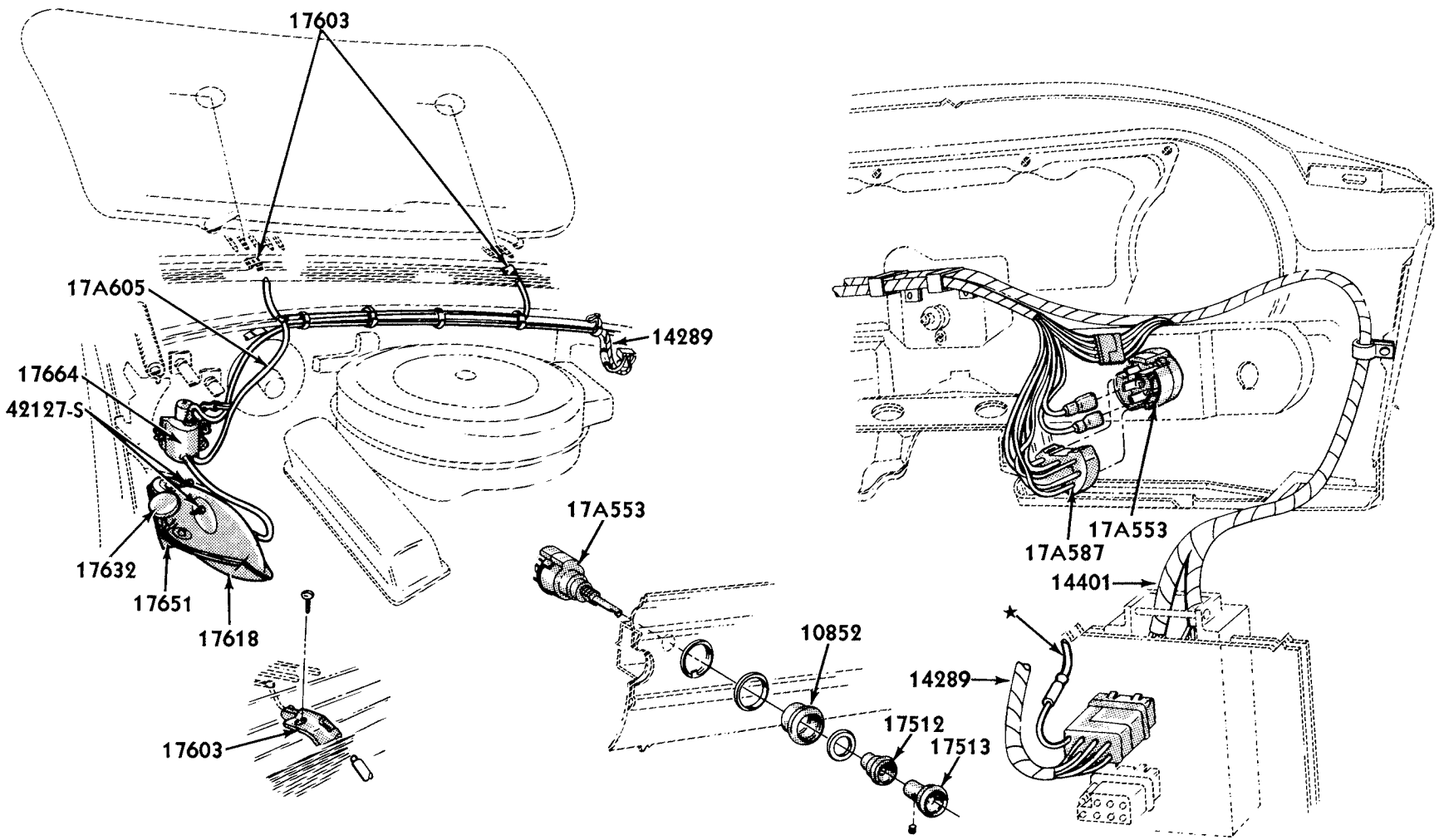

1964 MERCURY

PMC-1703

WINDSHIELD WASHER and RELATED PARTS

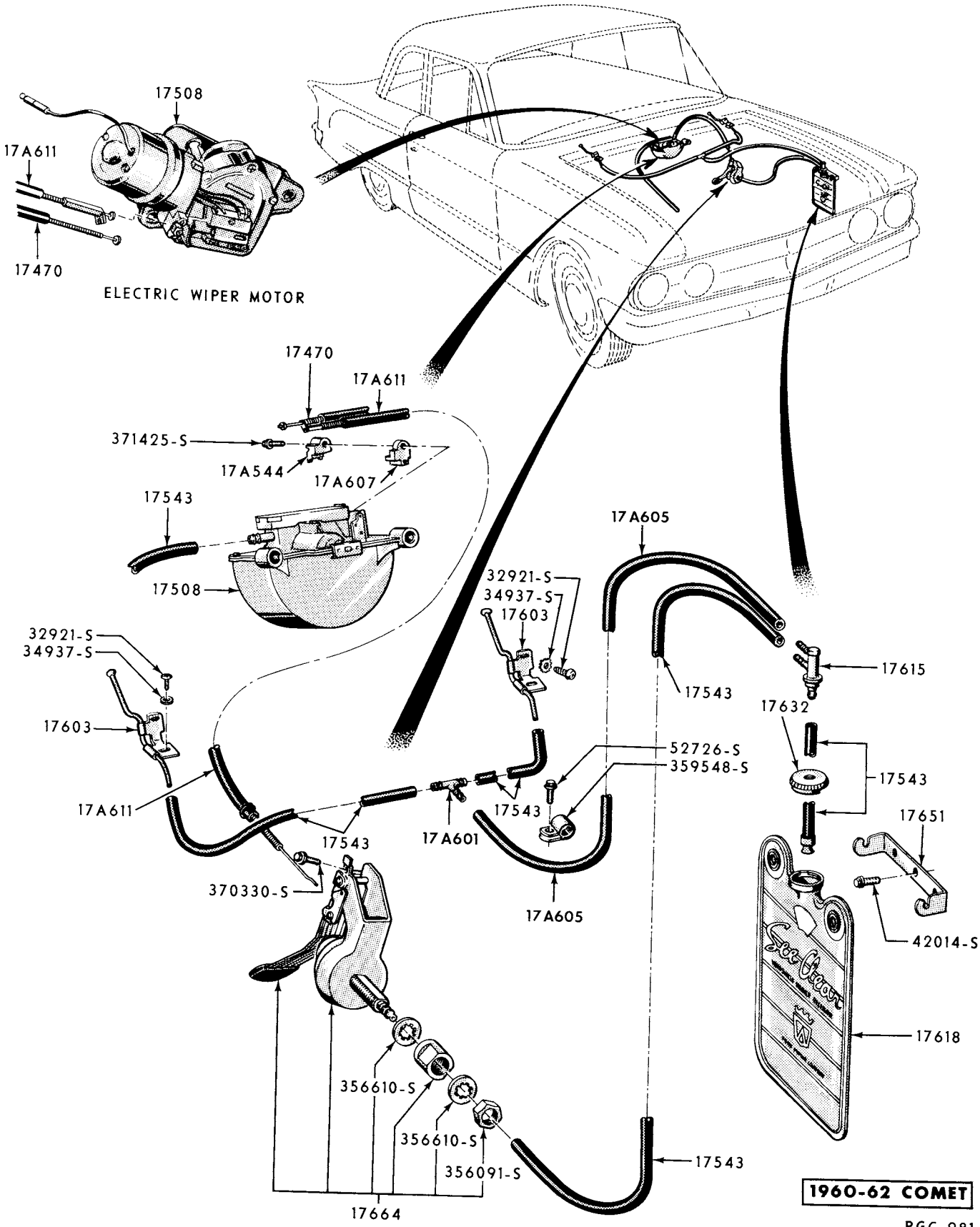

WINDSHIELD WASHER and RELATED PARTS

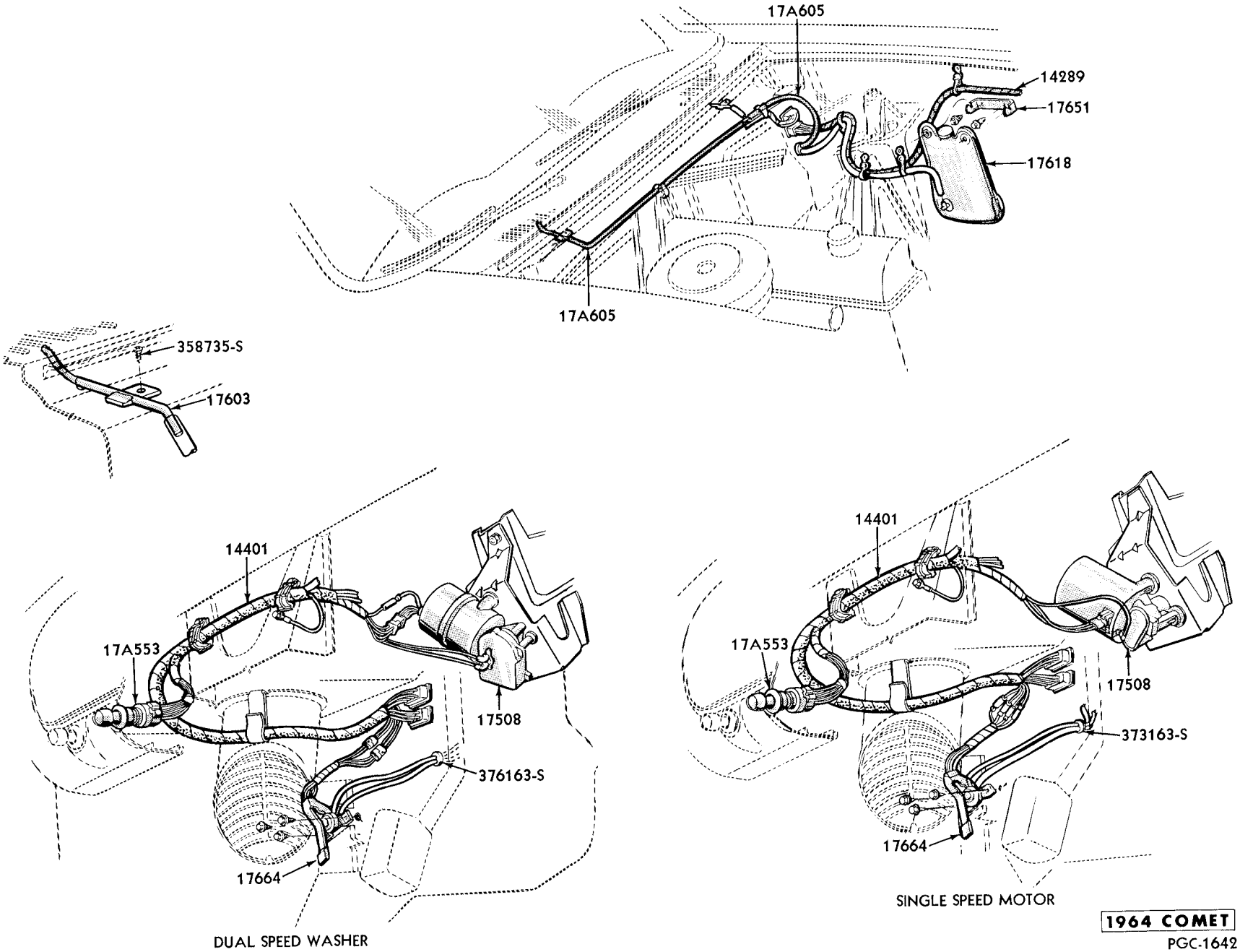

WINDSHIELD WASHER and RELATED PARTS

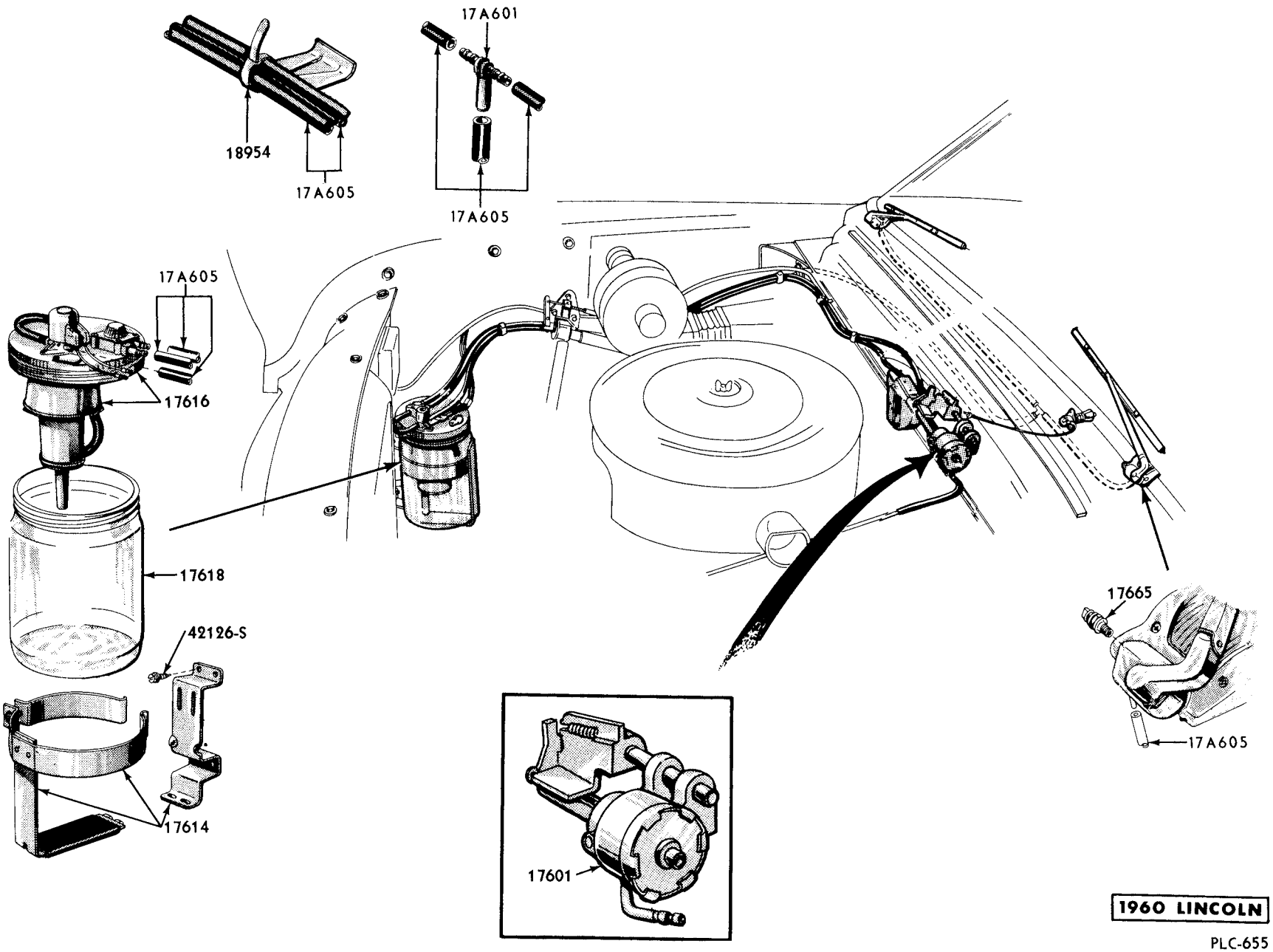

WINDSHIELD WASHER and RELATED PARTS

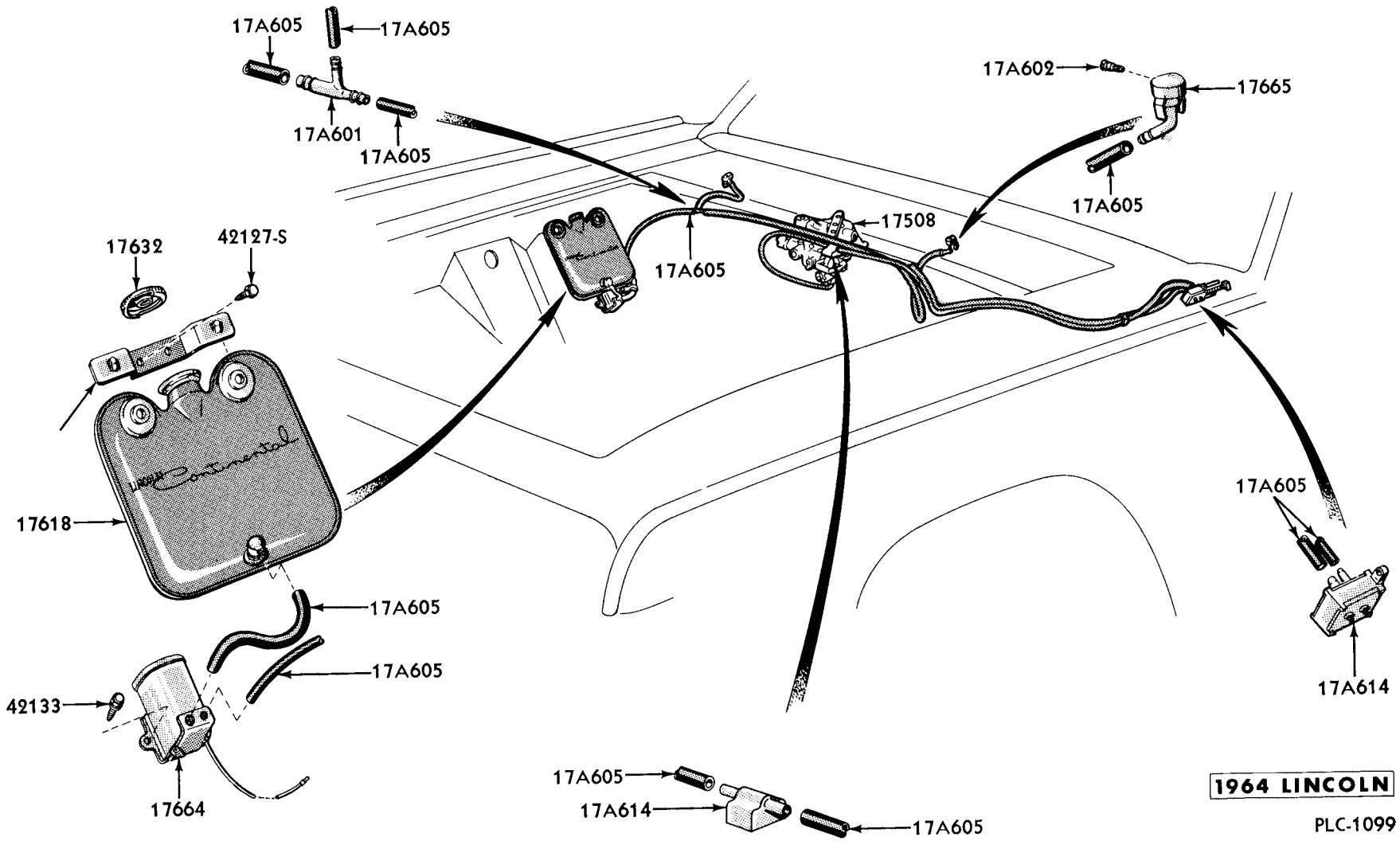

WINDSHIELD WASHER and RELATED PARTS

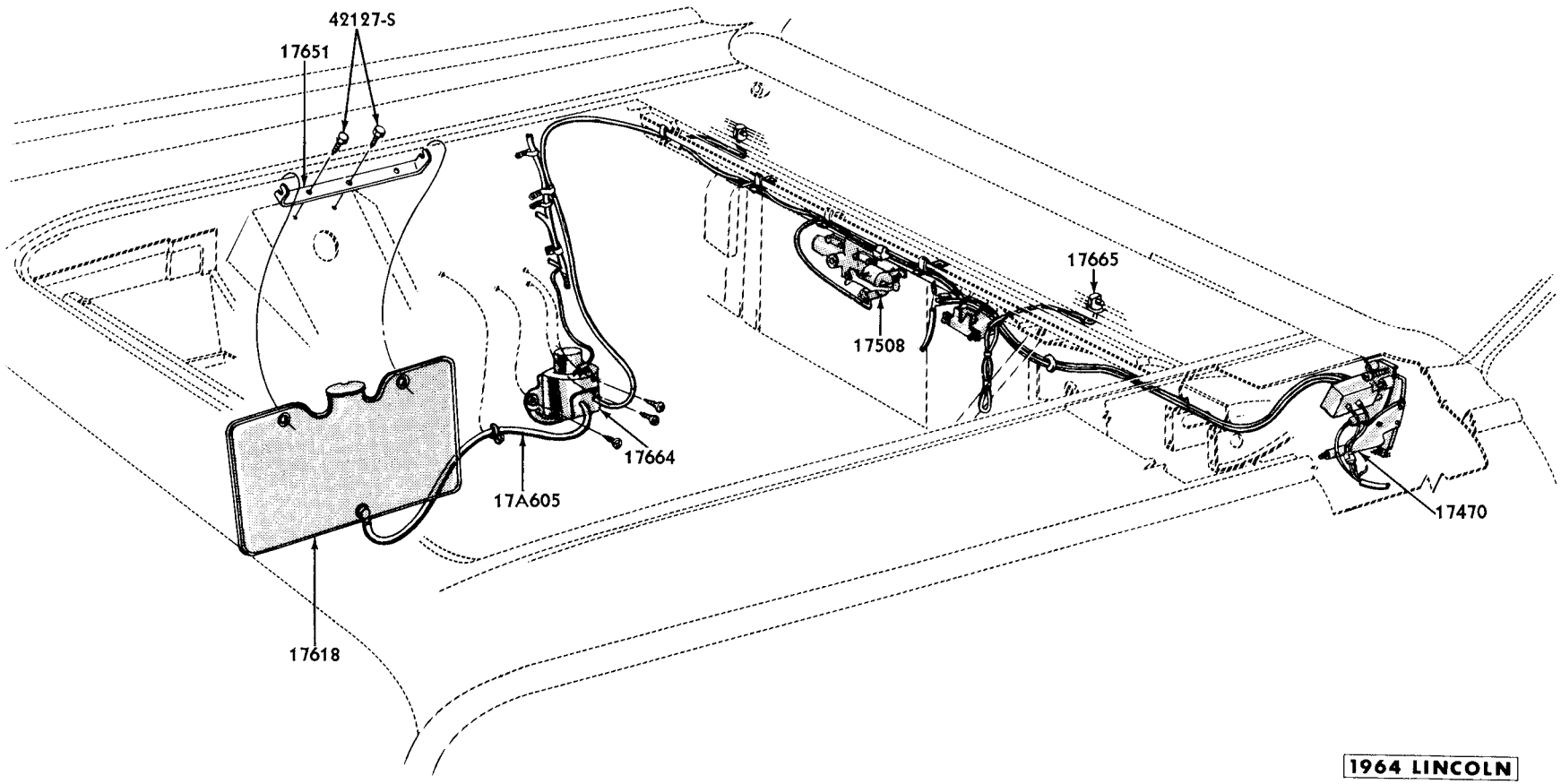

WINDSHIELD WASHER and RELATED PARTS

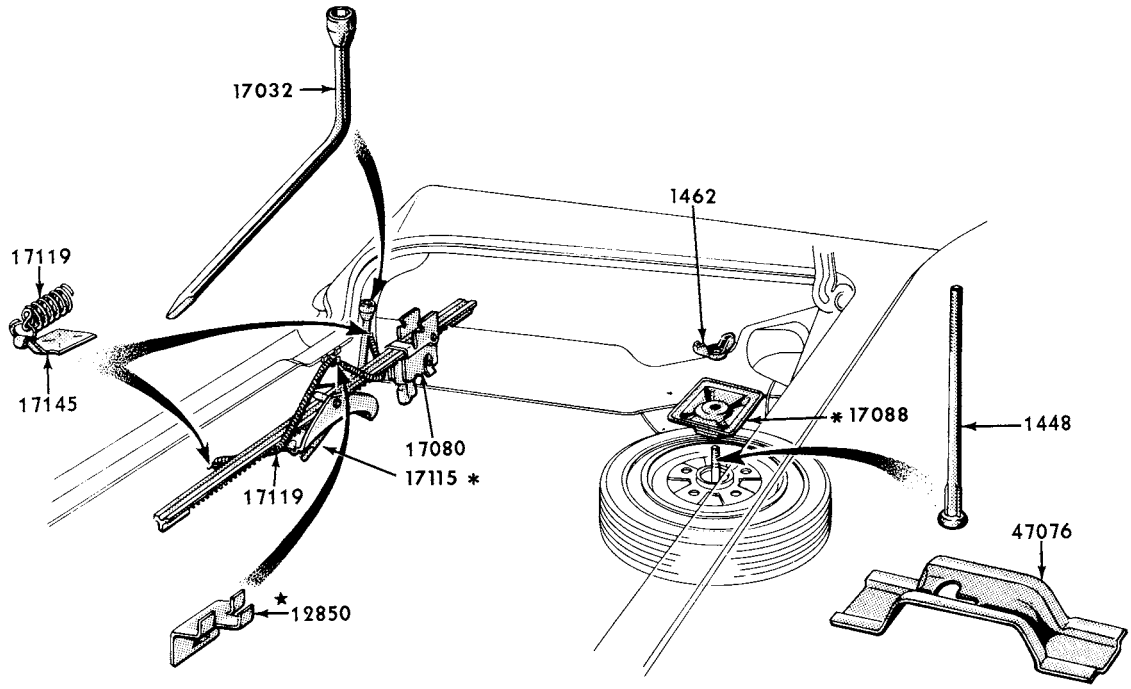

* ALSO SERVICED IN 17080 ASSEMBLY

1960-MERCURY

PMC-649

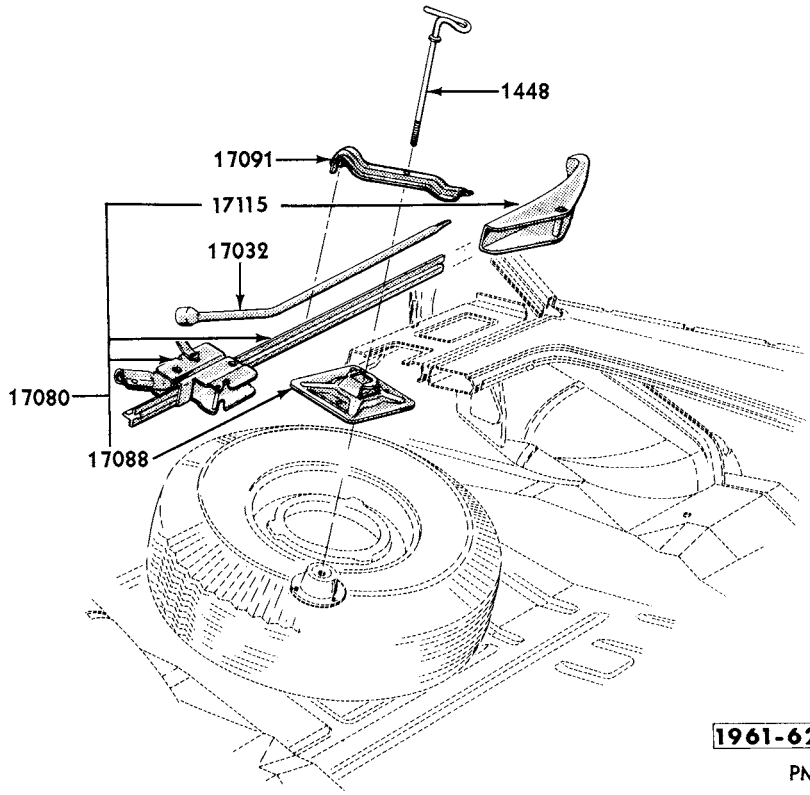

TYPICAL

1961-62 MERCURY

PMC-1160

SPARE TIRE MOUNT and JACK - PASSENGER CAR

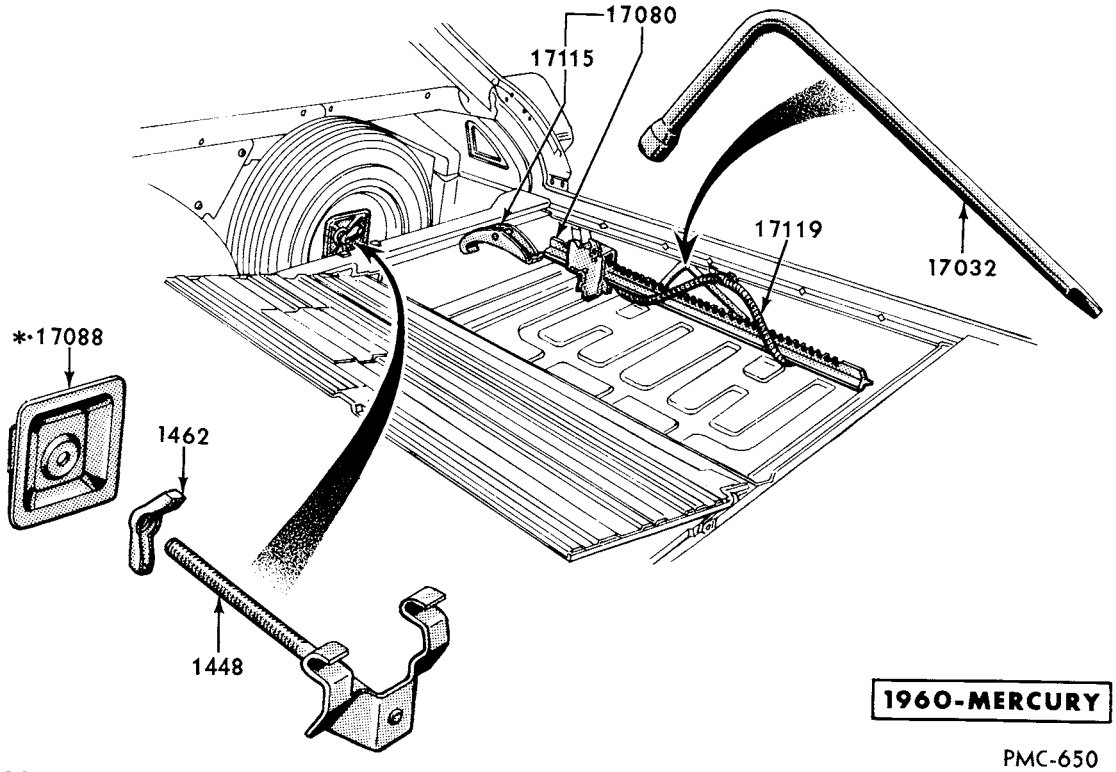

1960-MERCURY

PMC-650

* ALSO SERVICED IN 17080 ASSEMBLY

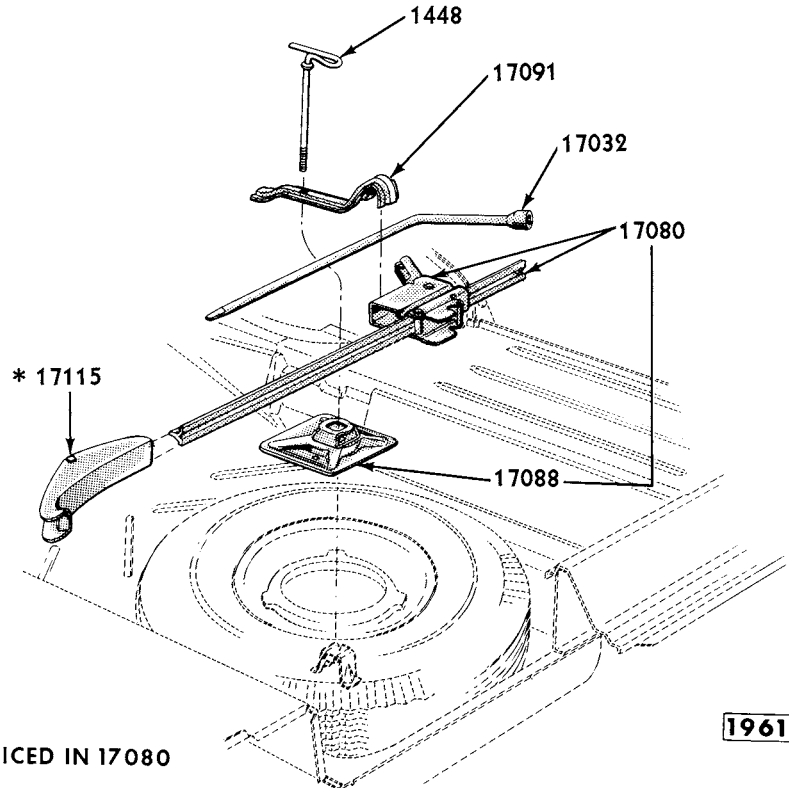

TYPICAL

1961-62 MERCURY

PMC-1159

* ALSO SERVICED IN 17080

SPARE TIRE MOUNT and JACK - STATION WAGON

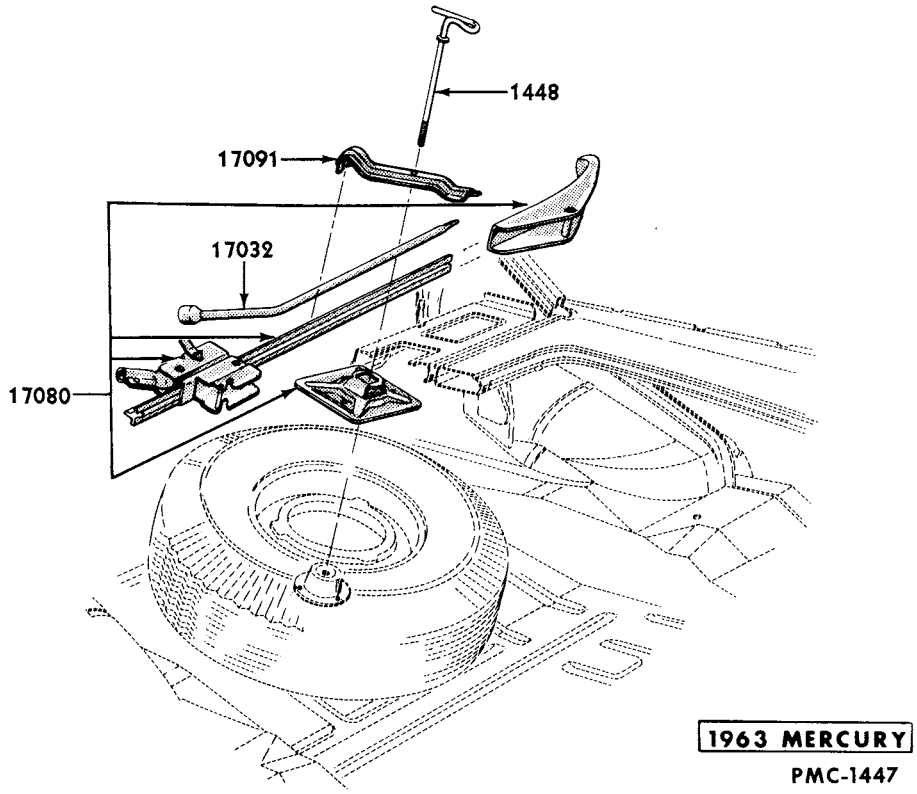

SPARE TIRE MOUNT and JACK - PASSENGER CAR

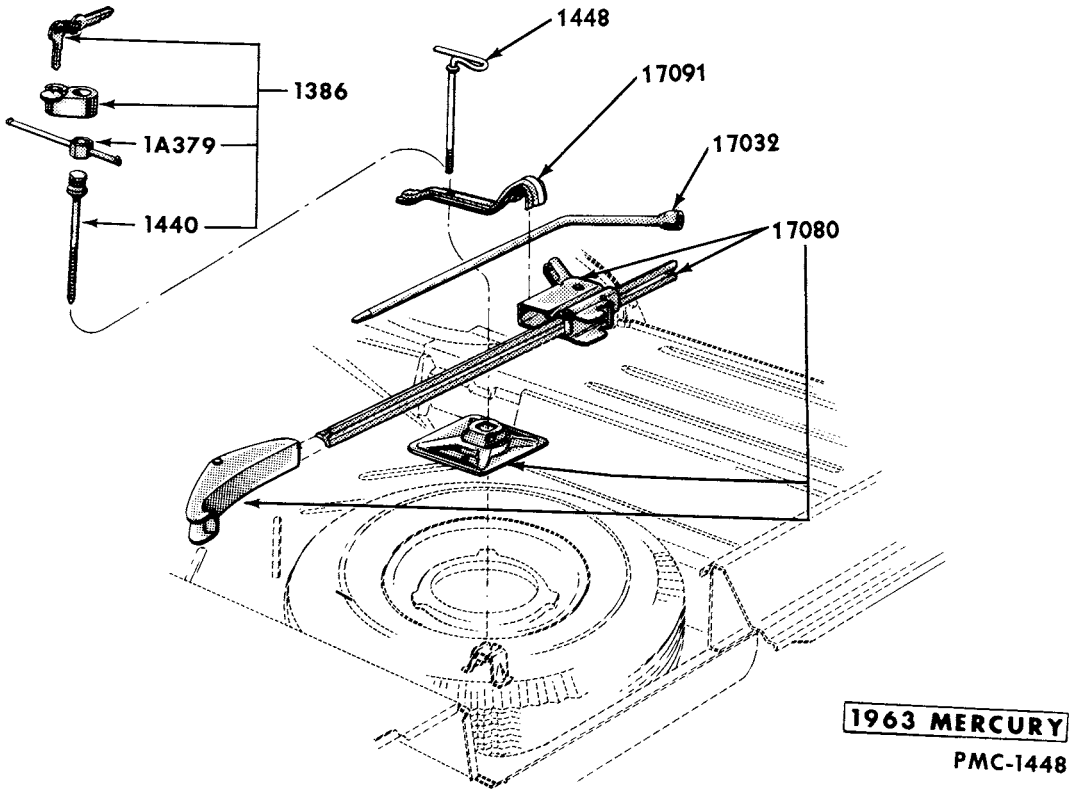

SPARE TIRE MOUNT and JACK - STATION WAGON

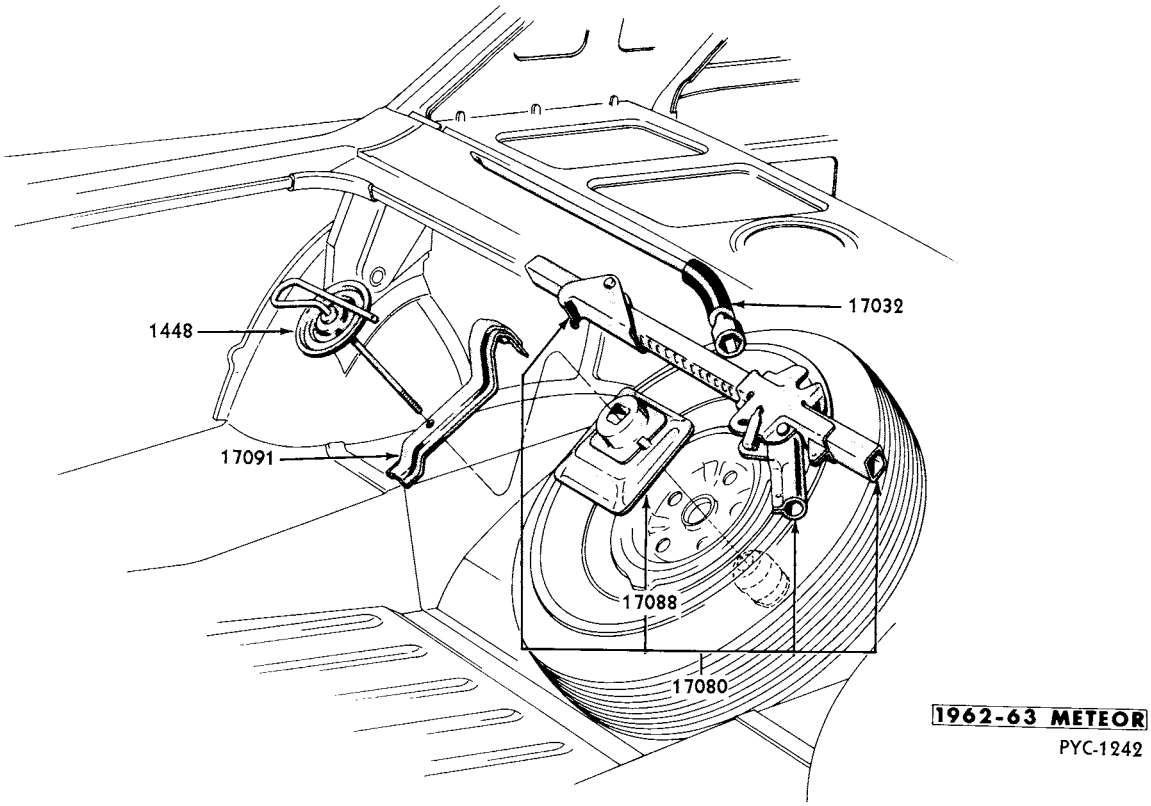

SPARE TIRE MOUNT and JACK

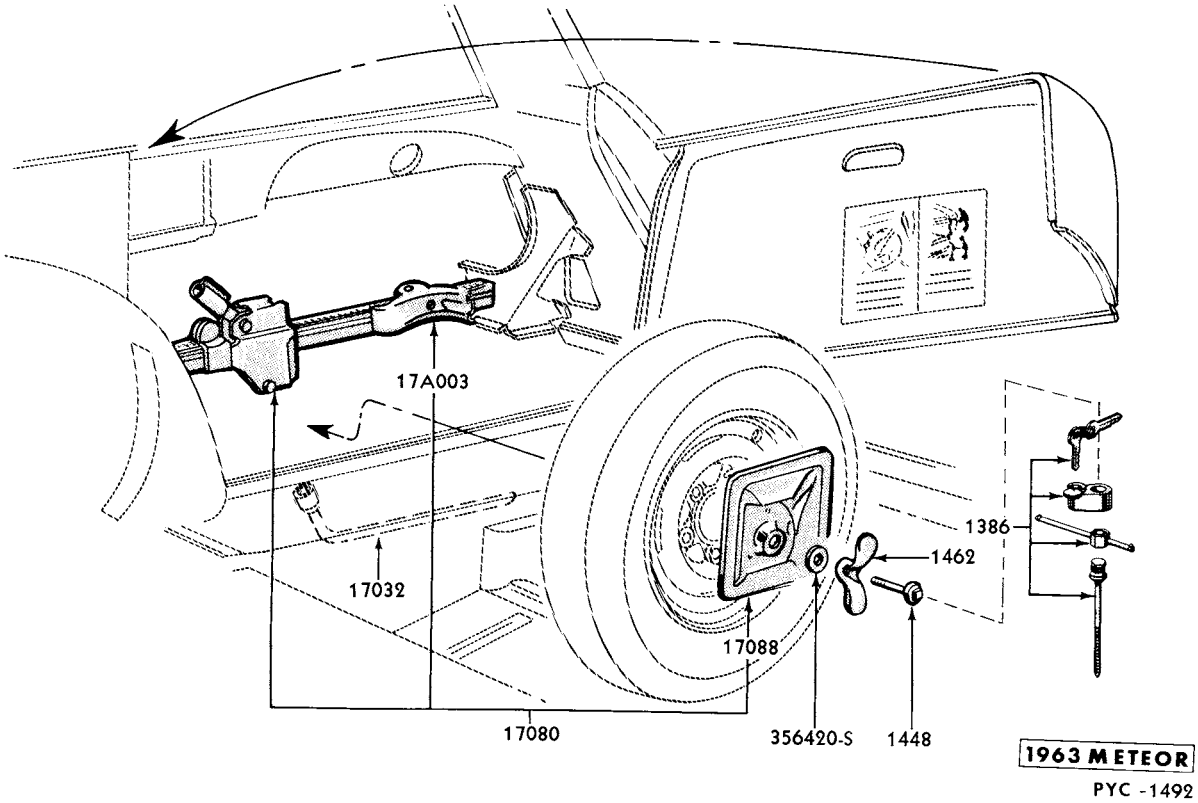

SPARE TIRE MOUNT and JACK - STATION WAGON

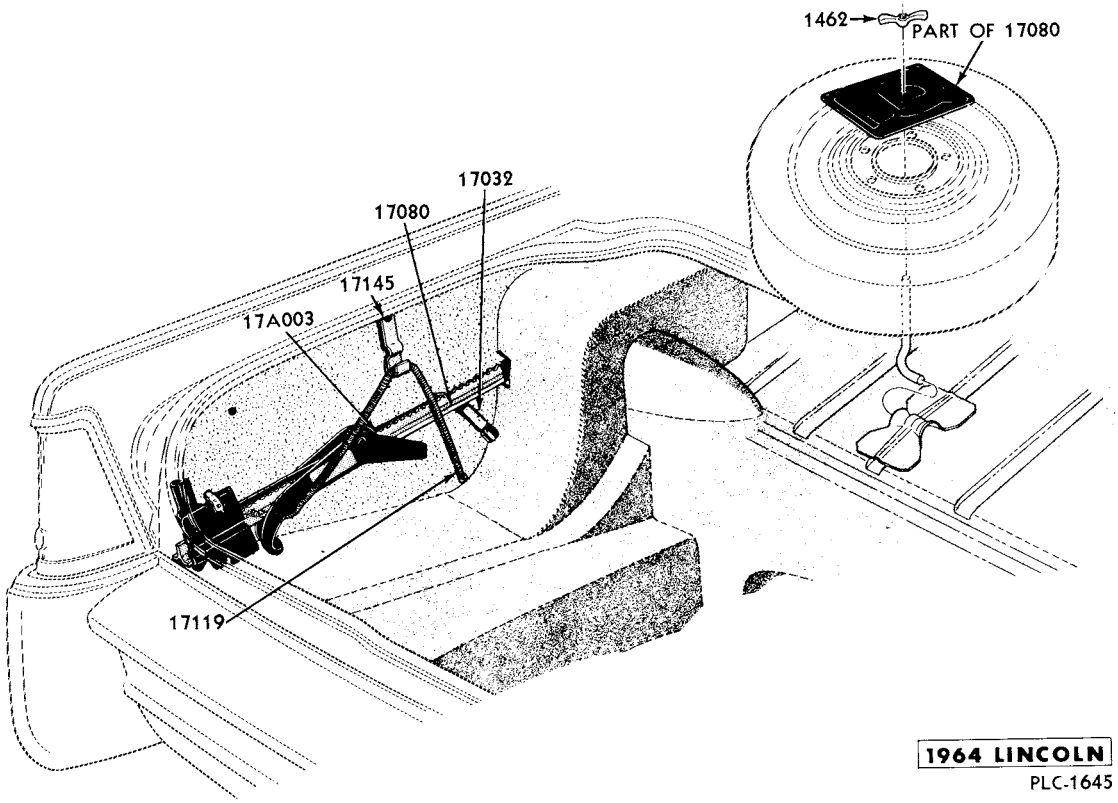

SPARE TIRE MOUNT and JACK - PASSENGER CAR

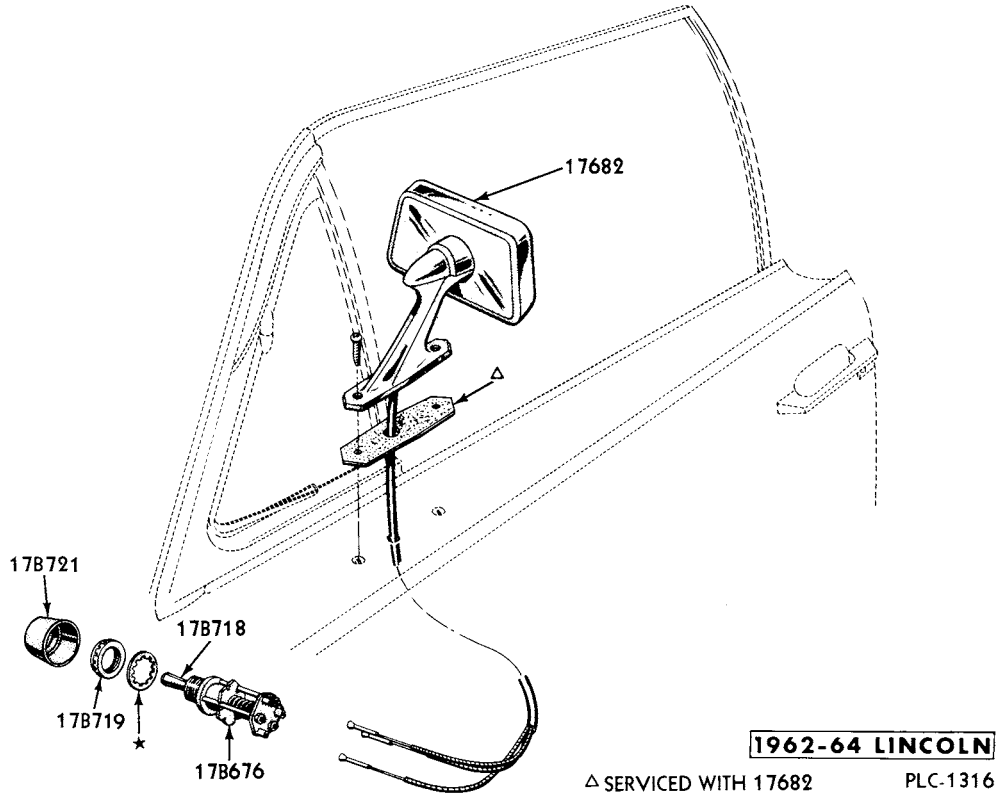

REMOTE CONTROL MIRROR

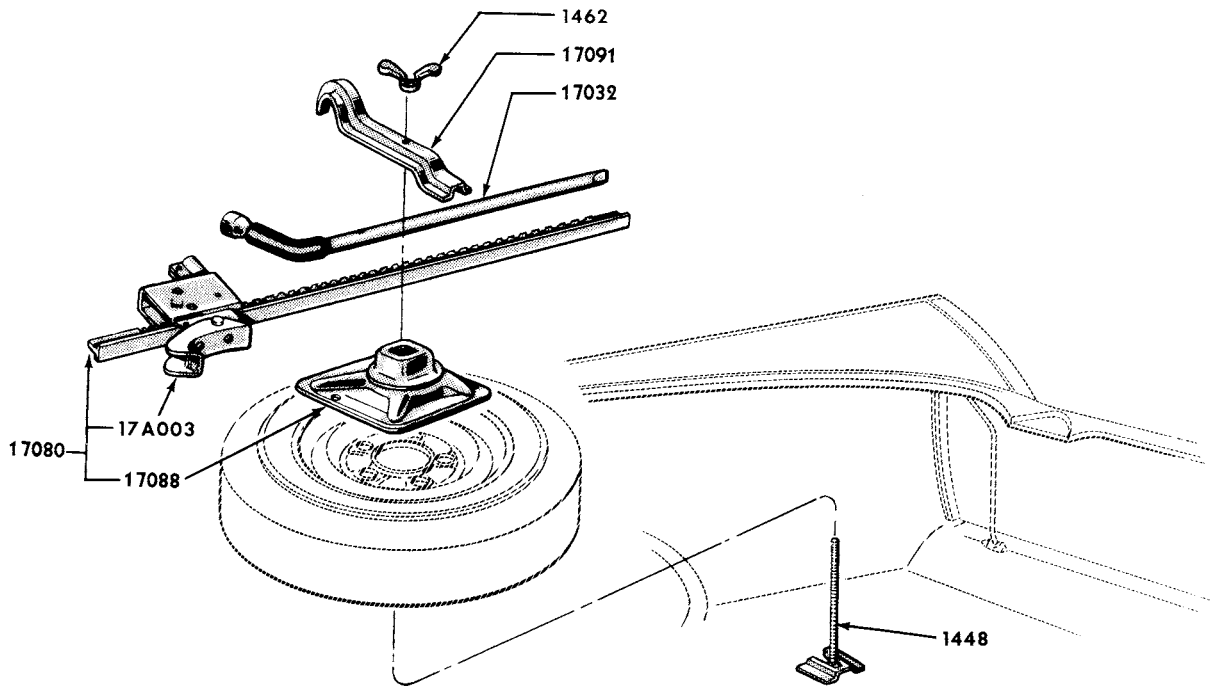

1960-63 COMET
PGC-1221

SPARE TIRE MOUNT and JACK - PASSENGER CAR

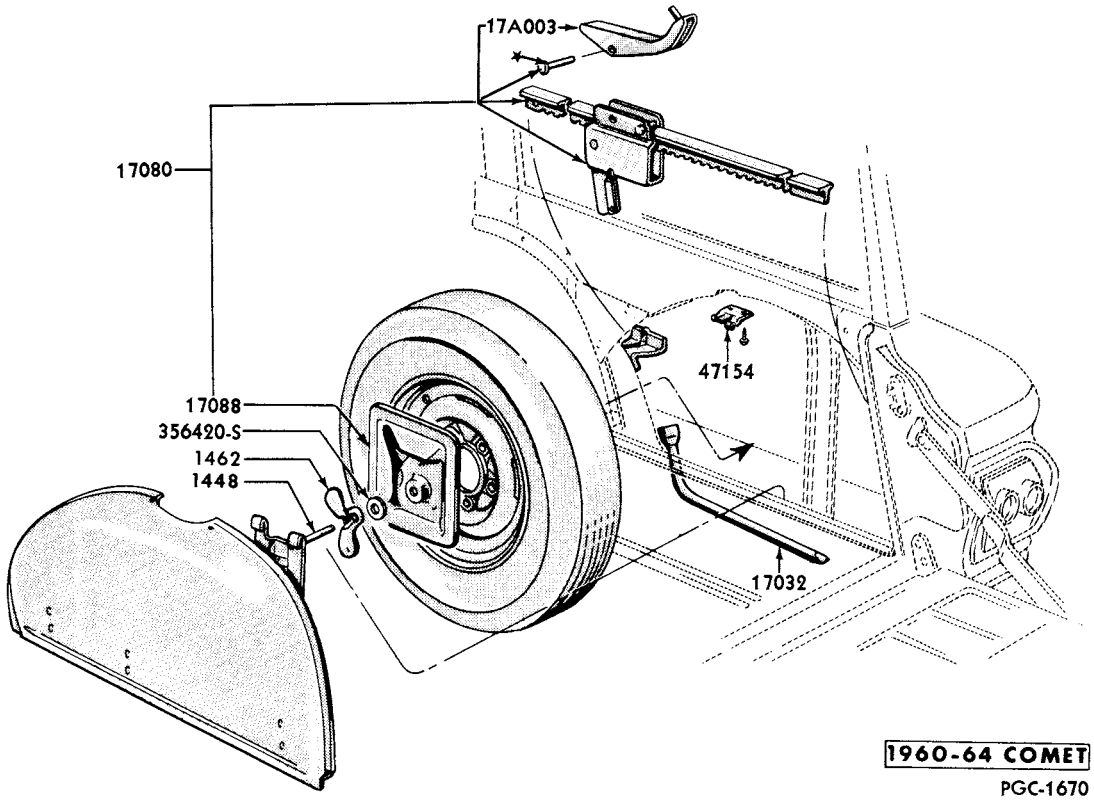

1960-64 COMET
PGC-1670

SPARE TIRE MOUNT and JACK - STATION WAGON

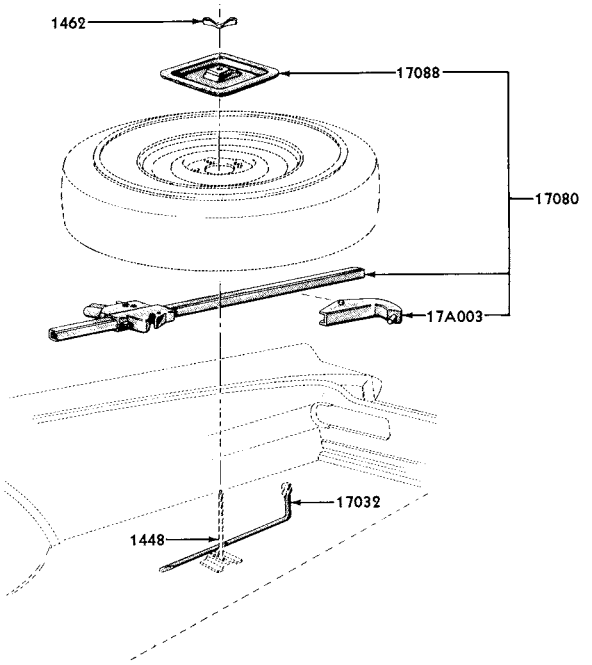

1964 COMET
PGC-1664

SPARE TIRE MOUNT and JACK - PASSENGER CAR

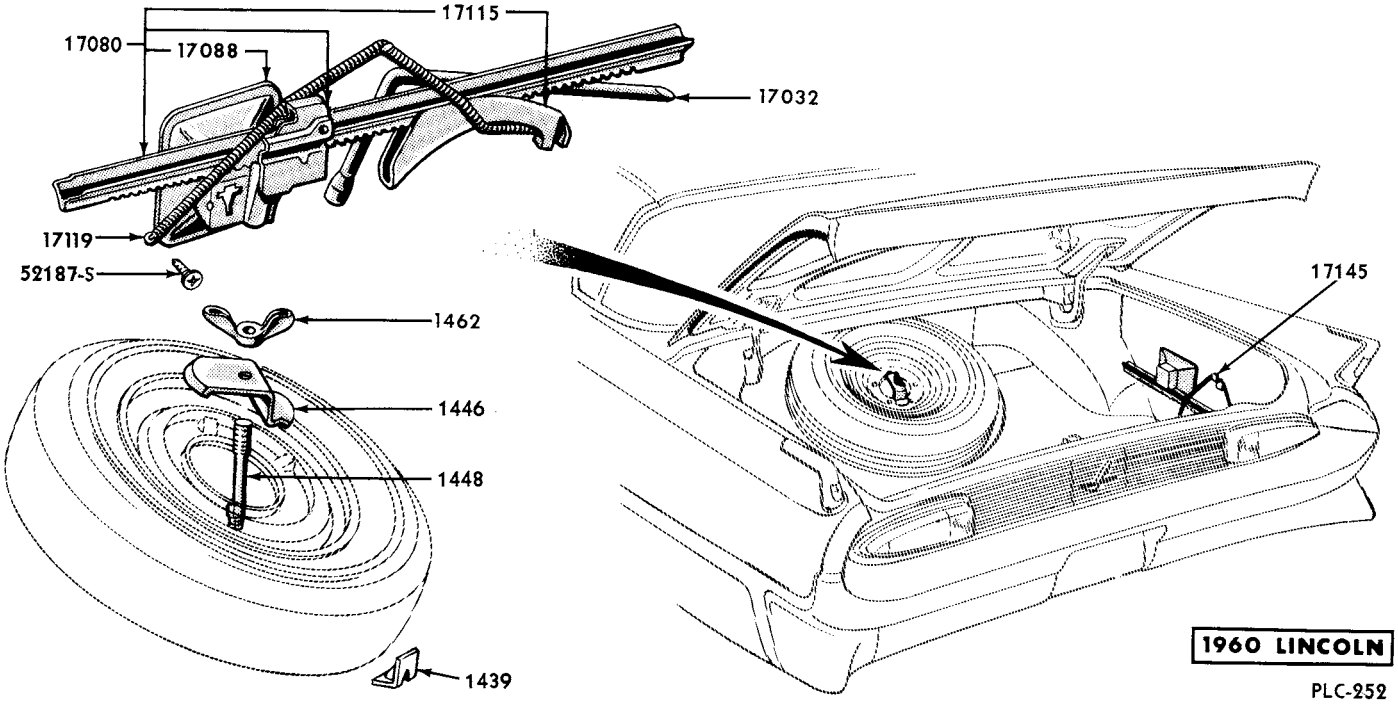

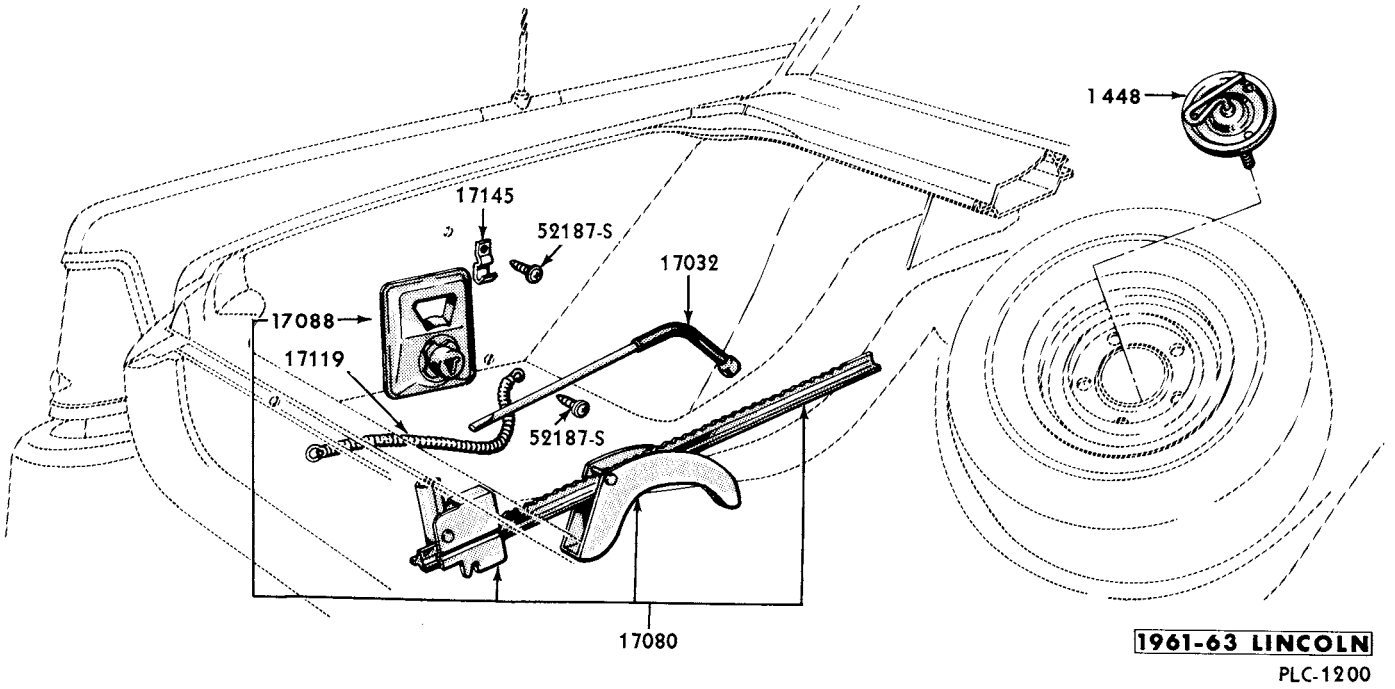

SPARE TIRE MOUNT and JACK

Tools

GROUP AND PART NUMBER	DESCRIPTION, SIZE, ETC.	NO. REQ'D	MODEL OR ENGINE CUBIC INCH DISPLACEMENT	VEHICLE CODE	YEAR 19____
17003	TOOL KIT				
B7A 17003-A		1	All	A B C D	60/62
17A003	HOOK (JACK)				
C2DZ 17A003-B	Narrow type - 1.5" x 7"	1	All	B C	62/63
C4GY 17A003-A	Narrow type - 1.5" x 7"	1	All	C	64
C4VY 17A003-A		1	All	D	64
17018	TOOL (ELECTRICAL TERMINAL CRIMPING)				
B9A 17018-A		1	All	A B C D	60/63
17025	MIRROR & ARM (REAR VIEW OUTSIDE)				
BAK 17025-C	Remote control	1	All	D	60
17A028	PIN (BUMPER JACK LIFT)				
C1VB 17A028-A	1" long	2	All	D	61
C1VY 17A028-A	1.12" long	AR	All	D	62/64
17032	WRENCH (WHEEL & JACK HANDLE)				
C2SZ 17032-B		1	All	A B C D	60/64
17069	ARM & BRACKET (REAR VIEW INSIDE MIRROR)				
BAK 17069-A		1	All except 68A	D	60
BAK 17069-B		1	68A	D	60
17080	JACK (BUMPER)				
PB9M 17080-A		1	All	A	60
C1MM 17080-B		1	All	A	61
C2MY 17080-A		1	All	A	62
C3AZ 17080-A		1	All	A	63
C4MY 17080-A		1	All	A	64
C3OZ 17080-A		1	All	B	62/63
C1KK 17080-A		1	All	C	60/61
C3DZ 17080-A		1	All	C	62/63
C4GY 17080-A		1	All	C	64
B9L 17080-A		1	All	D	60
C1VV 17080-C		1	All	D	61
C2VY 17080-A		1	All	D	62/63
C4VY 17080-A		1	All	D	64
17088	BASE (JACK)				
COAA 17088-A	Oblong opening	1	All	A	61
COAA 17088-B	"T" type opening	1	All	A	61
C2MY 17088-A	Square base	1	All	A	62
C3MY 17088-A	Rectangular shape opening	1	All	A	63
C3MY 17088-B	Wedge shaped opening	1	All	A	63
C3AZ 17088-A	6" x 8" box type	1	All	A	64
C1VV 17088-A		1	All	A	60
		1	All	D	60/63
C2OZ 17088-A	Square opening	1	All	B	62
C2OZ 17088-B	Oblong opening	1	All	B	62
C2OZ 17088-C	Square opening - use with California jack only	1	All	B	62
C3OZ 17088-A	Rectangular opening	1	All	B	63
C3OZ 17088-B	Wedge shape opening	1	All	B	63
C3OZ 17088-C	Square opening	1	All	B	63
CODD 17088-A	"T" type opening	1	All	C	60/63
		1	All	B	63
CODD 17088-B	"V" type opening	1	All	C	60/62
C4OZ 17088-A	Long tapered box type	1	All	C	64
C4SZ 17088-A		1	All	D	64

Tools

GROUP AND PART NUMBER	DESCRIPTION, SIZE, ETC.	NO. REQ'D	MODEL OR ENGINE CUBIC INCH DISPLACEMENT	VEHICLE CODE	YEAR 19____
17091	CLAMP (JACK HOLD DOWN)				
C3AZ 17091-A		1	All	A	63/64
COAB 17091-A		1	All	A	61/62
		1	All	B	62/63
		1	All	C	60/61
		1	54,62	C	62
		1	All	C	63
17115	LIFT (JACK)				
PB9M 17115-B		1	All	A	60
C1MM 17115-A		1	All	A	61
C2MY 17115-A		1	All	A	62
B9L 17115-A	Use with bumper jack B9L-17080-A	1	All	D	60
17119	SPRING (JACK HOLD DOWN)				
BAE 17119-A	22-5/8" free length	1	All	A	60
		1	All	D	60/63
C4VY 17119-A	25-13/16" free length	1	All	D	64
17145	CLIP (JACK HOLD DOWN SPRING RETAINING)				
BAE 17145-B		1	All	D	60
C1VB 17145-A		1	All	D	61/64
17156	HANDLE (REAR VIEW OUTSIDE MIRROR CONTROL SHAFT)				
BAK 17156-B	Remote control	1	All	D	60
17158	ESCUTCHEON (REAR VIEW OUTSIDE MIRROR ARM)				
BAK 17158-A	Remote control - outside	1	All	D	60
17167	ESCUTCHEON (OUTSIDE REAR VIEW MIRROR CONTROL HANDLE)				
B8LY 17167-A	Remote control - inside	1	All	D	60
17208	BRACE (REAR BUMPER MOUNTING BRACKET TO FLOOR)				
BAK 17208-A		2	All	D	60
17224-5	PANEL ASSEMBLY (REAR BUMPER OPENING FINISH)				
C4VY 17224-A	R. H. - 24. 9" long (a)	1	All	D	64
C4VY 17225-A	L. H. - 24. 9" long (a)	1	All	D	64
34392-S7	Nut-5/16"-18	4	a		

Speedometer

17A254	KIT (SPEEDOMETER CABLE TIP REPLACEMENT)				
B9AF 17A254-A		1	All	A C D	60/61
Consists of the following -					
(1) B9AF-17A253-A	die swaging (1) B9AF-17280-A tip				
17255	SPEEDOMETER				
COMY 17255-A	Less mounting plate	1	All	A	60
COMY 17255-B	Kilometers - less mounting plate	1	All	A	60
COMY 17255-C	Police cars only - less mounting plate	1	All	A	60
C1AZ 17255-A	Miles - less mounting plate	1	All	A	61
C1AZ 17255-B	Police cars only - miles	1	All	A	61
C1AZ 17255-C	Kilometers - less mounting plate	1	All	A	61

CONTINUED ON NEXT PAGE

Speedometer

GROUP AND PART NUMBER	DESCRIPTION, SIZE, ETC.	NO. REQ'D	MODEL OR ENGINE CUBIC INCH DISPLACEMENT	VEHICLE CODE	YEAR 19____
17255	SPEEDOMETER (CONTINUED)				
C2MY 17255-A	Miles - less mounting plate	1	All	A	62
C2MY 17255-B	Kilometers - less mounting plate	1	All	A	62
C2MY 17255-C	Miles - Police cars only	1	All	A	62
C3MY 17255-A	Miles	1	All	A	63
C3MY 17255-B	Kilometers	1	All	A	63
C4MY 17255-A	Miles	1	All	A	64
C4MY 17255-B	Kilometers	1	All	A	64
C2YY 17255-A	Miles - less mounting plate	1	All	B	62
C2YY 17255-B	Kilometers - less mounting plate	1	All	B	62
C3YY 17255-A	Miles	1	All	B	63
C3YY 17255-B	Kilometers	1	All	B	63
COGY 17255-A	Miles - less mounting plate	1	All	C	60/61
COGY 17255-B	Kilometers - less mounting plate	1	All	C	60/61
C2GY 17255-A	Miles - less mounting plate	1	All	C	62/63
C3OZ 17255-D	Kilometers	1	All	C	62/63
C4GY 17255-A	Miles - less mounting plate	1	All	C	64
C4GY 17255-B	Kilometers	1	All	C	64
COLF 17255-C		1	All	D	60
C1VY 17255-C	Miles	1	All	D	61/63
C1VY 17255-D	Kilometers	1	All	D	61/63
C4VY 17255-A	Miles	1	All	D	64
C4VY 17255-B	Kilometers	1	All	D	64
17260	CABLE & CORE ASSEMBLY (SPEEDOMETER)				
C1VF 17260-A	Use with speed control - 52-1/8" long	1	All	A	62/63
C3AZ 17260-B	59-43/64" long - without speed control	1	All	A	63
		1	All	A	64
C4MY 17260-A	Use with speed control - 50-1/16" long	1	All	A	64
C2OZ 17260-G	62-1/8" long - without speed control - use with all transmissions	1	All	A	60/62
	Use with all transmissions except 6 cylinder with standard transmission	1	All	B	62/63
C4VY 17260-B	Use with speed control - 38-5/8" long	1	All	A	61
	With speed control	1	All	D	61/64
C2OZ 17260-D	65-1/2" long	1	All	B	62
C2OZ 17260-J	Use with 6 cylinder with standard transmission - 53-1/2" long	1	All	B	62/63
C1SF 17260-A	Use with standard transmission on vehicles built prior to 4-24-62 - 55-3/4" long	1	All	C	60/62
C2DZ 17260-C	Use with automatic transmission 56" long	1	All	C	62/63
	58-41/64" long	1	All	C	64
C2DZ 17260-F	Use with four speed transmission floor mounting - 66-13/32" long	1	144, 170	C	62/64
C2DZ 17260-H	Use with standard transmission - 53-3/4" long	1	All	C	62/64
C3DZ 17260-D	Use with four speed transmission floor mounting - 74-13/32" long	1	260, 289	C	63/64
B9LF 17260-A	55-1/2" long	1	All	D	60
COLF 17260-A	Use with speed control - 41" overall length	1	430-2V	D	60
C1VZ 17260-A	46" long - without speed control	1	All	D	61/62
C2VY 17260-A	Use without speed control - 46" long	1	All	D	63
C4VY 17260-A	Use without speed control - 48" long	1	All	D	64
17A260	BEZEL (SPEEDOMETER)				
COLF 17A260-E		1	All	D	60
C1VF 13A261-B		1	All	D	61/63

Speedometer

GROUP AND PART NUMBER	DESCRIPTION, SIZE, ETC.	NO. REQ'D	MODEL OR ENGINE CUBIC INCH DISPLACEMENT	VEHICLE CODE	YEAR 19____
17262	KIT (SPEEDOMETER CABLE CORE REPLACEMENT)				
B9T 17262-D	125" long - .150" diameter - cut to length and attach tip	1	All	A	60
	125" long - .150" diameter - cut to length	1	All	A C D	64
B9AZ 17262-B	114" long - .130" diameter - L.H. lay	1	All	A C D	64
B9A 17262-D	114" long - .130" diameter - cut to length and attach tip	1	All	A	60
	114" long - .130" diameter - cut to length	AR	All	A B C D	63/64
B9T 17262-E	175" long - .150" diameter - cut to length and attach tip	1	All	A B C	60/64
		AR	All	D	63/64
B9AZ 17262-A	81" long - .130" diameter - cut to length	1	All	A B C D	60/62
		1	All	A C D	64
17A263	SPRING (SPEEDOMETER RETAINING)				
COLF 17A263-A		3	All	D	60
17264	CLAMP (SPEEDOMETER CABLE)				
B9TZ 17264-A		1	All	A	60
C1VY 17264-A		1	All	D	61/64
17271	GEAR (SPEEDOMETER DRIVEN)				
COMM 17271-B	22 Teeth - color code YELLOW - use with 3.10:1 axle ratio and A/T	1	312	A	60
COAA 17271-K	19 Teeth - color code RED - use with 2.71:1 axle ratio and A/T	1	383, 430	A	60
	Use with 3.89:1 axle with 710 x 15 tires and 3.56:1 axle with 750 x 14 tires with S/T and/or o/drive	1	All	A	61/62
	Use with 3.89:1 and 3.50:1 axle ratio with 700 x 14 , 710 x 15" and 750 x 14 tires with S/T - also with 3.25:1 axle with 6.70 x 15 and 750 x 14 tires with PCE A/T	1	All	A	63
COAA 17271-G	20 Teeth - color code ORANGE - use with 2.71:1 axle and S/T with 8.00 x 14 tires - use with 2.91:1 axle and A/T with 9.00 x 14 tires	1	All	A	60
	Use with 3.89:1 axle and S/T or o/drive with 7.50 x 14, 8.00 x 14 and 6.70 x 15 tires	1	All	A	61/62
	Use with 3.56:1 axle and dual range A/T with 7.10 x 15 tires	1	All	A	62/63
COAA 17271-H	21 Teeth - color code GREEN - use with 2.91:1 axle and A/T	1	383, 430	A	60
	Use with 3.56:1 axle and duel range or single range A/T with 800 x 14 tires	1	All	A	61
	Use with 3.56:1 axle and dual range A/T with 800 x 14 tires - use with 4.11:1 axle and S/T with 6.70 x 15 and 7.10 x 15 tires	1	All	A	62/63
COAA 17271-A	17 Teeth - color code BLUE - use with 2.91:1 axle and 2 speed A/T	1	All	A	61
	Use with 3.00:1 axle and 2 speed A/T with 6.70 x 15 or 7.10 x 15 tires	1	All	A	61/63
COAA 17271-B	18 Teeth - color code PURPLE - use with 3.10:1 axle and 2 speed A/T	1	All	A	61
	Use with 3.00:1 axle and 2 speed A/T with 7.50 x 14 or 8.00 x 14 tires	1	All	A	61/63

CONTINUED ON NEXT PAGE

GROUP AND PART NUMBER	DESCRIPTION, SIZE, ETC.	NO. REQ'D	MODEL OR ENGINE CUBIC INCH DISPLACEMENT	VEHICLE CODE	YEAR 19____
17271	GEAR (SPEEDOMETER DRIVEN) CONTINUED				
COAA 17271-J	18 Teeth - color code NATURAL - use with 3.00:1, 3.10:1, 2.91:1 axle with PCC, PCD, PCE and A/T and with 3.56:1 axle and S/T or o/drive	1	All	A	61
	Use with 3.00:1 axle and dual range transmission with 7.50 x 14 or 8.00 x 14 tires and with 3.56:1 axle and S/T with 6.70 x 15 or 7.10 x 15 or 8.00 x 14 tires	1	All	A	62/63
COAA 17271-E	21 Teeth - color code YELLOW - use with 3.56:1 axle and 2 speed A/T with all tires	1	All	A	61/62
	Use with 3.61:1 axle and 2 speed A/T with all tires	1	All	A	63
C2AZ 17271-A	17 Teeth - color code BROWN - use with 3.00:1 axle and S/T and dual range transmission with 6.70 x 15 or 7.10 x 15 tires	1	All	A	62/63
C3OZ 17271-A	15 Teeth - color code BROWN - use with 3.50.1 axle with 4 speed S/T on all except 6.70 x 15 tires- use with 3.00.1 axle with dual range A/T with 8.00 x 14 tires	1	All	A	64
CODD 17271-A	16 Teeth - color code WINE - use with 3.00.1 axle with 3 speed S/T and dual range A/T with 7.50 x 14 tires - use with 3.50.1 axle with 4 speed S/T with 6.70 x 15 tires - use with 3.50.1 axle with o/drive with 7.50 x 14 tires	1	All	A	64
C3DZ 17271-B	17 Teeth - color code GREEN - use with 3.89.1 axle with 4 speed S/T - use with 3.25.1 axle with 3 speed S/T and dual range A/T	1	All	A	64
CODD 17271-B	18 Teeth - color code GOLD - use with 4.11.1 axle with 4 speed S/T - use with 3.50.1 axle with 3 speed S/T and dual range A/T with 7.50 x 14 tires - use with 3.89.1 axle with o/drive with 7.50 x 14 tires	1	All	A	64
CODD 17271-C	19 Teeth - color code PINK - use with 3.89.1 axle with 3 speed S/T and dual range A/T with 7.60 x 15 tires - use with 4.11.1 axle with 3 speed S/T and o/drive with 7.50 x 14 tires	1	All	A	64
C1DD 17271-A	20 Teeth - color code BLACK - use with 3.89.1 axle with 3 speed S/T and dual range A/T with 7.60 x 15 tires	1	All	A	64
CODD 17271-A	16 Teeth - color code WINE - use with 3.00.1 axle and 2 speed A/T with 7.00 x 14 tires - use with 3.50.1 axle and o/drive with 7.00 x 14 tires	1	All	B	62/63
CODD 17271-B	18 Teeth - color code GOLD - use with 3.20.1 axle and S/T or 2 speed A/T with 6.50 x 13 or 7.00 x 14 tires - use with 3.25.1 axle and S/T or 2 speed A/T with 7.00 x 14 tires - use with 3.80.1 axle and o/drive with 7.00 x 14 tires	1	All	B	62/63
CODD 17271-C	19 Teeth - color code PINK - use with 3.25.1 axle and S/T or 2 speed with 6.50 x 13 tires - use with 3.50.1 axle and S/T or 2 speed with 7.00 x 14 tires and 3.80.1 axle and o/drive with 6.50 x 13 tires	1	All	B	62/63
C1DD 17271-A	20 Teeth - color code BLACK - use with A/T or S/T	1	All	B	62
	Use with 3.50:1 axle ratio with 6.50 x 13 tires - A/T or S/T	1	All	B	63

CONTINUED ON NEXT PAGE

GROUP AND PART NUMBER	DESCRIPTION, SIZE, ETC.	NO. REQ'D	MODEL OR ENGINE CUBIC INCH DISPLACEMENT	VEHICLE CODE	YEAR 19____
17271	GEAR (SPEEDOMETER DRIVEN) CONTINUED				
C3OZ 17271-A	15 Teeth - color code BROWN - use with 3 and 4 speed S/T with 3.25:1 axle and 700 x 14 tires	1	All	B	63
C3DZ 17271-B	17 Teeth - color code GREEN - use with o/drive transmission with 3.50:1 axle and 6.50 x 13 or 14 and 7.00 x 13 tires	1	All	B	63
	Use with 3 speed S/T and A/T with 3.25:1 axle and 7.00 x 14 tires	1	All	B	63
	Use with 3 speed S/T with 3.50:1 axle and 7.00 x 13 or 14 tires	1	All	B	63
	Use with 4 speed S/T with 3.50:1 axle and 6.50 x 14 or 7.00 x 13 or 14 tires	1	All	B	63
	Use with o/drive and 4 speed S/T with 3.80:1 axle and 7.00 x 14 tires				
CODD 17271-A	16 Teeth - color code WINE - use with 3.10:1 and 3.20:1 axle ratio with 6.00 x 13 or 6.50 x 13 tires	1	All	C	60/61
		1	54,62	C	62/63
	Use with 2.80:1 and 3.00:1 axle with dual range A/T and 6.50 x 14 or 7.00 x 14 tires	1	260, 289	C	64
CODD 17271-B	18 Teeth - color code GOLD - use with 3.56:1 axle ratio with 6.00 x 13 or 6.50 x 13 tires	1	All	C	60/61
		1	54,62	C	62/63
	Use on 6 cylinder with 3.20:1 axle with dual range A/T and 6.50 x 14 tires	1	All	C	64
	Use on 8 cylinder engines with 3.25:1 axle and 3 speed S/T and 3 speed A/T and 7.00 x 14 and 6.50 x 14 tires	1	All	C	64
CODD 17271-C	19 Teeth - color code PINK - use with 3.89:1 axle ratio with 6.00 x 13 or 6.50 x 13 tires	1	All	C	60/61
	Use with 3.50:1 axle with dual range A/T and 7.00 x 14 tires	1	260,289	C	64
C1DD 17271-A	20 Teeth - color code BLACK - use with 4.00:1 axle ratio with 6.50 x 13 tires	1	All	C	61/63
	Use with 6 cylinder engines with 3.50:1 axle with 3 speed S/T and 2 speed A/T and 6.50 x 14 tires	1	All	C	64
	Use with 8 cylinder engines with 3.50:1 axle with 3 speed S/T and 6.50 x 14 tires	1	All	C	64
C2DZ 17271-G	17 Teeth - color code PURPLE - use with 4 speed transmission - floor mounting with 3.50:1 axle and 6.50 x 13 tires	1	All	C	62/63
	Use with 3.50:1 axle with 4 speed standard HEG transmission and 6.50 x 14 tires on vehicles built prior to 1-15-64	1	260,289	C	64
	Use with 3.00:1 axle with 4 speed standard HEH transmission and 6.50 x 14 tires on vehicles built after 1-14-64				
C2DZ 17271-F	18 Teeth - color code WHITE - use with 4 speed transmission - floor mounting with 3.50:1 axle and 6.00 x 13 tires	1	All	C	62/63
	Use with 3.25:1 axle and 6.00 x 14 or 7.00 x 14 tires	1	All	C	64
	NOTE - use with HEH transmission only on vehicles built prior to 1-14-64				

CONTINUED ON NEXT PAGE

GROUP AND PART NUMBER	DESCRIPTION, SIZE, ETC.	NO. REQ'D	MODEL OR ENGINE CUBIC INCH DISPLACEMENT	VEHICLE CODE	YEAR 19___
17271	GEAR (SPEEDOMETER DRIVEN) CONTINUED				
C3DZ 17271-A	15 Teeth - color code BROWN - use with 4 speed S/T	1	260,289	C	63
	Use on 8 cylinder engines with 4 speed S/T with 3.25:1 axle and 6.50 x 14 or 7.00 x 14 tires NOTE - use with HEG transmission only on vehicles built prior to 1-15-64	1	All	C	64
C2DZ 17271-J	16 Teeth - use with 4 speed transmission - floor mounting with 3.10:1 axle and 6.00 x 13 tires also 3.20:1 axle and 6.50 x 13 tires	1	All	C	63
	Use with 3.50:1 axle with 4 speed standard HEG transmission with 7.00 x 14 tires on vehicles built prior to 1-15-64 Use with 3.00:1 axle with 4 speed standard HEH transmission with 7.00 x 14 tires on vehicles built after 1-14-64	1	260,289	C	64
C3DZ 17271-B	17 Teeth - color code GREEN - use with 3.00.1 axle and 6.50 x 13 or 7.00 x 13 tires - use with 3.50.1 axle and 6.50 x 13 tires	1	All	C	63
	Use on 8 cylinder engines with 3.00:1 axle with 3 speed S/T or dual range A/T with 6.50 x 14 tires	1	All	C	64
C2DZ 17271-H	20 Teeth - color BLUE - use with 4 speed transmission - floor mounting with 4.00:1 axle and 6.50 x 13 tires	1	All	C	63
	Use with 3.50.1 axle and 6.50 x 14 tires NOTE - use with HEH transmission only on vehicles built after 1-15-64	1	260, 289	C	64
C3OZ 17271-A	15 Teeth - color code BROWN - use with 2.80.1 axle with dual range A/T with 7.00 x 14 tires	1	260, 289	C	64
C4DZ 17271-A	19 Teeth - color code PINK - use with 3.50:1 axle with S/T with 7.00 x 14 tires NOTE - use with HEH transmission only on vehicles built after 1-15-64	1	260, 289	C	64
COAA 17271-G	20 Teeth - color code ORANGE - use with 2.89.1 axle	1	All	D	60
C1VV 17271-B	18 Teeth - color code WHITE - use with 2.89:1 axle ratio only with 9.00 x 14 or 9.50 x 14 tires	1	All	D	61/64
C3VY 17271-A	19 Teeth - color code RED - use with 3.11:1 axle	1	All	D	63/64
17A283	BRACKET (SPEEDOMETER HOUSING BEZEL MOUNTING)				
C1VF 17A283-C		2	All	D	61/63
17A284	CLIP (SPEEDOMETER BEZEL MOUNTING)				
C1VF 17A284-C		2	All	D	61/63
17285	GEAR (SPEEDOMETER DRIVE)				
B7A 17285-B	8 Teeth - S/T	1	All	A	60
	Use for PAZ, PBM, PCC, PCD, PCE A/T	1	All	A	61/63
C2AZ 17285-B	7 Teeth - use with o/drive transmission	1	223,292	A	61/62
WAA 17285-A	Use with S/T	1	All	A	61/62
	7 Teeth - use with 3 speed S/T	1	All	A	63
C2AZ 17285-A	7 Teeth - use with 4 speed floor shift transmission	1	All	A	62/63
C2OZ 17285-D	7 Teeth - PCE dual range A/T	1	All	A	64

CONTINUED ON NEXT PAGE

Speedometer

GROUP AND PART NUMBER	DESCRIPTION, SIZE, ETC.	NO. REQ'D	MODEL OR ENGINE CUBIC INCH DISPLACEMENT	VEHICLE CODE	YEAR 19____
17285	GEAR (SPEEDOMETER DRIVE) CONTINUED				
B7C 17285-A	Use on vehicles built prior to 1-2-62 with o/drive transmission	1	221, 260	B	62
	6 Teeth - use with Ford HEH - 4 speed S/T only	1	All	A	64
C2OZ 17285-C	6 Teeth - use with o/drive transmission - use on vehicles built after 1-1-62	1	221, 260	B	62/63
C3OZ 17285-A	6 Teeth - use with 4 speed transmission	1	All	B	63
	Use with Borg Warner 4 speed S/T	1	All	A	64
COMP 17285-A	10 Teeth - use with A/T	1	All	A D	60
	NOTE - Drive gear for 1961 and 1962 Lincoln is part of transmission output shaft basic No. 7060				
C3OZ 17285-C	7 Teeth - not used with 4 speed or o/drive transmissions	1	221, 260	B	62
	Use with A/T	1	221, 260	B	63
	Use with all except 4 speed transmission	1	260	C	63
	Use with S/T	1	260, 289	C	64
	Use with 3 speed S/T	1	All	A	64
C2OZ 17285-A	7 Teeth - use with S/T	1	221, 260	B	62
C2OZ 17285-B	7 Teeth	1	170	B	62
	Use with S/T	1	170	B C	63/64
CODR 17285-A	6 Teeth - use with S/T	1	All	C	60/63
C2DZ 17285-A	6 Teeth - use with 4 speed transmission floor mounting	1	144, 170	C	62/63
C3DZ 17285-A	6 Teeth - use with 4 speed transmission	1	260	C	63
	Use with Borg Warner 4 speed transmission	1	260, 289	C	64
C4DZ 17285-A	7 Teeth - use with Ford HEH - 4 speed S/T only	1	All	C	64
17A285	RETAINER (SPEEDOMETER BEZEL MOUNTING CLIP)				
C1VF 17A285-B		2	All	D	61/62
17288	SPACER (SPEEDOMETER GEAR)				
WAT 17288-A	Use with standard transmission	1	All	A	60
C2DZ 17288-A	Use with four speed transmission floor mounting	1	All	C	62/63
17289	CASE (SPEEDOMETER)				
COMF 17301-B		1	All	A	60
C2AZ 17289-A		1	All	A	61
C2MF 17302-A		1	All	A	62
CODZ 17289-A		1	All	C	60/63
17289	PLATE (SPEEDOMETER MOUNTING)				
C4VY 17289-A		1	All	D	64
17292	RETAINER (SPEEDOMETER DRIVEN GEAR)				
C1DD 17292-A		1	All	A B C	60/64
		1	All	D	60
C1VV 17292-A		1	All	D	61/64
17294	ADAPTOR (SPEEDOMETER)				
C1VV 17294-C		1	All	D	61/64
17298	SEAL (SPEEDOMETER DRIVE GEAR OIL)				
87036-S94	"O" ring - .287" I.D. x .670" O.D.	1	All	A B C D	60/64
17301-2	REFER TO GROUP 17289				

Speedometer

GROUP AND PART NUMBER	DESCRIPTION, SIZE, ETC.	NO. REQ'D	MODEL OR ENGINE CUBIC INCH DISPLACEMENT	VEHICLE CODE	YEAR 19____
17303	GASKET (SPEEDOMETER CASE)				
C2SZ 17303-A		1	All	A B C	60/64
		1	All	D	64
	NS-improvise	1	All	D	61/63
17304	GROMMET (SPEEDOMETER CASE)				
FDR 17304-A		2	All	A B C	60/64
		2	All	D	64
17305	RETAINER (SPEEDOMETER CASE GROMMET)				
FDR 17305-A		2	All	A B C	60/64
		2	All	D	64
17A321	BAFFLE & RETAINER (SPEEDOMETER LAMP)				
C3MY 17A321-A		1	All	A	63/64
17A326	KIT (TACHOMETER)				
C2RZ 17A326-C	5000 RPM - use with 6 cylinder engine	1	All	A B C	60/63
C2RZ 17A326-B	8000 RPM - use with 8 cylinder engine	1	All	A B C D	60/63
C3RZ 17A326-B	3" - 6000 RPM - use with all 8 cylinder engines	1	All	A B C D	63/64
	Consists of the following -				
(1) COAF-14A105-A	jumper wire	(1) C2RA-17363-B	bracket-mounting	(2) 52734-S8	screw-pan hd. tap. - 8-13 x 1/2"
(1) C2RA-17B261-A	plate-mounting	(2) 32892-S	screw-rd. hd. tap. - 8-18 x 1-1/2"	(1) 53264-S13	screw-oval hd. tap. - 8-32 x 1/2"
(1) C2RA-17B262-A	cover-rear				
(1) C2RA-17311-A	housing	(1) 41827-S	screw-typed tap. - 8-32 x 1/2"		
(1) C2RA-17360-D	tachometer				
C4AZ 17A326-A	4" - 9000 RPM - use with 8 cylinder engine -	1	All	A B D	60/64
	12 volt only	1	All	C	60/63
	Use with 8 cylinder Special Performance (Engine Warranty Code D)	1	289	C	64
	Consists of the following -				
(1) C3RA-17A314-A	sender assembly	(1) C3RA-17360-F	tachometer	(1) I. S. -1214	instructions
C3RZ 17A326-A	3" - 6000 RPM - use with all 6 cylinder engines	1	All	B C	63
		1	170, 200	C	64
	Consists of the following -				
(1) COAF-14A105-A	jumper wire	(1) C2RA-17368-B	bracket-mounting	(2) 52734-S	screw-pan hd. tap. - 8-18 x 1/2"
(1) C2RA-17B261-A	plate-mounting	(2) 32892-S	screw-rd. hd. tap. - 8-18 x 1-1/2"	(1) 53264-S	screw-oval hd. tap.- 8-32 x 1/2"
(1) C2RA-17B262-A	cover-rear				
(1) C2RA-17311-A	housing	(1) 41827-S	screw-typed tap.- 8-32 x 1/2"		
(1) C3RA-17360-A	tachometer				
17360	TACHOMETER & HOUSING ASSEMBLY				
C4GY 17360-A	6000 RPM - use with 8 cylinder engine - Cyclone	1	63E	C	64
17368	KIT (TACHOMETER BRACKET)				
C2RZ 17368-A		1	All	A B C D	60/63
C2RZ 17368-B	Bracket and case assembly - use with high performance engine as optional mount for C2RZ-17A326-B and C	1	All	A B C D	60/63
C4AZ 17368-A	Use for steering column or instrument panel top mounting of C4AZ-17A326-A tachometer	1	All	A B C D	60/64
17383	REFER TO GROUP 3B699				

Windshield Wiper

GROUP AND PART NUMBER	DESCRIPTION, SIZE, ETC.	NO. REQ'D	MODEL OR ENGINE CUBIC INCH DISPLACEMENT	VEHICLE CODE	YEAR 19____
17A387	KIT (LICENSE PLATE FRAME)				
C4AZ 17A387-A	Consists of (2) pieces	AR	All	A B C D	60/64
17A388	BUMPER (FRONT LICENSE PLATE)				
COLB 17A388-A		1	All	D	60
17A391	KIT (PLATE - FRONT LICENSE PLATE OPENING COVER)				
COLB 17A391-A	For States not using front license plates	1	All	D	60
17C428	SLEEVE (WINDSHIELD WIPER MOTOR SWITCH)				
C3AZ 17C428-A	For electric wipers - single speed	1	All	A B C	63/64
17C429	PLATE (WINDSHIELD WIPER MOTOR SEAL)				
C3AZ 17C429-A		1	All	A	63/64
17C430	GASKET (WINDSHIELD WIPER MOTOR SEAL)				
C3AZ 17C430-A		1	All	A	63/64
17A431	HOUSING (WINDSHIELD WIPER MOTOR)				
C3AZ 17A431-A	For electric wipers - single speed	1	All	A B C	63/64
17C431	GROMMET (WINDSHIELD WIPER MOTOR MOUNTING BRACKET)				
C3AZ 17C431-A	For electric wipers - two speed - for motor mounting bracket	4	All	A	63/64
	For mounting P/S reservoir to fender	2	All	A	63/64
		2	All	D	64
17B432-3	ARM & PIVOT SHAFT (WINDSHIELD WIPER MOUNTING)				
C1VB 17B432-B	R.H. - less nut (a)	1	All	D	61/63
C1VB 17B433-C	L.H. - less nut (a)	1	All	D	61/63
43487-S	Screw and washer-hex. hd.-1/4"-20 x 3/8"	4	a		
354013-S8	Washer-flat	2	a		
356482-S	Washer-spring-3/8"	2	a		
17A434	GEAR & SHAFT ASSEMBLY (WINDSHIELD WIPER OUTPUT)				
C3AZ 17A434-B	For electric wipers - single speed	1	All	A	63/64
C2AZ 17A434-B	For electric wipers - single speed motor NOTE - Must be used with C2AF-17A485-A armature assembly	1	All	A B	62
C3DZ 17A434-B	For electric wipers - single speed	1	All	B C	63/64
17B434-5	CAM (WINDSHIELD WIPER ARM)				
B8LY 17B434-A	R.H. - use on vehicles built prior to 10-20-59	1	All	D	60
B8LY 17B435-A	L.H. - use on vehicles built prior to 10-20-59	1	All	D	60
17A435	SHAFT (WINDSHIELD WIPER OUTPUT)				
COAF 17A435-B	For electric wipers - use on vehicles built prior to 10-20-60	1	All	A	61
C1AF 17A435-A	For electric wipers - use on vehicles built after 10-19-60	1	All	A	61
	For electric wipers - 2 speed - use on vehicles built prior to 12-25-61	1	All	A	62
C2AZ 17A435-A	For electric wipers - 2 speed - use on vehicles built after 12-24-61	1	All	A	62
C3AZ 17A435-A	For electric wipers - 2 speed - includes (1) 97515-S retainer	1	All	A	63/64
C2OZ 17A435-A	For electric wipers - 2 speed	1	All	B	62/63
CODF 17A435-B	For electric wipers	1	All	C	60/62
C3DZ 17A435-B	For electric wipers - 2 speed	1	All	C	63/64

Windshield Wiper

GROUP AND PART NUMBER	DESCRIPTION, SIZE, ETC.	NO. REQ'D	MODEL OR ENGINE CUBIC INCH DISPLACEMENT	VEHICLE CODE	YEAR 19____
17A436	ARM ASSEMBLY (WINDSHIELD WIPER OUTPUT)				
COAF 17A436-B	For electric wipers - use on vehicles built prior to 10-20-60	1	All	A	61
	For electric wipers Also refer to group 17B545	1	All	C	60/62
C1AF 17A436-A	For electric wipers - use on vehicles built after 10-19-60	1	All	A	61
C2AZ 17A436-A	For electric wipers - 2 speed - use on vehicles built prior to 11-24-61	1	All	A	62
C2AZ 17A436-B	For electric wipers - 2 speed - use on vehicles built after 11-23-61	1	All	A	62
C3AZ 17A436-B	For electric wipers - single speed	1	All	A	63/64
C3AZ 17A436-G	Use with 2 speed wipers	1	All	A	63/64
C3OZ 17A436-A	For electric wipers - 2 speed	1	All	B	63
C3OZ 17A436-D	For electric wipers - single speed	1	All	B	63
C3DZ 17A436-A	For electric wipers - 2 speed	1	All	C	63/64
C3DZ 17A436-B	For electric wipers - single speed	1	All	C	63/64
17B436	REFER TO GROUP 17A536				
17B437	REFER TO GROUP 17528				
17C437	KIT (ARMATURE & GEAR ASSEMBLY WINDSHIELD WIPER)				
C2AZ 17C437-A	For electric wipers - single speed motor NOTE - use when armature requires replacement	1	All	A B	62
	Consists of the following - (1) C2AF-17A434-B shaft and gear (1) C2AF-17A485-A armature				
17C440	BOOT (WINDSHIELD WIPER TERMINAL SEAL)				
C3OZ 17C440-A	For electric wipers - single speed	1	All	B C	63
17C443	BRACKET (WINDSHIELD WIPER CONTROL)				
C4DZ 17C443-A		1	All	C	64
17A451	SLEEVE (VACUUM PUMP TUBE RETAINER)				
	NS-9/32" I.D. x 1/2" O.D. x 1-3/8" long - for service cut from MG-9170-A	1	All	D	60/61
17A452	TUBE & CLIP (VACUUM PUMP TO WINDSHIELD WIPER MOTOR HOSE)				
B9ME 17A452-A		1	All	D	60
17453	ABSORBER (WINDSHIELD WIPER MOTOR MOUNTING BRACKET SOUND)				
PB9M 17453-A	Rubber	1	All	A	60
17C455	SLINGER (WINDSHIELD WIPER OUTPUT SHAFT)				
C3AZ 17C455-A	For electric wipers - 2 speed	1	All	A	63/64
17A459	PLUG (WINDSHIELD WIPER TUBE TO MANIFOLD CONNECTOR)				
B9AE 17A459-B	Use to cap 372224-S elbow - required when electric wipers are installed and/or servo equipment when fuel and vacuum pump assembly is installed - to be used on vehicles built after 10-3-60	1	292	A	61
17A460	WIRE (WINDSHIELD WIPER SWITCH TO IGNITION SWITCH)				
	NS-dealer improvise - cut from B6A-14296-C	1	All	A B C	60/62
C2OZ 17A460-B	For converting two speed wipers to single speed wipers - single speed motor must also be used	1	All	B	62/63

CONTINUED ON NEXT PAGE

Windshield Wiper

GROUP AND PART NUMBER	DESCRIPTION, SIZE, ETC.	NO. REQ'D	MODEL OR ENGINE CUBIC INCH DISPLACEMENT	VEHICLE CODE	YEAR 19____
17A460	WIRE (WINDSHIELD WIPER SWITCH TO IGNITION SWITCH) CONTINUED				
C2OZ 17A460-C	For converting single speed wipers to two speed wiper - 2 speed motor must also be used in connection with C3OZ-17B587-A wiring assembly	1	All	B	62/63
C4DZ 17A460-A	To convert single speed wipers to 2 speed wipers	1	All	C	64
17A461	CAM (WINDSHIELD WIPER)				
COMF 17A461-A	For electric wipers	1	All	A	60/61
	For electric wipers - 2 speed	1	All	A B C	62/64
	For electric wipers - use with CODF-17508-C motor assembly	1	All	C	60
	For electric wipers	1	All	C	61
17A464	ARM & LINK (WINDSHIELD WIPER)				
COMF 17A464-A	For electric wipers	1	All	A	60/61
	For electric wipers - 2 speed	1	All	A B C	62/64
	For electric wipers - use with CODF-17508-D motor assembly	1	All	C	60/61
CODF 17A464-A	For electric wipers - use with CODF-17508-C motor assembly	1	All	C	60
17A465	PAD (FRONT BUMPER GUARD)				
COLB 17A465-A		2	All	D	60
17B468	VALVE (WINDSHIELD WIPER MOTOR PRESSURE REGULATOR)				
C1VB 17B468-B	(a)	1	All	D	61
42143-S8	Screw-hex. washer hd. tap. -No. 14-10 x 3/4"	2	a		
17470	CONTROL (WINDSHIELD WIPER)				
COAF 17470-H	When used with windshield washer kit 17A603 C1AF-17A625-A switch must be attached - use on vehicles built prior to 3-24-61 - on vehicles built after 3-23-61 use C1AB-17B479-A	1	All	A	61
CODF 17470-B		1	All	C	60/62
COLF 17470-B		1	All	D	60
C1VY 17470-A		1	All	D	61/63
C4VY 17470-A		1	All	D	64
17B470	LENS & BEZEL (WINDSHIELD WIPER CONTROL)				
C1VF 17B470-D		1	All	D	61/63
C4VY 17B470-A		1	All	D	64
17471	GASKET (WINDSHIELD WIPER GEAR COVER)				
C2OZ 17471-A	For electric wipers - 2 speed	1	All	A B	62
C2AZ 17471-A	For electric wipers - single speed	1	All	A B	62
B9A 17471-A	For electric wipers	1	All	A C	60/61
C3OZ 17471-A	For electric wipers - single speed	1	All	A B C	63/64
17A472	SPACER (FRONT BUMPER GUARD - PAD)				
COLB 17A472-A		6	All	D	60
17C472	CONNECTOR (WINDSHIELD WIPER MOTOR HOSE)				
C4VY 17C472-A	Nut type reducer	1	All	D	64
C4VY 17C472-B	Nipple - 1.38" long	1	All	D	64
17A473	BASE (WINDSHIELD WIPER COORDINATOR MOUNTING)				
B9AF 17A473-A	For electric wipers	1	All	A	60
		1	All	C	60/61
	For electric wipers - 2 speed - use with CODF-17508-D motor assembly	1	All	C	62

Windshield Wiper

GROUP AND PART NUMBER	DESCRIPTION, SIZE, ETC.	NO. REQ'D	MODEL OR ENGINE CUBIC INCH DISPLACEMENT	VEHICLE CODE	YEAR 19____
17B473	CLIP (WINDSHIELD WIPER TUBING)				
C1VV 17B473-A	Use to attach C1VB-17B475-A, C1VB-17B476-A and C1VB-17B477-A tubes to dash panel	1	All	D	61
17A474	ADAPTOR (WINDSHIELD WIPER COORDINATOR)				
B9AF 17A474-A	For electric wipers	1	All	C	60/61
	For electric wipers - 2 speed use with CODF-17508-D motor assembly	1	All	C	62
17B474	TUBE (WINDSHIELD WIPER PRESSURE FEED)				
C1VV 17B474-A		1	All	D	61
C2VY 17B474-A		1	All	D	62/64
17A475	REFER TO GROUP 17541				
17B475	TUBE (WINDSHIELD WIPER MOTOR TO VALVE) PRESSURE				
C1VB 17B475-A		1	All	D	61
17B476	TUBE (WINDSHIELD WIPER MOTOR TO VALVE) RETURN				
C1VB 17B476-A		1	All	D	61
17B477	TUBE (WINDSHIELD WIPER VALVE TO MOTOR) CONTROL				
C1VB 17B477-A		1	All	D	61
17A479	GEAR (WINDSHIELD WIPER INPUT)				
C2AZ 17A479-A	For electric wipers - 2 speed	1	All	A	60/62
	For electric wipers - 2 speed	1	All	B C	62
	For electric wipers - 2 speed - use with CODF-17508-D motor assembly	1	All	C	60/61
C2AZ 17A479-B	For electric wipers - 2 speed	1	All	B C	63/64
		1	All	A	64
B9MF 17A479-B	For electric wipers - use with CODF-17508-C motor assembly	1	All	C	60
17A479	GEAR & PINION (WINDSHIELD WIPER MOTOR)				
C3AZ 17A479-A	For electric wipers - single speed	1	All	A B C	63/64
17B479	SWITCH & CONTROL ASSEMBLY (WINDSHIELD WIPER)				
C1AB 17B479-A	Used on vehicles built after 3-23-61 - use COAF-17470-H control and C1AF-17A625-A switch on vehicles built prior to 3-24-61	1	All	A	61
	For electric wipers and washer - 2 speed - use with electric motor C2AZ-17508-B	1	All	A	62
	NOTE - switch includes Bowden cable control				
17B480	KIT ("O" RING & WASHER HYDRAULIC WINDSHIELD WIPER)				
C1VY 17B480-A	Use with parts 17B474, 17B475, 17B476 and 17B477	1	All	D	61
	Consists of the following -				
(2) C1VB-17B570-A	gasket	(2) 87002-S94	"o" ring	(2) 87010-S94	"o" ring
(2) C1VB-17B570-B	gasket	(2) 87006-S94	"o" ring		
17B483	KIT (WINDSHIELD WIPER MOTOR KICKER & SHUTTLE)				
CODZ 17B483-A	For vacuum motor	1	All	C	60/62
	Consists of the following -				
(1) CODB-17B480-A	kicker	(1) CODB-17B482-A	shuttle	(1) V-5780	instruction sheet
(1) CODB-17B481-A	spring				

Windshield Wiper

GROUP AND PART NUMBER	DESCRIPTION, SIZE, ETC.	NO. REQ'D	MODEL OR ENGINE CUBIC INCH DISPLACEMENT	VEHICLE CODE	YEAR 19____
17A485	ARMATURE (WINDSHIELD WIPER MOTOR)				
C2AZ 17A485-A	For electric wipers - single speed	1	All	A	62
C3AZ 17A485-C	For electric wipers - single speed - use on Comet and Meteor built prior to 3-15-63 and use with C3OZ-17508-B windshield motor only	1	All	A B C	63
		1	All	A	64
C3UZ 17A485-A	For electric wipers - single speed - use on vehicles built after 3-14-63 and use with C3UZ-17508-C windshield wiper motor only	1	All	B C	63/64
17B495	KIT (CABLE WINDSHIELD WIPER PIVOT SHAFT)				
COMY 17B495-A		1	All	A	60
Consists of the following -					
(1) COMB-17B495-A cable 14" long	(1) COMB-17B496-A connector 1"				
17496	BRACKET (WINDSHIELD WIPER MOTOR MOUNTING)				
COAZ 17496-A	For electric wipers	1	All	A	60/61
C2AZ 17496-A	For electric wipers - single speed - includes standard parts	1	All	A	62
C3AZ 17496-A	For electric wipers - 2 speed	1	All	A	63/64
C3AZ 17496-B	For electric wipers - single speed	1	All	A	63/64
C2OZ 17496-B	For electric wipers - single speed	1	All	B	62
C2OZ 17496-C	For electric wipers - 2 speed	1	All	B	62
C3OZ 17496-A	For electric wipers - 2 speed	1	All	B	63
C3OZ 17496-B	For electric wipers - single speed	1	All	B	63
CODZ 17496-A	For electric wipers - 2 speed	1	All	C	60/62
CODB 17496-C	For electric wipers - single speed - attaches to cowl top panel to secure windshield wiper motor to bracket	1	All	C	60/63
	Single speed or 2 speed	1	All	C	64
C3DZ 17496-A	For electric wipers - 2 speed	1	All	C	63/64
C3DZ 17496-B	For electric wipers - single speed	1	All	C	63/64
17A499	LEAD (WINDSHIELD WIPER MOTOR)				
C2AZ 17A499-A	For electric wipers - single speed	1	All	A B	62
17A500	KIT (CAM REPLACEMENT ELECTRIC WINDSHIELD WIPER)				
B9MY 17A500-A	For electric wipers - use with CODF-17508-C motor assembly only	1	All	C	60
Consists of the following -					
(1) B9MF-17A461-A cam	(1) 353862-S washer		(1) 2900982 retainer		
(1) B9MF-17A462-A retainer	(1) 358662-S washer		(1) 2900983 spring		
17B500	SEAL (WINDSHIELD WIPER)				
C2OZ 17B500-A	Rubber	1	All	A B	62
17A501	SPRING ASSEMBLY (WINDSHIELD WIPER CAM RETURN)				
COMF 17A501-B	For electric wipers	1	All	A	60/61
	For electric wipers - 2 speed	1	All	A B C	62/64
	For electric wipers - use with CODF-17508-D motor	1	All	C	60
	For electric wipers	1	All	C	61
17B502	SEAL (WINDSHIELD WIPER AUXILIARY DRIVE)				
C1AF 17B502-A	For electric wipers - use on vehicles built after 10-19-60	1	All	A	61/62
17B505	PLATE (WINDSHIELD WIPER MOTOR PRESSURE REGULATOR VALVE ANCHOR)				
C1VB 17B505-A	Rubber - attaches to fire wall	1	All	D	61

Windshield Wiper

GROUP AND PART NUMBER	DESCRIPTION, SIZE, ETC.	NO. REQ'D	MODEL OR ENGINE CUBIC INCH DISPLACEMENT	VEHICLE CODE	YEAR 19____
17508	MOTOR (WINDSHIELD WIPER)				
COMF 17508-E	For electric wipers - less drive	1	All	A	60
COAF 17508-E	For electric wipers - use on vehicles built prior to 10-20-60 - less drive	1	All	A	61
C2AZ 17508-B	For electric wipers - use on vehicles built after 10-19-60 - less drive	1	All	A	61
	For electric wipers - 2 speed - less drive - use with C1AB-17B479-A Bowden cable control switch	1	All	A	62
C1AZ 17508-A	For vacuum wipers - less drive (a)	1	All	A	61
C2AZ 17508-C	For electric wipers - 2 speed - use C2AZ-17A553-B electric control switch	1	All	A	62
C3AZ 17508-A	For electric wipers - single speed - less drive	1	All	A	63/64
C3AZ 17508-B	For electric wipers - 2 speed - less arm and bracket	1	All	A	63/64
C2AZ 17508-A	For electric wipers - single speed - less drive	1	All	A B	62
C2OZ 17508-C	For electric wipers - 2 speed - less drive	1	All	B	62
C3OZ 17508-A	For electric wipers - 2 speed - less arm and bracket	1	All	B	63
C3OZ 17508-B	For electric wipers - single speed - less drive	1	All	B C	63
C3UZ 17508-C	For electric wipers - single speed	1	All	B C	63/64
CODB 17508-C	For vacuum wipers - less drive	1	All	C	60/62
C2DZ 17508-B	For electric wipers - less drive - 2 speed	1	All	C	60/62
C3DZ 17508-A	For electric wipers - 2 speed - less arm	1	All	C	63/64
COLB 17508-A	Vacuum - less drive	1	All	D	60
C1VY 17508-A	Hydraulic - less drive☆ (b) ☆ Includes - (1) 3/8" tube and nut assembly (2) 3/8" coupling	1	All	D	61
C2VY 17508-A	Hydraulic - less drive	1	All	D	62/63
C4VY 17508-A	Hydraulic - less drive	1	All	D	64
42906-S7	Screw and washer-1/4-20 x 3/4	2	a		
43260-S7	Screw and washer-1/4-20 x 1/2	AR	a		
43511-S7	Screw and lockwasher-1/4"-20 x 1.00	2	b		
17A511	SWITCH & COVER (WINDSHIELD WIPER)				
COMF 17A511-A	For electric wipers	1	All	A	60
COAF 17A511-A	For electric wipers	1	All	A	61
C2OZ 17A511-A	For electric wipers - 2 speed	1	All	A B	62/64
		1	All	C	63/64
COMF 17A511-C		1	All	C	60/61
	For electric wipers - 2 speed	1	All	C	62
17A511	COVER (WINDSHIELD WIPER GEAR)				
C3AZ 17A511-B	For electric wipers - single speed - includes gasket	1	All	A B C	63/64
17512	NUT (WINDSHIELD WIPER CONTROL)				
COMF 17512-A		1	All	A	60
COAF 17512-A		1	All except 54B, 65B, 71B, 75B, 76B	A	61
C2MY 17512-A	☆(1) req'd. - for windshield wiper control ☆(1) req'd. - for air control	2☆	All	A	62
C2AB 17512-A	(1) req'd. - for windshield wiper control (1) req'd. - for R. H. air control with heater only	2	All	A	63
C4AZ 17512-A		2	All	A	64
B7A 17512-B		1	54B, 65B, 71B, 75B, 76B	A	61
		1	All	C	60/63

CONTINUED ON NEXT PAGE

Windshield Wiper

GROUP AND PART NUMBER	DESCRIPTION, SIZE, ETC.	NO. REQ'D	MODEL OR ENGINE CUBIC INCH DISPLACEMENT	VEHICLE CODE	YEAR 19____
17512	NUT (WINDSHIELD WIPER CONTROL) CONTINUED				
C3OZ 17512-A		1	All	B	62/63
C4GY 17512-A		1	All	C	64
COLF 17512-A		1	All	D	60
17513	KNOB (WINDSHIELD WIPER CONTROL)				
COMF 17513-A		1	All	A	60
COAF 17513-A	(1) req'd. - for top control (1) req'd. - for windshield wiper control	AR	All	A	61
C2YB 17513-B	(1) req'd. - for windshield wiper switch (1) req'd. - for R. H. air control with heater	AR	All	A B	62/64
	(1) req'd. - for R. H. air control with fixed steering column	AR	All	A	64
PB9E 17513-A	Chrome - also use for heater blower switch	1or2	All	C	60/62
	Heater blower switch only	1	All	A	62
	(1) req'd. - for windshield wiper switch and heater control (1) req'd. - for rear window control (1) req'd. - for convertible top control	AR	All	C	63
CODF 17513-A	Use as heater control - WHITE	1	All	C	60/63
COLF 17513-A		1	All	D	60
C1VF 17513-A		1	All	D	61/63
C4VY 17513-A		1	All	D	64
17514-5	SPACER (WINDSHIELD WIPER MOUNTING OUTER)				
COAB 17514-A	5/8" I. D. - use on vehicles built prior to 11-16-60	1	All	A	61
C1AB 17514-A	3/4" I. D. - use on vehicles built after 11-15-60	1	All	A	61/62
C2OB 17514-A		1	All	B	62
C3OZ 17514-A	9/16" thick	2	All except 65	B	63
C3OZ 17514-B	3/8" thick	2	65	B	63
CODB 17514-B	R.H.	1	All	C	60/64
CODB 17515-B	L. H.	1	All	C	60/64
17B517-8	PLATE (WINDSHIELD WIPER MOTOR MOUNTING)				
C1AB 17496-A		1	All	A	61
C2AZ 17B518-A	For electric wipers - single speed	1	All	A	62
C2AZ 17B517-A	For electric wipers	1	All	B	62
C3OZ 17B517-A		1	All	B	63
17519-20	SPACER (WINDSHIELD WIPER MOUNTING)				
BAK 17519-B	R.H. - outer	1	All	D	60
BAK 17520-B	L.H. - outer	1	All	D	60
17522	VALVE (WINDSHIELD WIPER MOTOR VACUUM CHECK)				
CODB 17522-A	For vacuum wipers	1	All	C	60/64
17526-7	ARM (WINDSHIELD WIPER)				
COMB 17526-C	R. H.	1	All	A	60
COMB 17527-C	L. H.	1	All	A	60
COAB 17526-A	R. H. - pivot shaft 9/16" I. D. - use on vehicles (a) built prior to 11-16-60	1	All	A	61/62
COAB 17527-A	L.H. - pivot shaft 9/16" I. D. - use on vehicles (a) built prior to 11-16-60	1	All	A	61/62
C2AZ 17526-A	R.H. - use on vehicles built after 11-15-60	1	All	A	61/62
C2AZ 17527-A	L.H. - use on vehicles built after 11-15-60	1	All	A	61/62

CONTINUED ON NEXT PAGE

GROUP AND PART NUMBER	DESCRIPTION, SIZE, ETC.	NO. REQ'D	MODEL OR ENGINE CUBIC INCH DISPLACEMENT	VEHICLE CODE	YEAR 19____
17526-7	ARM (WINDSHIELD WIPER) CONTINUED				
C3AZ 17526-A		2	All	A	63/64
C2OZ 17526-A		2	All	B	62/63
CODB 17526-B		2	All	C	60/64
B9LB 17526-A	R.H. - use on vehicles built prior to 10-20-59	1	All	D	60
B9LB 17527-A	L.H. - use on vehicles built prior to 10-20-59	1	All	D	60
COLB 17526-A	R.H. - use on vehicles built after 10-19-59	1	All	D	60
COLB 17527-A	L.H. - use on vehicles built after 10-19-59	1	All	D	60
C1VY 17526-A	R.H.	1	All	D	61/63
C1VY 17527-A	L.H.	1	All	D	61/63
C4VY 17526-A	R.H.	1	All	D	64
C4VY 17527-A	L.H.	1	All	D	64
356094-S	Nut-octagon hd.-5/8" x 24	2	a		
17A526	COVER (WINDSHIELD WIPER MOTOR GEAR)				
C2AZ 17A526-A	For electric wipers - single speed	1	All	A B	62
17A527	INSULATOR (WINDSHIELD WIPER SWITCH)				
COMF 17A527-A	For electric wipers	1	All	C	60/61
	For electric wipers - 2 speed	1	All	C	62
17528	BLADE (WINDSHIELD WIPER)				
B9MB 17528-B		2	All	A	60
C3TZ 17528-A	12.88" long - alternate with C1AB-17528-B in sets only	2	All	A	61/62
C1AB 17528-B	13.00" long for vacuum wipers - alternate with C3TZ-17528-A in sets only	2	All	A	61/62
C3AZ 17528-A	15.00" with frame - alternate with C3AZ-17528-D in sets only	2	All	A B C	61/64
C3AZ 17528-D	15.00" with frame - alternate with C3AZ-17528-A in sets only	2	All	A B	63
		2	All	C	60/63
C1SB 17528-B	For electric 2 speed wipers	2	All	B	62
COLB 17528-A		2	All	D	60
C1VB 17528-C	R.H. - with removable insert	1	All	D	61/63
C1VB 17B437-C	L.H. - with removable insert	1	All	D	61/63
C4VY 17528-A	R.H. - with removable insert	1	All	D	64
C4VY 17528-B	L.H. - with removable insert For insert refer to group 17593	1	All	D	64
17531	CLIP (WINDSHIELD WIPER ADAPTOR & CONNECTOR ARM)				
C3SZ 17531-A		2	All	A D	61/64
		AR	All	B	62/63
		2	All	C	60/64
17A536	SHIELD (WINDSHIELD WIPER CABLE)				
B9LB 17A536-A		1	All	D	60
COLB 17B436-A	L.H. - attaches to brake pedal support and cowl top	1	All	D	60
17A538	ADAPTOR (WINDSHIELD WIPER CONTROL CABLE)				
COAB 17A538-A		1	54A, 58A, 62A, 64A, 65A, 71A, 75A	A	61/62
		1	All	C	60/62
17540	ARM ASSEMBLY (WINDSHIELD WIPER MOUNTING)				
C2OZ 17540-A		1	All	B	62

Windshield Wiper

GROUP AND PART NUMBER	DESCRIPTION, SIZE, ETC.	NO. REQ'D	MODEL OR ENGINE CUBIC INCH DISPLACEMENT	VEHICLE CODE	YEAR 19.___
17541	SEAL (WINDSHIELD WIPER PIVOT SHAFT TO COWL TOP)				
B9MY 17A475-A		2	All	A	60
		2	All	B	62
	NS-Improvise	2	All	C	60/64
CODB 17541-A	Leather	2	All	D	60
BAK 17541-A	Rubber - 51/64" I.D. x 3/16" thick - outer	2	All	D	60
B8LY 17A475-A	Inner	2	All	D	61/63
	NS-improvise				
17543	HOSE (WINDSHIELD WIPER, WASHER, HEATER & AIR CONDITIONER VACUUM CONTROL)				
C1SZ 17543-A	25 ft. roll - 3/64" I.D. - use this hose to service heater and/or a/cond. - cut to required length	AR	All	A	60
		AR	All	D	61/63
A9A 17543-A	50 ft. roll - 1/8" I.D. - cut to required length	AR	All	B	62/63
		AR	All	A C	63
06H 17543-C	25 ft. roll - 7/32" I.D. x 7/16" O.D. - for vacuum hose application - cut to required length	AR	All	A C	60/62
		AR	All	D	60/62
B9A 17543-A	25 ft. roll - 9/32" I.D. x 1/2" O.D. - cut to required length	AR	All	A	61/62
		AR	All	C	60/64
		AR	All	D	60
A9A 17543-C	50 ft. roll - 1/4" I.D. x 15/32" O.D. - cut to required length	AR	All	A B	61/64
		AR	All	D	61/62&64
		AR	All	C	60/64
A9A 17543-B	50 ft. roll - 3/16" I.D. - cut to required length	AR	All	A B C	62/63
		AR	All	D	60/62
C4SZ 17543-A	15 ft. roll - 9/64" I.D. x 11/64" O.D. - vacuum supply hose - cut to required length	AR	All	A B C D	63/64
C4SZ 17543-B	15 ft. roll - 13/64" I.D. x 15/64" O.D. - vacuum supply hose - cut to required length	AR	All	A B C D	63/64
C4SZ 17543-C	15 ft. roll - 3/32" I.D. x 7/64" O.D. - vacuum supply hose - cut to required length	AR	All	A B C D	63/64
	NS-32" long - cut from B9A-17543-A	1	All	C	60/62
17A544	GUIDE (WINDSHIELD WIPER CONTROL CABLE)				
COAB 17A544-A	For vacuum wiper motor only	1	All	B C	60/62
17B545	ARM (WINDSHIELD WIPER DRIVE)				
C2OZ 17B545-A	For electric wipers - 2 speed	1	All	B	62
C2OZ 17B545-B	For electric wipers - single speed Also refer to group 17A436	1	All	B	62
17548	RETAINER (WINDSHIELD WASHER CONTROL BUTTON)				
C1VY 17548-A		1	All	D	61/63
17548	SPRING (WINDSHIELD WASHER CONTROL BUTTON)				
C4VY 17548-A		1	All	D	64
17A549	SCREW (WINDSHIELD WIPER MOTOR SHAFT STOP)				
COMF 17A549-A	For electric wipers	1	All	A C	60/61
	For electric wipers - 2 speed	1	All	A B C	62/64
C3AZ 17A549-A	For electric wipers - single speed	1	All	A B C	63/64
17B549	LEVER (WINDSHIELD WIPER PARK SWITCH)				
C3AZ 17B549-A	For electric wipers - single speed	1	All	A B C	63/64
17B550	WASHER (WINDSHIELD WIPER MOTOR THRUST)				
C2AZ 17B550-A	Nylon - for electric wipers - single speed	1	All	A B	62
17A553	REFER TO GROUP 17A555				

Windshield Wiper

GROUP AND PART NUMBER	DESCRIPTION, SIZE, ETC.	NO. REQ'D	MODEL OR ENGINE CUBIC INCH DISPLACEMENT	VEHICLE CODE	YEAR 19____
17554-5	HOUSING (WINDSHIELD WIPER PIVOT SHAFT)				
COMB 17554-A	R.H. - less nut	1	All	A	60
B9BM 17555-A	L.H. - less nut	1	All	A	60
BAK 17554-A	R.H. - use on vehicles built prior to 10-20-59 - less spacer	1	All	D	60
BAK 17555-A	L.H. - use on vehicles built prior to 10-20-59 - less spacer	1	All	D	60
COLB 17554-A	R.H. - use on vehicles built after 10-19-59 - less spacer	1	All	D	60
COLB 17555-A	L.H. - use on vehicles built after 10-19-59 - less spacer	1	All	D	60
17A555	SWITCH (WINDSHIELD WIPER CONTROL)				
COMF 17A553-A		1	All	A	60
COMF 17A555-A	Includes washer control	1	All	A	60
C2AZ 17A553-A	For electric wipers and washer - single speed - with 5 prong connection	1	All	A	62
C2AZ 17A553-B	For electric wipers - 2 speed - use with electric switch control motor - C2AZ-17508-C - with 7 prong connection	1	All	A	62
C4AZ 17A553-A	For electric wipers - single speed - with 7 terminals for windshield washer - use with C4AZ-17B587-D (C4MB-B)	1	All	A	64
C4AZ 17A553-B	For electric wipers - 2 speed - with 7 terminals - use with C4AZ-17B587-C (C4MB-A)	1	All	A	64
C3AZ 17A553-A	For electric wipers - single speed - with terminals for windshield washer	1	All	A C	63
C3AZ 17A553-B	For electric wipers - 2 speed - with terminals for 2 speed windshield washer	1	All	A C	63
C2OZ 17A553-A	For electric wipers - 2 speed	1	All	B	62/63
C2OZ 17A555-A	For electric wipers - single speed Also refer to groups 17470, 17A479 and 17A511	1	All	B	62
C3OZ 17A555-A	For electric wipers - single speed Also refer to group 17470	1	All	B	63
C4DZ 17A553-A	For electric wipers - 2 speed	1	All	C	64
C4DZ 17A553-B	For electric wipers - single speed	1	All	C	64
17A556	GEAR & STOP ASSEMBLY (WINDSHIELD WIPER OUTPUT)				
B9MF 17A556-A	For electric wipers	1	All	A C	60/61
	For electric wipers - 2 speed	1	All	A B C	62/64
17A558	SPACER (WINDSHIELD WIPER OUTPUT SHAFT)				
CODF 17A558-A	For electric wipers	1	All	C	60/61
17B563	PIN (WINDSHIELD WIPER MOTOR)				
C3AZ 17B563-A	For electric wipers - single speed	1	All	A B C	63/64
17B564	PIN (WINDSHIELD WIPER MOTOR CONTACT OPERATING)				
C3AZ 17B564-A	For electric wipers - single speed	1	All	A B C	63/64
17566-7	ARM & PIVOT SHAFT (WINDSHIELD WIPER MOUNTING)				
COAB 17566-B	R.H. - knurled driver 1/2" O.D. - use on vehicles built prior to 11-16-60 - less spacer	1	All	A	61
COAB 17567-B	L.H. - knurled driver 1/2" O.D. - use on vehicles built prior to 11-16-60 - less spacer	1	All	A	61

CONTINUED ON NEXT PAGE

GROUP AND PART NUMBER	DESCRIPTION, SIZE, ETC.	NO. REQ'D	MODEL OR ENGINE CUBIC INCH DISPLACEMENT	VEHICLE CODE	YEAR 19____
17566-7	ARM & PIVOT SHAFT (WINDSHIELD WIPER MOUNTING) CONTINUED				
C1AB 17566-A	R.H. - knurled driver 9/16" O.D. - use on vehicles built after 11-15-60 - less spacer	1	All	A	61
C1AB 17567-A	L.H. - knurled driver 9/16" O.D. - use on vehicles built after 11-15-60 - less spacer	1	All	A	61
C2AZ 17566-A	R.H. - for electric wipers - single speed - less spacer	1	All	A	62
C2AZ 17566-B	R.H. - for electric wipers - 2 speed - less spacer	1	All	A	62
C2AZ 17567-A	L.H. - for electric wipers - single and 2 speed - less spacer	1	All	A	62
C3AZ 17566-A	R.H. - for electric wipers - less nut	1	All	A	63/64
C3AZ 17567-A	L.H. - for electric wipers - less nut	1	All	A	63/64
C2OZ 17566-A	R.H. - less spacer	1	All	B	62
C2OZ 17567-A	L.H. - less spacer	1	All	B	62
C3OZ 17566-A	R.H. - less spacer	1	All	B	63
C3OZ 17567-A	L.H. - less spacer	1	All	B	63
CODB 17566-D	R.H. - less spacer	1	All	C	60/62
CODB 17567-D	L.H. - less spacer	1	All	C	60/62
C3DZ 17566-A	R.H. - less spacer	1	All	C	63/64
C3DZ 17567-A	L.H. - less spacer	1	All	C	63/64
C4VY 17566-A	R.H. - less nut	1	All	D	64
C4VY 17567-A	L.H. - less nut	1	All	D	64
17B566	BRUSH & TERMINAL ASSEMBLY (WINDSHIELD WIPER MOTOR)				
C3AZ 17B566-A	Insulated slip on terminal - for electric wipers - single speed	1	All	A B C	63/64
C3AZ 17B566-B	Rounded eyelet - for electric wipers - single speed	1	All	A B C	63/64
17579	BODY (WINDSHIELD WIPER) AUXILIARY DRIVE				
COMB 17579-B		1	All	A	60
COAB 17579-C	Use on vehicles built prior to 10-20-60	1	All	A	61
C1AF 17579-A	Use on vehicles built after 10-19-60	1	All	A	61/62
CODB 17579-B		1	All	C	60/62
C3DZ 17579-A		1	All	C	63/64
B9LB 17579-A		1	All	D	60
C1VY 17579-C	(a)	1	All	D	61/64
43906-S7	Screw and lockwasher-1/4"-20 x 3/4"	4	a		
17B583	PLATE & SWITCH (WINDSHIELD WIPER MOTOR BRUSH)				
C2AZ 17B583-A	For electric wipers - single speed	1	All	A B	62
C3AZ 17B583-A	For electric wipers - single speed	1	All	A B C	63/64
17B584	CUP & MAGNET ASSEMBLY (WINDSHIELD WIPER MOTOR)				
C3AZ 17B584-C	For electric wipers - single speed - use on Comet and Meteor built prior to 3-15-63 with C3OZ-17508-B windshield wiper motor	1	All	A B C	63
	Single speed	1	All	A	64
C3UZ 17B584-A	For electric wipers - single speed - use on vehicles built after 3-14-63 and with C3UZ-17508-C windshield wiper motor only	1	All	B C	63/64
17B587	WIRING (WINDSHIELD WIPER SWITCH TO WINDSHIELD WIPER MOTOR) EXTENSION				
C2AZ 17B587-A	For electric wipers - 2 speed with a/cond. only	1	All	A	62
C3AZ 17B587-A	For electric wipers - single speed	1	All	A	63
C3AZ 17B587-D	Use with 2 speed wipers	1	All	A	63
C4AZ 17B587-C	Use with 2 speed wipers - use with C4AZ-17A553-B (C4MB-B) switch	1	All	A	64

CONTINUED ON NEXT PAGE

Windshield Wiper

GROUP AND PART NUMBER	DESCRIPTION, SIZE, ETC.	NO. REQ'D	MODEL OR ENGINE CUBIC INCH DISPLACEMENT	VEHICLE CODE	YEAR 19____
17B587	WIRING (WINDSHIELD WIPER SWITCH TO WINDSHIELD WIPER MOTOR) EXTENSION (CONTINUED)				
C4AZ 17B587-D	For electric wipers - single speed - use with C4AZ-17A553-A (C4MB-A) switch	1	All	A	64
C3OZ 17B587-A	For electric wipers - 2 speed - use on vehicles built prior to 1-17-63	1	All	B	62/63
C3OZ 17B587-B	For electric wipers - 2 speed - use on vehicles built after 1-16-63	1	All	B	63
17B588	SPACER (WINDSHIELD WIPER PIVOT SHAFT INNER)				
C3OZ 17B588-A		2	65A	B	63
17593	BLADE INSERT (WINDSHIELD WIPER LESS FRAME)				
C1AZ 17593-A	13" service blade replacement for C1AB-17528-B	2	All	A	61/62
C3AZ 17593-A	15" service blade replacement for C3AZ-17528-A	2	All	A B C	63/64
C3AZ 17593-B	15" service blade replacement for C3AZ-17528-C	2	All	A B C	63
	15" service blade replacement for all Anderson blade assemblies	2	All	A C	64
C1VB 17593-A	17.90" long - use with C1VB-17528-C and C1VB-17B437-C	2	All	D	61/63
C4VY 17593-A	19.88" long	2	All	D	64
17B595	BRUSH & PLATE (WINDSHIELD WIPER MOTOR)				
C2AZ 17B595-A	For electric wipers - single speed	1	All	A B	62
17B597	FRAME & FIELD (WINDSHIELD WIPER MOTOR)				
C2AZ 17B597-A	For electric wipers - single speed	1	All	A B	62
17B599	SPRING (WINDSHIELD WIPER MOTOR BRUSH)				
C2AZ 17B599-A	For electric wipers - single speed	2	All	A B	62
C3AZ 17B599-A	For electric wipers - single speed	2	All	A B C	63/64
17601	COORDINATOR (WINDSHIELD WASHER)				
B9MB 17601-A		1	All	D	60
17A601	TEE (WINDSHIELD WASHER HOSE)				
COMB 17A601-B	9/64" O.D. x 17/64" O.D. x 17/64" - use for vehicles with a/cond.	1	All	A	60
B5LY 17A601-A	1/8" x 1/8" x 7/32"	AR	All	A	60
	(1) req'd. - for heater with climate dial				
	(1) req'd. - for a/cond.	AR	All	D	60
COAB 17A601-A	(2) holes 3/16" diameter - (1) hole 1/8" diameter	1	All	A B C	60/64
		1	All	D	61/64
	Use with Rotunda windshield washer - also serviced in C1RZ-17A603-A kit	1	All	A B C D	60/63
17A602	JET (WINDSHIELD WASHER NOZZLE)				
COMB 17A602-A	Also serviced in COMB-17665-B	2	All	A	60
C1VB 17A602-A	Included in C1VB-17665-A	2	All	D	61/64
17603	JET & BRACKET (WINDSHIELD WASHER)				
COAZ 17603-A		2	All	A	61/62
C3AZ 17603-B	Electric	2	All	A	63/64
C2OB 17603-A		2	All	B	62/63
CODB 17603-A		2	All	C	60/63
C4DZ 17603-A		2	All	C	64

Windshield Wiper

GROUP AND PART NUMBER	DESCRIPTION, SIZE, ETC.	NO. REQ'D	MODEL OR ENGINE CUBIC INCH DISPLACEMENT	VEHICLE CODE	YEAR 19____
17A603	KIT (WINDSHIELD WASHER)				
C1AZ 17A603-C		1	All	A	61
C3AZ 17A603-A	For electric wipers - single speed	1	All	A	63
C4AZ 17A603-A	For electric wipers - single speed	1	All	A	64
C4MY 17A603-A	For electric wipers - 2 speed - refer to basic number 17A553 for applicable windshield wiper control switch	1	All	A	63/64

Consists of the following -

(1) COAB-17A601-A	tee	(1) C1AB-17A605-A	hose resvr. to pump	(2) 42127-S8	screw. hex. -
(2) C3AZ-17603-C	jet and bracket	(1) C4AB-17610-A	reservoir		No. 10-12 x 1/2"
(1) COAB-17A605-A	hose pump to tee	(1) C4MB-17A622-A	wiring	(3) 42147-S8	screw-hex. -
(1) COAB-17A605-C	hose tee to jet	(1) C4VB-17651-A	brkt. -resvr. mtg.		No. 10-12 x 7/8"
(1) COAB-17A605-D	hose tee to jet	(1) C1AZ-17664-B	pump		

C1RZ 17A603-A	"Rotunda" -	1	All	A B C D	60/63

Consists of the following -

(1) COAB-17A601-A	tee	(1) C1RZ-17618-A	reservoir	§(2) C1RB-17665-A	nozzle
☆(1) C1RB-17A605-A	hose	(1) C2RZ-17632-A	cover	(4) 42127-S	washer
☆(1) C1RB-17A605-B	hose	§(2) C1RB-17A635-A	pin aiming	§(2) 376772-S	washer
☆(2) C1RB-17A605-C	hose	(1) B9BA-17651-A	bracket	§(2) 376773-S	washer
☆(1) C1RB-17A615-A	screen	(1) C1RZ-17664-A	pump		

☆Not serviced loose §Serviced only in C1RZ-17A638-A nozzle kit

C3OZ 17A603-A	For electric wipers - single speed	1	All	B	63
C1DZ 17A603-A	Note - Part B9AF-17A474-A required when installed on vehicles with electric wipers	1	All	C	60/62
C3DZ 17A603-A	For electric wipers - single speed	1	All	C	63
C4DZ 17A603-A	For electric wipers - single speed	1	All	C	64
17A604	BUTTON ASSEMBLY (WINDSHIELD WASHER CONTROL)				
C1VY 17A604-A		1	All	D	61/63
C4VY 17A604-A		1	All	D	64
17A605	HOSE (WINDSHIELD WASHER)				
B7MY 17A605-A	25 ft. roll - 7/64" I.D. x 25/64" O.D. - use this hose to service various hoses by cutting to required length	AR AR	All All	A D	61 60/62
B7MY 17A605-C	25 ft. roll - 5/32" I.D. x 3/8" O.D. - use this hose to service various vacuum hoses by cutting to required length	AR	All	A C D	60
B7MY 17A605-B	25 ft. roll - 7/32" I.D. x 7/16" O.D. - use this hose to service various hoses by cutting to required length	AR AR AR	All All All	A A B C D	60 63/64 61/64
COKY 17A605-A	25 ft. roll - 5/32" I.D. x 9/32" O.D. - use this hose to service various hoses by cutting to required length	AR	All	A B D C	61/64 60/64
COMY 17A605-B	25 ft. roll - 3/32" I.D. x 13/64" O.D. - use this hose to service various hoses by cutting to required length	AR AR	All All	A B C D	60/64 61/64
17A607	ADAPTOR (WINDSHIELD WASHER CONTROL CABLE)				
COAB 17A607-A	For vacuum wiper motor only	1	All	B C	60/62
17A611	CABLE (WINDSHIELD WASHER CONTROL)				
CODZ 17A611-A		1	All	C	60/62
17A612	CONNECTOR (WINDSHIELD WASHER VACUUM HOSE)				
COMB 17A612-A	Brass	1	All	A	60

Windshield Wiper

GROUP AND PART NUMBER	DESCRIPTION, SIZE, ETC.	NO. REQ'D	MODEL OR ENGINE CUBIC INCH DISPLACEMENT	VEHICLE CODE	YEAR 19____
17614	BRACKET (WINDSHIELD WASHER RESERVOIR)				
COLB 17614-A		1	All	D	60
17A614	VALVE (WINDSHIELD WASHER CONTROL)				
COMF 17A614-A		1	All	A	60
C1VB 17A614-A	Located at windshield wiper motor control hose	1	All	D	61/64
C1VF 17A614-B	Located at instrument panel mounting	1	All	D	61/64
17615	VALVE (WINDSHIELD WASHER)				
BF 17615-A		1	All	B C	60/62
17616	COVER (WINDSHIELD WASHER JAR)				
BAE 17616-A		1	All	D	60
17A616	RESERVOIR & COVER (WINDSHIELD WASHER)				
COMB 17A616-A	Plastic	1	All	A	60
17618	RESERVOIR (WINDSHIELD WASHER)				
C1AZ 17618-B		1	All	A	61/64
C1RZ 17618-A	Use with "Rotunda" windshield washer - also serviced in C1RZ-17A603-A kit	1	All	A B C D	60/63
C1VB 17618-A		1	All	B D	61/63
		1	All	C	61/64
BT 17618-A	Glass	1	All	D	60
C4VY 17618-A		1	All	D	64
17A622	WIRING (WINDSHIELD WASHER SWITCH TO MOTOR)				
C1AB 17A622-A	For electric wipers	1	All	A	61/62
C3AZ 17A622-A	For electric wipers - single speed - use on vehicles built prior to 2-16-63	1	All	A	63
C3AZ 17A622-B	For electric wipers - single speed - use on vehicles built after 2-15-63	1	All	A	63
	NS-for 2 speed electric windshield wipers - dealer improvise 48" from 18 gauge wire	1	All	A	64
C2OZ 17A622-A	For electric wipers	1	All	B	62/63
17A625	SWITCH (WINDSHIELD WASHER CONTROL)				
C1AF 17A625-A	Used on vehicles built prior to 3-24-61 - on vehicles built after 3-23-61 use C1AB-17B479-A	1	All	A	61
17A631	WIRING (WASHER COORDINATOR FEED)				
C1VB 17A631-A		1	All	D	61
17632	COVER (WINDSHIELD WASHER RESERVOIR)				
COMB 17632-A		1	All	A	60
C2RZ 17632-A	Use with "Rotunda" windshield washer - also serviced in C1RZ-17A603-A kit	1	All	A B C D	60/63
B8S 17632-A		1	All	A D	61/64
		1	All	B C	63/64
BM 17632-A		1	All	B C	60/62
17A638	KIT (NOZZLE REPAIR) WINDSHIELD WASHER				
C1RZ 17A638-A	Use with "Rotunda" windshield washer - components also serviced in C1RZ-17A603-A kit	1	All	A B C D	60/63

Consists of the following -

(2) C1RB-17A635-A pin aiming (2) 376772-S washer (2) 376773-S washer
(2) C1RB-17665-A nozzle

Windshield Wiper

GROUP AND PART NUMBER	DESCRIPTION, SIZE, ETC.	NO. REQ'D	MODEL OR ENGINE CUBIC INCH DISPLACEMENT	VEHICLE CODE	YEAR 19____
17651	BRACKET (WINDSHIELD WASHER RESERVOIR MOUNTING)				
COMB 17651-A		1	All	A	60
C1AB 17651-A	(a)	1	All	A	61/63
B9BA 17651-A	Use with "Rotunda" windshield washer - also serviced in C1RZ-17A603-A	1	All	A B D	60/63
		1	All	C	60/64
C4AZ 17651-A	(a)	1	All	A D	64
C1VB 17651-A		1	All	D	61/63
42014-S7	Screw-hex. -with tap. hd.	2	a		
17664	PUMP (WINDSHIELD WASHER)				
COAE 17664-A	Not used on 312 C. I. D. engine with alternator	1	All	A	60
COME 17664-B	Used with alternator only	1	312	A	60
C1AF 17664-B	For electric windshield washer (a)	1	All	A	61
C1AZ 17664-B	For electric windshield washer	1	All	A	62/64
C1RZ 17664-A	Use with "Rotunda" windshield washer - also serviced in C1RZ-17A603-A kit	1	All	A B C D	60/63
C2OZ 17664-B	For electric wipers - single speed	1	All	B	62
C2OZ 17664-A	For electric wipers - 2 speed - use on vehicles built prior to 1-17-63	1	All	B	62/63
		1	All	C	63
C3OZ 17664-B	For electric wipers - 2 speed - use on vehicles built after 1-16-63	1	All	B C	63
C3OZ 17664-A	For electric wipers - single speed	1	All	B C	63
B8A 17664-A		1	All	C	60/62
C4DZ 17664-A	Use with single speed windshield wipers with switch and wiring on rear of pump with leads extending from right side of switch	1	All	C	64
C4OZ 17664-A	Use with single speed windshield wipers with switch and wiring assembly on top of pump with wire leads extending from top of switch	1	All	C	64
C4GY 17664-A	Use with two speed windshield wipers on vehicles built prior to 3-20-64	1	All	C	64
C4DZ 17664-B	Use with two speed windshield wipers on vehicles built after 3-19-64	1	All	C	64
C2SZ 17664-A		1	All	D	61/64
42133-S8	Screw-hex. -with hd. tap.	3	a		
17665	NOZZLE (WINDSHIELD WASHER)				
COMB 17665-B	Assembly - includes jet	2	All	A	60
BY 17665-A		2	All	D	60
C1VB 17665-A	Includes C1VB-17A602-A	2	All	D	61/64
17B676	REMOTE CONTROL (REAR VIEW MIRROR)				
C4AZ 17B676-A		1	All	A	64
C3AZ 17B676-A	Fender mounting mirror	1	All	A B C	63
C4OZ 17B676-A		1	All	C	64
C2VY 17B676-A	Includes knob	1	All	D	62/64
17B678	CEMENT (REAR VIEW MIRROR)				
B9AB 17B678-A	For windshield mounted rear view mirror	1	All	A C	63/64
		1	All	B	63
		1	All	D	61&64
17A679	MIRROR (VISOR VANITY)				
C1VB 17A679-A		1	All	D	62/64
		1	57C	A	64
B9LB 17A679-A		1	All	D	60

Windshield Wiper

GROUP AND PART NUMBER	DESCRIPTION, SIZE, ETC.	NO. REQ'D	MODEL OR ENGINE CUBIC INCH DISPLACEMENT	VEHICLE CODE	YEAR 19____
17682	MIRROR (REAR VIEW OUTSIDE)				
C4MY 17682-A	Remote control - door mounting - 21" cable	1	All	A B C	63
	Use with integrated a/cond. - remote control	1	All	A	64
C4OZ 17682-A	L. H. - round type	1	All	C	64
C4GY 17682-A	Remote control - rectangular	1	All	C	64
C2VY 17682-A	Remote control - head and cables	1	All	D	62/64
17684	BRACKET (REAR VIEW INSIDE MIRROR)				
COMB 17684-A	(a)	1	All except 76	A	60
COMB 17684-B	(a)	1	76	A	60
C3GY 17698-A	Chrome finish	1	All except 63, 76	C	61/62&64
		1	All except 62C, 76	C	63
C1SB 17698-A	For windshield mounted rear view mirror	1	All	D	61
		1	76	C	63
		1	All	D	64
C1VB 17684-C	For windshield header mounted rear view mirror	1	All except 74	D	61/62
		1	53	D	63
C1VB 17684-D	For windshield header mounted rear view mirror	1	74	D	61/63
372909-S13	Screw-attach mirror to bracket	1	a		
17690	ARM (REAR VIEW INSIDE MIRROR)				
C2SZ 17690-B		AR	63, 76	A	63
		AR	57C, D, 63C, D, 76	A	64
		AR	65	B	63
		AR	63, 76	C	63/64
		AR	All	D	64
17696	KIT (REAR VIEW OUTSIDE MIRROR)				
B9MB 17696-A		1	All	A	60/64
Consists of the following -					
(1) BAF-17682-A	mirror hooded	(1) 358641-S100	screw-set-1/4"-20	(1) Template	
(2) 52743-S8	screw-pan hd. tap. - No. 10-12 x 3/4"	(1) Allen wrench 1/8"			
C4AZ 17696-B	R. H. and L. H. - remote control - rectangular type	1	All	A	64
C4MY 17696-A	21" cables - use with production installed a/cond.	1	All	A	64
C2MY 17696-A	Crested	1	All	A B	61/64
C3AZ 17696-A	Remote control - door mounted rectangular type	1	All	A	63/64
		1	All	B C	63
C3RZ 17696-A	Universal type	1	All	A B C D	63/64
C1SZ 17696-B	Round - thin base	1	All	B C	60/64
		1	All	D	61
B5AZ 17696-A	Round - heavy base	1	All	A B C D	60/63
C2OZ 17696-A		1	All	C	63
C4GY 17696-A	Remote control - rectangular type	1	All	C	64
C4GY 17696-B	Rectangular type - standard	1	All	C	64
C4OZ 17696-B	R. H. - remote control - round type	1	All	C	64
C4OZ 17696-A	L. H. - remote control - round type	1	All	C	64
17698	KIT - BRACKET (REAR VIEW INSIDE MIRROR)				
C3OZ 17698-A	Windshield mounting	1	57C, 63B, C, 75C, 76	A	63/64
		1	65	B	63
		1	63, 76	C	63/64
Consists of the following -					
(1) C3OB-17698-A	bracket	(1) C3OB-17B722-A	button	(1) 89935-S8	screw
17698	REFER TO GROUP 17684				

Windshield Wiper

GROUP AND PART NUMBER	DESCRIPTION, SIZE, ETC.	NO. REQ'D	MODEL OR ENGINE CUBIC INCH DISPLACEMENT	VEHICLE CODE	YEAR 19____
17700	MIRROR (REAR VIEW INSIDE)				
B9MB 17702-B	Clear	1	All except 57F, 63F, 76D	A	60
COAB 17700-GP	Includes bracket	1	54A, 62A, 65A, 71A, 75A	A	61
C1AZ 17700-A	Non-glare kit - less bracket	1	All	A	61
COAB 17700-E		1	76	A	61/62
C2MY 17700-B	With bracket	1	54A, 62A, 65A, 75A, 71A	A	62
C2AZ 17700-G	Clear - with bracket - chrome	1	All except 76	A	61
		1	54B, 65B, 71B, 75B	A	62
		1	54B, 65B, C, 71B, 75B	A	63
		1	54F, 65C, F, 71B, D, 75F	A	64
C2AZ 17700-H	Non-glare kit - toggle type	1	All except 76A	A	62/63
		1	54, 62, 65, 71, 75	A	64
C2MY 17700-C	With bracket	1	54A, 62A, 65A, 75A	A	63
		1	54A, B, 62A, 65A, B, 71A, C, 75	A	64
C3AZ 17700-A	Less arm and bracket	1	63, 76	A	63
		1	57C, 63C, 76	A	64
C1SZ 17700-A	Nite and day	1	76	A C	63
		1	57, 63, 76	A C	64
		1	65	B	63
	(b)	1	All	D	64
C2OZ 17700-C	Includes bracket	1	All	B	62
	Clear	1	All except 65	B	63
C2OZ 17700-D	Non-glare	1	All	B	62
		1	All except 65	B	63
C3DZ 17700-A	Less arm and bracket	1	63, 65, 76	B C	63/64
CODB 17700-K189	Includes bracket	1	All	C	60
CODZ 17700-A	Clear - less bracket - painted	1	All except 62A(S-22)	C	60/62
	Clear - less bracket	1	All except 62C, 76	C	63
		1	All except 54C, D, 63, 76	C	64
C1DZ 17700-B	Non-glare - less bracket	1	All except 76	C	61/63
		1	All except 63, 76	C	64
C1GB 17702-A	Chrome - less bracket	1	62A(S-22)	C	61/62
		1	62C	C	63
		1	54C, D	C	64
B9LB 17712-A	For bracket refer to group 17069	1	All	D	60
C1SZ 17700-B	Windshield header rear view mirror (a)	1	All	D	61/63
372922-S	Screw-flat hd. -1/4"-28 x .62"-use to attach mirror to bracket	1	a, b		
374986-S13	Attach mirror to bracket	AR	a		
17A700	MIRROR GLASS (REAR VIEW OUTSIDE)				
B8MY 17A700-A	Glass only - rectangle	1	All	A	60/62
		1	All	D	60
17702	REFER TO GROUP 17700				
17A708	MIRROR & CABLE (REAR VIEW OUTSIDE)				
B9MY 17A708-A		1	All	A	60/62
C3MY 17A708-A	Use with fender mounted mirror	1	All	A B C	63
C4MY 17A708-A	Remote control - glass and cable - door mounting	1	All	A	63/64
		1	All	C	64
		1	All	D	62/64
C4OZ 17A708-A	Remote control - round - door mounted	1	All	C	64
17A711	BEARING (REAR VIEW OUTSIDE MIRROR BALL STUD)				
BF 17A711-A		1	All	D	61/62
		1	All	C	64

Windshield Wiper

GROUP AND PART NUMBER	DESCRIPTION, SIZE, ETC.	NO. REQ'D	MODEL OR ENGINE CUBIC INCH DISPLACEMENT	VEHICLE CODE	YEAR 19____
17712	REFER TO GROUP 17700				
17A714	SPRING (REAR VIEW OUTSIDE MIRROR)				
BF 17A714-A		1	All	D	61/62
		1	All	C	64
17B718	KNOB (REAR VIEW MIRROR REMOTE CONTROL)				
C2VY 17B718-A		1	All	A B C D	60/64
C4OZ 17B718-A	Use with L. H. door mounting mirror	1	All	C	64
17B719	NUT (REAR VIEW OUTSIDE MIRROR)				
C3AZ 17B719-A	Remote control knob retaining - door mounted	1	All	A	63/64
C2VY 17B719-A	Remote control retaining - use with fender mounted mirror	1	All	A	60/63
		1	All	D	62/64
		1	All	B C	63/64
17B721	RETAINER (REAR VIEW OUTSIDE MIRROR ADJUSTING CABLE)				
C2VY 17B721-A		1	All	A B C	63/64
		1	All	D	62/64
17723	MIRROR GLASS (REAR VIEW OUTSIDE)				
COAZ 17723-A	Round	1	All	B C	60/64
17724	GASKET (REAR VIEW OUTSIDE MIRROR)				
C3AZ 17724-A	Use on vehicles built prior to 11-1-63	1	All	A	63/64
C4SZ 17724-C	7-1/2" long - use on vehicles built after 10-31-63	1	All	A	64
C4GY 17724-A		1	All	C	64
BAK 17724-A	For remote control mirror - arm escutcheon	1	All	D	60
17B733	PLATE (REAR VIEW OUTSIDE MIRROR REMOTE CONTROL)				
C3AZ 17B733-A	Use with door mounted mirror	1	All	A	63/64

Bumpers

17A750-1	BRACKET (REAR BUMPER MOUNTING)				
C1VB 17A750-A	R. H. - use on vehicles built after 10-10-60	1	All	D	61/63
C1VB 17A751-A	L.H.- use on vehicles built after 10-10-60	1	All	D	61/63
17A752	DEFLECTOR (STONE - FRAME TO ROCKER PANEL)				
B9M 17A752-A		2	All	A	60
17754-5	ARM (FRONT BUMPER) OUTER				
COMB 17754-B	R.H.	1	All	A	60
COMB 17755-B	L.H.	1	All	A	60
C1MB 17754-A	R.H.	1	All	A	61
C1MB 17755-A	L.H.	1	All	A	61
	NS-R. H. - use on bumper impact bar C2MY-17757-B identified with 11 bolt holes	1	All	A	62
	NS-L. H. - use on bumper impact bar C2MY-17757-B identified with 11 bolt holes	1	All	A	62
C1AB 17754-A	R.H.	1	All	A	63
C1AB 17755-A	L.H.	1	All	A	63
C4MY 17754-A	R.H.	1	All	A	64
C4MY 17755-A	L.H.	1	All	A	64

CONTINUED ON NEXT PAGE

Bumpers

GROUP AND PART NUMBER	DESCRIPTION, SIZE, ETC.	NO. REQ'D	MODEL OR ENGINE CUBIC INCH DISPLACEMENT	VEHICLE CODE	YEAR 19____
17754-5	ARM (FRONT BUMPER) OUTER (CONTINUED)				
C3YY 17754-A	R.H.	1	All	B	62/63
C3YY 17755-A	L.H.	1	All	B	62/63
C1KB 17754-B	R.H.	1	All	C	60/63
C1KB 17755-B	L.H.	1	All	C	60/63
C4GY 17754-A	R.H.	1	All	C	64
C4GY 17755-A	L.H.	1	All	C	64
COLB 17754-A	R.H.	1	All	D	60
COLB 17755-A	L.H.	1	All	D	60
17756-7	BAR (FRONT BUMPER IMPACT)				
COMB 17756-B	(a)	1	All	A	60
C1MB 17757-B	(b)	1	All	A	61
C2MY 17757-B	Identified with (9) bolt holes NOTE - When replacing front bumper bar with (11) bolt holes - refer to groups 17754-5 and 17A984-5 for replacing parts	1	All	A	62
C3MZ 17757-A	(c)	1	All	A	63
C4MY 17757-A	Center (c)	1	All	A	64
C2YY 17757-A	(c)	1	All	B	62/63
C1GY 17757-A	(c)	1	All	C	60/63
C4GY 17757-A	(d)	1	All	C	64
C3VY 17757-A	(c)	1	All	D	63
C4VY 17757-A	(c)	1	All	D	62&64
B9MB 17758-A	Bolt	AR	a, b, c		
42154-S	Screw-for license plate	2	b		
42159-S9	Screw-for license plate	2	a		
44730-S	Washer	AR	c		
44731-S	Washer-flat-7/16"	8	a		
55675-S	Nut-hex.-lock-7/16"-14	AR	a, c		
359812-S	Bumper	1	b		
371331-S32	Clip-for license plate	2	a, b		
376337-S100	Bolt	AR	d		
17758	BOLT (BUMPER BAR TO ARM)				
COAB 17758-A	Front bumper	4	All	A	61
B9MB 17758-A	7/16" x 1-1/2" long with 1/4" shoulder and (a) 1-1/16" thread length	AR AR	All All	A D B C	60/64 61/64
44730-S	Washer-flat-7/16"	AR	a		
55675-S	Nut-hex. lock-7/16"-14	AR	a		
17A761	SPACER (REAR BUMPER ARM TO REAR BUMPER HOUSING SUPPORT)				
COLB 17A761-A		AR	All	D	60
17762	BAR (FRONT BUMPER IMPACT) UPPER				
COLB 17762-B		1	All	D	60
C1VB 17762-G		1	All	D	61
17B765-6	BRACE (FRONT BUMPER MOUNTING BRACKET)				
C1VB 17B765-A	R.H.	1	All	D	61
C1VB 17B766-A	L.H.	1	All	D	61
17766-7	ARM (FRONT BUMPER) INNER				
C1MB 17766-A	R.H.	1	All	A	61
C1MB 17767-A	L.H.	1	All	A	61
C2MY 17766-A	R.H.	1	All	A	62
C2MY 17767-A	L.H.	1	All	A	62

CONTINUED ON NEXT PAGE

Bumpers

GROUP AND PART NUMBER	DESCRIPTION, SIZE, ETC.	NO. REQ'D	MODEL OR ENGINE CUBIC INCH DISPLACEMENT	VEHICLE CODE	YEAR 19____
17766-7	ARM (FRONT BUMPER) INNER (CONTINUED)				
C1AZ 17766-A	R.H.	1	All	A	63
C1AZ 17767-A	L.H.	1	All	A	63
C4MY 17766-A	R.H.	1	All	A	64
C4MY 17767-A	L.H.	1	All	A	64
C3YY 17766-A	R.H.	1	All	B	62/63
C3YY 17767-A	L.H.	1	All	B	62/63
C4GY 17766-A	R.H.	1	All	C	64
C4GY 17767-A	L.H.	1	All	C	64
17770-1	ARM (FRONT BUMPER) UPPER				
C1VB 17770-C	R.H.	1	All	D	61
C1VB 17771-C	L.H.	1	All	D	61
17A778	REINFORCEMENT (REAR BUMPER LICENSE PLATE OPENING)				
C1AB 17A778-A	Includes mounting for license plate lamp	1	71	A	63
		1	All	A	64
C2YB 17A778-A		1	All except 71	B	62/63
C2OZ 17A778-B		1	71	B	63
C1GB 17A778-A	(a)	1	All	C	60/63
20324-S8	Screw and washer-1/4"-20 x 5/8"	2	a		
17779	DEFLECTOR (FRONT BUMPER STONE)				
COMY 17A878-A		1	All	A	60
C2MB 17779-A		1	All	A	61/62
C3MY 17779-A		1	All	A	63
C4MY 17779-A		1	All	A	64
C2YB 17779-A		1	All	B	62/63
C3GY 17A862-A	Welded	1	All	C	60/63
C4GY 17779-A		1	All	C	64
C2VB 17A878-A	Lower	1	All	D	62/64
	Consists of the following -				
(1) C2VB-17B769-A	deflector	(1) C2VB-17B771-A	seal	(13) M-3198-B	staples
		Components not serviced loose			
C4VY 17779-A	Upper	1	All	D	62/64
17A780	FILLER (FRONT BUMPER IMPACT BAR)				
COLB 17A780-A	R.H.	1	All	D	60
COLB 17A796-A	L.H.	1	All	D	60
17782-3	ARM (FRONT BUMPER) LOWER				
C1VB 17782-C	R.H.	1	All	D	61
C1VB 17783-C	L.H.	1	All	D	61
17A782-3	ARM (FRONT BUMPER) INTERMEDIATE				
COMB 17A782-B	R.H.	1	All	A	60
COMB 17A783-B	L.H.	1	All	A	60
17B786	WASHER (FRONT BUMPER IMPACT BAR MOUNTING BOLT)				
C2VY 17B786-A		AR	All	D	62/64
17787-8	ARM (REAR BUMPER) INNER				
COMB 17787-A	R.H.	1	All except 77	A	60
COMB 17788-A	L.H.	1	All except 77	A	60
COMB 17787-B	R.H.	1	77	A	60
COMB 17788-B	L.H.	1	77	A	60
C1MB 17787-A	R.H.	1	All except 71	A	61
C1MB 17788-A	L.H.	1	All except 71	A	61

CONTINUED ON NEXT PAGE

Bumpers

GROUP AND PART NUMBER	DESCRIPTION, SIZE, ETC.	NO. REQ'D	MODEL OR ENGINE CUBIC INCH DISPLACEMENT	VEHICLE CODE	YEAR 19____
17787-8	ARM (REAR BUMPER) INNER (CONTINUED)				
C1MB 17787-B	R.H.	1	71	A	61
C1MB 17788-B	L.H.	1	71	A	61
C2MB 17787-A	R.H.	1	71	A	62
C2MB 17788-A	L.H.	1	71	A	62
C2MB 17787-B	R.H.	1	All except 71	A	62
C2MB 17788-B	L.H.	1	All except 71	A	62
C3AZ 17787-B	R.H.	1	71	A	63
C3AZ 17788-B	L.H.	1	71	A	63
C3MY 17787-A	R.H.	1	All except 71	A	63
C3MY 17788-A	L.H.	1	All except 71	A	63
C3AZ 17787-A	R.H.	1	71	A	64
C3AZ 17788-A	L.H.	1	71	A	64
C4MY 17787-A	R.H.	1	All except 71	A	64
C4MY 17788-A	L.H.	1	All except 71	A	64
C3YY 17787-A	R.H. (a)	1	All except 71	B	62/63
C3YY 17788-A	L.H. (a)	1	All except 71	B	62/63
C3YY 17787-B	R.H. (a)	1	71	B	63
C3YY 17788-B	L.H. (a)	1	71	B	63
C1KB 17787-A	R.H.	1	54, 62, 76	C	60/63
C1KB 17788-A	L.H.	1	54, 62, 76	C	60/63
C1KB 17787-B	R.H.	1	59, 71	C	60/63
C1KB 17788-B	L.H.	1	59, 71	C	60/63
C4GY 17787-A	R.H.	1	All except 71	C	64
C4GY 17788-A	L.H.	1	All except 71	C	64
C4DZ 17787-B	R.H.	1	71	C	64
C4DZ 17788-B	L.H.	1	71	C	64
33982-S	Nut-1/2" x 13	2	a		
44735-S	Washer	4	a		
370226-S8	Bolt-hex. hd.-1/2" x 13 x 4.38"-use to attach 17787-8 and 17795-6 to rear member	4	a		
17789	BRACE (REAR BUMPER) END				
C3AZ 17789-B	R.H.	1	71	A	63
C3AZ 17789-D	L.H.	1	71	A	63
C3AZ 17789-A	R.H.	1	71	A	64
C3AZ 17789-C	L.H.	1	71	A	64
17790	SUPPORT (FRONT BUMPER STONE DEFLECTOR)				
COMB 17790-A	(a)	1	All	A	60
C1MB 17790-B		1	All	A	61/62
354299-S	Nut-hex-lock-5/16" x 24	2	a		
355471-S	Bolt-special carriage-5/16" x 24	2	a		
17A792	REINFORCEMENT (FRONT BUMPER IMPACT BAR) CENTER				
C1AB 17A792-A		1	All	A	61/63
C4MY 17A792-A		1	All	A	64
17B792-3	BRACKET & GUSSET ASSEMBLY (FRONT BUMPER MOUNTING)				
C2VY 17B792-A	R.H.	1	All	D	62/64
C2VY 17B793-A	L.H.	1	All	D	62/64
17A793-4	BRACKET (FRONT BUMPER MOUNTING)				
COLB 17A793-A	R.H.	1	All	D	60
COLB 17A794-A	L.H.	1	All	D	60
C1VB 17A793-E	R.H. - mounting	1	All	D	61
C1VB 17A794-E	L.H. - mounting	1	All	D	61

Bumpers

GROUP AND PART NUMBER	DESCRIPTION, SIZE, ETC.	NO. REQ'D	MODEL OR ENGINE CUBIC INCH DISPLACEMENT	VEHICLE CODE	YEAR 19____
17795-6	ARM (REAR BUMPER) OUTER				
COMB 17795-A	R.H.	1	All	A	60
COMB 17796-A	L.H.	1	All	A	60
C1MY 17795-A	R.H.	1	All except 71	A	61
C1MY 17796-A	L.H.	1	All except 71	A	61
C1MY 17795-B	R.H.	1	71	A	61
C1MY 17796-B	L.H.	1	71	A	61
C2MY 17795-A	R.H.	1	71	A	62
C2MY 17796-A	L.H.	1	71	A	62
C2MY 17795-B	R.H.	1	All except 71	A	62
C2MY 17796-B	L.H.	1	All except 71	A	62
C3MY 17795-A	R.H.	1	All except 71	A	63
C3MY 17796-A	L.H.	1	All except 71	A	63
C3AZ 17795-A	R.H.	1	71	A	63/64
C3AZ 17796-A	L.H.	1	71	A	63/64
C4MY 17795-A	R.H.	1	All except 71	A	64
C4MY 17796-A	L.H.	1	All except 71	A	64
C3YY 17795-A	R.H. (a)	1	All except 71	B	62/63
C3YY 17796-A	L.H. (a)	1	All except 71	B	62/63
C3YY 17795-B	R.H. (a)	1	71	B	63
C3YY 17796-B	L.H. (a)	1	71	B	63
C1KB 17795-A	R.H.	1	54, 62, 76	C	60/63
C1KB 17796-A	L.H.	1	54, 62, 76	C	60/63
C1KB 17795-B	R.H.	1	59, 71	C	60/63
C1KB 17796-B	L.H.	1	59, 71	C	60/63
C4GY 17795-A	R.H. (a)	1	All except 71	C	64
C4GY 17796-A	L.H. (a)	1	All except 71	C	64
C4DZ 17795-B	R.H.	1	71	C	64
C4DZ 17796-B	L.H.	1	71	C	64
COLB 17795-A	R.H.	1	All	D	60
COLB 17796-A	L.H.	1	All	D	60
33982-S	Nut-1/2" x 13	2	a		
44735-S	Washer	4	a		
370226-S8	Bolt-hex. hd. -1/2" x 13 x 4.38"-use to attach 17787-8 and 17795-6 to rear member	4	a		
17A796	REFER TO GROUP 17A780				
17A797-8	BRACE (REAR BUMPER IMPACT BAR END OUTER)				
COMB 17A797-D	R.H.	1	All	A	60
COMB 17A798-D	L.H.	1	All	A	60
C1MB 17A797-C	R.H.	1	All except 71	A	61
C1MB 17A798-C	L.H.	1	All except 71	A	61
C1MB 17A797-D	R.H.	1	71	A	61
C1MB 17A798-D	L.H.	1	71	A	61
C2MB 17A797-A	R.H.	1	71	A	62
C2MB 17A798-A	L.H.	1	71	A	62
C2MB 17A797-B	R.H.	1	All except 71	A	62
C2MB 17A798-B	L.H.	1	All except 71	A	62
17A799	SHIM (FRONT BUMPER IMPACT BAR)				
	NS-1/2" x 1/2" x .090" - improvise	AR	All	D	62/64
17802	BAR (FRONT BUMPER IMPACT) LOWER				
C1VB 17802-B		1	All	D	61

Bumpers

GROUP AND PART NUMBER	DESCRIPTION, SIZE, ETC.	NO. REQ'D	MODEL OR ENGINE CUBIC INCH DISPLACEMENT	VEHICLE CODE	YEAR 19____
17808	DEFLECTOR (REAR BUMPER STONE)				
B9MB 17808-B	Center - 82" long - cut to required length	1	All except 77	A	60
COMB 17808-B	Center - 65" long	1	77	A	60
COMB 17808-C	R.H. - use when spare tire carrier is installed	1	All except 77	A	60
COMB 17814-A	L.H. - use when spare tire carrier is installed	1	All except 77	A	60
C1MB 17808-A	75.80" long (a)	1	All	A	61
C2MB 17808-B		1	All except 71	A	62
C3AZ 17808-A	78" long (a)	1	71	A	63
C3MY 17808-A	(a)	1	All except 71	A	63/64
C3AZ 17808-D	78" long (a)	1	71	A	64
C2MB 17808-A	78" long	1	71	A	62
	Cut as required	AR	54, 62, 76	C	62/63
COMB 17A877-B	Outer - 24-1/4" long - cut to required length	2	All	A	60
	Substitution for part 74102A42-3	2	74	D	61/63
C2OB 17808-A		1	All except 71	B	62/63
C3OZ 17808-A	70" long	1	71	B	63
C1KB 17808-A		1	54, 62	C	60/61
CODB 17808-C		1	59, 71	C	60/64
C4GY 17808-A	72-3/5" long	1	All except 71	C	64
COLB 17808-C	Use on vehicles built prior to 9-8-59 - Note - (8) pieces of COLB-6340307-B spacer are also required	1	All	D	60
C1VB 17A877-A	Outer	2	All	D	61/63
C1VB 17808-A		1	All	D	61/63
C4VY 17808-A	67-3/4" long	1	All	D	64
371141-S32	Clip	AR	a		
17B812	MOULDING (FRONT BUMPER STONE DEFLECTOR)				
C4GY 17B812-A	R.H. and L.H. - 12-7/8" long	2	All	C	64
Package also includes -	(3) C4GY-17B858-B retainer				
17814	REFER TO GROUP 17808				
17A820-2	BRACE (FRONT BUMPER) END				
COMY 17A821-A	R.H.	1	All	A	60
COMY 17A822-A	L.H.	1	All	A	60
C1MB 17A820-A	R.H.	1	All	A	61
C1MB 17A821-A	L.H.	1	All	A	61
C2MY 17A820-A	R.H.	1	All	A	62
C2MY 17A821-A	L.H.	1	All	A	62
C1AB 17A820-A	R.H.	1	All	A	63
C1AB 17A821-A	L.H.	1	All	A	63
C4GY 17A820-A	R.H.	1	All	C	64
C4GY 17A821-A	L.H.	1	All	C	64
17B820	KIT (REAR BUMPER) STEP				
C3OZ 17B820-A	Auxiliary seat	1	71A, C, F	B	63
Consists of the following -					
(1) C3AB-17758-A bolt	(1) C3OZ-17B821-A pad		(1) 40936-S8	hex.washer hd.tap.-	
(1) C3YB-17B807-A step assembly	(1) C3YB-17B822-A spacer			5/16"-18 x 5/8"	
17B821	PAD (REAR BUMPER) STEP				
C3OZ 17B821-A	Auxiliary seat - also serviced in C3OZ-17B820-A kit	1	71A, C, F	B	63

Bumpers

GROUP AND PART NUMBER	DESCRIPTION, SIZE, ETC.	NO. REQ'D	MODEL OR ENGINE CUBIC INCH DISPLACEMENT	VEHICLE CODE	YEAR 19____
17836-7	DEFLECTOR (REAR BUMPER STONE) END				
COMB 17836-A		2	All	A	60
C1MB 17836-B	R.H.	1	All	A	61/62
C1MB 17837-B	L.H.	1	All	A	61/62
C3MY 17836-A	R.H. - end - 8-1/4" long (a)	1	All except 71	A	63
C3MY 17837-A	L.H. - end - 8-1/4" long (a)	1	All except 71	A	63
371141-S32	Clip	AR	a		
17841	SLEEVE (BUMPER ARM BOLT)				
C1KB 17841-B	Rear	AR	All	B C	60/64
		2	All	A D	63
C1KY 17911-A	Front	2	All	C	60/62
C1KB 17841-A		2	All	D	62
17A856-7	BRACE (REAR BUMPER OUTER ARM SUPPORT TO SIDE MEMBER)				
C1DB 17A856-A	R.H.	1	59, 71	C	60/64
C1DB 17A857-A	L.H.	1	59, 71	C	60/64
17B856	PLATE (FRONT BUMPER ARM ADJUSTING)				
C4AZ 17B856-A		2	All	A	64
17A858	SUPPORT (REAR BUMPER ARM)				
C3OZ 17A858-A		2	71	B	63
CODB 17A858-A		2	59, 71	C	60/64
17B858	RETAINER (FRONT BUMPER STONE DEFLECTOR MOULDING)				
C4GY 17B858-B		6	All	C	64
17B859	COVER (FRONT BUMPER STONE DEFLECTOR MOULDING)				
C4GY 17B859-A	2-5/8" long	1	All	C	64
17862-3	BAR (REAR BUMPER IMPACT) OUTER				
COMB 17862-B	R.H.	1	All	A	60
COMB 17863-B	L.H.	1	All	A	60
COLB 17862-B	R.H.	1	All	D	60
COLB 17863-B	L.H.	1	All	D	60
C1VB 17862-B	R.H.	1	All	D	61/63
C1VB 17863-B	L.H.	1	All	D	61/63
C4VY 17862-A	R.H.	1	All	D	64
C4VY 17863-A	L.H.	1	All	D	64
17A862	REFER TO GROUP 17779				
17A863	SUPPORT (REAR BUMPER MOUNTING BRACKET)				
COLY 17A863-A		2	All	D	60
17866	BAR (REAR BUMPER IMPACT) CENTER				
COMB 17866-B		1	All except 77	A	60
COMB 17866-D		1	77	A	60
COMB 17A880-A	Use when spare tire carrier is installed	1	All except 77	A	60
COLY 17A880-A	Center (a)	1	All	D	60
34808-S	Washer-spring lock-7/16"	4	a		
351428-S	Washer-flat-7/16"	4	a		
372434-S	Bolt	4	a		
17A869	BRACKET (FRONT BUMPER TO FENDER)				
C2YB 17A869-A		2	All	B	62/63
C1KB 17A869-A		2	All	C	60/63

GROUP AND PART NUMBER	DESCRIPTION, SIZE, ETC.	NO. REQ'D	MODEL OR ENGINE CUBIC INCH DISPLACEMENT	VEHICLE CODE	YEAR 19____
17A871-2	REINFORCEMENT (FRONT BUMPER OUTER ARM)				
COLB 17A871-A	R.H.	1	All	D	60
COLB 17A872-A	L.H.	1	All	D	60
17A873-4	ARM (FRONT BUMPER) INNER				
COMY 17A873-A	R.H.	1	All	A	60
COMY 17A874-A	L.H.	1	All	A	60
C1KY 17A873-A	R.H.	1	All	C	60/63
C1KY 17A874-A	L.H.	1	All	C	60/63
COLB 17A873-A	R.H. - lower	1	All	D	60
COLB 17A874-A	L.H. - lower	1	All	D	60
COLY 17A873-A	R.H.	1	All	D	60
COLY 17A874-A	L.H.	1	All	D	60
17A877	REFER TO GROUP 17808				
17A878	REFER TO GROUP 17779				
17879	RETAINER (REAR BUMPER STONE DEFLECTOR)				
C1VB 17879-A	Use for rear bumper stone deflector - use as reinforcement for front fender apron	21	All	D	61/62
C1VY 17879-A	(9) req'd. - for rear bumper stone deflector	21	All	D	63
	(12) req'd. - for reinforcement for front fender apron				
	(12) req'd. to attach shield front fender apron upper reinforcement to fender - (8) req'd. to attach shield front fender front lower extension splash	AR	All	D	64
17A880	REFER TO GROUP 17866				
17A900-1	EXTENSION (FRONT BUMPER IMPACT BAR)				
C4MY 17A900-A	R.H. - outer	1	All	A	64
C4MY 17A901-A	L.H. - outer	1	All	A	64
C1VB 17A900-B	R.H.	1	All	D	61
C1VB 17A901-B	L.H.	1	All	D	61
C2VY 17A900-A	R.H.	1	All	D	62/64
C2VY 17A901-A	L.H.	1	All	D	62/64
17906	BAR (REAR BUMPER IMPACT)				
C1MY 17906-C	(a)	1	All	A	61/62
C3AZ 17906-A	Less reinforcement license plate opening - C1AB-17A778-A	1	71	A	63/64
C4MY 17906-A		1	All except 71	A	63/64
C2YY 17906-A		1	All	B	62
	Less reinforcement license plate opening - C2YB-17A778-A	1	All except 71	B	63
C3OZ 17906-A		1	71	B	63
C1GY 17906-A	Less reinforcement license plate opening - C1GB-17A778-A	1	All	C	60/63
C4DZ 17906-A		1	71	C	64
C4GY 17906-A		1	All except 71	C	64
C3VY 17906-A	Includes rear license plate lamp bracket - requires license plate lamp C3VY-13550-B	1	All	D	61/63

CONTINUED ON NEXT PAGE

Bumpers

GROUP AND PART NUMBER	DESCRIPTION, SIZE, ETC.	NO. REQ'D	MODEL OR ENGINE CUBIC INCH DISPLACEMENT	VEHICLE CODE	YEAR 19____
17906	BAR (REAR BUMPER IMPACT) CONTINUED				
C4VY 17906-A	Center	1	All	D	64
42154-S8	Screw for license plate	2	a		
358159-A1-S	Anti-rattler	1	a		
371331-S32	Clip for license plate	2	a		
17A906-7	BRACE (REAR BUMPER MOUNTING BRACKET TO CROSSMEMBER)				
C1VB 17A906-A	R.H.	1	All	D	61/63
C1VB 17A907-A	L.H.	1	All	D	61/63
C4VY 17A906-A	R.H.	1	All	D	64
C4VY 17A907-A	L.H.	1	All	D	64
17A909	BRACKET (REAR BUMPER SUPPORT TO FRAME)				
COMB 17A909-A		1	All except 77	A	60
17911	REFER TO GROUP 17841				
17912	REINFORCEMENT (REAR BUMPER IMPACT BAR)				
C3MY 17912-A		1	All except 71	A	63/64
17A914	REINFORCEMENT (REAR BUMPER IMPACT BAR) CENTER				
C3AZ 17A914-A		1	All except 71	A	63/64
17A924	ABSORBER (REAR BUMPER ARM IMPACT BAR)				
351503-S40	Front and rear	AR	All	A B C D	61/62
17A953	SEAL (REAR BUMPER TO LOWER BACK PANEL)				
	NS-rubber - improvise locally	4	All	D	60/64
17984-5	GUARD (REAR BUMPER)				
C4VY 17984-A	R.H.	1	All	D	64
C4VY 17985-A	L.H.	1	All	D	64
17A984-5	BRACE (FRONT BUMPER IMPACT BAR) INNER				
C1MB 17A984-A	R.H.	1	All	A	61
C1MB 17A985-A	L.H.	1	All	A	61
C2MY 17A984-A	R.H. - use on bumper impact bar C2MY-17757-B identified with (9) or (11) bolt holes	1	All	A	62
C2MY 17A985-A	L.H. - use on bumper impact bar C2MY-17757-B identified with (9) or (11) bolt holes	1	All	A	62
17996-7	GUARD (FRONT BUMPER)				
COLB 17996-A		2	All	D	60
C1VB 17996-B	R.H.	1	All	D	61
C1VB 17997-B	L.H.	1	All	D	61
17A998	DEFLECTOR (FRONT FLOOR CROSSMEMBER STONE)				
	NS-1/4" thick x 2-1/4" wide x 24" long	1	All	D	61/64

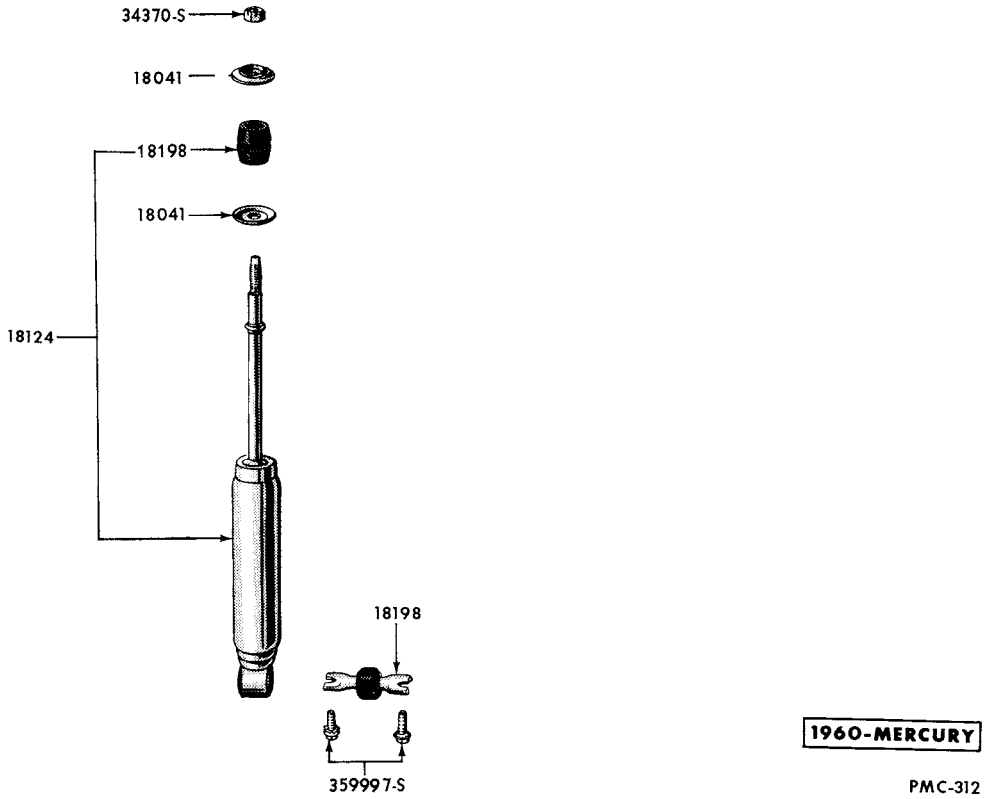

FRONT SHOCK ABSORBER

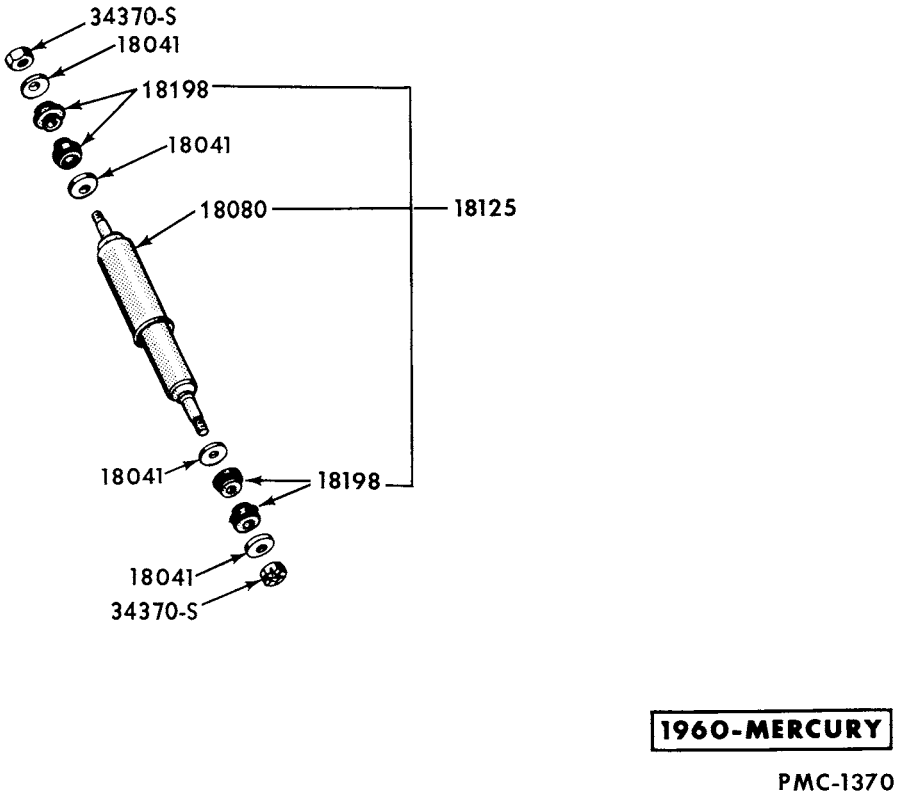

REAR SHOCK ABSORBER

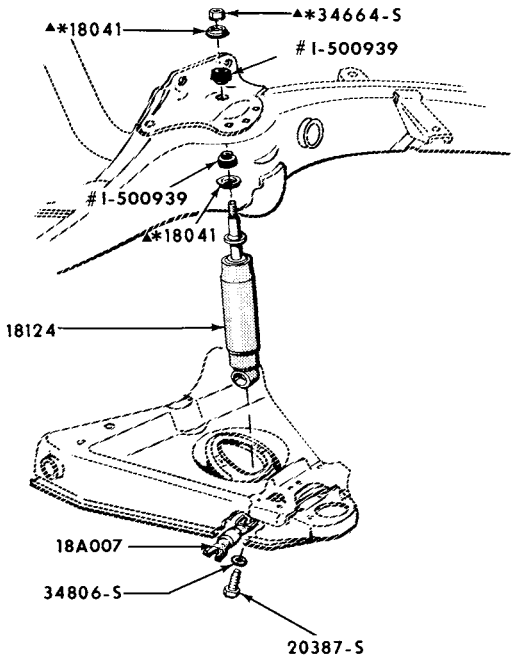

▲ ALSO SUPPLIED IN 18124 SHOCK ABSORBER KIT
* SUPPLIED IN 18198 BUSHING REPAIR KIT
# SERVICED IN 18124 & 18198 KITS ONLY

1961-64 MERCURY
PMC-1687

SHOCK ABSORBER - FRONT

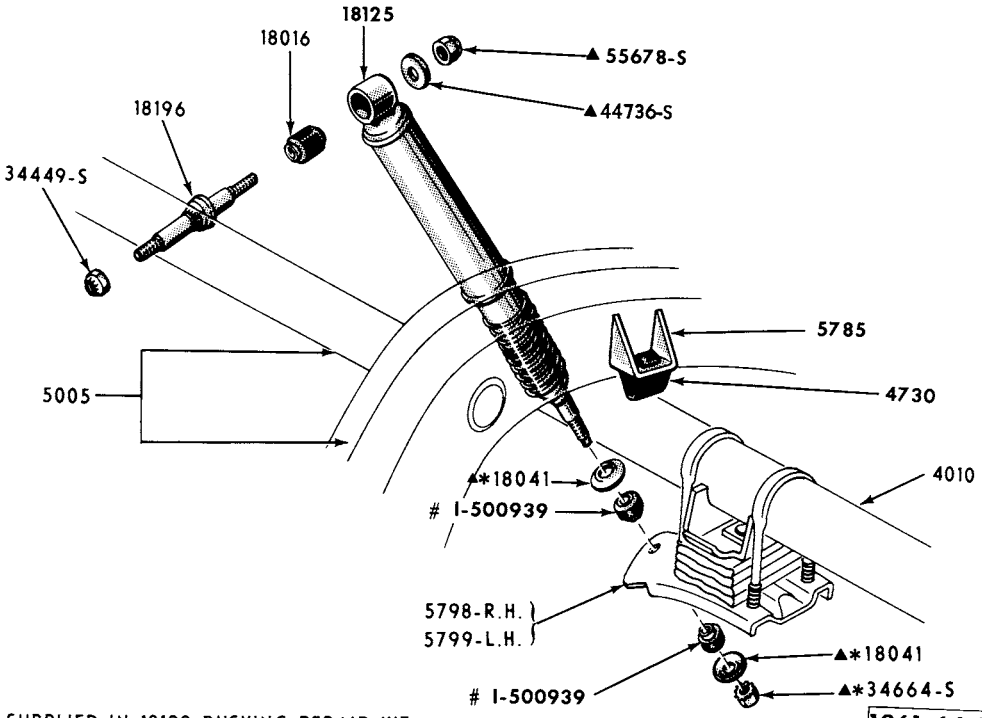

* SUPPLIED IN 18198 BUSHING REPAIR KIT
▲ ALSO SUPPLIED IN 18125 SHOCK ABSORBER KIT
SERVICED IN 18125 & 18198 KITS ONLY

1961-64 MERCURY
PMC-1688

SHOCK ABSORBER - REAR

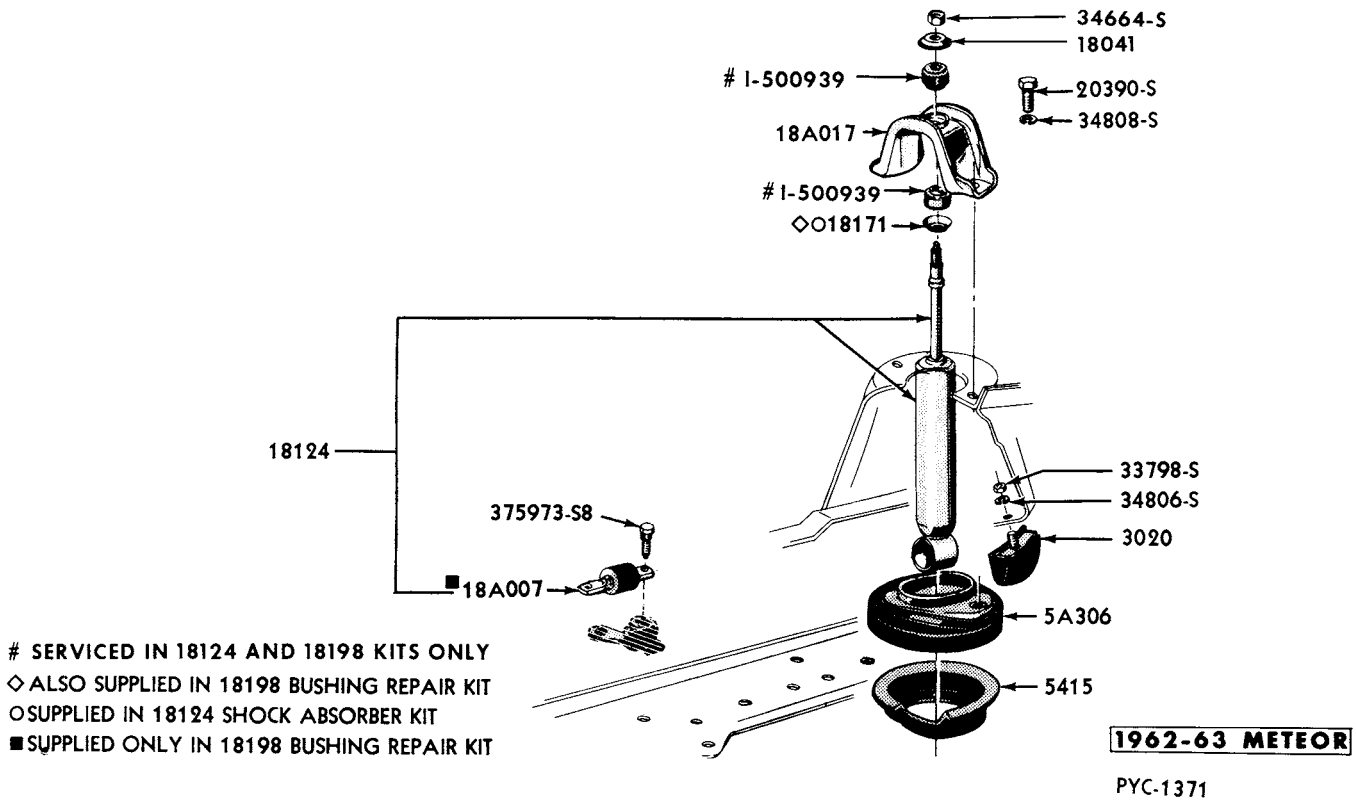

SERVICED IN 18124 AND 18198 KITS ONLY
◇ ALSO SUPPLIED IN 18198 BUSHING REPAIR KIT
O SUPPLIED IN 18124 SHOCK ABSORBER KIT
■ SUPPLIED ONLY IN 18198 BUSHING REPAIR KIT

FRONT SHOCK ABSORBER

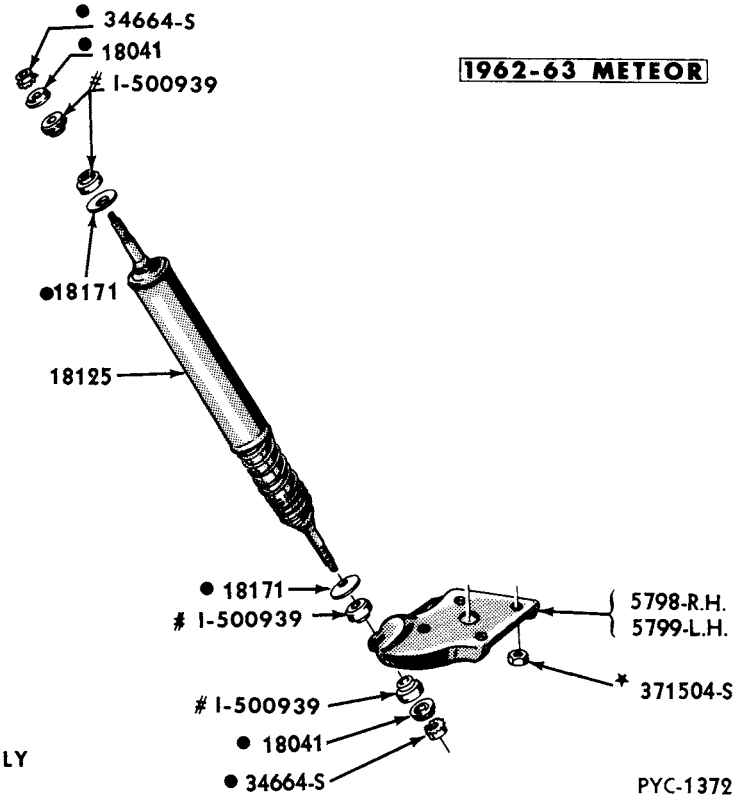

SERVICED IN 18125 AND 18198 KITS ONLY
● ALSO SERVICED IN 18125 AND 18198 KITS

REAR SHOCK ABSORBER

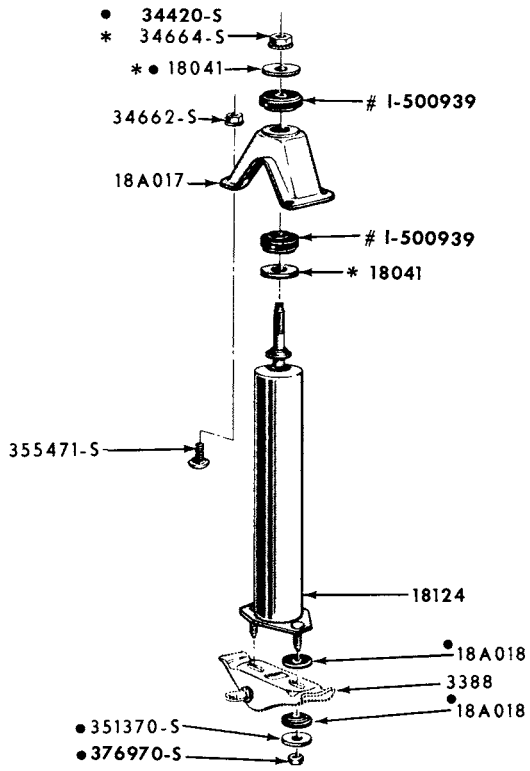

• ALSO SERVICED IN 18124 KIT
* ALSO SERVICED IN 18198 KIT
# SERVICED IN 18124 & 18198 KITS ONLY

1960-64 COMET

PGC-1750

SHOCK ABSORBER - FRONT

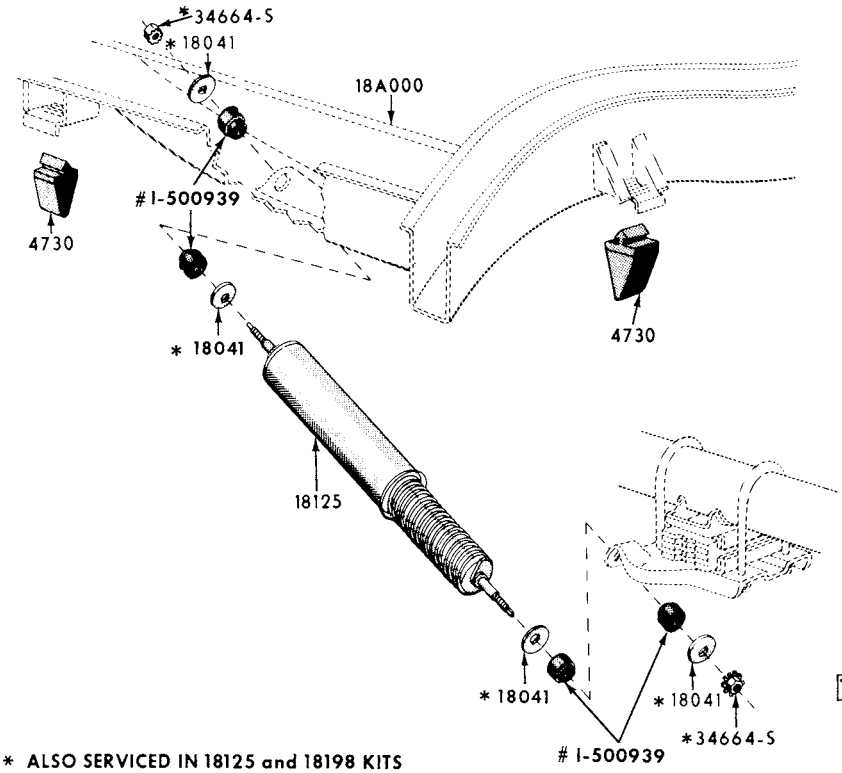

1960-64 COMET

PGC-1751

* ALSO SERVICED IN 18125 and 18198 KITS
# SERVICED IN 18125 & 18198 KITS ONLY

SHOCK ABSORBER - REAR

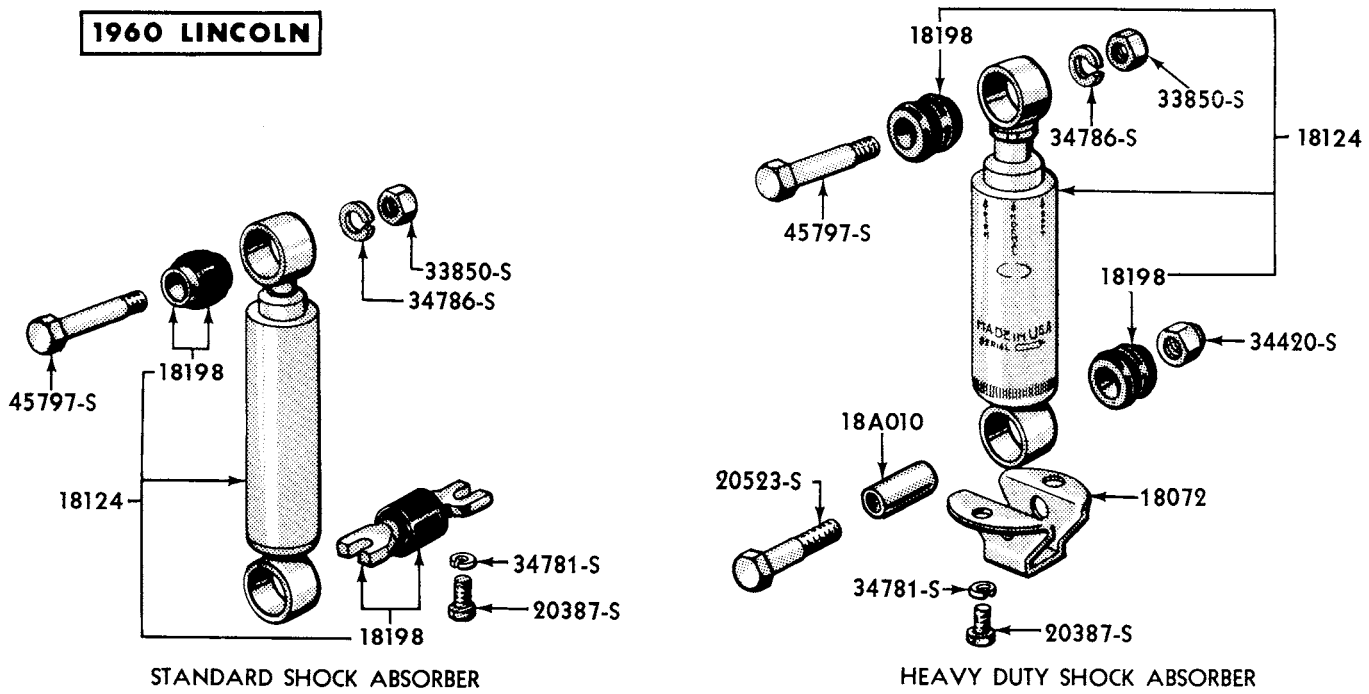

FRONT SHOCK ABSORBER

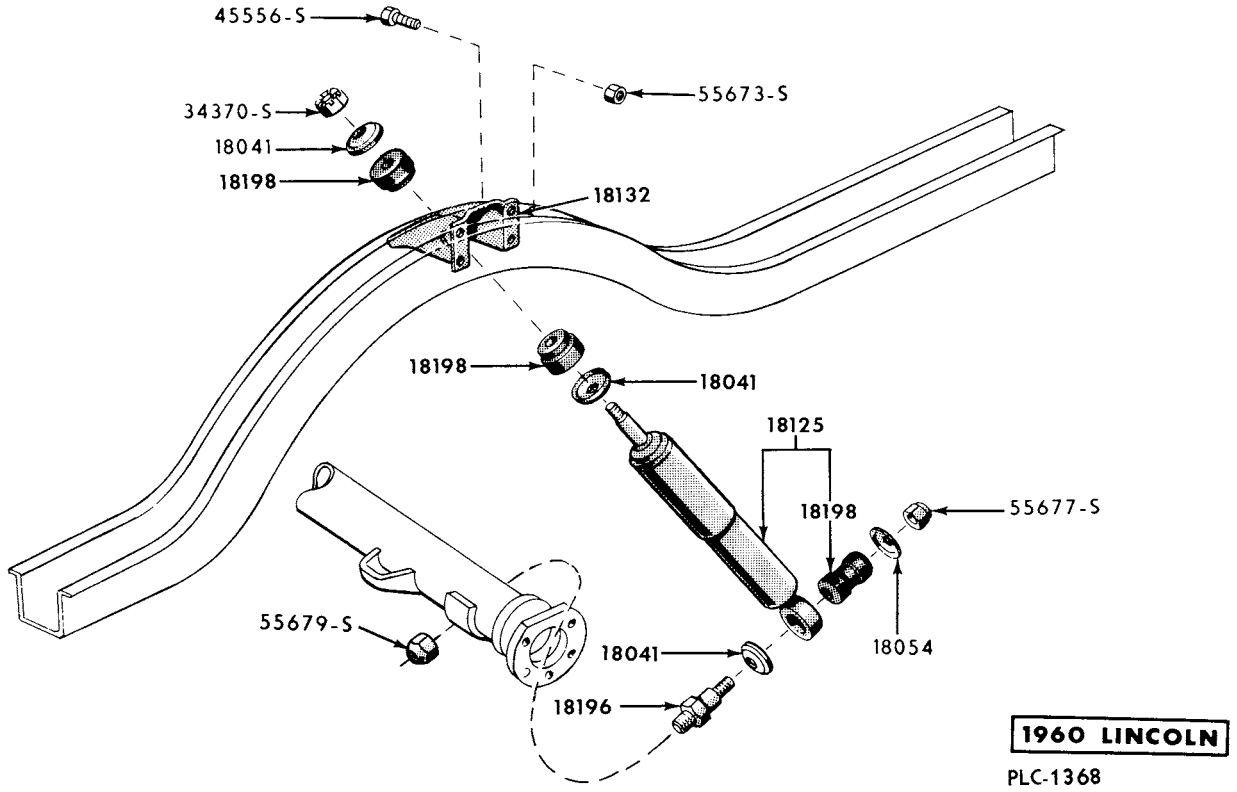

REAR SHOCK ABSORBER

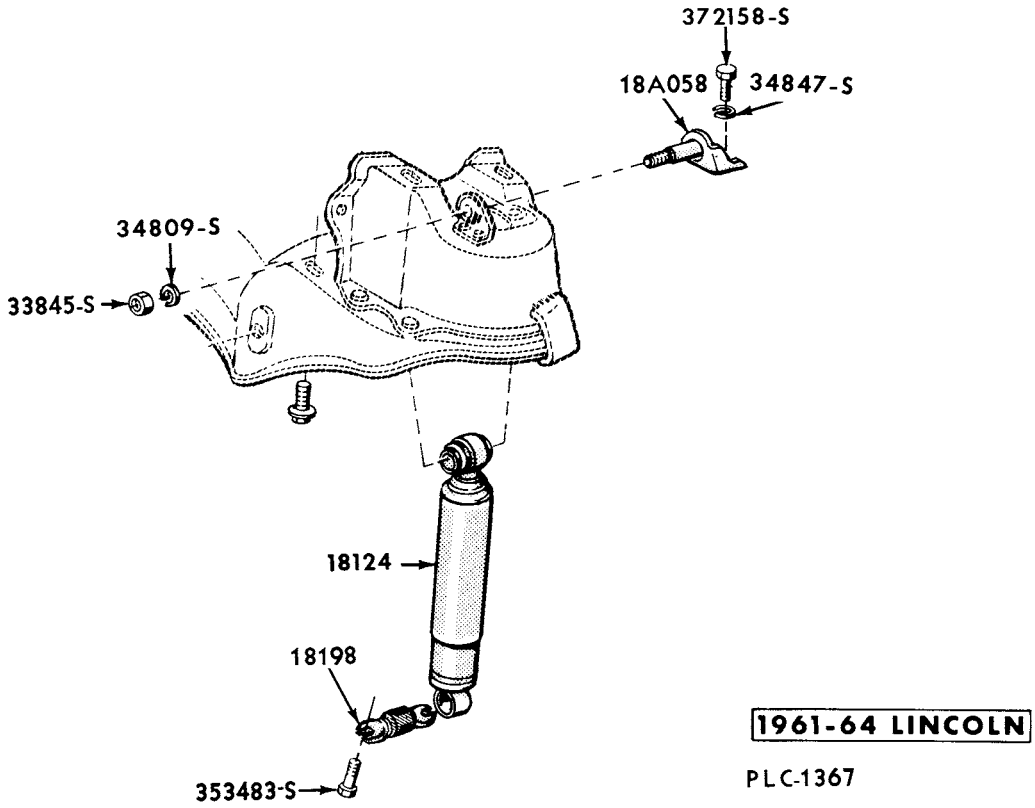

FRONT SHOCK ABSORBER

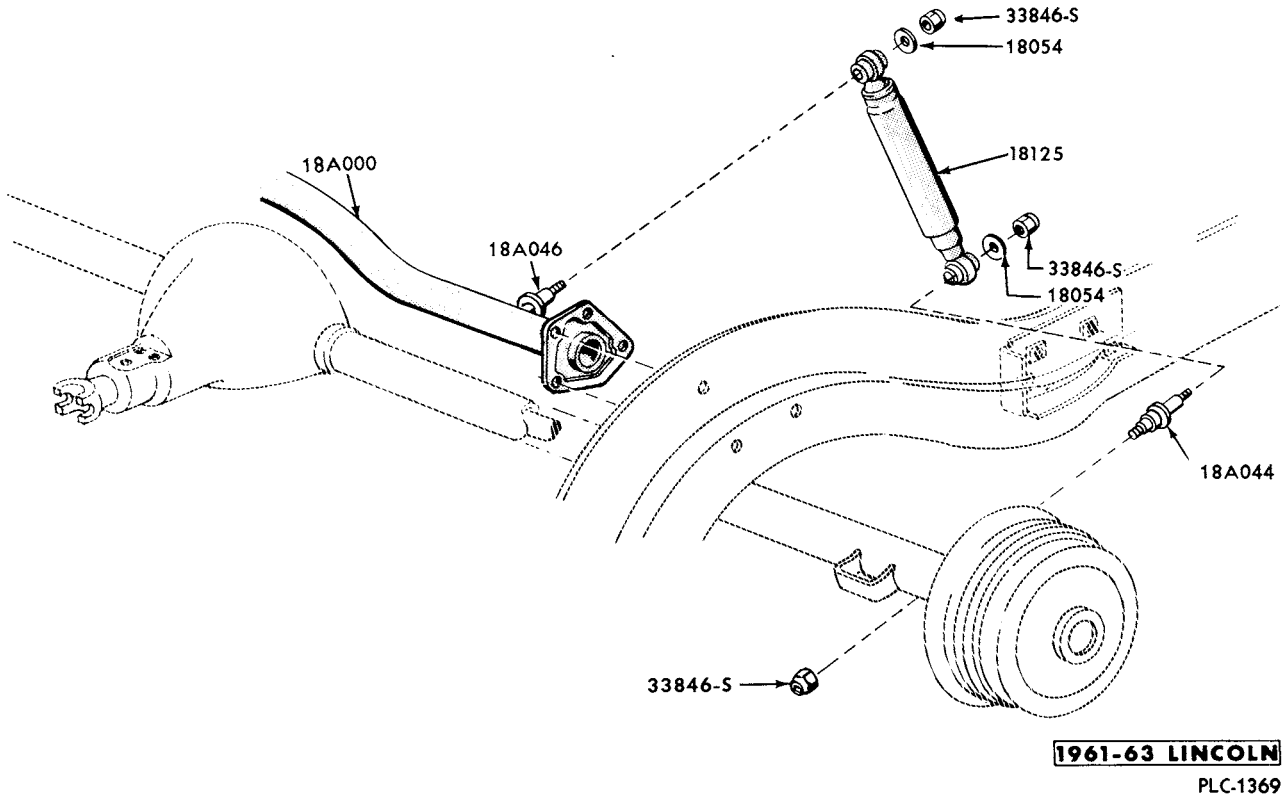

REAR SHOCK ABSORBER

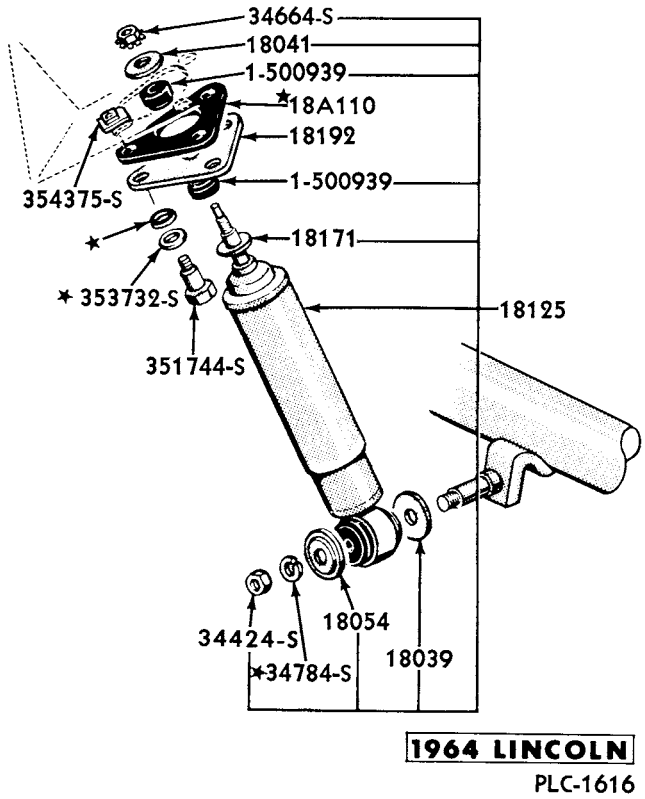

SHOCK ABSORBER - REAR

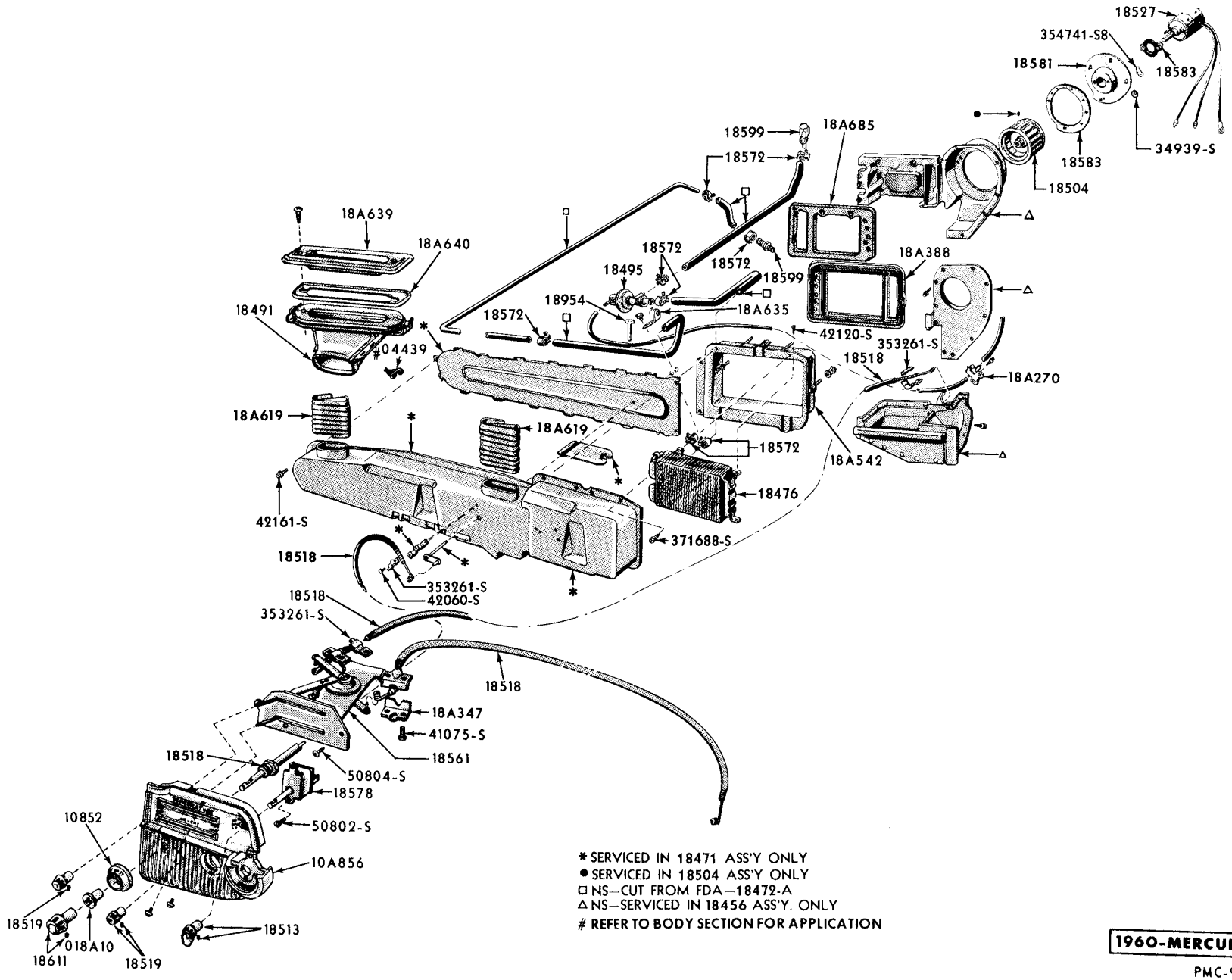

* SERVICED IN 18471 ASS'Y ONLY
● SERVICED IN 18504 ASS'Y ONLY
□ NS—CUT FROM FDA—18472-A
△ NS—SERVICED IN 18456 ASS'Y. ONLY
REFER TO BODY SECTION FOR APPLICATION

1960-MERCURY

PMC-927

HEATER and RELATED PARTS

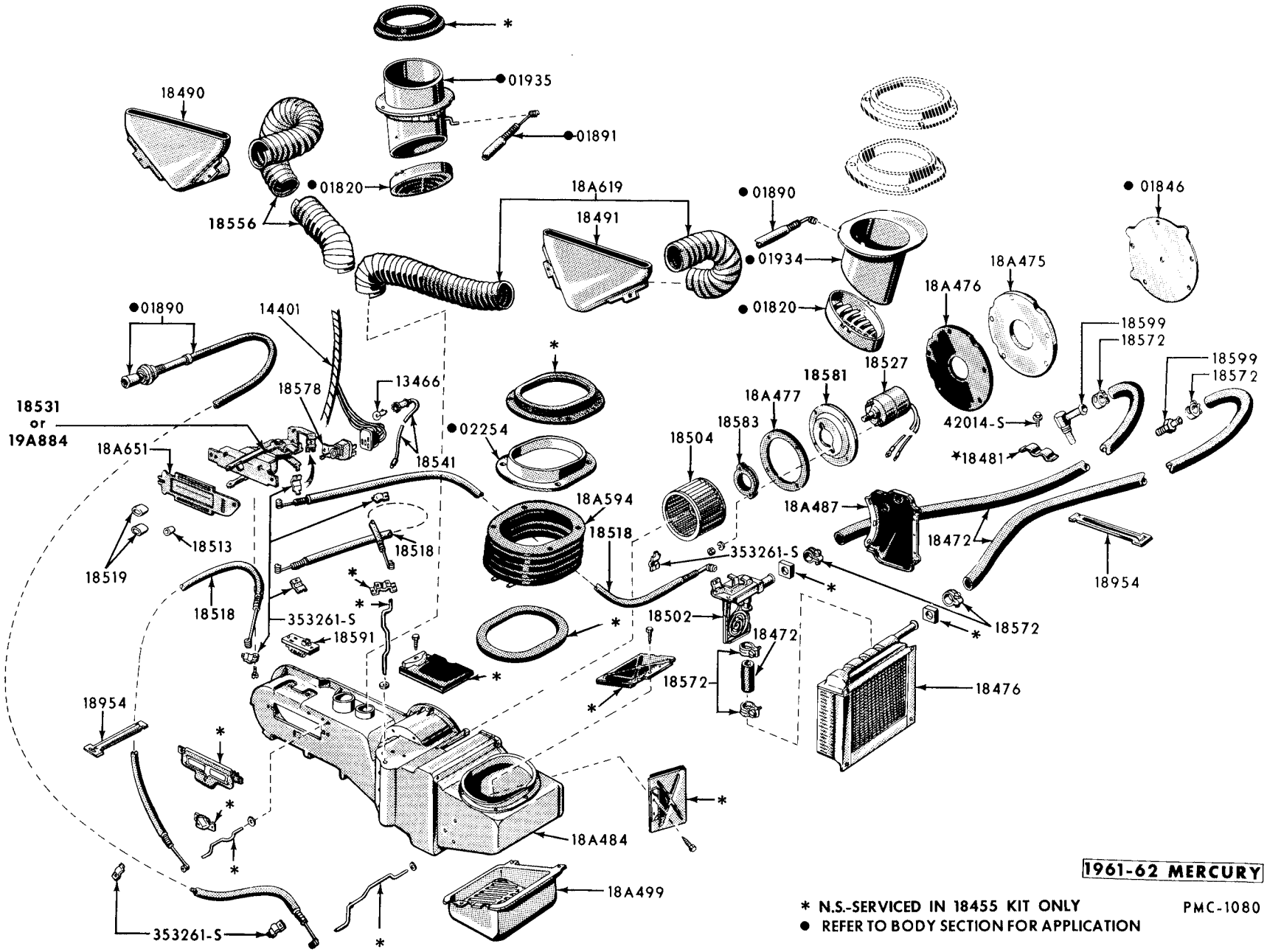

HEATER and RELATED PARTS

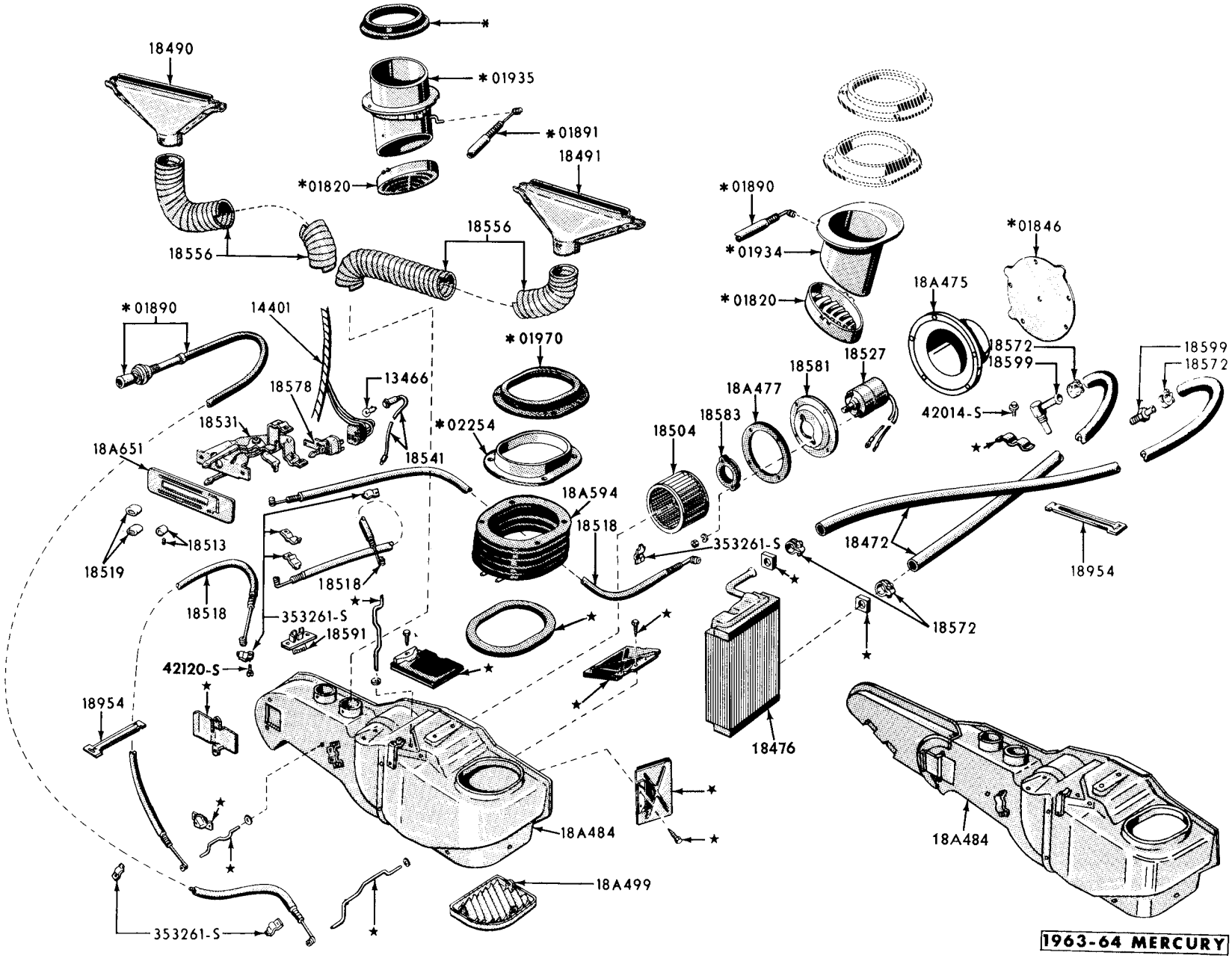

HEATER and RELATED PARTS

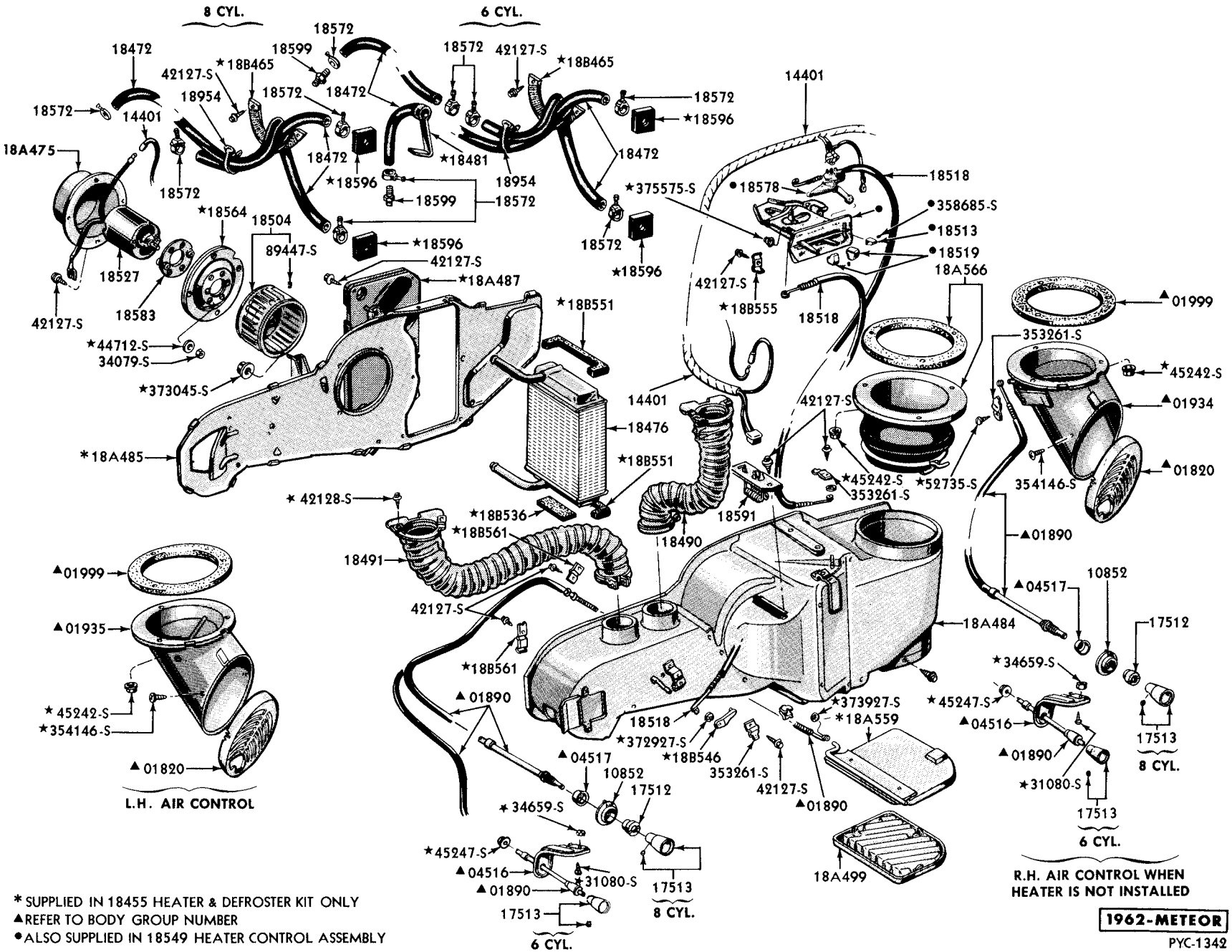

* SUPPLIED IN 18455 HEATER & DEFROSTER KIT ONLY
▲ REFER TO BODY GROUP NUMBER
● ALSO SUPPLIED IN 18549 HEATER CONTROL ASSEMBLY

HEATER and RELATED PARTS

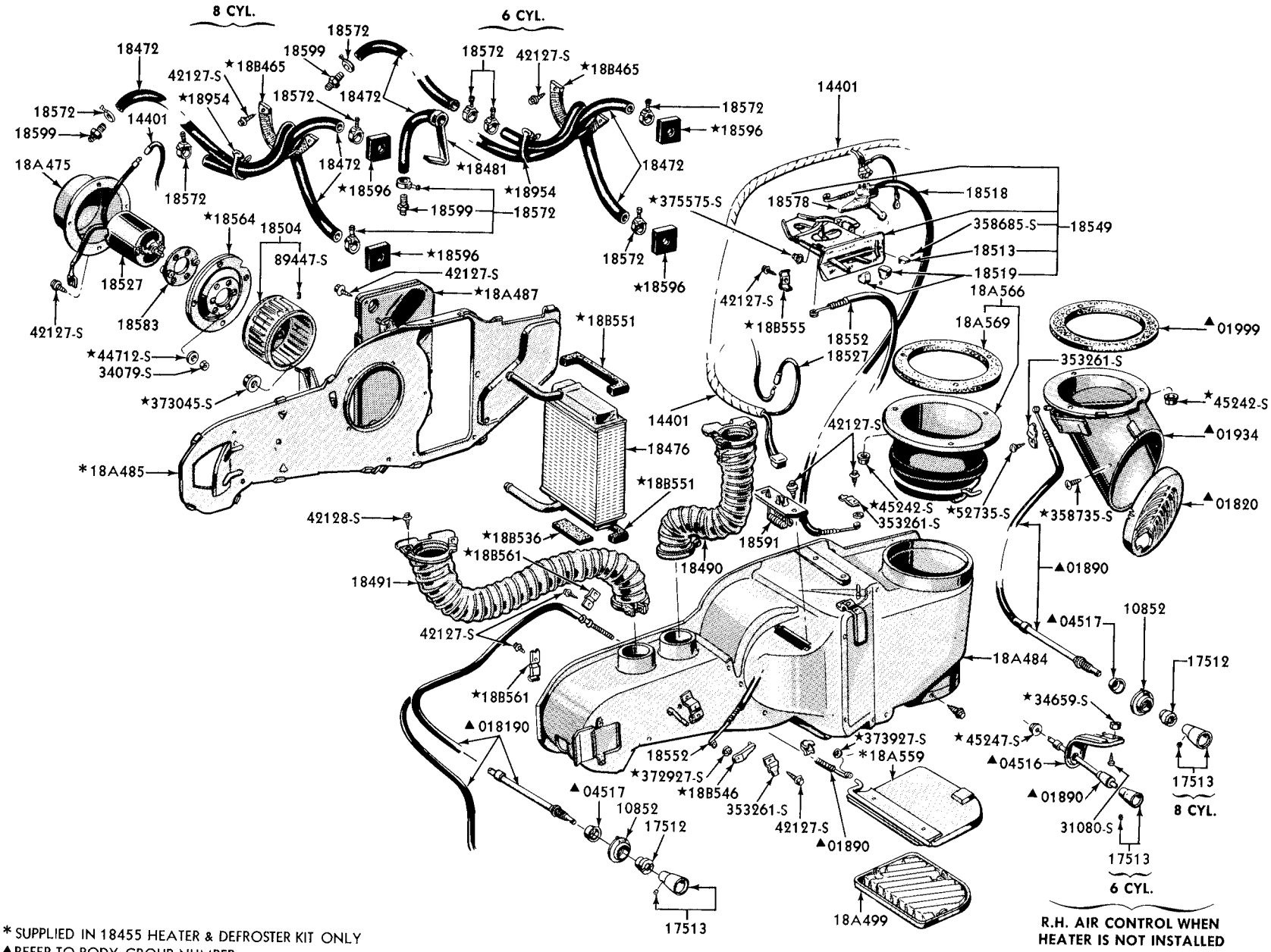

* SUPPLIED IN 18455 HEATER & DEFROSTER KIT ONLY
▲REFER TO BODY GROUP NUMBER

HEATER and RELATED PARTS

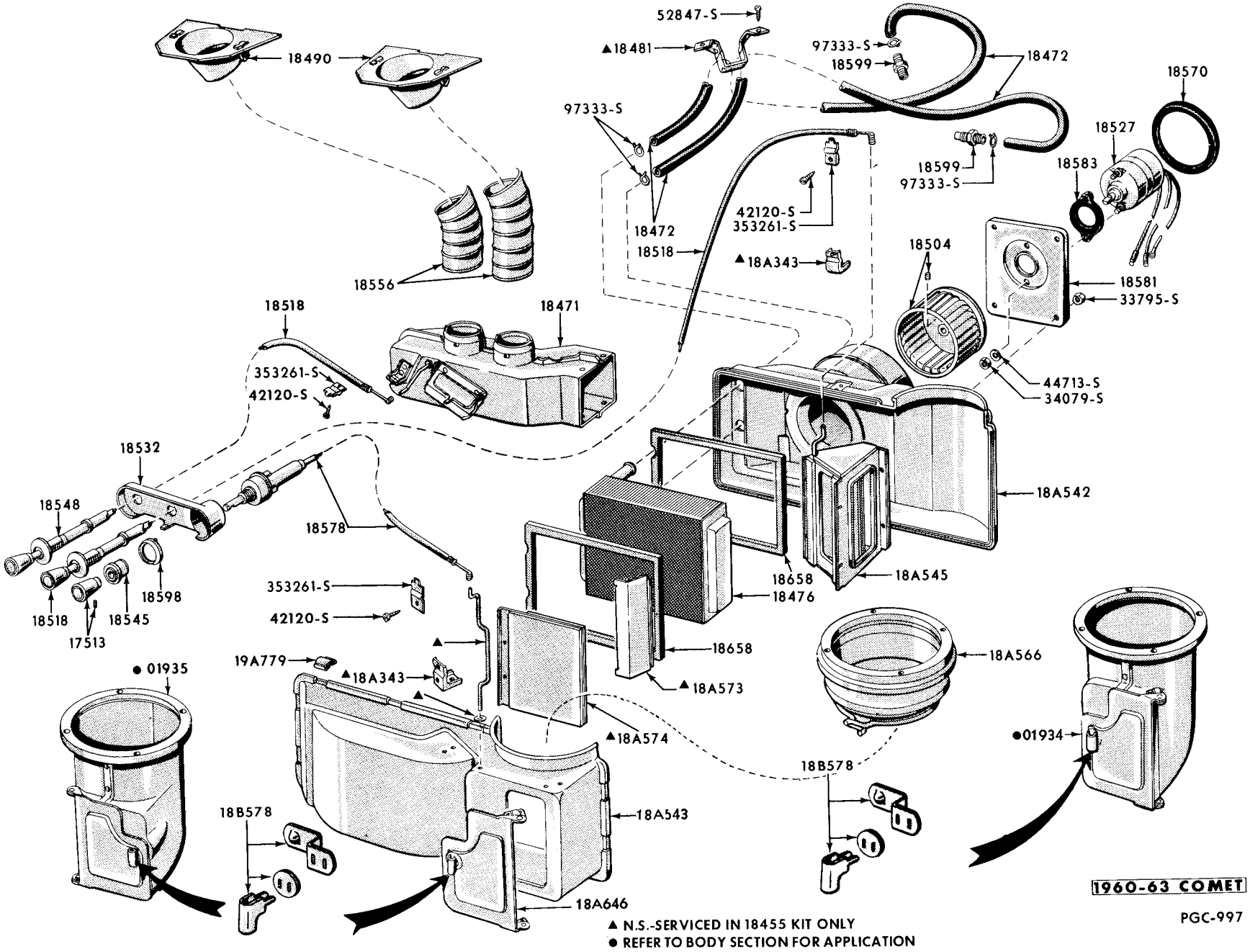

HEATER and RELATED PARTS

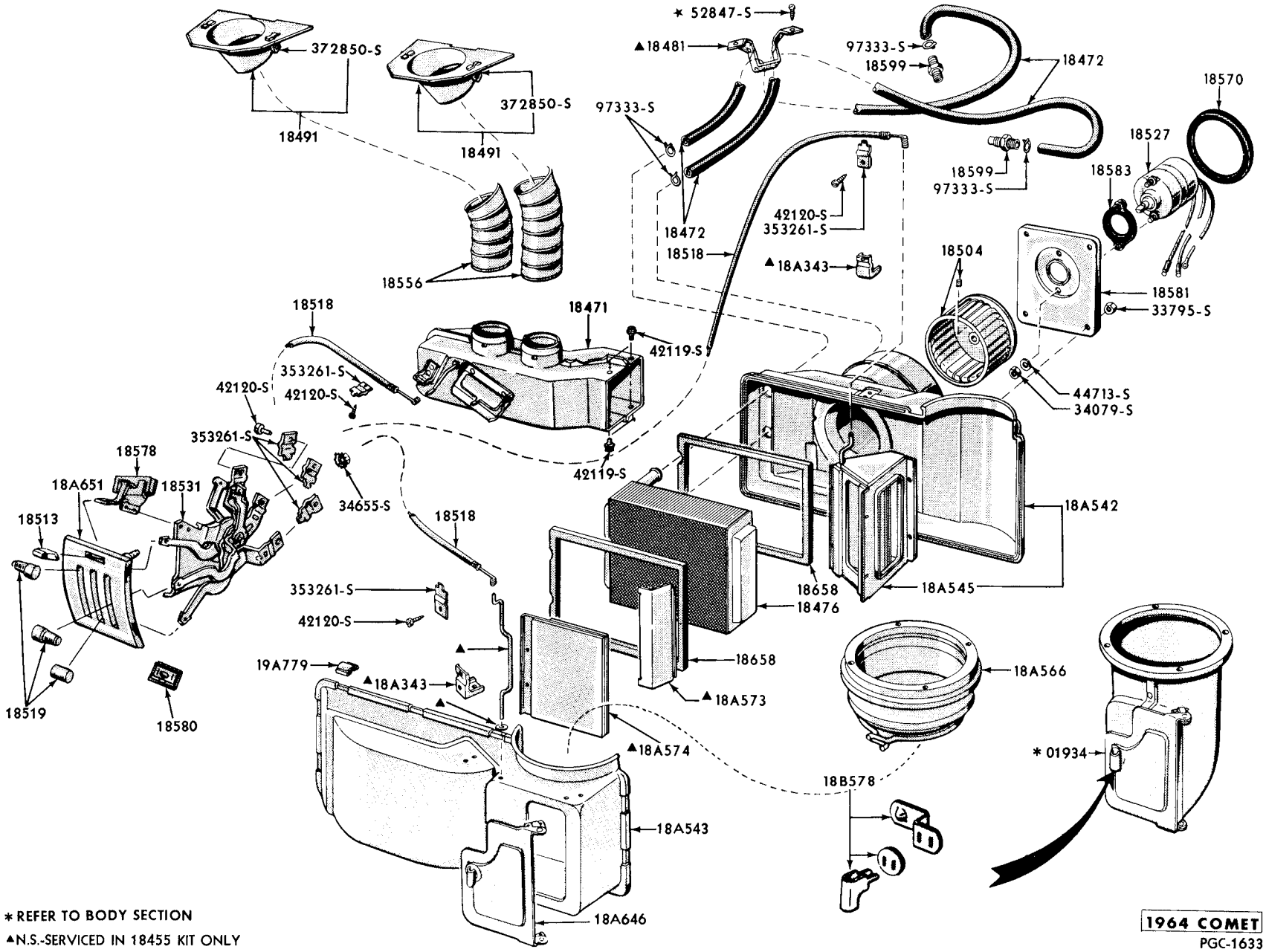

* REFER TO BODY SECTION

▲N.S.-SERVICED IN 18455 KIT ONLY

1964 COMET
PGC-1633

HEATER and RELATED PARTS

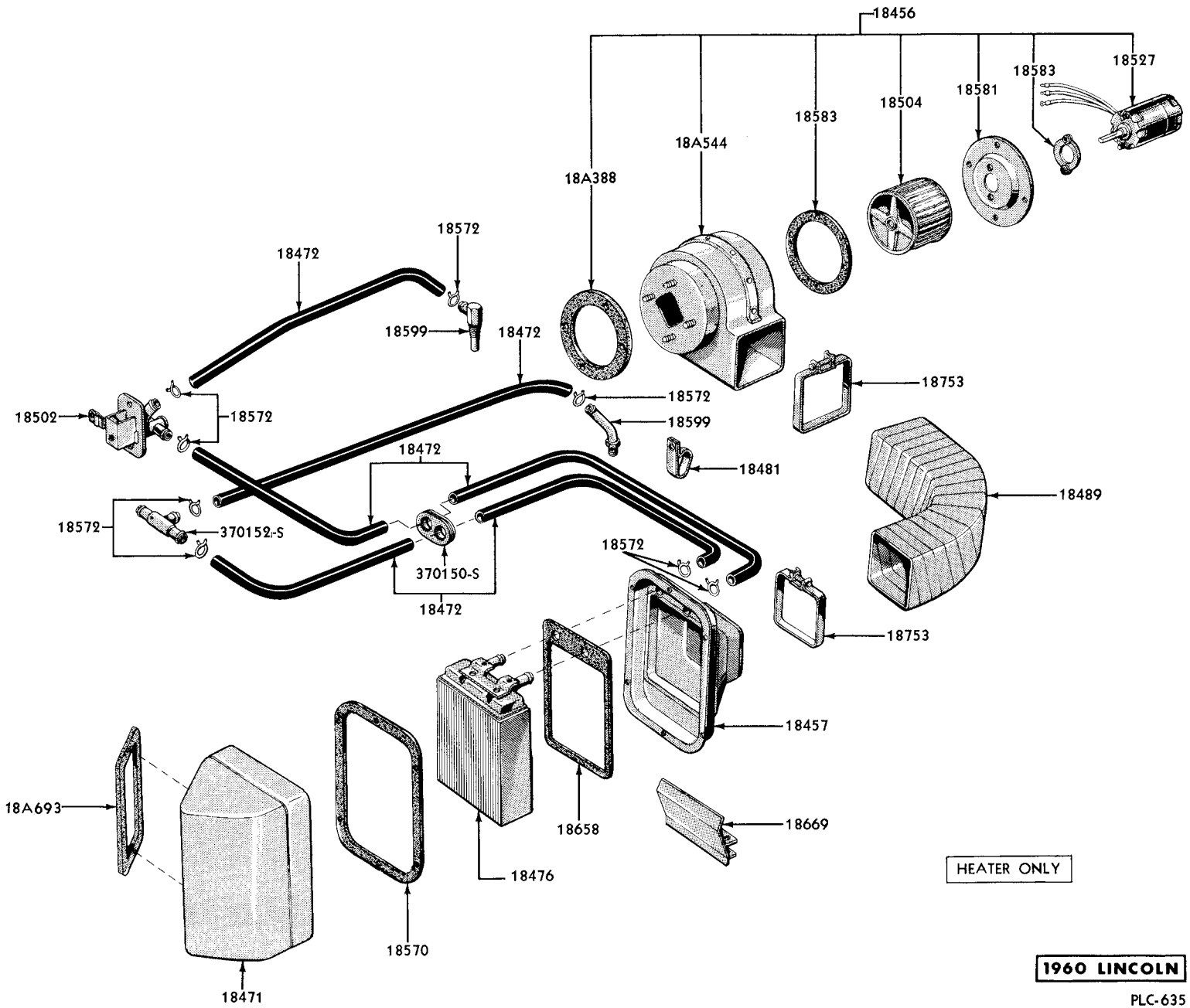

HEATER and RELATED PARTS

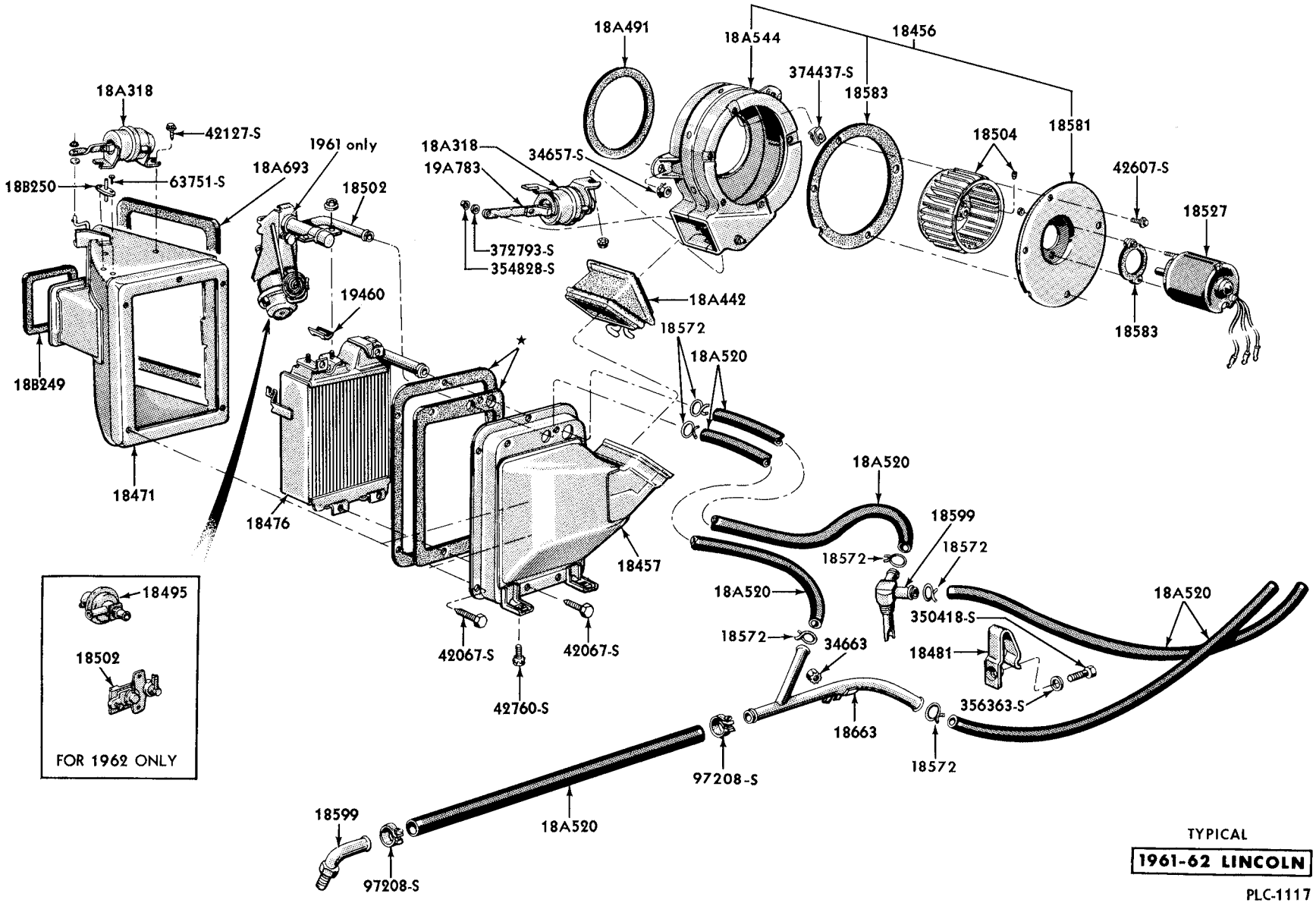

HEATER and RELATED PARTS

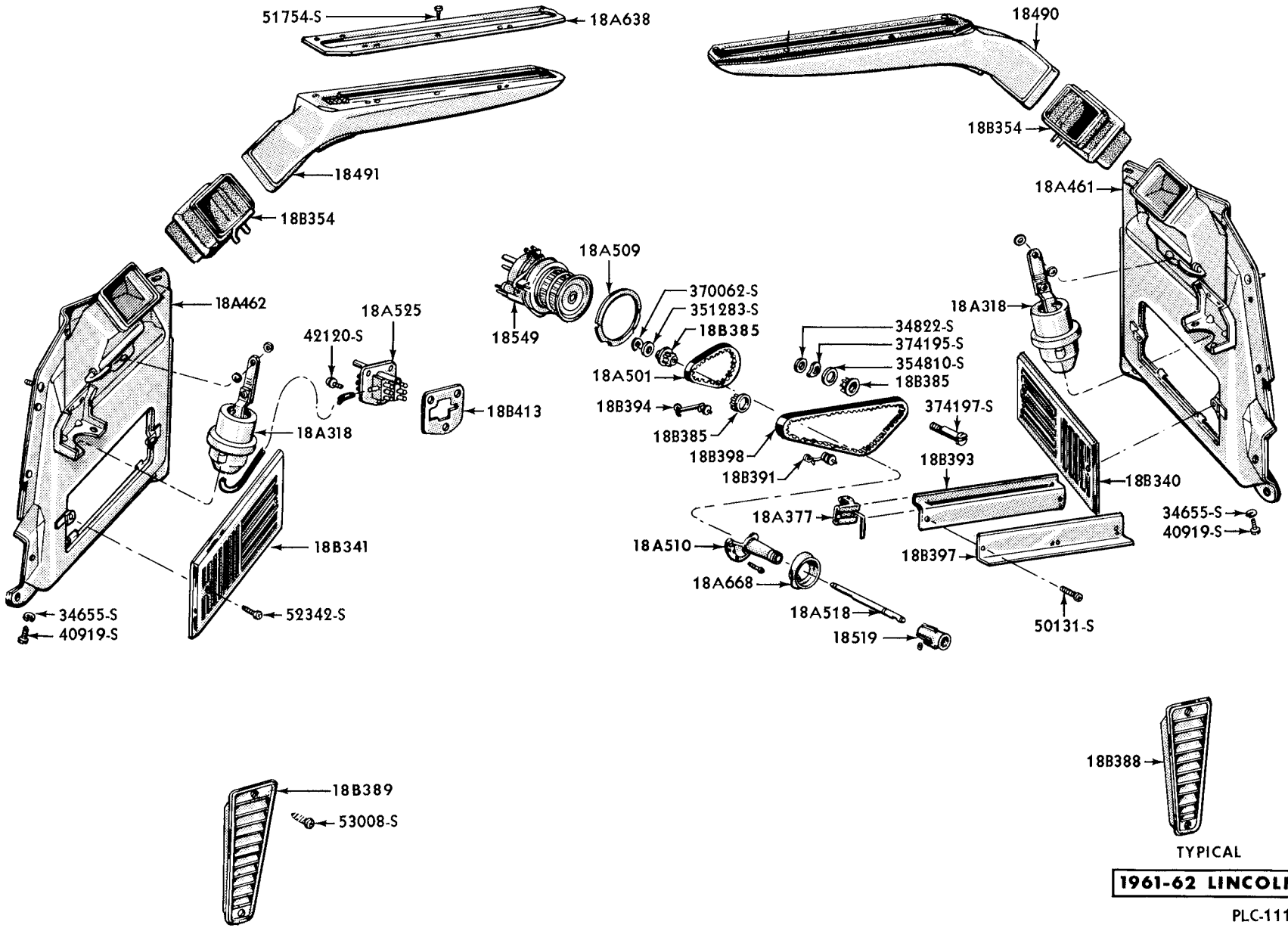

HEATER CONTROLS and DUCTS

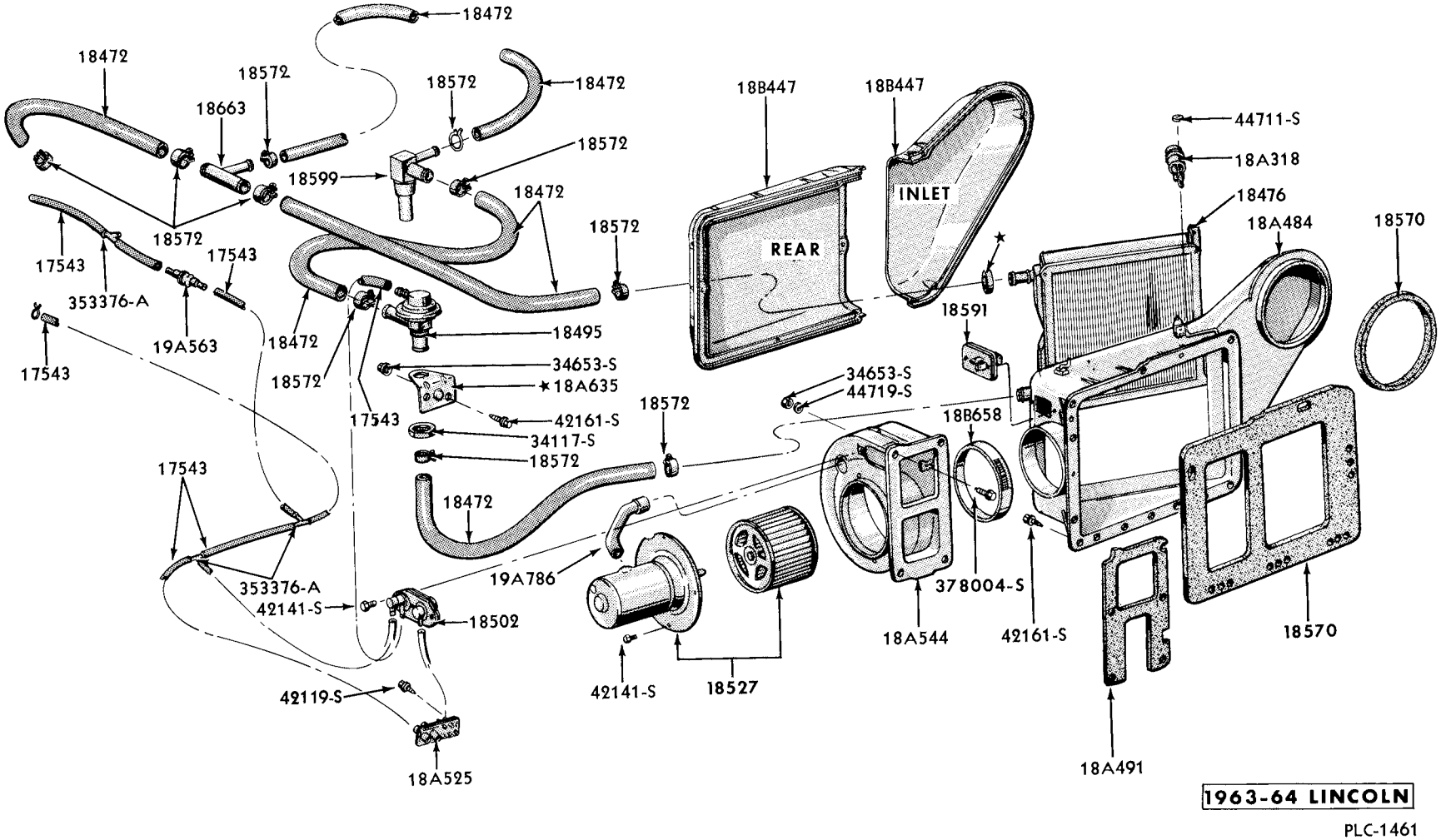

HEATER and RELATED PARTS

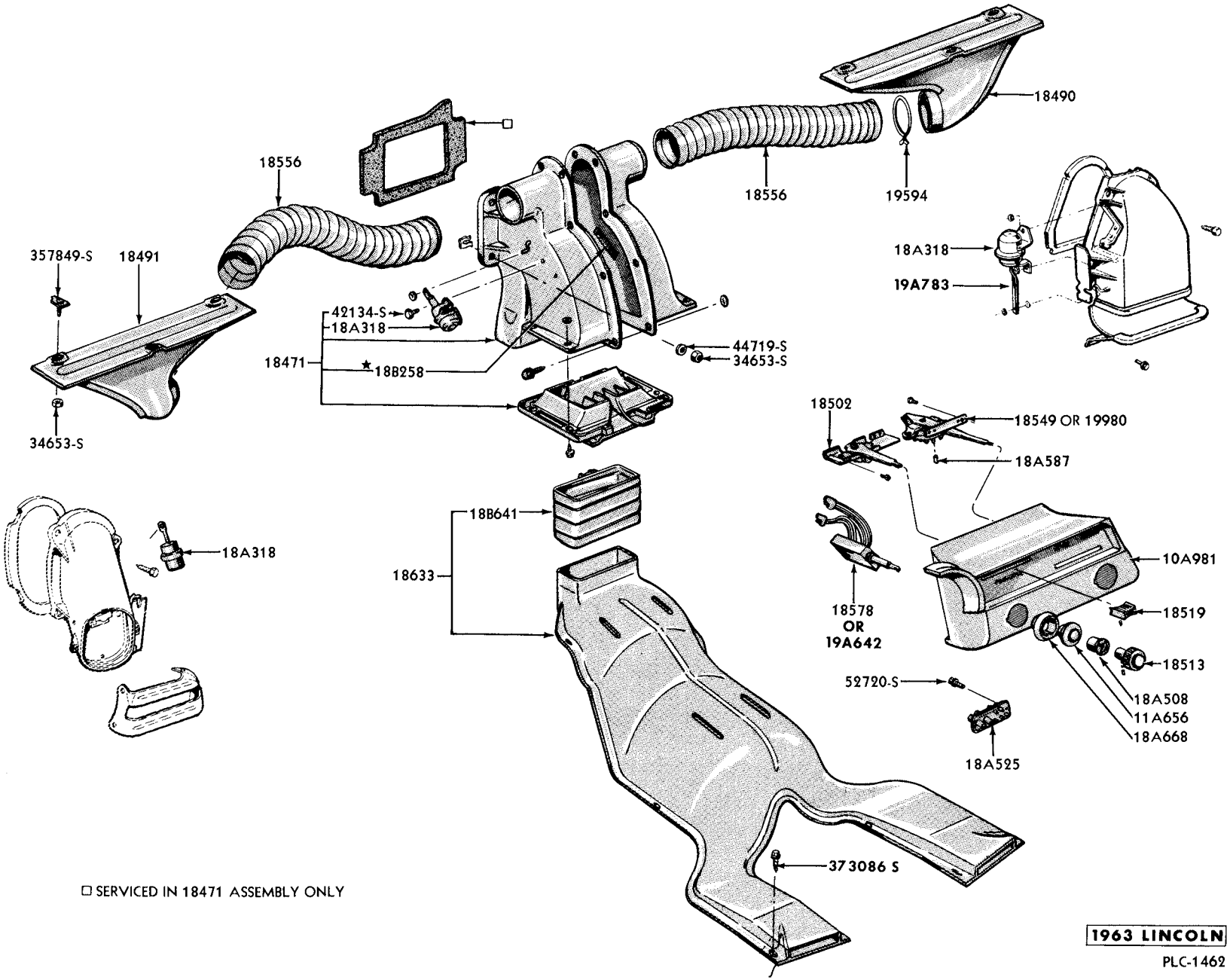

HEATER CONTROLS and DUCTS

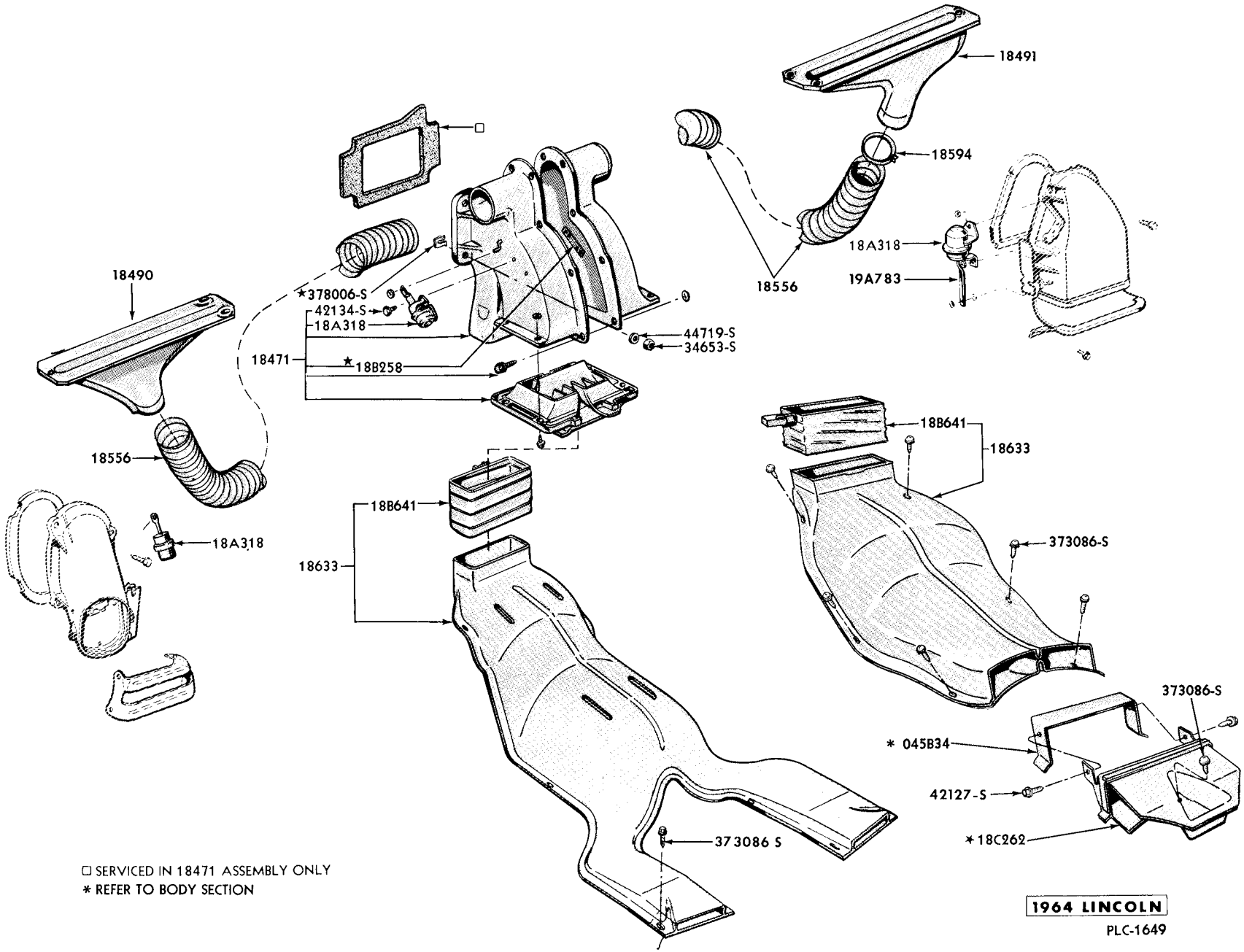

HEATER DUCTS and DEFROSTER

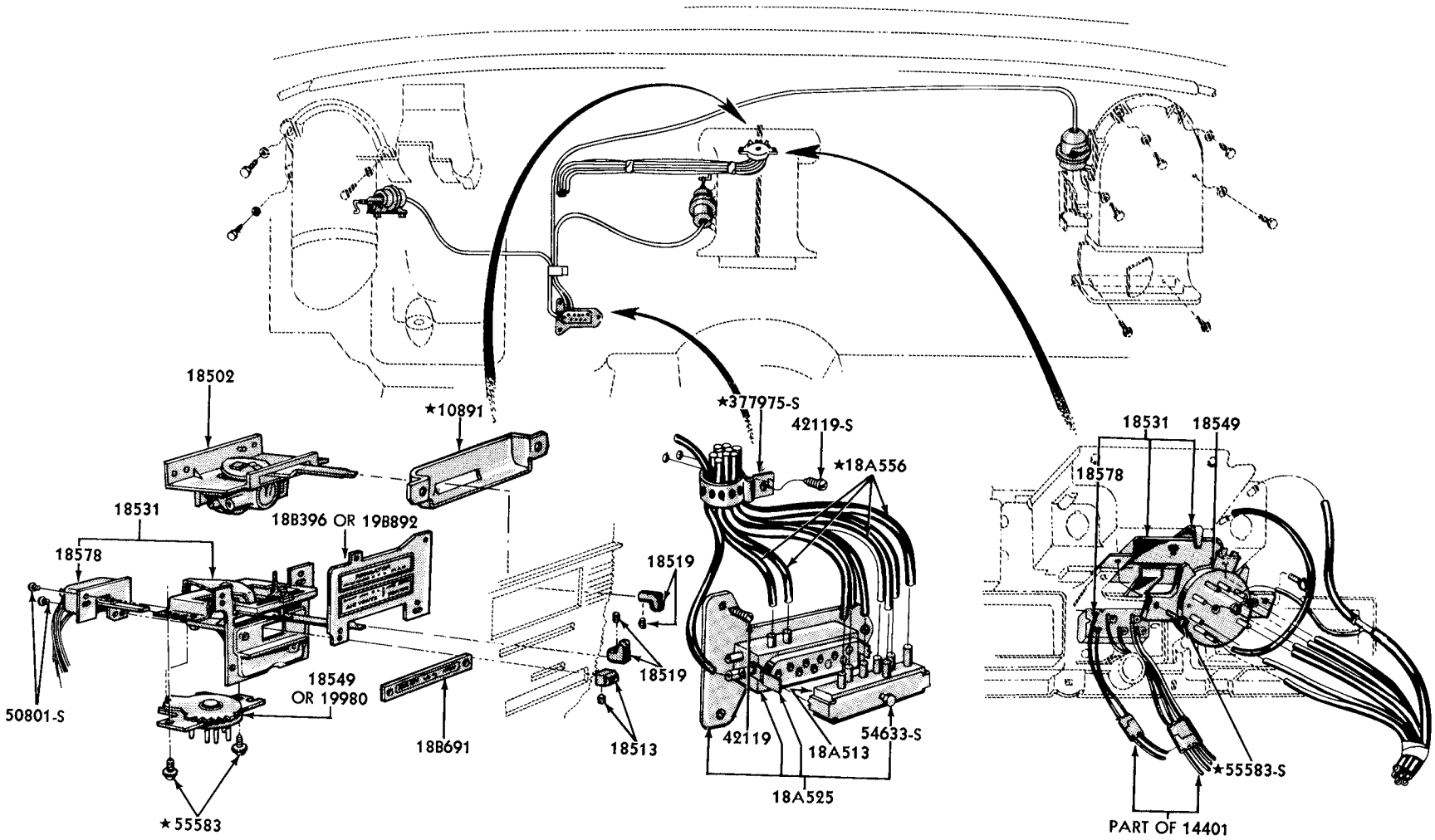

HEATER and DEFROSTER CONTROLS

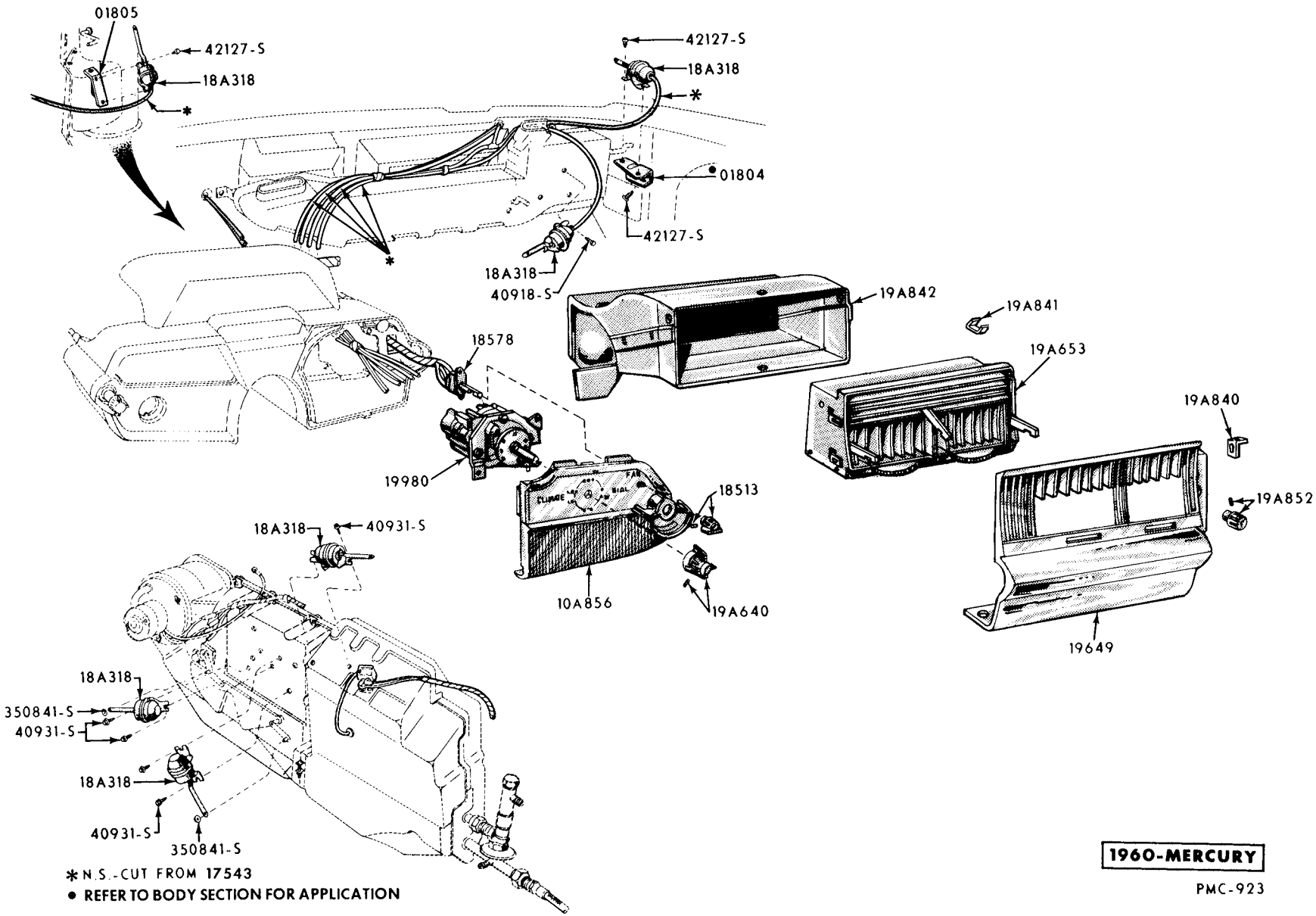

AIR CONDITIONER CONTROLS and RELATED PARTS

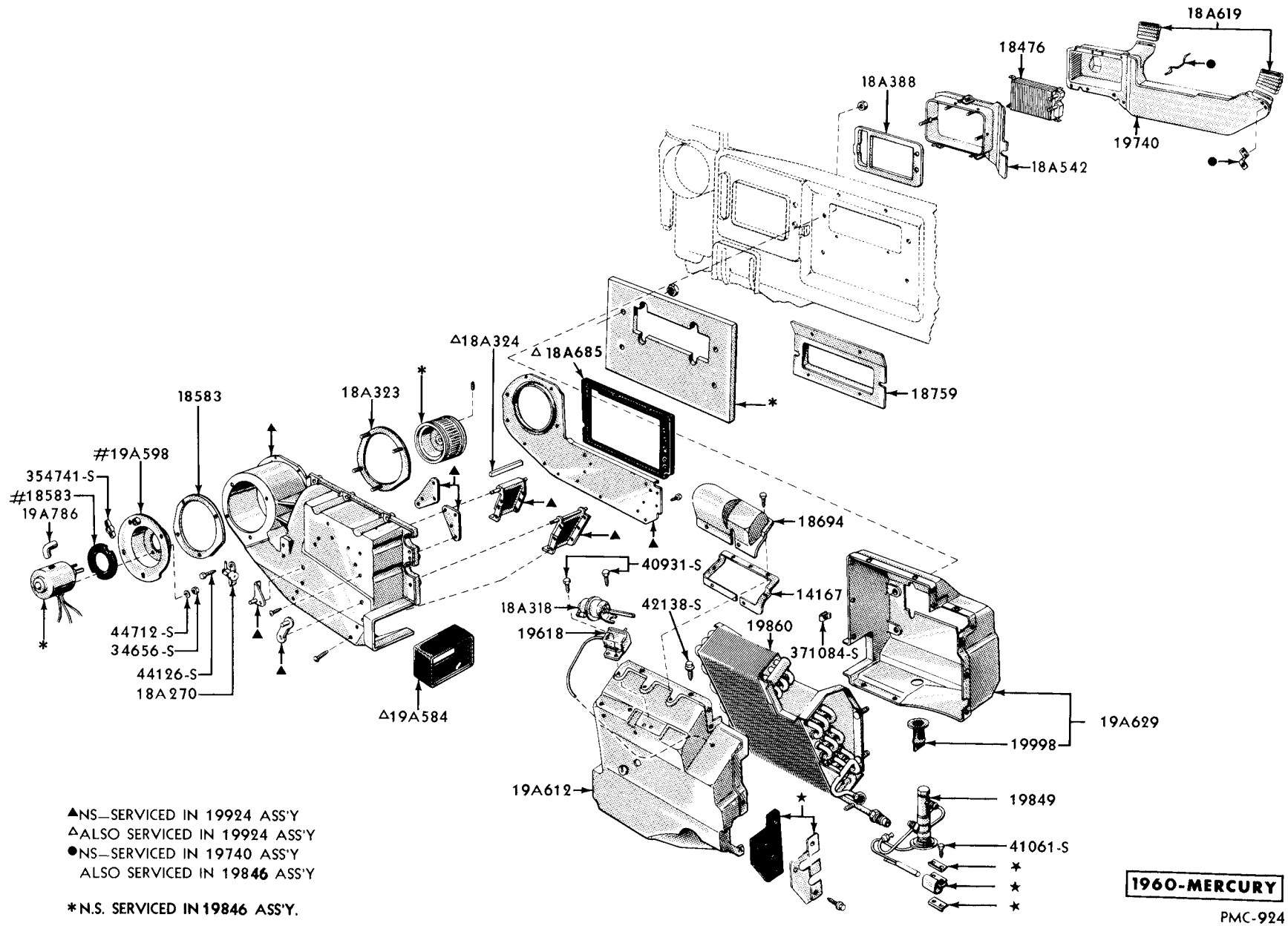

AIR CONDITIONER EVAPORATOR and RELATED PARTS

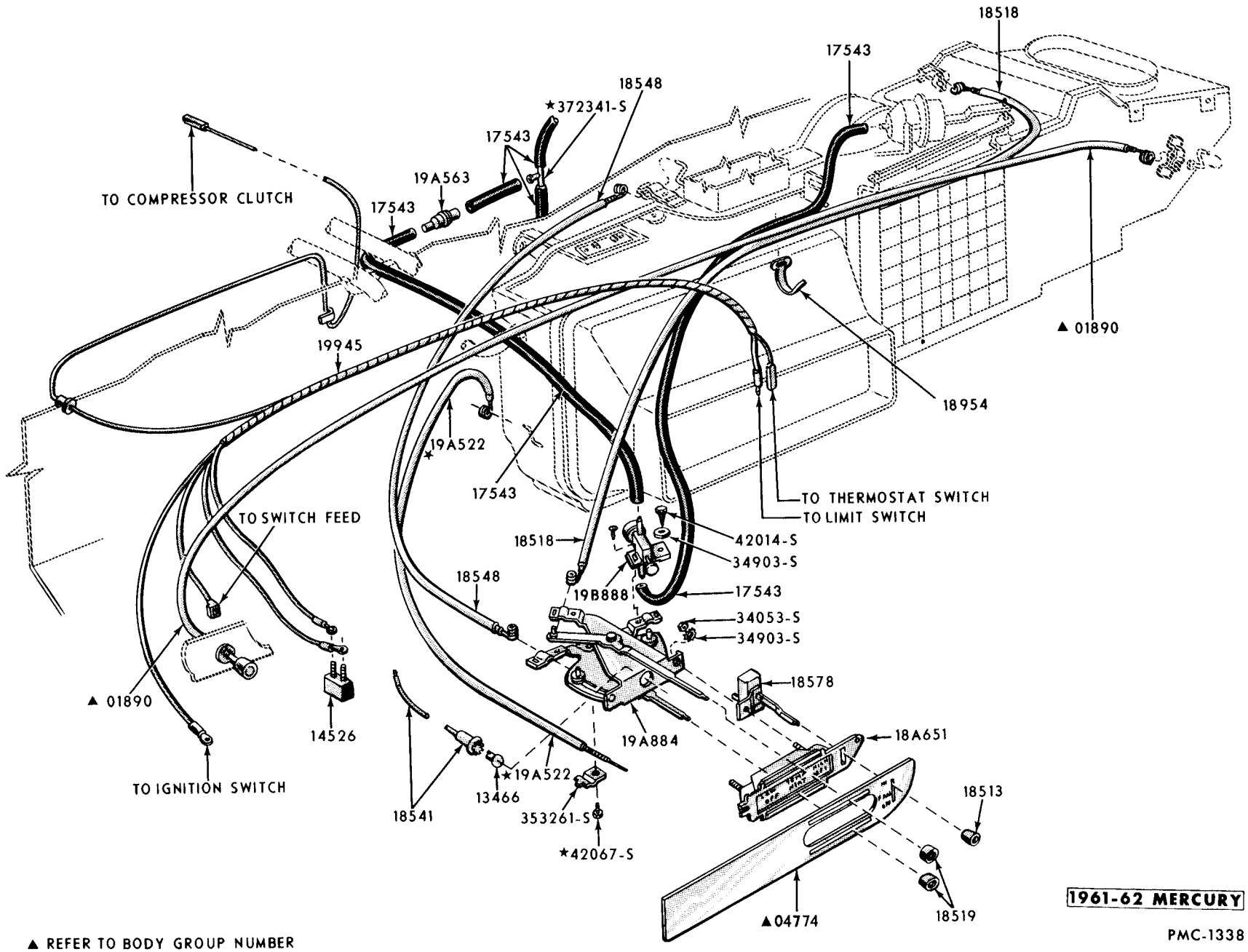

▲ REFER TO BODY GROUP NUMBER

AIR CONDITIONER CONTROLS and RELATED PARTS

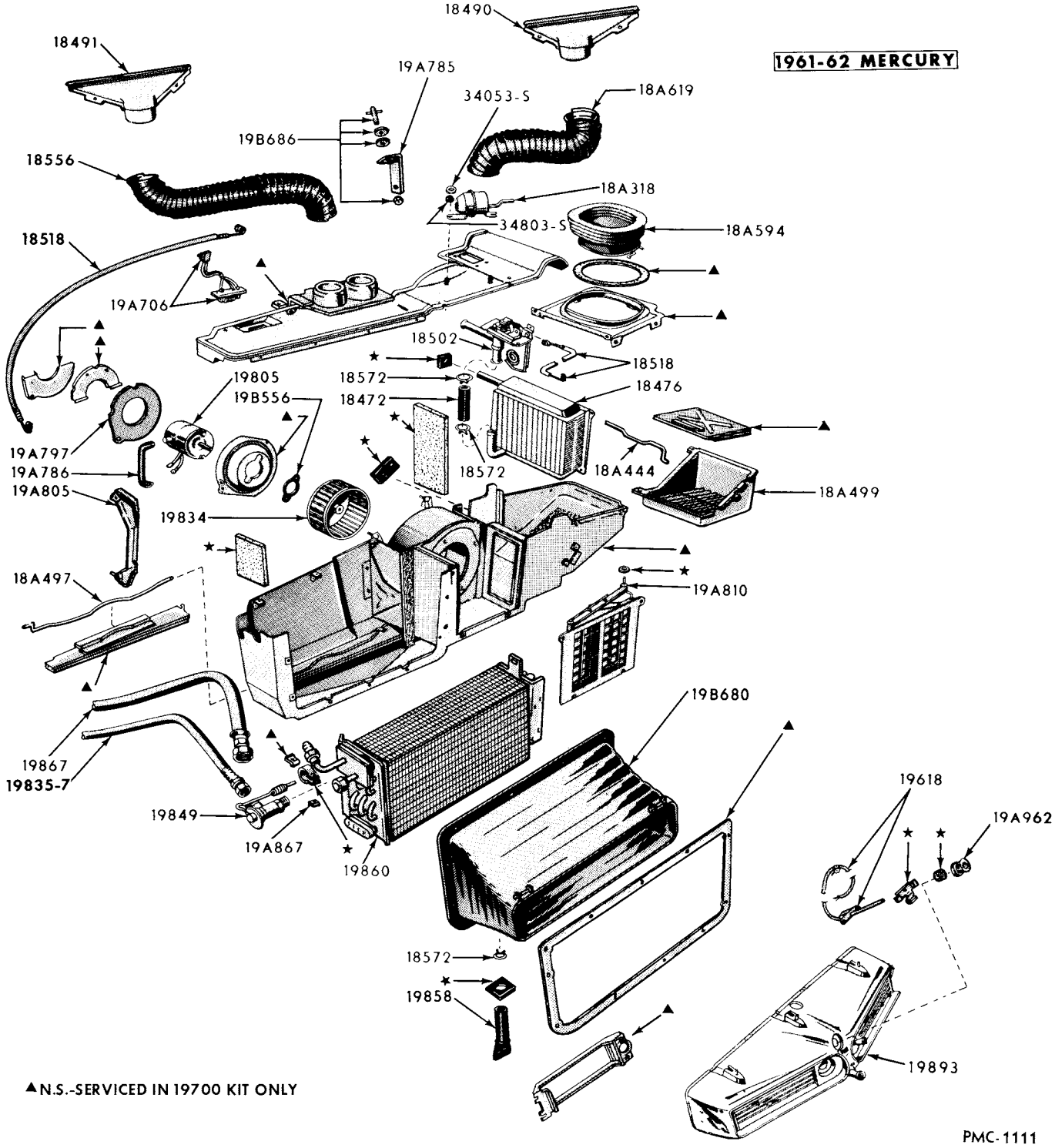

AIR CONDITIONER EVAPORATOR and RELATED PARTS

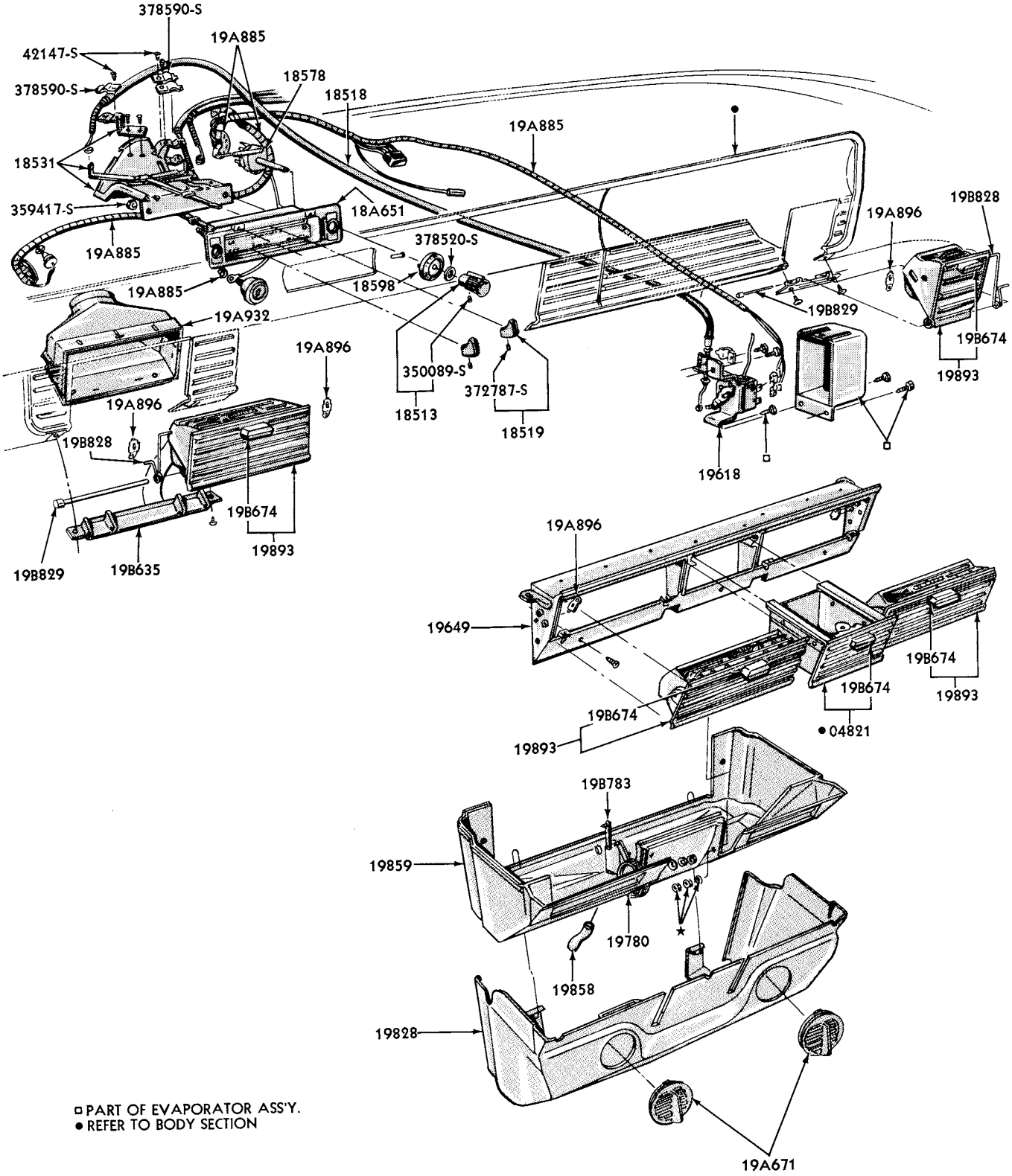

1964 MERCURY

PMC-1724

AIR CONDITIONER CONTROLS and REGISTERS - DELUXE

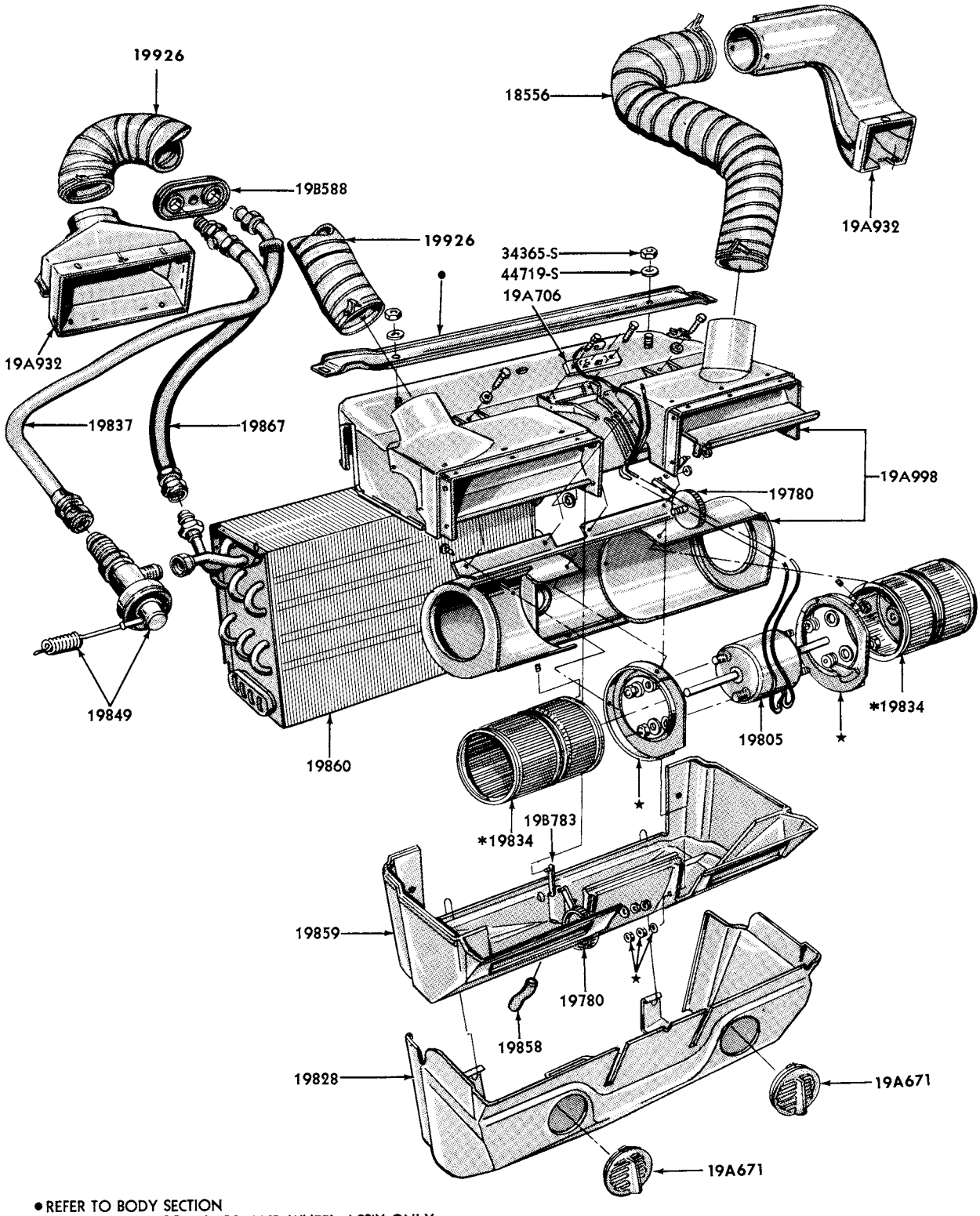

• REFER TO BODY SECTION
* SUPPLIED IN 19805 MOTOR AND WHEEL ASS'Y ONLY

1964 MERCURY
PMC-1708

AIR CONDITIONER EVAPORATOR and DUCTS - DELUXE

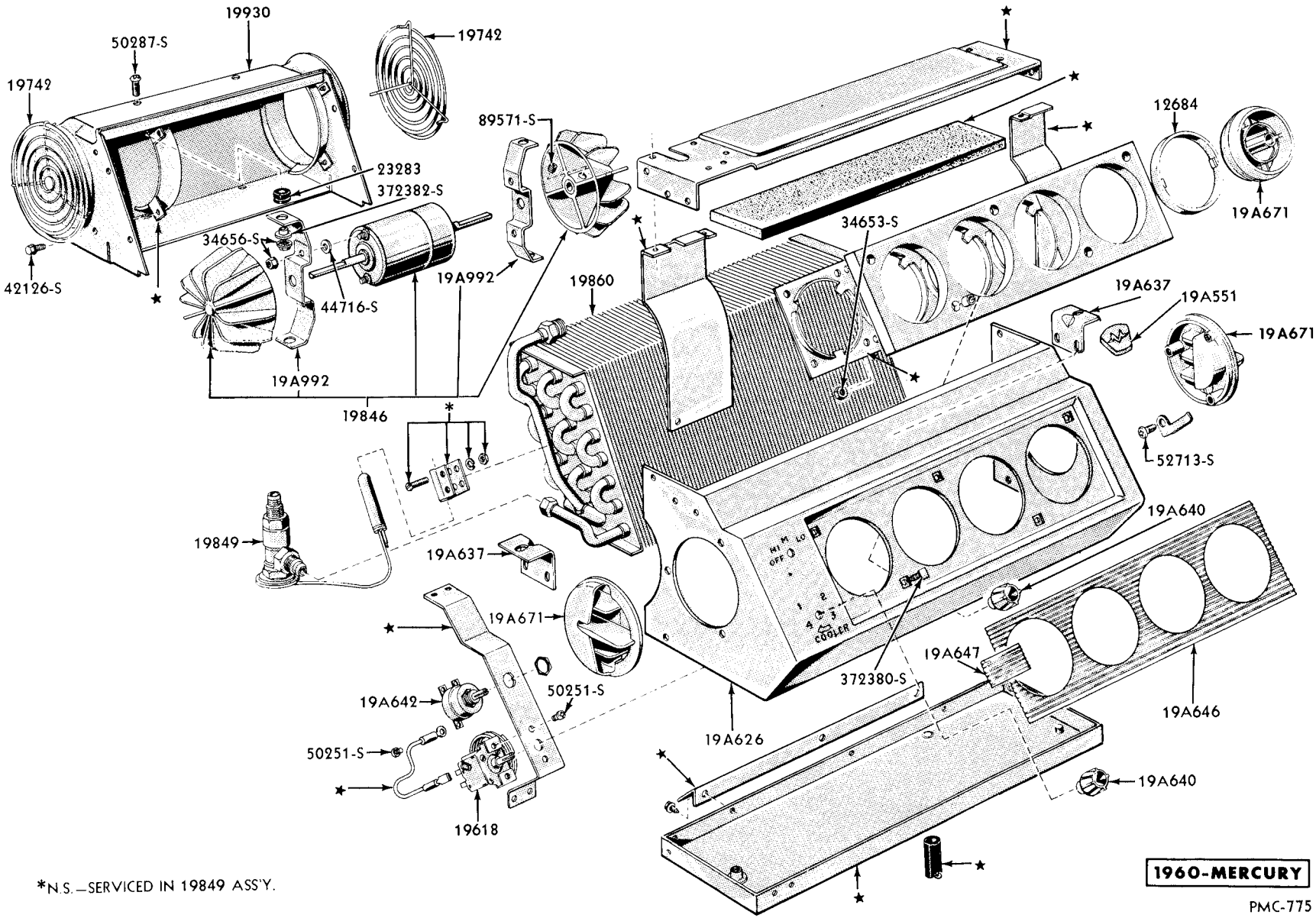

*N.S.—SERVICED IN 19849 ASS'Y.

AIR CONDITIONER - HANG ON TYPE

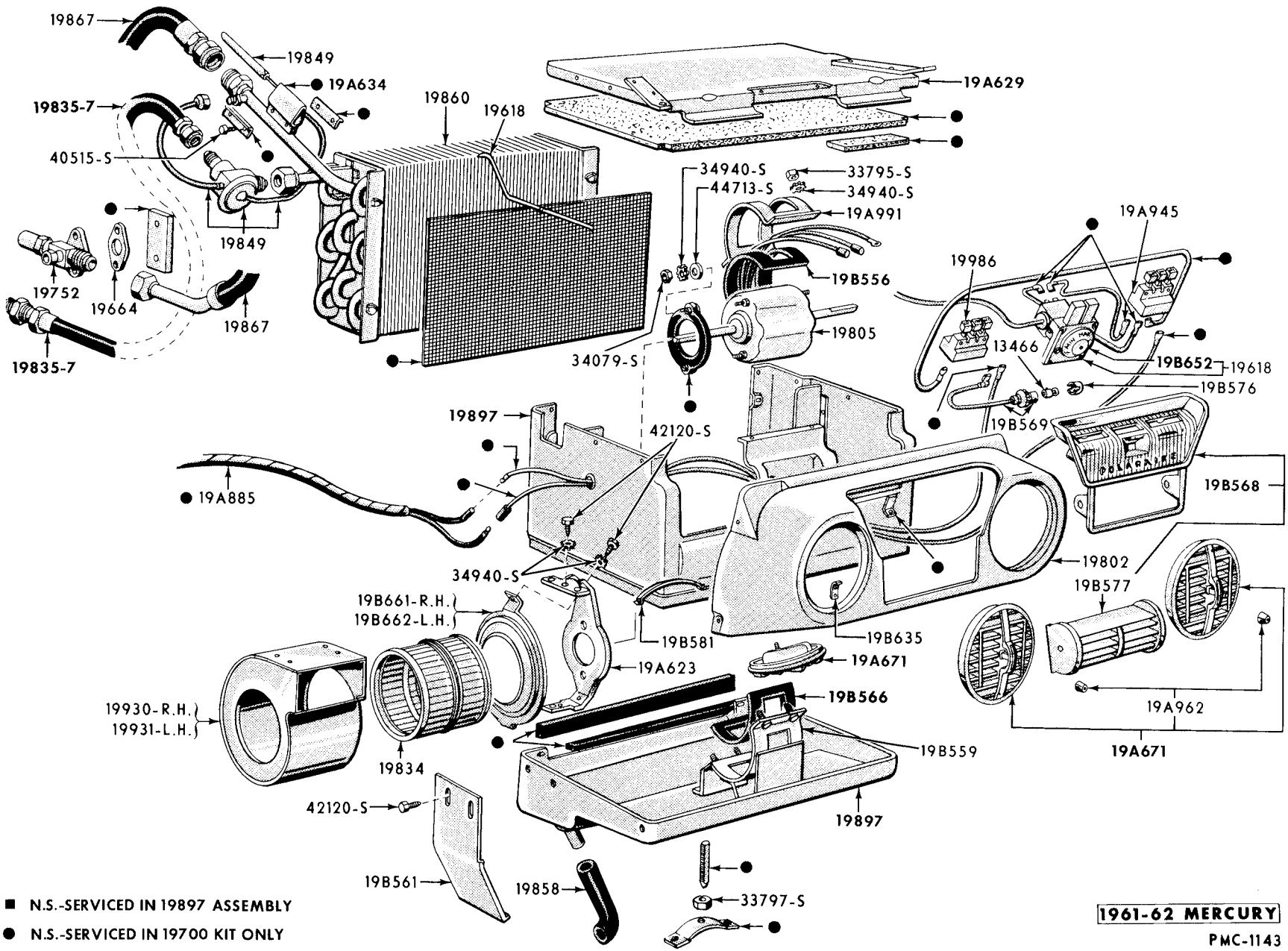

AIR CONDITIONER - HANG-ON TYPE

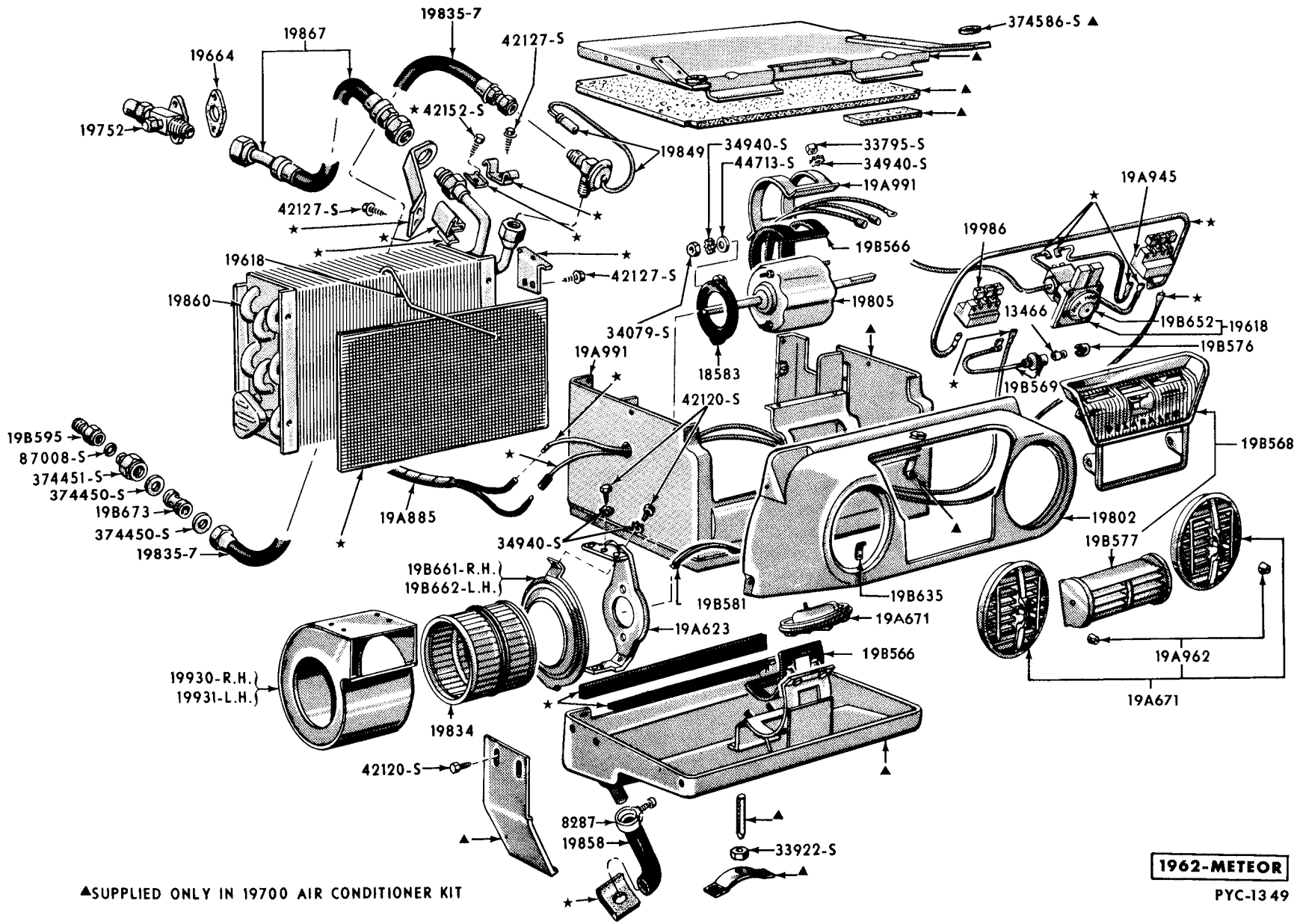

AIR CONDITIONER - HANG-ON TYPE

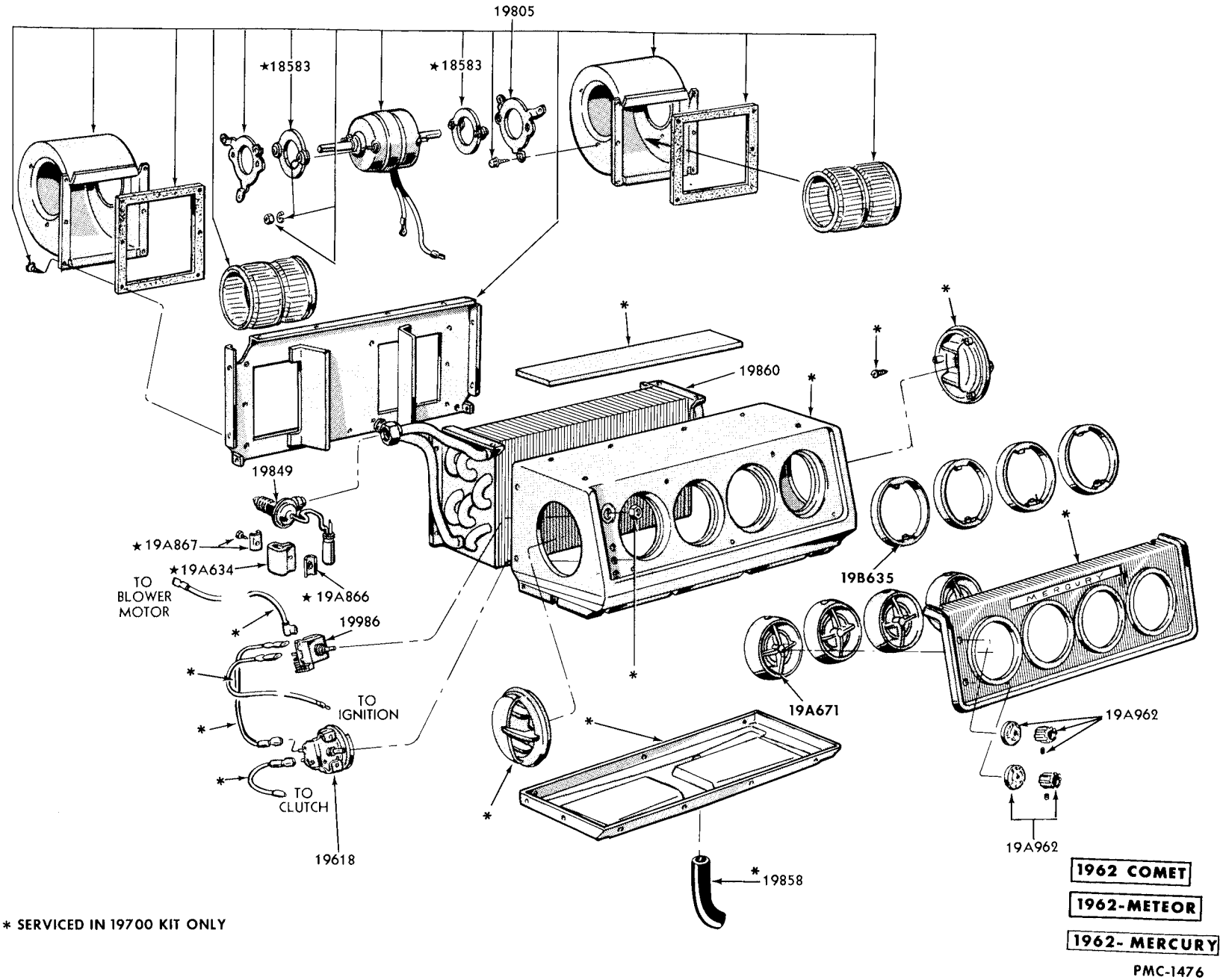

* SERVICED IN 19700 KIT ONLY

AIR CONDITIONER - HANG-ON TYPE "MERCURY" EMBLEM

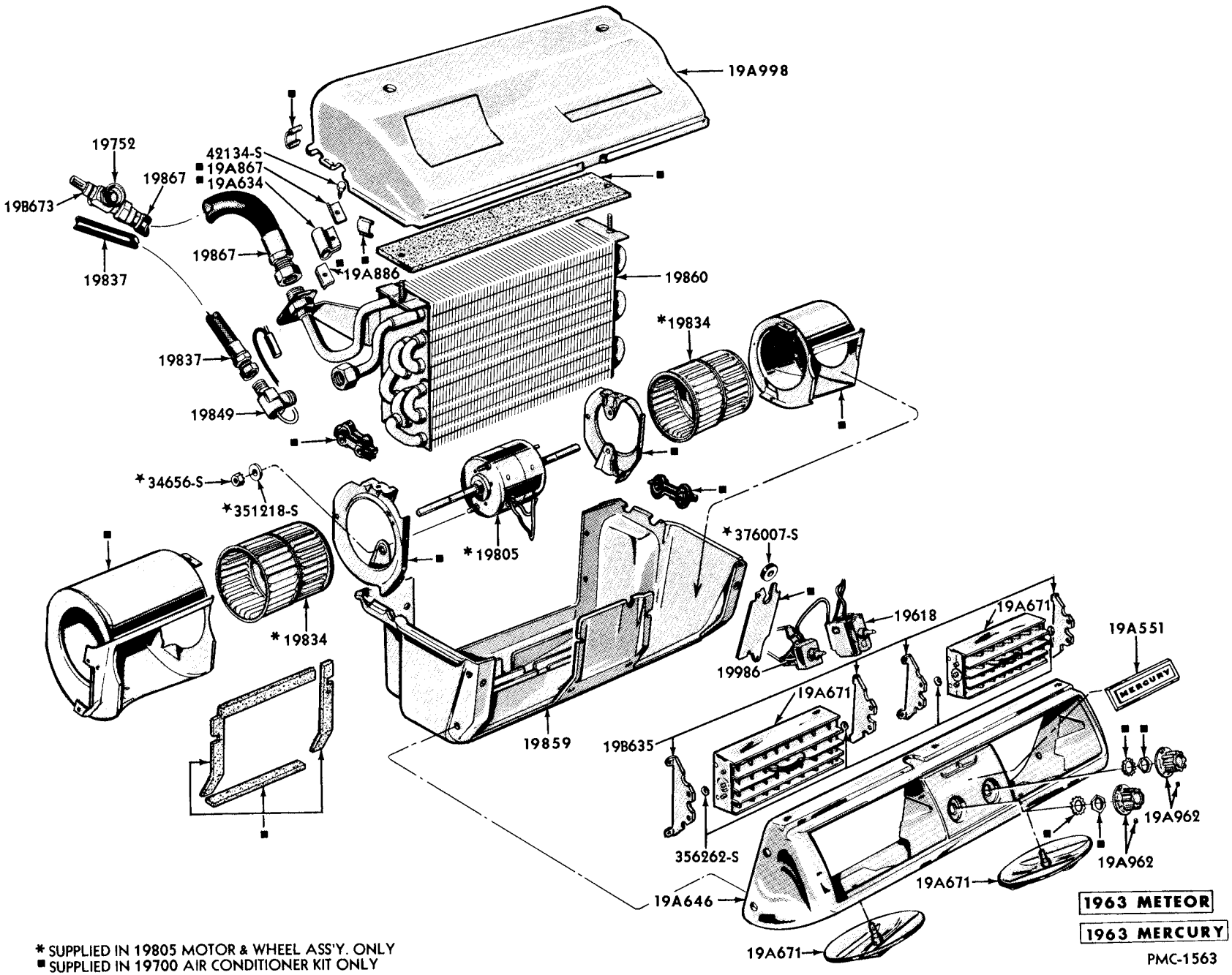

* SUPPLIED IN 19805 MOTOR & WHEEL ASS'Y. ONLY
■ SUPPLIED IN 19700 AIR CONDITIONER KIT ONLY

AIR CONDITIONER - HANG ON TYPE - DELUXE

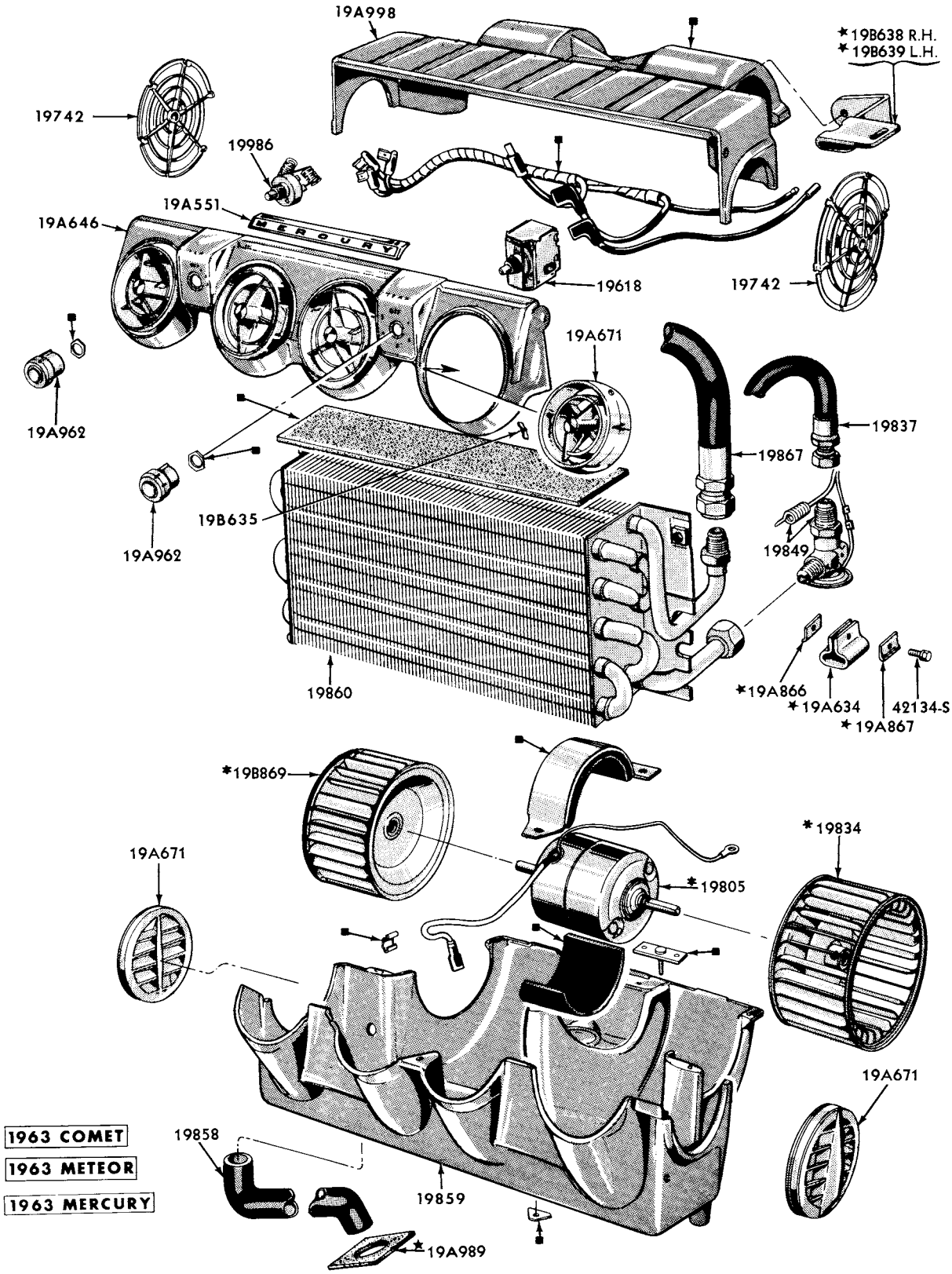

*SUPPLIED IN 19805 MOTOR AND WHEEL ASS'Y. ONLY
■SUPPLIED IN 19700 AIR CONDITIONER KIT ONLY

PMC-1564

AIR CONDITIONER - HANG ON TYPE - ECONOMY

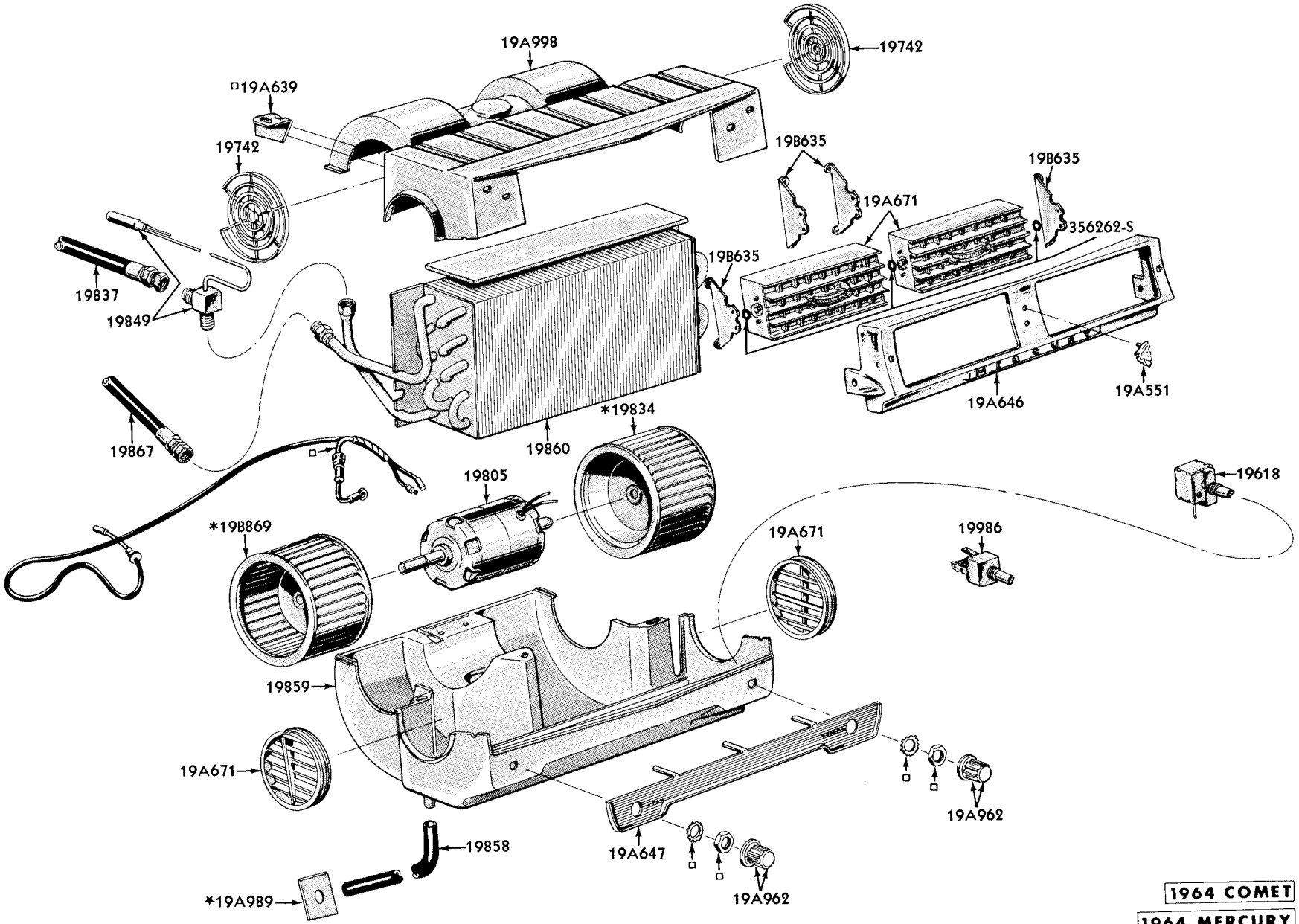

* SUPPLIED IN 19805 MOTOR AND WHEEL ASS'Y. ONLY
□ SUPPLIED IN 19700 AIR CONDITIONER KIT ONLY

1964 COMET
1964 MERCURY
PMC-1698

AIR CONDITIONER - HANG-ON TYPE

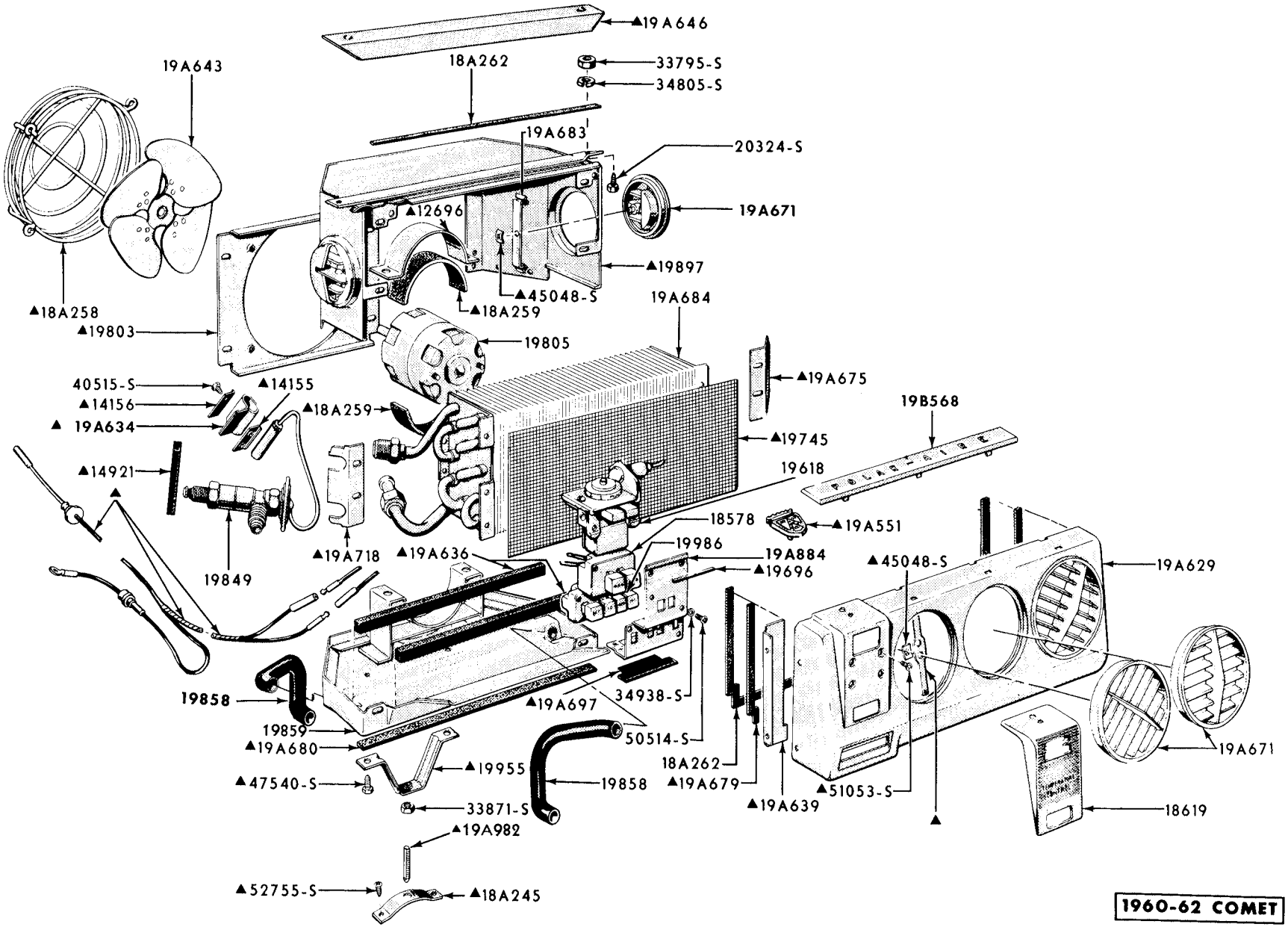

AIR CONITIONER - HANG ON TYPE

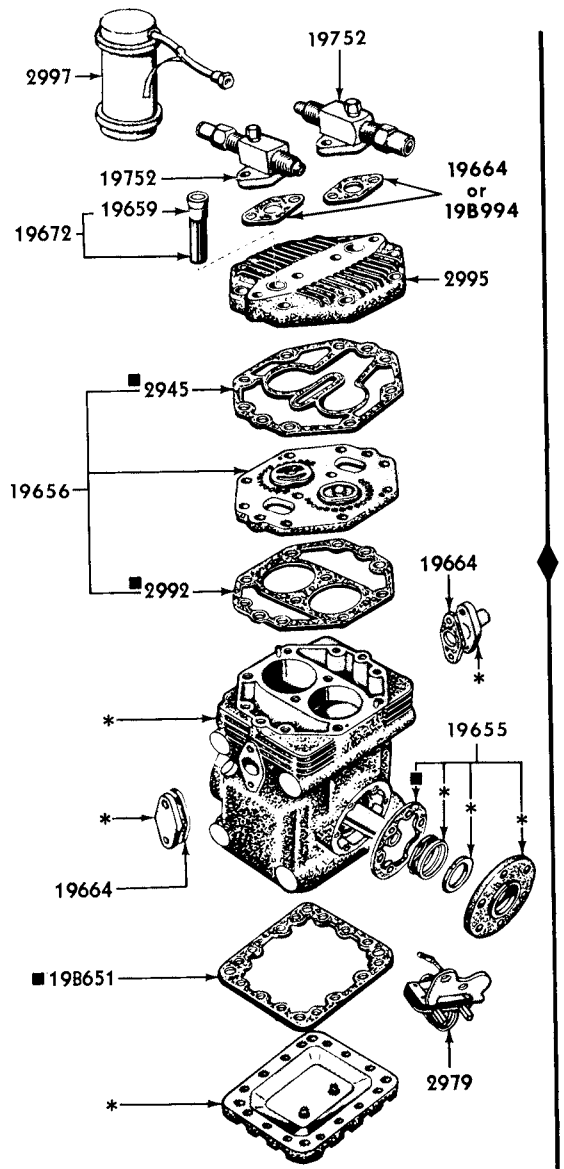

* N.S. SERVICED IN 19703 ASSEMBLY
■ N.S.-SERVICED IN 19B684 KIT ONLY

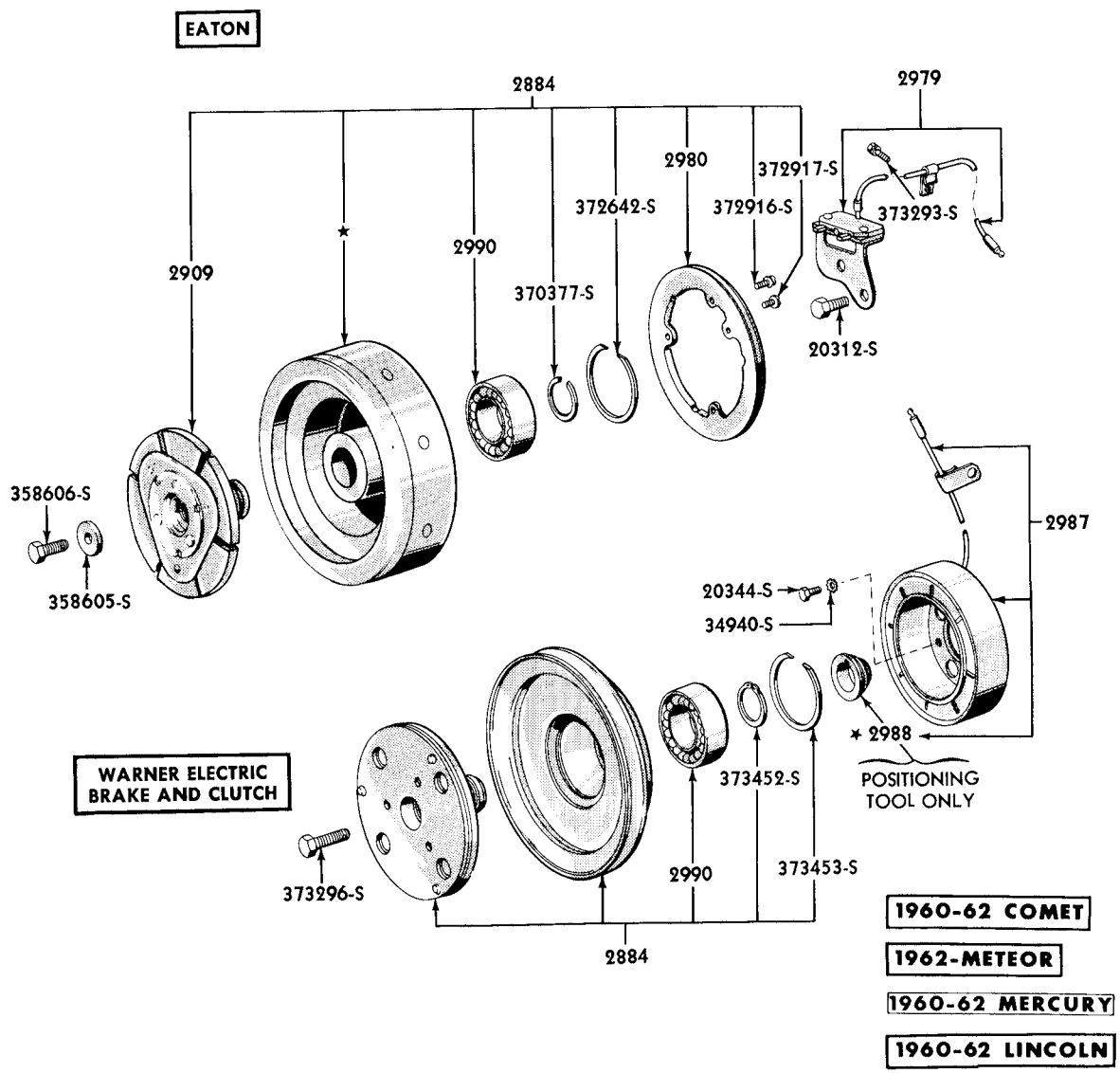

PLC-1223

AIR CONDITIONER COMPRESSOR and CLUTCHES

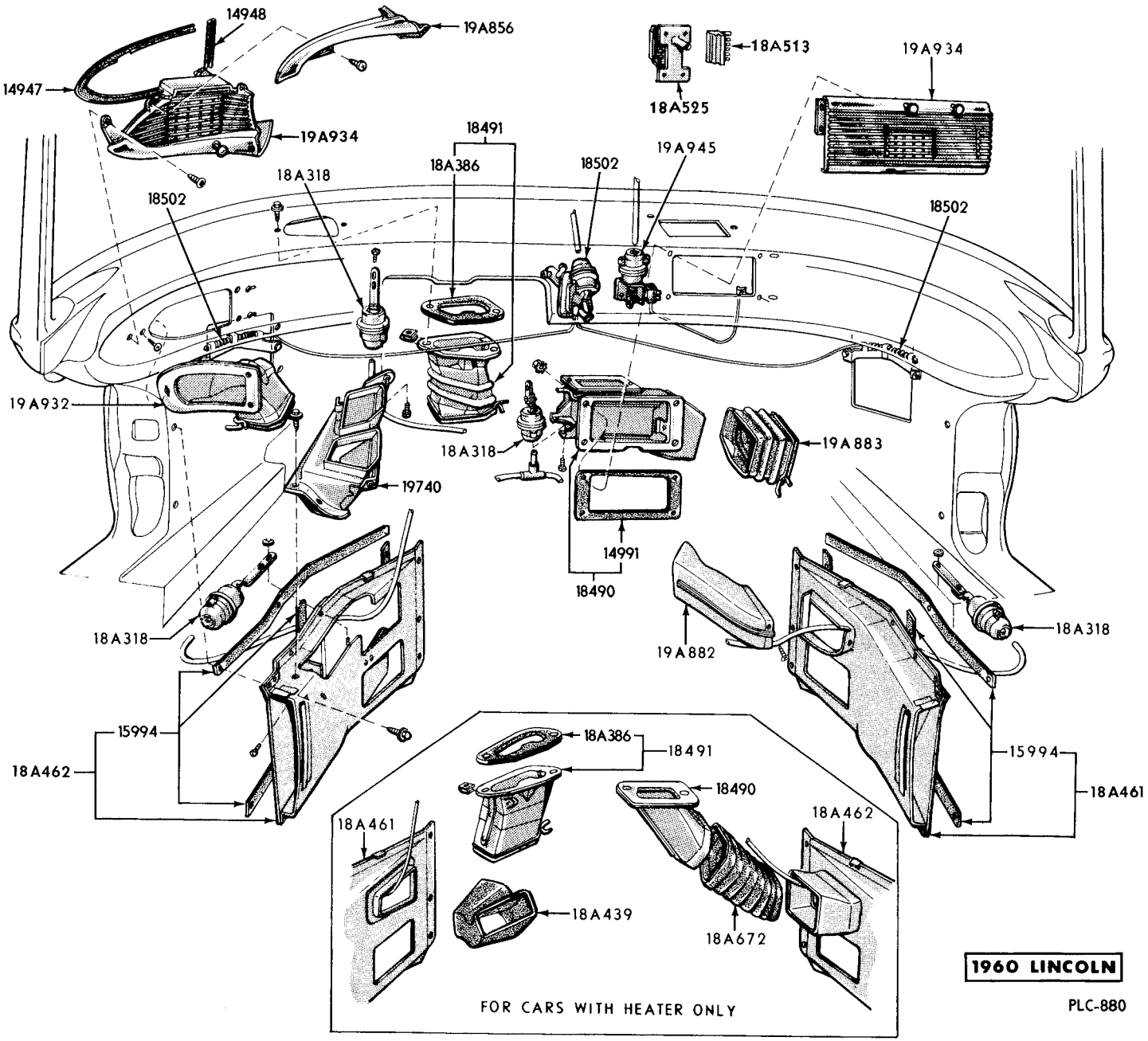

HEATER, AIR CONDITIONER CONTROLS and DUCTS

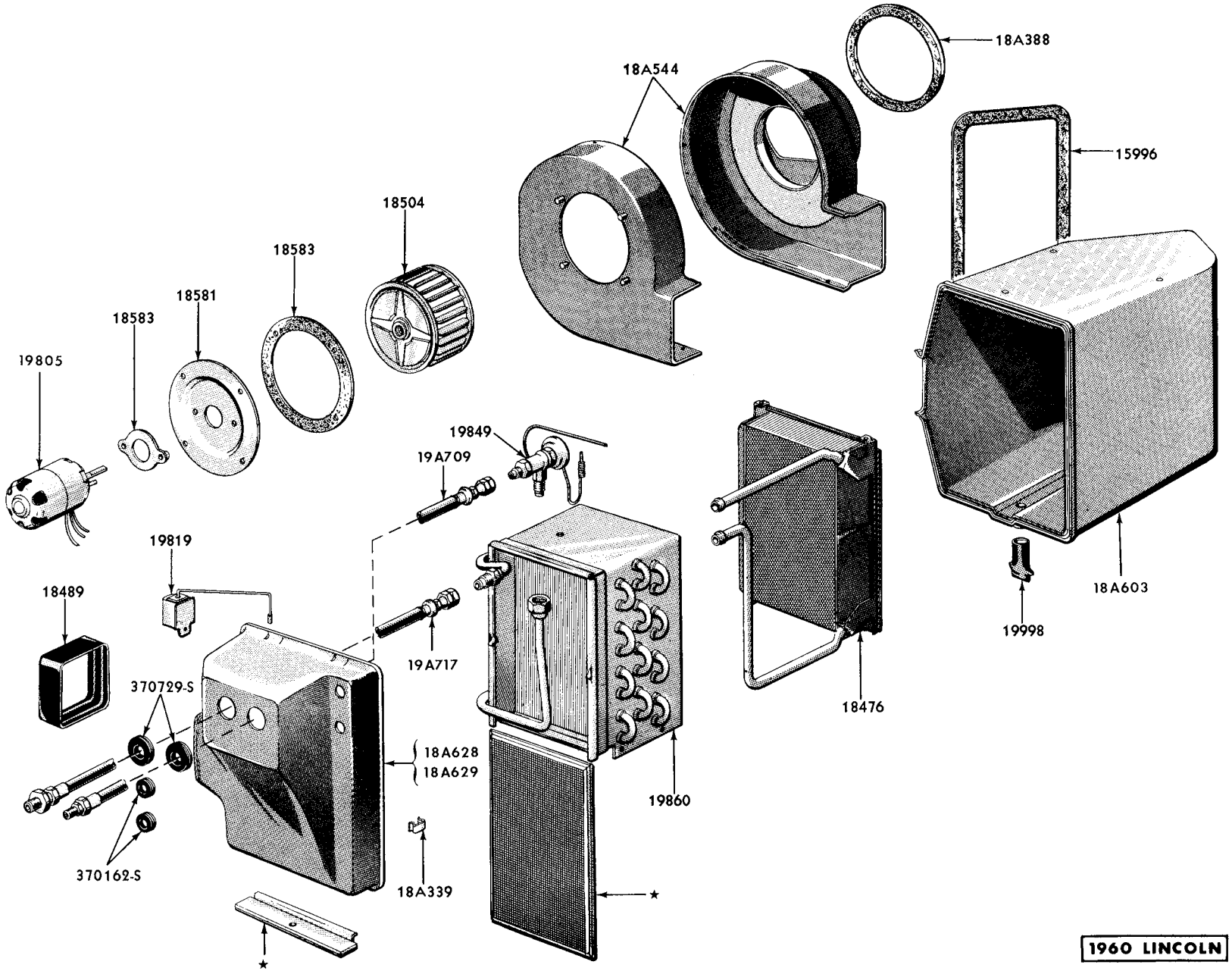

AIR CONDITIONER EVAPORATOR and HEATER

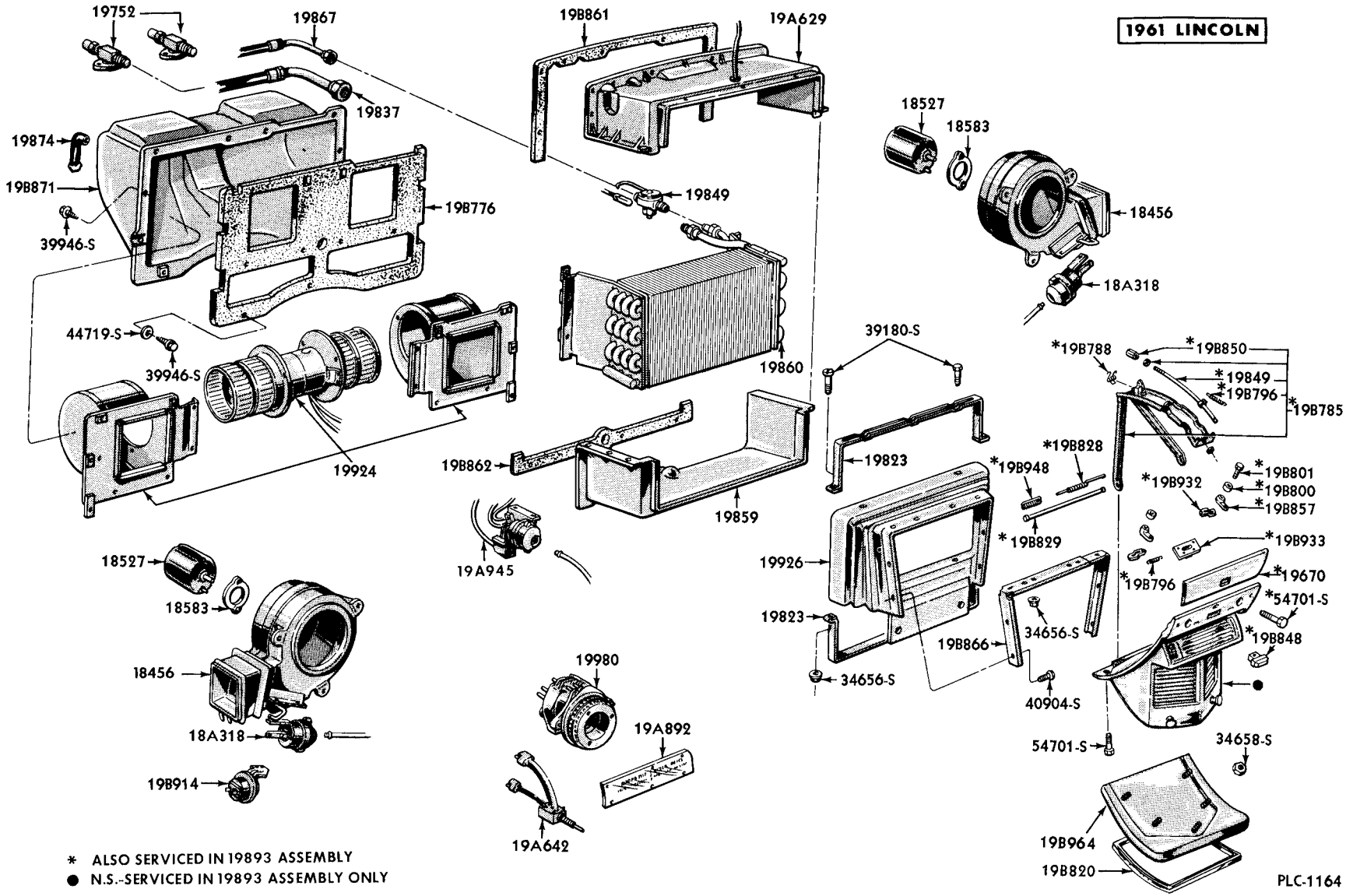

AIR CONDITIONER EVAPORATOR and RELATED PARTS

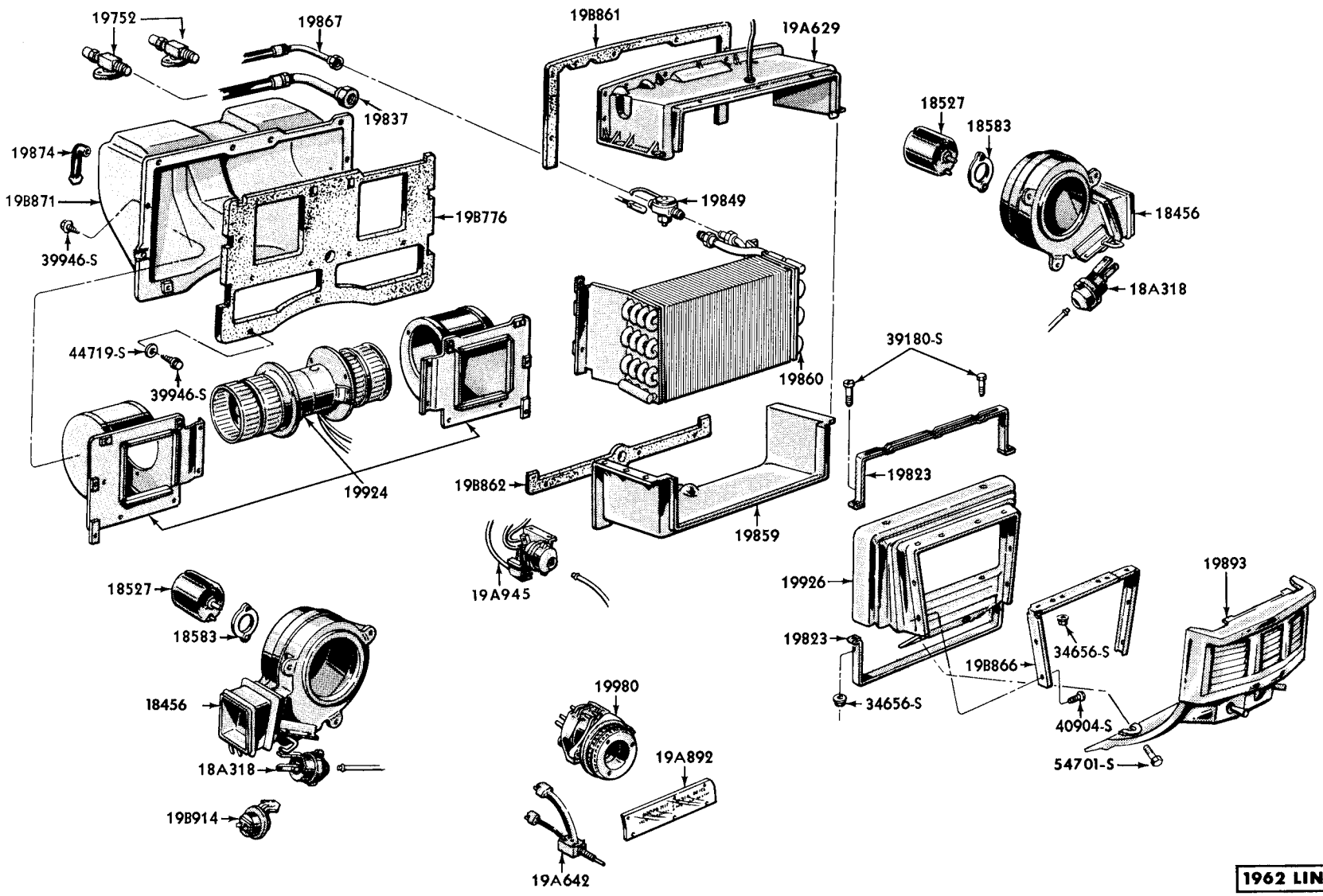

AIR CONDITIONER EVAPORATOR and RELATED PARTS

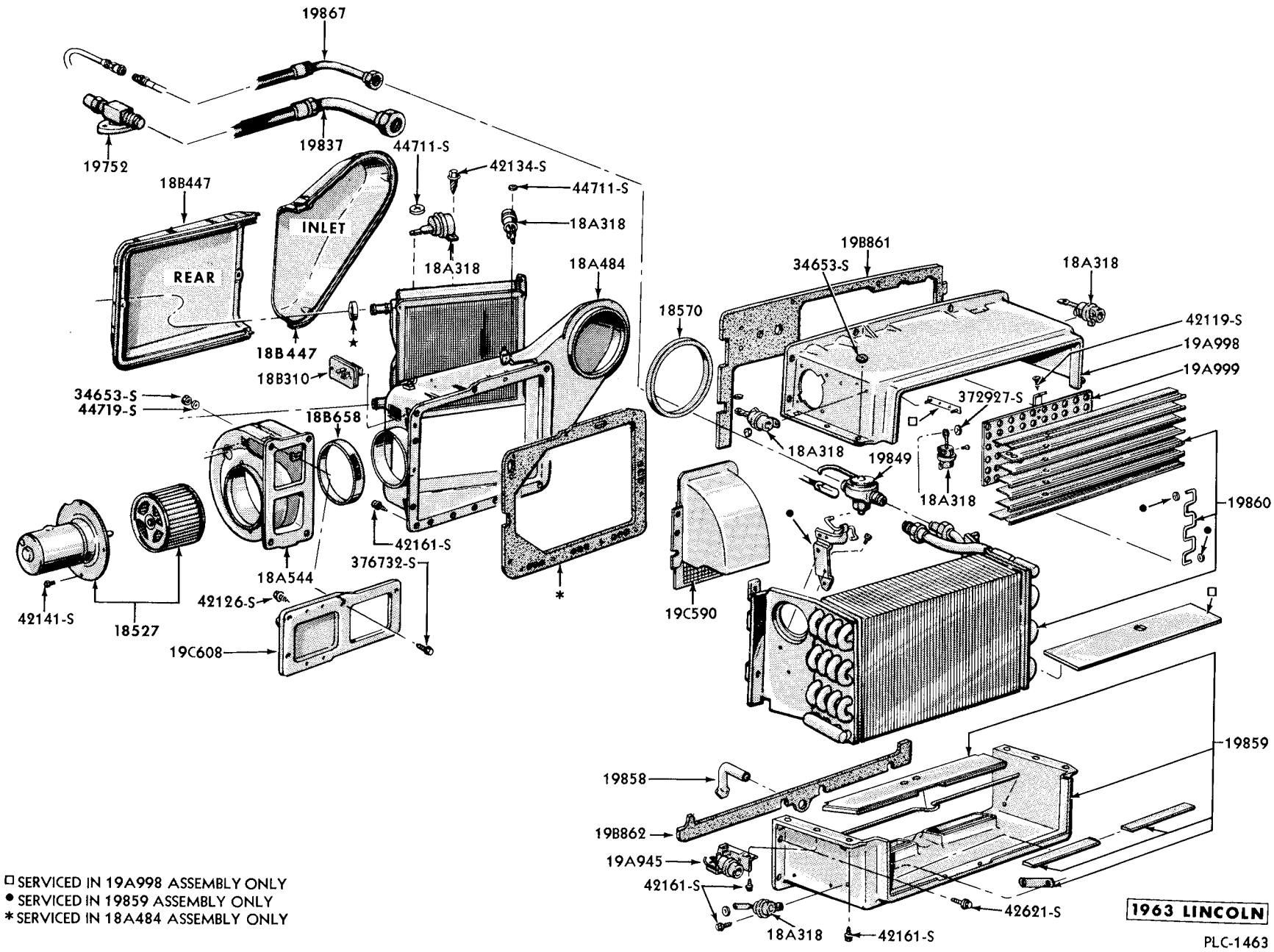

□ SERVICED IN 19A998 ASSEMBLY ONLY
● SERVICED IN 19859 ASSEMBLY ONLY
* SERVICED IN 18A484 ASSEMBLY ONLY

AIR CONDITIONER EVAPORATOR and RELATED PARTS

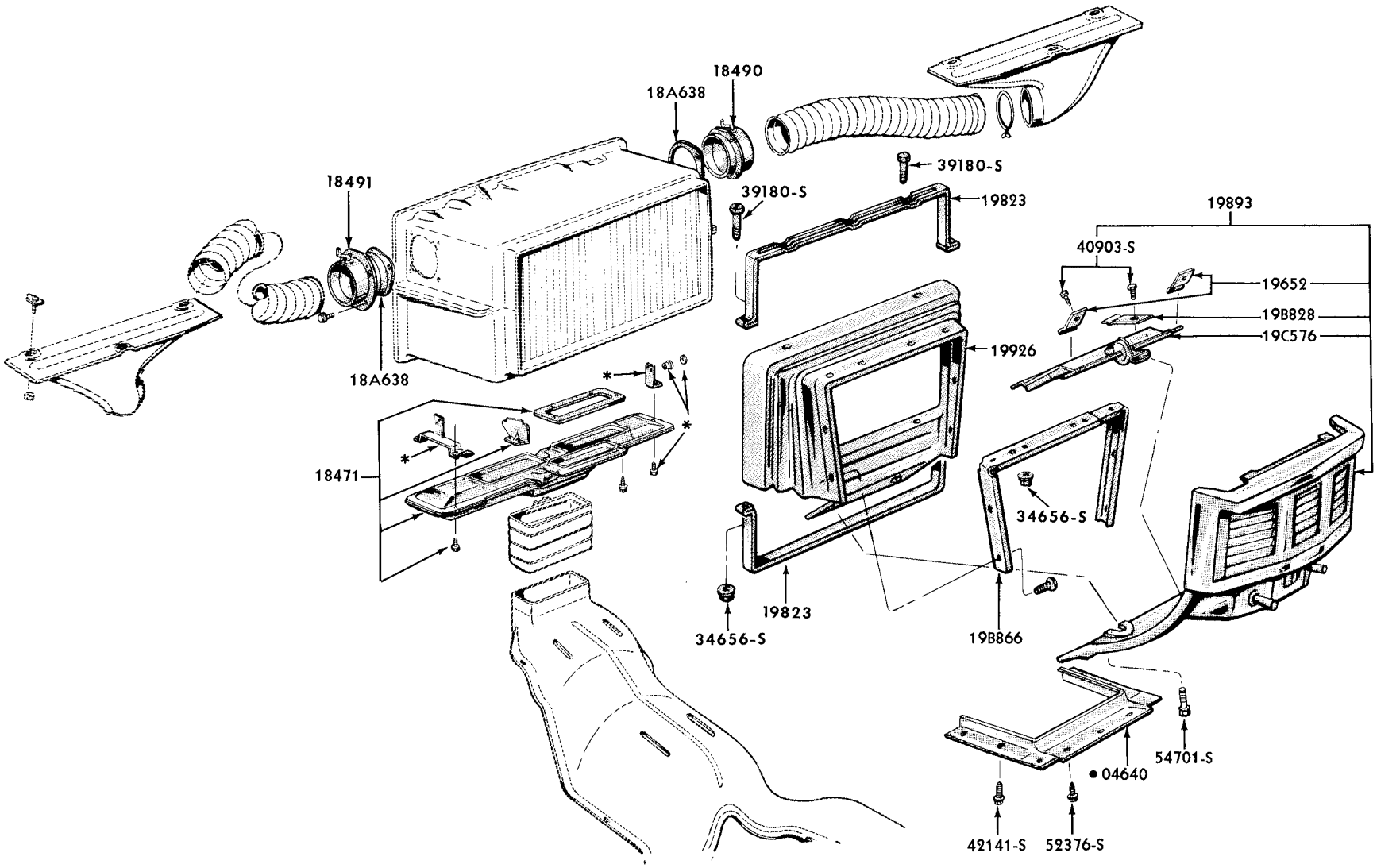

1963 LINCOLN

PLC-1464

* SERVICED IN 19859 ASSEMBLY ONLY
• REFER TO BODY SECTION FOR APPLICATION

AIR CONDITIONER CONTROLS and DUCTS

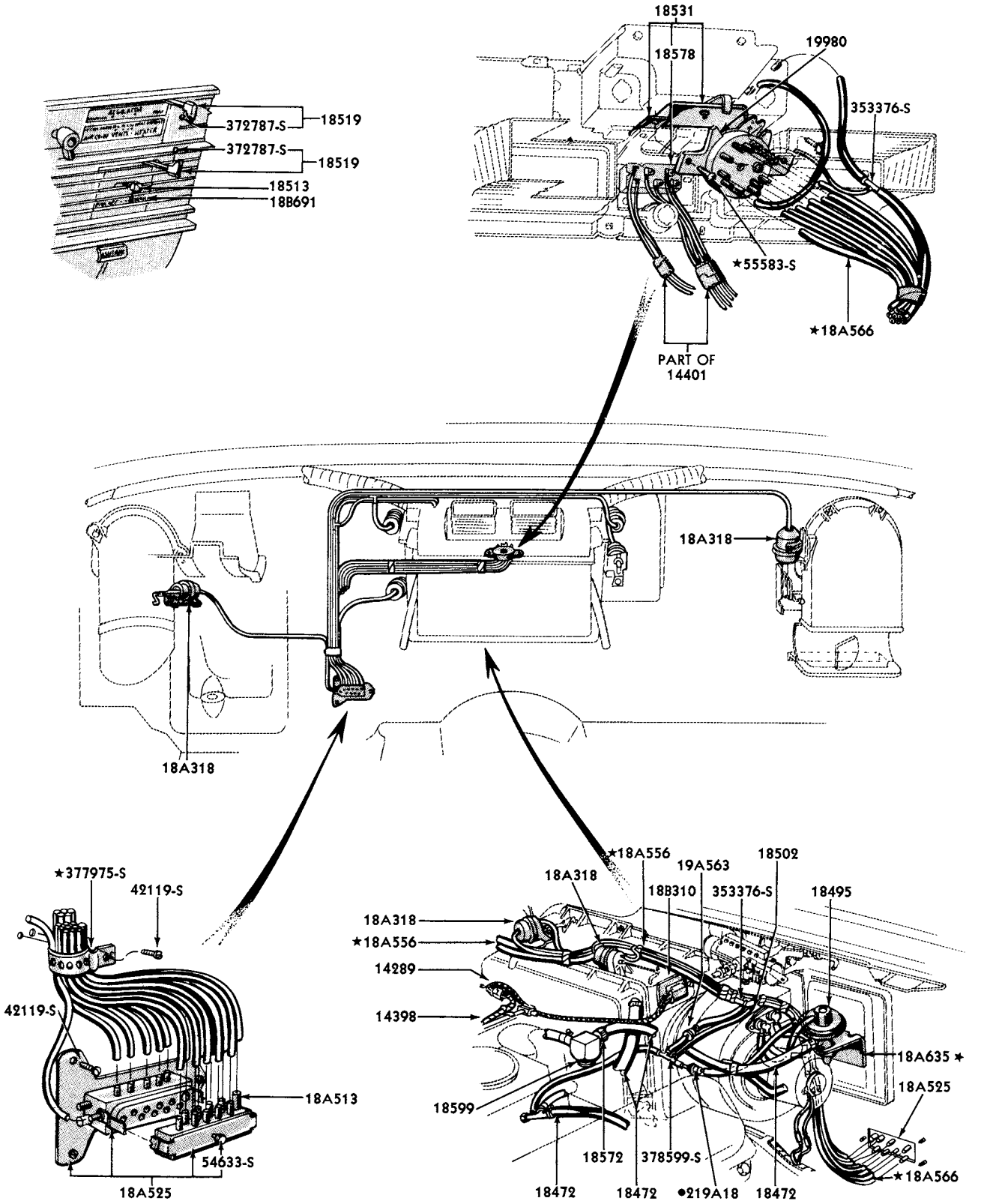

• REFER TO BODY SECTION

1964 LINCOLN

PLC-1668

AIR CONDITIONER CONTROLS

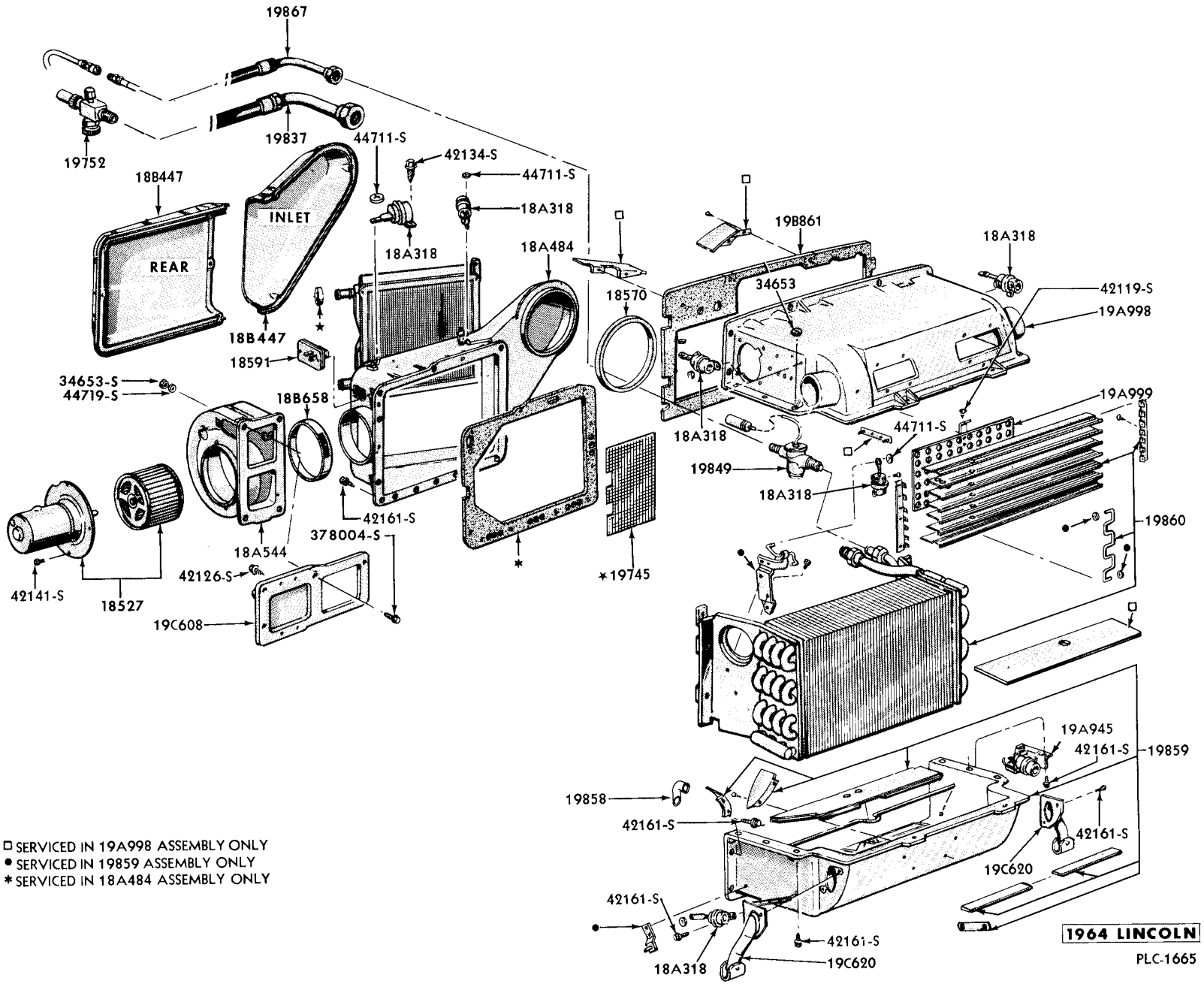

AIR CONDITIONER EVAPORATOR and RELATED PARTS

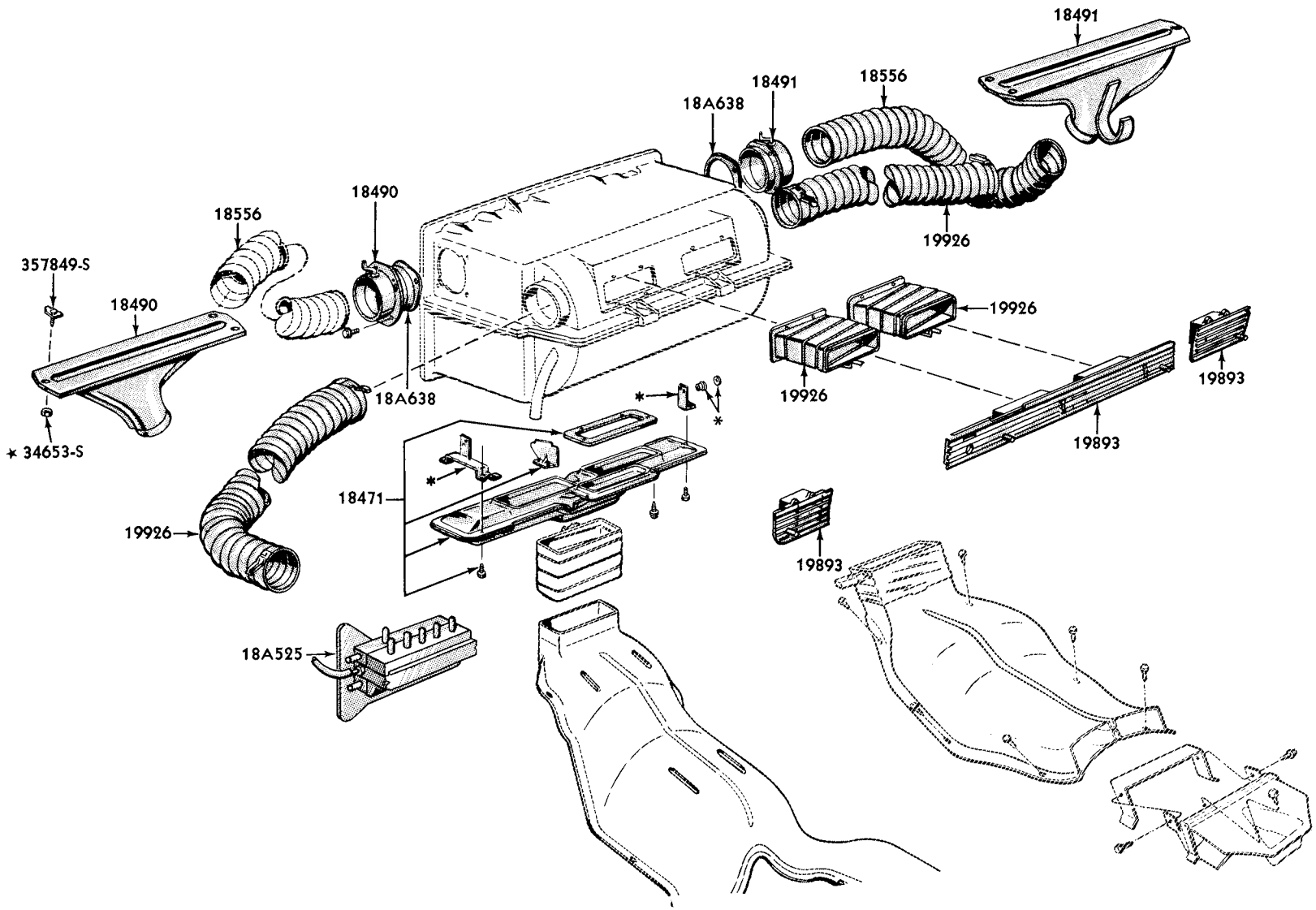

* SERVICED IN 19859 ASSEMBLY ONLY

1964 LINCOLN
PLC-1666

AIR CONDITIONER DUCTS and REGISTERS

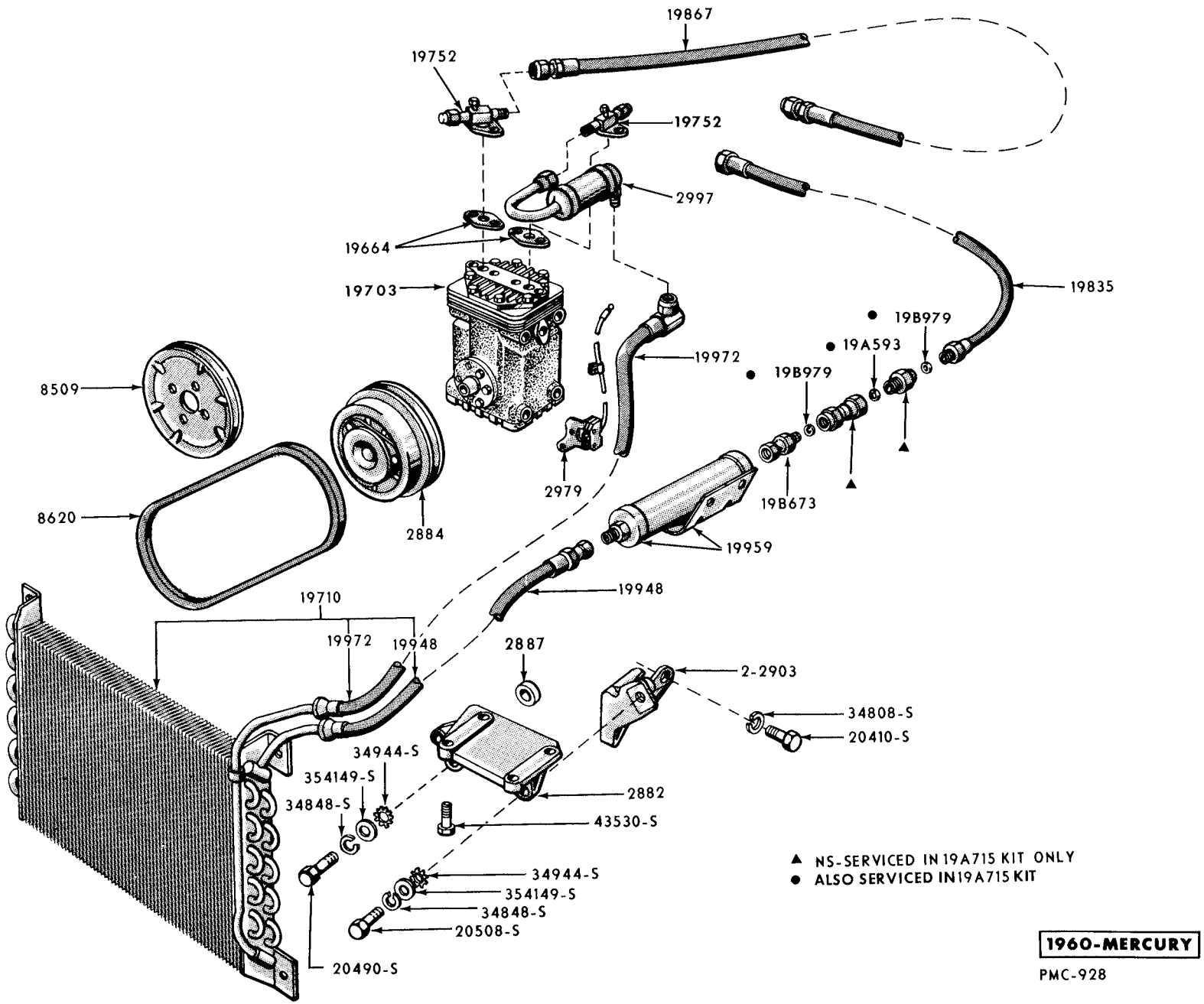

AIR CONDITIONER CONDENSER and RELATED PARTS

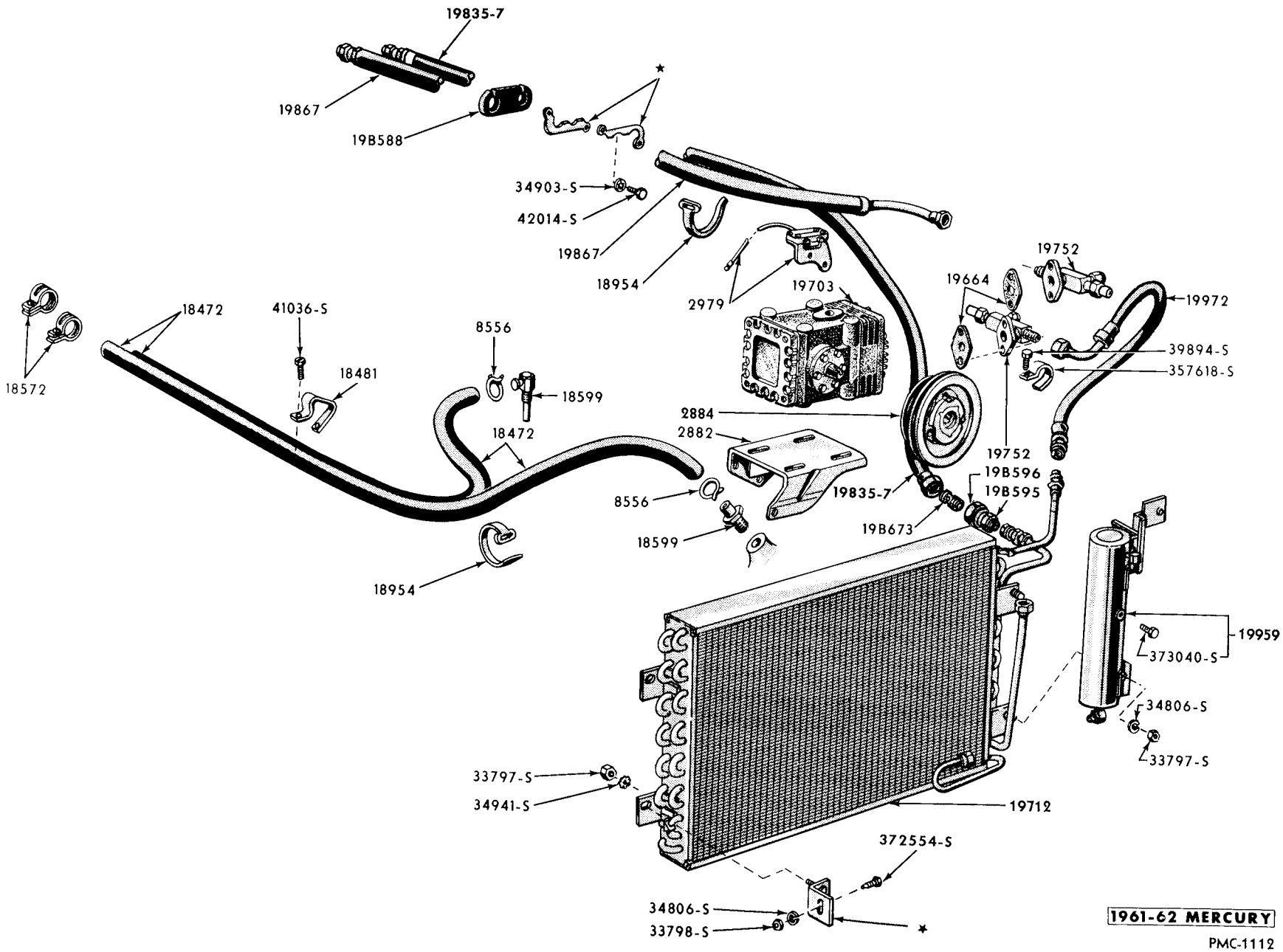

AIR CONDITIONER CONDENSER and RELATED PARTS

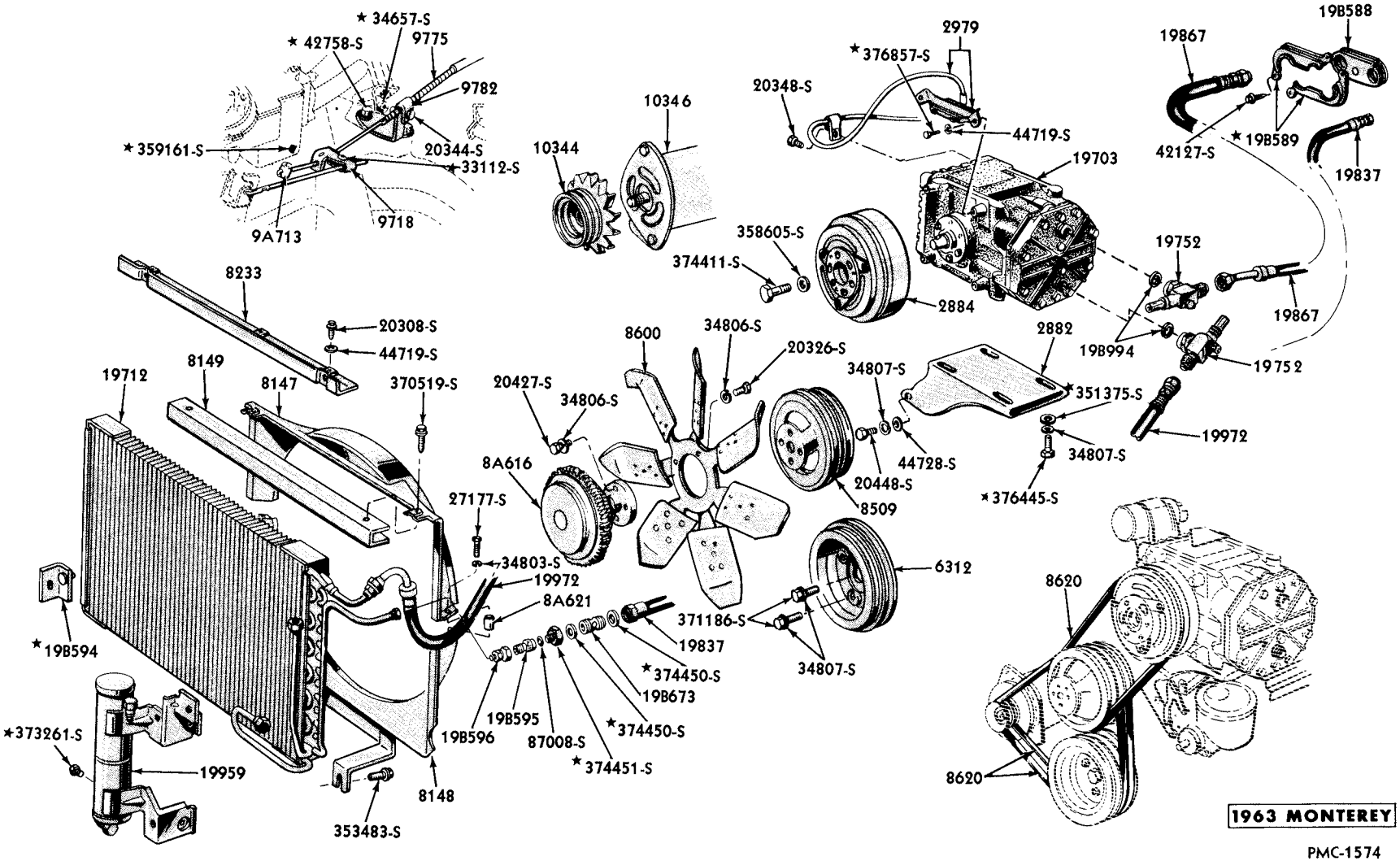

AIR CONDITIONER, CONDENSER and RELATED PARTS

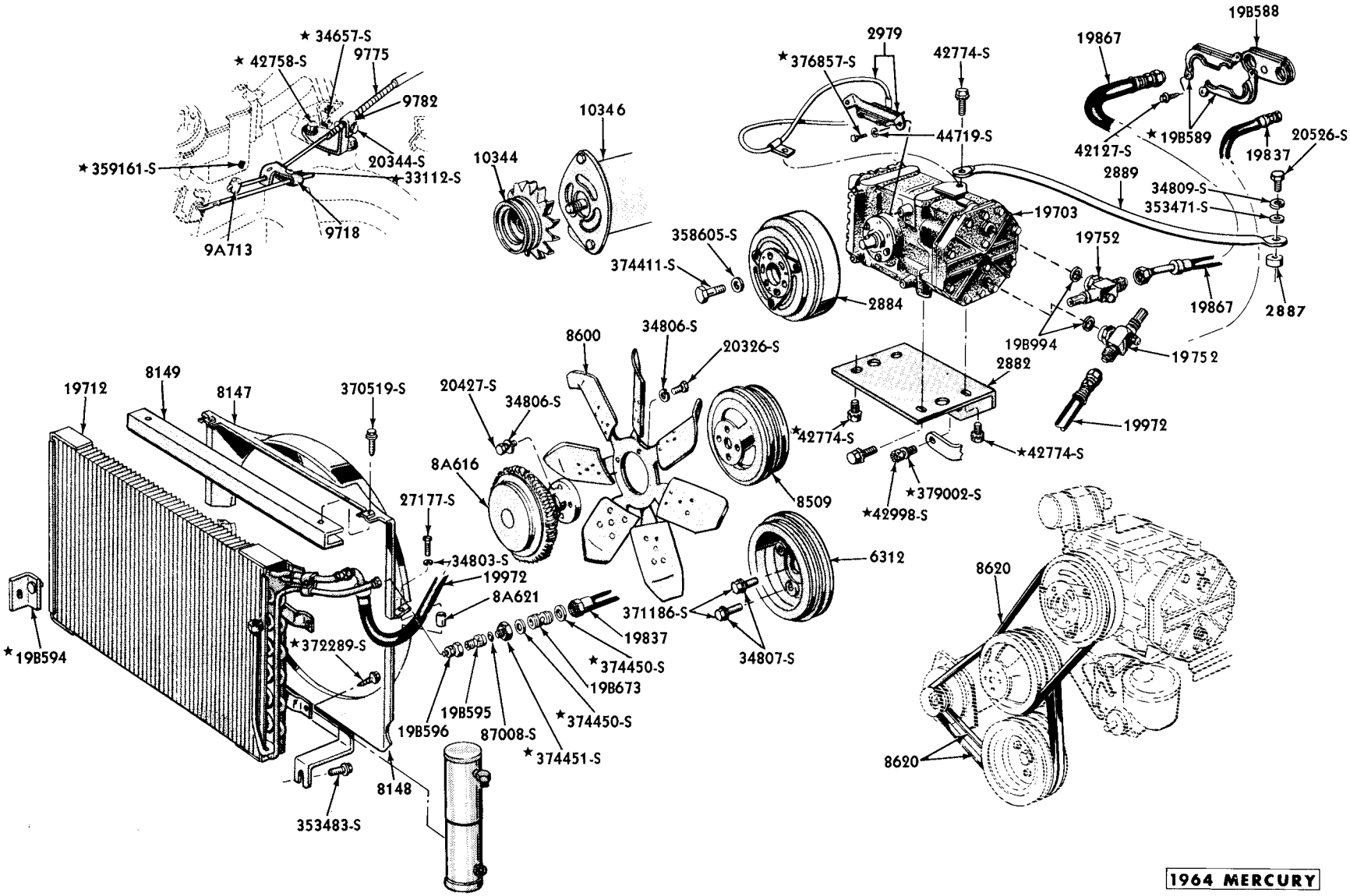

1964 MERCURY

PMC-1673

AIR CONDITIONER, CONDENSER and HOSES - DELUXE

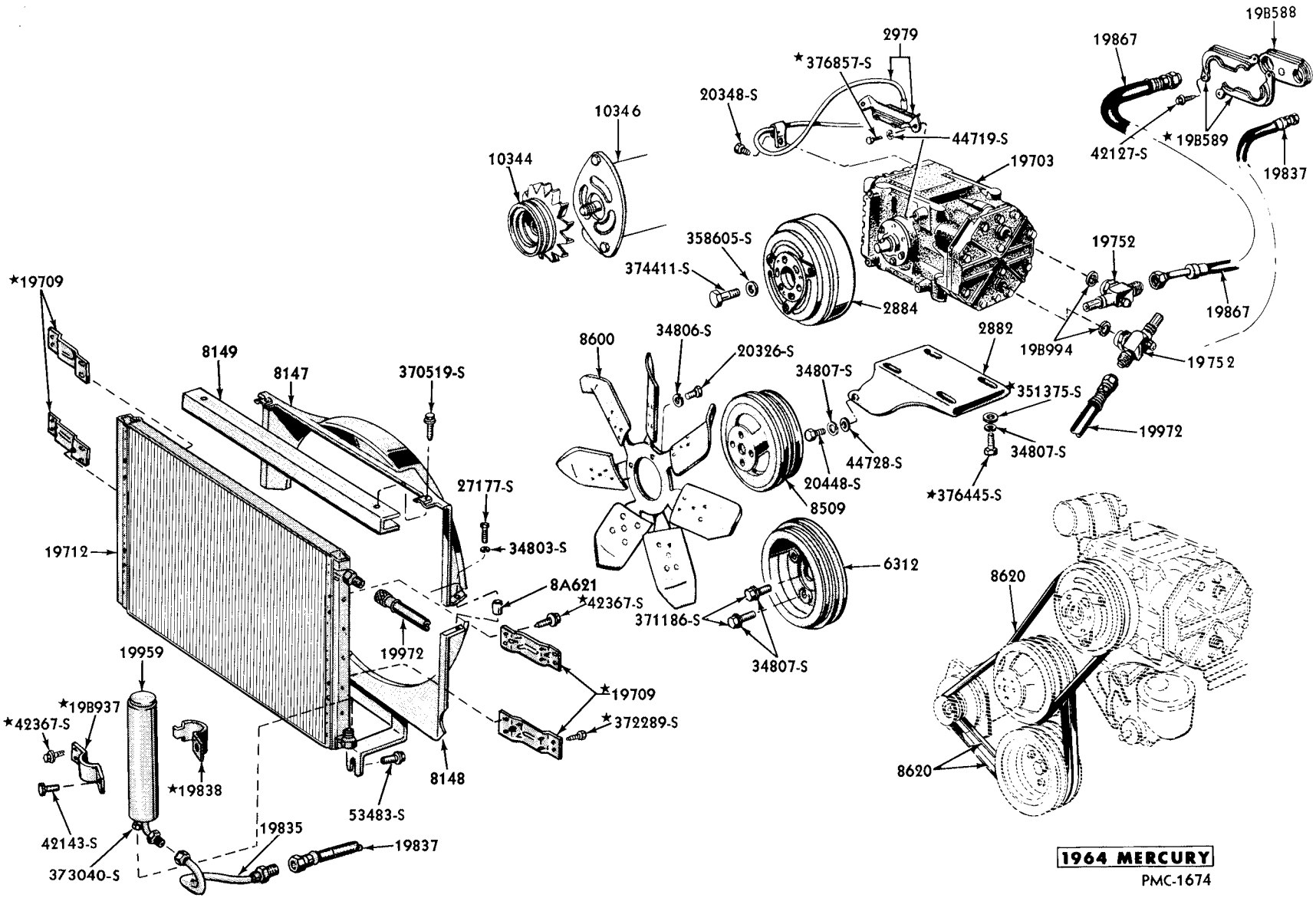

AIR CONDITIONER CONDENSER and HOSES - ECONOMY

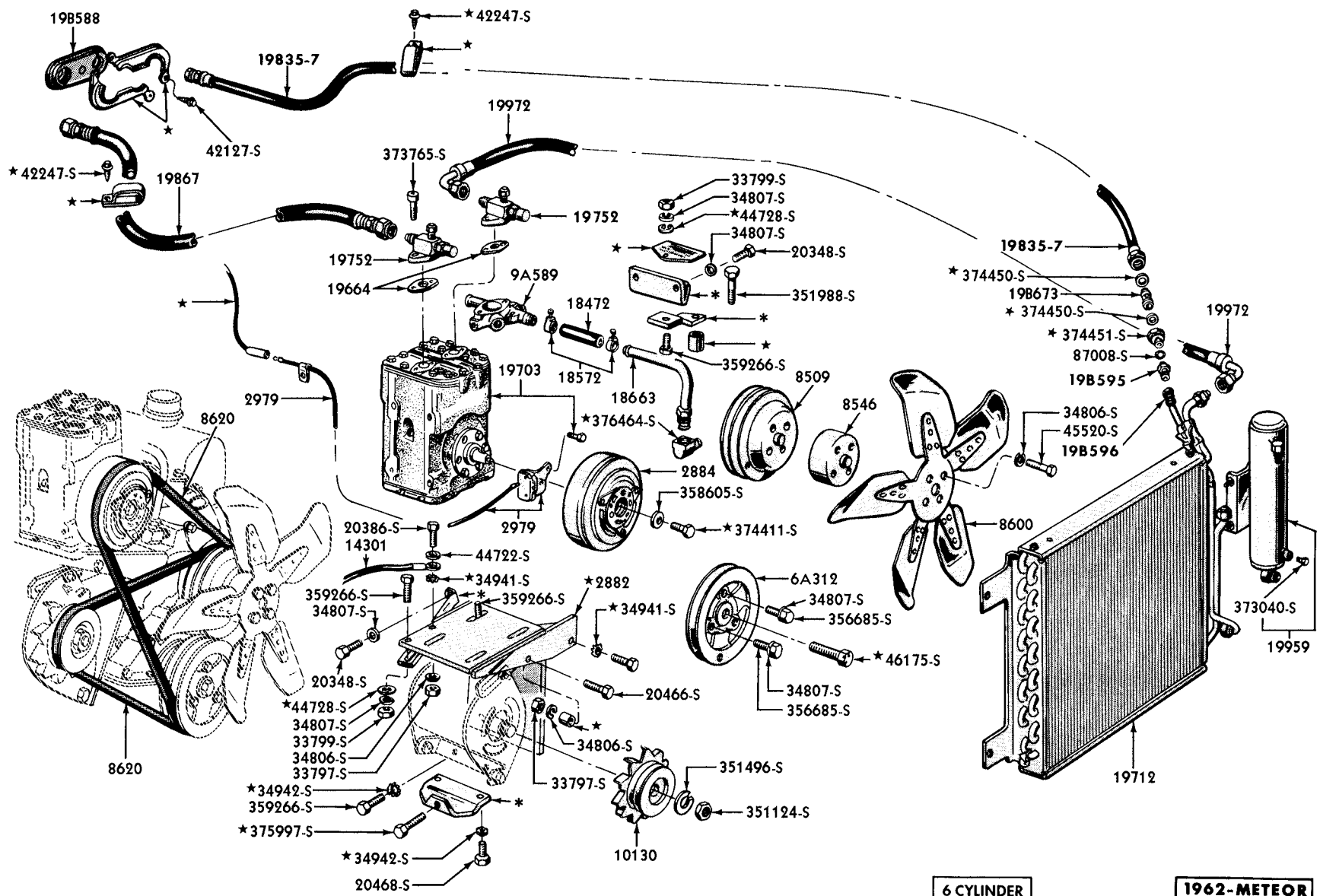

* SUPPLIED ONLY IN 19700 AIR CONDITIONER KIT

AIR CONDITIONER, CONDENSER and RELATED PARTS

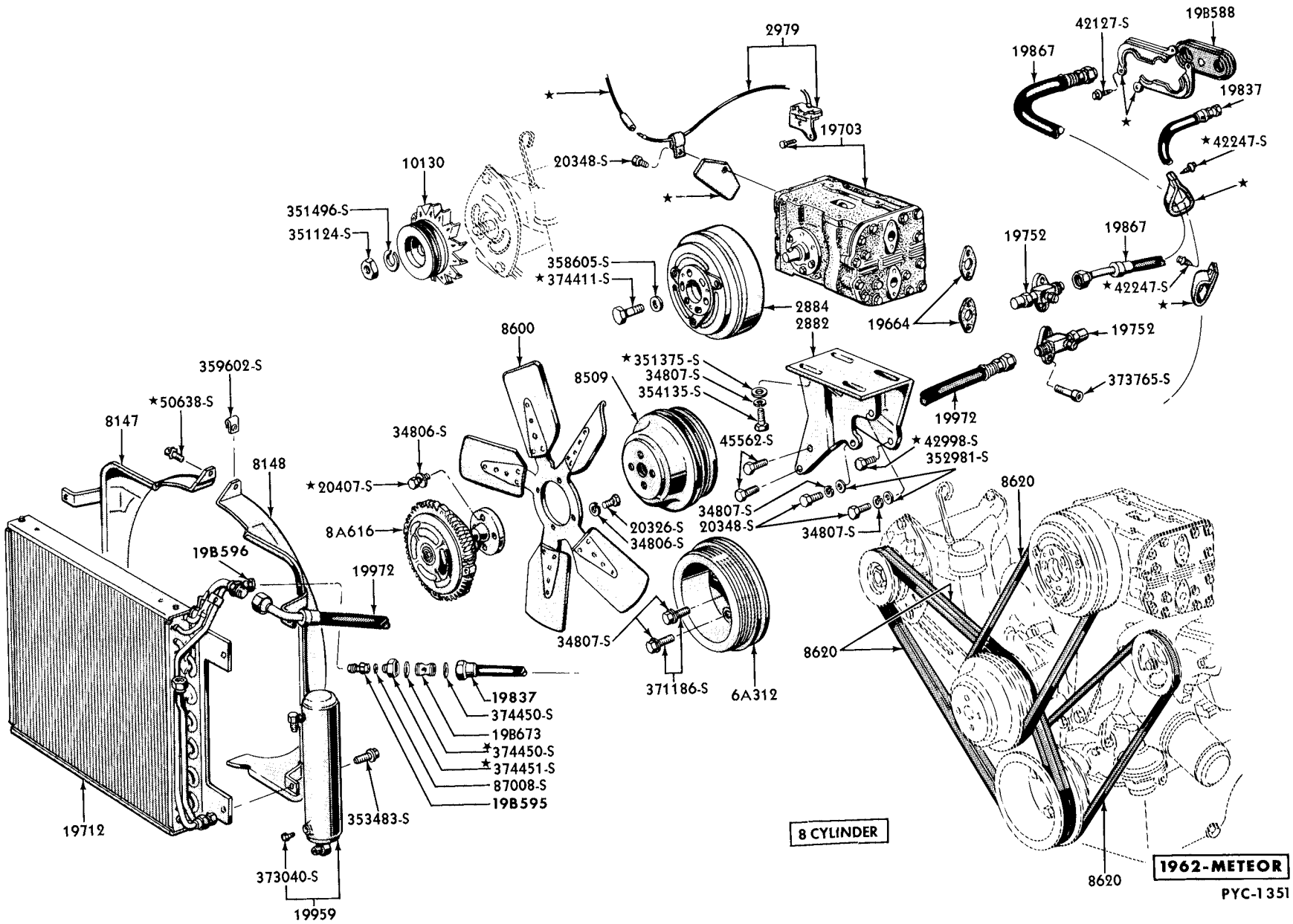

AIR CONDITIONER, CONDENSER and RELATED PARTS

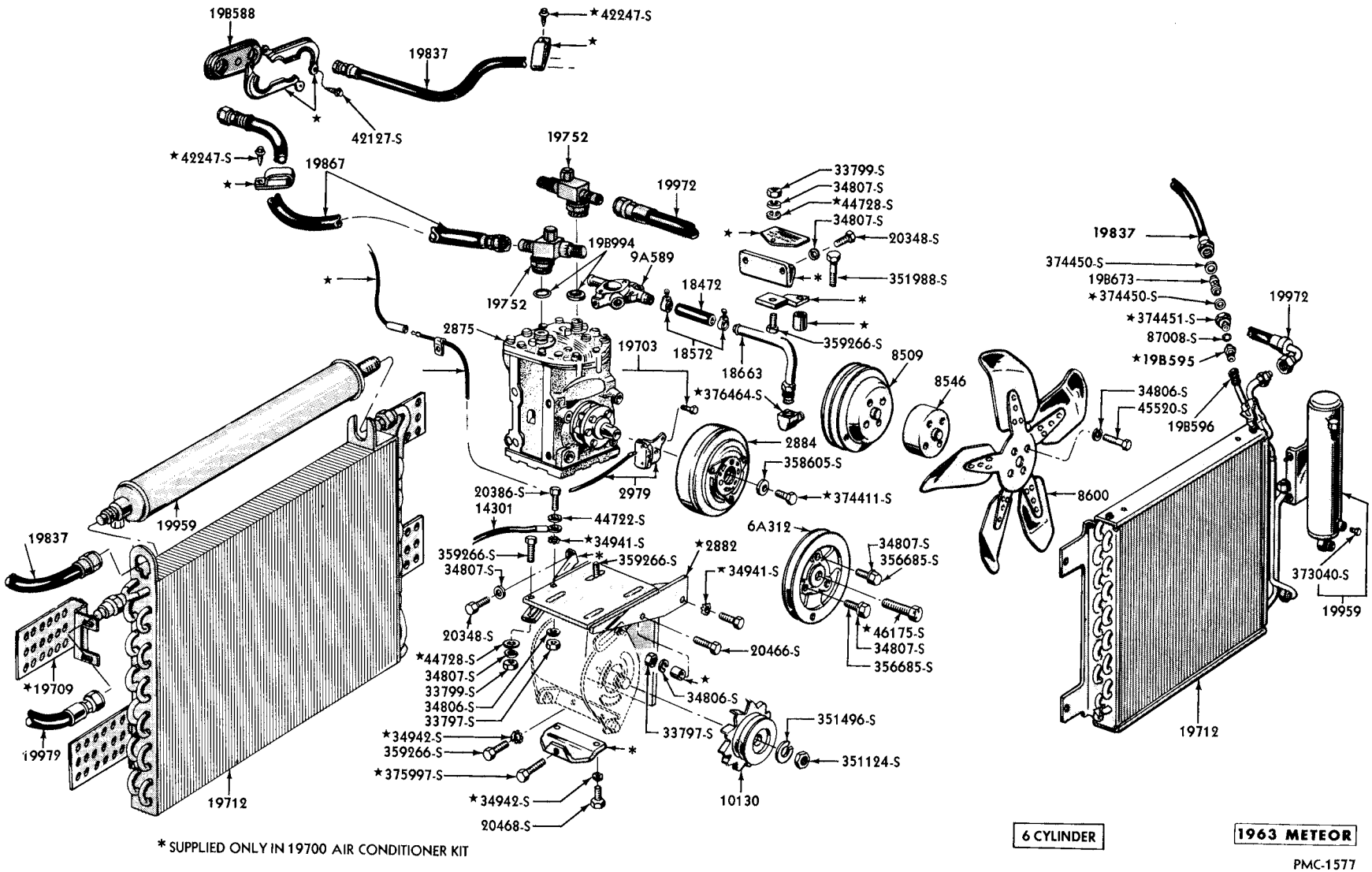

* SUPPLIED ONLY IN 19700 AIR CONDITIONER KIT

AIR CONDITIONER, CONDENSER and RELATED PARTS

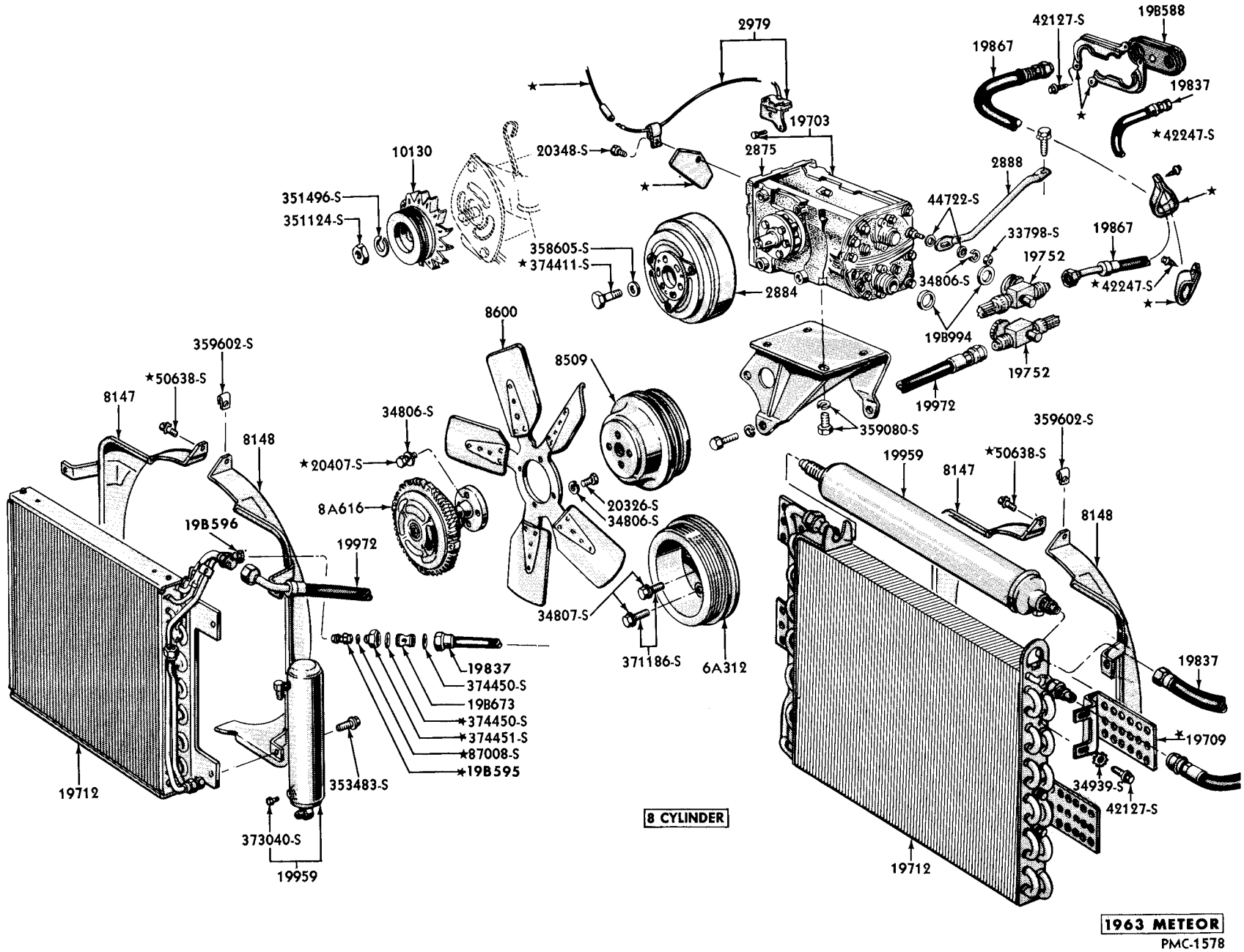

AIR CONDITIONER, CONDENSER and RELATED PARTS

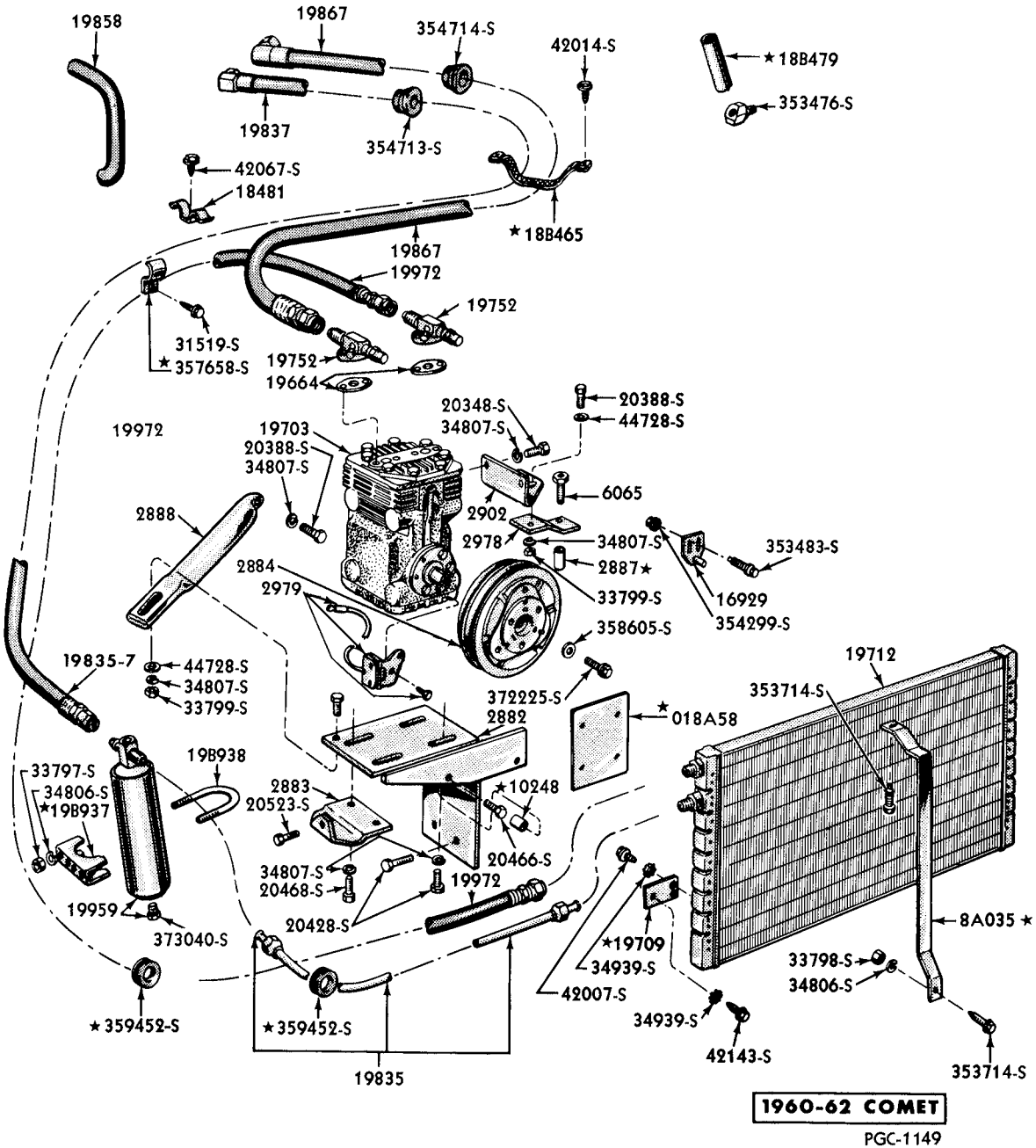

AIR CONDITIONER CONDENSER and RELATED PARTS

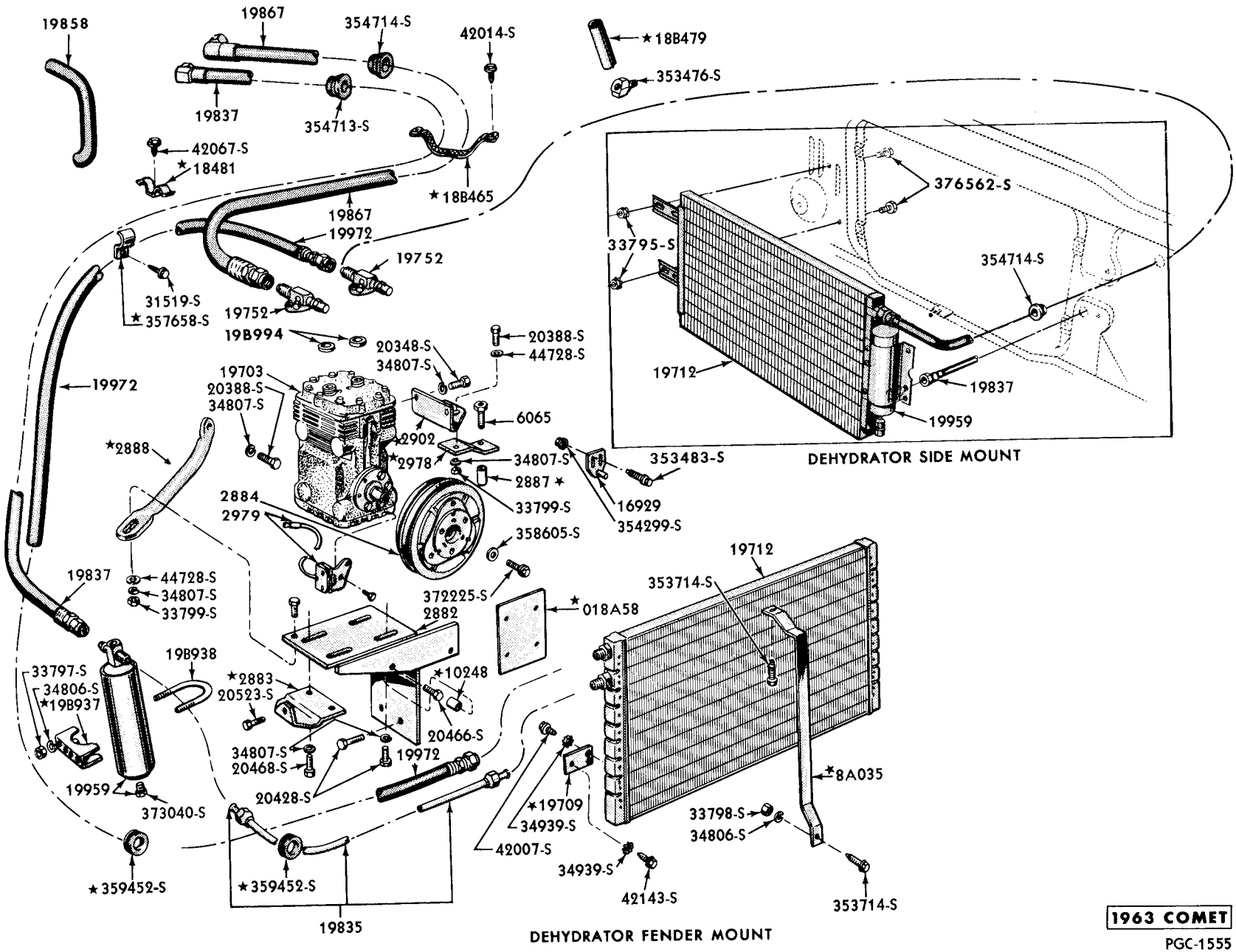

AIR CONDITIONER CONDENSER and HOSES - 6 CYLINDER ENGINES

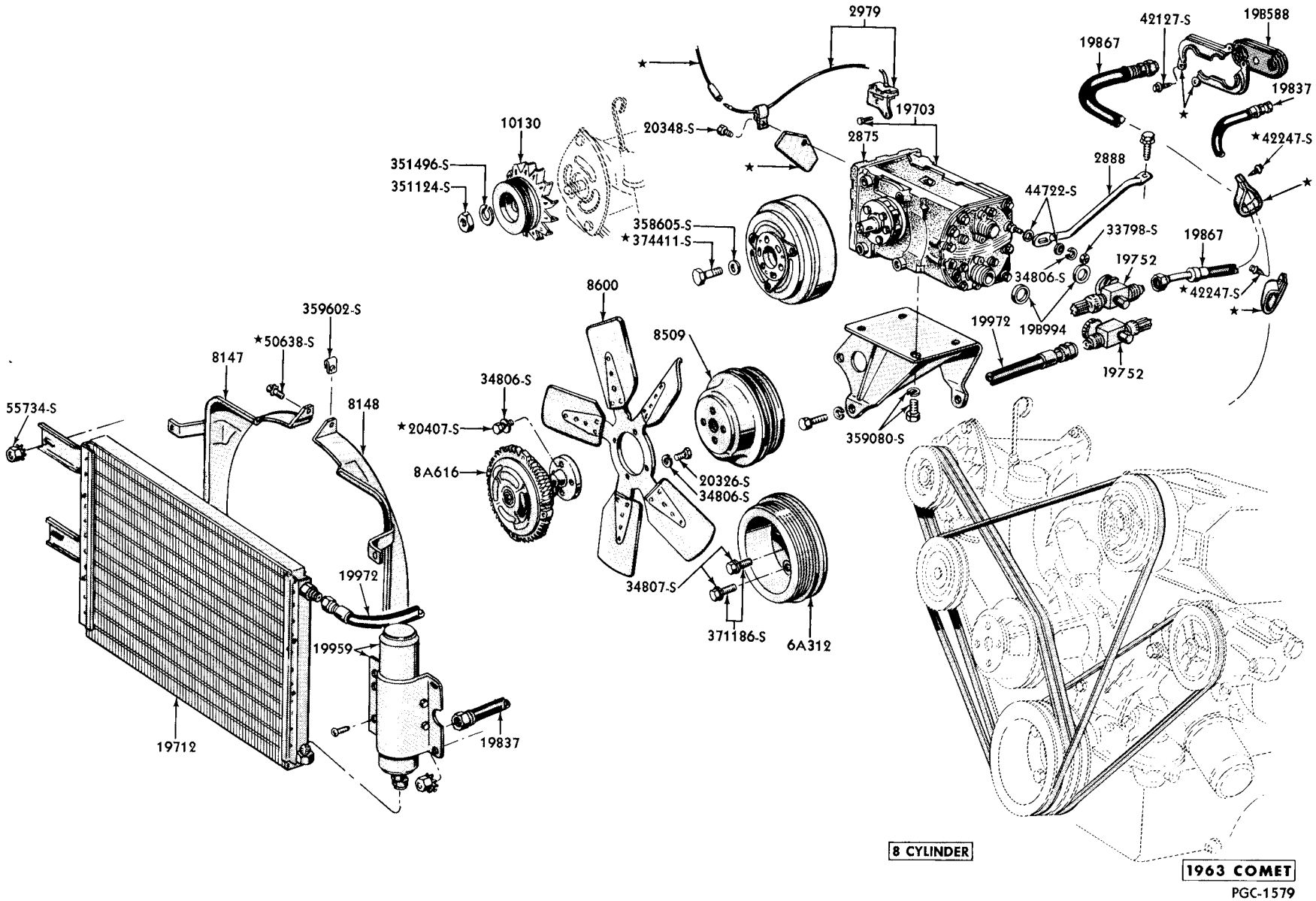

AIR CONDITIONER, CONDENSER and RELATED PARTS

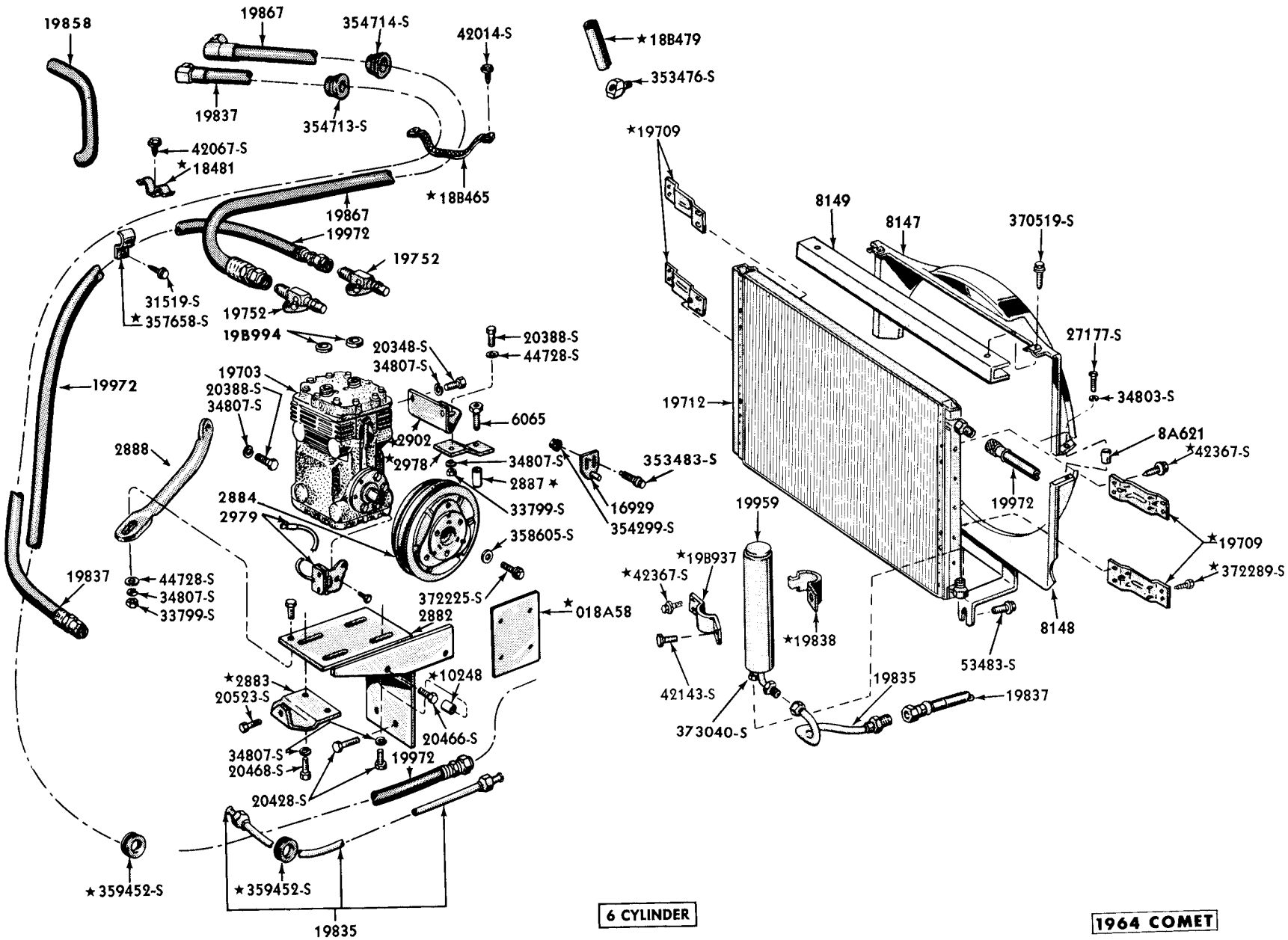

★ NOT SERVICED

AIR CONDITIONER CONDENSER and HOSES - 6 CYLINDER

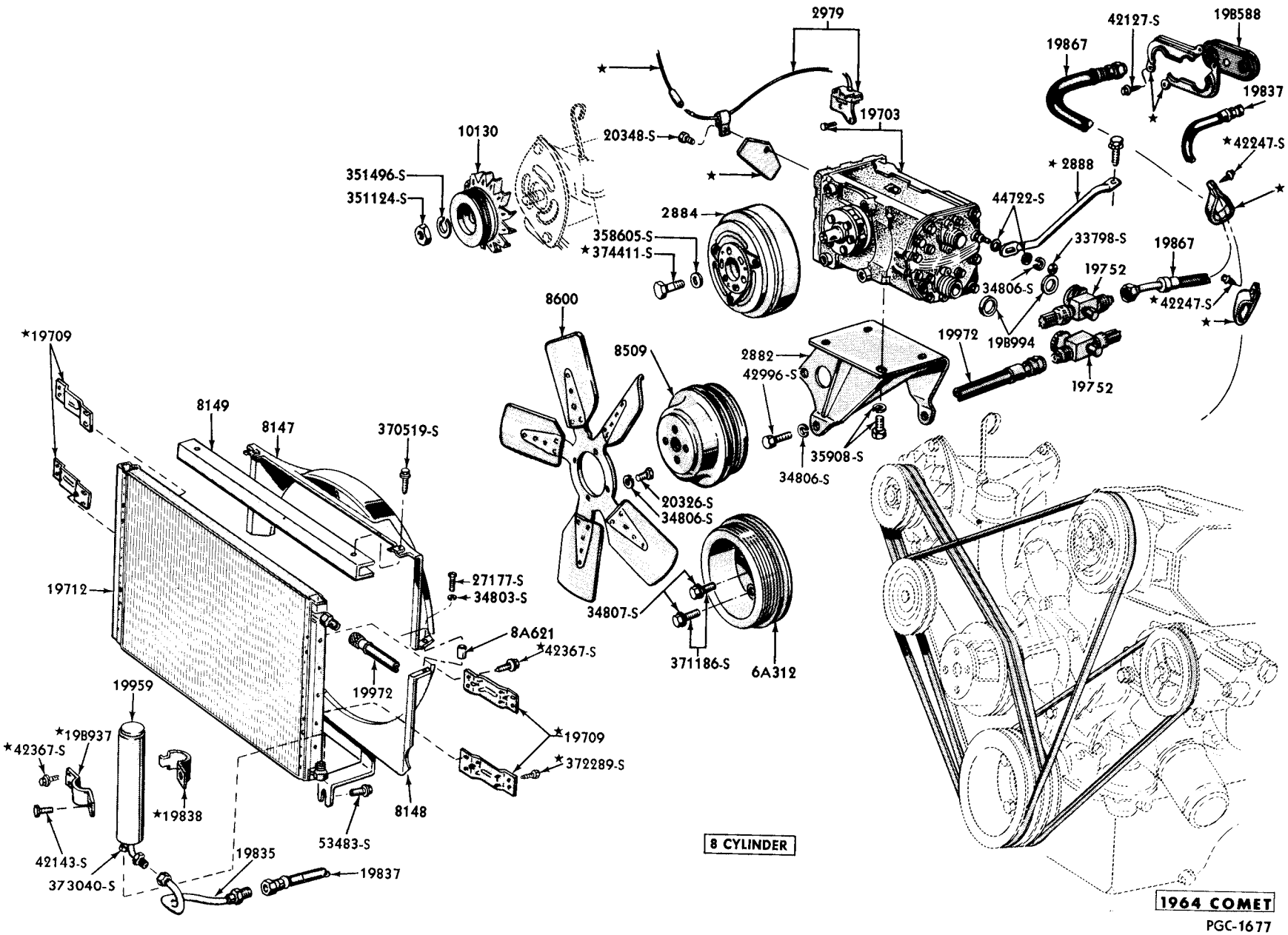

AIR CONDITIONER CONDENSER and HOSES - 8 CYLINDER ENGINES

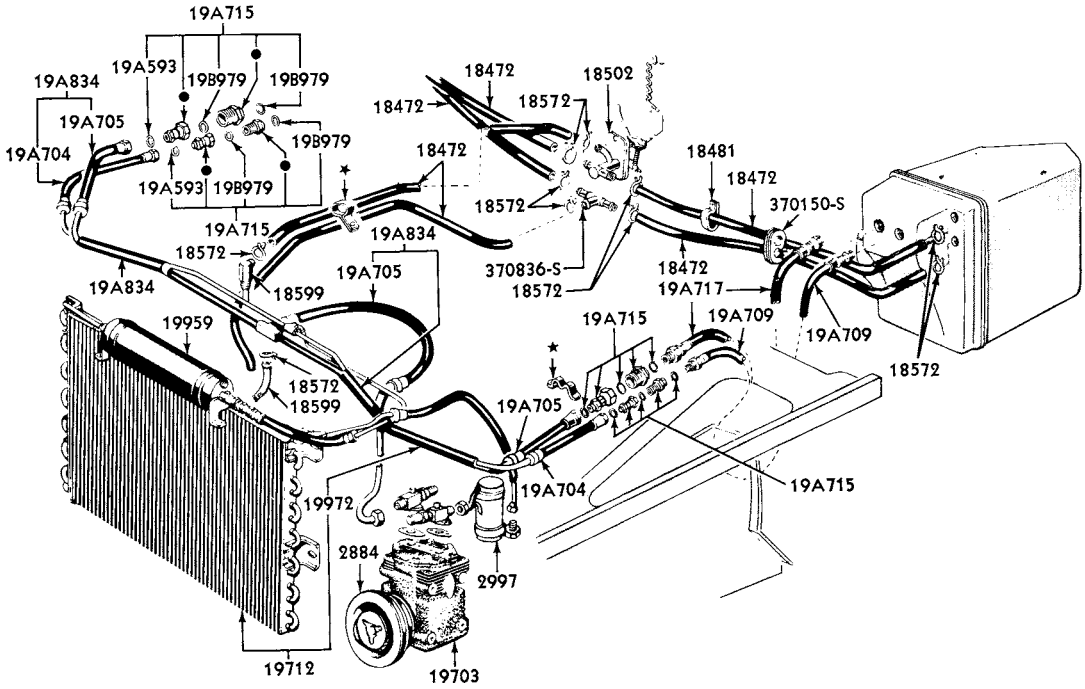

1960 LINCOLN

PLC-900

● N.S.-SERVICED IN 19A715 KIT ONLY

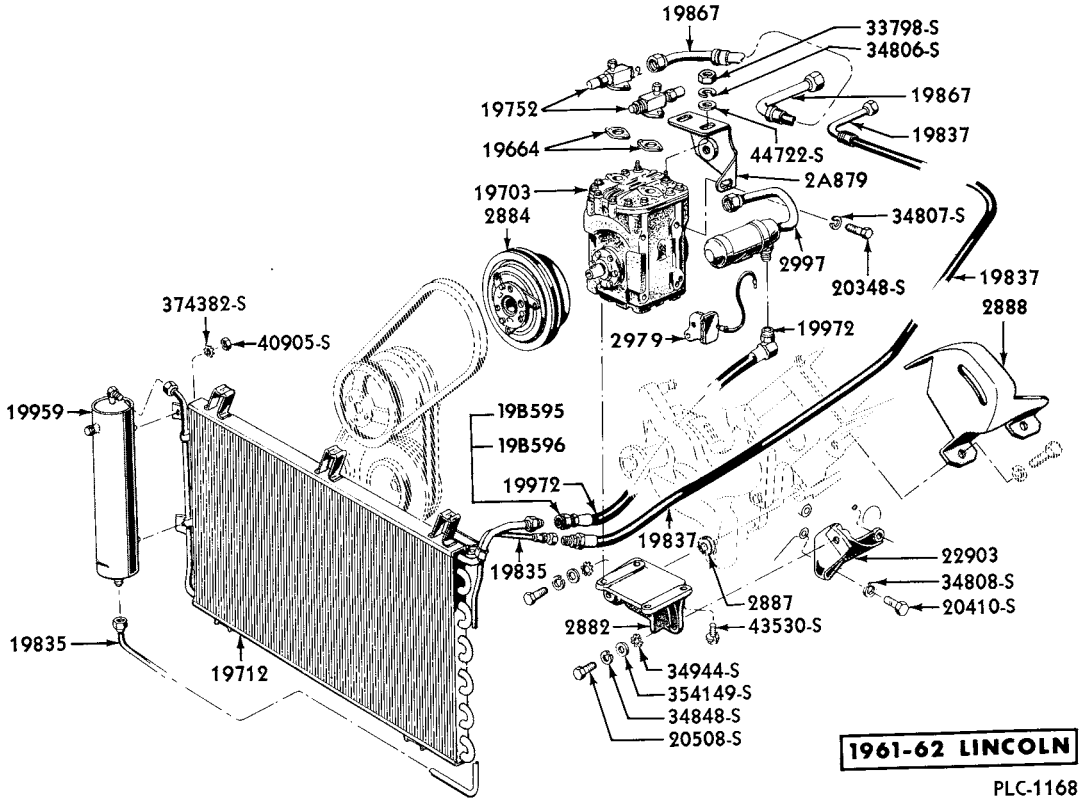

1961-62 LINCOLN

PLC-1168

AIR CONDITIONER CONDENSER and HOSES

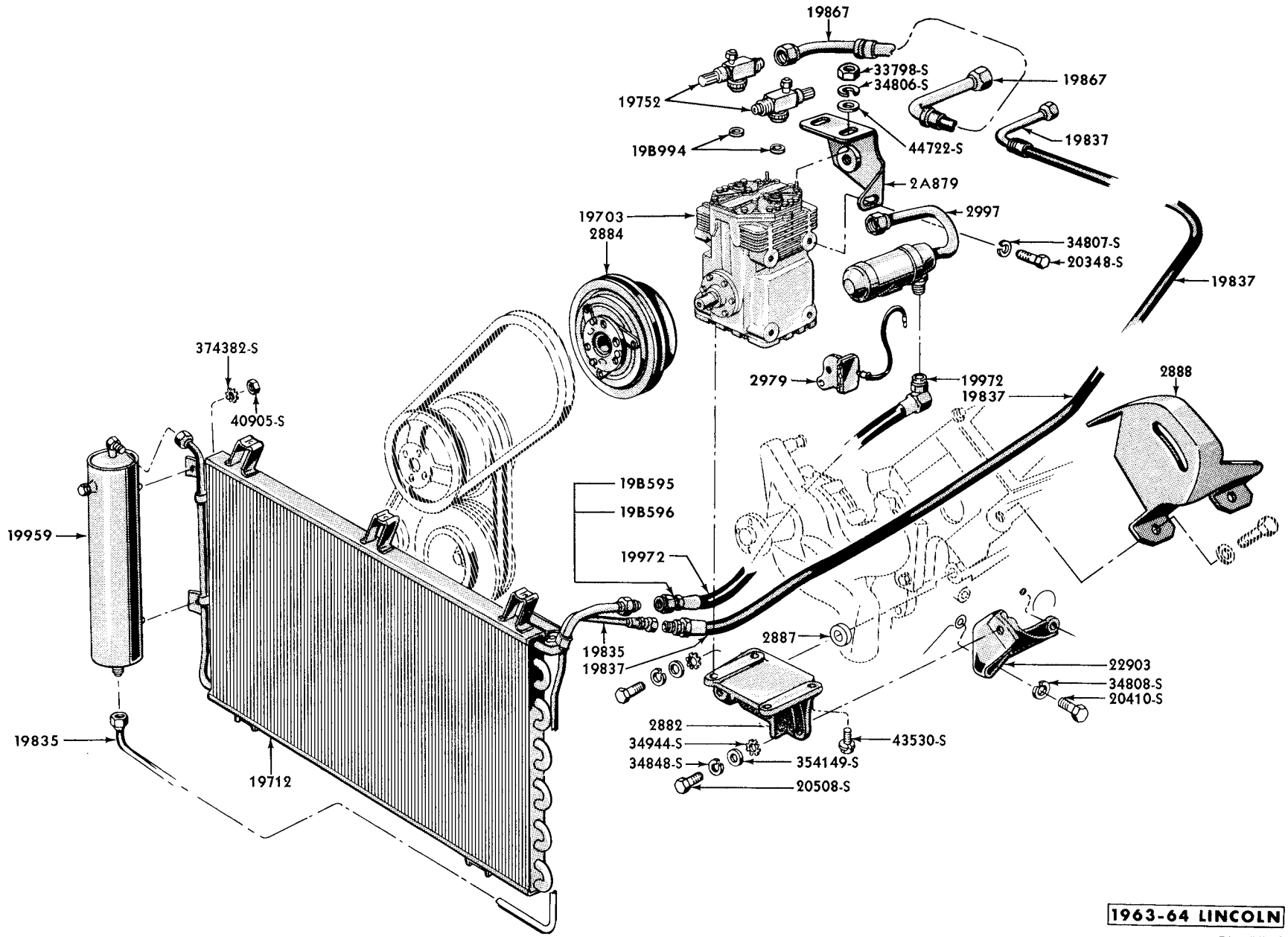

AIR CONDITIONER CONDENSER and HOSES

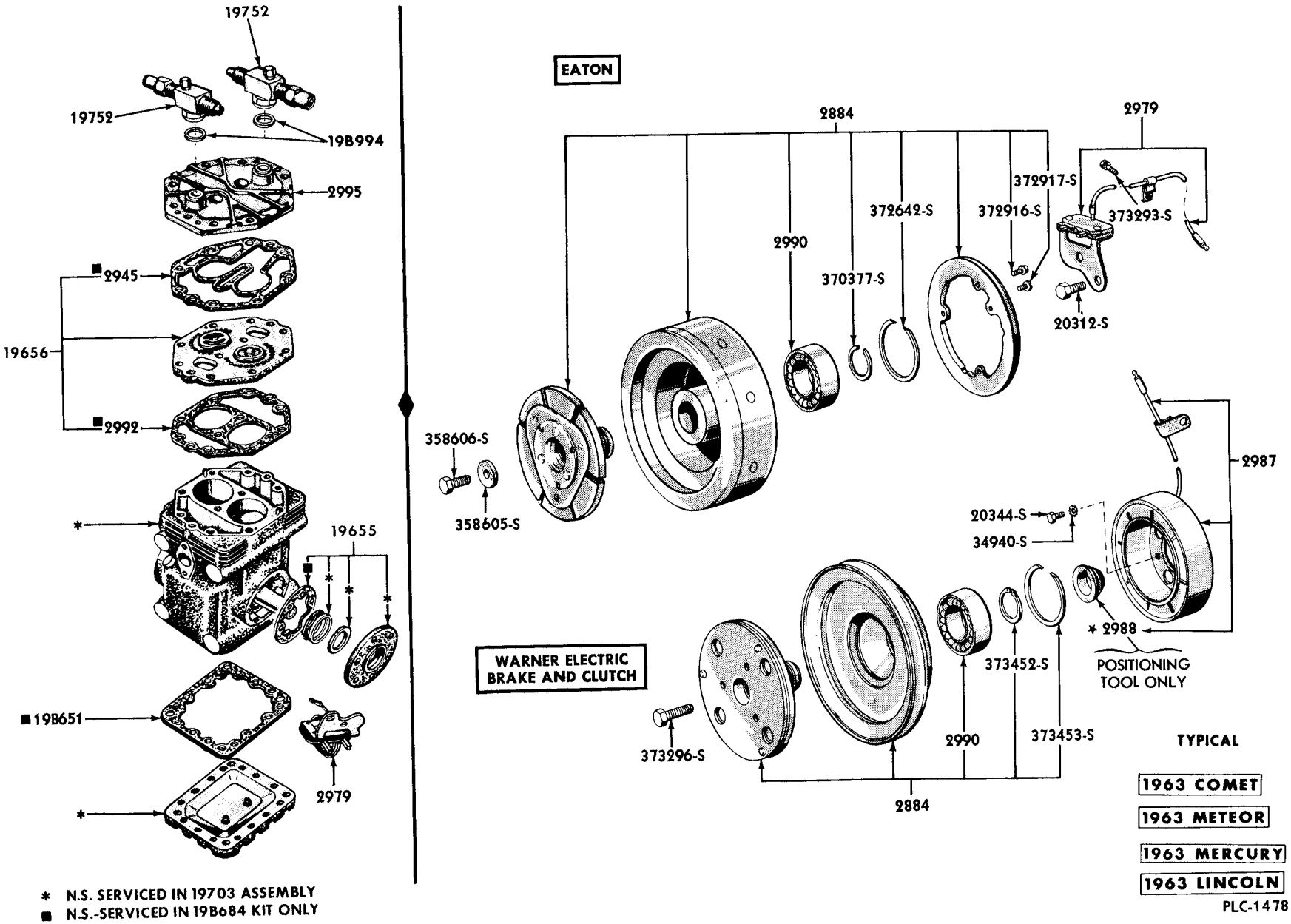

* N.S. SERVICED IN 19703 ASSEMBLY
■ N.S.-SERVICED IN 19B684 KIT ONLY

AIR CONDITIONER COMPRESSOR and CLUTCHES

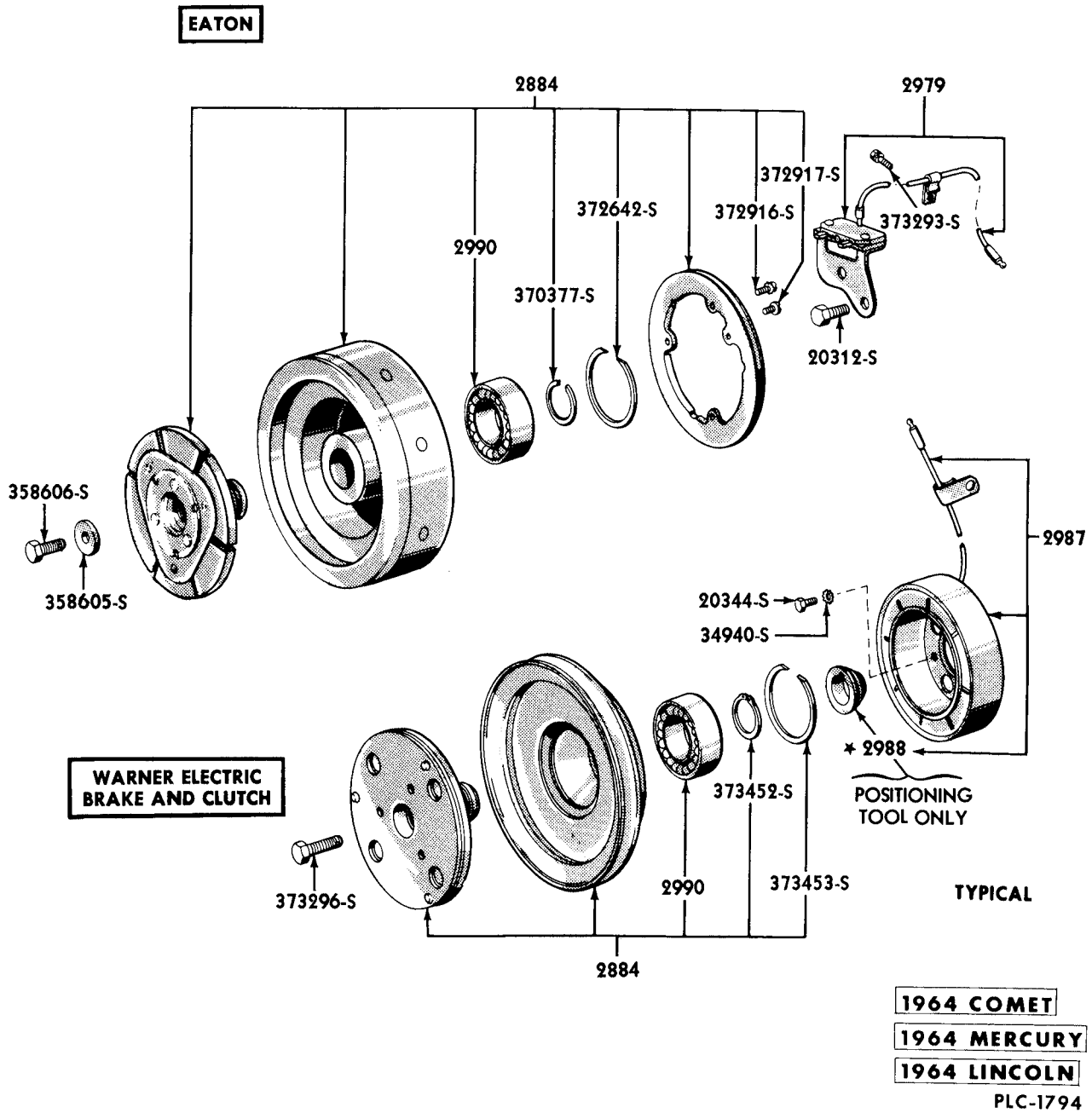

AIR CONDITIONER CLUTCHES

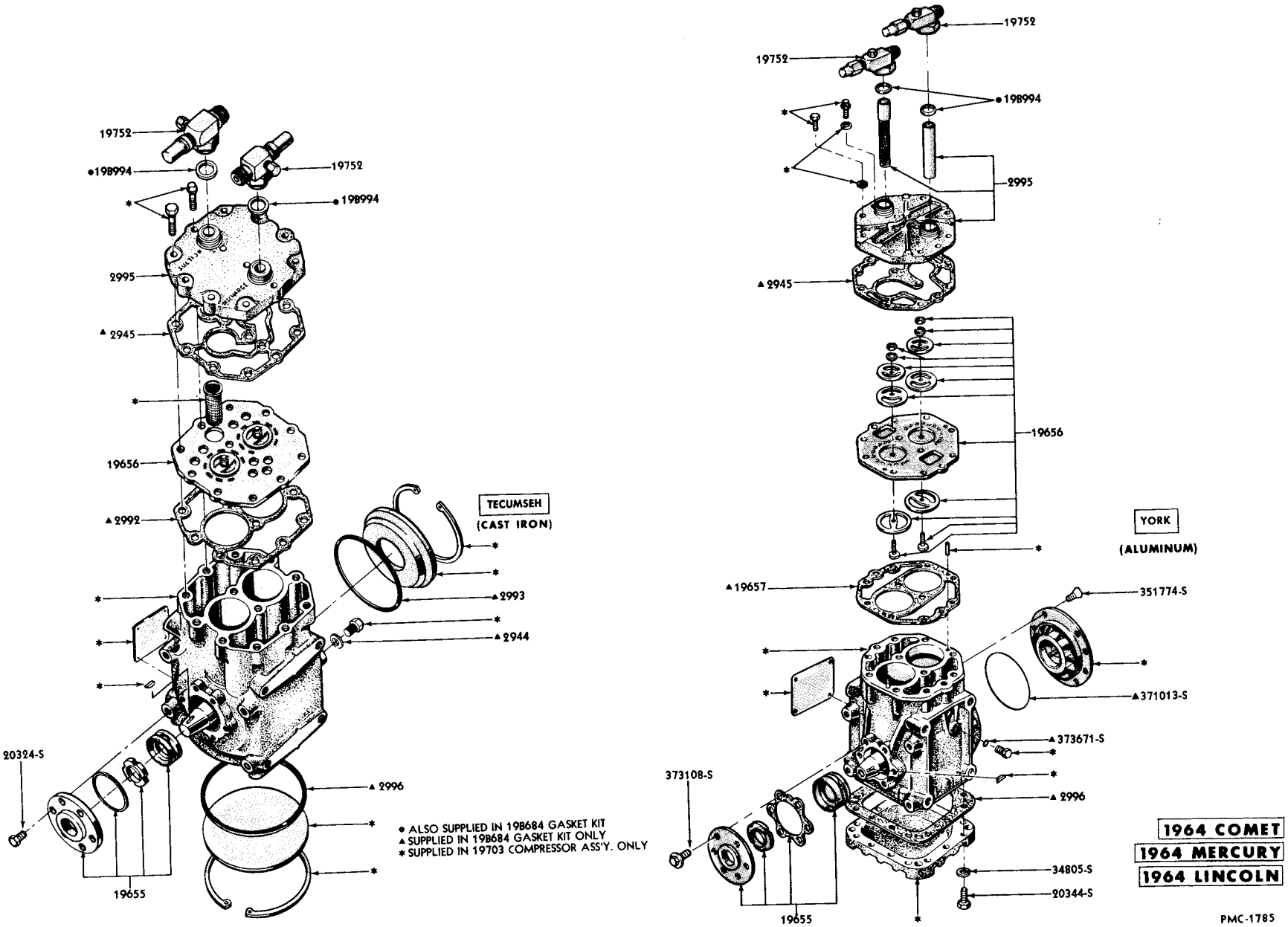

AIR CONDITIONER COMPRESSOR

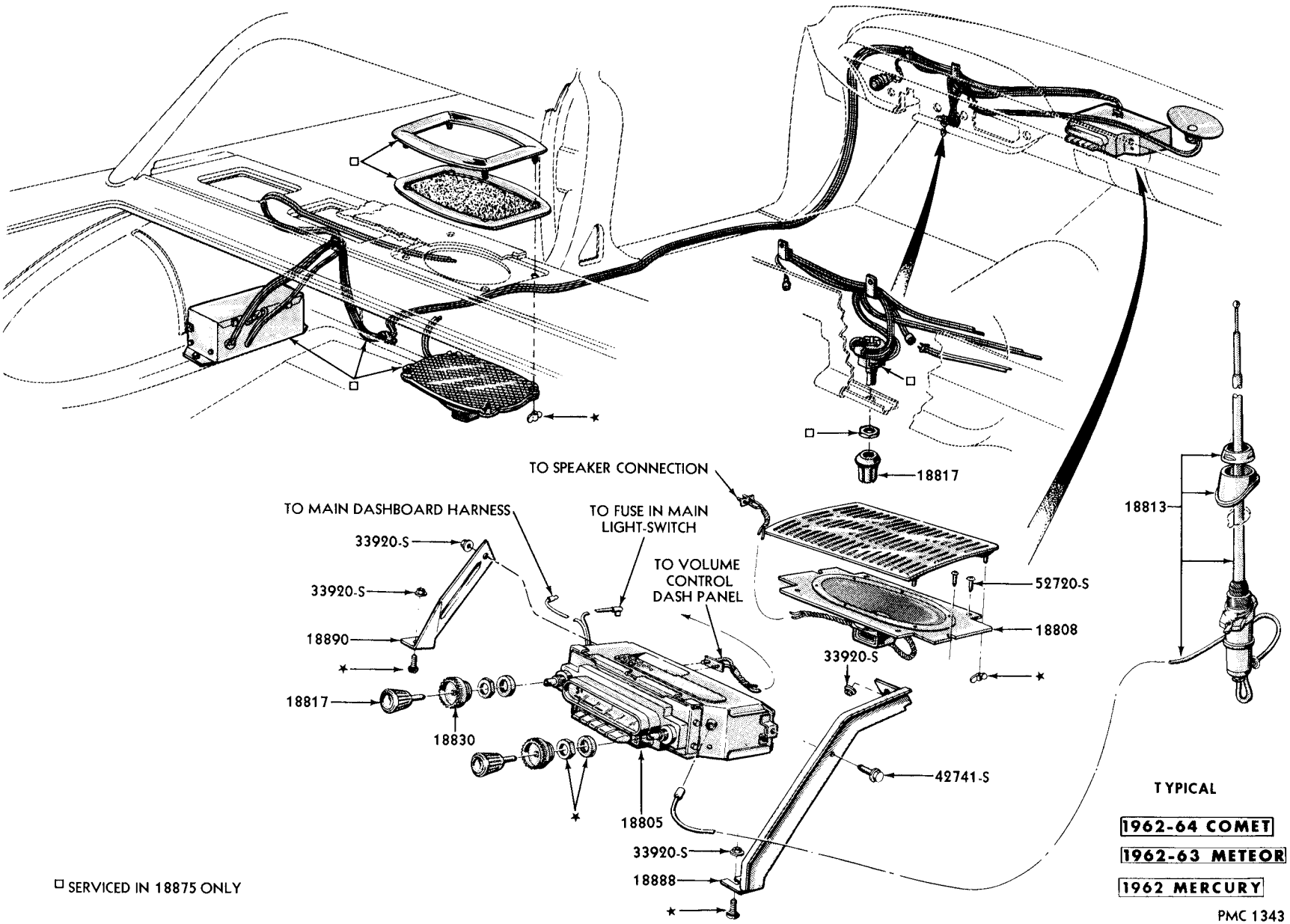

□ SERVICED IN 18875 ONLY

RADIO ANTENNA and STUDIO SONIC SOUND SYSTEM

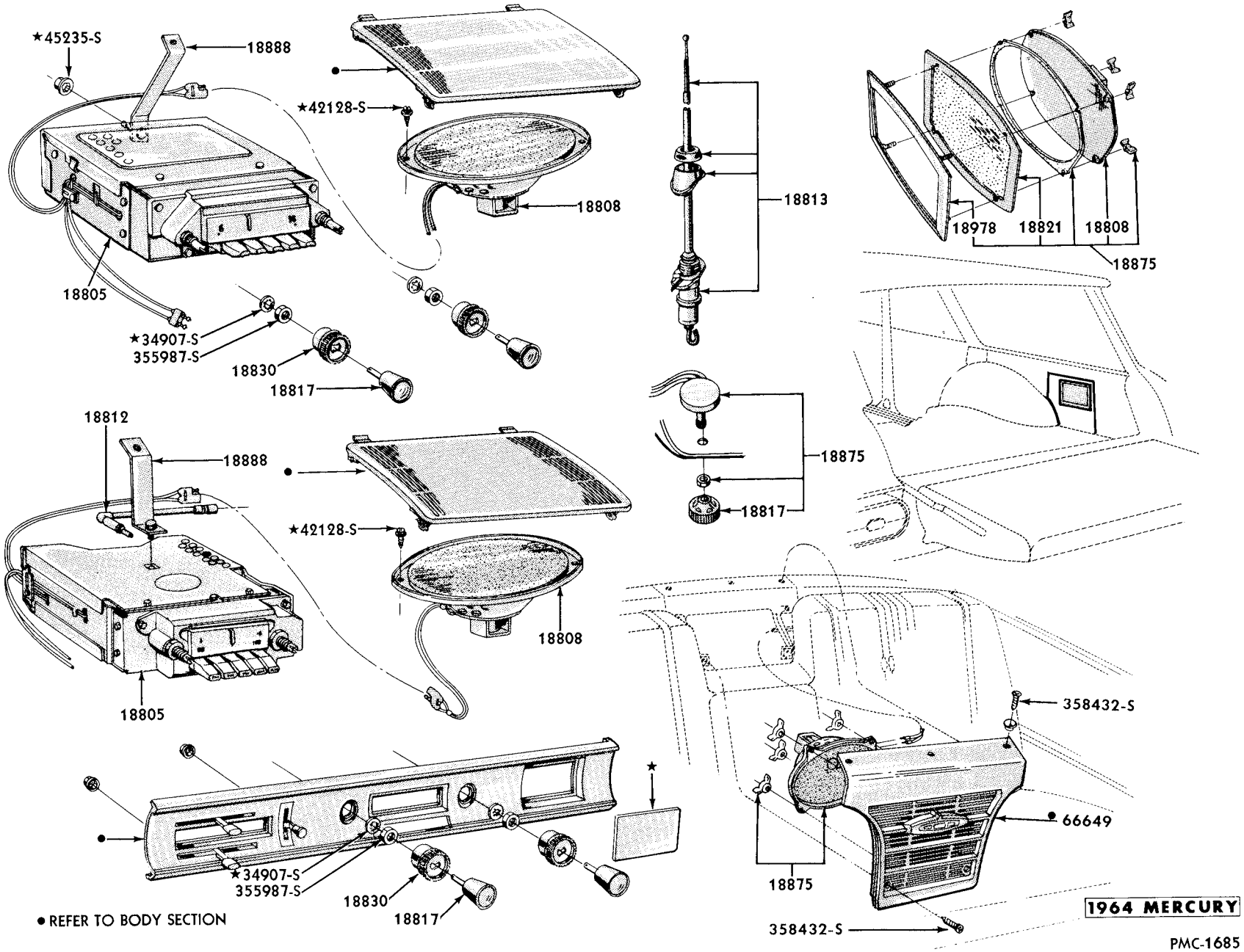

RADIO ANTENNA and SPEAKERS

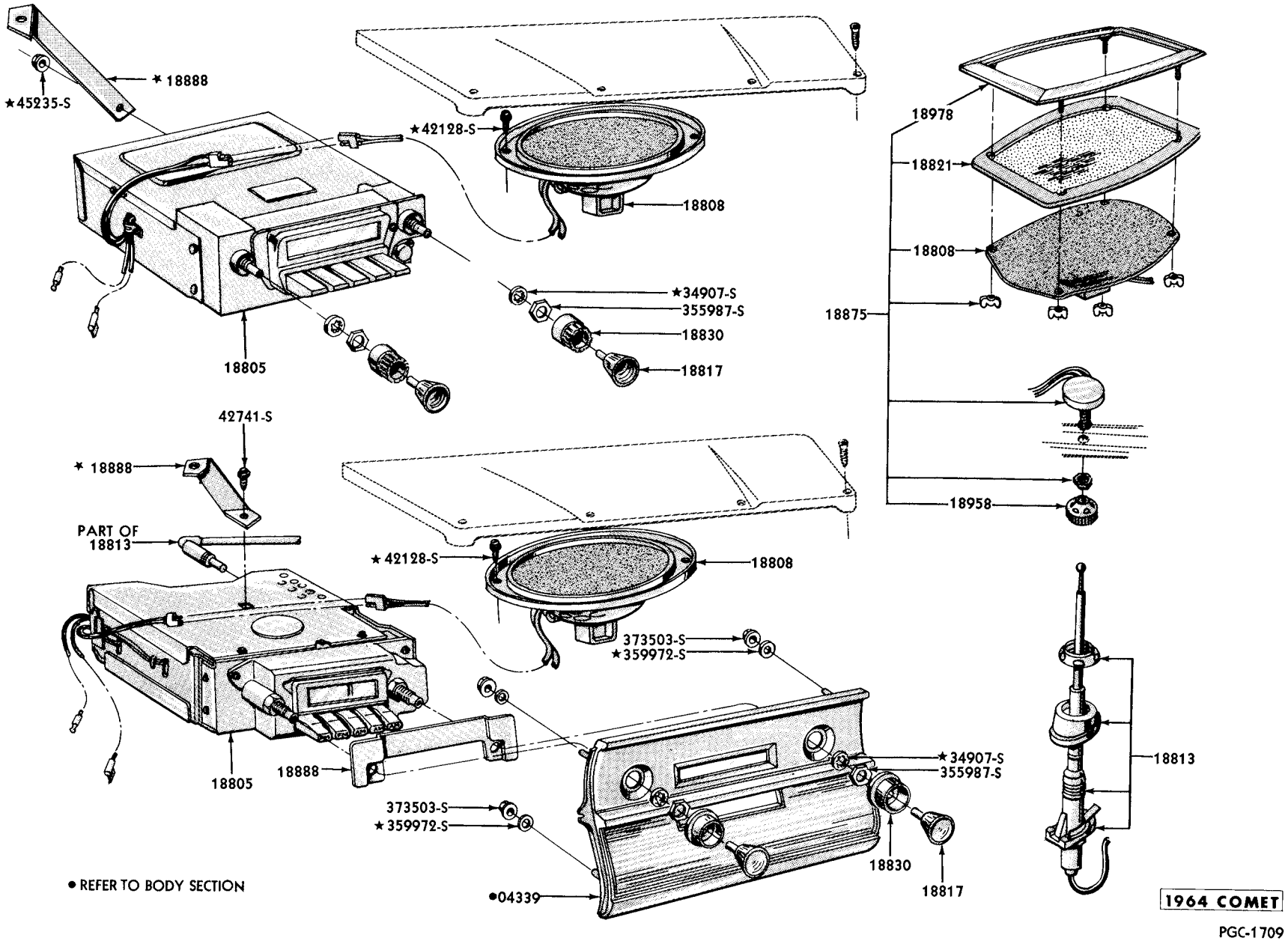

RADIO ANTENNA and SPEAKERS

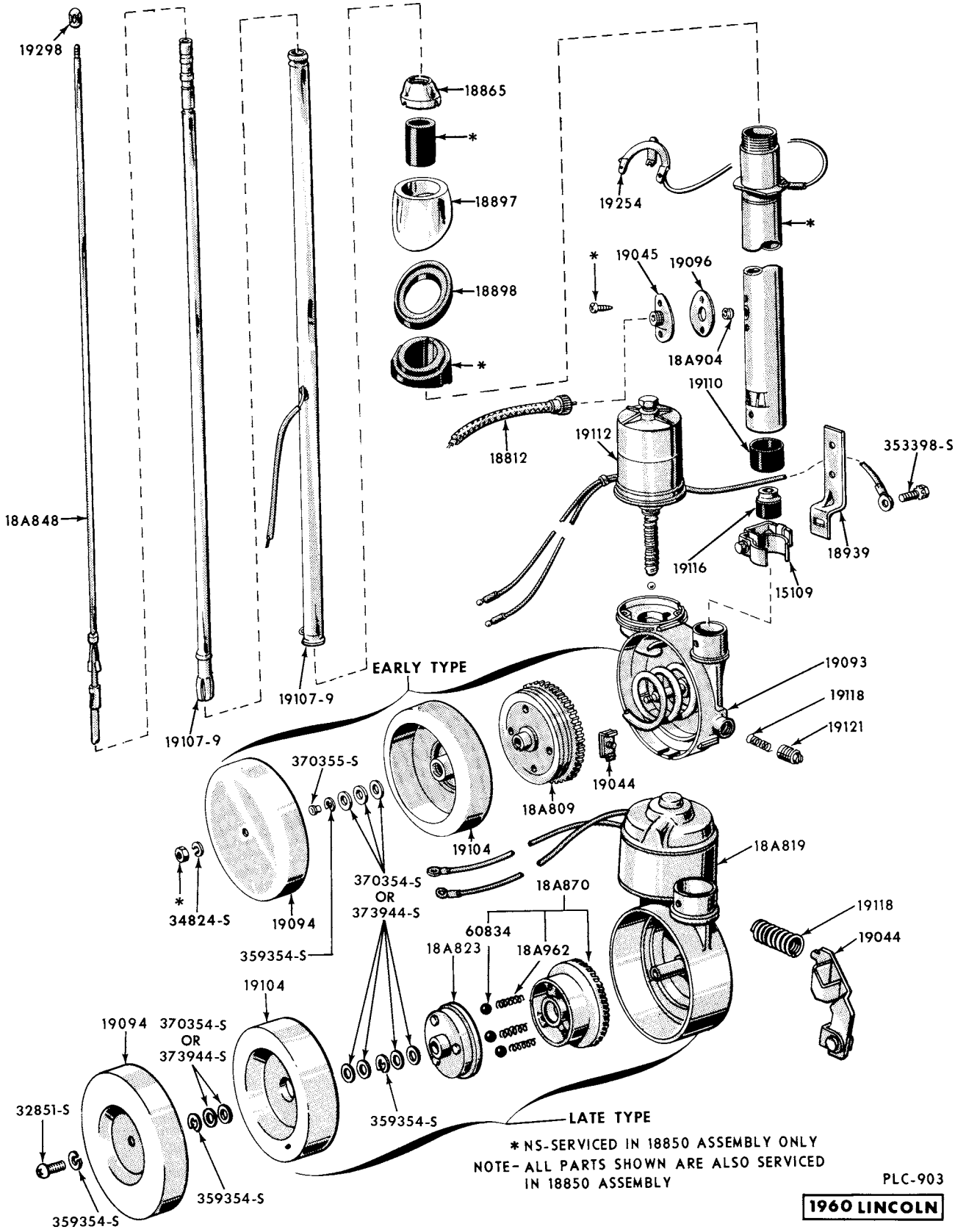
19298
18865
*
18897
18898
*
19254
*
* 19045
19096
18A904
19110
18812
19112
353398-S
18A848
19116
18939
15109
19093
19118
19121
19107-9
19107-9
EARLY TYPE
370355-S
19044
18A809
19104
18A819
370354-S
OR
373944-S
18A870
*
34824-S
19094
359354-S
60834
18A823
18A962
19118
19044
19104
19094
370354-S
OR
373944-S
32851-S
359354-S
359354-S
359354-S
LATE TYPE
* NS-SERVICED IN 18850 ASSEMBLY ONLY
NOTE- ALL PARTS SHOWN ARE ALSO SERVICED
IN 18850 ASSEMBLY
PLC-903
1960 LINCOLN

ANTENNA

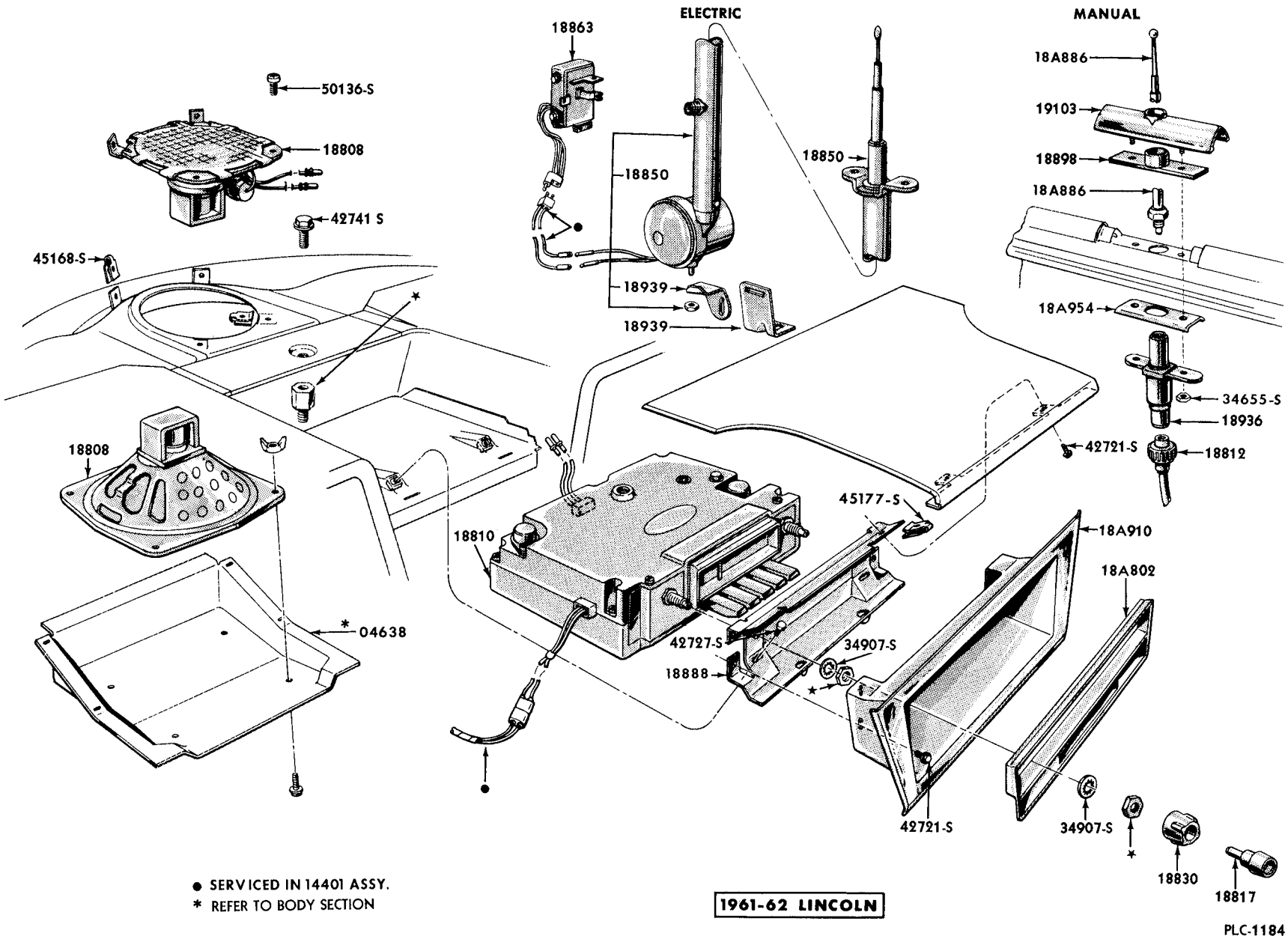

RADIO ANTENNA and SPEAKERS

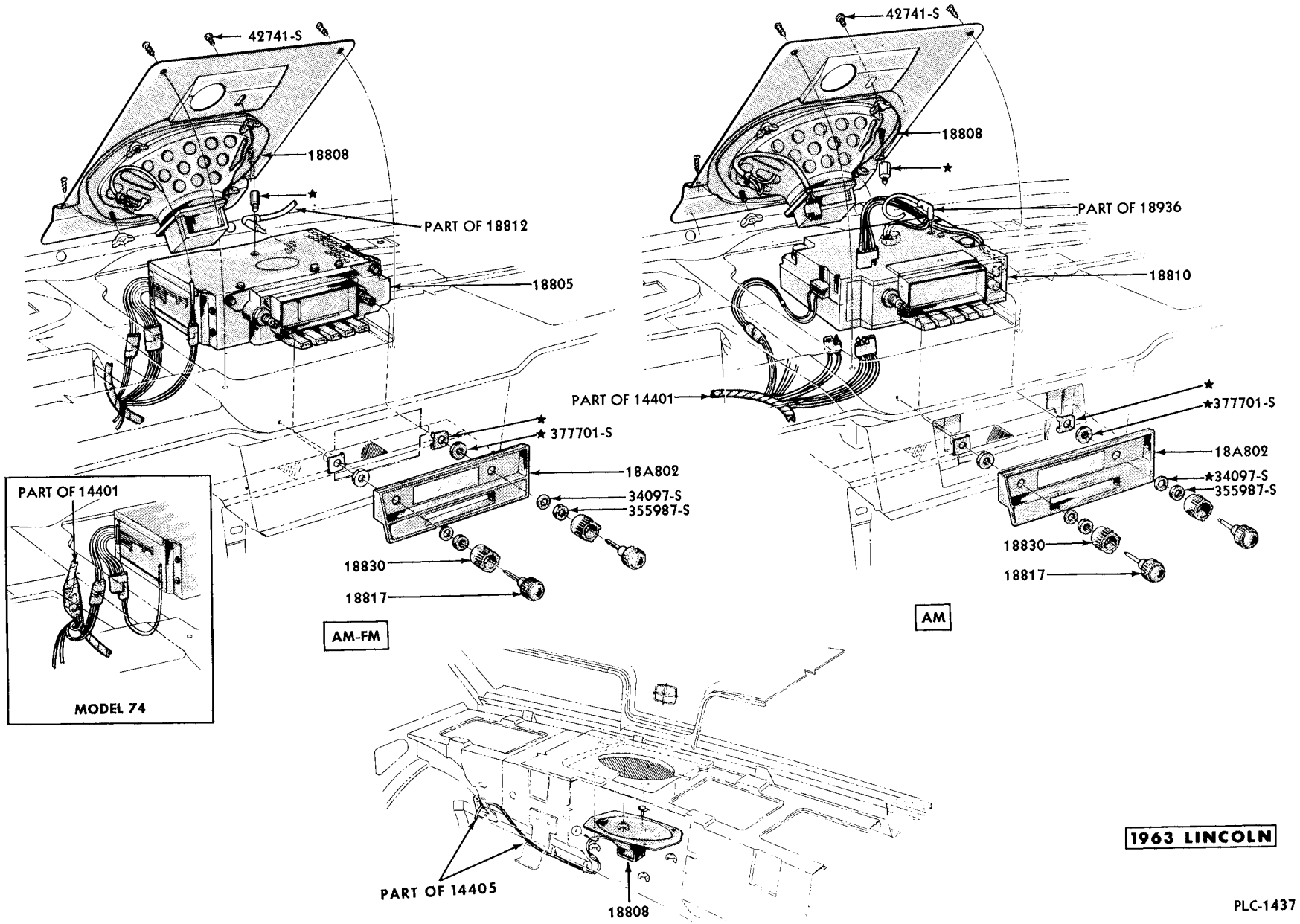

RADIO and SPEAKERS

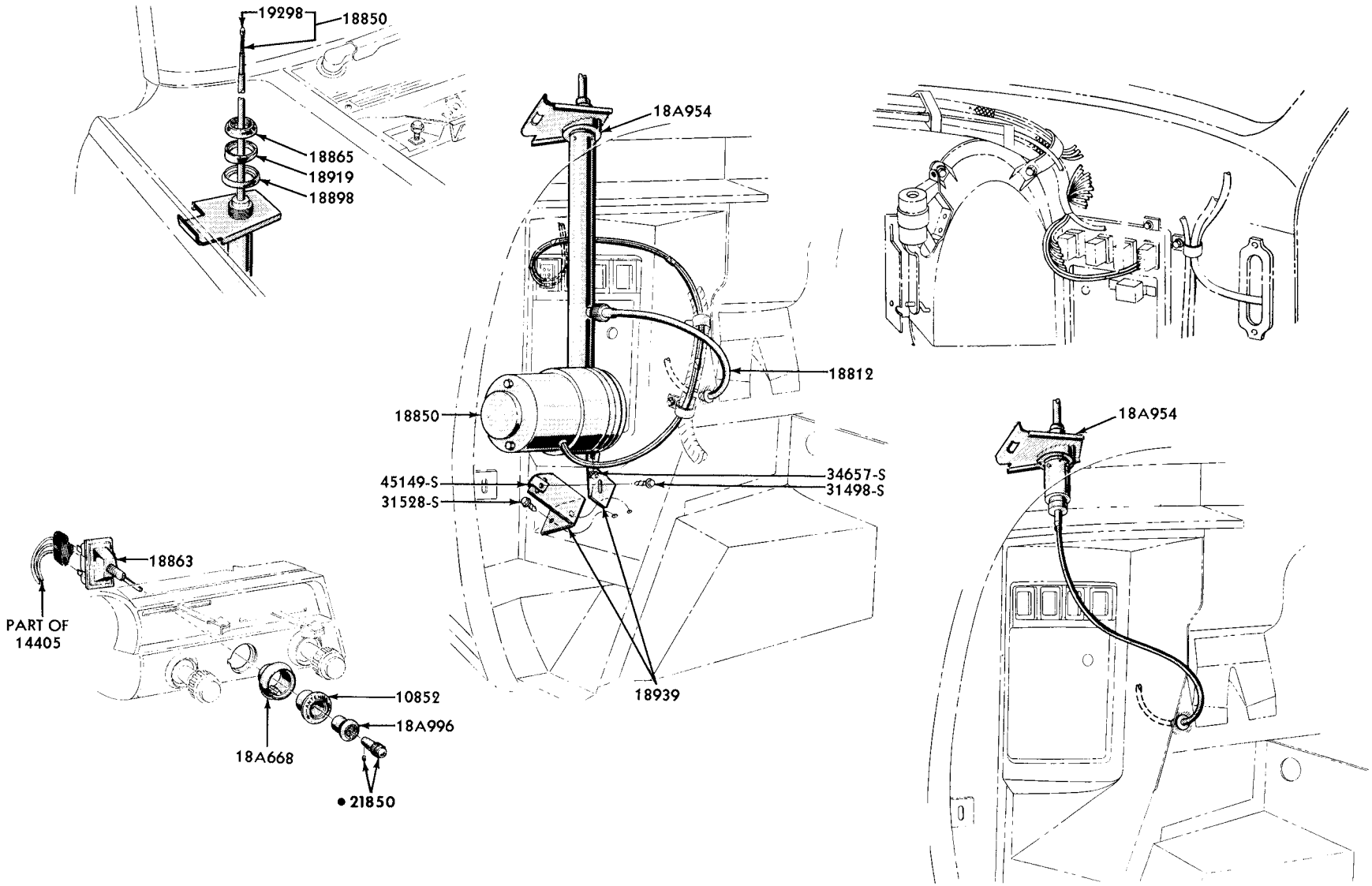

• REFER TO BODY SECTION FOR APPLICATION

1963 LINCOLN

PLC-1453

ANTENNA

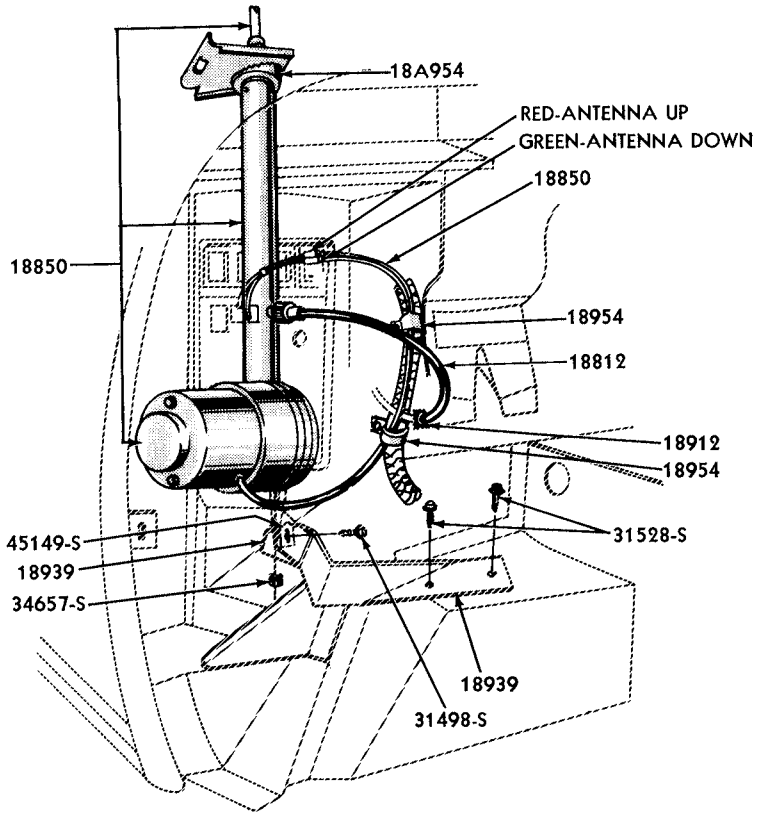

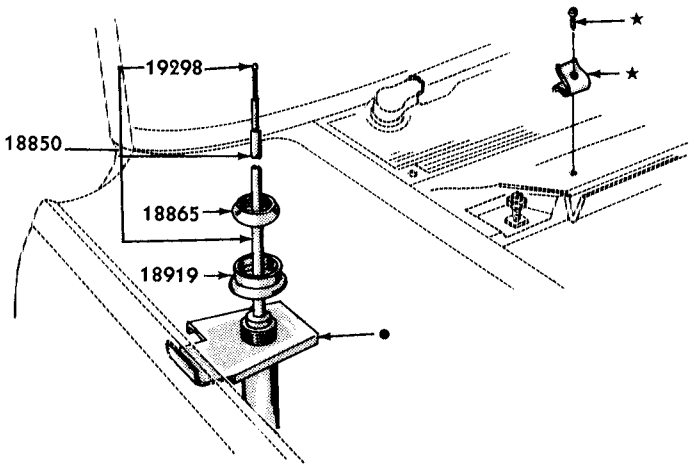

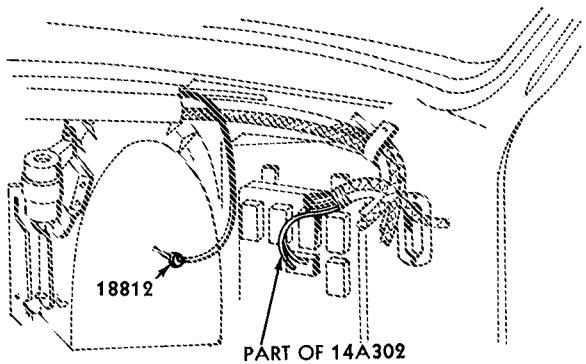

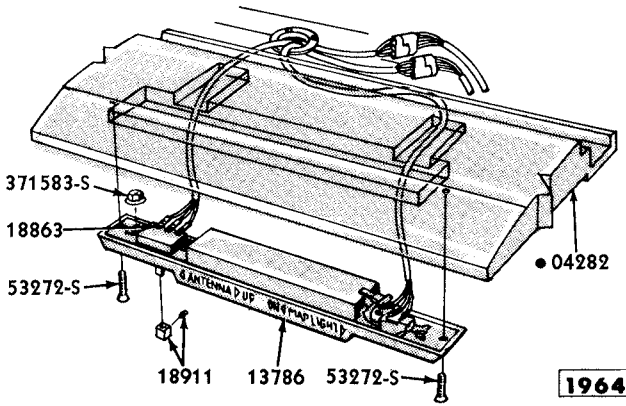

● REFER TO BODY SECTION

1964 LINCOLN

PLC-1720

ANTENNA-ELECTRIC

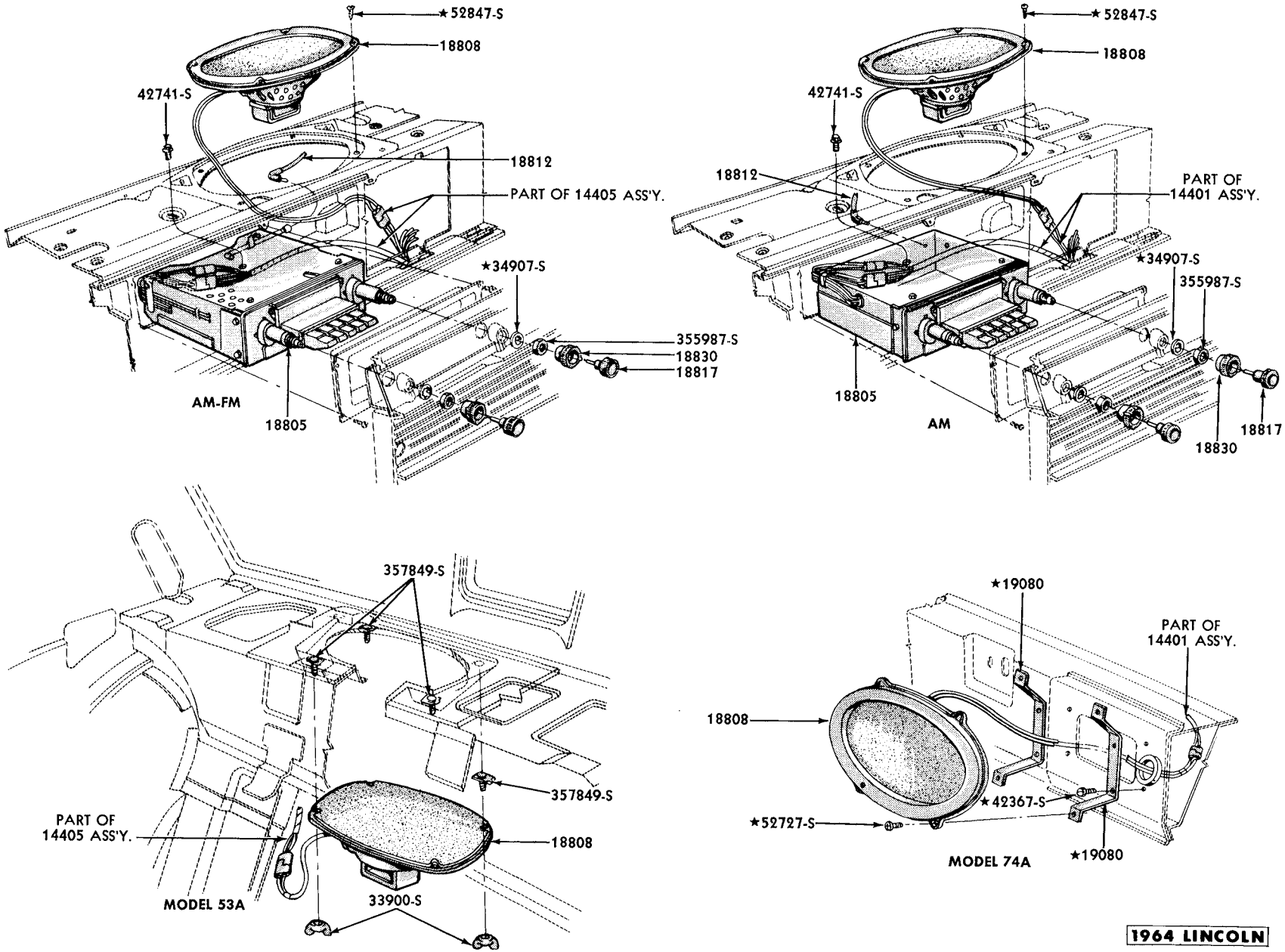

1964 LINCOLN

PLC-1726

RADIO and SPEAKERS

Shock Absorber

GROUP AND PART NUMBER	DESCRIPTION, SIZE, ETC.	NO. REQ'D	MODEL OR ENGINE CUBIC INCH DISPLACEMENT	VEHICLE CODE	YEAR 19____
18A000	MEMBER (REAR SHOCK ABSORBER MOUNTING)				
C2YY 18A000-A		1	All except 71	B	62/63
C3OZ 18A000-A		1	71	B	63
CODB 18A000-D		1	59, 71	C	60
C3GY 18A000-B		1	All except 59, 71, 76	C	60/63
C3DZ 18A000-C		1	59, 71	C	61/64
C3GY 18A000-A	Use with 144 and 170 C.I.D. engines	1	76	C	63
C3GY 18A000-C	Use with 260 C.I.D. engine	1	76	C	63
C4GY 18A000-A		1	All except 71, 76	C	64
C4GY 18A000-B		1	76	C	64
C1VV 18A000-D		1	All	D	61/63
C4VY 18A000-A		1	All	D	64
18A007	REFER TO GROUP 18198				
18A010	SPACER (FRONT SHOCK ABSORBER MOUNTING BRACKET) LOWER				
B6LY 18A010-A	Use with heavy duty shock absorber - export only	2	All except 77	A	60
		2	All except 71	A	61
		2	All	D	60
18016-7	REFER TO GROUP 18198				
18A017	BRACKET (FRONT SHOCK ABSORBER) UPPER				
C2OZ 18A017-A		2	All	B	62/63
C3DZ 18A017-A		2	All	C	60/63
C4DZ 18A017-A	Domestic	2	All	C	64
C4DZ 18A017-B	Use for export only	2	All	C	64
18A018	INSULATOR (FRONT SHOCK ABSORBER) LOWER				
CODD 18A018-A		8	All	C	60/64
18A024-5	REINFORCEMENT (SHOCK ABSORBER) REAR				
C4VY 18A024-A	R.H. - mounting member	1	All	D	64
C4VY 18A025-A	L.H. - mounting member	1	All	D	64
18039	REFER TO GROUP 18041				
18041	WASHER (SHOCK ABSORBER INSULATOR)				
PB7M 18039-A	Front - inner - for export only	4	All except 77	A D	60
MG 18171-A	Inner	6	All	A	60
	(2) req'd. - for front shock absorbers				
	(4) req'd. - for rear shock absorbers				
	(2) req'd. - for front shock absorbers	4	All	A	61/64
	(2) req'd. - for rear shock absorbers				
	(4) req'd. - for rear shock absorbers	4	All	B	63
	(2) req'd. - for front shock absorbers	6	All	C	60/64
	(4) req'd. - for rear shock absorbers				
	(2) req'd. - for rear shock absorbers	2	All	D	64
	Also serviced in 18198 kit				

CONTINUED ON NEXT PAGE

Shock Absorber

GROUP AND PART NUMBER	DESCRIPTION, SIZE, ETC.	NO. REQ'D	MODEL OR ENGINE CUBIC INCH DISPLACEMENT	VEHICLE CODE	YEAR 19____
18041	WASHER (SHOCK ABSORBER INSULATOR) CONTINUED				
MG 18041-A	Outer - also use for export	AR	All	A	60/64
	(4) req'd. - for front shock absorbers				
	(4) req'd. - for rear shock absorbers				
	(4) req'd. - for radiator support struts-1960 only				
	(4) req'd. - for rear shock absorbers	4	All	B	63
	(4) req'd. - for front shock absorbers	12	All	C	60/64
	(8) req'd. - for rear shock absorbers				
	Outer	4	All	D	60/62
	(2) req'd. - to attach rear shock absorber to mounting plate				
	(4) req'd. - for engine to frame mounting bolt washer	4	All	D	63/64
	(4) req'd. - for rear shock absorbers	4	All	D	64
	Also serviced in 18198 kit				
LD 18171-A	Inner - use for export only	4	All	A	61/64
	(2) req'd. - for front shock absorbers				
	(2) req'd. - for rear shock absorbers				
	(4) req'd. - for front shock absorbers	12	All	B C	60/64
	(8) req'd. - for rear shock absorbers				
	Inner	10	All	D	60
	(2) req'd. - for rear shock upper stud				
	(8) req'd. - for stabilizer bar				
LD 18039-A	Lower - inner	2	All	D	60
	NS-rear - 1" O.D. x 21/32" I.D. x 3/32" thick rubber	AR	All	D	64
18A044-6	STUD (REAR SHOCK ABSORBER MOUNTING)				
C1VV 18A046-C	Upper	2	All	D	61/63
C1VV 18A044-C	Lower	2	All	D	61/64
18047	BOLT (FRONT SHOCK ABSORBER MOUNTING)				
PB8L 18047-A	Upper - use with heavy duty shock absorbers	2	All	D	60
18054	WASHER (REAR SHOCK ABSORBER)				
LD 18054-A	Lower - outer	2	All	D	60
C1VV 18054-A	Outer	2	All	D	61/64
18A058	BRACKET (FRONT SHOCK ABSORBER MOUNTING) REAR				
C1VV 18A058-D	(a)	2	All	D	61/64
34782-S	Lockwasher-spring-3/8"	2	a		
372158-S	Screw-hex. washer hd.-3/8"-16 x 1.12	2	a		
18069	BRACKET (FRONT SHOCK ABSORBER MOUNTING)				
B8E 18069-A	Use for export only	2	All except 77	A	60
		2	All	A	61
C2OZ 18183-A	Use for export only - Use on vehicles built prior to 1-2-62, which require shock absorbers utilizing an "Eye Type" bushing at lower mounting area	2	All	B	62
18072	BRACKET (FRONT SHOCK ABSORBER MOUNTING) LOWER				
PB8L 18072-A	Also use for export (a)	2	All	D	60
20515-S8	Bolt-hex. hd.-3/8"-24 x 1-7/8"-req'd. to attach shock absorber and bushing assy. front to bracket-front shock absorber mounting lower	2	a		
34420-S8	Nut-lock-3/8"-24-req'd. to attach shock absorber and bushing assy. front to bracket-front shock absorber mounting lower	2	a		

Shock Absorber

GROUP AND PART NUMBER	DESCRIPTION, SIZE, ETC.	NO. REQ'D	MODEL OR ENGINE CUBIC INCH DISPLACEMENT	VEHICLE CODE	YEAR 19____
18A073	MEMBER (REAR SHOCK ABSORBER MOUNTING MEMBER)				
	NS-steel - 3" x 1" x 3/4"	2	All	D	64
18077	REFER TO GROUP 18124				
18080	REFER TO GROUP 18125				
18097	REFER TO GROUP 18125				
18A110	PAD (REAR SHOCK ABSORBER UPPER PLATE)				
	NS-butyl rubber	2	All	D	64
18124	KIT (SHOCK ABSORBER & BUSHING) FRONT				
COAZ 18124-B		2	All	A	60
	Consists of the following -				
(1) COAA-18077-D	shock absorber (2) washers (2) bushings				
(1) lock nut					
COKY 18124-C	Use for export only	2	All except 77	A	60
C1AZ 18077-A	Use for export only	2	All except 71	A	61/62
C1AZ 18124-K	Heavy duty ☆Not used on vehicles equipped with 406 C. I. D. engine	2	All except 58, 64☆	A	61/62
	Consists of the following -				
(1) MG-18041-A	washer (1) MG-18171-A washer (1) 34664-S8 nut & wshr.-3/8"-24				
(1) C1AA-18077-D	shock absorber (2) COAA-18198-A insulator (2) 358892-S screw and washer				
C1MY 18124-A	Standard - also use for export ☆ Not used on vehicles equipped with 406 C. I. D. engine	2	All except 65C, 71, 76B☆	A	61/62
	Consists of the following -				
(1) C1MM-18077-J	shock absorber (2) COAA-18198-A insulator				
C1MY 18124-B	Standard	2	71	A	61/62
	Heavy duty	2	58, 64	A	61
	Consists of the following -				
(1) C1MM-18077-H	shock absorber (2) COAA-18198-A insulator				
C2MY 18124-A	Standard ☆ Not used on vehicles equipped with 406 C. I. D. engine	2	65C, 76B☆	A	62
	Consists of the following -				
(1) MG-18041-A	washer (1) MG-18171-A washer (1) 34664-S nut &wshr. -3/8"-24				
(1) C2MA-18077-A	shock absorber (2) COAA-18198-A insulator (2) 359997-S nut & wshr.-5/16"-24				
C4AZ 18124-A		2	All except 71☆	A	62
	For Police Special (a)	2	54A, 62A	A	63/64
	☆Use on vehicles equipped with 406 C. I. D. engine				
	Consists of the following -				
(1) MG-18041-A	washer outer (1) MG-18171-A washer inner (2) 359997-S nut & wshr.-5/16"-24				
(1) C4AF-18077-H or	(1) 34664-S8 nut & wshr. -3/8"-24 (2) I-500939 insulator				
C3AA-18077-AN	shock absorber				
C3AZ 18124-E	Standard ☆ Use with 390 C. I. D. engine	2	All except 65C, 71, 76B☆	A	63
	Consists of the following -				
(1) MG-18041-A	washer outer (1) MG-18171-A washer inner (2) 359997-S nut &wshr.-5/16"-24				
(1) C3AA-18077-AL	shock absorber (1) 34664-S nut & wshr.-3/8"-24 (2) I-500939 insulator				
C3AZ 18124-F	Standard	2	71	A	63
	Consists of the following -				
(1) MG-18041-A	washer outer (1) MG-18171-A washer inner (2) 359997-S nut & wshr.-5/16"-24				
(1) C3AA-18077-AK	shock absorber (1) 34664-S nut & wshr. -3/8"-24 (2) I500939 insulator				

CONTINUED ON NEXT PAGE

GROUP AND PART NUMBER	DESCRIPTION, SIZE, ETC.	NO. REQ'D	MODEL OR ENGINE CUBIC INCH DISPLACEMENT	VEHICLE CODE	YEAR 19___
18124	KIT (SHOCK ABSORBER & BUSHING) FRONT (CONTINUED)				
C3AZ 18124-H	Heavy duty	2	71	A	63
	Consists of the following -				
(1) MG-18041-A	washer outer	(1) MG-18171-A	washer inner	(2) 359997-S	nut & wshr.-5/16"-24
(1) C3AA-18077-AM	shock absorber	(1) 34664-S	nut & wshr. -3/8"-24	(2) I-500939	insulator
C2AZ 18077-A	Use for export only - adjustable	2	All except 71	A	63/64
C4MY 18124-A	Standard and heavy duty (a) ☆ Heavy duty - use with 390 C.I.D. engine ☆ Standard - use with 406 and 427 C.I.D. engines	2	All except 71☆	A	63/64
	Consists of the following -				
(1) MG-18041-A	washer-outer	(1) MG-18171-A	washer-inner	(2) 359997-S	nut & wshr.-5/16"-24
(1) C4MF-18077-B or		(1) 34664-S	nut & wshr.-3/8"-24	(2) I-500939	insulator
C3AA-18077-Z	shock absorber				
C4AZ 18124-B	Standard (a) ☆ Use with 390 C.I.D. engine	2	All except 71☆	A	64
	Consists of the following -				
(1) MG-18041-A	washer-outer	(1) MG-18171-A	washer-inner	(2) 359997-S	nut & wshr.-5/16"-24
(1) C3AA-18077-V or		(1) 34664-S	nut & wshr.-3/8"-24	(2) I-500939	insulator
C4AF-18077-E	shock absorber				
C4AZ 18124-C	Standard (a)	2	71	A	64
	Consists of the following -				
(1) MG-18041-A	washer-outer	(1) MG-18171-A	washer-inner	(2) 359997-S	nut & wshr.-5/16"-24
(1) C3AA-18077-Y or		(1) 34664-S	nut & wshr.-3/8"-24	(2) I-500939	insulator
C4AF-18077-F	shock absorber				
C4AZ 18124-D	Heavy duty (a)	2	71	A	64
	Consists of the following -				
(1) MG-18041-A	washer-outer	(1) MG-18171-A	washer-inner	(2) 359997-S	nut & wshr.-5/16"-24
(1) C3AA-18077-AA or		(1) 34664-S	nut & wshr.-3/8"-24	(2) I-500939	insulator
C4AF-18077-G	shock absorber				
C2OZ 18124-B	Heavy duty	2	All	B	62
	Consists of the following -				
(1) MG-18041-A	washer	(2) 33800-S8	nut	(2) 34782-S7	washer
(1) C2OA-18077-T	shock absorber	(1) 34664-S	nut & wshr. -3/8"-24	(2) I-500939	insulator
(1) MG-18171-A	washer				
C2OZ 18124-C	Standard	2	All	B	62
	Consists of the following -				
(1) MG-18041-A	washer	(2) 33800-S	nut	(2) 34782-S	washer
(1) C2OA-18077-S	shock absorber	(1) 34664-S	nut & wshr.-3/8"-24	(2) I-500939	insulator
(1) MG-18171-A	washer				
C2OZ 18077-B	Use for export only - adjustable Has "Ear Type" lower bushing required for direct attachment to upper arm and joint assembly - identified by part number 3827484 stamped on body of shock absorber - for mounting bracket C2OZ-18183-A must be removed for 1962 only	2 2	All All except 71	B B	62 63
C3OZ 18077-A	Use for export only - adjustable	2	71	B	63
C3OZ 18124-A	Standard	2	71	B	63
	Consists of the following -				
(1) MG-18041-A	washer	(2) 33800-S	nut	(2) 34782-S	washer
(1) C3OA-18077-C	shock absorber	(1) 34664-S	nut & wshr.-3/8"-24	(2) I-500939	insulator
(1) MG-18171-A	washer				

CONTINUED ON NEXT PAGE

Shock Absorber

GROUP AND PART NUMBER	DESCRIPTION, SIZE, ETC.	NO. REQ'D	MODEL OR ENGINE CUBIC INCH DISPLACEMENT	VEHICLE CODE	YEAR 19____
18124	KIT (SHOCK ABSORBER & BUSHING) FRONT (CONTINUED)				
C3OZ 18124-B	Heavy duty	2	All	B	63
	Consists of the following -				
(1) MG-18041-A	washer (2) 33800-S8 nut (2) 34782-S7 washer				
(1) C3OA-18077-F	shock absorber (1) 34664-S nut & wshr.-3/8"-24 (2) I-500939 insulator				
(1) MG-18171-A	washer				
C3OZ 18124-C	Standard	2	All except 71	B	63
	Consists of the following -				
(1) MG-18041-A	washer (2) 33800-S8 nut (2) 34782-S7 washer				
(1) C3OA-18077-D	shock absorber (1) 34664-S nut & wshr.-3/8"-24 (2) I-500939 insulator				
(1) MG-18171-A	washer				
CODZ 18077-B	Use for export only	2	All	C	60/62
C1DZ 18124-C	Standard	2	All except 59, 71	C	60/62
	Consists of the following -				
(1) C1DD-18045-C	shock absorber (2) C2RZ-18198-H insulator				
C1DZ 18124-D	Heavy duty ☆ Standard on models 59 and 71	2	54, 62 ☆	C	60/62
	Consists of the following -				
(1) C1DD-18045-D	shock absorber (2) C2RZ-18198-H insulator				
C3DZ 18077-C	Use for export only - adjustable	2	All	C	63
C3DZ 18124-A	Standard - ☆ Use with 144 and 170 C.I.D. engines	2	All☆	C	63
	Consists of the following -				
(1) MG-18041-A	washer outer (1) MG-18171-A washer inner (2) 376970-S nut-flange-lock				
(1) C3DA-18045-C	shock absorber (1) 34664-S nut & wshr.-3/8"-24 (2) I-500939 insulator				
C3DZ 18124-B	Heavy duty ☆ Use with 144 and 170 C.I.D. engines	2	All☆	C	63
	Consists of the following -				
(1) MG-18041-A	washer (1) MG-18171-A washer (2) 376970-S nut-flange-lock				
(1) C3DA-18045-D	shock absorber (1) 34664-S nut & wshr.-3/8"-24 (2) I-500939 insulator				
C3DZ 18124-C	Standard ☆ Use with 260 C.I.D. engine	2	All☆	C	63
	Consists of the following -				
(1) MG-18041-A	washer-outer (1) 34664-S nut & wshr.-3/8"-24 (2) I-500939 insulator				
(1) C3GA-18045-A	shock absorber (2) 376970-S nut-flange lock-				
(1) MG-18171-A	washer-inner 5/16" x 24				
C4DZ 18077-A	Use for export only - adjustable	2	All	C	64
C4GY 18124-A	Standard	2	All	C	64
	Consists of the following -				
(4) C4DA-18A018-A	insulator-lower (1) MG-18171-A washer-inner (2) 376970-S nut-flange-lock-				
(1) C1SS-18041-A	washer-outer (1) 34420-S nut & wshr .-3/8"-24 5/16"-24				
(1) C4GF-18045-C	shock absorber (2) I-500939 insulator				
COLY 18077-A	Heavy duty - adjustable - also use for export	2	All	D	60
B8LY 18124-A	Consists of (1) C2RA-18045-S	2	All	D	60
C4VY 18124-A	Standard - non-adjustable (b)	2	All	D	61/63
	Domestic non-adjustable - also use for export as individual replacement of non-adjustable shocks installed on vehicles built prior to 10-1-63	2	All	D	64
C4VY 18077-B	Heavy duty - domestic - also use for export - adjustable	2	All	D	61/63
	Use for export - adjustable - use on vehicles built after 9-30-63	2	All	D	64
	Heavy duty - domestic - adjustable	2	All	D	64

CONTINUED ON NEXT PAGE

Shock Absorber

GROUP AND PART NUMBER	DESCRIPTION, SIZE, ETC.	NO. REQ'D	MODEL OR ENGINE CUBIC INCH DISPLACEMENT	VEHICLE CODE	YEAR 19____
18124	KIT (SHOCK ABSORBER & BUSHING) FRONT (CONTINUED)				
20387-S	Bolt-hex. hd. -5/16"-24 x 1"	2	a		
33845-S	Nut-hex. -1/2"-13	2	b		
34806-S	Washer-spring-lock-5/16"	2	a		
34809-S	Washer-spring-lock-1/2"	2	b		
34857-S	Washer-spring-lock-3/8"	2	b		
353483-S	Screw-hex. washer hd. -5/16"-24	4	b		
372158-S	Bolt-hex. hd. pilot lead-3/8"-16 x 1-1/8" long	2	b		
18125	KIT (SHOCK ABSORBER & BUSHING) REAR				
B9MY 18125-A	Heavy duty	2	77	A	60
	Consists of the following -				
(1) B9MM-18080-U	shock absorber (4) COAA-18198-A bushing				
COMY 18125-B	Standard	2	All	A	60
	Heavy duty	2	All except 71☆	A	61/62
	☆ Not used on 406 C. I. D. engine				
	Consists of the following -				
(1) C2RZ-18080-Y	shock absorber (4) C2RZ-18198-E bushing				
C1MY 18097-A	Use for export only	2	All except 71	A	61
C1AZ 18125-K	Heavy duty	2	71	A	61/62
	Consists of the following -				
(1) MG-18041-A	washer (2) COAA-18198-A insulator (1) 44736-S8 washer-flat-1/2"				
(1) MG-18171-A	washer				
(1) C1AA-18097-Y	shock absorber (1) 34664-S nut & wshr. -3/8"-24 (1) 55678-S8 nut-hex.lock-1/2"-20				
C1MY 18125-A	Standard	2	All except 65C, 71, 76B☆	A	61/62
	☆ Not used on 406 C. I. D. engine				
	Consists of the following -				
(1) C1MM-18097-K	shock absorber (2) COAA-18198-A insulator				
C1MY 18125-C	Standard	2	71	A	61/62
	Consists of the following -				
(1) C1MM-18097-J	shock absorber (2) COAA-18198-A insulator				
C1AZ 18125-F	Load - leveler - rear	1	All	A	61/64
	Consists of the following -				
(2) C3AA-18097-A	shock absorber (1) IS-630-A installation sheet				
	NOTE - bushings attached to shock absorbers				
C2MY 18125-A	Standard	2	65C, 76B☆	A	62
	☆ Not used on vehicles equipped with 406 C. I. D. engine				
	Consists of the following -				
(1) MG-18041-A	washer (2) COAA-18198-A insulator (1) 44736-S washer -flat-1/2"				
(1) C2MA-18097-A	shock absorber (1) 34664-S nut & wshr. -3/8"-24 (1) 55678-S nut-hex.lock-1/2"-20				
(1) MG-18171-A	washer				
C3AZ 18125-F	☆Use on vehicles equipped with 406 C. I. D. engine	2	All except 71☆	A	62
	For Police Special	2	54A, 62A	A	63
	Consists of the following -				
(1) MG-18041-A	washer-outer (1) 34664-S nut & wshr. -3/8"-24 (1) 55678-S8 nut-hex lock-1/2"-20				
(1) C3AA-18097-E	shock absorber (1) 44736-S8 washer-flat-1/2" (2) I-500939 insulator				
(1) MG-18171-A	washer-inner				
C1AZ 18097-A	Use for export only - adjustable	2	All except 71	A	62/64
C3MY 18125-D	Heavy duty	2	All except 71☆	A	63
	☆ Use with 390 C. I. D. engine				
	Consists of the following -				
(1) MG-18041-A	washer (1) 34664-S nut & wshr. -3/8"-24 (1) 55678-S8 nut-hex. lock-1/2"-20				
(1) C3MA-18097-AB	shock absorber (1) 44736-S wshr. -flat-1/2" (2) I-500939 insulator				
(1) MG-18171-A	washer				

CONTINUED ON NEXT PAGE

GROUP AND PART NUMBER	DESCRIPTION, SIZE, ETC.	NO. REQ'D	MODEL OR ENGINE CUBIC INCH DISPLACEMENT	VEHICLE CODE	YEAR 19____
18125	KIT (SHOCK ABSORBER & BUSHING) REAR (CONTINUED)				
C4AZ 18125-A	Standard ☆ Use with 390 C.I.D. engine	2	All except 71☆	A	63/64
Consists of the following -					
(1) MG-18041-A	washer-outer	(1) MG-18171-A	washer-inner	(1) 55678-S	nut-hex. lock-1/2"-20
(1) C4AF-18097-A	shock absorber	(1) 34664-S	nut & wshr. -3/8"-24	(2) I-500939	insulator
(1) 44736-S	washer-flat-1/2"				
C4AZ 18125-B	Standard	2	71	A	63/64
Consists of the following -					
(1) MG-18041-A	washer-outer	(1) 34664-S	nut & wshr.-3/8"-24	(1) 55678-S	nut-hex.lock-1/2"-20
(1) C4AF-18097-B	shock absorber	(1) 44736-S	wshr. -flat-1/2"	(2) I-500939	insulator
(1) MG-18171-A	washer-inner				
C4AZ 18125-C	Heavy duty	2	71	A	63/64
Consists of the following -					
(1) MG-18041-A	washer-outer	(1) 34664-S	nut & wshr. -3/8"-24	(1) 55678-S	nut-hex.lock-1/2"-20
(1) C4AF-18097-D	shock absorber	(1) 44736-S	wshr. -flat-1/2"	(2) I-500939	insulator
(1) MG-18171-A	washer-inner				
C4AZ 18125-E	Standard ☆ Use with 406 and 427 C.I.D. engines	2	All except 71☆	A	63/64
Consists of the following -					
(1) MG-18041-A	washer-outer	(1) 34664-S	nut & wshr. -3/8"-24	(1) 55678-S	nut-hex. lock-1/2"-20
(1) C4AF-18097-C	shock absorber	(1) 44736-S	wshr. -flat-1/2"	(2) I-500939	insulator
(1) MG-18171-A	washer-inner				
C4AZ 18125-D	For Police Special	2	54A, 62A	A	64
Consists of the following -					
(1) MG-18041-A	washer-outer	(1) 34664-S	nut & wshr. -3/8"-24	(1) 55678-S	nut-hex. lock-1/2"-20
(1) C4AF-18097-E	shock absorber	(1) 44736-S	wshr. -flat-1/2"	(2) I-500939	insulator
(1) MG-18171-A	washer-inner				
C4MY 18125-A	Heavy duty (a)	2	All except 71	A	64
Consists of the following -					
(1) MG-18041-A	washer-outer	(1) 34664-S	nut & wshr. -3/8"-24	(1) 55678-S8	nut-hex. lock-1/2"-20
(1) C4MF-18097-A	shock absorber	(1) 44736-S	wshr. -flat-1/2"	(2) I-500939	insulator
(1) MG-18171-A	washer-inner				
C2OZ 18125-A	Heavy duty	2	All	B	62
Consists of the following -					
(2) MG-18041-A	washer-outer	(2) MG-18171-A	washer-inner	(4) I-500939	insulator
(1) C2OA-18080-L	shock absorber	(2) 34664-S	nut & wshr. -3/8"-24		
C2OZ 18097-A	Use for export only - adjustable	2	All	B	62/63
C4OZ 18125-B	Standard	2 2	All except 71 All	B B	63 62
Consists of the following -					
(2) MG-18041-A	washer-outer	(2) MG-18171-A	washer-inner	(4) I-500939	insulator
(1) C3OF-18080-B	shock absorber	(2) 34664-S8	nut & wshr. -3/8"-24		
C3OZ 18125-B	Heavy duty	2	71	B	63
Consists of the following -					
(2) MG-18041-A	washer-outer	(2) MG-18171-A	washer -inner	(4) I-500939	insulator
(1) C3OA-18080-G	shock absorber	(2) 34664-S8	nut & wshr. -3/8"-24		
C3OZ 18125-D	Heavy duty	2	All except 71	B	63
Consists of the following -					
(2) MG-18041-A	washer-outer	(2) MG-18171-A	washer-inner	(4) I-500939	insulator
(1) C3OA-18080-J	shock absorber	(2) 34664-S8	nut & wshr. -3/8"-24		
C3OZ 18125-E	Kit - load leveler	1	71	B	63
Consists of the following -					
		(2) C3OA-18097-A	shock absorber		

CONTINUED ON NEXT PAGE

Shock Absorber

GROUP AND PART NUMBER	DESCRIPTION, SIZE, ETC.	NO. REQ'D	MODEL OR ENGINE CUBIC INCH DISPLACEMENT	VEHICLE CODE	YEAR 19__
18125	KIT (SHOCK ABSORBER & BUSHING) REAR (CONTINUED)				
C4OZ 18125-A	Standard	2	71	B	63
	Consists of the following -				
(2) MG-18041-A	washer-outer	(2) MG-18171-A	washer-inner	(4) I-500939	insulator
(1) C4OF-18080-A	shock absorber	(2) 34664-S8	nut & wshr. -3/8"-24		
C2DZ 18080-A	Use for export only	2	All	C	60/62
C1DZ 18125-D	Standard	2	54,62	C	60/62
	Consists of the following -				
(2) MG-18041-A	washer-outer	(2) MG-18171-A	washer-inner	(2) 34664-S	nut & wshr. -3/8"-24
(1) C1DD-18080-E	shock absorber	(4) COAA-18198-A	insulator		
C1DZ 18125-E	Heavy duty	2	54,62	C	60/62
	Consists of the following -				
(1) C1DD-18080-F	shock absorber	(4) C2RZ-18198-G	insulator		
C1DZ 18125-F	Standard	2	59, 71	C	60/62
	Consists of the following -				
(1) C1DD-18080-G	shock absorber	(4) C2RZ-18198-G	insulator		
C3DZ 18097-B	Use for export only - adjustable	2	All	C	63
C3DZ 18125-A	Standard ☆ Use with 144 and 170 C.I.D. engines	2	All☆	C	63
	Consists of the following -				
(2) MG-18041-A	washer-outer	(2) MG-18171-A	washer-inner	(4) I-500939	insulator
(1) C3DA-18080-C	shock absorber	(2) 34664-S	nut & wshr. -3/8"-24		
C3DZ 18125-B	Heavy duty ☆ Use with 144 and 170 C.I.D. engines	2	All☆	C	63
	Consists of the following -				
(2) MG-18041-A	washer-outer	(2) MG-18171-A	washer-inner	(4) I-500939	insulator
(1) C3DA-18080-D	shock absorber	(2) 34664-S	nut & wshr. -3/8"-24		
C3DZ 18125-C	Standard ☆Use with 260 C.I.D. engine	2	All☆	C	63
	Consists of the following -				
(2) MG-18041-A	washer-outer	(2) MG-18171-A	washer-inner	(4) I-500939	insulator
(1) C3DA-18080-F	shock absorber	(2) 34664-S	nut & wshr. -3/8"-24		
C3DZ 18125-D	Heavy duty ☆ Use with 260 C.I.D. engine	2	All☆	C	63
	Consists of the following -				
(2) MG-18041-A	washer-outer	(2) MG-18171-A	washer-inner	(4) I-500939	insulator
(1) C3DA-18080-J	shock absorber	(2) 34664-S	nut & wshr. -3/8"-24		
C4DZ 18097-B	Use for export only - adjustable	2	All	C	64
C4GY 18125-A	Standard	2	All except 71	C	64
	Consists of the following -				
(2) MG-18041-A	washer-outer	(2) MG-18171-A	washer-inner	(4) I-500939	insulator
(1) C4GF-18080-C	shock absorber	(2) 34664-S	nut & wshr. -3/8"-24		
C4GY 18125-B	Standard	2	71	C	64
	Consists of the following -				
(2) MG-18041-A	washer-outer	(2) MG-18171-A	washer-inner	(4) I-500949	insulator
(1) C4GF-18080-A	shock absorber	(2) 34664-S	nut & wshr. -3/8"-24		

CONTINUED ON NEXT PAGE

Shock Absorber

GROUP AND PART NUMBER	DESCRIPTION, SIZE, ETC.	NO. REQ'D	MODEL OR ENGINE CUBIC INCH DISPLACEMENT	VEHICLE CODE	YEAR 19____
18125	KIT (SHOCK ABSORBER & BUSHING) REAR (CONTINUED)				
COLY 18125-A	Standard	2	All	D	60
	Consists of the following -				
(1) C2RA-18080-N	shock absorber (2) C2RZ-18198-B bushing				
COLY 18125-B	Heavy duty and export	2	All	D	60
	Consists of the following -				
(1) 3825465	shock absorber (2) PB7M-18198-A insulator				
C2VY 18125-B	Standard	2	53	D	61/62
C1VY 18097-A	Rear - adjustable - shock absorber and bushing - for export and heavy duty domestic	2	All	D	61/63
C2VY 18125-A	Standard - non adjustable	2	74	D	61/63
	Heavy duty	2	53	D	61/63
C3VY 18125-B	Standard - non adjustable	2	53	D	63
C4VY 18125-A	Standard - domestic - non-adjustable - also use (b) for export as individual replacement on non-adjustable shocks installed on vehicles built prior to 10-1-63	2	All	D	64
	Consists of the following -				
(1) C1VV-18039-A	washer-lower-inner (1) C4VA-18080-A shock absorber (1) 34664-S nut-hex. lock-3/8"-24				
(1) C1SS-18041-A	washer-upper-outer (1) C1SS-18171-A washer-upper-inner (2) I-500939 insulator				
(1) C1VV-18054-A	washer-lower-outer (1) 34424-S nut-hex. lock-1/2"-20				
C4VY 18097-B	Use for export - adjustable - use on vehicles built after 9-31-63	2	All	D	64
	Heavy duty - domestic - adjustable	2	All	D	64
34449-S	Nut-lock-1/2"-20	2	a		
351774-S	Bolt-hex. hd. shoulder-3/8"-16 x 1.70"-to attach rear shock absorber upper plate to underbody assy.	6	b		
378375-S	Nut-3/8"-16-to attach rear shock absorber upper plate to underbody assy.	6	b		
18132-3	BRACKET (SHOCK ABSORBER MOUNTING) REAR				
B9MY 18132-A	R.H. - upper	1	All	A	60
B9MY 18133-A	L.H. - upper	1	All	A	60
COLY 18132-A	Upper	2	All	D	60
C4VY 18132-A	R.H. - upper	1	All	D	64
C4VY 18133-A	L.H. - upper	1	All	D	64
18153	MIRROR (SPOTLIGHT)				
B7A 18153-A	Also serviced in spotlight kits 15312-13	1	All	B C	60/63
		1	All	A	63
18171	REFER TO GROUP 18041				
18183	REFER TO GROUP 18069				
18192	PLATE (SHOCK ABSORBER) REAR				
C4VY 18192-A	Upper (a)	2	All	D	64
351744-S	Bolt-hex. hd. shoulder-3/8"-16 x 1.62"	6	a		
353732-S	Washer-flat-.66" x 1"	6	a		
354375-S	Nut-retainer-3/8"-16	6	a		
18196	STUD (REAR SHOCK ABSORBER) MOUNTING				
COAA 18196-A	Upper	2	All	A	61/62
C3MY 18196-A	Upper (a)	2	All	A	63/64
B2LY 18196-A	Lower	2	All	D	60
34449-S	Nut-lock-1/2"-20	2	a		
55678-S	Nut-hex.-1/2"-20	2	a		

Shock Absorber

GROUP AND PART NUMBER	DESCRIPTION, SIZE, ETC.	NO. REQ'D	MODEL OR ENGINE CUBIC INCH DISPLACEMENT	VEHICLE CODE	YEAR 19____
18198	BUSHING (SHOCK ABSORBER)				
B7MY 18198-A	Front - mounting	2	All	A	60
	Front - heavy duty - use on vehicles built prior to 11-15-62	2	All	A	63
COAA 18A007-A	Front - mounting	2	All	A	61/64
COAA 18016-A	Rear	2	All	A	61/64
PB8M 18017-A	Use for export and heavy duty domestic	AR	All except 77	A	60/61
	Use for export only	AR	All	A	62
	(2) req'd. - for front shock absorbers				
	(2) req'd. - for rear shock absorbers				
	(2) req'd. - for front shock absorbers	2	All	B	62
	Use on vehicles built prior to 1-2-62 equipped with shock absorber C2OZ-18077 utilizing an "Eye Type" bushing at lower mounting area				
	Use with heavy duty shock absorbers - also use for export	8	All	D	60
	(4) req'd. - for front shock absorbers				
	(4) req'd. - for rear shock absorbers				
COAA 18198-A	Also use for export - also serviced in 18124 and 18125 kits	AR☆	All	A B C D	60/62
	☆(4) req'd. - for front shock absorbers				
	☆(8) req'd. - for rear shock absorbers				
	☆(4) req'd. - for radiator supports				
	Use with heavy duty rear shock absorbers	4	All	D	60
	Rear - insulator	4	All	D	64
B7LY 18198-A	Lower - also use for export	2	All	D	60
B8LY 18198-A	Upper	12	All	D	60
	(4) req'd. - for rear shock absorbers				
	(8) req'd. - for stabilizer bar				
B8LY 18198-B	Front - lower mounting	2	All	D	60
B8LY 18198-C	Upper - front and rear	4	All	D	60
C1VY 18198-A	Front - lower mounting	2	All	D	61/64
C1VY 18198-B	(2) req'd. - for front - (4) req'd. - for rear	6	All	D	61/63
	Front and rear	4	All	D	64

18198	KIT (SHOCK ABSORBER INSULATOR REPAIR)				
C1SZ 18198-C	Front and/or rear	AR	All	A	61/64
	(1) req'd. - for front shock absorber				
	(1) req'd. - for rear shock absorber				
	(2) req'd. - for rear shock absorber	AR	All	B	62/63
	(1) req'd. - for front shock absorber	AR	All	C	60/64
	(2) req'd. - for rear shock absorber				

Consists of the following -

(2) C1SS-18041-A	washer-outer	(2) 34664-S	nut & wshr. -3/8"-24	(4) I-500939	insulator
(2) C1SS-18171-A	washer-inner				

C2OZ 18198-A	Front	2	All	B	62/63

Consists of the following -

(1) C2OA-18A007-C	bushing assy.	(2) 33800-S	nut	(2) 376325-S	bolt
(1) C1SS-18041-A	washer	(1) 34664-S	nut & wshr. -3/8"-24	(2) I-500939	insulator
(1) C1SS-18171-A	washer	(2) 34782-S	washer		

Heater

GROUP AND PART NUMBER	DESCRIPTION, SIZE, ETC.	NO. REQ'D	MODEL OR ENGINE CUBIC INCH DISPLACEMENT	VEHICLE CODE	YEAR 19____
18233	BRACKET & WIRING (VANITY MIRROR LAMP)				
FEW 18233-A	Located in glove compartment	1	All	A B C	60/64
		1	All	D	61/64
18B244	REFER TO GROUP 18581				
18B249	GASKET (HEATER AIR DUCT)				
C1VF 18B249-A	For R. H. and L. H. pillar	2	All	D	61/62
18B250	CONNECTOR (HEATER VACUUM HOSE)				
C1VF 18B250-A		2	All	D	61/62
C2VY 18B250-A		2	All	D	62
	NS-for heater - round - 1.26"x 1.60" x .30" - located at instrument panel	1	All	D	64
18A262	GASKET (AIR CONDITIONER EVAPORATOR CASE TO CONTROL PANEL)				
B9FA 18A262-A	Use for panel and control assembly	1	All	C	60/61
	NS-improvise - use for evaporator assembly	1	All	C	60/61
18C262	OUTLET (HEATER REAR SEAT DUCT)				
C4VY 18C262-A	BLACK - for heater and/or a/cond. - use on vehicles equipped with bucket seats - dealer to paint to match interior trim if required	1	All	D	64
18263	LENS (VANITY MIRROR LAMP)				
FEW 18263-A	Plastic - located in glove compartment	1	All	A	60/64
		1	All	B C	60/64
		1	All	D	61/64
18A270	SWITCH (HEATER & AIR CONDITIONER TEMPERATURE)				
B9FM 18A270-A	For heater and/or a/cond. - vacuum control	1	All	A	60
18B310	REFER TO GROUP 18591				
18B311	GASKET (RESISTOR HEATER BLOWER)				
	NS-dealer improvise	1	All	D	61/62
18A318	MOTOR (AIR CONDITIONER & HEATER VACUUM CONTROL)				
COMF 18A318-A	For blend air door - a/cond. and/or heater	1	All	A	60
COAF 18A318-B	For a/cond. damper door (a)	1	All	A	60
	For R.H. air vent - a/cond.	1	All	A	60
	For temperature control - a/cond.	1	All	A	60
	For defroster door - a/cond.	1	All	A	60
	For L.H. air vent - a/cond. and/or heater	1	All	A	60
	For a/cond.	1	All except 223	A	61/62
	For side cowl ducts for heater and fresh air	2	All	D	60
	For R.H. defroster	1	All	D	60
	For side cowl ducts - for a/cond.	2	All	D	60
	For air vents - R.H. and L.H.	2	All	D	60/62
	Vacuum for heater side cowl - R.H. and L.H.	2	All	D	61
	For blower assembly - heater - R.H. and L.H.	2	All	D	61/62
	For heater side cowl duct	2	All	D	61/62
	For heater - R.H. and L.H.	2	All	D	61/62
	For heater and/or a/cond.	AR	All	D	63/64
	(1) req'd. - for defroster door - heater only				
	(2) req'd. - for air vents - heater and a/cond.				
	(2) req'd. - for defroster door - a/cond. only				
	(1) req'd. - for heat door - a/cond. only				

CONTINUED ON NEXT PAGE

Heater

GROUP AND PART NUMBER	DESCRIPTION, SIZE, ETC.	NO. REQ'D	MODEL OR ENGINE CUBIC INCH DISPLACEMENT	VEHICLE CODE	YEAR 19__
18A318	MOTOR (AIR CONDITIONER & HEATER VACUUM CONTROL) CONTINUED				
COLF 19A833-B	For L.H. defroster	1	All	D	60
C3VY 18A318-B	For heater air ventilation door - for heater (b) and/or a/cond.	1	All	D	63/64
C3VY 18A318-C	For heater and a/cond. - use to retain heater (b) recirculating air ventilation actuator door in partial open position	1	All	D	63/64
C4VY 18A318-A	For a/cond. evaporator louver vent door	1	All	D	63/64
COAF 19A783-A	Arm-must be used with COAF-18A318-B motor	1	a		
44711-S	Washer-No. 9-flat	AR	b		
42134-S	Screw-hex. hd. washer-self-tap. -No. 10-12 x 5/8"	AR	b		
18A321	GASKET (HEATER & AIR CONDITIONER AIR DAMPER DOOR)				
B9FM 18A321-A	Inner - 4" x 4" - for a/cond. except hang-on	1	All	A	60
B9FM 18A321-B	2" x 4" - for a/cond. except hang-on	1	All	A	60
18A323	REINFORCEMENT (HEATER & AIR CONDITIONER BLOWER MOTOR MOUNTING)				
B9FM 18A323-A	For heater and/or a/cond.	1	All	A	60
18A324	SEAL (BLOWER HEATER CHAMBER TO AIR CONDITIONER CHAMBER)				
B9FM 18A324-A	For a/cond. except hang-on	1	All	A	60
18A339	CLIP (HEATER INLET DUCT TO CORE CASE)				
B8LY 18A339-A	For a/cond.	16	All	D	60
18B340-1	GRILLE (HEATER SIDE COWL DUCT REGISTER)				
C1VV 18B340-A	R.H. - dealer to paint applicable color	1	All	D	61
C1VV 18B341-A	L.H. - dealer to paint applicable color	1	All	D	61
C2VY 18B340-A	R.H. - GRAY	1	All	D	62
C2VY 18B341-A	L.H. - GRAY	1	All	D	62
18A347	CLIP (HEATER REGULATOR CONTROL WIRE)				
B9MF 18A347-A	For heater with manual controls	1	All	A	60
18B354	CONNECTOR (HEATER SIDE COWL DUCT)				
C1VF 18B354-B		2	All	D	61/62
18B364	REFER TO GROUP 18502				
18A373	REFER TO GROUP 18519				
18A377	POINTER (HEATER REGULATOR CONTROL)				
C1VF 18A377-A		1	All	D	61/62
18B385	PULLEY (HEATER TEMPERATURE REGULATOR CONTROL)				
COLY 18B385-A	3/4" long	1	All	D	60/62
C1VF 18B385-A	1/4" long	2	All	D	61/62
18A386	GASKET (DEFROSTER NOZZLE) L.H.				
COLF 18A386-A		1	All	D	60
18A388	GASKET (HEATER & AIR CONDITIONER CORE CASE TO DASH PANEL)				
B9MY 18A388-A	For heater and/or a/cond.	1	All	A	60
18B388-9	REGISTER (HEATER AIR)				
C1VF 18B388-B	R.H. - front door	1	All	D	61/62
C1VF 18B389-B	L.H. - front door	1	All	D	61/62

Heater

GROUP AND PART NUMBER	DESCRIPTION, SIZE, ETC.	NO. REQ'D	MODEL OR ENGINE CUBIC INCH DISPLACEMENT	VEHICLE CODE	YEAR 19____
18B391-2	SPRING & ROLLER (HEATER REGULATOR CONTROL)				
C1VF 18B391-A	R. H.	1	All	D	61/62
C1VF 18B392-A	L. H.	1	All	D	61/62
18B393	SUB-DIAL (HEATER SERVO CONTROL)				
C1VF 18B393-A		1	All	D	61/62
18B394	SPRING & ROLLER (HEATER AIR CONTROL POINTER BELT)				
C1VF 18B394-A		1	All	D	61/62
18B395	MASK (AIR CONDITIONER & HEATER CONTROL)				
C1VF 18B395-A	R.H. (1) req'd. - for heater (1) req'd. - for a/cond.	2	All	D	61/62
C3VY 18B395-A	For heater	1	All	D	63
C3VY 18B395-B	For a/cond.	1	All	D	63
18B396	LENS (HEATER CONTROL)				
C1VF 18B396-A		1	All	D	61/62
C3VY 18B396-A		1	All	D	63
C4VY 18B396-A	For heater only	1	All	D	64
18B397	PLATE (HEATER SERVO CONTROL SUB-DIAL TRIM)				
C1VF 18B397-A		1	All	D	61/62
18B398	BELT (HEATER TEMPERATURE REGULATOR CONTROL POINTER) LARGE				
C1VF 18B398-A		1	All	D	61/62
18A402	POINTER & SHAFT (HEATER & AIR CONDITIONER TEMPERATURE REGULATOR CONTROL)				
COLF 18A402-B	For heater and/or a/cond.	1	All	D	60
18B404	BEZEL (HEATER BLOWER CONTROL INNER)				
C1VB18B404-A(07)	WOOD GRAIN	1	All	D	61/63
C1VB18B404-A(08)	DARK GRAY	1	All	D	61/63
18B405	BEZEL (VENT AIR VALVE CONTROL INNER)				
C1VB18B405-A(07)	WOOD GRAIN	1	All	D	61/62
C1VB18B405-A(08)	DARK GRAY	1	All	D	61/62
18A407	DIAL (HEATER & AIR CONDITIONER TEMPERATURE REGULATOR CONTROL)				
COLF 18A407-C	Rear - use for heater	1	All	D	60
COLF 18A407-D	Rear - use for a/cond.	1	All	D	60
18A409	REFER TO GROUP 18A544				
18B413	GASKET (HEATER TEMPERATURE REGULATOR CONTROL HOSE CONNECTOR BLOCK)				
C1VF 18B413-A		1	All	D	61/62
18A439	CONNECTOR (DEFROSTER NOZZLE TO SIDE COWL)				
B8LY 18A439-A	L. H. - for heater	1	All	D	60
18A442	CONNECTOR (HEATER AIR INLET DUCT)				
C1VV 18A442-A		2	All	D	61/62
18A444	ARM (AIR CONDITIONER VENT AIR OUTLET DOOR)				
COAF 18A444-A	For a/cond. except hang-on	1	All except 223	A	61/62
18B447	COVER (HEATER & AIR CONDITIONER HOUSING)				
C3VY 18B447-A	Rear - for heater and/or a/cond.	1	All	D	63/64
C3VY 18B447-B	Inlet - for heater and/or a/cond.	1	All	D	63/64

Heater

GROUP AND PART NUMBER	DESCRIPTION, SIZE, ETC.	NO. REQ'D	MODEL OR ENGINE CUBIC INCH DISPLACEMENT	VEHICLE CODE	YEAR 19____
18455	KIT (HEATER & DEFROSTER)				
C1AF 18455-D	Refer to C1MY-5704774-A for cover and back plate assembly	1	All	A	61
C4MY 18455-A	Fresh air	1	All	A	64
C3OZ 18455-A	Fresh air	1	All	B	63
C3DZ 18455-A	Fresh air	1	All	C	60/63
C4DZ 18455-A	Blendaire	1	All	C	64
18456	BLOWER (HEATER & AIR CONDITIONER)				
COMF 18456-C	Less motor and wheel	1	All	A	60
FFC 18456-D	R.H. - for heater	1	All	D	60
B9LY 18456-A	L.H. - for heater	1	All	D	60
C1VY 18456-D	R.H. - for heater and/or a/cond. - less vacuum motor, valve, motor and wheel assembly and attaching parts	1	All	D	61/62
C1VY 18456-E	L.H. - for heater and/or a/cond. - less vacuum motor, valve, motor and wheel assembly and attaching parts	1	All	D	61/62
18457	DUCT (HEATER INLET)				
B9LF 18457-B	R.H. and L.H. - for heater	2	All	D	60
C1VF 18457-B	R.H.	1	All	D	61
C1VF 18A688-C	L.H.	1	All	D	61
C2VY 18457-A	R.H. - for heater	1	All	D	62
C2VY 18457-B	L.H. - for heater	1	All	D	62
18A461-2	DUCT (HEATER & AIR CONDITIONER SIDE COWL)				
COLF 18A461-D	R.H. - for heater	1	All	D	60
COLF 18A462-C	L.H. - for heater	1	All	D	60
COLF 19A735-B	R.H. - for a/cond.	1	All	D	60
COLF 19A736-B	L.H. - for a/cond.	1	All	D	60
C1VV 18A461-B	R.H. - for heater	1	All	D	61
C1VV 18A462-B	L.H. - for heater	1	All	D	61
C2VY 18A461-A	R.H. - for heater	1	All	D	62
C2VY 18A462-A	L.H. - for heater	1	All	D	62
18A465	COVER (HEATER TEMPERATURE REGULATOR CONTROL OPENING)				
CODF 18A465-B	BLACK - for vehicles without heaters (a) (1) req'd. - for defroster opening (1) req'd. - for temperature opening (1) req'd. - for heater switch opening	3	All	C	60/63
45052-S7	Nut-3/16"-stud clip flat spring	3	a		
18471	PLENUM CHAMBER (HEATER & AIR CONDITIONER)				
COMF 18471-G		1	All	A	60
C3DZ 18471-A	(a)	1	All	C	60/64
FFC 18471-A	R.H. and L.H. - for heater	2	All	D	60
C1VF 18471-C	R.H.	1	All	D	61
C1VF 18A689-C	L.H.	1	All	D	61
C2VY 18471-A	R.H.	1	All	D	62
C2VY 18471-B	L.H.	1	All	D	62
C3VY 18471-A	For heater - includes vacuum motor and outlet grille	1	All	D	63
C3VY 18471-B	For a/cond. - includes gaskets	1	All	D	63
C4VY 18471-A	For heater - includes vacuum motor and outlet grille (b)	1	All	D	64
C4VY 18471-B	For a/cond. - includes gaskets	1	All	D	64
34653-S	Nut and washer-hex. -No. 8-32	6	b		
42119-S	Screw-hex. hd. washer-self. tap. -No. 8-18 x 3/8"	4	a		
44719-S	Washer-flat-1/4"	4	b		
378006-S	NS-spring clip	2	b		

Heater

GROUP AND PART NUMBER	DESCRIPTION, SIZE, ETC.	NO. REQ'D	MODEL OR ENGINE CUBIC INCH DISPLACEMENT	VEHICLE CODE	YEAR 19____
18472	HOSE (HEATER)				
FDA 18472-A	5/8" I.D. - 100 ft. roll - cut to required length (a)	AR	All	A B C D	60/64
FFC 18472-L	3/4" I.D. - 100 ft. roll - cut to required length (a)	AR	All	A B C D	60/64
97333-S	Hose clamp-spring wire-No. 15	AR	a		
18A475	COVER (HEATER MOTOR DASH PANEL OPENING)				
COAF 18A475-A	For heater only	1	All	A	61
C2MY 18A475-A	For heater only	1	All	A	62/64
C2YY 18A475-A	For heater only	1	All	B	62/63
18476	CORE & SEAL ASSEMBLY (HEATER & AIR CONDITIONER)				
C3VY 18476-A	For heater and/or a/cond.	1	All	D	63/64
18476-7	CORE (HEATER & AIR CONDITIONER)				
COMY 18476-A	For a/cond. and /or heater	1	All	A	60
C1AF 18476-A	For heater	1	All	A	61
COAF 18476-C	For a/cond.	1	All except 223	A	61/62
C2AZ 18476-A	For heater - 2-1/2"core - use in heater assembly having (2) nylon studs with spring nut retainers located at bottom surface at approximate center line of glove compartment door	1	All	A B	62/63
C3AZ 18476-A	For heater - 2" core - does not have nylon studs with spring nut retainers located at bottom surface at approximate center line of glove compartment door	1	All	A B	62/63
	For heater - 2" core	1	All	A	64
CODF 18476-A	For heater	1	All	C	60/64
FAA 18476-A	R.H. and L.H. - for heater	2	All	D	60
FFC 18476-A	R.H. - for a/cond.	1	All	D	60
FFC 18477-A	L.H. - for a/cond.	1	All	D	60
C1VV 18476-A	R.H. - for heater	1	All	D	61
C1VV 18477-A	L.H. - for heater	1	All	D	61
C2VY 18476-A	R.H. - for heater	1	All	D	62
C2VY 18477-A	L.H. - for heater	1	All	D	62
18A476	SEAL (HEATER MOTOR DASH PANEL COVER)				
COAF 18A476-A	For heater only	1	All	A	61
18A477	GASKET (HEATER BLOWER MOTOR MOUNTING PLATE)				
COAF 18A477-A		1	All	A B	61/63
18481	BRACKET (HEATER & AIR CONDITIONER HOSE SUPPORT)				
FFC 18481-D	For heater	1	312	A	60
	For heater and/or a/cond.	1	All	A	61/62
	For heater	1	All	D	60
C1VF 18481-A		1	All	D	61/62
18A484	HOUSING (HEATER & AIR CONDITIONER)				
C1AF 18A484-B		1	All	A	61
C2AZ 18A484-A	(Use with 2-1/2" heater core) Δ NS - RB C3AZ-18A484-A - use with 2" heater core	1	All	A	62/63
C3AZ 18A484-A	Use with 2" heater core	1	All	A	62
		1	All except 54F, 57C, F, 63C, F, 65C, F, 75C, F, 76B, C, F	A	63/64
C3AZ 18A484-B	Use with 2" heater core - BLACK only	1	54F, 57C, F, 63C, F, 65C, F, 75C, F, 76B, C, F	A	63/64

CONTINUED ON NEXT PAGE

GROUP AND PART NUMBER	DESCRIPTION, SIZE, ETC.	NO. REQ'D	MODEL OR ENGINE CUBIC INCH DISPLACEMENT	VEHICLE CODE	YEAR 19___
18A484	HOUSING (HEATER & AIR CONDITIONER) CONTINUED				
C2YY 18A484-A	Use with 2-1/2" heater core (Δ)	1	All	B	62/63
C3OZ 18A484-A	Use with 2" heater core (§)	1	All	B	62/63
C3VY 18A484-B	For heater and/or a/cond. (a)	1	All	D	63/64
42161-S	Screw-hex. washer hd.-self-tap.-No. 10-12 x 1-1/2"	8	a		
	Δ - Use in heater assembly having (2) nylon studs with spring nut retainers located at bottom surface at approximate center line of glove compartment door				
	§ Not used in heater assembly having (2) nylon studs with spring nut retainers located on bottom surface at approximate center line of glove compartment door				
18A487	PLATE (HEATER HOUSING CORE)				
C1AF 18A487-A		1	All	A	61
18489	CONNECTOR (HEATER BLOWER TO AIR DUCT)				
FEK 18489-B	Case to blower	1	All	A	60
	Case to blower for heater with a/cond.	2	All	D	60
FFC 18489-B	Case to blower for heater	2	All	D	60
18490-1	NOZZLE (WINDSHIELD DEFROSTER)				
COMF 18490-A	R.H. - for heater and/or a/cond.	1	All	A	60
COMF 18491-C	L.H. - for heater and/or a/cond.	1	All	A	60
C1AF 18490-A	R.H. - for heater and/or a/cond.	1	All	A	61/62
COAF 18491-B	L.H. - for heater and/or a/cond.	1	All	A	61/62
C3AZ 18490-A	R.H. - for heater (a)	1	All	A	63/64
C3AZ 18491-A	L.H. - for heater (a)	1	All	A	63/64
C2OZ 18490-A	R.H. - for heater	1	All	B	62
C2OZ 18491-A	L.H. - for heater	1	All	B	62
C3OZ 18490-A	R.H. - for heater	1	All	B	63
C3OZ 18491-A	L.H. - for heater	1	All	B	63
CODF 18490-A	For heater	2	All	C	60/63
C4DZ 18491-A	For heater - R.H. and L.H. - cut to suit at connector end where applicable (c)	2	All	C	64
FFC 18490-C	R.H. - for heater	1	All	D	60
COLF 18491-A	L.H. - for heater	1	All	D	60
COLF 19A788-D	R.H. - for a/cond.	1	All	D	60
COLF 18491-B	L.H. - for a/cond.	1	All	D	60
C1VY 18490-A	R.H. - for heater	1	All	D	61/62
C1VY 18491-A	L.H. - for heater	1	All	D	61/62
C3VY 18490-A	R.H. - for heater and/or a/cond. - located at instrument panel	1	All	D	63
C3VY 18491-A	L.H. - for heater and/or a/cond. - located at instrument panel	1	All	D	63
C3VY 18490-B	R.H. - outlet - for a/cond. - located at evaporator assembly (b)	1	All	D	63/64
C3VY 18491-B	L.H. - outlet - for a/cond. - located at evaporator assembly (b)	1	All	D	63/64
C4VY 18490-A	R.H. - for heater and/or a/cond. - located at instrument panel (b)	1	All	D	64
C4VY 18491-A	L.H. - for heater and/or a/cond. - located at instrument panel (b)	1	All	D	64
34653-S	Nut and washer-hex. -No. 8-32	6	b		
53038-S	Screw-oval trim hd. cr. rec. tap. -No. 8-15	4	a		
357849-S	C-clip moulding	6	b		
372850-S	Clip-nozzle to instrument panel	4	c		

Heater

GROUP AND PART NUMBER	DESCRIPTION, SIZE, ETC.	NO. REQ'D	MODEL OR ENGINE CUBIC INCH DISPLACEMENT	VEHICLE CODE	YEAR 19____
18A491	SEAL (AIR CONDITIONER & HEATER BLOWER TO DASH)				
C1VF 18A491-A		2	All	D	61/62
C3VY 18A491-A	For heater and/or a/cond.	1	All	D	63/64
18495	VALVE (HEATER & AIR CONDITIONER WATER CONTROL)				
B9A 18495-B	For heater and/or a/cond. - vacuum	1	All	A	60
C2VY 18495-B	For heater and/or a/cond.	2	All	D	62
	Includes 34117-S	1	All	D	63/64
18A497	SHAFT (AIR CONDITIONER AIR OUTLET DOOR)				
COAF 18A497-A	For a/cond. except hang-on	1	All except 223	A	61/62
18A499	GRILLE (VENT AIR OUTLET)				
COAF 18A499-A	For heater	1	All	A	61
COAF 18A499-B	For a/cond. except hang-on	1	All	A	61/62
C2OA 18A499-A	For heater	1	All	A B	62/64
18A501	BELT (HEATER & AIR CONDITIONER TEMPERATURE REGULATOR CONTROL)				
COLF 18A501-A	For heater and/or a/cond.	1	All	D	60
C1VF 18A501-A	Small - for heater	1	All	D	61/62
18502	VALVE (AIR CONDITIONER & HEATER TEMPERATURE REGULATOR)				
COAF 18502-D	For heater	1	All	A	61
COAF 18502-E	For a/cond. except hang-on	1	All	A	61/62
COLF 18502-C	Includes calibrated motor	1	All	D	60
C1VF 18502-A	R. H. (§)	1	All	D	61
C1VF 18B364-A	L. H. (§)	1	All	D	61
	§ Package also includes - (1) B7A-19460-A seal				
C2VY 18502-A		2	All	D	62
C3VY 18502-A	For heater and/or a/cond. vacuum control - located at instrument panel	1	All	D	63
C3VY 18502-B	For heater and/or a/cond. - located at heater blower assembly (a)	1	All	D	63/64
C4VY 18502-A	For heater and/or a/cond. vacuum control - located at instrument panel (a)	1	All	D	64
42141-S	Screw-hex. washer hd. -self-tap. -No. 10-12 x 5/8"	2	a		
18A502	BEZEL (HEATER TEMPERATURE REGULATOR CONTROL)				
COLF 18A502-C	Use for heater	1	All	D	60
18504-5	WHEEL (HEATER & AIR CONDITIONER BLOWER)				
COMF 18504-B	For heater	1	All	A	60
C3AZ 18504-A	For heater - statically balanced	1	All	A B	63/64
COAF 18504-C	For heater	1	All	A B	61/62
	L. H. - clockwise - for heater	1	All	D	60
CODF 18504-B	For heater	1	All	C	60/64
B7A 18504-C	R. H. - counter-clockwise - for heater	1	All	D	60
FFC 18504-A	R. H. - counter-clockwise - for a/cond.	1	All	D	60
FFC 18505-A	L. H. - clockwise - for a/cond.	1	All	D	60
C1VF 18504-A	R. H. - counter-clockwise - for heater	1	All	D	61/62
C1VF 18505-A	L. H. - clockwise - for heater	1	All	D	61/62

Heater

GROUP AND PART NUMBER	DESCRIPTION, SIZE, ETC.	NO. REQ'D	MODEL OR ENGINE CUBIC INCH DISPLACEMENT	VEHICLE CODE	YEAR 19___
18A507	HOUSING (HEATER & AIR CONDITIONER TEMPERATURE REGULATOR CONTROL)				
COLF 18A507-A	For heater and/or a/cond.	1	All	D	60
18A508	NUT (HEATER & AIR CONDITIONER REGULATOR CONTROL BEZEL MOUNTING)				
COLF 18A508-A		1	All	D	60
C1VF 18A508-A	For blower switch - for heater and/or a/cond.	2	All	D	61/62
		1	All	D	63
18A509	SEAL (HEATER & AIR CONDITIONER TEMPERATURE REGULATOR CONTROL)				
COLF 18A509-A	Dust	1	All	D	60
	NS-improvise - dust - for heater and/or a/cond.	1	All	D	61
18A510	YOKE (HEATER TEMPERATURE REGULATOR CONTROL)				
COLF 18A510-A		1	All	D	60
C1VF 18A510-A		1	All	D	61/62
18513	KNOB (HEATER & AIR CONDITIONER BLOWER SWITCH)				
COMF 18513-A	Heater and/or a/cond.	1	All	A	60
COAF 18513-A	Heater and/or a/cond.	1	All	A	61
	For a/cond. except hang-on	1	All except 65C, 76B	A	62
C2MY 18513-A	For heater	1	All	A	62
	For a/cond. except hang-on	1	65C, 76B	A	62
C3MY 18513-A	For heater - chrome	1	All	A	63/64
C4MY 18513-A	For heater with Deluxe a/cond. - chrome	1	All	A	64
C2OZ 18513-A	For heater	1	All	B	62/63
C4DZ 18513-A	For heater - chrome	1	All	C	64
C3VY 18513-A	Chrome	1	All	D	63
C4VY 18513-A	Chrome - for heater and/or a/cond. (a)	1	All	D	64
372787-S	NS-screw-No. 8-32 x .19" set NOTE - Also refer to group 17513	1	a		
18A513	COUPLING (HEATER & AIR CONDITIONER TEMPERATURE REGULATOR CONTROL HOSE)				
COLY 18A513-A	Use with connector block COLF-18A525-B	1	All	D	60
C4VY 18A513-A	For a/cond. - includes gasket (a)	1	All	D	64
C4VY 18A513-B	For heater only - includes gasket (a)	1	All	D	64
54633-S	NS-screw-hex. hd. -No. 10-32 x 3/8"-to attach to 18A525 assembly	1	a		
18A516	SPRING (HEATER TEMPERATURE REGULATOR CONTROL BELT TENSION)				
COLF 18A516-A		1	All	D	60
18518	CONTROL CABLES (HEATER & AIR CONDITIONER)				
PB9M 18518-A	Heater temperature - 49-1/4" long - use with manual heater	1	All	A	60
FDU 19988-A	88-1/4" long for heater with manual controls - cut to required length (1) req'd. - for heater air control (1) req'd. - for heater temperature control	AR	All	A	60
	NS-29-1/2" long for heater temperature - cut from FDK-18518-B CONTINUED ON NEXT PAGE	1	All	A	62

GROUP AND PART NUMBER	DESCRIPTION, SIZE, ETC.	NO. REQ'D	MODEL OR ENGINE CUBIC INCH DISPLACEMENT	VEHICLE CODE	YEAR 19____
18518	CONTROL CABLES (HEATER & AIR CONDITIONER) CONTINUED				
FDK 18518-B	47-1/2" long -				
	For defroster with heater and/or a/cond.	AR	All	A	61
	except hang-on - 22-1/2" long - cut as required				
	For heater - manual air control - 34" long - cut as required	1	All	A	61
	For heater and/or a/cond. except hang-on - 36-3/8" long - cut as required	1	All	A	61
	For defroster with a/cond. except hang-on - 22-1/2" long - cut as required	AR	All	A	62
	For heater - manual air control - 32-3/4" long - cut as required	1	All	A	62
	For a/cond. except hang-on	1	All	A	62
	For heater - manual air control - 27-1/2" long - cut as required	1	All	A	63
	For heater - temperature control - 29-1/8" long - cut as required	1	All	A	63
	For heater and/or Deluxe a/cond. - manual air control - cut to required length of 27-1/2"	1	All	A	64
	For heater and/or Deluxe a/cond. - temperature control - cut to required length of 29-1/8"	1	All	A	64
	For heater and Deluxe a/cond. - control assembly located on instrument panel and to thermostat - located on evaporator assembly - cut to required length of 23-1/4"	1	All	A	64
	For heater - temperature control - 18-1/2" long - cut as required	1	All	B	63
	NS-18-1/2" long for heater temperature - cut from FDK-18518-B	1	All	B	62
	NS-21-1/2" long for defroster with heater - cut from FDK-18518-B	1	All	B	62/63
C1KF 18518-B	Chrome knob - 35" long for heater temperature control	1	All	C	60/63
C1KF 18548-B	Chrome knob - 22" long for defroster control	1	All	C	60/63
CODZ 18518-B	White knob - 35" long for heater temperature control	1	All	C	60/63
CODZ 18548-B	White knob - 22" long for defroster control	1	All	C	60/63
C4DZ 18548-A	For heater - defroster control - 19" long (a)	1	All	C	64
C4DZ 18552-A	For heater - 31" long (a)	2	All	C	64
	(1) req'd. - for temperature control				
	(1) req'd. - for air control				
42120-S	Screw-hex. washer hd. -self-tap. -No. 10-16 x 3/8"	AR	a		
353261-S	Clip-control wire	AR	a		
378523-S32	Clip to attach control cables to heater control only	AR	a		
18A518	SHAFT (HEATER TEMPERATURE REGULATOR CONTROL)				
C1VF 18A518-A		1	All	D	61/62
18519	KNOB (HEATER & AIR CONDITIONER REGULATOR CONTROL)				
COMF 18519-A	Use with heater with manual controls	2	All	A	60
C1AF 18519-A	For heater and/or a/cond.	☆2	All	A	61
C2AZ 18519-A	For a/cond. except hang-on	☆2	All except 65C, 76B	A	62
C2MY 18519-A	For heater	☆2	All	A	62/63
	For a/cond. except hang-on	2	65C, 76B	A	62
	For heater and/or Deluxe a/cond. - chrome	☆2	All	A	64

CONTINUED ON NEXT PAGE

Heater

GROUP AND PART NUMBER	DESCRIPTION, SIZE, ETC.	NO. REQ'D	MODEL OR ENGINE CUBIC INCH DISPLACEMENT	VEHICLE CODE	YEAR 19____
18519	KNOB (HEATER & AIR CONDITIONER REGULATOR CONTROL) CONTINUED				
C2OA 18519-A	For heater ☆ (1) req'd. - for temperature control ☆ (1) req'd. - for defroster control	☆2	All	B	62/63
C5DZ 18519-A	For heater - for temperature control - chrome	1	All	C	64
C5DZ 18519-B	For heater - for heat control - chrome	1	All	C	64
C5DZ 18519-C	For heater - for defroster control - chrome	1	All	C	64
COLF 18A373-A	For heater and a/cond.	1	All	D	60
C1VF 18519-A(02)	BLUE	2	All	D	61
C1VF 18519-A(04)	GREEN	2	All	D	61
C1VF 18519-A(06)	TURQUOISE	2	All	D	61
C1VF 18519-A(01)	BLACK	2	All	D	61/62
C1VF 18519-A(03)	BEIGE	2	All	D	61/62
C1VF 18519-A(05)	RED	2	All	D	61/62
C1VF 18519-A(07)	WOOD GRAIN	2	All	D	61/62
C1VF 18519-A(20)	BLUE	2	All	D	62
C1VF 18519-A(21)	GREEN	2	All	D	62
C1VF 18519-A(22)	SILVER BLUE	2	All	D	62
C1VF 18519-A(23)	TURQUOISE	2	All	D	62
C3VY 18519-A	Chrome - for heater and/or a/cond. - (1) req'd. - for heater and/or a/cond. control (1) req'd. - for temperature regulator control	2	All	D	63
C4VY 18519-A	Chrome - for heater and/or a/cond. - (a) (1) req'd. - for heater and/or a/cond. control (1) req'd. - for temperature regulator control	2	All	D	64
372787-S	NS-screw-set-No. 8-32 x .19"	2	a		
18A520	HOSE (HEATER & AIR CONDITIONER TEMPERATURE REGULATOR CONTROL)				
COLF 18A520-B	3/16" O.D. - 5/64" I.D. x 26-1/2" long - (5) req'd. - for heater (6) req'd. - for a/cond.	AR	All	D	60/62
C1VF 18A520-G	7/16" O.D. - 7/32" I.D. x 28" long - for heater and/or a/cond.	AR	All	D	60/62
C1VF 18A520-A	3/16" O.D. - 5/64" I.D. x 3-3/4" long - for a/cond.	1	All	D	61
C1VF 18A520-C	7/16" O.D. - 7/32" I.D. x 1-1/2" long - for a/cond.	1	All	D	61
18A521	GASKET (VACUUM HOSE CONNECTOR BLOCK)				
COLF 18A521-A		1	All	D	60
18A522	TANK & BRACKET (HEATER VACUUM RESERVOIR)				
COLF 18A522-D		1	All	D	60
	Refer to group 57219A02 for 1961 and 1962 vehicles				
18A525	BLOCK (HEATER & AIR CONDITIONER TEMPERATURE REGULATOR CONTROL HOSE CONNECTOR)				
COLF 18A525-B	Refer to 18A513 for hose coupling block	1	All	D	60
C1VY 18A525-A		1	All	D	61
C2VY 18A525-A		1	All	D	62
C3VY 18A525-A	For heater and/or a/cond.	1	All	D	63
C4VY 18A525-C	For a/cond. (a)	1	All	D	64
C4VY 18A525-D	For heater (a)	1	All	D	64
42119-S	Screw-hex. washer hd. -self-tap. -No. 8-18 x 3/8"	3	a		
377975-S	NS-strap. to attach vacuum tube to instrument panel	1	a		

Heater

GROUP AND PART NUMBER	DESCRIPTION, SIZE, ETC.	NO. REQ'D	MODEL OR ENGINE CUBIC INCH DISPLACEMENT	VEHICLE CODE	YEAR 19____
18527	MOTOR (HEATER & AIR CONDITIONER BLOWER)				
B9FM 18527-A	For heater	1	All	A	60
COAF 18527-D	For heater	1	All	A	61
C2OZ 18527-A	For heater	1	All	A B	62/64
CODF 18527-A	For heater	1	All	C	60/64
B8T 18527-A	R.H. - counter-clockwise - for heater	1	All	D	60
FFC 18527-A	L.H. - clockwise - for heater	1	All	D	60
C1VF 18527-A	R.H. - counter-clockwise - for heater	1	All	D	61/62
C1VF 18527-B	L.H. - clockwise - for heater	1	All	D	61/62
C3VY 18527-A	For heater and/or a/cond. - counter-clockwise - includes balanced wheel	1	All	D	63
C3VY 18527-B	For heater and/or a/cond. -counter-clockwise- (a) includes balanced wheel assembly	1	All	D	64
42141-S	Screw-hex. washer hd. -self-tap. -No. 10-12 x 5/8"	4	a		
18531-2	BRACKET (HEATER & AIR CONDITIONER CONTROL MOUNTING)				
C2AZ 18531-A		1	All	A	62
C3AZ 18531-A		1	All	A	63
C4MY 18531-A	For heater and/or Deluxe a/cond. (a)	1	All	A	64
CODF 18532-A		1	All	C	60/63
C4DZ 18531-A	For heater (a)	1	All	C	64
C4VY 18531-A	For heater and/or a/cond. - includes heater blower switch	1	All	D	64
42120-S	Screw-hex. washer hd. tap. -No. 10-16 x 3/8"	AR	a		
353261-S	Clip-control wire assy.	AR	a		
18541	SOCKET & WIRE (HEATER & AIR CONDITIONER CONTROL LAMP)				
FEG 18541-A	For heater and/or a/cond. except hang-on	1	All	A	61/62
	For heater	1	All	A	63
	For heater and/or Deluxe a/cond.	1	All	A	64
18A542-3	CASE (HEATER & AIR CONDITIONER CORE)				
B9MY 18A542-A	For heater	1	All	A	60
B9MY 18A542-B	For a/cond. except hang-on	1	All	A	60
CODZ 18A542-B	Front - includes temperature control valve	1	All	C	60/64
CODF 18A543-E	Rear	1	All	C	60/64
18A544	HOUSING (AIR CONDITIONER & HEATER BLOWER)				
B8LY 18A544-A	R.H. - for a/cond.	1	All	D	60
B8LY 18A409-A	L.H. - for a/cond.	1	All	D	60
B8LY 18A544-B	R.H. - for heater	1	All	D	60
B9LY 18A409-A	L.H. - for heater	1	All	D	60
C1VF 18568-A	R.H. - for heater	1	All	D	61
C1VF 18A409-A	L.H. - for heater	1	All	D	61
C4VY 18A544-A	For heater and/or a/cond. (a)	1	All	D	63/64
34653-S	Nut and washer-hex. -No. 8-32	4	a		
44719-S	Washer-flat-1/4"	4	a		
378004-S	Bolt-1/4"-32	4	a		
18545	NUT (HEATER BLOWER SWITCH)				
CODZ 18545-B		1	All	C	60/63
18A545	VALVE (HEATER TEMPERATURE CONTROL)				
CODF 18A545-B	Also serviced in 18A542	1	All	C	60/63
CODZ 18A545-B	Also serviced in 18A542	1	All	C	64
18548	REFER TO GROUP 18518				

Heater

GROUP AND PART NUMBER	DESCRIPTION, SIZE, ETC.	NO. REQ'D	MODEL OR ENGINE CUBIC INCH DISPLACEMENT	VEHICLE CODE	YEAR 19____
18549	CONTROL (HEATER)				
C2OZ 18549-A	For heater (b)	1	All	B	62/63
COLF 18549-C	Dole - heater - identified with red paint dab	1	All	D	60
C2VY 18549-A	For heater	1	All	D	61/62
C3VY 18549-A	For heater (a)	1	All	D	63
C4VY 18549-A	For heater (c)	1	All	D	64
55583-S	NS-screw and washer assy.-to attach to 18531 heater control mounting bracket assy.	2	c		
353261-S	Clip-control wire to heater plenum chamber	AR	b		
377930-S	Clip - BLACK with 9/32" holes	1	a		
18552	REFER TO GROUP 18518				
18B555	CLAMP (HEATER CONTROL CABLE RETAINING)				
C2OZ 18B555-A	Use with heater only	1	All	B	62/63
18556	HOSE (HEATER & AIR CONDITIONER DEFROSTER)				
B5A 18556-C	35.5" long for heater and/or a/cond.	AR	All	A	61/62
	2-1/2" I.D. x 35-1/2" long	2	All	A	63/64
	R.H. - for heater - cut to required length of 16"	1	All	A	63/64
	L.H. - for heater - except with 1964 Deluxe	1	All	A	63/64
	a/cond. - cut to required length of 27"	1	All	A	63/64
	L.H. - for a/cond. - cut to required length of 33" - use from evaporator to L.H. instrument panel	1	All	A	64
	For heater - cut to required length of 24"	2	All	C	60/62
	R.H. - for heater - cut to required length of 20-1/2" - also serviced in 18491 assembly	1	All	C	63/64
	L.H. - for heater - cut to required length of 24" - also serviced in 18491 assembly	1	All	C	63/64
	L.H. - for heater - cut to required length of 13"	1	All	D	63
	R.H. - for heater - cut to required length of 13-1/2"	1	All	D	63
	R.H. and L.H. - for a/cond. - cut to required length of 13-1/2"	2	All	D	63
	R.H. - for a/cond. - cut to required length of 11"	1	All	D	64
	L.H. - for a/cond. - cut to required length of 18"	1	All	D	64
	R.H. and L.H. - for heater - cut to required length of 18"	2	All	D	64
18561	CONTROL (HEATER REGULATOR)				
COMF 18561-A	For heater with manual controls	1	All	A	60
18A566	COLLAR & CONNECTOR (HEATER INLET)				
C2OZ 18A566-A		1	All	B	62/63
CODF 18A566-B	(a)	1	All	C	60/64
373920-S	NS-clip-use to retain collar and connector to dash panel	AR	a		
18568	REFER TO GROUP 18A544				
18570	GASKET (HEATER & AIR CONDITIONER TO DASH)				
CODF 18570-A		1	All	C	60/64
FAA 18570-A	R.H. and L.H. - for heater	2	All	D	60/62
C3VY 18570-A	Rectangular - for heater and/or a/cond.	1	All	D	63/64
C3VY 18570-B	Circular - for heater and/or a/cond.	1	All	D	63/64

Heater

GROUP AND PART NUMBER	DESCRIPTION, SIZE, ETC.	NO. REQ'D	MODEL OR ENGINE CUBIC INCH DISPLACEMENT	VEHICLE CODE	YEAR 19____
18572	CLAMP (HOT WATER HEATER HOSE)				
C3AZ 18572-A	Not used with piston type carburetor choke	1	All	A B C	63/64
BPA 18572-A	Multiple usage part	AR	All	A B C D	60/64
	Also refer to group 8556				
18578	SWITCH (HEATER & AIR CONDITIONER)				
COMF 18578-A	Use with heater and/or a/cond. - blower	1	All	A	60
C1AZ 18578-A	Use with heater and/or a/cond. - blower	1	All	A	61/62
C3AZ 18578-A	Use for heater - blower	1	All	A	63
C4MY 18578-A	Use for heater - blower	1	All	A	64
C4MY 18578-B	Use for heater with Deluxe a/cond. - blower	1	All	A	64
C2OZ 18578-A	Use for heater - blower	1	All	B	62/63
B9A 18578-C	Use for a/cond. temperature control	1	All	C	60/62
C2DZ 18578-A	Use for heater - blower	1	All	C	60/63
C4DZ 18578-A	Use for heater - blower	1	All	C	64
COLF 18578-A	Use with heater	1	All	D	60
COLF 18578-C	Use with a/cond.	1	All	D	60
C1VF 18578-A	Use for heater - blower	1	All	D	61/63
C4VY 18578-A	Use for heater and/or a/cond. - blower - also (a) serviced in 18531 heater control mounting brkt. assy.	1	All	D	64
50801-S	NS-screw -to attach to 18531 assy.	2	a		
18B578	KIT (HANDLE - HEATER DOOR & AIR VENT DUCT)				
C1KY 18B578-A	For service of basic part numbers 18A646, 01934 and 01935	3	All	C	60/63
	For service of basic part numbers 18A646 and 01934 (1) req'd. - for heater door (1) req'd. - for R.H. air vent door	2	All	C	64

Consists of the following -

(1) CODF-18A561-B pawl (1) CODF-18A564-B retainer (1) 356363-S7 wave washer
(1) CODF-18A563-B handle

Details of kit not serviced loose

18580	CLAMP (HEATER CONTROL MOUNTING)				
C4DZ 18580-A		2	All	C	64
18581	PLATE (HEATER MOTOR MOUNTING)				
PB9M 19833-B	For heater	1	All	A	60
COKY 18581-A		1	All	A	61
C2MY 18581-A	For heater	1	All	A B	62/64
CODF 18581-A	For heater (a)	1	All	C	60/64
FFC 18581-B		1	All	D	60
C1VF 18581-A	R. H.	1	All	D	61/62
C1VF 18B244-A	L. H.	1	All	D	61/62
33795-S	Nut-hex. -1/4"-20	4	a		
34079-S	Nut-hex. -No. 10-32	2	a		
44713-S	Washer-flat-No. 10	2	a		
18583	GASKET (HEATER & AIR CONDITIONER BLOWER MOTOR MOUNTING)				
PB9M 18583-A	For a/cond. except hang-on	1	All	A	60
COAF 18583-A	For heater	1	All	A	61
C1UF 18583-A	For heater	1	All	A B	62/64
FDA 18583-A	For heater and/or a/cond.	1	All	A	60/61
	For a/cond.	2	All	B	62
	For heater	1	All	C	60/64
	For heater and/or a/cond.	2	All	D	60/62
FFC 18583-B	For a/cond. - plate to housing	2	All	D	60
C1VY 18583-A	For heater	2	All	D	62

Heater

GROUP AND PART NUMBER	DESCRIPTION, SIZE, ETC.	NO. REQ'D	MODEL OR ENGINE CUBIC INCH DISPLACEMENT	VEHICLE CODE	YEAR 19____
18A587	CAP (HEATER & AIR CONDITIONER MOTOR MOUNTING)				
COLF 18A587-A	For heater and/or a/cond. - use to cap vacuum nipples on heater control assembly 18549 and/or a/cond. control assembly 19980	AR	All	D	63
18591	RESISTOR (HEATER & AIR CONDITIONER SWITCH TO BLOWER MOTOR)				
C1SZ 18591-A	For heater	1	All	A	61
C2OA 18591-A	For heater	1	All	A B	62/64
C1VF 18B310-A		1	All	D	61/62
C3VY 18B310-A	For a/cond.	1	All	D	63/64
C3VY 18B310-B	For heater and/or a/cond. - copper terminals	1	All	D	63/64
18A594	CONNECTOR & PLATE (HEATER & AIR CONDITIONER)				
COAF 18A594-A	For heater and/or a/cond.	1	All	A	61/62
	For heater	1	All	A	63/64
18B595	BY-PASS (HEATER & AIR CONDITIONER CORE WATER)				
C2AZ 18B595-A	For a/cond. except hang-on	1	352,390	A	62
18596	SEAL (HEATER CORE TUBE)				
	NS-improvise - sponge rubber 1-1/2" O.D. x 1/2" I.D. x 5/8"	2	All	D	63
18598	BEZEL (HEATER & AIR CONDITIONER BLOWER SWITCH)				
C4MY 18598-A	For heater with Deluxe a/cond.	1	All	A	64
CODF 18598-A		1	All	C	60/63
18599	ELBOW (HOT WATER HEATER & AIR CONDITIONER CONNECTION)				
FEW 18599-C	For heater and/or a/cond.	1	383, 430	A	60
B7A 18599-B	For heater only	1	312	A	60
	For heater and/or a/cond.	1	All	A	61
	For heater - located on engine block	1	427-4V	A	64
C1AF 18599-A	For heater - located on engine block	1	427-8V	A	64
8M 18599	For heater and/or a/cond. - used on water pump	1	All	A	60/61
		1	All except 352, 390	A	62
	For vehicles without heaters	1	All	A	63
	Located at water pump	1	390	A	64
		2	170	B	62
		2	All	C	60/62
	For heater	2	144, 170, 200	C	63/64
C3OZ 18599-A	For heater	1	221, 260, 289	B C	63/64
FFC 18599-G		1	All	D	60
COLF 18599-A	Single outlet - 30°	1	All	D	60/61
C1VF 18599-A	Double outlet	1	All	D	61
C2VY 18599-A	Triple outlet	1	All	D	62
C3VY 18599-A	Double outlet - for heater and/or a/cond.	1	All	D	63/64
374135-S	Elbow - located at water pump	1	All	D	63/64
378599-S	Four outlet - 5/16" - for heater and/or a/cond. - use with heater control vacuum tube assembly	1	All	D	63/64
353376-S	Connector-tee	2	All	D	64
18A603	CASE & INSULATOR (HEATER & AIR CONDITIONER CORE)				
FFC 15438-C	R.H. - for a/cond.	1	All	D	60
B9LF 18A603-A	L.H. - for a/cond.	1	All	D	60
18B606	SHIELD (AIR CONDITIONER BLOWER MOTOR SWITCH)				
C2VY 18B606-A	Use on L. H. blower assembly only	1	All	D	61/62

Heater

GROUP AND PART NUMBER	DESCRIPTION, SIZE, ETC.	NO. REQ'D	MODEL OR ENGINE CUBIC INCH DISPLACEMENT	VEHICLE CODE	YEAR 19___
18608	SWITCH (RADIO FOOT CONTROL)				
FDU 18608-B	With wire - 30" long	1	All	D	60
18611	KNOB (AIR CONTROL)				
COMF 18611-A	R.H. and L.H. - use when heater and/or a/cond. is not installed	2	All	A	60
C3MY 18611-A	R.H. - use on vehicles with movable steering column	1	All	A	63/64
C4GY 18611-A	L.H. - BLACK	1	All	C	64
18619	PLATE (AIR CONDITIONER CONTROL NAME)				
B9A 18619-B		1	All	C	60/62
18A619	CONNECTOR (HEATER & AIR CONDITIONER PLENUM CHAMBER TO DEFROSTER NOZZLE)				
B9MY 18A619-A	13-1/4" long - 4" oval - for heater and/or a/cond. - cut to size as required	AR	All	A	60
	NS-L.H. - for heater only - 18.50" long - cut from B5A-18556-C	1	All	A	61
	NS-R.H. - for heater and/or a/cond. except hang-on	1	All	A	61
	R.H. - for a/cond. - 2.16" I.D. x 11" long Note - cut from B5A-18556-C	1	All	A	62
	NS-R.H. - for heater - cut from B5A-18556-C	1	All	A	62
	NS-L.H. - for heater and/or a/cond. - 22.50" long- cut from B5A-18556-C	1	All	A	62
18A628-9	DUCT & INSULATOR (AIR CONDITIONER & HEATER INLET)				
B9LF 18A628-A	R.H. - for a/cond.	1	All	D	60
B9LF 18A629-A	L.H. - for a/cond.	1	All	D	60
18633	DUCT (HEATER & AIR CONDITIONER CHAMBER TO REAR SEAT)				
C3VY 18633-A	For heater and/or a/cond. - includes insulator and heater outlet connector	1	All	D	63
	Use on models without bucket seats (a)	1	All	D	64
C4VY 18633-A	For heater and/or a/cond. - includes insulator (a) and heater outlet connector - use on models with bucket seats	1	All	D	64
42127-S	Screw-hex. washer hd. -self-tap. -No. 10-12 x 1/2"	2	a		
373086-S	NS-screw-washer hd. -self-tap.	12	a		
18A635	BRACKET (HEATER & AIR CONDITIONER WATER CONTROL VALVE MOUNTING)				
B9MY 18A635-A	For manual control heater only	1	312	A	60
COMF 18A635-A	For heater and/or a/cond.	1	All	A	60
	NS-improvise	2	All	D	62
18A638	GASKET (AIR CONDITIONER WINDSHIELD DEFROSTER NOZZLE) OUTLET				
COMF 18A638-A	For heater and/or a/cond.	2	All	A	60
C1VV 18A638-A	For heater	2	All	D	61/62
C3VY 18A638-A	For a/cond. - located at evaporator assembly	2	All	D	63/64
18A639	BEZEL (WINDSHIELD DEFROSTER OUTLET)				
COMF 18A639-AP	For heater and/or a/cond.	2	All	A	60
18A640	SEAL (WINDSHIELD DEFROSTER OUTLET BEZEL)				
COMF 18A640-A	For heater and/or a/cond.	2	All	A	60
18B641	CONNECTOR (HEATER & AIR CONDITIONER CHAMBER TO REAR SEAT DUCT)				
C3VY 18B641-A	For heater and/or a/cond. - also serviced in C3VY-18633-A and C4VY-18633-A rear seat duct assembly	1	All	D	63/64

Heater

GROUP AND PART NUMBER	DESCRIPTION, SIZE, ETC.	NO. REQ'D	MODEL OR ENGINE CUBIC INCH DISPLACEMENT	VEHICLE CODE	YEAR 19____
18A646	DOOR & HINGE (HEATER AIR VENTILATION)				
CODF 18A646-D		1	All	C	60/64
18A650	SPACER (HEATER PLENUM CHAMBER MOUNTING)				
COMF 18A650-A	For heater only	2	All	A	60
18A651	PANEL & RETAINER (HEATER & AIR CONDITIONER CONTROL)				
C1AF 18A651-B	For heater and/or a/cond. For dial - order part number 10A925 cover and back plate	1	All	A	61
C2MY 18A651-A	For heater and/or a/cond.	1	All	A	62
C3MY 18A651-A	For heater	1	All	A	63
C4MY 18A651-A	For heater and/or Deluxe a/cond.	1	All	A	64
C4DZ 18A651-A	For heater	1	All	C	64
18A656	RELAY (HEATER & AIR CONDITIONER MOTOR CONTROL)				
COLF 18A656-A	For a/cond. - high blower relay	1	All	D	60
18658	SEAL (HEATER CORE TO CASE)				
CODF 18658-A		2	All	C	60/64
FFC 18658-A	For heater	2	All	D	60
C1VY 18658-A		2	All	D	61/62
18B658	CLAMP (HEATER & AIR CONDITIONER BLOWER TO HEATER ASSEMBLY)				
C3VY 18B658-A	For heater and/or a/cond.	1	All	D	63/64
18A662-3	PANEL (COWL SIDE HEATER UNIT MOUNTING)				
C1VB 18A662-A	R. H.	1	All	D	61/62
C1VB 18A663-A	L. H.	1	All	D	61/62
18663	TUBE (HEATER & AIR CONDITIONER WATER OUTLET)				
C2OZ 18663-A	For a/cond. hang-on	1	170	B	62
C3DZ 18663-A	For Economy a/cond. with dehydrator and receiver tank mounted on side of condenser assembly	1	144, 170, 200	C	63/64
C1VY 18663-A	"Y"	1	All	D	61
C2VY 18663-A		1	All	D	62
C3VY 18663-A	For heater and/or a/cond.	1	All	D	63
	Located between automatic choke and water pump	1	All	D	64
18A664	SUPPORT (COWL SIDE HEATER UNIT MOUNTING PANEL)				
C1VB 18A664-B	R. H. and L. H.	2	All	D	61/62
18668	HOSE (HEATER TEMPERATURE CONTROL VACUUM OUTLET)				
	NS-54" long - red - cut from B7MY-17A605-C - for a/cond. with climate dial	1	All	A	60
18A668	BEZEL (HEATER CONTROL)				
C1VF 18A668-A	For heater temperature regulator control	2	All	D	61/62
	For door lock control	1	All	D	61/63
	For lighting switch	1	All	D	61/63
	For heater blower switch	1	All	D	63
	For electric antenna switch	1	All	D	63
18669	DEFLECTOR (HEATER INLET DUCT - AIR)				
FFC 18669-A	For heater	2	All	D	60
18A672	HOSE (HEATER AIR DISCHARGE)				
B8LY 18A672-A	R. H. - 12" long	1	All	D	60

Heater

GROUP AND PART NUMBER	DESCRIPTION, SIZE, ETC.	NO. REQ'D	MODEL OR ENGINE CUBIC INCH DISPLACEMENT	VEHICLE CODE	YEAR 19____
18A676	GASKET (WINDSHIELD DEFROSTER NOZZLE OUTLET)				
COLF 18A676-A	R. H. - for heater	1	All	D	60
18A685	GASKET (HEATER & AIR CONDITIONER BLOWER HOUSING TO DASH)				
B9MY 18A685-A	For heater and/or a/cond. except hang-on	1	All	A	60
18A688	REFER TO GROUP 18457				
18A689	REFER TO GROUP 18471				
18B691	JEWEL (HEATER & AIR CONDITIONER BLOWER INDICATOR)				
C4VY 18B691-A	For heater and/or a/cond.	1	All	D	64
18A693	GASKET (HEATER PLENUM CHAMBER TO SIDE COWL PANEL)				
B9LY 18A693-A	For heater	2	All	D	60
C1VF 18A693-A		2	All	D	61/62
18694	COVER (AIR CONDITIONER EVAPORATOR TEMPERATURE CONTROL THERMOSTAT)				
PB9M 18694-A	For a/cond. except hang-on	1	All	A	60
18753	CLAMP (AIR CONDITIONER & HEATER AIR INLET DUCT SLEEVE)				
B9MF 18753-A	For a/cond. except hang-on	1	All	A	60
FFC 18753-A	For heater and a/cond.	2	All	D	60
18759	FLANGE (AIR CONDITIONER AIR INLET DUCT TO DASH PANEL)				
PB9M 18759-A	For a/cond. except hang-on	1	All	A	60

Radio and Antenna

18A802	BEZEL (RADIO CONTROL)				
C1VF 18A802-B		1	All	D	61/63
18805	KIT (RADIO RECEIVER)				
C4MY 18805-AA	NS - 1/1/64 MW C4MY-18805-CA				
C4MY 18805-CA	Push button - transistor - AM - includes antenna when this kit is used to convert from AM-FM to AM only - use basic 04339 instrument panel finish center for installation	1	All	A	63
	Includes integral fader control for rear seat speaker (a, b, c)	1	All	A	64
C4MY 18805-BA	Push button - transistor - AM - FM - includes antenna - includes integral fader control for rear seat speaker - when used on vehicles equipped with Deluxe a/cond. C4MY-6204339-D instrument panel finish center must be used in lieu of panel assembly included in kit (a, b, c)	1	All	A	64
C2AZ 18805-B	Citizens Band Transmitter - includes channel No. 11 crystal (1) req'd. - for base unit (1) req'd. - for mobile unit	2	All	A B C D	60/64
C3YY 18805-A	Push button - transistor	1	All	B	62/63
C4GY 18805-AA	Push button - transistor - AM - includes antenna (a, b)	1	All	C	64

CONTINUED ON NEXT PAGE

GROUP AND PART NUMBER	DESCRIPTION, SIZE, ETC.	NO. REQ'D	MODEL OR ENGINE CUBIC INCH DISPLACEMENT	VEHICLE CODE	YEAR 19__
18805	KIT (RADIO RECEIVER) CONTINUED				
C4GY 18805-BA	Push button - transistor - AM-FM - includes (a,b) antenna - when installed on model 63E (1) C4GY-63045C38-B instrument panel applique center BLACK must be procured and applied to lower section of C4GY-6204339-C panel center included in this kit	1	All except 54C, D, 63C, D, 76B, D	C	64
Consists of the following - (1) C4GA-18805-D kit radio receiver (1) C4DZ-18813-A antenna (1) C4GY-6204339-C instrument panel finish center					
C4GY 18805-CA	Push button - transistor - AM-FM - includes (a,b) antenna	1	54C, D, 63C, D, 76B, D	C	64
Consists of the following - (1) C4GA-18805-D kit radio receiver (1) C4DZ-18813-A antenna (1) C4GY-5404339-B instrument panel finish center					
C4VY 18805-B	AM - FM	1	All	D	64
34907-S	NS-washer-external tooth-lock-3/8"	2	a		
42735-S	Screw and external tooth-lockwasher hex. hd. - 12-24 x 1/2"	1	c		
45235-S	NS-nut-1/4"-20	1	a		
355987-S	Nut-hex. -3/8"-32	2	a		
359972-S	NS-washer-angle-No. 10	2	b		
373503-S	Nut-self-threading-3/16"	2	a		
18806	BEZEL (RADIO CONTROL)				
PB9M 18806-A	Use on vehicles without production installed a/cond - without switch control	1	57A, 58A, 63A, 64A, 76A, 77A	A	60
18808	SPEAKER (RADIO RECEIVER)				
COMF 18808-A	Front	1	All	A	60
C1MY 18808-A	Front	1	All	A	61/62
C3MY 18808-A	Front (a)	1	All	A	63/64
C4MY 18808-A	Rear - use with dual rear seat speaker system - includes base assembly	2	54, 62, 65, 75	A	64
B8MY 18808-A	Rear seat speaker	1	77	A	60
	Rear seat (a)	1	76B, C	A	62/64
	Front - 5" x 7"	1	All	C	60/62
COLF 18808-A	Front - 6" x 9"	1	All except 76, 77	A D	60
C3MY 18808-B	Also serviced in 18875 kit - rear seat speaker	1	All except 76	A	61/62
	Rear seat (a)	1	57, 63, 71	A	63/64
		1	All except 76	B C	60/64
C4DZ 18808-A	Front seat speaker	1	All	B	62/63
	Front (a)	1	All	C	63/64
COLF 18808-C	4" front	1	All	D	60
C1VF 18808-B	4" front - instrument panel	1	All	D	61/62
C1VY 18808-C	6" x 9" - front instrument panel	1	All	D	61/62
C3VY 18808-A	Front seat - for AM or AM-FM	1	All	D	63
C3VY 18808-B	Rear seat	1	53A	D	63
		1	All except 74	D	64
C4VY 18808-A	Rear seat	1	74	D	64
C4VY 18808-B	Front seat - for AM or AM-FM	1	All	D	64
42128-S	NS-screw-self-tap.-hex. washer hd. No. 12-11 x1/2"	2	a		
18A809	GEAR & PULLEY (RADIO ANTENNA CONTROL CABLE)				
B9LF 18A809-A	Early type	1	All	D	60

Radio and Antenna

GROUP AND PART NUMBER	DESCRIPTION, SIZE, ETC.	NO. REQ'D	MODEL OR ENGINE CUBIC INCH DISPLACEMENT	VEHICLE CODE	YEAR 19____
18810	CHASSIS (RADIO RECEIVER)				
C2VY 18810-A	For manual or electric antenna	1	All	D	61/62
C3VY 18810-A	AM only	1	All	D	63
C4VY 18810-A	AM only	1	All	D	64
18812	CABLE (RADIO ANTENNA LEAD-IN)				
COMF 18812-D	60" long	1	All	A	60
C3MY 18812-A	AM-FM - 6-1/2" long	1	All	A	63/64
FFC 18812-B	L.H. - 223" long	1	All	D	60
FFC 18812-C	R.H. and L.H. - tandem	1	All	D	60
C1VF 18812-A		1	All	D	61/62
C3VY 18812-A	For electric antenna	1	All	D	63
C4VY 18812-A	For electric antenna	1	All	D	64
18813	KIT (RADIO ANTENNA)				
COMF 18813-C	Front - manual	1	All	A	60
C3AZ 18813-B	Front - manual	1	All	A	61/62
C3MY 18813-A	R.H. - manual	1	All	A	63/64
C2AZ 18813-B	Citizens Band Base Station - use for fixed station application	1	All	A B C D	60/64
C2AZ 18813-C	Citizens Band Mobile - for rear deck or side mounting	AR	All	A B C D	60/64
C2AZ 18813-D	Citizens Band Mobile - for rear bumper mounting	AR	All	A B C D	60/64
C2AZ 18813-E	Citizens Band Mobile - for optional roof mounting	AR	All	A B C D	60/64
C3YY 18813-A	L.H. - manual - when installed on vehicles equipped with outside remote control mirror - antenna must be installed on R.H. fender with adaptor kit C3YY-18813-B	1	All	B	62/63
C3YY 18813-B	Adaptor - required to install C3YY-18813-A L.H. antenna kit to R.H. front fender	1	All	B	62/63
C3DZ 18813-A	R.H. - manual	1	All	C	60/63
C4DZ 18813-A	R.H. - manual - also serviced in 18805 kit	1	All	C	64
	NS-electric	AR	All	D	60
	☆NS-manual	AR	All	D	61
	☆NS-manual and/or electric	AR	All	D	62
	☆NS-electric	AR	All	D	63/64
	☆NOTE - for 1961-63 available service parts see illustration page				
18817	KNOB (RADIO CONTROL)				
PB9M 18817-A		2	All	A	60
COAF 18817-A	For push button radio	2	All	A	61
C2YY 18817-A		2	All	A B	62/64
		2	All	C	64
	(1) req'd. - as tuning control (1) req'd. - as volume control				
B9FK 18817-A		2	All	C	60/63
	Rear seat speaker studio sonic sound system control	AR	All except 71, 76	A	60/62
		1	All except 59, 71, 76	B C	60/63
		1	63	A	63
FFC 18817-A	For FM radio	2	All	D	60
COLF 18817-A	For AM radio	2	All	D	60
C1VF 18817-A(02)	BLUE	2	All	D	61
C1VF 18817-A(04)	GREEN	2	All	D	61
C1VF 18817-A(06)	TURQUOISE	2	All	D	61
C1VF 18817-A(01)	BLACK	2	All	D	61/62

CONTINUED ON NEXT PAGE

GROUP AND PART NUMBER	DESCRIPTION, SIZE, ETC.	NO. REQ'D	MODEL OR ENGINE CUBIC INCH DISPLACEMENT	VEHICLE CODE	YEAR 19___
18817	KNOB (RADIO CONTROL) CONTINUED				
C1VF 18817-A(03)	BEIGE	2	All	D	61/62
C1VF 18817-A(05)	RED	2	All	D	61/62
C1VF 18817-A(07)	WOOD GRAIN	2	All	D	61/62
C1VF 18817-A(20)	BLUE	2	All	D	62
C1VF 18817-A(21)	GREEN	2	All	D	62
C1VF 18817-A(22)	SILVER BLUE	2	All	D	62
C1VF 18817-A(23)	TURQUOISE	2	All	D	62
C3VY 18817-A	Chrome	2	All	D	63
	NOTE - For electric antenna knob refer to C3VY-5721850-A				
	(1) req'd. - as tuning control	2	All	D	64
	(1) req'd. - as volume control				
18A819	MOTOR & HOUSING (ANTENNA)				
COLF 18A819-A	Late type	1	All	D	60
18821	SCREEN (REAR SEAT SPEAKER)				
COAA 18821-AP	Also serviced in 18875 kit	1	All except 76	A	61/62
		1	63, 71	A	63
		1	57A, D, F, 63A, D, F, 71	A	64
		1	All except 76	B C	60/64
18A823	PULLEY (ANTENNA ACTUATOR DRIVE)				
COLF 18A823-A	Late type	1	All	D	60
18830	DISC (RADIO TONE CONTROL)				
PB9M 18830-A		2	All	A	60
C1MF 18830-B		2	All	A	61
C2MY 18830-A		2	All	A	62
C3MY 18830-A	Chrome	2	All	A	63/64
C2YY 18830-A		2	All	B	62/63
COAF 18830-B		2	All	C	60/63
C4GY 18830-A	Chrome - use with AM radio	2	All	C	64
C4GY 18830-B	Chrome - use with AM-FM radio	2	All	C	64
COLF 18830-A	(2) req'd. - for AM radio	AR	All	D	60
	(2) req'd. - for FM radio				
C1VF 18830-A	(2) req'd. - for radio with manual antenna	2	All	D	61
	(1) req'd. - for radio with electric antenna	AR	All	D	62
	Refer to group 18A969 for electric antenna disc				
C3VY 18830-A	Chrome	2	All	D	63/64
18832	CONDENSER (RADIO - VOLTAGE REGULATOR)				
FAA 18832-A		1	All	A B C	60/62
		1	All	D	60
C1VV 18832-A		1	All	D	61/62
18842	BEZEL (RADIO CONTROL)				
COMF 18842-A		1	57B, F, 58B, 63B, F, 76D, 77B	A	60
	Use when a/cond. except hang-on is installed	1	57A, 58A, 63A, 64A, 76A, 77A	A	60
18A848	ROD & CONNECTOR (RADIO ANTENNA)				
B9LF 18A848-A	Early type	1	All	D	60
COLF 18A848-A	Late type	1	All	D	60

GROUP AND PART NUMBER	DESCRIPTION, SIZE, ETC.	NO. REQ'D	MODEL OR ENGINE CUBIC INCH DISPLACEMENT	VEHICLE CODE	YEAR 19____
18850	MOTOR & TUBE (RADIO ANTENNA)				
B8LY 18850-A	R.H. and L.H. - early type - electric - for manual switch operation only - use on vehicles built prior to 11-23-59	AR	All	D	60
COLF 18850-A	Late type - electric - use on vehicles built after 11-22-59	1	All	D	60
B8LY 18A956-B	R.H. and L.H. - manual - Tenna mast and housing	1	All	D	60
C2VY 18850-A	Electric - includes C2VY-18939-A bracket antenna mounting upper	1	All	D	62
C3VY 18850-A	R.H. - front - electric (a)	1	All	D	63/64
31498-S	Screw-hex. washer hd. tap. -No. 14-10 x 5/8"	1	a		
45149-S	NS-"J" nut-spring-No. 14-10	1	a		
18A854	REFER TO GROUP 19118				
18A855	REFER TO GROUP 19107-9				
18A856	REFER TO GROUP 19116				
18863	SWITCH (ELECTRIC RADIO ANTENNA)				
C2VY 18863-A	Attaches to C2VY-18810-A chassis radio receiver	1	All	D	62
C3VY 18863-A		1	All	D	63
C4VY 18863-A	(a)	1	All	D	64
53272-S	NS-screw-tap. oval trim hd. -No. 8-6-32	2	a		
371583-S	Nut-self threading-1/8"	2	a		
18865	NUT (ANTENNA DOME)				
B9LF 18865-A	Use with B8LY-18A956-B manual or B8LY-18850-A electric antennas	1	All	D	60
FDU 18865-B	Use with Casco or P.E.T. antenna	1	All	D	60
C3VY 18865-A	For electric antenna	1	All	D	63/64
18A870	GEAR (ANTENNA ACTUATOR DRIVE)				
COLF 18A870-A	Late type	1	All	D	60
18875	KIT (RADIO REAR SEAT SPEAKER)				
C3AZ 18875-B		1	76B	A	63
C4MY 18875-A	Single speaker - use with radio incorporating integral fader control for rear seat speaker	1	57,63,71	A	64
C4MY 18875-B	Single speaker - use with radio incorporating integral fader control for rear seat speaker	1	76C	A	64
C4MY 18875-C	Dual speakers - use with radio incorporating integral fader control for rear seat speakers	1	54,62,65,75	A	64
C3AZ 18875-A		1	63,71	A	63
		1	All	B	62/63
		1	All except 76	C	63/64
C4AZ 18875-A	Rear seat studio sonic sound system unit - refer to 13A024 for foot control switch	1	All except 71,76	A	62
		1	57,63	A	63/64
		1	All except 71,76	B C	62/64
18A886	MAST (RADIO ANTENNA)				
COAZ 18A886-A	Replacement - use to repair all 5/16" diameter manual antenna with broken masts	1	All	A B C	60/64
C2SZ 18A886-A	Manual - tube and plug For electric refer to group 18850	1	All	D	61/62

Radio and Antenna

GROUP AND PART NUMBER	DESCRIPTION, SIZE, ETC.	NO. REQ'D	MODEL OR ENGINE CUBIC INCH DISPLACEMENT	VEHICLE CODE	YEAR 19__
18888	SUPPORT (RADIO RECEIVER)				
COAF 18888-B	R.H. - for push button radio	1	All	A	61
COAF 18890-A	L.H. - for push button radio	1	All	A	61
C2MY 18888-A	Rear	1	All	A	62
C3MY 18888-A	Rear (a)	1	All	A	63/64
C2YY 18888-A	Rear	1	All	B	62/63
CODF 18888-A	R.H. - use on side mounted radio chassis	1	All	C	60/62
CODF 18890-A	L.H. - use on side mounted radio chassis	1	All	C	60/62
C2GY 18888-A	Rear - use on center mounted radio chassis	1	All	C	60/63
C4GY 18888-A	Front - use with AM-FM radio (a, b)	1	All	C	64
	NS-rear	1	All	C	64
FFC 18888-E	R.H. - FM	1	All	D	60
FFC 18890-B	L.H. - FM	1	All	D	60
COLF 18888-A	Rear - AM	1	All	D	60
C1VY 18888-A	Front	1	All	D	61/62
42741-S	Screw and washer-hex. hd. -1/4"-20 x 3/8"	1	b		
45235-S	NS-nut-stamped-1/4"-20	1	a		
18889	GASKET (RADIO REAR SEAT SPEAKER)				
PB9M 18889-A	Also serviced in 18875 kit	1	77	A	60
18890	REFER TO GROUP 18888				
18897	INSULATOR (ANTENNA MOUNTING)				
FFC 18897-A	Located under dome nut - use on Casco, P.E.T., Pioneer or Tenna designed antenna assemblies	1	All	D	60
18898	GASKET (ANTENNA LEAD-IN CONNECTOR TO TUBE)				
FFC 18898-B		1	All	D	60
C1VV 18898-A	Use on Casco, P.E.T., Pioneer or Tenna designed antenna assemblies	1	All	D	61
	For manual or electric antenna	1	All	D	62
C3VY 18898-A	For electric antenna	1	All	D	63/64
18A900	WIRING (RADIO RECEIVER TO REAR SEAT SPEAKER)				
BOMY 18A900-A	200" long	1	All except 76, 77	A	60
C4MY 18A900-A	Use with radio incorporating integral fader control	1	57, 63, 71, 76C	A	64
C4MY 18A900-B	For dual speaker system	1	54, 62, 65, 75	A	64
C4MY 18A900-C	Extension - for dual speaker system	1	54, 62, 65, 75	A	64
C2AZ 18A900-A	Not used with rear seat speaker studio sonic sound system unit - also serviced in 18875 kit	1	All except 76A	A	61/62
		1	All	C	61/62
B8LY 18A900-A	226" long	1	77	A	60
		1	All	D	60
C2OZ 18A900-A	Not used with rear seat speaker studio sonic sound system unit - also serviced in 18875 kit	1	All	B	62/63
		1	All except 71	B	63
18A904	PLUG (ANTENNA LEAD-IN CABLE)				
B9LF 18A904-A		1	All	D	60
C2VY 18A904-A	Use with Tenna electric including C3RA-18946-A gasket	1	All	D	60/63
18A910	BEZEL (RADIO RECEIVER)				
C1VY 18A910-A	BLACK	1	All	D	61
C2VA 18A910-A(21)	BLACK	1	All	D	62

Radio and Antenna

GROUP AND PART NUMBER	DESCRIPTION, SIZE, ETC.	NO. REQ'D	MODEL OR ENGINE CUBIC INCH DISPLACEMENT	VEHICLE CODE	YEAR 19____
18911	KNOB (RADIO ANTENNA CONTROL)				
C4VY 18911-A	Chrome (1) req'd. - for map lamp switch (1) req'd. - for radio antenna switch	2	All	D	64
18912	GROMMET (ANTENNA LEAD-IN SEAL)				
FEK 18912-A	Rubber (1) req'd. - for antenna lead-in seal	1	All	A B C	60/64
	For windshield wiper - electric	1	All	C	63
	For instrument panel	1	All	C	63
18917	KIT (ANTENNA MOUNTING INSTALLATION)				
C2AZ 18917-A	For Citizens Band base station antenna - 50 ft. length	1	All	A B C D	62/64
C2AZ 18917-B	For Citizens Band base station antenna - 100 ft. length	1	All	A B C D	62/64
18A917	WIRING (ANTENNA MOTOR FEED)				
COLF 18A917-B		1	All	D	60
18919	STANCHION (RADIO ANTENNA)				
C1TZ 18919-A	Front - manual antenna	1	All	A	60
C1AF 18919-A	Front - manual antenna	1	All	A	61
CODF 18919-B		1	All	C	60/63
C3VY 18919-A	For electric antenna - use on vehicles built prior to 4-24-63	1	All	D	63
C3VY 18919-B	For electric antenna - use on vehicles built after 4-23-63	1	All	D	63/64
18936	BASE (RADIO ANTENNA)				
C1VV 18936-A	Manual	1	All	D	61/62
18937	CAP (RADIO FOOT CONTROL SWITCH)				
FDU 18937-A	Also use for headlamp foot switch	AR	All	D	60
18939	BRACKET (ANTENNA MOUNTING)				
FFC 18939-A	R.H. and L.H.	1	All	D	60
C2VY 18939-A	Upper - for electric antenna	1	All	D	62
C2VY 18939-B	Lower - for electric antenna	1	All	D	62
C3VY 18939-B	Lower - for electric antenna	1	All	D	63
C3VY 18939-A	Upper - for electric antenna (a)	1	All	D	63/64
C4VY 18939-A	Lower - for electric antenna (a)	1	All	D	64
31498-S	Screw-hex. washer hd. tap. -No. 14-10 x 5/8"	1	a		
31528-S	NS-screw-hex. washer hd. tap. -1/4"-14	2	a		
34657-S	NS-nut and washer-1/4"-20	1	a		
45149-S	NS-"J" nut-No. 14-10 spring	1	a		
18A952	CHOKE (RADIO RECEIVER SUPPRESSION CONSTANT VOLTAGE REGULATOR)				
COMF 18A952-A	Located on rear of 10A897 panel	1	All	A	60
C3MY 18A952-A	For AM - FM radio	1	All	A	63/64
		1	All	C D	64
C1VV 18A952-A	Attaches to 10804	1	All	D	61/63
18954	CLAMP (RADIO ANTENNA HOSE)				
FAA 18954-A	Use with multi-luber, heater, radio, power windows, auxiliary starter, a/cond., windshield washers and o/drive wiring	AR	All	A B C D	60/64

GROUP AND PART NUMBER	DESCRIPTION, SIZE, ETC.	NO. REQ'D	MODEL OR ENGINE CUBIC INCH DISPLACEMENT	VEHICLE CODE	YEAR 19____
18A954	REINFORCEMENT (RADIO ANTENNA)				
C1VB 18A954-A	At fender	1	All	D	61/62
C3VY 18A954-A	For electric antenna - use on vehicles built prior to 4-24-63	1	All	D	63
C3VY 18A954-B	For electric antenna - use on vehicles built after 4-23-63	1	All	D	63/64
18A956	REFER TO GROUP 18850				
18958	KNOB (RADIO REAR SEAT SPEAKER FADER CONTROL)				
PB9E 18958-A	For radios not incorporating fader control - not used with rear seat speaker studio sonic sound system unit	1	All except 76A	A	61/62
		1	57,63,71,76B,76C	A	63/64
		1	All	B	62/63
		1	All except 76	C	60/64
18960	BRACKET (REAR SEAT SPEAKER)				
B9MF 18960-A	Also serviced in 18875 kit	1	77	A	60
18A961	REFER TO GROUP 19104				
18A962	SPRING (ANTENNA DRIVE)				
COLF 18A962-A	Late type	3	All	D	60
18A969	DISC (RADIO ANTENNA SWITCH)				
C1VF 18A969-A	For electric antenna NOTE - attaches to radio selector post	1	All	D	62
18972	CONTROL (RADIO REAR SEAT SPEAKER VOLUMN)				
COAZ 18972-A		1	All except 76A	A	61/62
		1	63,71,76B	A	63
		1	All	B	62/63
		1	All except 76	C	60/64
	Use with fader control - not part of radio chassis NOTE - not used with studio sonic sound system	1	57,63,71,76C	A	64
18978	GRILLE (REAR SEAT SPEAKER)				
COGY 18978-A	Also serviced in 18875 kit	1	All except 76	A	61/62
		1	63,71	A	63
		1	57A,D,F,63A,D,F,71	A	64
		1	All except 76	B C	60/64
18981	REFER TO GROUP 13A726				
18A986	CRYSTAL (CITIZENS BAND MATCHED CHANNEL)				
C2AZ 18A986-A	No. 1	AR	All	A B C D	60/64
C2AZ 18A986-B	No. 2	AR	All	A B C D	60/64
C2AZ 18A986-C	No. 3	AR	All	A B C D	60/64
C2AZ 18A986-D	No. 4	AR	All	A B C D	60/64
C2AZ 18A986-E	No. 5	AR	All	A B C D	60/64
C2AZ 18A986-F	No. 6	AR	All	A B C D	60/64
C2AZ 18A986-G	No. 7	AR	All	A B C D	60/64
C2AZ 18A986-H	No. 8	AR	All	A B C D	60/64
C2AZ 18A986-J	No. 9	AR	All	A B C D	60/64
C2AZ 18A986-K	No. 10	AR	All	A B C D	60/64
C2AZ 18A986-L	No. 11	AR	All	A B C D	60/64

CONTINUED ON NEXT PAGE

GROUP AND PART NUMBER	DESCRIPTION, SIZE, ETC.	NO. REQ'D	MODEL OR ENGINE CUBIC INCH DISPLACEMENT	VEHICLE CODE	YEAR 19____
18A986	CRYSTAL (CITIZENS BAND MATCHED CHANNEL) CONTINUED				
C2AZ 18A986-M	No. 12	AR	All	A B C D	60/64
C2AZ 18A986-N	No. 13	AR	All	A B C D	60/64
C2AZ 18A986-P	No. 14	AR	All	A B C D	60/64
C2AZ 18A986-Q	No. 15	AR	All	A B C D	60/64
C2AZ 18A986-R	No. 16	AR	All	A B C D	60/64
C2AZ 18A986-S	No. 17	AR	All	A B C D	60/64
C2AZ 18A986-T	No. 18	AR	All	A B C D	60/64
C2AZ 18A986-U	No. 19	AR	All	A B C D	60/64
C2AZ 18A986-V	No. 20	AR	All	A B C D	60/64
C2AZ 18A986-W	No. 21	AR	All	A B C D	60/64
C2AZ 18A986-X	No. 22	AR	All	A B C D	60/64
C2AZ 18A986-Y	No. 23	AR	All	A B C D	60/64
	NOTE - unit pack consists of (1) set of matched crystals (1) set req'd. - for base unit (1) set req'd. - for mobile unit				
18A996	NUT (RADIO ANTENNA CONTROL SWITCH)				
C3VY 18A996-A	For electric antenna	1	All	D	63
19A001	KIT (RADIO REVERBERATION SPEAKER FOOT CONTROL)				
C2AZ 19A001-A	For use on vehicles equipped with sonic sound system without cut-out foot control feature	1	All except 59, 71	A B C	62
19A004	PLATE (RADIO MOUNTING)				
	NS-improvise - steel - 8.58" x 3.12" x .58"	1	All	D	64
19044	ARM (ANTENNA DRIVE TENSION SPRING)				
B9LF 19044-A	Early type	1	All	D	60
COLF 19044-A	Late type	1	All	D	60
19045	CONNECTOR (ANTENNA LEAD-IN)				
FFC 19045-A		1	All	D	60
19080	BRACKET (RADIO REAR SEAT SPEAKER)				
	NS-improvise	2	74	D	64
19093	HOUSING (ANTENNA ACTUATOR)				
B9LF 19093-A	Early type	1	All	D	60
19094	COVER (ANTENNA ACTUATOR HOUSING)				
FEK 19094-A	Early type	1	All	D	60
COLF 19094-A	Late type	1	All	D	60
19096	GASKET (ANTENNA LEAD-IN CONNECTOR)				
B9LF 19096-A		1	All	D	60
19103	BEZEL (RADIO ANTENNA)				
C1VF 19103-A		1	All	D	61
	For manual or electric antenna	1	All	D	62
19104	RETAINER (ANTENNA CONTROL CABLE)				
B9LF 19104-A	Early type	1	All	D	60
COLF 18A961-A	Late type	1	All	D	60

Radio and Antenna

GROUP AND PART NUMBER	DESCRIPTION. SIZE. ETC.	NO. REQ'D	MODEL OR ENGINE CUBIC INCH DISPLACEMENT	VEHICLE CODE	YEAR 19____
19107-9	MAST (ANTENNA)				
B8LY 19107-A	Use with B8LY-18850-A - electric	1	All	D	60
COLF 19109-A	Outer - late type	1	All	D	60
COLF 18A855-A	Inner and center - late type	1	All	D	60
19110	INSULATOR (ANTENNA MAST TO TUBE) LOWER				
FEK 19110-A	Early type	1	All	D	60
COLF 19110-A	Late type	1	All	D	60
19112	MOTOR (ANTENNA DRIVE)				
B8LY 19112-A	Use with B8LY-18850-A - electric	1	All	D	60
B9LF 19112-A	Early type	1	All	D	60
19116	INSULATOR (ANTENNA OUTER MAST)				
B9LF 18A856-A	Early type	1	All	D	60
COLF 19116-A	Late type	1	All	D	60
19118	SPRING (ANTENNA DRIVE TENSION)				
B9LF 18A854-A	Early type	1	All	D	60
COLF 19118-A	Late type	1	All	D	60
19121	RETAINER (ANTENNA DRIVE TENSION SPRING)				
FEK 19121-A	Early type	1	All	D	60
19254	CONTACT (ANTENNA GROUND)				
FFC 19254-B		1	All	D	60

Lubricants and Air Conditioning

19A271	COVER (AIR CONDITIONER & HEATER CONTROL MOTOR)				
B9FK 19A271-A	For a/cond. except hang-on	1	All	A	60
19298	TIP (ANTENNA MAST)				
B8E 19298-A	Small hexagon	1	All	D	60
	For electric antenna	1	All	D	62/64
19460	SEAL (HEATER WATER CONTROL VALVE)				
B7A 19460-A	To core - also serviced in 18B364 and 18502 valve assemblies	2	All	D	61
19E500	REFLECTOR (FLAGS)				
C5AZ 19E500-A	Set consists of (3) flags	1	All	A B C D	60/64
19503	KIT (TOUCH-UP PAINT - 1 OZ. TUBE)				
	Refer to Parts and Accessories Stock Order Pad for color selection and order requirements accordingly			A B C D	60/63
19503	KIT (TOUCH-UP PAINT - 6 OZ. SPRAY CAN)				
	Refer to Parts and Accessories Stock Order Pad for color selection and order requirements accordingly			A B C D	60/64
19503	KIT (FAST DRY ENAMEL 3 OZ. CAN)				
	Refer to Parts and Accessories Stock Order Pad for color selection and order requirements accordingly			A B C D	60/64
19503	KIT (TOUCH-UP PAINT - QUARTS)				
	Refer to Parts and Accessories Stock Order Pad for color selection and order requirements accordingly			A C D	64

Lubricants and Air Conditioning

GROUP AND PART NUMBER	DESCRIPTION, SIZE, ETC.	NO. REQ'D	MODEL OR ENGINE CUBIC INCH DISPLACEMENT	VEHICLE CODE	YEAR 19____
19B503	WIRING (MULTIPLE LUBRICATOR)				
B9LF 19B503-C	47" - (1) req'd. - for multiple lubricator - (4) req'd. - for radiator support mounted horn	1	All	D	60
COLF 19B503-D	Dash to cowl	1	All	D	60
19D503	PLATE (COMPASS MOUNTING)				
C4RZ 19D503-A	Universal - also serviced in C4RZ-19A548-A assy.	1	All	A C D	64
19C505	KIT (FIRE EXTINGUISHER RECHARGE)				
C3RZ 19C505-A	2-3/4 lb. dry chemical	AR	All	A B C D	63/64
C3RZ 19C505-B	4 lb. dry chemical	AR	All	A B C D	63/64
19A508	REFER TO GROUP 19580				
19B512	NUT (DOOR LOCK CONTROL)				
COLF 19B512-A		1	All	D	60
19A513-5	HARNESS (MULTIPLE LUBRICATOR)				
B9L 19A513-A	To idler arm	1	All	D	60
B9L 19A514-B	R.H. - suspension	1	All	D	60
B9L 19A515-B	L.H. - suspension	1	All	D	60
19B514	SWITCH (LUGGAGE COMPARTMENT DOOR LOCK)				
COLF 19B514-A	Located inside glove box	1	All	D	60
19B519	REFRIGERANT (AIR CONDITIONER)				
B9LF 19B519-A	15 oz. container	AR	All	A B C D	60/64
19B520	WIRING (LUGGAGE COMPARTMENT LAMP TO SWITCH)				
	NS-80" long - for service improvise locally from No. 16 or 18 gauge wire	1	All	A	60/62
19A521	BRACKET (MULTIPLE LUBRICATOR PUMP MOUNTING)				
B9LL 19A521-A		1	All	D	60
19B523	BRACKET (MULTIPLE LUBRICATOR RESERVOIR)				
COLL 19B523-A	With adaptor and switch - for manual and automatic cycling multiple lubricators	1	All	D	60
19A529	RESTRICTOR (MULTIPLE LUBRICATOR)				
B9LL 19A529-A		1	All	D	60
19D530	LUBRICANT (DISTRIBUTOR CAM)				
C4AZ 19D530-A	1-1/2 oz. tube	AR	All	A C D	60/64
19536	BODY (MULTIPLE LUBRICATOR)				
LD 19536-A		1	All	D	60
19538	CYLINDER (MULTIPLE LUBRICATOR VACUUM PUMP)				
LD 19538-A		1	All	D	60
19B540	KIT (FIRE EXTINGUISHER & BRACKET)				
C3RZ 19B540-A	2-3/4 lb. dry chemical	AR	All	A B C D	63/64
C3RZ 19B540-B	4 lb. dry chemical	AR	All	A B C D	63/64
19543	ADAPTOR (MULTIPLE LUBRICATOR VACUUM HOSE TO BODY)				
LD 19543-A		1	All	D	60
19C543	KIT (TIRE INFLATOR & SEALANT)				
C2RZ 19C543-A		AR	All	A B C D	63/64

Lubricants and Air Conditioning

GROUP AND PART NUMBER	DESCRIPTION, SIZE, ETC.	NO. REQ'D	MODEL OR ENGINE CUBIC INCH DISPLACEMENT	VEHICLE CODE	YEAR 19____
19C544	DE-ICER (WINDSHIELD)				
C3RZ 19C544-A	16 oz. Aerosol can	AR	All	A B C D	63/64
19B545	LUBRICANT (STEERING LINKAGE)				
C1VV 19B545-A	5 lb. can	AR	All	A B	63/64
		AR	All	D	60/64
19546	LUBRICANT (WATER PUMP & RUST INHIBITOR)				
8A 19546-C	1 pt. can	AR	All	A B C D	60/64
19B546	LUBRICANT (HYPOID ADDITIVE)				
C1AA 19B546-A	4 oz. bottle - for use with Equa-lock type rear axle	AR	All	A B C	60/64
19C547	LUBRICANT (STANDARD TRANSMISSION)				
C3RZ 19C547-B	5 gal. can - for use with (3) or (4) speed manual transmissions	AR	All	A B C	60/64
19A548	COMPASS				
C4RZ 19A548-A	BLACK - lighted	1	All	A C D	64
19C548	LUBRICANT (ADDITIVE POWER STEERING & AUTOMATIC TRANSMISSION)				
C2RZ 19C548-A	8 oz. can	AR	All	A B C D	60/64
19A549	KIT (TISSUE DISPENSER)				
C3RZ 19A549-A		1	All	A B C D	60/64
19A551	MEDALLION (AIR CONDITIONER REGISTER)				
B9FM 19A551-A		1	All	A	60
COAF 19A551-B	Except hang-on	1	All	A	61/62
C3MY 19A551-A	For Deluxe a/cond.	1	All	A B	63
C4MY 19A551-A	For Economy a/cond.	1	All	A C	64
C3MY 19A551-B	For Economy a/cond.	1	All	A B C	63
19553	LUBRICANT (SILICONE)				
COAZ 19553-A	8 oz. tube	AR	All	A B C D	60/64
COAZ 19553-C	16 oz. Aerosal can	AR	All	A B C D	60/64
19554	LUBRICANT (WATER PUMP-STOP-LEAK & RUST INHIBITOR)				
COAA 19554-A	5-1/2 oz. bottle	AR	All	A B C D	60/64
19B556	GASKET (AIR CONDITIONER BLOWER MOTOR MOUNTING)				
COAF 19B556-A	For a/cond. except hang-on	1	All	A	61/62
COKY 19B556-B	For hang-on a/cond.	2	All	A B	61/62
19B559	BRACE (AIR CONDITIONER BLOWER MOTOR)				
COAF 19B559-A	For hang-on a/cond.	1	All	A B	61/62
19B561	SHIELD (AIR CONDITIONER EVAPORATOR CASE TO FLOOR)				
	NS-BLACK - for hang-on a/cond.	1	All	A	61
19A563	VALVE (AIR CONDITIONER & HEATER VACUUM CHECK)				
B9MF 19A563-A	1/4" O. D. nipples at both ends - for heater	1	All	A	60
	and/or a/cond. except hang-on	1	All	D	60/63
		1	All	D	64
	For a/cond. except hang-on	1	All	A	61/62
19A565	WIRING (AIR CONDITIONER COMPRESSOR CLUTCH FEED)				
COLF 19A565-C	Cowl to clutch	1	All	D	60
COLF 19A565-D	Cowl to dash	1	All	D	60

GROUP AND PART NUMBER	DESCRIPTION, SIZE, ETC.	NO. REQ'D	MODEL OR ENGINE CUBIC INCH DISPLACEMENT	VEHICLE CODE	YEAR 19___
19B565-6	REFER TO GROUP 19860				
19A566	TANK & BRACKET (VACUUM RESERVE)				
COMF 19A566-A	For heater, windshield washer and a/cond. except hang-on with vacuum controls for vehicles incorporating 1/4" vacuum hose	1	All	A	60
19B568	PANEL CONTROL (AIR CONDITIONER EVAPORATOR)				
COAF 19B568-AP	For hang-on a/cond.	1	All	A B	61/62
B9AZ 19B568-A	Name plate - "Polaraire"	1	All	C	60/62
19B569	SOCKET & WIRING (CONTROL NAME PLATE LAMP)				
COAF 19B569-A	For hang-on a/cond.	1	All	A B	61/62
19576	SPACER (COMPRESSOR MOUNTING SUPPORT BRACKET)				
FDL 19576-A	For use with alternator	2	383, 430	A	60
19B576	SHIELD (CONTROL NAME PLATE LAMP)				
COAF 19B576-A	For hang-on a/cond.	1	All	A B	61/62
19C576	DOOR & ACTUATOR (AIR CONDITIONER INSTRUMENT PANEL REGISTER)				
C3VY 19C576-A	BLACK - also serviced in C3VY-19893-A register-dealer to paint locally to match interior trim	1	All	D	63
19577	LUBRICANT (MULTIPLE LUBRICATOR)				
LE 19577-A	7 oz. can	AR	All	A B C D	60/62
19B577	REGISTER (AIR CONDITIONER EVAPORATOR FRONT CENTER)				
COAF 19B577-AP	BLACK - for hang-on a/cond.	1	All	A B	61/62
19578	LUBRICANT (STEERING GEAR)				
C3AZ 19578-A	14-1/2 oz. tube	AR	All	A B C D	60/64
19579	LUBRICANT (OIL CONDITIONER)				
C2AZ 19579-A	16 oz. can - for use with engine oil not meeting Ford Motor Co. specifications	AR	All	A B C D	60/64
B7A 19579-C	Crankcase conditioner	AR	All	A B C D	63/64
19B579	WIRING (AIR CONDITIONER FEED)				
COLF 19B579-A		1	All	D	60
19580	LUBRICANT (REAR AXLE HYPOID)				
C1AZ 19580-E	1 gal. can - 90 viscosity	AR	144, 170, 200, 221, 260, 292, 352	A B C	60/64
	Use on vehicles equipped with Equa-lock type rear axles	AR	289, 383, 390, 406, 427, 430	A C D	60/64
	NOTE - when used on Equa-lock type rear axles hypoid additive C1AA-19B546-A must be added				
C1AZ 19580-F	110 lb. drum - 90 viscosity	AR	144, 170, 200, 221, 260, 292, 352	A B C	60/64
	Use on vehicles equipped with Equa-lock type rear axles	AR	289, 383, 390, 406, 427, 430	A C D	60/64
	NOTE - when used on Equa-lock type rear axles hypoid additive C1AA-19B546-A must be added				
C2AZ 19580-D	1 gal. can - 90 viscosity - not used on vehicles equipped with Equa-lock type rear axles	AR	289, 383, 390, 406, 427, 430	A C D	60/64
COLY 19A508-B	120 lb. drum	AR	All	D	60/64

Lubricants and Air Conditioning

GROUP AND PART NUMBER	DESCRIPTION, SIZE, ETC.	NO. REQ'D	MODEL OR ENGINE CUBIC INCH DISPLACEMENT	VEHICLE CODE	YEAR 19____
19580	LUBRICANT (DIFFERENTIAL GEAR & WASHERS)				
C2AZ 19580-E	1 lb. can - required for application to differential case side gear hub bores before assembly	AR	All	A B C	60/64
		AR	All	D	60/62
19581	LUBRICANT (SPEEDOMETER CABLE)				
B5A 19581-A	1 lb. can	AR	All	A B C D	60/64
19B581	RETAINER (EVAPORATOR LOWER REGISTER)				
COAF 19B581-A	For hang-on a/cond.	2	All	A B	61/62
19582	FLUID (AUTOMATIC TRANSMISSION)				
C1AZ 19582-A	1 qt. can	AR	All	A B C D	60/64
C1AZ 19582-C	1 gal. can	AR	All	A B C D	60/64
C1AZ 19582-D	55 gal. drum	AR	All	A B C D	60/64
19583	LUBRICANT (RU-GLYDE)				
B6A 19583-A	1 gal. can - for tubeless tire servicing	AR	All	A B C D	60/64
19584	LUBRICANT (LUBRIPLATE - WHITE GREASE - WATERPROOF)				
COAZ 19584-A	Tube - high temperature 0°- 340°	AR	All	A B C D	60/64
19A584	CONNECTOR (AIR CONDITIONER BLOWER TO EVAPORATOR)				
B9FM 19A584-A	For a/cond. except hang-on	1	All	A	60
COLF 19A584-A	R. H. and L. H.	2	All	D	60
19585	LUBRICANT (WHEEL BEARING GREASE)				
C2AZ 19585-A	25 lb. pail	AR	All	A B C D	60/64
19586	LUBRICANT ("U" JOINT)				
C1AZ 19586-B	14-1/2 oz. cartridge	AR	All	A B C	60/64
		AR	All	D	64
C1VY 19586-A	1 lb. can	AR	All	D	61/62
19586	LUBRICANT (DOUBLE CARDAN CENTERING BALL)				
C3VY 19586-A	6 oz. tube	AR	All	D	63/64
19587	LUBRICANT (LOCK)				
B4A 19587-A	4 oz. can	AR	All	A B C D	60/64
19B588	SEAL (AIR CONDITIONER TUBES TO DASH PANEL)				
COAF 19B588-A	For Deluxe a/cond. on 1963 vehicles	1	All	A B	61/63
	For Deluxe a/cond. - 3.60" x 1.80" x .50"	2	All	A	64
19589	LUBRICANT (SPECIAL PURPOSE)				
B8A 19589-A	16 oz. can	AR	All	A B C	60/64
19590	LUBRICANT (BALL JOINT GREASE)				
C1AZ 19590-B	14-1/2 oz. cartridge - use for ball joints and tie rod ends	AR	All	A B C D	61/63
		AR	All	A C D	64
19C590	DUCT (AIR CONDITIONER RECIRCULATING AIR)				
C3VY 19C590-A		1	All	D	63
19A593	SEAL (AIR CONDITIONER HOSE COUPLING) ADAPTOR				
FFC 19A593-B	7/8" O.D. flat - also serviced in 19A715 kit	2	All	A D	60
FFC 19A593-A	1/2" O.D. flat - also serviced in 19A715 kit	2	All	D	60

GROUP AND PART NUMBER	DESCRIPTION, SIZE, ETC.	NO. REQ'D	MODEL OR ENGINE CUBIC INCH DISPLACEMENT	VEHICLE CODE	YEAR 19____
19594	STRAP (HEATER & AIR CONDITIONER)				
LD 19594-A	For a/cond. and/or heaters - 10" long - multiple usage part for all vehicles	AR	All	A B C D	60/64
	For lubricator harness	2	All	D	60
B8E 19599-A	4-5/8"	AR	All	D	60
19B595	COUPLING (AIR CONDITIONER SELF-SEALING) EXTERNAL				
COAF 19B595-A		1	All	A D	61/63
		1	All	B	62
	For Deluxe a/cond.	1	All	A D	64
19596	CONTACT (MULTIPLE LUBRICATOR INDICATOR)				
LD 19596-A		1	All	D	60
19B596	COUPLING (AIR CONDITIONER SELF-SEALING) INTERNAL				
COAF 19B596-A		1	All	A D	60
C1SF 19B596-A	For Deluxe a/cond. on 1963-64 vehicles	1	All	A B D	61/64
19A598	PLATE (AIR CONDITIONER BLOWER MOTOR MOUNTING)				
B9MF 19A598-B	For a/cond. except hang-on	1	All	A	60
19599	REFER TO GROUP 19594				
19C608	COVER (AIR CONDITIONER CONTROL MOTOR ACCESS)				
C3VY 19C608-A		1	All	D	63/64
	Consists of the following -				
(4) 42126-S	hex.wshr.hd.screw- No. 8-15 x 1/2"	(2) 378413-S	nut-spring-1/4"-20	(1) SK-MIS-1078	template
		(1)	cover		
19A612	PANEL (AIR CONDITIONER EVAPORATOR CASE) REAR				
B9MF 19A612-C	For a/cond. except hang-on	1	All	A	60
19A613	GASKET (AIR CONDITIONER EVAPORATOR HOSE)				
B9MF 19A613-A	For a/cond. except hang-on	1	All	A	60
19618	THERMOSTAT (AIR CONDITIONER EVAPORATOR TEMPERATURE CONTROL)				
B9MF 19618-B	For hang-on a/cond.	1	All	A	60
B9MF 19618-C	For a/cond. except hang-on	1	All	A	60
COAF 19618-F	For a/cond. except hang-on	1	All	A	61/62
C4MY 19618-A	For Deluxe a/cond.	1	All	A	64
COAF 19618-E	For hang-on a/cond. - except with "Mercury" emblem on evaporator case	1	All	A B	61/62
C3AZ 19618-A	For Deluxe a/cond.	1	All	A B	63
C4MY 19618-B	For Economy a/cond.	1	All	A C	64
C2AZ 19618-A	For hang-on a/cond. with "Mercury" emblem on evaporator case	1	All	A B C	62
C3AZ 19618-B	For Economy a/cond.	1	All	A B C	63
B9AF 19618-A	Except units with "Mercury" emblem on evaporator case	1	All	C	60/62
19C620	DUCT (AIR CONDITIONER EVAPORATOR) LOWER				
C4VY 19C620-B	R. H. (a)	1	All	D	64
C4VY 19C620-C	L. H. - includes deflector (a)	1	All	D	64
42161-S	Screw-hex. washer hd.-self-tap.-No.10-12 x 1-1/2"	4	a		
19A623	BRACKET (AIR CONDITIONER BLOWER HOUSING SUPPORT)				
COAF 19A623-A	For hang-on a/cond.	2	All	A B	61/62

Lubricants and Air Conditioning

GROUP AND PART NUMBER	DESCRIPTION, SIZE, ETC.	NO. REQ'D	MODEL OR ENGINE CUBIC INCH DISPLACEMENT	VEHICLE CODE	YEAR 19____
19A626	CASE (AIR CONDITIONER EVAPORATOR)				
COMF 19A626-A	For hang-on a/cond.	1	All	A	60
C2AZ 19A626-A	For hang-on a/cond. with "Mercury" emblem on evaporator case	1	All	A B C	62
19A629	REFER TO GROUP 19A998				
19B630	TUBE (MULTIPLE LUBRICATOR RESERVOIR TO PUMP)				
COLL 19B630-A	40" long - cut to length as required	1	All	D	60
19A634	CLAMP (AIR CONDITIONER EVAPORATOR EXPANSION VALVE BULB)				
	NS-for hang-on a/cond.	1	All	A	61/62
		1	All	C	60/62
19B635	RETAINER (AIR CONDITIONER EVAPORATOR REGISTER)				
C4MY 19B635-A	For Deluxe a/cond. - used to retain L. H. a/cond. instrument panel register (19893) to instrument panel (04320)	1	All	A	64
COAF 19B635-A	For hang-on a/cond. - except units with MERCURY emblem on evaporator case	4	All	A B	61/62
C2MY 19B635-A	For hang-on a/cond. - use for evaporator front register retaining	3	All	A	60
	For hang-on a/cond. with MERCURY emblem on evaporator case	AR	All	A B C	62
C3AZ 19A683-A	Front - for Economy a/cond.	8	All	A B C	63
C3MY 19B635-A	Front - for Deluxe a/cond.	4	All	A B	63/64
		4	All	C	64
B9AF 19A683-A	Side - for hang-on a/cond.	2	All	C	60/62
	NS-for hang-on a/cond. - except units with MERCURY emblem on evaporator case	4	All	C	60/62
19A637	BRACKET (AIR CONDITIONER EVAPORATOR TO INSTRUMENT PANEL MOUNTING)				
B9MF 19A637-A	For hang-on a/cond.	1	All	A	60
19A640	KNOB (AIR CONDITIONER CONTROL)				
B9MF 19A640-A	For hang-on a/cond.	2	All	A	60
COMF 19A640-A	For a/cond. except hang-on	1	All	A	60
19A642	SWITCH (AIR CONDITIONER CONTROL)				
B9MF 19A642-A	For hang-on a/cond.	1	All	A	60
C1VF 19A642-A		1	All	D	61/63
19A643	FAN (AIR CONDITIONER EVAPORATOR)				
B9AF 19A643-A		1	All	C	60/62
19A646	PLATE (AIR CONDITIONER EVAPORATOR TRIM)				
B9MF 19A646-A	4" x 14" - for hang-on a/cond.	1	All	A	60
C3AZ 19802-A	Register - for Deluxe a/cond.	1	All	A B	63
C4MY 19A646-A	Register - for Economy a/cond.	1	All	A C	64
C3AZ 19A995-A	Register - for Economy a/cond.	1	All	A B C	63
19A647	PLATE (AIR CONDITIONER CONTROL PANEL TRIM)				
B9MF 19A647-A	1" x 1-3/4" - for hang-on a/cond.	1	All	A	60
C4MY 19A647-A	For Economy a/cond.	1	All	A C	64
19648	GASKET (AIR CONDITIONER REGISTER TO INSTRUMENT PANEL)				
	NS-center - BLACK rubber - 4.75" x 1.69" x .210"	2	All	D	64
	NS-R. H. and L. H. - BLACK rubber - 2.81" x 1.69" x .210"	2	All	D	64

GROUP AND PART NUMBER	DESCRIPTION, SIZE, ETC.	NO. REQ'D	MODEL OR ENGINE CUBIC INCH DISPLACEMENT	VEHICLE CODE	YEAR 19____
19649	BEZEL (AIR CONDITIONER INSTRUMENT PANEL REGISTER)				
COMF 19649-BP	For a/cond. except hang-on	1	All	A	60
C4MY 19649-A	For Deluxe a/cond.	1	All	A	64
19B649	HOSE (AIR CONDITIONER & HEATER CONTROL VACUUM SUPPLY)				
	NS-9" long - for a/cond. except hang-on - cut from B9A-17543-A	1	All	A	61
19B651	GASKET (AIR CONDITIONER COMPRESSOR BASE PLATE)				
	NS-serviced in 19B684 kit	1	All	A C	60/62
19652	HINGE (AIR CONDITIONER INSTRUMENT PANEL REGISTER DOOR)				
	NS-also serviced in C3VY-19893-A a/cond. register assembly	1	All	D	63
19B652	DIAL (AIR CONDITIONER REGULATOR CONTROL)				
COAF 19B652-A	For hang-on a/cond.	1	All	A B	61/62
19A653	CONTROL (AIR CONDITIONER REGISTER)				
COMF 19A653-B	For a/cond. except hang-on	1	All	A	60
19655	SEAL (AIR CONDITIONER COMPRESSOR CRANKSHAFT)				
C1AZ 19655-A	Use on Tecumseh compressor	1	All	A B	61/64
		1	All	C	60/64
C4AZ 19655-A	Use on York compressor with (2) oil fill check plug bolts - (1) each located at center of R. H. and L. H. surfaces	1	All	A B C D	60/64
19656	PLATE (AIR CONDITIONER COMPRESSOR VALVE)				
COAE 19656-B	Use on cast aluminum Tecumeseh compressor	1	All	A B	61/62
		1	All	C	60/62
C3GY 19656-A	Use on Tecumseh compressor	1	All	A B	61/64
		1	All	C	60/64
C2SZ 19656-A	Use with York compressor with threaded type fittings	1	All	D	60/64
	Use on York compressor	1	All	A B C	60/64
19659	TUBE (AIR CONDITIONER COMPRESSOR DISCHARGE)				
PB8M 19659-A		1	All	A C D	60/62
19B660	EXTENSION (AIR CONDITIONER BLOWER SWITCH FEED)				
COMF 19B660-A	68" long - for a/cond. except hang-on	1	All	A	60
19B661-2	PLATE (AIR CONDITIONER BLOWER INLET)				
COAF 19B661-A	R.H. - for hang-on a/cond.	1	All	A B	61/62
COAF 19B662-A	L.H. - for hang-on a/cond.	1	All	A B	61/62
19664	GASKET (AIR CONDITIONER VALVE BODY TO COMPRESSOR)				
B8A 19664-A		AR	All	A B C	60/62
		2	All	D	60
	Use on compressor with bolt type fittings	2	All	D	61
19670	BEZEL (AIR CONDITIONER INSTRUMENT PANEL REGISTER)				
C1VF 19670-B		1	All	D	61

GROUP AND PART NUMBER	DESCRIPTION, SIZE, ETC.	NO. REQ'D	MODEL OR ENGINE CUBIC INCH DISPLACEMENT	VEHICLE CODE	YEAR 19____
19A671	REGISTER (AIR CONDITIONER EVAPORATOR)				
B9MY 19A671-A	Front - WHITE for hang-on a/cond.	4	All	A	60
B9MY 19A682-A	Side - BLACK for hang-on a/cond.	2	All	A	60
C4MY 19A671-A	For Deluxe a/cond. - mounted on evaporator trim cover (19828)	2	All	A	64
COAF 19A995-BP	Front - for hang-on a/cond. - except units with "Mercury" emblem on evaporator case	2	All	A B	61/62
C3MY 19A671-B	Lower - for Deluxe a/cond.	2	All	A B	63
B9AF 19A682-A	Side - for hang-on - a/cond.	2 2	All All	A B C	61/62 60/62
C2MY 19A671-A	For hang-on a/cond. "Mercury" emblem on evaporator case circular register	4	All	A B C	62
C3AZ 19A671-A	Front - for Economy a/cond. - chrome	4	All	A B C	63
C3MY 19A671-A	Front - for Deluxe a/cond. For Economy a/cond.	2 2	All All	A B A C	63 64
C3MY 19A671-C	Side - for Economy a/cond.	2	All	A B C	63/64
B9AF 19A671-B	Outer - front - except units with "Mercury" emblem on evaporator case	3	All	C	60/62
19672	SCREEN (AIR CONDITIONER COMPRESSOR SUCTION FITTING)				
B8S 19672-A		1	All	A C D	60/62
19A672	SEAL (AIR CONDITIONER EVAPORATOR CASE)				
B8LY 19A672-A	Rubber	1	All	D	60
19B673	SIGHT GLASS (AIR CONDITIONER EVAPORATOR LIQUID) INDICATOR				
COMY 19B673-A	For Deluxe a/cond. on 1963 and 1964 vehicles - includes (1) 87781 gasket	1	All	A B	60/64
19B674	KNOB (AIR CONDITIONER REGISTER AIR OUTLET DOOR)				
C1AF 19B674-A	For a/cond. except hang-on	2	All	A	61/62
C4MY 19B674-A	For Deluxe a/cond. (a) (4) req'd. - for register assembly (1) req'd. - for instrument panel ash tray receptacle basic 04821 Also serviced in 19893 and 04821 assembly	5	All	A	64
52003-S	Screw-self-tap.-flat hd.-No. 4-24 x 3/8"	10	a		
19B680	DUCT (AIR CONDITIONER EVAPORATOR TO INSTRUMENT PANEL REGISTER)				
C1AF 19B680-A	For a/cond. except hang-on	1	All except 223	A	61/62
19A682	REFER TO GROUP 19A671				
19A683	REFER TO GROUP 19B635				
19A684	CORE & TUBE (AIR CONDITIONER EVAPORATOR)				
B9AF 19A684-A	Except units with "Mercury" emblem on evaporator case	1	All	C	60/62
19B684	KIT (AIR CONDITIONER COMPRESSOR GASKET REPAIR)				
COAZ 19B684-B	Use on cast aluminum Tecumseh compressor	1 1	All All	A B C	61/62 60/62

Consists of the following -

‡(1) COAE-2992-A	gasket	‡(1) COAE-19658-B	seal	(1) 373764-S	screw and washer
‡(1) COAE-2993-A	gasket	(2) B8A-19664-A	gasket	(1) 373825-S	seal
‡(1) COAE-2996-A	gasket				

‡ Details of kit not serviced loose

CONTINUED ON NEXT PAGE

GROUP AND PART NUMBER	DESCRIPTION, SIZE, ETC.	NO. REQ'D	MODEL OR ENGINE CUBIC INCH DISPLACEMENT	VEHICLE CODE	YEAR 19____
19B684	KIT (AIR CONDITIONER COMPRESSOR GASKET REPAIR) CONTINUED				
C3GY 19B684-A	Use on Tecumseh compressor	1	All	A B	61/64
		1	All	C	60/64

Consists of the following -

‡(2) C3AA-2944-A	gasket	‡(1) C3VA-2993-A	gasket	(2) C2SZ-19B994-A	gasket - for roto-lok type valve
‡(1) C3VA-2945-A	gasket	‡(1) C3VA-2996-A	gasket		
‡(1) C3VA-2992-A	gasket	(2) B8A-19664-A	gasket - for bolt down type valve	‡(1) 373825-S	"o" ring

‡ Details of kit not serviced loose

C1AZ 19B684-A	Use on York compressor	1	All	A B C D	60/64

Consists of the following -

‡(1) C1AE-2945-A	gasket-cyl. hd.	‡(1) B9AE-19657-A	gasket -valve plate	‡(1) 371013-S91	seal - "o" ring
‡(1) C2AA-2996-A	gasket-base plate	(2) C2SZ-19B994-A	gasket-service valve	‡(2) 373671-S91	seal - "o" ring
‡(1) B9AE-19B651-A	gasket -base plate				

‡ Details of kit not serviced loose

19B686	STUD ASSEMBLY (AIR CONDITIONER EVAPORATOR SUPPORT)				
COAF 19B686-A	For a/cond. except hang-on	1	All	A	61/62
19B692	BRACKET (AIR CONDITIONER MUFFLER SUPPORT)				
COLF 19B692-A	Use with COLF-19B695-A strap	1	All	D	60
19693	REFER TO GROUP 19930-1				
19A695	REFER TO GROUP 19858				
19B695	STRAP (AIR CONDITIONER MUFFLER SUPPORT)				
COLF 19B695-A	Use with COLF-19B692-A bracket	1	All	D	60
19B696	SPACER (AIR CONDITIONER INSTRUMENT PANEL L.H. REGISTER)				
COLF 19B696-A		1	All	D	60
19698	GASKET (AIR CONDITIONER COMPRESSOR CRANKSHAFT BEARING HOUSING)				
	NS-serviced in 19B684 kit	1	All	A C	60/62
19B698	KIT - FILTER (AIR CONDITIONER EXPANSION VALVE)				
COMF 19B698-A		1	All	A D	60

Consists of the following -

(1) COMF-19B698-B strainer (1) COMF-19B699-A gasket

19700	KIT (AIR CONDITIONER)				
C3MY 19700-A	Economy ☆ Not used on model S-55, 71G and 71H ☆ Not used on vehicles equipped with 4 speed manual transmission ☆ Not used on vehicles equipped with P/S ☆ Use approptiate 19B969 kit when extra cooling is required	1	390☆	A	63

CONTINUED ON NEXT PAGE

GROUP AND PART NUMBER	DESCRIPTION, SIZE, ETC.	NO. REQ'D	MODEL OR ENGINE CUBIC INCH DISPLACEMENT	VEHICLE CODE	YEAR 19____
19700	KIT (AIR CONDITIONER) CONTINUED				
C4MY 19700-A	Economy ☆ Not used on console models ☆ Not used on Police Special models ☆ Not used on vehicles equipped with floor transmission shift ☆ Not used on vehicles equipped with movable steering column ☆ When installed on vehicles equipped with P/S appropriate 3A635 P/S adaptor kit must be used to complete installation	1	390☆	A	64
C3OZ 19700-C	Economy - evaporator identified with Ford name plate in lieu of Mercury name plate ☆ Not used on models S-33 ☆ Not used on vehicles equipped with floor transmission shift ☆ Not used on vehicles equipped with P/S ☆ Use appropriate 19B969 kit when extra cooling is required ☆ When installed on vehicles equipped with 200 C.I.D. engine (1) C2OA-8600-A fan blade must be procured and used in lieu of C3OZ-8600-A fan blade included in this kit	1	170☆, 200☆	B	63
C3OZ 19700-E	Deluxe - evaporator identified with "Selectaire" name plate in lieu of Mercury name plate ☆ Not used on vehicles equipped with P/S	1	170☆, 200☆	B	63
C3OZ 19700-B	Deluxe - evaporator identified with "Selectaire" name plate in lieu of Mercury name plate ☆ When installed on vehicles with P/S C3OZ-3A635-E adaptor kit must also be used to complete installation ☆ Applicable 19B969 extra cooling kit mandatory to be procured to complete installation	1	221☆, 260☆	B	63
C3GY 19700-B	Economy ☆ Not used on vehicles equipped with four speed manual transmission ☆ When installed on vehicles equipped with P/S C3DZ-3A635-C adaptor kit must be used to complete installation	1	260☆	C	63
C4GY 19700-A	Economy ☆ Not used on vehicles equipped with four speed manual transmission ☆ Not used on vehicles equipped with P/S	1	170, 200	C	64
C4GY 19700-C	Economy ☆ Not used on vehicles equipped with four speed manual transmissions ☆ When installed on vehicles equipped with P/S appropriate 3A635 P/S adaptor kit must be used to complete installation	1	170, 200	C	64
C4GY 19700-B	Economy ☆ Not used on vehicles equipped with four speed manual transmission ☆ When installed on vehicles equipped with P/S appropriate 3A635 P/S adaptor kit must be used to complete installation ☆ Not used on Special Performance	1	260, 289	C	64

GROUP AND PART NUMBER	DESCRIPTION, SIZE, ETC.	NO. REQ'D	MODEL OR ENGINE CUBIC INCH DISPLACEMENT	VEHICLE CODE	YEAR 19____
19703	COMPRESSOR (AIR CONDITIONER)				
C3SZ 19703-D	For Deluxe a/cond. - York compressor - identified by (1) oil fill check plug bolt located on rear surface of assembly Tecumseh compressor - identified by cast aluminum construction	1	390	A	63
C3AZ 19703-C	For Deluxe a/cond. - York compressor - identified by (2) oil fill check plug bolts - (1) each located at center of R. H. and L. H. surfaces Tecumseh compressor - identified by cast iron construction	1	All	A	64
C2AZ 19703-A		1 1	All except 223 All	A D	60/62 60
C3AZ 19703-D	For Economy a/cond. - York compressor - identified by (2) oil fill check plug bolts - (1) each located at center of R. H. and L. H. surfaces Tecumseh compressor - identified by cast iron construction	1	All	A B C A C	63 64
Package also includes -	(1) 378358-S stud-5/16"-18 x 24 x 231				
C2AZ 19703-B	(a)	1 1	223 All	A B C	61/62 60/62
C4VY 19703-A	York compresser - identified by (2) oil fill check plug bolts - (1) each located at center of R. H. and L. H.surface of assembly - when installed on 1961 vehicles - threaded type valves C3AZ-19752-A are also required	1	All	D	61/64
20523-S	Bolt-hex. hd. -3/8"-24-2.00-required to adjust compressor on mounting bracket CODE-2882-A	1	a		
19A704	TUBE (AIR CONDITIONER EVAPORATOR INLET)				
B9LF 19A704-B		1	All	D	60
19A705	TUBE (AIR CONDITIONER EVAPORATOR OUTLET)				
B9LF 19A705-C		1	All	D	60
19C705	FITTING ASSEMBLY (AIR CONDITIONER)				
C4AZ 19C705-D	Elbow - 90° - 3/8" size 5/8"-18 thread - for a/cond. Freon hose	AR	All	A B C	60/64
C4AZ 19C705-AJ	Adaptor - 1/2"-20 - male quick disconnect stem	AR	All	A B C	60/64
C4AZ 19C705-AR	Male - 5/8" size 7/8"-14 thread	AR	All	A B C	60/64
C4AZ 19C705-AS	Male - 1/2" size 3/4"-16 thread	AR	All	A B C	60/64
C4AZ 19C705-AU	Female - 5/8" size 7/8"-14 thread	AR	All	A B C	60/64
C4AZ 19C705-AZ	Female - 5/8" size 3/4"-16 thread	AR	All	A B C	60/64
19A706	RESISTOR (AIR CONDITIONER BLOWER MOTOR)				
COAF 19A706-A	For a/cond. except hang-on	1	All except 223	A	61
C2AZ 19A706-A	For a/cond. except hang-on	1	All	A	62
C4MY 19A706-A	For Deluxe a/cond.	1	All	A	64
COLF 19A706-A		1	All	D	60
C1VF 19A706-A		1	All	D	61/62

GROUP AND PART NUMBER	DESCRIPTION, SIZE, ETC.	NO. REQ'D	MODEL OR ENGINE CUBIC INCH DISPLACEMENT	VEHICLE CODE	YEAR 19____
19C708	TUBING (FREON AIR CONDITIONER)				
C4AZ 19C708-D	Copper - 5/8" O.D. 15 foot roll	AR	All	A C	60/64
C4AZ 19C708-E	Copper - 1/2" O.D. 15 foot roll	AR	All	A B C	60/64
C4AZ 19C708-F	Copper - 3/8" O.D. 15 foot roll	AR	All	A B C	60/64
19709	BRACKET (AIR CONDITIONER CONDENSER MOUNTING)				
	NS-for Deluxe a/cond. - .060 steel - 1-3/4" x 7"	4	All	A	64
	NS-for Economy a/cond. -1.12" x 1.86" x 6.68"	4	All	A	64
	NS-dealer improvise	4	All	C	60/62
19A709	HOSE (AIR CONDITIONER EVAPORATOR INLET TO COUPLING)				
B9LF 19A709-B	20" long - less coupling	2	All	D	60
19710	CONDENSER (AIR CONDITIONER)				
COMF 19710-T		1	All	A	60
19712	CORE (AIR CONDITIONER CONDENSER)				
C1AF 19712-C		1	292,352,390	A	61/62
C1AF 19712-D		1	223	A	61/62
C3AZ 19712-A	For Deluxe a/cond.	1	All	A	63
C4AZ 19712-A	For Deluxe a/cond.	1	All	A	64
C3AZ 19712-B	For Economy a/cond.	1	All	A	63
	For Economy a/cond. with dehydrator and receiver tank mounted on top of condenser assembly	1	All	B	63
C4AZ 19712-B	For Economy a/cond.	1	All	A C	64
C2OZ 19712-A		1	170,221	B	62
C2OZ 19712-B		1	260	B	62
C3OZ 19712-A	For Deluxe a/cond.	1	All	B	63
	For Economy a/cond. with dehydrator and receiver tank mounted on side of condenser assembly	1	All	B	63
CODF 19712-B		1	All	C	60/62
C3DZ 19712-A	For Economy a/cond. with dehydrator and receiver tank mounted on R. H. fender apron	1	144,170	C	63
C3DZ 19712-B	For Economy a/cond. with dehydrator and receiver tank mounted on side of condenser assembly	1	260	C	63
COLF 19712-B		1	All	D	60
C1VF 19712-B		1	All	D	61/63
C4VY 19712-A		1	All	D	64
19A715	PACKAGE (AIR CONDITIONER HOSE COUPLING)				
B8LY 19A715-C	Union - small - 3/8" pipe to 5/8"-18 - standard	AR	All	A D	60
	Consists of the following -				
(1) FFC-14937-B	union (1) FFC-19A593-A seal (1) B8LY-19B979-A "o" ring				
B8LY 19A715-D	Adaptor - small - 3/8" pipe to 5/8"-18 - standard	AR	All	A D	60
	Consists of the following -				
(1) FFC-14937-C	adaptor (1) B8LY-19B979-A "o" ring				
B8LY 19A715-A	Union - large - 1/2" pipe to 1"-20 - standard	2	All	D	60
	Consists of the following -				
(1) FFC-14937-A	union (1) FFC-19A593-B seal (1) B8LY-19B979-B "o" ring				
B8LY 19A715-B	Adaptor - large - 1/2" pipe to 1"-20 - standard	2	All	D	60
	Consists of the following -				
(1) FFC-14937-D	adaptor (1) B8LY-19B979-B "o" ring				
19A717	HOSE (AIR CONDITIONER EVAPORATOR OUTLET TO COUPLING)				
B9LF 19A717-B	20" long - less coupling	2	All	D	60

GROUP AND PART NUMBER	DESCRIPTION, SIZE, ETC.	NO. REQ'D	MODEL OR ENGINE CUBIC INCH DISPLACEMENT	VEHICLE CODE	YEAR 19____
19A735-6	REFER TO GROUP 18A461-2				
19740	PLENUM CHAMBER (AIR CONDITIONER)				
COMF 19740-C	For a/cond. except hang-on	1	All	A	60
COLF 19740-B	Less motor	1	All	D	60
19742	GRILLE (AIR CONDITIONER AIR INTAKE)				
COMF 19742-A	For hang-on a/cond.	2	All	A	60
C3MY 19742-A	For Economy a/cond.	2	All	A B C	63/64
19745	SCREEN (AIR CONDITIONER AIR INTAKE)				
	NS-galvanized wire mesh - 6" x 9"	1	All	D	64
19752	VALVE (AIR CONDITIONER COMPRESSOR)				
COAF 19A990-A	High pressure	1	All	A B C	60/62
C2SZ 19A990-A	For high and low pressure - for Economy a/cond.	2	All	A	64
	For high pressure - for Deluxe a/cond.	1	All	A	64
	For high and low pressure - for Economy a/cond.	2	260, 289	C	64
	Use on compressors with threaded type fittings				
	High pressure	1	All	A B C	63
	Low pressure	1	260	C	63
	Low pressure - for Economy a/cond. with dehydrator and receiver tank mounted on side of condenser assembly	1	144, 170	C	63
COAF 19752-A	Low pressure	1	All	A B C	60/62
		1	All	D	60
	For high and low pressure with bolt down type fittings - use on compressor	2	All	D	61
C3AZ 19752-A	Low pressure - for Deluxe a/cond.	1	All	A B	63/64
	Low pressure - for Economy a/cond. with dehydrator and receiver tank mounted on side of condenser assembly	1	All	B	63
	Low pressure for Economy a/cond. with dehydrator and receiver tank mounted on R. H. fender apron	1	144, 170	C	63
	For high and low pressure - use on compressor with threaded type fittings	2	All	D	61/64
C5ZZ 19A990-A	For high and low pressure - for Economy a/cond.	2	170, 200	C	64
B8LY 19A990-A	High pressure	1	All	D	60
19B776	GASKET (AIR CONDITIONER BLOWER HOUSING COVER)				
C1VV 19B776-A		1	All	D	61/62
19A779	CLIP (HEATER CORE CASE)				
CODF 19A779-A		11	All	C	60/64
19780	ACTUATOR (AIR CONDITIONER EVAPORATOR DOOR CONTROL)				
C4MY 19780-A	For Deluxe a/cond.	2	All	A	64
19A783	ARM (AIR CONDITIONER & HEATER VACUUM MOTOR CONTROL)				
COAF 19A783-A	Must be used with COAF-18A318-B motor	1	All	A	60/62
		AR	All	D	60/64
19B783	LINK (AIR CONDITIONER EVAPORATOR DOOR CONTROL)				
C4MY 19B783-A	For Deluxe a/cond.	2	All	A	64
19A785	BRACKET (AIR CONDITIONER EVAPORATOR CASE SUPPORT)				
COAF 19A785-B	Center - for a/cond. except hang-on	1	All	A	61/62

GROUP AND PART NUMBER	DESCRIPTION, SIZE, ETC.	NO. REQ'D	MODEL OR ENGINE CUBIC INCH DISPLACEMENT	VEHICLE CODE	YEAR 19____
19B785	LOCK (AIR CONDITIONER REGISTER)				
C1VV 19B785-A		1	All	D	61
19A786	HOSE (AIR CONDITIONER & HEATER BLOWER HOUSING TO BLOWER MOTOR)				
B9MY 19A786-A	For a/cond. except hang-on	1	All	A	60
COAF 19A786-A	For a/cond. except hang-on	1	All	A	61/62
C3VY 19A786-B	For heater and/or a/cond.	1	All	D	63/64
19A788	REFER TO GROUP 18490-1				
19B788	SPRING (AIR CONDITIONER REGISTER LOCK LATCH)				
C1VF 19B788-B		2	All	D	61
19B796	SPRING (AIR CONDITIONER REGISTER LOCK ACTUATOR ROD)				
C1VV 19B796-A		1	All	D	61
19A797	SEAL (AIR CONDITIONER BLOWER MOTOR PANEL OPENING)				
COAF 19A797-A	For a/cond. except hang-on	1	All	A	61/62
19B797	SPRING (AIR CONDITIONER INSTRUMENT PANEL DOOR STOP)				
C1VF 19B797-B		1	All	D	61
19B800	ROLLER (AIR CONDITIONER INSTRUMENT PANEL DOOR STOP CAM)				
C1VF 19B800-B		2	All	D	61
19B801	PIN (AIR CONDITIONER INSTRUMENT PANEL DOOR STOP CAM)				
C1VF 19B801-B		2	All	D	61
19802	REFER TO GROUP 19A646				
19802	PANEL (AIR CONDITIONER EVAPORATOR CASE)				
COAF 19802-AP	Front - for hang-on a/cond.	1	All	A B	61/62
19A804-5	BRACKET (AIR CONDITIONER EVAPORATOR SUPPORT)				
	NS-for Deluxe a/cond. - R.H. - 1.87" x 3/4" x 15-1/2" long	1	All	A	64
	NS-for Deluxe a/cond. - L.H. - 2.28" x 3/4" x 14-3/4" long	1	All	A	64
19805	MOTOR (AIR CONDITIONER BLOWER)				
C2AZ 19805-A	Except hang-on a/cond.	1	All	A	61/62
C4MY 19805-A	For Deluxe a/cond. - includes dual wheels - serviced only as balanced assembly	1	All	A	64
COAF 19805-C	For hang-on a/cond. - except units with "Mercury" emblem on evaporator case	1	All	A B	61/62
C3AZ 19805-C	For Deluxe a/cond. - includes wheel - serviced only as balanced assembly	1	All	A B	63
	NS-for Deluxe a/cond. - refer to group 19834 for wheel	1	All	A B	63
C2AZ 19805-B	For hang-on a/cond. with "Mercury" emblem on evaporator case - serviced only as balanced assy.	1	All	A B C	62
C3AZ 19805-B	For Economy a/cond. - includes wheels - serviced only as balanced assembly	1	All	A B C	63/64
B9FA 19805-A	Except units with "Mercury" emblem on evaporator case	1	All	C	60/62
FFC 19805-A	R.H. - counter-clockwise	1	All	D	60
FEG 19805-B	L.H. - clockwise	1	All	D	60
19A810	REGISTER (AIR CONDITIONER AIR INLET)				
COAF 19A810-A	For a/cond. except hang-on	1	All except 223	A	61/62

GROUP AND PART NUMBER	DESCRIPTION, SIZE, ETC.	NO. REQ'D	MODEL OR ENGINE CUBIC INCH DISPLACEMENT	VEHICLE CODE	YEAR 19____
19819	THERMOSTAT (AIR CONDITIONER EVAPORATOR TEMPERATURE CONTROL)				
FFC 19819-B	"Icing Switch"	1	All	D	60
19B820	BEZEL (AIR CONDITIONER INSTRUMENT PANEL REGISTER DOOR TRIM)				
C1VF 19B820-A	Used on early production models with C1VF-19B833-A - plate aluminum door trim instrument panel register	1	All	D	61
19823	RETAINER (AIR CONDITIONER EVAPORATOR INLET TUBE TO FRAME)				
C1VF 19823-B	(1) req'd. - for upper (1) req'd. - for lower	2	All	D	61/63
19828	COVER (AIR CONDITIONER EVAPORATOR TRIM)				
C4MY 19828-A	For Deluxe a/cond. - BLACK - dealer to paint to match interior trim if required	1	All	A	64
19B828	SPRING (AIR CONDITIONER INSTRUMENT PANEL REGISTER DOOR)				
C4MY 19B828-A	R. H. - for Deluxe a/cond. (1) req'd. - for R. H. a/cond. instrument panel register (C4MY-19893-A) (1) req'd. - for L. H. a/cond. instrument panel register (C4MY-19893-B)	2	All	A	64
C4MY 19B828-B	L. H. - for Deluxe a/cond. (1) req'd. - for L. H. a/cond. instrument panel register (C4MY-19893-B)	1	All	A	64
C1VF 19B828-B	R. H.	1	All	D	61
C1VF 19B948-A	L. H.	1	All	D	61
C3VY 19B828-A	Also serviced in C3VY-19893-A register assembly	1	All	D	63
19B829	PIN (AIR CONDITIONER INSTRUMENT PANEL REGISTER DOOR PIVOT)				
C4MY 19B829-A	For Deluxe a/cond. - 1/4" x 1" long (2) req'd. - for L. H. a/cond. instrument panel register (C4MY-19893-B) (4) req'd. - for (2) center a/cond. instrument panel registers (C4MY-19893-C)	6	All	A	64
C4MY 19B829-B	For Deluxe a/cond. - 1/4" x 2-1/4" long (1) req'd. - for R. H. a/cond. instrument panel register (C4MY-19893-A)	1	All	A	64
C1VF 19B829-B		1	All	D	61
19A832	BEZEL (AIR CONDITIONER REGULATOR)				
COLF 19A832-C		1	All	D	60
19833	REFER TO GROUP 18581				
19A833	REFER TO GROUP 18A318				
19B833	REFER TO GROUP 19B964				
19834	WHEEL (AIR CONDITIONER BLOWER)				
COAF 19834-D	Except hang-on	1	All	A	61/62
COAF 19834-E	For hang-on a/cond.	2	All	A B	61/62
19A834	TUBE (AIR CONDITIONER EVAPORATOR INLET & OUTLET)				
B9LF 19A834-A	Less condenser - valve and coupling	1	All	D	60

GROUP AND PART NUMBER	DESCRIPTION, SIZE, ETC.	NO. REQ'D	MODEL OR ENGINE CUBIC INCH DISPLACEMENT	VEHICLE CODE	YEAR 19____
19835-7	TUBE (AIR CONDITIONER DEHYDRATOR TO EVAPORATOR)				
COMF 19835-A	37-1/2" long - for a/cond. except hang-on	1	All	A	60
COMF 19835-B	For hang-on a/cond.	1	All	A	60
C1AF 19837-B	Rear - less sight glass and attaching parts	1	All	A	61/62
	Rear - for Deluxe a/cond. - less sight glass and attaching parts	1	All	A	63/64
C2AZ 19837-A	For hang-on a/cond. with "Mercury" emblem on evaporator case	1	All	A	62
C3AZ 19837-B	For Economy a/cond. - includes sight glass	1	All	A	63
C4OZ 19837-A	Rear - for Economy a/cond. - includes sight glass	1	All	A	64
	NS-front for Economy a/cond. - cut to required length from bulk tubing B7Q-2269-A - 3/8" I.D.	1	All	A C	64
C2OZ 19837-B	For hang-on a/cond. with "Mercury" emblem on evaporator case	1	All	B	62
C3OZ 19837-A	For Deluxe a/cond. - less sight glass and attaching parts - for 1962 - except units with "Mercury" emblem on evaporator case	1	All	B	62/63
C3AZ 19837-A	Rear - for Economy a/cond. with dehydrator and receiver tank mounted on top of condenser assembly - includes sight glass	1	221,260	B	63
C3OZ 19837-B	Rear - for Economy a/cond. with dehydrator and receiver tank mounted on top of condenser assembly - includes sight glass	1	170,200	B	63
C3OZ 19837-C	Rear - for Economy a/cond. with dehydrator and receiver tank mounted on side of condenser assembly - includes sight glass	1	All	B	63
CODF 19837-B	Rear - use between compressor and evaporator - 5/8" fitting both ends	1	All	C	60/62
CODF 19835-A		1	All	C	60/62
	For Economy a/cond. with dehydrator and receiver tank mounted on R.H. fender apron	1	144,170	C	63
C3DZ 19837-A	Rear - for Economy a/cond. with dehydrator and receiver tank mounted on R.H. fender apron	1	144,170	C	63
C3DZ 19837-B	Rear - 54" long - includes sight glass	1	260	C	63
	For Economy a/cond. with dehydrator and receiver tank mounted on side of condenser assembly	1	144,170	C	63
	Rear - for Economy a/cond. - includes sight glass	1	All	C	64
C1VF 19835-B	Front	1	All	D	61/63
C1VF 19837-B	Rear	1	All	D	61/63
	Rear - use on vehicles built prior to 11-15-63 - use with a/cond. systems having evaporator expansion valve mounted approximately at engine compartment dash panel - constructed of 51" of flexible hose and 5" of steel tubing formed into 90° angle	1	All	D	64
C4VY 19837-A	Rear - use on vehicles built after 11-14-63 - use with a/cond. systems having evaporated expansion valve 19849 mounted approximately 5" forward of engine compartment dash panel - constructed of 53" of flexible hose with fittings	1	All	D	64
C4VY 19835-A	Front	1	All	D	64
19838	CLAMP (AIR CONDITIONER DEHYDRATOR TANK)				
	NS-for Economy a/cond. - 2" wide 1.03" radius	2	All	A C	64
19A840-1	BRACKET (AIR CONDITIONER INSTRUMENT PANEL REGISTER)				
COMF 19A840-A	R.H. - for a/cond. except hang-on	1	All	A	60
COMF 19A841-A	L.H. - for a/cond. except hang-on	1	All	A	60

GROUP AND PART NUMBER	DESCRIPTION, SIZE, ETC.	NO. REQ'D	MODEL OR ENGINE CUBIC INCH DISPLACEMENT	VEHICLE CODE	YEAR 19____
19A842	DUCT & DEFLECTOR (AIR CONDITIONER EVAPORATOR TO INSTRUMENT PANEL)				
COMF 19A842-C	For a/cond. except hang-on	1	All	A	60
19846	MOTOR & WHEEL (AIR CONDITIONER BLOWER)				
COMF 19846-A	For a/cond. except hang-on - balanced assembly	1	All	A	60
COMF 19846-C	For hang-on a/cond. - balanced assembly - includes motor, wheels and brackets	1	All	A	60
19B848	BUTTON (AIR CONDITIONER REGISTER LOCK RELEASE)				
C1VF 19B848-A		1	All	D	61
19849	VALVE (AIR CONDITIONER EVAPORATOR EXPANSION)				
B9MF 19849-A	For hang-on a/cond.	1	All	A	60
B9MF 19849-D	For a/cond. except hang-on	1	All	A	60
C1AA 19849-A	For a/cond. except hang-on	1	All	A	61/62
COAF 19849-B	For hang-on a/cond. - except units with "Mercury" emblem on evaporator case	1	All	A B	61/62
C2AZ 19849-A	For hang-on a/cond. with "Mercury" emblem on evaporator case	1	All	A B C	62
	For Deluxe a/cond.	1	All	A B	63/64
C3DZ 19849-A	For Economy a/cond.	1	All	A B C	63/64
B9A 19849-B	Except units with "Mercury" emblem on evaporator case	1	All	C	60/62
B9LF 19849-A		2	All	D	60
C1VY 19849-B	Includes sight glass - use on vehicles built prior to 11-15-63 and mounted at engine compartment dash panel	1	All	D	61/64
C4VY 19849-A	Includes sight glass - use on vehicles built after 11-14-63 and mounted approximately 5" forward of engine compartment dash panel	1	All	D	64
19B849	ROD (AIR CONDITIONER REGISTER LOCK ACTUATOR)				
C1VV 19B849-A		1	All	D	61
19B850	CONNECTOR (AIR CONDITIONER REGISTER LOCK ACTUATOR ROD TO EXTENSION)				
C1VF 19B850-A		1	All	D	61
19A852	KNOB (AIR CONDITIONER REGISTER HORIZONTAL LOUVER ACTUATOR)				
B9MF 19A852-A	For a/cond. except hang-on	3	All	A	60
19A856	MOULDING (AIR CONDITIONER REGISTER UPPER) L. H.				
COLF 19A856-C		1	All	D	60
19858	HOSE (AIR CONDITIONER EVAPORATOR DRAIN)				
C4AZ 19858-A	For Economy a/cond.	2	All	A	64
COAF 19858-A	For hang-on a/cond.	2	All	A B	61/62
C3AZ 19858-A	For Economy a/cond.	2	All	A B	63
B9AF 19858-A	R. H.	1	All	C	60/62
B9AF 19A695-A	L. H.	1	All	C	60/62
C3GY 19858-A	For Economy a/cond.	2	All	C	63/64
C2VY 19858-A	Cut to required length	1	All	D	61/64
19859	PAN (AIR CONDITIONER EVAPORATOR DRIP)				
C4MY 19859-A	For Deluxe a/cond.	1	All	A	64
C3MY 19859-A	For Deluxe a/cond.	1	All	A B	63
C4MY 19859-B	For Economy a/cond.	1	All	A C	64
C3AZ 19897-A	For Economy a/cond.	1	All	A B C	63

CONTINUED ON NEXT PAGE

GROUP AND PART NUMBER	DESCRIPTION, SIZE, ETC.	NO. REQ'D	MODEL OR ENGINE CUBIC INCH DISPLACEMENT	VEHICLE CODE	YEAR 19____
19859	PAN (AIR CONDITIONER EVAPORATOR DRIP) CONTINUED				
B9AF 19859-A		1	All	C	60/62
C1VF 19859-A		1	All	D	61/62
C3VY 19859-B		1	All	D	63
C4VY 19859-A	(a)	1	All	D	64
42161-S	Screw-hex. washer hd. -self-tap. -No.10-12 x 1-1/2"	AR	a		
19860	CORE (AIR CONDITIONER EVAPORATOR)				
B9MF 19860-B	For a/cond. except hang-on - less expansion valve and bulb clamp	1	All	A	60
B9MF 19860-D	For hang-on a/cond. - less expansion valve	1	All	A	60
COAF 19860-B	For hang-on a/cond. - except units with "Mercury" emblem on evaporator case	1	All	A	61/62
C1AF 19860-A	For a/cond. except hang-on	1	All except 223	A	61/62
C3AZ 19860-A	For Deluxe a/cond.	1	All	A	63
C4MY 19860-A	For Deluxe a/cond.	1	All	A	64
C4AZ 19860-B	For Economy a/cond.	1	All	A C	64
C2AZ 19860-B	For hang-on a/cond. with "Mercury" emblem on evaporator case	1	All	A B C	62
C3AZ 19860-B	For Economy a/cond.	1	All	A B	63
	For Economy a/cond. with dehydrator and receiver tank mounted on R. H. fender apron	1	144, 170	C	63
C2OZ 19860-A	For hang-on a/cond. - except units with "Mercury" emblem on evaporator case	1	All	B	62
C3OZ 19860-A	For Deluxe a/cond.	1	All	B	63
C3DZ 19860-A		1	260	C	63
	For Economy a/cond. with dehydrator and receiver tank mounted on side of condenser assembly	1	144, 170	C	63
B9LF 19B565-A	R. H. - with expansion valve and hoses precharged	1	All	D	60
B9LF 19B566-A	L. H. - with expansion valve and hoses precharged	1	All	D	60
B9LF 19860-B	R. H.	1	All	D	60
B9LF 19A890-A	L. H.	1	All	D	60
C1VV 19860-A		1	All	D	61/62
C3VY 19860-B	Includes louver assembly	1	All	D	63
C4VY 19860-A	Includes louver assembly - use on vehicles built prior to 11-15-63 - use with a/cond. systems having evaporator expansion valve mounted at engine compartment dash panel	1	All	D	64
C4VY 19860-B	Includes louver assembly - use on vehicles built after 11-14-63 - use with a/cond. systems having evaporator expansion valve mounted approx. 5" forward of engine compartment dash panel	1	All	D	64
19B861-2	GASKET (AIR CONDITIONER EVAPORATOR CASE TO DASH PANEL)				
C1VV 19B862-A	Lower	1	All	D	61/62
C1VV 19B861-A	Upper	1	All	D	61/63
C3VY 19B862-A	Lower	1	All	D	63
C4VY 19B861-A	Full - sponge rubber	1	All	D	64
19B866	CLAMP (AIR CONDITIONER DUCT TO INSTRUMENT PANEL REGISTER)				
C1VV 19B866-A	Upper	1	All	D	61/63
19867	TUBE (AIR CONDITIONER EVAPORATOR TO COMPRESSOR SHUT-OFF VALVE)				
B9FM 19867-A	For a/cond. except hang-on	1	All	A	60
B9MF 19867-A	74" long - for hang-on a/cond.	1	All	A	60
C1AF 19867-A	For hang-on a/cond. - except units with "Mercury" emblem on evaporator case	1	223	A	61/62

CONTINUED ON NEXT PAGE

GROUP AND PART NUMBER	DESCRIPTION, SIZE, ETC.	NO. REQ'D	MODEL OR ENGINE CUBIC INCH DISPLACEMENT	VEHICLE CODE	YEAR 19____
19867	TUBE (AIR CONDITIONER EVAPORATOR TO COMPRESSOR SHUT-OFF VALVE) CONTINUED				
C3AZ 19867-C	Except units with "Mercury" emblem on evaporator case	1	All except 223	A	61/62
	For Deluxe a/cond.	1	All	A	63
C2AZ 19867-A	For hang-on a/cond. with "Mercury" emblem on evaporator case	1	All except 223	A	62
C2AZ 19867-B	For hang-on a/cond. with "Mercury" emblem on evaporator case	1	223	A	62
C3AZ 19867-B	For Economy a/cond.	1	All	A	63
C4AZ 19867-B	For Economy a/cond.	1	All	A	64
C3AZ 19867-A	For Deluxe a/cond.	1	170, 200	B	63
		1	All	A	64
C2OZ 19867-A	For hang-on a/cond. - except units with "Mercury" emblem on evaporator case	1	170	B	62
C2OZ 19867-B	For hang-on a/cond. - except units with "Mercury" emblem on evaporator case	1	221, 260	B	62
C2OZ 19867-C	For hang-on a/cond. with "Mercury" emblem on evaporator case	1	170	B	62
C2OZ 19867-D	For hang-on a/cond. with "Mercury" emblem on evaporator case	1	221, 260	B	62
C3OZ 19867-A	For Deluxe a/cond.	1	221, 260	B	63
C3OZ 19867-C	For Economy a/cond. with dehydrator and receiver tank mounted on top of condenser assembly	1	221, 260	B	63
C3OZ 19867-D	For Economy a/cond. with dehydrator and receiver tank mounted on top of condenser assembly	1	170, 200	B	63
C3OZ 19867-F	For Economy a/cond. with dehydrator and receiver tank mounted on side of condenser assembly	1	170, 200	B	63
C3OZ 19867-G	For Economy a/cond. with dehydrator and receiver tank mounted on side of condenser assembly	1	221, 260	B	63
CODF 19867-B	Use between dehydrator and evaporator - 7/8" fitting both ends	1	All	C	60/62
C3DZ 19867-A	For Economy a/cond. with dehydrator and receiver tank mounted on R. H. fender apron	1	144, 170	C	63
C3DZ 19867-B		1	260	C	63
C3DZ 19867-C	For Economy a/cond. with dehydrator and reciver tank mounted on side of condenser assembly	1	144, 170	C	63
	For Economy a/cond.	1	All	C	64
C1VF 19867-B		1	All	D	61/64
19A868	REGISTER (AIR CONDITIONER REAR)				
COLF 19A868-A	R. H. and L. H. - front door assembly	2	All	D	60
19B871	COVER (AIR CONDITIONER BLOWER HOUSING)				
C1VV 19B871-A		1	All	D	61/62
19A882	ADAPTOR (AIR CONDITIONER SIDE COWL DUCT) R. H.				
COLF 19A882-A		1	All	D	60
19A883	CONNECTOR (AIR CONDITIONER DEFROSTER NOZZLE) R. H.				
COLF 19A883-A		1	All	D	60
19A884	BRACKET (AIR CONDITIONER & HEATER CONTROL MOUNTING)				
C1AF 19A884-C	For heater and/or a/cond. except hang-on	1	All	A	61
C2AZ 19A884-A	For a/cond. except hang-on	1	All	A	62
B9AZ 19A884-A		1	All	C	60/62

GROUP AND PART NUMBER	DESCRIPTION, SIZE, ETC.	NO. REQ'D	MODEL OR ENGINE CUBIC INCH DISPLACEMENT	VEHICLE CODE	YEAR 19___
19A885	WIRING (AIR CONDITIONER THERMOSTAT TO CLUTCH)				
COAF 19A885-A	For a/cond. except hang-on	1	All	A	61/62
C4MY 19A885-B	For Deluxe a/cond.	1	All	A	64
	NS-for Deluxe a/cond. - dealer to improvise - (1) No. 16 wire approximately 17" long and (1) No. 16 wire approximately 14" long and necessary connectors and use as jumper assembly between the C4MY-19A885-B wire assembly and 19A641 evaporator assembly at thermostat switch	1	All	A	64
	NS-for Economy a/cond. - dealer improvise	1	All	A C	64
	NS-dealer improvise	1	All	B C	60/62
19B888	SWITCH (AIR CONDITIONER DAMPER DOOR)				
C1AF 19B888-B	Vacuum - for a/cond. except hang-on	1	All	A	61/62
19A890	REFER TO GROUP 19860				
19B892	LENS (AIR CONDITIONER CONTROL)				
C1VF 19B892-A		1	All	D	61/62
C3VY 19B892-A		1	All	D	63
C4VY 19B892-A		1	All	D	64
19893	REGISTER ASSEMBLY (AIR CONDITIONER INSTRUMENT PANEL)				
C1MF 19893-B	Less thermostat, knob, wiring, grommet, and thermostat mounting bracket - for a/cond. except hang-on	1	All	A	61/62
C4MY 19893-A	R. H. - for Deluxe a/cond. - also serviced in 04392 R. H. panel	1	All	A	64
C4MY 19893-B	L. H. - for Deluxe a/cond. - also serviced in 04393 L. H. panel	1	All	A	64
C4MY 19893-C	Center - for Deluxe a/cond.	1	All	A	64
C1VV 19893-F(283)	Dealer to paint to match interior trim and install applicable 19B964 pad to match	1	All	D	61
C2VY 19893-A	BLACK - dealer to paint to match interior trim	1	All	D	62
C3VY 19893-A	BLACK - dealer to paint to match interior trim	1	All	D	63
C4VY 19893-A	Center	1	All	D	64
C4VY 19893-C	R. H.	1	All	D	64
C4VY 19893-B	L. H.	1	All	D	64
19A896	SPRING (AIR CONDITIONER REGISTER LOUVER TENSION)				
B9MF 19A896-A	For a/cond. except hang-on - horizontal louver upper tension	1	All	A	60
C4MY 19A896-A	Snap-on type - for Deluxe a/cond. (a) (1) req'd. - for R. H. instrument panel register (2) req'd. - for L. H. instrument panel register (4) req'd. - for center instrument panel register	7	All	A	64
C4MY 19A896-C	Riveted type - for Deluxe a/cond. - required for two center a/cond. instrument panel registers	4	All	A	64
41280-S	Screw-self tap. fill. hd. -No. 6-32 x 1/4"	7	a		
52720-S	Screw-pan hd. cr. rec. tap. -No. 8-18 x 3/8"	14	a		
372428-S	Screw-oval hd. No. 6-32 x 1/4"	14	a		
19897	REFER TO GROUP 19859				
19897	CASE (AIR CONDITIONER EVAPORATOR & HEATER)				
COAF 19897-E(211)	BLACK - for hang-on a/cond.	1	All	A	61/62
C1AZ 19897-A	For a/cond.	1	292, 352, 390	A	61/62

GROUP AND PART NUMBER	DESCRIPTION, SIZE, ETC.	NO. REQ'D	MODEL OR ENGINE CUBIC INCH DISPLACEMENT	VEHICLE CODE	YEAR 19____
19B914	SWITCH VACUUM (AIR CONDITIONER BLOWER MOTOR GROUNDING)				
C2VY 19B914-A	Use on L. H. blower assembly only	1	All	D	61/62
19B918	TUBE (AIR CONDITIONER BLOWER HOUSING TO BLOWER MOTOR)				
COLF 19B918-A		2	All	D	60
19924	HOUSING (AIR CONDITIONER BLOWER)				
COMF 19924-D	For a/cond. except hang-on	1	All	A	60
19924	BLOWER (AIR CONDITIONER)				
C1VV 19924-A	Balanced assembly includes housing, motor and wheel	1	All	D	61/62
19926	DUCT (AIR CONDITIONER EVAPORATOR TO INSTRUMENT PANEL REGISTER)				
C4MY 19926-A	L. H. - 2-1/2" I.D. x 33" long - for Deluxe a/cond.	1	All	A	64
C1VV 19926-A		1	All	D	61/62
C3VY 19926-A		1	All	D	63
C4VY 19926-A	Center - also serviced in a/cond. evaporator panel assembly (19A998)	2	All	D	64
C4VY 19926-C	R. H. - 2-1/2" I.D. x 23" long	1	All	D	64
C4VY 19926-B	L. H. - 2-1/2" I.D. x 28" long	1	All	D	64
19930-1	HOUSING (AIR CONDITIONER BLOWER)				
COMF 19693-A	For hang-on a/cond.	1	All	A	60
COAF 19930-A	R.H. - for hang-on a/cond.	1	All	A B	61/62
COAF 19931-A	L.H. - for hang-on a/cond.	1	All	A B	61/62
19A932	CONNECTOR (AIR CONDITIONER REGISTER)				
C4MY 19A932-C	R. H. - for Deluxe a/cond.	1	All	A	64
C4MY 19A932-B	L. H. - for Deluxe a/cond.	1	All	A	64
COLF 19A932-A		1	All	D	60
19B933	BRACKET (AIR CONDITIONER REGISTER LOCK ROLLER SUPPORT MOUNTING)				
C1VF 19B933-A		1	All	D	61
19A934	REGISTER & CONTROL (AIR CONDITIONER INSTRUMENT PANEL)				
B8LY 19A934-A	R. H.	1	All	D	60
COLF 19A976-C	L. H.	1	All	D	60
19B938	BOLT (AIR CONDITIONER DEHYDRATOR TANK MOUNTING)				
CODF 19B938-A		1	All	C	60/62
C3DZ 19B938-A	For Economy a/cond. with dehydrator and receiver tank mounted on R. H. fender apron	1	144,170	C	63
19945	WIRING (AIR CONDITIONER BLOWER SWITCH FEED)				
COMF 19945-A	For a/cond. except hang-on	1	All	A	60
COAF 19945-A	For a/cond. except hang-on	1	All	A	61/62
19A945	SWITCH (AIR CONDITIONER TEMPERATURE CONTROL)				
COAF 19A945-A	For hang-on a/cond.	1	All	A B	61/62
COLF 19A945-A	With vacuum control	1	All	D	60
C1VV 19B967-A	With carburetor fast idle control device	1	All	D	61
C1VV 19A945-B	Without carburetor fast idle control device for (a) 1961	1	All	D	61/64
42161-S	Screw-hex.washer hd.-self-tap.-No. 10-12 x 1-1/2"	2	a		
19948	TUBE (AIR CONDITIONER RECEIVER TANK TO CONDENSER)				
COMF 19948-C		1	All	A	60

GROUP AND PART NUMBER	DESCRIPTION, SIZE, ETC.	NO. REQ'D	MODEL OR ENGINE CUBIC INCH DISPLACEMENT	VEHICLE CODE	YEAR 19___
19B948	REFER TO GROUP 19B828				
19A949	BRACKET (AIR CONDITIONER REGISTER THERMOSTAT MOUNTING)				
COAF 19A949-B	For a/cond. except hang-on	1	All	A	61/62
19959	DEHYDRATOR & RECEIVER TANK (AIR CONDITIONER)				
COMF 19959-H	Less sight glass and quick connect fittings	1	All	A	60
C1AF 19959-C	For a/cond. and hang-on - less sight glass (a)	1	292,352,390	A	61/62
C1AF 19959-D	For hang-on a/cond. - less sight glass (a)	1	223	A	61/62
C3AZ 19959-A	For Deluxe a/cond.	1	All	A	63
C4AZ 19959-A	For Deluxe a/cond. (a)	1	All	A	64
C3AZ 19959-C	For Economy a/cond. (a)	1	All	A	63
	For Economy a/cond. with dehydrator and receiver tank mounted on top of condenser assembly	1	All	B	63
C4AZ 19959-B	For Economy a/cond. - sight glass in 19837 tube (a)	1	All	A C	64
C2OZ 19959-A	For hang-on a/cond. - less sight glass (a)	1	All	B	62
C3OZ 19959-A	For Deluxe a/cond.	1	All	B	63
	For Economy a/cond. with dehydrator and receiver tank mounted on side of condenser assembly	1	All	B	63
CODZ 19959-A	For hang-on a/cond. - includes sight glass (a)	1	All	C	60/62
	Includes sight glass - for Economy a/cond. (a) with dehydrator and receiver tank mounted on R. H. fender apron	1	144,170	C	63
C3DZ 19959-A	Sight glass in 19837 tube	1	260	C	63
	For Economy a/cond. with dehydrator and receiver tank mounted on side of condenser assembly				
COLF 19959-C	With sight glass	1	All	D	60
C2VY 19959-A	Sight glass in 19837 tube	1	All	D	61/63
C4VY 19959-A		1	All	D	64
373040-S	Safety plug-1/8"fusible	1	a		
19A962	KNOB (AIR CONDITIONER REGISTER CONTROL)				
C1AA 19A962-A	For a/cond. except hang-on	1	All	A	61/62
COAF 19A962-B(211)	BLACK - for hang-on a/cond. - except units with "Mercury" emblem on evaporator case	2	All	A B	61/62
C2AZ 19A962-A	For hang-on a/cond. with "Mercury" emblem on evaporator case - for thermostat control	1	All	A B C	62
C2AZ 19A962-B	For hang-on a/cond. with "Mercury" emblem on evaporator case - for blower switch control	1	All	A B C	62
C3AZ 19A962-A	For Economy a/cond. (1) req'd. - for blower motor (1) req'd. - for thermostat control	2	All	A B C	63
C3AZ 19A962-B	For Deluxe a/cond. - for thermostat control	1	All	A B	63
	For Economy a/cond. - for thermostat control	1	All	A C	64
C3AZ 19A962-C	For Deluxe a/cond. - for blower motor	1	All	A B	63
	For Economy a/cond. - for blower motor	1	All	A C	64
19B964	PAD (AIR CONDITIONER INSTRUMENT PANEL REGISTER)				
C1VF 19B833-A	ALUMINUM plate - register door trim - use on (a) early production vehicles	1	All	D	61
C1VV19B964-A(211)	BLACK - use on late production vehicles	1	All	D	61
C1VV19B964-A(225)	BLUE - use on late production vehicles	1	All	D	61

CONTINUED ON NEXT PAGE

GROUP AND PART NUMBER	DESCRIPTION, SIZE, ETC.	NO. REQ'D	MODEL OR ENGINE CUBIC INCH DISPLACEMENT	VEHICLE CODE	YEAR 19__
19B964	PAD (AIR CONDITIONER INSTRUMENT PANEL REGISTER) CONTINUED				
C1VV19B964-A(227)	GREEN - use on late production vehicles	1	All	D	61
C1VV19B964-A(228)	TURQUOISE - use on late production vehicles	1	All	D	61
C1VV19B964-A(237)	ROSE - use on late production vehicles	1	All	D	61
C1VV19B964-A(250)	FAWN - use on late production vehicles	1	All	D	61
C1VV19B964-A(252)	GRAY - use on late production vehicles	1	All	D	61
C1VV19B964-A(254)	RED - use on late production vehicles	1	All	D	61
C1VV19B964-A(283)	BEIGE - use on late production vehicles	1	All	D	61
C1VF 19B820-A	Bezel-must be used with C1VF-19B833-A	1	a		
19B967	REFER TO GROUP 19A945				
19B969	KIT (AIR CONDITIONER) EXTRA COOLING				
C3AZ 19B969-F	For Economy a/cond. - NOTE - (1) C3SZ-8620-A alternator and water pump drive belt kit - which consists of (2) 3/8" x 39-3/4" matched belts - must be procured and used in lieu of generator and water pump drive belts - which consists of (2) 3/8" x 41-3/4" matched belts - included in this kit	1	All	A	63
C4AZ 19B969-A	For Economy a/cond. NOTE - (1) C3SZ-8620-A alternator and water pump drive belt kit - which consists of (2) 3/8" x 39-3/4" matched belts - must be procured and used in lieu of alternator and water pump drive belts - which consists of (2) 3/8" x 41-3/4" matched belts - included in this kit	1	All	A	64
C3OZ 19B969-A	Use on vehicles equipped with 17" width radiator core NOTE - mandatory equipment for Deluxe a/cond. kit C3YY-19700-D Optional equipment for Economy a/cond. kit C3YY-19700-C	1	221, 260	B	63
C3OZ 19B969-B	Use on vehicles equipped with 20" width radiator core NOTE - mandatory equipment for Deluxe a/cond. kit C3YY-19700-D Optional equipment for Economy a/cond. kit C3YY-19700-C	1	221, 260	B	63
C3OZ 19B969-E	For Economy a/cond.	1	170, 200	B	63
19972	HOSE (AIR CONDITIONER COMPRESSOR TO CONDENSER)				
COMF 19972-B		1	All	A	60
C1AF 19972-D		1	All	A	61/62
C3AZ 19972-C	For Deluxe a/cond.	1	All	A	63
C4AZ 19972-A	For Economy a/cond.	1	All	A	64
C4AZ 19972-C	For Deluxe a/cond.	1	All	A	64
C3AZ 19972-A	For Economy a/cond.	1	All	A	63
	For Economy a/cond. with dehydrator and receiver tank mounted on top of condenser assembly - includes low pressure compressor valve assembly	1	221, 260	B	63
C2OZ 19972-A	Hang-on	1	170	B	62
C2OZ 19972-B	Hang-on	1	221	B	62

CONTINUED ON NEXT PAGE

GROUP AND PART NUMBER	DESCRIPTION, SIZE, ETC.	NO. REQ'D	MODEL OR ENGINE CUBIC INCH DISPLACEMENT	VEHICLE CODE	YEAR 19____
19972	HOSE (AIR CONDITIONER COMPRESSOR TO CONDENSER) CONTINUED				
C2OZ 19972-C	Hang-on	1	260	B	62
	For Deluxe a/cond.	1	221,260	B	63
	For Economy a/cond. with dehydrator and receiver tank mounted on side of condenser assembly	1	221,260	B	63
C3OZ 19972-A	For Deluxe a/cond.	1	170,200	B	63
	For Economy a/cond. with dehydrator and receiver tank mounted on side of condenser assembly	1	170,200	B	63
C3OZ 19972-B	For Economy a/cond. with dehydrator and receiver tank mounted on top of condenser assembly - includes low pressure valve assembly	1	170,200	B	63
CODF 19972-B		1	All	C	60/62
C3DZ 19972-A	For Economy a/cond. with dehydrator and receiver tank mounted on R. H. fender apron	1	144,170	C	63
C3DZ 19972-C	For Economy a/cond. with dehydrator and receiver tank mounted on side of condenser assembly	1	144,170	C	63
C3DZ 19972-B		1	260	C	63
C4DZ 19972-B	For Economy a/cond.	1	170,200	C	64
C4DZ 19972-A	For Economy a/cond.	1	260,289	C	64
COLF 19972-A		1	All	D	60
C1VF 19972-A		1	All	D	61/64
19A976	REFER TO GROUP 19A934				
19B979	"O" RING (AIR CONDITIONER HOSE COUPLING)				
B8LY 19B979-A	Small - round - 5/8" O. D.	AR	All	A D	60
B8LY 19B979-B	Large - round - 1" O. D	AR	All	A D	60
19980	CONTROL (AIR CONDITIONER)				
COMF 19980-D	Single regulated - for a/cond. except hang-on	1	All	A	60
COLF 19980-D		1	All	D	60
C2VY 19980-A	Single vacuum - for 1961 models delete original vacuum hose and tee - and (1) C1VF-18A520-G hose must be used and cut to required length of 25"	1	All	D	61/62
C3VY 19980-A		1	All	D	63
C4VY 19980-A	(a)	1	All	D	64
55583-S	NS-screw and washer assy.-hex.washer hd.-No. 8-32 x 3/8"-attach to 18531 control mounting bracket	2	a		
19A982	STUD (AIR CONDITIONER EVAPORATOR SUPPORT)				
	NS-for hang-on a/cond.	1	All	A	61/62
19986	SWITCH (AIR CONDITIONER BLOWER)				
COAF 19986-A	For hang-on a/cond. - except units with "Mercury" emblem on evaporator case	1	All	A B	61/62
C4AZ 19986-B	For Deluxe a/cond.	1	All	A B	63
C4MY 19986-A	For Economy a/cond.	1	All	A C	64
C2AZ 19986-A	For hang-on a/cond. with "Mercury" emblem on evaporator case	1	All	A B C	62
C3AZ 19986-B	For Economy a/cond.	1	All	A B C	63
B9AF 19986-A	For a/cond. - except units with "Mercury" emblem on evaporator case	1	All	C	60/62
19988	REFER TO GROUP 18518				

GROUP AND PART NUMBER	DESCRIPTION, SIZE, ETC.	NO. REQ'D	MODEL OR ENGINE CUBIC INCH DISPLACEMENT	VEHICLE CODE	YEAR 19____
19A989	SEAL (AIR CONDITIONER EVAPORATOR DRAIN HOSE TO FLOOR)				
	NS-dealer improvise	2	All	A B	61/62
19A990	REFER TO GROUP 19752				
19A991	BAND (AIR CONDITIONER BLOWER MOTOR MOUNTING)				
COAF 19A991-A	For hang-on a/cond.	1	All	A B	61/62
19A992	BRACKET (AIR CONDITIONER MOTOR SUPPORT)				
B9MY 19A992-A	For hang-on a/cond.	2	All	A	60
19B994	GASKET (AIR CONDITIONER COMPRESSOR VALVE PLATE)				
C2SZ 19B994-A	Use on York compressor with threaded type fittings	2	All	D	61/62
		2	All	A B C D	63/64
19A995	REFER TO GROUPS 19A646 and 19A671				
19998	TRAP (AIR CONDITIONER EVAPORATOR DRAIN)				
PB9M 19998-A	For a/cond. except hang-on	1	All	A	60
FFC 19998-A		2	All	D	60
19A998	PANEL (AIR CONDITIONER EVAPORATOR CASE TOP)				
B9MF 19A629-A	Front - for a/cond. except hang-on	1	All	A	60
COAF 19A998-A(21)	Top - BLACK - for hang-on a/cond.	1	All	A	61/62
C4MY 19A998-B	Top - for Deluxe a/cond.	1	All	A	64
C3MY 19A998-B	Top - for Deluxe a/cond.	1	All	A B	63
C4MY 19A998-A	Top - for Economy a/cond. (b)	1	All	A C	64
C3MY 19A998-A	Top - for Economy a/cond.	1	All	A B C	63
B9AF 19A629-A	Front	1	All	C	60/62
C1VF 19A998-A	Top	1	All	D	61/62
C3VY 19A998-B	Top	1	All	D	63
C4VY 19A998-A	Top (a)	1	All	D	64
34653-S	Nut and washer assy.-hex.-No. 8-32	AR	a		
34659-S	NS-nut and lock washer-1/4"-20	2	b		
42748-S	NS-screw and washer assy.-1/4"-20 x 1-1/4"	2	b		
44719-S	Washer-flat-1/4"	2	b		
55613-S	NS-screw and washer assy.-1/4"-20 x 3/4"	2	b		
19A999	BAFFLE (AIR CONDITIONER EVAPORATOR CASE)				
C3VY 19A999-A		1	All	D	63
C4VY 19A999-A		1	All	D	64

MEMO

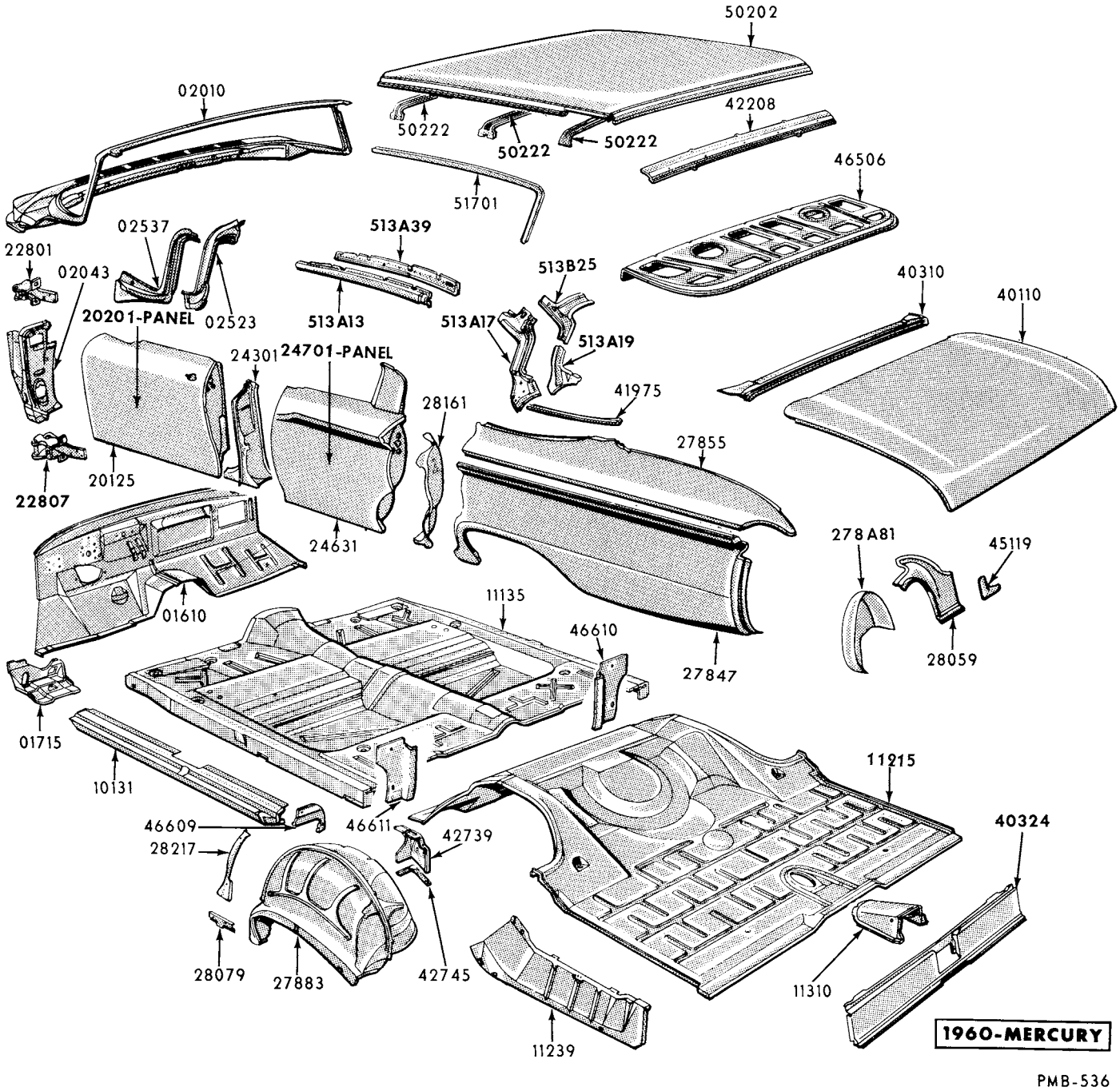

BODY SHEET METAL-MODEL 57

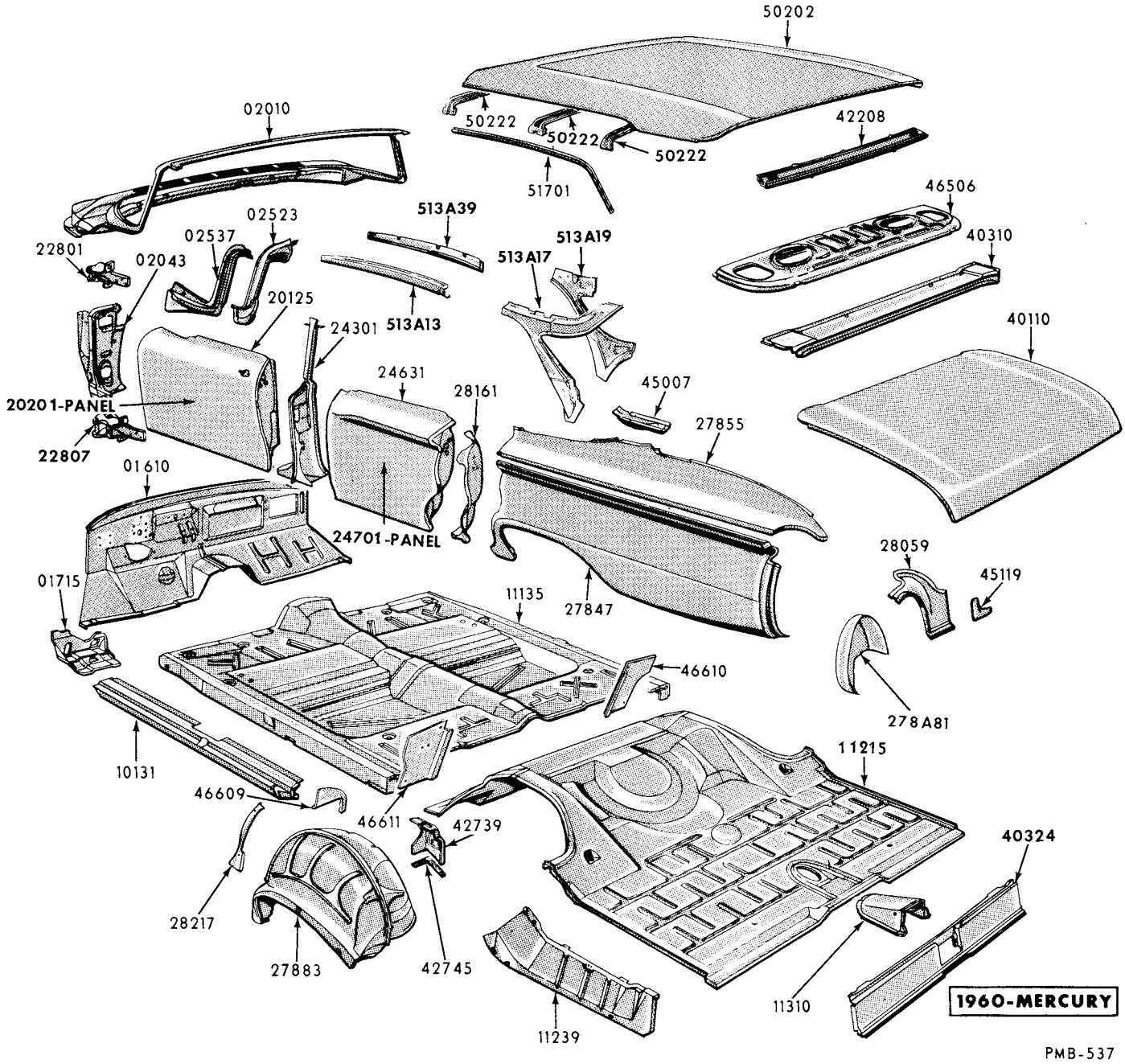

BODY SHEET METAL-MODEL 58

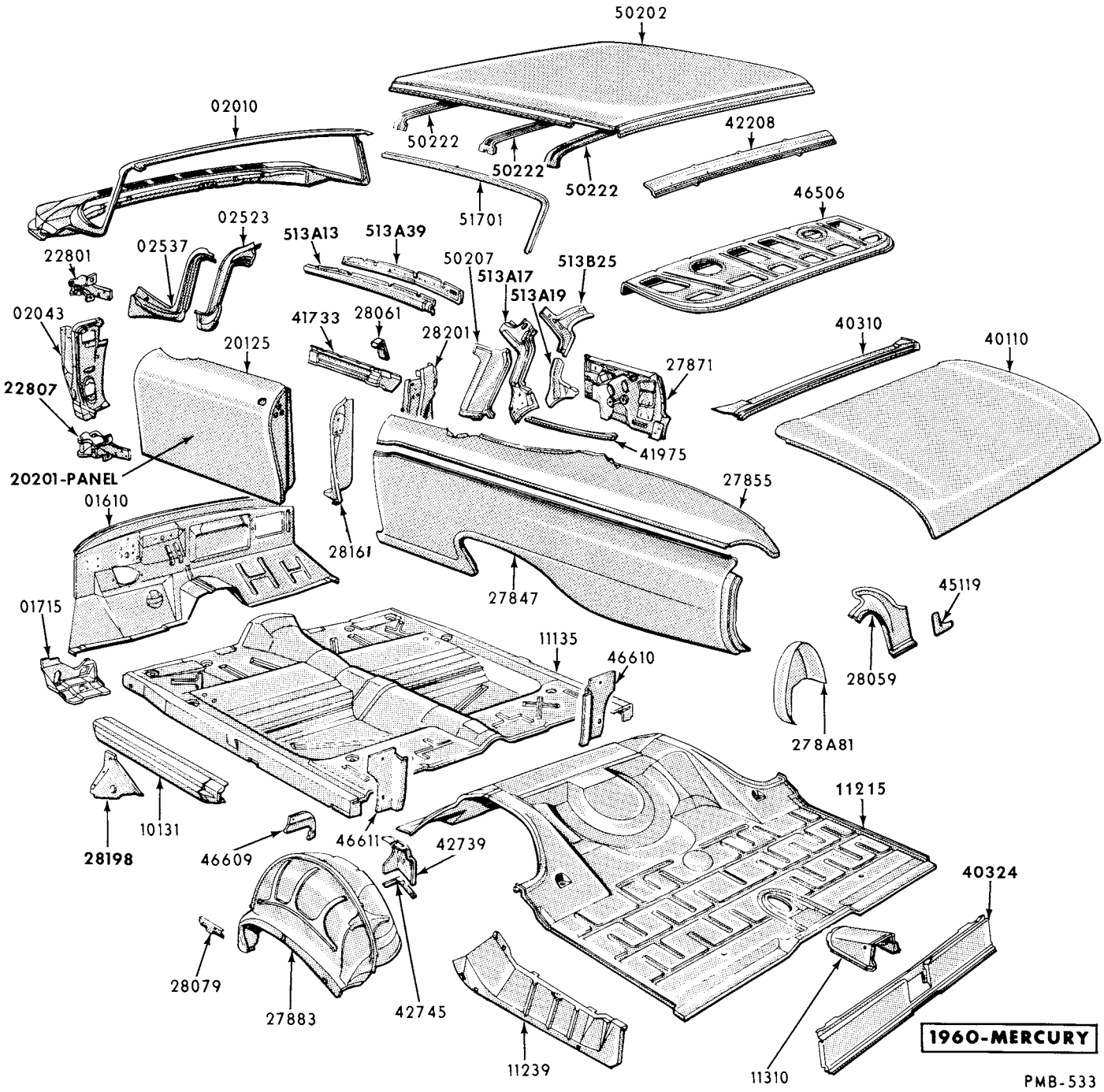

BODY SHEET METAL-MODEL 63

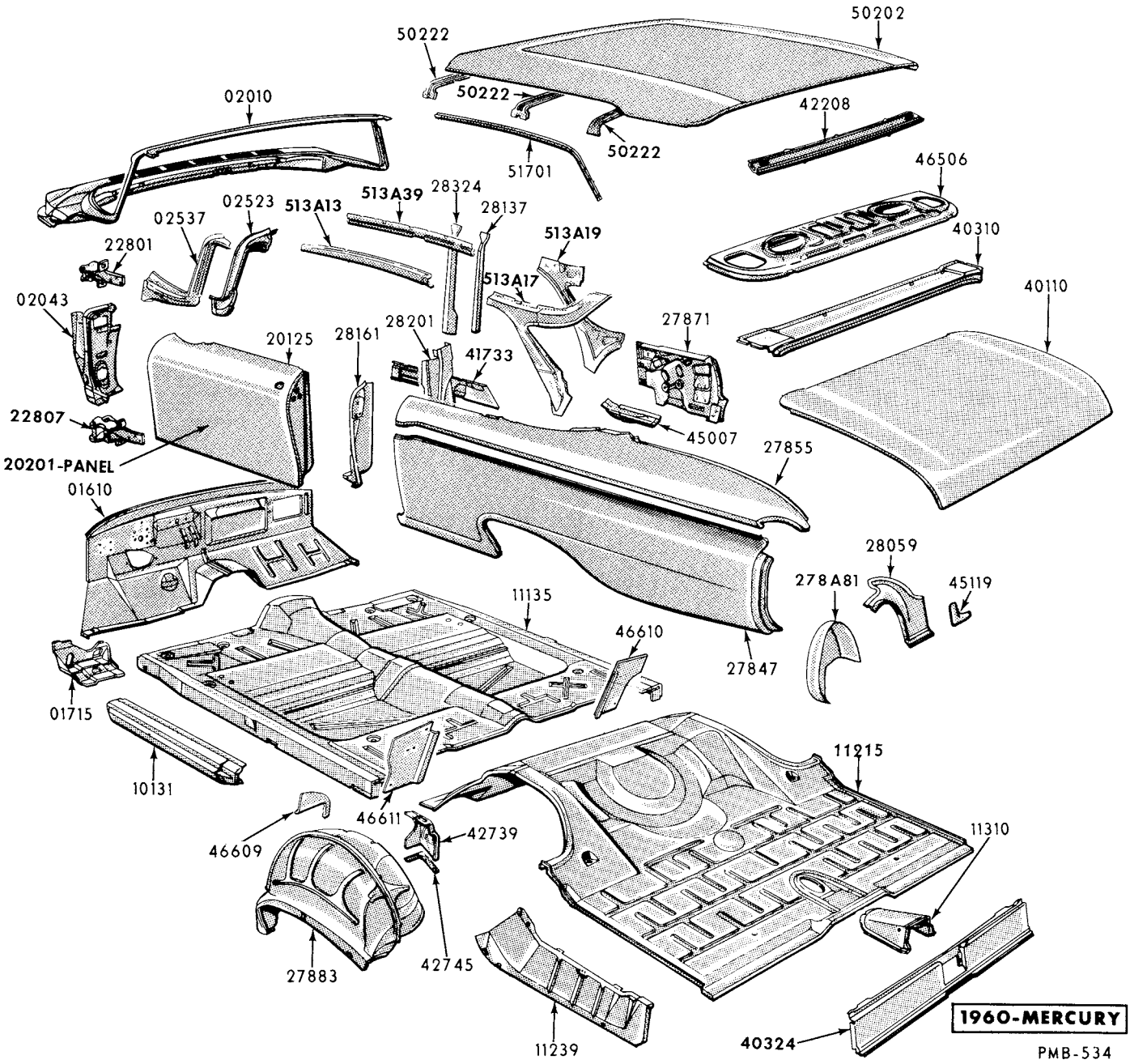

BODY SHEET METAL-MODEL 64

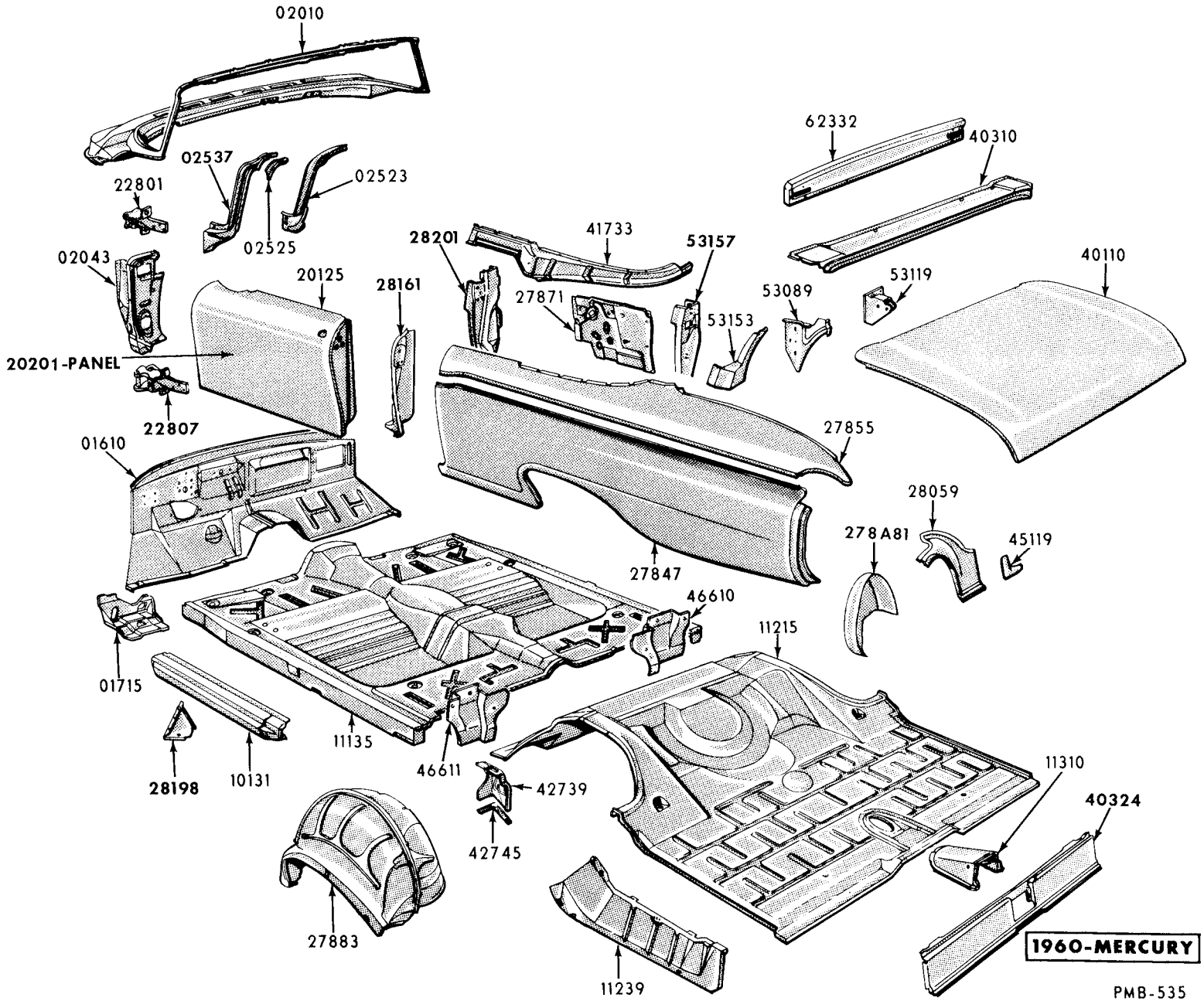

BODY SHEET METAL-MODEL 76

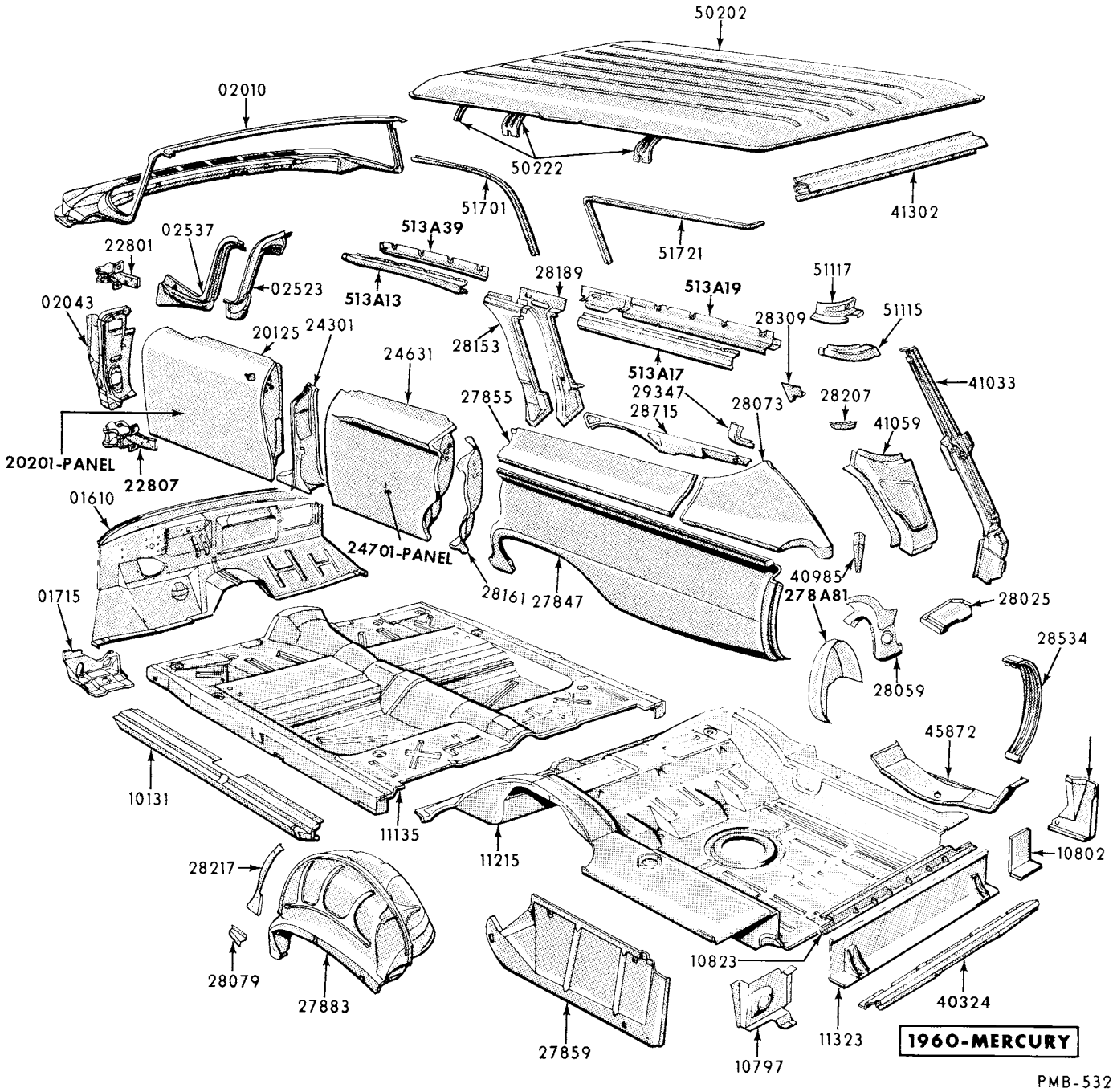

BODY SHEET METAL-MODEL 77

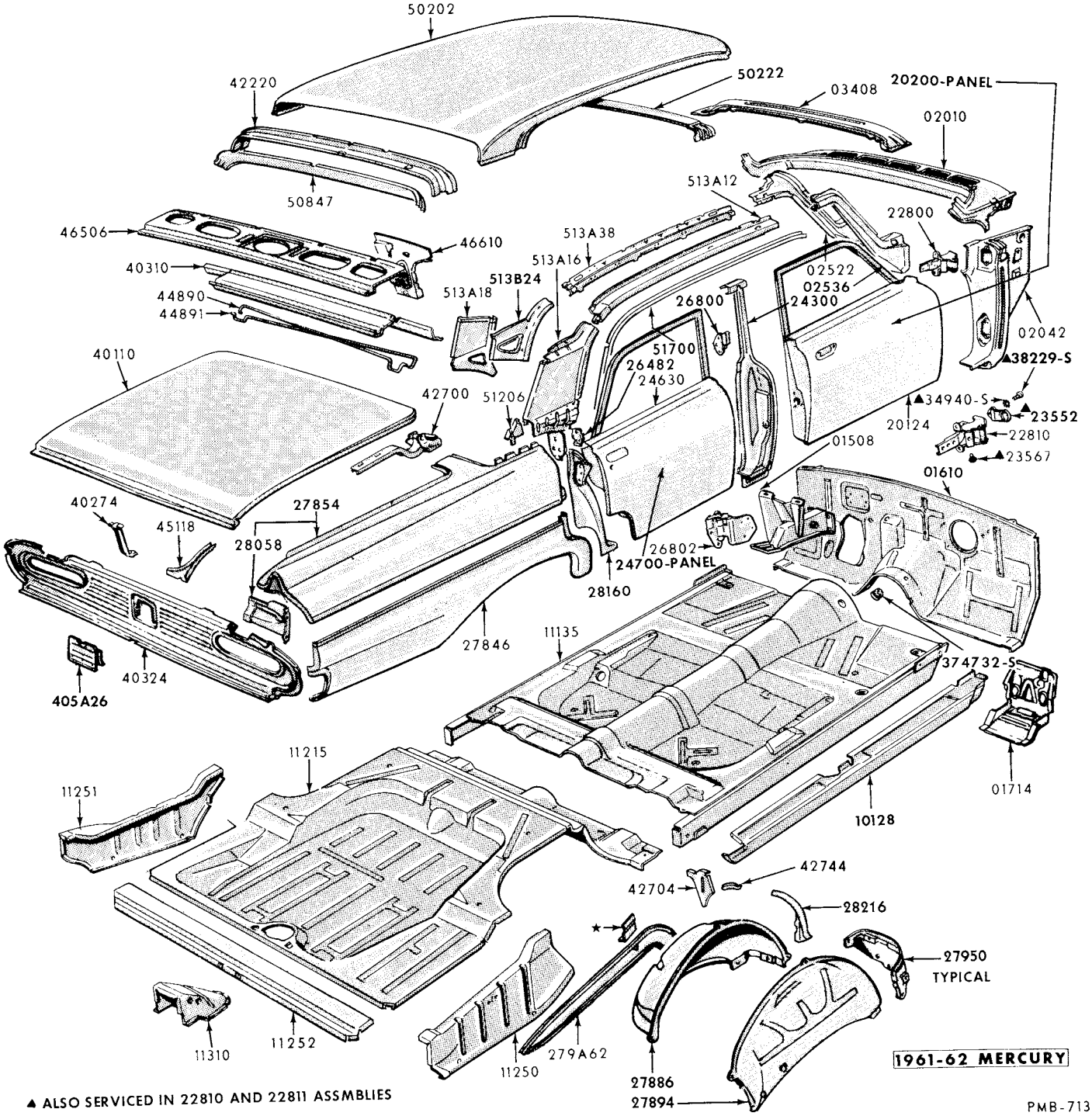

BODY SHEET METAL- MODELS 54, 58

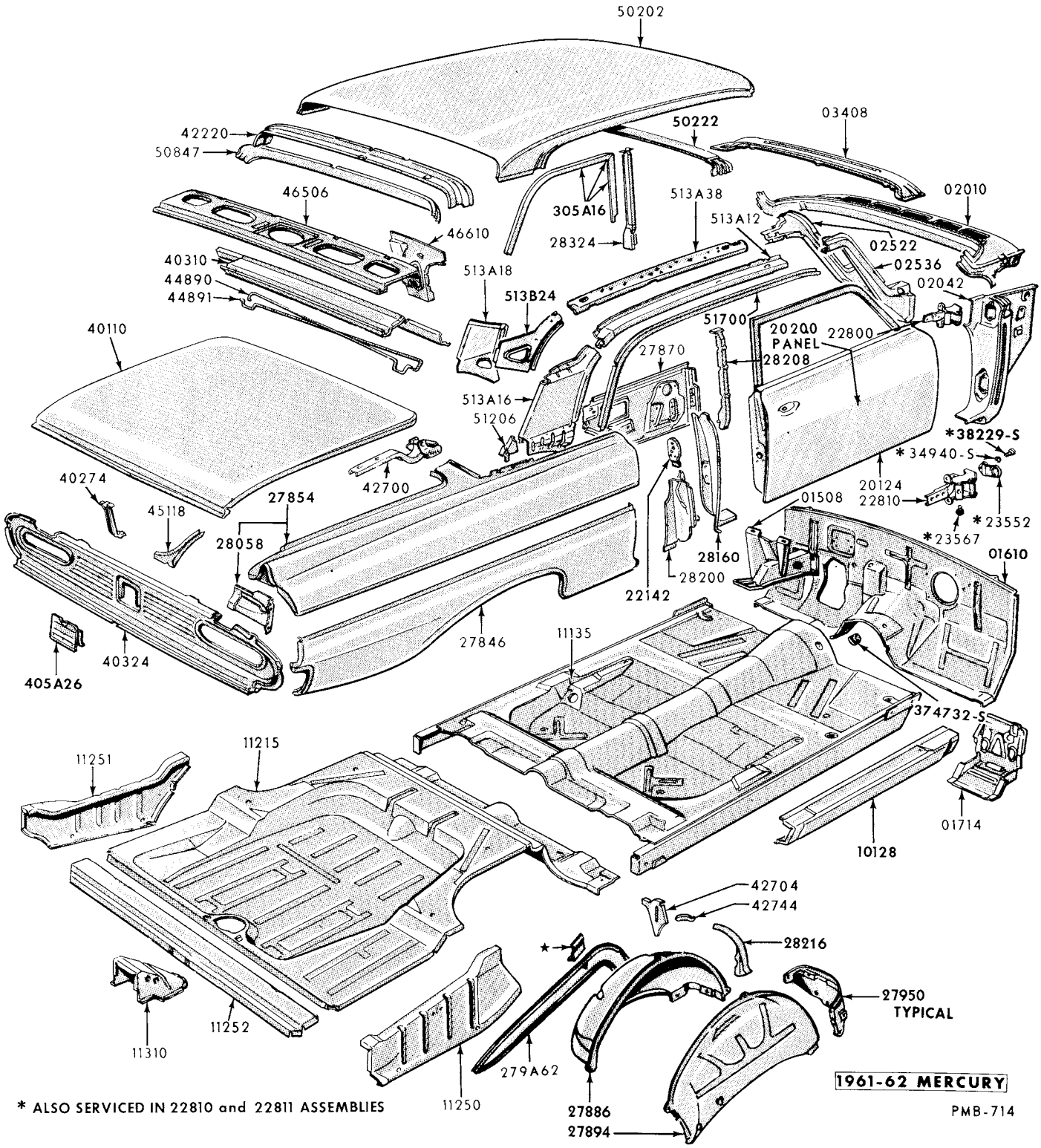

* ALSO SERVICED IN 22810 and 22811 ASSEMBLIES

BODY SHEET METAL - MODELS 62, 64

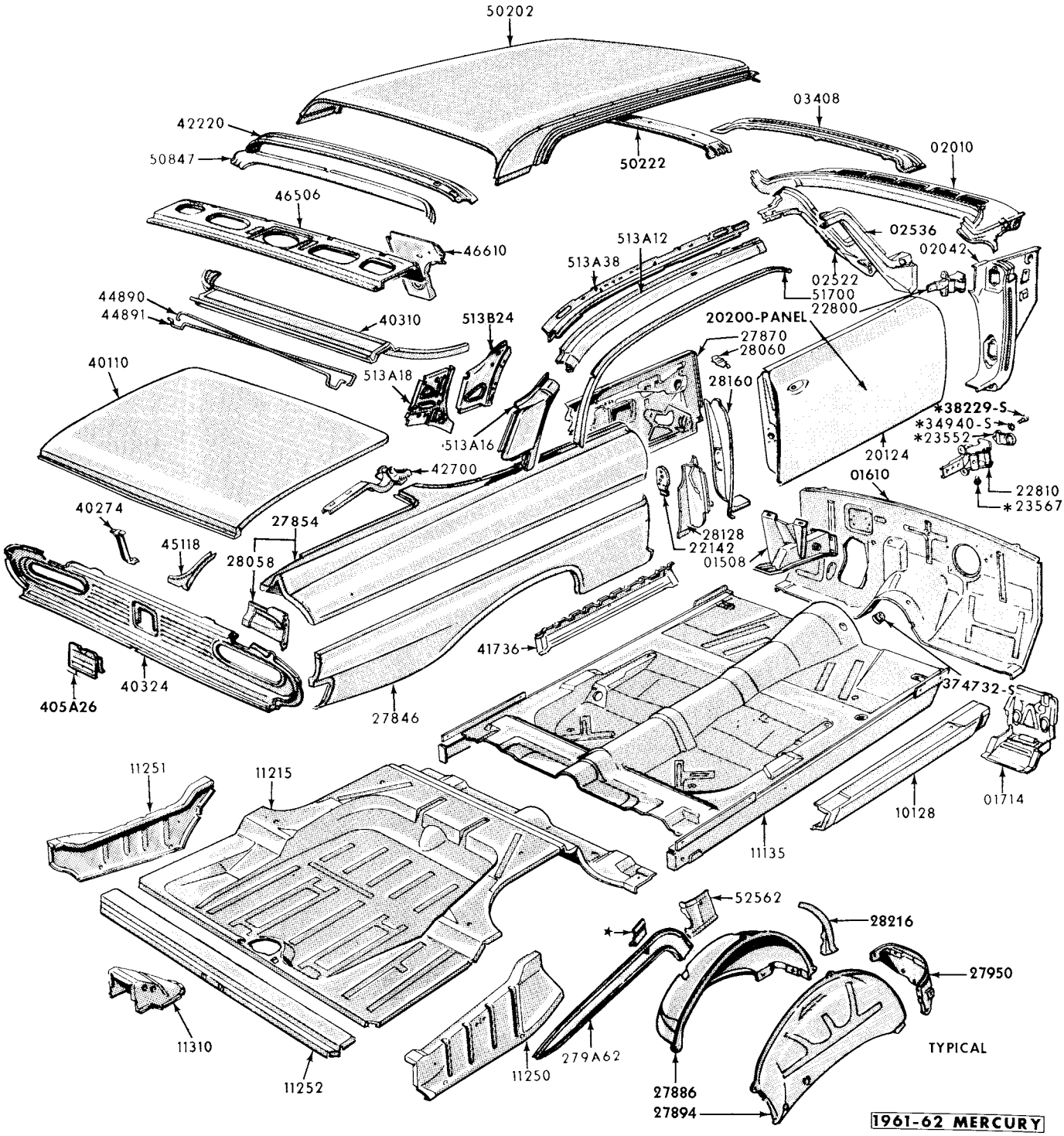

* ALSO SERVICED IN 22810 and 22811 ASSEMBLIES

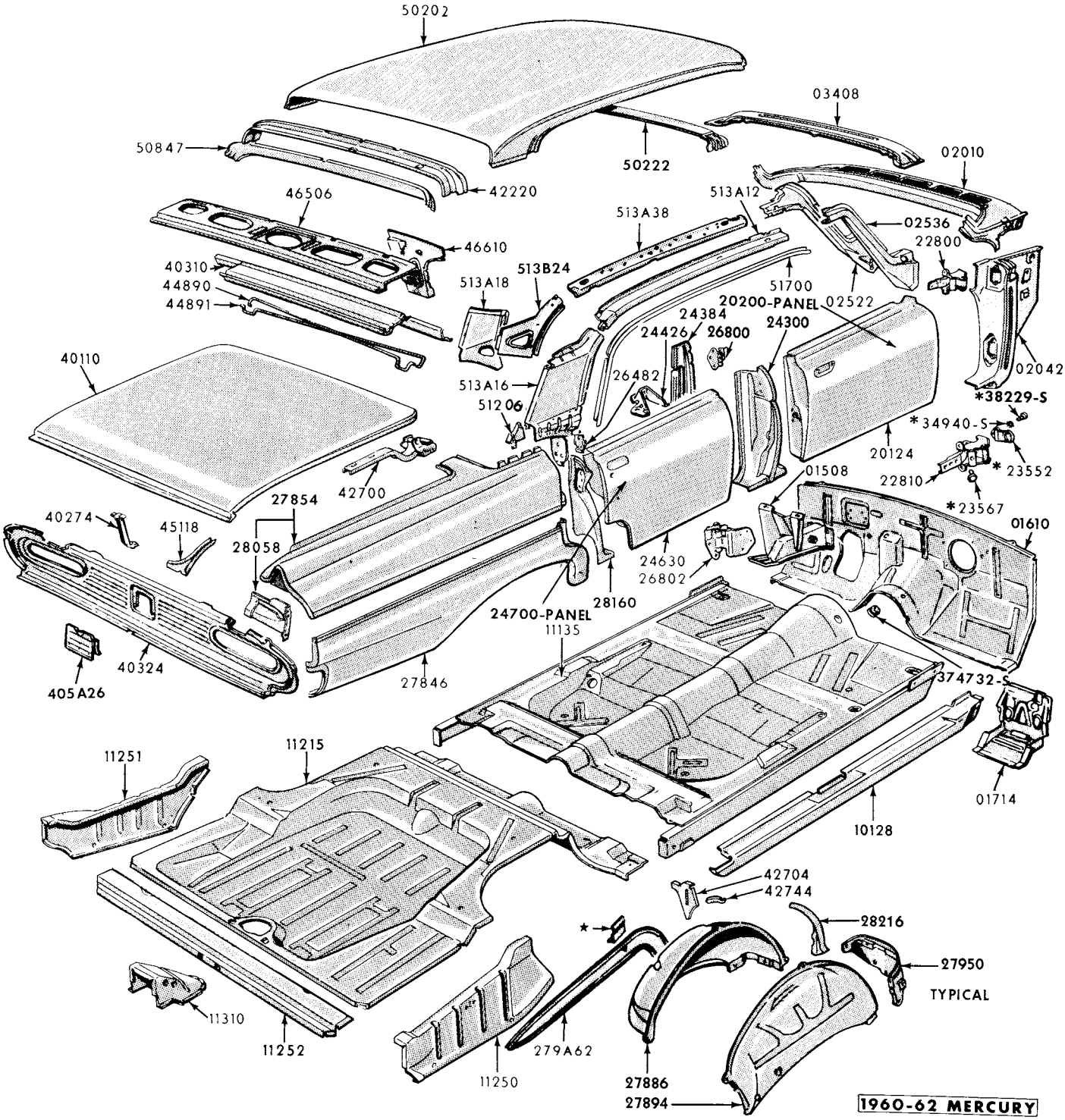

BODY SHEET METAL-MODEL 75

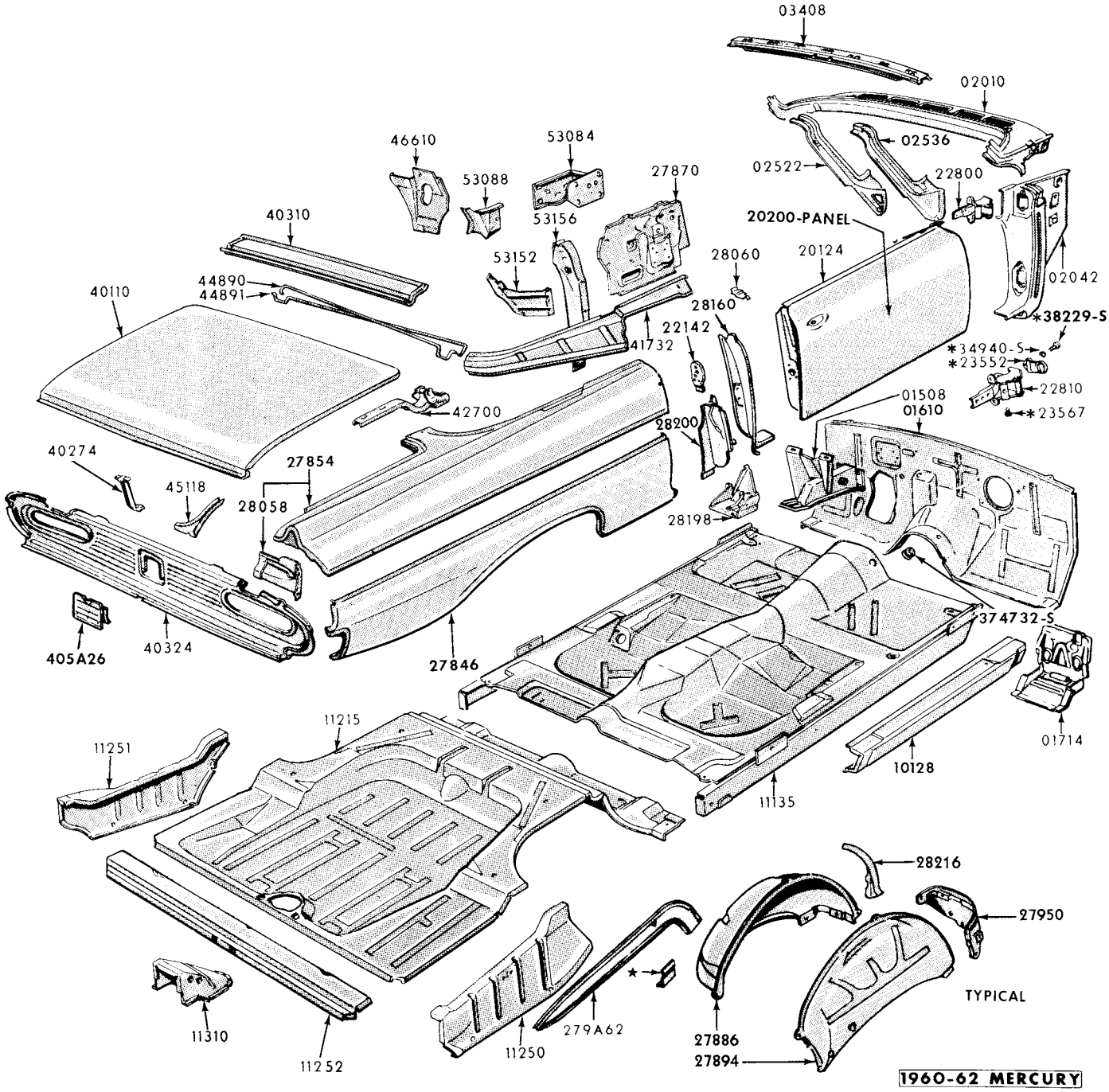

* ALSO SERVICED IN 22810 and 22811 ASSEMBLIES

PMB-717

BODY SHEET METAL- MODEL 76

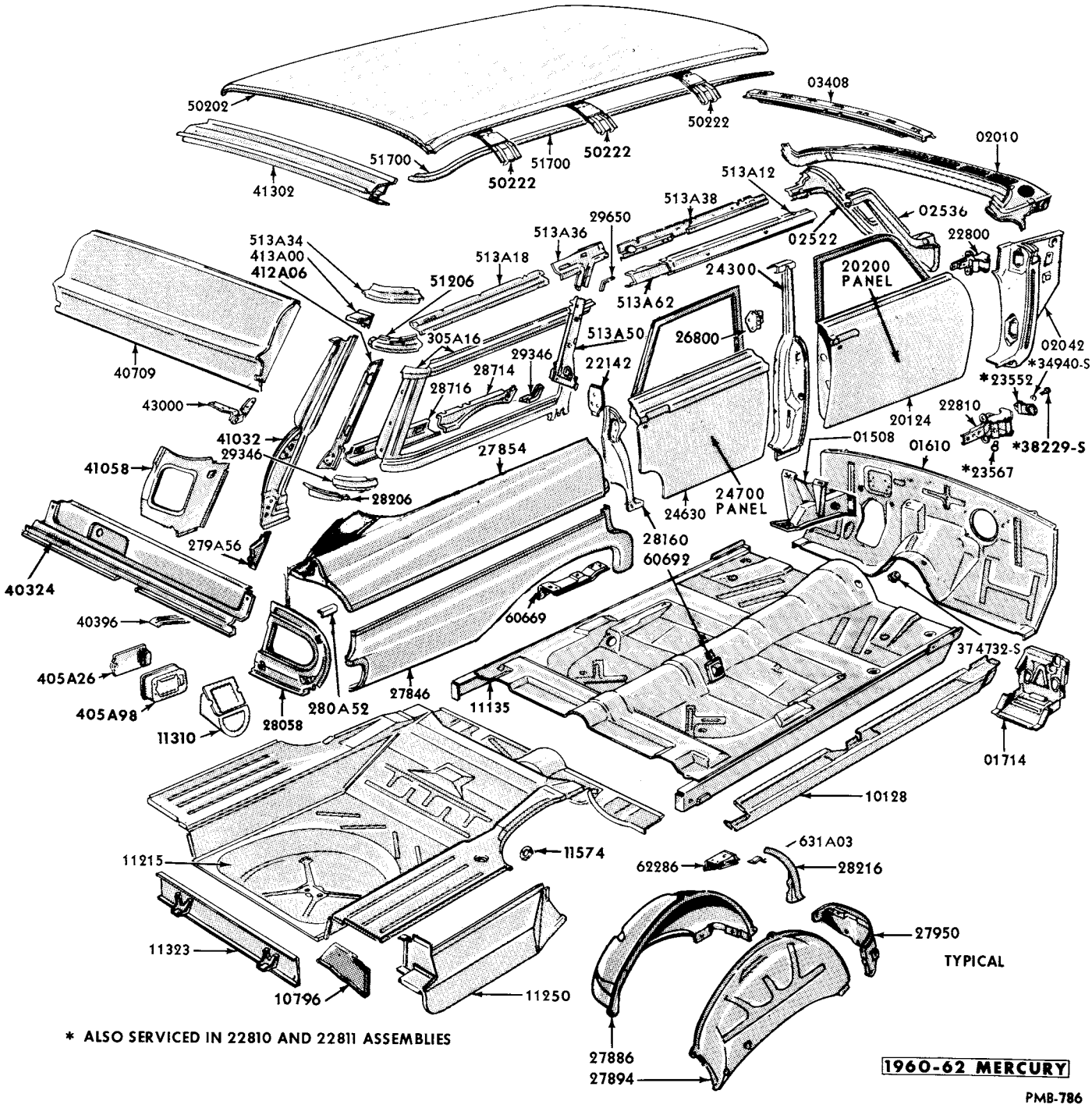

* ALSO SERVICED IN 22810 AND 22811 ASSEMBLIES

BODY SHEET METAL-MODEL 71

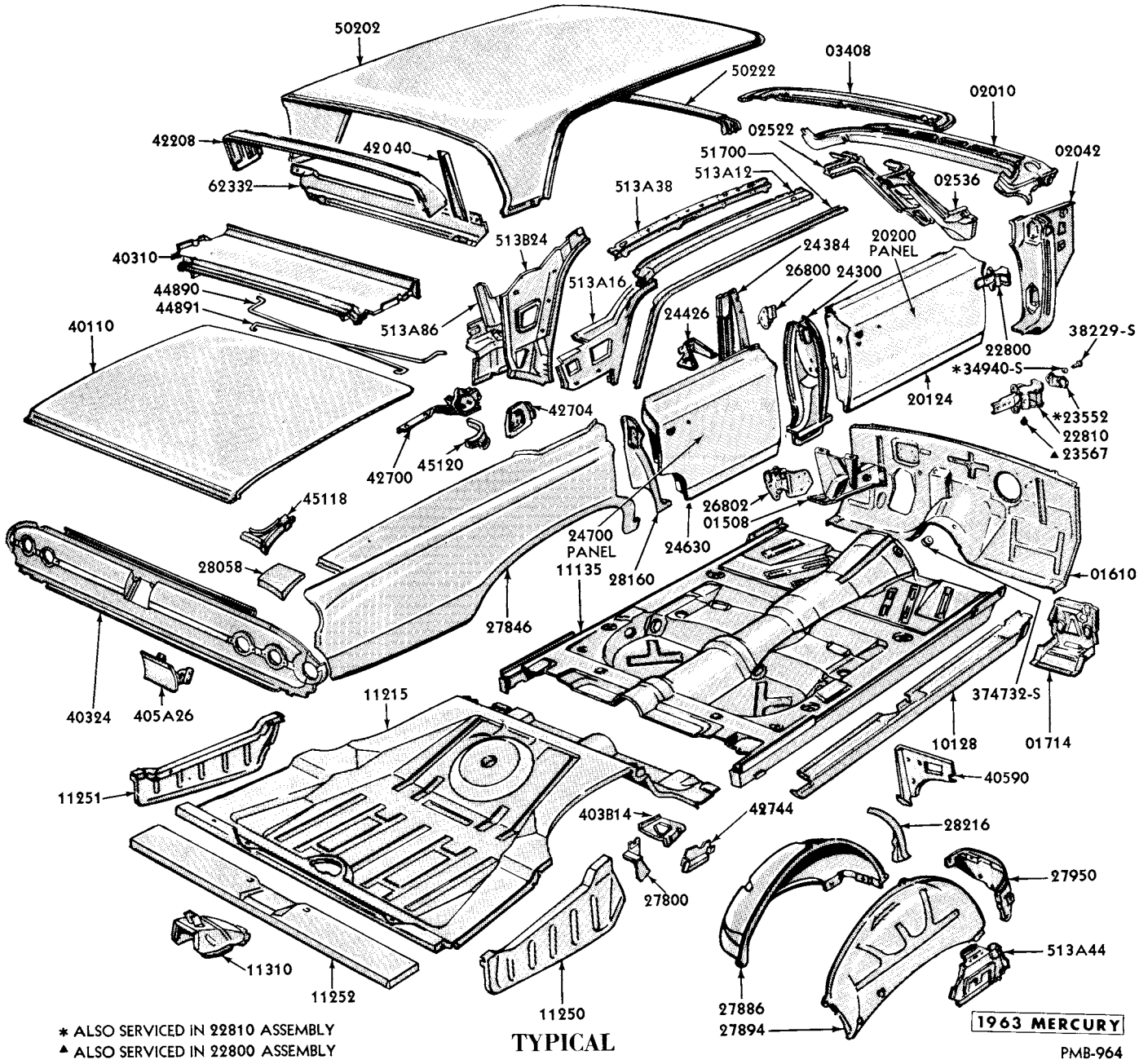

* ALSO SERVICED IN 22810 ASSEMBLY
▲ ALSO SERVICED IN 22800 ASSEMBLY

TYPICAL

BODY SHEET METAL - MODELS 54, 75

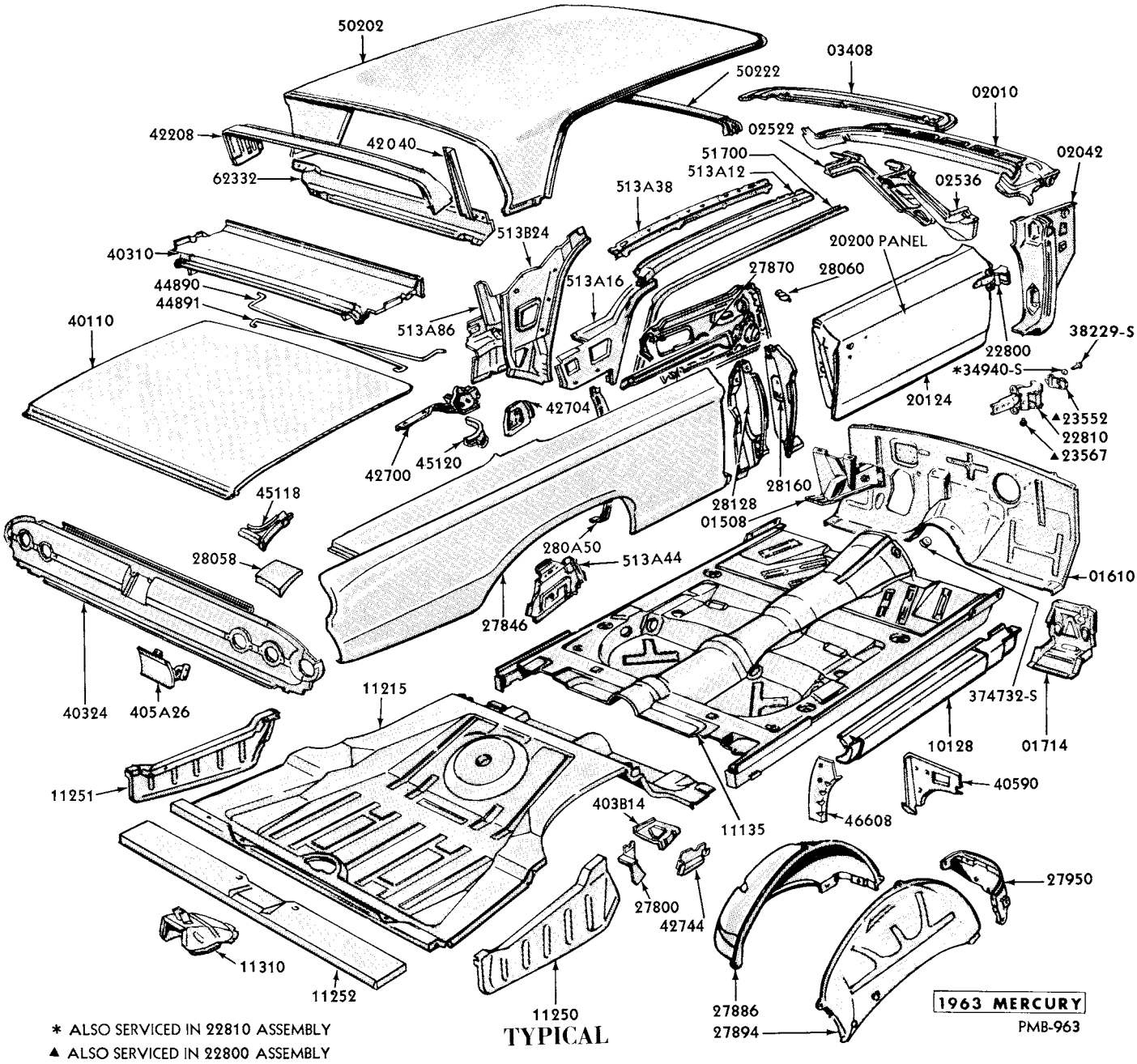

BODY SHEET METAL - MODELS 62, 65

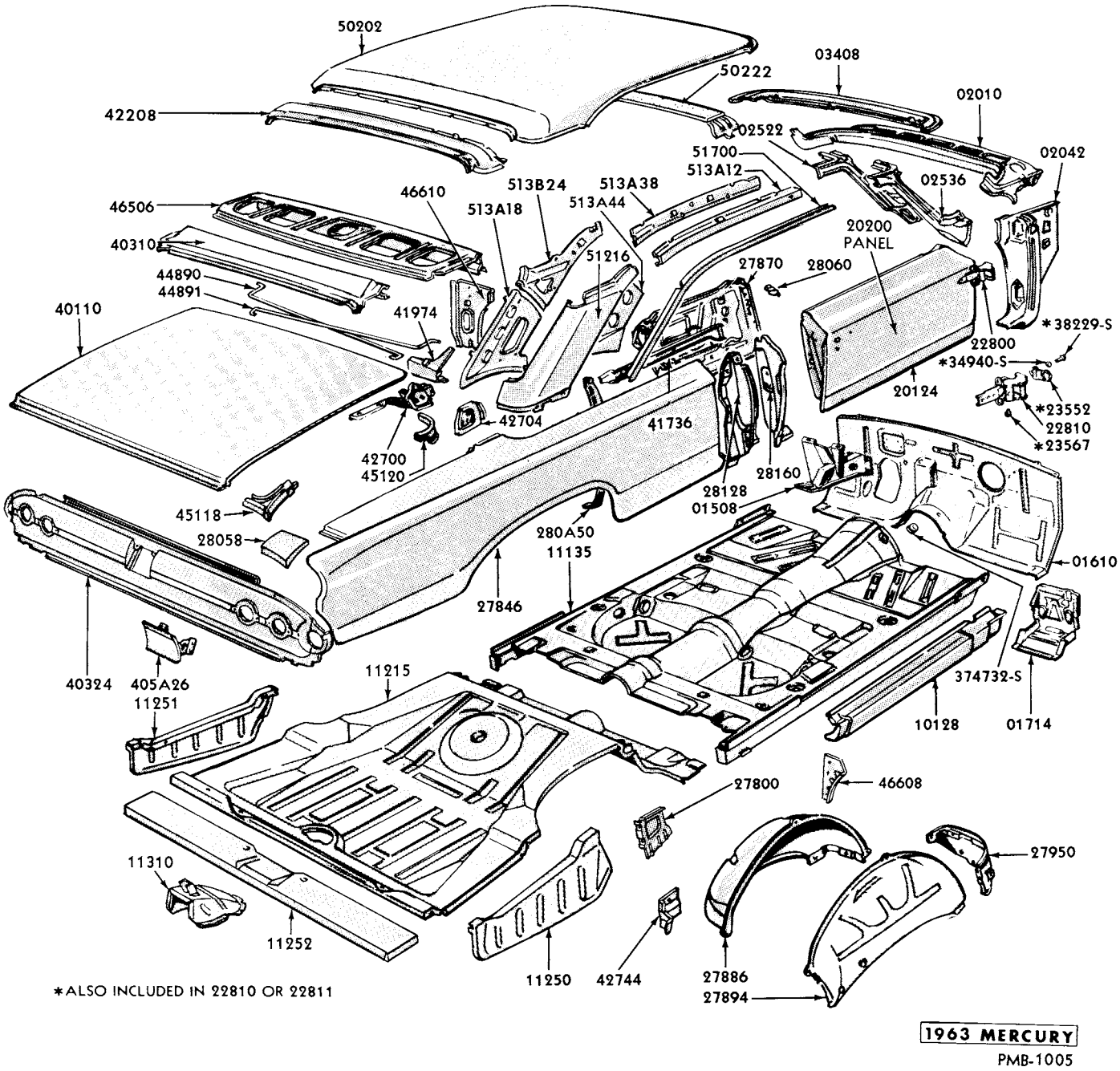

BODY SHEET METAL - MODEL 63

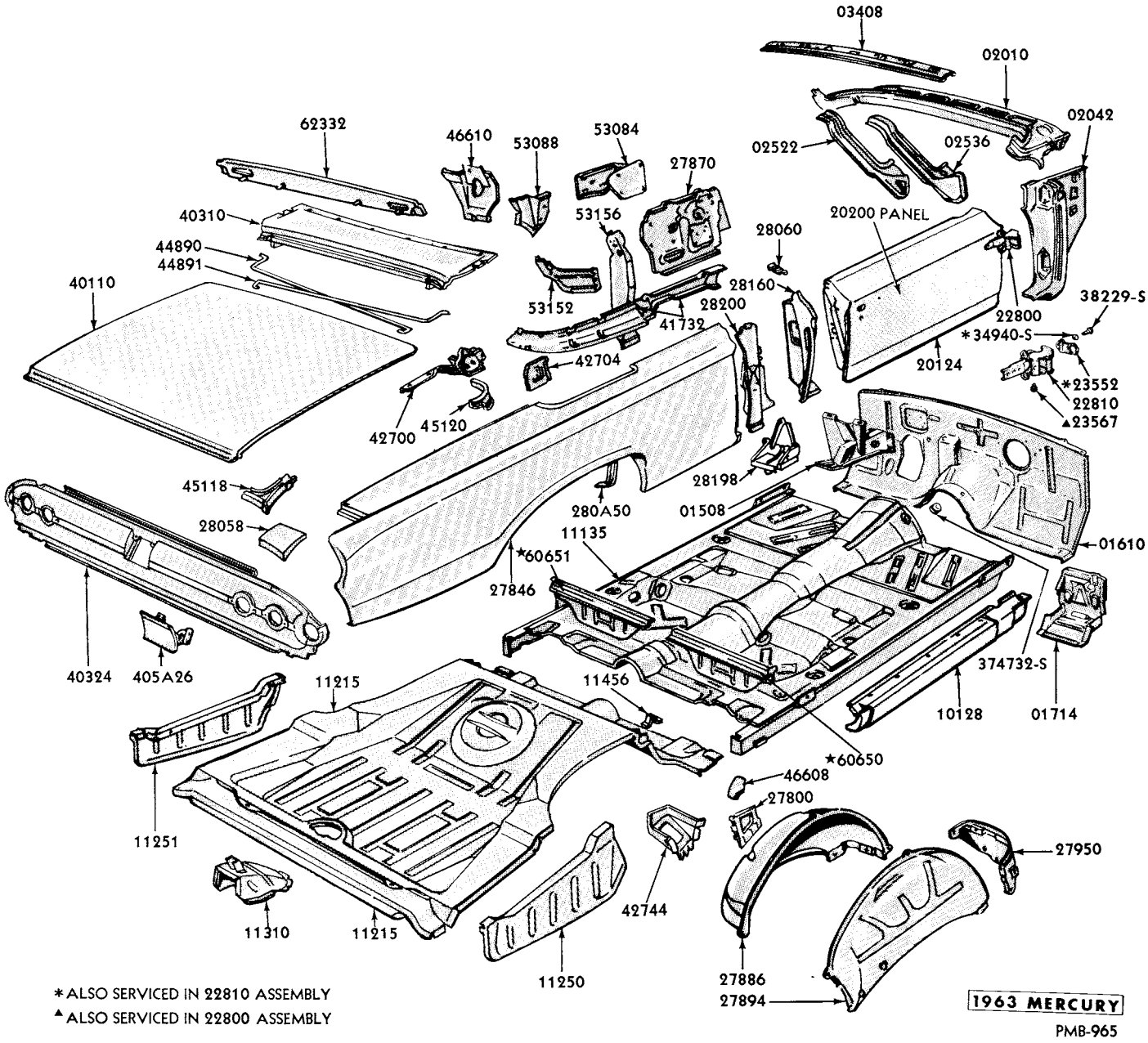

*ALSO SERVICED IN 22810 ASSEMBLY
▲ALSO SERVICED IN 22800 ASSEMBLY

BODY SHEET METAL-MODEL 76

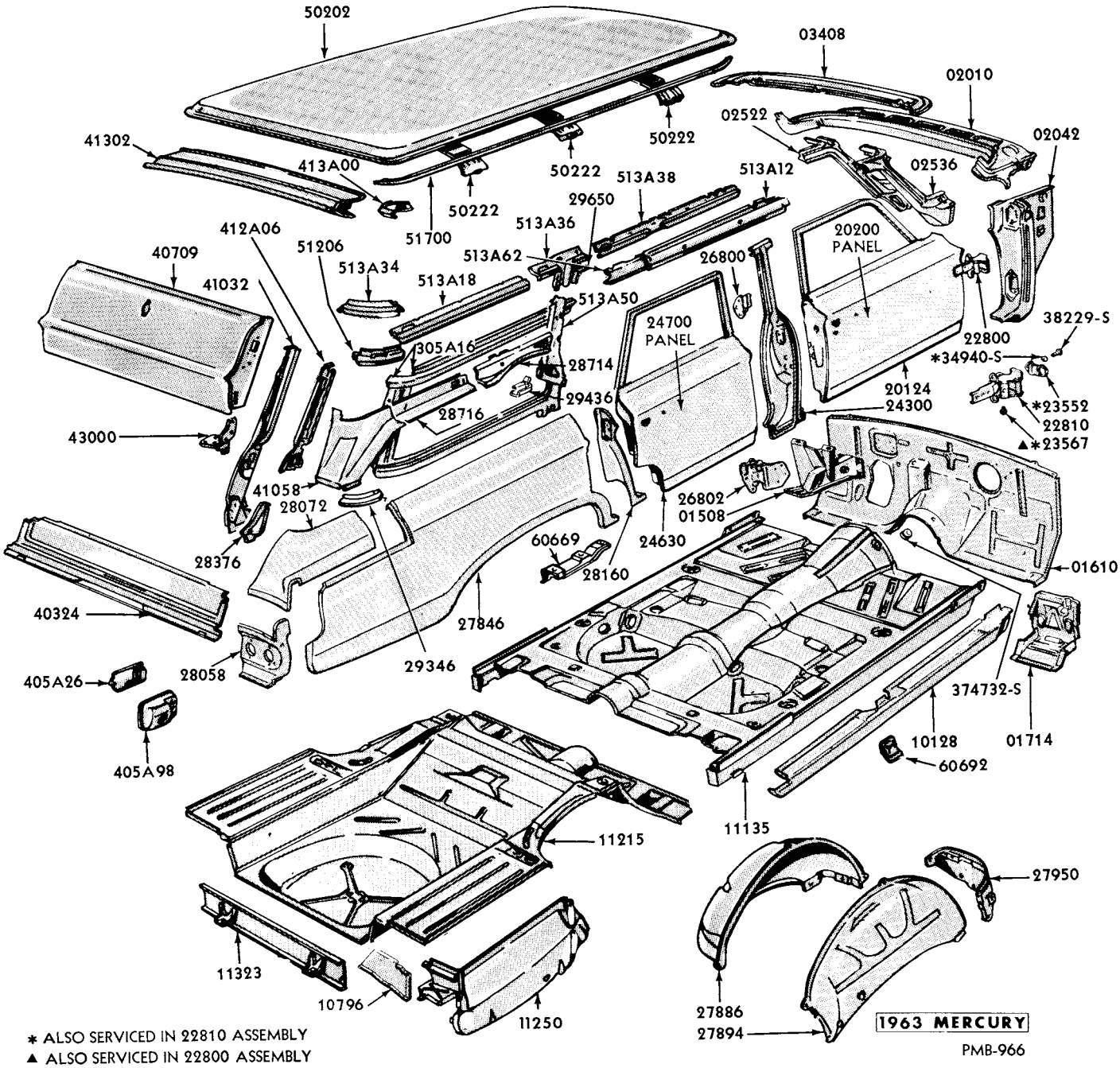

* ALSO SERVICED IN 22810 ASSEMBLY
▲ ALSO SERVICED IN 22800 ASSEMBLY

BODY SHEET METAL-MODEL 71

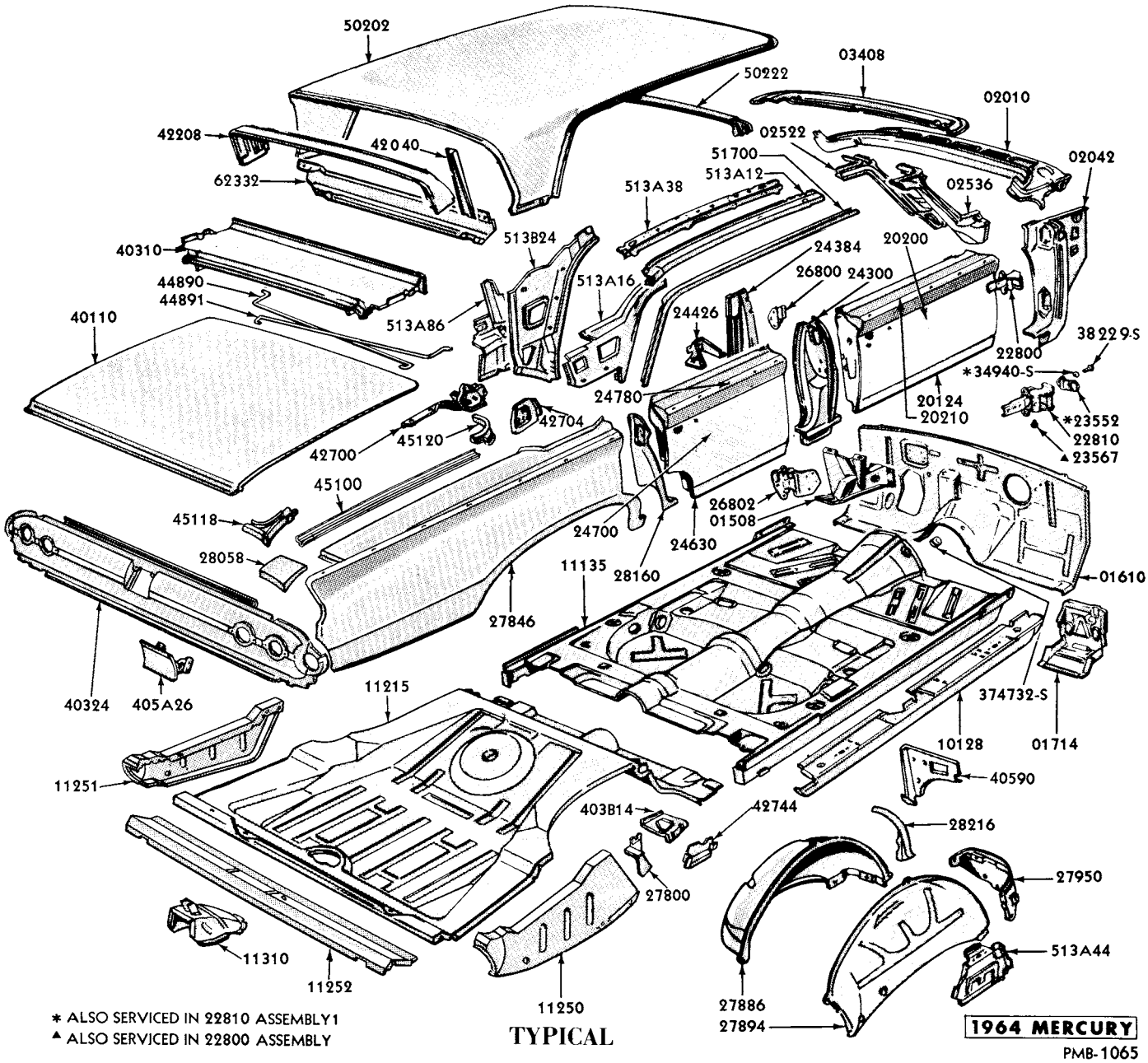

BODY SHEET METAL - MODELS 54, 75

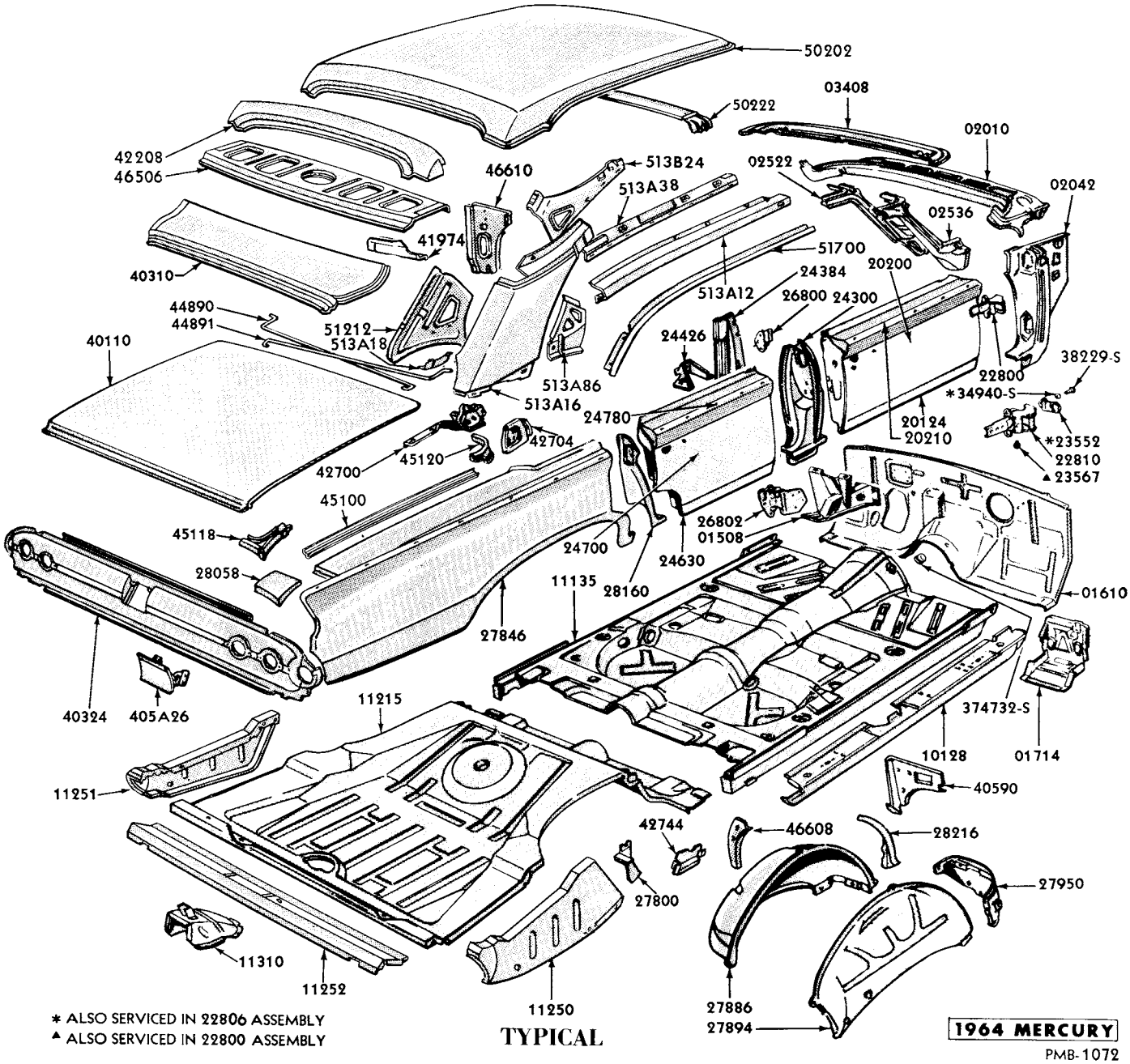

BODY SHEET METAL - MODEL 57

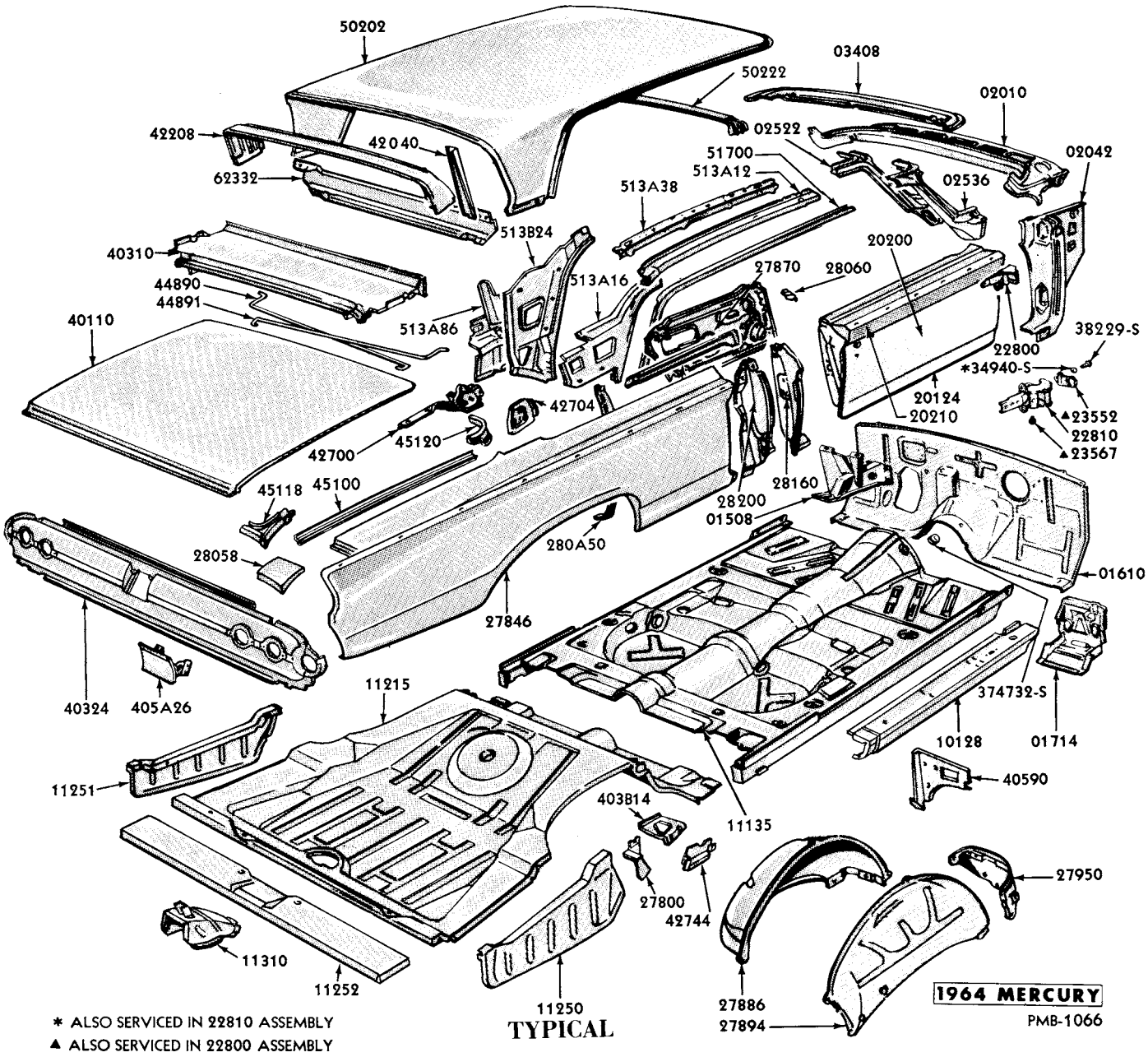

BODY SHEET METAL - MODELS 62, 65

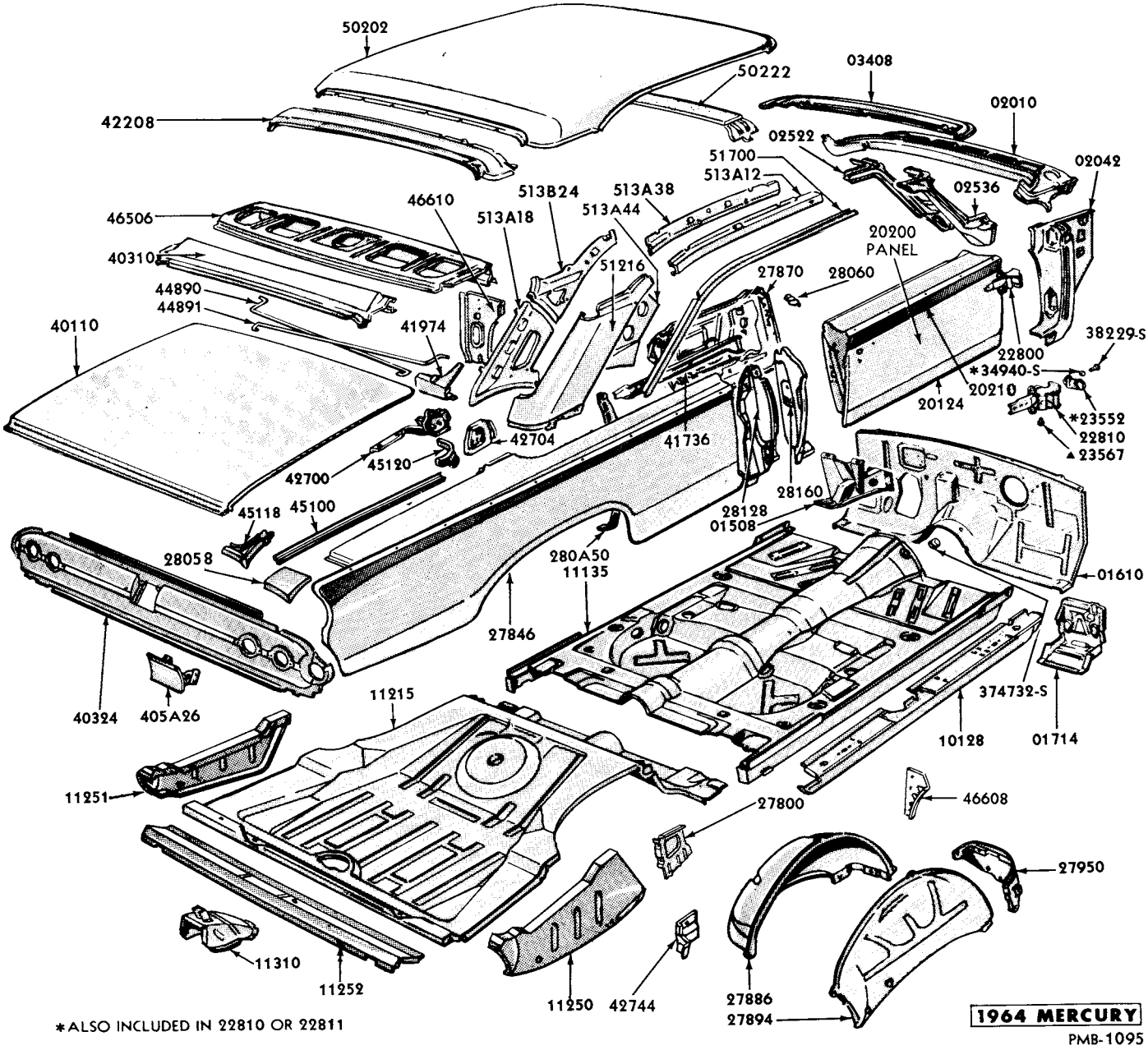

BODY SHEET METAL - MODEL 63

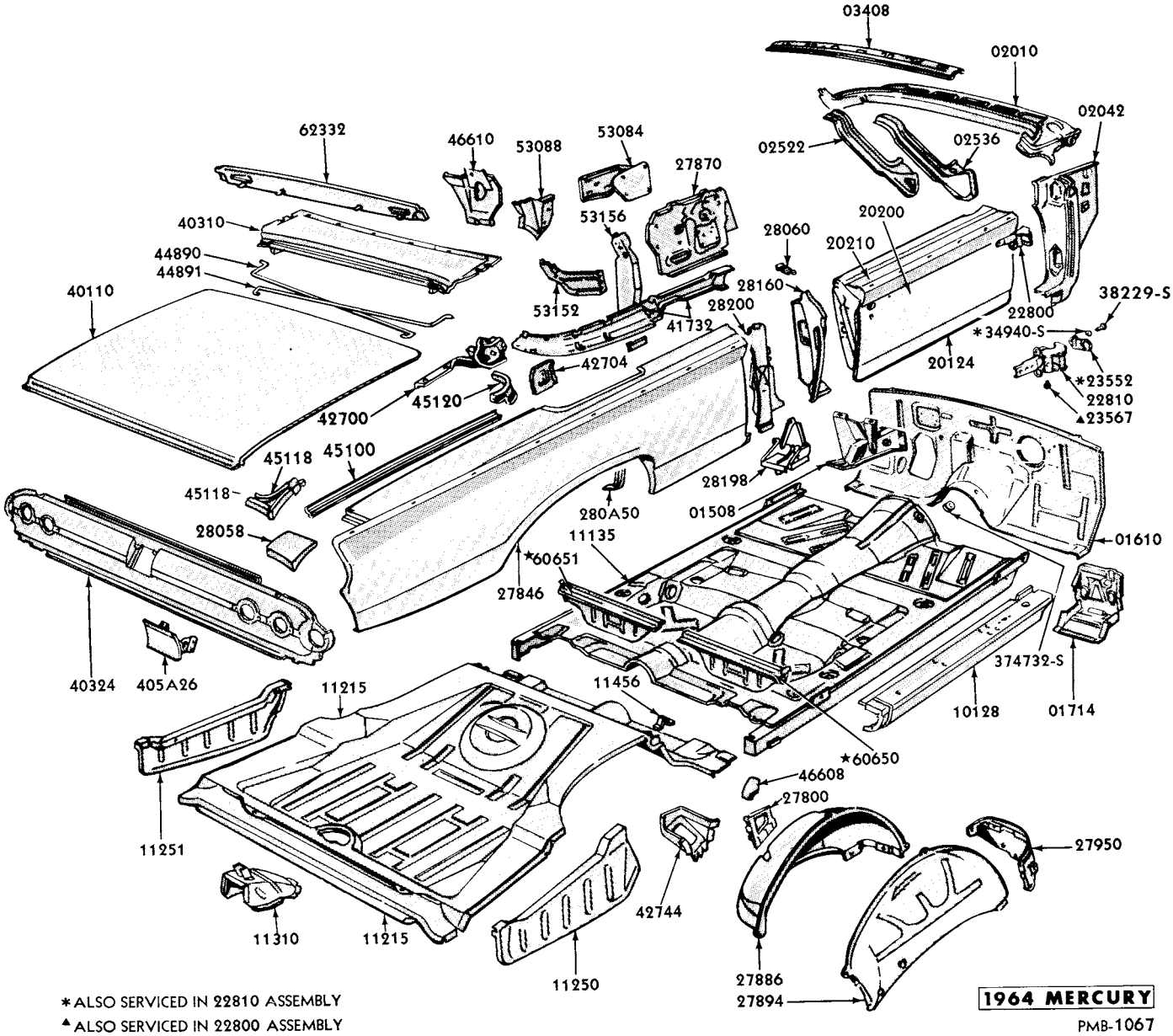

*ALSO SERVICED IN 22810 ASSEMBLY
▲ALSO SERVICED IN 22800 ASSEMBLY

BODY SHEET METAL - MODEL 76

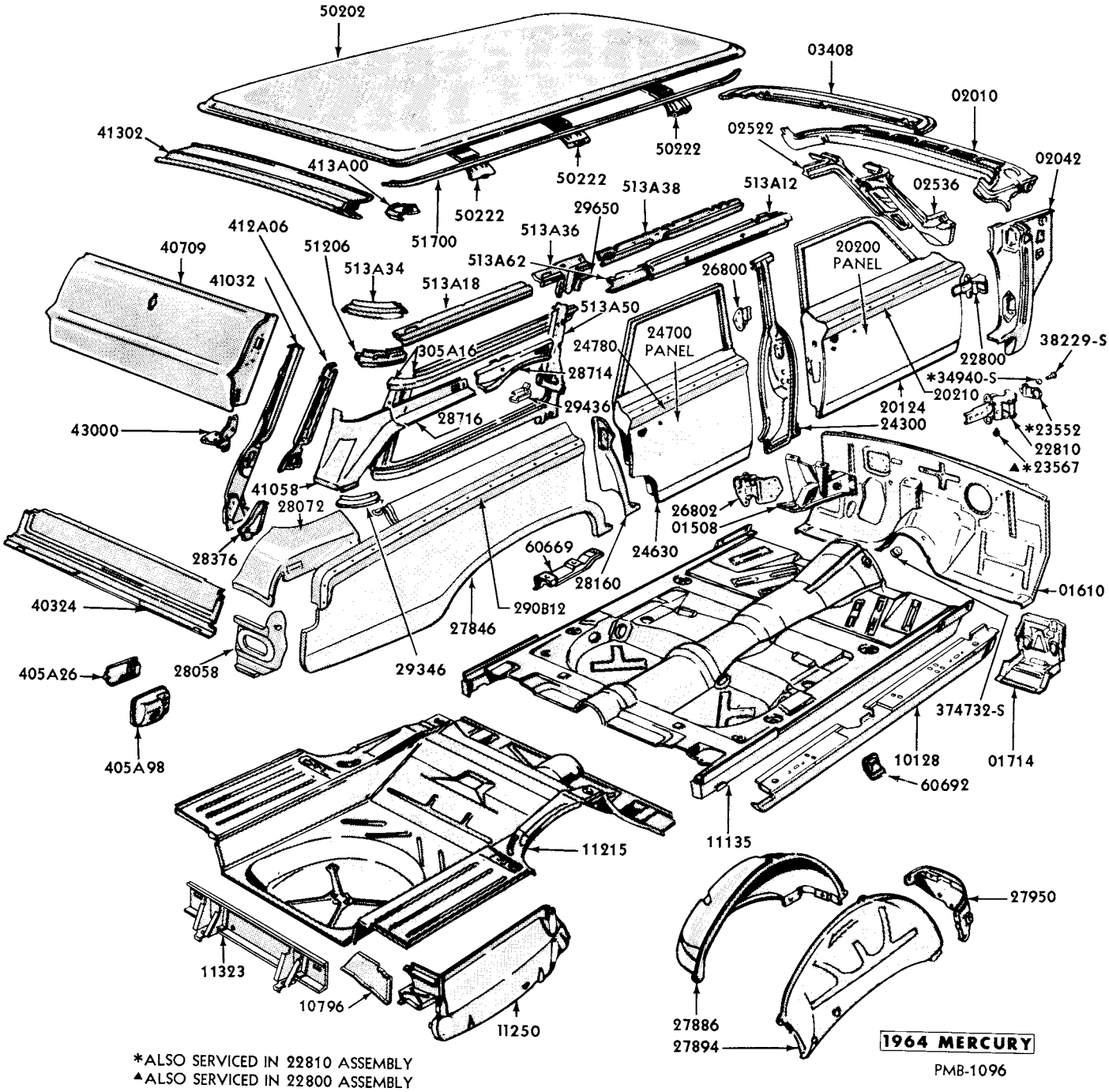

*ALSO SERVICED IN 22810 ASSEMBLY
▲ALSO SERVICED IN 22800 ASSEMBLY

BODY SHEET METAL - MODEL 71

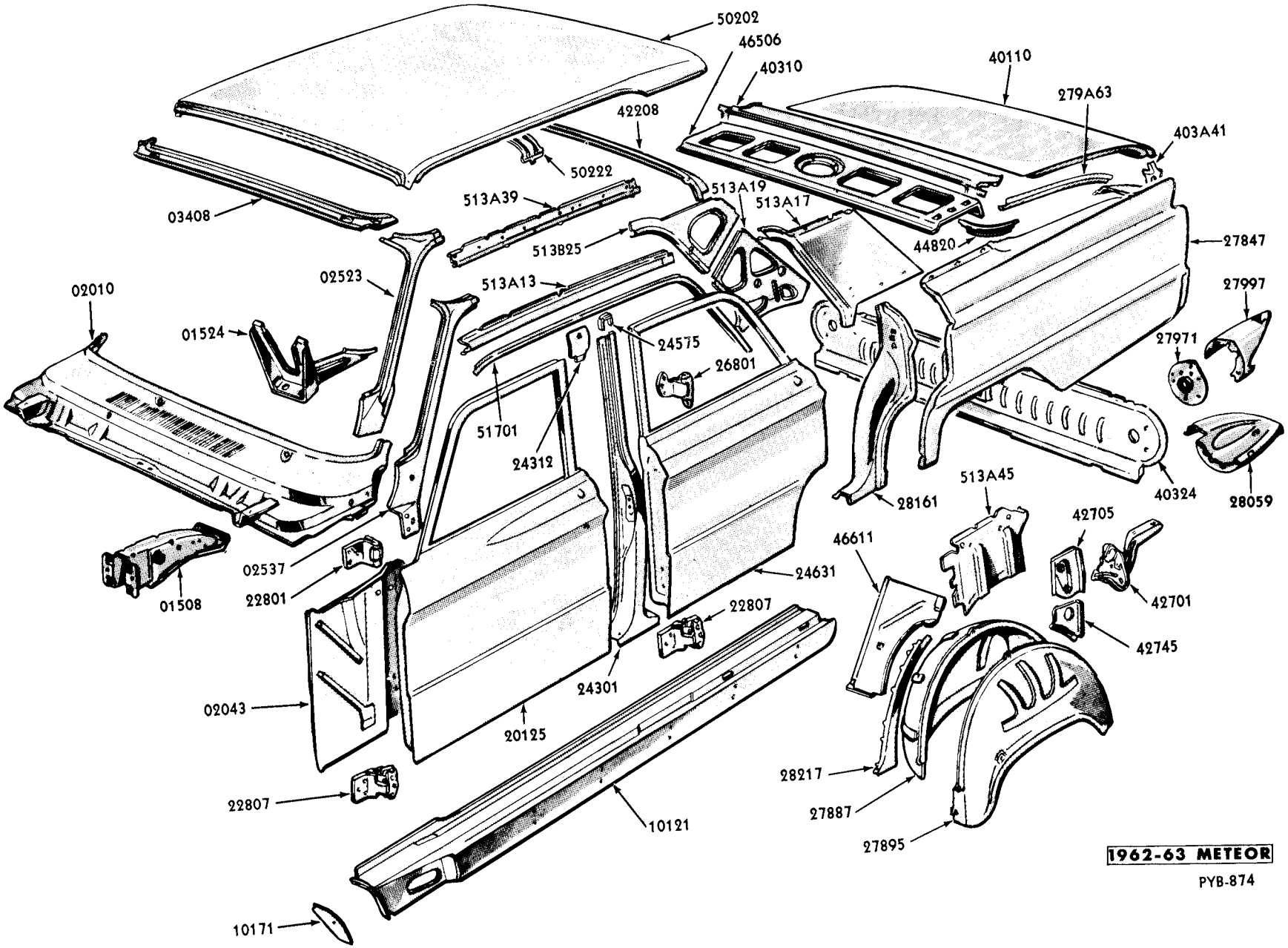

BODY SHEET METAL - MODEL 54

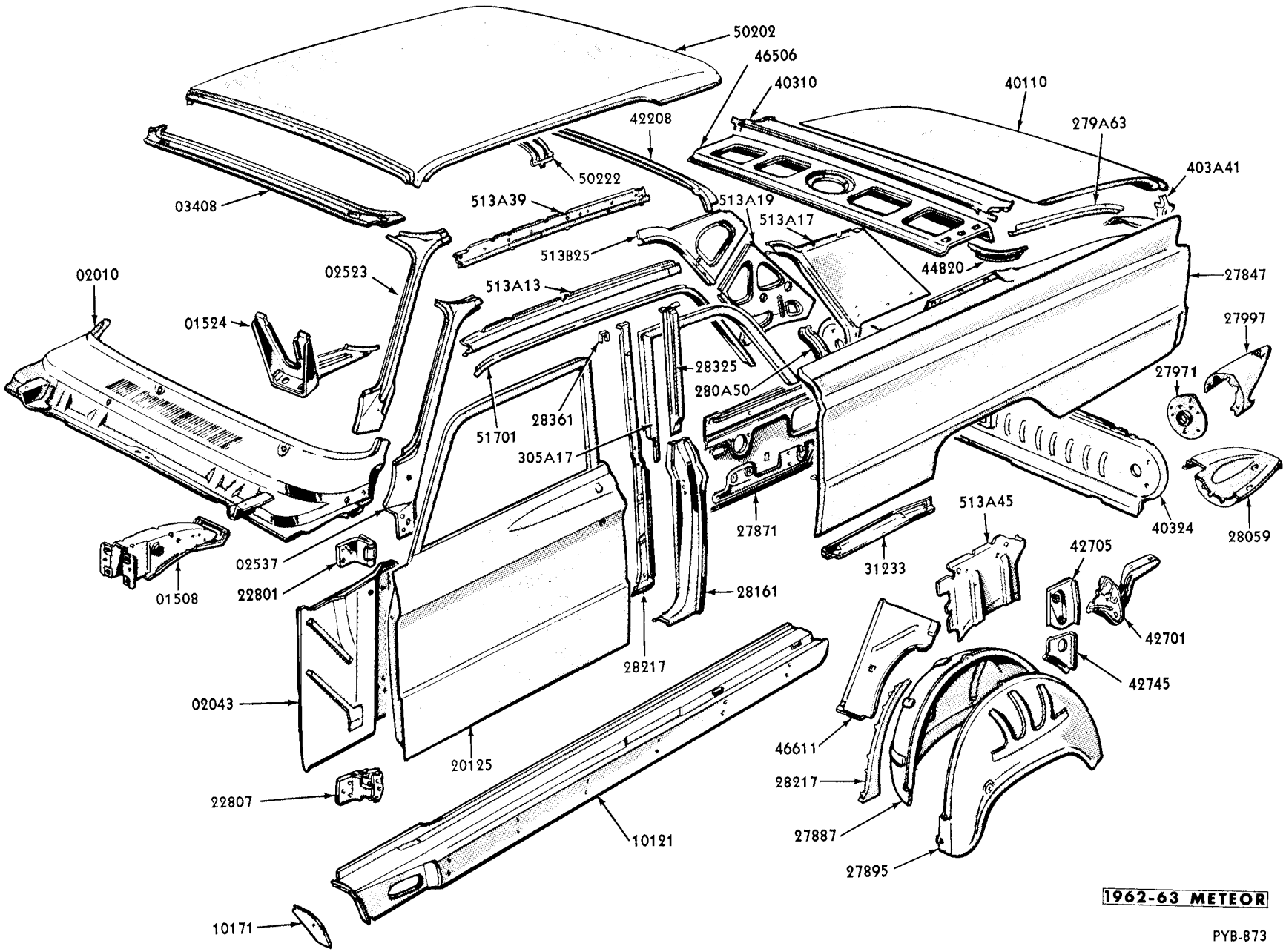

BODY SHEET METAL - MODEL 62

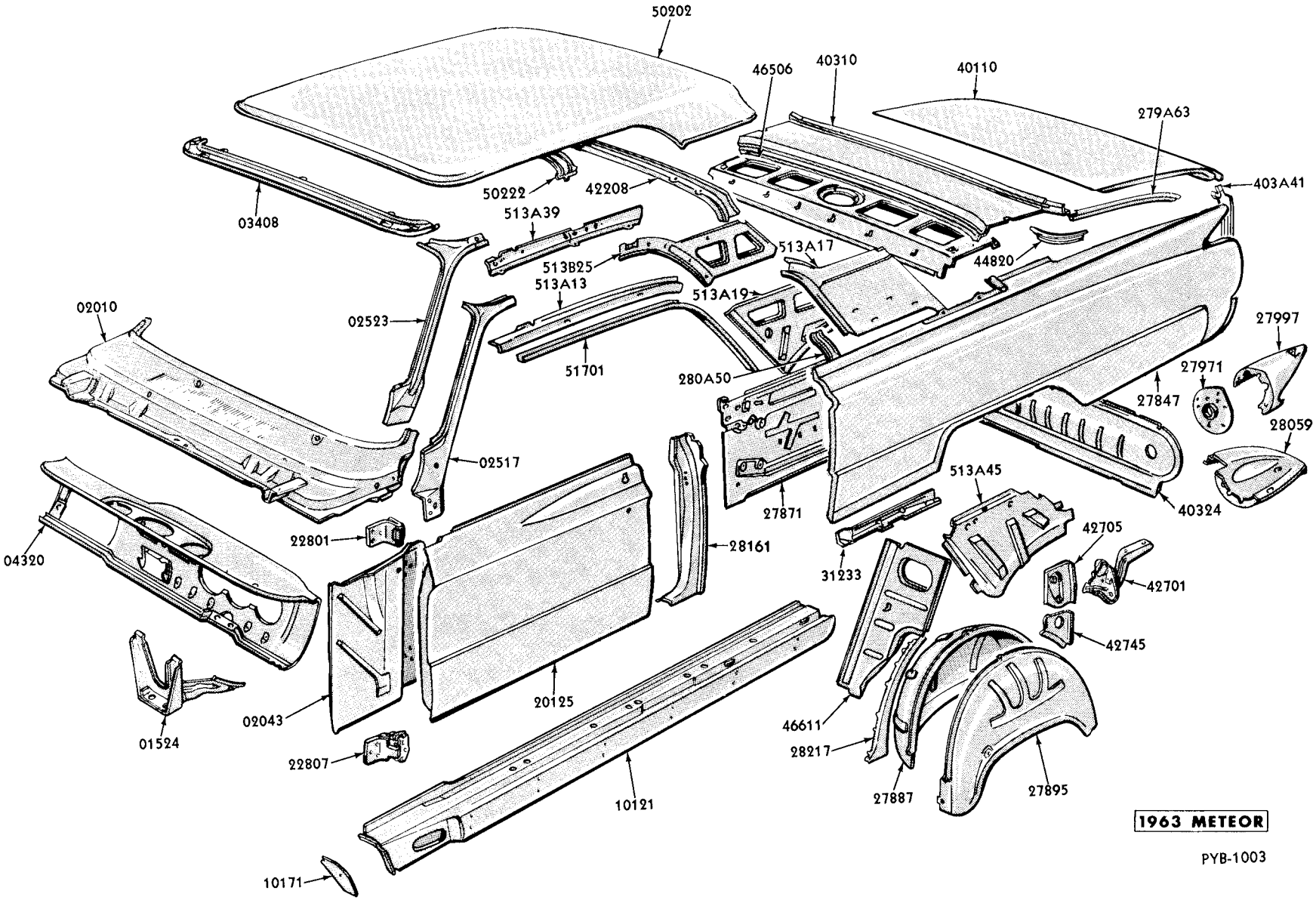

BODY SHEET METAL - MODEL 65

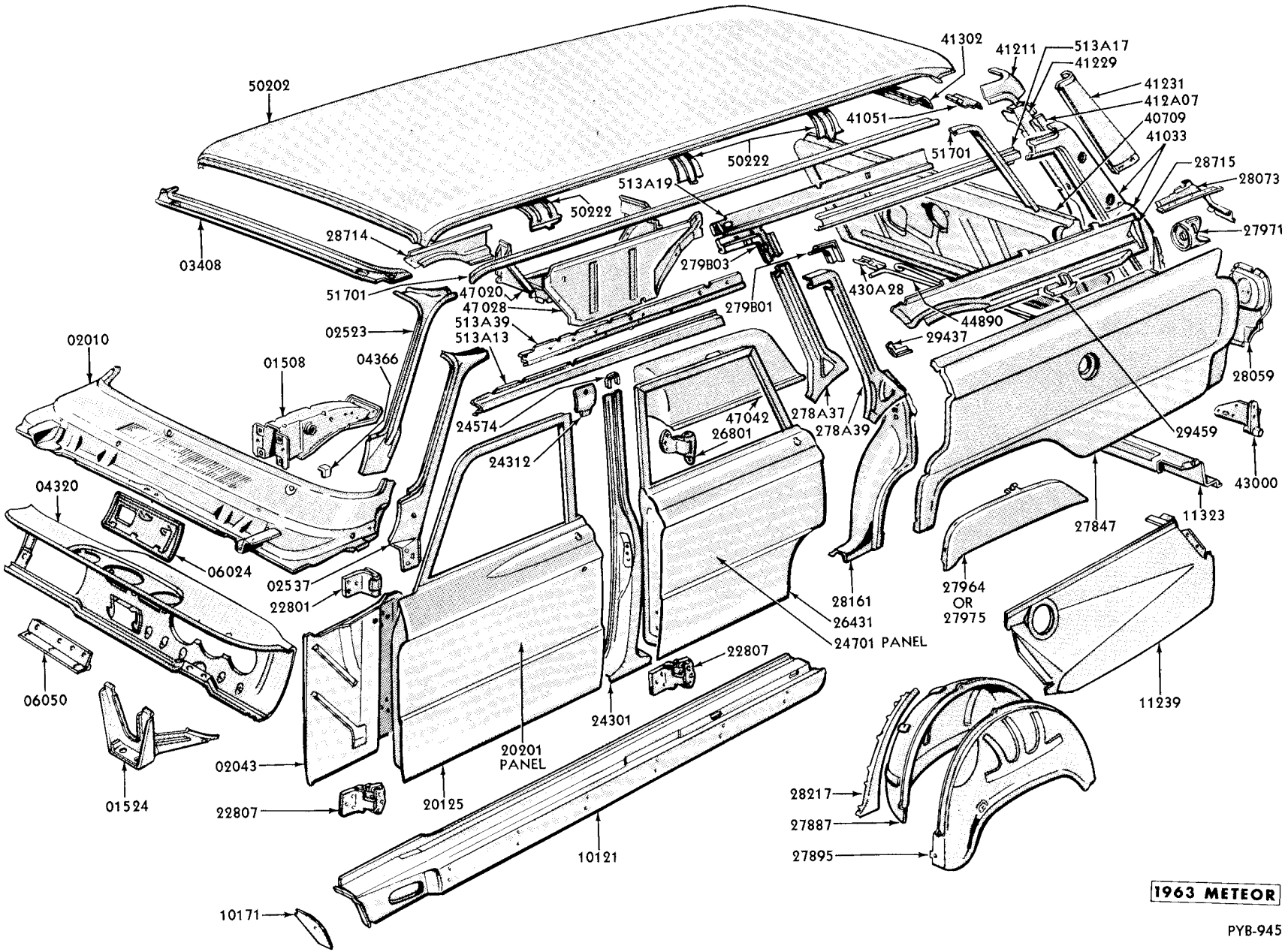

BODY SHEET METAL-MODEL 71

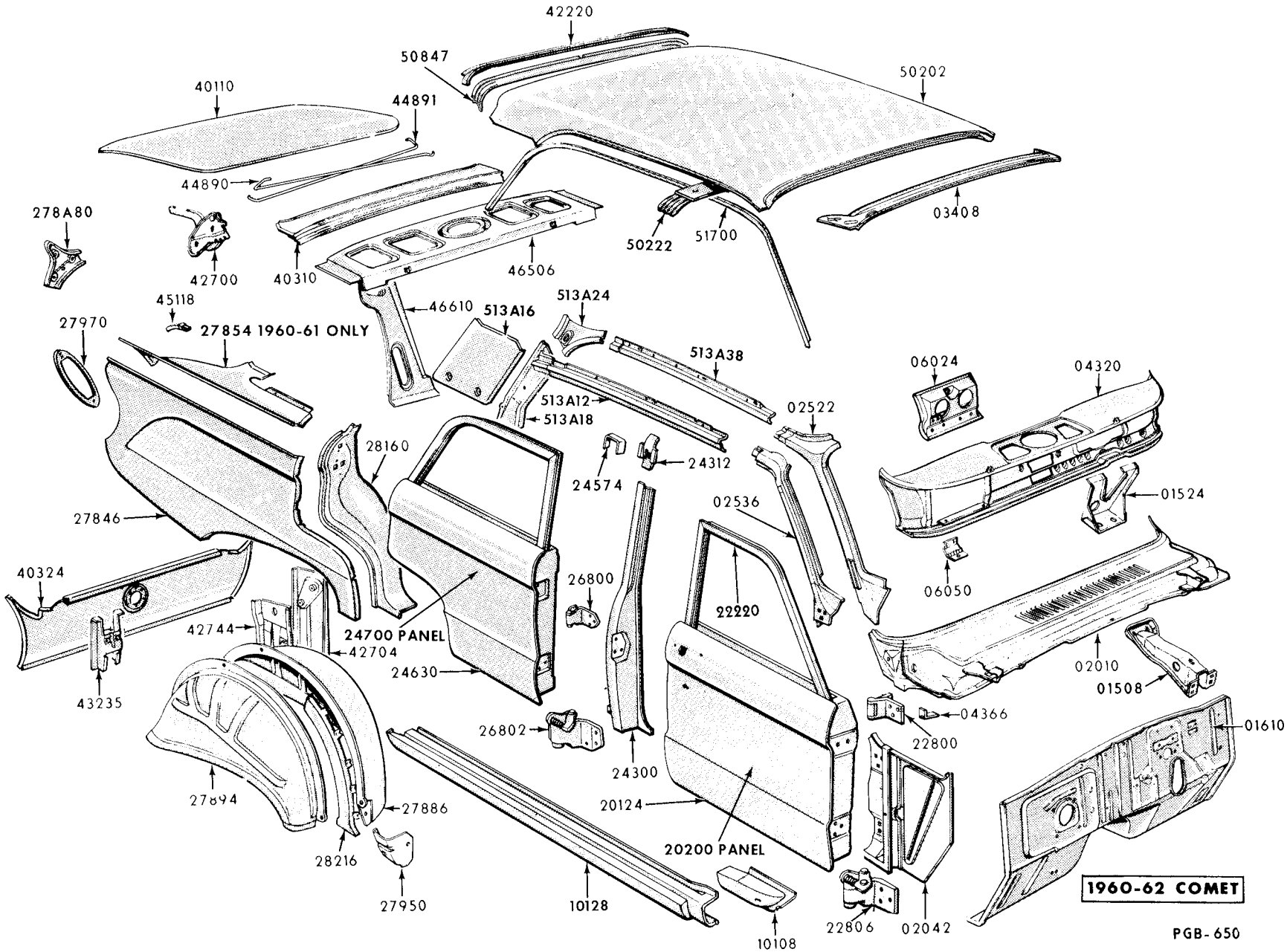

BODY SHEET METAL - MODEL 54

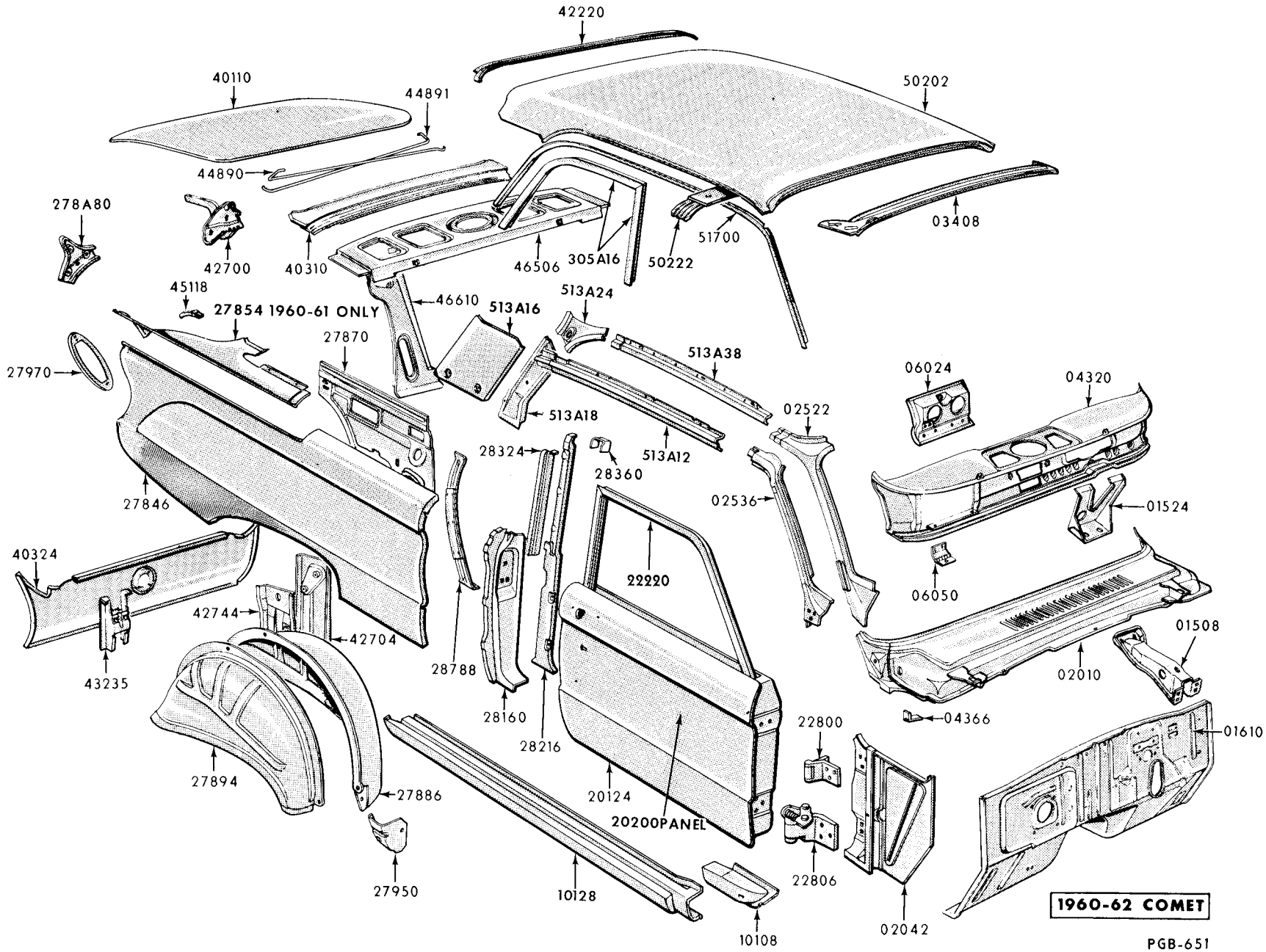

BODY SHEET METAL - MODEL 62

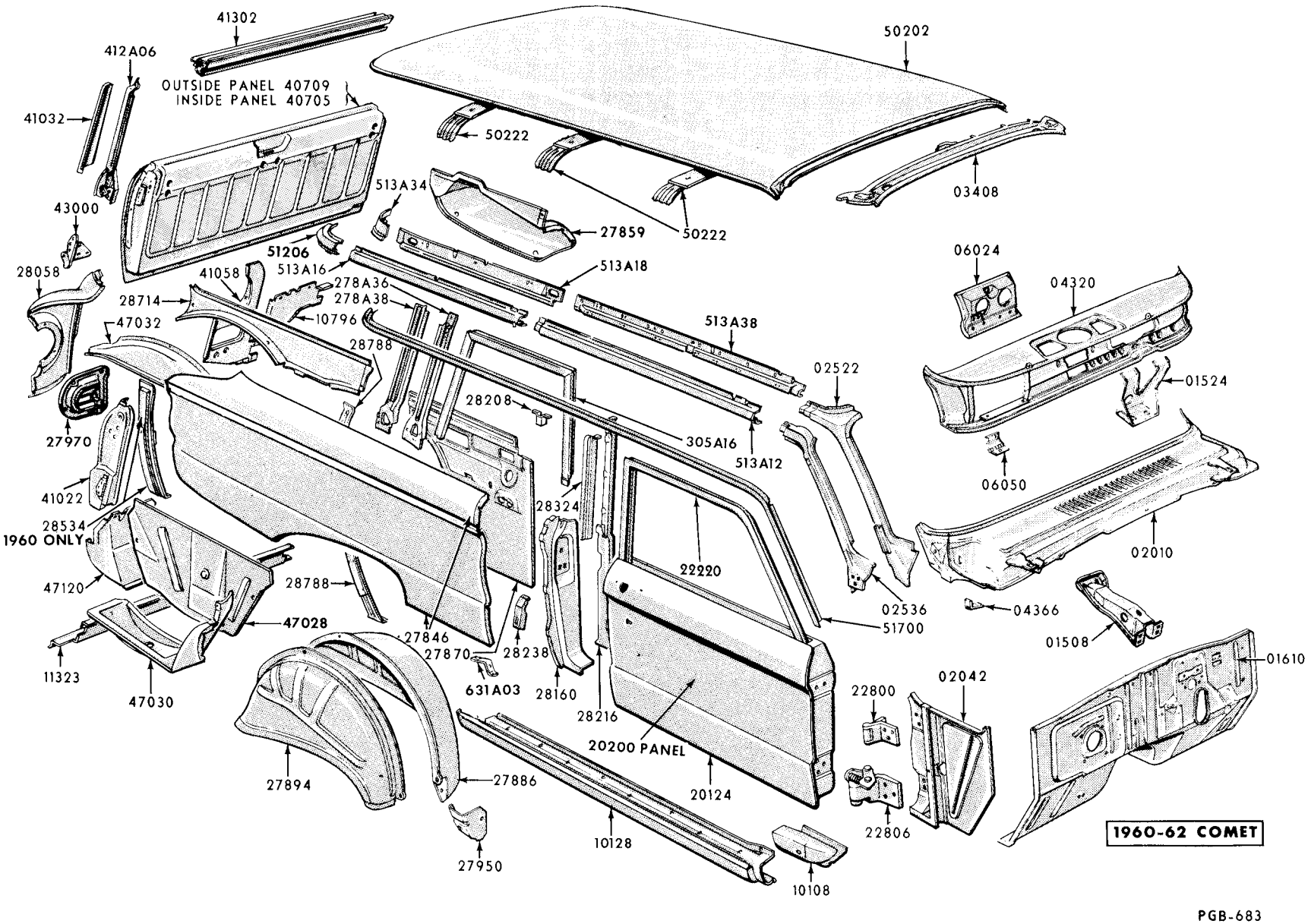

BODY SHEET METAL - MODEL 59

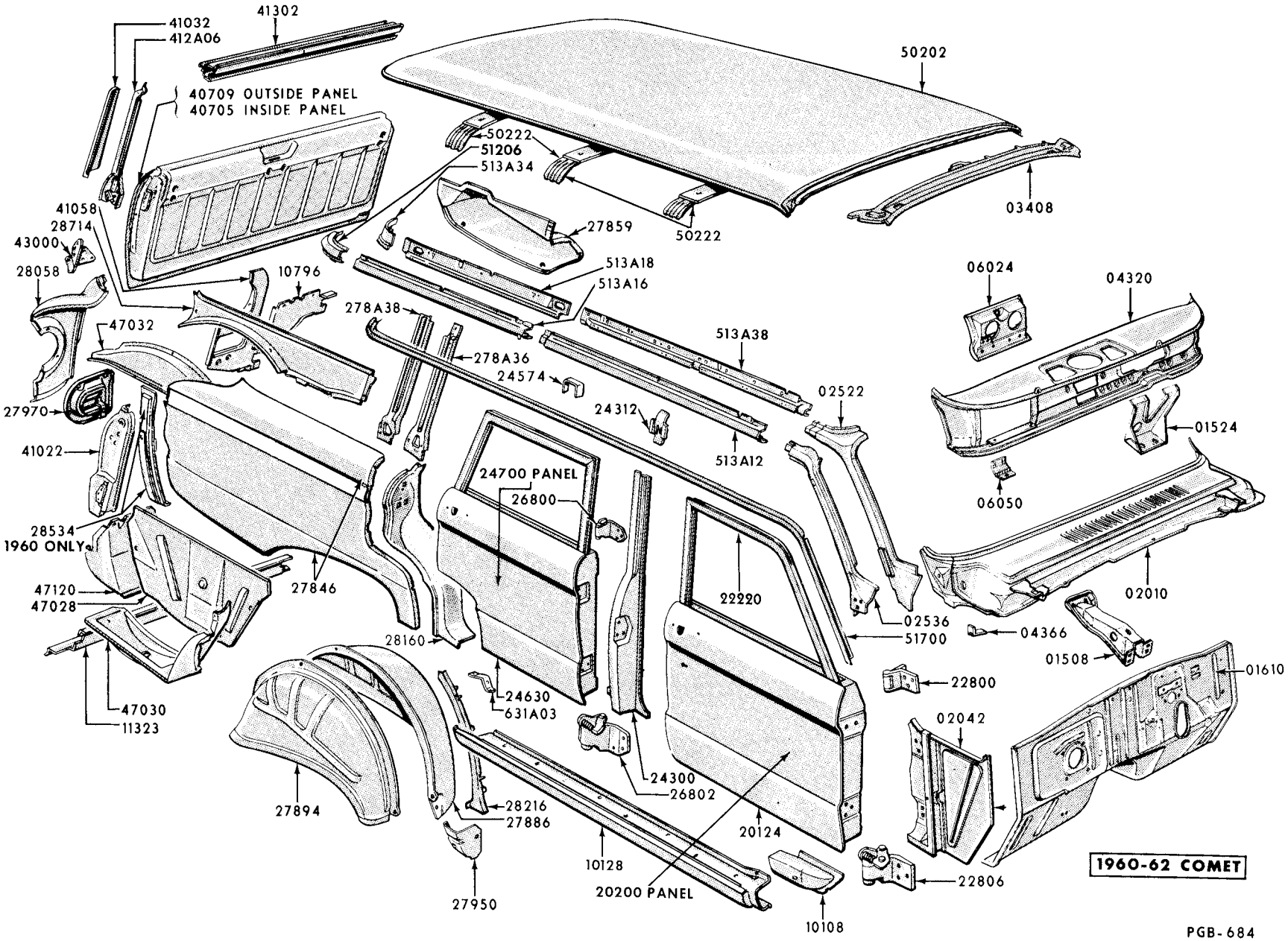

BODY SHEET METAL - MODEL 71

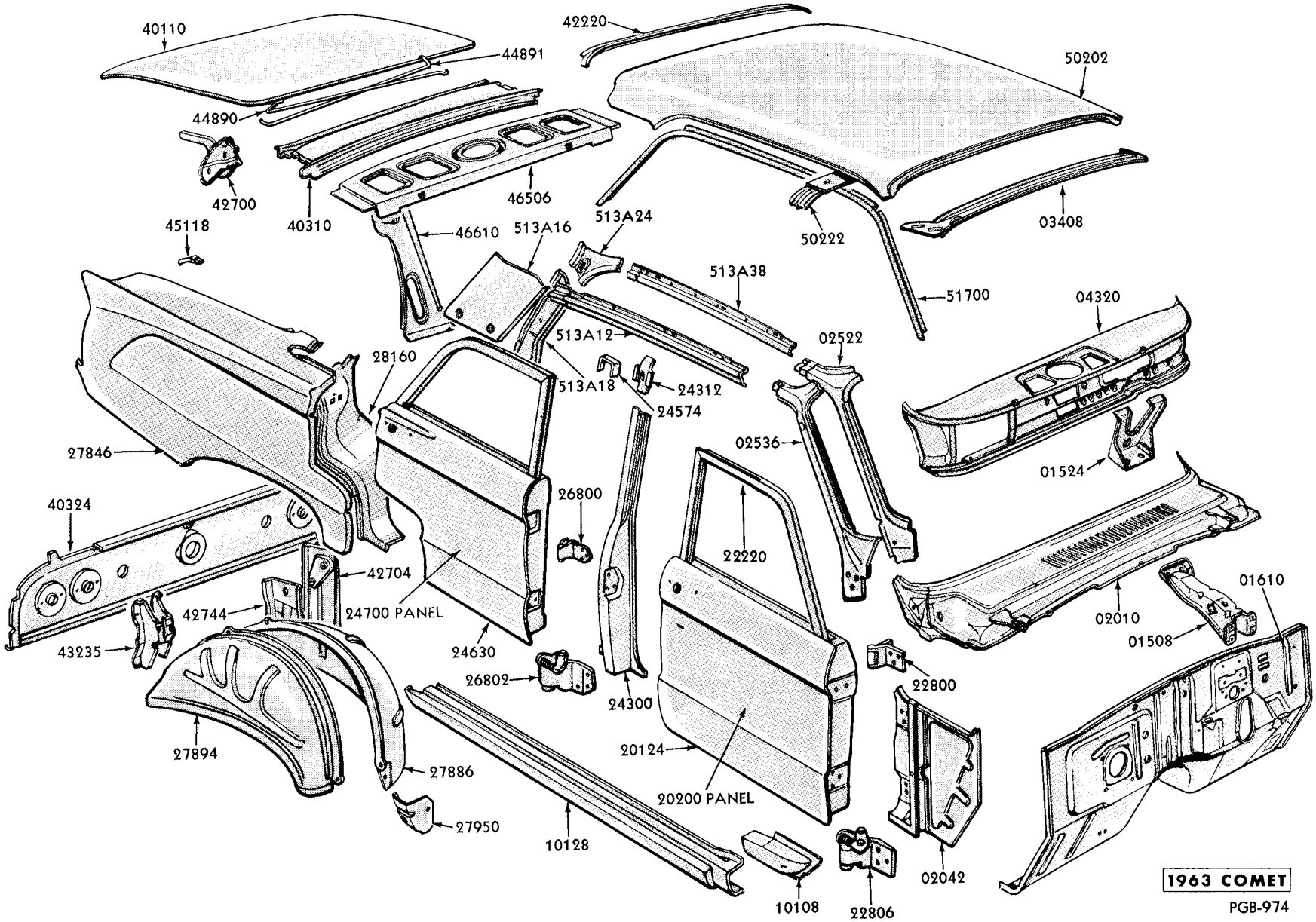

BODY SHEET METAL - MODEL 54

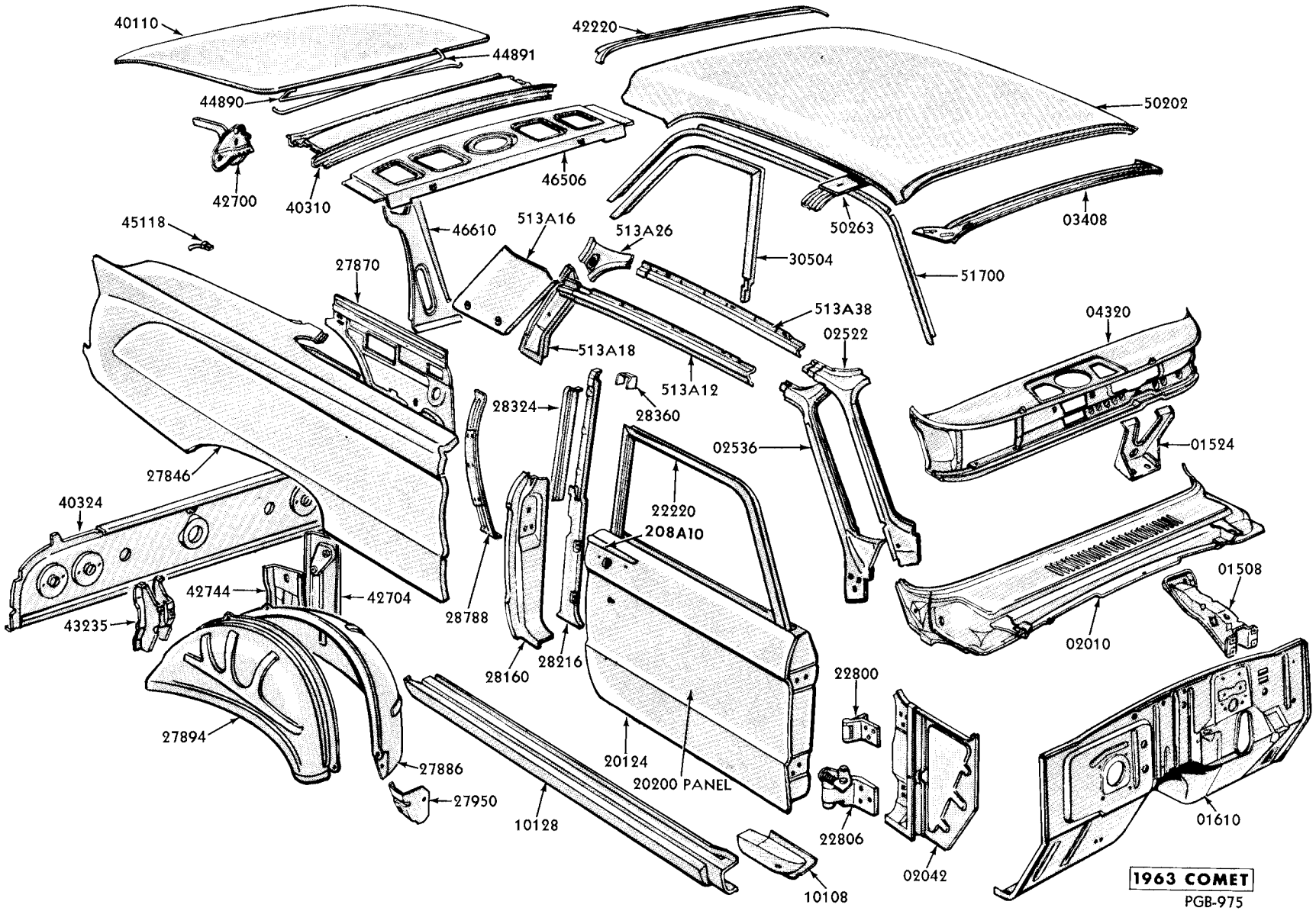

BODY SHEET METAL - MODEL 62

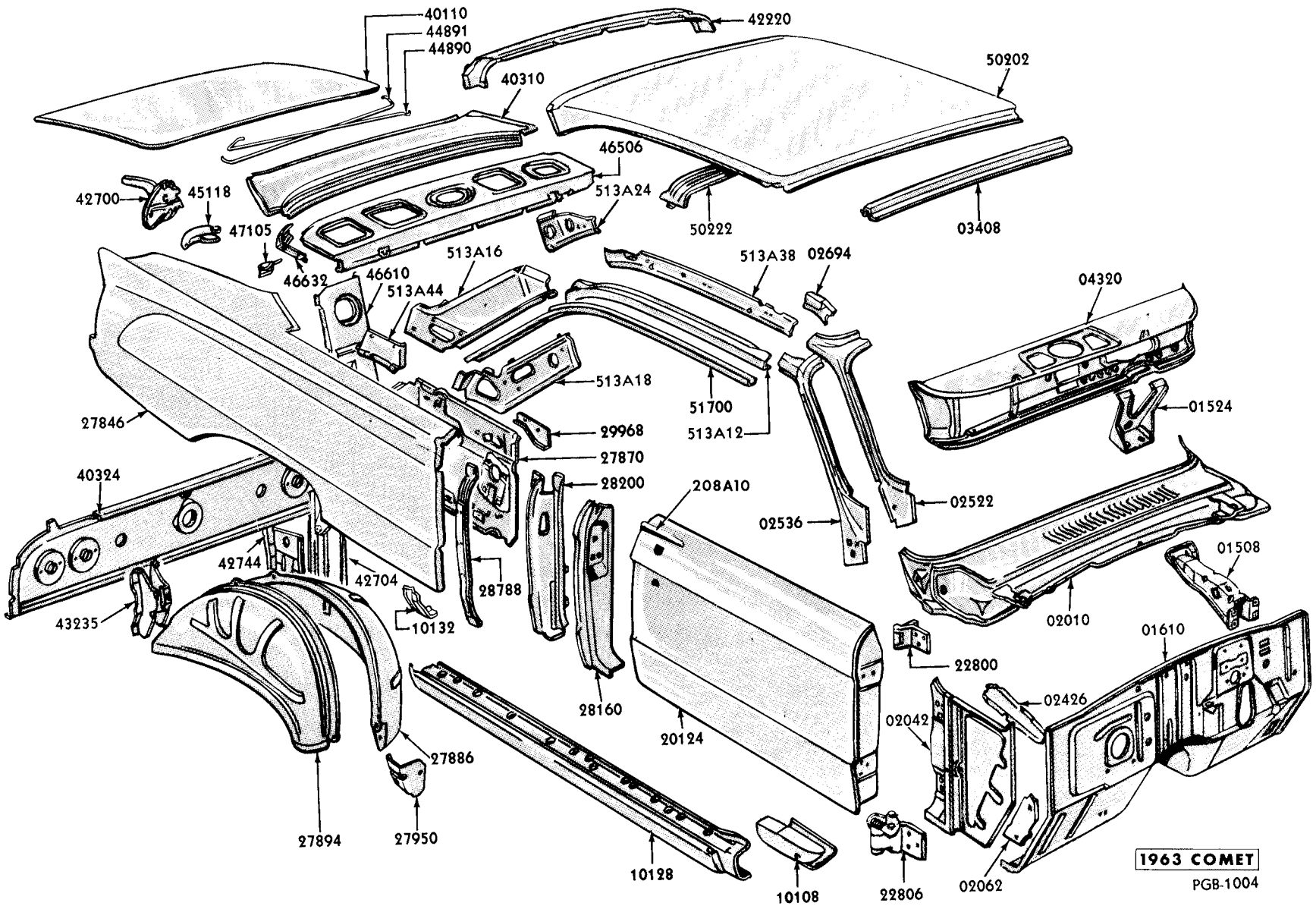

BODY SHEET METAL - MODEL 63

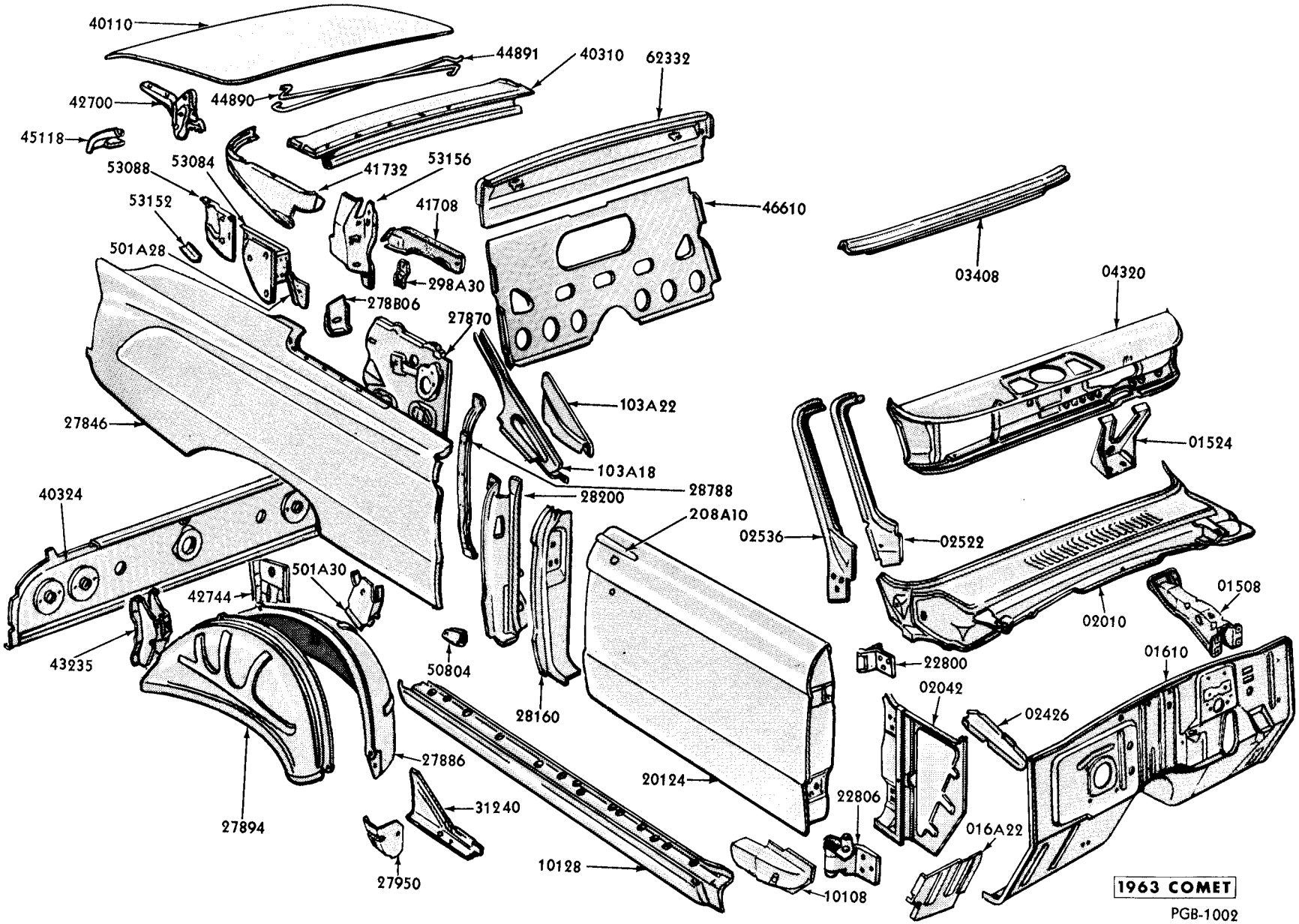

BODY SHEET METAL - MODEL 76

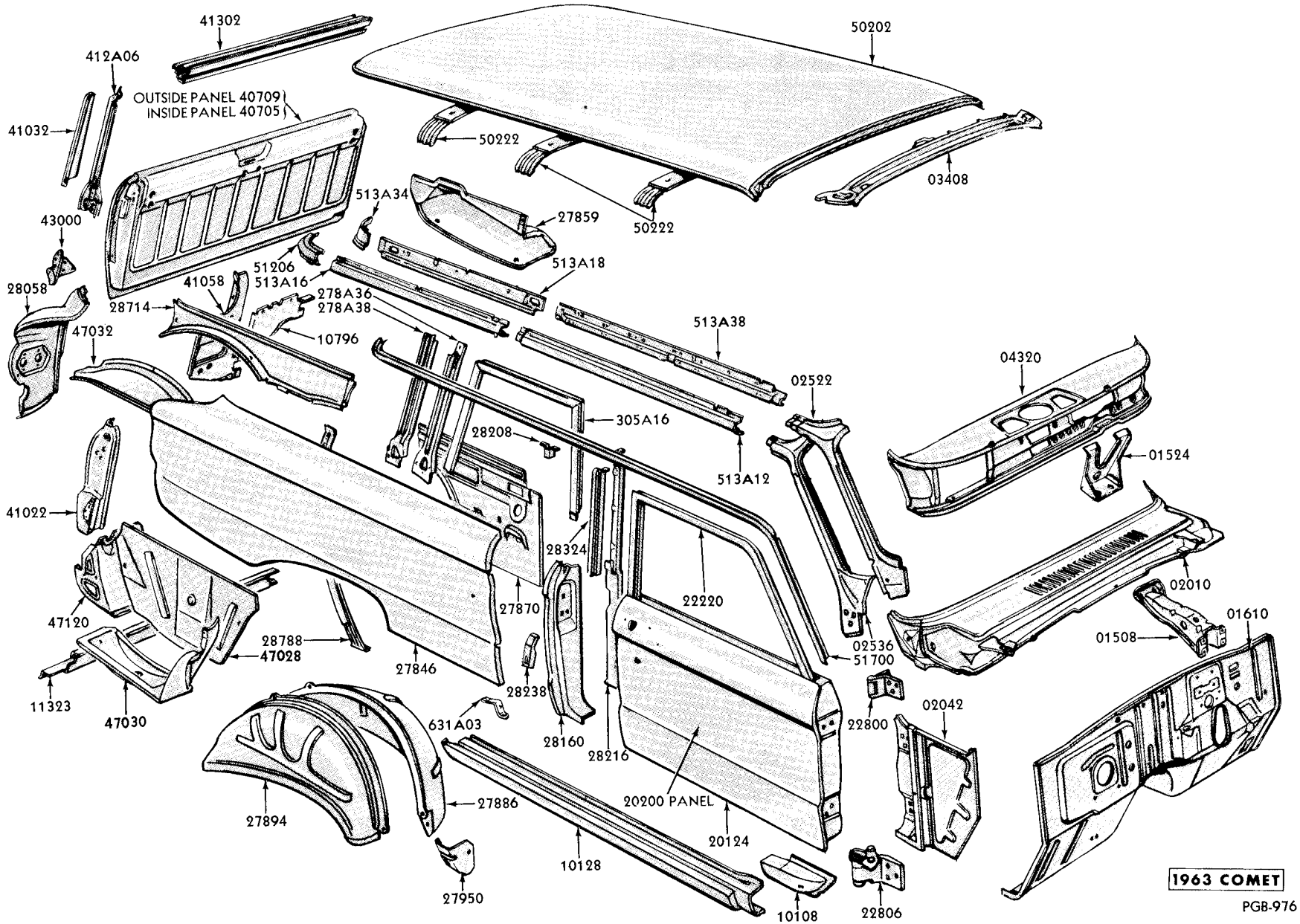

BODY SHEET METAL - MODEL 59

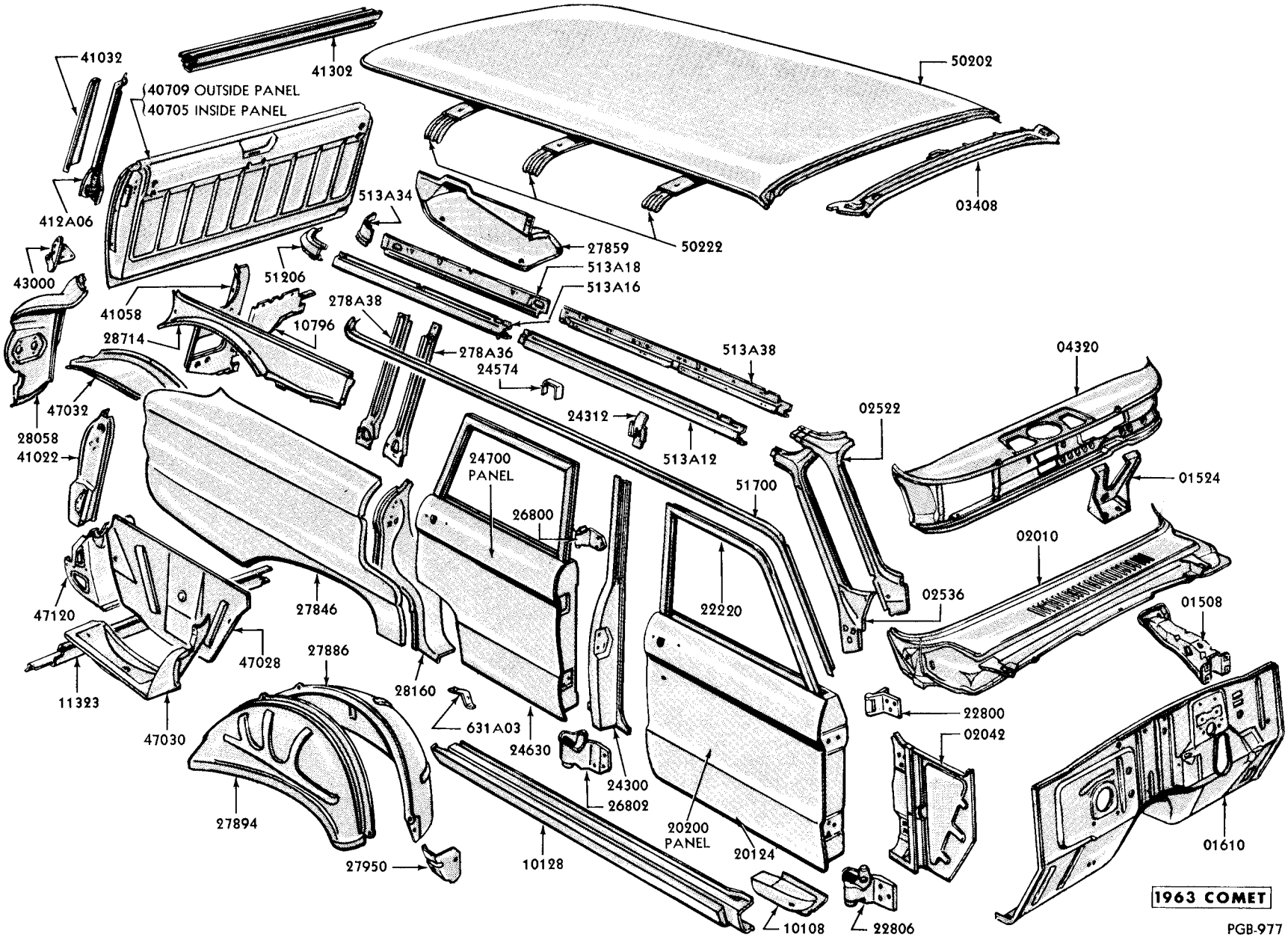

BODY SHEET METAL - MODEL 71

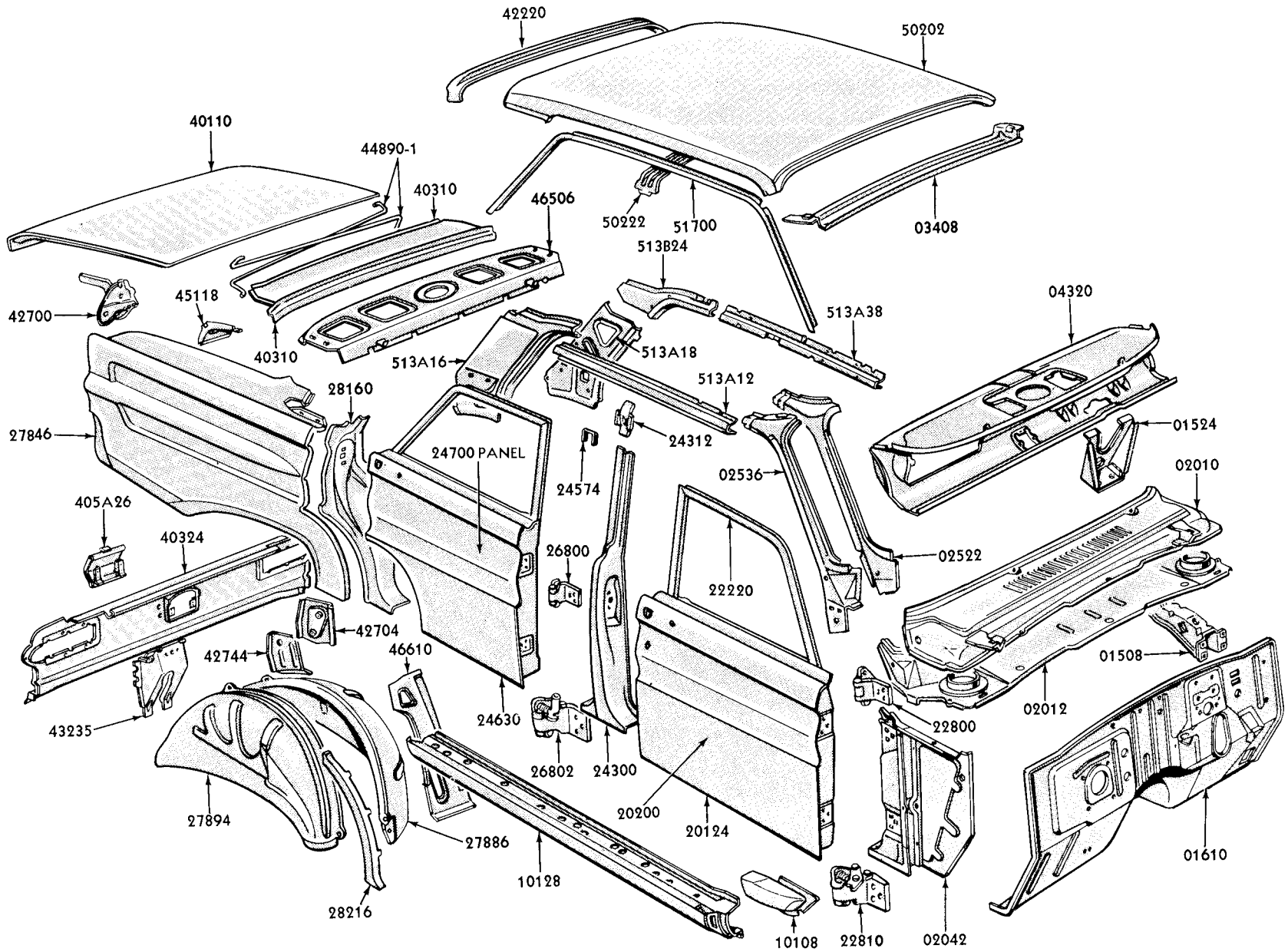

1964 COMET
PGB-1082

BODY SHEET METAL - MODEL 54

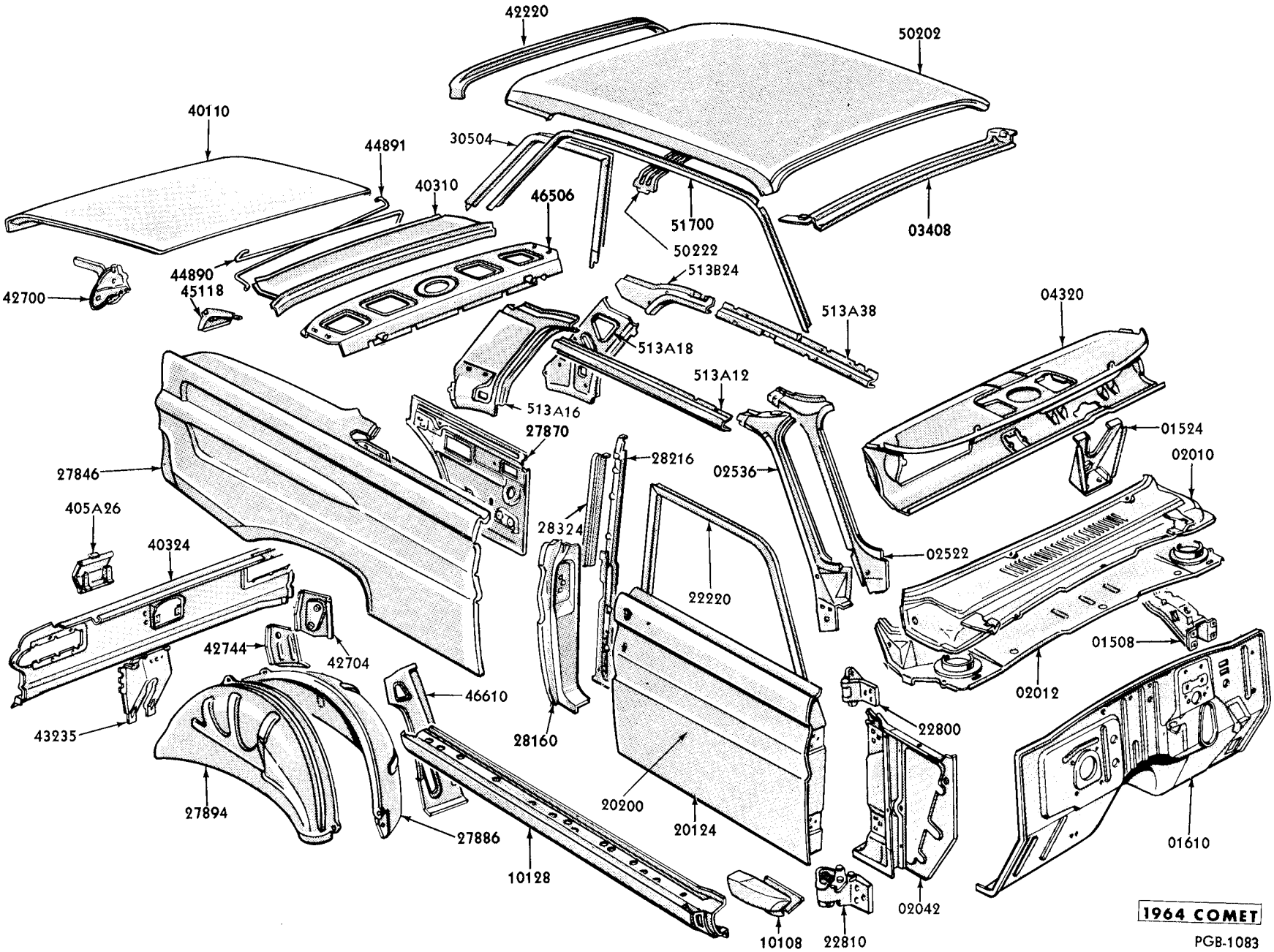

BODY SHEET METAL - MODEL 62

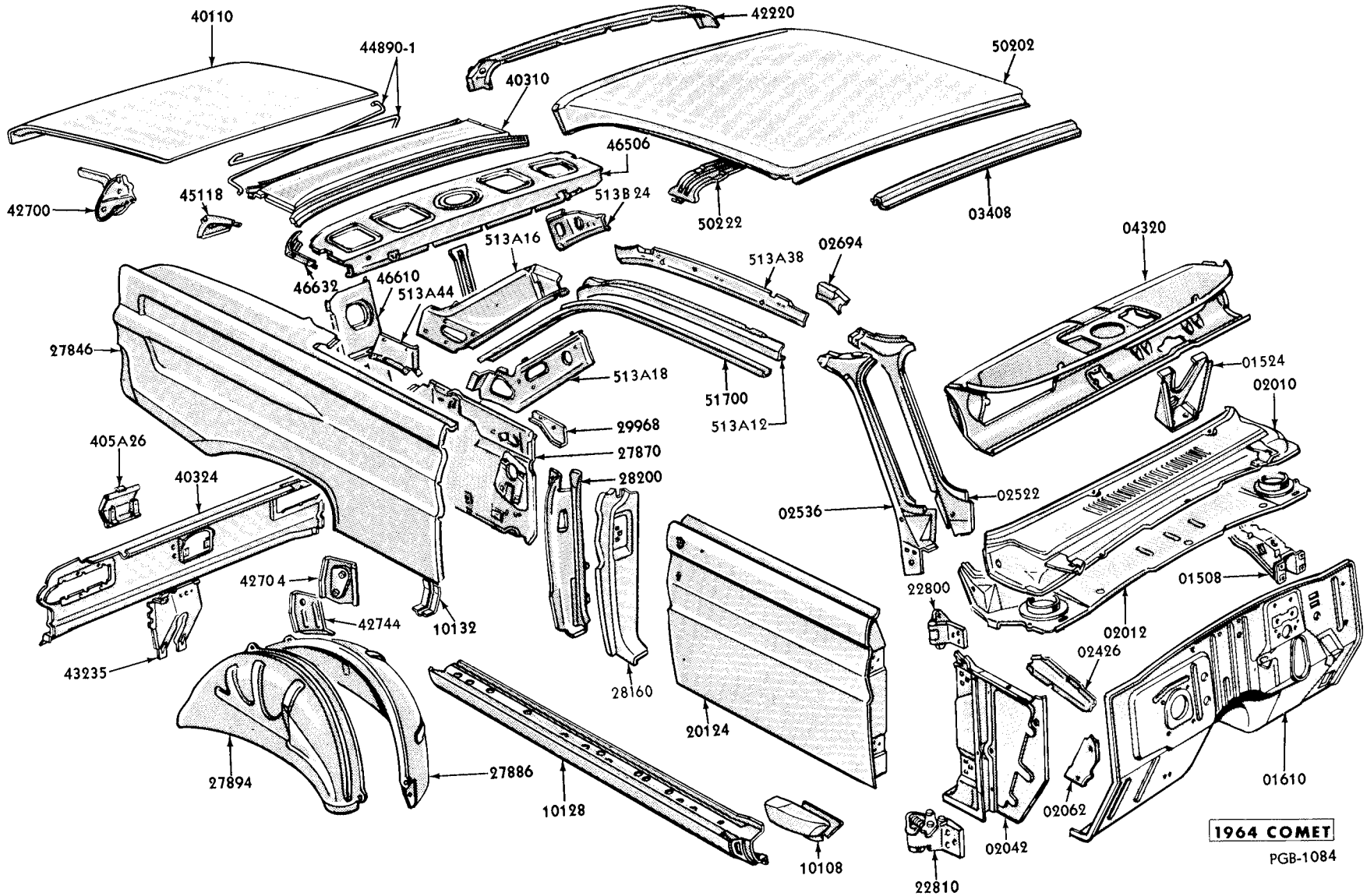

BODY SHEET METAL - MODEL 63

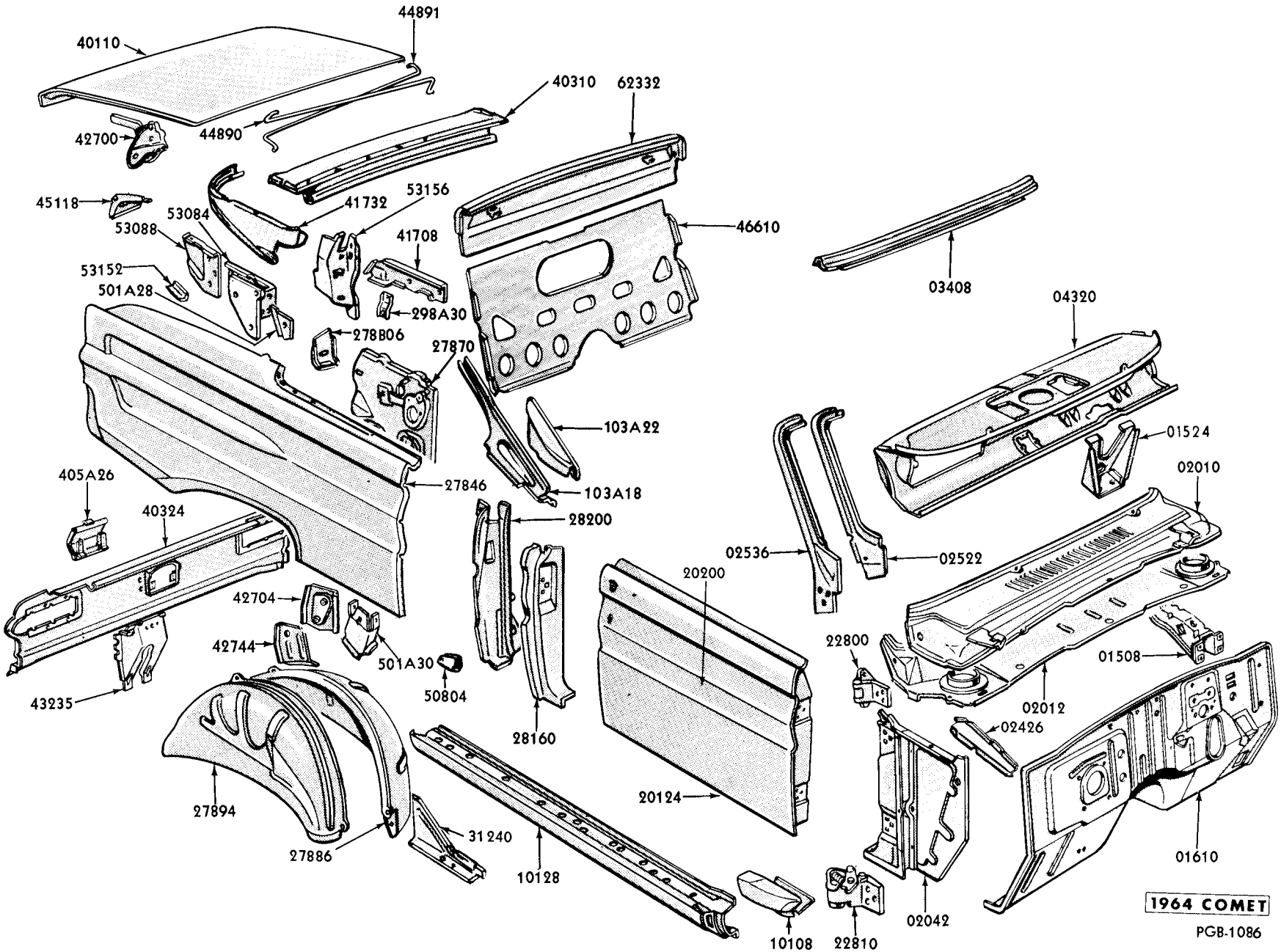

BODY SHEET METAL - MODEL 76

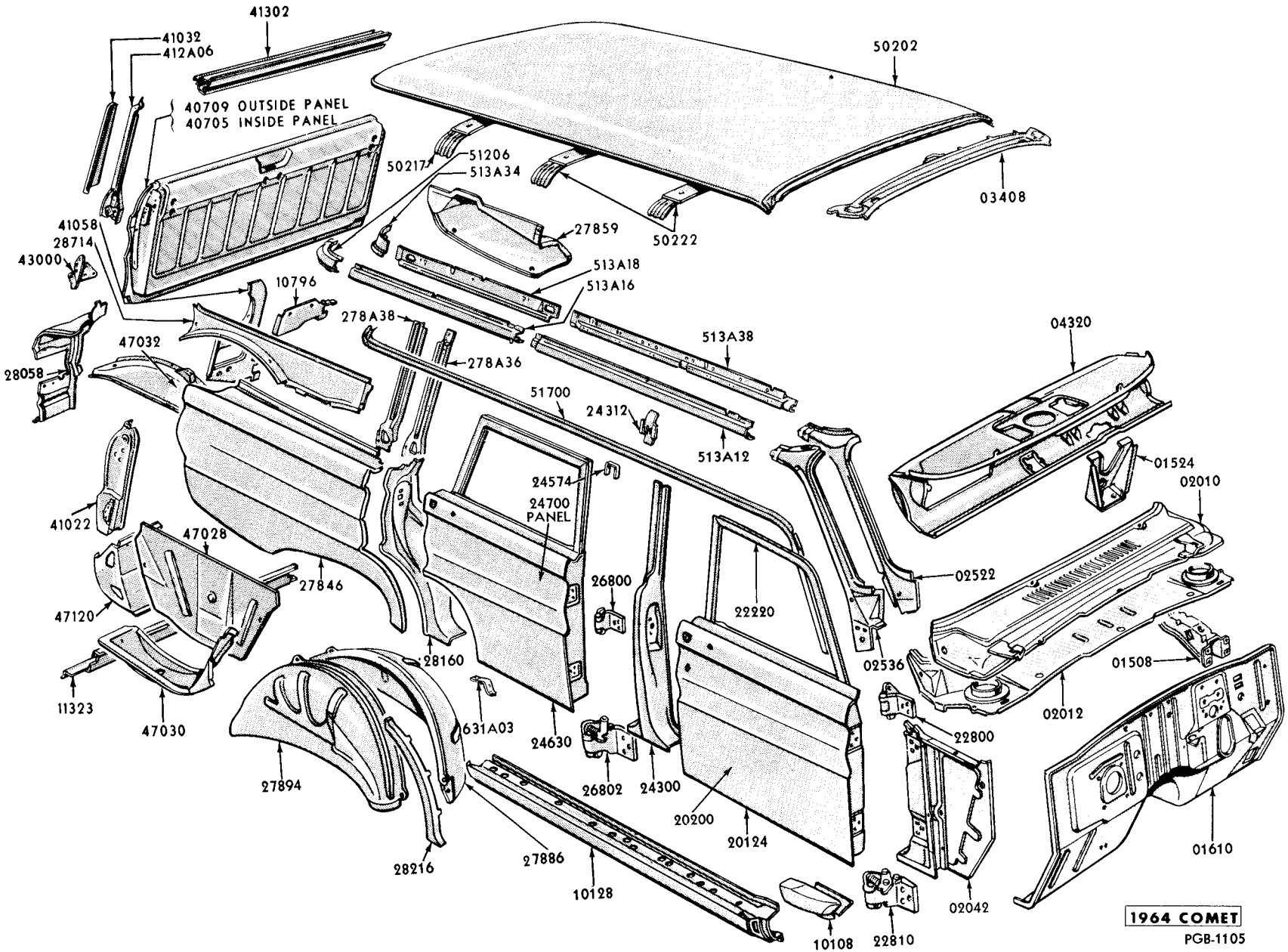

BODY SHEET METAL - STATION WAGON

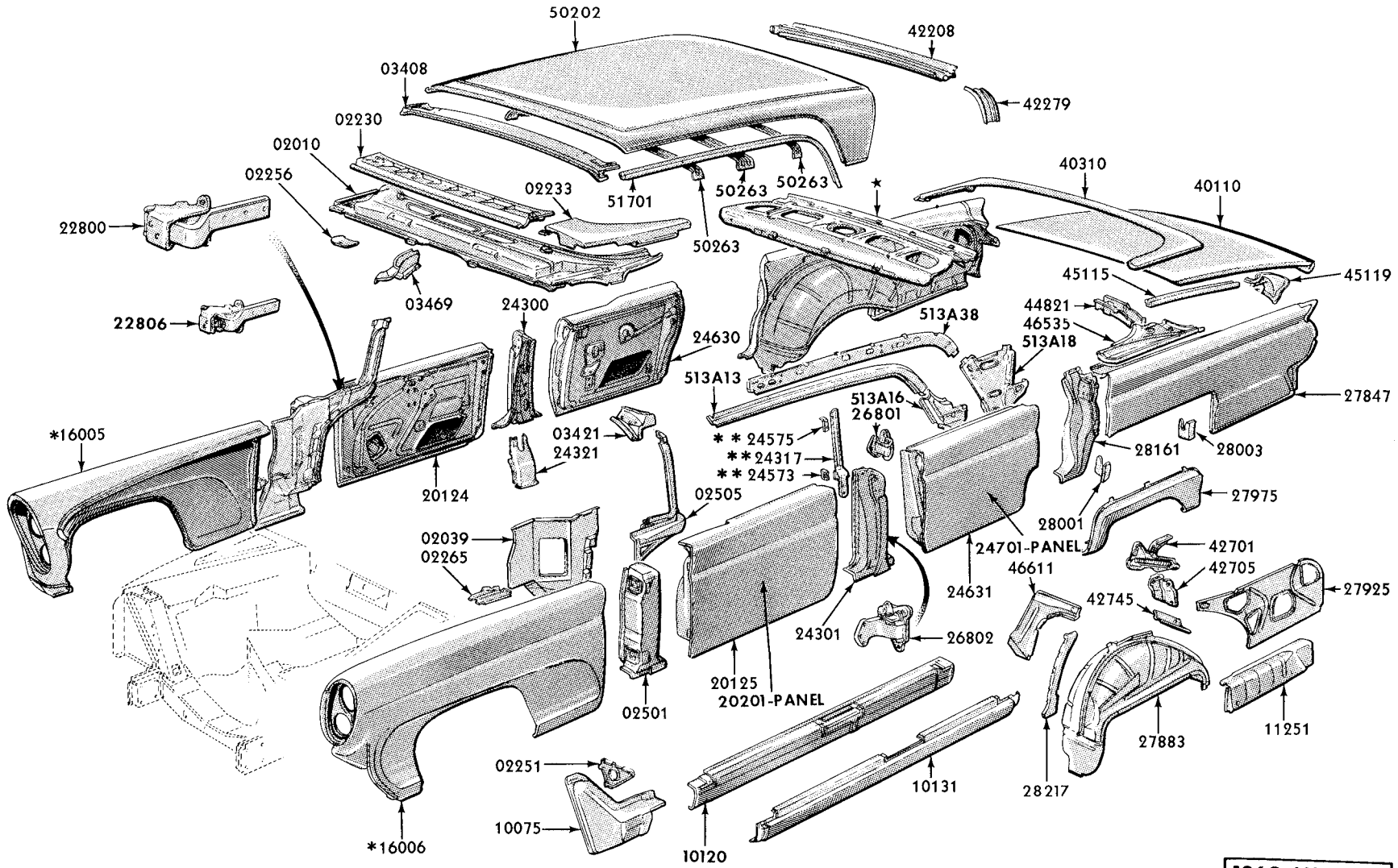

** USED FOR BODY TYPE 53 ONLY

* REFER TO CHASSIS SECTION

BODY SHEET METAL - MODELS 53, 57

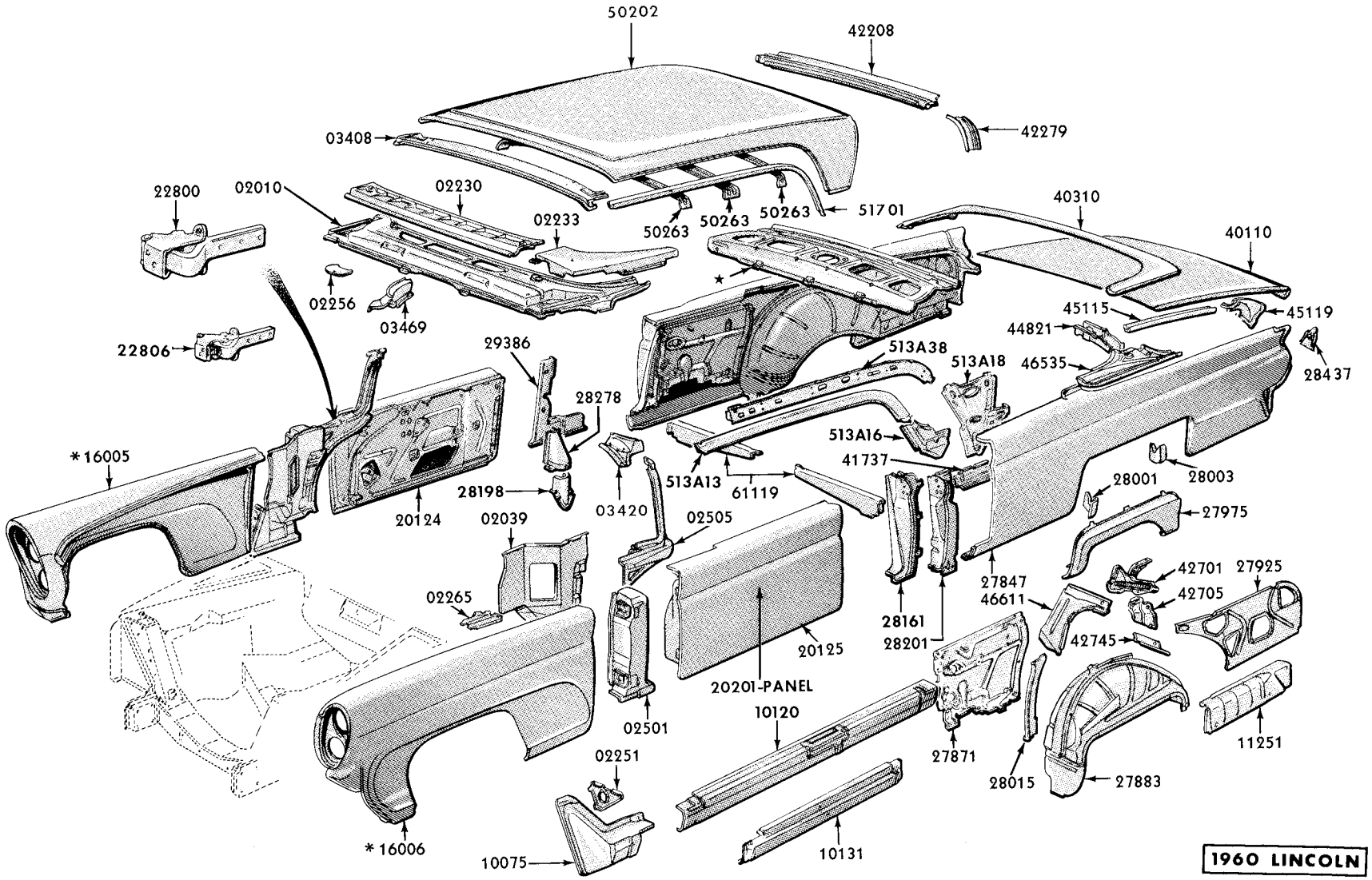

*REFER TO CHASSIS SECTION

BODY SHEET METAL - MODEL 63

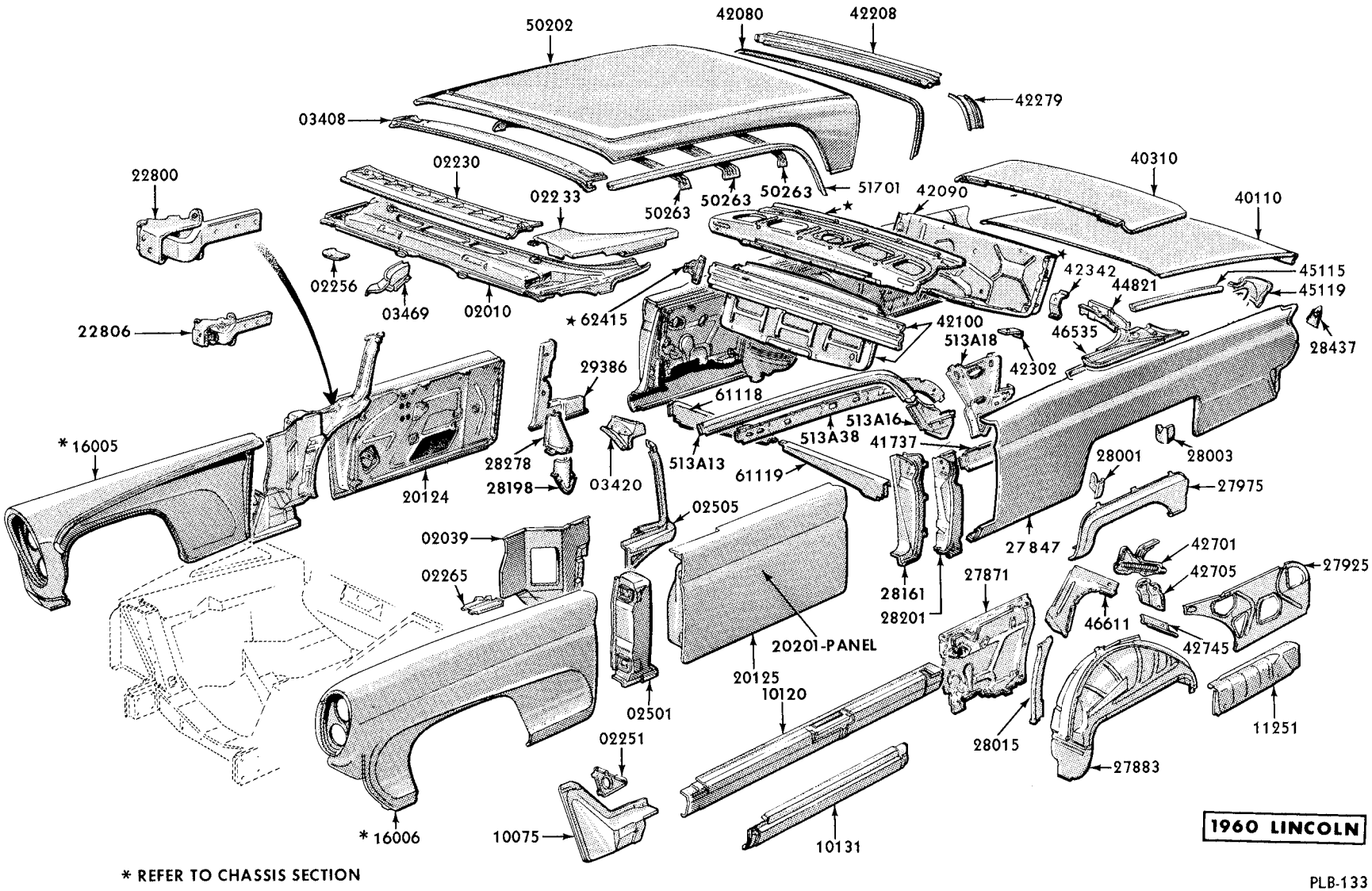

BODY SHEET METAL - MODEL 65

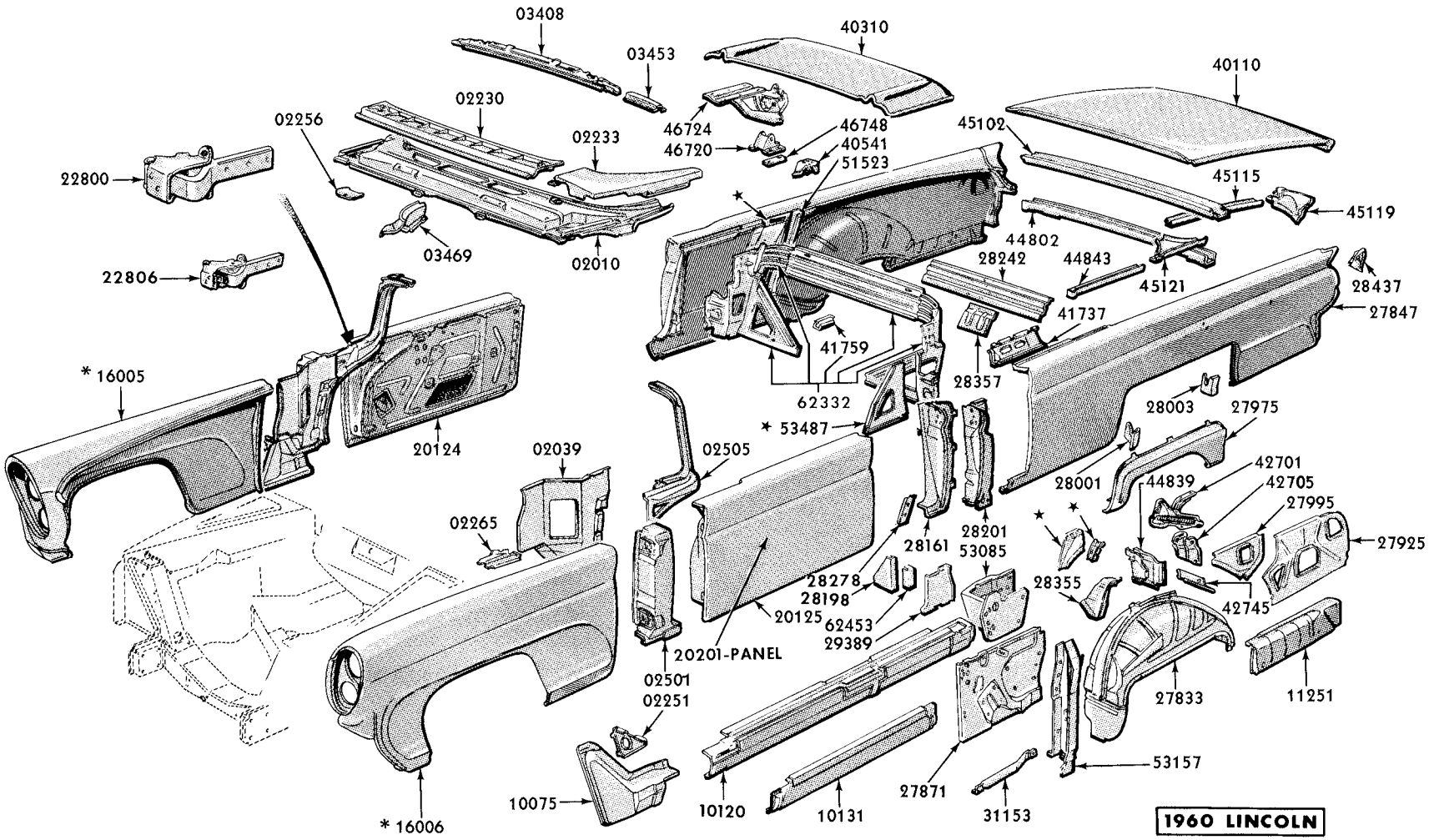

* REFER TO CHASSIS SECTION

BODY SHEET METAL - MODEL 68

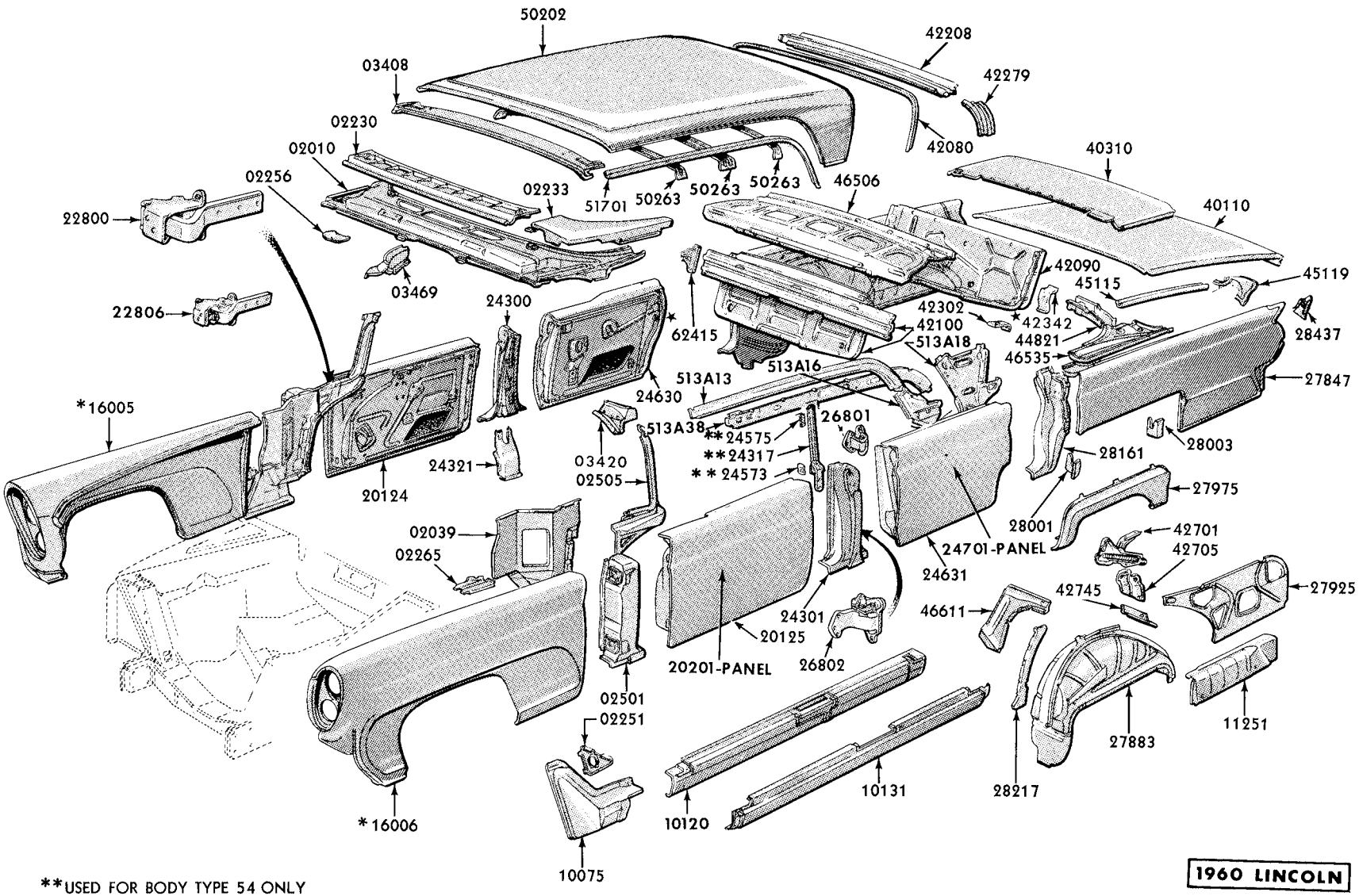

**USED FOR BODY TYPE 54 ONLY

* REFER TO CHASSIS SECTION

1960 LINCOLN

PLB-135

BODY SHEET METAL - MODELS 54, 75

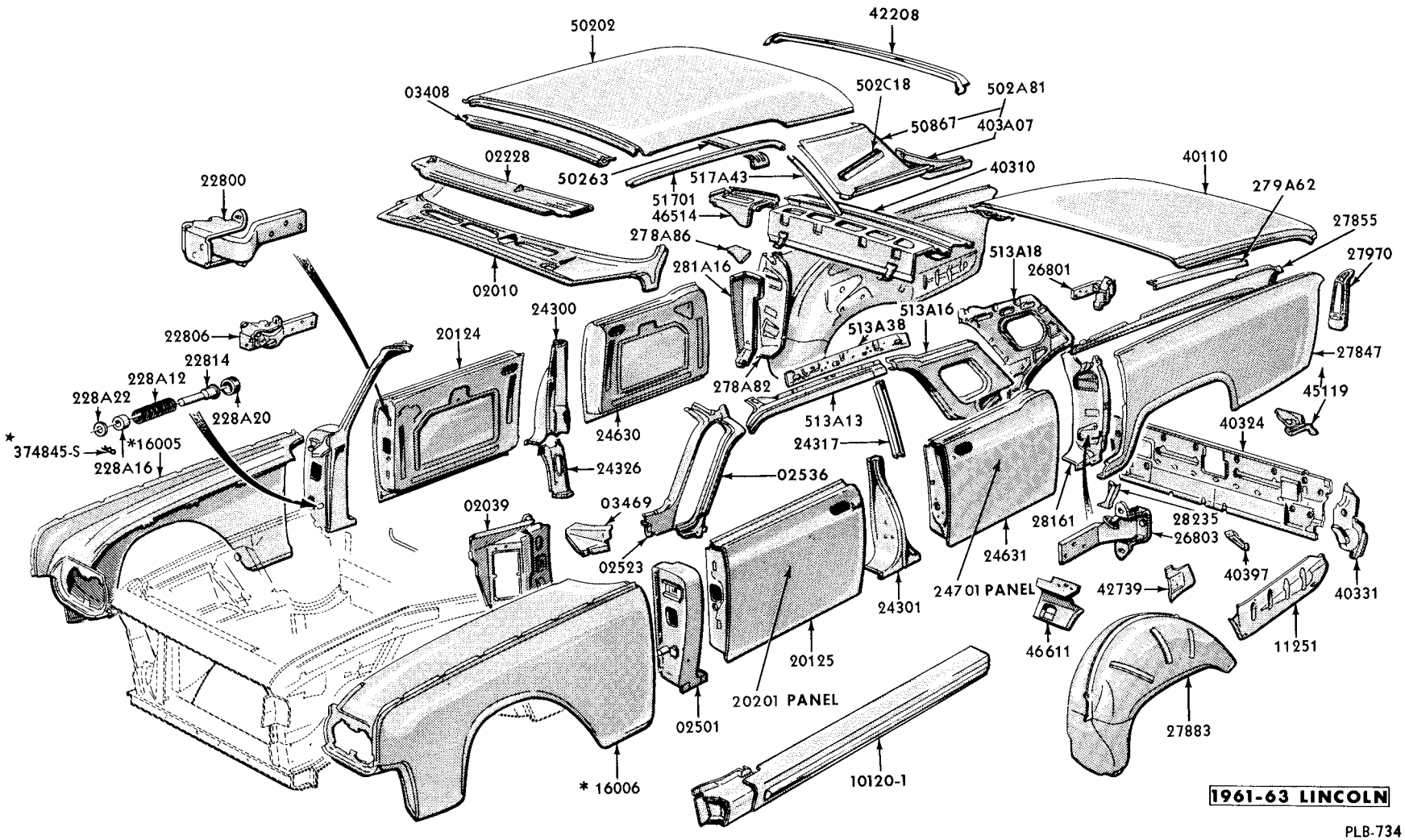

* REFER TO CHASSIS SECTION

BODY SHEET METAL - MODEL 53

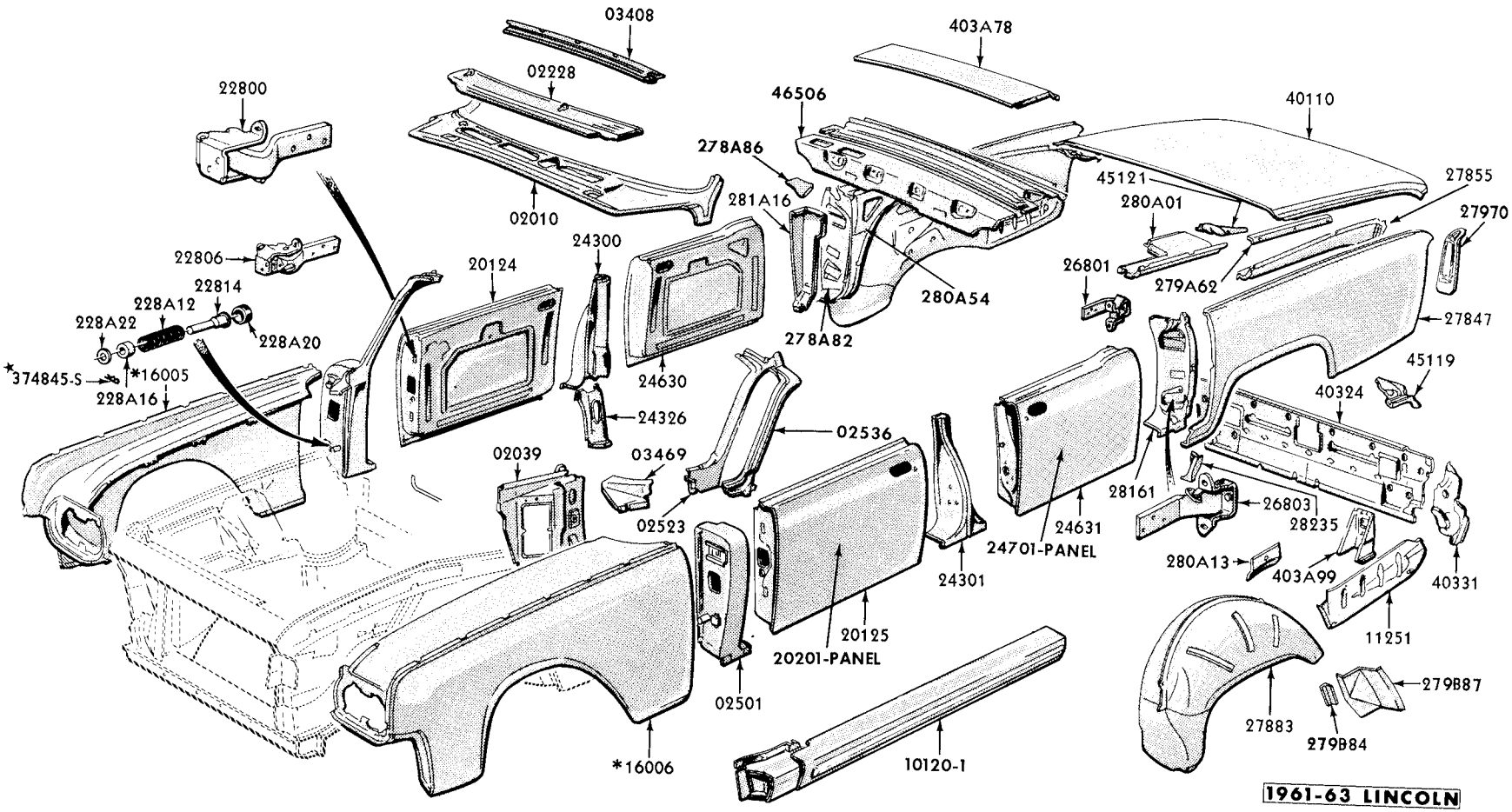

* REFER TO CHASSIS SECTION

BODY SHEET METAL - MODEL 74

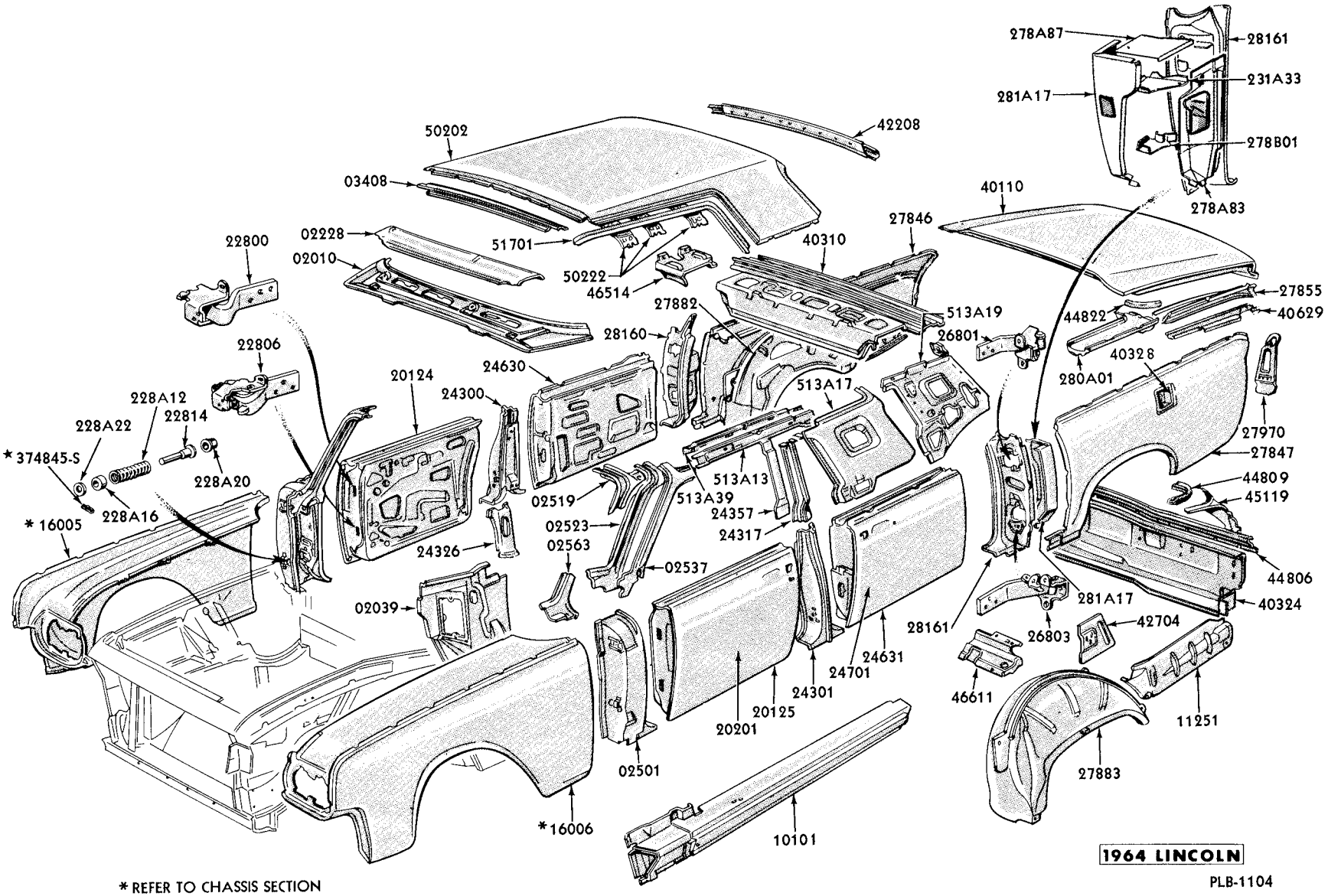

* REFER TO CHASSIS SECTION

BODY SHEET METAL - MODEL 53

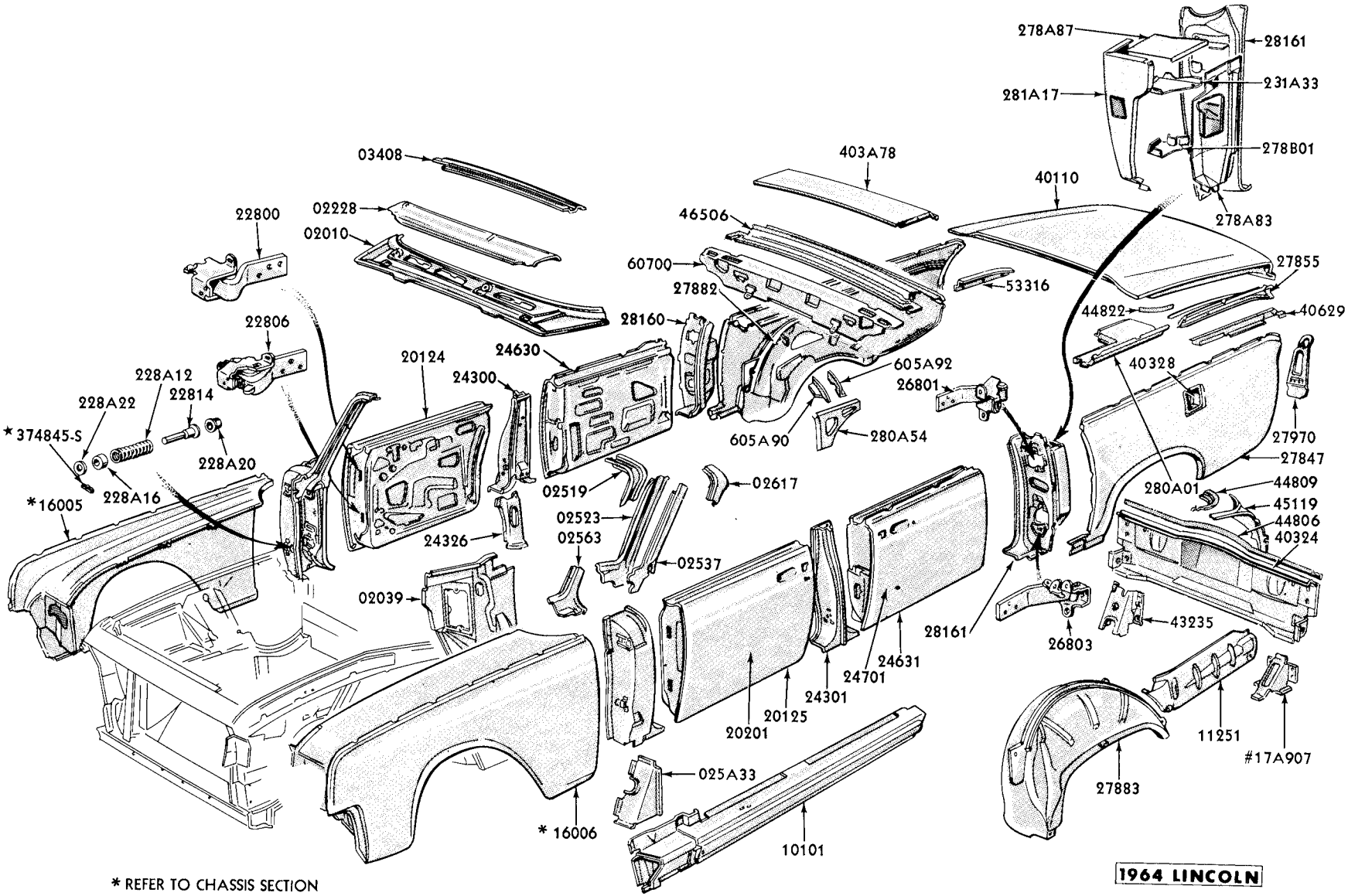

* REFER TO CHASSIS SECTION

BODY SHEET METAL - MODEL 74

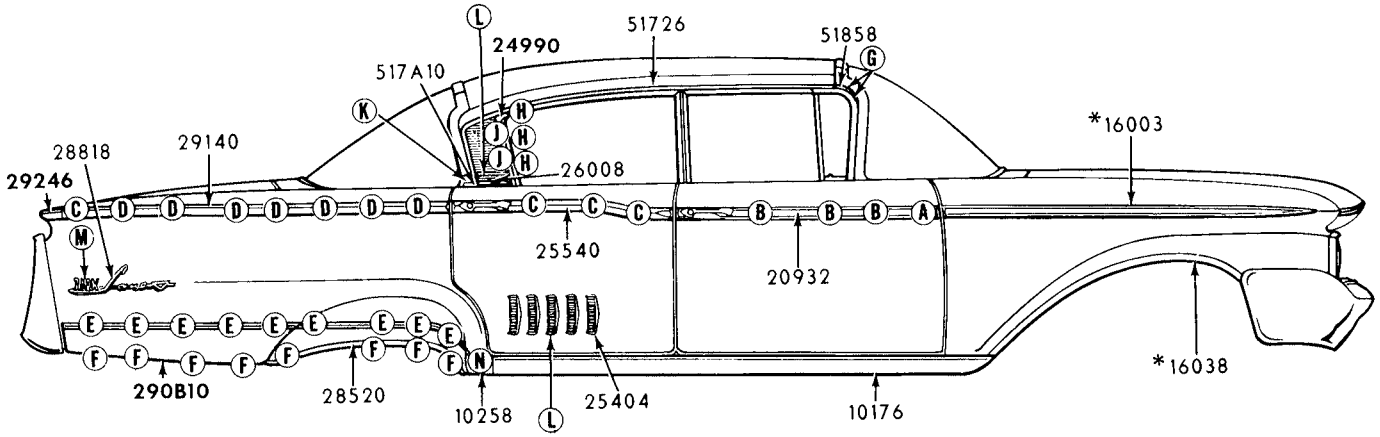

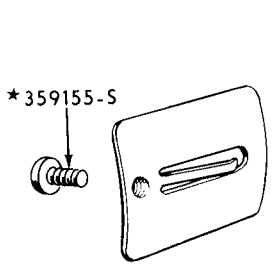

21645

A

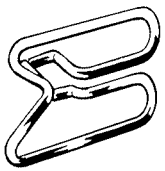

20810

B

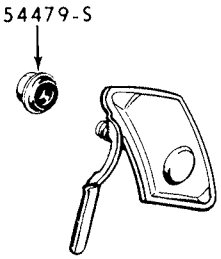

290A08

C

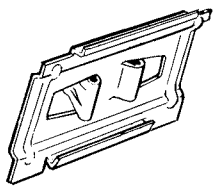

29108

D

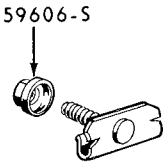

28507

E

372556-S

F

*371589-S

G

52003-S

H

*358735-S

J

52726-S

K

371107-S

L

353577-S

M

N

*REFER TO CHASSIS SECTION

1960-MERCURY

PMB-614

EXTERIOR MOULDINGS-MODEL 57

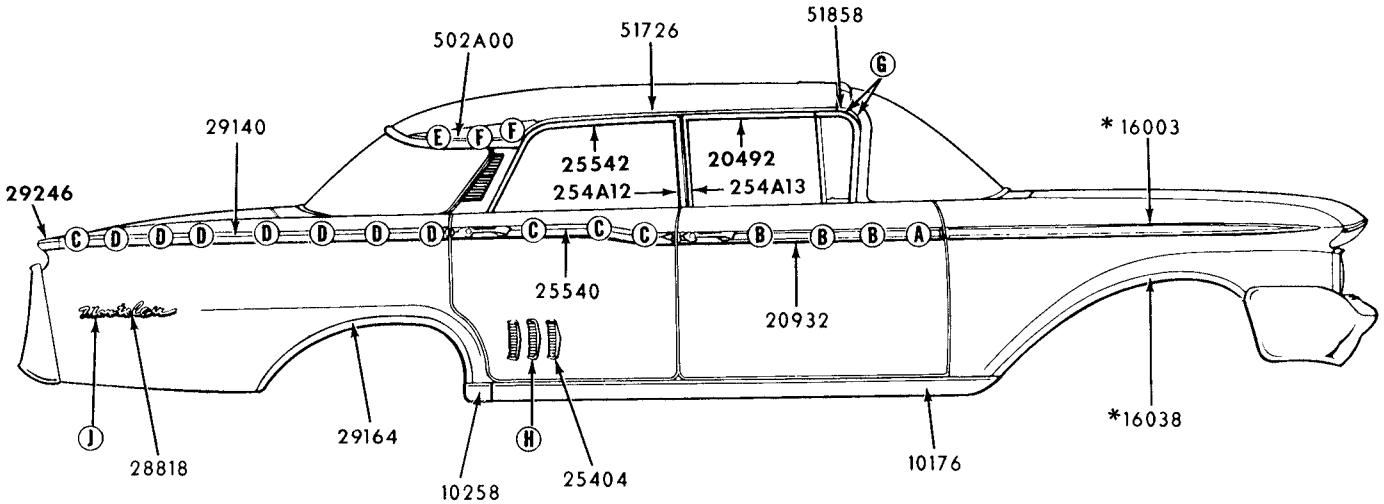

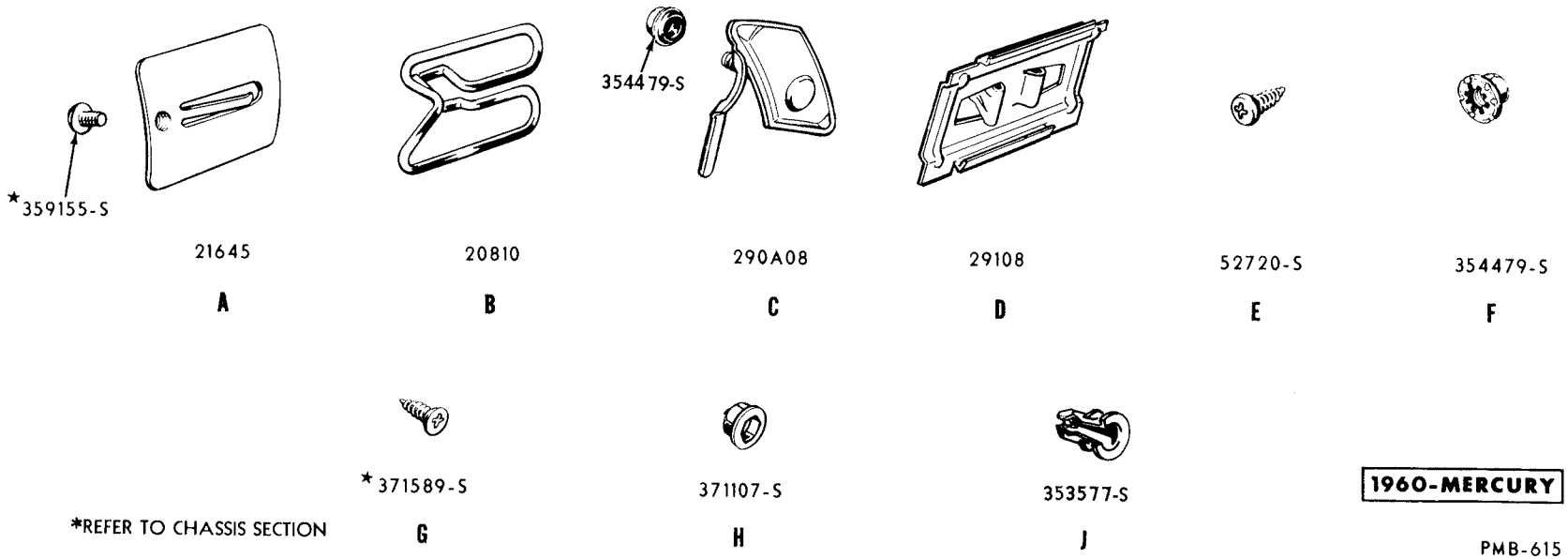

*REFER TO CHASSIS SECTION

1960-MERCURY

PMB-615

EXTERIOR MOULDINGS-MODEL 58

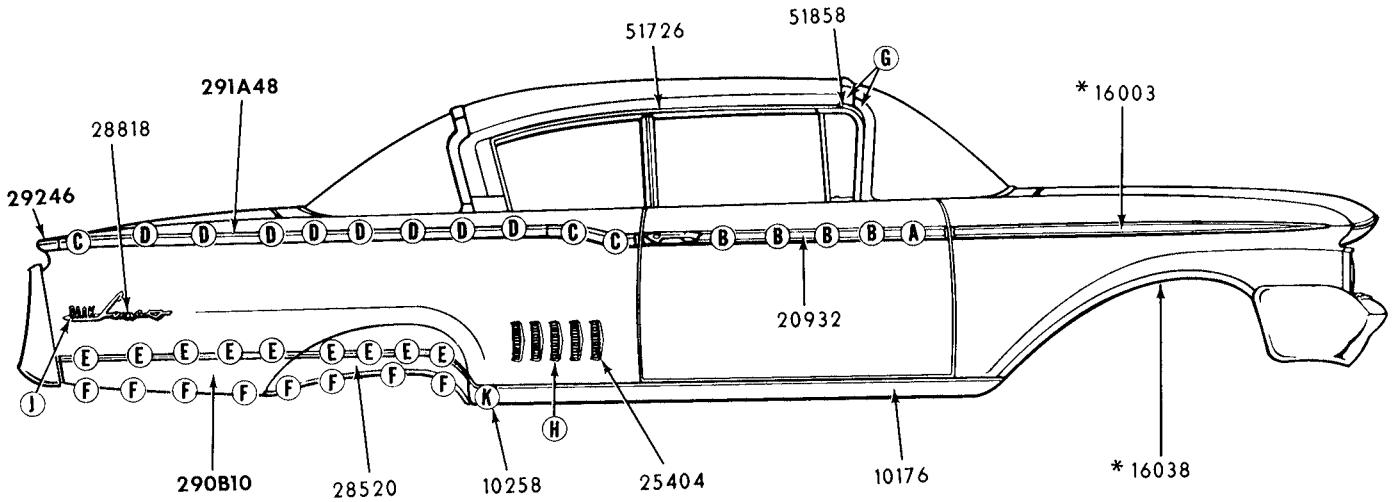

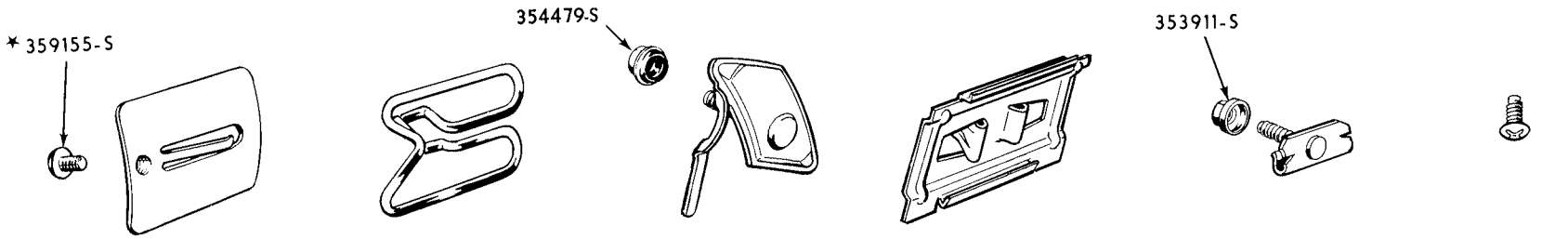

21645 A | 20810 B | 290A08 C | 29108 D | 28507 E | 372556-S F

*REFER TO CHASSIS SECTION

*371589-S G | 371107-S H | 353577-S J | K

1960-MERCURY

PMB-616

EXTERIOR MOULDINGS-MODEL 63

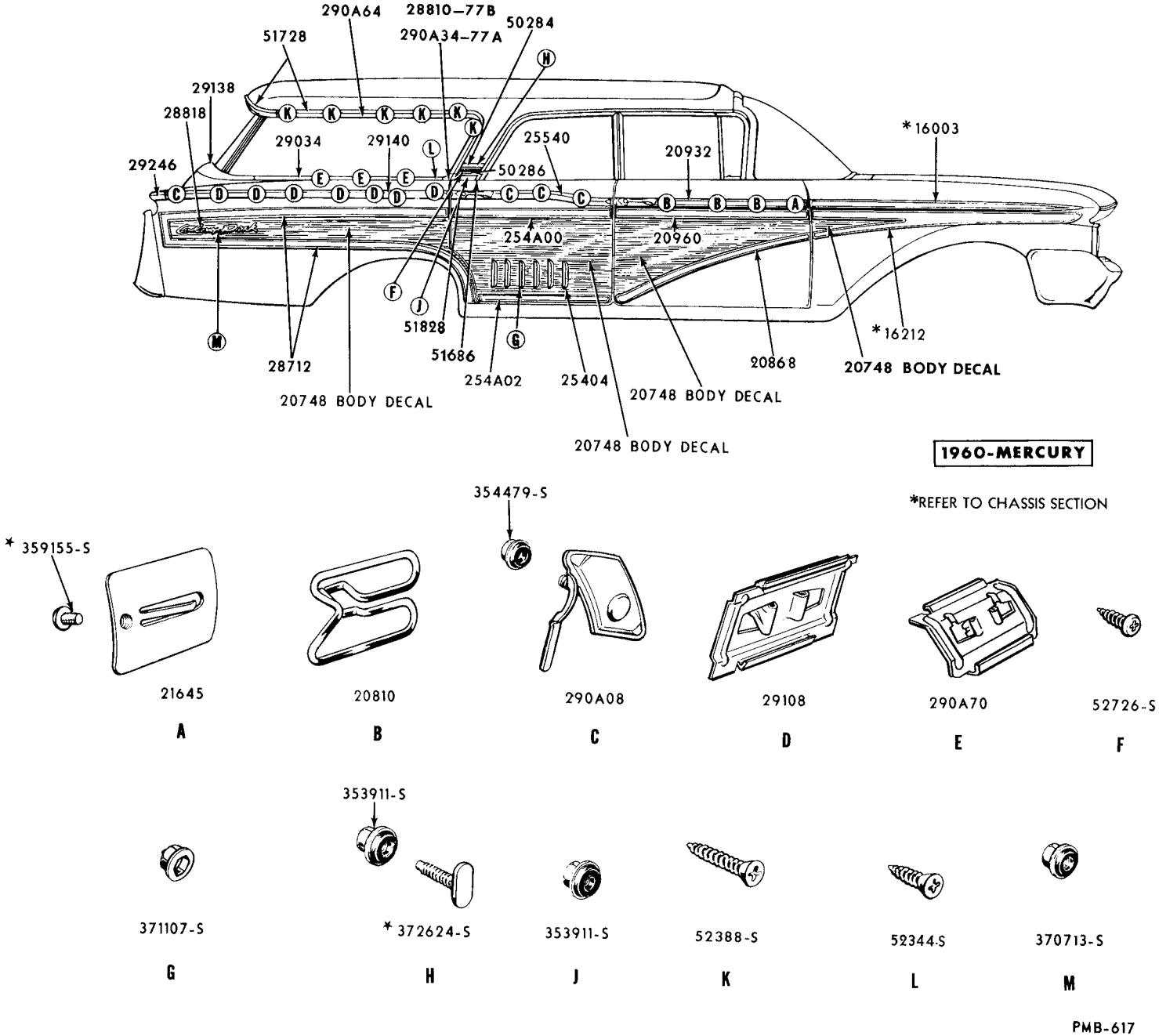

EXTERIOR MOULDINGS-MODEL 77B

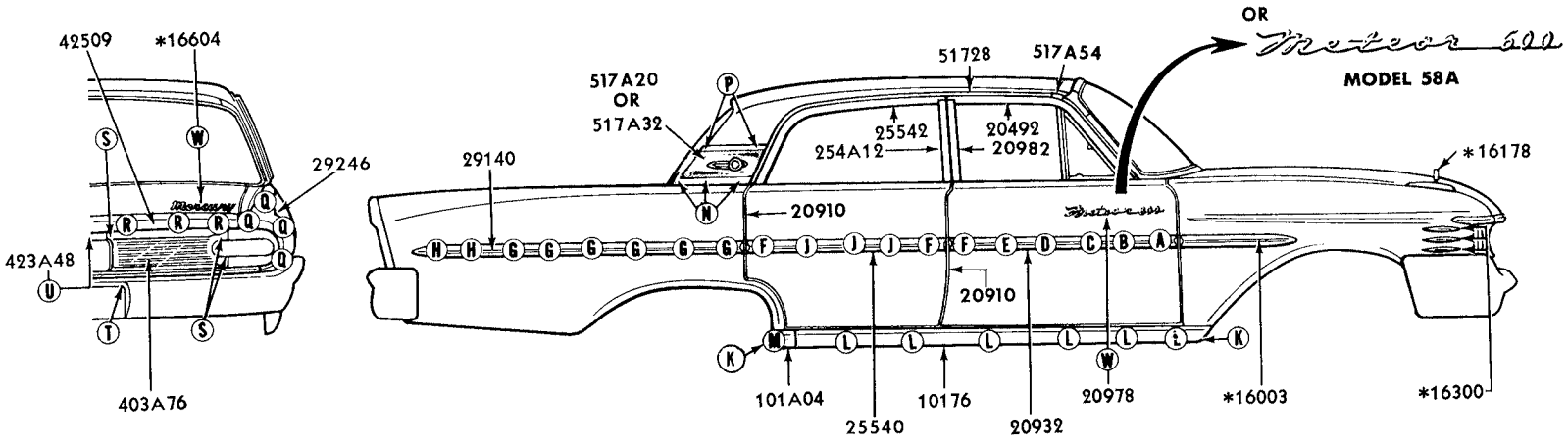

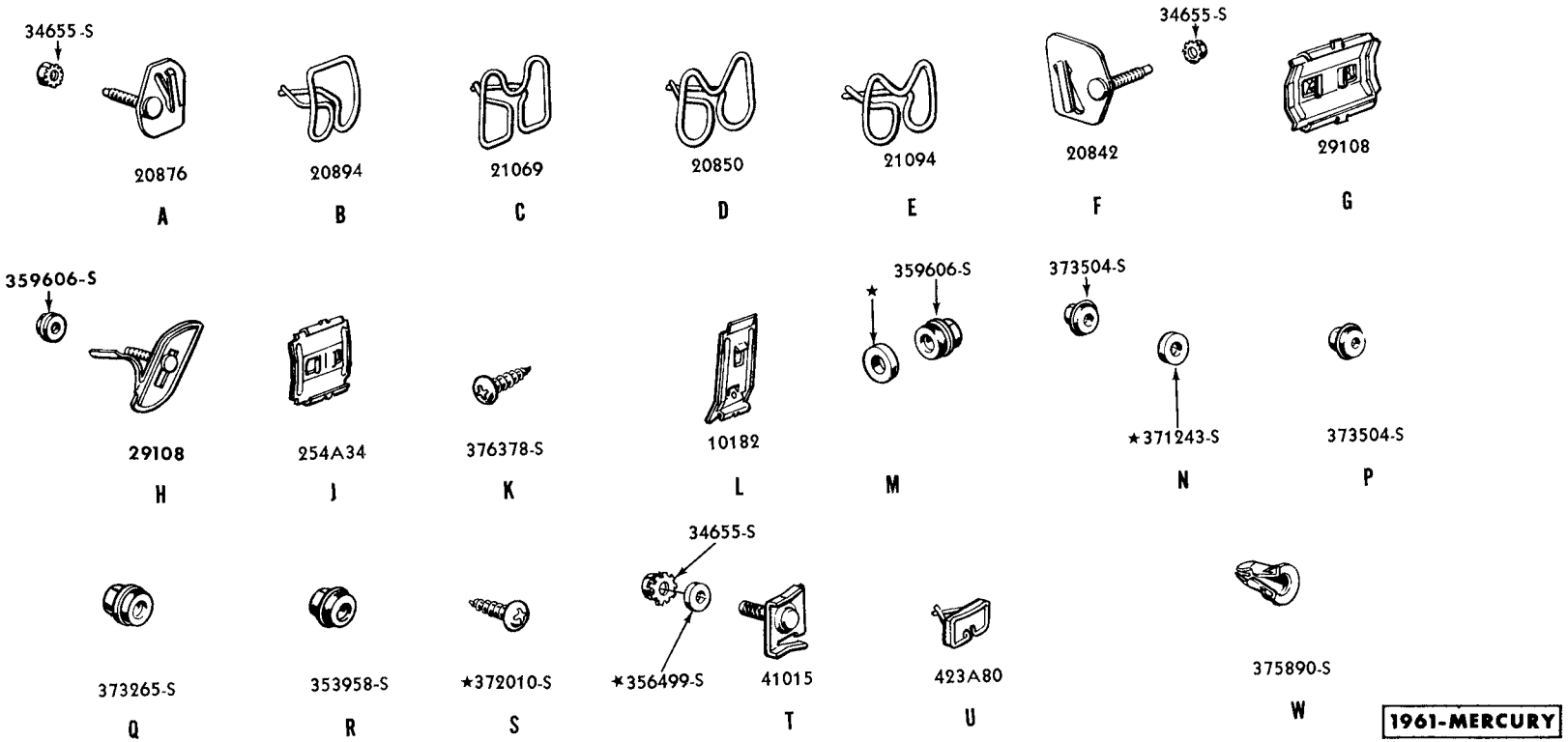

*REFER TO CHASSIS SECTION

PMB-750

EXTERIOR MOULDINGS - MODELS 54A, 58A, 75A

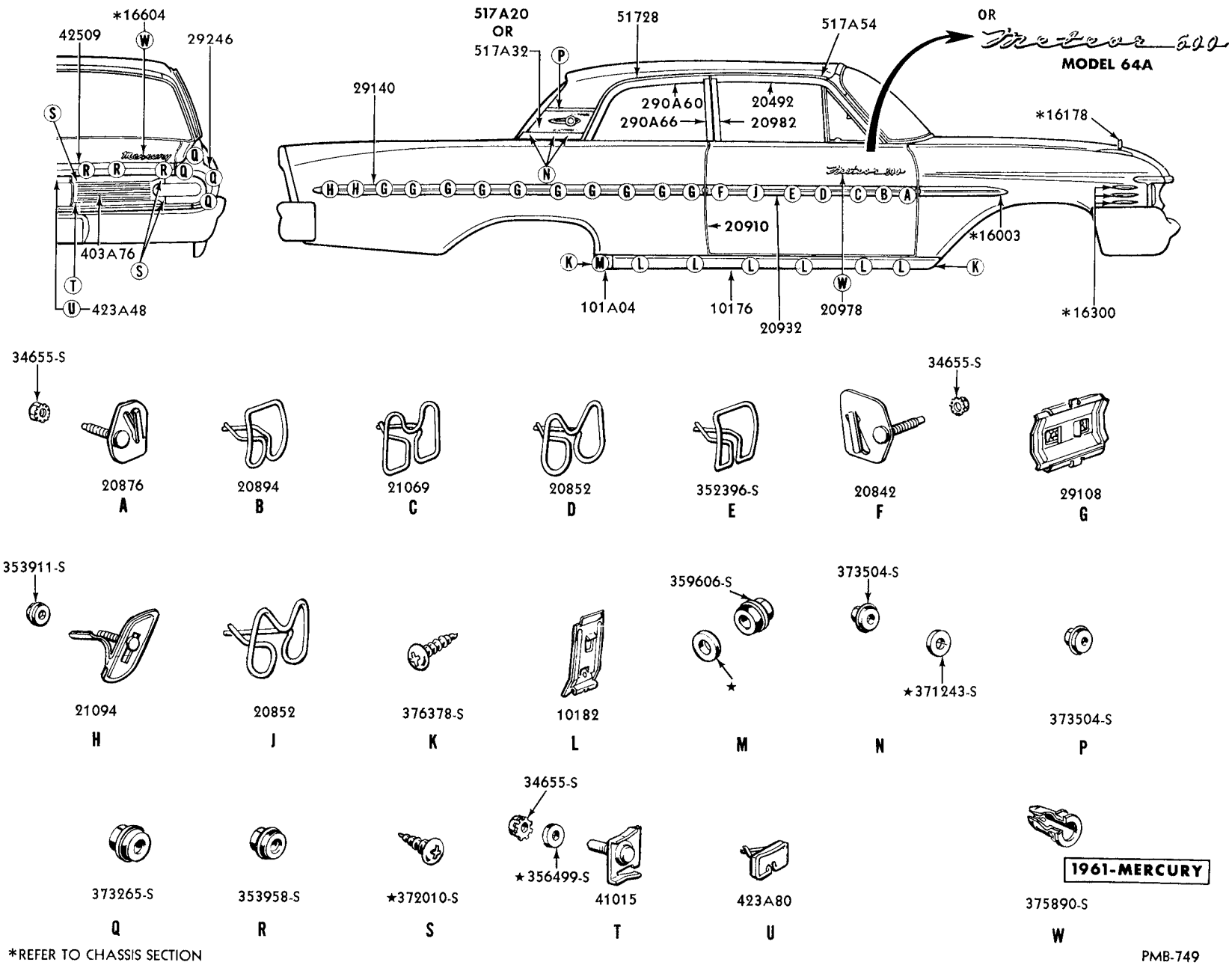

EXTERIOR MOULDINGS - MODELS 62A, 64A, 65A

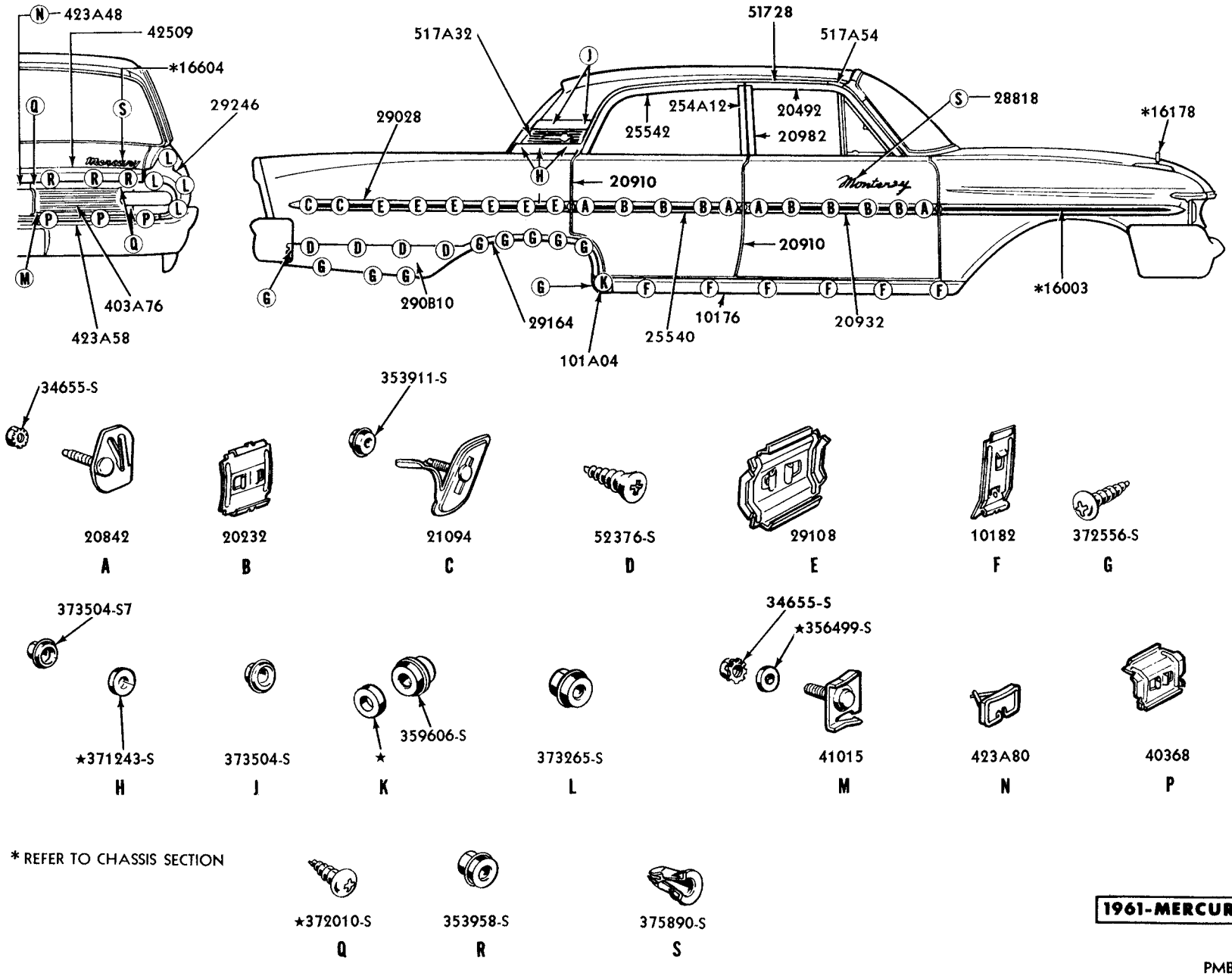

EXTERIOR MOULDINGS - MODELS 54B,75B

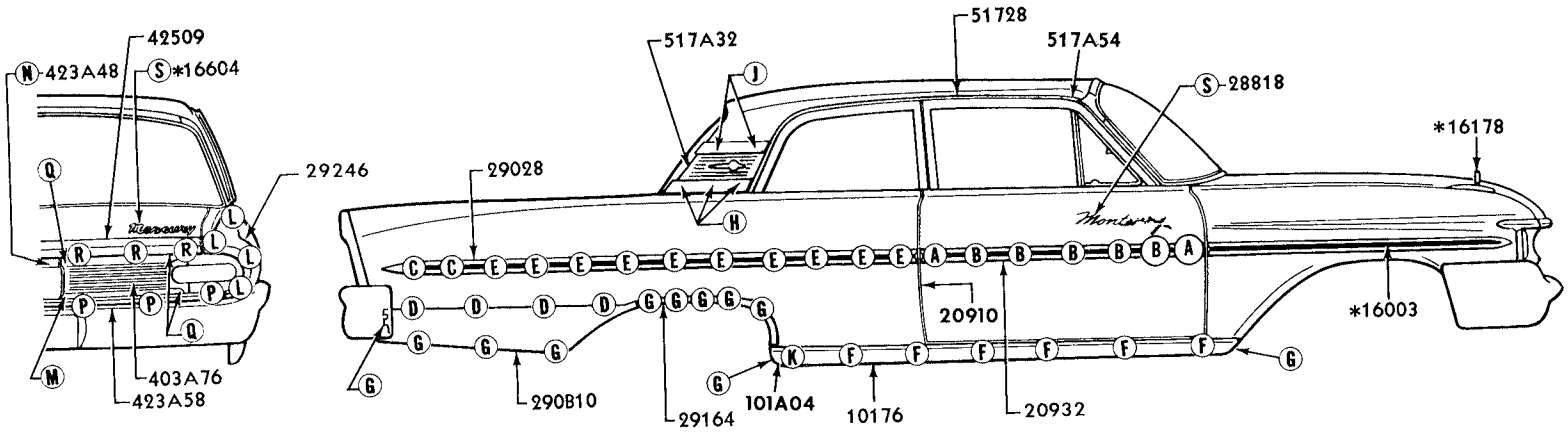

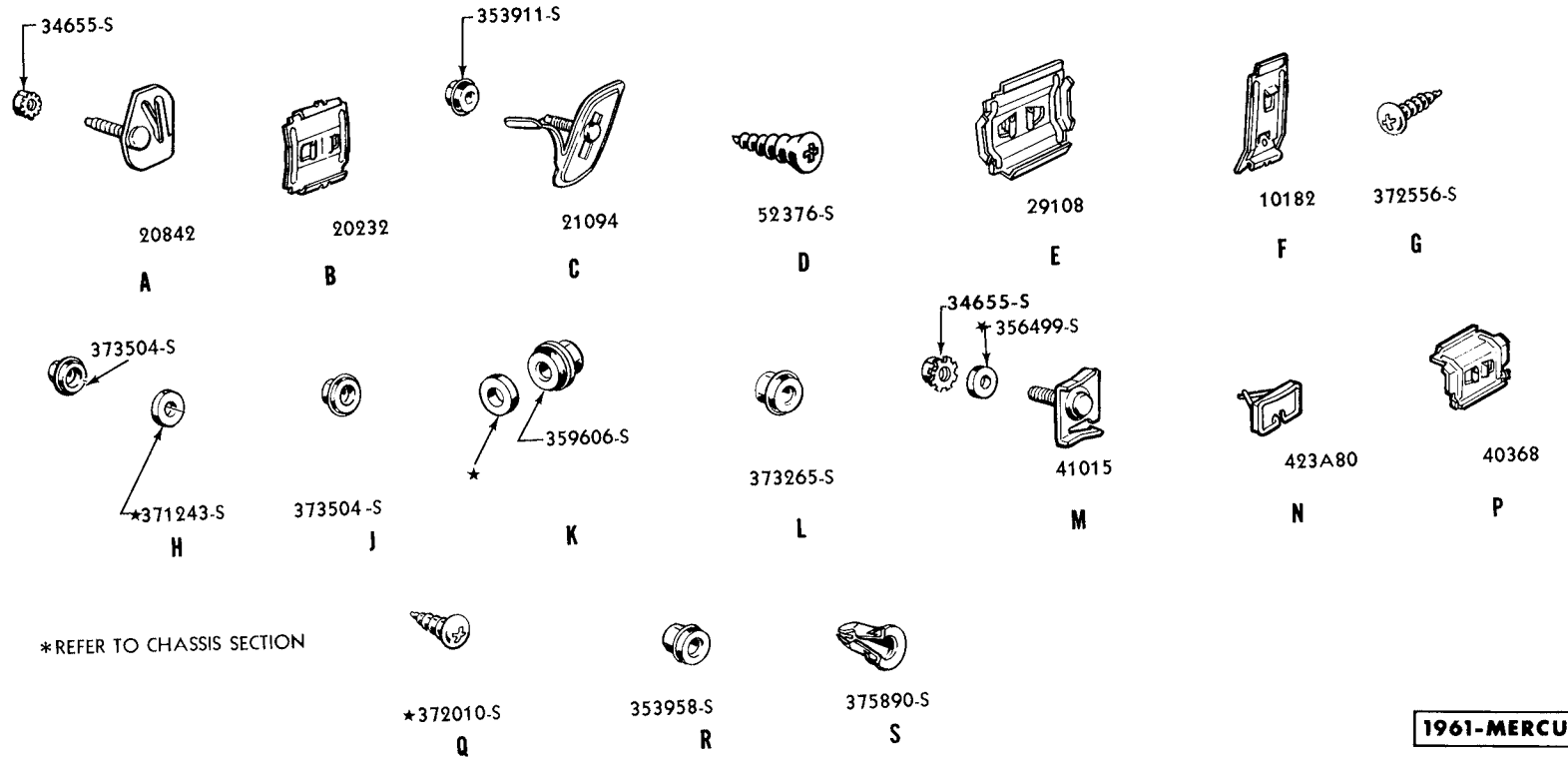

*REFER TO CHASSIS SECTION

1961-MERCURY

PMB-751

EXTERIOR MOULDINGS - MODEL 65B

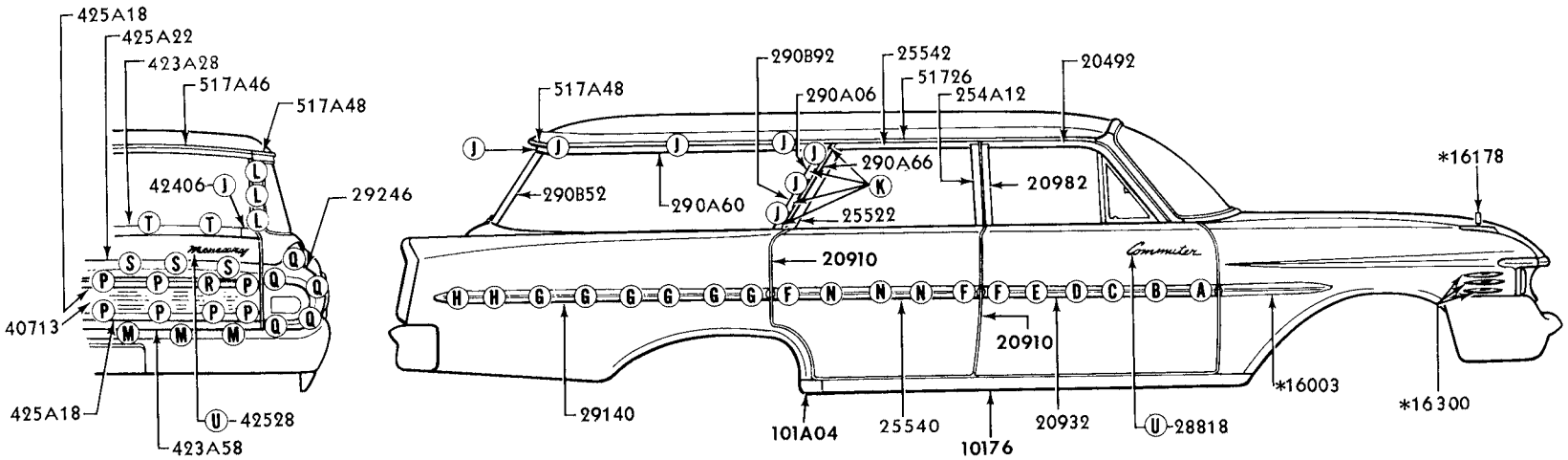

* REFER TO CHASSIS CATALOG

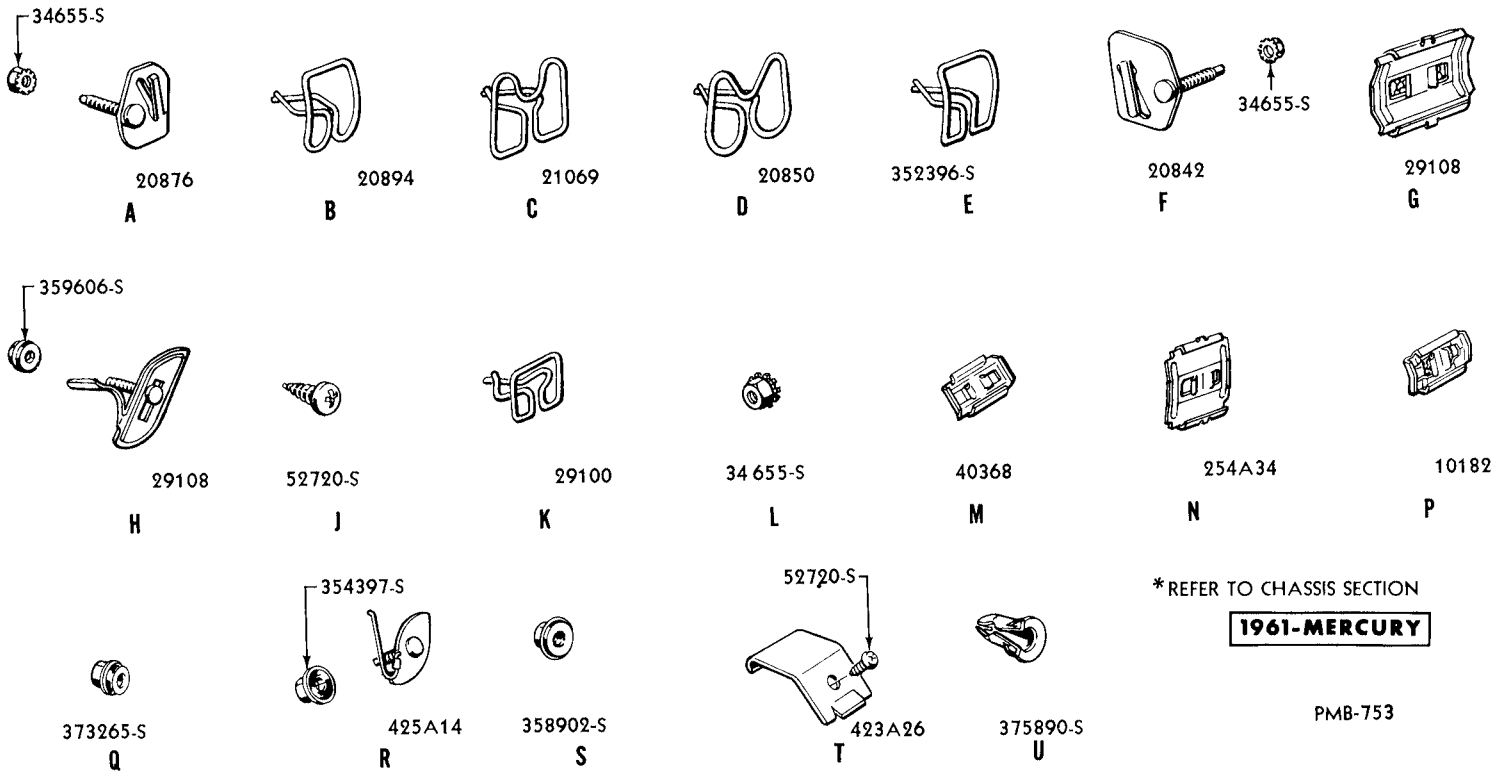

* REFER TO CHASSIS SECTION

1961-MERCURY

PMB-753

EXTERIOR MOULDINGS - MODEL 71A

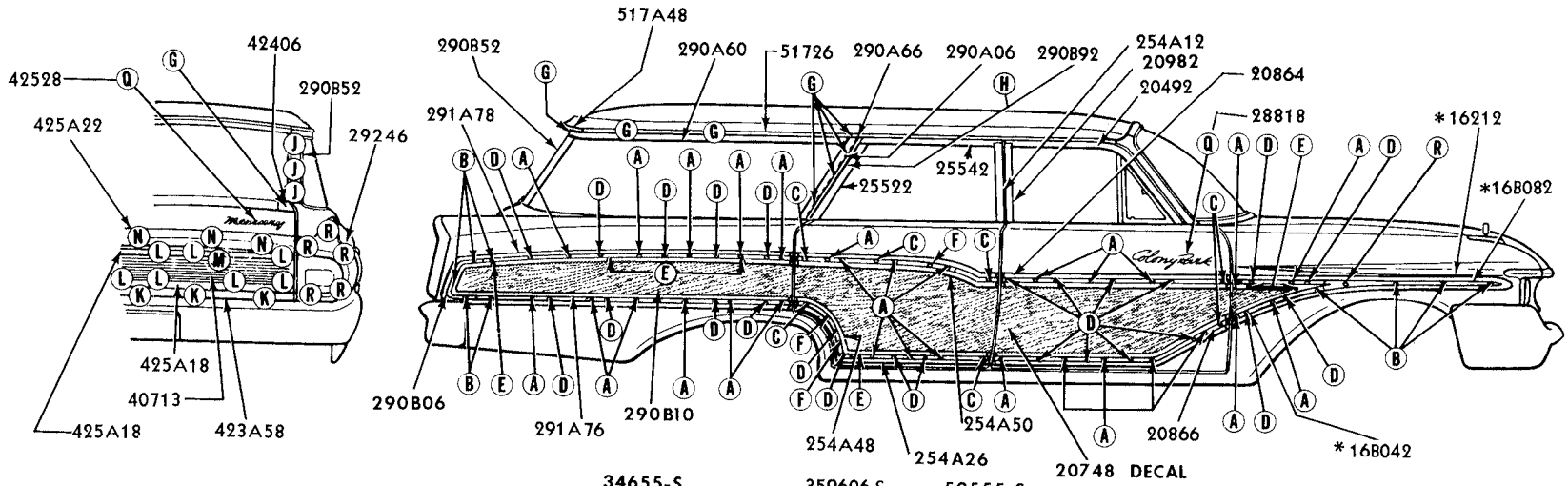

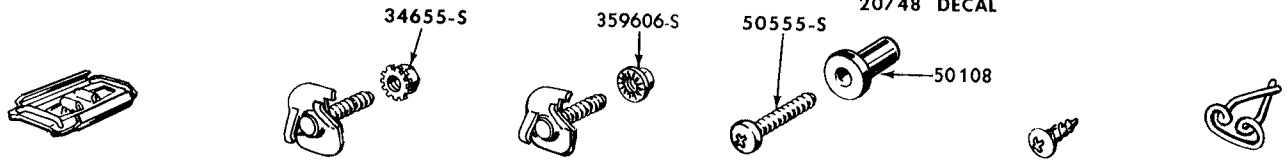

20892 A | 20872 B | 20872 C | 50108 D | 372010-S E | 254A64 F

52720-S8 G | 29100 H | 34655-S8 J | 40368 K | 10182 L

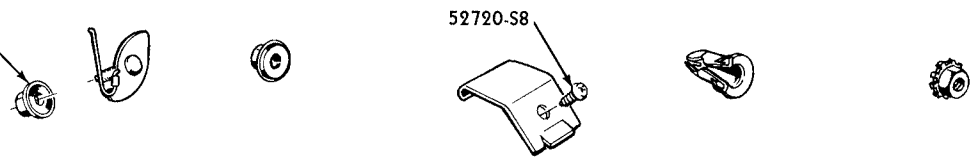

*REFER TO CHASSIS SECTION

425A14 M | 358902-S100 N | 423A26 P | 375890-S Q | 34655-S R

1961-MERCURY

PMB-754

EXTERIOR MOULDINGS - MODEL 71B

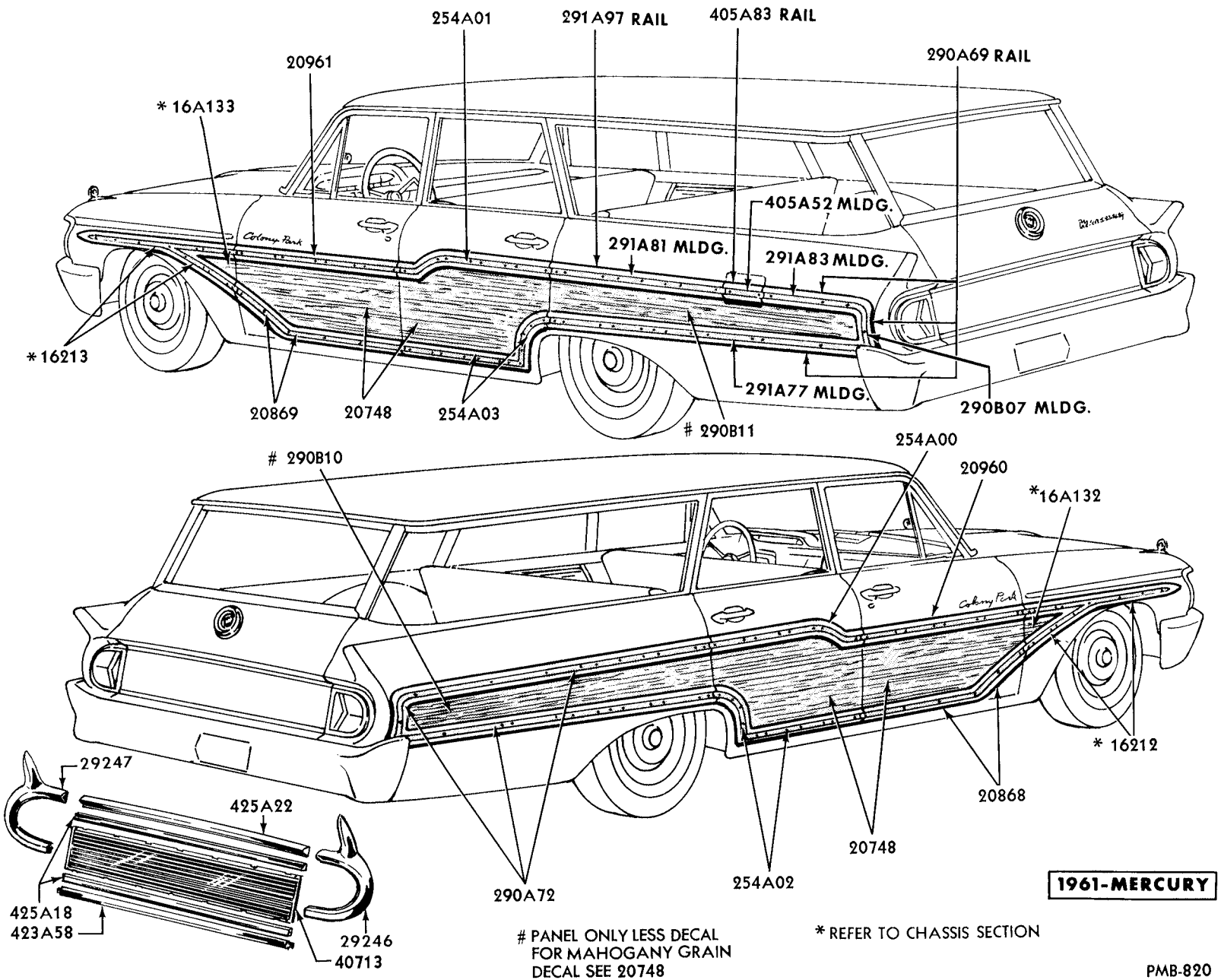

STATION WAGON EXTERIOR RAILS and PANELS

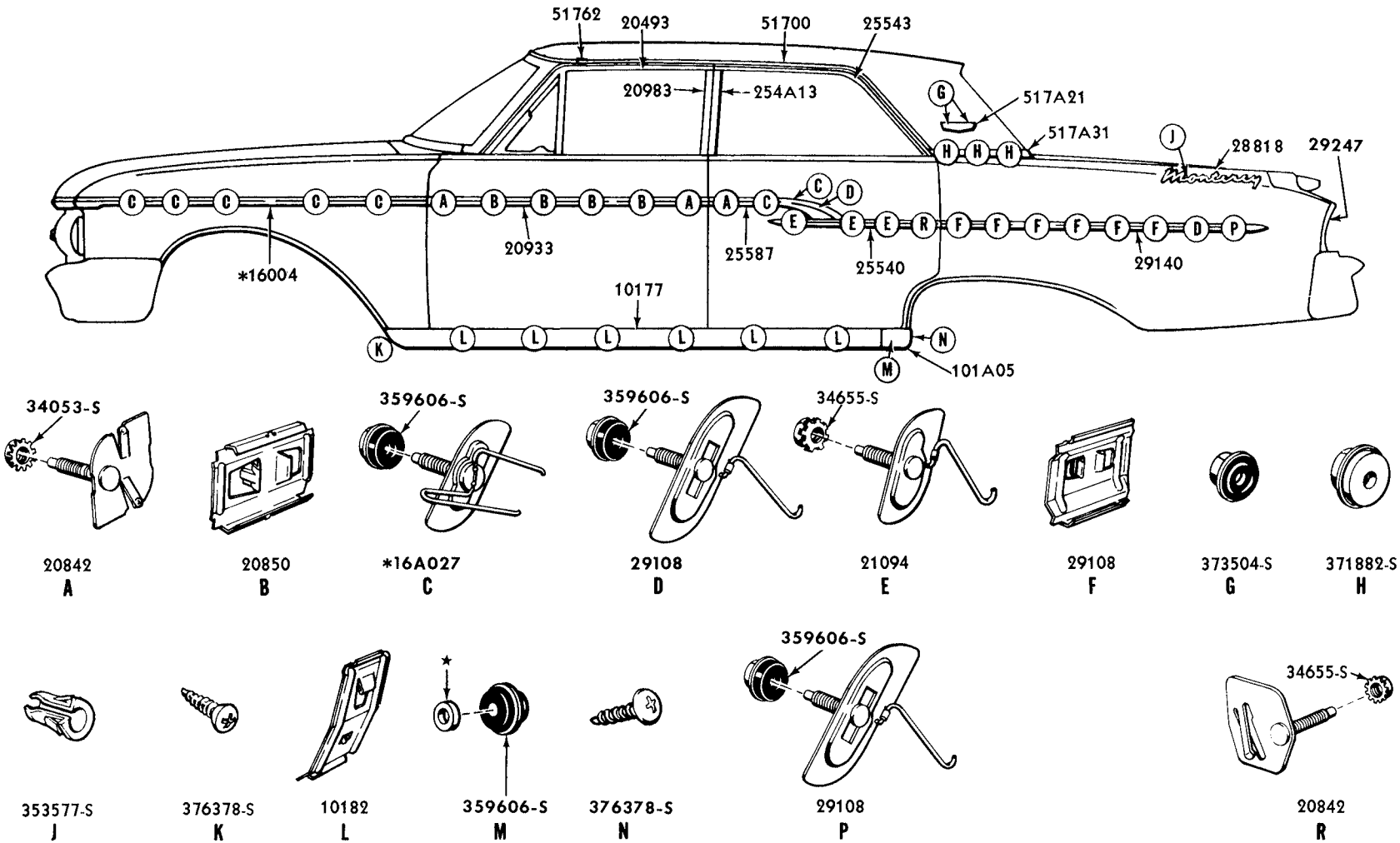

* REFER TO CHASSIS SECTION

1962 MERCURY

PMB-850

EXTERIOR MOULDINGS - MODELS 54A, 75A

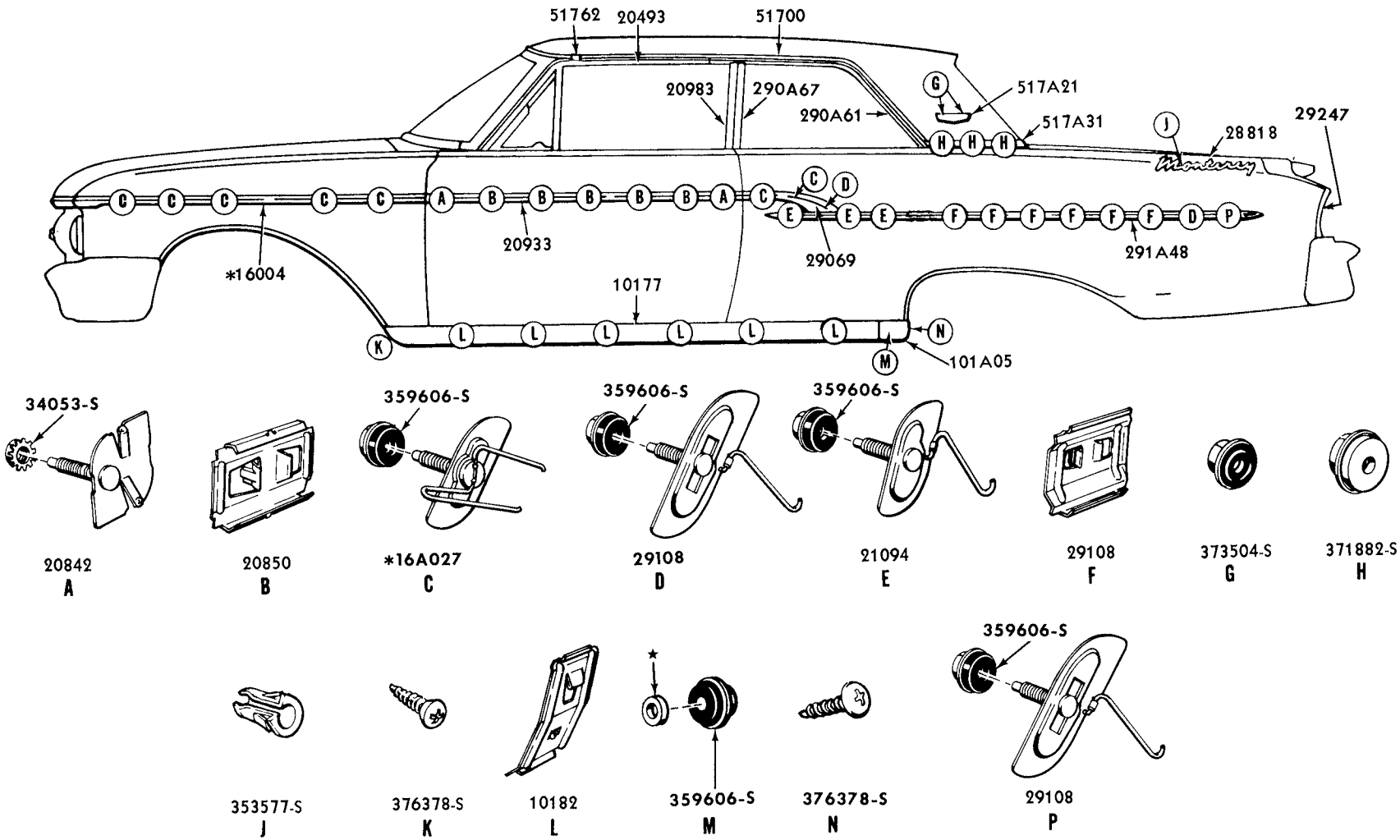

* REFER TO CHASSIS SECTION

1962 MERCURY

PMB-849

EXTERIOR MOULDINGS - MODELS 62A, 65A

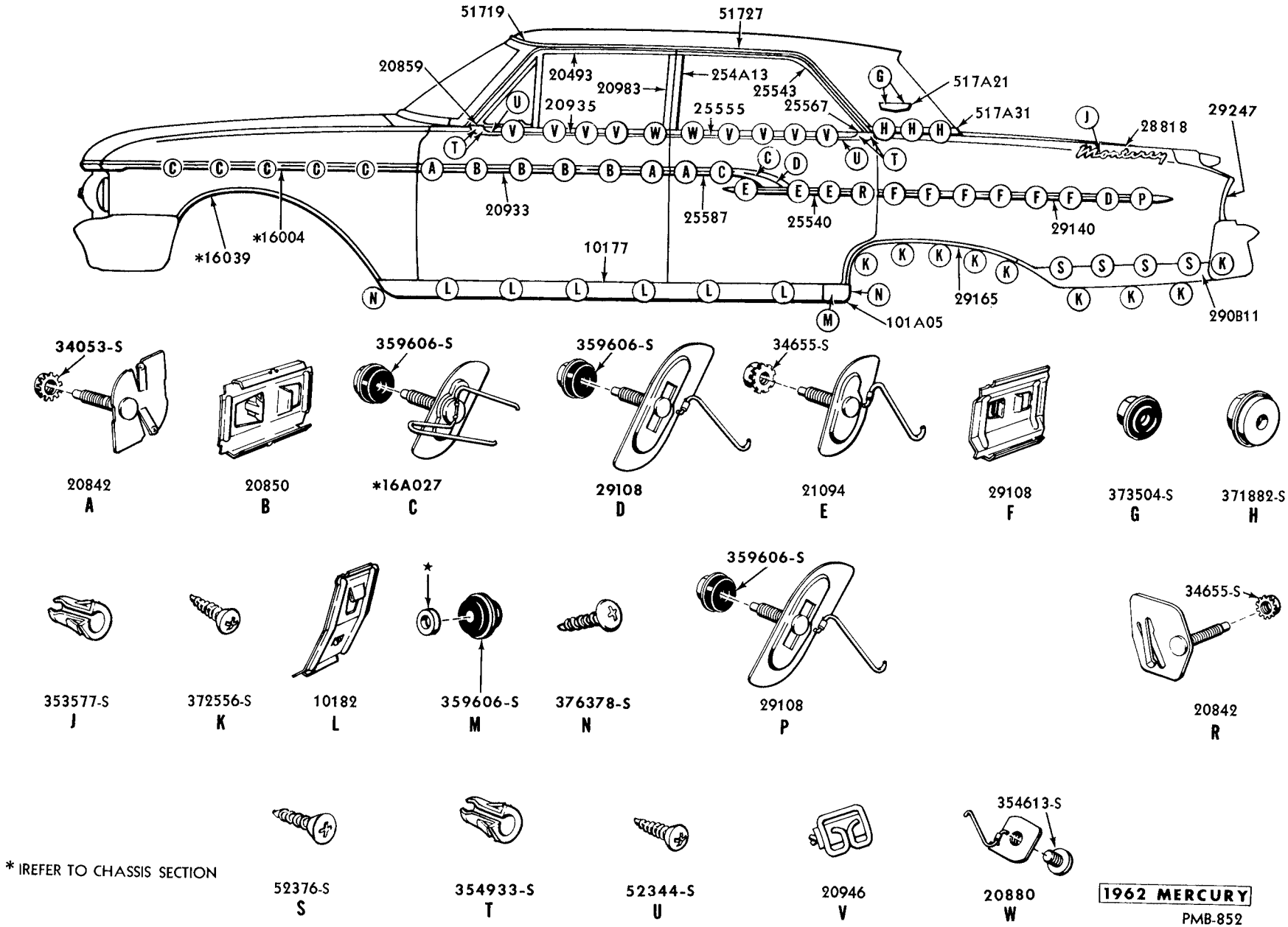

* IREFER TO CHASSIS SECTION

1962 MERCURY
PMB-852

EXTERIOR MOULDINGS - MODELS 54B, 75B

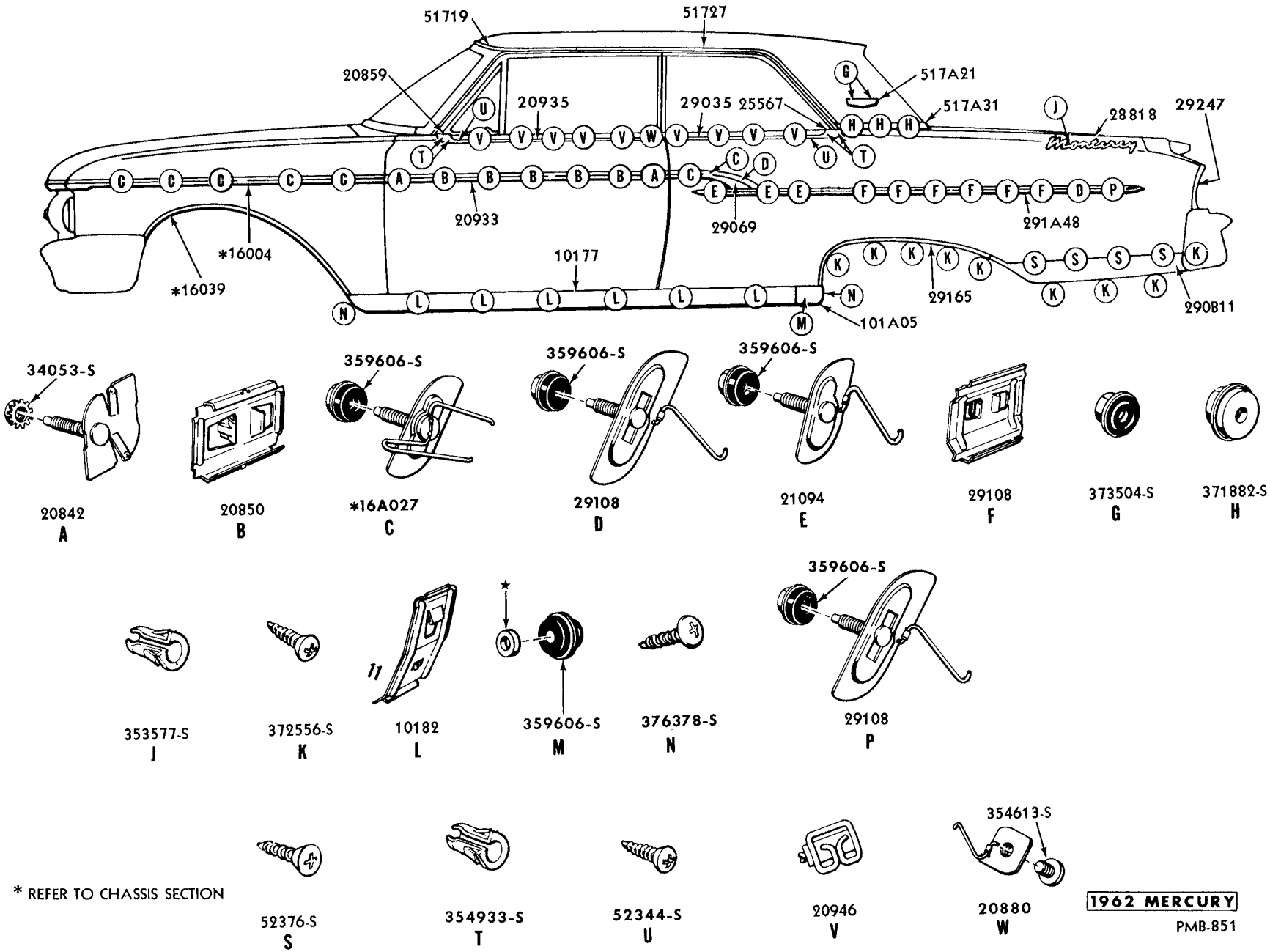

EXTERIOR MOULDINGS - MODELS 65B, 76A

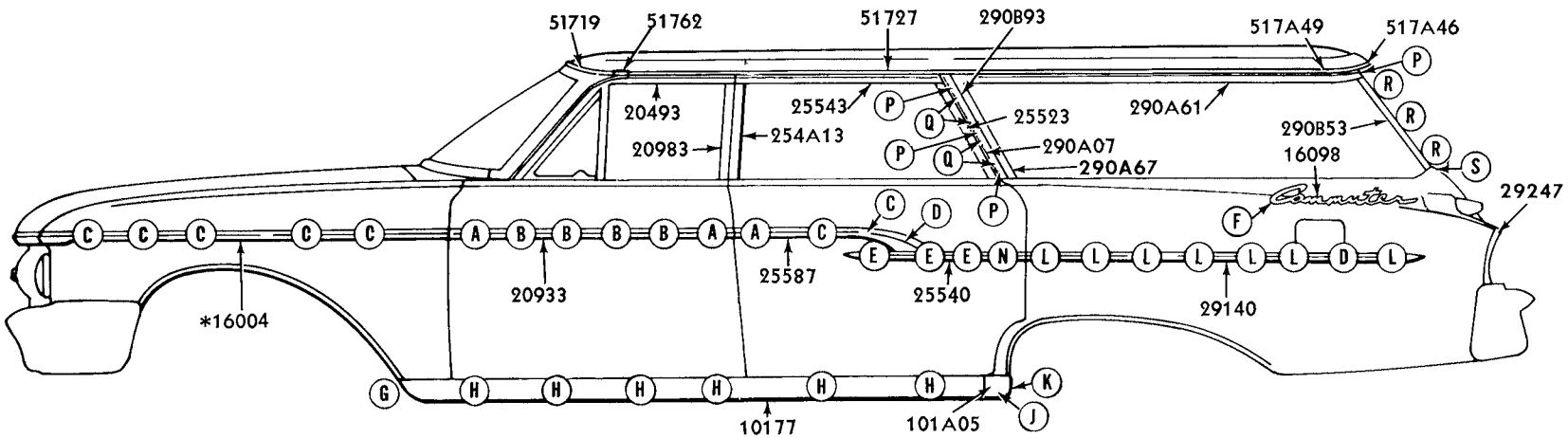

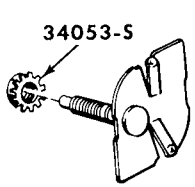

20842
A

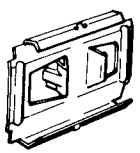

20850
B

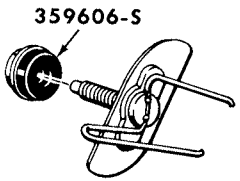

*16A027
C

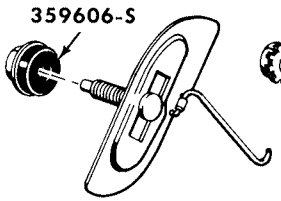

29108
D

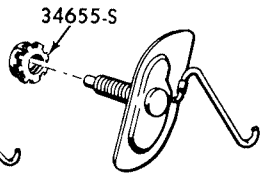

21094
E

353577-S
F

376378-S
G

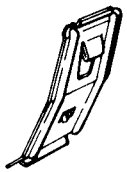

10182
H

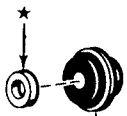

359606-S
J

376378-S
K

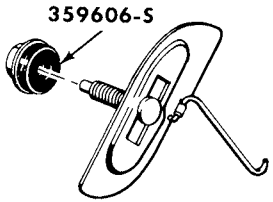

29108
L

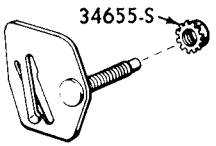

20842
N

52720-S
P

29100
Q

34655-S
R

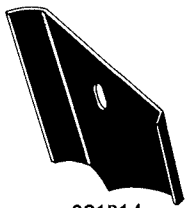

291B14
S

* REFER TO CHASSIS SECTION

1962 MERCURY

PMB-853

EXTERIOR MOULDINGS - MODEL 71

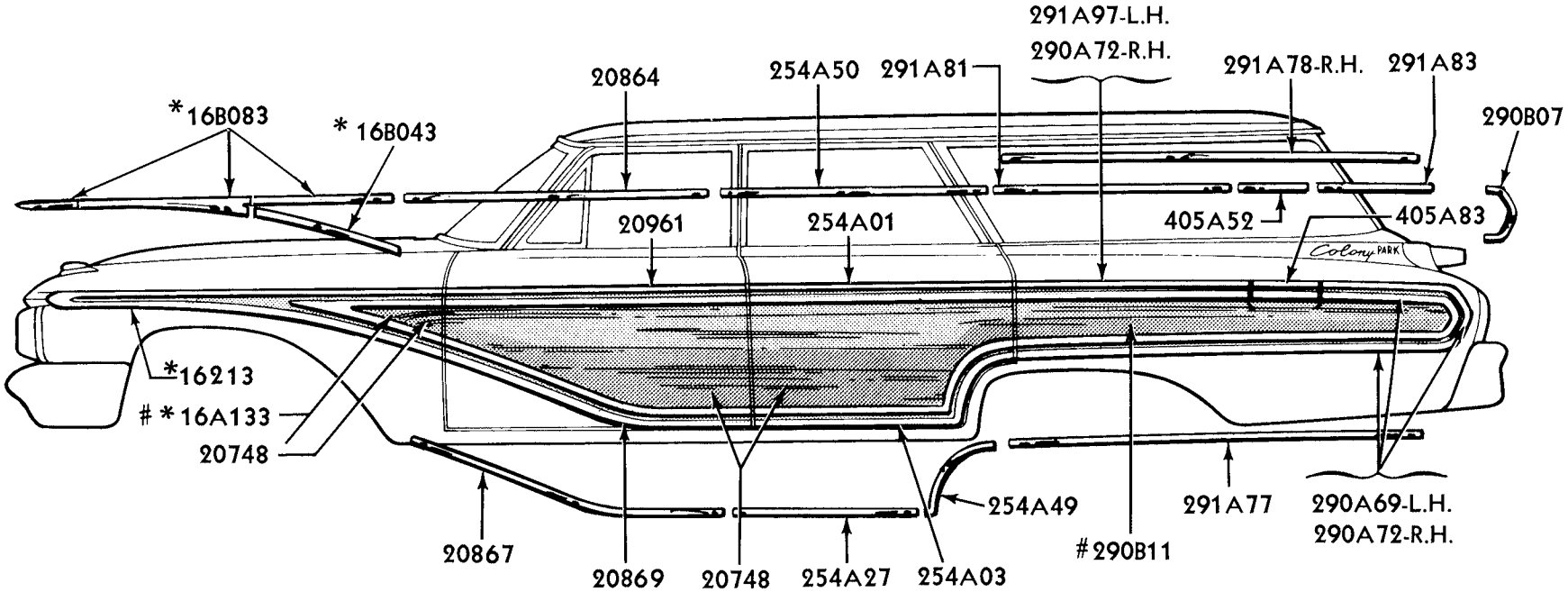

* REFER TO CHASSIS SECTION
\# PANEL ONLY LESS DECAL
FOR MAHOGANY GRAIN DECAL
SEE GROUP 20748

1962 MERCURY

PMB-854

STATION WAGON EXTERIOR RAILS, PANELS, and MOULDINGS

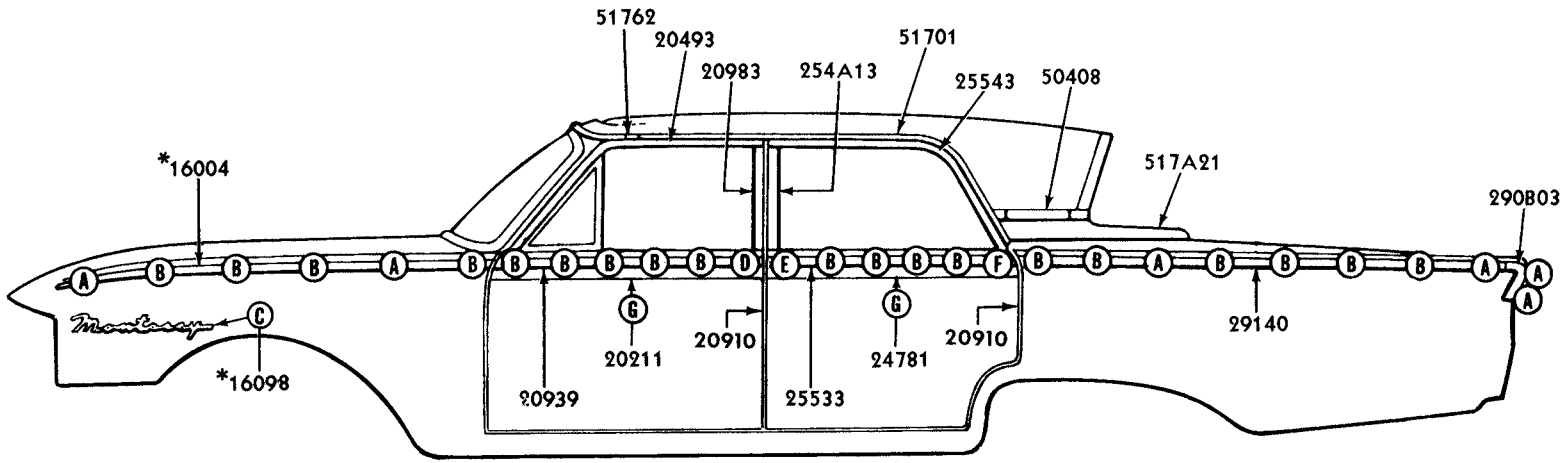

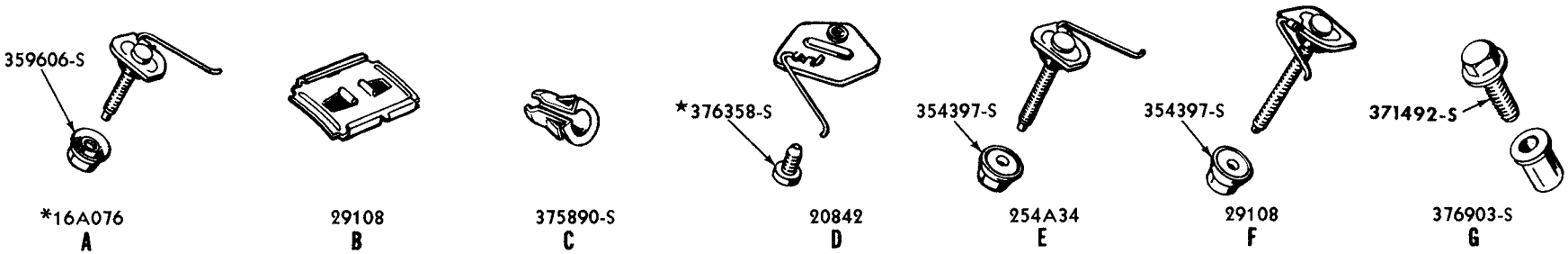

* REFER TO CHASSIS SECTION

1963 MERCURY

PMB-933

EXTERIOR MOULDINGS - MODELS 54A, 75A

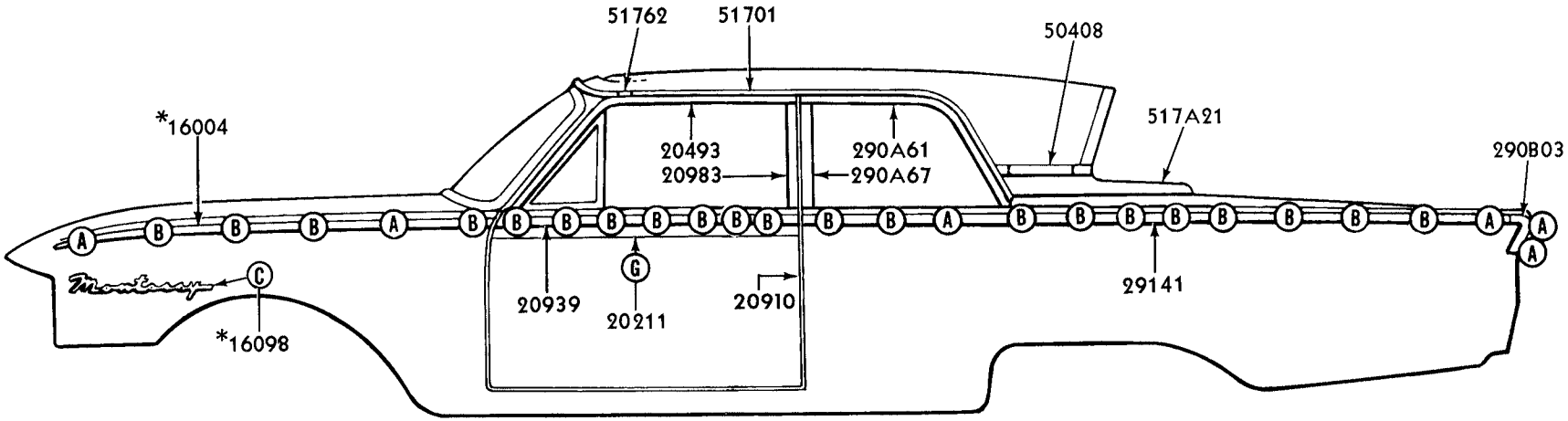

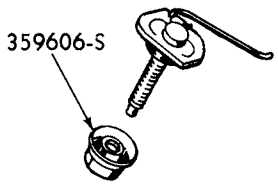

*16A076
A

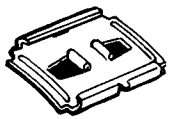

29108
B

375890-S
C

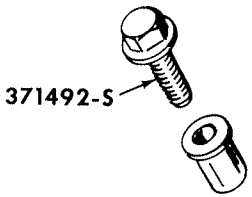

376903-S
G

1963 MERCURY
PMB-932

* REFER TO CHASSIS SECTION

EXTERIOR MOULDINGS - MODELS 62A, 65A

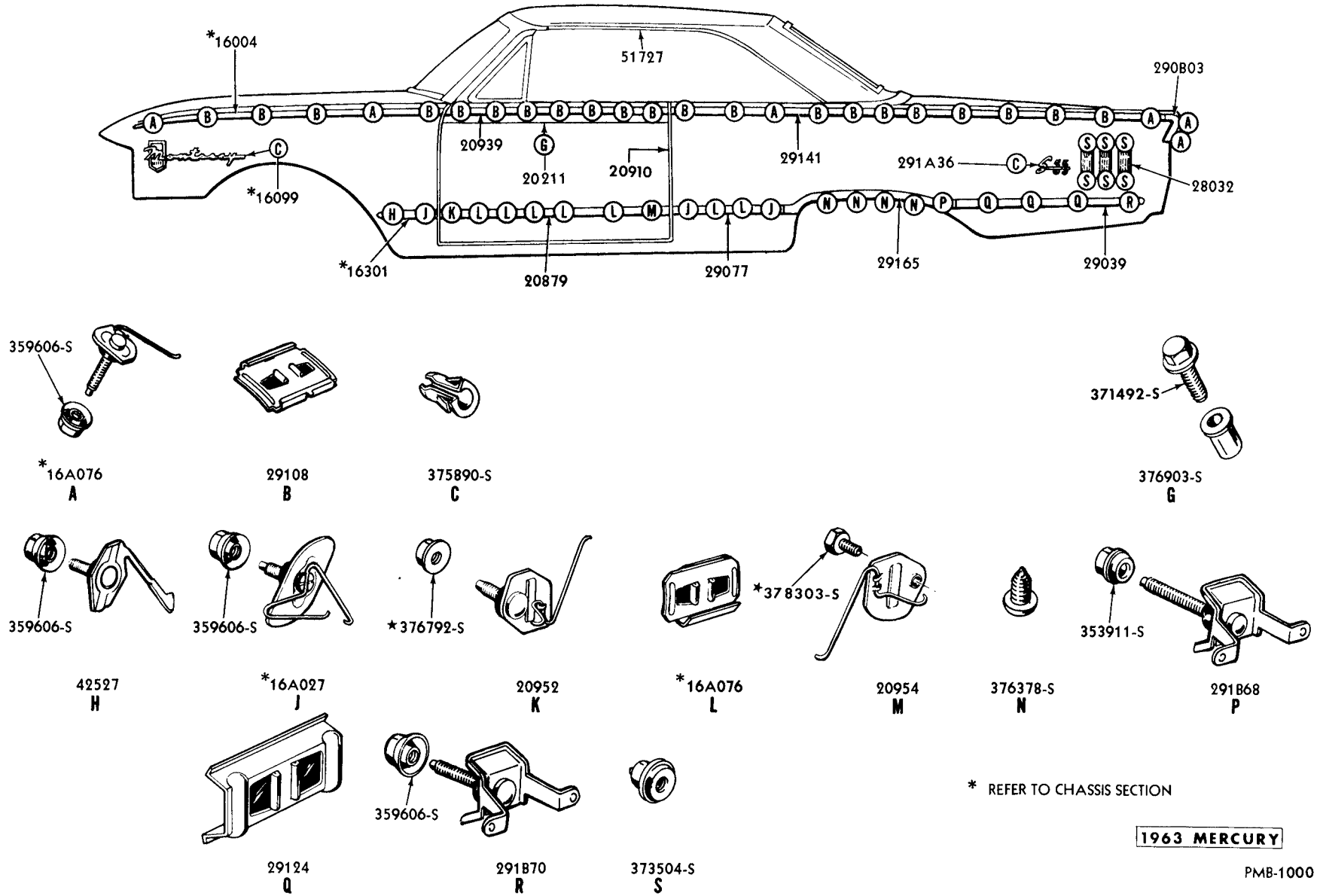

* REFER TO CHASSIS SECTION

1963 MERCURY

PMB-1000

EXTERIOR MOULDINGS - MODELS 63, 76

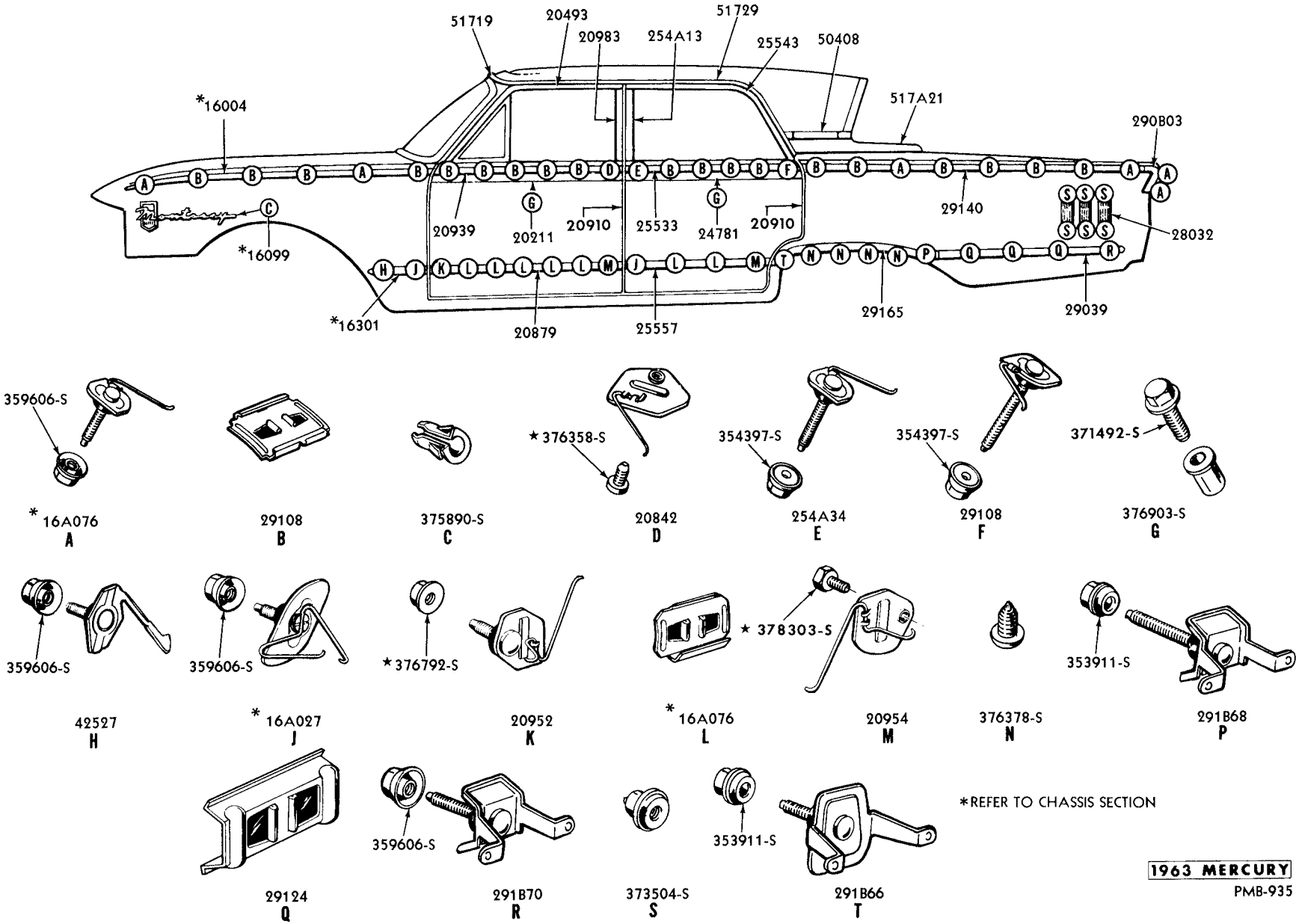

EXTERIOR MOULDINGS - MODELS 54B, 75B, 75C

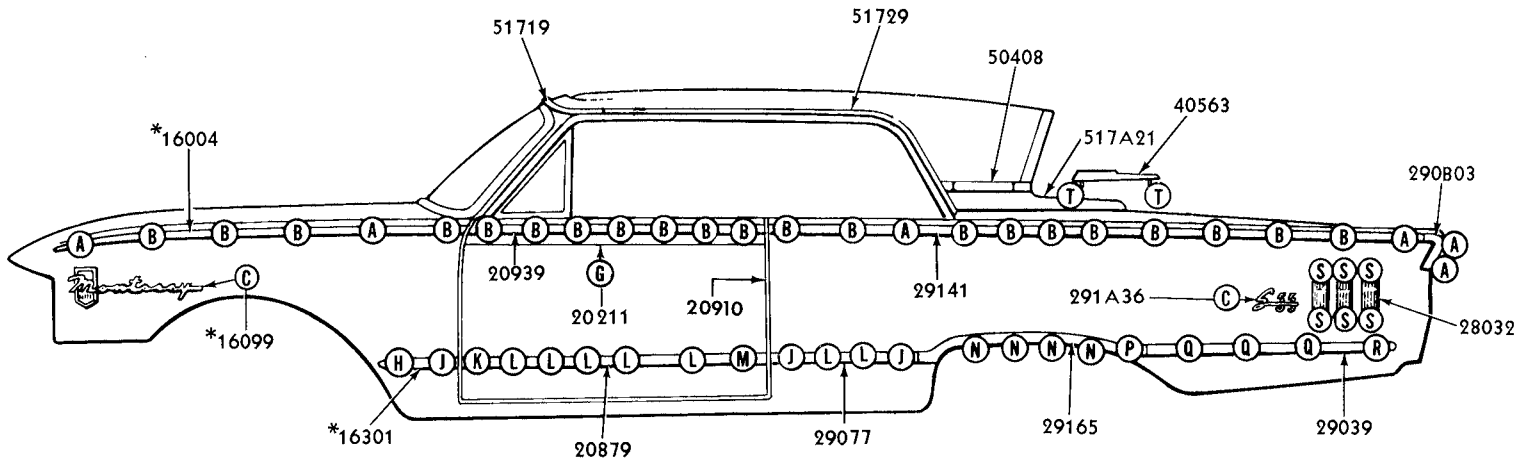

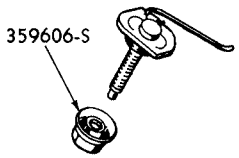

*16A076
A

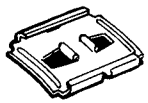

29108
B

375890-S
C

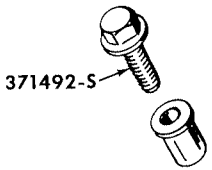

376903-S
G

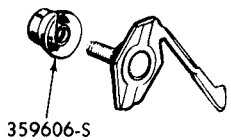

42527
H

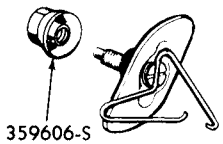

*16A027
J

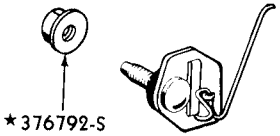

20952
K

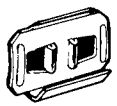

*16A076
L

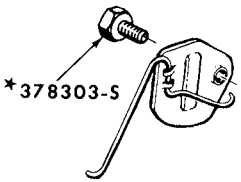

20954
M

376378-S
N

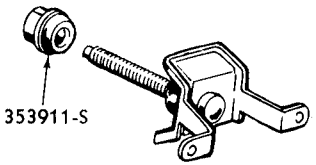

291B68
P

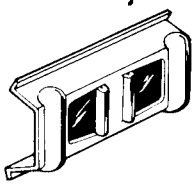

29124
Q

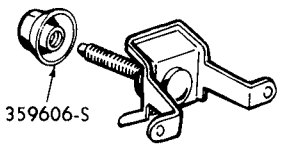

291B70
R

373504-S
S

373503-S
T

* REFER TO CHASSIS SECTION

1963 MERCURY

PMB-934

EXTERIOR MOULDINGS - MODELS 65B, C,

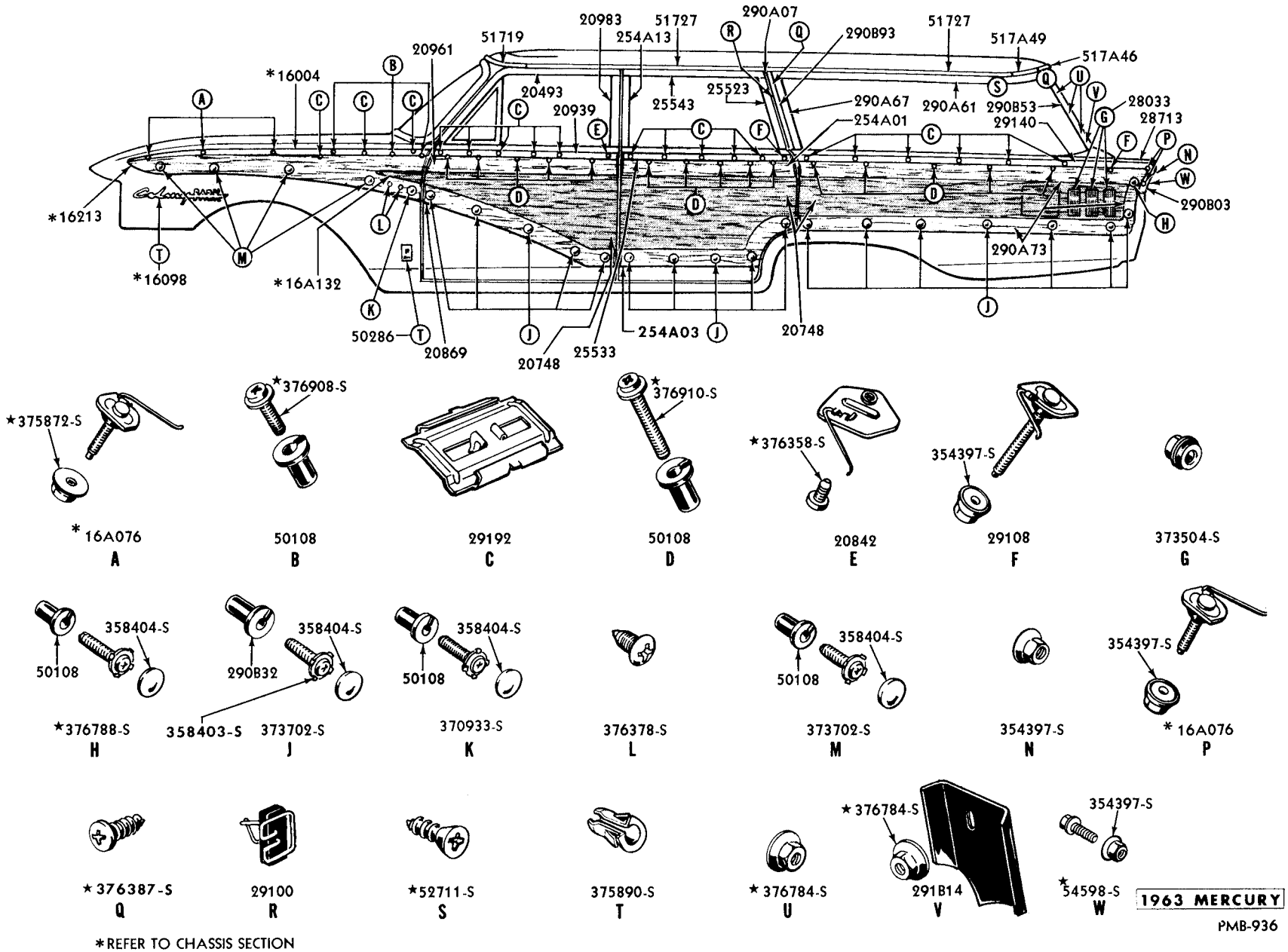

*REFER TO CHASSIS SECTION

EXTERIOR MOULDINGS, RAILS and PANELS - MODEL 71

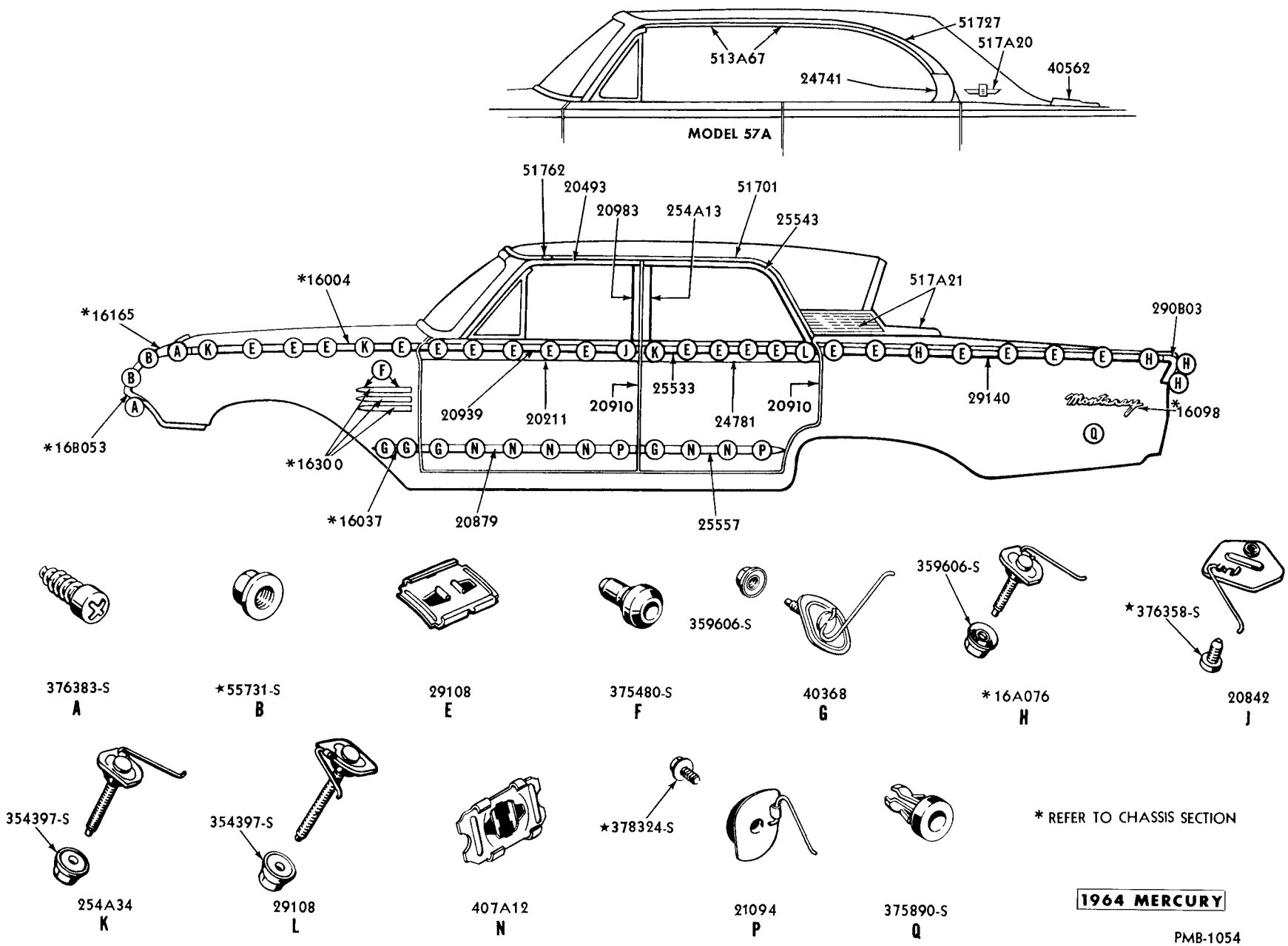

EXTERIOR MOULDINGS - MODELS - 54A, 57A

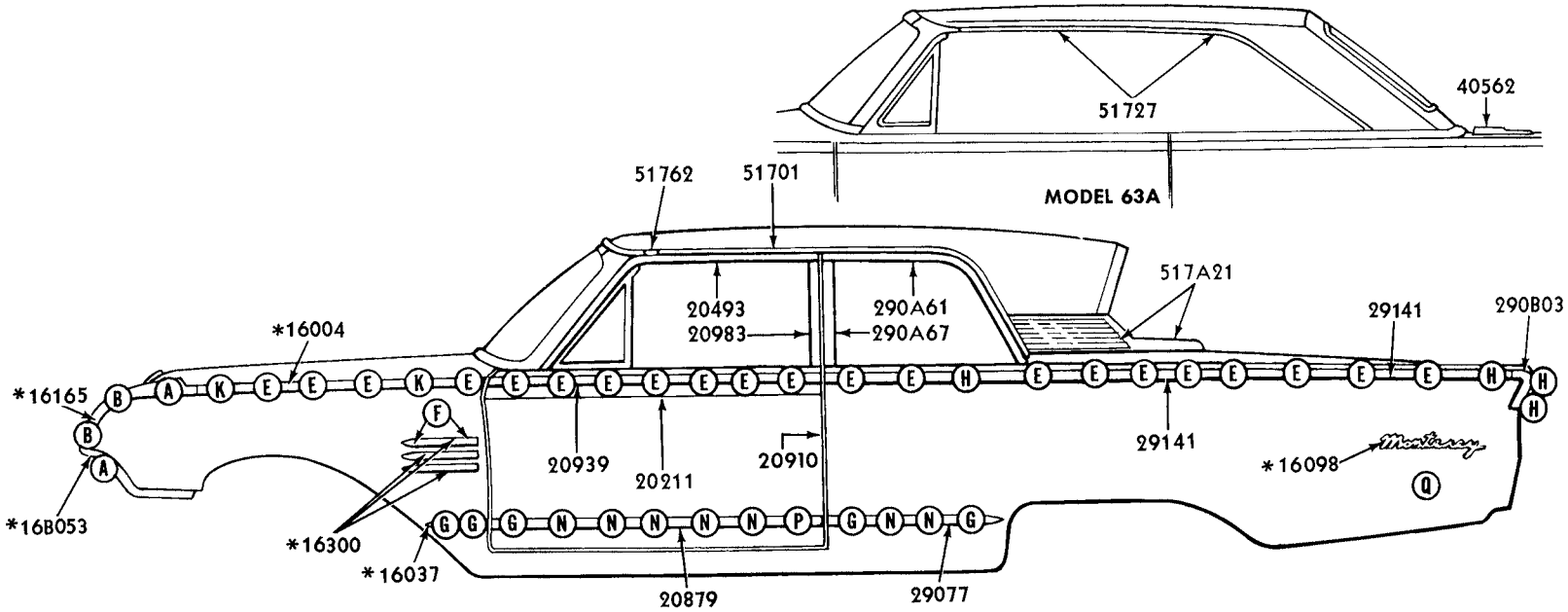

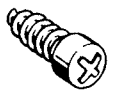

376383-S
A

*55731-S
B

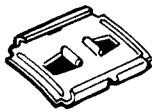

29108
E

375480-S
F

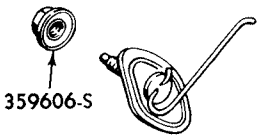

40368
G

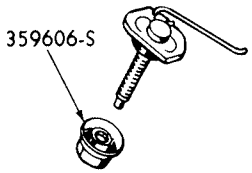

*16A076
H

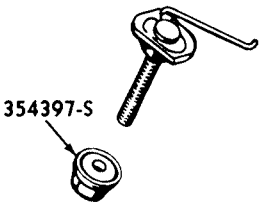

254A34
K

407A12
N

21094
P

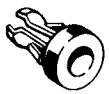

375890-S
Q

*REFER TO CHASSIS SECTION

1964 MERCURY

PMB-1055

EXTERIOR MOULDINGS - MODELS - 62A, 63A, 65A, 76A

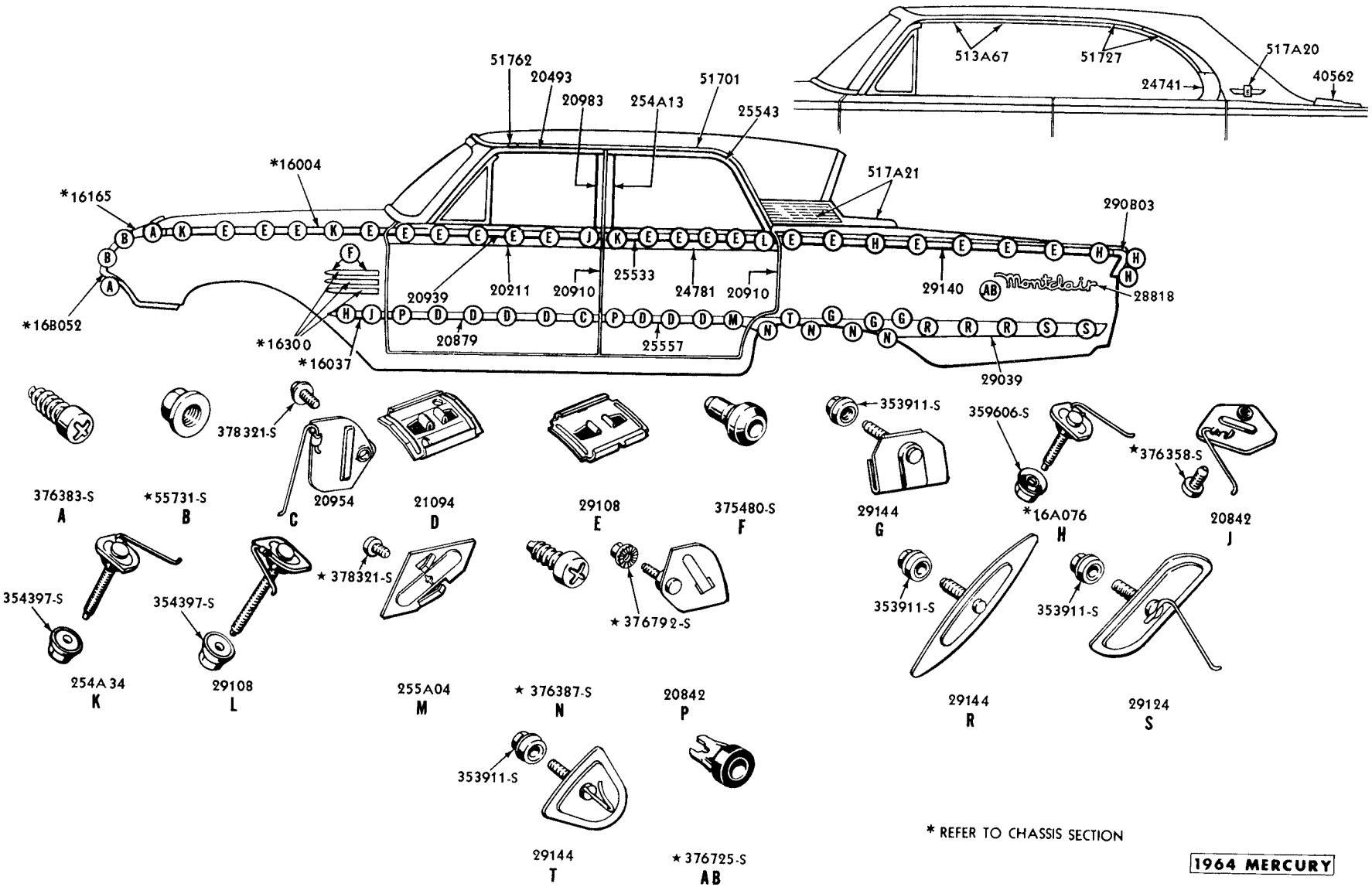

EXTERIOR MOULDINGS - MODELS 54D, 57D

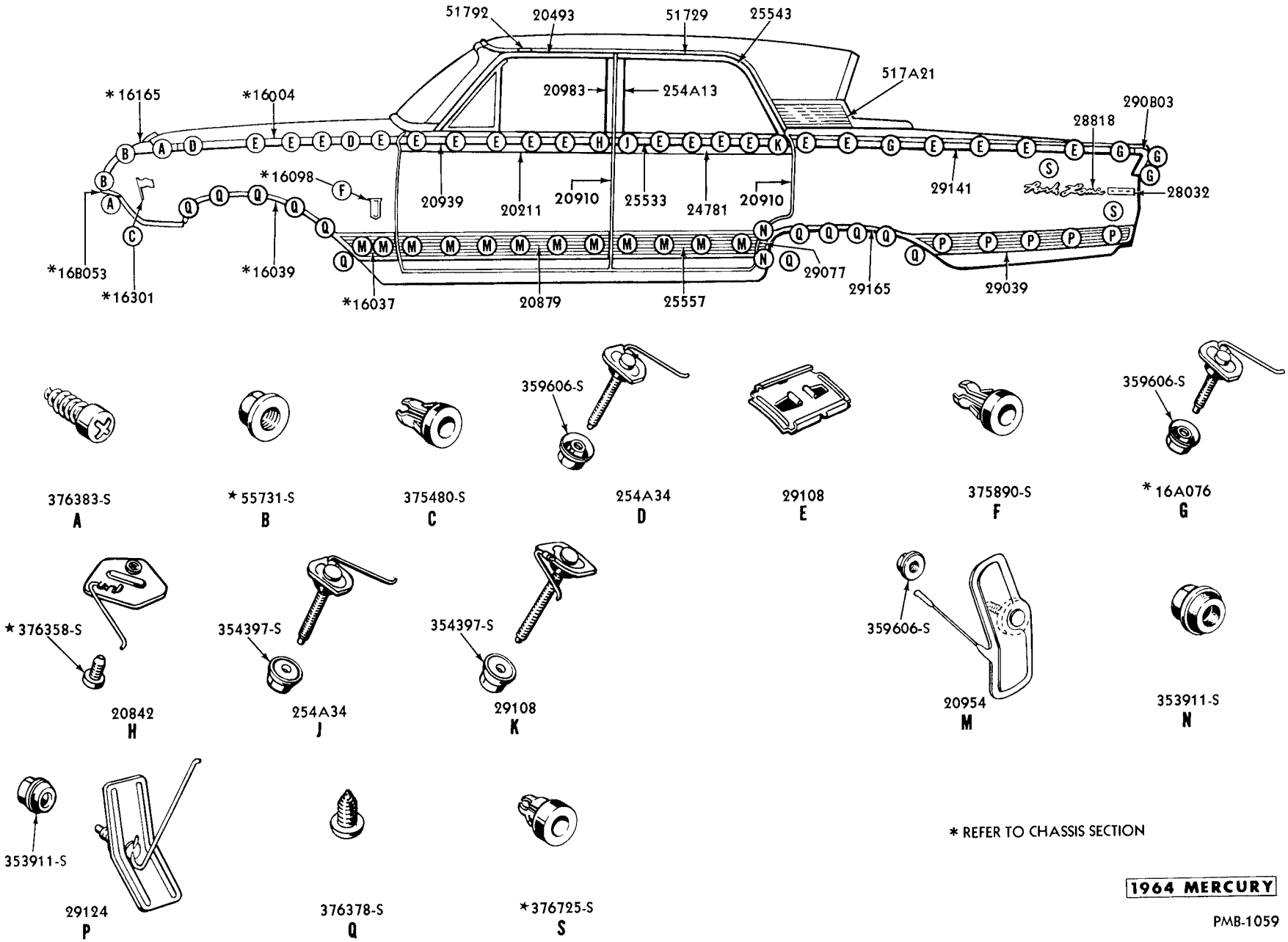

EXTERIOR MOULDINGS - MODELS 54F, 75F PARKLANE

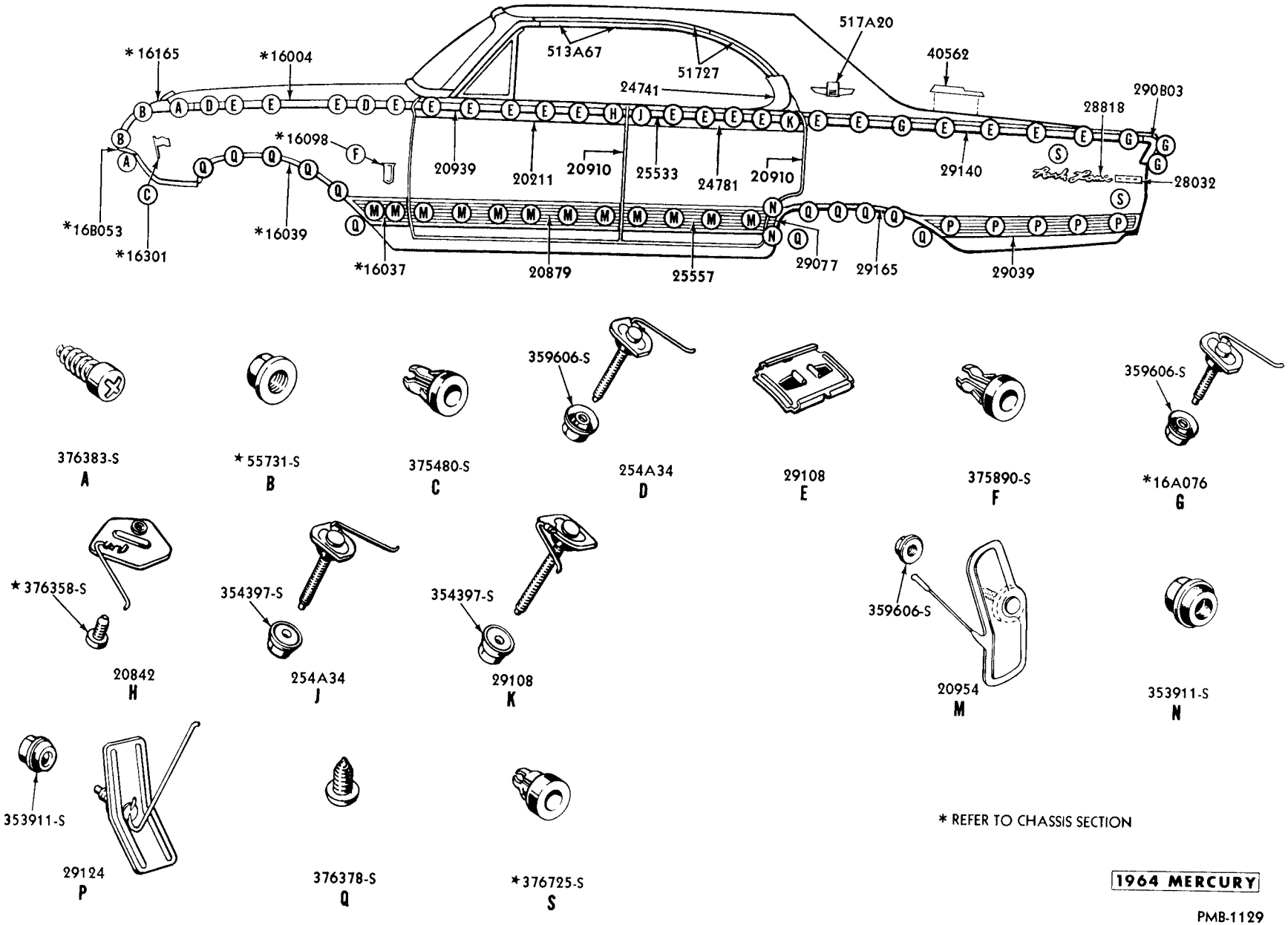

EXTERIOR MOULDINGS - MODELS 57C, F

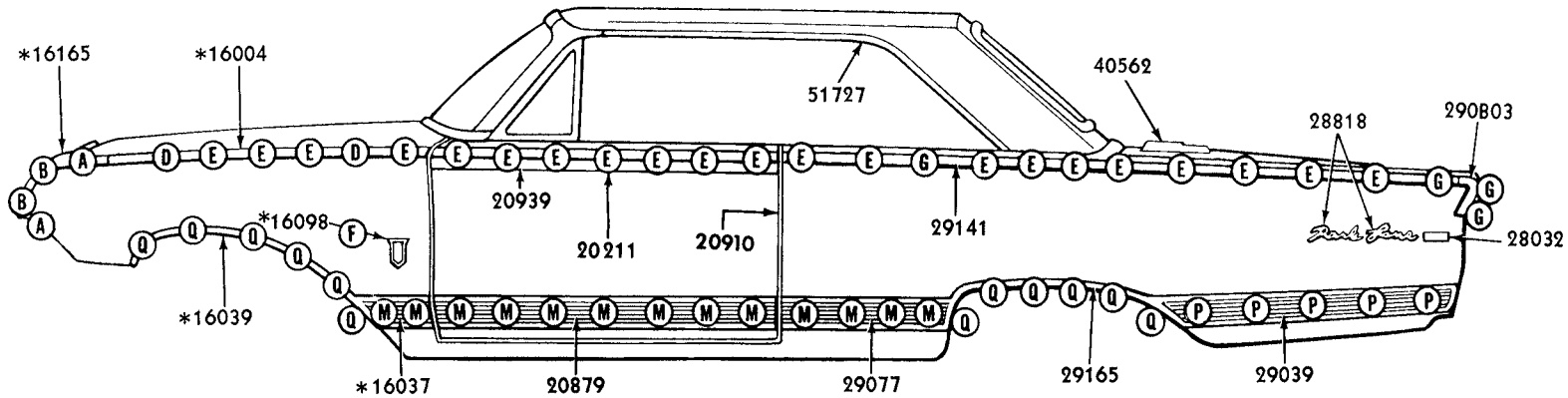

376383-S
A

*55731-S
B

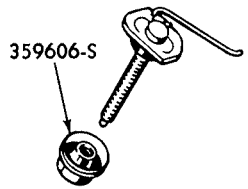

254A34
D

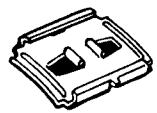

29108
E

*376725-S
F

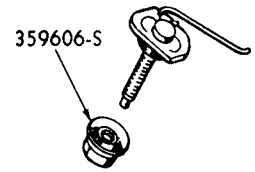

*16A076
G

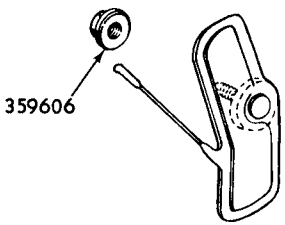

20954
M

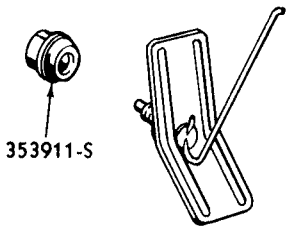

21094
P

376378-S
Q

* REFER TO CHASSIS SECTION

1964 MERCURY

PMB-1130

EXTERIOR MOULDINGS - MODELS 63C, F, 76C, F

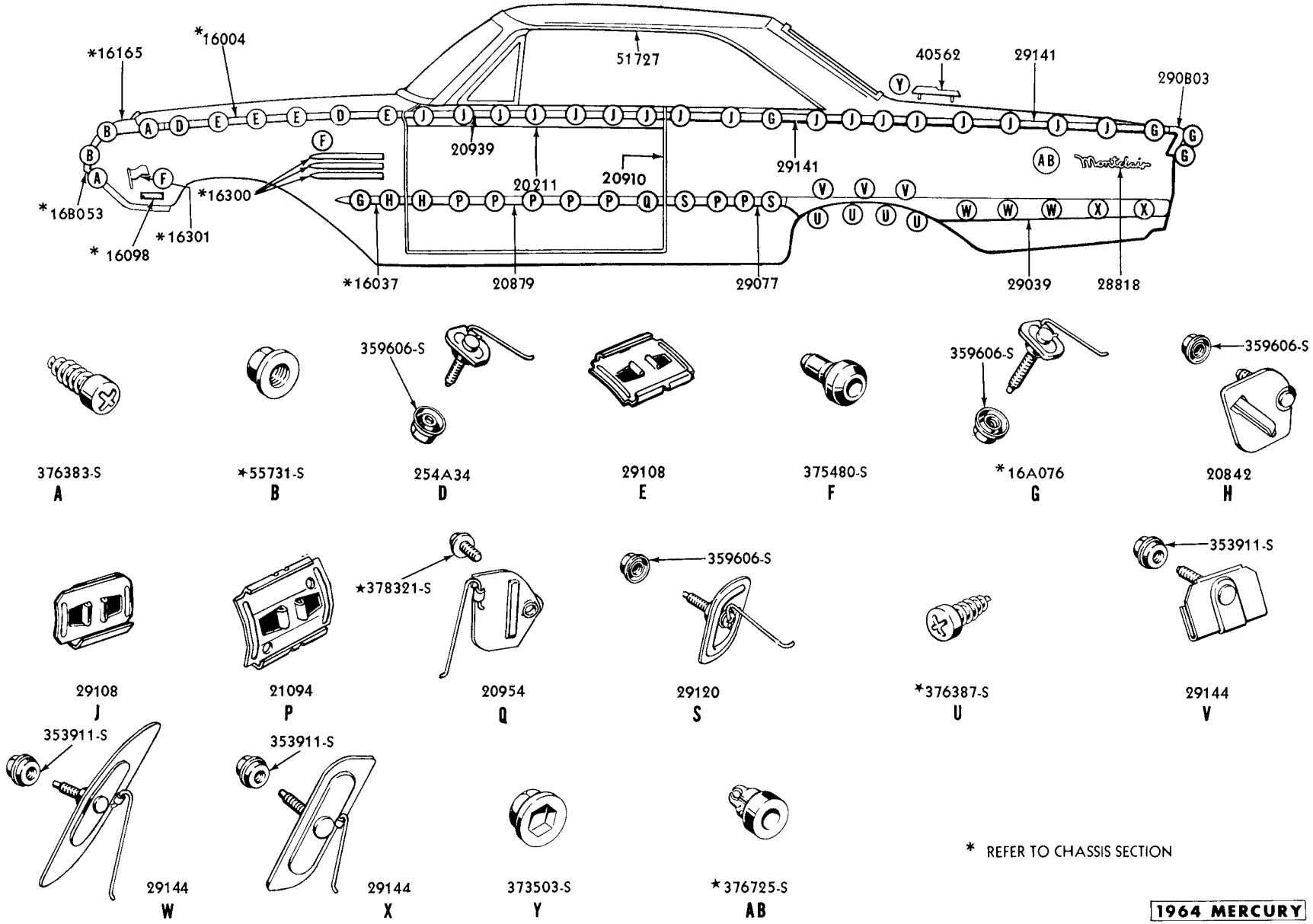

EXTERIOR MOULDINGS - MODEL 63D

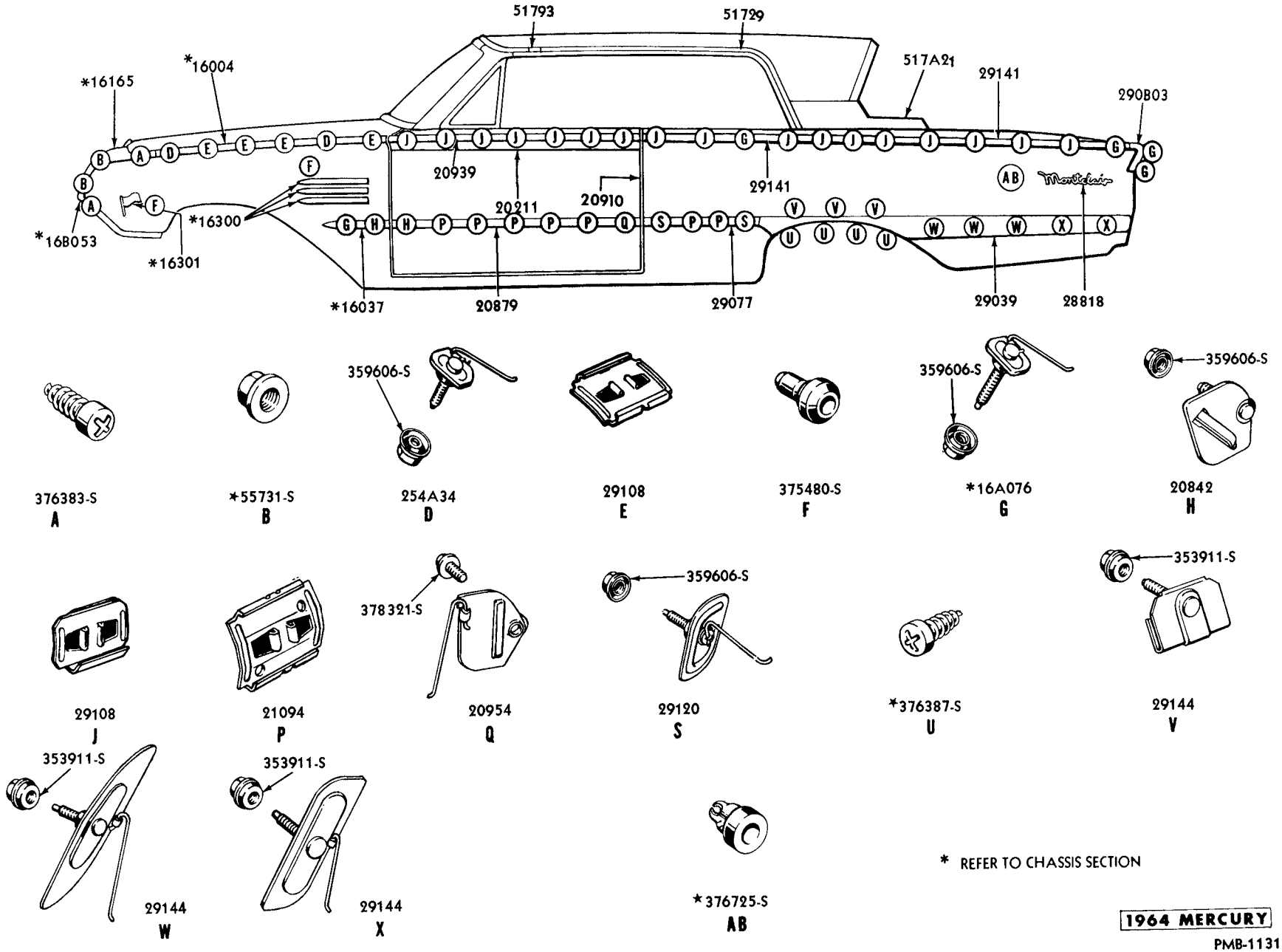

EXTERIOR MOULDINGS - MODEL 65B

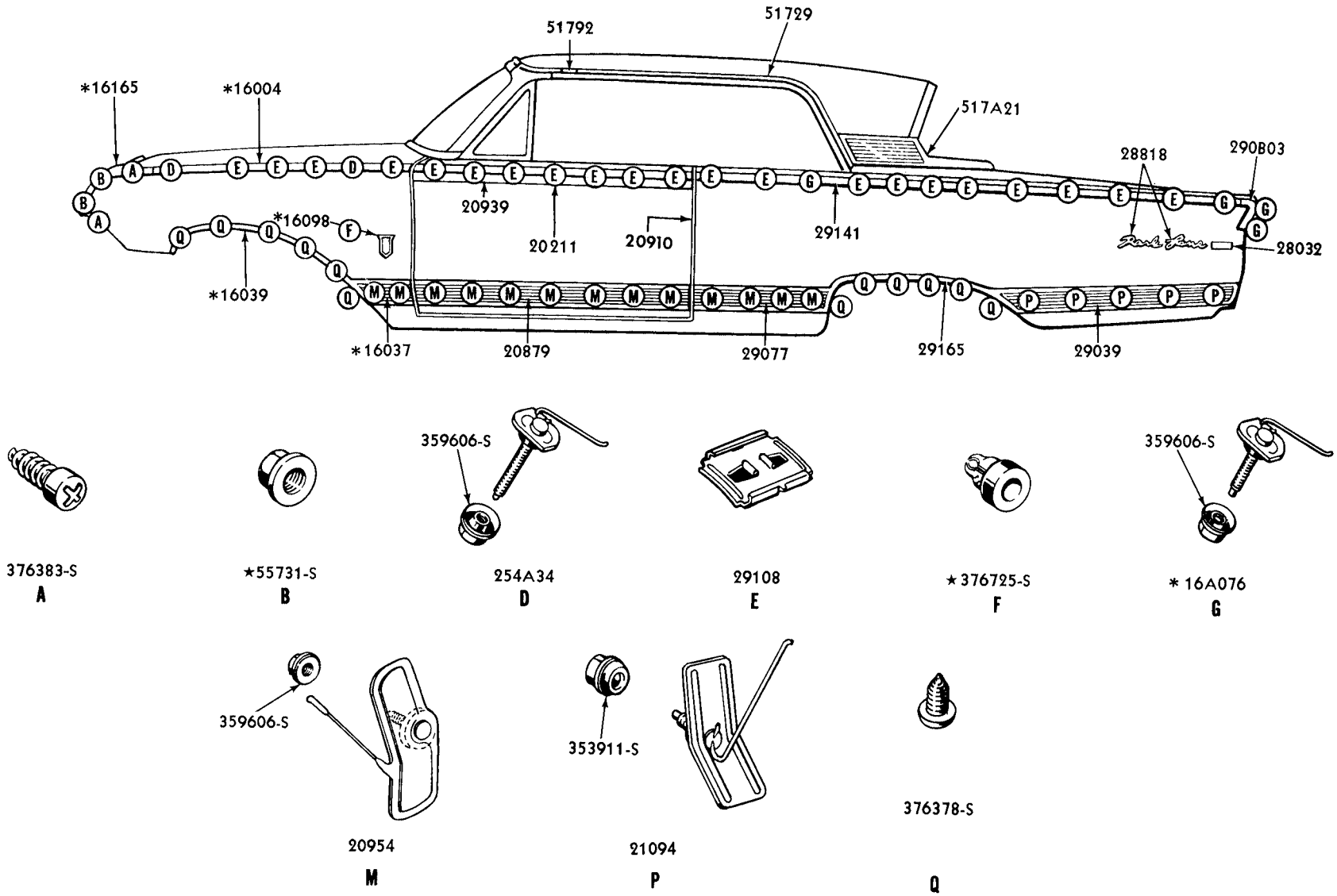

* REFER TO CHASSIS SECTION

1964 MERCURY

PMB-1058

EXTERIOR MOULDINGS - MODELS 65C, F

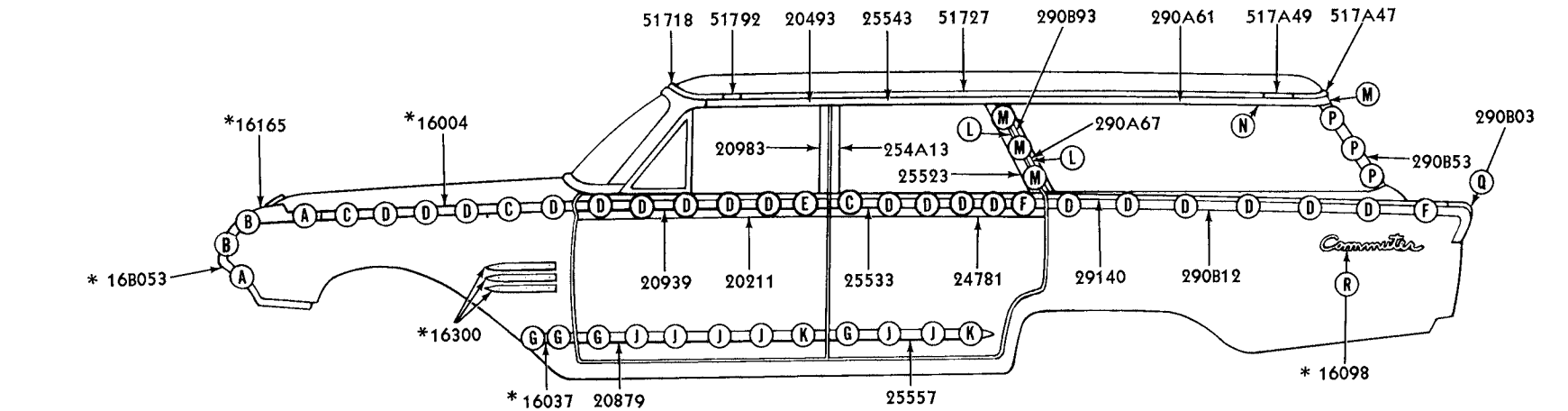

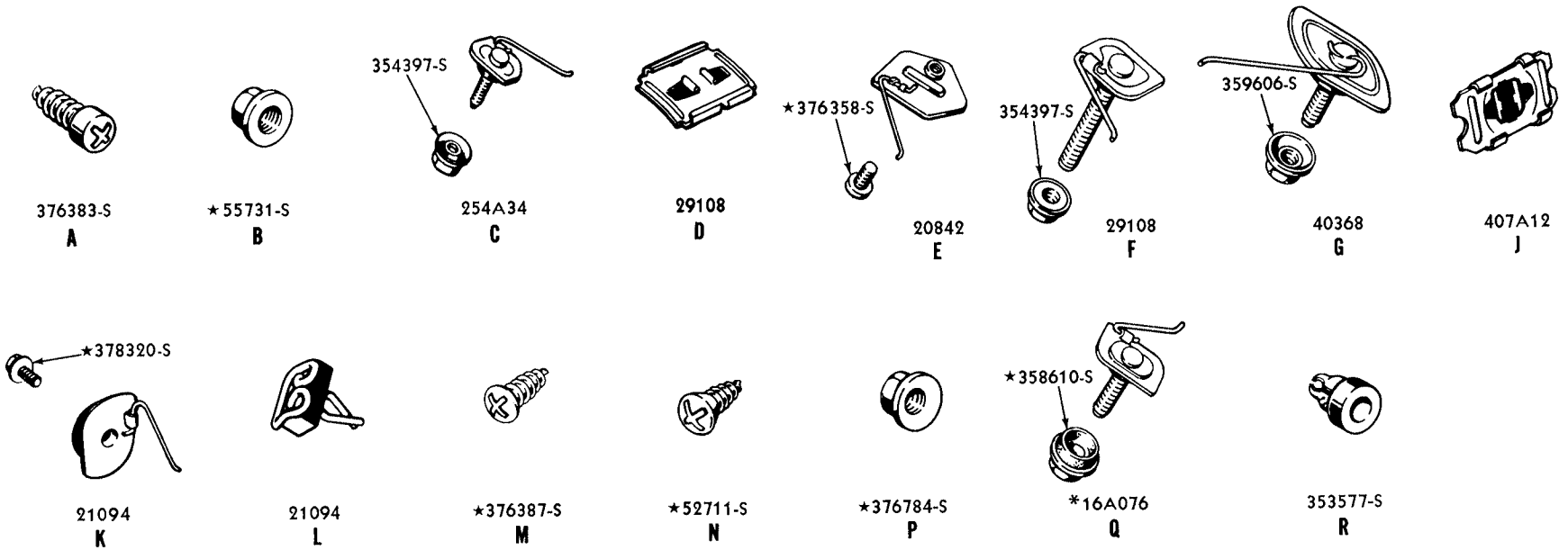

* REFER TO CHASSIS SECTION

1964 MERCURY

PMB-1094

EXTERIOR MOULDINGS - MODELS 71A,C

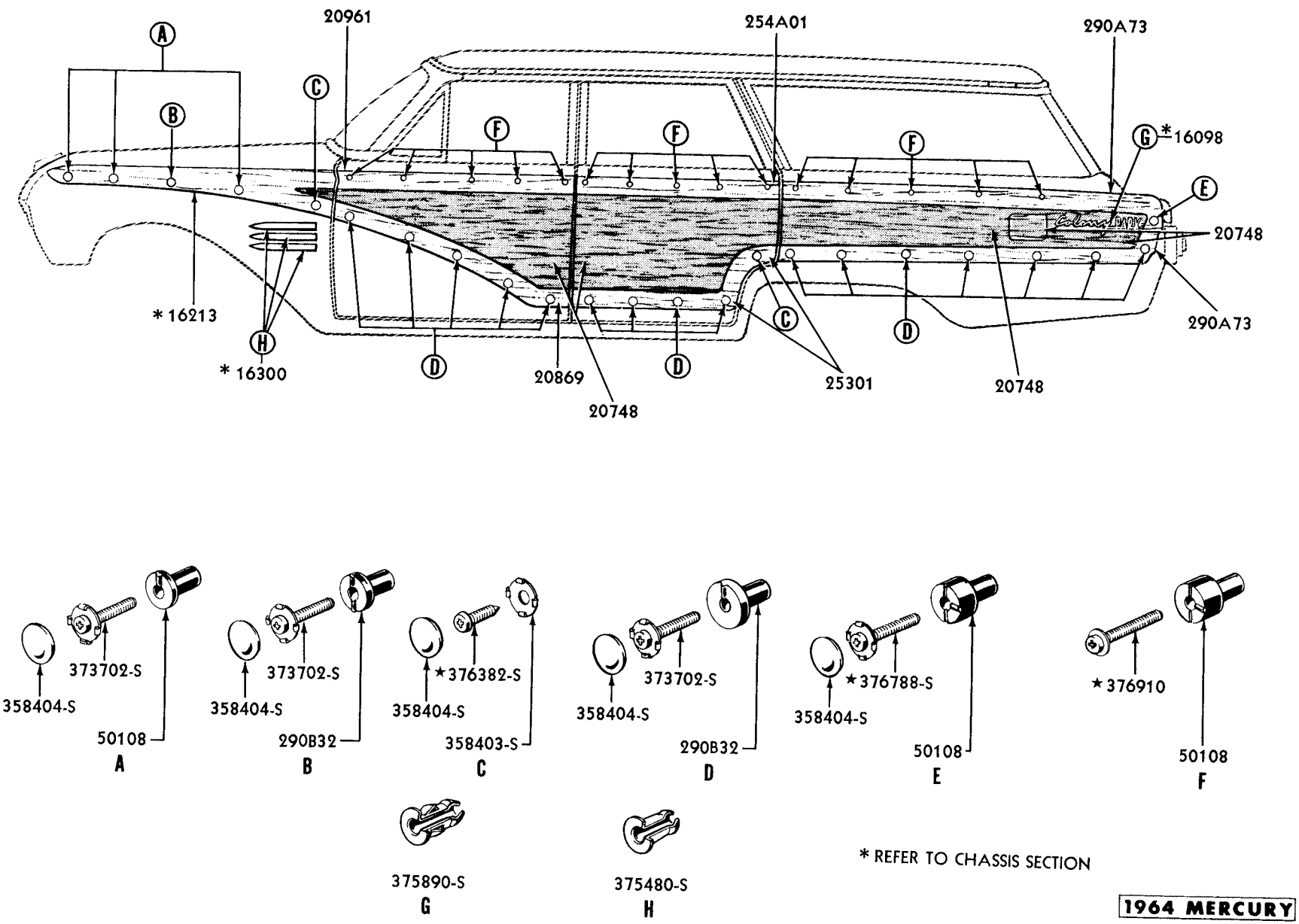

EXTERIOR WOOD RAILS and PANELS - MODEL 71

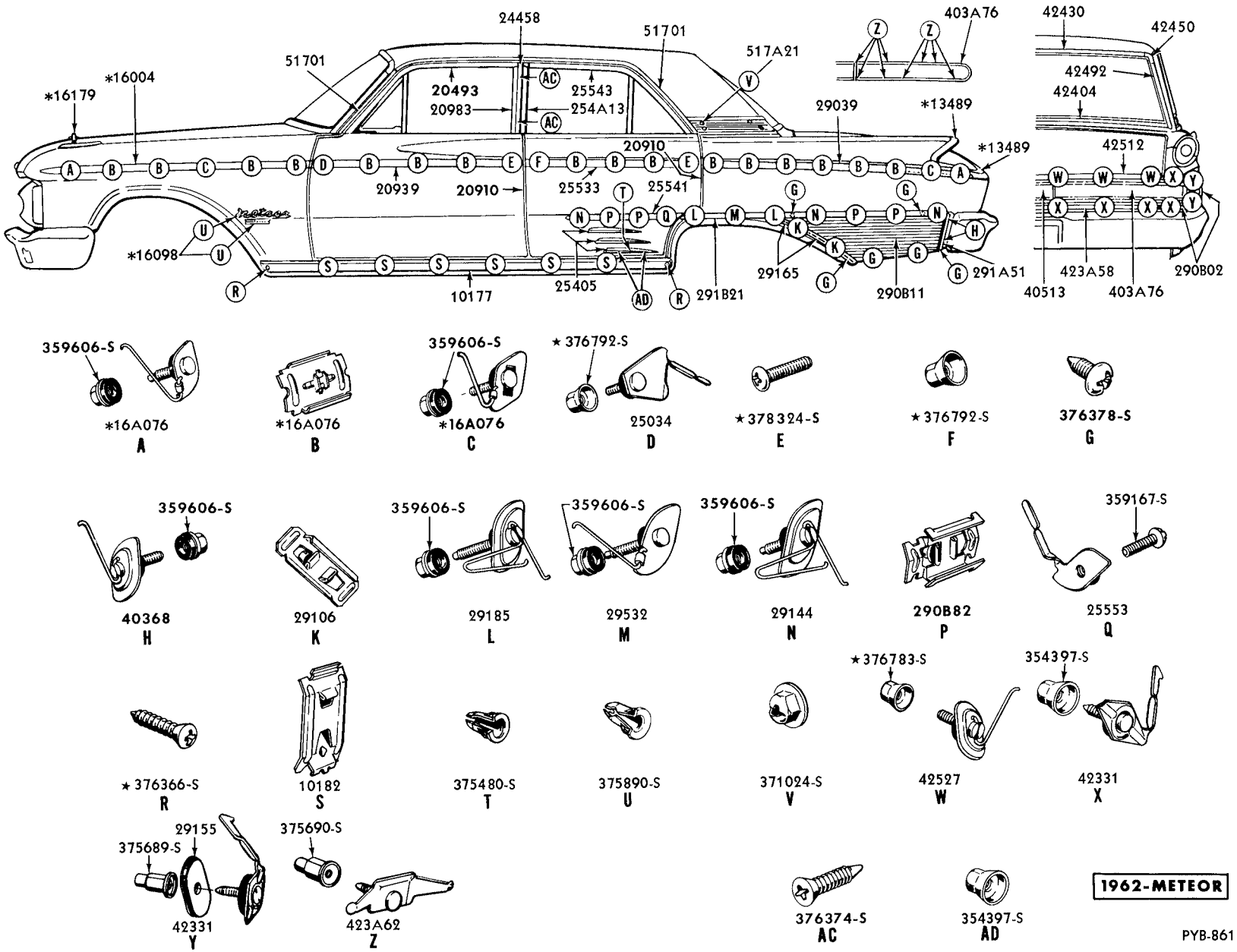

*REFER TO CHASSIS SECTION

EXTERIOR MOULDINGS - MODEL 54

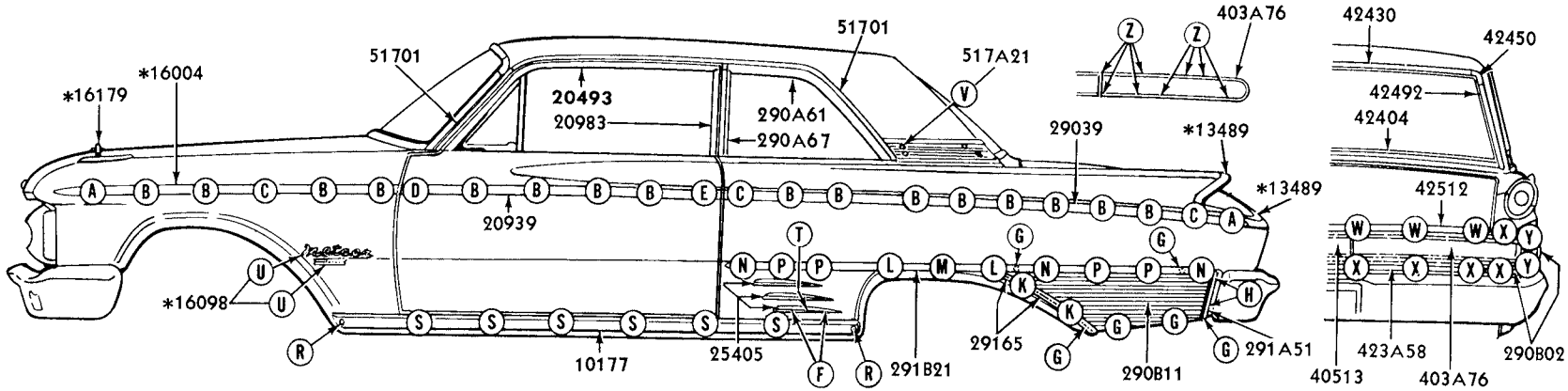

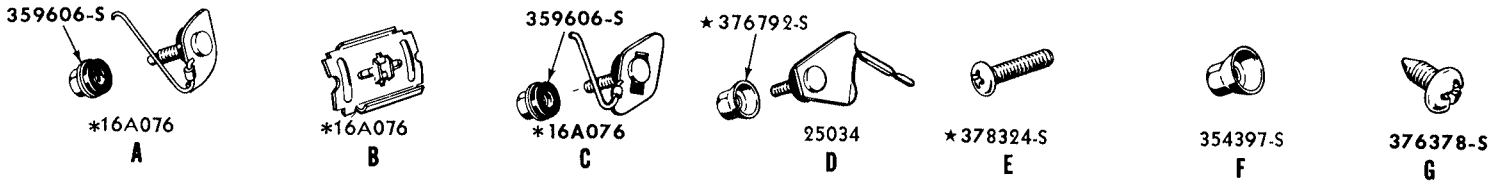

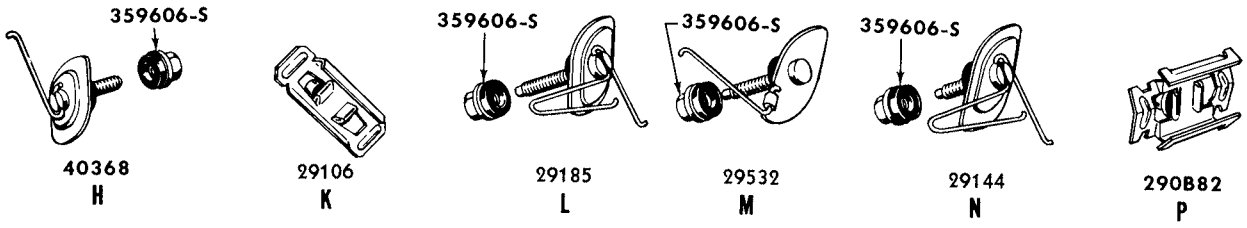

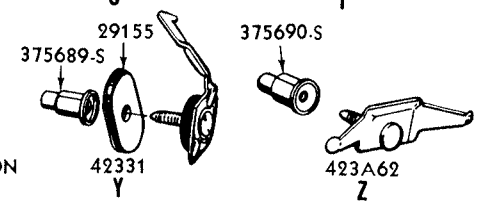

* REFER TO CHASSIS SECTION

1962-METEOR

PYB-862

EXTERIOR MOULDINGS - MODEL 62

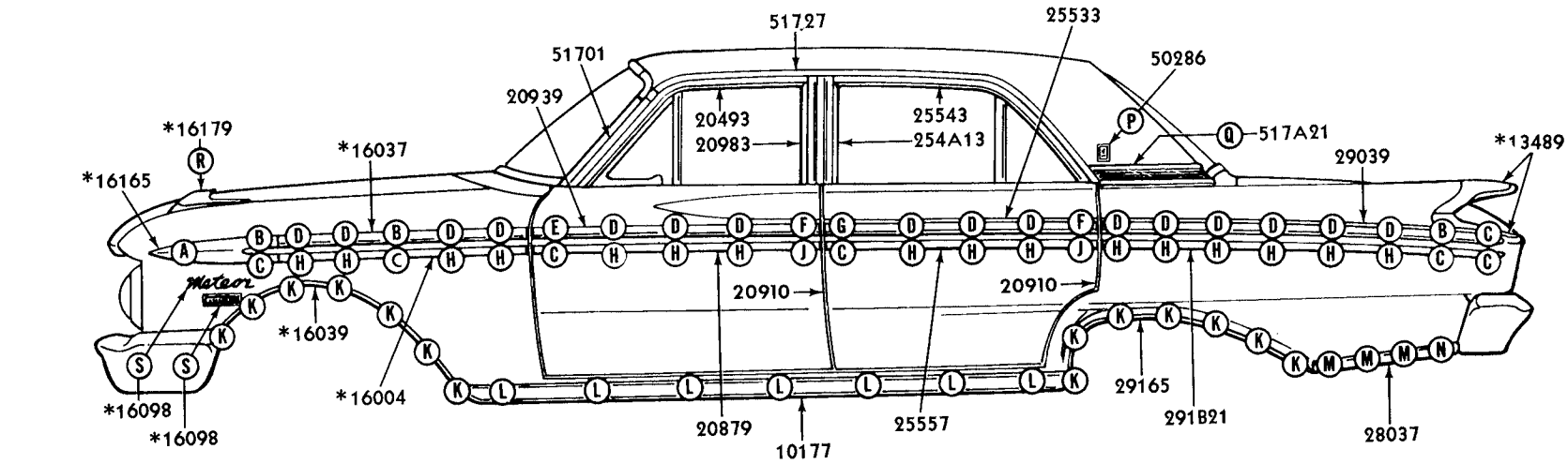

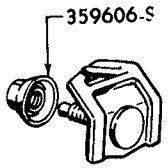

*C3YY-16A076-A
A

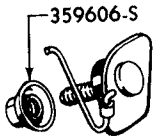

*C2GY-16A076-B
B

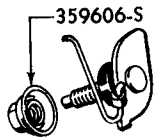

*C2DZ-16A076-C
C

*C2GY-16A076-A
D

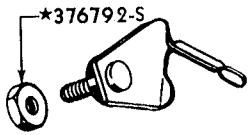

25034
E

*378324-S
F

*376792-S
G

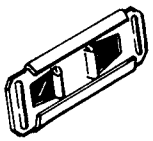

*C20Z-16A076-A
H

20880
J

376378-S
K

10182
L

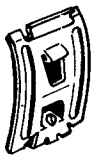

291A66
M

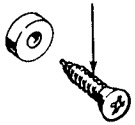

*102A78
N

* 373704-S
P

371024-S
Q

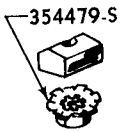

*16A158
R

375890-S
S

1963 METEOR

PYB-938

* REFER TO CHASSIS SECTION

EXTERIOR MOULDINGS - MODEL 54

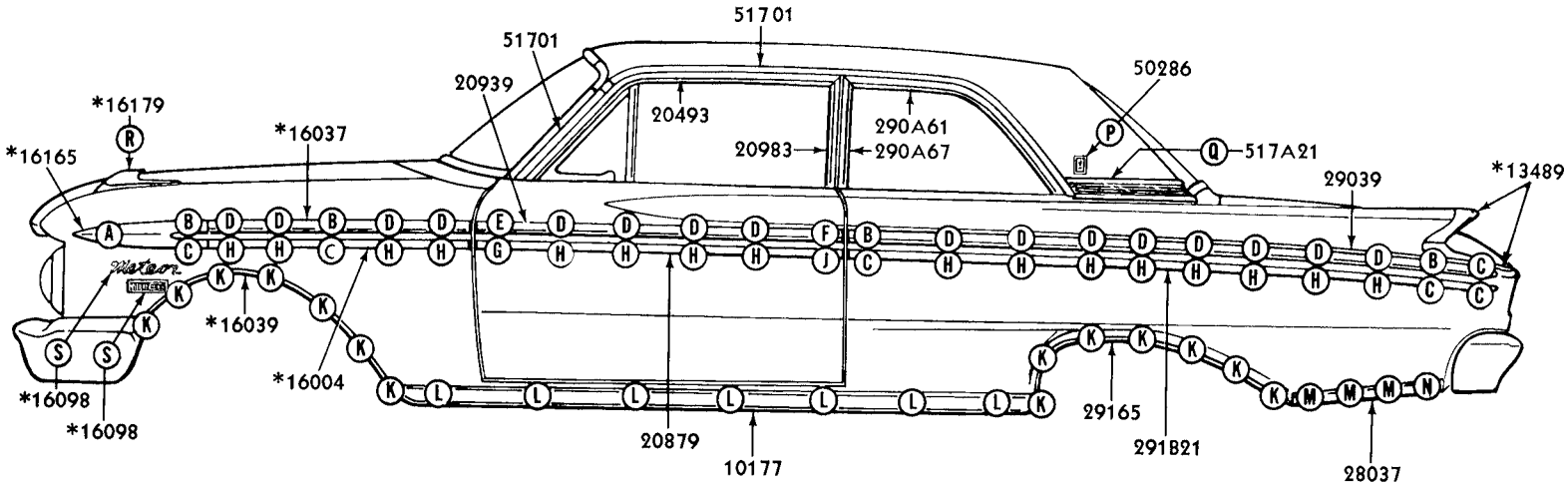

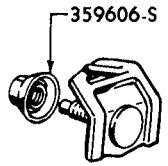

*C3YY-16A076-A
A

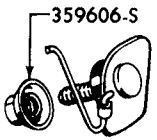

*C2GY-16A076-B
B

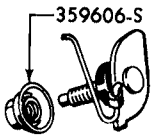

*C2DZ-16A076-C
C

*C2GY-16A076-A
D

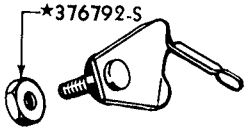

25034
E

*378324-S
F

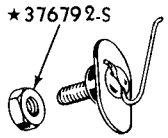

*C2DZ-16A076-C
G

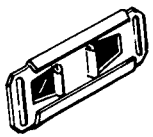

*C20Z-16A076-A
H

20880
J

376378-S
K

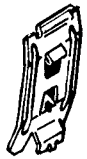

10182
L

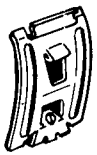

291A66
M

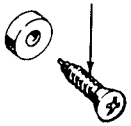

*102A78
N

*373704-S
P

371024-S
Q

*16A158
R

375890-S
S

1963 METEOR

PYB-937

* REFER TO CHASSIS SECTION

EXTERIOR MOULDINGS - MODEL 62

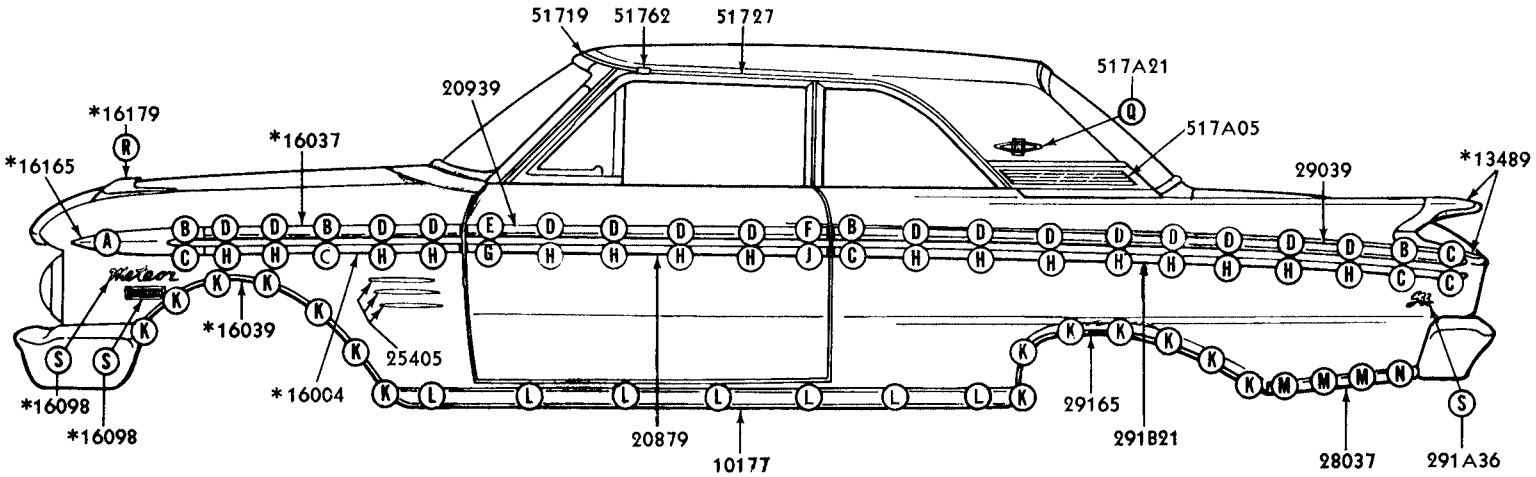

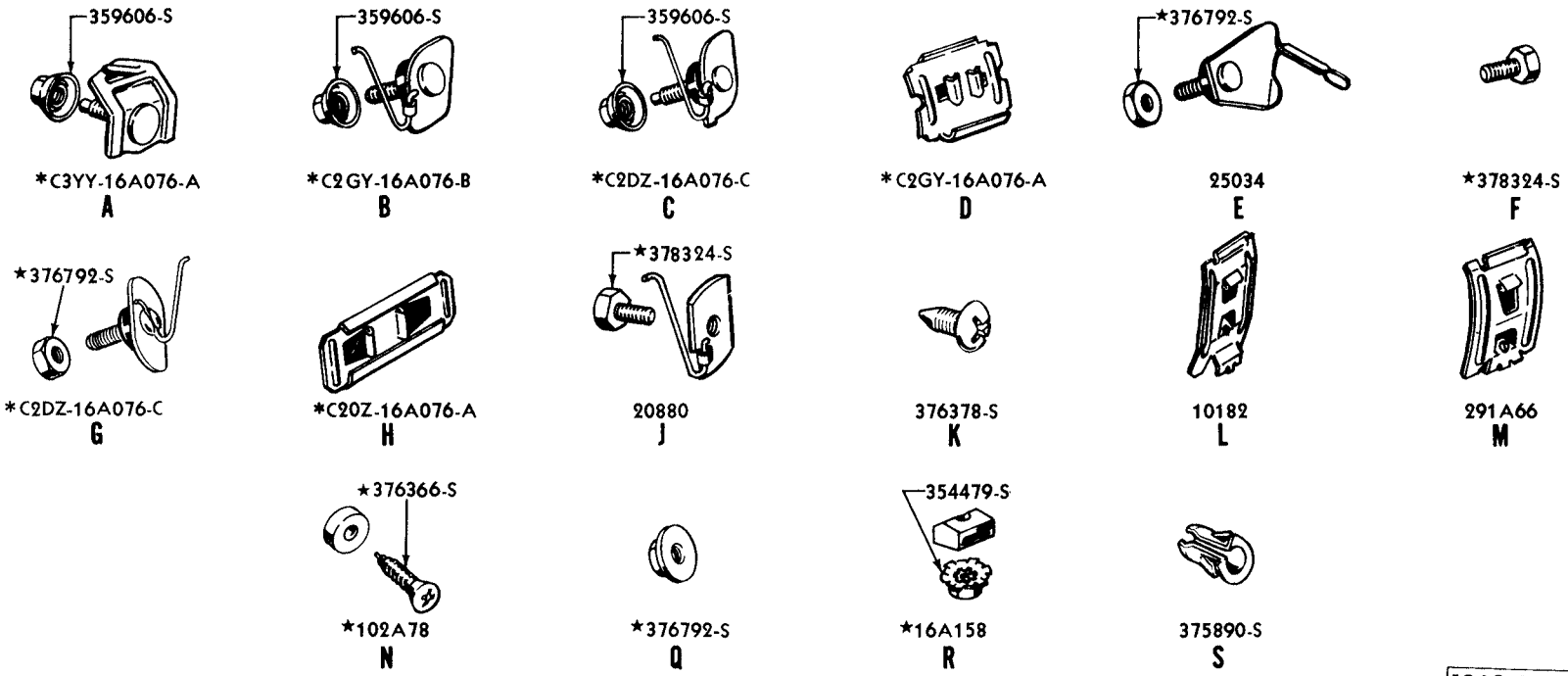

1963 METEOR

* REFER TO CHASSIS SECTION

PYB-939

EXTERIOR MOULDINGS - MODEL 65

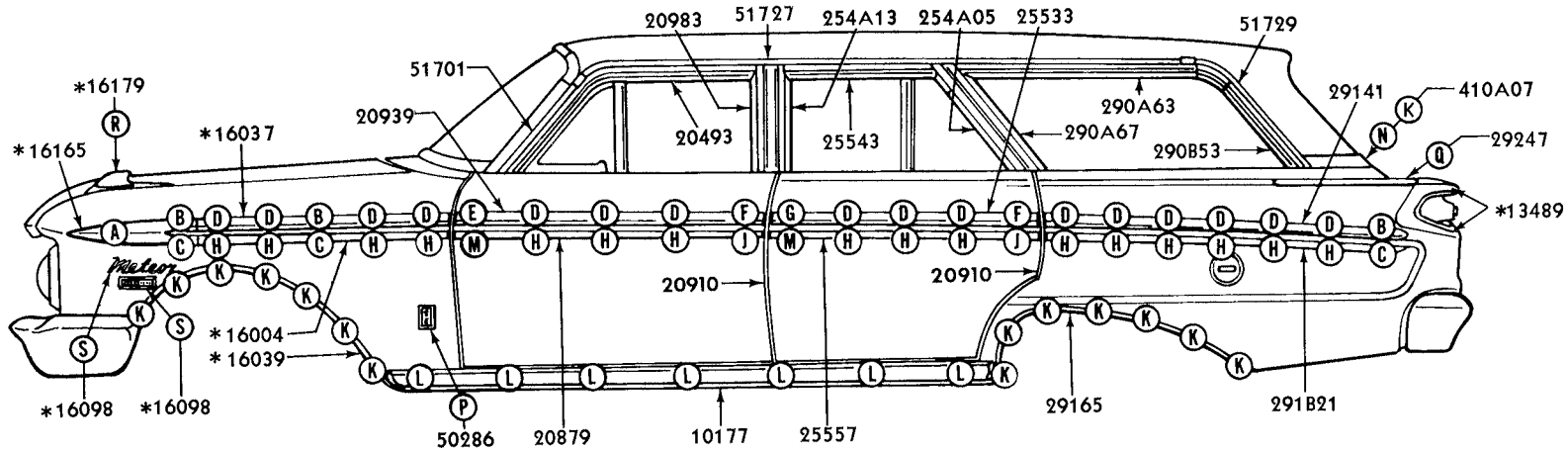

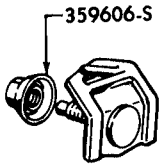

*C3YY-16A076-A
A

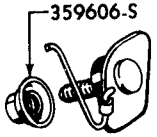

*C2GY-16A076-B
B

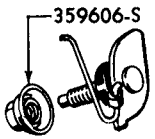

*C2DZ-16A076-C
C

*C2GY-16A076-A
D

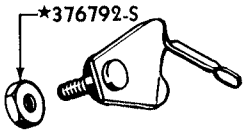

25034
E

*378324-S
F

*376792-S
G

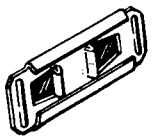

*C20Z-16A076-A
H

20880
J

376378-S
K

10182
L

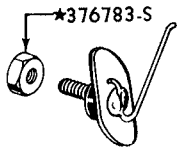

* C2DZ-16A076-C
M

359606-S
N

*373704-S
P

354479-S
Q

*16A158
R

375890-S
S

1963 METEOR

PYB-940

* REFER TO CHASSIS SECTION

EXTERIOR MOULDINGS - MODELS 71A, B, C , E

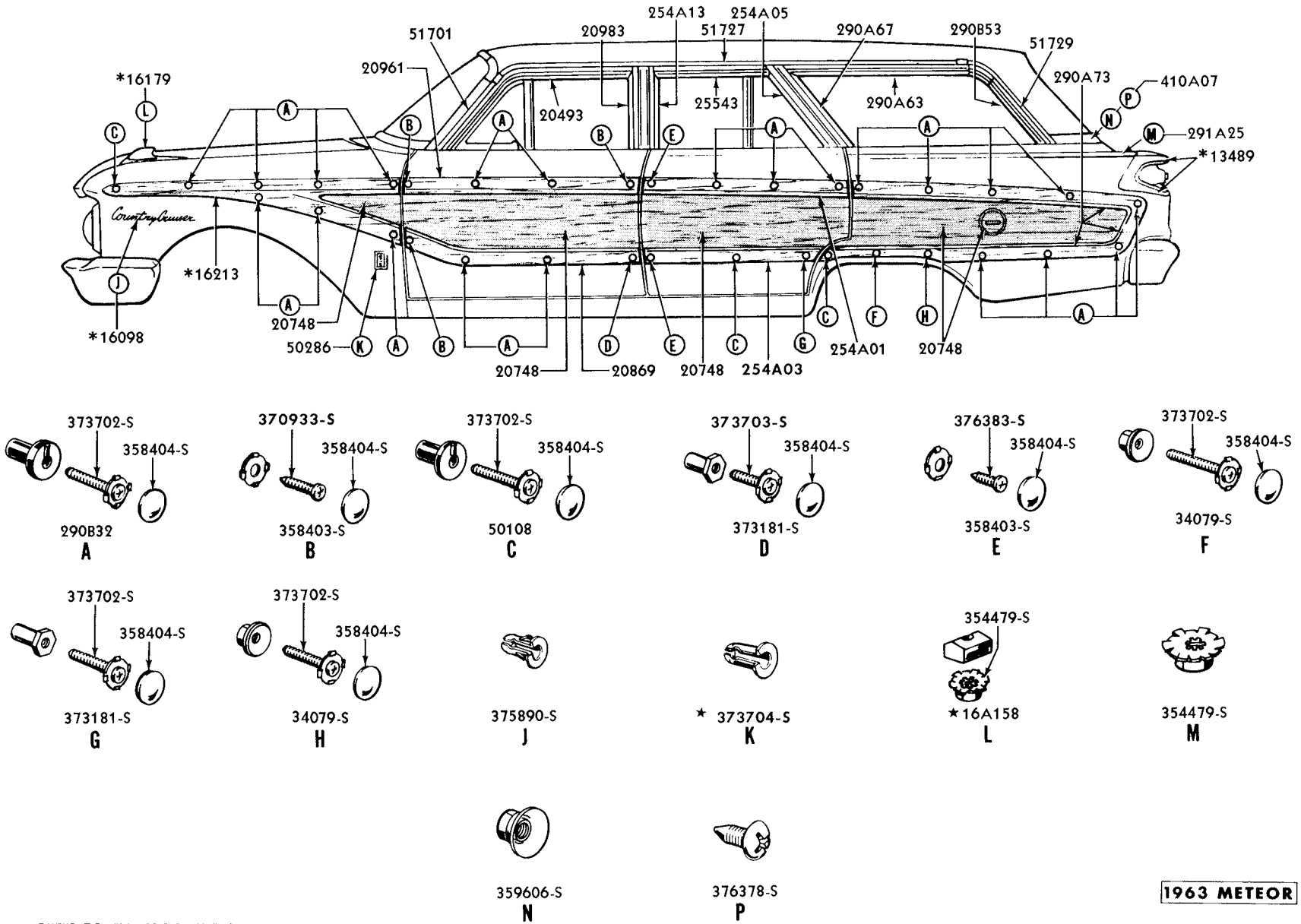

*REFER TO CHASSIS SECTION

1963 METEOR

PYB-941

EXTERIOR MOULDINGS, RAILS and PANELS - MODEL 71D, F

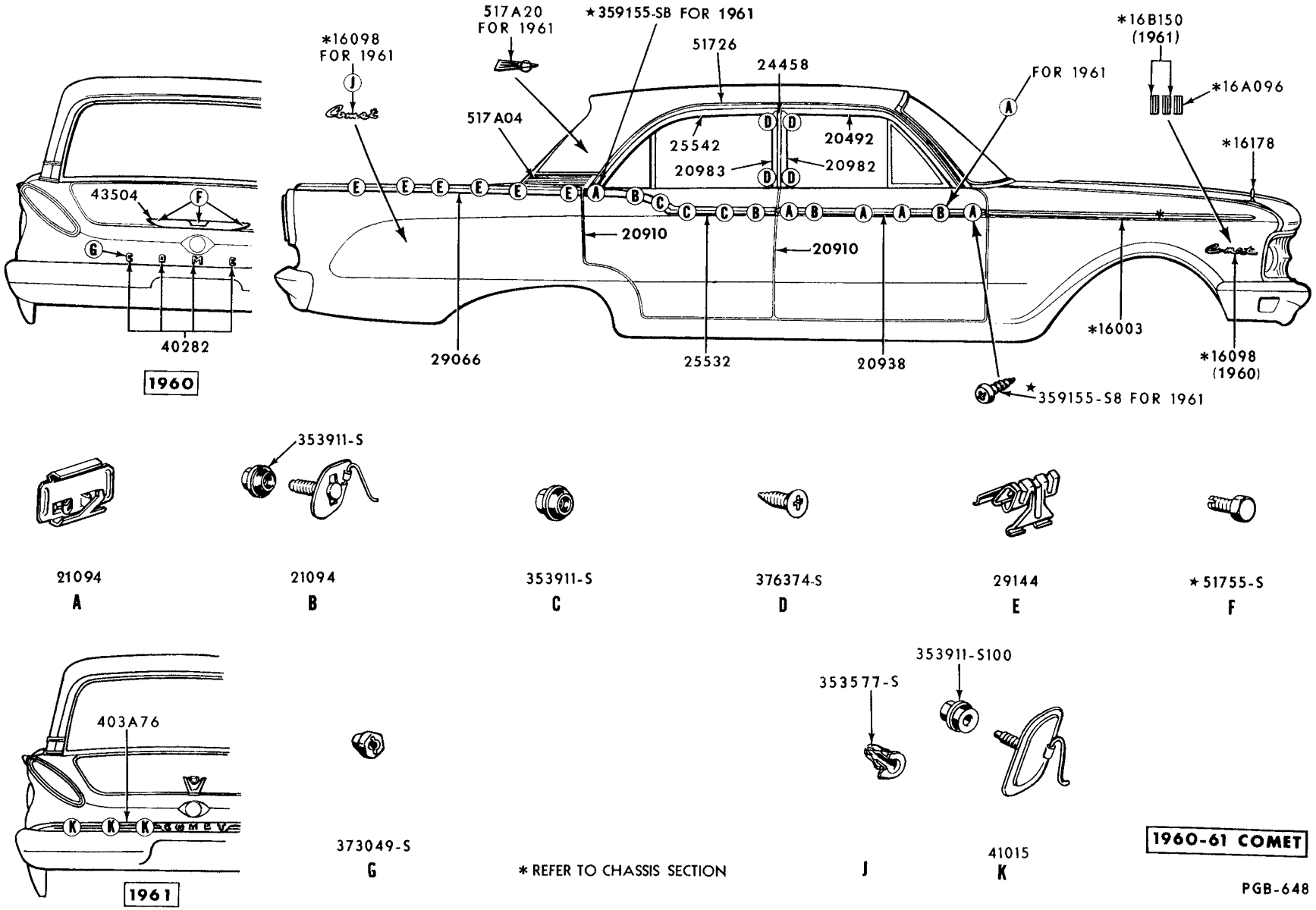

EXTERIOR MOULDINGS - MODEL 54

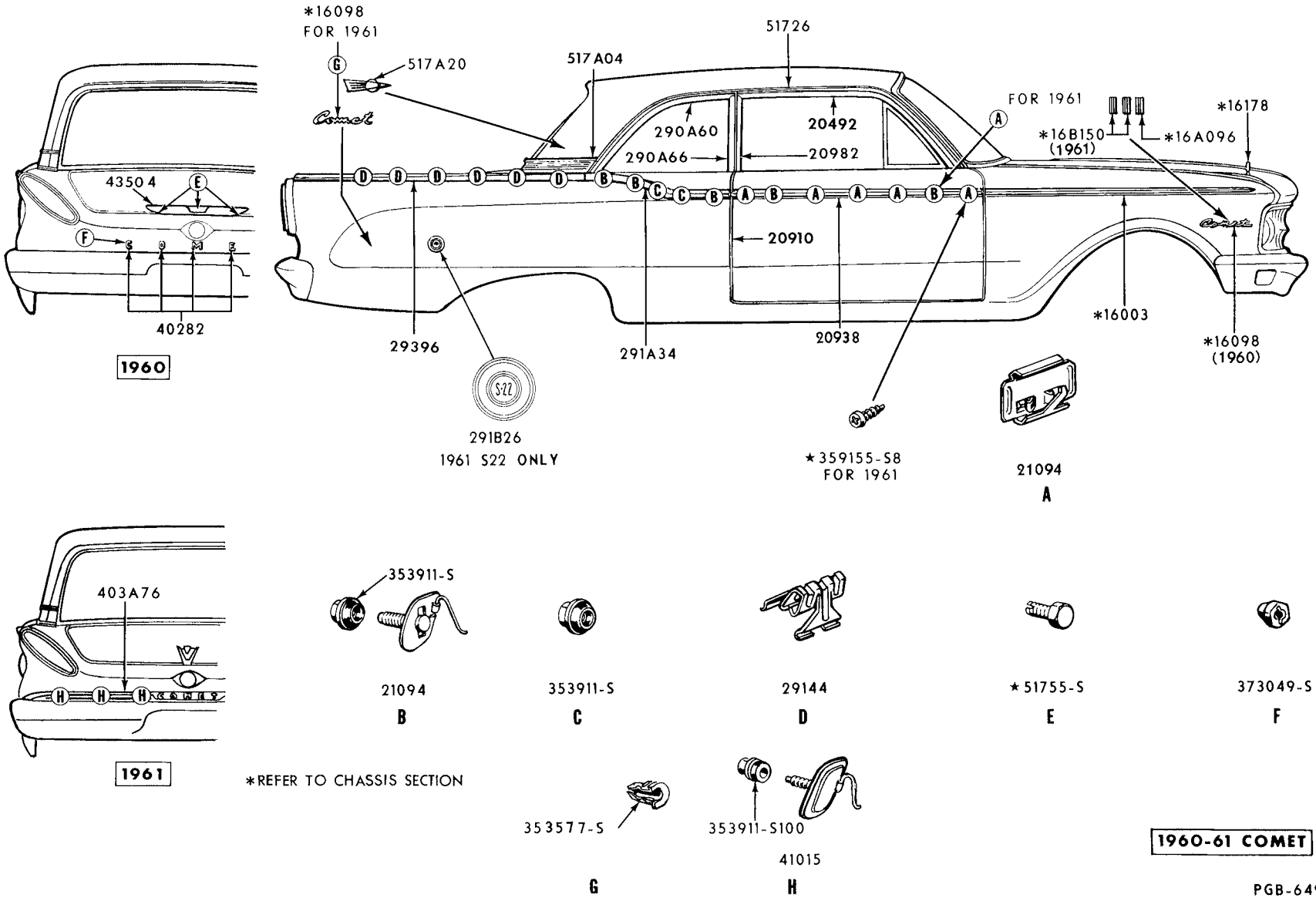

EXTERIOR MOULDINGS - MODEL 62

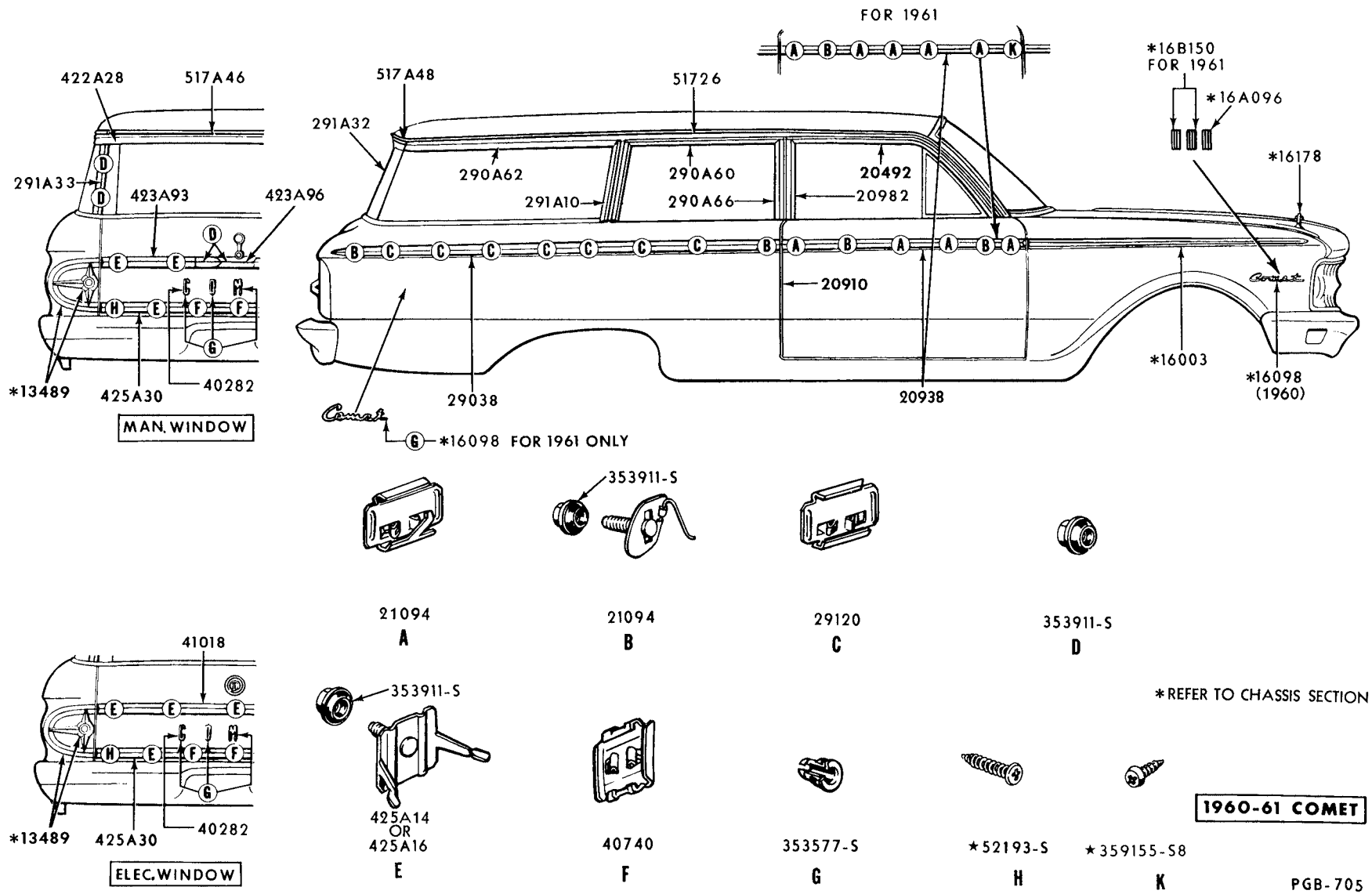

EXTERIOR MOULDINGS - MODEL 59

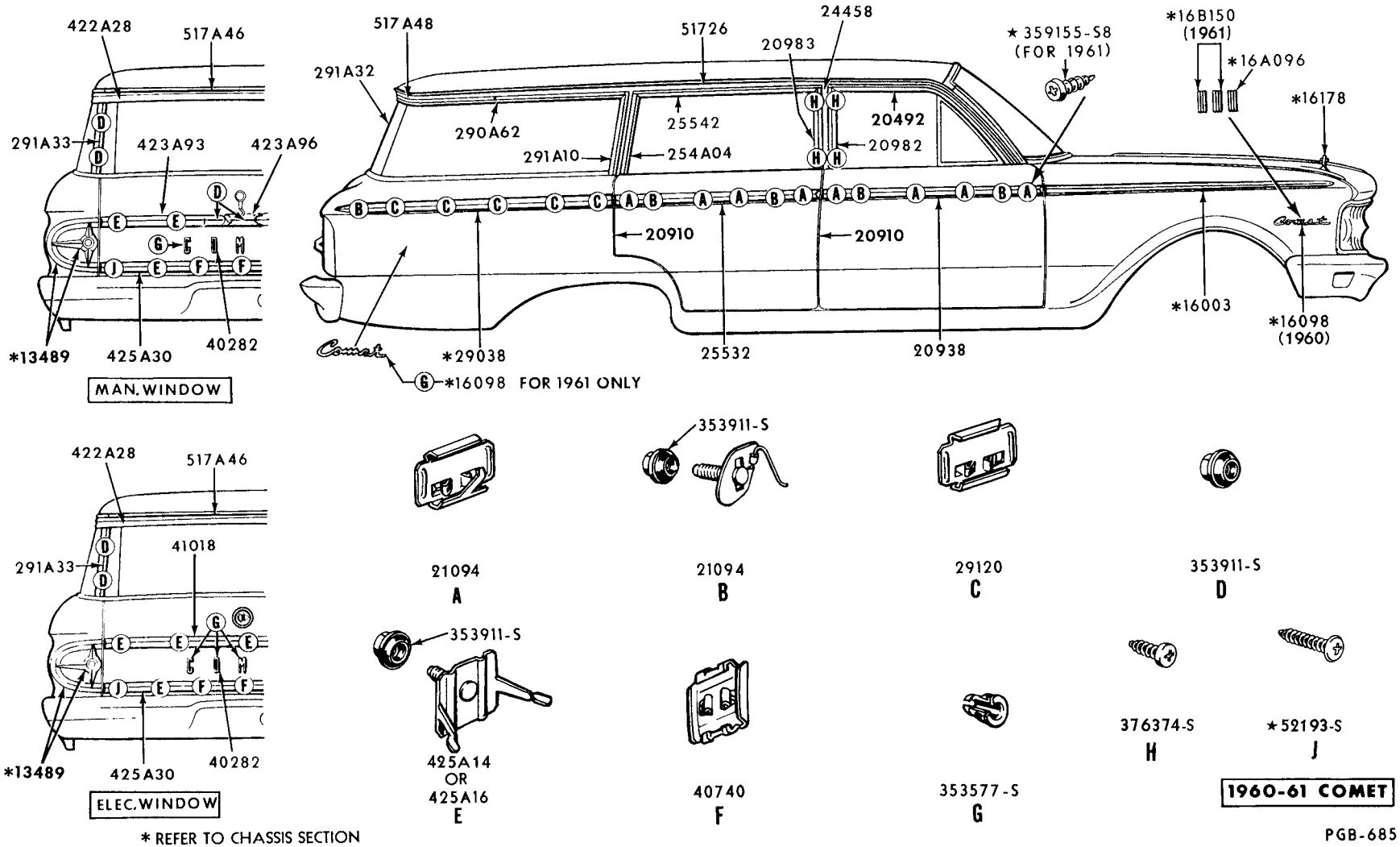

EXTERIOR MOULDINGS - MODEL 71

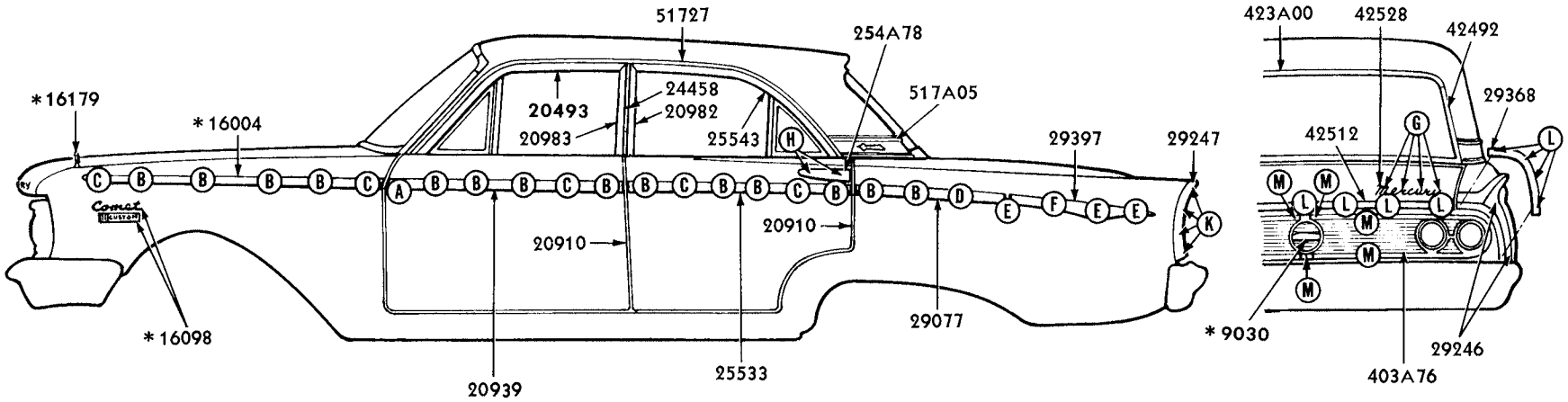

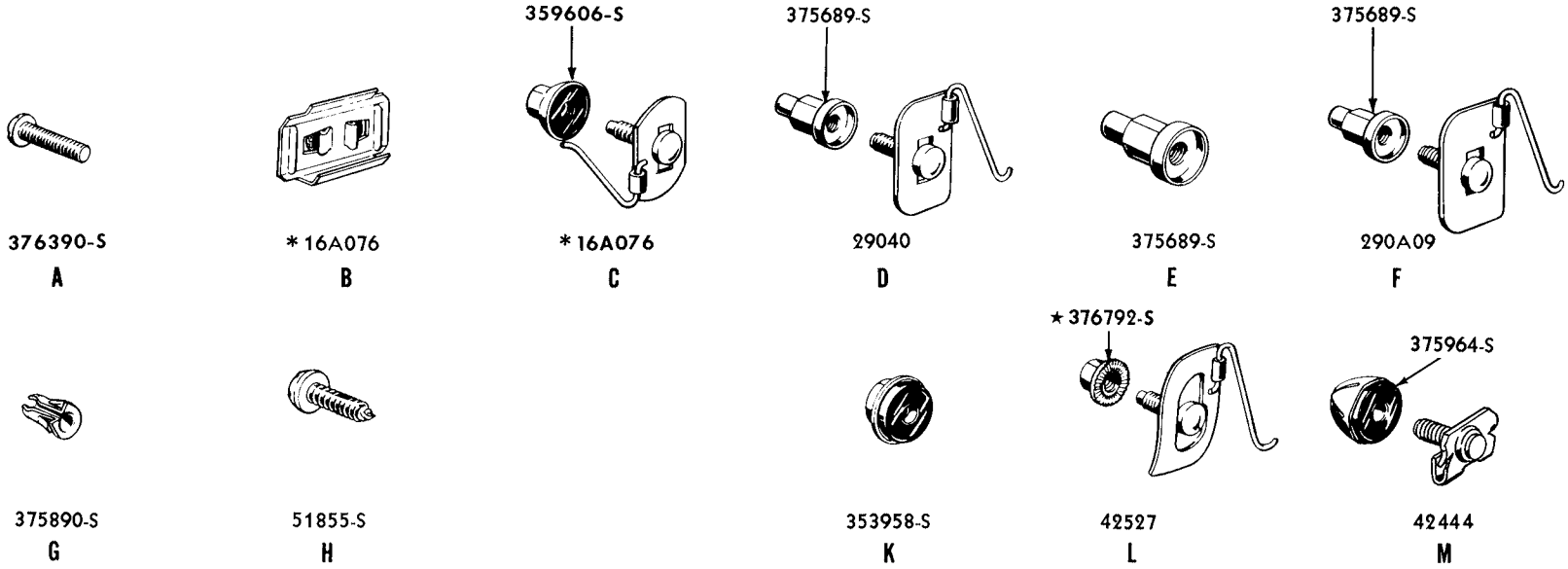

* REFER TO CHASSIS SECTION

1962-COMET

PGB-858

EXTERIOR MOULDINGS - MODEL 54

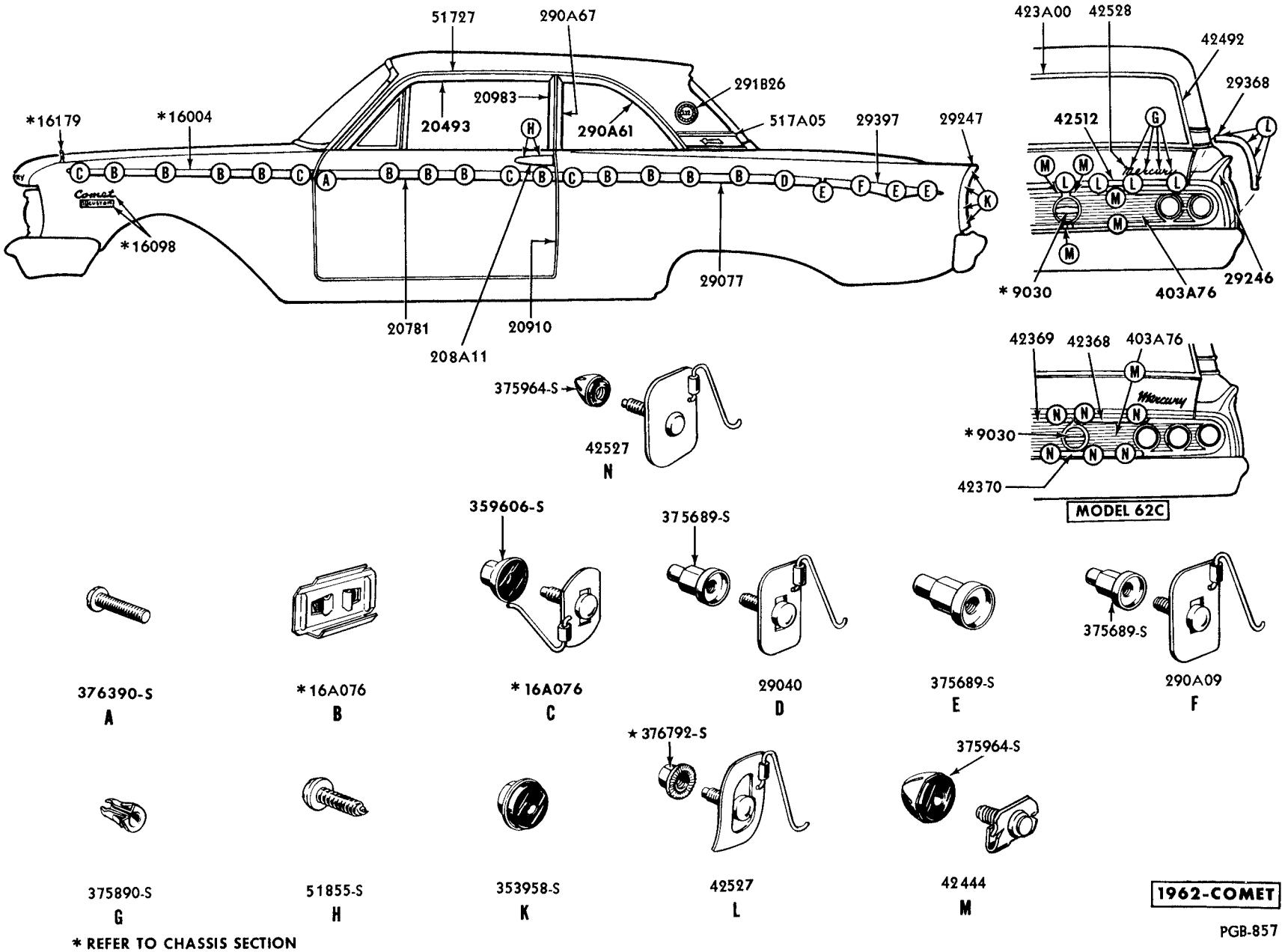

EXTERIOR MOULDINGS - MODEL 62

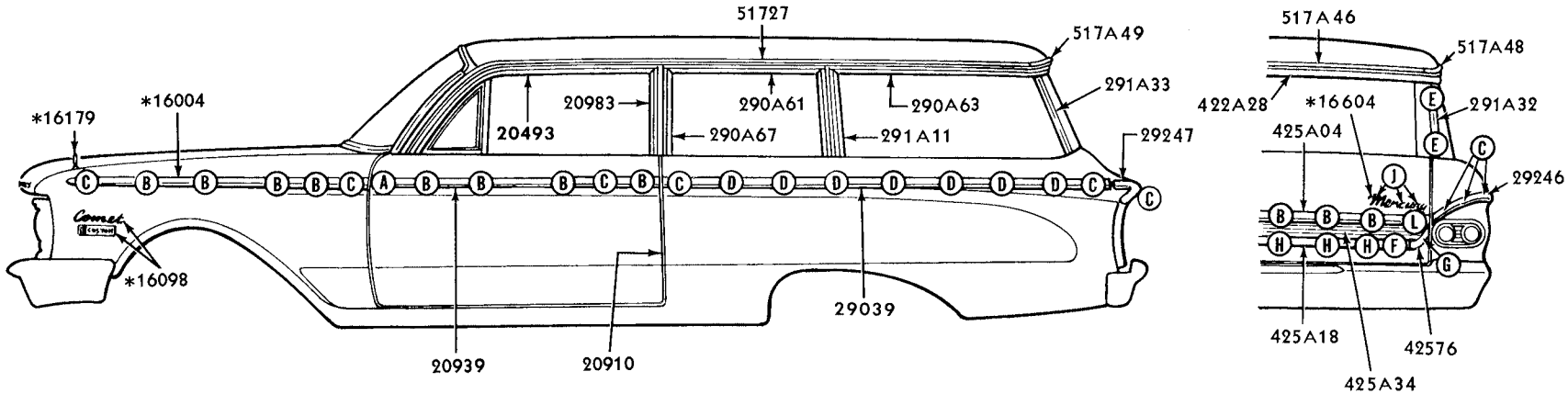

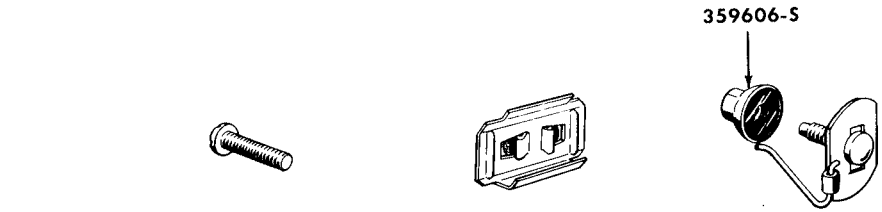

376390-S
A

*16A076
B

*16A076
C

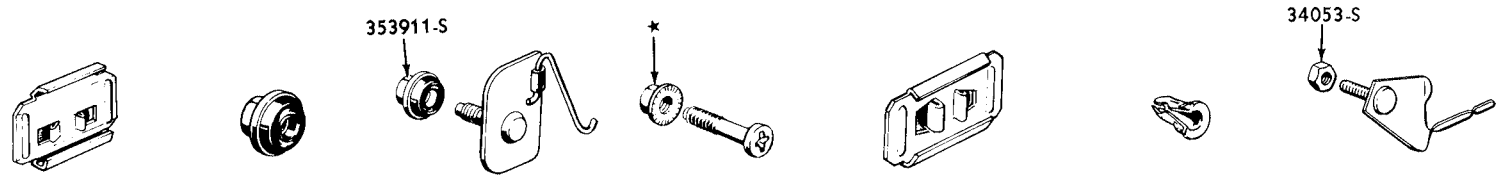

29120
D

353911-S
E

*16A076
F

50507-S
G

20842
H

375890-S
J

25034
L

1962-COMET

*REFER TO CHASSIS SECTION

PGB-859

EXTERIOR MOULDINGS - MODEL 59

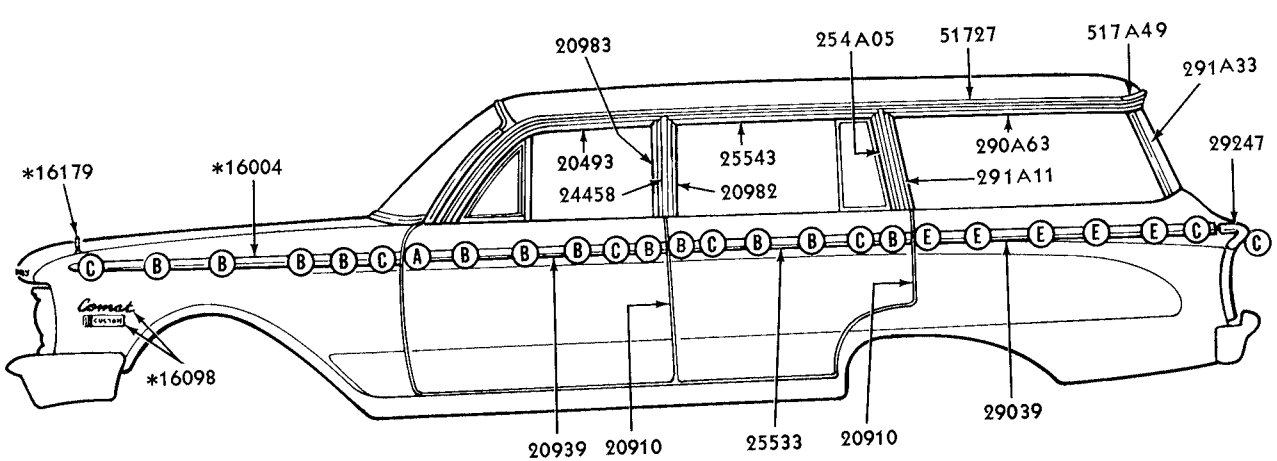

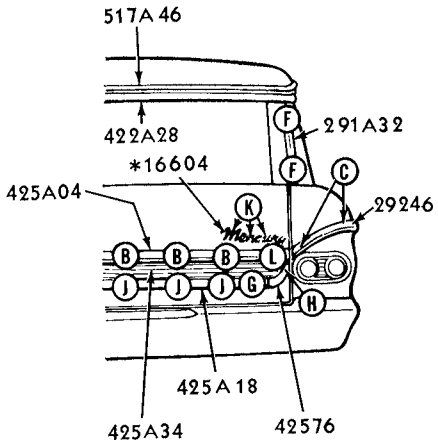

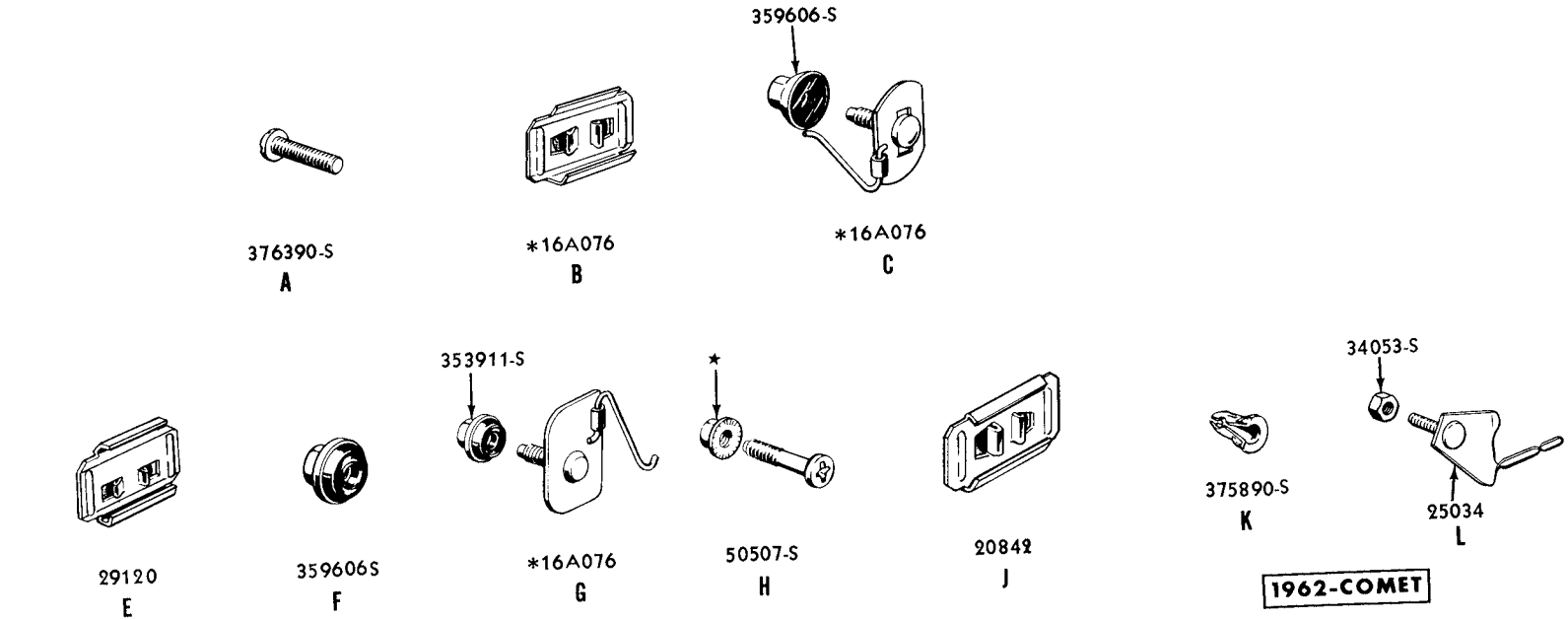

1962-COMET

PGB-860

* REFER TO CHASSIS SECTION

EXTERIOR MOULDINGS - MODELS 71A, B

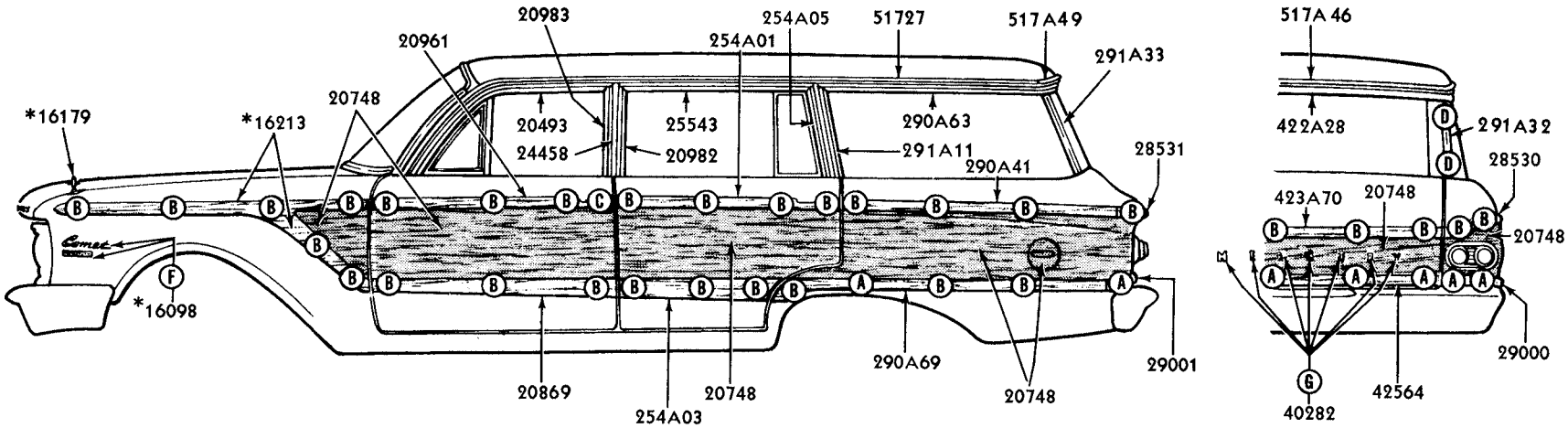

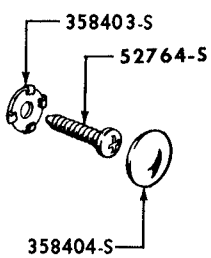

A

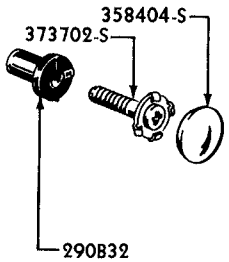

B

*376376-S

C

359606-S

D

375890-S100

F

373504-S

G

1962-COMET

* REFER TO CHASSIS SECTION

PGB-869

STATION WAGON EXTERIOR MOULDINGS, RAILS and DECALS - MODELS 71C, 71D

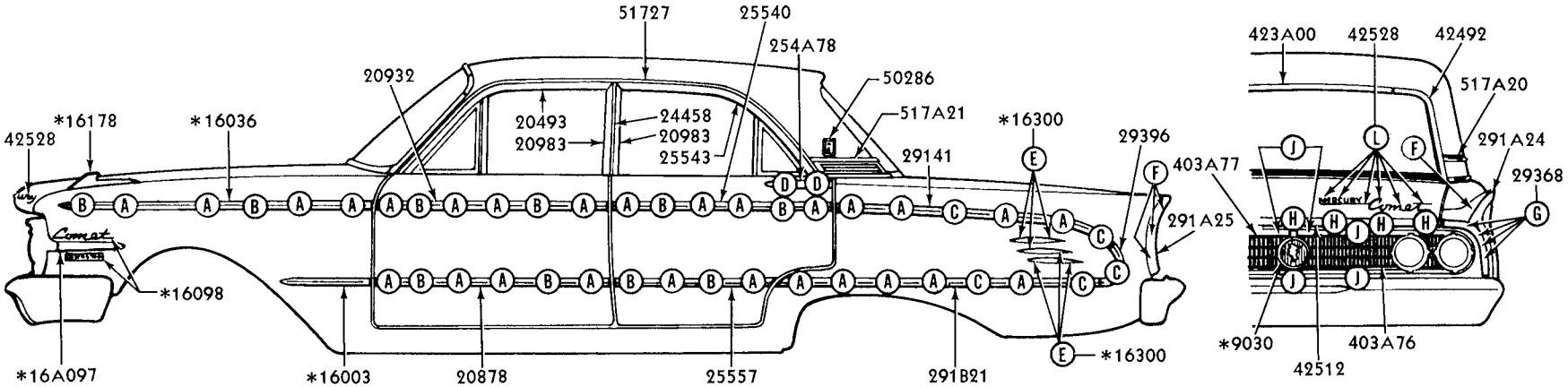

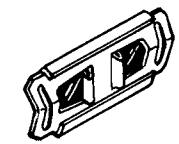

*C2OZ-16A076-A

A

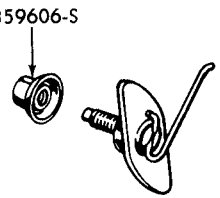

*C2DZ-16A076-C

B

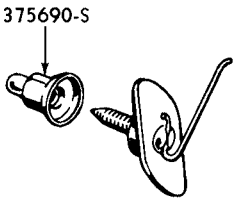

29120

C

51855-S

D

★376423-S

E

353958-S

F

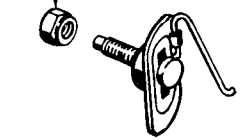

*C2DZ-16A076-C

G

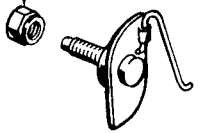

42527

H

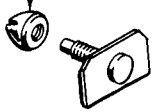

42444

J

375890-S

L

1963 COMET

*REFER TO CHASSIS SECTION

PGB-955

EXTERIOR MOULDINGS - MODEL 54

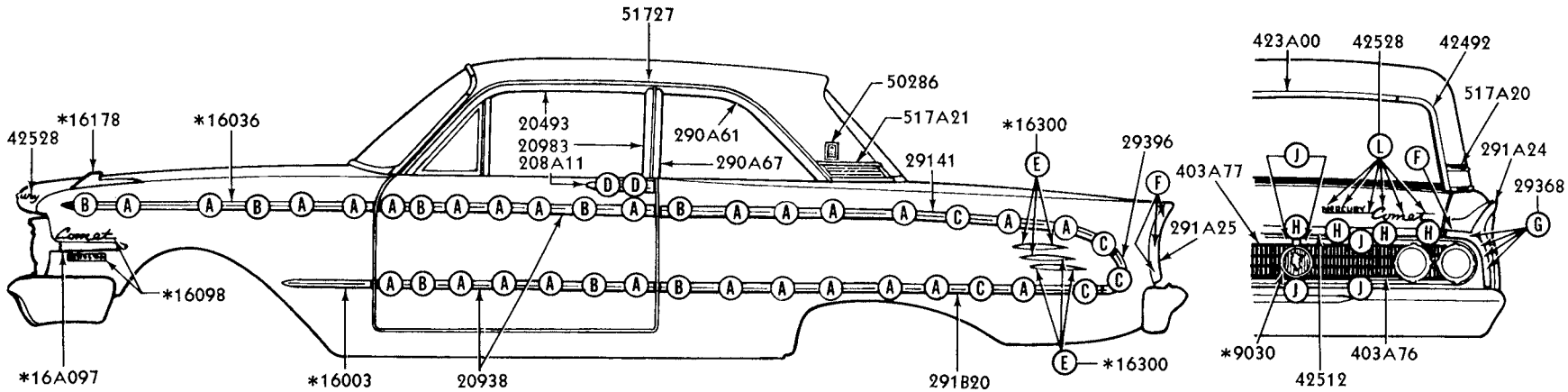

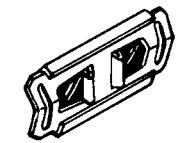

*C2OZ-16A076-A

A

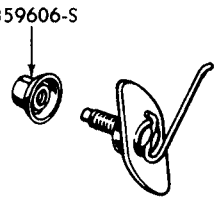

*C2DZ-16A076-C

B

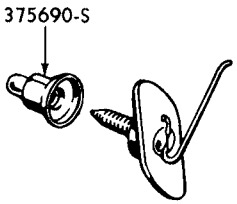

29120

C

51855-S

D

★376423-S

E

353958-S

F

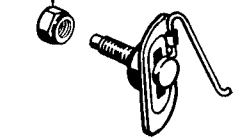

*C2DZ-16A076-C

G

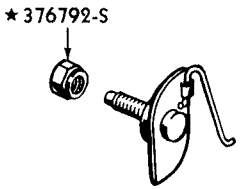

42527

H

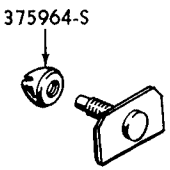

42444

J

375890-S

L

1963 COMET

* REFER TO CHASSIS SECTION

PGB-953

EXTERIOR MOULDINGS - MODELS 62A, B

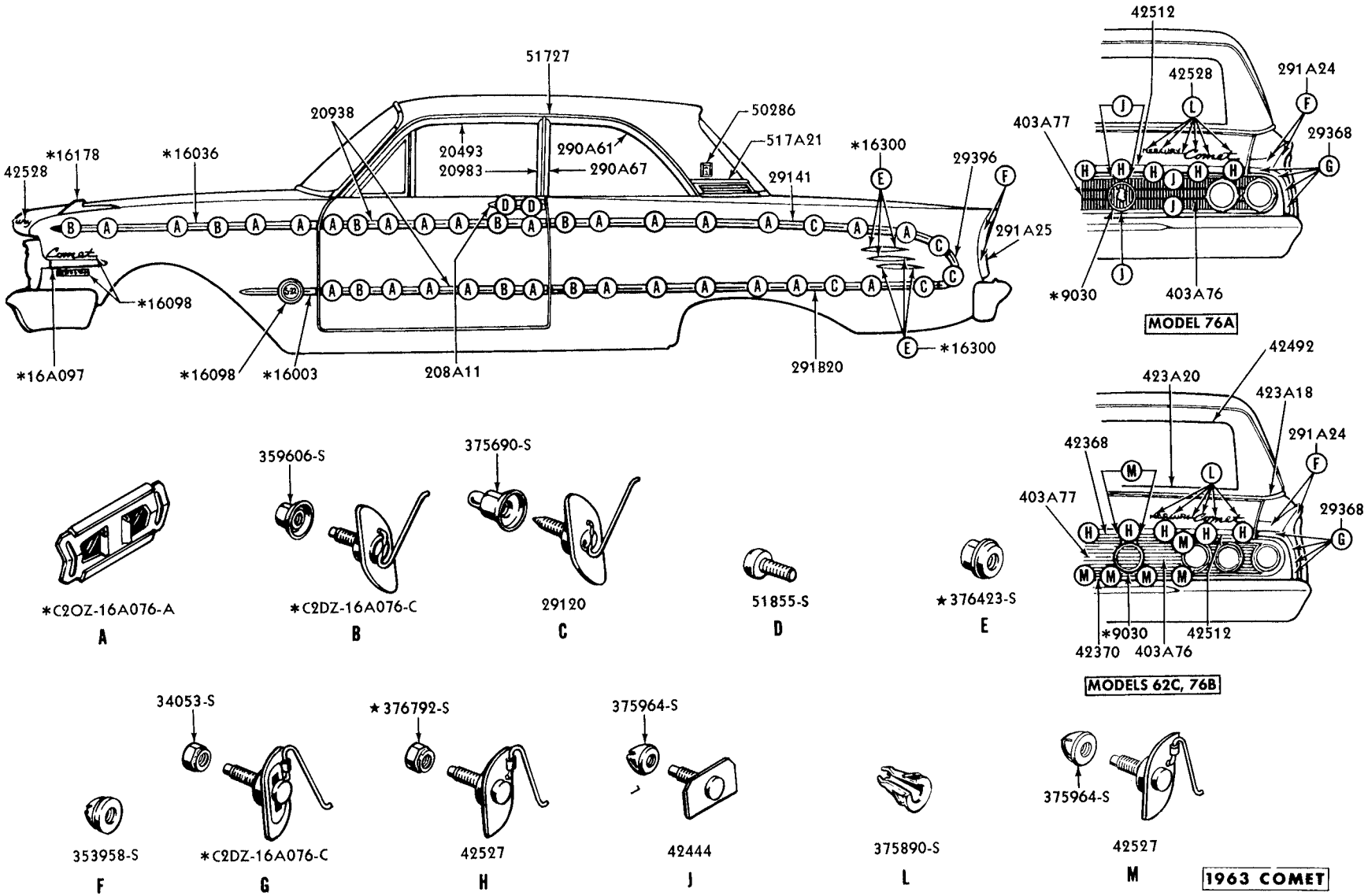

EXTERIOR MOULDINGS - MODELS 62C, 63, 76

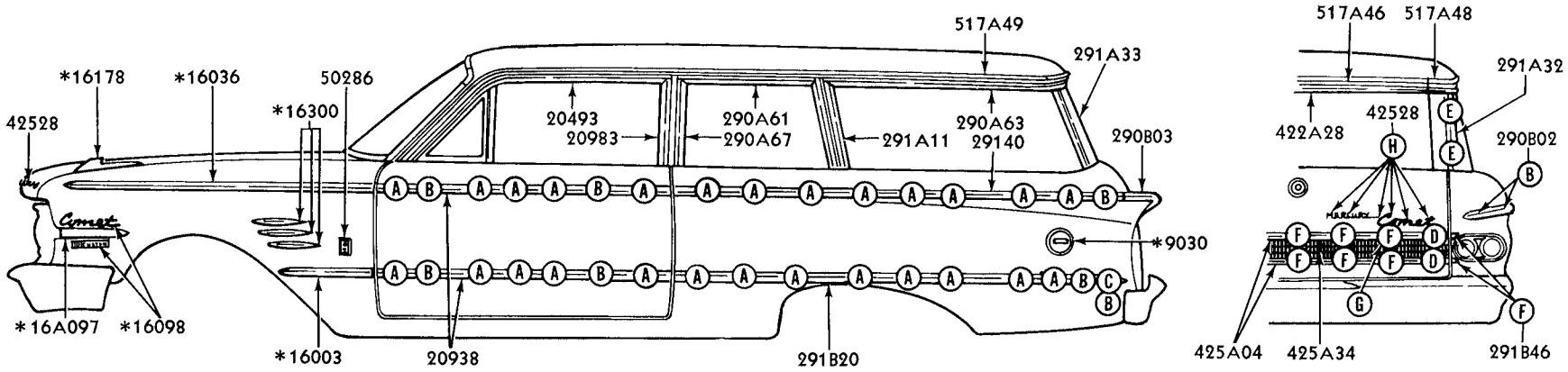

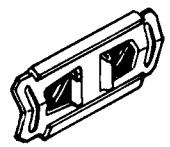

*C2OZ-16A076-A

A

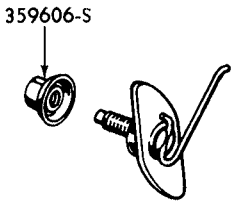

*C2DZ-16A076-C

B

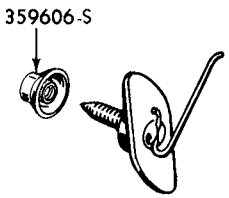

29120

C

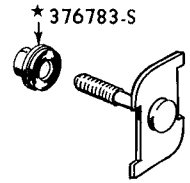

407A12

D

359606-S

E

376378-S

F

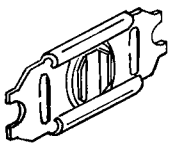

407A12

G

375890-S

H

*REFER TO CHASSIS SECTION

1963 COMET

PGB-956

EXTERIOR MOULDINGS - MODEL 59

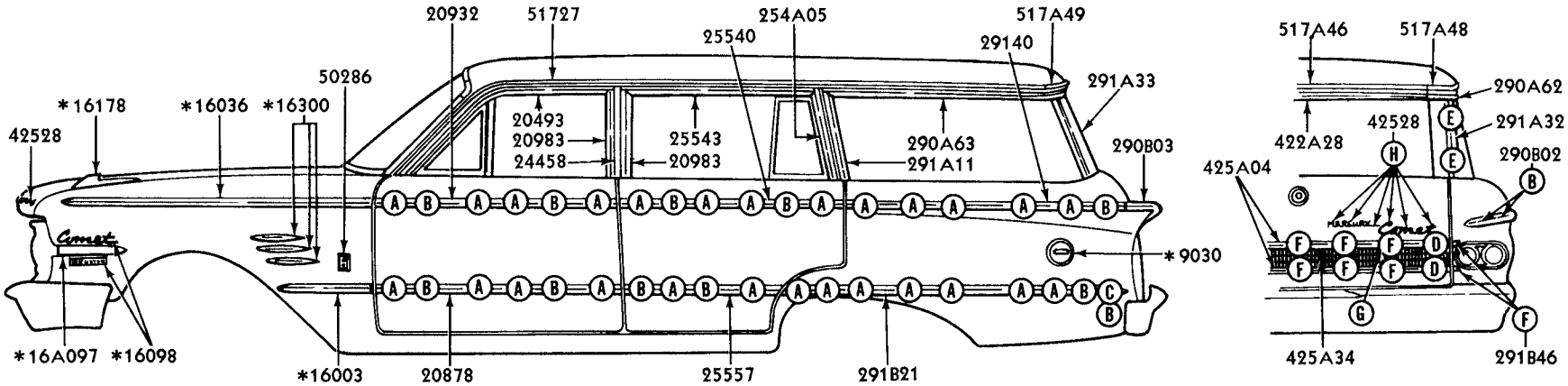

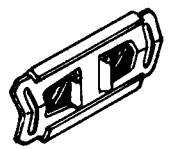

*C2OZ-16A076-A

A

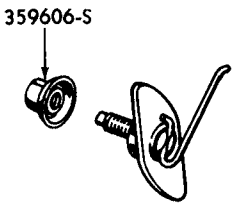

*C2DZ-16A076-C

B

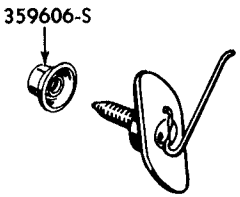

29120 RH ONLY

C

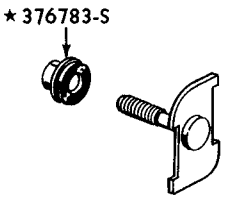

407A12

D

359606-S

E

376378-S

F

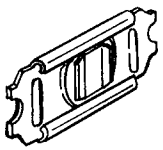

407A12

G

375890-S

H

1963 COMET

* REFER TO CHASSIS SECTION

PGB-957

EXTERIOR MOULDINGS - MODELS 71A,B

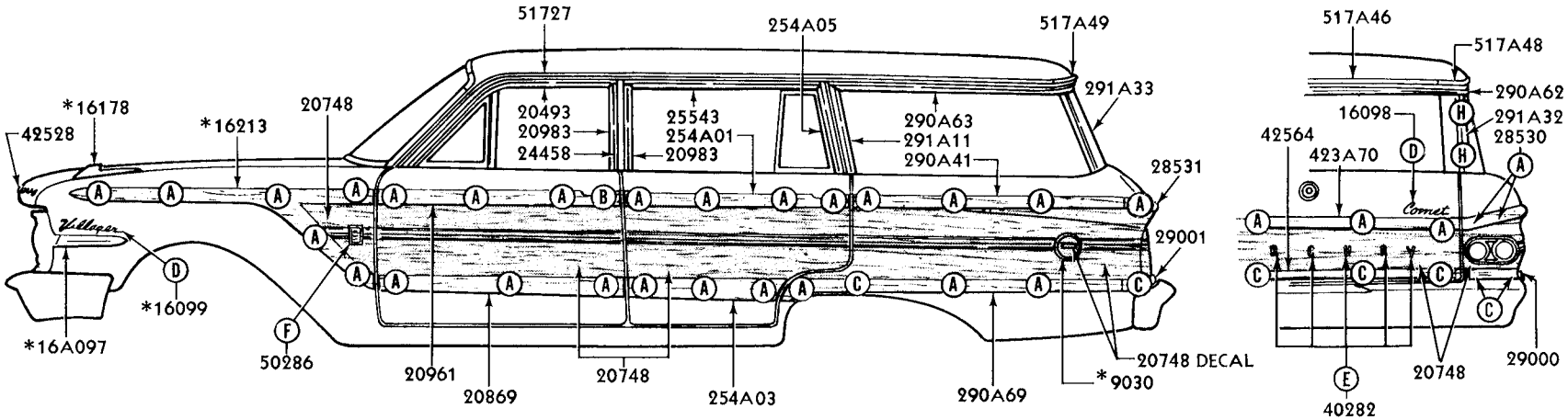

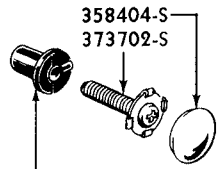

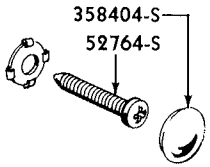

* REFER TO CHASSIS SECTION

1963 COMET

PGB-960

EXTERIOR MOULDINGS, RAILS and PANELS - MODELS 71C, D

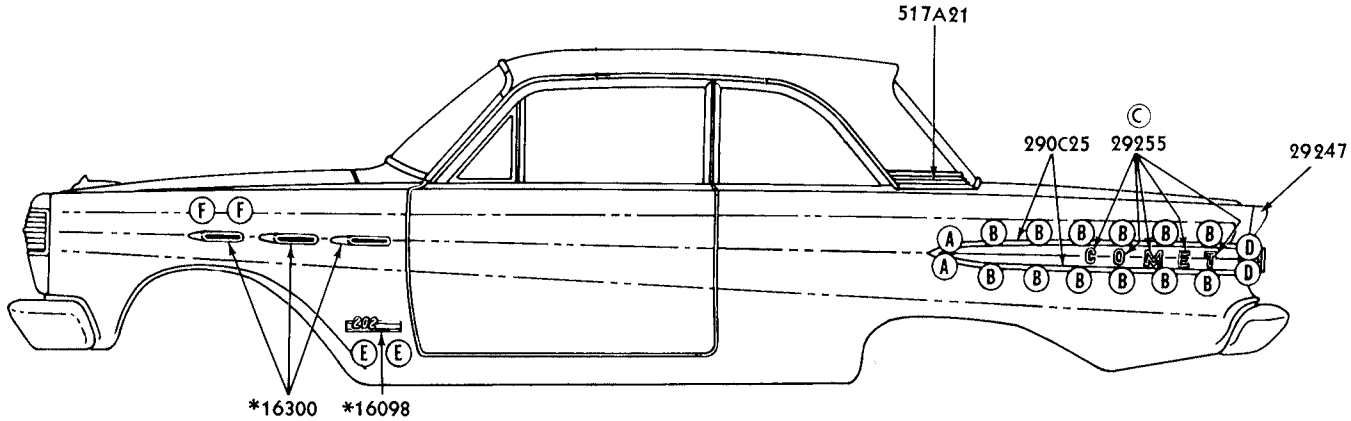

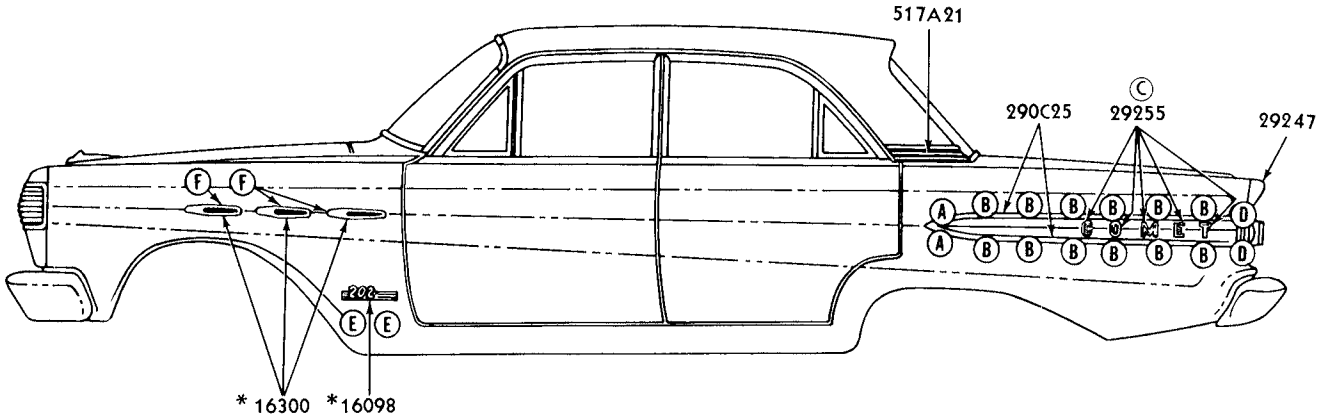

290C64
A

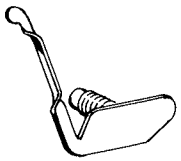

42634
B

★378728-S
C

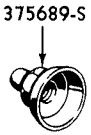

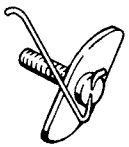

29120
D

378362-S
E

376331-S
F

* REFER TO CHASSIS SECTION

1964 COMET

PGB-1077

EXTERIOR MOULDINGS - MODEL 54A

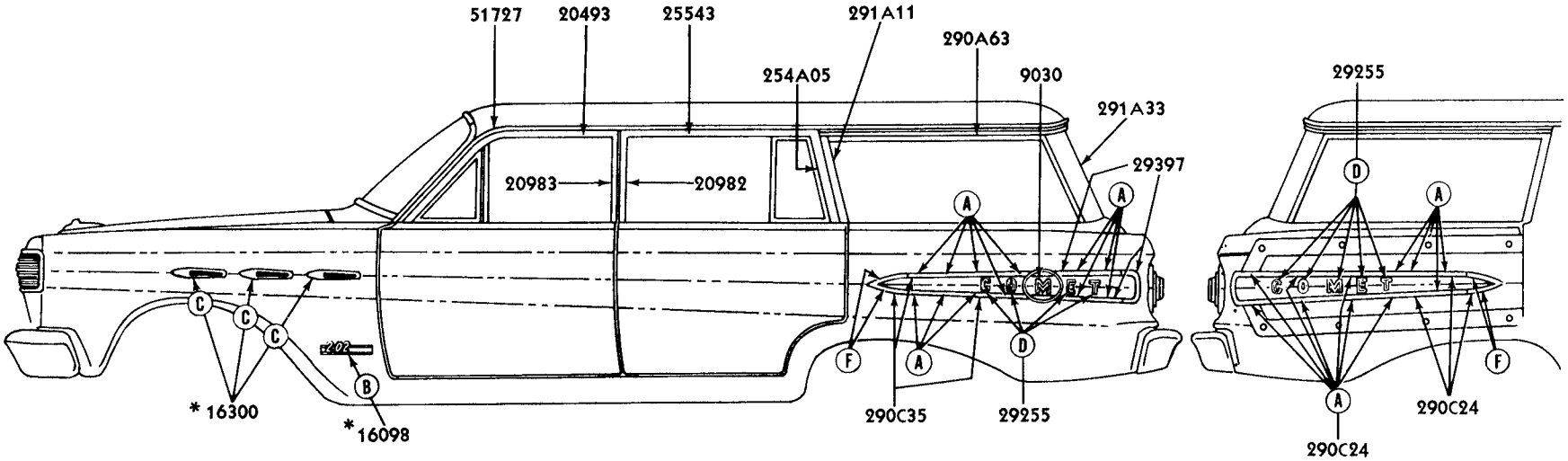

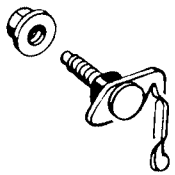

42364
A

378362-S
B

★376331-S
C

★378728-S
D

290C64
F

* REFER TO CHASSIS SECTION FOR APPLICATION

1964 COMET
PGB-1078

EXTERIOR MOULDINGS - MODEL 71A

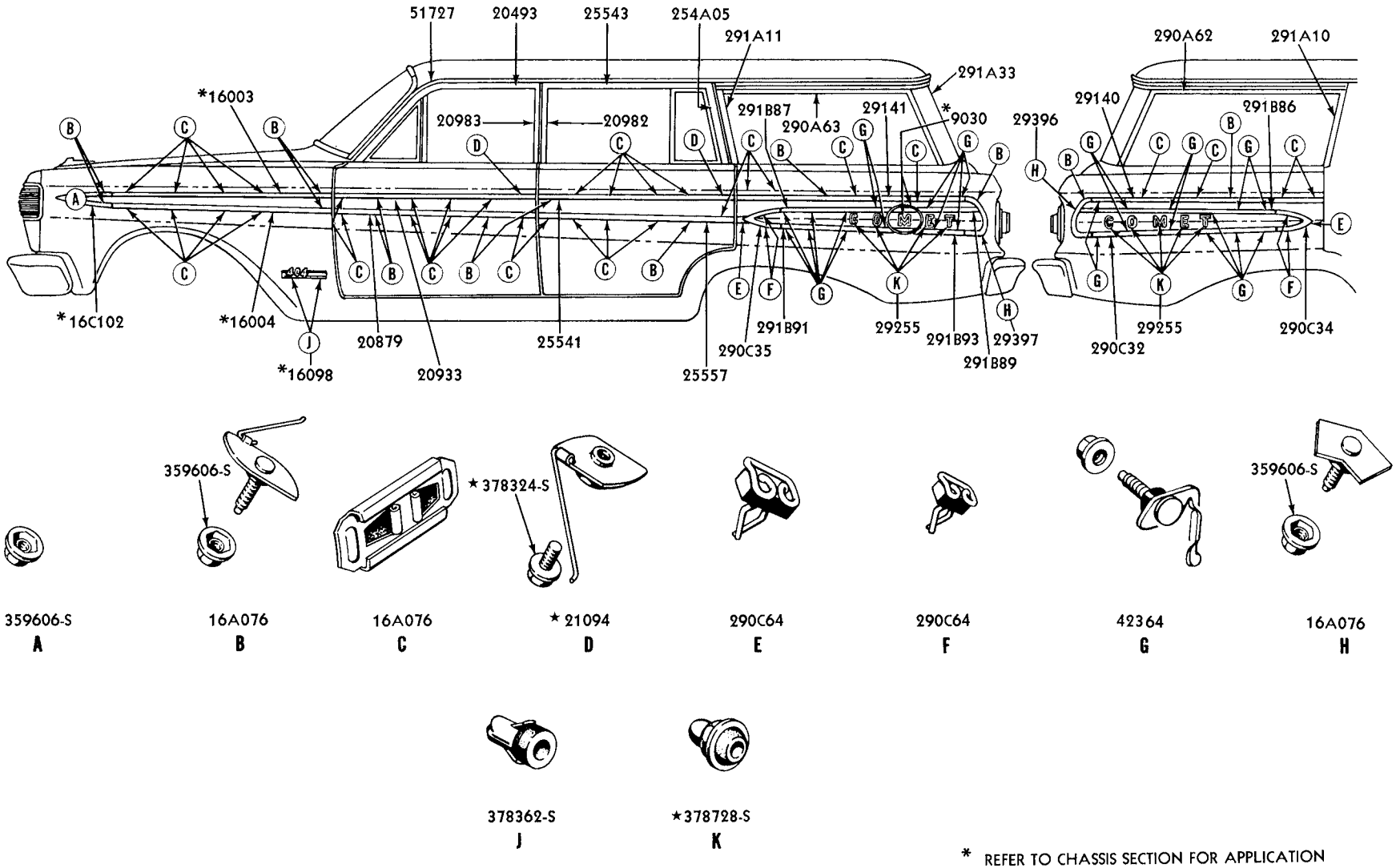

* REFER TO CHASSIS SECTION FOR APPLICATION

1964 COMET

PGB-1079

EXTERIOR MOULDINGS - MODEL 71B

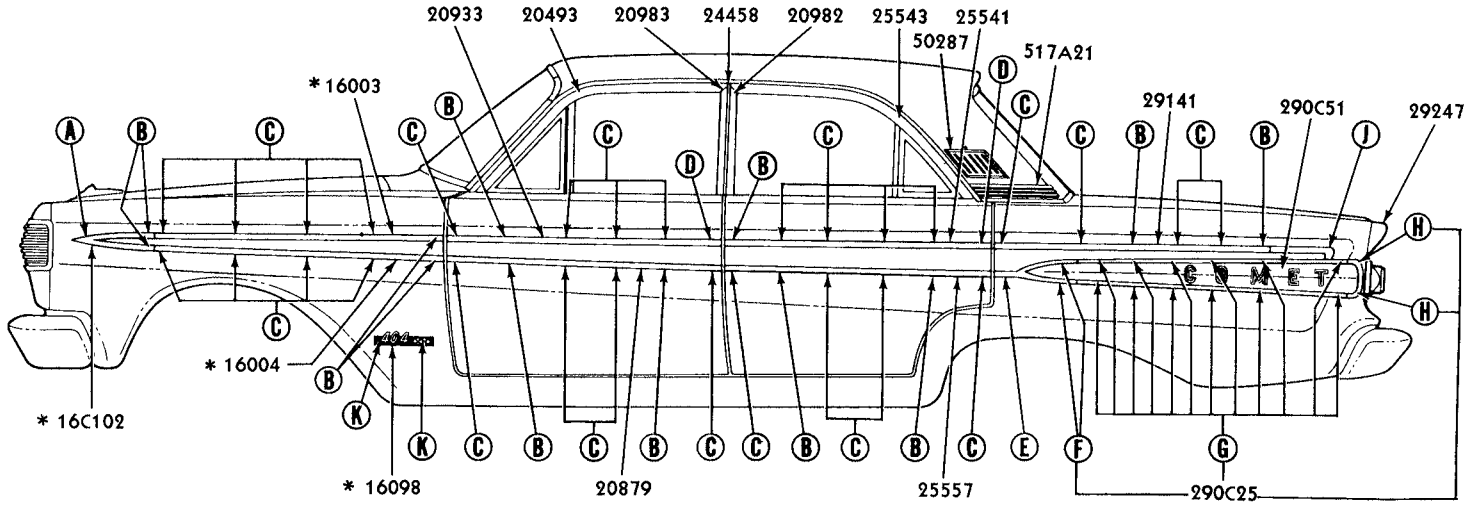

359606-S
A

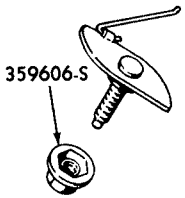

16A076
B

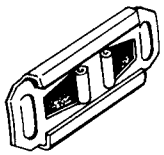

16A076
C

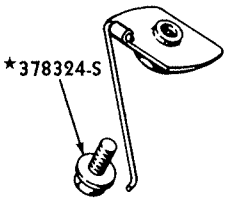

*21094
D

290C64
E

290C64
F

42364
G

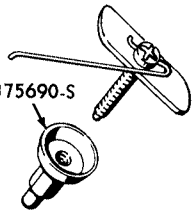

29120
H

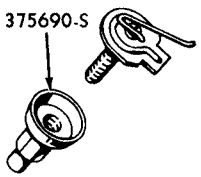

290A08
J

378362-S
K

*REFER TO CHASSIS SECTION FOR APPLICATION

1964 COMET

PGB-1135

EXTERIOR MOULDINGS - MODEL 54B

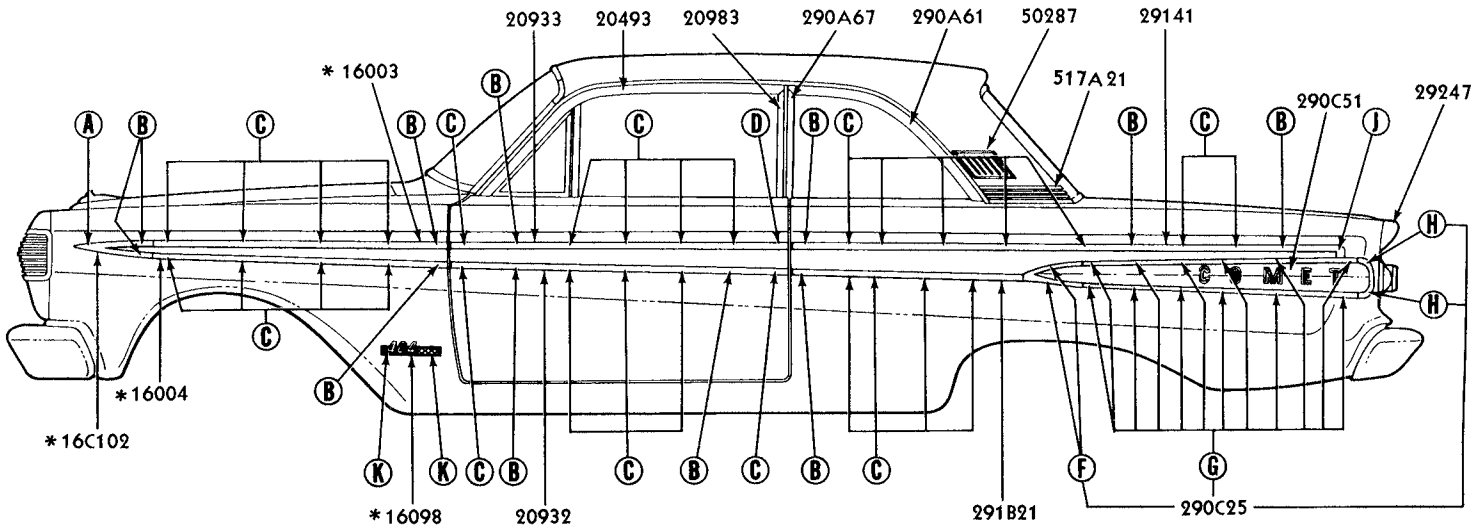

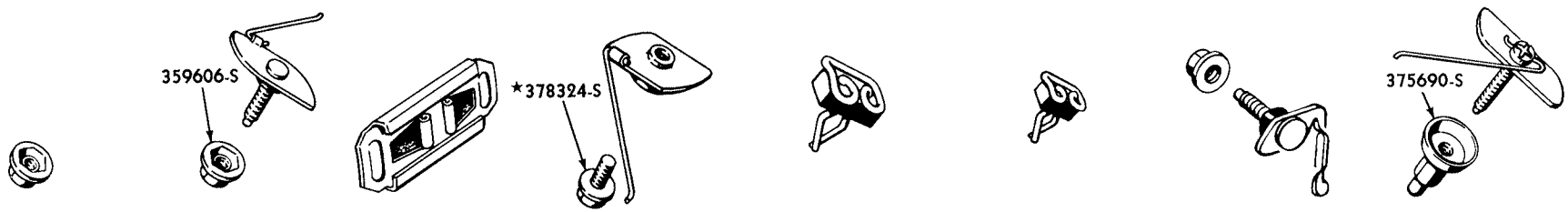

359606-S	16A076	16A076	*21094	290C64	290C64	42364	29120
A	B	C	D	E	F	G	H

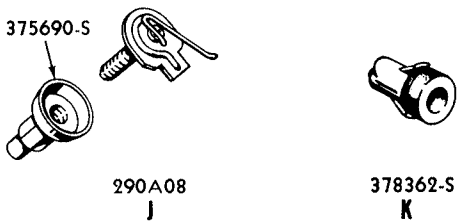

290A08	378362-S
J	K

*REFER TO CHASSIS SECTION FOR APPLICATION

1964 COMET

PGB-1134

EXTERIOR MOULDINGS - MODEL 62B

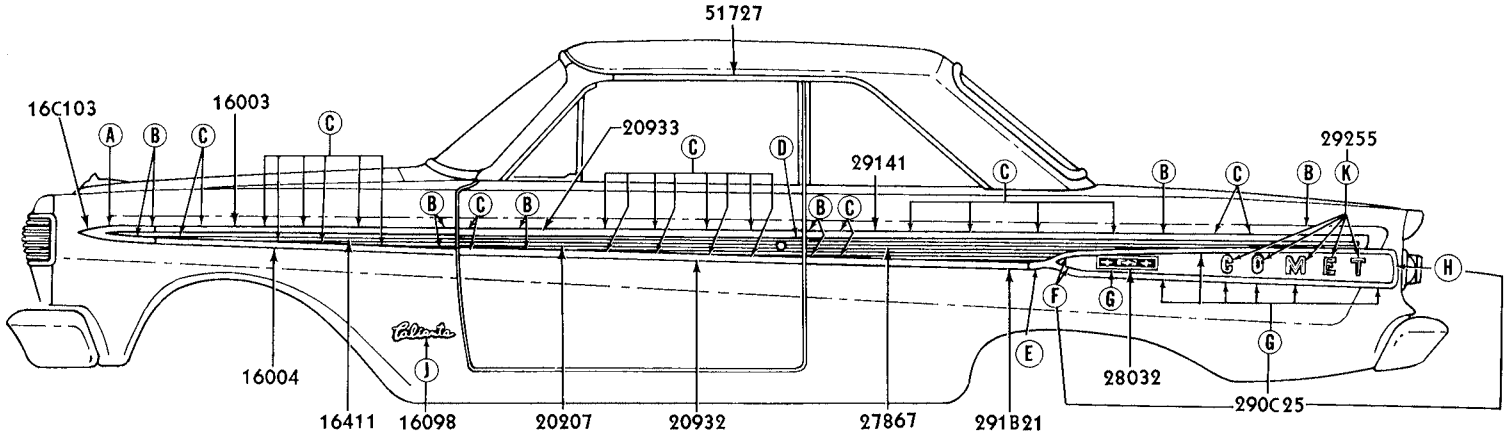

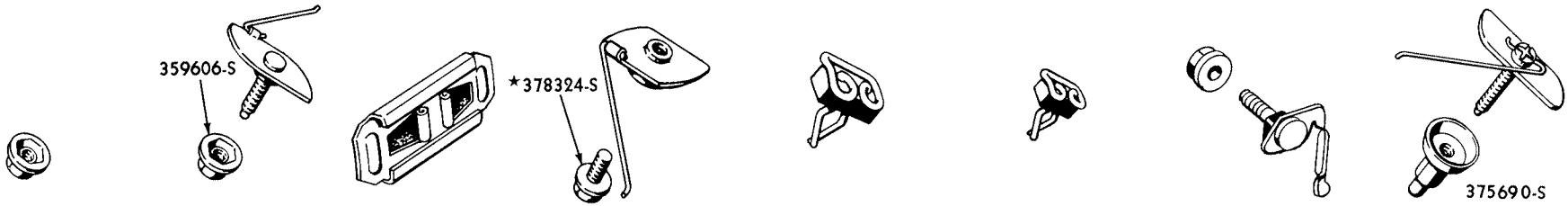

359606-S	16A076	16A076	★21094	290C64	290C64	42364	29120
A	B	C	D	E	F	G	H

378362-S	★378728-S
J	K

* REFER TO CHASSIS SECTION FOR APPLICATION

1964 COMET

PGB-1115

EXTERIOR MOULDINGS - MODELS 63C, D, 76B, D

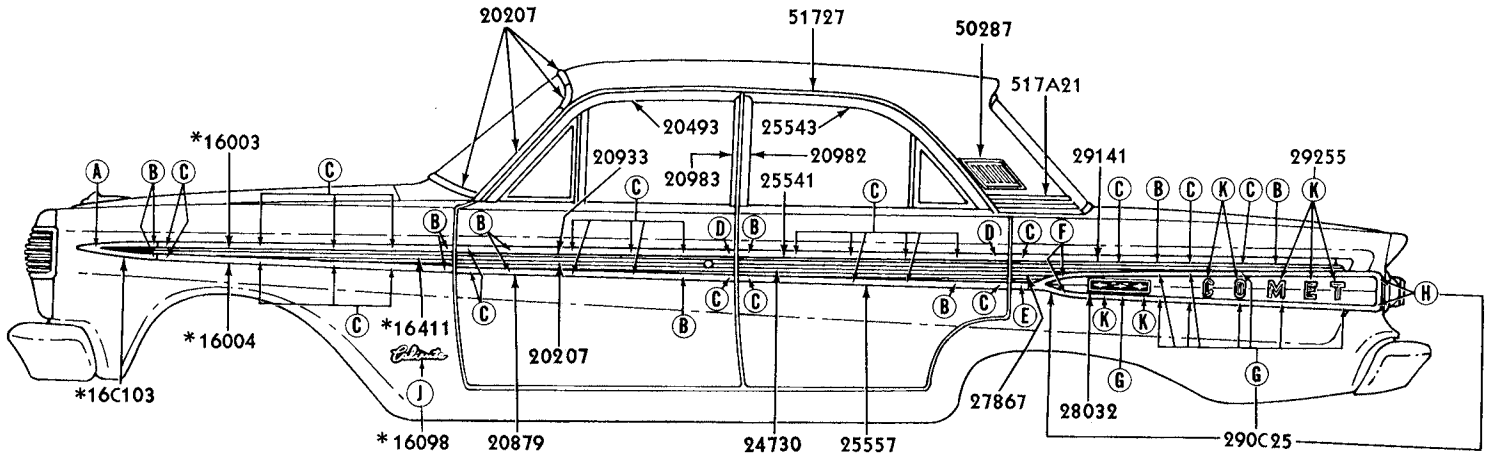

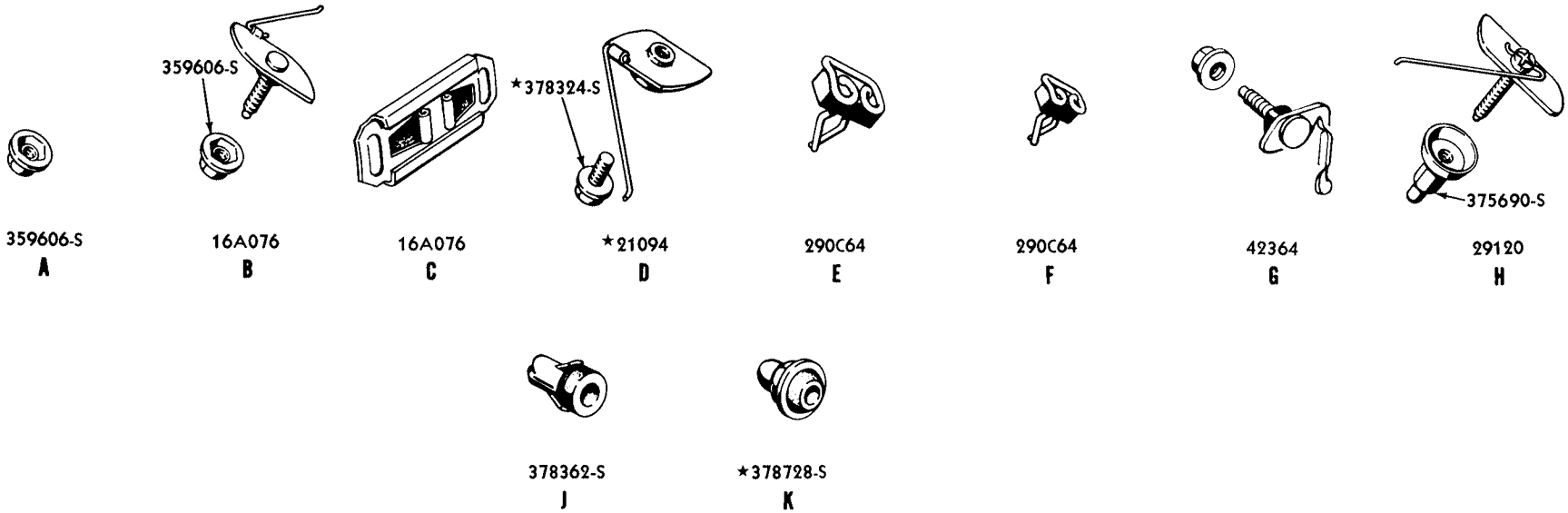

* REFER TO CHASSIS SECTION FOR APPLICATION

1964 COMET

PGB-1116

EXTERIOR MOULDINGS - MODEL 54C, D

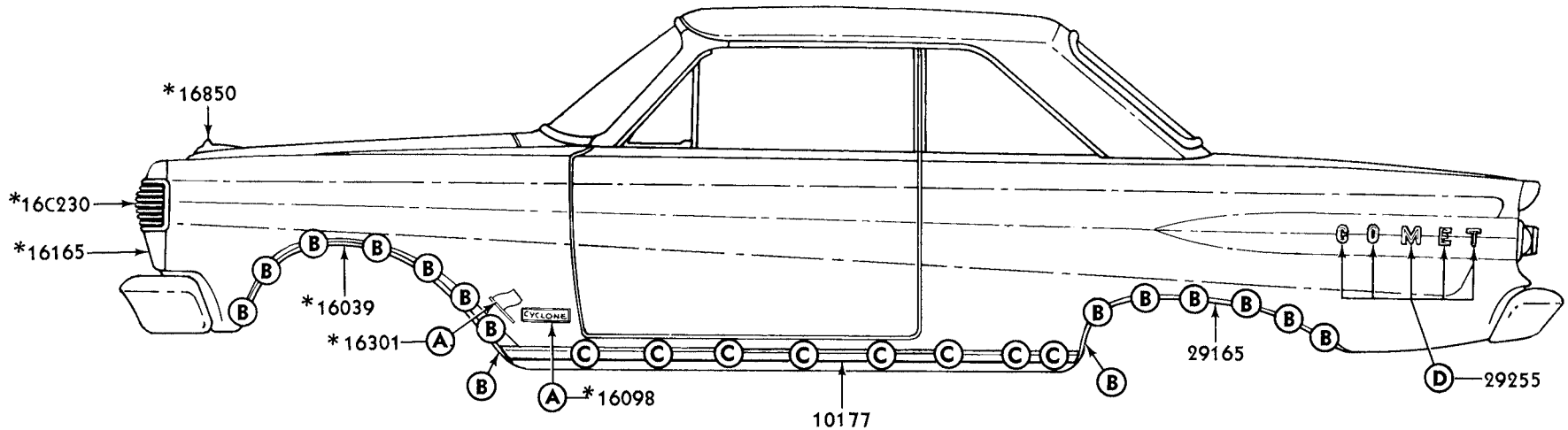

*REFER TO CHASSIS SECTION

378362-S
A

★376387-S
B

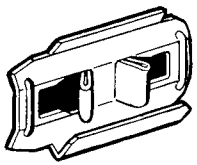

* 16A076
C

★378728-S
D

1964 COMET
PGB-1146

EXTERIOR MOULDINGS - MODEL 63E

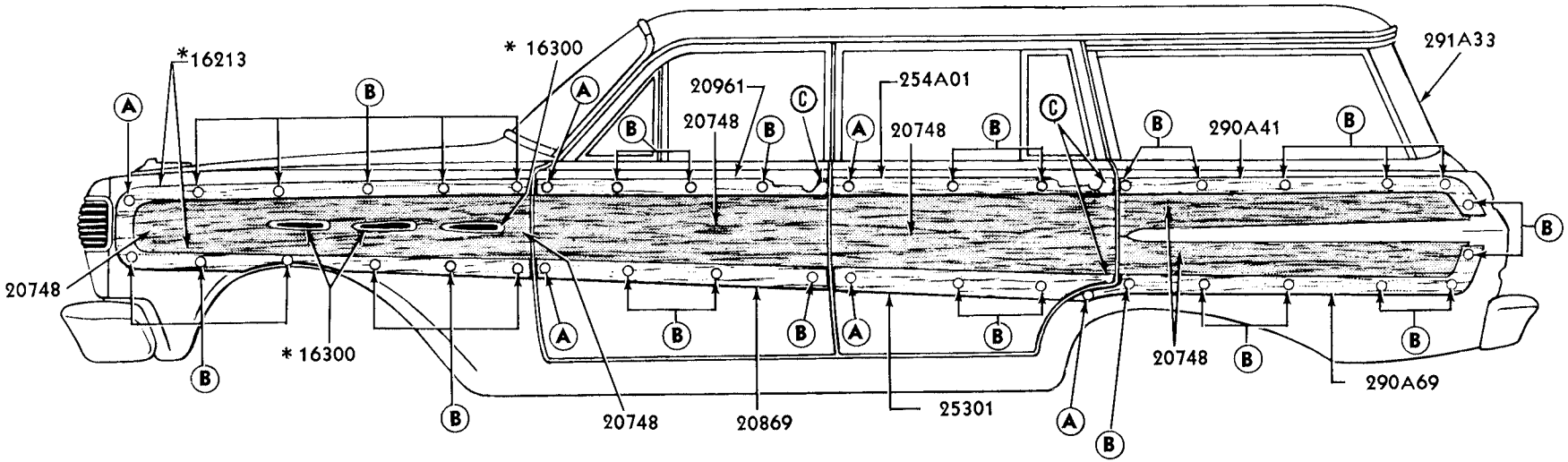

* REFER TO CHASSIS SECTION

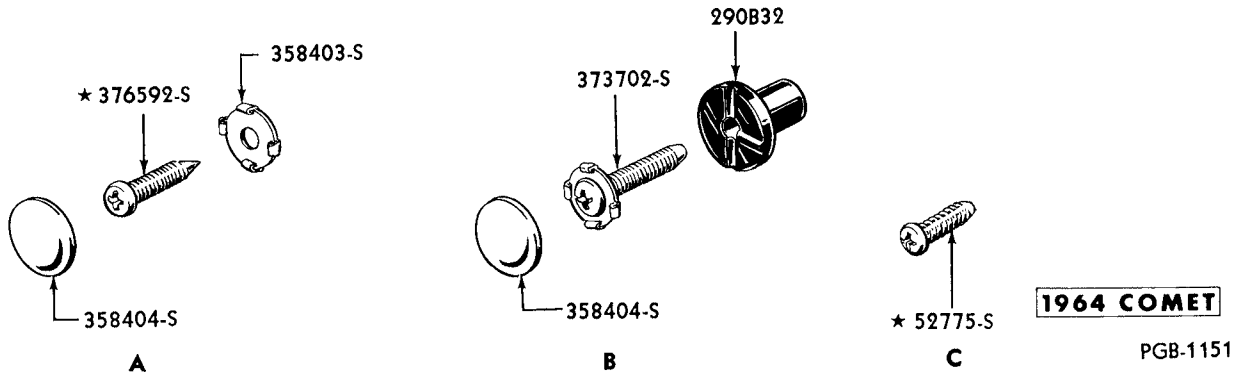

1964 COMET

PGB-1151

EXTERIOR WOOD RAILS and PANELS - MODEL 71

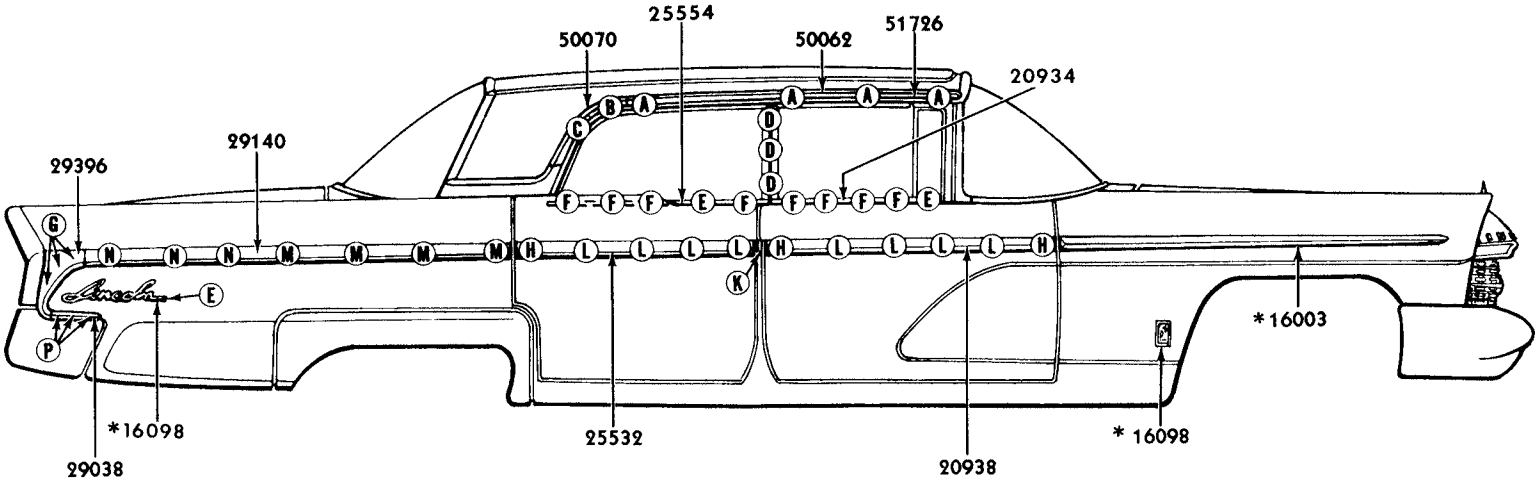

* REFER TO CHASSIS SECTION

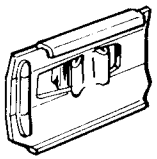

50004
A

* 51755-S
B

370680-S
C

* 51057-S
D

353577-S
E

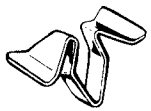

29128
F

354397-S
G

26457-S

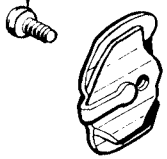

29316
H

* 51750-S
K

* 354672-S

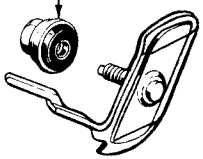

290A96
L

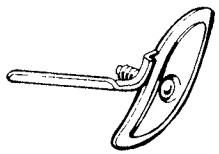

29120
M

* 354672-S

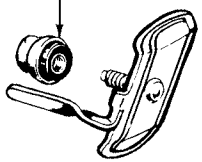

290A08
N

* 372010-S
P

1960 LINCOLN

PLB-553

EXTERIOR MOULDING - MODELS 53, 57

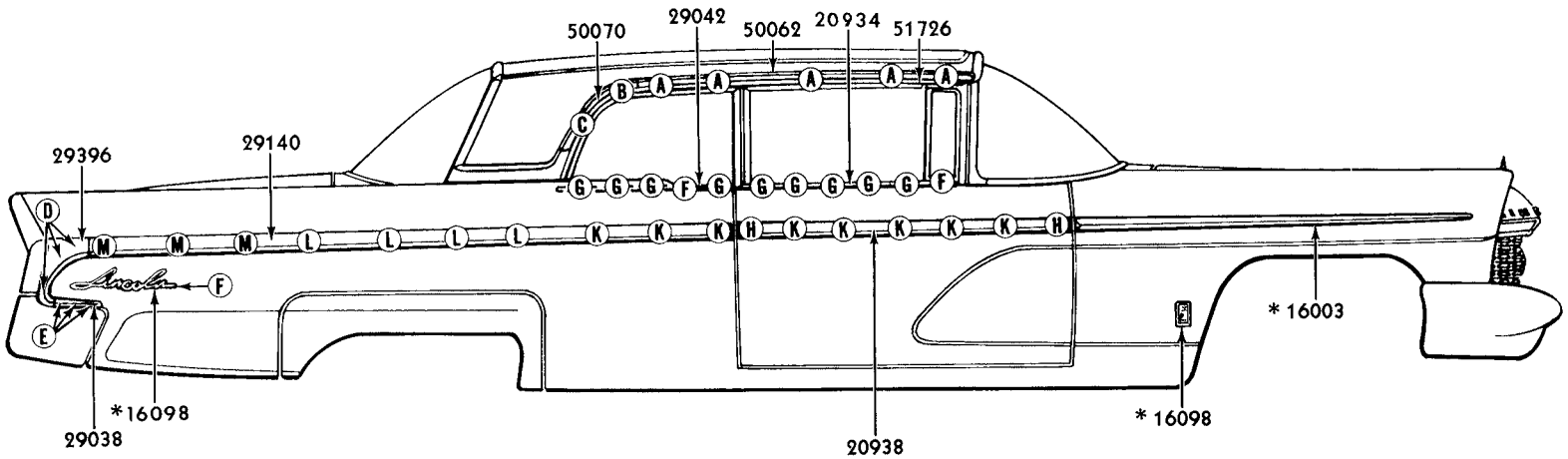

* REFER TO CHASSIS SECTION

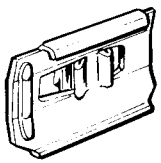

50004
A

* 51755-S
B

370680-S
C

354397-S
D

* 372010-S
E

353577-S
F

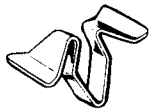

29128
G

26457-S

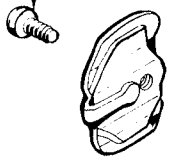

29316
H

* 354672-S

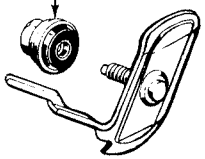

290A96
K

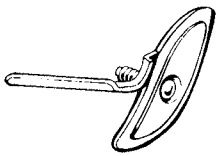

29120
L

* 354672-S

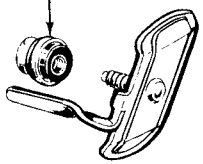

290A08
M

1960 LINCOLN

PLB-554

EXTERIOR MOULDING - MODEL 63

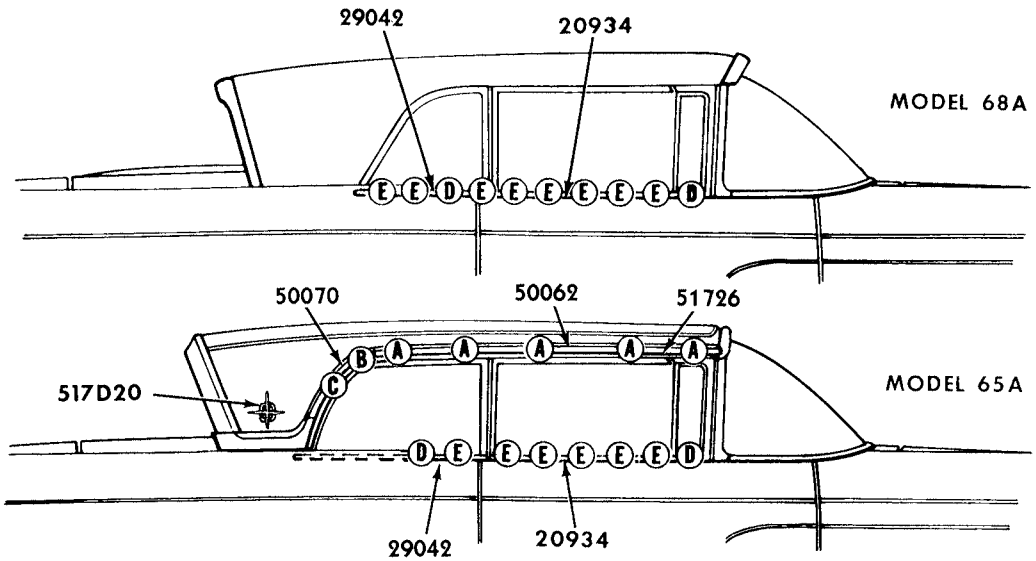

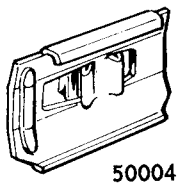

50004

A

★ 51755-S

B

370680-S

C

353577-S

D

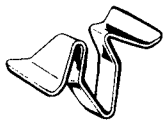

29128

E

1960 LINCOLN

PLB-556

EXTERIOR MOULDING - MODELS 65, 68

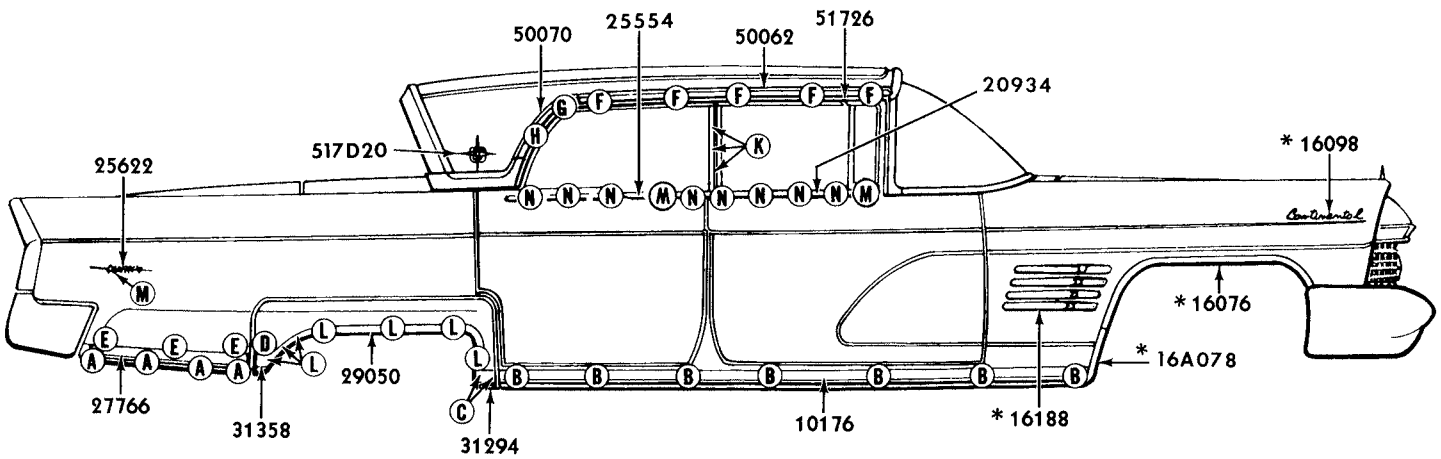

* REFER TO CHASSIS SECTION

MODEL 75A

* 51756-S
A

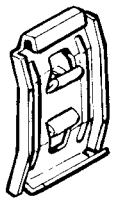

10182
B

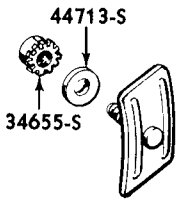

20783
C

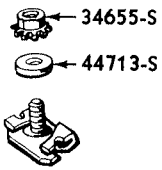

29302
D

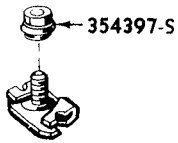

29302
E

1960 LINCOLN

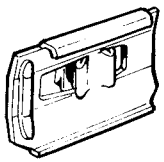

50004
F

* 51755-S
G

370680-S
H

* 51057-S
K

* 372010-S
L

370030-S
M

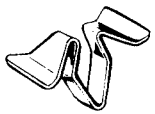

29128
N

PLB-555

EXTERIOR MOULDING - MODELS 54, 75

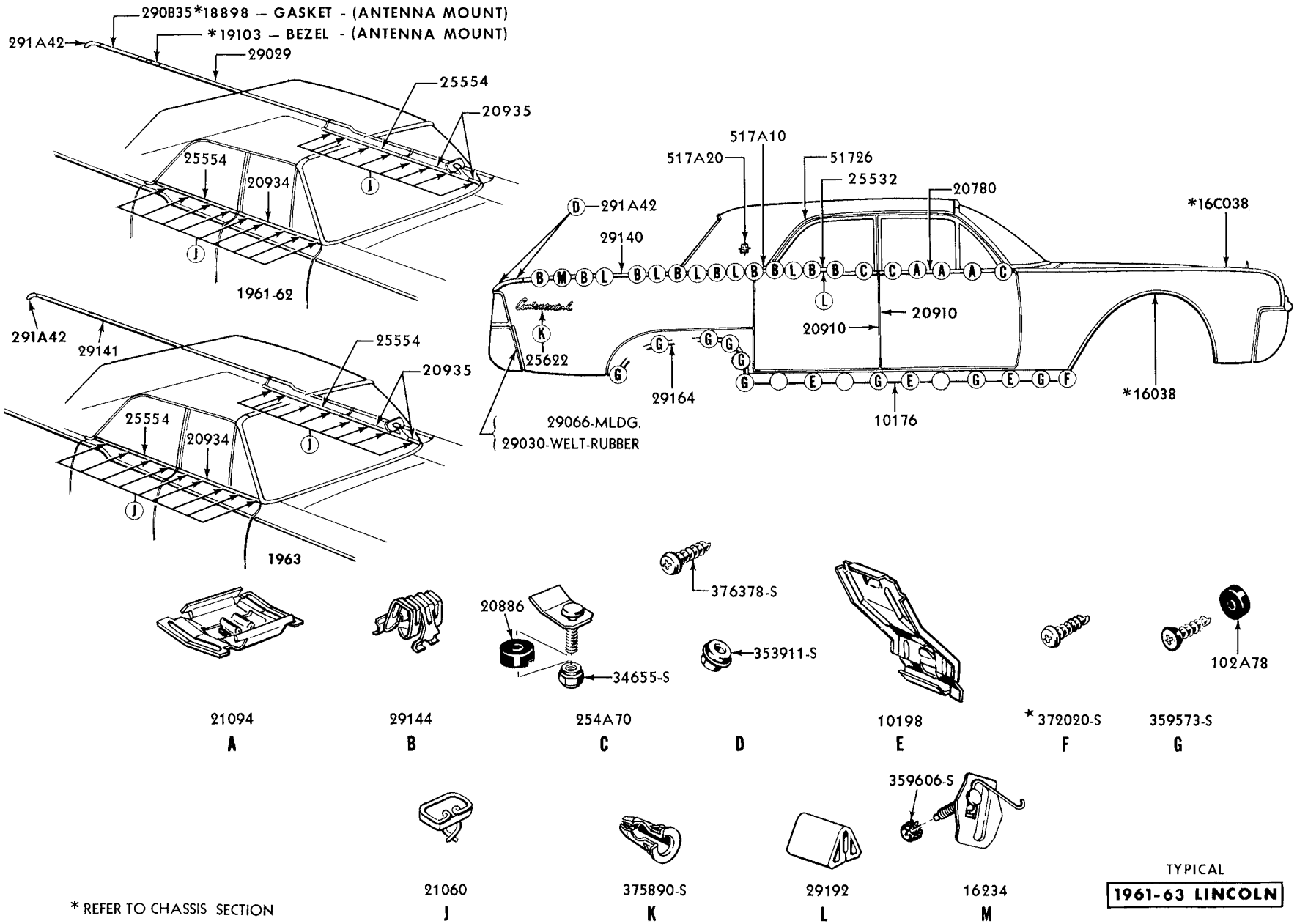

EXTERIOR MOULDINGS - ALL MODELS

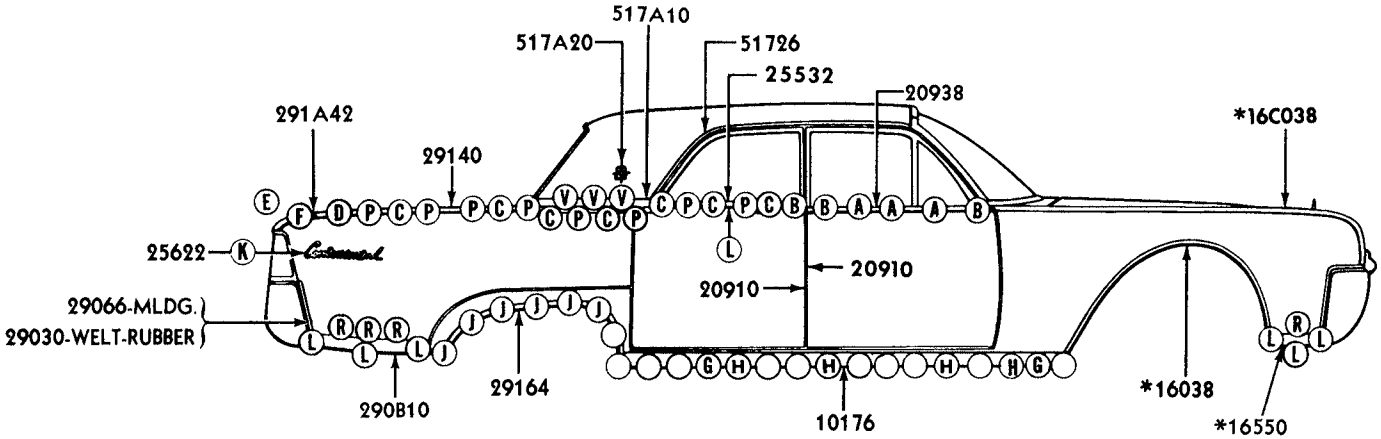

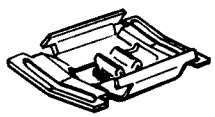

21094
A

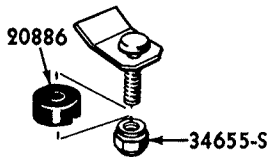

254A70
B

29144
C

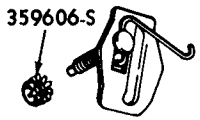

16234
D

*372020-S
E

353911-S
F

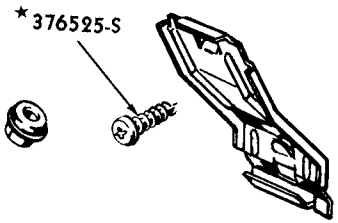

10182
G

*376361-S
H

359573-S
J

375890-S
K

376378-S
L

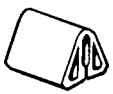

29192
P

291A66
R

371882-S
V

* REFER TO CHASSIS SECTION

1964 LINCOLN

PLB-1062

EXTERIOR MOULDINGS

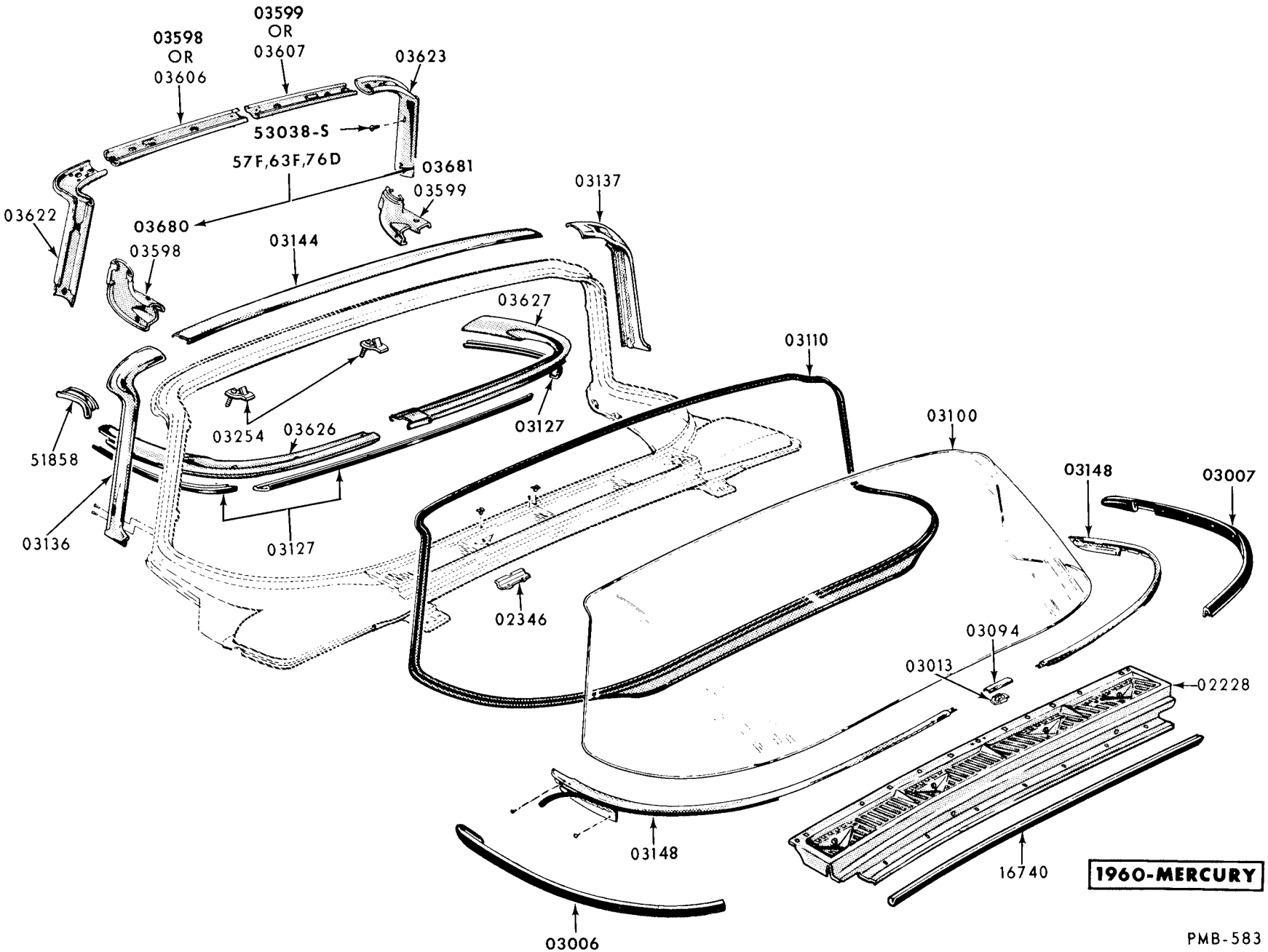

WINDSHIELD and RELATED PARTS - EXCEPT CONVERTIBLE

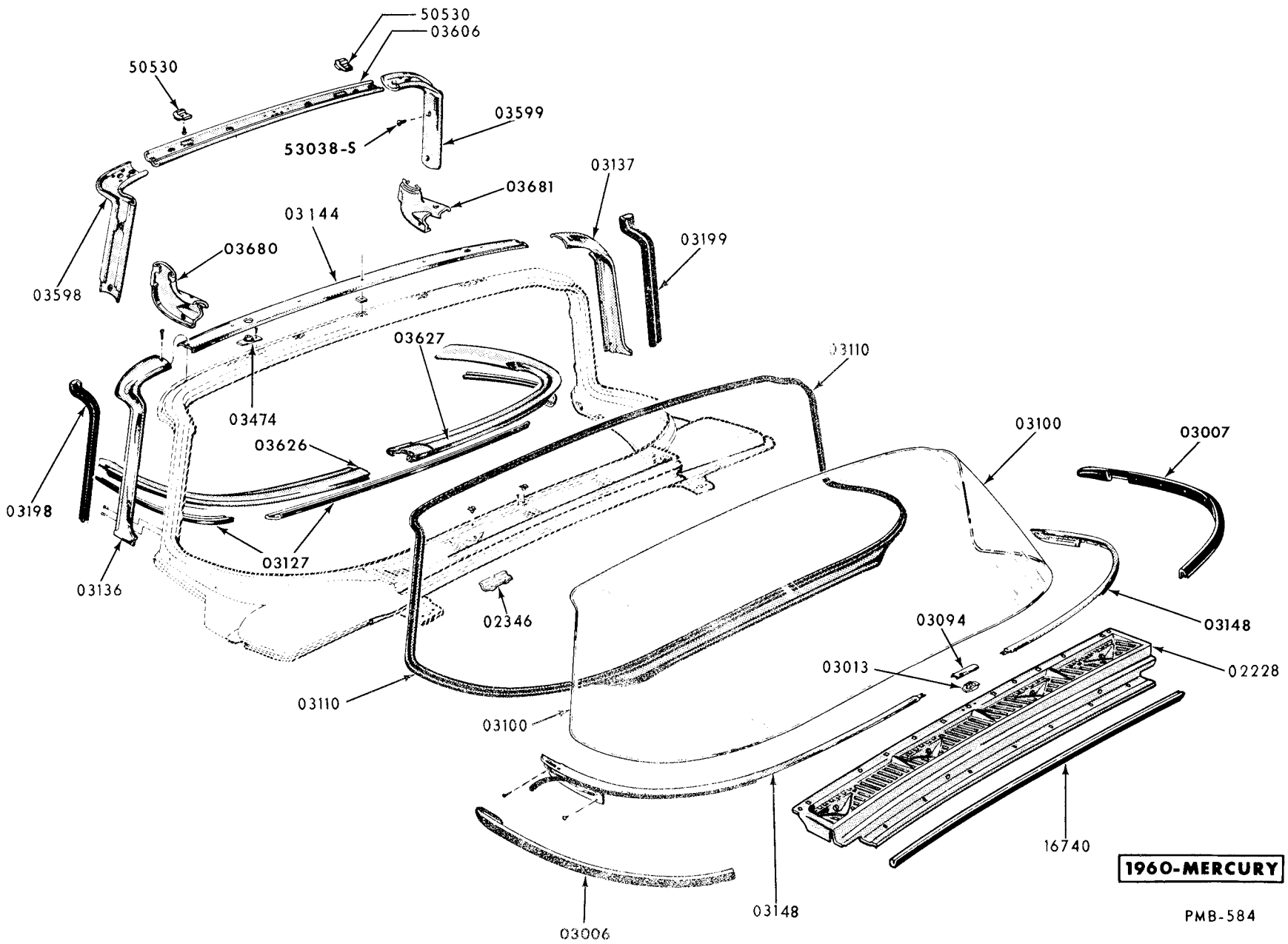

WINDSHIELD and RELATED PARTS - CONVERTIBLE

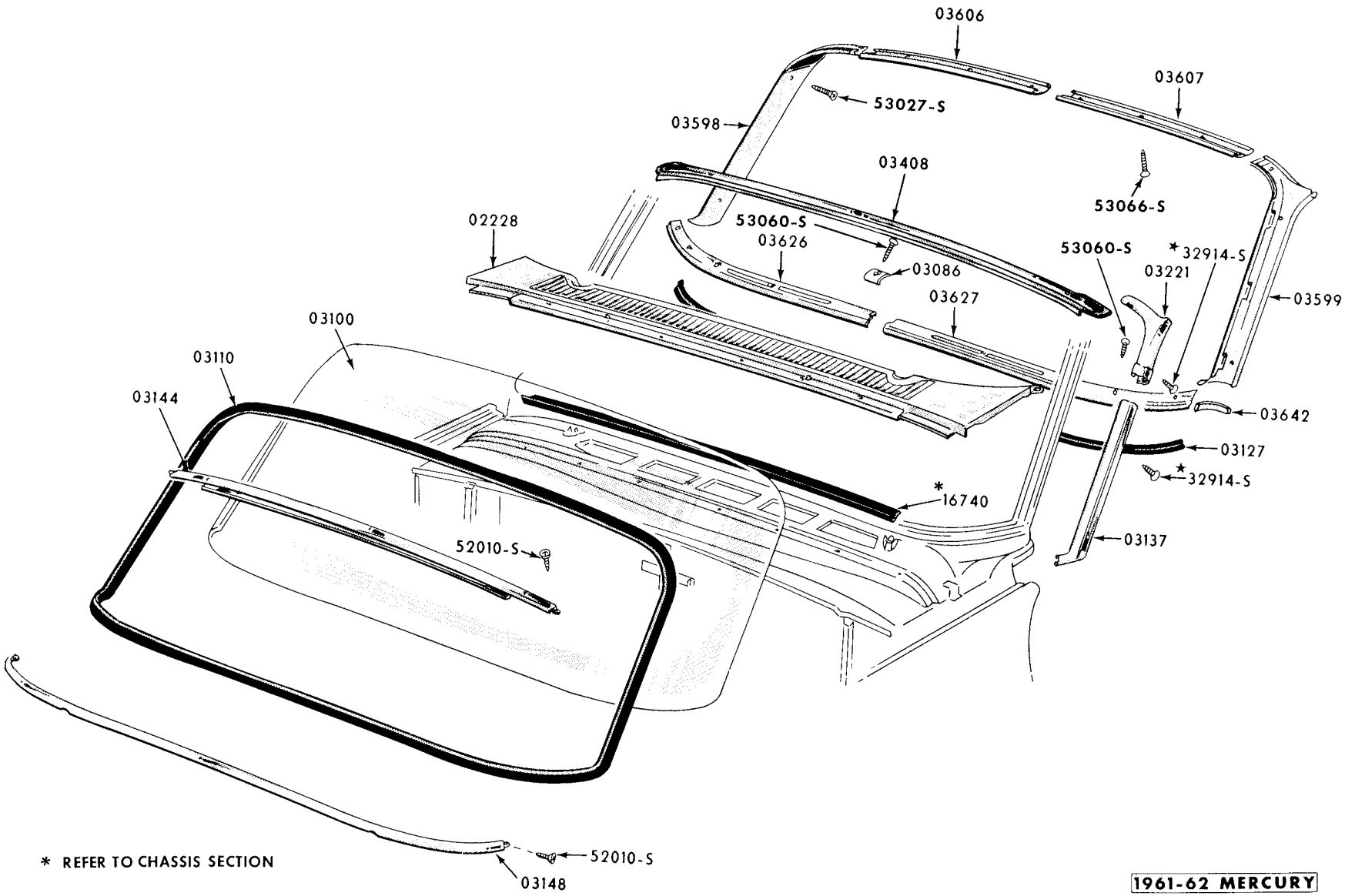

WINDSHIELD and RELATED PARTS - EXCEPT CONVERTIBLE

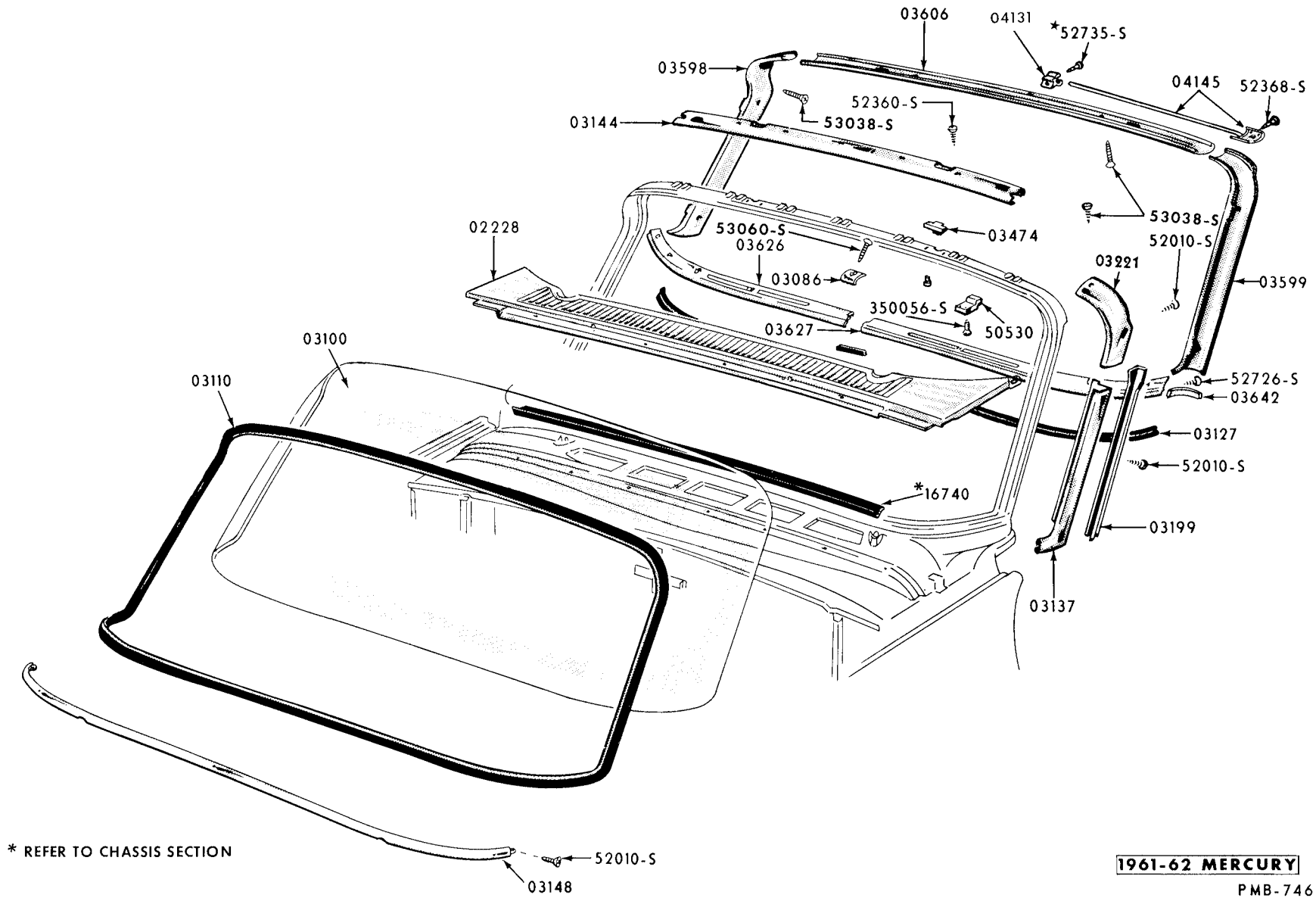

WINDSHIELD and RELATED PARTS - CONVERTIBLE

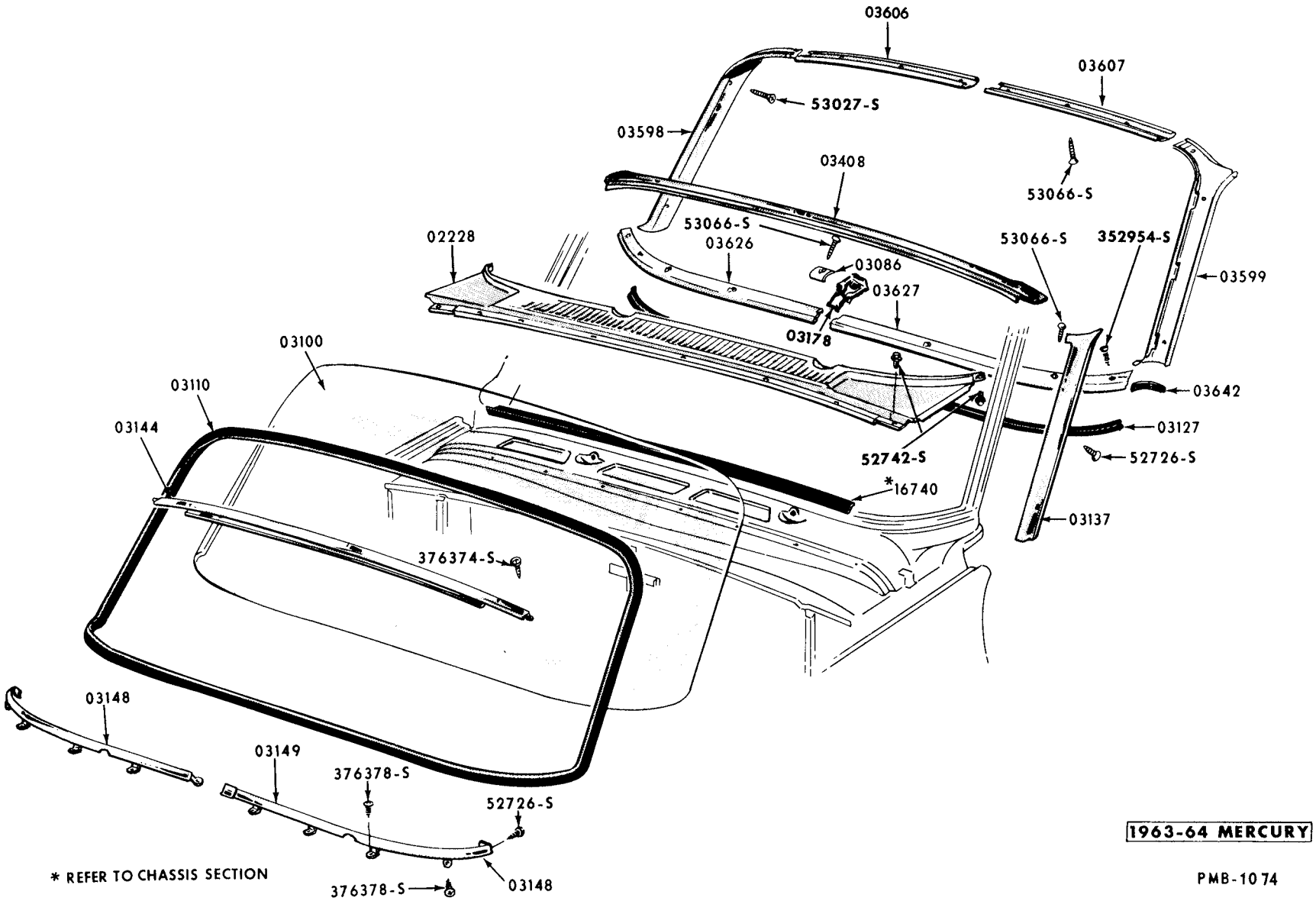

WINDSHIELD and RELATED PARTS - MODELS 54, 62, 65, 71, 75

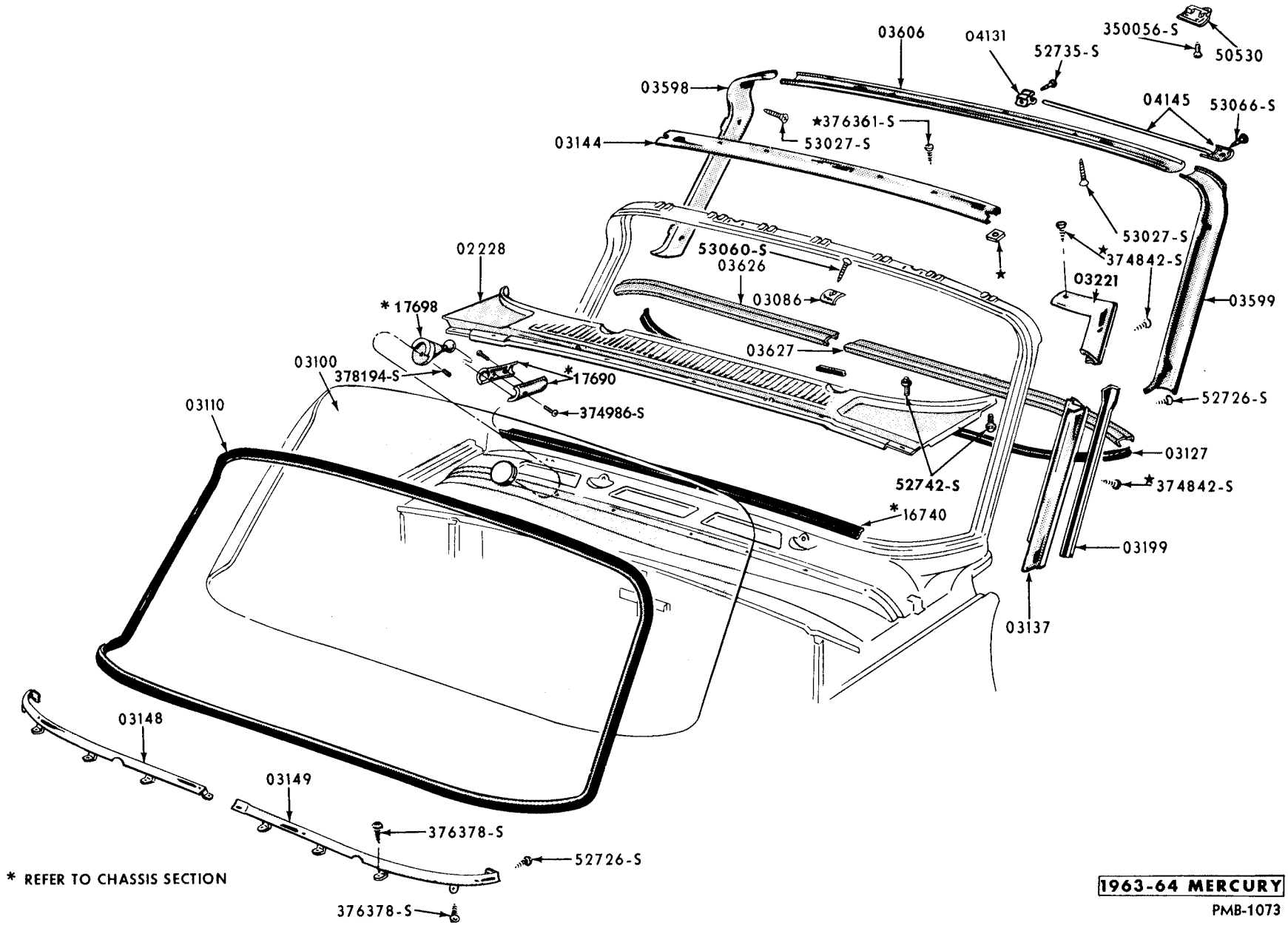

WINDSHIELD and RELATED PARTS MODELS - 57, 63, 76

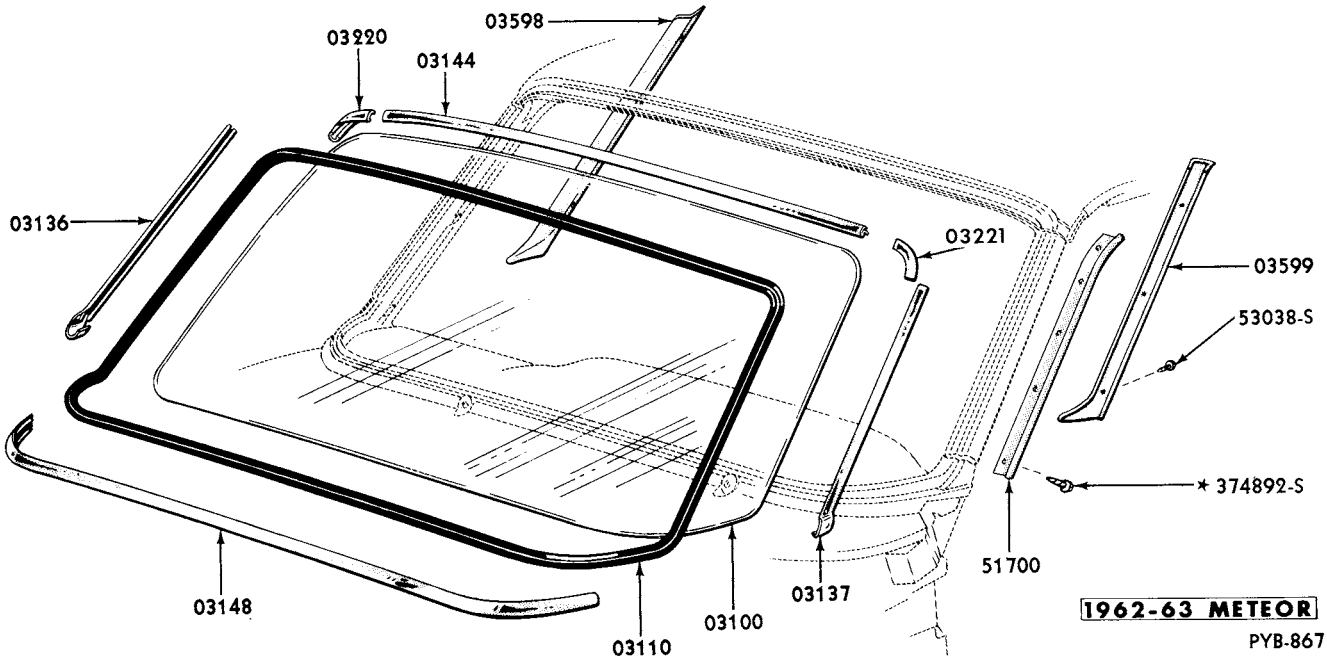

WINDSHIELD and RELATED PARTS

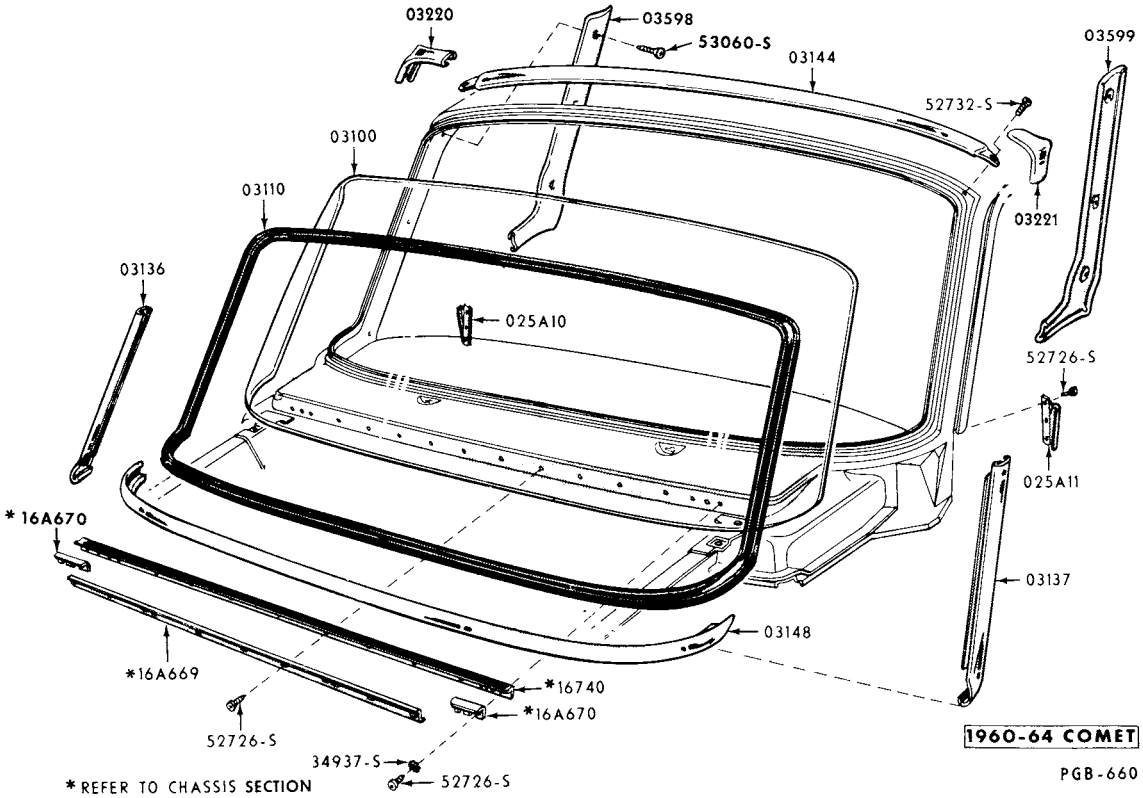

WINDSHIELD and RELATED PARTS

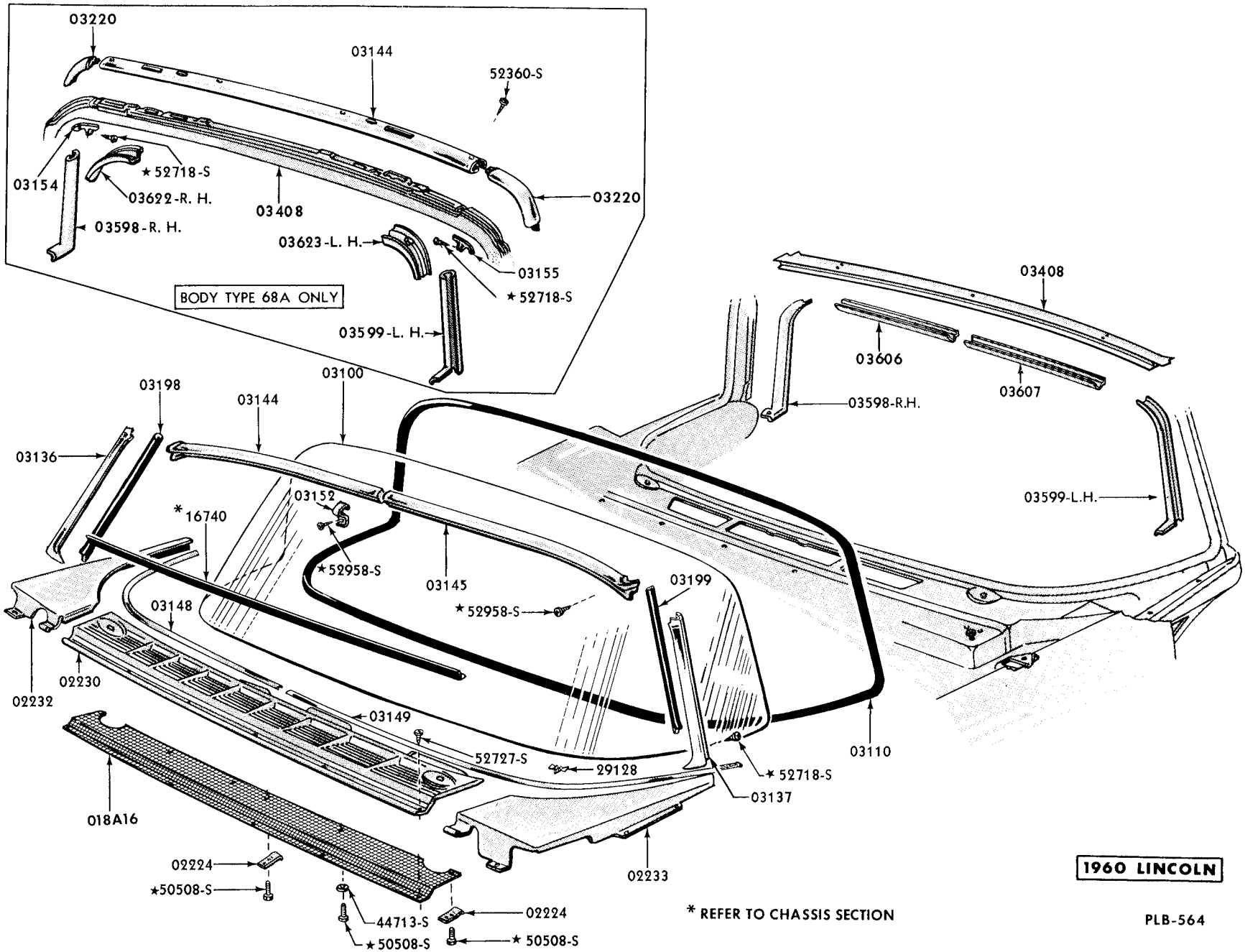

WINDSHIELD and RELATED PARTS

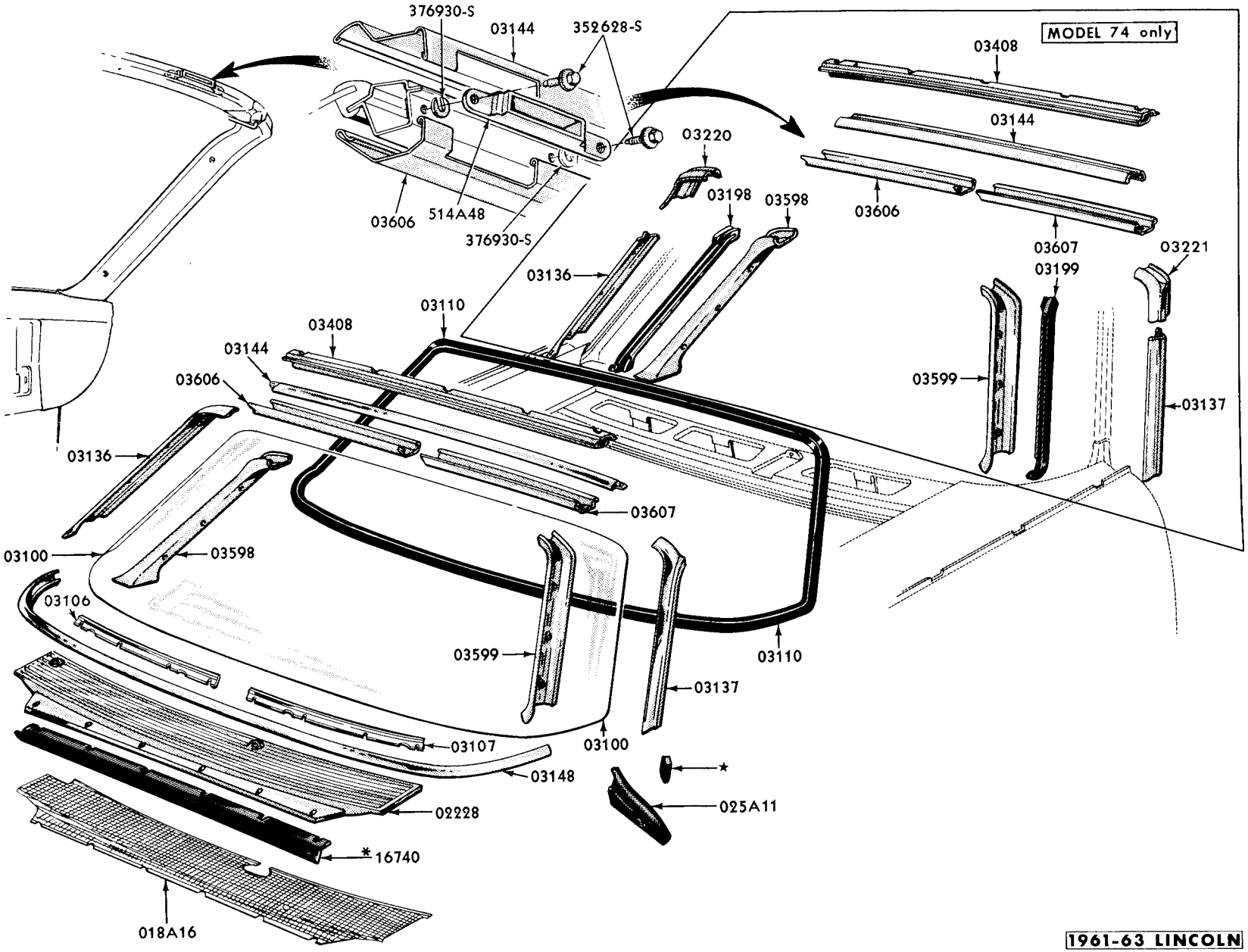

* REFER TO CHASSIS SECTION

WINDSHIELD and RELATED PARTS

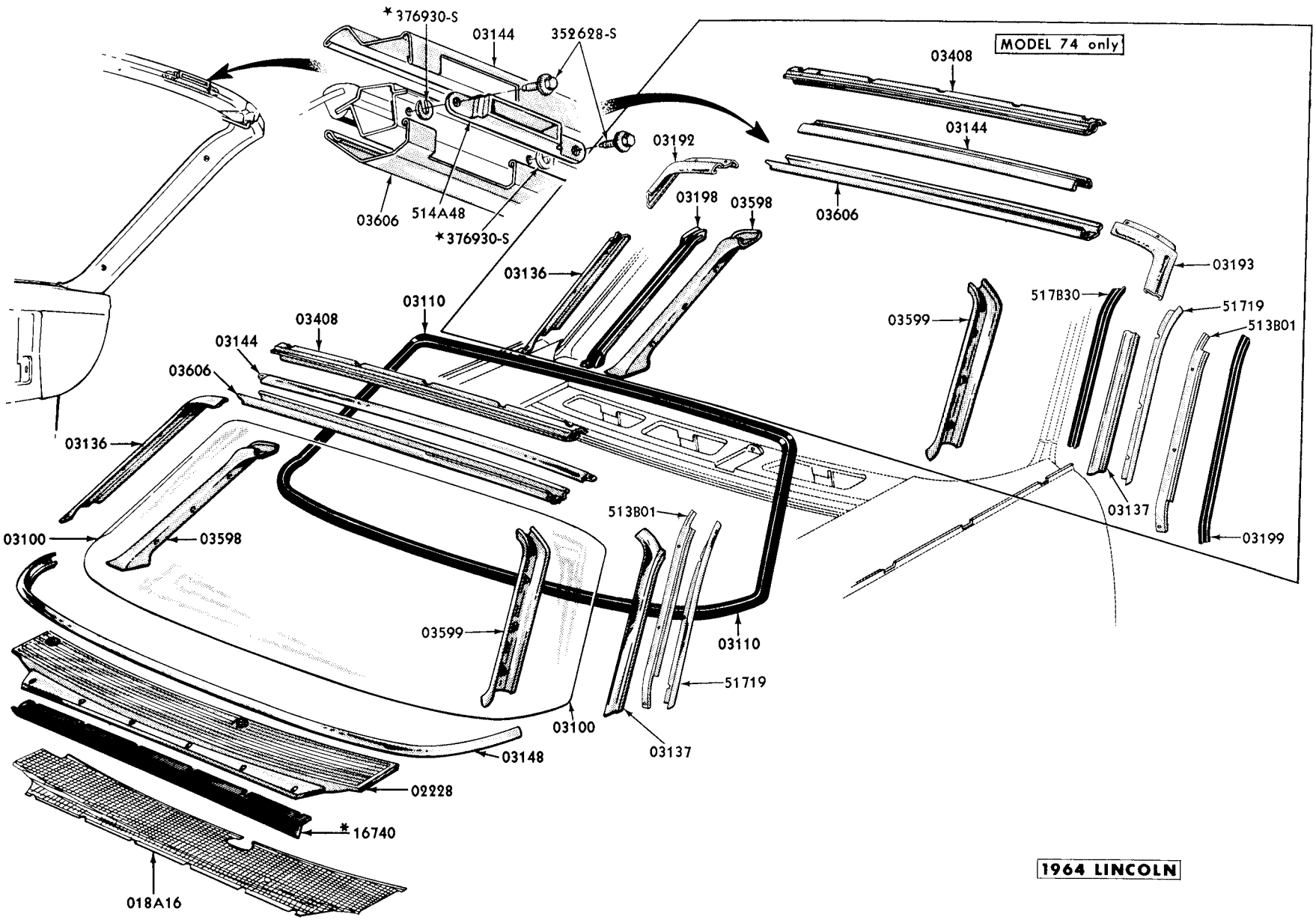

* REFER TO CHASSIS SECTION

PLB-1145

WINDSHIELD and RELATED PARTS

GROUP AND PART NUMBER	DESCRIPTION, SIZE, ETC.	NO. REQ'D	MODEL OR ENGINE CUBIC INCH DISPLACEMENT	VEHICLE CODE	YEAR 19____
350008	KIT (MOULDING RETAINER) OUTSIDE BELT				
59LK 350008-A	For doors and quarters	AR	All	D	60
	Consists of the following -				
(5) BAK-6329128-A	retainer (1) 353577-S2 retainer				
00151	RETAINER (BODY BOLT ABSORBER) LOWER				
BAC 7000151-B	(2) each at No. 3,4,5,6,8 body bolt	10	All except 76	A	60/61
00154-5	ABSORBER (BODY BOLT)				
B9A 6400154-A	Upper - No. 3, 5, 6 body bolt	12	All except 76	A	60
	No. 7, 8 body bolt	AR	All except 76, 77	A	60
	No. 8A body bolt	AR	77	A	60
COMM 6400155-B	Lower - No. 3, 5, 6 body bolt	12	All except 76	A	60
	No. 7, 8 body bolt	AR	All except 76, 77	A	60
	No. 8A body bolt	AR	77	A	60
B7A 7000154-A		4	All	A	60
COMM 7700154-A	Rubber	2	All except 76,77	A	60
B8A 6400154-A	Upper - No.3,4,5,7 body bolt	AR	All except 76	A	61
B8A 6400155-A	Lower - No.3,4,5,7 body bolt	AR	All except 76	A	61
C3AZ 6200154-A	Upper - (2) each at No. 1, 1A, 3, 3A, 4, 5 and 7 body bolt	14	All except 76	A	63
C3AZ 6200154-C	Upper - at No. 8 body bolt	2	All except 71, 76	A	63
C3AZ 6200155-A	Lower - (2) each at No. 1, 1A, 3, 3A, 4, 5, 6 and 7 body bolt	14	All except 76	A	63
	(2) each at No. 1,1A,3,4,5 and 6 body bolt	6	All except 76	A	64
C3AZ 6200155-E	Lower - at No. 8 body bolt	2	All except 71, 76	A	63
	Lower	2	All except 76	A	64
C4AZ 6200154-A	Upper - No. 1 and 1A body bolt	4	76	A	64
C4AZ 6200155-A	Lower - No. 7 body bolt	2	All except 76	A	64
C4AZ 6200155-B	Lower - No. 1 and 1A body bolt	4	76	A	64
00157	RETAINER (BODY BOLT ABSORBER) LOWER				
C3AZ 6200157-A	(2) each at No. 3, 3A, 4, 6 and 7 body bolt	10	All except 71, 76	A	63
C3AZ 6200157-B	(2) each at No. 1, 1A and 6 body bolt	6	All except 76	A	63
	Use at No. 6 body bolt	2	All except 76	A	64
C3AZ 6200157-C	Use at No. 8 body bolt	2	71	A	63/64
C3AZ 6200157-D	Use at No. 3, 3A, 4, 5, 7 and 8 body bolt	10	All except 71, 76	A	63
	Use at No. 3,4,5 and 8 body bolt	6	All except 76	A	64
C4AZ 6200157-A	Use at No. 1 and 1A body bolt	4	All except 76	A	64
00163	RETAINER (BODY BOLT ABSORBER) UPPER				
B7A 7000163-A	No. 3,4,5,7 body bolt	AR	All except 76	A	60/61
C3AZ 6200163-A	(2) each at No. 1, 1A, 3, 3A, 4, 5, 7 and 8 body bolt	16	All except 76	A	63
	(2) each at No. 3,4,5 and 8 body bolt	6	All except 76	A	64
C4AZ 6200163-A	(2) each at No. 1 and 1A body bolt	4	All except 76	A	64
00304	PLATE (FRAME HOIST)				
B9LB 5700304-A		2	All	D	60
01402	BRACKET (VENT AIR VALVE CONTROL MOTOR MOUNTING)				
B9LB 5701402-A		2	All	D	60
01416-7	GRILLE (COWL SIDE VENT)				
B9MB 6401416-AP	R. H.	1	All	A	60
B9MB 6401417-AP	L. H.	1	All	A	60
01420-1	BRACKET (WINDSHIELD DEFROSTER MOUNTING)				
C1AB 6201420-A	R. H.	1	All	A	61/62
C1AB 6201421-A	L. H.	1	All	A	61/62

GROUP AND PART NUMBER	DESCRIPTION, SIZE, ETC.	NO. REQ'D	MODEL OR ENGINE CUBIC INCH DISPLACEMENT	VEHICLE CODE	YEAR 19__
01440	KIT (VENT AIR VALVE CONTROL MOTOR MOUNTING SEAL)				
COLY 6301440-A		2	All	D	60
	Consists of the following -				
(1) B9LB-5701403-A seal	(1) B9LB-5701404-A seal				
01449	COVER (VENT AIR INLET DUCT BLOWER OPENING)				
PB9M 6401449-A	Not used with a/cond. or heater (a)	1	All	A	60
42126-S8	Screw-hex. washer hd. tap. -No. 8-15 x 1/2"	2	a		
01492	ABSORBER (DASH PANEL UPPER SOUND)				
BAK 5701492-A	Fiber padding	1	All	D	60
C1VB 5701492-B	Fiber padding	1	All	D	61/63
01508	SUPPORT (BRAKE PEDAL)				
COMB 6401508-A	With 9/16" square mounting holes	1	All	A	60
C1AZ 6201508-A		1	All	A	61/62
C3AZ 6201508-C		1	All	A	63
C4AZ 6201508-A	Without movable steering column	1	All	A	64
C4AZ 6201508-B	With movable steering column	1	All	A	64
C2OZ 6201508-A	(a)	1	All	B	62/63
C1DZ 6401508-A		1	All	C	60/62
C3DZ 6201508-A		1	All	C	63/64
BAK 5701516-B		1	All	D	60
C1VB 5701508-B		1	All	D	61/62
C2VY 5701508-A		1	All	D	63
C4VY 5301508-A		1	All	D	64
31498-S8	Screw-hex. washer hd. -No. 14-10 x 5/8"	1	a		
015A08	REFER TO GROUP 01524				
01516	REFER TO GROUP 01508				
01524	BRACE (BRAKE PEDAL SUPPORT)				
COMB 6401524-A		1	All	A	60
C3AZ 6201524-A	Use with movable steering column	1	All	A	63
C3AZ 76015A08-A	Use without a/cond.	1	All	A	63
	Use with movable steering column	1	All except 76	A	63/64
	Use on stationary steering column	1	76	A	63/64
C2OZ 6201524-A		1	All	B	62
C3OZ 6201524-A		1	All	B	63
CODB 6401524-A		1	All	C	60/62
C3DZ 6201524-A		1	All	C	63
C4DZ 6201524-A		1	All	C	64
COLB 6301524-C		1	All	D	60
C1VY 5701524-A		1	All	D	61/63
C4VY 5301524-A		1	All	D	64
01527	GROMMET (VENT AIR VALVE DAMPER SHAFT)				
PB9M 6401527-A	Rubber	2	All	A	60
01605	REFER TO GROUP 01610				
01610	PANEL (DASH)				
COMB 6401610-A		1	All	A	60
C1AZ 6201610-B		1	All	A	61/63
C4AZ 6201610-A		1	All	A	64

CONTINUED ON NEXT PAGE

GROUP AND PART NUMBER	DESCRIPTION, SIZE, ETC.	NO. REQ'D	MODEL OR ENGINE CUBIC INCH DISPLACEMENT	VEHICLE CODE	YEAR 19____
01610	PANEL (DASH) CONTINUED				
C2OZ 6201605-A		1	All	B	62
C3OZ 6201610-A		1	All	B	63
CODZ 6401610-E	Use with 6 cylinder engine on vehicles built prior to 1-7-63	1	All except 76	C	60/63
C3DZ 6201610-B	Use with 6 cylinder engine on vehicles built after 1-6-63	1	All except 63, 76	C	63
C3DZ 6201610-A	Use with 8 cylinder engine	1	All except 76	C	63
	6 cylinder engine	1	63	C	63
C3DZ 7601610-A	Use with 6 cylinder engine on vehicles built prior to 1-7-63	1	76	C	63
C3DZ 7601610-B	Use with 6 or 8 cylinder engine on vehicles built after 1-6-63	1	76	C	63
C4DZ 6201610-A	Use with 6 cylinder engine	1	All except 63,76	C	64
C4DZ 6201610-B	Use with 8 cylinder engine	1	All except 76	C	64
	6 cylinder engine	1	63	C	64
C4DZ 7601610-A	Use with 6 or 8 cylinder engine	1	76	C	64
COLB 6301610-C		1	All	D	60
C1VB 5701610-B	Lower - for vehicles without a/cond.	1	53	D	61
C1VB 5701610-D	Lower - for vehicles with a/cond.	1	53	D	61
C1VB 7401610-F	Lower - for vehicles with a/cond.	1	74	D	61
C1VY 7401610-C	Lower - for vehicles without a/cond. - also use for all vehicles with a/cond. for 1962 only by cutting openings for a/cond. units	1	74	D	61/62
C3VY 7401610-A	Lower - when using with a/cond. - openings must be cut where required	1	All	D	63/64
016A12-3	REINFORCEMENT (DASH FRAME BRACE TO FLOOR SIDE MEMBER)				
C1MB 76016A12-A	R.H.	1	76	A	61/62
		1	All	A	63
C1MB 76016A13-A	L.H.	1	76	A	61/62
		1	All	A	63
C4AZ 76016A12-A	R.H.	1	76	A	64
C4AZ 76016A13-A	L.H.	1	76	A	64
016B12	BRACKET (DASH AT STEERING COLUMN) SUPPORT REINFORCEMENT				
C4VY 53016B12-A		1	All	D	64
016A22-3	REINFORCEMENT (DASH PANEL)				
C3DZ 62016A22-A	R.H. - use with 8 cylinder engine	1	All except 76	C	63/64
C3DZ 62016A23-A	L.H. - use with 8 cylinder engine	1	All except 76	C	63/64
C3DZ 76016A22-B	R.H. - use with 6 or 8 cylinder engine on vehicles built after 1-6-63	1	76	C	63/64
C3DZ 76016A23-B	L.H. - use with 6 or 8 cylinder engine on vehicles built after 1-6-63	1	76	C	63/64
016A24	SEAL (DASH PANEL HOOD RELEASE CABLE OPENING)				
COLB 63016A24-A		1	All	D	60
C1VB 57016A24-A	Rubber	1	All	D	61/64
016A34-5	REINFORCEMENT (DASH PANEL GUSSET TO FLOOR SIDE MEMBER)				
COMB 64016A34-A	R.H.	1	All	A	60
COMB 64016A35-A	L.H.	1	All	A	60
016A50	PANEL (DASH) UPPER				
C1VY 57016A50-L	For vehicles without a/cond. - also use with a/cond. for 1962 only by cutting openings for a/cond. units	1	All	D	61/62
C3VY 57016A50-A	When using with a/cond. - openings must be cut where required	1	All	D	63/64

GROUP AND PART NUMBER	DESCRIPTION, SIZE, ETC.	NO. REQ'D	MODEL OR ENGINE CUBIC INCH DISPLACEMENT	VEHICLE CODE	YEAR 19____
016A58	TUBE (DASH PANEL EXTENSION) DRAIN				
C4VY 53016A58-B	Rubber - Y-shape	2	All	D	61/64
016A60	RETAINER (DASH PANEL EXTENSION) DRAIN				
C1VB 57016A60-A	Steel	2	All	D	61/64
01670-1	ABSORBER (DASH SOUND)				
COMB 6401670-D	R. H. - with aluminum foil	1	All	A	60
COMB 6401671-B	L. H. - with aluminum foil	1	All	A	60
C2AZ 6201670-A	R. H.	1	All	A	61/62
C1MB 6201671-A	L. H.	1	All	A	61
C1AB 6201671-B	L. H.	1	All	A	62
C3AZ 6201670-A	R. H. - use when heater is installed	1	All	A	63
C3AZ 6201670-B	R. H. - use when heater is not installed	1	All	A	63
C3AZ 6201671-A	L. H.	1	All	A	63
C4AZ 6201670-A	R.H. - use when heater is installed	1	All	A	64
C4AZ 6201670-B	R.H. - use when heater is not installed	1	All	A	64
C4AZ 6201671-A	L.H.	1	All	A	64
C2OZ 6201670-A	R.H.	1	All	B	62/63
C2OZ 6201671-A	L.H.	1	All	B	62/63
CODZ 6401670-A	R.H.	1	All	C	60/62
C3DZ 6201670-A	R.H. - cut to fit when heater is installed	1	All	C	63
CODZ 6401671-A	L.H.	1	All	C	60/63
C1VY 5701670-G	Cut out center section when used with a/cond.	1	All	D	61/62
C3VY 5701670-A	When using with a/cond. - openings must be cut where required	1	All	D	63
C4VY 5301670-A	When using with a/cond. - openings must be cut where required	1	All	D	64
016A81	GUSSET (DASH PANEL UPPER TO PANEL COWL TOP) OUTER				
C1VB 57016A81-A		1	All	D	61/64
01698-9	PLATE (STEERING COLUMN OPENING COVER)				
B9BM 6401698-A	Lower	1	All	A	60
COAB 6401698-A	R. H. - use on vehicles built prior to 9-16-60	1	58, 64	A	61
COAB 6401699-B	L. H. - use on vehicles built prior to 9-16-60	1	58, 64	A	61
C1AZ 6201698-A	R. H. - use with standard transmission on vehicles built after 9-15-60	1	58, 64	A	61
		1	All	A	62
C1AZ 6201699-B	L. H. - use with standard transmission on vehicles built after 9-15-60	1	58, 64	A	61
		1	All	A	62
C1MM 6201698-A	Lower - use with automatic transmission and without movable steering column	1	All	A	61/63
C3AZ 6201698-A	R. H.	1	All	A	63
C3AZ 6201699-A	L. H.	1	All	A	63
C4AZ 6201698-A	R.H. - use with fixed steering column	1	All	A	64
C4AZ 6201699-A	L.H. - use with fixed steering column	1	All	A	64
C2OZ 6201698-A	R.H.	1	All	B	62/63
C2OZ 6201699-A	L.H.	1	All	B	62/63
CODB 6401698-A	R.H. - inner - use on vehicles built prior to 11-20-63	1	All	C	60/64
CODB 6401699-A	L.H. - outer - use on vehicles built prior to 11-20-63	1	All	C	60/64
C4DZ 6201698-A	R. H. - inner - use on vehicles built after 11-19-63	1	All	C	64
C4DZ 6201699-A	L. H. - outer - use on vehicles built after 11-19-63	1	All	C	64
BAK 5701698-A		1	All	D	60

GROUP AND PART NUMBER	DESCRIPTION, SIZE, ETC.	NO. REQ'D	MODEL OR ENGINE CUBIC INCH DISPLACEMENT	VEHICLE CODE	YEAR 19____
01700	COVER (HEATER HOSE OPENING)				
CODB 6401700-A	Plastic - use when heater is not installed	2	All	C	60/64
017A06	PLATE (TRADE NAME)				
C2DZ 64017A06-A	"Product of Ford Motor Company" - located on glove compartment door (Δ)	1	All	A B	62
C2GY 62017A06-A	"Product of Ford Motor Company" - located on glove compartment door (Δ)	1	All	C	62
Δ Package also includes -	(2) 375890-S100 nut-sleeve type				
01708	ABSORBER (DASH PANEL STEERING COLUMN OPENING COVER SOUND)				
COMB 6401708-D	With aluminum foil	1	All	A	60
C1AB 6201708-B		1	All	A	61/62
C3AZ 6201708-A		1	All	A	63
C4AZ 6201708-A		1	All	A	64
C2OZ 6201708-A		1	All	B	62/63
CODZ 6401708-A		1	All	C	60/64
COLB 6301708-A		1	All	D	60
C3VY 5701708-A		1	All	D	63
C4VY 5301708-A		1	All	D	64
01714-5	BRACE (DASH TO FRAME)				
B9MB 7601714-A	R.H.	1	All	A	60
B9MB 7601715-A	L.H.	1	All	A	60
COAZ 6401714-A	R.H.	1	All	A	61/63
C1AB 6201715-A	L.H.	1	All	A	61/62
C3AZ 6201715-A	L.H.	1	All	A	63
C4AZ 6201714-A	R.H.	1	All	A	64
C4AZ 6201715-A	L.H.	1	All	A	64
017A30	SPRING (STEERING COLUMN RETAINING COVER)				
C3AZ 62017A30-A	Use with movable steering column	1	All	A	63/64
01738	SEAL (STEERING COLUMN OPENING COVER PLATE)				
B9BM 6401738-A	Rubber	1	All	A	60
C1MM 6201738-B	Rubber - cover plate - use with automatic or standard transmission - without floor type shift	1	All	A	61&63
C4AZ 6201738-A	Rubber - cover plate - use with automatic or standard transmission - without floor type shift	1	All	A	64
BAK 5701738-A		1	All	D	60
01742	PLATE (DASH PANEL HEATER VALVE OPENING COVER)				
BAK 5701742-A	Steel - use when heater is not installed	1	53, 57, 63	D	60
017A64	BRACE (GLOVE COMPARTMENT DOOR LOCK STRIKER)				
C4DZ 62017A64-B		1	All	C	64
01771	PAD (STEERING COLUMN OPENING COVER PLATE)				
	NS-dealer improvise - asphalt felt	1	58, 64	A	61
	Use with movable steering column	1	All	A	63
01792-3	GUSSET (DASH PANEL END)				
C1VY 5701792-A	R.H. - steel	1	All	D	61/64
C1VY 5701793-A	L.H. - steel	1	All	D	61/64
C1VY 7401792-A	R.H. - steel - lower - to cowl side	1	74	D	61/64
C1VY 7401793-A	L.H. - steel - lower - to cowl side	1	74	D	61/64

GROUP AND PART NUMBER	DESCRIPTION, SIZE, ETC.	NO. REQ'D	MODEL OR ENGINE CUBIC INCH DISPLACEMENT	VEHICLE CODE	YEAR 19___
01797	REFER TO GROUP 7B507				
01804-5	BRACKET (VENT AIR VALVE DAMPER CONTROL MOTOR)				
B9MB 5701804-A	R.H. - use with heater, defroster and/or a/cond. (a)	1	All	A	60
B9MB 5701805-A	L.H. - use with heater, defroster and/or a/cond. (a)	1	All	A	60
42127-S8	Screw-hex. washer hd. tap. -No. 10-12 x 1/2"	1or2	a		
01810	SEAL (DASH PANEL HEATER OPENING COVER)				
BAK 5701810-A	Rubber - use when heater is not installed	2	53, 57, 63	D	60
018A10	NUT (AIR CONTROL MOUNTING)				
COMF 64018A10-B	Chrome	2	All	A	60
01811	PLATE (STEERING COLUMN OPENING COVER) UPPER				
B9BM 6401811-A		1	All	A	60
C1MM 6201811-A	Use with automatic transmission	1	All	A	61/63
	For standard transmission refer to group 01699				
018A16	SCREEN (COWL TOP VENT)				
COMB64018A16-B	Wire mesh cloth	1	All	A	60
BAK 5702285-B	Wire mesh cloth	1	All	D	60
C3VY 57018A16-A	Wire mesh cloth	1	All	D	61/64
01820	REGISTER (VENT AIR)				
COAZ 6401820-A	Plastic - not used on R.H. side when heater or a/cond. is installed (a)	2	All	A B	61/64
	L.H. only	1	All	C	64
BAK 5701820-D	Chrome finish	2	All	D	60
354146-S8	Screw-truss hd. tap. -No. 15-18 x 1/2"	AR	a		
01822-3	BRACKET (VENT AIR VALVE DAMPER CONTROL WIRE)				
B9MB 6401822-C	R.H. (a,c)	1	All	A	60
PB9M 6401823-A	L.H. (a,b)	1	All except 57F, 63F, 76D	A	60
40919-S8	Screw-hex. washer hd. tap. -No. 10-32 x 1/2"	1	a		
42127-S8	Screw-hex. washer hd. tap. -No. 10-12 x 1/2"	1or2	a		
353261-S8	Clip	1	c		
359474-S8	Clip	1	b		
018A30	SEAL (VENT AIR INLET DUCT TO COWL TOP INNER PANEL)				
PB9M 6402866-A	Use on vehicles built prior to 12-31-59	2	All	A	60
COMB64018A30-A	Use on vehicles built after 12-30-59	2	All	A	60
01846	COVER (DASH PANEL HEATER OPENING)				
PB9M 7001846-A		1	All	A	60
COAB 6401846-A	Steel - use when heater or a/cond. is not installed	1	All	A	61/64
C2OB 6201846-A	Use when heater is not installed	1	All	B	62/63
CODB 6401846-A	Use when heater or defroster is not installed (a)	1	All	C	60/64
42134-S8	Screw-hex. washer hd. -No. 10-12 x 5/8"	4	a		
01850-1	VALVE (VENT AIR)				
B9MB 6401850-A	R.H. (a)	1	All	A	60
PB9M 6401851-A	L.H. (a)	1	All	A	60
C1VY 5301850-A	R.H.	1	All	D	61/64
C1VY 5701851-A	L.H. - less lower body	1	All	D	61/64
42127-S8	Screw-hex. washer hd. tap. -No. 10-12 x 1/2"	4	a		

GROUP AND PART NUMBER	DESCRIPTION, SIZE, ETC.	NO. REQ'D	MODEL OR ENGINE CUBIC INCH DISPLACEMENT	VEHICLE CODE	YEAR 19__
01854	BODY (VENT AIR VALVE)				
C1VF 5701854-A	R.H.	1	All	D	61/64
C1VF 57019A39-A	L.H. - lower	1	All	D	61/64
018A56	SUPPORT (VENT AIR OUTLET DUCT)				
CODB 64018A56-A	Not used on R.H. side when heater and defroster is installed (a)	4 2	All All	C C	60/63 64
359606-S	Nut-No.10-24	AR	a		
01862	DAMPER (VENT AIR VALVE)				
C3AZ 6201862-A		2 1	All All	A B C	61/64 64
COLB 6301862-C		2	All	D	60
018A67	DEFLECTOR (VENT AIR VALVE) AIR				
C1VF 57018A67-B	L.H.	1	All	D	61/64
018A70-1	GASKET (VENT AIR VALVE TO DASH)				
C1VF 57018A70-A	R.H.	1	All	D	61/64
C1VF 57018A71-A	L.H.	1	All	D	61/64
01890-1	CONTROL (VENT AIR OUTLET DUCT)				
COMF 6401890-A	R.H. - 57" long	1	All	A	60
COMF 6401891-A	L.H. - 35" long	1	All	A	60
C1MF 6201890-C	R.H. - 46-1/8" long - also use for L.H. side by cutting to 16-1/2" long	1	54B, 65B, 71B, 75B, 76	A	61
COAF 6401890-B	R.H. - 49-1/2" long - also use for L.H. side by cutting to 16-1/2" long	1	All except 54B, 65B, 71B, 75B, 76	A	61
C2MY 6201890-A	R.H. - 50" long - with knob - use when heater is not installed	1	All	A	62
C2MY 6201891-A	L.H. - 17" long - use with or without heater	1	All	A	62
C3AZ 6201890-A	R.H. - 53-15/16" long - less knob - use with or without heater	1	All	A	63/64
C3MY 6201891-A	L.H. - 16" long - with knob - use without movable steering column	1	All	A	63/64
C3MY 6201891-B	L.H. - 16" long - with knob - use with movable steering column	1	All	A	63/64
C2AZ 6201890-B	R.H. - 54" long - less knob - use with heater With heater cut to required length of 51" - Without heater cut to required length of 45"	1 1 1	All All All	A B B	62 62/63 62/63
C2OZ 6201890-C	R.H. - 48-1/8" long - with knob L.H. - cut to 13-5/8" long for service	1 1	All All	B B	62 62/63
C4DZ 6201891-A	L.H. - 12-1/2" long - without knob	1	All	C	64
01934-5	DUCT (VENT AIR OUTLET)				
C1AZ 6201934-A	R.H. - use on vehicles built prior to 4-1-63	1	All☆	A	61/63
C1AZ 6201935-A	L.H. - use on vehicles built prior to 4-1-63	1	All	A	61/63
C3AZ 6201934-A	R.H. - use on vehicles built after 3-29-63	1	All☆	A	63/64
C3AZ 6201935-A	L.H. - use on vehicles built after 3-29-63	1	All	A	63/64
C2OZ 6201934-A	R.H. (a)	1	All☆	B	62/63
C2OZ 6201935-A	L.H. - use on vehicles built prior to 4-1-63 (a)	1	All	B	62/63
C3OZ 6201935-A	L.H. - use on vehicles built after 3-29-63	1 1	All All	B C	63 64

☆ Not required when heater is installed

CONTINUED ON NEXT PAGE

GROUP AND PART NUMBER	DESCRIPTION, SIZE, ETC.	NO. REQ'D	MODEL OR ENGINE CUBIC INCH DISPLACEMENT	VEHICLE CODE	YEAR 19____
01934-5	DUCT (VENT AIR OUTLET) CONTINUED				
CODZ 6401934-E	R.H. - use when heater or defroster is not installed	1	All	C	60/64
C3DZ 6401935-A	L.H. For service of vent air duct handle see kit C1KY-18B578-A	1	All	C	60/63
34053-S8	Nut-hex. -No. 10-24	3	a		
353261-S8	Clip	1	a		
019A39	REFER TO GROUP 01854				
01990	PANEL (VENT AIR) FRONT				
COLY 5401990-A		2	All	D	60
01992	PANEL (VENT AIR) REAR				
COLB 2301992-A	Use with a/cond.	2	All	D	60
COLB 6301992-A	Use without a/cond.	2	All	D	60
01998	SEAL (VENT AIR INLET DUCT)				
COLB 6301998-A	Rubber - (1) R.H. (1) L.H.	2	All	D	60
01999	GASKET (VENT AIR INLET DUCT TO COWL TOP PANEL)				
C2OZ 6201999-A		2	All	B	62/63
		1	All	C	64
COLB 6301999-B	Rubber	2	All	D	60
020A06-7	FILLER (COWL SIDE TRIM) LOWER				
CODB64020A06-CP	R.H.	1	All	C	60
CODB64020A07-CP	L.H.	1	All	C	60
02010	PANEL (COWL TOP)				
COMB 6402010-B		1	All except 76	A	60
COMB 7602010-B		1	76	A	60
C2AZ 6202010-A		1	All	A	61/62
C3AZ 6202010-B		1	All	A	63/64
C3OZ 6202010-A		1	All	B	62/63
CODZ 6402010-J		1	All	C	60/63
C4DZ 6202010-A		1	All	C	64
COLB 6302010-B		1	All	D	60
C1VY 5702010-A		1	All	D	61/63
C4VY 5302010-A		1	All	D	64
02012	PANEL (COWL TOP OUTER)				
CODZ 6402012-A		1	All	C	60/63
C4DZ 6202012-A		1	All	C	64
02038-9	PANEL (COWL SIDE)				
COLB 6302038-A	R.H.	1	All	D	60
COLB 6302039-A	L.H.	1	All	D	60
C3VY 5702038-A	R.H.	1	All	D	61/63
C3VY 5702039-A	L.H.	1	All	D	61/63
C4VY 5302038-A	R.H.	1	All	D	64
C4VY 5302039-A	L.H.	1	All	D	64
020A40-1	GUSSET (COWL SIDE TO UPPER DASH PANEL)				
C1VY 57020A40-A	R.H.	1	All	D	61/64
C1VY 57020A41-A	L.H.	1	All	D	61/64

GROUP AND PART NUMBER	DESCRIPTION, SIZE, ETC.	NO. REQ'D	MODEL OR ENGINE CUBIC INCH DISPLACEMENT	VEHICLE CODE	YEAR 19____
02042-3	PILLAR & COWL SIDE (FRONT BODY)				
COMB 6402042-B	R.H.	1	All	A	60
COMB 6402043-B	L.H.	1	All	A	60
C1AZ 6202042-D	R.H.	1	All	A	61/62
C1AZ 6202043-D	L.H.	1	All	A	61/62
C3AZ 6202042-A	R.H.	1	All	A	63
C3AZ 6202043-A	L.H.	1	All	A	63
C4AZ 6202042-A	R.H.	1	All	A	64
C4AZ 6202043-A	L.H.	1	All	A	64
C3OZ 6202042-A	R.H.	1	All	B	62/63
C3OZ 6202043-A	L.H.	1	All	B	62/63
C3DZ 6202042-A	R.H.	1	All except 76	C	60/63
C1DZ 6402043-A	L.H. - use with 6 cylinder engine on vehicles built prior to 1-7-63	1	All except 76	C	60/63
C3DZ 6202043-A	L.H. - use with 6 or 8 cylinder engine on vehicles built after 1-6-63	1	All except 76	C	63
C3DZ 7602042-A	R.H.	1	76	C	63
C3DZ 7602043-A	L.H.	1	76	C	63
C4DZ 6302042-A	R.H.	1	All	C	64
C4DZ 6302043-A	L.H.	1	All	C	64
02042-3	REINFORCEMENT (COWL SIDE PANEL TO FLOOR)				
PB9M 6402042-B	R.H.	1	All	A	60
PB9M 6402043-B	L.H.	1	All	A	60
02062-3	EXTENSION (COWL SIDE PANEL)				
C3DZ 7602062-A	R.H.	1	76	C	63/64
C3DZ 7602063-A	L.H.	1	76	C	63/64
02092	BRACKET (COWL SIDE TRIM PANEL)				
C1VY 5702092-A		2	All	D	61/63
021A14-5	GUSSET (DASH PANEL TO FLOOR SIDE MEMBER)				
C4AZ 76021A14-A	R.H.	1	All	A	64
C4AZ 76021A15-A	L.H.	1	All	A	64
02136	COVER (COWL SIDE HEATER OPENING)				
BAK 5702136-B	Steel - use when heater is not installed	2	53, 57, 63	D	60
02207	TUBE (COWL TOP INNER PANEL DRAIN)				
PB9M 6402207-A	R.H. - curved (a)	1	All	A	60
PB9M 6402207-B	L.H. - straight (a)	1	All	A	60
COLB 6302207-A	12-7/8" long	2	All	D	60
44713-S8	Washer-No.10-flat	2	a		
52735-S8	Screw-pan hd. cr.rec.tap.-No.10-12 x 5/8"	2	a		
02212-3	RETAINER (COWL TOP INNER PANEL DRAIN TUBE)				
PB9M 6402212-A	R.H. - 5" long	1	All	A	60
PB9M 6402213-A	L.H. - 4" long	1	All	A	60
02224	BRACKET (COWL TOP VENTILATOR GRILLE RETAINING)				
BAK 5702224-B		2	All	D	60
02228	GRILLE (COWL TOP VENT)				
COMB 6402228-C		1	All	A	60
C1AB 6202228-B		1	All	A	61/62
C3AZ 6202228-A	(a)	1	All	A	63
C4AZ 6202228-A		1	All	A	64

CONTINUED ON NEXT PAGE

GROUP AND PART NUMBER	DESCRIPTION, SIZE, ETC.	NO. REQ'D	MODEL OR ENGINE CUBIC INCH DISPLACEMENT	VEHICLE CODE	YEAR 19___
02228	GRILLE (COWL TOP VENT) CONTINUED				
C1VB 5702228-A		1	All	D	61/62
C3VY 5702228-A		1	All	D	63/64
34938-S8	Washer-external tooth lock-No. 8	10	a		
52742-S8	Screw-pan hd. cr. rec. -No. 8-15 x 3/4"	10	a		
02230	PANEL (COWL TOP OUTER) CENTER				
BAK 5702230-B	Die cast	1	All	D	60
02232-3	PANEL (COWL TOP OUTER) SIDE				
BAK 5702232-B	R. H.	1	All	D	60
BAK 5702233-B	L. H.	1	All	D	60
02246	SUPPORT (PARKING BRAKE BRACKET TO COWL SIDE)				
BAK 5702246-A		1	All	D	60
02250-1	SUPPORT (COWL SIDE AIR CONDITIONER MOUNTING TRAY)				
BAK 5702250-A	R. H.	1	All	D	60
BAK 5702251-A	L. H.	1	All	D	60
02254	COLLAR (COWL TOP INNER PANEL)				
C1AB 6202254-A		1	All	A	61/64
02256	PLATE (COWL TOP PANEL ACCESS HOLE COVER)				
BAK 5702256-A		2	All	D	60
02264-5	TRAY (COWL SIDE AIR CONDITIONING UNIT MOUNTING)				
BAK 5702264-A	R. H.	1	All	D	60
BAK 5702265-A	L. H.	1	All	D	60
02270	CLAMP (COWL TOP INNER PANEL DRAIN TUBE)				
BAF 6402270-A		2	All	D	60
02285	REFER TO GROUP 018A16				
02294-5	BRACKET (COWL TOP PANEL TO FRONT FENDER APRON)				
C2OZ 6202294-A	R. H.	1	All	B	62/63
C2OZ 6202295-A	L. H.	1	All	B	62/63
CODZ 6402294-A	R. H.	1	All	C	60/63
CODZ 6402295-A	L. H.	1	All	C	60/63
C4DZ 6202294-A	R.H.	1	All	C	64
C4DZ 6202295-A	L.H.	1	All	C	64
02354-5	RETAINER (COWL TRIM PANEL)				
PB9M 6402354-AP	R. H.	1	All	A	60
PB9M 6402355-AP	L. H.	1	All	A	60
CODB 6402354-AP	R. H.	1	All	C	60
CODB 6402355-AP	L. H.	1	All	C	60
02422	ABSORBER (COWL SIDE PANEL SOUND) UPPER				
BAK 5702422-A	Fiber padding	2	All	D	60
C1VB 5702422-A	Fiber padding	2	All	D	61/64
02426-7	GUSSET (COWL SIDE TO FRONT PILLAR) LOWER				
C3DZ 7602426-A	R. H.	1	63, 76	C	63/64
C3DZ 7602427-A	L. H.	1	63, 76	C	63/64

GROUP AND PART NUMBER	DESCRIPTION, SIZE, ETC.	NO. REQ'D	MODEL OR ENGINE CUBIC INCH DISPLACEMENT	VEHICLE CODE	YEAR 19____
02500-1	PILLAR (FRONT BODY) LOWER				
COLB 6302500-B	R.H.	1	All	D	60
COLB 6302501-B	L.H.	1	All	D	60
C1VB 5702500-C	R.H.	1	All	D	61/62
C1VB 5702501-C	L.H.	1	All	D	61/62
C3VY 5702500-A	R.H.	1	All	D	63
C3VY 5702501-A	L.H.	1	All	D	63
C4VY 5302500-A	R.H.	1	All	D	64
C4VY 5302501-A	L.H.	1	All	D	64
02504-5	PILLAR (BODY FRONT) UPPER				
COLB 6302504-A	R.H.	1	All except 68	D	60
COLB 6302505-A	L.H.	1	All except 68	D	60
COLB 6802504-A	R.H.	1	68	D	60
COLB 6802505-A	L.H.	1	68	D	60
025A10-1	TROUGH (FRONT BODY UPPER PILLAR) DRAIN				
CODB 64025A10-B	R.H. (a)	1	All	C	60/64
CODB 64025A11-B	L.H. (a)	1	All	C	60/64
C1VB 57025A10-B	R.H. - rubber	1	All	D	61/63
C1VB 57025A11-B	L.H. - rubber	1	All	D	61/63
52726-S8	Screw-pan hd. cr. rec. -No. 8-15 x 1/2"	2	a		
02516-7	REFER TO GROUP 02536-7				
025A16	SEAL (FRONT BODY PILLAR HEAT DUCT)				
C1VB 57025A16-A		2	All	D	61/62
02518-9	EXTENSION (FRONT BODY UPPER INNER PILLAR)				
C4VY 5302518-A	R.H.	1	53	D	64
C4VY 5302519-A	L.H.	1	53	D	64
C4VY 7402518-A	R.H.	1	74	D	64
C4VY 7402519-A	L.H.	1	74	D	64
025A20-1	REFER TO GROUP 51700-1				
02522-3	PILLAR (FRONT BODY) UPPER INNER				
B9MB 5702522-A	R.H.	1	57, 63, 77	A	60
B9MB 5702523-A	L.H.	1	57, 63, 77	A	60
PB9M 6402522-A	R.H.	1	58, 64	A	60
PB9M 6402523-A	L.H.	1	58, 64	A	60
PB9M 7602522-A	R.H.	1	76	A	60
PB9M 7602523-A	L.H.	1	76	A	60
COAB 5702522-A	R.H.	1	65, 75	A	61
COAB 5702523-A	L.H.	1	65, 75	A	61
COAB 6402522-A	R.H.	1	54, 58, 62, 64, 71	A	61
COAB 6402523-A	L.H.	1	54, 58, 62, 64, 71	A	61
COAB 7602522-A	R.H.	1	76	A	61/62
COAB 7602523-A	L.H.	1	76	A	61/62
C3AZ 6202522-A	R.H.	1	54,62,71	A	62/64
C3AZ 6202523-A	L.H.	1	54,62,71	A	62/64
C3AZ 6302522-A	R.H.	1	57,63	A	63/64
C3AZ 6302523-A	L.H.	1	57,63	A	63/64
C2AZ 7502522-A	R.H.	1	65,75	A	62
C3AZ 6502522-A	R.H.	1	65, 75	A	63/64
C3AZ 6502523-A	L.H.	1	65, 75	A	62/64

CONTINUED ON NEXT PAGE

GROUP AND PART NUMBER	DESCRIPTION, SIZE, ETC.	NO. REQ'D	MODEL OR ENGINE CUBIC INCH DISPLACEMENT	VEHICLE CODE	YEAR 19____
02522-3	PILLAR (FRONT BODY) UPPER INNER (CONTINUED)				
C3AZ 7602522-A	R.H.	1	76	A	63/64
C3AZ 7602523-A	L.H.	1	76	A	63/64
C2OZ 6202522-A	R.H. - use on vehicles built prior to 7-13-63	1	All except 65	B	62/63
C2OZ 6202523-A	L.H. - use on vehicles built prior to 7-13-63	1	All except 65	B	62/63
C2OZ 6202522-B	R.H. - use on vehicles built after 7-12-63	1	All except 65	B	63
C2OZ 6202523-B	L.H. - use on vehicles built after 7-12-63	1	All except 65	B	63
C3OZ 6502522-A	R.H.	1	65	B	63
C3OZ 6502523-A	L.H.	1	65	B	63
CODZ 6402522-B	R.H.	1	All except 63,76	C	60/64
CODZ 6402523-C	L.H.	1	All except 63,76	C	60/64
C3DZ 6302522-A	R.H.	1	63	C	63
C3DZ 6302523-A	L.H.	1	63	C	63
C3DZ 7602522-A	R.H.	1	76	C	63
C4DZ 7602522-A	R.H.	1	76	C	64
C4DZ 7602523-A	L.H.	1	76	C	63/64
C4DZ 6302522-A	R.H.	1	63	C	64
C4DZ 6302523-A	L.H.	1	63	C	64
C1VY 5702522-B	R.H.	1	53	D	61/63
C1VY 5702523-B	L.H.	1	53	D	61/63
C3VY 7402522-A	R.H.	1	74	D	61/63
C3VY 7402523-A	L.H.	1	74	D	61/63
C4VY 5302522-A	R.H.	1	53	D	64
C4VY 5302523-A	L.H.	1	53	D	64
C4VY 7402522-A	R.H.	1	74	D	64
C4VY 7402523-A	L.H.	1	74	D	64
02524-5	REINFORCEMENT (FRONT BODY UPPER OUTER PILLAR)				
PB9M 5702524-A	R.H.	1	57, 63, 77	A	60
PB9M 5702525-A	L.H.	1	57, 63, 77	A	60
PB9M 6402524-A	R.H.	1	58, 64	A	60
PB9M 6402525-A	L.H.	1	58, 64	A	60
PB9M 7602524-A	R.H.	1	76	A	60
PB9M 7602525-A	L.H.	1	76	A	60
02530	EXTENSION (FRONT BODY PILLAR LOWER GUSSET)				
C1VY 7402530-A		2	74	D	61/63
025A32-3	GUSSET (FRONT BODY PILLAR LOWER)				
C1VB 74025A32-A	R.H.	1	74	D	61
C1VB 74025A33-A	L.H.	1	74	D	61
C1VY 74025A32-A	R.H.	1	74	D	62/63
C1VY 74025A33-A	L.H.	1	74	D	62/63
C4VY 74025A32-A	R.H.	1	74	D	64
C4VY 74025A33-A	L.H.	1	74	D	64
02536-7	PILLAR (FRONT BODY) UPPER OUTER				
PB9M 5702536-A	R.H.	1	57, 63, 77	A	60
PB9M 5702537-A	L.H.	1	57, 63, 77	A	60
PB9M 6402536-A	R.H.	1	58, 64	A	60
PB9M 6402537-A	L.H.	1	58, 64	A	60
PB9M 7602516-A	R.H.	1	76	A	60
PB9M 7602517-A	L.H.	1	76	A	60
C1AB 6202536-A	R.H.	1	54, 58, 62, 64, 71	A	61
C1AB 6202537-A	L.H.	1	54, 58, 62, 64, 71	A	61
C1AB 7502536-A	R.H.	1	65, 75	A	61
C1AB 7502537-A	L.H.	1	65, 75	A	61

CONTINUED ON NEXT PAGE

GROUP AND PART NUMBER	DESCRIPTION, SIZE, ETC.	NO. REQ'D	MODEL OR ENGINE CUBIC INCH DISPLACEMENT	VEHICLE CODE	YEAR 19____
02536-7	PILLAR (FRONT BODY) UPPER OUTER (CONTINUED)				
C1AB 7602536-A	R.H.	1	76	A	61/62
C1AB 7602537-A	L.H.	1	76	A	61/62
C3AZ 6202536-A	R.H.	1	54,62,71	A	62/64
C3AZ 6202537-A	L.H.	1	54,62,71	A	62/64
C3AZ 6502536-A	R.H.	1	65, 75	A	62/64
C3AZ 6502537-A	L.H.	1	65, 75	A	62/64
C3AZ 6302536-A	R.H.	1	57,63	A	63/64
C3AZ 6302537-A	L.H.	1	57,63	A	63/64
C3AZ 7602536-A	R.H.	1	76	A	63/64
C3AZ 7602537-A	L.H.	1	76	A	63/64
C2OZ 6202516-A	R.H.	1	All except 65	B	62/63
C2OZ 6202517-A	L.H.	1	All except 65	B	62/63
C3OZ 6502516-A	R.H.	1	65	B	63
C3OZ 6502517-A	L.H.	1	65	B	63
CODB 6402536-J	R.H.	1	All	C	60/62
CODB 6402537-J	L.H.	1	All	C	60/62
C3DZ 6302536-A	R.H.	1	63	C	63
C3DZ 6302537-A	L.H.	1	63	C	63
C3DZ 6402536-A	R.H.	1	All except 63, 76	C	63
C3DZ 6402537-A	L.H.	1	All except 63, 76	C	63
C3DZ 7602536-A	R.H.	1	76	C	63
C3DZ 7602537-A	L.H.	1	76	C	63
C4DZ 6202536-A	R.H.	1	All except 63,76	C	64
C4DZ 6202537-A	L.H.	1	All except 63,76	C	64
C4DZ 6302536-A	R.H.	1	63,76	C	64
C4DZ 6302537-A	L.H.	1	63,76	C	64
C1VB 5702516-A	R.H.	1	74	D	61/63
C1VB 5702517-A	L.H.	1	74	D	61/63
C1VY 5702516-A	R.H.	1	53	D	61/63
C1VY 5702517-A	L.H.	1	53	D	61/63
C4VY 5302516-A	R.H.	1	53	D	64
C4VY 5302517-A	L.H.	1	53	D	64
C4VY 7402516-A	R.H.	1	74	D	64
C4VY 7402517-A	L.H.	1	74	D	64
025A36-7	GUSSET (FRONT BODY UPPER OUTER PILLAR)				
C1VB 74025A36-A	R.H.	1	74	D	61/63
C1VB 74025A37-A	L.H.	1	74	D	61/63
02562-3	EXTENSION (FRONT BODY UPPER OUTER PILLAR)				
C4VY 5302562-A	R.H.	1	All	D	64
C4VY 5302563-A	L.H.	1	All	D	64
02614	RETAINER (DOOR OPENING WINDLACE)				
PB9M 6402614-A	Upper front	6	58, 64	A	60
B7A 7002614-A	Clip type	AR	All	A	60/63
		AR	All	B	62
		AR	All	C	60/64
		AR	63, 65	D	60
BAK 5702614-A	Front - 22-1/2" long	2	All	D	60
02616-7	PILLAR (FRONT BODY UPPER OUTER CORNER)				
C4VY 7402616-A	R.H.	1	74	D	64
C4VY 7402617-A	L.H.	1	74	D	64
02619	BRACKET (FRONT DOOR OPENING FRONT WINDLACE & RETAINER)				
BAK 5702619-A		6	All	D	60

GROUP AND PART NUMBER	DESCRIPTION, SIZE, ETC.	NO. REQ'D	MODEL OR ENGINE CUBIC INCH DISPLACEMENT	VEHICLE CODE	YEAR 19____
02694-5	REINFORCEMENT (FRONT BODY UPPER INNER PILLAR) UPPER				
C3DZ 6302694-A	R.H.	1	63	C	63/64
C3DZ 6302695-A	L.H.	1	63	C	63/64
02866	REFER TO GROUP 018A30				
02869	SEAL (VENT AIR INLET DUCT TO BLOWER)				
PB9M 6402869-A		1	All	A	60
02916-7	REINFORCEMENT (COWL SIDE PANEL TO FLOOR)				
C4AZ 7602916-A	R.H.	1	76	A	64
C4AZ 7602917-A	L.H.	1	76	A	64
03006-7	FILLER (WINDSHIELD OUTSIDE BELT MOULDING)				
COMB 6403006-B	R.H. - rubber - 27-1/2" long	1	All	A	60
COMB 6403007-B	L.H. - rubber - 27-1/2" long	1	All	A	60
03013	RETAINER (WINDSHIELD OUTSIDE BELT MOULDING JOINT COVER)				
COMB 6403013-C		1	All	A	60
03086	COVER (WINDSHIELD GARNISH LOWER MOULDING JOINT)				
C2AZ 6203086-A	(a)	1	All	A	61/62
C3AZ 6203086-A		1	All	A	63/64
53060-S13	Screw-oval hd. cr. rec.-No. 8-15 x 1"	1	a		
03094	COVER (WINDSHIELD OUTSIDE BELT MOULDING JOINT)				
COMB 6403094-A		1	All	A	60
03100	GLASS (WINDSHIELD)				
B9MB 6403100-A	Tinted with BLUE GREY band	1	All	A	60
PB9M 6403100-C	Clear	1	All	A	60
C1AB 6203100-A	Clear	1	All except 76	A	61
C1AB 6203100-B	Tinted	1	All except 76	A	61
C1AB 7603100-A	Clear	1	76	A	61/62
C1AB 7603100-B	Tinted	1	76	A	61/62
C2AZ 6203100-A	Clear	1	All except 57,63,76	A	62/64
C2AZ 6203100-B	Tinted	1	All except 57,63,76	A	62/64
C3AZ 7603100-C	Clear - equipped with rear view mirror bracket	1	57,63,76	A	63/64
C3AZ 7603100-D	Tinted - equipped with rear view mirror bracket	1	57,63,76	A	63/64
C2OZ 6203100-A	Clear	1	All except 65	B	62/63
C2OZ 6203100-B	Tinted	1	All except 65	B	62/63
C3OZ 6503100-C	Clear - equipped with mirror bracket	1	65	B	63
C3OZ 6503100-D	Tinted - equipped with mirror bracket	1	65	B	63
CODB 6403100-E	Clear	1	All except 63,76	C	60/64
CODB 6403100-F	Tinted	1	All except 63,76	C	60/64
C3DZ 7603100-C	Clear - equipped with rear view mirror bracket	1	63,76	C	63/64
C3DZ 7603100-D	Tinted - equipped with rear view mirror bracket	1	63, 76	C	63/64
BAK 5703100-C	Clear	1	53,57,63	D	60
B9LB 5703100-A	Tinted - with BLUE GREY band	1	All	D	60
C1VB 5703100-C	Clear	1	All	D	61/63
C1VB 5703100-F	Tinted	1	All	D	61/63
C4VY 5303100-A	Clear	1	All	D	64
C4VY 5303100-B	Tinted	1	All	D	64
03106-7	RETAINER (WINDSHIELD WEATHERSTRIP)				
C3VY 5703106-A	Use on vehicles built prior to 4-15-63	2	All	D	63
C3VY 5703106-C	R.H. - use on vehicles built after 4-14-63	1	All	D	63
C3VY 5703107-C	L.H. - use on vehicles built after 4-14-63	1	All	D	63

GROUP AND PART NUMBER	DESCRIPTION, SIZE, ETC.	NO. REQ'D	MODEL OR ENGINE CUBIC INCH DISPLACEMENT	VEHICLE CODE	YEAR 19____
03110	WEATHERSTRIP (WINDSHIELD)				
COMB 6403110-A		1	All except 76	A	60
COMB 7603110-A		1	76	A	60
C1AB 6203110-B		1	All except 76	A	61
C1AB 7603110-A		1	76	A	61/62
C2AZ 6203110-B		1	All except 76	A	62
C3AZ 6303110-B		1	63, 76	A	63
C2AZ 6203110-A		1	All except 57,63,76	A	63/64
C3AZ 6303110-C		1	57,63,76	A	64
C2OZ 6203110-A		1	All except 65	B	62/63
C3OZ 6503110-A		1	65	B	63
CODB 6403110-C		1	All except 63,76	C	60/64
C3DZ 6303110-A		1	63	C	63/64
C3DZ 7603110-A		1	76	C	63/64
B9LB 5703110-A		1	All	D	60
C1VB 5703110-B		1	53	D	61/62
C1VB 7403110-A		1	74	D	61/62
C3VY 5703110-B	(a)	1	53	D	63
C3VY 7403110-A	Use on vehicles built prior to 3-15-63 (a)	1	74	D	63
C3VY 7403110-B	Use on vehicles built after 3-14-63	1	74	D	63
C4VY 5303110-A		1	53	D	64
C4VY 7403110-A		1	74	D	64
C3VY 5703106-A	Retainer	2	a		
03127	WELT (WINDSHIELD GARNISH MOULDING)				
B9MB 6403127-A	47" long - cut to size for radio grille and garnish mouldings	AR	All	A	60
COAB 6403127-A		2	54A,58A,62A,64A,65A, 71A,75A	A	61
		2	All	A	62/63
		2	54,57,62,63D,65A,B,71D, 76A	A	64
03136-7	MOULDING (WINDSHIELD OUTSIDE) SIDE				
COMB 6403136-A	R.H. (b)	1	All except 76	A	60
COMB 6403137-A	L.H. (b)	1	All except 76	A	60
COMB 7603136-A	R.H. (c)	1	76	A	60
COMB 7603137-A	L.H. (c)	1	76	A	60
COAB 6403136-B	R.H. (a)	1	All except 76	A	61/62
COAB 6403137-B	L.H. (a)	1	All except 76	A	61/62
COAB 7603136-B	R.H. (a)	1	76	A	61/62
COAB 7603137-B	L.H. (a)	1	76	A	61/62
C3AZ 6203136-A	R.H. (Δ)	1	All except 57,63,76	A	63/64
C3AZ 6203137-A	L.H. (Δ)	1	All except 57,63,76	A	63/64
C3AZ 6303136-C	R.H. (Δ)	1	63	A	63/64
C3AZ 6303137-C	L.H. (Δ)	1	63	A	63/64
C4AZ 5703136-A	R.H. (Δ)	1	57	A	64
C4AZ 5703137-A	L.H. (Δ)	1	57	A	64

Δ Package also includes -

(3 or 4) 375747-S101 screw-No.8-15 x 3/4"

C3AZ 7603136-A	R.H. (§)	1	76	A	63/64
C3AZ 7603137-A	L.H. (§)	1	76	A	63/64

§ Package also includes -

(2) 374842-S101 screw

CONTINUED ON NEXT PAGE

GROUP AND PART NUMBER	DESCRIPTION, SIZE, ETC.	NO. REQ'D	MODEL OR ENGINE CUBIC INCH DISPLACEMENT	VEHICLE CODE	YEAR 19____
03136-7	MOULDING (WINDSHIELD OUTSIDE) SIDE (CONTINUED)				
C2OZ 6203136-A	R.H.	1	All except 65	B	62/63
C2OZ 6203137-A	L.H.	1	All except 65	B	62/63
C3OZ 6503136-A	R.H. (ΔΔ)	1	65	B	63
C3OZ 6503137-A	L.H. (ΔΔ)	1	65	B	63
ΔΔ Package also includes -					
	(3) 376394-S101 screw				
C1DB 6403136-A	R. H. (d)	1	All except 63, 76	C	60/64
C1DB 6403137-A	L. H. (d)	1	All except 63, 76	C	60/64
C3DZ 7603136-A	R.H. (‡)	1	63,76	C	63/64
C3DZ 7603137-A	L.H. (‡)	1	63,76	C	63/64
‡ Package also includes -					
	(2) 376361-S101 screw				
COLB 6303136-A	R.H.	1	All except 68	D	60
COLB 6303137-A	L.H.	1	All except 68	D	60
BAK 6803136-A	R.H.	1	68	D	60
BAK 6803137-A	L.H.	1	68	D	60
C1VY 5703136-B	R.H.	1	53	D	61/63
C1VY 5703137-B	L.H.	1	53	D	61/63
C1VY 7403136-B	R.H.	1	74	D	61/63
C1VY 7403137-B	L.H.	1	74	D	61/63
C4VY 5303136-A	R.H. (‡‡)	1	53	D	64
C4VY 5303137-A	L.H. (‡‡)	1	53	D	64
C4VY 7403136-A	R.H. (‡‡)	1	74	D	64
C4VY 7403137-A	L.H. (‡‡)	1	74	D	64
‡‡ Package also includes -					
	(3) 375740-S101 screw-No. 8-15 x 3/8"				
B9MB 6403254-A	Clip	2	b		
32914-S8	Screw-No. 6-18 x 3/8"	2	a		
53038-S13	Screw-oval hd.-No. 8-15 x 3/4"	2	c		
359872-S100	Screw-oval hd. cr. rec. -No. 8-15	1	d		
371589-S	Screw-flat hd.-No. 6-20 x 3/8"	AR	b		
03144-5	MOULDING (WINDSHIELD OUTSIDE) TOP				
PB9M 6403144-A	52-27/32" long (c)	1	All except 76	A	60
PB9M 7603144-A	(b)	1	76	A	60
COAB 5903144-A	(a)	1	71	A	61
C1AB 6203144-A	(a)	1	All except 71, 76	A	61
COAB 7603144-A	(b)	1	76	A	61/62
C2AZ 6203144-A	Rustless steel	1	All except 57,63,76	A	62/64
Package also includes -					
	(2) 376374-S100 screw				
C3AZ 6303144-B	Rustless steel - not used with Laundau Top (§§)	1	63	A	63/64
C3AZ 6303144-C	Use with Laundau Top (§§)	1	63	A	64
§§ Package also includes -					
(6) C4AZ-6303178-A retainer	(8) 376387-S101 screw-No. 8				
C3AZ 7603144-A	Rustless steel	1	76	A	63/64
Package also includes -					
	(5) 376361-S101 screw				
C4AZ 5703144-A		1	57	A	64
C2OZ 6203144-A	Rustless steel	1	All except 65	B	62/63
C3OZ 6503144-A	Rustless steel	1	65	B	63
Package also includes -					
	(2) 376394-S101 screw				

CONTINUED ON NEXT PAGE

GROUP AND PART NUMBER	DESCRIPTION, SIZE, ETC.	NO. REQ'D	MODEL OR ENGINE CUBIC INCH DISPLACEMENT	VEHICLE CODE	YEAR 19____
03144-5	MOULDING (WINDSHIELD OUTSIDE) TOP (CONTINUED)				
CODB 6403144-A	Rustless steel (d)	1	All except 63,76	C	60/64
C3DZ 6303144-A	Rustless steel	1	63	C	63/64
Package also includes -					
	(5) C3DZ-6303178-A retainer				
C3DZ 7603144-A	Rustless steel	1	76	C	63/64
Package also includes -					
	(3) 376361-S101 screw				
COLB 6303144-B	R.H. - zinc die cast	1	All except 68	D	60
COLB 6303145-B	L.H. - zinc die cast	1	All except 68	D	60
BAK 6803144-B		1	68	D	60
C1VY 5703144-C		1	53	D	61/63
C1VB 7403144-B		1	74	D	61/63
C4VY 5303144-A		1	53	D	64
Package also includes -					
	(8) C4SB-6303178-A retainer				
C4VY 7403144-A		1	74	D	64
Package also includes -					
(3) C4VY-7403180-A clip	(3) 376373-S101 screw-No.8-18 x 5/8"				
B9MB 6403254-A	Clip	6	c		
34053-S8	Nut-No.10-24	6	c		
52010-S8	Screw-No.6-18 x 1/2"	2	a		
52732-S8	Screw-pan hd. cr. rec. -No.6-18 x 5/8"	2	d		
53038-S13	Screw-oval hd.-No.8-15 x 3/4"	5	b		
03148-9	MOULDING (WINDSHIELD OUTSIDE) BELT				
COMB 6403164-C	R.H. - 49-1/2" long (b)	1	All	A	60
COMB 6403165-C	L.H. - 49-1/2" long (b)	1	All	A	60
COAB 6403148-A	(a)	1	All	A	61/62
C3AZ 6203148-A	R.H. (Δ)	1	All except 57,63,76	A	63/64
C3AZ 6203149-A	L.H. (Δ)	1	All except 57,63,76	A	63/64
C3AZ 7603148-A	R.H. (Δ)	1	57,63,76	A	63/64
C3AZ 7603149-A	L.H. (Δ)	1	57,63,76	A	63/64
Δ Package also includes -					
(4) 375747-S101 screw	(4 or 5) 376378-S101 screw				
C2OB 6203148-A	Rustless steel	1	All except 65	B	62/63
C3OZ 6503148-A	Rustless steel	1	65	B	63
CODB 6403148-A	Rustless steel	1	All	C	60/64
BAK 5703148-A	R.H.	1	All	D	60
BAK 5703149-A	L.H.	1	All	D	60
C1VB 5703148-C		1	All	D	61/63
C4VY 5303148-A	Rustless steel	1	All	D	64
COMB 6403407-D	Retainer	6	b		
52010-S8	Screw-No.6-18 x 1/2"	2	a		
52720-S8	Screw-pan hd.-No.8-15 x 3/8"	2	b		
372141-S100	Screw-pan hd. -No. 8-15 x 1"	2	b		
03152	COVER (WINDSHIELD OUTSIDE TOP MOULDING JOINT)				
COLB 6303152-A	Center	1	All except 68	D	60
03152-3	REFER TO GROUP 03220-1				
03154-5	WEATHERSTRIP (WINDSHIELD OUTSIDE UPPER MOULDING)				
B9LB 6803154-A	R.H.	1	68	D	60
B9LB 6803155-A	L.H.	1	68	D	60
03164-5	REFER TO GROUP 03148				

GROUP AND PART NUMBER	DESCRIPTION, SIZE, ETC.	NO. REQ'D	MODEL OR ENGINE CUBIC INCH DISPLACEMENT	VEHICLE CODE	YEAR 19____
03178	RETAINER (WINDSHIELD OUTSIDE TOP MOULDING)				
C3AZ 6303178-A	Spring steel	6	63	A	63
C4AZ 5703178-A		5	57	A	64
C4AZ 6303178-A	Spring steel	6	63	A	64
C3DZ 6303178-A		5	63	C	63/64
C4SZ 6303178-A		8	53	D	64
03180	CLIP (WINDSHIELD OUTSIDE TOP MOULDING)				
C4VY 7403180-A		3	74	D	64
03192-3	REFER TO GROUP 03220-1				
03198-9	WEATHERSTRIP (FRONT BODY UPPER PILLAR)				
PB9M 7603198-A	R.H.	1	76	A	60
PB9M 7603199-A	L.H.	1	76	A	60
COAB 7603198-A	R.H.	1	76	A	61/62
COAB 7603199-A	L.H.	1	76	A	61/62
C3AZ 7603198-B	R.H.	1	76	A	63/64
C3AZ 7603199-B	L.H.	1	76	A	63/64
C3DZ 7603198-A	R.H.	1	76	C	63/64
C3DZ 7603199-A	L.H.	1	76	C	63/64
BAK 5703198-A	R.H.	1	All except 68	D	60
BAK 5703199-A	L.H.	1	All except 68	D	60
BAK 6803198-A	R.H.	1	68	D	60
BAK 6803199-A	L.H.	1	68	D	60
C2VY 7403198-A	R.H.	1	74	D	61/63
C1VB 7403199-D	L.H. - use on vehicles built prior to 11-17-61	1	74	D	61/62
C2VY 7403199-A	L.H. - use on vehicles built after 11-16-61	1	74	D	62/63
C4VY 7403198-A	R.H.	1	74	D	64
C4VY 7403199-A	L.H.	1	74	D	64
03201	SPACER (WINDSHIELD OUTSIDE SIDE MOULDING)				
B9MB 6403201-A	Hard rubber - 1/4" x 3/8" x 5/8"	2	All	A	60
03220-1	MOULDING (WINDSHIELD OUTSIDE) UPPER CORNER				
C1AB 5903220-A	R.H. (a)	1	71	A	61
C1AB 5903221-A	L.H. (a)	1	71	A	61
C1AB 6203220-B	R.H. (a)	1	54, 62, 65, 75	A	61
C1AB 6203221-B	L.H. (a)	1	54, 62, 65, 75	A	61
C1AB 6403220-A	R.H. (a)	1	58, 64	A	61
C1AB 6403221-A	L.H. (a)	1	58, 64	A	61
COAB 7603192-A	R.H. (c)	1	76	A	61/62
COAB 7603193-A	L.H. (c)	1	76	A	61/62
C2AZ 6203220-A	R.H. (††)(b)	1	All except 76	A	62
C2AZ 6203221-A	L.H. (††)(b)	1	All except 76	A	62
	†† Package also includes - (2) 376394-S101 screw-No.6-20 x 1/2"				
C3AZ 7603220-A	R.H. (†)	1	76	A	63/64
C3AZ 7603221-A	L.H. (†)	1	76	A	63/64
	† Package also includes - (1) 52726-S8 screw (2) 374842-S101 screw				
C2OZ 6203220-B	R.H. - cover - snap-on type	1	All except 65	B	62/63
C2OZ 6203221-B	L.H. - cover - snap-on type	1	All except 65	B	62/63
C3OZ 6503220-A	R.H. (‡)	1	65	B	63
C3OZ 6503221-A	L.H. (‡)	1	65	B	63
	‡ Package also includes - (2) 376394-S101 screw				

CONTINUED ON NEXT PAGE

GROUP AND PART NUMBER	DESCRIPTION, SIZE, ETC.	NO. REQ'D	MODEL OR ENGINE CUBIC INCH DISPLACEMENT	VEHICLE CODE	YEAR 19____
03220-1	MOULDING (WINDSHIELD OUTSIDE) UPPER CORNER (CONTINUED)				
CODB 6403152-C	R. H. - cover - rustless steel - snap-on type	1	All except 63,76	C	60/64
CODB 6403153-C	L. H. - cover - rustless steel - snap-on type	1	All except 63,76	C	60/64
C3DZ 6303220-A	R. H. (ΔΔ)	1	63	C	63/64
C3DZ 6303221-A	L. H. (ΔΔ)	1	63	C	63/64
	ΔΔ Package also includes - (2) 376373-S101 screw				
C3DZ 7603220-A	R. H. (§)	1	76	C	63/64
C3DZ 7603221-A	L. H. (§)	1	76	C	63/64
	§ Package also includes - (2) 376361-S101 screw				
BAK 6803192-A	R. H.	1	68	D	60
BAK 6803193-A	L. H.	1	68	D	60
C1VY 7403192-B	R. H. (d)	1	74	D	61/63
C1VY 7403193-B	L. H. (d)	1	74	D	61/63
C4VY 7403192-A	R. H. (‡)	1	74	D	64
C4VY 7403193-A	L. H. (‡)	1	74	D	64
	‡ Package also includes - (1) 376373-S101 screw-No. 8-18 x 5/8"				
32914-S8	Screw-No. 6-18 x 3/8"	AR	a		
52010-S8	Screw-No. 6-18 x 1/2"	1	c		
53038-S13	Screw-oval hd.-No. 8-15 x 3/4"	1	c		
375557-S7	Screw-pan hd.-No. 6-20 x 1/2"	2	b		
376373-S101	Screw-flat hd.-No. 8-18 x 5/8"	2	d		
03254	CLIP (WINDSHIELD SIDE MOULDING) RETAINING				
B9MB 6403254-A		8	All except 76	A	60
03407	RETAINER (WINDSHIELD OUTSIDE BELT MOULDING)				
COMB 6403407-D	(3) R. H. and (3) L. H.	6	All	A	60
03408	PANEL (WINDSHIELD HEADER)				
COAB 6403408-A		1	All except 76	A	61
COAB 7603408-A		1	76	A	61/62
C3AZ 6203408-A	Includes moulding - roof drip front	1	All except 57,63,76	A	62/64
C3AZ 7603408-A		1	76	A	63/64
C3AZ 6303408-B		1	57, 63	A	63/64
C2OZ 6203408-A		1	All except 65	B	62/63
C3OZ 6503408-A		1	65	B	63
CODZ 6403408-D	Necessary to drill holes for mirror bracket on 1960 vehicles	1	All except 63,76	C	60/64
C3DZ 6303408-A		1	63	C	63
C3DZ 7603408-A		1	76	C	63/64
	Necessary to drill headlining retainer holes	1	63	C	64
COLB 6303408-A		1	All except 68	D	60
BAK 6803408-B		1	68	D	60
C1VB 5703408-A		1	53	D	61/63
C1VB 7403408-A		1	74	D	61/63
C4VY 5303408-A		1	53	D	64
C4VY 7403408-A		1	74	D	64
03420-1	EXTENSION (WINDSHIELD HEADER) INNER PANEL				
BAK 5703420-A	R. H.	1	All except 68	D	60
BAK 5703421-A	L. H.	1	All except 68	D	60
03452-3	EXTENSION (WINDSHIELD HEADER) OUTER PANEL				
BAK 6803452-A	R. H.	1	68	D	60
BAK 6803453-A	L. H.	1	68	D	60

GROUP AND PART NUMBER	DESCRIPTION, SIZE, ETC.	NO. REQ'D	MODEL OR ENGINE CUBIC INCH DISPLACEMENT	VEHICLE CODE	YEAR 19____
03458	DOWEL (FOLDING TOP NO. 1 BOW)				
PB9M 7603458-A	Chrome finish	2	76	A	60
COAB 7603458-A	Chrome finish	2	76	A	61/62
BAK 6803458-A	Chrome finish	2	68	D	60
03468-9	REINFORCEMENT (WINDSHIELD OPENING) LOWER SIDE				
PB9M 6403468-A	R.H.	1	All	A	60
PB9M 6403469-A	L.H.	1	All	A	60
BAK 5703468-A	R.H.	1	All	D	60
BAK 5703469-A	L.H.	1	All	D	60
C1VB 5703468-A	R.H.	1	All	D	61/64
C1VB 5703469-A	L.H.	1	All	D	61/64
03474	PLATE (WINDSHIELD HEADER DOWEL STRIKER)				
PB9M 7603474-A	Chrome finish	2	76	A	60
COAB 7603474-A	Chrome finish	2	76	A	61/62
03512-3	REFER TO GROUP 03598-9				
03598-9	MOULDING (WINDSHIELD GARNISH) SIDE				
PB9M 5703598-AP	R.H. - lower (a)	1	57A, B, 63A, B, 77	A	60
PB9M 5703599-AP	L.H. - lower (a)	1	57A, B, 63A, B, 77	A	60
PB9M 6403598-AP	R.H. - upper - 25-1/4" long (a)	1	57A, B, 58, 63A, B, 64, 77	A	60
PB9M 6403599-AP	L.H. - upper - 25-1/4" long (a)	1	57A, B, 58, 63A, B, 64, 77	A	60
PB9M 6403598-BP	R.H. - lower (a)	1	58, 64	A	60
PB9M 6403599-BP	L.H. - lower (a)	1	58, 64	A	60
COMB 7603598-A	R.H. - chrome (b)	1	76A	A	60
COMB 7603599-A	L.H. - chrome (b)	1	76A	A	60
C1AB 6203598-AP	R.H. - in prime (d)	1	All except 76	A	61
C1AB 6203599-AP	L.H. - in prime (d)	1	All except 76	A	61
C1MB 7603598-A	R.H. - chrome finish (b)	1	76A	A	61/62
C1MB 7603599-A	L.H. - chrome finish (b)	1	76A	A	61/62
C2MY 5403598-A	R.H. - chrome finish (d)	1	54B, 65B, C, 71B, D, 75B	A	62
C2MY 5403599-A	L.H. - chrome finish (d)	1	54B, 65B, C, 71B, D, 75B	A	62
C2AZ 6203598-A	R.H. - in prime (d)	1	54A, 62A, 65A, 71A, 75A	A	62
C2AZ 6203599-A	L.H. - in prime (d)	1	54A, 62A, 65A, 71A, 75A	A	62
C3AZ 6203598-A	R.H. - in prime - use with fixed steering column (d)	1	54A, 62A, 65A, 75A	A	63
C3AZ 6203599-A	L.H. - in prime - use with fixed steering column (d)	1	54A, 62A, 65A, 75A	A	63
C3AZ 6203598-B	R.H. - use with movable steering column	1	54A, 62A, 65A, 75A	A	63
C3AZ 6203599-B	L.H. - use with movable steering column	1	54A, 62A, 65A, 75A	A	63
C3AZ 6303598-B	R.H. - use with movable steering column (††)	1	63	A	63
C3AZ 6303599-B	L.H. - use with movable steering column (††)	1	63	A	63
†† Package also includes - (2) 53060-S13 screw					
C3AZ 6503598-A	R.H. - chrome finish - use with fixed steering column (Δ)	1	54B, 65B, C, 71, 75B, C	A	63
C3AZ 6503599-A	L.H. - chrome finish - use with fixed steering column (Δ)	1	54B, 65B, C, 71, 75B, C	A	63
C3AZ 6503598-B	R.H. - use with movable steering column (Δ)	1	54B, 65B, C, 71, 75B, C	A	63
C3AZ 6503599-B	L.H. - use with movable steering column (Δ)	1	54B, 65B, C, 71, 75B, C	A	63
Δ Package also includes - (2) 53027-S13 screw-No.8-15 x 5/8" (1) 53066-S12 screw					
C3AZ 7603598-A	R.H. - chrome finish - use with fixed steering column (§)	1	76	A	63
C3AZ 7603599-A	L.H. - chrome finish - use with fixed steering column (§)	1	76	A	63
C3AZ 7603598-B	R.H. - use with movable steering column (§)	1	76	A	63
C3AZ 7603599-B	L.H. - use with movable steering column (§)	1	76	A	63

CONTINUED ON NEXT PAGE

GROUP AND PART NUMBER	DESCRIPTION, SIZE, ETC.	NO. REQ'D	MODEL OR ENGINE CUBIC INCH DISPLACEMENT	VEHICLE CODE	YEAR 19____
03598-9	MOULDING (WINDSHIELD GARNISH) SIDE (CONTINUED)				
§ Package also includes -					
	(2) 53027-S13 screw-No. 8-15 x 5/8"				
C3AZ 6303598-A	R.H. - aluminum - use with fixed steering column - use on vehicles built prior to 1-2-64 (ΔΔ)	1	57,63	A	63/64
C3AZ 6303599-A	L.H. - aluminum - use with fixed steering column - use on vehicles built prior to 1-2-64 (ΔΔ)	1	57,63	A	63/64
ΔΔ Package also includes -					
	(2) 53060-S13 screw				
C4MY 5403598-A	R.H.	1	54B, F, 65B, C, F, 71B, D, 75F	A	64
C4MY 5403599-A	L.H.	1	54B, F, 65B, C, F, 71B, D, 75F	A	64
C4AZ 6203598-A	R.H.	1	54A, 62A, 65A, 71A, C	A	64
C4AZ 6203599-A	L.H.	1	54A, 62A, 65A, 71A, C	A	64
C4AZ 6303598-A	R.H. - use on vehicles built after 1-1-64 (†)	1	57,63	A	64
C4AZ 6303599-A	L.H. - use on vehicles built after 1-1-64 (†)	1	57,63	A	64
† Package also includes -					
(1) 52726-S8 screw-No.8-15 x 1/2" (1) 53060-S13 screw-No. 8-15 x 1"					
C4AZ 7603598-A	R.H. (§§)	1	76	A	64
C4AZ 7603599-A	L.H. (§§)	1	76	A	64
§§ Package also includes -					
(1) 52726-S8 screw-No. 8-15 x 1/2" (2) 53027-S13 screw-No. 8-15 x 5/8"					
C2OB 6203512-AP	R.H. - in prime (b)	1	All except 65	B	62/63
C2OB 6203513-AP	L.H. - in prime (b)	1	All except 65	B	62/63
C3OZ 6503598-A	R.H. - in prime	1	65	B	63
C3OZ 6503599-A	L.H. - in prime	1	65	B	63
CODZ 6403512-A	R.H. - in prime (c)	1	All except 63, 76	C	60/64
CODZ 6403513-A	L.H. - in prime (c)	1	All except 63, 76	C	60/64
C3DZ 6303598-B	R.H. (‡)	1	63	C	63/64
C3DZ 6303599-A	L.H. (‡)	1	63	C	63
C3DZ 6303599-B	L.H. (‡)	1	63	C	64
C3DZ 7603598-A	R.H. (‡)	1	76	C	63
C3DZ 7603598-B	R.H. (‡)	1	76	C	64
C3DZ 7603599-B	L.H. (‡)	1	76	C	63/64
‡ Package also includes -					
	(3) 53027-S13 screw-No. 8-15 x 5/8"				
COLB 6303598-AP	R.H.	1	53,57,63	D	60
COLB 6303599-AP	L.H.	1	53,57,63	D	60
COLB 6503598-A	R.H. - chrome finish	1	54,65,75	D	60
COLB 6503599-A	L.H. - chrome finish	1	54,65,75	D	60
COLB 6803598-A	R.H. - chrome finish	1	68	D	60
COLB 6803599-A	L.H. - chrome finish	1	68	D	60
C1VB 5703598-C	R.H.	1	53	D	61/62
C1VB 5703599-C	L.H.	1	53	D	61/62
C1VB 7403598-B	R.H.	1	74	D	61/62
C1VB 7403599-B	L.H.	1	74	D	61/62
C3VY 5703598-A	R.H.	1	53	D	63
C3VY 5703599-A	L.H.	1	53	D	63
C3VY 7403598-A	R.H.	1	74	D	63
C3VY 7403599-A	L.H.	1	74	D	63
C4VY 5303598-A	R.H. (‡‡)	1	53	D	64
C4VY 5303599-A	L.H. (‡‡)	1	53	D	64
C4VY 7403598-A	R.H. (‡‡)	1	74	D	64
C4VY 7403599-A	L.H. (‡‡)	1	74	D	64
‡‡ Package also includes -					
	(2) 53049-S13 screw-No.8-18 x 7/8"				
53027-S13	Screw-oval hd. cr. rec. -No. 8-15 x 5/8"	2	d		
53038-S13	Screw-oval hd. cr. rec. -No. 8-15 x 3/4"	AR	b		
53060-S13	Screw-oval hd. cr. rec. -No. 8-15 x 1"	3	c		
371847-S13	Screw-oval hd. -No. 8-15 x 2-1/2"	AR	a		

GROUP AND PART NUMBER	DESCRIPTION, SIZE, ETC.		NO. REQ'D	MODEL OR ENGINE CUBIC INCH DISPLACEMENT	VEHICLE CODE	YEAR 19____
03606-7	MOULDING (WINDSHIELD GARNISH) UPPER					
B9MB 5703606-A	R.H. - chrome	(a)	1	57F, 63F	A	60
B9MB 5703607-A	L.H. - chrome	(a)	1	57F, 63F	A	60
COMB 7603606-A	Chrome - 46-5/8" long	(b)	1	76	A	60
COAB 6403606-AP	R.H.	(a)	1	54, 58, 62, 64, 65, 71, 75	A	61
COAB 6403607-AP	L.H.	(a)	1	54, 58, 62, 64, 65, 71, 75	A	61
C1MB 7603606-B		(b)	1	76	A	61/62
C2MB 5403606-A	R.H. - chrome finish	(a)	1	54B, F, 65B, C, F, 71B, D, 75B, F	A	62/64
C2MB 5403607-A	L.H. - chrome finish	(a)	1	54B, F, 65B, C, F, 71B, D, 75B, F	A	62/64
C2AB 6203606-AP	R.H.	(a)	1	54A, 62A, 65A, 71A, C, 75A	A	62/64
C2AB 6203607-AP	L.H.	(a)	1	54A, 62A, 65A, 71A, C, 75A	A	62/64
C3AZ 7603606-A	Chrome finish		1	76	A	63
Package also includes -						
	(3) 53027-S13	screw-No.8-15 x 5/8"				
C3AZ 6303606-A	Aluminum - use on vehicles built prior to 1-2-64		1	57, 63	A	63/64
Package also includes -						
	(4) 53060-S13	screw-No. 8-15 x 1"				
C4AZ 6303606-A	Aluminum - use on vehicles built after 1-1-64		1	57, 63	A	64
Package also includes -						
(2) 52726-S8	screw-No.8-15 x 1/2" (4) 53060-S13	screw-No. 8-15 x 1"				
C4AZ 7603606-A	Chrome finish		1	76	A	64
Package also includes -						
(1) 52726-S8	screw-No. 8-15 x 1/2" (3) 53027-S13	screw-No. 8-15 x 5/8"				
C3DZ 6303606-B		(§)	1	63	C	63/64
C3DZ 7603606-B		(§)	1	76	C	63/64
§ Package also includes -						
	(2) 53027-S13	screw-No.8-15 x 5/8"				
BAK 5703606-AP	R.H.		1	53, 57, 63	D	60
BAK 5703607-AP	L.H.		1	53, 57, 63	D	60
BAK 6803606-A	R.H. - chrome finish		1	68	D	60
BAK 6803607-A	L.H. - chrome finish		1	68	D	60
BAK 7503606-A	R.H. - chrome finish		1	54, 65, 75	D	60
BAK 7503607-A	L.H. - chrome finish		1	54, 65, 75	D	60
C1VB 5703606-B	R.H.		1	53	D	61/63
C1VB 5703607-B	L.H.		1	53	D	61/63
C1VB 7403606-B	R.H.		1	74	D	61/63
C1VB 7403607-B	L.H.		1	74	D	61/63
C4VY 5303606-A		(‡)	1	53	D	64
C4VY 7403606-A		(‡)	1	74	D	64
‡ Package also includes -						
	(4) 53049-S13	screw-No. 8-18 x 7/8"				
53038-S13	Screw-oval hd.-No. 8-15 x 3/4"		2or4	b		
53066-S13	Screw-oval hd.-No. 8-15 x 1-1/4"		3	a		
03622-3	MOULDING (WINDSHIELD GARNISH) SIDE UPPER					
B9MB 5703622-AP	R.H.	(a)	1	57A, B, 63A, B, 77	A	60
B9MB 5703623-AP	L.H.	(a)	1	57A, B, 63A, B, 77	A	60
COMB 6303622-A	R.H. - chrome	(a)	1	57F, 63F	A	60
COMB 6303623-A	L.H. - chrome	(a)	1	57F, 63F	A	60
B9MB 6403622-AP	R.H.	(a)	1	58, 64	A	60
B9MB 6403623-AP	L.H.	(a)	1	58, 64	A	60
BAK 6803622-C	R.H. - chrome finish		1	68	D	60
BAK 6803623-C	L.H. - chrome finish		1	68	D	60
53038-S13	Screw-oval hd.-No. 8-15 x 3/4"		AR	a		
53066-S13	Screw-oval hd.-No. 8-15 x 1-1/4"		AR	a		

GROUP AND PART NUMBER	DESCRIPTION, SIZE, ETC.	NO. REQ'D	MODEL OR ENGINE CUBIC INCH DISPLACEMENT	VEHICLE CODE	YEAR 19.___
03626-7	MOULDING (WINDSHIELD GARNISH) LOWER				
COMB 6403626-BP	R. H. (a)	1	All	A	60
COMB 6403627-BP	L. H. (a)	1	All	A	60
C2AZ 6203626-A	R.H. (b)	1	All	A	61/62
C2AZ 6203627-A	L.H. (b)	1	All	A	61/62
C3AZ 6203626-A	R. H. - in prime (c)	1	All	A	63/64
C3AZ 6203627-A	L. H. - in prime (c)	1	All	A	63/64
52392-S13	Screw-oval hd. cr. rec. -No. 8-15 x 1-3/4"	1	b, c		
53038-S13	Screw-oval hd. -No. 8-15 x 3/4"	7	a, c		
53060-S13	Screw-oval hd. cr. rec. -No. 8-15 x 1"	2	b, c		
352954-S13	Screw-cr. rec. -sheet metal No. 8	1	c		
03638	SUPPORT (WINDSHIELD GARNISH MOULDING) LOWER				
C3AZ 6203638-A	Steel	7	All	A	63/64
03642	FILLER (WINDSHIELD GARNISH MOULDING) LOWER CORNER				
COAB 6403642-A		2	All	A	61/62
C3AZ 6203642-A		2	All	A	63/64
		2	63, 76	C	64
03680-1	MOULDING (WINDSHIELD GARNISH) SIDE LOWER				
COMB 6303680-A	R. H. - chrome (a)	1	57F, 63F, 76 D	A	60
COMB 6303681-A	L. H. - chrome (a)	1	57F, 63F, 76D	A	60
371847-S13	Screw-oval hd. -No. 8-15 x 2-1/2"	AR	a		
03742-3	REINFORCEMENT (COWL TOP RADIATOR SUPPORT BRACE)				
BAK 5703742-B	R. H.	1	All	D	60
BAK 5703743-B	L. H.	1	All	D	60
04055	BRACE (INSTRUMENT PANEL TO STEERING COLUMN)				
B9BM 6404055-AP		1	All	A	60
04090-1	BRACKET & PIVOT (VISOR)				
BAK 5704090-A		2	All except 68	D	60
BAK 6804090-C	R. H.	1	68	D	60
BAK 6804091-C	L. H.	1	68	D	60
C1VB 7404090-B	R. H.	1	74	D	61
C1VB 7404091-B	L. H.	1	74	D	61
C2VY 5704090-A	R. H. (a)	1	53	D	61/63
C2VY 5704091-A	L. H. (a)	1	53	D	61/63
C2VY 7404090-A	R. H. (a)	1	74	D	62/63
C2VY 7404091-A	L. H. (a)	1	74	D	62/63
C4VY 5304090-A	R.H. (a)	1	53	D	64
C4VY 5304091-A	L.H. (a)	1	53	D	64
C4VY 7404090-A	R. H. (a)	1	74	D	64
C4VY 7404091-A	L. H. (a)	1	74	D	64
52388-S13	Screw-oval hd. cr. rec. tap. -No. 8-15 x 1-1/2"	4	a		
355097-AS7	Screw-set-No. 10-32 x 3/16"	1	a		
04114	PIN (INSIDE VISOR ANCHOR)				
BAE 6404114-A	For padded visor and regular production visor	2	All	A	61/64
		2	All except 65	B	62/63
B8A 7004114-A	Plastic	2	All	C	60
C3DZ 7604114-A		2	63,76	C	63/64
PB9M 7604114-A	Steel 5" long	2	All except 63,76	C	61/64
		2	All	D	61/63

GROUP AND PART NUMBER	DESCRIPTION, SIZE, ETC.	NO. REQ'D	MODEL OR ENGINE CUBIC INCH DISPLACEMENT	VEHICLE CODE	YEAR 19____
04131-2	BRACKET (VISOR CLIP MOUNTING)				
C1AB 6204131-C	Use with padded visor (a)	1	All except 76	A	61/62
C1AB 7604131-A	Use with padded visor (b)	2	76	A	61/62
C3AZ 7604131-B		1	76	A	63
C3AZ 6304131-B		1	57,63	A	63/64
C3OZ 6504131-A	1-1/2" x 1-3/4" - chrome finish	1	65	B	63
B8A 7604132-A	Plastic - use with padded visor	2	All	C	60
C3DZ 7604132-A	Chrome finish	1	76	C	63
		1	63,76	C	64
B9LB 5704131-A		2	All	D	60
C4VY 5304131-A		1	53	D	64
C4VY 7404131-A		1	74	D	64
50801-S	Screw and washer	4	b		
52368-S13	Screw-oval hd. -No. 8-15 x 7/8"	1	a		
	Refer to group 17700 for all models except 57,63 for 1964 Mercury				
04134	SPRING (VISOR ARM CLIP)				
COMB 6404134-A	Located on rear view mirror bracket (17684)	2	All	A	60
C2AZ 6203134-A		1	All except 57,63,76	A	62&64
CODB 5904134-C	Located on rear view mirror bracket (17684) - use on vehicles built prior to 4-10-61	1	All	C	61
C3DZ 6204134-A	Located on rear view mirror bracket (17684)	1	All except 65	B	63
	Use on vehicles built after 4-9-61	1	All except 76	C	61/64
04144-5	ARM & BRACKET (VISOR)				
PB9M 5704144-B	R.H. - chrome	1	All except 76	A	60
PB9M 5704145-B	L.H. - chrome	1	All except 76	A	60
B9MB 7604144-A	R.H. - chrome	1	76	A	60
B9MB 7604145-A	L.H. - chrome	1	76	A	60
C1MB 5404144-A	R.H. - chrome (a)	1	54B, 65B, 71B, 75B	A	61
C1MB 5404145-A	L.H. - chrome (a)	1	54B,65B,71B,75B	A	61
COAB 6404144-AP	R.H. (a)	1	54A, 58A, 62, 64A, 65A, 71A,75A	A	61
COAB 6404145-AP	L.H. (a)	1	54A, 58A, 62, 64A, 65A, 71A,75A	A	61
C1AZ 7604144-A	R.H. (b)	1	76A	A	61/62
C1AZ 7604145-A	L.H. (b)	1	76A	A	61/62
C2AZ 6204144-C	Use for Police and Taxi vehicles only	2	54A, 62A	A	62/63
		2	54A,B,62A,65A,B,71A,C	A	64
C2AZ 6204144-D	Chrome finish (c)	2	All except 57,63,76	A	62/64
C3AZ 6304144-A	R.H. - (4) hole design	1	57,63	A	63/64
C3AZ 6304145-A	L.H. - (4) hole design	1	57,63	A	63/64
C3AZ 7604144-B	R.H. - chrome finish (b)	1	76	A	63/64
C3AZ 7604145-A	L.H. - chrome finish (b)	1	76	A	63
C3AZ 7604145-B	L.H.	1	76	A	64
C4AZ 6304144-A	R.H. - (3) hole design	1	57,63	A	64
C4AZ 6304145-A	L.H. - (3) hole design	1	57,63	A	64
C3OZ 6504144-A	R.H. - in prime (c)	1	65A	B	63
C3OZ 6504145-A	L.H. - in prime (c)	1	65A	B	63
C3YY 6504144-A	R.H. - chrome finish	1	65B	B	63
C3YY 6504145-A	L.H. - chrome finish	1	65B	B	63

CONTINUED ON NEXT PAGE

GROUP AND PART NUMBER	DESCRIPTION, SIZE, ETC.	NO. REQ'D	MODEL OR ENGINE CUBIC INCH DISPLACEMENT	VEHICLE CODE	YEAR 19____
04144-5	ARM & BRACKET (VISOR) CONTINUED				
CODZ 6404144-A	R. H. - in prime	1	All except 65	B	62/63
		1	All except 62A(S-22), 62C, 63, 76	C	60/63
		1	All except 54C, D, 63, 76	C	64
CODZ 6404145-A	L. H. - in prime	1	All except 65	B	62/63
		1	All except 62A(S-22), 62C, 63, 76	C	60/63
		1	All except 54C, D, 63, 76	C	64
C1GY 6204144-A	R.H. - chrome finish	1	62A(S-22), 62C	C	61/63
		1	54C, D	C	64
C1GY 6204145-A	L.H. - chrome finish	1	62A(S-22), 62C	C	61/63
		1	54C, D	C	64
C3DZ 6304144-A	R. H. - (4) hole bracket	1	63	C	63/64
C3DZ 6304145-A	L. H. - (4) hole bracket	1	63	C	63/64
C3DZ 7604144-A	R.H. - chrome finish - use with padded visor (b)	1	76	C	63/64
C3DZ 7604145-A	L.H. - chrome finish - use with padded visor (b)	1	76	C	63/64
52388-S13	Screw-cr. rec. hd. -No. 8-15 x 1-1/2"	AR	b		
52482-S13	Screw-oval hd. -No. 8-15 x 5/8"	6	a		
53027-S13	Screw-cr. rec. oval hd. -No. 8-15x 5/8"	6	c		
04200	KIT (INSTRUMENT PANEL SAFETY PAD) ATTACHING				
C4DZ 5404200-A		1	All	C	64

Package also includes -

(1) COAZ-19552-A cement
(10) C4GY-54044B96-A retainer
(1) C4DZ-6204296-A moulding
(1) C4DZ-6204518-A moulding - R.H.
(1) C4DZ-6204519-A moulding - L.H.

04264	MOULDING (INSTRUMENT PANEL END UPPER RETAINING)				
COAB 6404264-A		1	All	A	61
04287	MOULDING (INSTRUMENT PANEL END UPPER COVER RETAINING)				
COAB 6404287-A		1	All	A	61
04296-7	MOULDING (INSTRUMENT PANEL UPPER) PAD RETAINING				
COMB 5804296-A	R. H. - 12" long	1	All	A	60
PB9M 6504297-A	L. H. - 13" long	1	All	A	60
COAB 6404296-A		1	All	A	61
C2MB 6204296-A	24.00" long	1	All	A	62
C2YY 6204296-A	R. H. - side	1	All	B	62/63
C2YY 6204297-A	L. H. - side	1	All	B	62/63
C1KB 6204296-C	Rustless steel - use with or without padded dash	1	All	C	60/63
C4DZ 6204296-A	Rustless steel - use with or without padded dash	1	54A, B, 62, 63E, 71, 76B	C	64
		2	54C, D, 63C, D, 76D	C	64

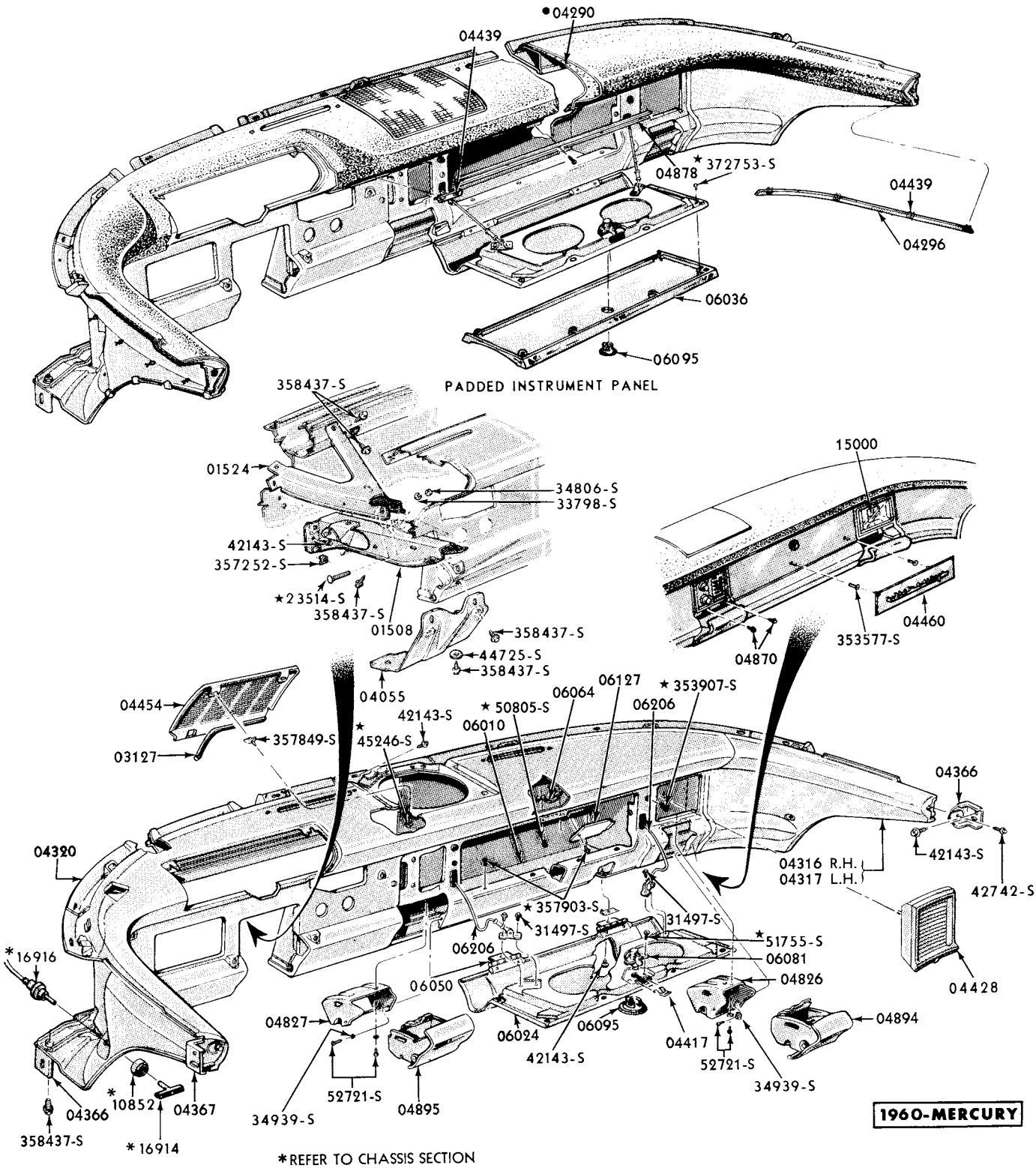

INSTRUMENT PANEL and PAD

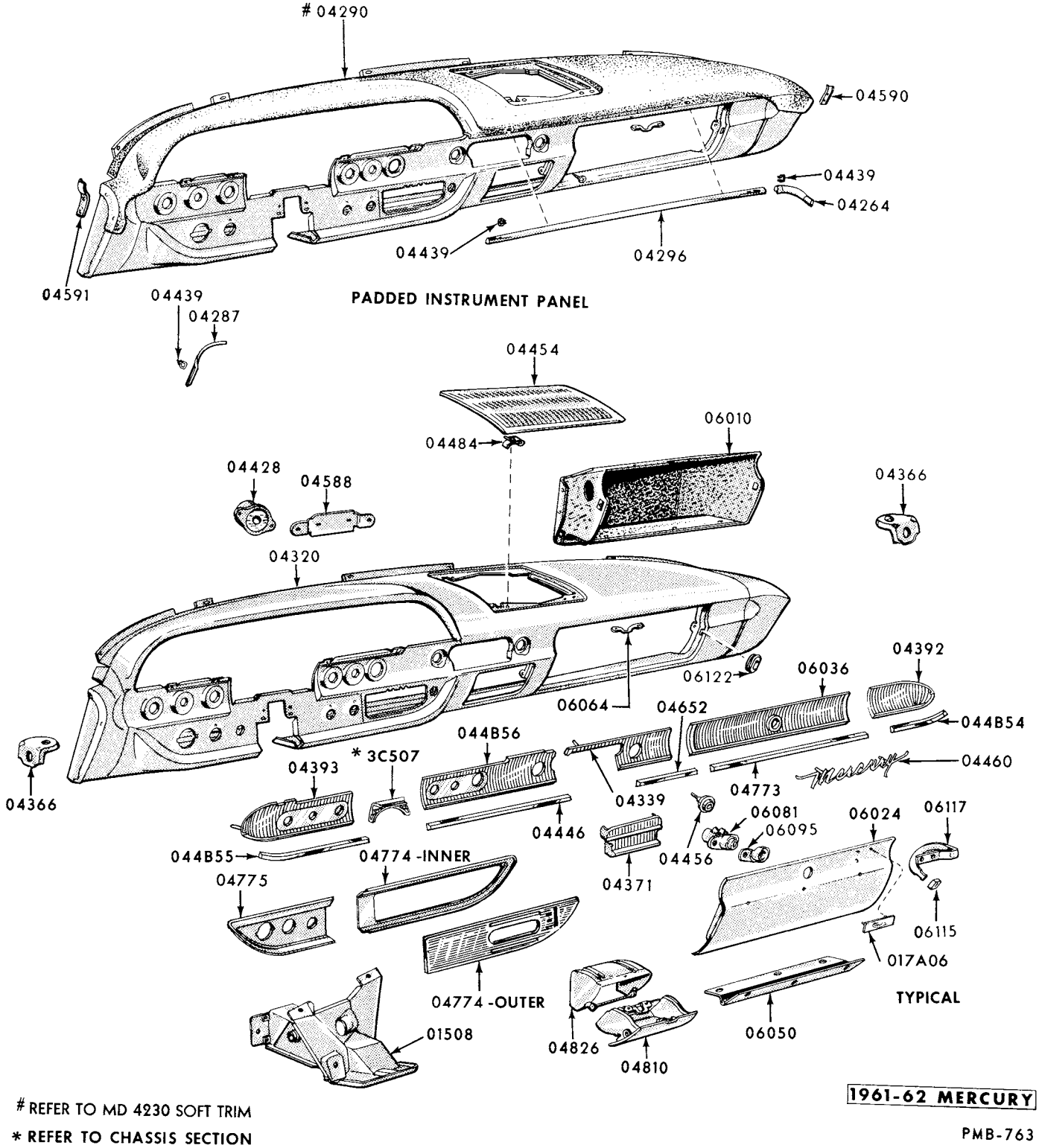

INSTRUMENT PANEL and PAD

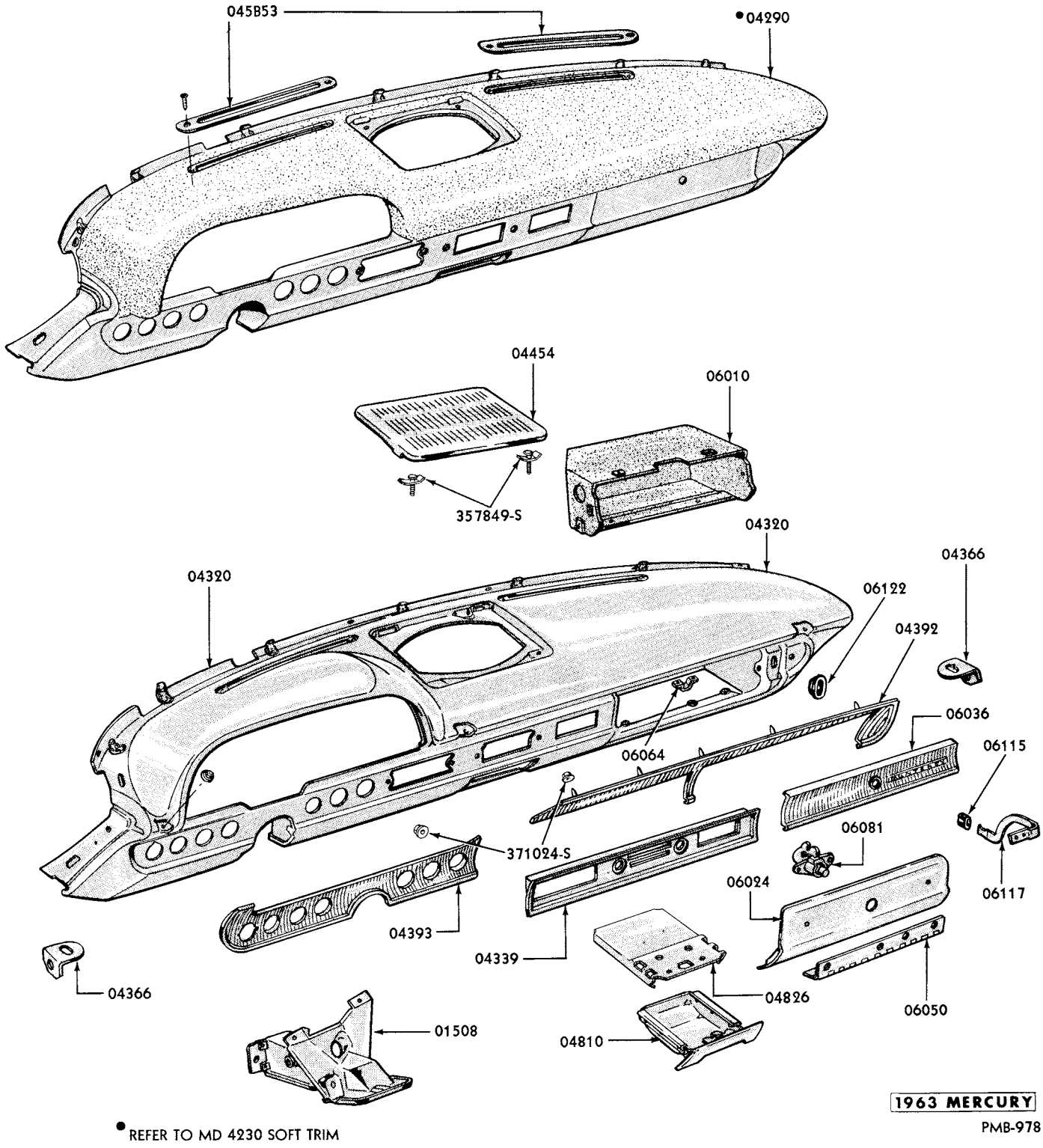

• REFER TO MD 4230 SOFT TRIM

INSTRUMENT PANEL and PAD

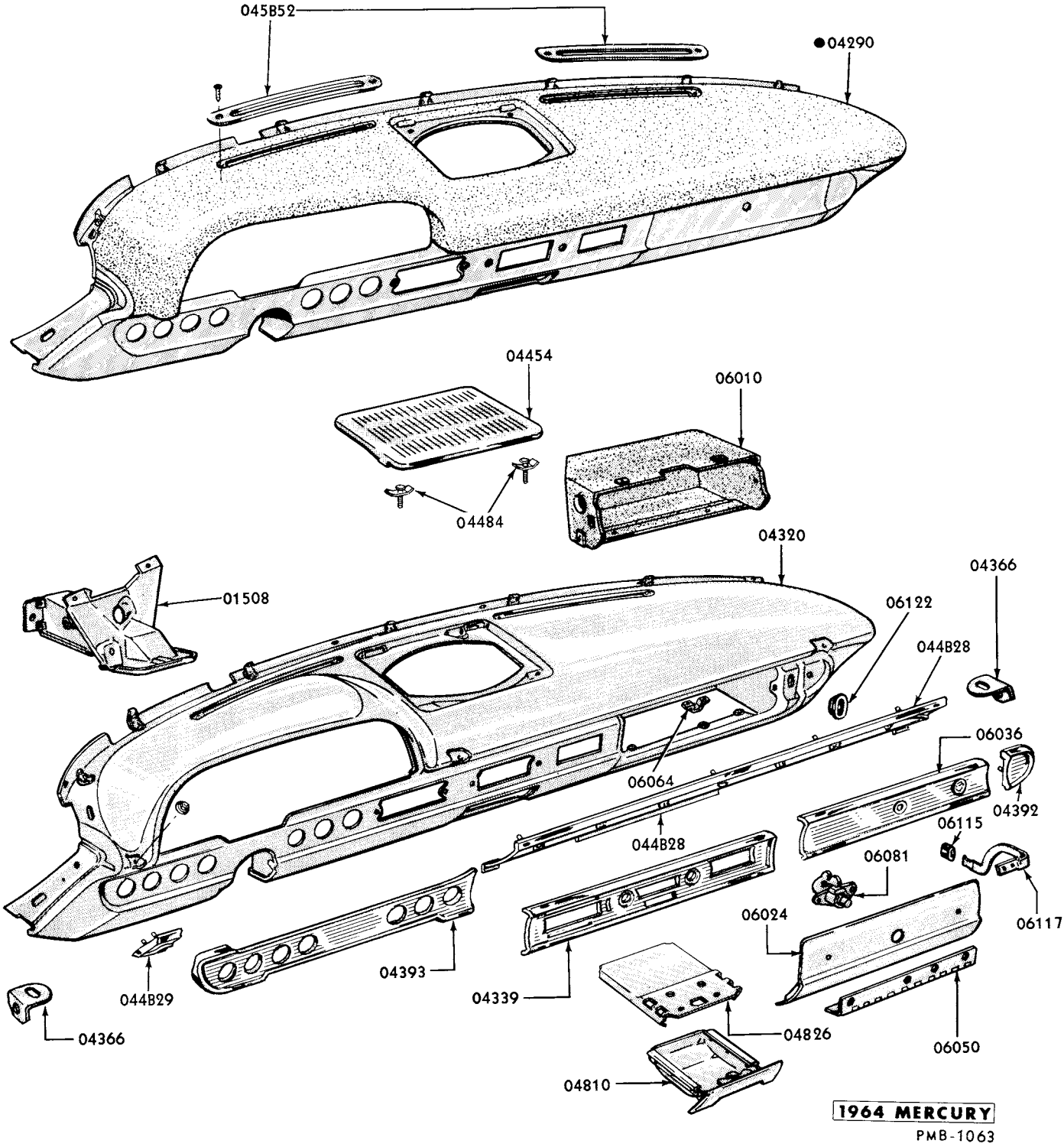

● REFER TO MD 4230 SOFT TRIM

INSTRUMENT PANEL WITHOUT A/C

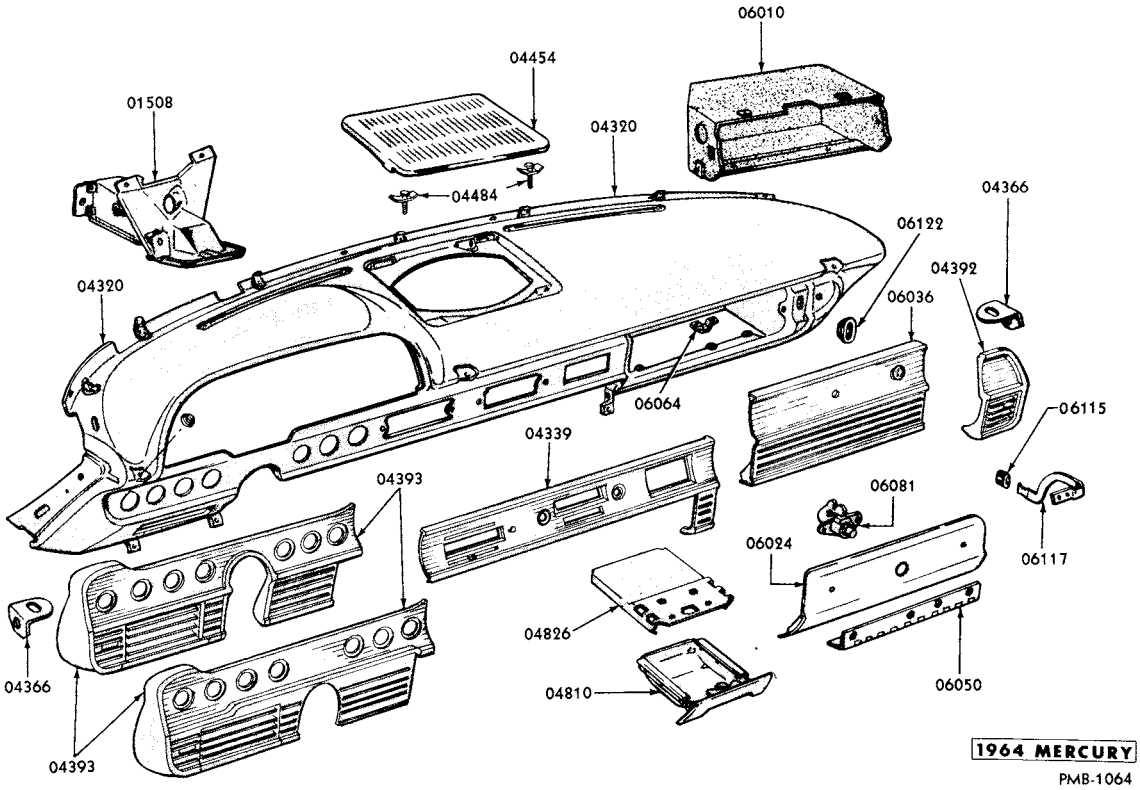

INSTRUMENT PANEL with AIR CONDITIONING

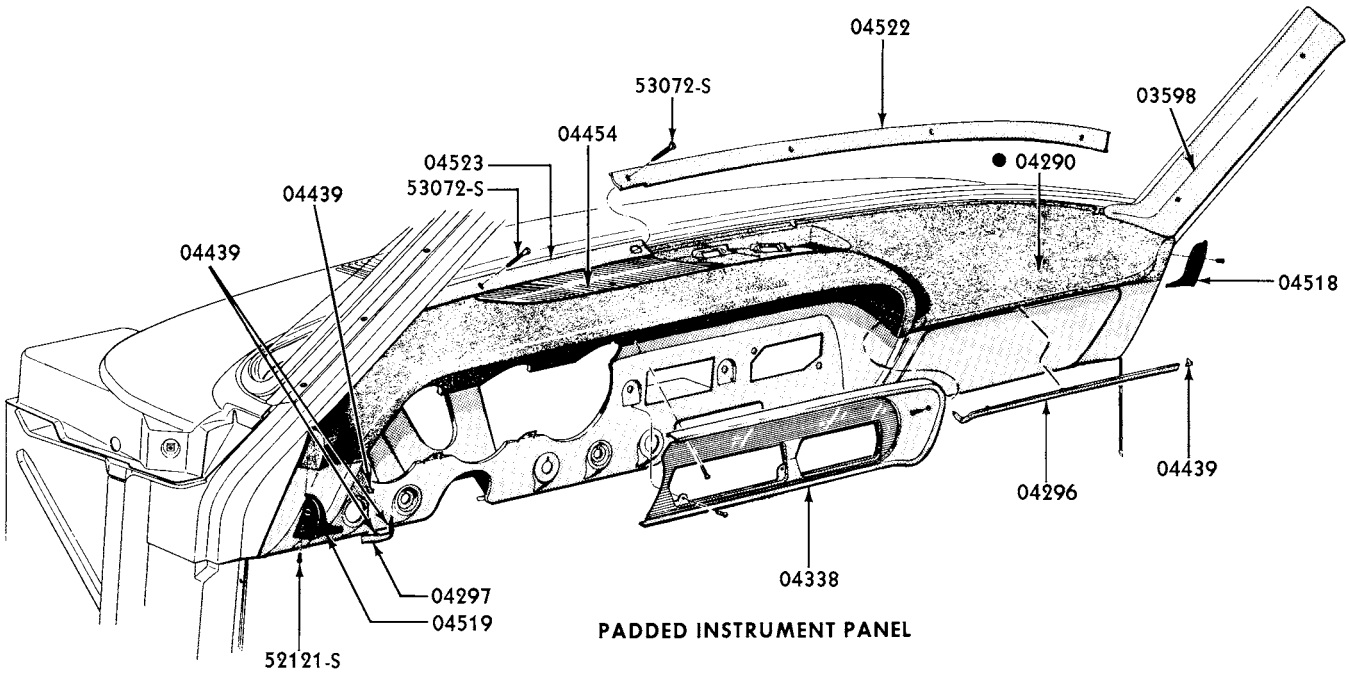

PADDED INSTRUMENT PANEL

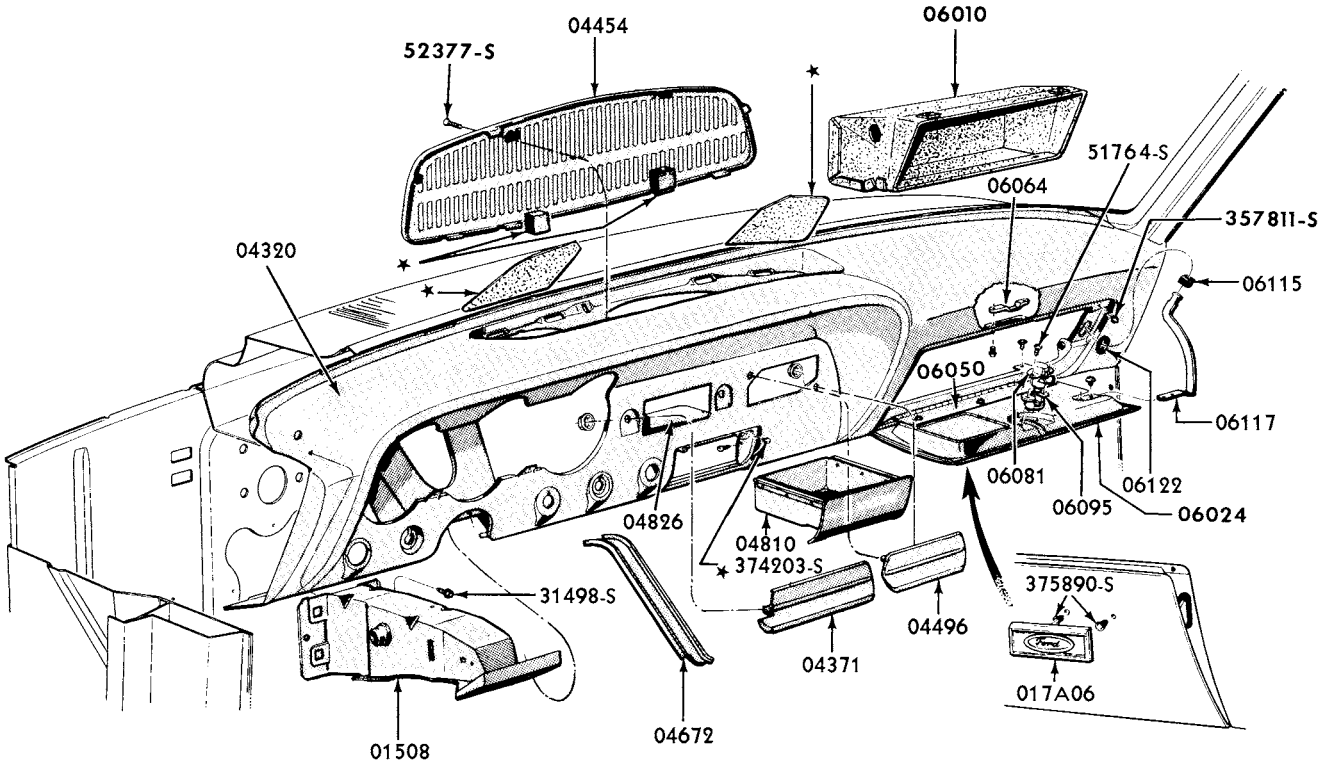

● REFER TO MD 4230 SOFT TRIM SECTION

1962-63 METEOR

PYB-878

INSTRUMENT PANEL and PAD

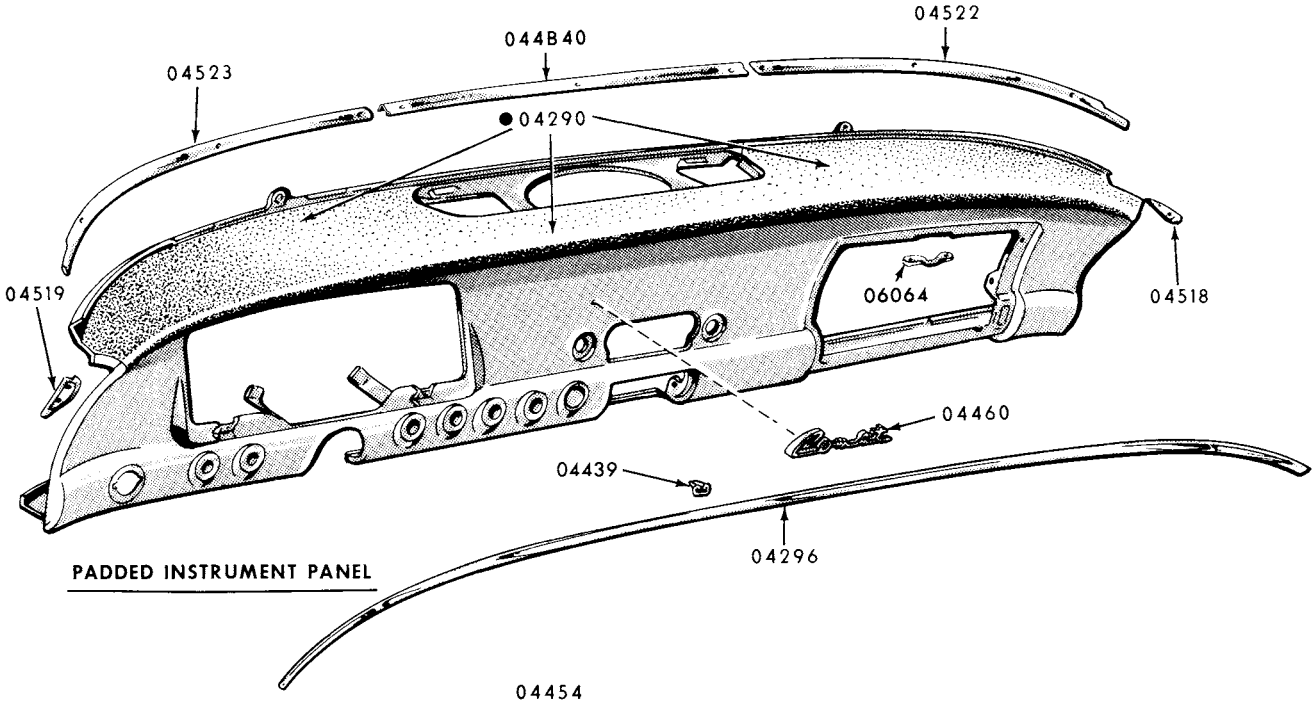

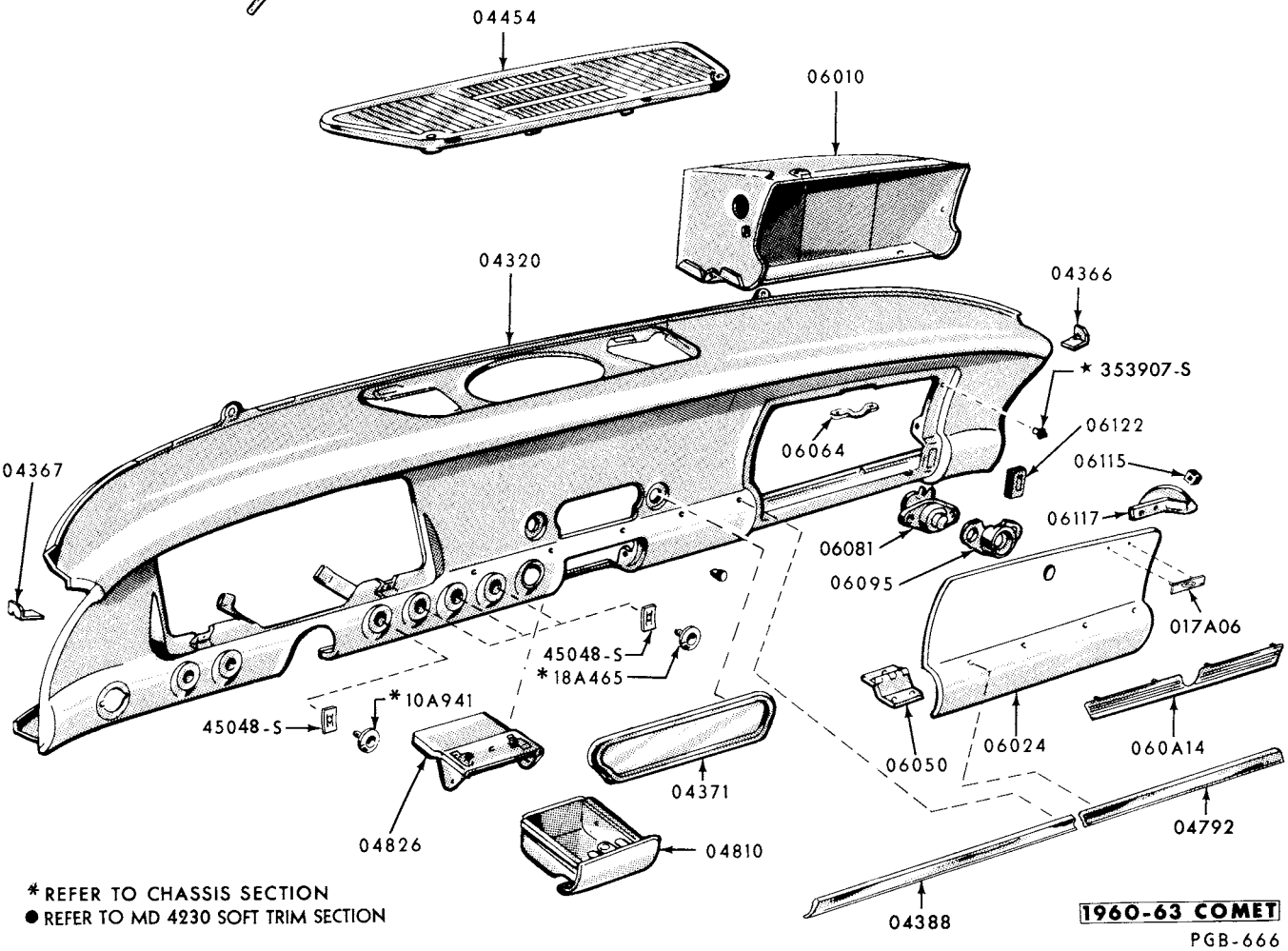

INSTRUMENT PANEL and PAD

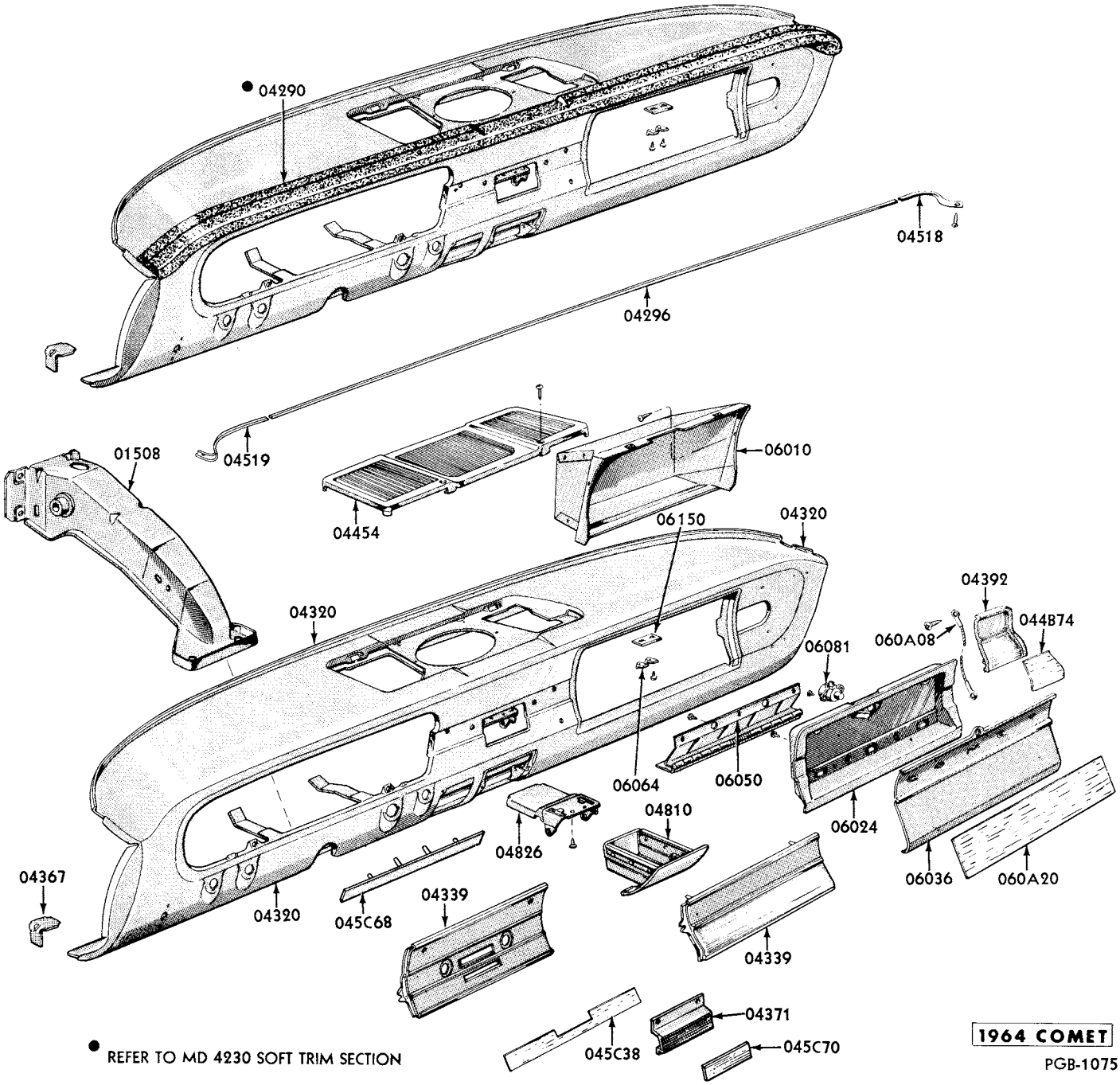

INSTRUMENT PANEL

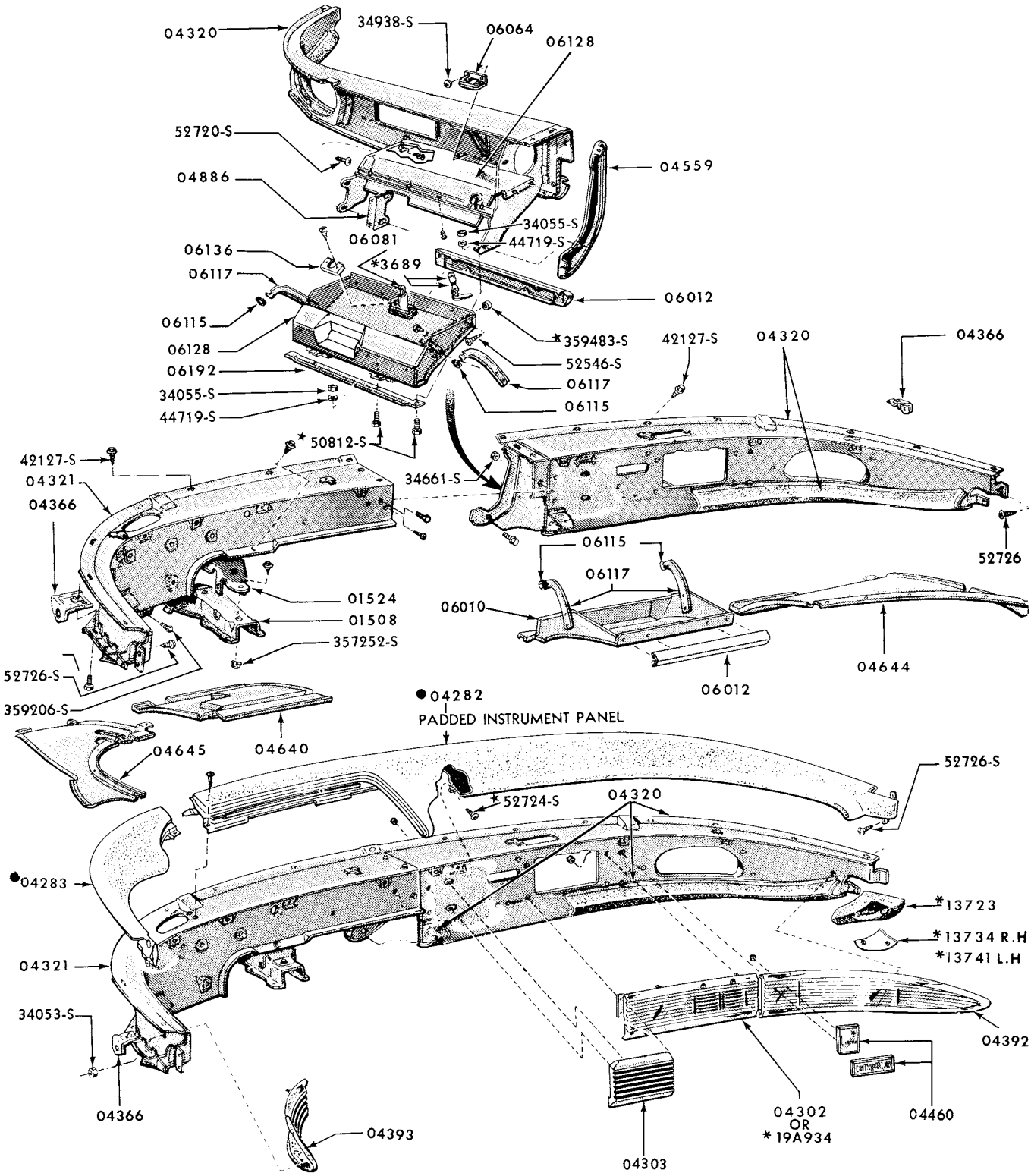

* REFER TO CHASSIS SECTION

● REFER TO MD 4230 SOFT TRIM SECTION

1960 LINCOLN

PLB-563

INSTRUMENT PANEL

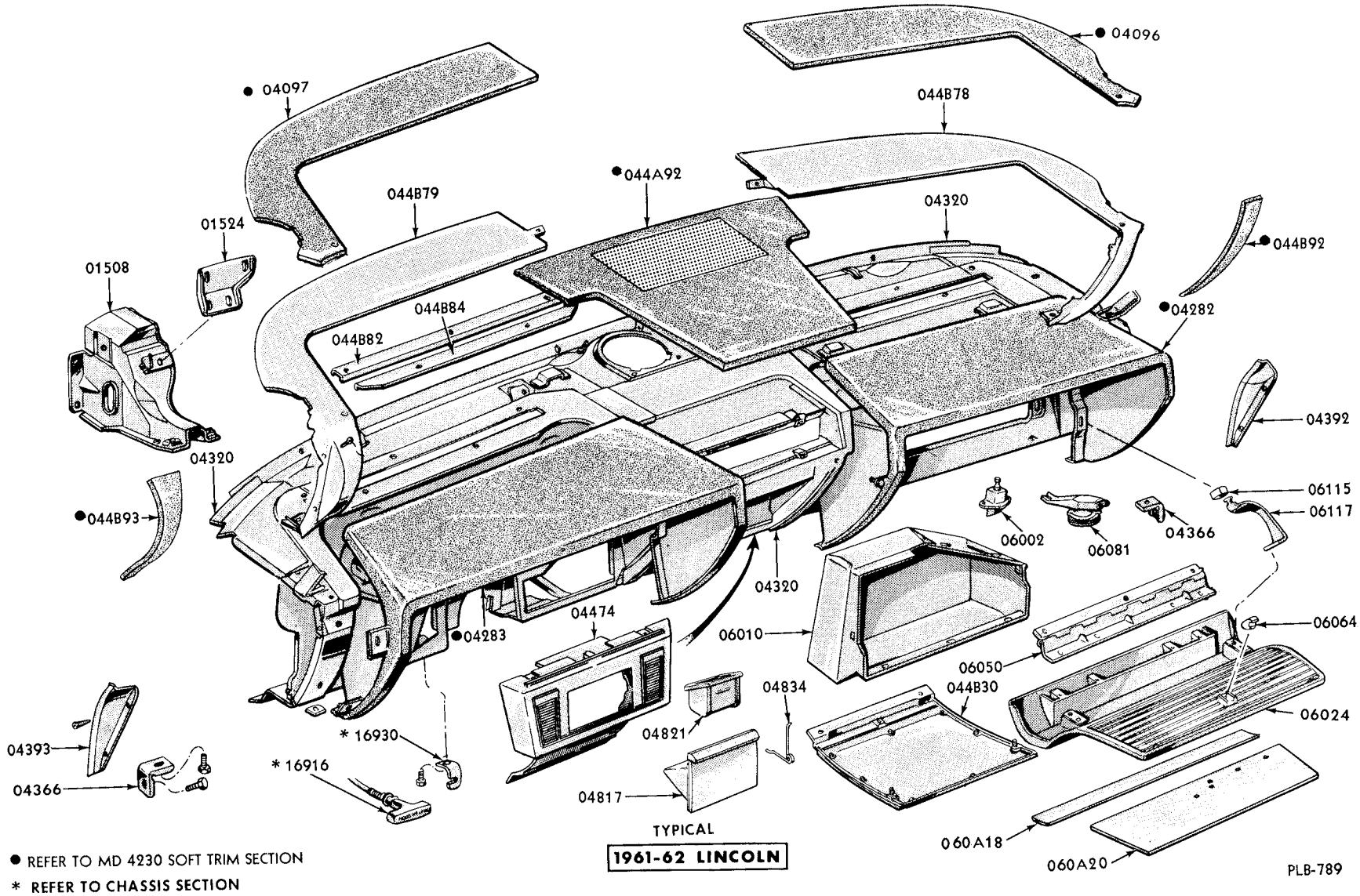

● REFER TO MD 4230 SOFT TRIM SECTION

* REFER TO CHASSIS SECTION

1961-62 LINCOLN

INSTRUMENT PANEL

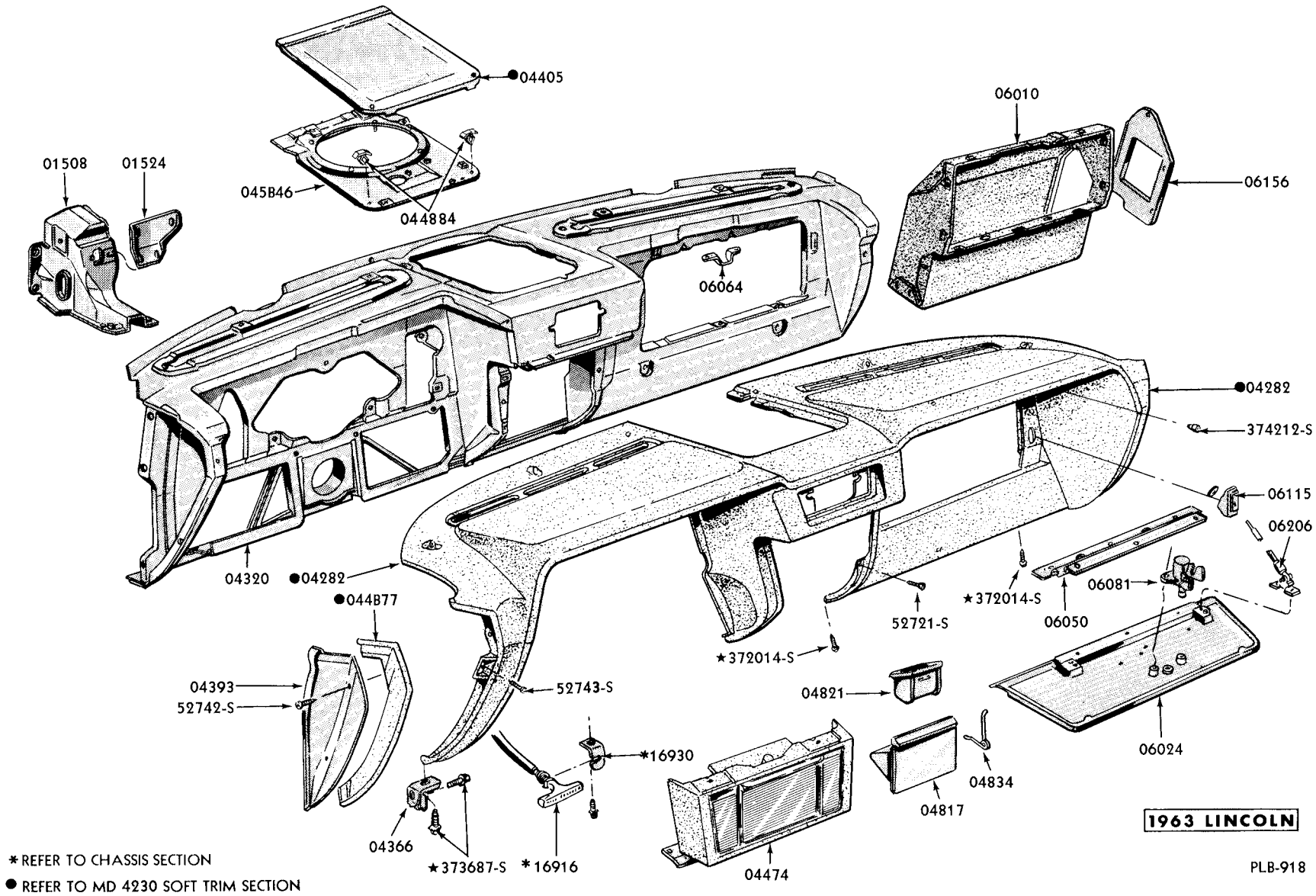

INSTRUMENT PANEL and PAD

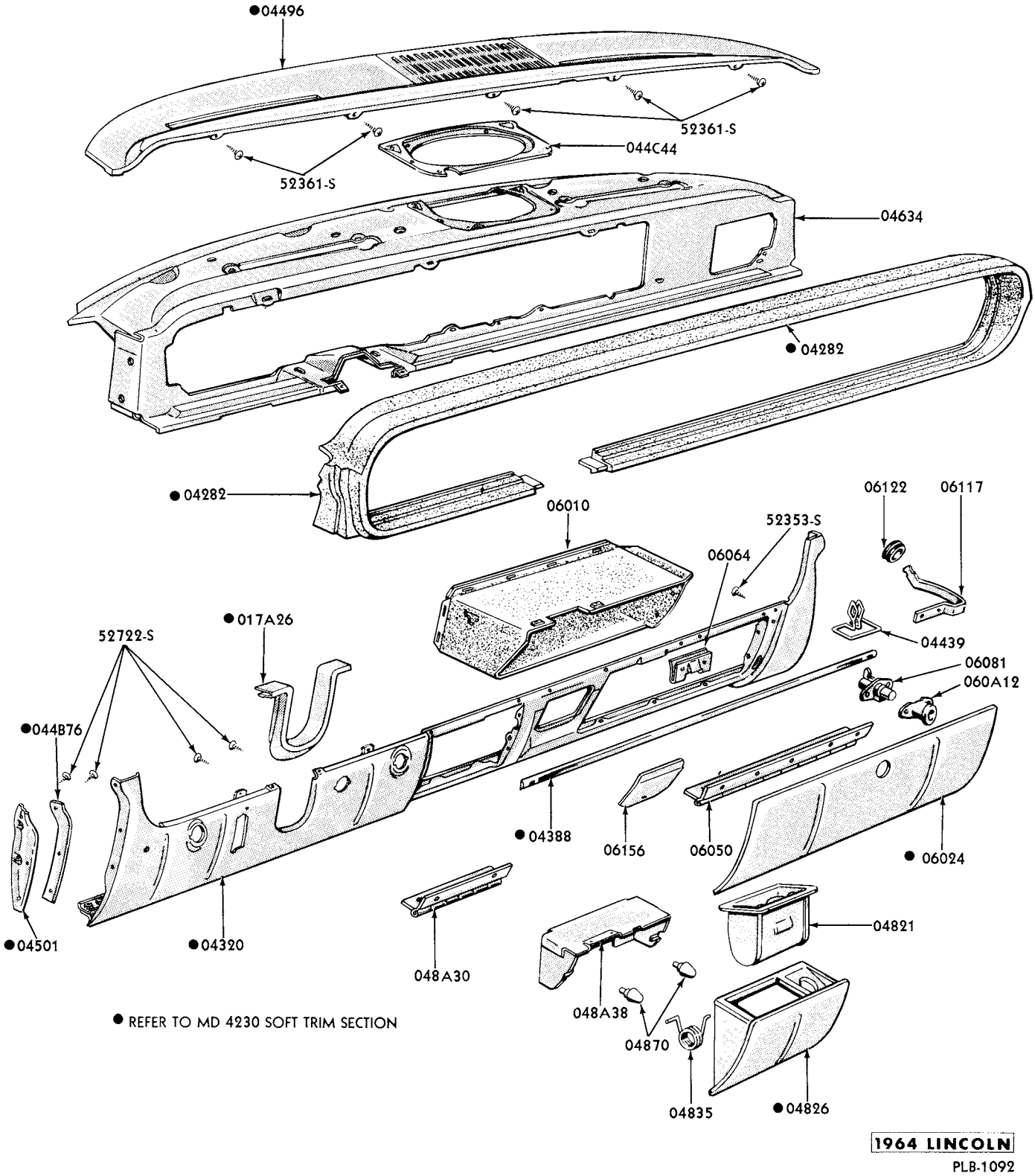

INSTRUMENT PANEL and RELATED PARTS

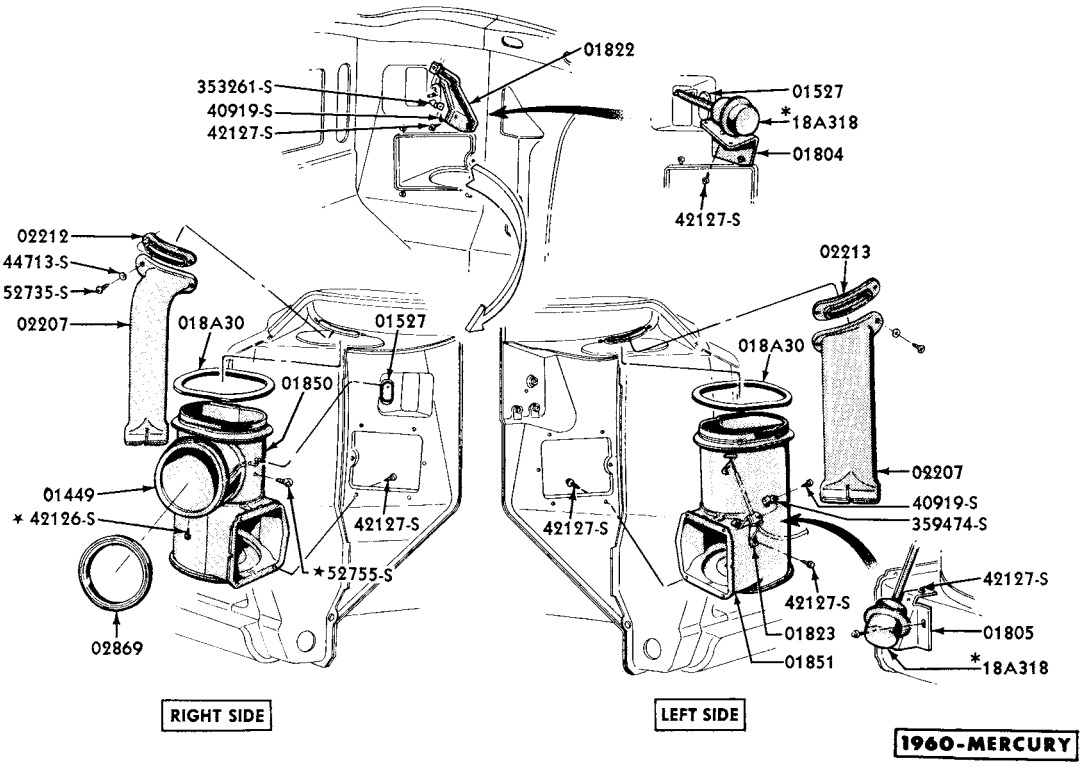

*REFER TO CHASSIS SECTION

PMB-828

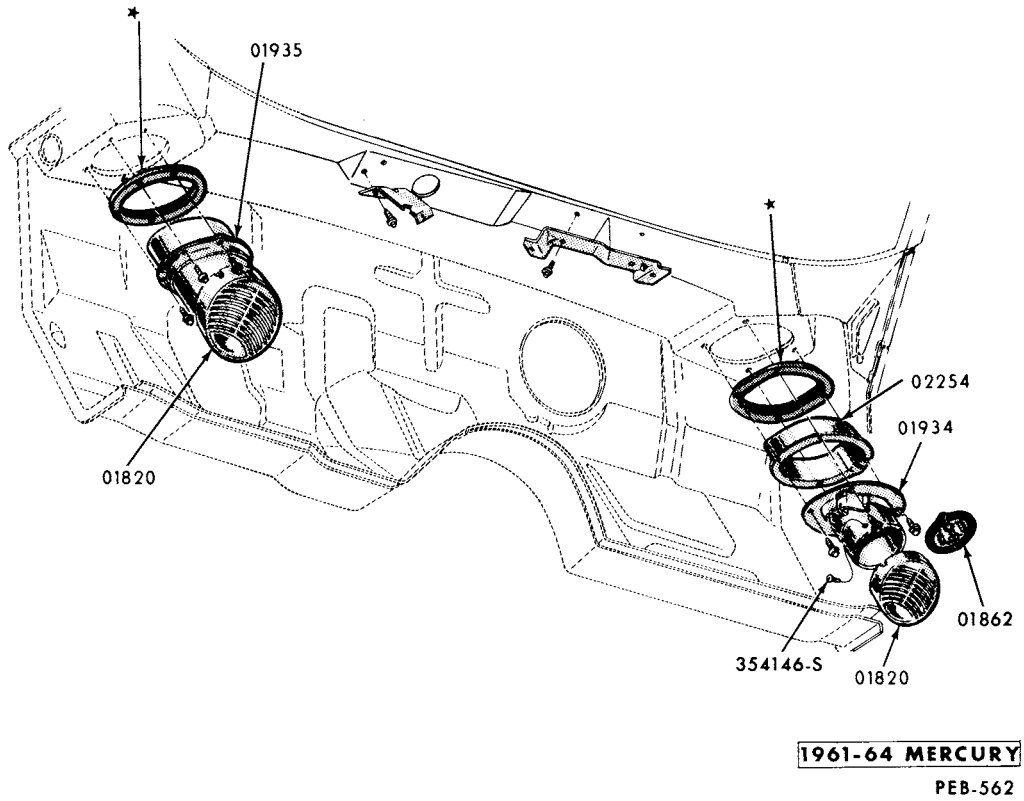

PEB-562

AIR VENT DUCT and RELATED PARTS

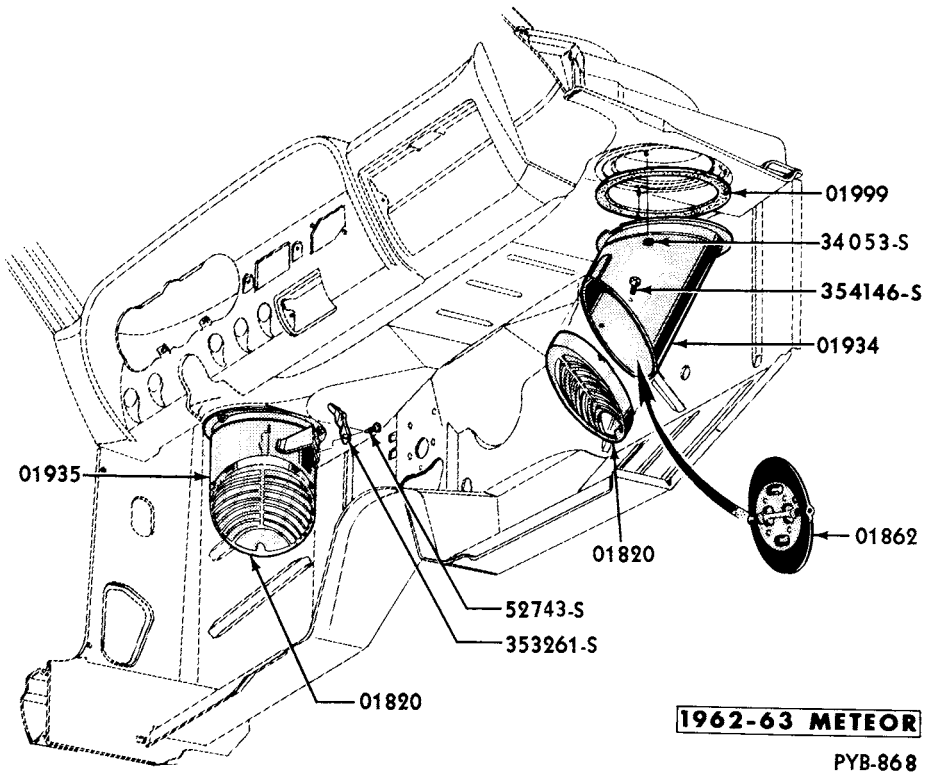

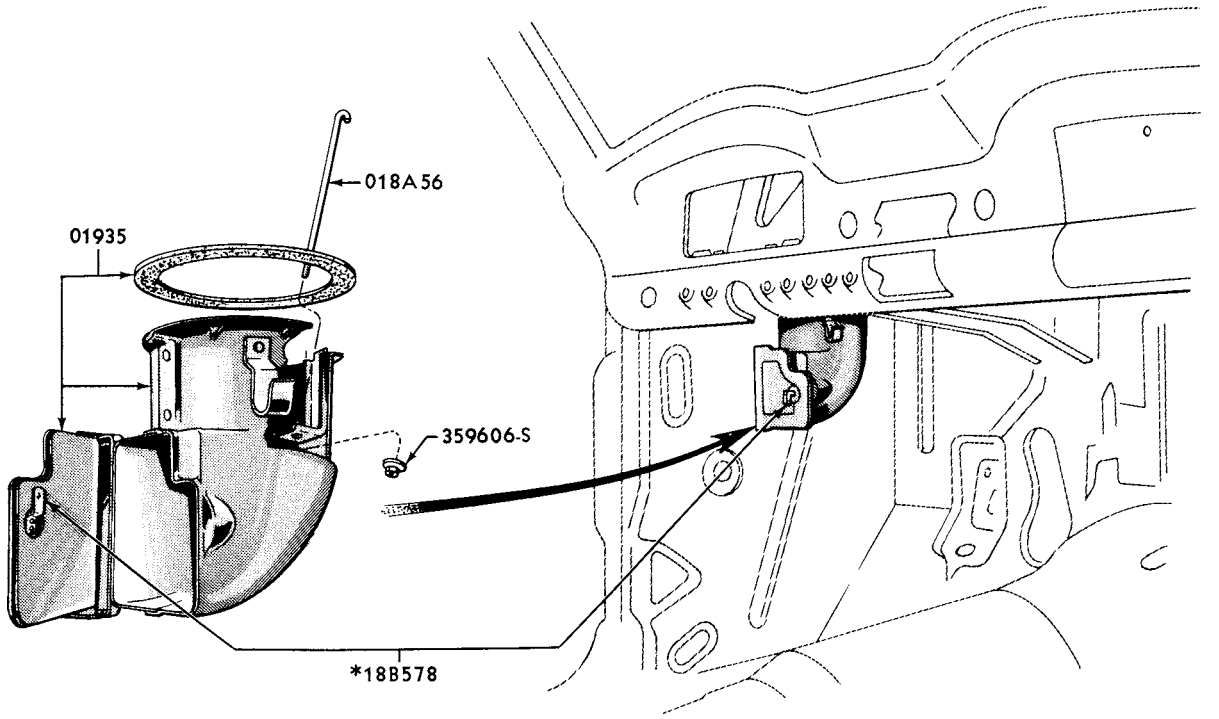

*REFER TO CHASSIS SECTION

AIR VENT DUCT and RELATED PARTS

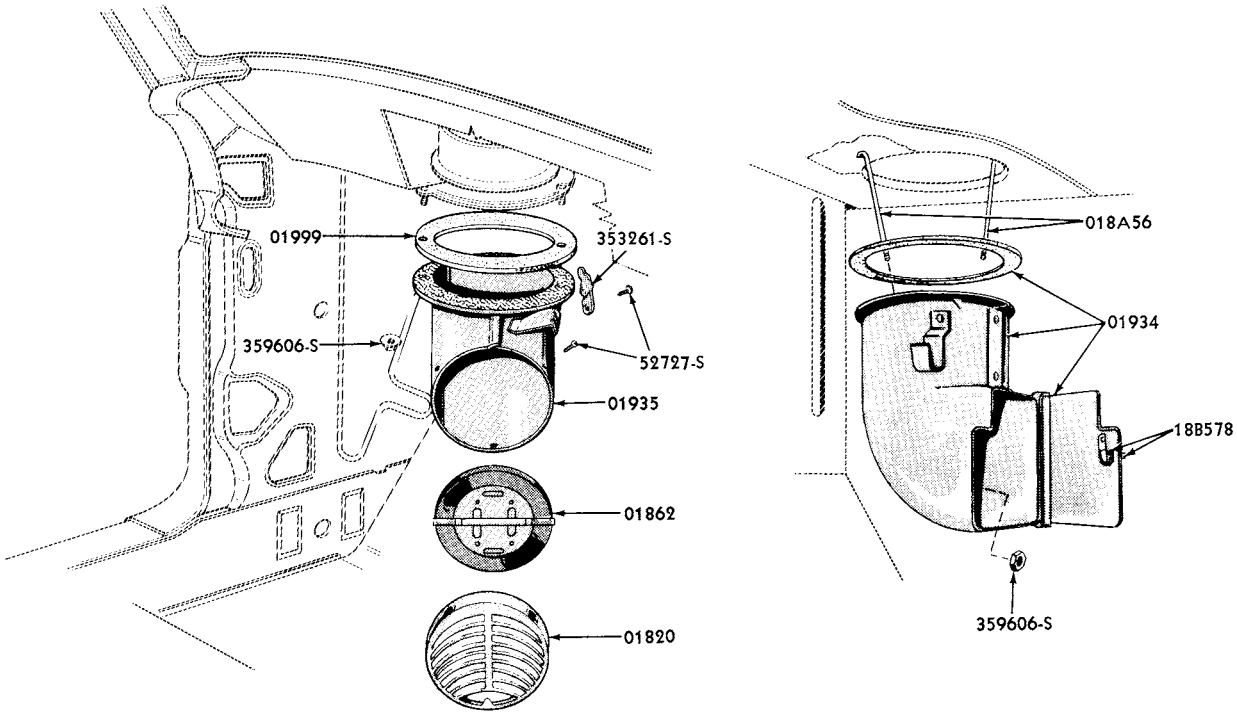

1964 COMET

PGB-1103

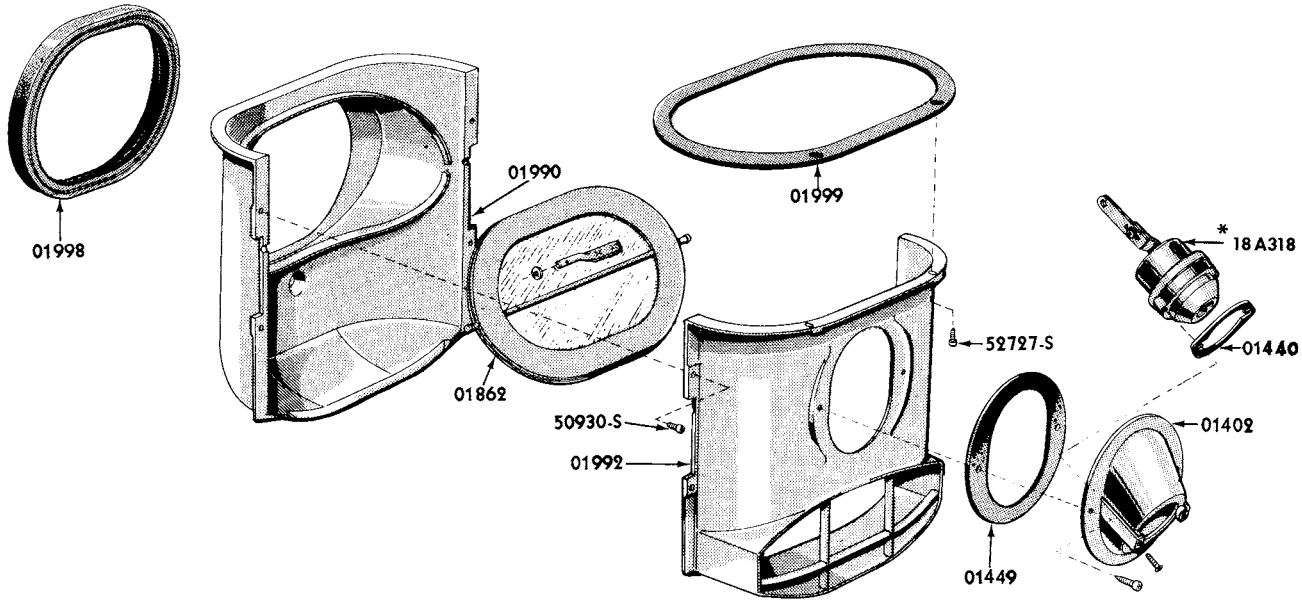

* REFER TO CHASSIS SECTION

1960 LINCOLN

PLC-879

AIR VENT and RELATED PARTS

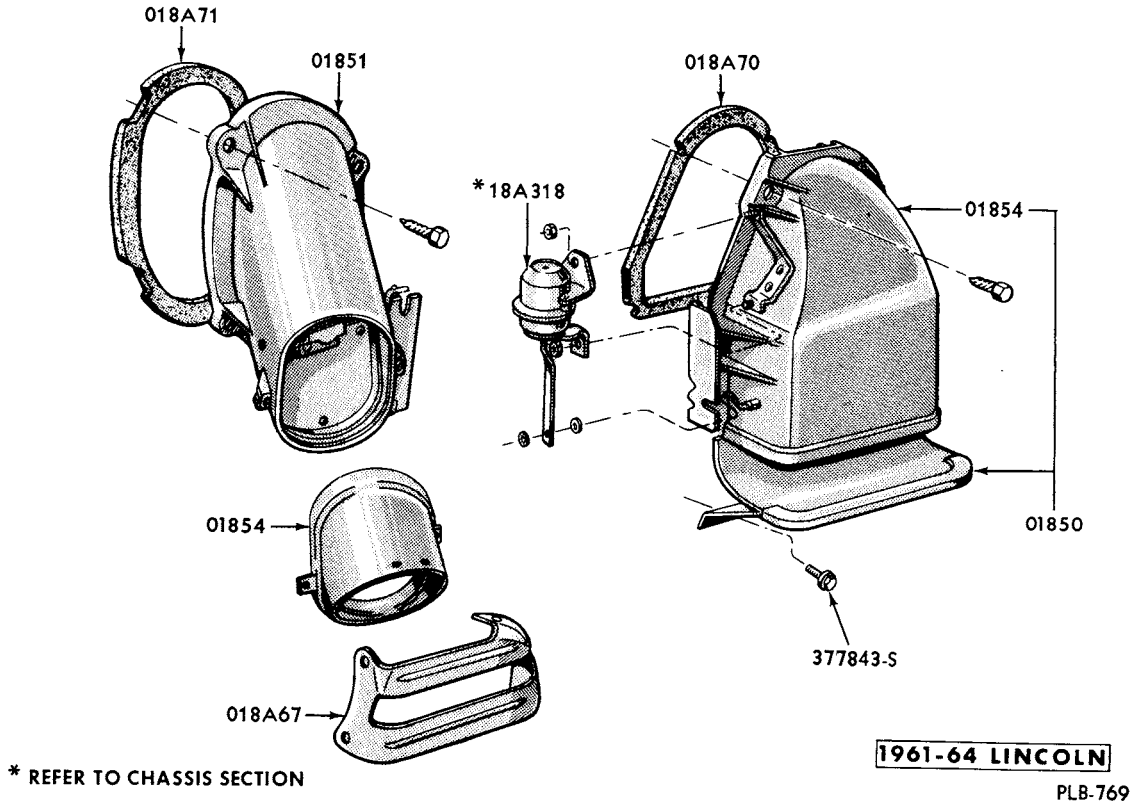

AIR VENT and RELATED PARTS

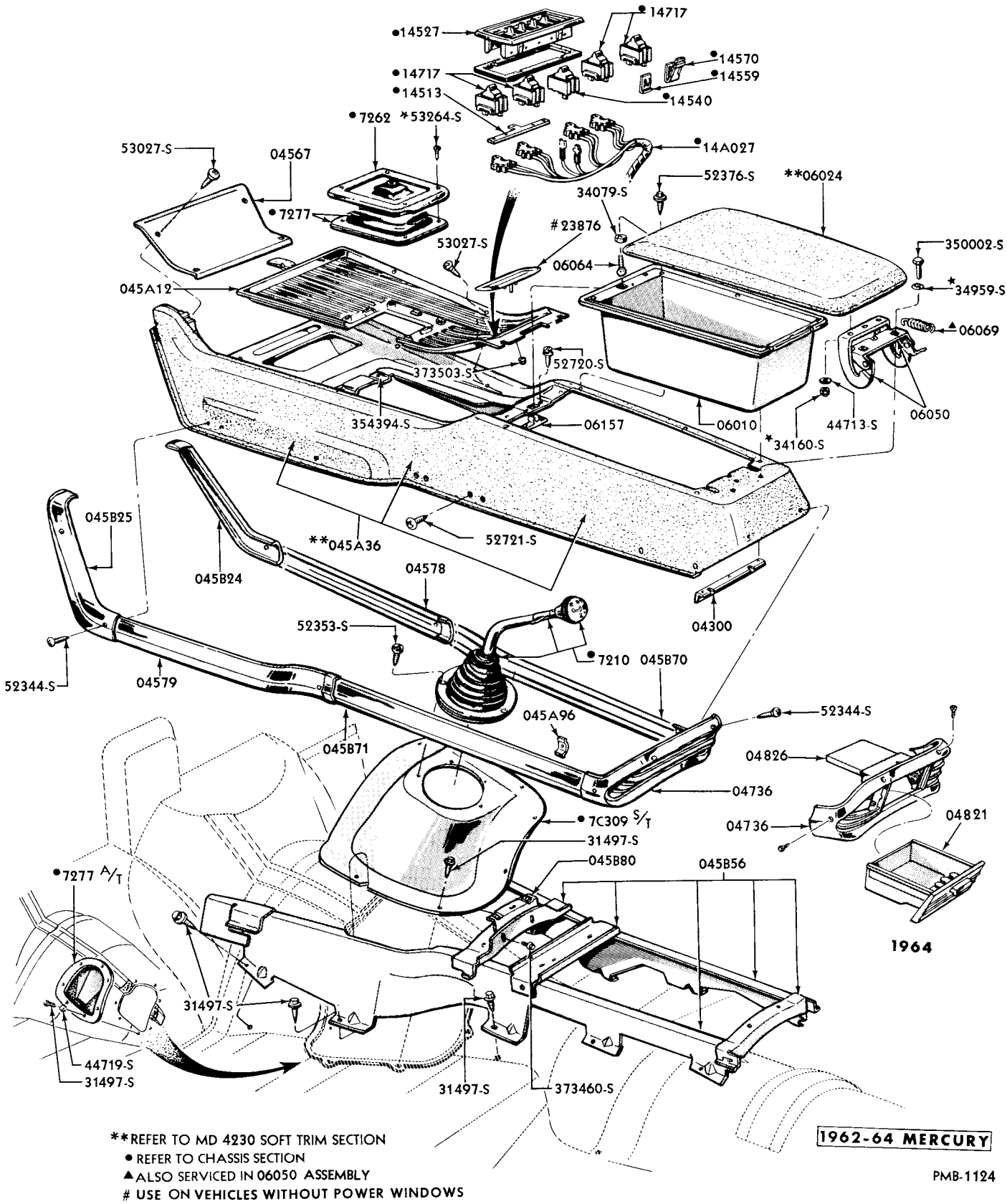

CONSOLE COMPARTMENT

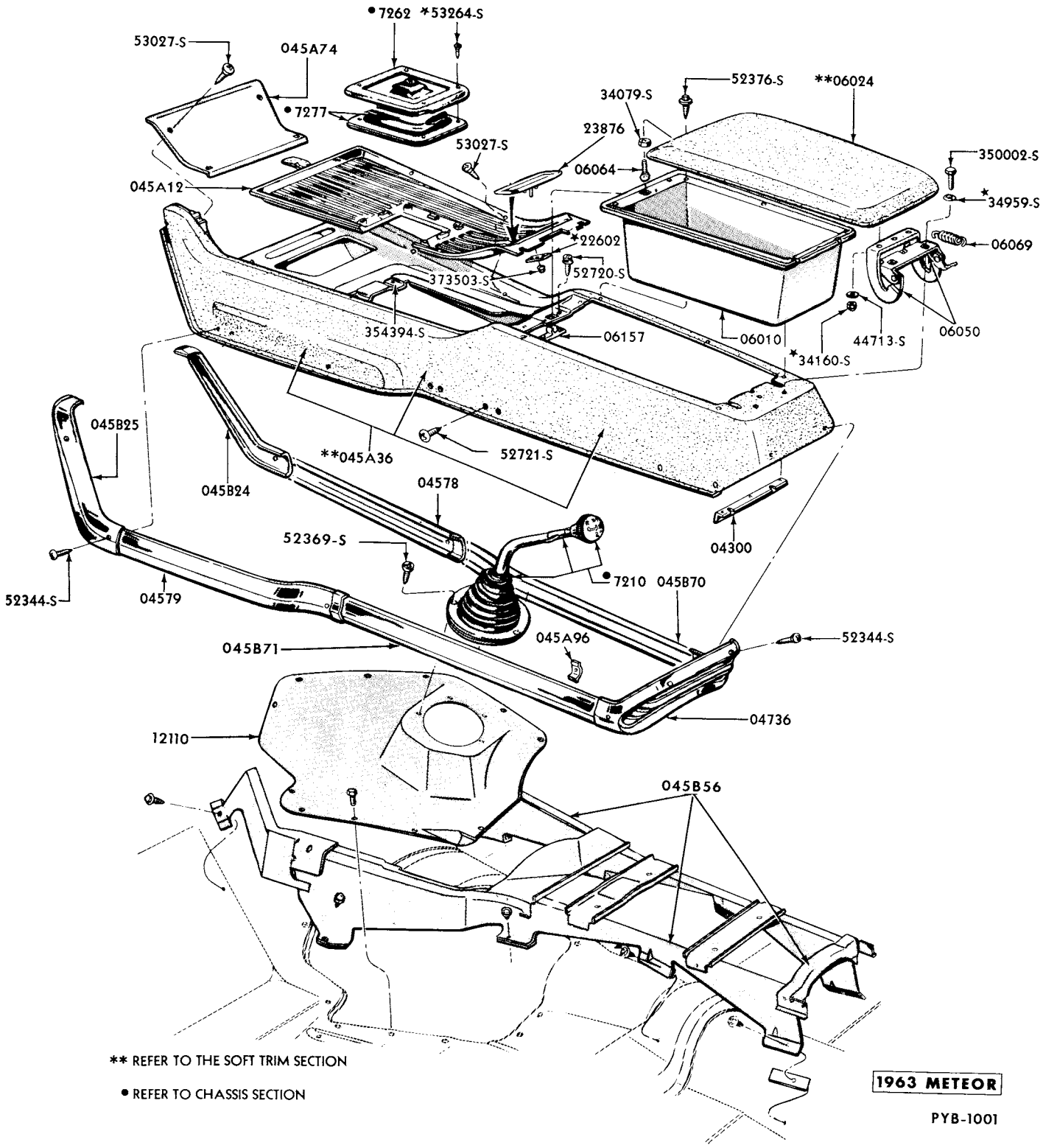

CONSOLE COMPARTMENT

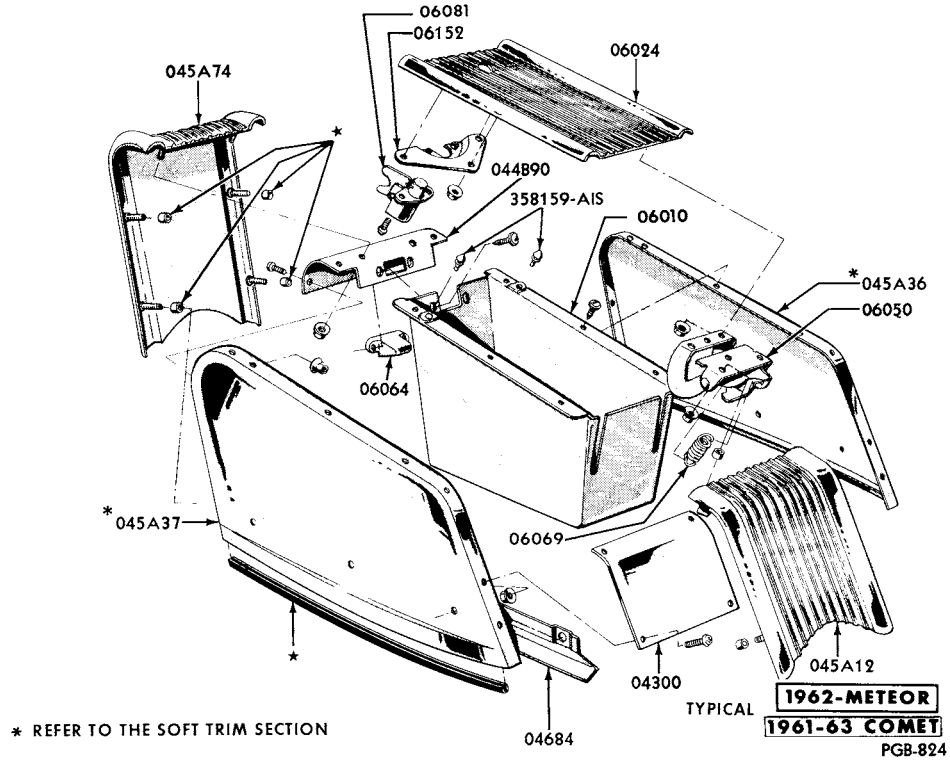

CONSOLE COMPARTMENT

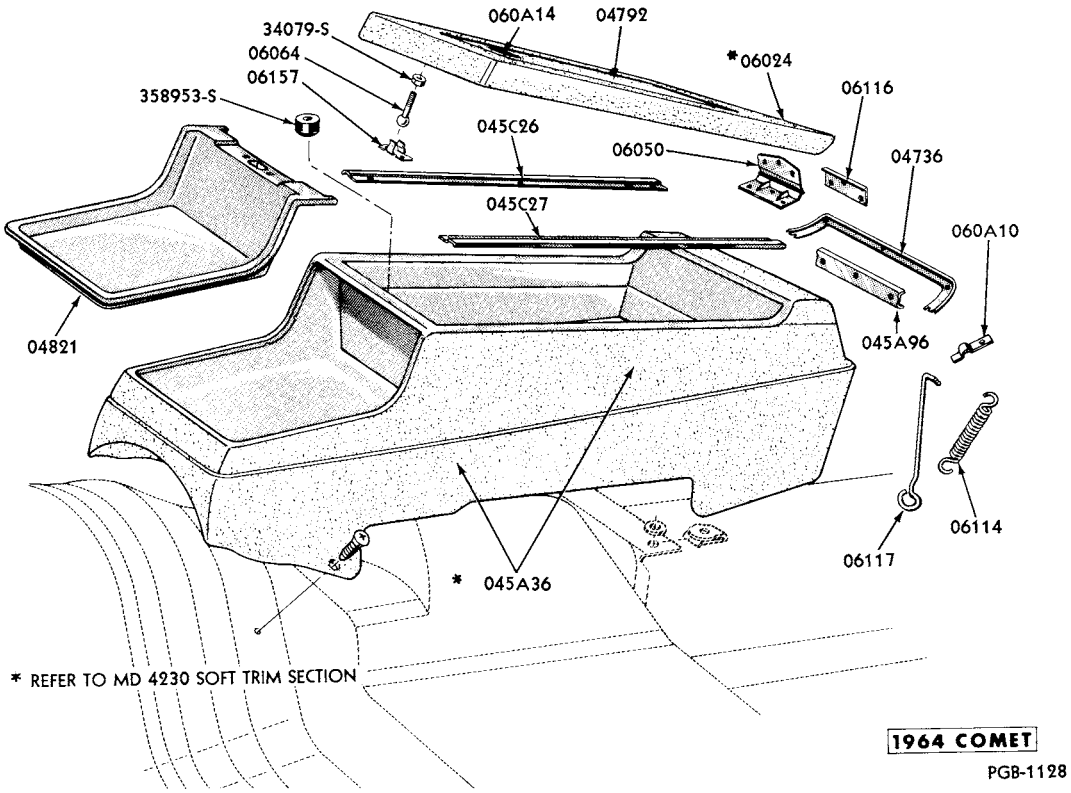

CONSOLE COMPARTMENT

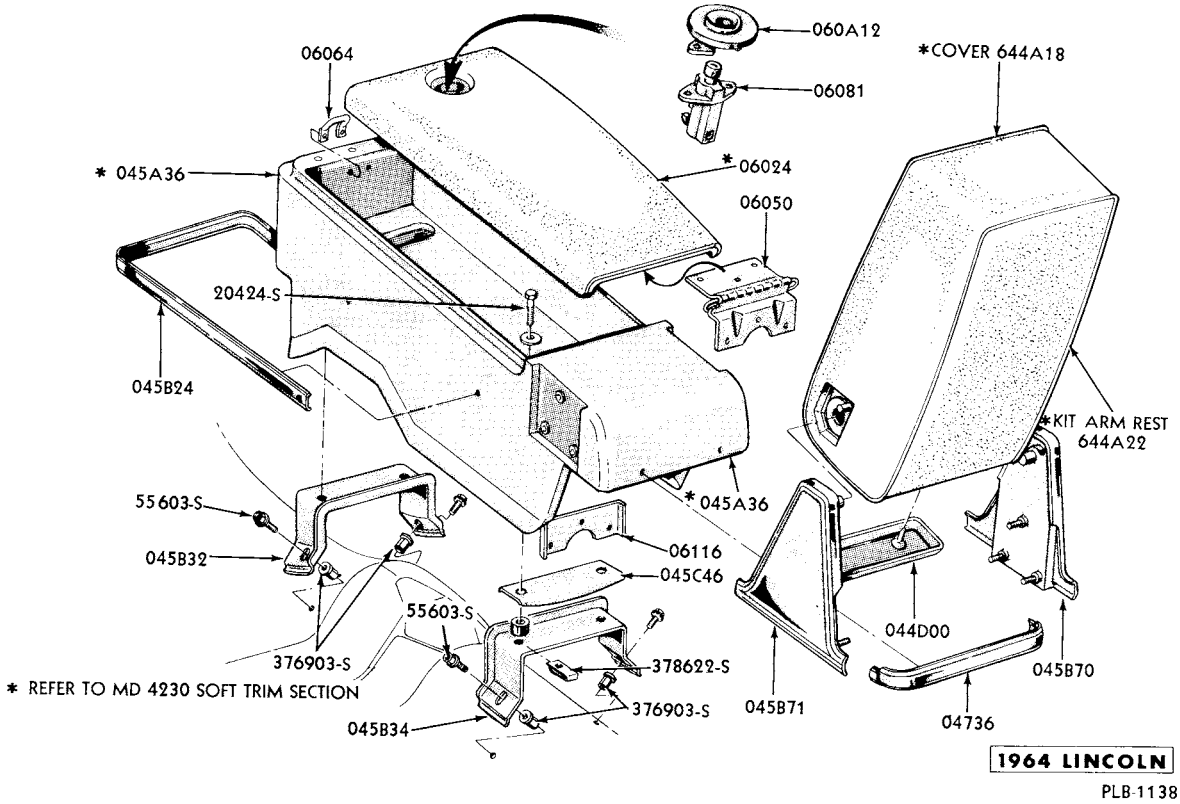

CONSOLE COMPARTMENT

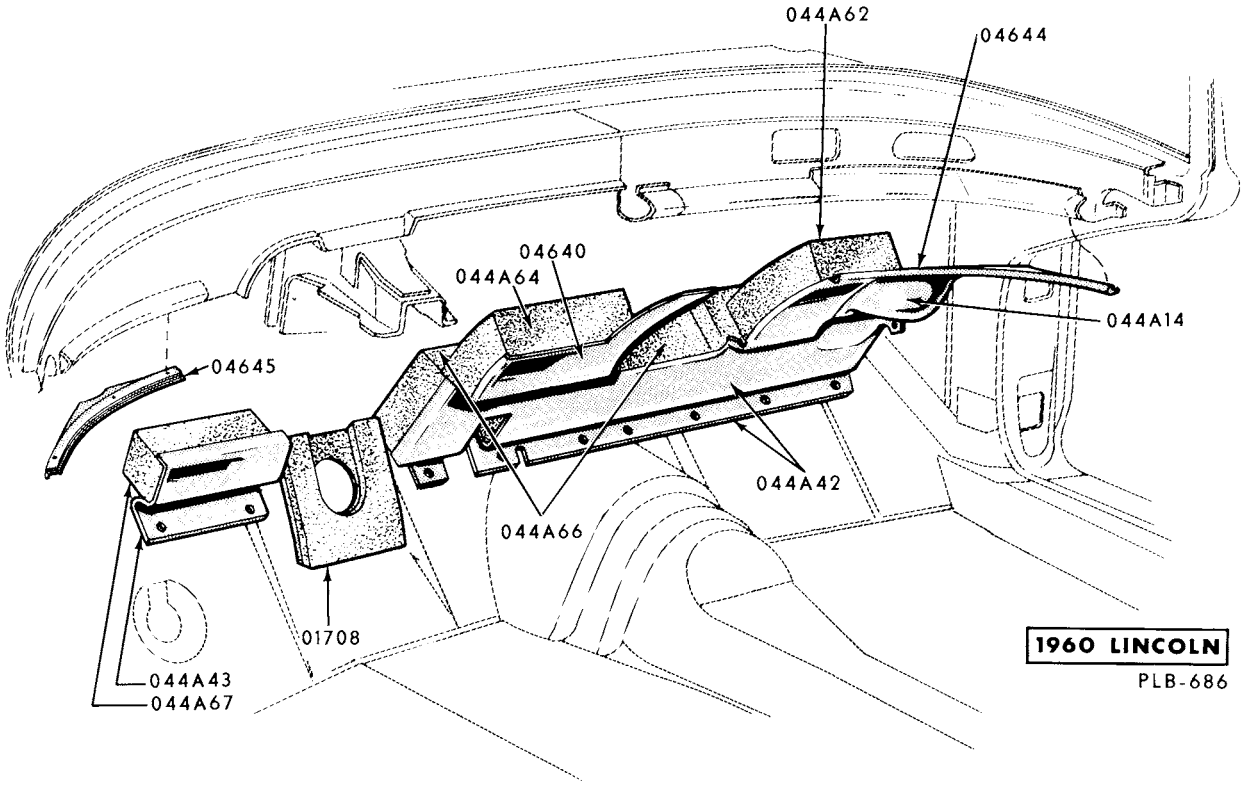

INSTRUMENT PANEL SOUND ABSORBERS

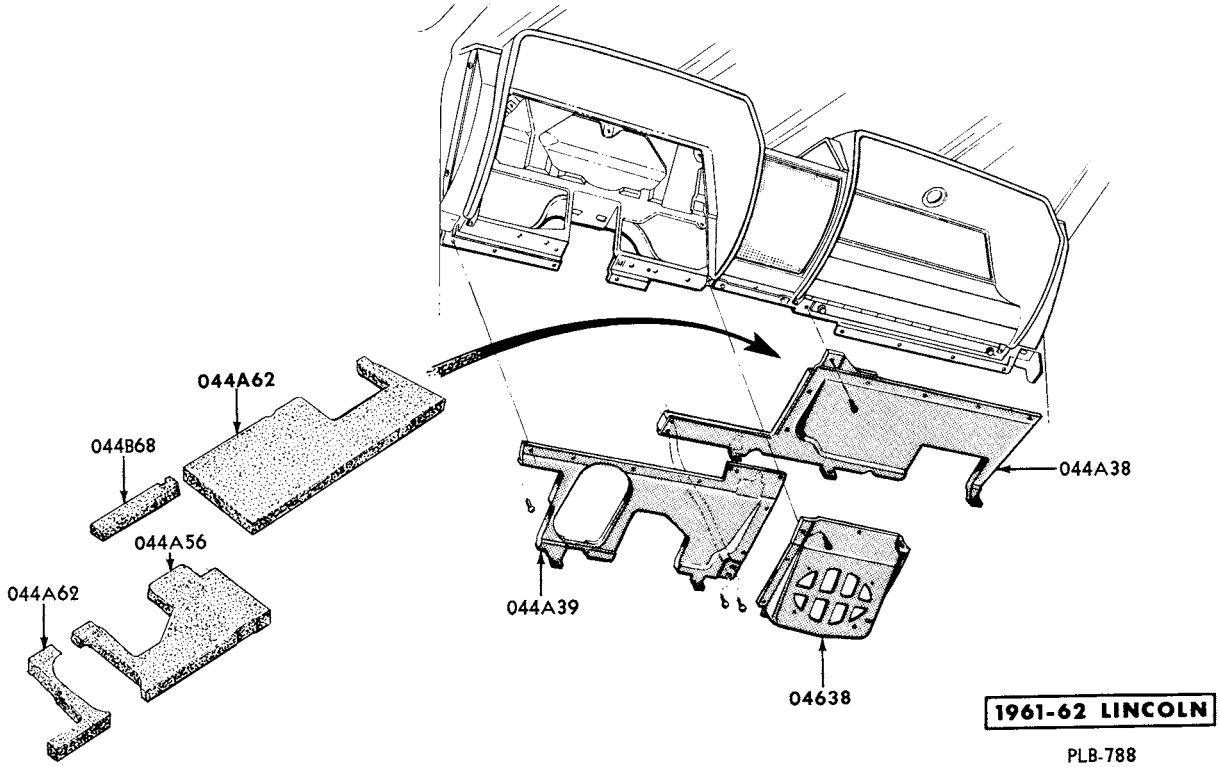

INSTRUMENT PANEL SOUND ABSORBERS

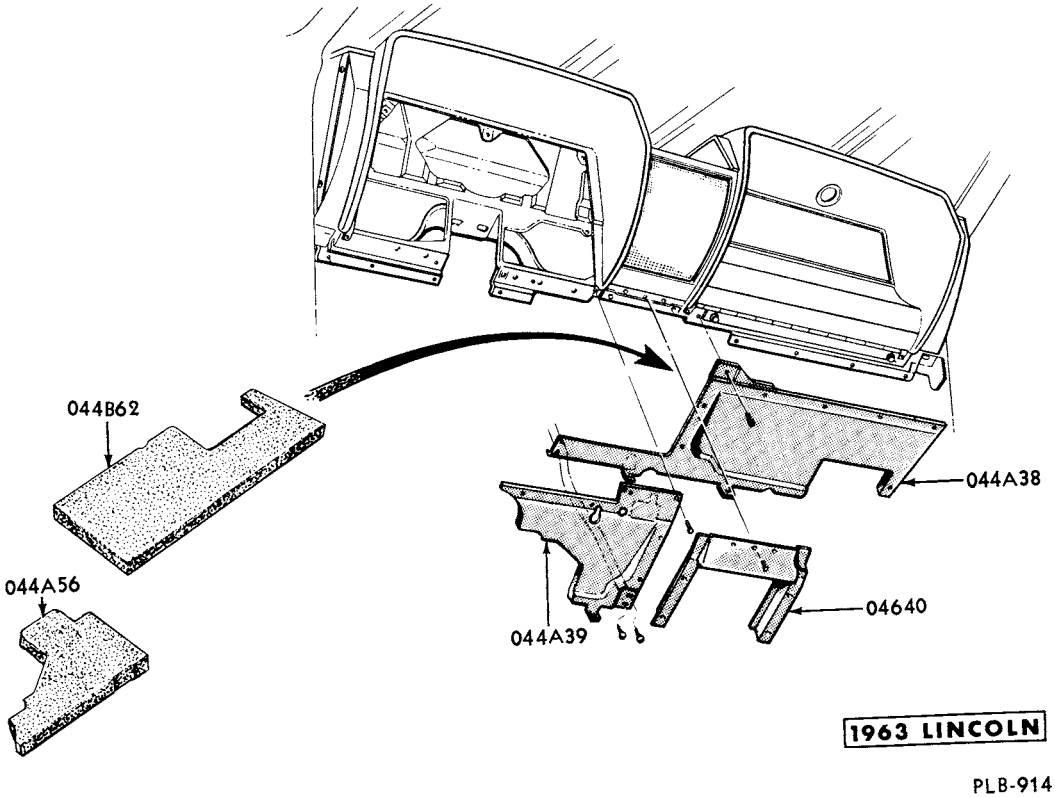

INSTRUMENT PANEL SOUND ABSORBERS

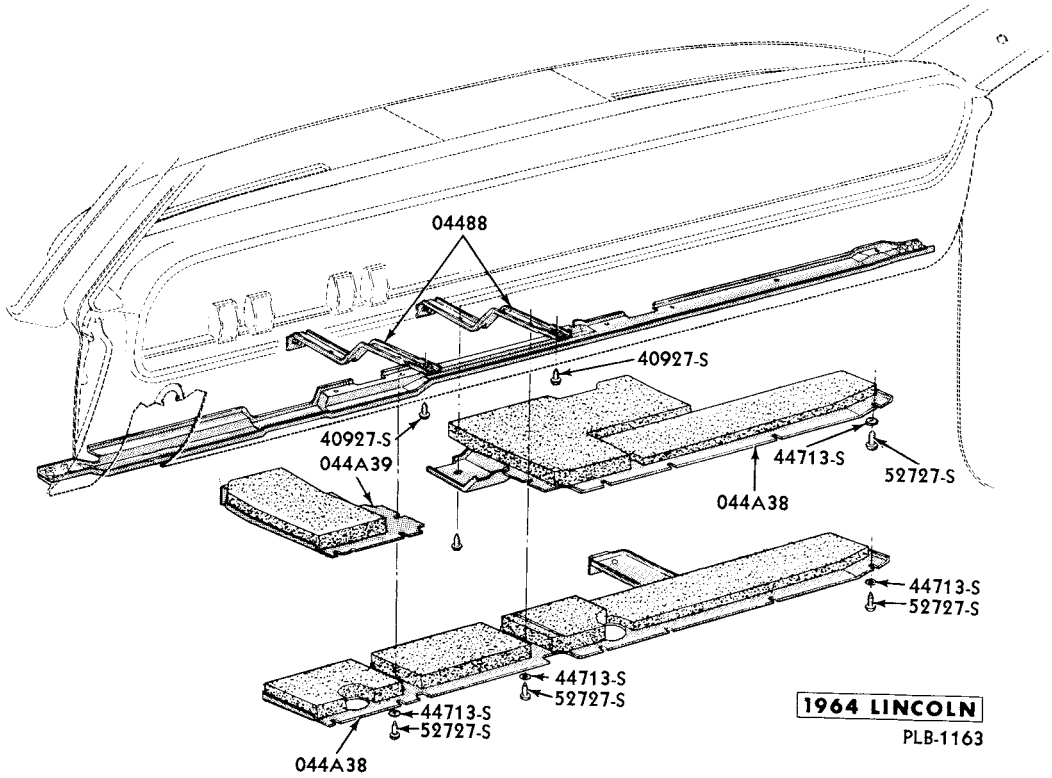

INSTRUMENT PANEL SOUND ABSORBERS

GROUP AND PART NUMBER	DESCRIPTION, SIZE, ETC.	NO. REQ'D	MODEL OR ENGINE CUBIC INCH DISPLACEMENT	VEHICLE CODE	YEAR 19____
04300	REINFORCEMENT (CONSOLE COMPARTMENT PANEL REAR)				
C2AZ 6504300-A	Steel	1	57C, 63C, 65C, 76B, C	A	62/64
		1	65B	B	63
C1DB 6404300-A	Steel - bright finish	1	62A(S-22), 62C, 71D	B C	61/62
		1	62C, 63B, 71D, 76B	C	63
04302-3	PANEL (INSTRUMENT PANEL FINISH) CENTER				
BAK 5704302-A	R. H.	1	All	D	60
COLB 6304303-A	L. H.	1	All	D	60
04316-7	PANEL (INSTRUMENT PANEL END)				
COMB 6404316-A	R. H.	1	All	A	60
COMB 6404317-A	L. H.	1	All	A	60
04320	PANEL (INSTRUMENT) VINYL COVERED				
	Refer to MD-4230 Soft Trim Section				
04320-1	PANEL (INSTRUMENT)				
COMB 6404320-D	Has heater and defroster slots	1	All	A	60
C1AB 6204320-B		1	All	A	61
C2AZ 6204320-A		1	All	A	62
C3MY 6204320-A	Use with fixed steering column	1	All	A	63
C3MY 6204320-B	Use with movable steering column	1	All	A	63
C4MY 6204320-A	Use with fixed steering column	1	All	A	64
C4MY 6204320-B	Use with movable steering column	1	All	A	64
C4MY 6204320-C	Use with factory installed a/cond.	1	All	A	64
C3YY 6204320-B		1	All	B	62/63
C1KY 6204320-D		1	All	C	60/63
G4GY 6204320-A	Use on vehicles built prior to 10-21-63	1	All	C	64
C4GY 6204320-B	Use on vehicles built after 10-20-63	1	All	C	64
COLB 6304320-CP	R.H.	1	All	D	60
COLB 6304321-CP	L.H.	1	All	D	60
C1VB 5704320-HP		1	All	D	61
C2VY 5704320-A		1	All	D	62
C3VY 5704320-A		1	All	D	63
04338-9	PANEL (INSTRUMENT PANEL FINISH)				
C1MB 6204339-C	Center - 9-7/64" long	1	54B, 65B, 71B, 75B, 76A	A	61
C2MY 5404339-A	Center	1	All	A	62
C3MY 6204339-A	Center - use with AM radio	1	All	A	63
C3MY 6204339-B	Center - use with FM radio	1	All	A	63
C4MY 6204339-A	Center - use with AM radio without a/cond.	1	All	A	64
C4MY 6204339-B	Center - use with AM-FM without a/cond.	1	All	A	64
C4MY 6204339-C	Center - use with AM radio with a/cond.	1	All	A	64
C4MY 6204339-D	Center - use with AM-FM radio with a/cond.	1	All	A	64
C2YY 6204338-A	Zinc die cast	1	All	B	62/63
C4GY 5404339-A	Center - use with or without AM radio	1	54C, D, 63C, D, 76B, D	C	64
C4GY 5404339-B	Center - use with AM-FM radio	1	54C, D, 63C, D, 76B, D	C	64
C4GY 6204339-B	Center - use with AM radio	1	54A, B, 62A, B, C, 63E, 71A, B, C	C	64
C4GY 6204339-C	Center - use with AM-FM radio	1	54A, B, 62A, B, C, 63E, 71A, B, C	C	64
04360	REFER TO GROUP 04371				
04364	REFER TO GROUP 04366-7				

GROUP AND PART NUMBER	DESCRIPTION, SIZE, ETC.	NO. REQ'D	MODEL OR ENGINE CUBIC INCH DISPLACEMENT	VEHICLE CODE	YEAR 19____
04366-7	BRACKET (INSTRUMENT PANEL TO COWL SIDE)				
B9BM 6404366-A	To pillar	2	All	A	60
PB9M 6404366-B	R.H.	1	All	A	60
PB9M 6404367-B	L.H.	1	All	A	60
COAB 6404366-A		2	All	A	61/64
C2OB 6204366-A		2	All	B	62/63
CODB 6404366-B	R.H.	1	All	C	60/63
CODB 6404367-B	L.H.	1	All	C	60/63
C4DZ 6204366-A	R.H.	1	All	C	64
C4DZ 6204367-A	L.H.	1	All	C	64
BAK 5704364-A		2	All	D	60
C1VB 5704366-A		2	All	D	61/63
04371	COVER (INSTRUMENT PANEL RADIO OPENING)				
COMF 6404371-A	Use when radio is not installed	1	57B,F,58B,63B,F,76D, 77B	A	60
PB9M 6404371-A	WHITE - use when radio is not installed	1	57A,58A,63A,64A,76A, 77A	A	60
C1MF 6204360-AP	Use when radio is not installed	1	All except 54B, 65B, 71, 75B,76	A	61
C1MF 6204371-C	Use when radio is not installed	1	54B,65B,71,75B,76	A	61
C2MY 5404371-A	Use when radio is not installed	1	All	A	62
C3MY 6204371-A	Chrome - use when radio is not installed	1	All	A	63
C4MY 6204371-A	Chrome - use when radio is not installed	1	All	A	64
C2OZ 6204371-B	Use when radio is not installed	1	All	B	62/63
CODF6404371-C(209)	TURQUOISE - use when radio is not installed	1	All	C	60
		1	All	C	62/63
CODF6404371-C(211)	BLACK - use when radio is not installed	1	All	C	60/63
CODF6404371-C(217)	GREEN - use when radio is not installed	1	All	C	60/63
CODF6404371-C(266)	RED - use when radio is not installed	1	All	C	60/63
CODF6404371-C(215)	BLUE - use when radio is not installed	1	All	C	61/63
C4GY 6204371-A	Use when radio is not installed	1	All	C	64
04388	MOULDING (INSTRUMENT PANEL)				
C2GB 6204388-A	17-3/4" long	1	All	C	62/63
04388	MOULDING (INSTRUMENT PANEL) VINYL COVERED				
	Refer to MD-4230 Soft Trim Section				
04392-3	PANEL (INSTRUMENT PANEL FINISH) END				
C1MB 6204392-B	R.H.	1	54B, 65B, 71B, 75B, 76	A	61
C1MB 6204393-B	L H.	1	54B, 65B, 71B, 75B, 76	A	61
C2MY 5404392-A	R.H.	1	All	A	62
C2MY 5404393-A	L.H.	1	All	A	62
C3MY 6204392-A	R.H.	1	All	A	63
C3MY 6204393-A	L.H. - use with fixed steering column	1	All	A	63
C3MY 6204393-B	L.H. - use with movable steering column	1	All	A	63
C4MY 6204392-A	R.H. - not used with factory installed a/cond.	1	All	A	64
C4MY 6204392-B	R.H. - with register - use with factory installed a/cond.	1	All	A	64
C4MY 6204393-A	L.H. - use with fixed steering column without a/cond.	1	All	A	64
C4MY 6204393-B	L.H. - use with movable steering column without a/cond.	1	All	A	64
C4MY 6204393-C	L.H. - use with fixed steering column with a/cond.	1	All	A	64
C4MY 6204393-D	L.H. - use with movable steering column with a/cond.	1	All	A	64

CONTINUED ON NEXT PAGE

GROUP AND PART NUMBER	DESCRIPTION, SIZE, ETC.	NO. REQ'D	MODEL OR ENGINE CUBIC INCH DISPLACEMENT	VEHICLE CODE	YEAR 19____
04392-3	PANEL (INSTRUMENT PANEL FINISH) END (CONTINUED)				
C4GY 5404392-A	R.H. - SILVER	1	54C,D,63C,D,E,76B,D	C	64
C4GY 6204392-A	R.H. - BLACK	1	54A,B,62A,B,C,71	C	64
COLB 6304480-A	R.H.	1	All	D	60
COLB 6304481-A	L.H.	1	All	D	60
C3VY 5704392-A	R.H.	1	All	D	61/63
C3VY 5704393-A	L.H.	1	All	D	61/63
04396	BRACKET (INSTRUMENT PANEL CLOCK OPENING COVER MOUNTING)				
C3AZ 6204396-A		1	54A, 62A, 65A, 75A	A	63
		1	All	A	64
044D00	COVER (CONSOLE ARM REST REAR)				
	Refer to MD-4230 Soft Trim Section				
044A14	COVER (INSTRUMENT PANEL LOWER OUTER EXTENSION)				
COLB 63044A14-AP	R.H. - use on vehicles built prior to 1-2-60	1	All	D	60
COLB 63044A14-BP	R.H. - use on vehicles built after 1-1-60	1	All	D	60
044D14	WASHER (INSTRUMENT PANEL PAD RETAINER)				
C4VY 53044D14-A		6	All	D	64
04417	RETAINER (GLOVE COMPARTMENT DOOR LOCK ESCUTCHEON)				
PB9M 6404417-A		1	All	A	60
044B26	CLIP (CONSOLE PANEL UPPER MOULDING)				
C1SB 63044B26-A	Use to attach 3A257 to 16020-1	10	All	D	61/62
04428	COVER (INSTRUMENT PANEL CLOCK OPENING)				
B9FM 6404428-A	Chrome - use when clock is not installed - flat - without a/cond.	1	All	A	60
COMF 6404428-A	Chrome - use when clock is not installed - curved - with a/cond.	1	All	A	60
C1MF 6204428-B	Use when clock is not installed	1	58, 64, 71	A	61
C2MY 6204428-A	Use when clock is not installed	1	All except 54B,65B,71B, 75B,76	A	62
C3MY 6204428-A	Chrome - use when clock is not installed	1	All	A	63
C4MY 6204428-A	Without clock	1	All	A	64
044B28-9	PANEL (INSTRUMENT PANEL FINISH) UPPER				
C4MY 62044B28-A	R.H.	1	All	A	64
C4MY 62044B29-A	L.H.	1	All	A	64
044B30	ORNAMENT (INSTRUMENT PANEL) CENTER				
C1VB 57044B30-CP	Not used with a/cond.	1	All	D	61
044A38-9	EXTENSION (INSTRUMENT PANEL LOWER) OUTER				
C1VY 57044A38-C	R.H.	1	All	D	61/62
C2VY 57044A39-D	L.H.	1	All	D	61/62
C3VY 57044A38-A	R.H.	1	All	D	63
C3VY 57044A39-A	L.H.	1	All	D	63
C4VY 53044A38-A	R.H. - without a/cond.	1	All	D	64
C4VY 53044A39-B	L.H. - without a/cond.	1	All	D	64
C4VY 53044A38-B	R.H. - with a/cond.	1	All	D	64

GROUP AND PART NUMBER	DESCRIPTION, SIZE, ETC.	NO. REQ'D	MODEL OR ENGINE CUBIC INCH DISPLACEMENT	VEHICLE CODE	YEAR 19.__
04439	CLIP (INSTRUMENT PANEL PAD RETAINING UPPER MOULDING)				
COAB 6404439-E	Use with padded dash	2	All	A	61
C1MB 6404439-A	Use when padded dash is not installed	13	54A,58A,62A,64A,65A, 71A,75A	A	61
COKB 5804439-B	Use when padded dash is not installed	6	All except 54B,65B,71B, 75B,76	A	61/62
COAB 6404439-F	Use with padded dash	6	All	A B	61/62
COMB 6404561-A	Use with padded dash	8	All	A	60
	Attach weatherstrip to front fender apron	14	All	A	60
	Attach weatherstrip to luggage compartment door	6	All	D	61
C2OZ 6204439-A	Use with instrument panel pad mouldings	AR	All	B	63
C1KB 6204561-A	Use when padded dash is not installed	13	All	C	60/63
CODB 6404561-C	Use with padded dash	AR	All	C	60/63
	Use on package tray	3	All except 71, 76	C	64
C4DZ 6404561-A	Use when padded dash is installed	7	All	C	64
C4VY 5304439-A		4	All	D	64
044B40	MOULDING (INSTRUMENT PANEL PAD RETAINING TOP CENTER)				
C1DB 64044B40-AP	Use with padded dash - when using for 1960 vehicles use with C1DB-6404522-3-AP in sets only (a)	1	All	C	60/63
52388-S13	Screw-cr.rec.oval hd.	3	a		
044A42-3	PANEL (INSTRUMENT PANEL EXTENSION) BOTTOM				
COLB 63044A42-AP	R.H. - plastic	1	All	D	60
COLB 63044A43-AP	L.H. - plastic	1	All	D	60
044C44	PLATE (INSTRUMENT PANEL RADIO SPEAKER) MOUNTING				
C4VY 53044C44-A		1	All	D	64
04446	MOULDING (INSTRUMENT PANEL) INTERMEDIATE				
C1MB 6404446-A		1	54A, 58A, 62A, 64A, 65A, 71A,75A	A	61
044B52-3	BRACKET (INSTRUMENT PANEL MOUNTING) UPPER				
C1VB 57044B52-A	R.H.	1	All	D	61/62
C1VB 57044B53-A	L.H.	1	All	D	61/62
04454	GRILLE (INSTRUMENT PANEL RADIO)				
PB9M 6404454-AP	For standard dash - also use with padded dash having grille cut-out	1	All	A	60
COAB 6404454-AP	Use when padded dash is not installed	1	All except 54B,65B,71B, 75B,76	A	61/62
COAB 6404454-BP	Use with padded dash	1	All	A	61/62
C3AZ 6204454-B	(b)	1	All	A	63/64
C2OB 6204454-AP	(a)	1	All	B	62/63
CODB 6404454-BP		1	All	C	60/63
C4DZ 6204454-A		1	All	C	64
52377-S13	Screw-oval hd.tap. -No. 10-12 x 1"	2	a		
357849-S100	Retainer	2	b		
044B54-5	MOULDING (INSTRUMENT PANEL END) LOWER				
C1MB 64044B54-A	R.H.	1	54A, 58A, 62A, 64A, 65A, 71A,75A	A	61
C1MB 64044B55-A	L.H.	1	54A, 58A, 62A, 64A, 65A, 71A,75A	A	61
04456	RETAINER (INSTRUMENT PANEL RADIO OPENING COVER PLATE)				
C1MF 6204456-A	Use when radio is not installed	2	54B,65B,71,75B,76	A	61
C2MY 6204456-A	Use when radio is not installed	2	All	A	62

GROUP AND PART NUMBER	DESCRIPTION, SIZE, ETC.	NO. REQ'D	MODEL OR ENGINE CUBIC INCH DISPLACEMENT	VEHICLE CODE	YEAR 19___
044A56	ABSORBER (INSTRUMENT PANEL LOWER OUTER EXTENSION SOUND) INNER				
C1VB 57044A56-C	L. H.	1	All	D	61/63
044B56	PANEL (INSTRUMENT PANEL FINISH) INTERMEDIATE				
C1MB 62044B56-B	11-3/4" long	1	54B, 65B, 71B, 75B, 76	A	61
C2MY54044B56-A	12-1/4" long	1	All	A	62
04457	GASKET (INSTRUMENT PANEL RADIO OPENING) COVER				
C4GY 6204457-A		1	All	C	64
044A58	ABSORBER (INSTRUMENT PANEL BOTTOM EXTENSION INNER SOUND)				
COLB 63044A58-B	Felt	1	All	D	60
04460	PLATE (INSTRUMENT PANEL) NAME				
COMB6404460-A	Die cast - "MERCURY" - located on glove compartment door	1	57A, 58A, 63A, 64A, 76A	A	60
C1MB 6204460-A	Die cast - "MERCURY" - located on glove compartment door	1	All	A	61
C3MY 6504460-A	"S FIFTY-FIVE"	1	65C, 76B	A	63
C1KB 6204460-B	"COMET"	1	All	C	60/63
COLB 6304460-A	"LINCOLN"	1	53, 57, 63	D	60
COLB 6504460-B	"CONTINENTAL"	1	54, 65, 68, 75	D	60
044A62	ABSORBER (INSTRUMENT PANEL LOWER OUTER EXTENSION SOUND) OUTER				
COLB 63044A62-D	Fiberglas	1	All	D	60
C1VY 57044B62-B	R. H. - fiberglas	1	All	D	61/63
044B62	REFER TO GROUP 044A62				
044A64	ABSORBER (INSTRUMENT PANEL LOWER CENTER EXTENSION OUTER SOUND)				
COLB 63044A64-D	Fiberglas	1	All	D	60
044A66-7	ABSORBER (INSTRUMENT PANEL BOTTOM EXTENSION OUTER SOUND)				
COLB 63044A66-E	R. H. - fiberglas	1	All	D	60
COLB 63044A67-E	L. H. - fiberglas	1	All	D	60
044B66	RETAINER (INSTRUMENT PANEL END MOULDING)				
C1MB 62044B66-A		2	All	A	61
044B68	ABSORBER (INSTRUMENT PANEL LOWER OUTER EXTENSION SOUND) CENTER				
C1VB 57044B68-A	Fiberglas	1	All	D	61/62
04474	PANEL (INSTRUMENT PANEL AIR CONDITIONING OPENING COVER)				
C2VY 5704474-A	Use with or without a/cond.	1	All	D	62
C3VY 5704474-A	Use when a/cond. is not installed	1	All	D	63
044B74	PANEL (INSTRUMENT PANEL APPLIQUE END)				
C4GY 54044B74-A		1	54C, D, 63C, D, 76B, D	C	64
C4GY 63044B74-A	BLACK	1	63E	C	64
044B78-9	PANEL (INSTRUMENT PANEL FINISH)				
C1VY 57044B78-B	R. H. - less cover	1	All	D	61/62
C1VY 57044B79-B	L. H. - less cover	1	All	D	61/62
04480-1	REFER TO GROUP 04392-3				
044B82-3	PANEL (WINDSHIELD DEFROSTER OPENING FINISH) FRONT				
C1VB 57044B82-AP	R. H.	1	All	D	61/62
C1VB 57044B83-AP	L. H.	1	All	D	61/62

GROUP AND PART NUMBER	DESCRIPTION, SIZE, ETC.	NO. REQ'D	MODEL OR ENGINE CUBIC INCH DISPLACEMENT	VEHICLE CODE	YEAR 19____
04484	CLIP (INSTRUMENT PANEL RADIO GRILLE) RETAINING				
COAB 6404484-A		2	All	A	61/62
C4AZ 6204484-A		2	57C, 63C, 65C	A	64
C1SB 6304484-B		2	All	D	63
		2	All except 57C, 63C, 65C	A	64
044B84-5	PANEL (WINDSHIELD DEFROSTER OPENING FINISH) REAR				
C1VB 57044B84-AP	R. H.	1	All	D	61/62
C1VB 57044B85-AP	L. H.	1	All	D	61/62
04488	BRACE (INSTRUMENT PANEL) UPPER HALF TO LOWER HALF				
C4VY 5304488-A		2	All	D	64
044B90	REINFORCEMENT (CONSOLE COMPARTMENT PANEL) FRONT				
C2DZ 64044B90-A	Bright finish - when using for Comet models prior to 3-1-62 drill (2) 3/8" diameter holes	1	62A(S-22), 62C, 71D	B C	61/62
		1	62C, 63B, 71D, 76B	C	63
04496	COVER (INSTRUMENT PANEL HEATER CONTROL OPENING)				
C3MY 6204496-A	Chrome - use when heater and/or a/cond. is not installed	1	All	A	63
C4MY 6204496-A	Chrome - use when heater is not installed	1	All	A	64
C2OZ 6204496-B	Plastic - use when heater is not installed	1	All	B	62/63
C4DZ 6204496-A	Use when heater is not installed	1	All	C	64
044B96	CLIP (INSTRUMENT PANEL PAD RETAINING) UPPER				
C4GY 54044B96-A		AR	All	C	64
04500-1	FILLER (INSTRUMENT PANEL END) VINYL COVERED				
	Refer to MD-4230 Soft Trim Section				
045A12	PANEL (CONSOLE COMPARTMENT REAR)				
C2AZ 76045A12-B	Zinc die cast - use with automatic shift - floor type (a)	1	57C, 63C, 65C, 75C, 76B, C	A	62/64
C2AZ 76045A12-C	Zinc die cast - use with manual shift - floor type - use on vehicles built prior to 12-3-62 (a)	1	65C, 75C, 76B	A	62/63
Kit - consists of the following -					
(1) C3AZ-7262-A	retainer trans. gear shift boot	(1) C3AZ-7277-B	boot assembly gear shift	(1) C3AZ-65045A12-A	panel
C3AZ 65045A12-A	Zinc die cast - use with manual shift - floor type - use on vehicles built after 12-2-62	1	57C, 63C, 65C, 75C, 76B, C	A	63/64
C4AZ 63045A12-A	Use with movable steering column and column shift	1	57C, 63C, 65C, 76C	A	64
C2OZ 62045A12-A	Zinc die cast	1	62C	B	62
C3OZ 65045A12-A	Zinc die cast - column shift	1	65B	B	63
Package also includes -					
		(4) 53027-S13	screw		
C1DB 64045A12-A	Aluminum - use on vehicles built prior to 3-1-62	1	62A(S-22), 62C	C	61/62
C2DZ 64045A12-A	Zinc die cast - with BLACK stripe - use on vehicles built after 2-28-62	1	62C, 71D	C	62
C3DZ 62045A12-A	Zinc die cast - with ARGENT strip	1	62C, 76B	C	63
C3DZ 71045A12-A	Zinc die cast	1	71D	C	63
53027-S13	Screw-oval hd. cr. rec. tap. -No. 8-15 x 5/8"	4	a		
045B12	COVER (INSTRUMENT PANEL REAR WINDOW CONTROL OPENING)				
C3MY 62045B12-A	Use when electric rear window is not installed	1	54A, 62A, 63, 65A, 75A	A	63
C4MY 63045B12-A	Use when electric rear window is not installed	1	57, 63	A	64
045C12-3	SUPPORT (INSTRUMENT PANEL AIR CONDITIONER MOUNTING)				
C4MY 62045C12-A	R.H.	1	All	A	64
C4MY 62045C13-A	L.H.	1	All	A	64

GROUP AND PART NUMBER	DESCRIPTION, SIZE, ETC.	NO. REQ'D	MODEL OR ENGINE CUBIC INCH DISPLACEMENT	VEHICLE CODE	YEAR 19____
04516-7	BRACKET (INSTRUMENT PANEL VENT AIR CONTROL MOUNTING)				
C2OZ 6204517-B	L. H.	1	All	B	62
C2OZ 6204517-A	L. H. - spacer - round - 1-1/16" O. D. x 7/16" I. D.	1	All	B	62/63
C3OZ 6204517-A	L. H. - "L" shaped	1	All	B	62/63
C4DZ 6204516-B	Use on L. H. side only	1	All	C	64
04518-9	MOULDING (INSTRUMENT PANEL PAD RETAINING) END				
C2OZ 6204518-A	R. H. (Δ)	1	All	B	62/63
C2OZ 6204519-A	L. H. (Δ)	1	All	B	62/63
Δ Package also includes - (2) 52131-S13 screw					
CODB 6404518-BP	R. H.	1	All	C	60/63
CODB 6404519-BP	L. H.	1	All	C	60/63
C4DZ 6204518-B	R. H. (‡)	1	All	C	64
C4DZ 6204519-B	L. H. (‡)	1	All	C	64
‡ Package also includes - (2) 53016-S13 screw					
04522-3	MOULDING (INSTRUMENT PANEL PAD RETAINING) TOP				
C2OZ 6204522-A	R. H. (Δ)	1	All	B	62/63
C2OZ 6204523-A	L. H. (Δ)	1	All	B	62/63
Δ Package also includes - (3) 53073-S13 screw					
CODB 6404522-CP	R. H. (a)	1	All	C	60
CODB 6404523-CP	L. H. (a)	1	All	C	60
C1DB 6404522-AP	R. H. (a)	1	All except 63, 76	C	61/63
C1DB 6404523-AP	L. H. (a)	1	All except 63, 76	C	61/63
C3DZ 7604522-A	R. H.	1	63, 76	C	63
C3DZ 7604523-A	L. H.	1	63, 76	C	63
52388-S13	Screw-oval trim hd. cr. rec. tap. -No. 8-15 x 1-1/2"	6or8	a		
045B24-5	MOULDING (CONSOLE COMPARTMENT PANEL FRONT)				
C2AZ 76045B24-B	R. H. - use with a/cond. (Δ)	1	63C, 65C, 75C, 76B	A	62/63
C2AZ 76045B25-B	L. H. - use with a/cond. (Δ)	1	63C, 65C, 75C, 76B	A	62/63
C2AZ 76045B24-A	R. H. - use without a/cond. (Δ)	1	57C, 63C, 65C, 75C, 76B, C	A	62/64
		1	65B	B	63
C2AZ 76045B25-A	L. H. - use without a/cond. (Δ)	1	57C, 63C, 65C, 75C, 76B, C	A	62/64
		1	65B	B	63
Δ Package also includes - (2) 53016-S13 screw					
C4VY 53045B24-A	Bucket seat	1	All	D	64
045C26-7	MOULDING (CONSOLE PANEL SIDE)				
C4DZ 62045C26-A	R. H.	1	54C, 63C, 76B	C	64
C4DZ 62045C27-A	L. H.	1	54C, 63C, 76B	C	64
045B32	BRACKET (CONSOLE MOUNTING) FRONT				
C4VY 53045B32-A	Bucket seat	1	All	D	64
045B34	BRACKET (CONSOLE MOUNTING) REAR				
C4VY 53045B34-A	Bucket seat	1	All	D	64
045A36	PANEL (CONSOLE)				
	Refer to MD-4230 Soft Trim Section				
045C38	PANEL (INSTRUMENT PANEL APPLIQUE) CENTER				
C4GY 54045C38-B	Use with or without AM radio - WOOD GRAIN	1	54C, D, 63C, D, 76B, D	C	64
C4GY 54045C38-C	Use with AM-FM radio only - WOOD GRAIN	1	54C, D, 63C, D, 76B, D	C	64
C4GY 63045C38-A	Use with or without AM radio - BLACK	1	63E	C	64
C4GY 63045C38-B	Use with AM-FM radio only - BLACK	1	63E	C	64

GROUP AND PART NUMBER	DESCRIPTION, SIZE, ETC.	NO. REQ'D	MODEL OR ENGINE CUBIC INCH DISPLACEMENT	VEHICLE CODE	YEAR 19____
045B46	PANEL (INSTRUMENT PANEL RADIO SUPPORT UPPER)				
C3VY 57045B46-A		1	All	D	63
045C46	BRACKET (CONSOLE MOUNTING) UPPER				
C4VY 53045C46-A	Bucket seat	2	All	D	64
045B52	COVER (INSTRUMENT PANEL PAD DEFROSTER) OPENING				
C4AZ 54045B52-A	Paint to match interior	2	All	A	64
045B53	COVER (INSTRUMENT PANEL PAD DEFROSTER OPENING FLANGE)				
C3AZ 62045B53-A	In prime	2	All	A	63
045B56	SUPPORT (CONSOLE COMPARTMENT)				
C2AZ 65045B56-A	(a)	1	63C, 65C, 75C	A	62/63
C2AZ 76045B56-A	(a)	1	76B	A	62/63
C4AZ 63045B56-A		1	57C, 63C, 65C	A	64
C4AZ 76045B56-A		1	76C	A	64
C3OZ 65045B56-A	Use on vehicles built prior to 11-19-62	1	65B	B	63
C3OZ 65045B56-C	Use on vehicles built after 11-18-62	1	65B	B	63
31497-S8	Screw-hex. washer hd. tap. -No. 14-14 x 1/2"	10	a		
04559	BRACKET (INSTRUMENT PANEL CENTER GUSSET MOUNTING)				
BAK 5704559-C		1	All	D	60
045C60	RETAINER (CONSOLE SIDE FRONT MOULDING)				
C4VY 53045C60-A	Bucket seat	1	All	D	64
04561	REFER TO GROUP 04439				
045B64	SPACER (INSTRUMENT PANEL RADIO GRILLE REAR)				
	NS-improvise from tire carcas - 3/4" diameter x 3/8" thick	2	All	A	63
04567	REFER TO GROUP 045A74				
045A68	SPACER (CONSOLE COMPARTMENT PANEL FRONT)				
	NS-improvise from steel tubing - 3/8" O.D. x 1/16" wall thickness x 11/32" long	AR	62A(S-22), 62C	C	61/62
045C68	COVER (INSTRUMENT PANEL RADIO OPENING) UPPER				
C4GY 54045C68-B	Use when radio is not installed	1	54C, D, 63C, D, 76B, D	C	64
C4GY 62045C68-A	Use when radio is not installed	1	54A, B, 62, 71	C	64
045B70-1	MOULDING (CONSOLE COMPARTMENT PANEL SIDE) REAR				
C2AZ 76045B70-A	R.H.	1	57C, 63C, 65C, 75C, 76B, C	A	62/64
C2AZ 76045B71-A	L.H.	1	57C, 63C, 65C, 75C, 76B, C	A	62/64
C3OZ 65045B70-A	R.H. (Δ)	1	65B	B	63
C3OZ 65045B71-A	L.H. (Δ)	1	65B	B	63
	Δ Package also includes - (3) C2AZ-76045A96-A retainer (3) 52720-S8 screw				
C4VY 53045B70-A	R.H. - bucket seat	1	All	D	64
C4VY 53045B71-B	L.H. - bucket seat	1	All	D	64
045C70	PANEL (INSTRUMENT PANEL RADIO LOWER COVER FINISH)				
C4GY 54045C70-A	Not used with radio - WOOD GRAIN	1	54C, D, 63C, D, 76B, D	C	64
C4GY 63045C70-A	Not used with radio - BLACK	1	63E	C	64

GROUP AND PART NUMBER	DESCRIPTION, SIZE, ETC.	NO. REQ'D	MODEL OR ENGINE CUBIC INCH DISPLACEMENT	VEHICLE CODE	YEAR 19____
045A74	PANEL (CONSOLE COMPARTMENT FRONT)				
C2AZ 7604567-A	Use without a/cond. (Δ)	1	65C, 76B	A	62
C2AZ 7604567-B	Use with a/cond. (Δ)	1	65C, 76B	A	62
C3AZ 6504567-A	Use with a/cond. (Δ)	1	63C, 65C, 75C, 76B	A	63
		1	65B	B	63
C3AZ 6504567-B	Use without a/cond. (Δ)	1	57C, 63C, 65C, 75C, 76B, C	A	63/64
		1	65B	B	63

Δ Package also includes -

(4) 53027-S13 screw-No. 8-15 x 5/8"

C4AZ 6304567-A	Use with a/cond.	1	57C, 63C, 65C, 76C	A	64
C2OZ 62045A74-A		1	62C	B	62
C1DB 64045A74-A	Aluminum - use on vehicles built prior to 3-1-62	1	62A(S-22), 62C	C	61/62
C2DZ 64045A74-A	Zinc die cast - use on vehicles built after 2-28-62	1	62C, 71D	C	62
C3DZ 62045A74-A	Zinc die cast	1	62C, 71D	C	63
C3DZ 76045A74-A	Zinc die cast	1	76B	C	63

04578-9	MOULDING (CONSOLE COMPARTMENT PANEL SIDE) FRONT				
C2AZ 7604578-A	R.H. (Δ)	1	57C, 63C, 65C, 75C, 76B, C	A	62/64
C2AZ 7604579-A	L.H. (Δ)	1	57C, 63C, 65C, 75C, 76B, C	A	62/64
C3OZ 6504578-A	R.H. (Δ)	1	65B	B	63
C3OZ 6504579-A	L.H. (Δ)	1	65B	B	63

Δ Package also includes -

(2) 53016-S13 screw

045B80	BRACKET (AUTOMATIC SHIFT MOUNTING PLATE)				
C2AZ 76045B80-A	Use with console compartment (a)	1	65C, 75C, 76B	A	62/63
		1	57C, 63C, 65C, 76C	A	64
373460-S7	Screw and washer-pan. hd. -1/4"-20 x 1/2"	2	a		

04588	PLATE (INSTRUMENT PANEL RADIO OPENING COVER MOUNTING)				
C2MY 6204588-A	Use when radio is not installed	1	All	A	62

045B88	STRIP (CONSOLE PANEL SIDE FLANGE BREAKER)				
C3DZ 76045B88-A	Plastic	2	76B	C	63

04590-1	RETAINER (INSTRUMENT PANEL COVER) SIDE				
COAB 6404590-A	R.H.	1	All	A	61
COAB 6404591-A	L.H.	1	All	A	61
C2MB 6204590-A	R.H. - 2-1/4" long	1	All	A	62
C2MB 6204591-A	L.H. - 2-1/4" long	1	All	A	62

045A96	RETAINER (CONSOLE COMPARTMENT PANEL REAR MOULDING)				
C2AZ 76045A96-A		AR	57C, 63C, 65C, 75C, 76B, C	A	62/64
		6	65B	B	63
C4DZ 62045A96-A		1	54C, 63C, 76B	C	64

04634	PANEL (INSTRUMENT) UPPER				
C4VY 5304634-A	Use on vehicles built prior to 11-18-63	1	All	D	64
C4VY 5304634-B	Use on vehicles built after 11-17-63	1	All	D	64

04638	EXTENSION (INSTRUMENT PANEL LOWER) CENTER				
C1VY 5704638-C		1	All	D	61/62

04640	EXTENSION (INSTRUMENT PANEL LOWER) CENTER				
COLB 6304640-BP		1	All	D	60
C3VY 5704640-A	In prime - paint to match	1	All	D	63

GROUP AND PART NUMBER	DESCRIPTION, SIZE, ETC.	NO. REQ'D	MODEL OR ENGINE CUBIC INCH DISPLACEMENT	VEHICLE CODE	YEAR 19____
04644-5	EXTENSION (INSTRUMENT PANEL LOWER)				
COLB 6304644-BP	R.H. - outer	1	All	D	60
COLB 6304645-AP	L.H. - outer	1	All	D	60
04652	MOULDING (INSTRUMENT PANEL LOWER)				
C1MB 6404652-A	Center	1	54A, 58A, 62A, 64A, 65A, 71A,75	A	61
04664	SUPPORT (INSTRUMENT PANEL LOWER CENTER EXTENSION)				
BAK 5704664-A		1	All	D	60
04672	BRACE (INSTRUMENT PANEL FLANGE TO COWL INNER PANEL)				
C2OZ 6204672-A		1	All	B	62/63
04683	DECAL (FUSE BLOCK INSTRUCTION)				
B9BM 6404683-A		1	All	A	60
04684-5	RETAINER (CONSOLE COMPARTMENT)				
C2YY 6204684-A	R.H. - steel	1	62C	B	62
C2YY 6204685-A	L.H. - steel	1	62C	B	62
C1DB 6404684-A	Steel	2	62A(S-22), 62C	C	61/62
C3DZ 6204684-A	R.H. - steel	1	62C, 71D	C	63
C3DZ 6204685-A	L.H. - steel	1	62C, 71D	C	63
C3DZ 7604684-A	R.H. - steel	1	76B	C	63
C3DZ 7604685-A	L.H. - steel	1	76B	C	63
04736	MOULDING (CONSOLE COMPARTMENT PANEL REAR)				
C2AZ 6504736-A	(Δ)(a)	1	63C, 65C	A	62/63
		1	65C	A	64
C2AZ 7604736-A	(Δ)(a)	1	76B, C	A	62/64
C3AZ 7504736-A	(Δ)	1	75C	A	63
		1	57C, 63C	A	64
Δ Package also includes -					
	(4) 53016-S13 screw				
C3OZ 6504736-A		1	65B	B	63
Package also includes -					
	(5) 53016-S13 screw				
C4DZ 6204736-A		1	54C, 63C, 76B	C	64
C4VY 5304736-A	Bucket seat	1	All	D	64
C2AZ 76045A96-A	Retainer	4	a		
04772	MOULDING (INSTRUMENT PANEL UPPER PAD RETAINING CENTER)				
COMB 5804772-A		1	All	A	60
04773	MOULDING (GLOVE COMPARTMENT DOOR)				
C1MB 6404773-A		1	54A, 58A, 62A, 64A, 65A, 71A,75A	A	61
04774-5	PANEL (INSTRUMENT PANEL AT CLUSTER FINISH) LOWER				
C1MY 5704774-A	R.H. - outer - use when heater and/or a/cond. is installed	1	All	A	61
C1MY 5704774-B	R.H. - outer - use when heater and/or a/cond. is not installed	1	All	A	61
COKZ 6404774-A	R.H. - inner	1	All	A	61
C1MB 6204775-B	L.H. - when used for convertible models 76 a 1.00" diameter hole must be added for top control - also .75" diameter hole for brake light - all models	1	All	A	61

CONTINUED ON NEXT PAGE

GROUP AND PART NUMBER	DESCRIPTION, SIZE, ETC.	NO. REQ'D	MODEL OR ENGINE CUBIC INCH DISPLACEMENT	VEHICLE CODE	YEAR 19____
04774-5	PANEL (INSTRUMENT PANEL AT CLUSTER FINISH) LOWER (CONTINUED)				
C2MY 5704774-A	R.H. - use when heater and/or a/cond. is not installed - paint to match	1	All	A	62
C2MY 5704774-B	R.H. - use when heater and/or a/cond. is installed - paint to match	1	All	A	62
C2MY 5704775-A	L.H.	1	All	A	62
04784	RETAINER (INSTRUMENT PANEL CENTER FINISH PANEL)				
C4MY 6204784-A		2	All	A	64
04792	MOULDING (GLOVE COMPARTMENT DOOR)				
C2GB 6204792-A	12-3/4" long	1	All	C	62
		1	All except 62C, 76B	C	63
C3GY 6204792-A		1	62C, 76B	C	63
C4GY 5404792-A	Console	1	54C, 63C	C	64
Package also includes -	(6) 373704-S100 sleeve nut				
04810	RECEPTACLE (INSTRUMENT PANEL ASH)				
COAZ 6404810-C		1	All	A	61/62
C3AZ 6204810-C		1	All	A	63/64
C3OZ 6204810-A		1	All	B	62/63
C3DZ 6204810-A		1	All	C	60/63
C4DZ 6204810-A		1	All	C	64
04812	RESERVOIR (INSTRUMENT PANEL ASH RECEPTACLE)				
COAB 6404812-A		1	All	A	61/62
04817	PANEL (INSTRUMENT PANEL ASH RECEPTACLE)				
C2VY 5704817-A	Not used when a/cond. is installed	1	All	D	62/63
04821	BOX & SNUFFER (ASH RECEPTACLE)				
C4MY 5404821-A	With a/cond.	1	All	A	64
21A 7004821-A	Quarter panel - also refer to group 30702-3	2	76	A C	61/64
BAK 5704821-A	Located on instrument panel	1	All	D	62
C3VY 5704821-A	Located on instrument panel	1	All	D	63
C4VY 5304821-A	Located on instrument panel	1	All	D	64
04821	RECEPTACLE (CONSOLE PANEL ASH)				
C3AZ 7504821-B	Hang-on type - includes retainer - use on vehicles built prior to 12-3-62	1	75C	A	63
C3AZ 7504821-A	Less retainer - use on vehicles built after 12-2-62	1	75C	A	63
		1	57C, 63C, 65C	A	64
C3DZ 7104821-A		1	71D	C	63
C4DZ 6204821-A		1	54C, 63C, 76B	C	64
04826	RETAINER (INSTRUMENT PANEL ASH RECEPTACLE) VINYL COVERED				
	Refer to MD-4230 Soft Trim Section				
04826-7	RETAINER (INSTRUMENT PANEL ASH RECEPTACLE BOX)				
COMB 6404826-A	R.H. - illuminated	1	All	A	60
PB9M 6404827-A	L.H.	1	All	A	60
C1AB 6204826-A	Use on vehicles built prior to 10-3-60	1	All	A	61
C1AZ 6204826-A	Use on vehicles built after 10-2-60	1	All	A	61/62
C3AZ 6204826-A		1	All	A	63/64
C3AZ 7504826-A	Use on console compartment ash receptacle - use on vehicles built after 12-2-62	1	75C	A	63
		1	57C, 63C, 65C	A	64

CONTINUED ON NEXT PAGE

GROUP AND PART NUMBER	DESCRIPTION, SIZE, ETC.	NO. REQ'D	MODEL OR ENGINE CUBIC INCH DISPLACEMENT	VEHICLE CODE	YEAR 19____
04826-7	RETAINER (INSTRUMENT PANEL ASH RECEPTACLE BOX)				
C2OZ 6204826-A		1	All	B	62/63
CODB 6404826-A		1	All	C	60/62
		1	All except 71D	C	63
C3DZ 7104826-A		1	71D	C	63
C4DZ 6204826-A		1	All	C	64
048A30	HINGE (INSTRUMENT PANEL ASH RECEPTACLE)				
C4VY 53048A30-A		1	All	D	64
04834-5	SPRING (INSTRUMENT PANEL ASH RECEPTACLE RETAINER COVER)				
B7A 6404834-A	R. H.	1	All	D	62/63
B7A 6404835-A	L. H.	1	All	D	62/63
C4VY 5304835-A		1	All	D	64
048A38	SHIELD (INSTRUMENT PANEL ASH RECEPTACLE)				
C4VY 53048A38-A	Use on vehicles built prior to 11-1-63	1	All	D	64
C4VY 53048A38-B	Use on vehicles built after 10-31-63	1	All	D	64
04870	BUMPER (INSTRUMENT PANEL ASH RECEPTACLE)				
PB9M 6404870-A		3	All	A	60
C4VY 5304870-A		2	All	D	64
04878	RETAINER (INSTRUMENT PANEL PAD)				
PB9M 6404878-AP	21-7/64" long	1	All	A	60
04886	BRACKET (INSTRUMENT PANEL GUSSET MOUNTING)				
BAK 5704886-B		1	All	D	60
04894-5	PANEL & BOX (INSTRUMENT PANEL ASH RECEPTACLE)				
COMB 6404894-AP	R. H.	1	All	A	60
COMB 6404895-AP	L. H.	1	All	A	60
06002	LATCH (GLOVE COMPARTMENT DOOR LOCK)				
C1VB 5706002-B		1	All	D	61/62
060A08	CABLE (GLOVE COMPARTMENT DOOR CHECK)				
C4DZ 62060A08-A		1	All	C	64
06010	COMPARTMENT (GLOVE)				
B9MB 6406010-B	Use with or without vacuum heater and defroster - also used with hang-on a/cond.	1	All	A	60
COMB 6406010-A	Use with instrument panel mounted a/cond. only	1	All	A	60
PB9M 6406010-A	Not used with a/cond. or heater and defroster	1	All	A	60
COAB 6406010-A		1	All	A	61/62
C2AZ 7606010-A	Console (a)	1	57C,63C,65C,75C,76B,C	A	62/64
C3MY 6206010-A		1	All	A	63/64
C2OB 6206010-A		1	All	B	62/63
C3OZ 6506010-A	Console	1	65B	B	63
C1DZ 6406010-A	Console	1	62A(S-22),62C,71D	C	61/62
	(b)	1	62C	B	62
	(d)	1	62C,63C,71D	C	63
CODB 6406010-A		1	All	C	60/62
CODZ 6406010-A		1	All	C	63
C3DZ 7606010-A	Console (c)	1	76B	C	63
C4DZ 6206010-A		1	All	C	64
BAK 5706010-CP		1	All	D	60

CONTINUED ON NEXT PAGE

GROUP AND PART NUMBER	DESCRIPTION, SIZE, ETC.	NO. REQ'D	MODEL OR ENGINE CUBIC INCH DISPLACEMENT	VEHICLE CODE	YEAR 19____
06010	COMPARTMENT (GLOVE) CONTINUED				
C1VY 5706010-E		1	All	D	61/62
C3VY 5706010-B		1	All	D	63
C4VY 5306010-A		1	All	D	64
C2YY 6204684-A	Retainer-R. H.	1	b		
C2YY 6204685-A	Retainer-L. H.	1	b		
C3DZ 6204684-A	Retainer-R. H.	1	d		
C3DZ 6204685-A	Retainer-L. H.	1	d		
C1DB 6404684-A	Retainer	2	d		
C3DZ 7604684-A	Retainer-R. H.	1	c		
C3DZ 7604685-A	Retainer-L. H.	1	c		
52376-S13	Screw-oval hd. cr. rec. tap. -No. 8-15 x 1"	2	a		
060A10	BRACKET (CONSOLE COMPARTMENT DOOR CHECK ARM)				
C4DZ 62060A10-A		1	54C, 63C, 76B	C	64
06012	PANEL (GLOVE COMPARTMENT FRONT)				
BAK 5706012-AP		1	All	D	60
060A12	BEZEL (GLOVE COMPARTMENT LOCK)				
C4VY 53060A12-A		1	All	D	64
C1SB 63060A12-B	Console compartment	1	All	D	64
060A14	ORNAMENT (GLOVE COMPARTMENT DOOR)				
C1KB 62060A14-B		1	All	C	60
C1GB 62060A14-A		1	All	C	61
C4GY 54060A14-A	Console compartment door	1	All	C	64
060A18	PANEL (GLOVE COMPARTMENT DOOR APPLIQUE) LOWER				
C1VB 57060A18-D	WOOD GRAIN applique	1	All	D	61/62
060A20	PANEL (GLOVE COMPARTMENT DOOR APPLIQUE)				
C4GY 63060A20-A	BLACK	1	63E	C	64
C4GY 54060A20-A	WOOD GRAIN	1	54C, D, 63C, D, 76B, D	C	64
C1VB 57060A20-D	WOOD GRAIN - upper	1	All	D	61/62
06024	DOOR (GLOVE COMPARTMENT)				
COMB 6406024-B	Use when a/cond. is not installed	1	All	A	60
COMB 6406044-BP	Die cast and chrome - use with a/cond.	1	All	A	60
C2AZ 6206024-A		1	All	A	61/62
C3AZ 6206024-A		1	All	A	63
C4MY 6206024-A		1	All	A	64
C3OZ 6206024-A		1	All	B	62/63
C1DZ 6406024-A	Console compartment - aluminum - use on vehicles built prior to 3-1-62	1	62A(S-22), 62C	C	61/62
C2DZ 6406024-A	Console compartment - zinc die cast - for Comet requirements use on vehicles built after 2-28-62	1	62C, 71D	B C	62
CODZ 6406024-B		1	All	C	60/63
C3DZ 6206024-A	Console compartment - with ARGENT stripe	1	62C, 63C, 71D, 76B	C	63
C4DZ 6206024-A		1	All	C	64
C1VB 5706044-DP	Panel	1	All	D	61/62
C3VY 5706024-C	Wood grained walnut - includes name plate "LINCOLN CONTINENTAL" (Δ)	1	All	D	63
C3VY 5706024-D	Brushed aluminum finish - includes name plate "LINCOLN CONTINENTAL" (Δ)	1	All	D	63
	Δ This door uses one check strap				
06024	DOOR (GLOVE OR CONSOLE COMPARTMENT) VINYL COVERED				
	Refer to MD-4230 Soft Trim Section				

GROUP AND PART NUMBER	DESCRIPTION, SIZE, ETC.	NO. REQ'D	MODEL OR ENGINE CUBIC INCH DISPLACEMENT	VEHICLE CODE	YEAR 19____
06027	REFER TO GROUP 06064				
06036	PANEL (GLOVE COMPARTMENT DOOR FINISH)				
COMB 5806036-B	Die cast	1	57B, F, 58B, 63B, F, 76D, 77B	A	60
C1MB 6206036-B	Die cast	1	54B, 65B, 71B, 75B, 76A	A	61
C2MY 5406036-A	Die cast - with "MERCURY" name plate	1	All except 65C, 76B	A	62
C2MY 7606036-B	Die cast - with "S-55" name plate	1	65C, 76B	A	62
C3MY 6206036-A	Zinc die cast - with "MONTEREY" name plate	1	All except 63B, C, 65C, 75C, 76B	A	63
C3MY 6306036-A	With "MARAUDER" name plate	1	63B, C	A	63
C3MY 6506036-B	With "S FIFTY-FIVE" name plate	1	65C, 75C, 76B	A	63
C4MY 6206036-A	Without a/cond.	1	All	A	64
C4MY 6206036-B	With a/cond.	1	All	A	64
C4GY 5406036-A		1	54C, D, 63C, D, 76B, D	C	64
C4GY 6206036-A		1	54A, B, 62A, B, C, 63E, 71	C	64
06044	REFER TO GROUP 06024				
06050	HINGE (GLOVE COMPARTMENT DOOR)				
COMB 6406050-B		2	All	A	60
COAB 6406050-A		1	All	A	61/62
C3MY 6206050-A		1	All	A	63/64
C2AZ 7606050-A	Console compartment door (a)	1 1	63C, 65C, 75C, 76B 65B	A B	62/63 63
C2OB 6206050-A	Use on vehicles built prior to 12-19-62	1	All	B	62/63
C3OZ 6206050-A	Use on vehicles built after 12-18-62	1	All	B	63
C1DZ 6406050-A	For aluminum console compartment door - use on vehicles built prior to 3-1-62	1	62A(S-22), 62C	C	61/62
C2DZ 6406050-A	For zinc die cast console compartment door - for Comet requirements use on vehicles built after 2-28-62	1	62C, 63C, 71D, 76B	B C	62/63
CODB 6406050-A		2	All	C	60/63
C4DZ 6206050-A		1	All	C	64
C4DZ 6206050-B	Console compartment door	1	54C, 63C, 76B	C	64
C4DZ 6306050-A	Console compartment door	1	63E	C	64
C1VB 5706050-CP		1	All	D	61/62
C3VY 5706050-A	13" long	1	All	D	63
C4VY 5306050-A		1	All	D	64
C4VY 5306050-D	Console compartment door	1	All	D	64
350002-S	Bolt-hex. hd. special-No. 10-24 x 7/16"	AR	a		
06064	CATCH (GLOVE COMPARTMENT DOOR LOCK)				
PB9M 7006064-A		1	All	A	60
C3AZ 6206064-A		1	All	A	63/64
C2AZ 7606064-A	Console compartment door lock	1 1	57C, 63C, 65C, 75C, 76B, C 65B	A B	62/64 63
C2DZ 6406064-A	Console compartment door lock Glove compartment door lock Glove compartment door lock	1 1 1	62A(S-22), 62C, 63C, 71D, 76B All All	B C A C	61/63 61/62 60/63
C2OZ 6206064-A		1	All	B	62/63
C4DZ 6206064-A		1	All	C	64
C4DZ 6206064-B	Console compartment door lock	1	54C, 63C, 76B	C	64
C4DZ 6306064-A	Console compartment door	1	63E	C	64
BAK 5706027-A		1	All	D	60
C1VB 5706064-B		1	All	D	61/62
C3VY 5706064-A		1	All	D	63
C4VY 5306064-A		1	All	D	64
C4VY 5306064-B	Console compartment door lock	1	All	D	64

GROUP AND PART NUMBER	DESCRIPTION, SIZE, ETC.	NO. REQ'D	MODEL OR ENGINE CUBIC INCH DISPLACEMENT	VEHICLE CODE	YEAR 19____
06069	SPRING (CONSOLE COMPARTMENT DOOR HINGE)				
C2AZ 7606069-A		1	57C, 63C, 65C, 75C, 76B, C	A	62/64
		1	65B	B	63
C1DZ 6406069-A	For aluminum console door - use on vehicles built prior to 3-1-62	1	62A(S-22), 62C	C	61/62
C2DZ 6406069-A	For die cast console door - for Comet requirements use on vehicles built after 2-28-62	1	62C	B	62
		1	62C, 63C, 71D, 76B	C	62/63
06072	REFER TO GROUP 06081				
06081	LOCK (GLOVE COMPARTMENT DOOR)				
PB9M 6406081-A	With keys	1	All	A	60
C1MB 6206081-C	With keys	1	All	A	61
C2MY 6206081-A	With keys	1	All	A	62
C3MY 6206081-A	With keys	1	All	A	63
C4MY 6206081-A	With keys	1	All	A	64
C2YY 6206081-A	With keys	1	All	B C	60/63
C2DZ 6406072-A	Push button - without keys	1	All	C	62/63
	Also use on console compartment door	1	62A(S-22), 62C, 71D	B C	61/62
	Also use on console compartment door	1	62C, 63C, 71D, 76B	C	63
C4DZ 6206072-A	Push button - without keys	1	54A, 62A, 71A	C	64
C4GY 6206081-A	With keys	1	All	C	64
B9LB 5706081-A	With keys	1	All	D	60
C1VB 7406081-B	With keys	1	All	D	61/62
C3VY 7406081-A	With keys	1	All	D	63
C4VY 5306081-A	Console compartment door	1	All	D	64
C4VY 7406081-A	With keys	1	All	D	64
C4VY 7406081-B	Lock set - glove and console compartment door	1	74	D	64
06095	ESCUTCHEON (GLOVE COMPARTMENT DOOR LOCK)				
COMB 5806095-A	Die cast - chrome - use when a/cond. is not installed	1	57B-F, 58B, 63B, F, 76D, 77B	A	60
PB9M 6406095-A	Die cast - chrome - use when a/cond. is not installed	1	57A, 58A, 63A, 64A, 76A	A	60
COAB 6406095-A	Die cast - chrome	1	58A, 64A	A	61
		1	54A, 62A, 65A, 71A, 75A	A	62
		1	All	B	62/63
06114	SPRING (CONSOLE COMPARTMENT DOOR CHECK ARM)				
C4DZ 6206114-A		1	54C, 63C, 76B	C	64
06115	BUMPER (GLOVE COMPARTMENT DOOR CHECK ARM)				
B6A 7006115-A	Rubber	1	All	A B	61/64
		1	All	C	60/63
		1	All	D	60 & 64
C1VB 5706115-A		1	All	D	61/62
C3VY 5706115-A		1	All	D	63
06116	PLATE (CONSOLE GLOVE COMPARTMENT DOOR HINGE) ANCHOR				
C4DZ 6206116-A		1	54C, 63C, 76B	C	64
C4VY 5306116-A	Bucket seat	1	All	D	64

GROUP AND PART NUMBER	DESCRIPTION, SIZE, ETC.	NO. REQ'D	MODEL OR ENGINE CUBIC INCH DISPLACEMENT	VEHICLE CODE	YEAR 19____
06117	ARM (GLOVE COMPARTMENT DOOR CHECK)				
C2AB 6206117-AP		1	All	A	61/62
C3AZ 6206117-A	In prime	1	All	A	63/64
C2OB 6206117-AP		1	All	B	62/63
CODB 6406117-EP		1	All	C	60/63
C4DZ 6206117-A	Console compartment door	1	54C,62C,63C,76B	C	64
BAK 5706117-AP		2	All	D	60
C1VB 5706117-BP		2	All	D	61/62
C4VY 5306117-A		1	All	D	64
06122	GROMMET (GLOVE COMPARTMENT DOOR CHECK ARM)				
C3AZ 6206122-A	Nylon	1	All	A B	63/64
COAB 6406122-A	Nylon	1	All	A	61/62
		1	All	C	60/63
C2OZ 6206122-A	Nylon	1	All	B	62
C1VB 5706122-A		2	All	D	61/62
		1	All	C	60/63
BAK 5706208-A		8	All	D	60
C4VY 5306122-A		1	All	D	64
06127	PLATE (GLOVE COMPARTMENT FUSE ACCESS OPENING COVER)				
PB9M 6406127-A		1	All	A	60
06128	COVER (GLOVE COMPARTMENT)				
BAK 5706128-A	Cardboard	1	All	D	60
06136	BRACKET (GLOVE COMPARTMENT DOOR LOCK MOUNTING)				
BAK 5706136-A		1	All	D	60
06150	PLATE (GLOVE COMPARTMENT LOCK CATCH ANCHOR)				
C4DZ 6206150-A		1	All	C	64
	Console compartment	1	All	D	64
06152	SUPPORT (CONSOLE COMPARTMENT DOOR LOCK)				
C1DB 6406152-A	Use with aluminum console door only on vehicles built prior to 3-1-62	1	62A(S-22), 62C	C	61/62
06156	COVER (GLOVE COMPARTMENT FUSE PANEL OPENING)				
C3VY 5706156-B		1	All	D	63
C4VY 5306156-AAC	All trim - BLACK vinyl	1	All	D	64
06157	STRIKER (CONSOLE COMPARTMENT DOOR)				
C2AZ 7606157-A	Nylon	1	63C, 65C, 75C, 76B	A	62/63
		1	65B	B	63
C2AZ 7606157-B	Steel	1	57C,63C,65C,76C	A	64
		1	54C,63C,76B	C	64
06192	BRACKET (GLOVE COMPARTMENT HINGE)				
BAK 5706192-AP		1	All	D	60
06206	CABLE (GLOVE COMPARTMENT DOOR CHECK)				
COMB 6406206-A	6-7/8" long - (2) req'd. when used without a/cond. and (1) req'd. when used with a/cond. routed thru glove compartment	2	All	A	60
COMB 6406206-B	4-15/16" long - use with hang-on a/cond.	2	All	A	60
C3VY 5706206-A		1or2	All	D	63
06208	RETAINER (GLOVE COMPARTMENT COVER)				
BAK 5706208-A		8	All	D	60

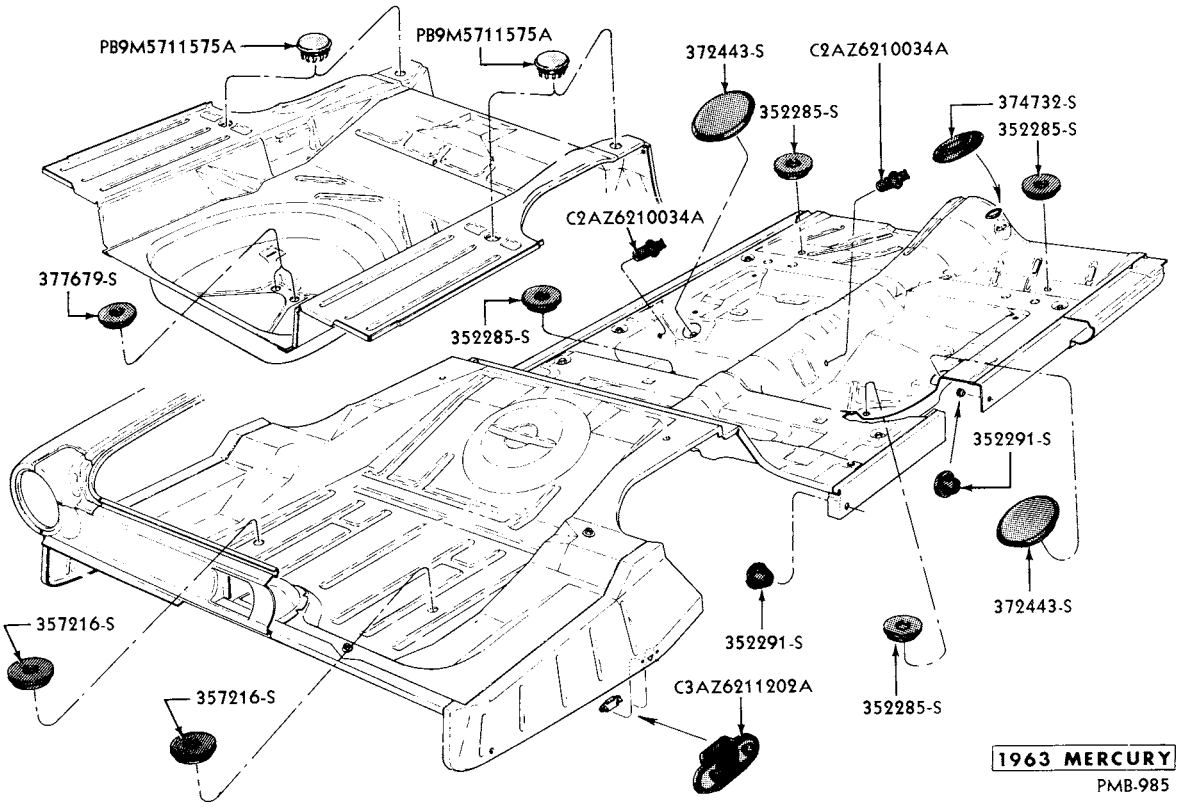

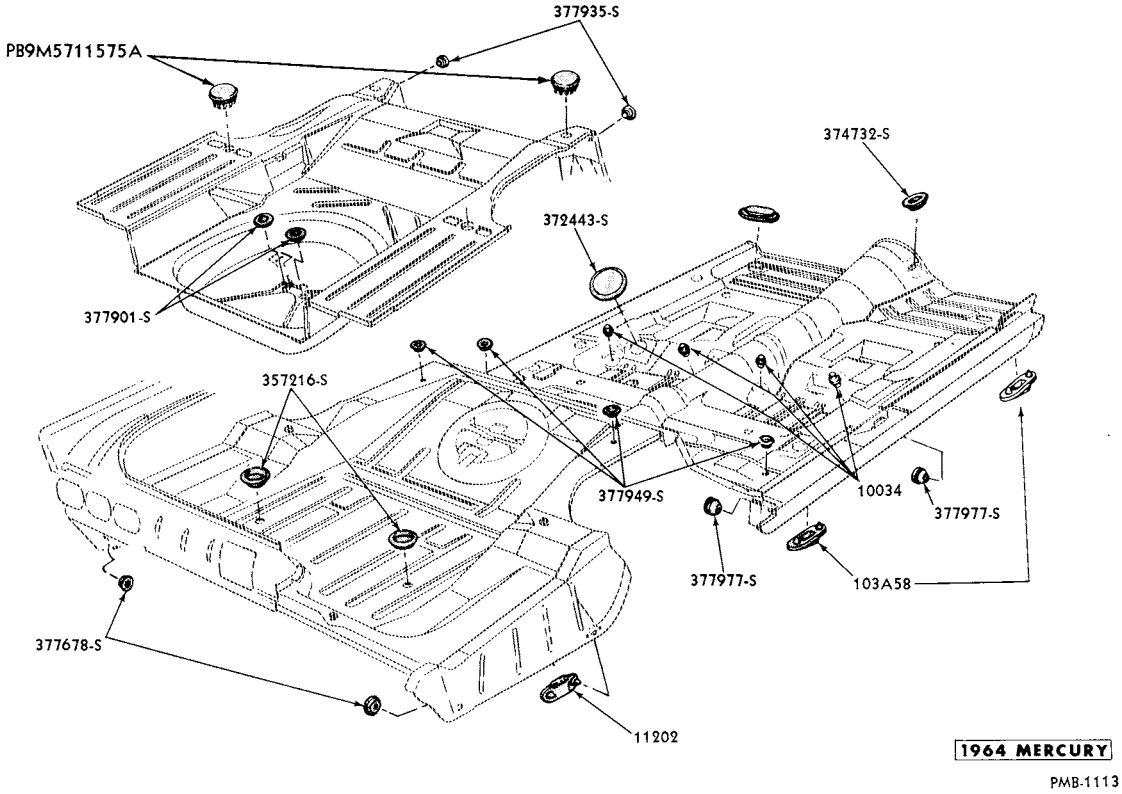

FLOOR PAN , PLUGS and BUTTONS

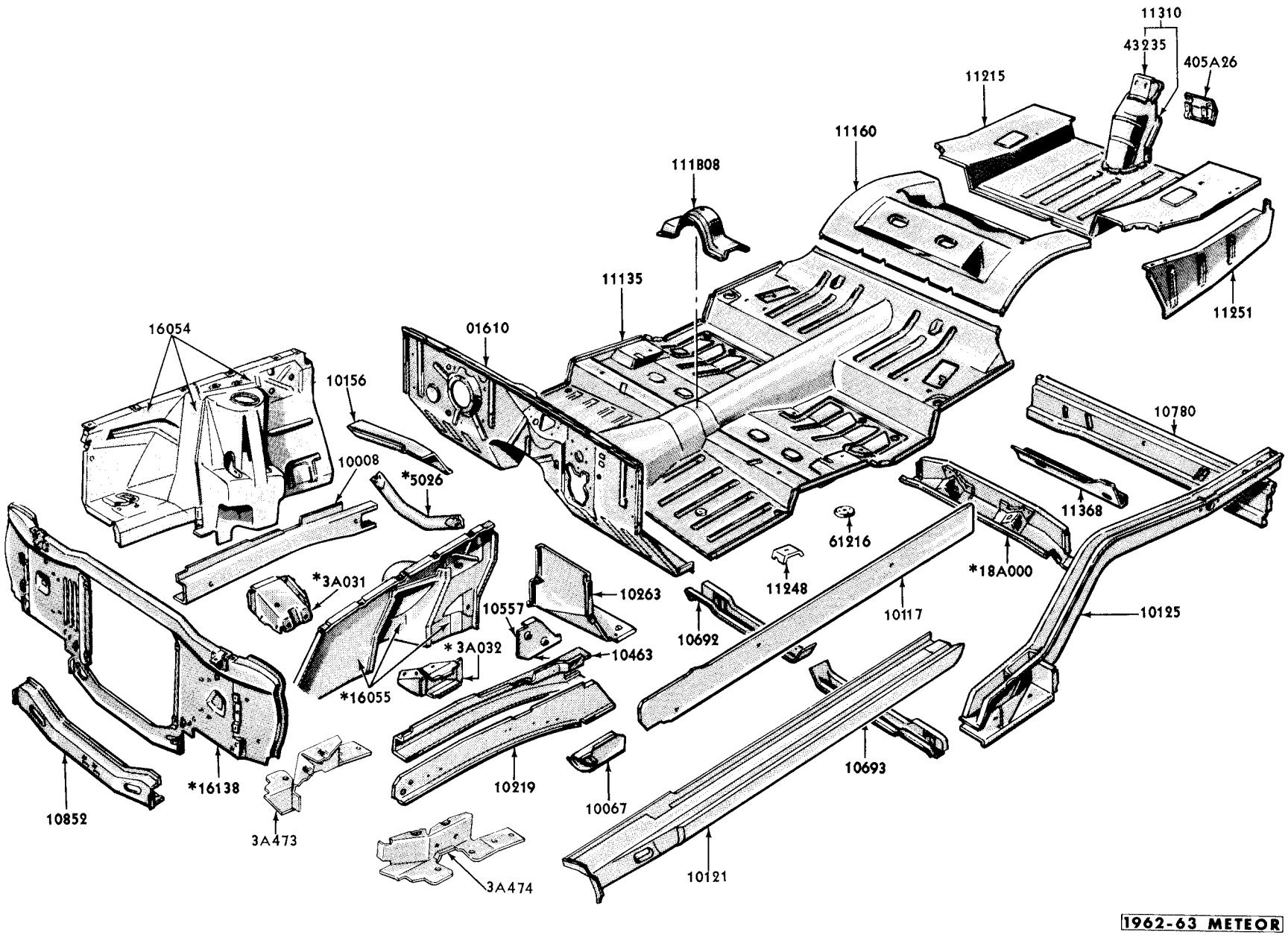

* REFER TO CHASSIS SECTION FOR APPLICATION

UNDERBODY - ALL MODELS

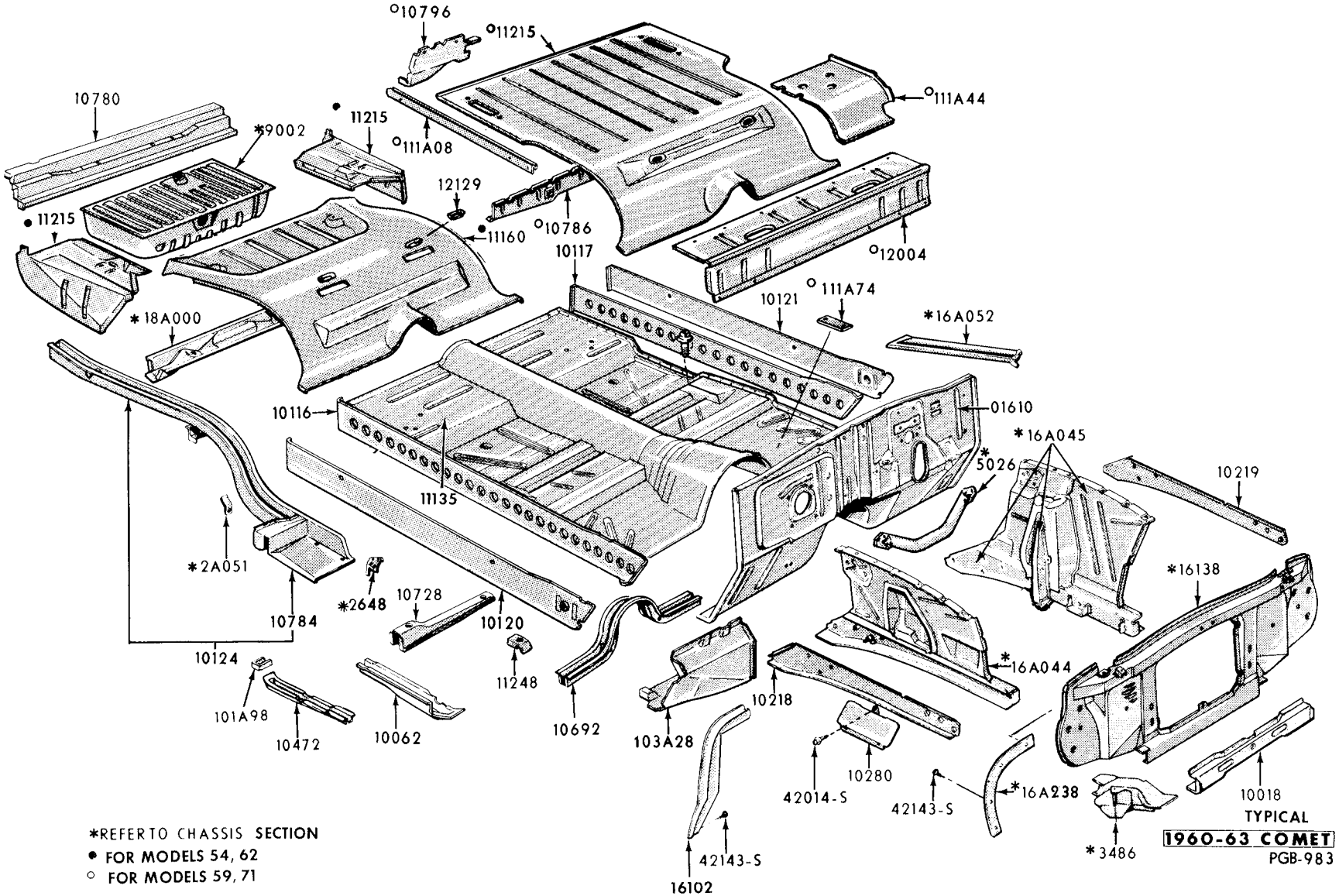

UNDERBODY - ALL MODELS

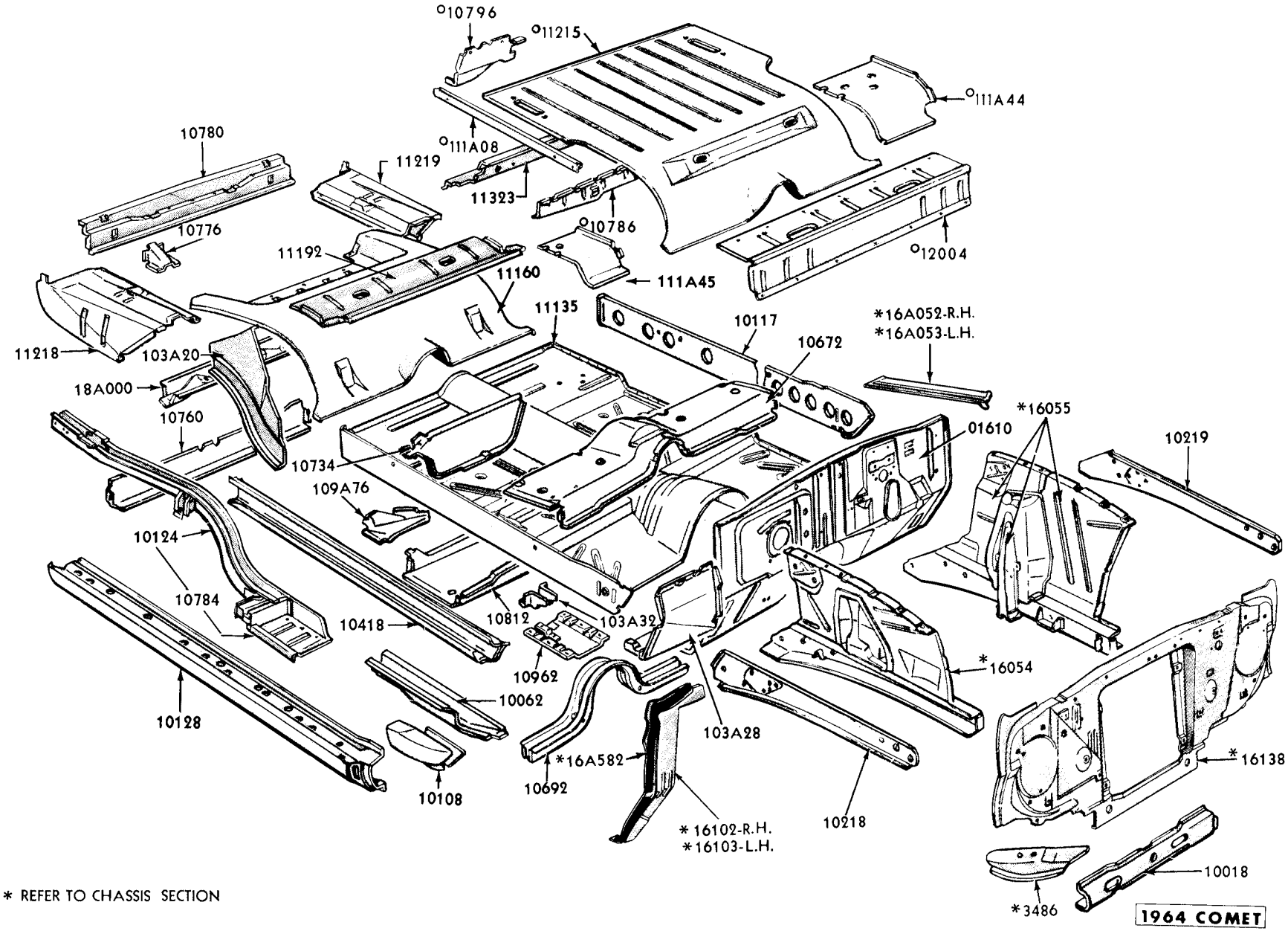

* REFER TO CHASSIS SECTION

oFOR MODELS 59,71

PGB-1139

UNDERBODY - ALL MODELS

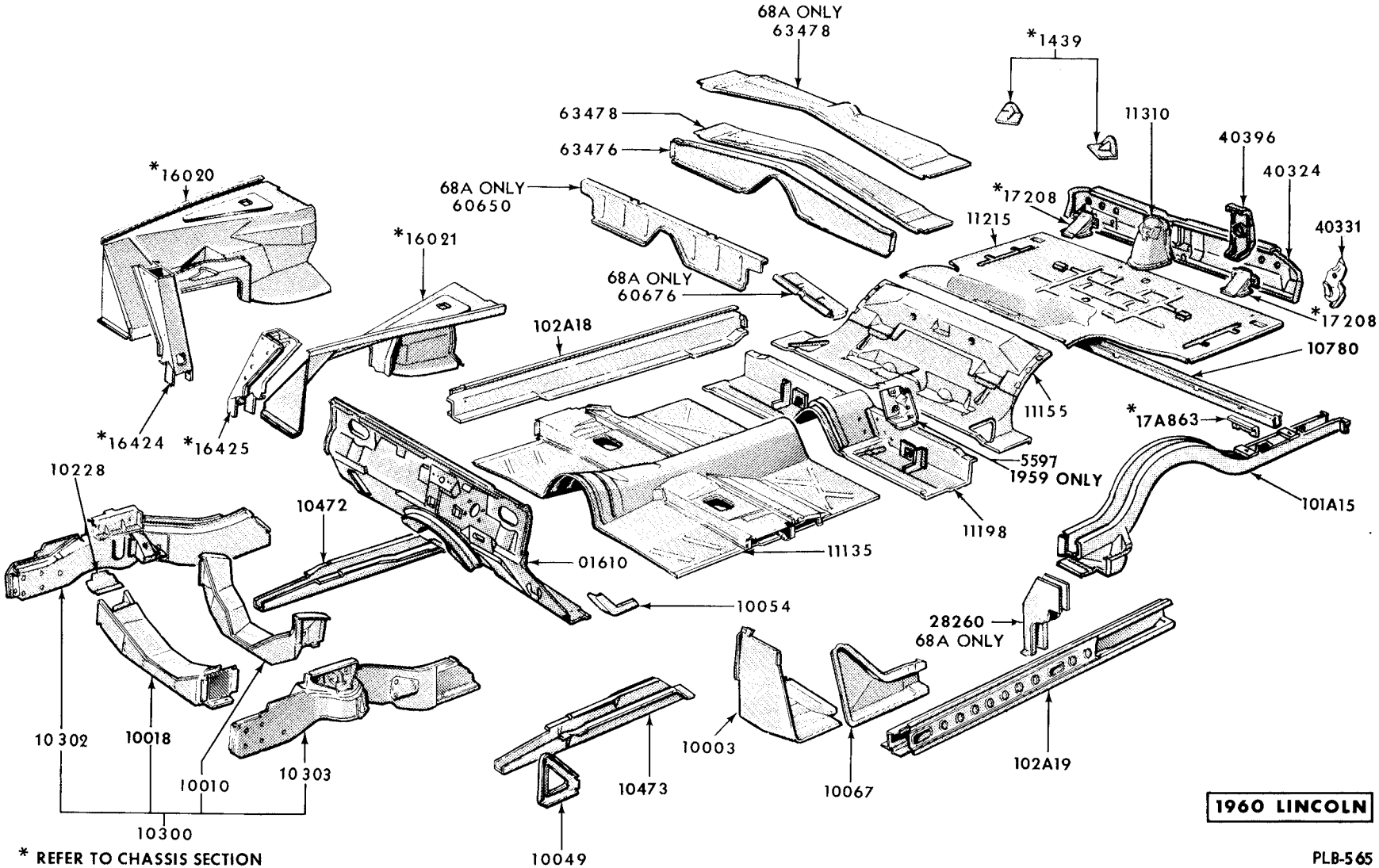

UNDERBODY - ALL MODELS

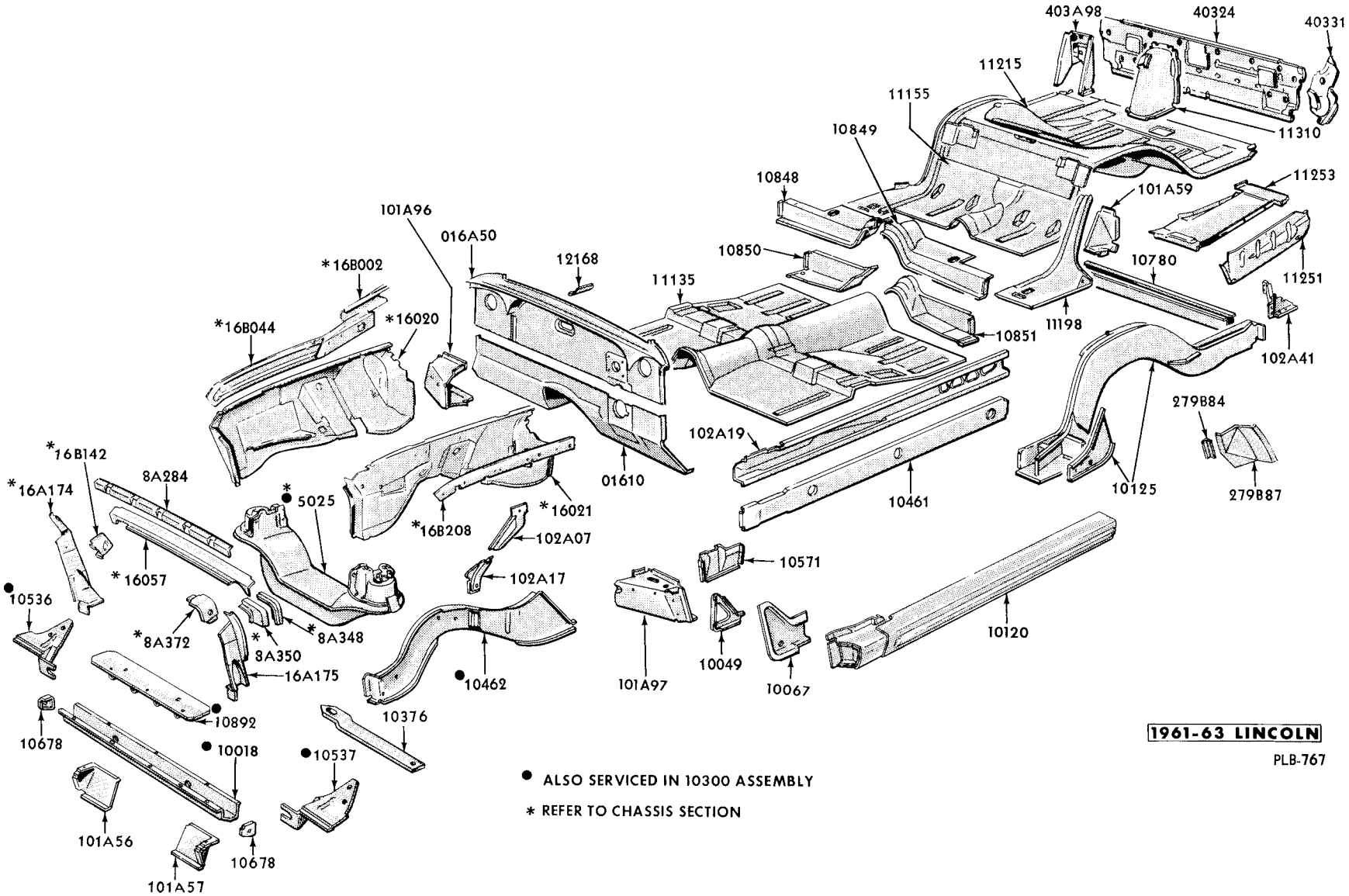

UNDERBODY - ALL MODELS

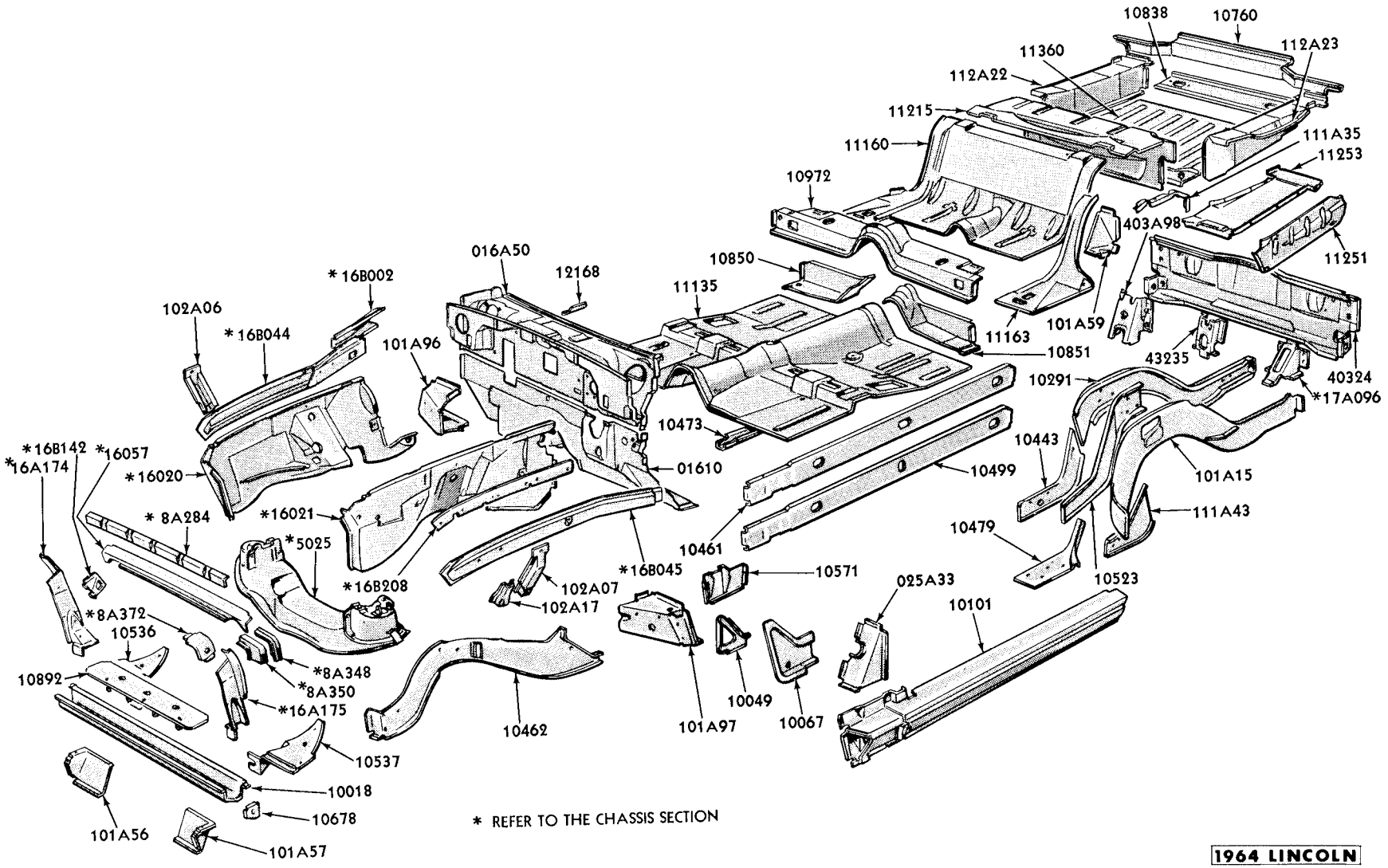

UNDER BODY - ALL MODELS

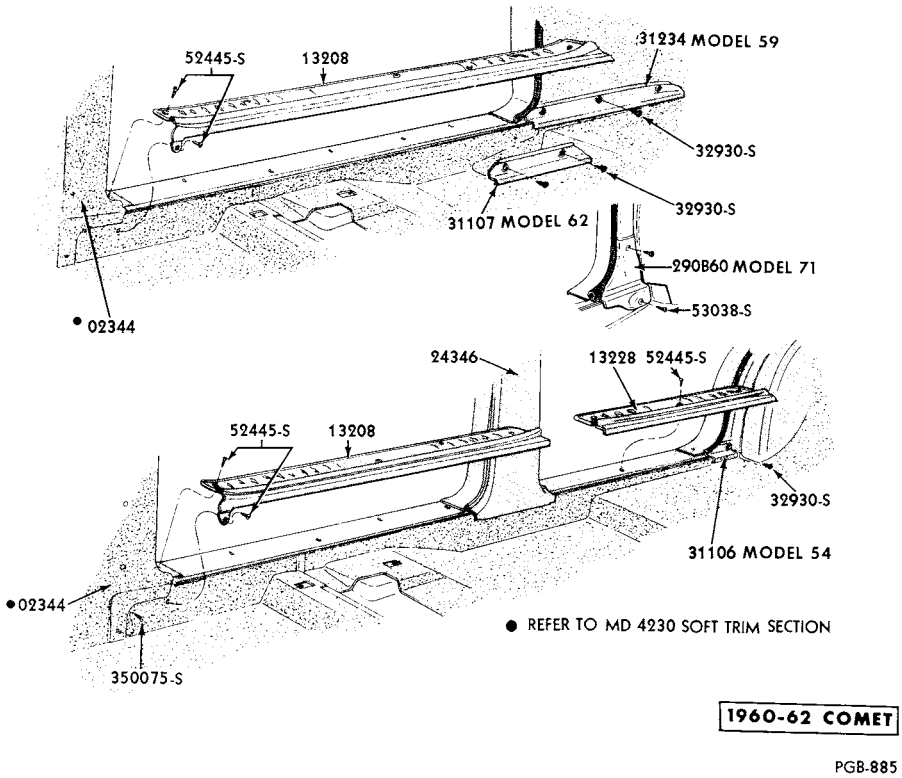

SCUFF PLATES and FILLERS

GROUP AND PART NUMBER	DESCRIPTION, SIZE, ETC.	NO. REQ'D	MODEL OR ENGINE CUBIC INCH DISPLACEMENT	VEHICLE CODE	YEAR 19____
10002-3	REINFORCEMENT (FLOOR SIDE MEMBER TO FRONT SIDE MEMBER)				
B9LB 5710002-A	R.H.	1	All	D	60
B9LB 5710003-A	L.H.	1	All	D	60
10008-9	MEMBER (FRONT SIDE) INNER				
C2YY 6210008-A	R.H.	1	All	B	62/63
C2YY 6210009-A	L.H.	1	All	B	62/63
10010	MEMBER (FRONT SUSPENSION) NO. 2 CROSS				
BAK 5710010-B		1	All	D	60
10014	REFER TO GROUP 10018				
10018	MEMBER (FRONT SUSPENSION) NO. 1 CROSS				
C3DZ 6210018-A		1	All	C	60/64
BAK 5710014-B		1	All	D	60
C1VY 5310018-A		1	All	D	61/64
10034	PLUG (FLOOR PAN SEAT BELT)				
C2AZ 6210034-A	Rubber	4	All	A B C D	62/64
10042-3	REINFORCEMENT (FLOOR SIDE MEMBER TO FRONT SIDE MEMBER)				
C4VY 5310042-A	R.H.	1	All	D	61/64
C4VY 5310043-A	L.H.	1	All	D	61/64
10048-9	GUSSET (FLOOR SIDE MEMBER TO FRONT SIDE MEMBER REINFORCEMENT)				
BAK 5710048-A	R.H.	1	All	D	60
BAK 5710049-A	L.H.	1	All	D	60
C1VB 5710048-A	R.H.	1	All	D	61/64
C1VB 5710049-A	L.H.	1	All	D	61/64
10054	BRACKET (FLOOR SIDE MEMBER INNER FRONT EXTENSION TO DASH)				
BAK 5710054-A		2	All	D	60
10062-3	EXTENSION (FRONT SIDE MEMBER)				
CODB 5910472-A	Use on vehicles built prior to 5-1-61	2	All	C	60/61
CODZ 6410062-C	Use on vehicles built after 4-28-61	2	All	C	61/62
	Use with 6 cylinder engine	2	All except 63, 76	C	63/64
C3DZ 6210062-A	R.H.	1	All	C	63
	R.H. - use with 8 cylinder engine	1	All	C	64
	R.H. - 6 cylinder engine	1	63, 76	C	64
C3DZ 7610063-A	L.H. - use without P/S on vehicles built prior to 1-7-63	1	63, 76	C	63
C3DZ 6210063-A	L.H. - use with 8 cylinder engine - use on vehicles built after 1-6-63	1	All	C	63/64
	L.H. - 6 cylinder engine	1	63,76	C	64
COLB 6310472-B	R.H.	1	All	D	60
COLB 6310473-B	L.H.	1	All	D	60
C4VY 5310472-A	R.H. - rear	1	All	D	64
C4VY 5310473-A	L.H. - rear	1	All	D	64
10066-7	EXTENSION (FLOOR SIDE INNER MEMBER) FRONT				
C2OB 6210066-A	R.H.	1	All	B	62/63
C2OB 6210067-A	L.H.	1	All	B	62/63
B9LB 5710066-A	R.H.	1	All	D	60
B9LB 5710067-A	L.H.	1	All	D	60
C1VB 5710066-A	R.H.	1	53	D	61/64
C1VB 5710067-A	L.H.	1	53	D	61/64
C1VB 7410066-A	R.H.	1	74	D	61/64
C1VB 7410067-A	L.H.	1	74	D	61/64

GROUP AND PART NUMBER	DESCRIPTION, SIZE, ETC.	NO. REQ'D	MODEL OR ENGINE CUBIC INCH DISPLACEMENT	VEHICLE CODE	YEAR 19____
10074-5	EXTENSION (FRONT SIDE OUTER MEMBER) FRONT				
COLB 6310074-A	R.H.	1	All	D	60
COLB 6310075-A	L.H.	1	All	D	60
10100-1	REFER TO GROUP 10120-1				
101A04-5	MOULDING (BODY ROCKER PANEL) REAR				
C1MY 62101A04-C	R.H. - 3-13/64" long (Δ)	1	54A, 62A, 65A, 71A, D, 75A	A	61/62
C1MY 62101A05-C	L.H. - 3-13/64" long (Δ)	1	54A, 62A, 65A, 71A, D, 75A	A	61/62
C2AZ 62101A04-A	R.H. - 3-13/64" long (Δ)	1	54B, 65B, C, 75B, 76A, B	A	61/62
C2AZ 62101A05-A	L.H. - 3-13/64" long (Δ)	1	54B, 65B, C, 75B, 76A, B	A	61/62
Δ Package also includes -					
(1) 356499-S	flat washer - (asphaltic sealer)	(1) 359606-S8	nut	(1) 376378-S101	screw
10108-9	EXTENSION (BODY ROCKER PANEL) FRONT				
CODB 6410108-A	R.H. - use with 6 cylinder engine only	1	All except 63, 76	C	60/63
CODB 6410109-A	L.H. - use with 6 cylinder engine only	1	All except 63, 76	C	60/63
C3DZ 7610108-B	R.H. - use with 8 cylinder engine	1	All	C	63
	R.H. - use with 6 cylinder engine	1	63, 76	C	63
C3DZ 7610109-B	L.H. - use with 8 cylinder engine	1	All	C	63
	L.H. - use with 6 cylinder engine	1	63, 76	C	63
C4DZ 6210108-A	R.H. - use with 6 cylinder engine only	1	All except 63, 76	C	64
C4DZ 6210109-A	L.H. - use with 6 cylinder engine only	1	All except 63, 76	C	64
C4DZ 6210108-B	R.H. - use with 8 cylinder engine	1	All	C	64
	R.H. - use with 6 cylinder engine	1	63, 76	C	64
C4DZ 6210109-B	L.H. - use with 8 cylinder engine	1	All	C	64
	L.H. - use with 6 cylinder engine	1	63, 76	C	64
101A08-11	COVER (FLOOR OUTER SIDE MEMBER WIRE HARNESS)				
C1VB 57101A08-A	R.H. - front	1	All	D	61
C1VB 57101A09-A	L.H. - front	1	All	D	61
C1VB 57101A10-A	R.H. - rear	1	All	D	61
C1VB 57101A11-A	L.H. - rear	1	All	D	61
10110-1	REFER TO GROUP 102A18-9				
101A14-5	REFER TO GROUP 10124-5				
10116-7	MEMBER (FLOOR SIDE) INNER				
C5OZ 6510116-A	R.H.	1	All	B	62/63
C5OZ 6510117-A	L.H.	1	All	B	62/63
C3DZ 6210116-A	R.H.	1	All	C	63/64
C3DZ 6210117-A	L.H.	1	All	C	63/64
10120-1	MEMBER (FLOOR SIDE) OUTER				
C3OZ 5410120-A	R.H. - when using on models 62 and 65 - (2) 1/2" x 2" elongated drain holes must be added	1	All	B	62/63
C3OZ 5410121-A	L.H. - when using on models 62 and 65 - (2) 1/2" x 2" elongated drain holes must be added	1	All	B	62/63
CODZ 6210120-A	R.H.	1	All except 76	C	60/63
CODZ 6210121-A	L.H.	1	All except 76	C	60/63
BAK 5710120-A	R.H.	1	All except 68	D	60
BAK 5710121-A	L.H.	1	All except 68	D	60
BAK 6810100-A	R.H.	1	68	D	60
BAK 6810101-A	L.H.	1	68	D	60

CONTINUED ON NEXT PAGE

GROUP AND PART NUMBER	DESCRIPTION, SIZE, ETC.	NO. REQ'D	MODEL OR ENGINE CUBIC INCH DISPLACEMENT	VEHICLE CODE	YEAR 19____
10120-1	MEMBER (FLOOR SIDE) OUTER (CONTINUED)				
C1VY 5710100-D	R.H. - includes rocker panel	1	53	D	61/63
C1VY 5710101-D	L.H. - includes rocker panel	1	53	D	61/63
C1VY 7410100-E	R.H. - includes rocker panel	1	74	D	61/63
C1VY 7410101-E	L.H. - includes rocker panel	1	74	D	61/63
C4VY 5310100-A	R.H.	1	53	D	64
C4VY 5310101-A	L.H.	1	53	D	64
C4VY 7410100-A	R.H.	1	74	D	64
C4VY 7410101-A	L.H.	1	74	D	64
101A22	EXTENSION (FRONT SIDE MEMBER) FRONT				
CODB 59101A22-A	Use on vehicles built prior to 5-1-61	2	All	C	60/61
10124-5	MEMBER (FLOOR SIDE) REAR				
C2YY 6210124-A	R.H.	1	All except 71	B	62/63
C2YY 6210125-A	L.H.	1	All except 71	B	62/63
C3OZ 7110124-A	R.H.	1	71	B	63
C3OZ 7110125-A	L.H.	1	71	B	63
C3DZ 5910124-A	R.H.	1	59, 71	C	60/63
C1DZ 5910125-A	L.H. - use on vehicles built prior to 1-7-63	1	59, 71	C	60/63
C3DZ 5910125-A	L.H. - use on vehicles built after 1-6-63	1	59, 71	C	63
C1GY 6210124-D	R.H.	1	54, 62, 63	C	60/63
C1GY 6210125-C	L.H.	1	54, 62, 63	C	60/63
C3GY 7610124-A	R.H.	1	76	C	63
C3GY 7610125-A	L.H.	1	76	C	63
C4DZ 5910124-A	R.H.	1	71	C	64
C4DZ 5910125-A	L.H.	1	71	C	64
C4GY 6210124-A	R.H.	1	54,62,63	C	64
C4GY 6210125-A	L.H.	1	54,62,63	C	64
C4GY 7610124-A	R.H.	1	76	C	64
C4GY 7610125-A	L.H.	1	76	C	64
COLB 6310124-B	R.H.	1	All	D	60
COLB 6310125-B	L.H.	1	All	D	60
C1VB 57101A14-B	R.H.	1	All	D	61/63
C1VB 57101A15-A	L.H.	1	All	D	61/63
C4VY 53101A14-A	R.H. - outer rear	1	All	D	64
C4VY 53101A15-A	L.H. - outer rear	1	All	D	64
10128-31	PANEL (BODY ROCKER)				
COMB 5810128-D	R.H.	1	57, 58, 77	A	60
COMB 5810129-D	L.H.	1	57,58,77	A	60
B9MB 5710130-A	R.H. - repair	1	57, 58, 77	A	60
B9MB 5710131-A	L.H. - repair	1	57, 58, 77	A	60
B9MB 6410130-A	R.H. - repair	1	63, 64, 76	A	60
B9MB 6410131-A	L.H. - repair	1	63, 64, 76	A	60
B9MB 6410130-B	R.H. - extended - repair	1	63, 64, 76	A	60
B9MB 6410131-B	L.H. - extended - repair	1	63, 64, 76	A	60
COMB 6410130-A	R.H.	1	63, 64, 76	A	60
COMB 6410131-A	L.H.	1	63, 64, 76	A	60
C3AZ 6210128-A	R.H.	1	62,63,64,65,76	A	61/63
C3AZ 6210129-A	L.H.	1	62,63,64,65,76	A	61/63
C3AZ 7510128-B	R.H.	1	54,58,71,75	A	61/63
C3AZ 7510129-A	L.H. - use on vehicles built prior to 2-11-63	1	54,58,71,75	A	61/63
C3AZ 7510129-B	L.H. - use on vehicles built after 2-10-63	1	54, 71, 75	A	63
C4AZ 5710128-A	R.H.	1	54, 57, 71, 75	A	64
C4AZ 5710129-A	L.H.	1	54, 57, 71, 75	A	64
C4AZ 6210128-A	R.H.	1	62, 63, 65, 76	A	64
C4AZ 6210129-A	L.H.	1	62, 63, 65, 76	A	64

CONTINUED ON NEXT PAGE

GROUP AND PART NUMBER	DESCRIPTION, SIZE, ETC.	NO. REQ'D	MODEL OR ENGINE CUBIC INCH DISPLACEMENT	VEHICLE CODE	YEAR 19____
10128-31	PANEL (BODY ROCKER) CONTINUED				
C1KB 5410130-A	R.H.☆	1	54, 62, 63	C	60/63
C1KB 5410131-A	L.H.☆	1	54, 62, 63	C	60/63
CODB 5810130-A	R.H.☆	1	59, 71	C	60/63
CODB 5810131-A	L.H.☆	1	59, 71	C	60/63
	☆Refer to group 10108-9 for rocker panel extension front				
C3GY 7610128-A	R.H. - member - floor side outer - use on vehicles built prior to 2-1-63	1	76	C	63
C3GY 7610129-A	L.H. - member - floor side outer - use on vehicles built prior to 2-1-63	1	76	C	63
C3GY 7610128-B	R.H. - use on vehicles built after 1-31-63	1	76	C	63
C3GY 7610129-B	L.H. - use on vehicles built after 1-31-63	1	76	C	63
C4DZ 6210128-A	R.H. - member floor side outer	1	71	C	64
C4DZ 6210129-A	L.H. - member floor side outer	1	71	C	64
C4GY 7610128-A	R.H. - member floor side outer	1	All except 71	C	64
C4GY 7610129-A	L.H. - member floor side outer	1	All except 71	C	64
COLB 5710130-A	R.H.	1	53, 54, 57, 75	D	60
COLB 5710131-A	L.H.	1	53, 54, 57, 75	D	60
BAK 6310130-A	R.H.	1	63, 65, 68	D	60
BAK 6310131-A	L.H.	1	63, 65, 68	D	60
10132	REINFORCEMENT (FLOOR SIDE OUTER MEMBER)				
C3DZ 6310132-A		2	63	C	63
C4DZ 6310132-A		2	63	C	64
10146	KIT (BODY ROCKER PANEL MOULDING)				
C4GY 6210146-A		1	All except 63E, 71	C	64
Consists of the following -					
(2) C4GB-6210176-B moulding	(2) 357903-S	screw-	(4) 377924-S	screw-	
(12) C2YB-6210182-B retainer		No. 8-15 x 1/2"		No. 8-15 x 3/4"	
(4) C2YB-62102A78-A spacer	(1)	Installation sketch			
10156-7	REINFORCEMENT (FLOOR SIDE MEMBER TO FRONT SIDE MEMBER) REAR				
C2OZ 6210156-A	R.H.	1	All	B	62/63
C2OZ 6210157-A	L.H.	1	All	B	62/63
101A56-7	REINFORCEMENT (FRONT SIDE MEMBER GUSSET TO FRONT SUSP. NO. 1 CROSSMEMBER) LOWER				
C1VY 57101A56-A	R.H.	1	All	D	61/64
C1VY 57101A57-A	L.H.	1	All	D	61/64
101A58-9	GUSSET (REAR FLOOR SIDE INNER MEMBER TO CENTER FLOOR REAR CROSSMEMBER)				
C1VB 74101A58-A	R.H.	1	All	D	61/63
C1VB 74101A59-A	L.H.	1	All	D	61/63
C4VY 53101A58-A	R.H.	1	All	D	64
C4VY 53101A59-A	L.H.	1	All	D	64
10170-1	FILLER (FLOOR SIDE OUTER MEMBER FRONT) END				
C2OB 6210170-A	R.H.	1	All	B	62/63
C2OB 6210171-A	L.H.	1	All	B	62/63

GROUP AND PART NUMBER	DESCRIPTION, SIZE, ETC.	NO. REQ'D	MODEL OR ENGINE CUBIC INCH DISPLACEMENT	VEHICLE CODE	YEAR 19__
10176-7	MOULDING (BODY ROCKER PANEL CURB BUFFER)				
COMB 5810176-A	R.H. - 84-5/64" long (a)	1	All	A	60
COMB 5810177-A	L.H. - 84-5/64" long (a)	1	All	A	60
C1MB 5410176-A	R.H. (Δ)	1	All except 71B, D	A	61/62
C1MB 5410177-A	L.H. (Δ)	1	All except 71B, D	A	61/62
Δ Package also includes - (6) C2AZ-5410182-A retainer (1) 376378-S101 screw					
C2YY 6210176-A	R.H. (§)(b)	1	54B, 62B, C	B	62
C2YY 6210177-A	L.H. (§)(b)	1	54B, 62B, C	B	62
§ Package also includes - (6) C2YY-6210182-A retainer (2) 376366-S100 screw					
C3YY 6210176-A	R.H. (†)	1	54B, 62B, 65B, 71A, E	B	63
C3YY 6210177-A	L.H. (†)	1	54B, 62B, 65B, 71A, E	B	63
† Package also includes - (7) C2YY-6210182-A retainer					
C4GY 6210176-A	(§§)	2	All except 63E, 71	C	64
§§ Package also includes - (6) C2YY-6210182-A retainer (1) 357903-S101 screw No. 8-15 x 1/2" (2) 377924-S101 screw-No. 8-15 x 3/4" (2) C2YB-62102A78-A spacer					
C4GY 6310176-A	R.H. (††)	1	63E	C	64
C4GY 6310177-A	L.H. (††)	1	63E	C	64
†† Package also includes - (9) C2GY-16A076-A retainer (1) 376387-S101 screw-No. 8-18 x 3/8"					
C4GY 7110176-B	R.H. (ΔΔ)	1	71	C	64
C4GY 7110177-B	L.H. (ΔΔ)	1	71	C	64
ΔΔ Package also includes - (6) C2YY-6210182-B retainer (1) 357903-S101 screw-No. 8-15 x 1/2" (1) sketch (2) C2YB-62102A78-A spacer (2) 377924-S101 screw No. 8-15 x 3/4"					
PB9L 5310176-A	R.H. (c)	1	All	D	60
PB9L 5310177-A	L.H. (c)	1	All	D	60
C1VB 5710176-D	R.H. (‡)	1	All	D	61/63
C1VB 5710177-D	L.H. (‡)	1	All	D	61/63
‡ Package also includes - (3) C1VY-5710198-C retainer (4) 359573-S100 screw (1) 372020-S100 screw (4) C1VB-57102A78-A spacer					
C4VY 5310176-A	R.H. (‡‡)	1	All	D	64
C4VY 5310177-A	L.H. (‡‡)	1	All	D	64
‡‡ Package also includes - (2) C4VB-5310182-C retainer (4) 376361-S101 screw (2) 376525-S101 screw-No. 10 x 3/8" (4) C4VB-57102A78-A spacer					
B9LB 5710182-A	Retainer	14	c		
COMB 5810182-B	Retainer	14	a		
372556-S	Screw	2	a		
	NS-spacer-3/8" I.D. x 3/4" O.D. x 3/8" thick-improvise from gasket material or rubber	2	b		
10182	RETAINER (BODY ROCKER PANEL CURB BUFFER MOULDING)				
COMB 5810182-B		14	All	A	60
BAE 5810182-A	Use on tailgate moulding	12	71	A	61
C2AZ 5410182-A		12	All except 71B, D	A	61/62
C2YY 6210182-A	Rocker panel	12	54B, 62B, 65, 71A, E	B	62/63
	Front fender	2	54B, 62B, 65, 71A, E	B	63
	Rocker panel	12	All except 63E	C	64
B9LB 5710182-A		14	All	D	60
C1VY 5710198-C		6	All	D	61/63
10196-7	GUSSET (FLOOR SIDE MEMBER TO REAR SIDE MEMBER)				
C2OZ 6210196-A	R.H.	1	All	B	62/63
C2OZ 6210197-A	L.H.	1	All	B	62/63

GROUP AND PART NUMBER	DESCRIPTION, SIZE, ETC.	NO. REQ'D	MODEL OR ENGINE CUBIC INCH DISPLACEMENT	VEHICLE CODE	YEAR 19____
101A96-7	EXTENSION (FLOOR SIDE MEMBER TO FRONT SIDE MEMBER REINFORCEMENT)				
C4VY 53101A96-A	R.H.	1	All	D	61/64
C4VY 53101A97-A	L.H.	1	All	D	61/64
10198	REFER TO GROUP 10182				
101A98	EXTENSION (FRONT FLOOR CROSSMEMBER NO. 2)				
CODB 59101A98-A	Use on vehicles built prior to 5-1-61	2	All	C	60/61
102A06-7	SUPPORT (FRONT SIDE MEMBER TO APRON REINFORCEMENT) UPPER				
C4VY 53102A06-A	R.H.	1	All	D	61/64
C1VB 57102A07-A	L.H.	1	All	D	61/64
10208	GUSSET (FLOOR SIDE OUTER MEMBER)				
BAK 5710208-A		4	53, 54, 57, 75	D	60
102A16-7	SUPPORT (FRONT SIDE MEMBER TO APRON REINFORCEMENT) LOWER				
C1VB 57102A16-A	R.H.	1	All	D	61/64
C1VB 57102A17-A	L.H.	1	All	D	61/64
10218-9	MEMBER (FRONT SIDE) OUTER				
C2YY 6210218-A	R.H.	1	All	B	62/63
C2YY 6210219-A	L.H.	1	All	B	62/63
CODB 6410218-D	R.H. - use on vehicles built prior to 1-7-63	1	All	C	60/63
CODZ 6410219-D	L.H. - use on vehicles built prior to 1-7-63	1	All	C	60/63
C3DZ 6210218-B	R.H. - use on vehicles built after 1-6-63	1	All	C	63/64
C3DZ 6210219-A	L.H. - use on vehicles built after 1-6-63	1	All	C	63/64
102A18-9	MEMBER (FLOOR SIDE)				
BAK 5710110-A	R.H.	1	All	D	60
BAK 5710111-A	L.H.	1	All	D	60
C1VB 57102A18-A	R.H. - inner	1	53	D	61/63
C1VB 57102A19-A	L.H. - inner	1	53	D	61/63
C1VB 74102A18-A	R.H. - inner	1	74	D	61/63
C1VB 74102A19-A	L.H. - inner	1	74	D	61/63
102A20	SHIELD (BRAKE & FUEL LINE)				
C1VB 57102A20-A		1	All	D	61/64
10228-9	REINFORCEMENT (FRONT SUSPENSION NO. 1 CROSSMEMBER) OUTER				
BAK 5710228-A	R.H.	1	All	D	60
BAK 5710229-A	L.H.	1	All	D	60
102A40-1	GUSSET (REAR FLOOR SIDE MEMBER TO REAR FLOOR CROSSMEMBER)				
C1VB 74102A40-B	R.H.	1	74	D	61
C1VB 74102A41-B	L.H.	1	74	D	61
10258-9	EXTENSION (BODY ROCKER PANEL MOULDING)				
COMB 5810258-A	R.H. (a)	1	All except 57F, 63F, 76D	A	60
COMB 5810259-A	L.H. (a)	1	All except 57F, 63F, 76D	A	60
COMB 6310258-A	R.H. (a)	1	57F, 63F, 76D	A	60
COMB 6310259-A	L.H. (a)	1	57F, 63F, 76D	A	60
353911-S100	Nut and washer	1	a		
10262-3	REINFORCEMENT (FLOOR SIDE MEMBER TO FRONT SIDE MEMBER)				
C2OZ 6210262-A	R.H.	1	All	B	62/63
C2OZ 6210263-A	L.H.	1	All	B	62/63

GROUP AND PART NUMBER	DESCRIPTION, SIZE, ETC.	NO. REQ'D	MODEL OR ENGINE CUBIC INCH DISPLACEMENT	VEHICLE CODE	YEAR 19____
10267	GROMMET (FLOOR CARPET DIMMER SWITCH)				
B9MY 6410267-A		1	All	A D	63
102A78	SPACER (BODY ROCKER PANEL MOULDING)				
	NS-3/8" I.D. x 3/4" O.D. x 3/8" thick - improvise from gasket material or rubber	4	All	B	62/63
C1VB 57102A78-A	3/8" I.D. x 3/4" O.D. x 15/64" thick	8	All	D	61/63
10280-1	PLATE (FRONT SIDE MEMBER TO FRONT SUSPENSION HOUSING COVER)				
CODB 6410280-A	R.H.	1	All	C	60/63
CODB 6410281-A	L.H.	1	All	C	60/63
10290-1	MEMBER (REAR FLOOR SIDE) INNER				
C4VY 5310290-A	R.H.	1	All	D	64
C4VY 5310291-A	L.H.	1	All	D	64
10300	MEMBER (FRONT SUSPENSION)				
COLB 6310300-B		1	All	D	60
C1VY 5710300-G		1	All	D	61/63
C4VY 5710300-A		1	All	D	64
10302-3	MEMBER (FRONT SUSPENSION SIDE)				
COLB 6310302-B	R.H.	1	All	D	60
COLB 6310303-B	L.H.	1	All	D	60
103A18-9	GUSSET (FLOOR SIDE MEMBER TO WHEELHOUSE) UPPER				
C3DZ 76103A18-A	R.H.	1	76	C	63
C3DZ 76103A19-A	L.H.	1	76	C	63
C4GY 76103A18-A	R.H.	1	76	C	64
C4GY 76103A19-A	L.H.	1	76	C	64
103A20-1	GUSSET (FLOOR SIDE MEMBER TO WHEELHOUSE) INNER				
C3GY 76103A20-A	R.H.	1	76	C	63/64
C3GY 76103A21-A	L.H.	1	76	C	63/64
103A22-3	GUSSET (FLOOR SIDE MEMBER TO WHEELHOUSE) INNER FRONT				
C3DZ 76103A22-A	R.H.	1	76	C	63/64
C3DZ 76103A23-A	L.H.	1	76	C	63/64
103A28-9	EXTENSION (FLOOR SIDE MEMBER TO FRONT SIDE MEMBER) FRONT				
C3DZ 62103A28-A	R.H. - use with 8 cylinder engine	1	All except 76	C	63
C3DZ 62103A29-A	L.H. - use with 8 cylinder engine	1	All except 76	C	63
C3DZ 76103A28-B	R.H. - use with 6 or 8 cylinder engine (a)	1	76	C	63/64
C3DZ 76103A29-B	L.H. - use with 6 or 8 cylinder engine (a)	1	76	C	63/64
C4DZ 62103A28-A	R.H. - use with 8 cylinder engine	1	All except 76	C	64
C4DZ 62103A29-A	L.H. - use with 8 cylinder engine	1	All except 76	C	64
377865-S7	Plug button-steel-3" dia. hole	1	a		
103A32-3	BRACKET (FRONT SIDE MEMBER EXTENSION)				
C3DZ 62103A32-A	Use with 8 cylinder engine	2	All except 76	C	63/64
C3DZ 76103A32-A	R.H.	1	76	C	63/64
C3DZ 76103A33-A	L.H.	1	76	C	63/64
103A54	COVER (FRONT SIDE MEMBER FRONT EXTENSION OPENING)				
C3DZ 62103A54-A		1	63, 76	C	63
		1	All	C	64
103A58	VALVE (BODY ROCKER PANEL DRAIN)				
C4AZ 62103A58-B		AR	All	A	64

GROUP AND PART NUMBER	DESCRIPTION, SIZE, ETC.	NO. REQ'D	MODEL OR ENGINE CUBIC INCH DISPLACEMENT	VEHICLE CODE	YEAR 19____
10376	BRACE (FRONT SUSPENSION TO SIDE MEMBER)				
C2VY 7410376-A		2	74	D	62/64
10418-9	REINFORCEMENT (FLOOR SIDE INNER MEMBER)				
C3DZ 7610418-A	R.H.	1	76	C	63
C3DZ 7610419-A	L.H.	1	76	C	63
C3DZ 7610418-B	R.H.	1	76	C	64
C3DZ 7610419-B	L.H.	1	76	C	64
10432-3	FILLER (FLOOR SIDE INNER MEMBER REINFORCEMENT)				
C3DZ 7610432-A	R.H.	1	76	C	63/64
C3DZ 7610433-A	L.H.	1	76	C	63/64
10442-3	MEMBER (CENTER FLOOR SIDE) INNER				
C4VY 5310442-A	R.H.	1	All	D	64
C4VY 5310443-A	L.H.	1	All	D	64
104A44-5	BRACE (CENTER FLOOR INNER SIDE MEMBER)				
C4VY 74104A44-A	R.H.	1	74	D	64
C4VY 74104A45-A	L.H.	1	74	D	64
104A46-7	REINFORCEMENT (CENTER FLOOR INNER SIDE MEMBER)				
C4VY 74104A46-A	R.H.	1	74	D	64
C4VY 74104A47-A	L.H.	1	74	D	64
10460-1	REINFORCEMENT (FLOOR SIDE MEMBER) INNER				
C1VB 7410460-A	R.H.	1	74	D	61/63
C1VB 7410461-A	L.H.	1	74	D	61/63
C4VY 7410460-A	R.H.	1	74	D	64
C4VY 7410461-A	L.H.	1	74	D	64
10462-3	MEMBER (FRONT SIDE)				
C2OZ 6210462-A	R.H.	1	All	B	62/63
C2OZ 6210463-A	L.H.	1	All	B	62/63
C4DZ 6210462-A	R.H.	1	All	C	64
C4DZ 6210463-A	L.H.	1	All	C	64
C1VY 5710462-G	R.H.	1	All	D	61/64
C1VY 5710463-G	L.H.	1	All	D	61/63
C4VY 5710463-A	L.H.	1	All	D	64
10472-3	REFER TO GROUP 10062-3				
10478-9	EXTENSION (FLOOR SIDE INNER MEMBER TO LOWER MEMBER)				
C4VY 7410478-A	R.H.	1	All	D	64
C4VY 5310479-A	L.H.	1	53	D	64
C4VY 7410479-A	L.H.	1	74	D	64
10498-9	REINFORCEMENT (FLOOR SIDE MEMBER)				
C1VB 5710498-A	R.H.	1	53	D	61/63
C1VB 5710499-A	L.H.	1	53	D	61/63
C4VY 5310498-A	R.H.	1	53	D	64
C4VY 5310499-A	L.H.	1	53	D	64
10522-3	REINFORCEMENT (FLOOR SIDE REAR INNER MEMBER)				
C4VY 5310522-A	R.H.	1	All	D	64
C4VY 5310523-A	L.H.	1	All	D	64

GROUP AND PART NUMBER	DESCRIPTION, SIZE, ETC.	NO. REQ'D	MODEL OR ENGINE CUBIC INCH DISPLACEMENT	VEHICLE CODE	YEAR 19.____
10536-7	GUSSET (FRONT SIDE INNER MEMBER TO FRONT SUSPENSION) NO. 1 CROSSMEMBER				
BAK 5710536-A	R.H.	1	All	D	60
BAK 5710537-A	L.H.	1	All	D	60
C1VB 5710536-B	R.H.	1	All	D	61/64
C1VB 5710537-B	L.H.	1	All	D	61/64
10546-7	REINFORCEMENT (FRONT SUSPENSION NO. 2 CROSSMEMBER) UPPER OUTER				
BAK 5710546-A	R.H.	1	All	D	60
BAK 5710547-A	L.H.	1	All	D	60
10556-7	EXTENSION (FRONT SIDE INNER MEMBER)				
C2OB 6210556-A	R.H.	1	All	B	62/63
C2OB 6210557-A	L.H.	1	All	B	62/63
10570-1	GUSSET (FLOOR SIDE UPPER TO FLOOR SIDE LOWER MEMBER) FRONT				
C4VY 5310570-A	R.H.	1	53	D	61/64
C4VY 5310571-A	L.H.	1	53	D	61/64
C4VY 7410570-A	R.H.	1	74	D	61/64
C4VY 7410571-A	L.H.	1	74	D	61/64
10644-5	EXTENSION (FRONT SIDE OUTER MEMBER)				
BAK 5710644-A	R.H.	1	All	D	60
BAK 5710645-A	L.H.	1	All	D	60
10672	MEMBER (FRONT FLOOR CROSS) UPPER				
C3DZ 7610672-A		1	76	C	63/64
10678-9	FILLER (FRONT SUSPENSION NO. 1 CROSSMEMBER) END				
C1VB 5710678-C	R.H.	1	All	D	61/63
C1VY 5710679-A	L.H.	1	All	D	61/63
C4VY 5310678-A	R.H.	1	All	D	64
C4VY 5310679-A	L.H.	1	All	D	64
10692-3	MEMBER (FRONT FLOOR CROSS NO. 1)				
C2OZ 6210692-A	R.H.	1	All	B	62/63
C2OZ 6210693-A	L.H.	1	All	B	62/63
CODZ 6410692-B		1	All	C	61/63
CODZ 6410692-C		1	All	C	64
10718	REINFORCEMENT (FLOOR PAN AT MAIN PIVOT BRACKET)				
BAK 6810718-A		2	68	D	60
10728	MEMBER (FRONT FLOOR CROSS NO. 2)				
CODB 6410728-B	Necessary to cut 10-3/4" off of tapered end - when used on vehicles built prior to 5-1-61	2	All	C	60/62
C3DZ 6210728-A		2	All except 76	C	63/64
10734-5	MEMBER (FLOOR CROSS NO. 3) UPPER				
C3DZ 7610734-A	R.H.	1	76	C	63/64
C3DZ 7610735-A	L.H.	1	76	C	63/64
10742	PLATE (REAR FLOOR FUEL TANK VENT UPPER TUBE SEAL) RETAINING				
BAK 5710742-A		1	All	D	60
10746	REFER TO GROUP 10780				
10760	REINFORCEMENT (REAR FLOOR REAR CROSSMEMBER)				
C3DZ 7610760-A		1	76	C	63/64
C4VY 5310760-A		1	All	D	64

GROUP AND PART NUMBER	DESCRIPTION, SIZE, ETC.	NO. REQ'D	MODEL OR ENGINE CUBIC INCH DISPLACEMENT	VEHICLE CODE	YEAR 19____
10776	GUSSET (REAR FLOOR REAR CROSSMEMBER)				
C3GY 7610776-A		2	76	C	63/64
10780	MEMBER (REAR FLOOR CROSS) REAR				
C2YY 6210746-A		1	All except 71	B	62/63
CODB 5910780-B		1	59, 71	C	60/63
C3GY 7610780-A		1	54, 62, 76	C	60/63
C4DZ 5910780-A		1	71	C	64
C4GY 7610780-A		1	54, 62, 63, 76	C	64
BAK 5710746-B		1	All	D	60
C1VY 7410746-A		1	All	D	61/63
10784-5	EXTENSION (REAR SIDE MEMBER TO FLOOR SIDE MEMBER)				
C1KB 6210784-A	R.H.	1	54, 62, 63	C	60/64
C1KB 6210785-A	L.H.	1	54, 62, 63	C	60/64
CODB 6410784-B	R.H.	1	59, 71	C	60/64
CODB 6410785-B	L.H.	1	59, 71	C	60/64
10786	MEMBER (REAR FLOOR CROSS) FRONT				
C4DZ 5910786-A		1	59, 71	C	60/64
10796-7	EXTENSION (REAR FLOOR CROSS SILL TO INNER QUARTER PANEL)				
COMB 5610796-A	R.H.	1	77	A	60
COMB 5610797-A	L.H.	1	77	A	60
C1AB 5910796-A	R.H.	1	71	A	61/64
C1AB 5910797-A	L.H.	1	71	A	61/64
C3DZ 5910796-A	R.H.	1	59, 71	C	60/63
CODB 5910797-B	L.H.	1	59, 71	C	60/63
C4DZ 5910796-A	R.H.	1	71	C	64
C4DZ 5910797-A	L.H.	1	71	C	64
10802	FILLER (REAR FLOOR CROSS SILL TO INNER QUARTER PANEL EXTENSION)				
COMB 5610802-A		1	77	A	60
10812-3	MEMBER (FRONT FLOOR CROSS) LOWER				
C3DZ 7610812-A	R.H. (a)	1	76	C	63/64
C3DZ 7610813-A	L.H. (a, b)	1	76	C	63/64
377901-S	Plug-button-rubber-for 1-1/2" dia. hole	2	a		
377865-S7-8	Plug-button-steel-for 3" dia. hole	1	b		
10823	PANEL (REAR FLOOR CROSSMEMBER)				
B9MB 5610823-A		1	77	A	60
10838	EXTENSION (REAR FLOOR REAR SILL PANEL)				
C4VY 5310838-A		1	All	D	64
10848-9	MEMBER (CENTER FLOOR CROSS) UPPER				
C1VY 5710848-A	R.H.	1	All	D	61/63
C1VY 5710849-A	L.H.	1	All	D	61/63
10850-1	MEMBER (CENTER FLOOR FRONT CROSS) LOWER				
C1VB 5710850-A	R.H.	1	All	D	61/64
C1VB 5710851-A	L.H.	1	All	D	61/64
10852	MEMBER (FRONT CROSS)				
C3OZ 6210852-A		1	All	B	62/63

GROUP AND PART NUMBER	DESCRIPTION, SIZE, ETC.	NO. REQ'D	MODEL OR ENGINE CUBIC INCH DISPLACEMENT	VEHICLE CODE	YEAR 19____
10892	REINFORCEMENT (FRONT SUSPENSION NO. 1 CROSSMEMBER)				
C4VY 5310892-A		1	All	D	61/64
10904	SPACER (REAR FLOOR REAR CROSSMEMBER)				
C4VY 5310904-A		2	All	D	64
10918	SHIM (REAR BUMPER BRACKET TO REAR CROSSMEMBER)				
C1VB 5710918-A		AR	All	D	61/63
10962	PLATE (FRONT FLOOR LOWER CROSSMEMBER)				
C3DZ 7610962-A	Use on vehicles built prior to 2-25-63	1	76	C	63
C3DZ 7610962-B	Use on vehicles built after 2-24-63	1	76	C	63/64
10968-9	GUSSET (FRONT FLOOR UPPER CROSSMEMBER)				
C3DZ 7610968-A	R.H.	1	76	C	63/64
C3DZ 7610969-A	L.H.	1	76	C	63/64
10972	MEMBER (CENTER FLOOR FRONT CROSS) UPPER				
C4VY 5310972-A		1	All	D	64
109A76-7	GUSSET (FRONT FLOOR LOWER CROSSMEMBER)				
C3DZ 76109A76-A	R.H.	1	76	C	63/64
C3DZ 76109A77-A	L.H.	1	76	C	63/64
11002-3	DAMPER (FRONT & REAR VIBRATION)				
C2VY 7411002-A	R.H. - rear	1	74	D	61/63
C2VY 7411003-A	L.H. - rear	1	74	D	61/63
C2VY 7411018-A	Front (b)	2	74	D	61/63
C4VY 7411002-A	R.H. - front - assembly (a)	1	74	D	64
C4VY 7411003-A	L.H. - front - assembly (a)	1	74	D	64
B8AZ 6065-A	Bolt-hex. hd. -1/2-13 x 4.22" long	2	b		
370226-S8	Bolt	AR	a		
11010-1	ARM (REAR VIBRATION DAMPER)				
C2VY 7411010-A	R.H. - painted GREEN	1	74	D	61/63
C2VY 7411011-A	L.H. - painted YELLOW	1	74	D	61/63
11012-3	BRACKET (REAR VIBRATION DAMPER ARM)				
C2VY 7411012-B	R.H. (a)	1	74	D	61/63
C2VY 7411013-B	L.H. (a)	1	74	D	61/63
45740-S8	Bolt-hex. hd. -5/8"-11 x 1-1/2"	AR	a		
11018	REFER TO GROUP 11002-3				
11022-3	ARM (FRONT VIBRATION DAMPER)				
C2VY 7411022-A	R.H.	1	74	D	61/63
C2VY 7411023-A	L.H.	1	74	D	61/63
11024	BRACKET (FRONT VIBRATION DAMPER)				
C2VY 7411024-A		2	74	D	61/63
11034-5	ARM (FRONT VIBRATION DAMPER RESTRAINER)				
C2VY 7411034-A	R.H.	1	74	D	61/63
C2VY 7411035-A	L.H.	1	74	D	61/63
11044	ARM (REAR VIBRATION DAMPER RESTRAINER)				
C2VY 7411044-A		1	74	D	61/63

GROUP AND PART NUMBER	DESCRIPTION, SIZE, ETC.	NO. REQ'D	MODEL OR ENGINE CUBIC INCH DISPLACEMENT	VEHICLE CODE	YEAR 19____
111A00-1	BRACKET (AUXILIARY FLOOR SUPPORT)				
COAB 59111A00-C	R.H. - 6 - passenger only	1	71	A	61/64
COAB 59111A01-C	L.H. - 6 - passenger only	1	71	A	61/64
111A06	PLATE (TAILGATE SPRING ACCESS HOLE COVER)				
CODZ 59111A06-A		2	59, 71	C	60/64
111A08-9	MOULDING (REAR FLOOR PAN SIDE)				
C3OZ 71111A08-A	R.H.	1	71	B	63
C3OZ 71111A09-A	L.H.	1	71	B	63
C1DZ 59111A08-A	R.H. (a)	1	59, 71	C	60/64
CODB 59111A09-B	L.H. (a, b)	1	59, 71	C	60/64
52720-S8	Screw-pan hd.cr.rec.tap.-No.8-15 x 3/8"	2	a		
52727-S8	Screw-pan hd.cr.rec.tap.-No.10-12 x 1/2"	5	b		
111B08	REINFORCEMENT (FRONT FLOOR PAN CROSS)				
C2OZ 62111B08-A		1	All	B	62/63
111B10-1	REINFORCEMENT (FRONT FLOOR PAN TO SIDE MEMBER)				
C1MB 62111B10-B	R.H.	1	All except 58, 64	A	61/62
C1MB 62111B11-B	L.H.	1	All except 58, 64	A	61/62
C3MY 62111B10-A	R.H.	1	All	A	63
C3MY 62111B11-A	L.H.	1	All	A	63
111B14-5	BRACKET (RELAY SWITCH TO FLOOR PAN MOUNTING SIDE)				
C1VB 57111B14-A	R.H.	1	All	D	61/63
		1	74	D	64
C1VB 57111B15-A	L.H.	1	All	D	61/63
		1	74	D	64
111A32	SEAL (CENTER FLOOR ACCESS HOLE COVER PLATE)				
COLB 68111A32-A	Rubber	2	68	D	60
111A34-5	SUPPORT (REAR FLOOR PAN TO REAR SIDE MEMBER)				
C3OZ 71111A34-A	R.H.	1	71	B	63
C3OZ 71111A35-A	L.H.	1	71	B	63
C4VY 53111A34-A	R.H.	1	All	D	64
C4VY 53111A35-A	L.H.	1	All	D	64
11135	PAN (FRONT FLOOR)				
COMB 6411135-A		1	All except 76	A	60
COMB 7611135-A		1	76	A	60
C1AB 7611135-A	(a)	1	76	A	61
C2AZ 7511135-A		1	All except 76	A	61/63
C2AZ 7611135-A		1	76	A	62/63
C4AZ 5711135-A		1	All except 76	A	64
C4AZ 7611135-A		1	76	A	64
C2OZ 6211135-A		1	All	B	62
C3OZ 6211135-A		1	All except 71	B	63
C3OZ 7111135-B		1	71	B	63
C2DZ 5911135-A		1	All except 76	C	60/64
C3DZ 7611135-A		1	76	C	63/64
COLB 6311135-B		1	All	D	60
C1VY 5711135-F		1	All	D	61/63
C4VY 5311135-A		1	All	D	64
374732-S	Cover-transmission band adjusting hole	1	a		

GROUP AND PART NUMBER	DESCRIPTION, SIZE, ETC.	NO. REQ'D	MODEL OR ENGINE CUBIC INCH DISPLACEMENT	VEHICLE CODE	YEAR 19____
111A42-3	REINFORCEMENT (CENTER FLOOR EXTENSION INNER MEMBER)				
C1VB 74111A42-A	R.H.	1	74	D	61/64
C1VB 74111A43-A	L.H.	1	74	D	61/64
11144-5	REINFORCEMENT (FRONT FLOOR PAN) REAR				
C3OZ 7111144-A	R.H.	1	71	B	63
C3OZ 7111145-A	L.H.	1	71	B	63
111A44-5	REINFORCEMENT (FRONT FLOOR PAN)				
C3DZ 59111A44-A	R.H. - necessary to cut 4-1/2" off of rear edge for model 71	1	59,63,71	C	60/64
C3DZ 59111A45-A	L.H. - necessary to cut 4-1/2" off of rear edge for model 71	1	59,63,71	C	60/64
C3DZ 76111A44-A	R.H.	1	76	C	63/64
C3DZ 76111A45-A	L.H.	1	76	C	63/64
11155	REFER TO GROUP 11160				
11160	PAN (CENTER FLOOR)				
C2OZ 6211160-A		1	All except 71	B	62/63
C3OZ 7111160-A		1	71	B	63
C1KB 6211160-A		1	54,62	C	60
C1KB 6211160-B		1	54,62	C	61/62
C3GY 7611160-A		1	54,62,63,76	C	63
C4GY 6211160-A		1	54,62,63,76	C	64
B9LB 5711155-A		1	All	D	60
C1VB 5711155-B		1	All	D	61
C1VY 5711155-B		1	All	D	62/64
11162-3	EXTENSION (CENTER FLOOR PAN)				
B9LB 5711198-B		1	All	D	60
C1VY 7411162-A	R.H. - 5/64" thick	1	All	D	61/63
C1VY 7411163-A	L.H. - 5/64" thick	1	All	D	61/63
C4VY 7411162-A	R.H.	1	All	D	64
C4VY 7411163-A	L.H.	1	All	D	64
111A74	PLATE (FRONT FLOOR PAN ACCESS HOLE COVER)				
CODB 59111A74-A	Use on vehicles built prior to 5-1-61	2	All	C	60/61
11190-1	PLATE (CENTER FLOOR WELDING ACCESS HOLE COVER)				
BAK 5711190-A	R.H.	1	All except 68	D	60
BAK 5711191-A	L.H.	1	All except 68	D	60
COLB 6811190-A	R.H.	1	68	D	60
COLB 6811191-A	L.H.	1	68	D	60
11192	REINFORCEMENT (CENTER FLOOR PAN TO SEAT BACK STRAINER)				
C3GY 7611192-A		1	76	C	63/64
11198	REFER TO GROUP 11162-3				

GROUP AND PART NUMBER	DESCRIPTION, SIZE, ETC.	NO. REQ'D	MODEL OR ENGINE CUBIC INCH DISPLACEMENT	VEHICLE CODE	YEAR 19__
11202	SEAL (REAR FLOOR PAN EXTENSION DRAIN)				
C3AZ 6211202-A		2	All	A	63/64
		1	71	B	63
112A08	REINFORCEMENT (CENTER FLOOR AT PINION BUMPER) INNER				
C4VY 53112A08-A		1	All	D	64
11215	PAN (REAR FLOOR)				
PB9M 5611215-A		1	77	A	60
COMB 6411215-A		1	All except 77	A	60
C3AZ 6211215-A		1	All except 71	A	61/63
C2AZ 7111215-A		1	71	A	61/63
C4MY 6211215-A		1	All except 71	A	64
C4AZ 7111215-A		1	71	A	64
C3YY 6211218-A		1	All except 71	B	62/63
C3OZ 7111218-A	Front	1	71	B	63
C3OZ 7111360-A	Rear	1	71	B	63
C3GY 6211218-A	R. H.	1	54, 62, 63, 76	C	60/63
C2GB 6211219-A	L. H.	1	54, 62, 63, 76	C	60/63
C1DZ 5911218-A		1	59, 71	C	60/64
C4GY 6211218-A	R.H.	1	54, 62, 63, 76	C	64
C4GY 6211219-A	L.H.	1	54, 62, 63, 76	C	64
COLB 6311215-B		1	All	D	60
C3VY 5711215-A		1	All	D	61/63
C4VY 5311218-A	Front	1	All	D	64
C4VY 5311360-A	Rear	1	All	D	64
11218-9	REFER TO GROUP 11215				
112A22-3	PAN (REAR FLOOR SIDE)				
C4VY 74112A22-A	R.H.	1	All	D	64
C4VY 74112A23-A	L.H.	1	All	D	64
11228-9	FILLER (REAR FLOOR TO QUARTER PANEL)				
C2YY 6211228-A		2	54, 62	B	62/63
C2GY 6211229-A	Located in luggage compartment on L. H. side only (a)	1	All except 59, 71	C	60/63
C4GY 6211229-A	Located in luggage compartment on L.H. side only	1	54A, B, 62, 63 C, 76	C	64
31498-S8	Screw-hex. washer hd. tap.-No. 14 x 5/8"	3	a		
44720-S8	Washer-flat-1/4"	3	a		
11238-9	REFER TO GROUP 11250-1				
11248	REINFORCEMENT (FLOOR PAN SEAT TRACK)				
C2AZ 7611248-A		2	65C, 76B	A	62/63
C4AZ 6311248-A	Inner - 4-way bucket seats	2	57C, 63C, 65C, 76C	A	64
C2OB 6211248-A		2	All	B	62/63
CODB 6411248-A		2	All except 76	C	60/64
C3DZ 7611248-A		2	76	C	63/64
11250-1	EXTENSION (REAR FLOOR PAN TO QUARTER PANEL)				
COMB 6411239-A		1	All except 77	A	60
COMB 6411250-A	R.H.	1	All except 77	A	60
C1MB 7111250-B	R.H.	1	71	A	61
C1MB 7111251-B	L.H.	1	71	A	61

CONTINUED ON NEXT PAGE

GROUP AND PART NUMBER	DESCRIPTION, SIZE, ETC.	NO. REQ'D	MODEL OR ENGINE CUBIC INCH DISPLACEMENT	VEHICLE CODE	YEAR 19____
11250-1	EXTENSION (REAR FLOOR PAN TO QUARTER PANEL) CONTINUED				
C2MB 6211250-A	R.H.	1	All except 71	A	61/62
C2MB 6211251-A	L.H.	1	All except 71	A	61/62
C2MB 7111250-A	R.H.	1	71	A	62
C2MB 7111251-A	L.H.	1	71	A	62
C1AZ 5911238-A	R.H.	1	71	A	63
C3AZ 7111239-A	L.H.	1	71	A	63
C3MY 6211250-A	R.H.	1	All except 71	A	63
C3MY 6211251-A	L.H.	1	All except 71	A	63
C4MY 6211250-A	R.H.	1	All except 71	A	64
C4MY 6211251-A	L.H.	1	All except 71	A	64
C4AZ 7111238-A	R.H.	1	71	A	64
C4AZ 7111239-A	L.H.	1	71	A	64
C2YY 6211250-A	R.H.	1	All except 71	B	62/63
C2YY 6211251-A	L.H.	1	All except 71	B	62/63
C3OZ 7111239-A		1	71	B	63
BAK 5711250-B	R.H.	1	All	D	60
BAK 5711251-B	L.H.	1	All	D	60
C1VY 5711250-B	R.H.	1	All	D	61/63
C4VY 5311250-A	R.H.	1	All	D	64
C4VY 5311251-A	L.H.	1	All	D	61/64
11252-3	EXTENSION (REAR FLOOR PAN)				
C1MB 6211252-A	Rear	1	All except 71	A	61
C2MY 6211252-A	Rear	1	All except 71	A	62
C3MY 6211252-A	Rear	1	All except 71	A	63
C4MY 6211252-A	Rear	1	All except 71	A	64
C3OZ 7111252-A	R.H. - rear corner	1	71	B	63
C3OZ 7111253-A	L.H. - rear corner	1	71	B	63
C1VY 5711252-A	R.H. - rear side	1	All	D	61/63
C1VY 5711253-A	L.H. - rear side	1	All	D	61/63
C4VY 5311252-A	R.H. - rear side	1	All	D	64
C4VY 5311253-A	L.H. - rear side	1	All	D	64
112A54-5	RETAINER (REAR FLOOR PAN REAR CORNER COVER)				
C3OZ 71112A54-A	R.H. - steel	1	71	B	63
C3OZ 71112A55-A	L.H. - steel	1	71	B	63
112A64-5	PLATE (FRONT FLOOR PAN ACCESS HOLE COVER)				
C4VY 53112A64-A	R.H. - use with bucket seats	1	All	D	64
C4VY 53112A65-A	L.H. - use with bucket seats	1	All	D	64
11290	COVER (FUEL GAUGE ACCESS HOLE)				
C1VB 5711290-A		1	All	D	61/63
11310	HOUSING (FUEL TANK FILLER PIPE)				
COMB 6411310-A		1	All except 77	A	60
C1MB 6211310-A		1	All except 71	A	61
C1MB 7127936-B	In prime	1	71	A	61/62
C2MY 6211310-A	Inner	1	All except 71	A	62
C3MY 6211310-A	Inner	1	All except 71	A	63
C4MY 6211310-A	Inner	1	All except 71	A	64
C2YY 6211310-A	Inner	1	All except 71	B	62/63
BAK 5711310-A	Inner	1	All	D	60
C1VB 5711310-A	Inner	1	All	D	61/62
C3VY 5711310-A	Inner - less striker bracket	1	All	D	63
C4VY 5311310-A	Inner	1	All	D	64
11318	REFER TO GROUP 11323				

GROUP AND PART NUMBER	DESCRIPTION, SIZE, ETC.	NO. REQ'D	MODEL OR ENGINE CUBIC INCH DISPLACEMENT	VEHICLE CODE	YEAR 19__
11323	PANEL (REAR FLOOR REAR SILL)				
PB9M 5611323-A		1	77	A	60
C1AZ 5911323-A		1	71	A	61/63
C4AZ 7111323-A		1	71	A	64
C3OZ 7111323-A		1	71	B	63
C1DZ 6611318-A		1	59, 71	C	60/63
C4DZ 5911323-A		1	71	C	64
11360	REFER TO GROUP 11215				
11368	MEMBER (REAR FLOOR CROSS FUEL TANK FRONT SUPPORT)				
C2YB 6211368-A		1	All	B	62/63
11456	BRACKET (FLOOR PAN TO REAR SEAT BACK STRAINER)				
BY 7611456-A		2	57, 63, 76	A	60
COAB 6311456-A		2	76	A	61/64
C3AZ 6311456-A		2	63	A	63/64
C4AZ 5711456-A		2	57	A	64
C3OZ 6511456-A		2	65	B	63
11480-1	DEFLECTOR (UNDER FRONT FLOOR CARPET) HEAT				
C1VB 5711480-B	Fiberglas - use when a/cond. is installed	1	All	D	61/62
C3VY 5711480-A	R.H. - fiberglas - use when a/cond. is installed	1	All	D	63/64
C3VY 5711481-A	L.H. - fiberglas - use when a/cond. is installed	1	All	D	63/64
11482	DEFLECTOR (UNDER REAR FLOOR CARPET) HEAT				
C3VY 5711482-A	Fiberglas - use when a/cond. is installed	1	All	D	63/64
11500	SUPPORT (AUXILIARY FLOOR SIDE)				
PB9M 5611500-AP	(1) R.H. and (1) L.H. - 7" long	2	77	A	60
11510	SUPPORT (STOWAGE COMPARTMENT LOCK STRIKER)				
C3OZ 7111510-A		1	71	B	63
11520	SPACER (BODY TO FRAME)				
PB9M 5711520-A	Rubber	2	57, 77	A	60
B9BM 6411520-A	Rubber (1) R.H. and (1) L.H. - floor pan to frame at No. 3 and 5 body bolt	2	All	A	60
B7A 7011520-A		AR	All except 76	A	61
11550	CATCH (STOWAGE COMPARTMENT LOCK)				
C3OZ 7111550-A	(a)	1	71	B	63
	Use as stop in front seat - back rest - passenger side	1	62A, 63B, 65B, 76A	A	63
33923-S7	Nut-hex. -5/16"-24	1	a		
11564	PANEL (AUXILIARY FLOOR) LESS COVER				
PB9M 5611564-AP	6 passenger	1	77	A	60
COAB 5911564-AP		1	71	A	61
C2AZ 7111564-A		1	71	A	62/64
11574-5	BUTTON (FLOOR PAN BODY BOLT HOLE) PLUG				
PB9M 5711574-A	R.H.	1	77	A	60
PB9M 5711575-A	L.H.	3	77	A	60
	No. 7 body bolt hole	2	71	A	61/63
	No. 8 body bolt hole	2	71	A	61/63
		2	71	A	64

GROUP AND PART NUMBER	DESCRIPTION, SIZE, ETC.	NO. REQ'D	MODEL OR ENGINE CUBIC INCH DISPLACEMENT	VEHICLE CODE	YEAR 19____
11598	COVER (STOWAGE COMPARTMENT DOOR LOCK)				
C3OZ 7111598-A	(a)	1	71B, E	B	63
34805-S8	Lockwasher-1/4"	1	a		
39844-S8	NS-screw-1/4"-20 x 5/8"	1	a		
11608	PLATE (FRONT FLOOR PAN NAME)				
BAK 5711608-A	"LINCOLN" - located at body pillar	1	53, 57, 63	D	60
BAK 6811608-A	"CONTINENTAL" - located at body pillar	1	54, 65, 68, 75	D	60
11654	ABSORBER (FLOOR PANS) SOUND				
B9MB 6311654-A	Fiberglas - 34-3/8" x 73-1/2" - cut to fit for roof panel, package tray, floor pans, or heat package for a/cond.	AR	All	A	60/61
		AR	All	D	60/62
11663	CYLINDER (STOWAGE COMPARTMENT LOCK)				
B9MB 5611663-C	With keys	1	77	A	60
C3YY 7111663-A	With keys	1	71E	B	63
11676	PLATE (STOWAGE WELL FLOOR PANEL LOCK COVER)				
B9MB 5611676-AP		1	77	A	60
11680	COVER (STOWAGE WELL FLOOR PANEL LOCK KEY HOLE)				
B9MB 5611680-AP		1	77	A	60
11686	PLATE (STOWAGE WELL FLOOR COVER LATCH STRIKER)				
B9MB 5611686-A		1	77	A	60
12000	REINFORCEMENT (REAR FLOOR FRONT RISER)				
C3OZ 7112000-A		2	71	B	63
12004	RISER (REAR FLOOR) FRONT				
C3OZ 7112004-A		1	71	B	63
CODZ 5912004-BP		1	59, 71	C	60/64
12110	PLATE (FLOOR TRANSMISSION) COVER				
C3OZ 6512110-A	Use with four speed transmission	1	All	B	63
12110	REINFORCEMENT (FLOOR PLATE TRANSMISSION COVER)				
C3DZ 6212110-A	Use with four speed transmission	1	All	C	63/64
12118	REINFORCEMENT (FLOOR TRANSMISSION COVER) PLATE				
C3OZ 6512118-B	Use with four speed transmission	1	All	B	63
12120	PLATE (FLOOR TRANSMISSION COVER ADAPTOR)				
C3DZ 6212120-A	Use with four speed transmission	1	All	C	63/64
12129	COVER (TRANSMISSION BAND ADJUSTMENT ACCESS HOLE)				
PB9M 5612129-A	Plastic	1	All	A	60
BAE 6412129-A	Plastic - use only for rear shock access hole cover	2	All	C	60/62
12168	COVER (TRANSMISSION BAND ACCESS HOLE)				
C1VB 5712168-A		1	All	D	61/64
13012	ESCUTCHEON (FLOOR MAT AT STEERING COLUMN)				
COAB 6413012-A	Rubber	1	All	A	62

GROUP AND PART NUMBER	DESCRIPTION, SIZE, ETC.	NO. REQ'D	MODEL OR ENGINE CUBIC INCH DISPLACEMENT	VEHICLE CODE	YEAR 19___
13190	RETAINER (FRONT FLOOR MAT TO SEAT TRACK)				
C2OZ 6213190-A	3-7/8" long	4	All except 65	B C	63
		4	All except 62C	B C	62
		4	54A, B, D, 62A, B, 63D, 71A, B, C, 76D	C	64
C1DB 6413190-A	2-7/8" long	4	All except 62A(S-22)	C	60/61
13192-3	RETAINER (AUXILIARY FLOOR MAT)				
COAB 7113192-AP	R.H.	1	71	A	61/62
		1	71C, D	A	63/64
COAB 7113193-AP	L.H.	1	71	A	61/62
		1	71C, D	A	63/64
13204	SPACER (DOOR SCUFF PLATE)				
BAK 6313204-A	Rubber - 38" long	AR	All	D	60/61
13205	CREST BASE (DOOR SCUFF PLATE)				
COLB 6513205-A		2	65, 68	D	60
	(2) req'd. - for front	4	54, 75	D	60
	(2) req'd. - for rear				
13208-9	PLATE (FRONT DOOR SCUFF)				
PB9M 5613208-A	R.H.	1	63, 64, 76	A	60
PB9M 5613209-A	L.H.	1	63, 64, 76	A	60
PB9M 5713208-A	R.H.	1	57, 58, 77	A	60
PB9M 5713209-A	L.H.	1	57, 58, 77	A	60
C2MY 5413208-A	R.H.	1	54, 58, 71, 75	A	61/62
C2MY 5413209-A	L.H.	1	54, 58, 71, 75	A	61/62
C2MY 6213208-A	R.H.	1	62, 64, 65, 76	A	61/62
C2MY 6213209-A	L.H.	1	62, 64, 65, 76	A	61/62
C3AZ 5413208-A	R.H.	1	54, 57, 71, 75	A	63/64
C3AZ 5413209-A	L.H.	1	54, 57, 71, 75	A	63/64
C3AZ 6213208-A	R.H.	1	62, 63, 65, 76	A	63/64
C3AZ 6213209-A	L.H.	1	62, 63, 65, 76	A	63/64
C2OZ 5413208-A	R.H.	1	54	B	62
C2OZ 5413209-A	L.H.	1	54	B	62
C3OZ 6213208-A	R.H.	1	62, 65	B	62/63
C3OZ 6213209-A	L.H.	1	62, 65	B	62/63
C3OZ 5413208-A	R.H.	1	54, 71	B	63
C3OZ 5413209-A	L.H.	1	54, 71	B	63
CODZ 5813208-C	R.H.	1	54, 71	C	60/62
CODZ 5813209-C	L.H.	1	54, 71	C	60/62
CODZ 6413208-C	R.H.☆	1	59, 62	C	60/62
CODZ 6413209-C	L.H.☆	1	59, 62	C	60/62
C3DZ 5413208-A	R.H.	1	54, 71	C	63/64
C3DZ 5413209-A	L.H.	1	54, 71	C	63/64
C3DZ 6213208-A	R.H.☆	1	59, 62, 63	C	63/64
C3DZ 6213209-A	L.H.☆	1	59, 62, 63	C	63/64
	☆ For scuff plate extension (filler) refer to group 31107 or 31234				
	CONTINUED ON NEXT PAGE				

GROUP AND PART NUMBER	DESCRIPTION, SIZE, ETC.	NO. REQ'D	MODEL OR ENGINE CUBIC INCH DISPLACEMENT	VEHICLE CODE	YEAR 19____
13208-9	PLATE (FRONT DOOR SCUFF) CONTINUED				
C3DZ 7613208-A	R.H.	1	76	C	63/64
C3DZ 7613209-A	L.H.	1	76	C	63/64
BAK 5713208-B	R.H.	1	53, 57	D	60
BAK 5713209-B	L.H.	1	53, 57	D	60
BAK 6313208-B	R.H.	1	63	D	60
BAK 6313209-B	L.H.	1	63	D	60
COLB 6513208-A	R.H.	1	65, 68	D	60
COLB 6513209-A	L.H.	1	65, 68	D	60
COLB 7513208-A	R.H.	1	54, 75	D	60
COLB 7513209-A	L.H.	1	54, 75	D	60
C1VY 5713208-B	With trade mark name plate	2	All	D	61/64
13210-1	STRIP (REAR FLOOR AT WHEELHOUSE SIDE) FINISH				
PB9M 5613210-AP	R.H. - lower	1	77	A	60
PB9M 5613211-AP	L.H. - lower	1	77	A	60
COAB 5913210-AP	R.H.	1	71	A	61/64
COAB 5913211-AP	L.H.	1	71	A	61/64
C3OZ 7113210-A	R.H.	1	71	B	63
C3OZ 7113211-A	L.H.	1	71	B	63
13218	SUPPORT (DOOR SCUFF PLATE)				
C3OZ 6213218-A	Steel - 34-1/4" long - cut to length as required for front and rear door	2or4	All	B	62/63
13228-9	PLATE (REAR DOOR SCUFF)				
PB9M 5713228-A	R.H.	1	57, 58, 77	A	60
PB9M 5713229-A	L.H.	1	57, 58, 77	A	60
C2MY 5413228-A	R.H.	1	54,58,71,75	A	61/62
C2MY 5413229-A	L.H.	1	54,58,71,75	A	61/62
C3AZ 5413228-A	R.H.	1	54, 57, 71, 75	A	63/64
C3AZ 5413229-A	L.H.	1	54, 57, 71, 75	A	63/64
C2OZ 5413228-A	R.H.	1	54	B	62
C2OZ 5413229-A	L.H.	1	54	B	62
C3OZ 5413228-A	R.H.	1	54, 71	B	63
C3OZ 5413229-A	L.H.	1	54, 71	B	63
CODB 5813228-B	R.H. ☆	1	54, 71	C	60/62
CODB 5813229-B	L.H. ☆	1	54, 71	C	60/62
C3DZ 5413228-A	R.H. ☆	1	54, 71	C	63/64
C3DZ 5413229-A	L.H. ☆	1	54, 71	C	63/64
	☆ For scuff plate extension (filler or cap) refer to group 290B60 or group 31106				
BAK 5713228-B	R.H.	1	53,54,57,75	D	60
BAK 5713229-B	L.H.	1	53, 57	D	60
COLB 7513229-A	L.H.	1	54, 75	D	60
C1VY 5713228-A		2	All	D	61/63
C4VY 5313228-A		2	All	D	64

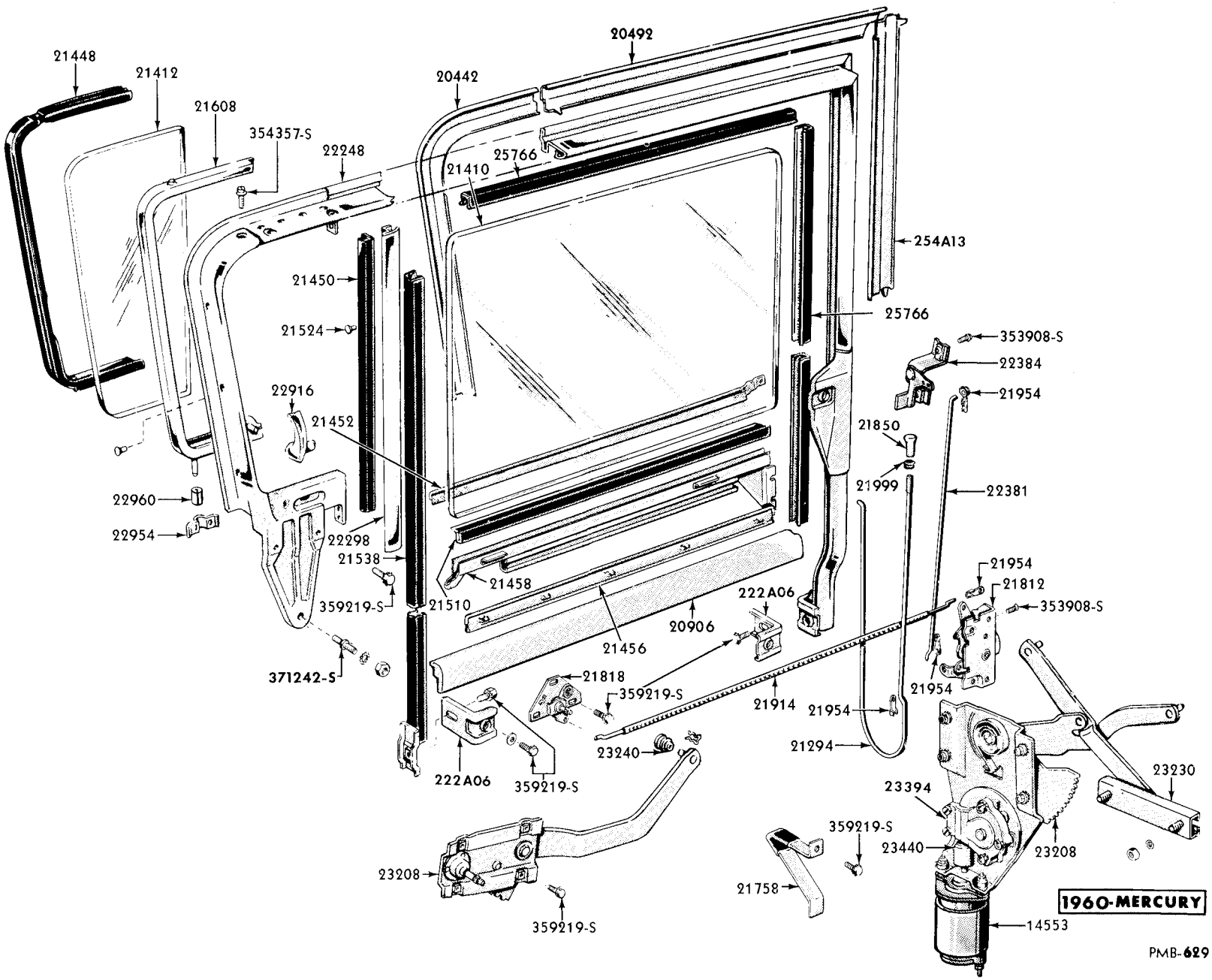

FRONT DOOR WINDOW and RELATED PARTS-MODEL 58

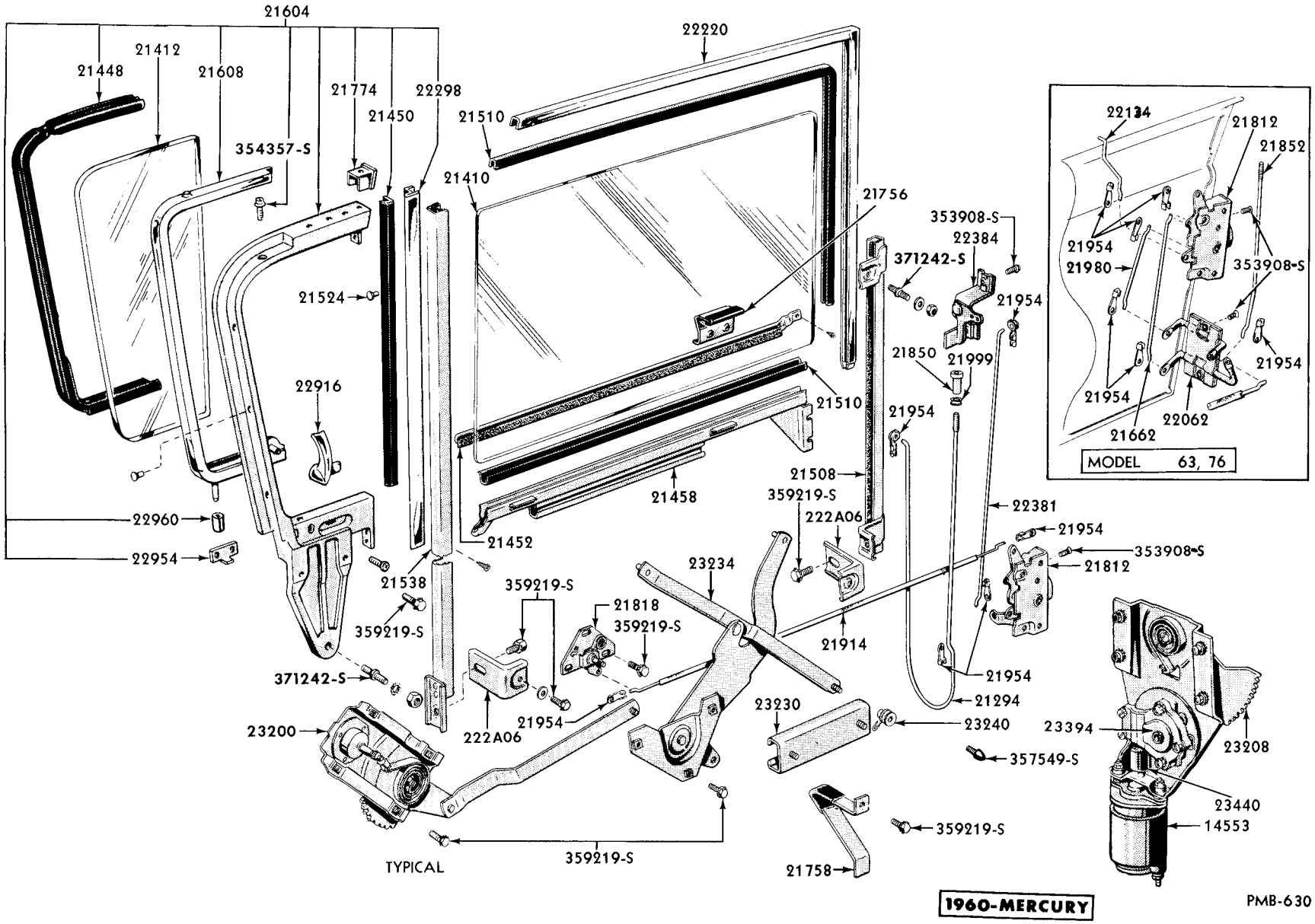

FRONT DOOR WINDOW and RELATED PARTS - MODEL 57, 63, 64, 76, 77

[redacted]

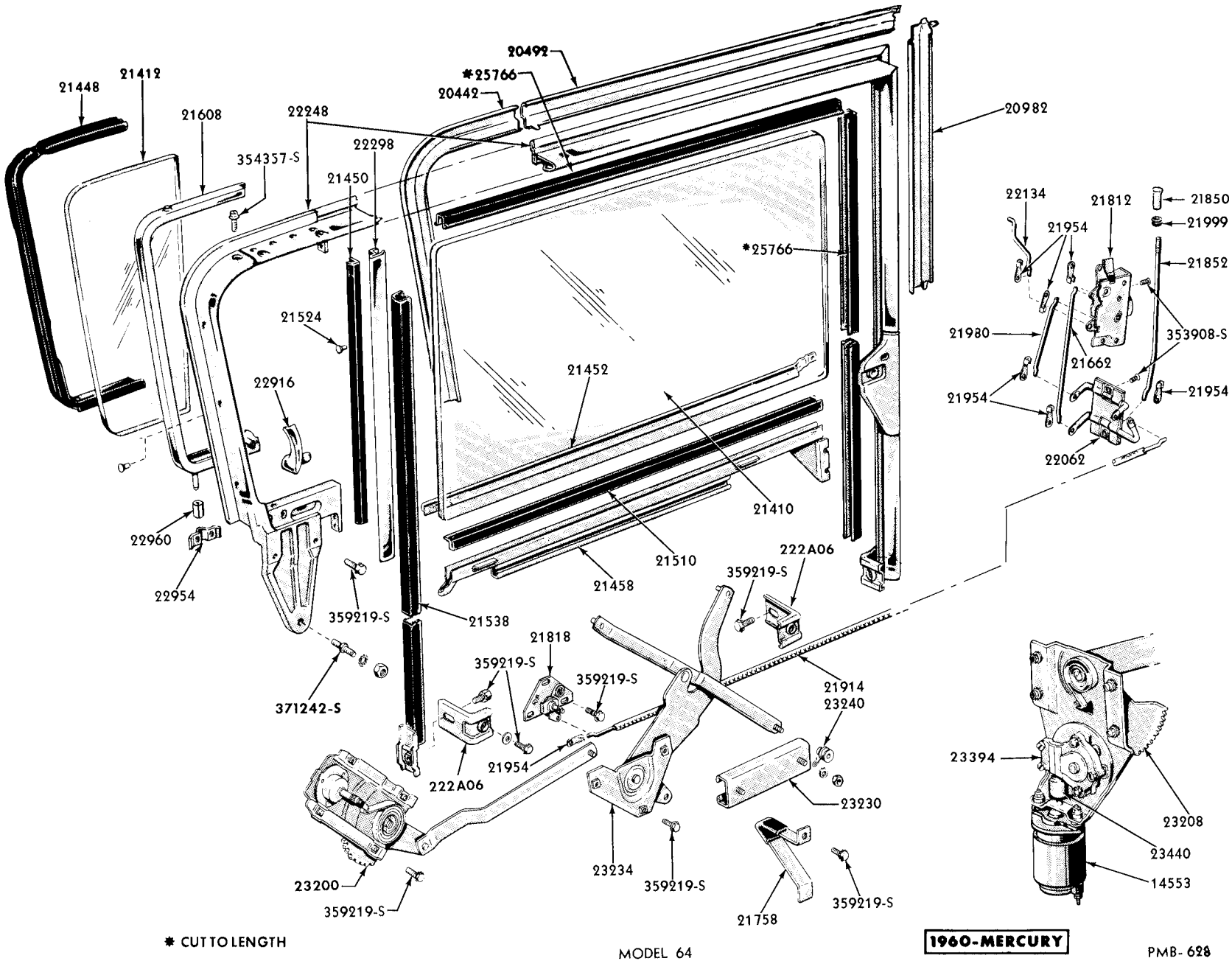

FRONT DOOR WINDOW and RELATED PARTS-MODEL 64

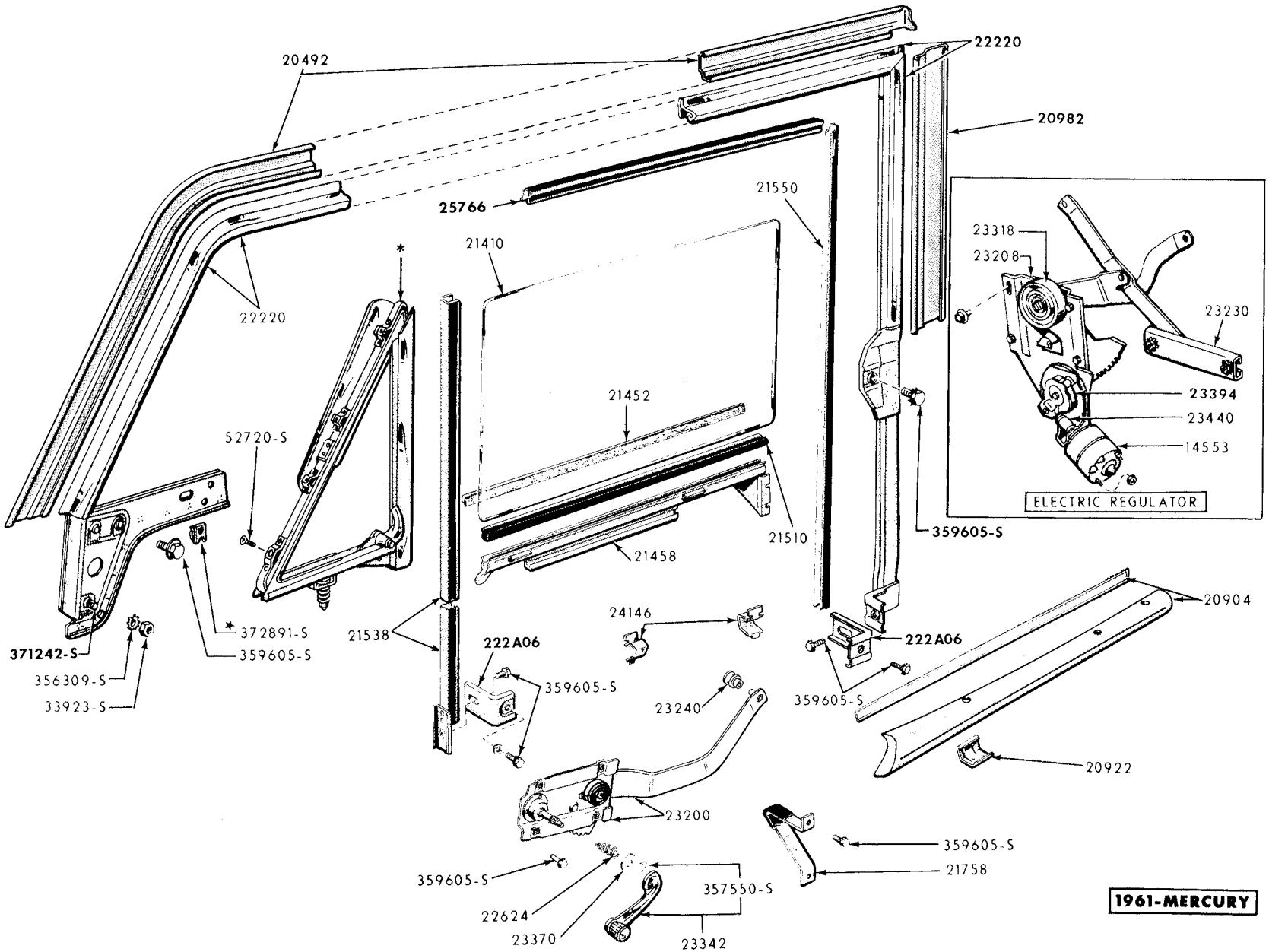

FRONT DOOR WINDOW and RELATED PARTS : MODELS 54,58,71

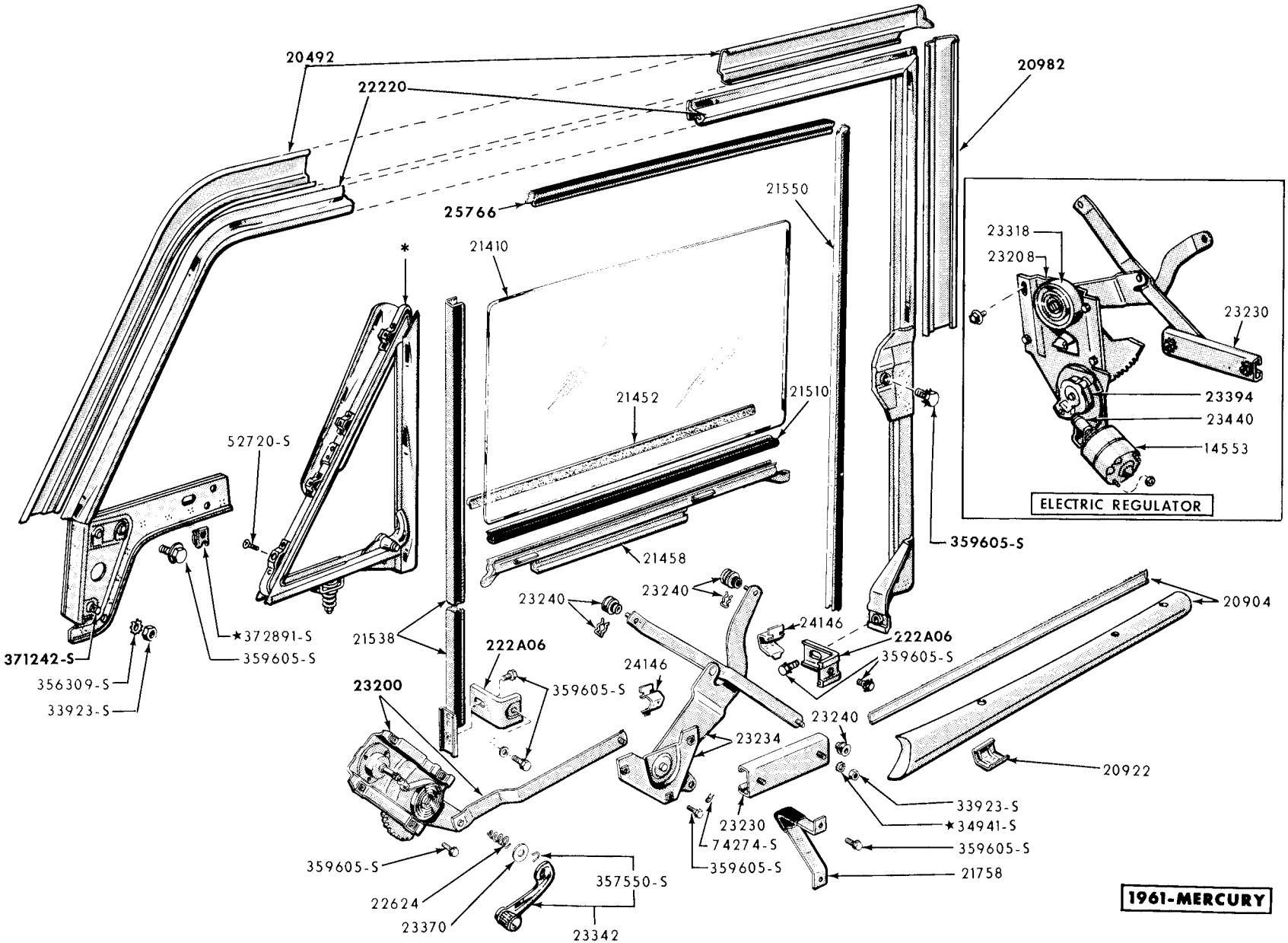

* FOR SERVICE DETAILS REFER TO VENTILATOR WINDOW ILLUSTRATION

PEB-594

FRONT DOOR WINDOW and RELATED PARTS- MODELS 62, 64

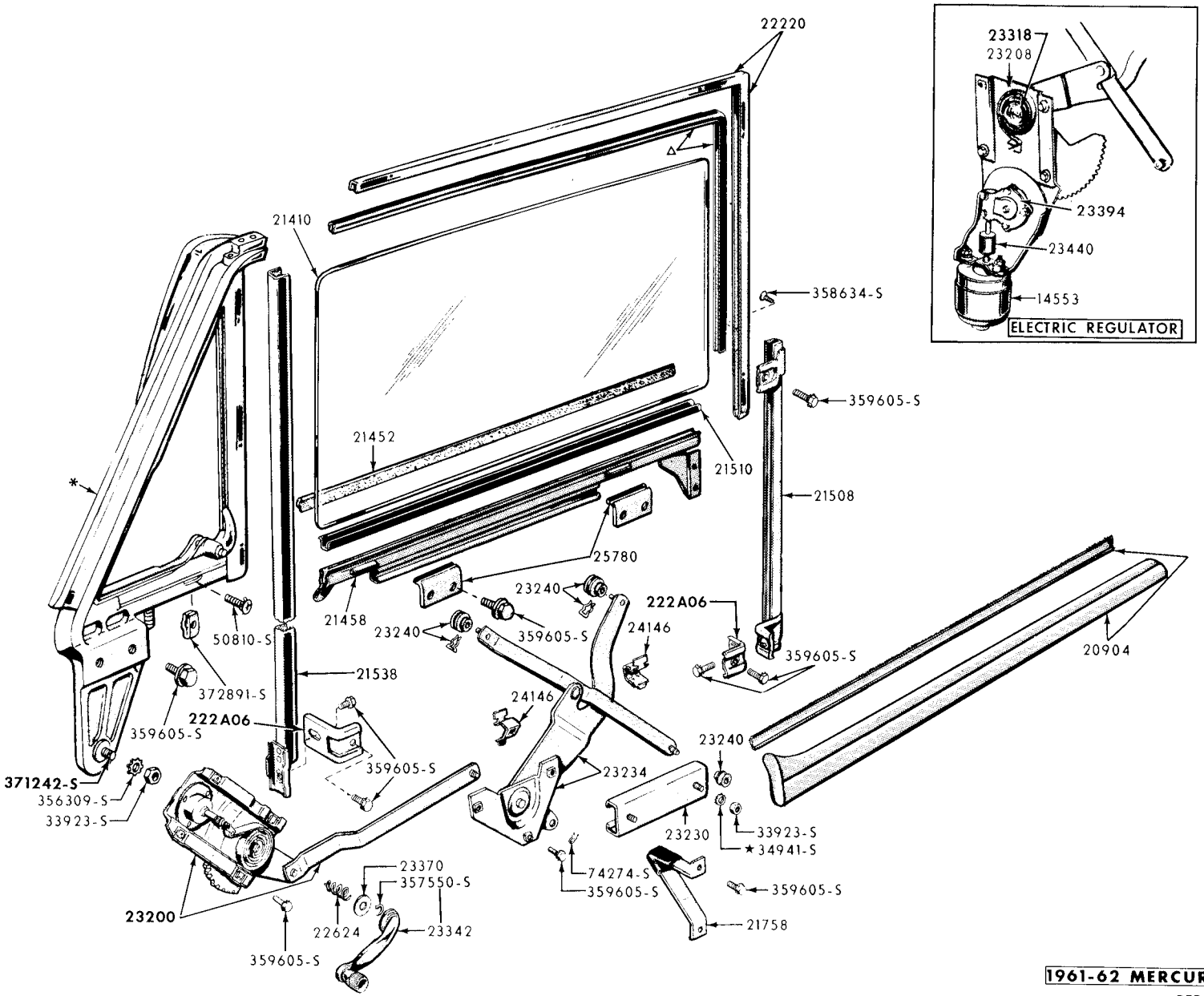

1961-62 MERCURY

PEB-596

*FOR SERVICE DETAILS REFER TO **VENTILATOR** WINDOW ILLUSTRATION

△USE BULK GLASS TAPE

FRONT DOOR WINDOW and RELATED PARTS - MODELS 65,75,76

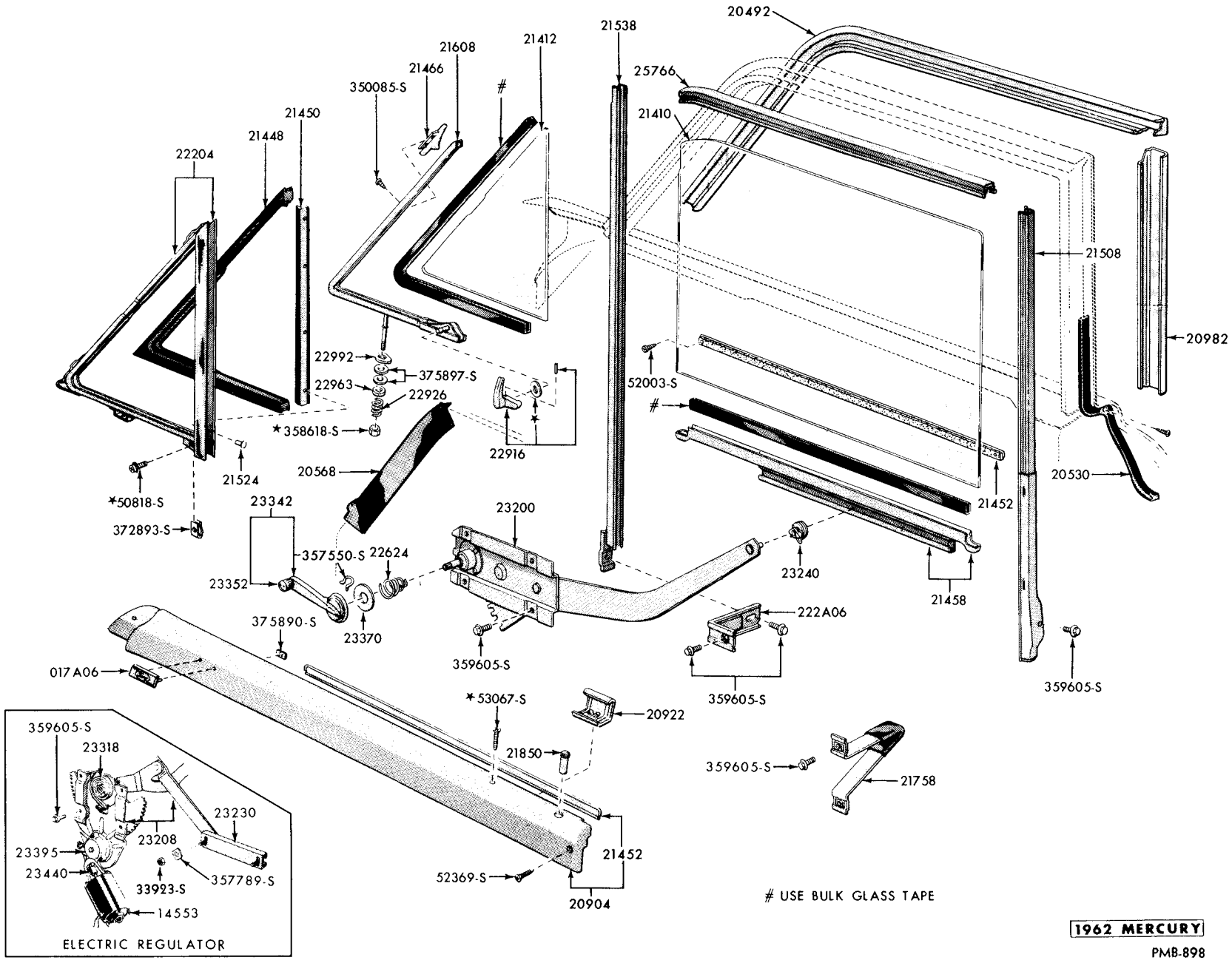

FRONT DOOR WINDOW and RELATED PARTS - MODELS 54, 71

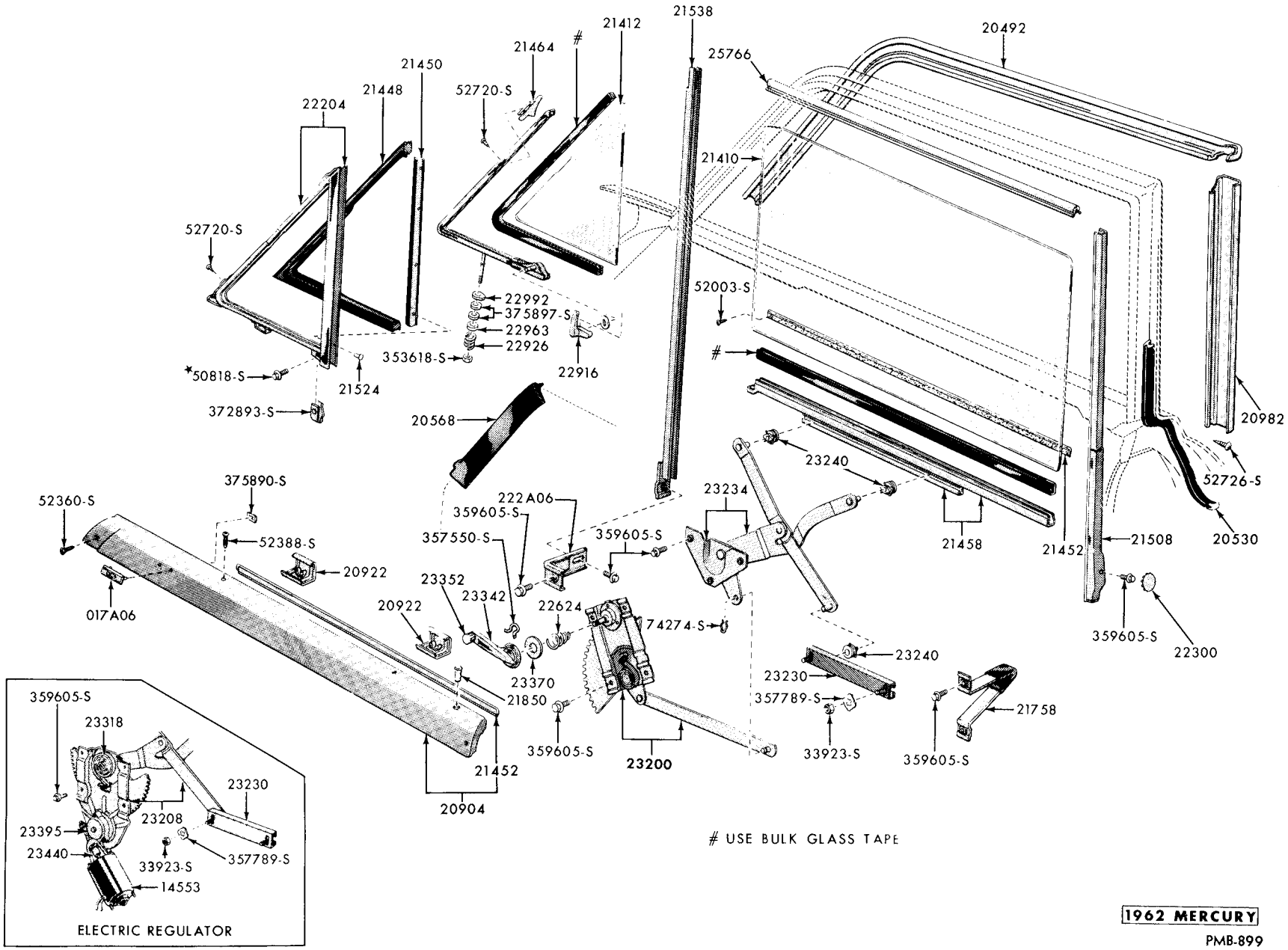

FRONT DOOR WINDOW and RELATED PARTS - MODEL 62

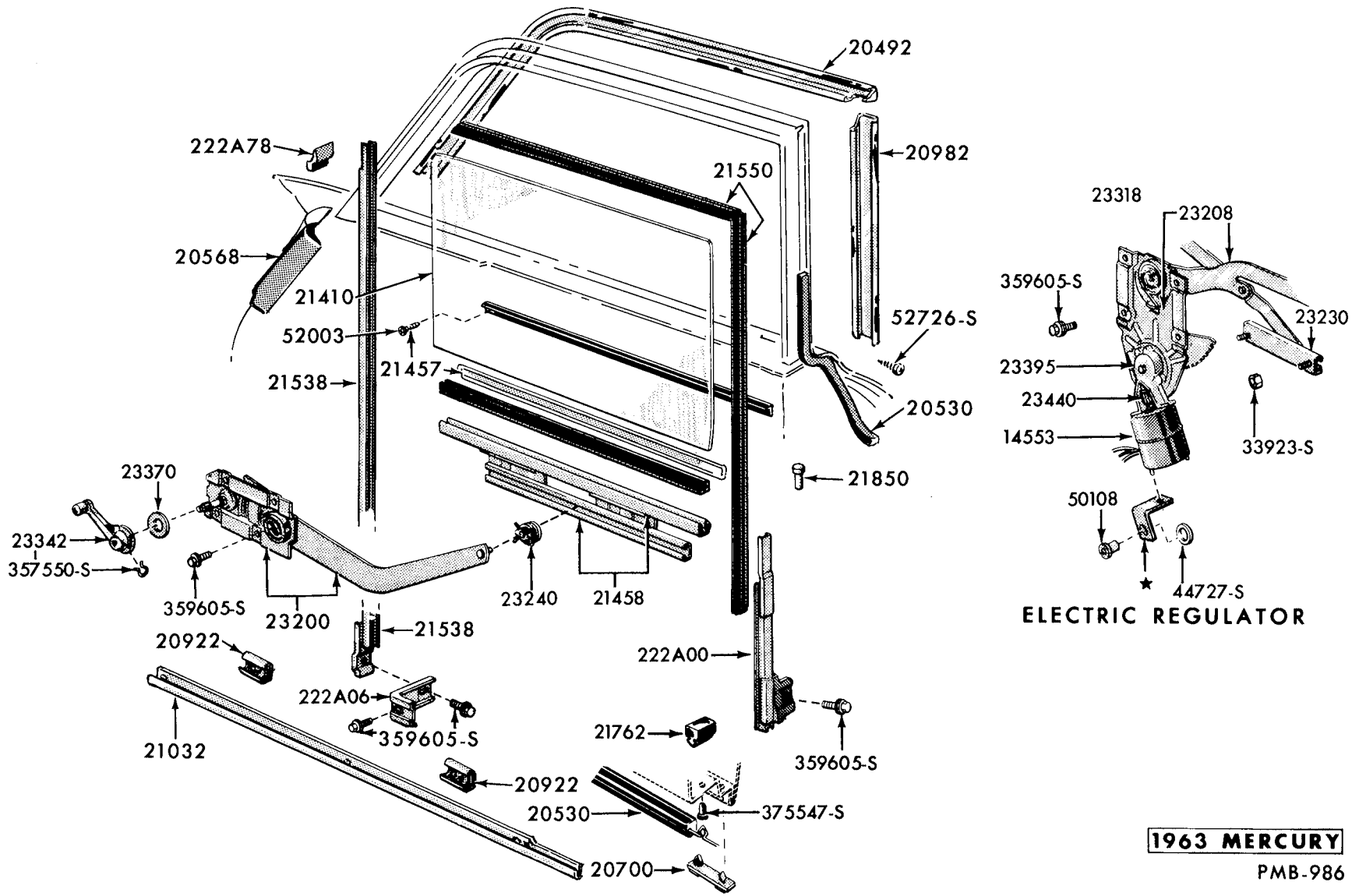

FRONT DOOR WINDOW and RELATED PARTS - MODELS 54, 71

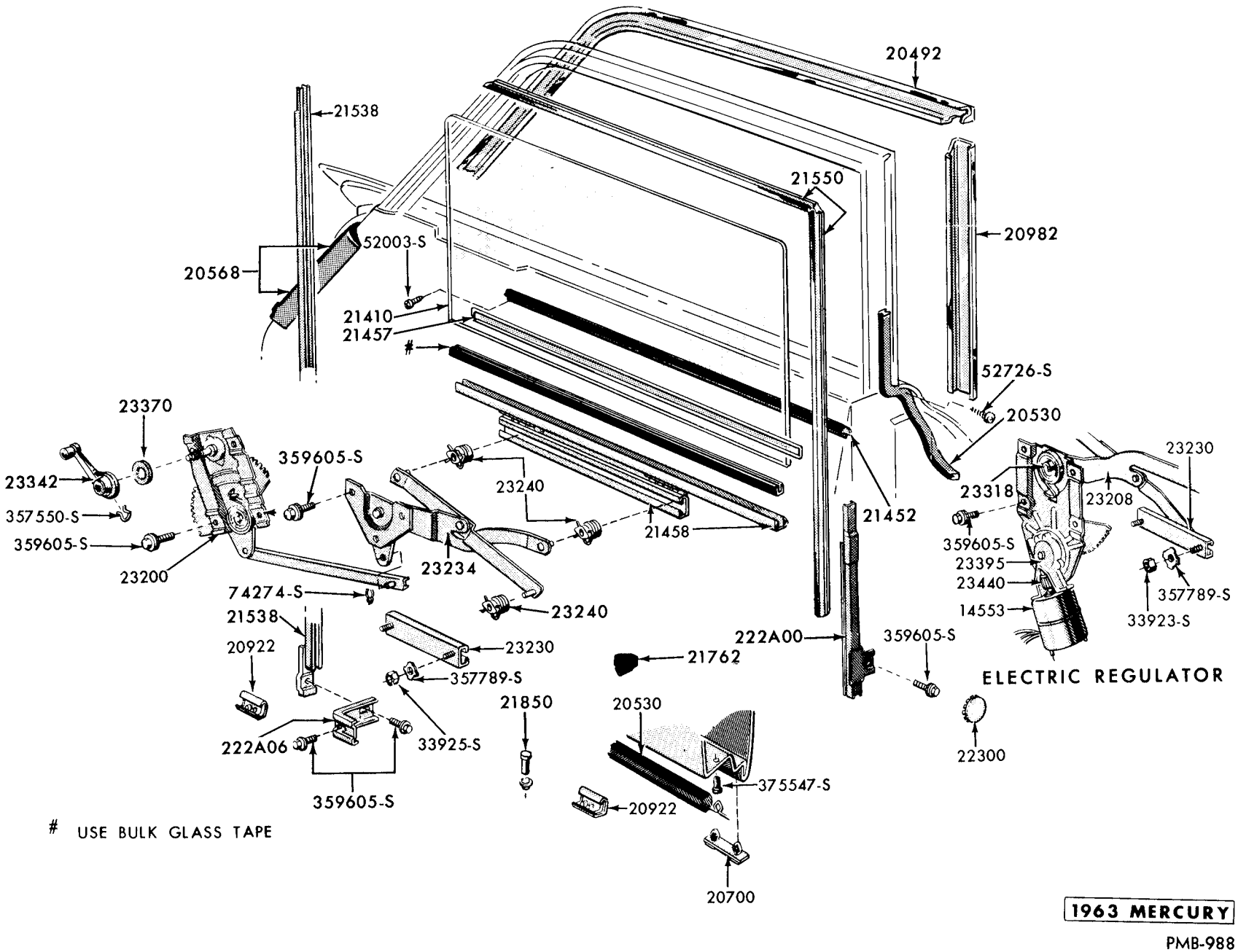

FRONT DOOR WINDOW and RELATED PARTS - MODEL 62

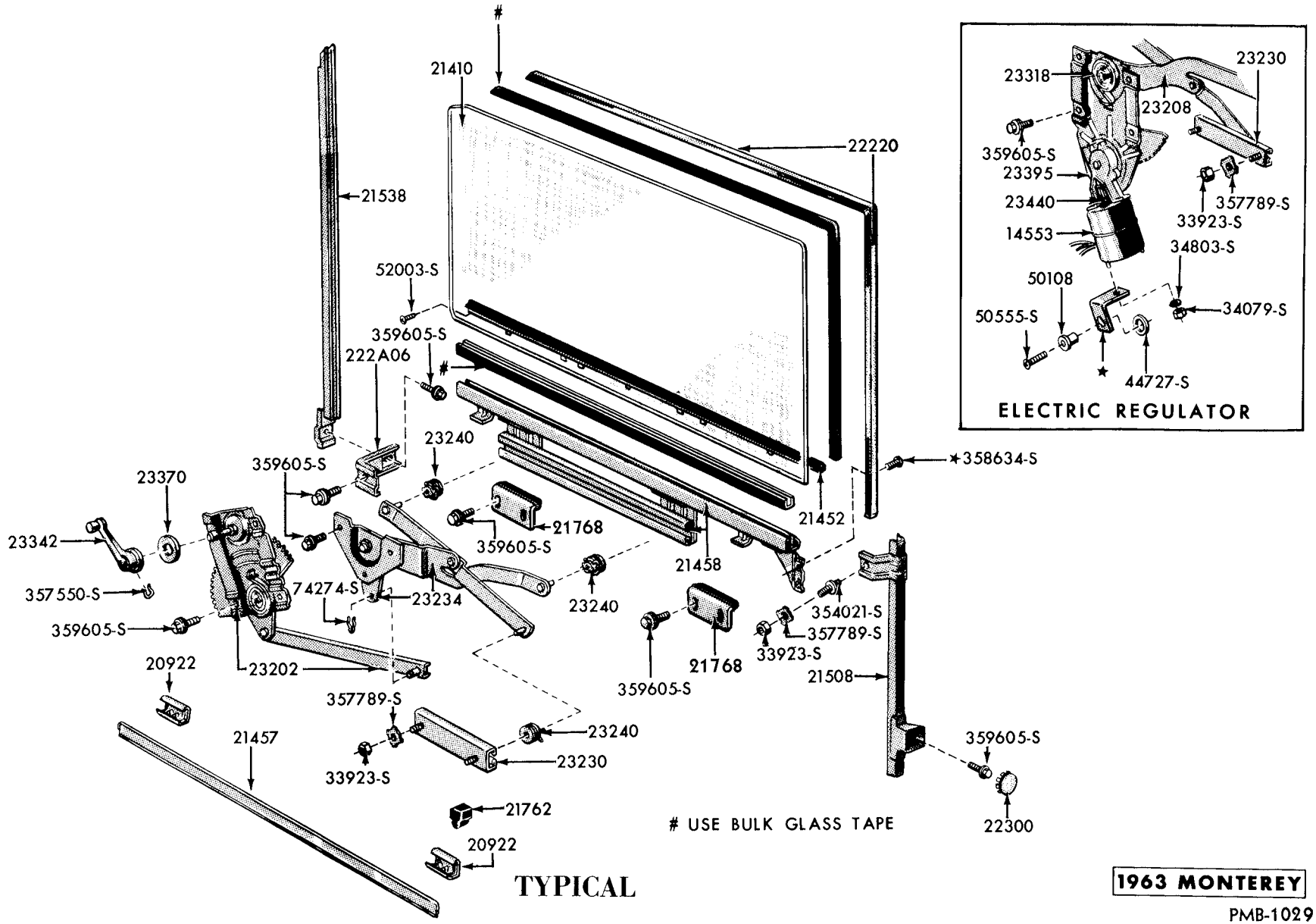

FRONT DOOR WINDOW and RELATED PARTS - MODELS 63, 65, 75, 76

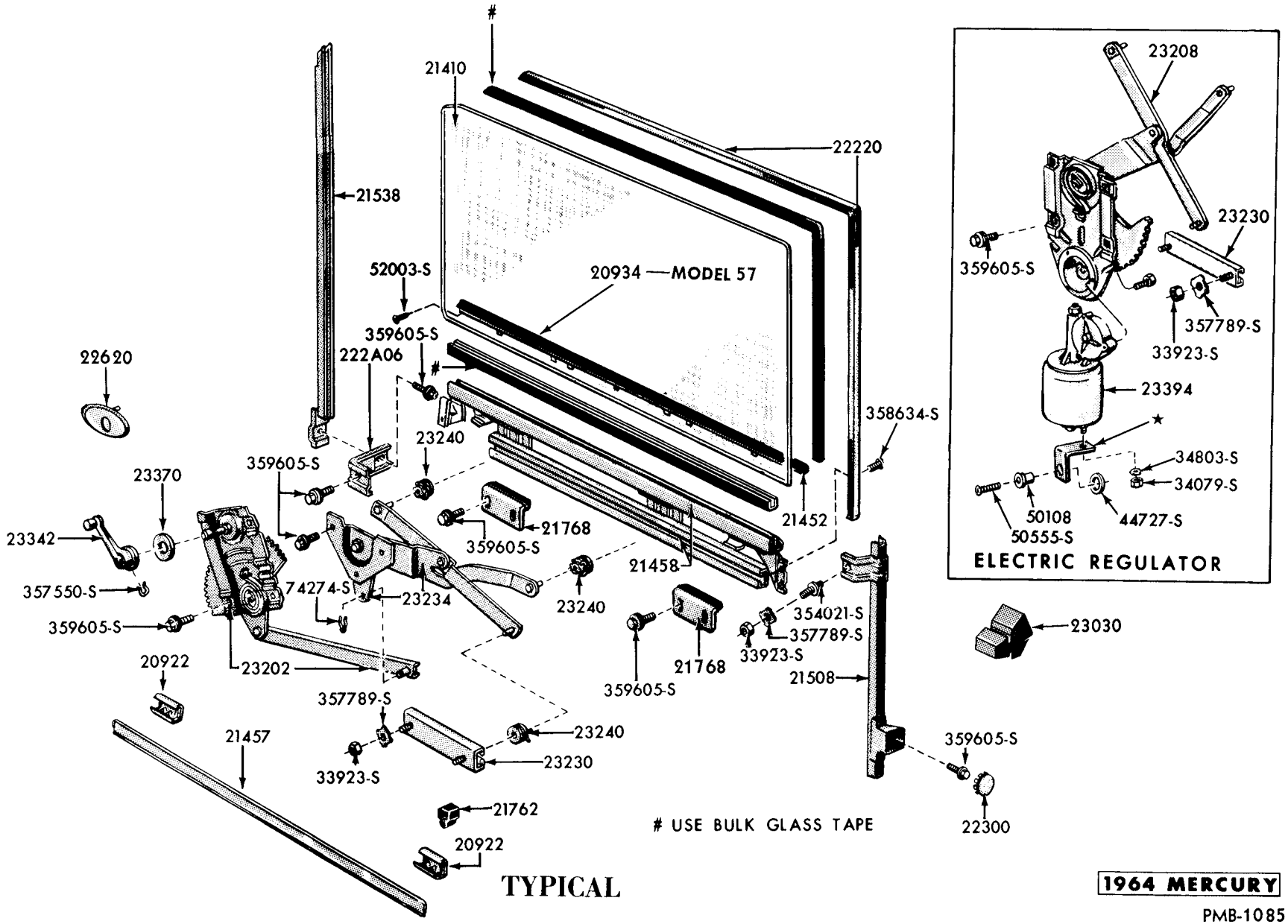

FRONT DOOR WINDOW and RELATED PARTS - MODELS 57, 63, 65, 75, 76

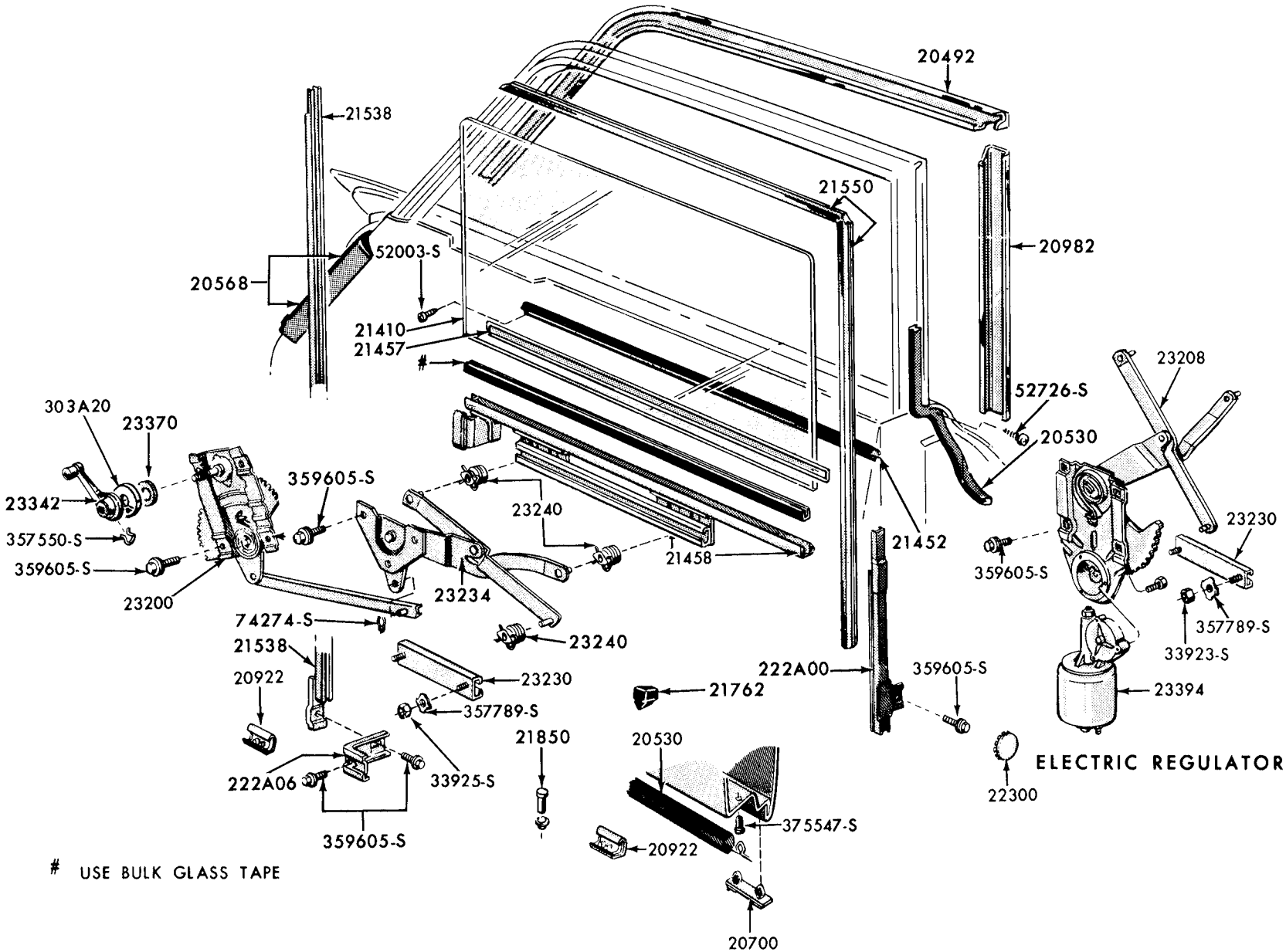

1964 MERCURY
PMB-1081

FRONT DOOR WINDOW and RELATED PARTS - MODEL 62

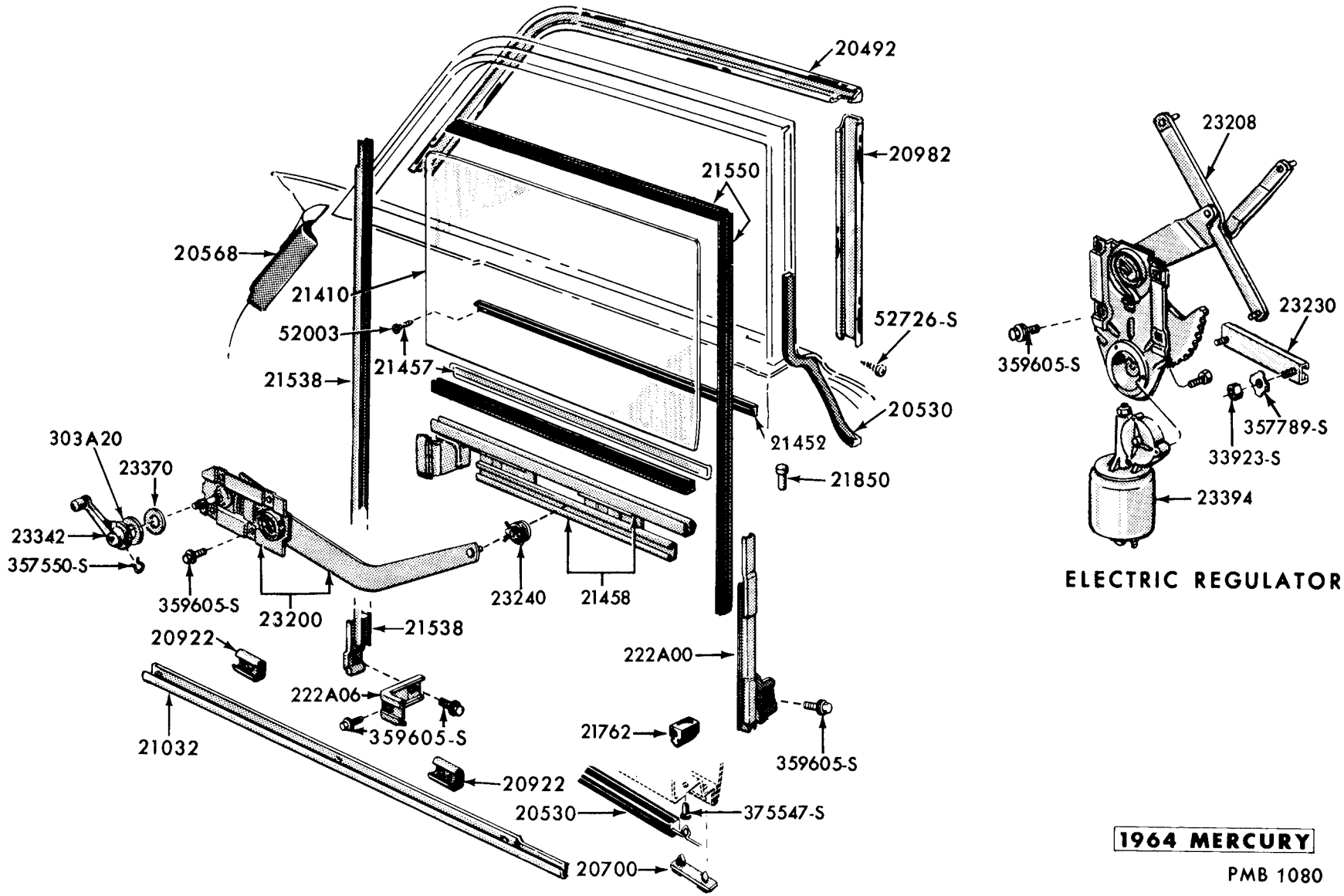

FRONT DOOR WINDOW and RELATED PARTS - MODEL 54, 71

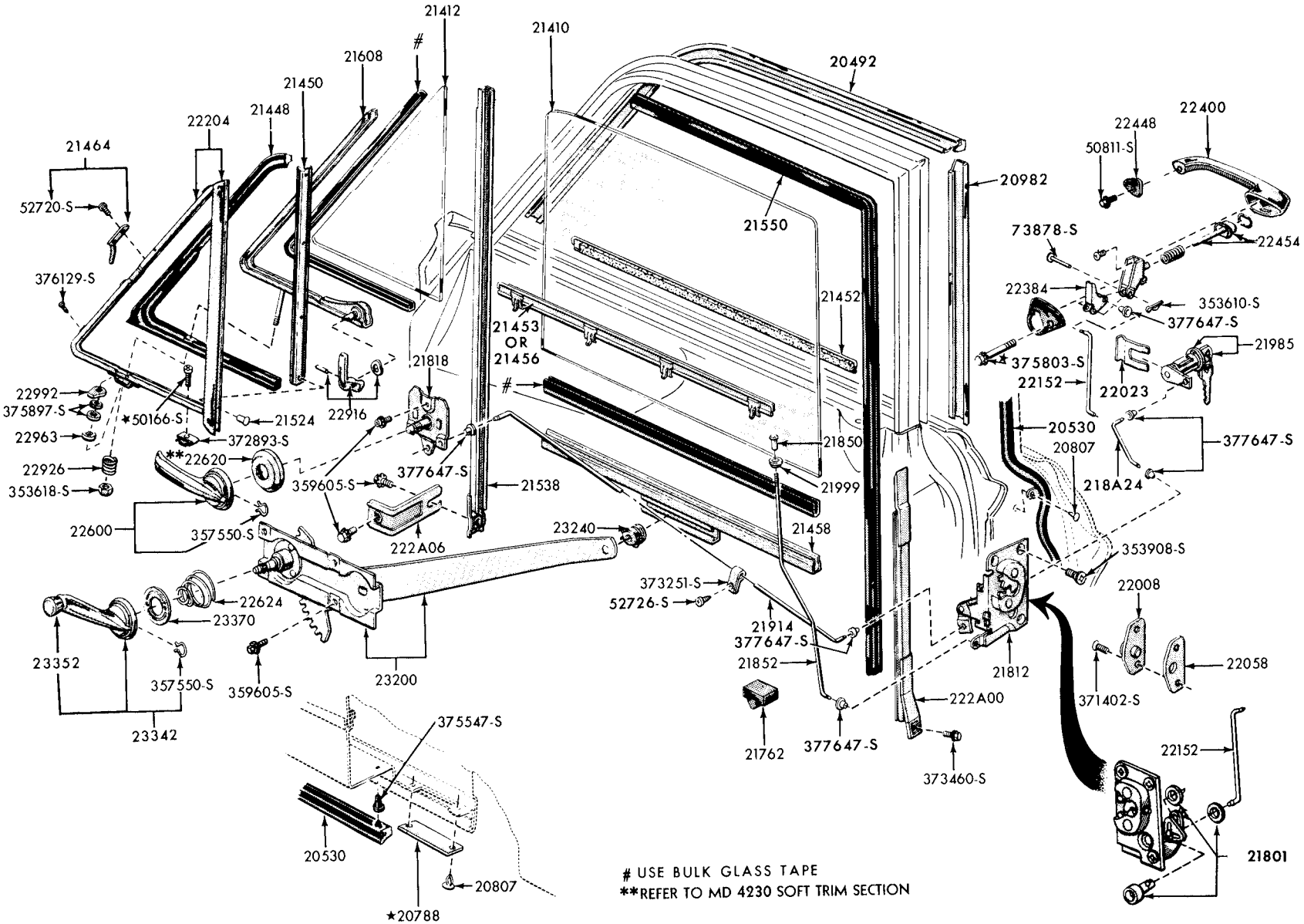

FRONT DOOR WINDOW and RELATED PARTS - MODELS 54, 62, 71

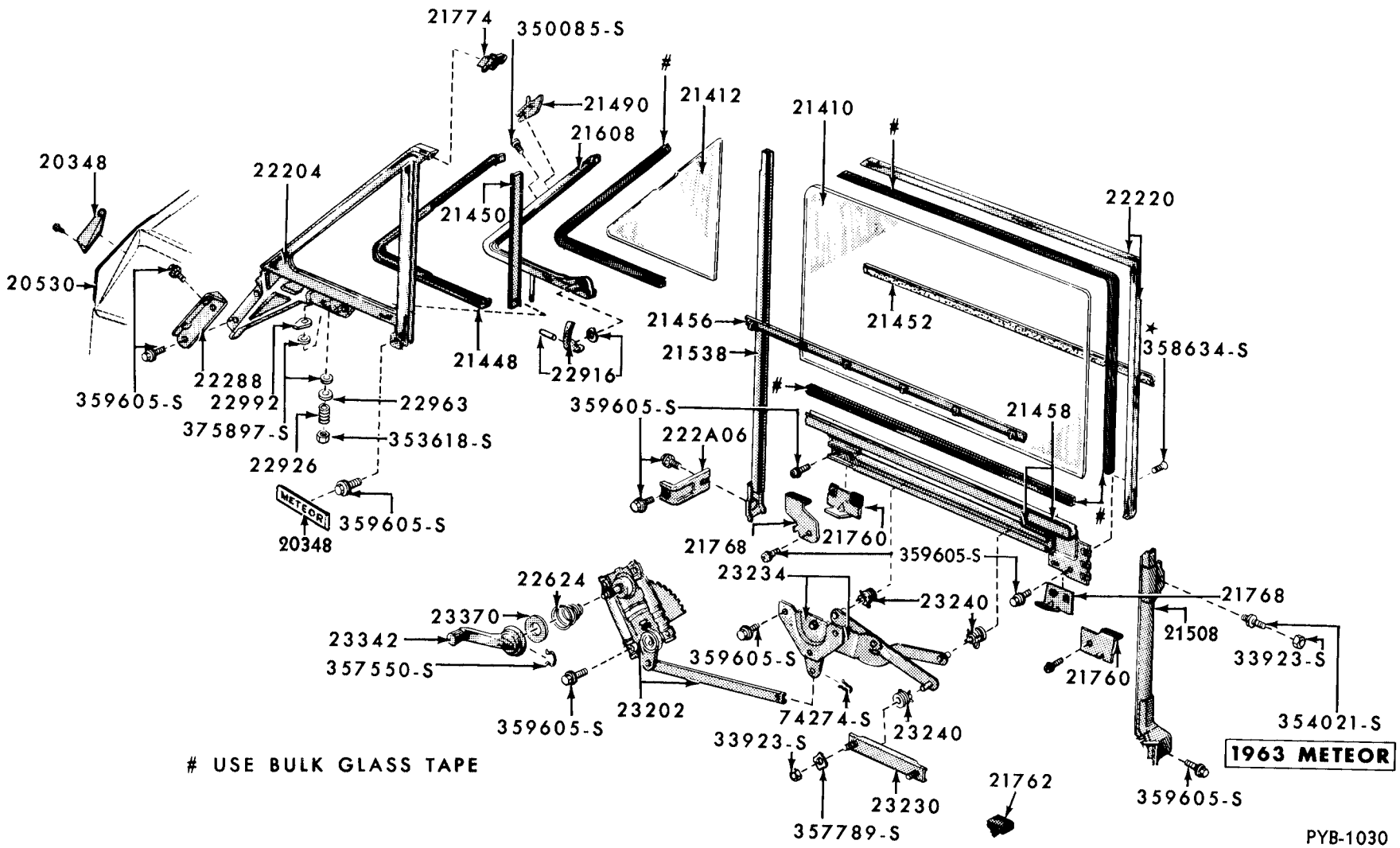

FRONT DOOR WINDOW and RELATED PARTS - MODEL 65

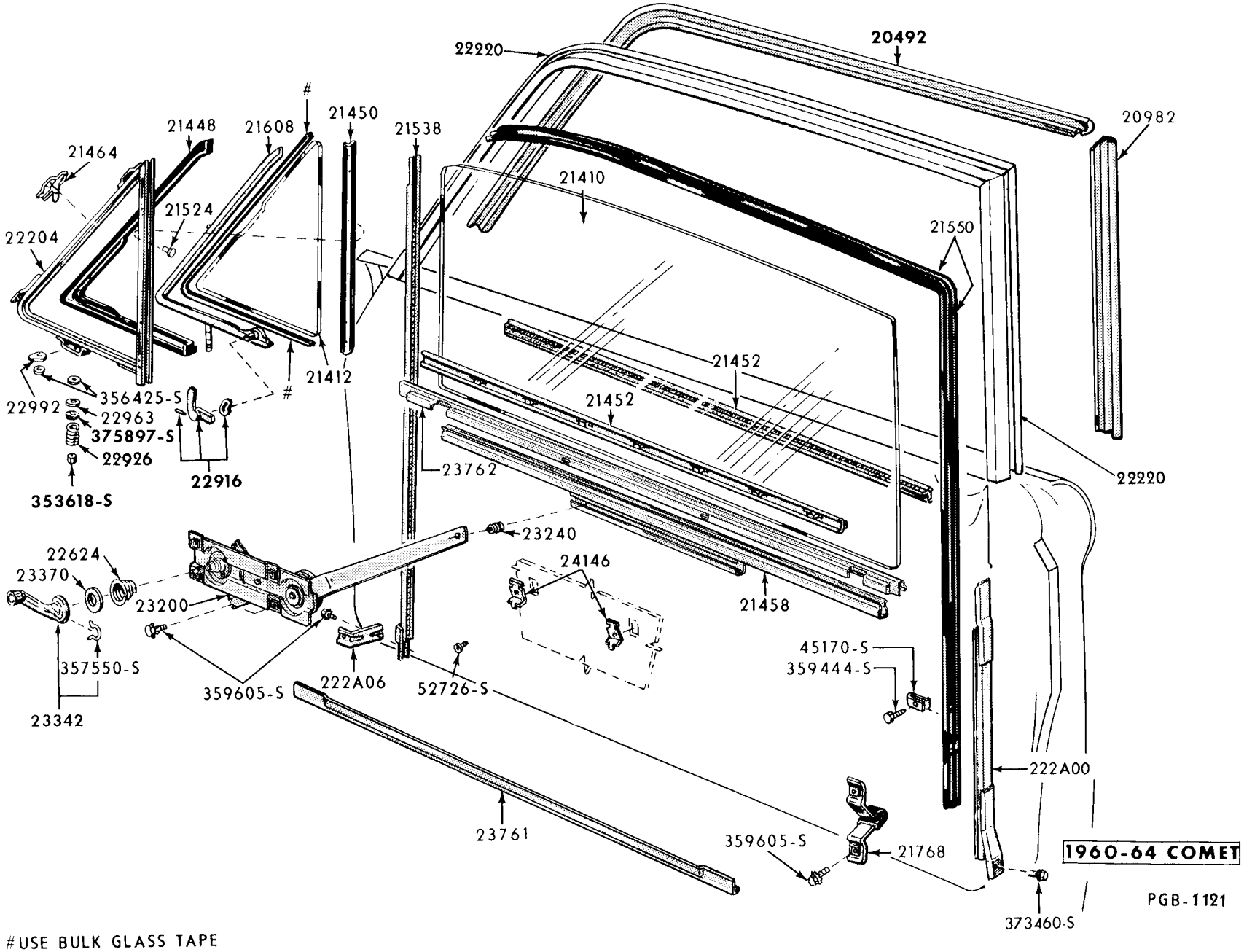

FRONT DOOR WINDOW and RELATED PARTS -MODEL 54, 59, 62, 71

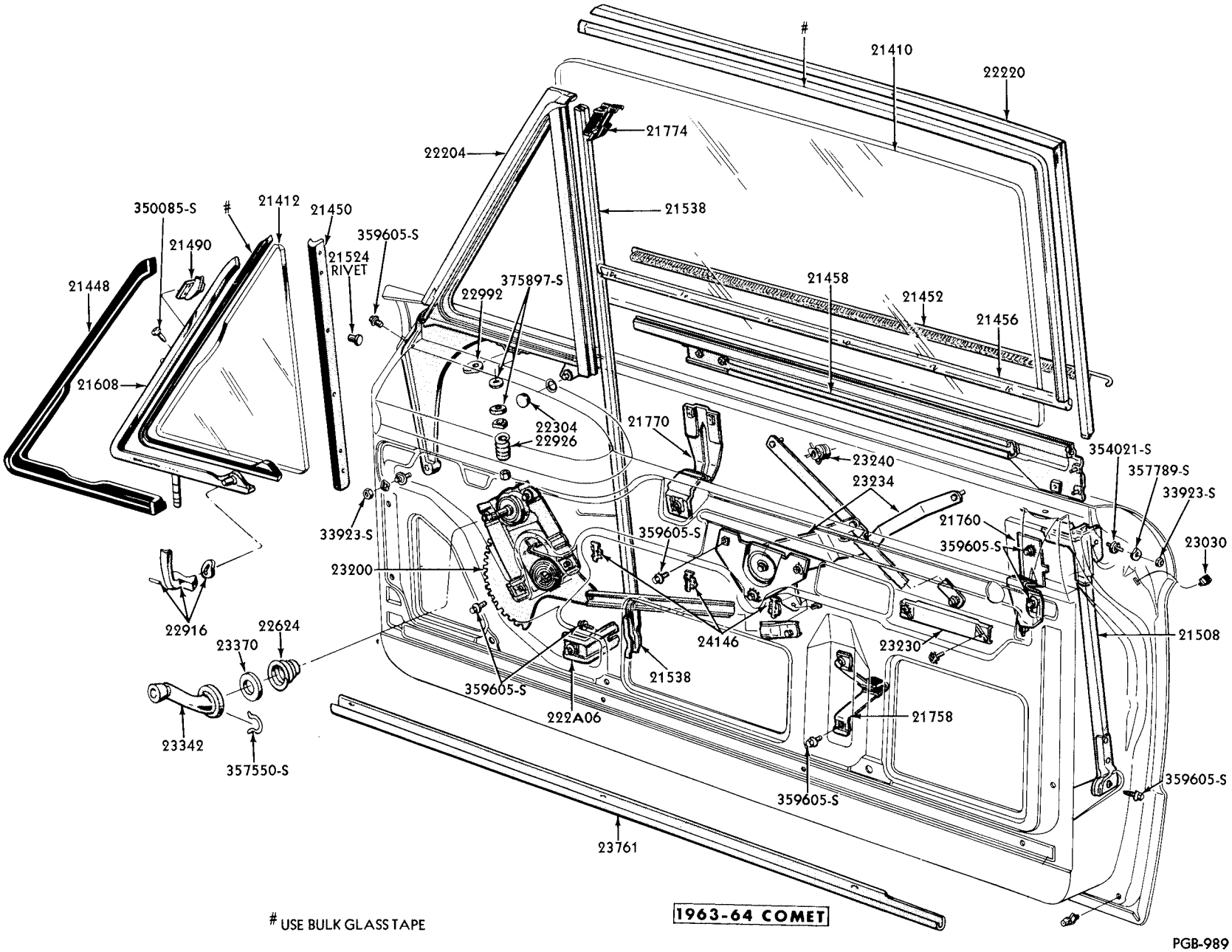

USE BULK GLASS TAPE

FRONT DOOR WINDOW and RELATED PARTS - MODELS 63, 76

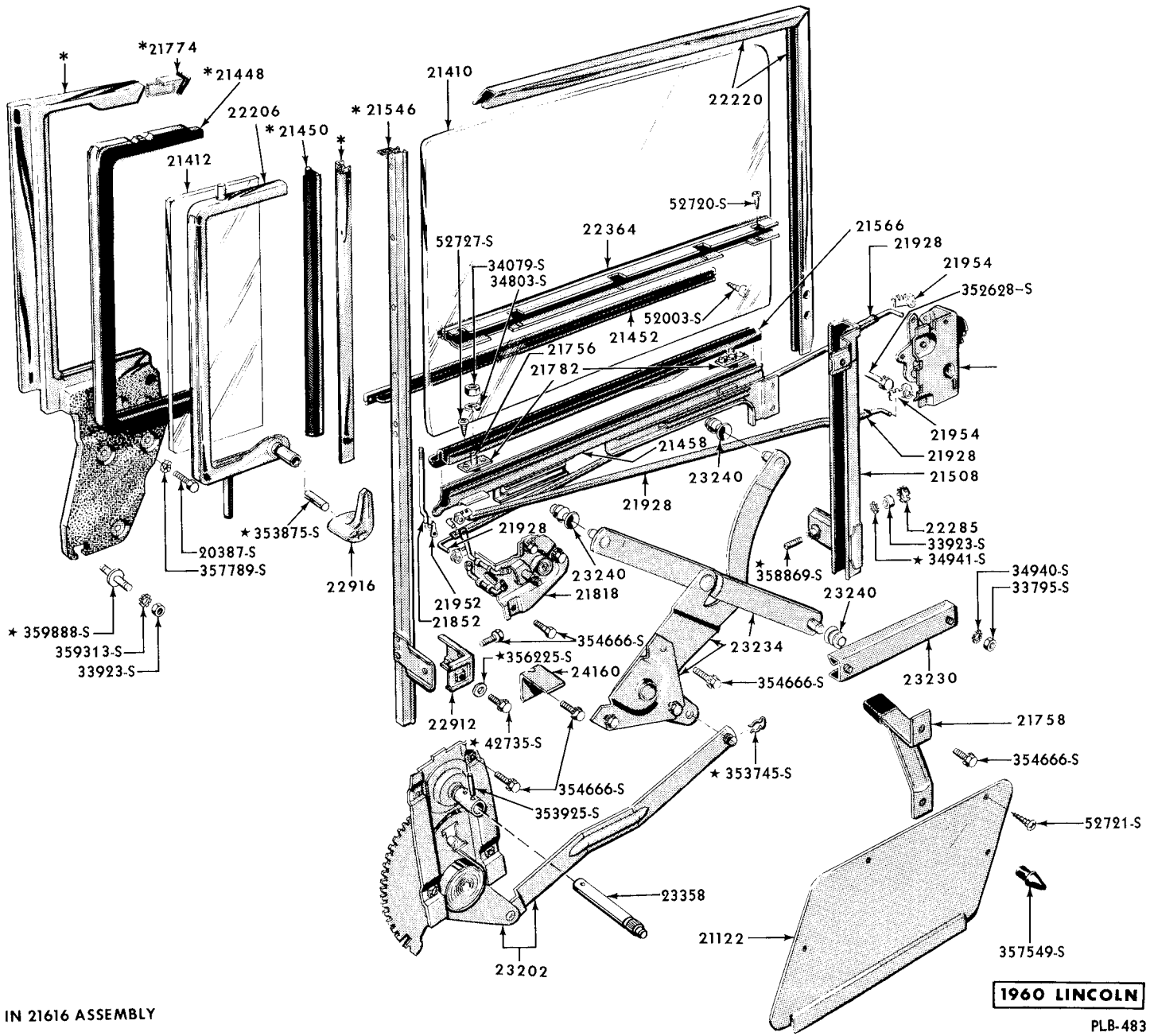

* ALSO SERVICED IN 21616 ASSEMBLY

FRONT DOOR WINDOW and RELATED PARTS

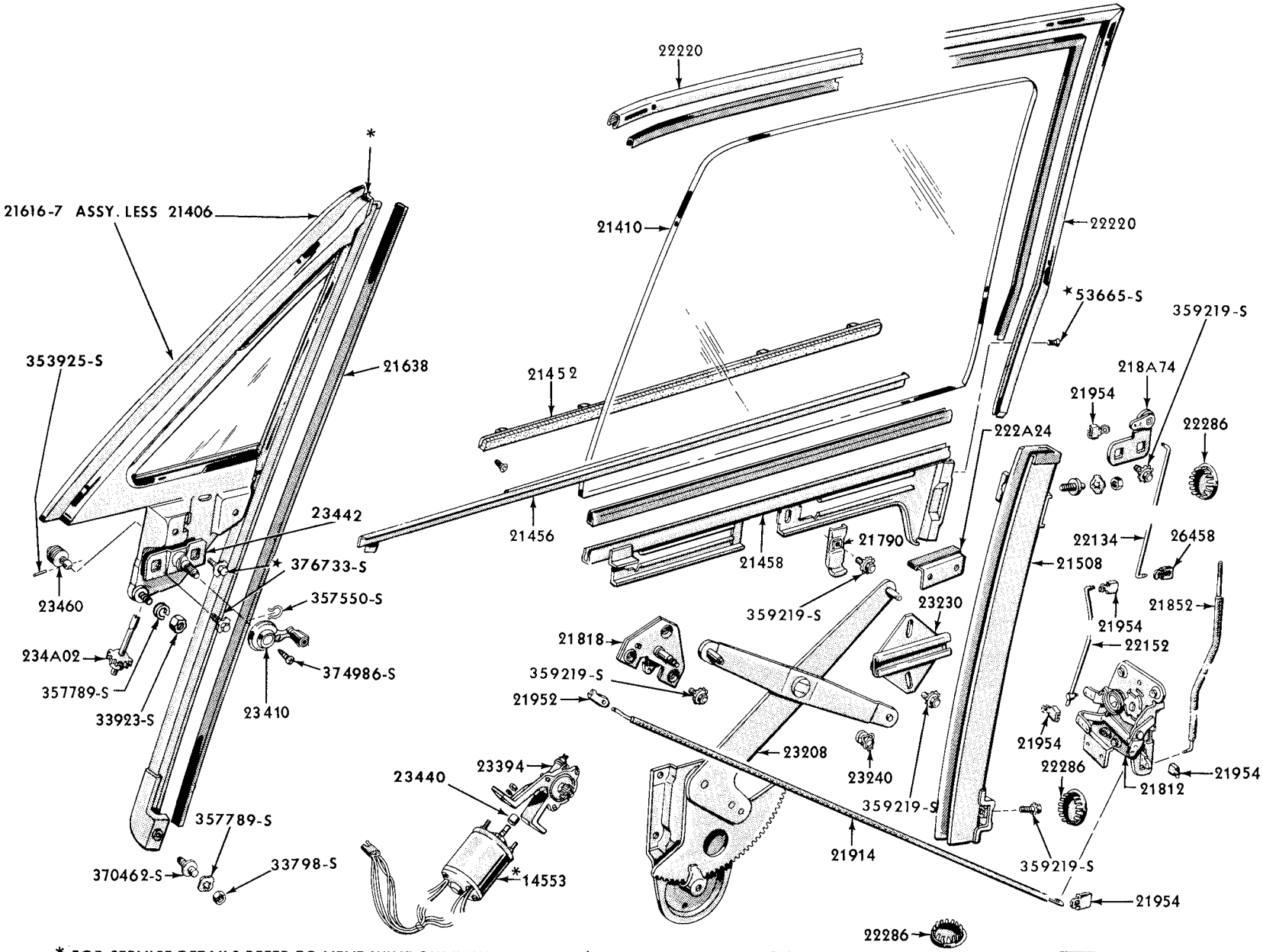

* FOR SERVICE DETAILS REFER TO VENT WINDOW ILLUSTRATION *REFER TO CHASSIS SECTION

1961-63 LINCOLN

PLB-773

FRONT DOOR WINDOW and RELATED PARTS

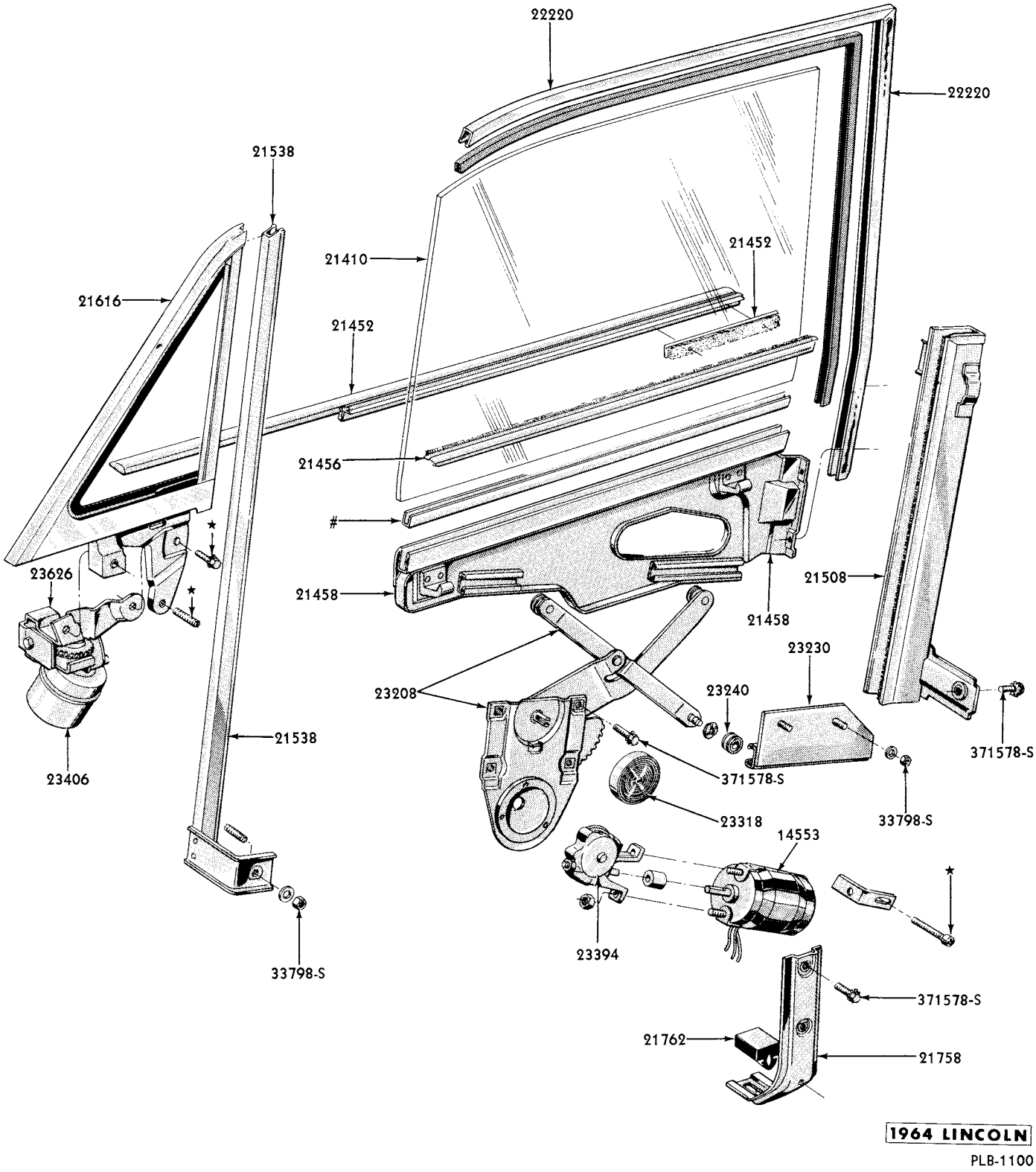

FRONT DOOR WINDOW and RELATED PARTS

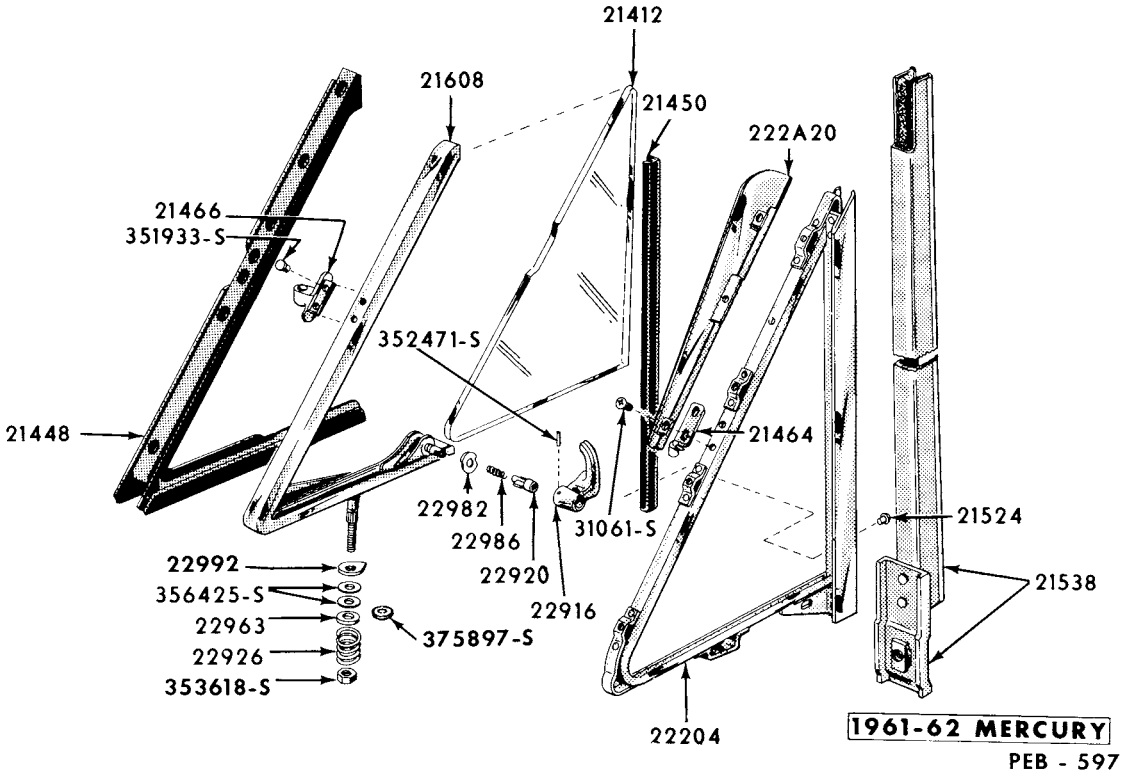

FRONT DOOR VENTILATOR WINDOW - MODELS 54, 58, 62, 64, 71

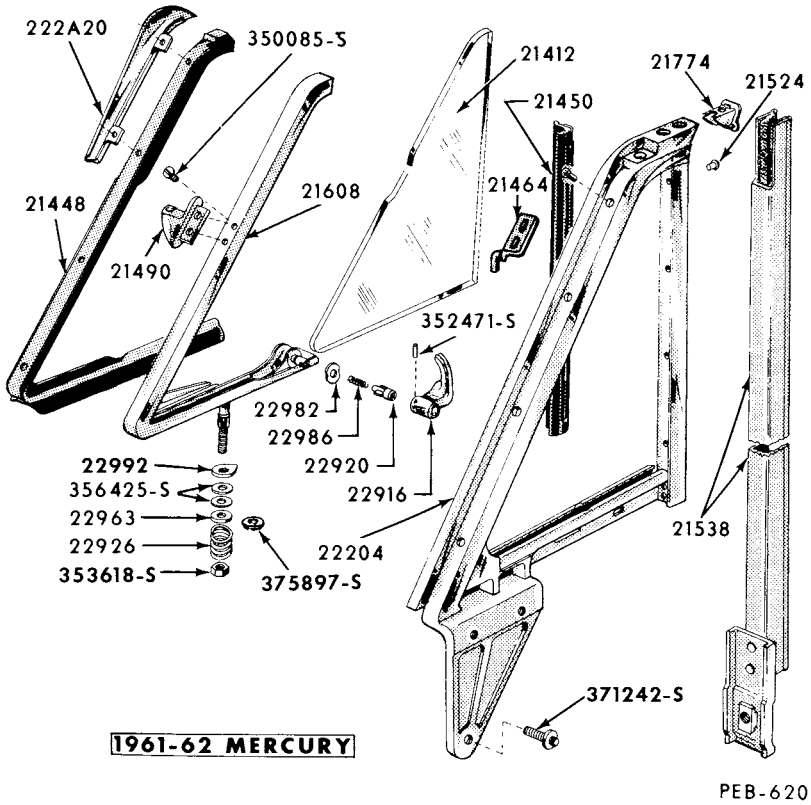

FRONT DOOR VENTILATOR WINDOW - MODELS 65, 75, 76

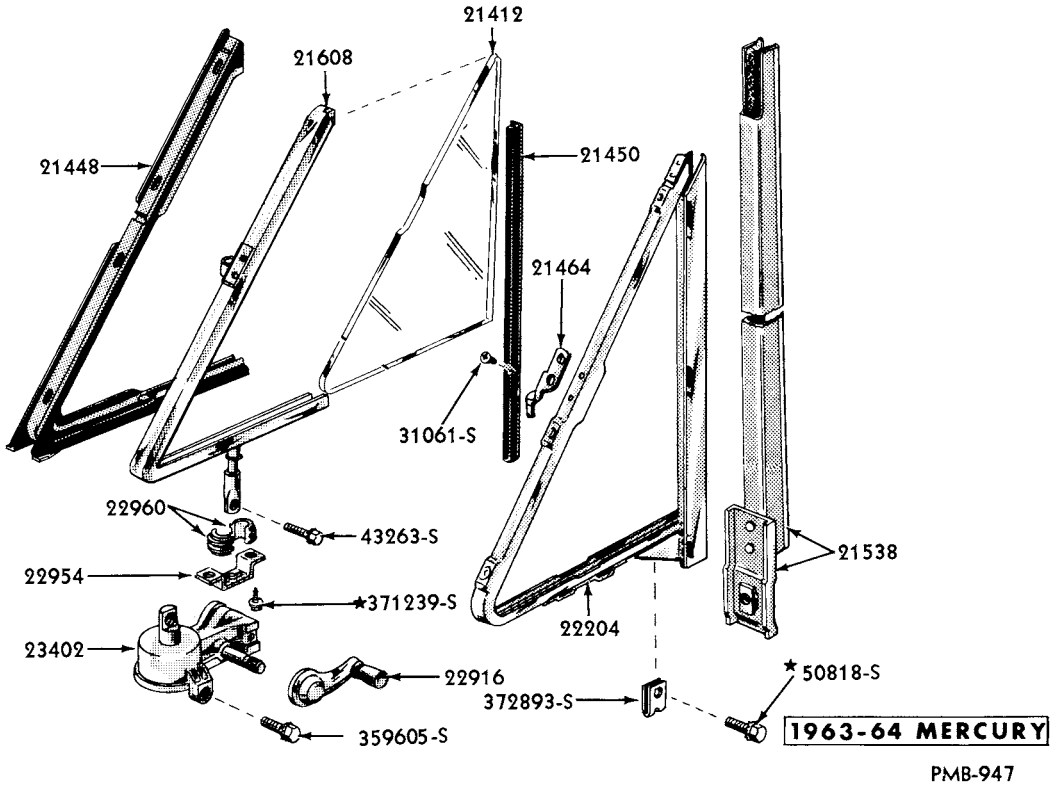

FRONT DOOR VENTILATOR WINDOW - MODELS 54, 62, 71

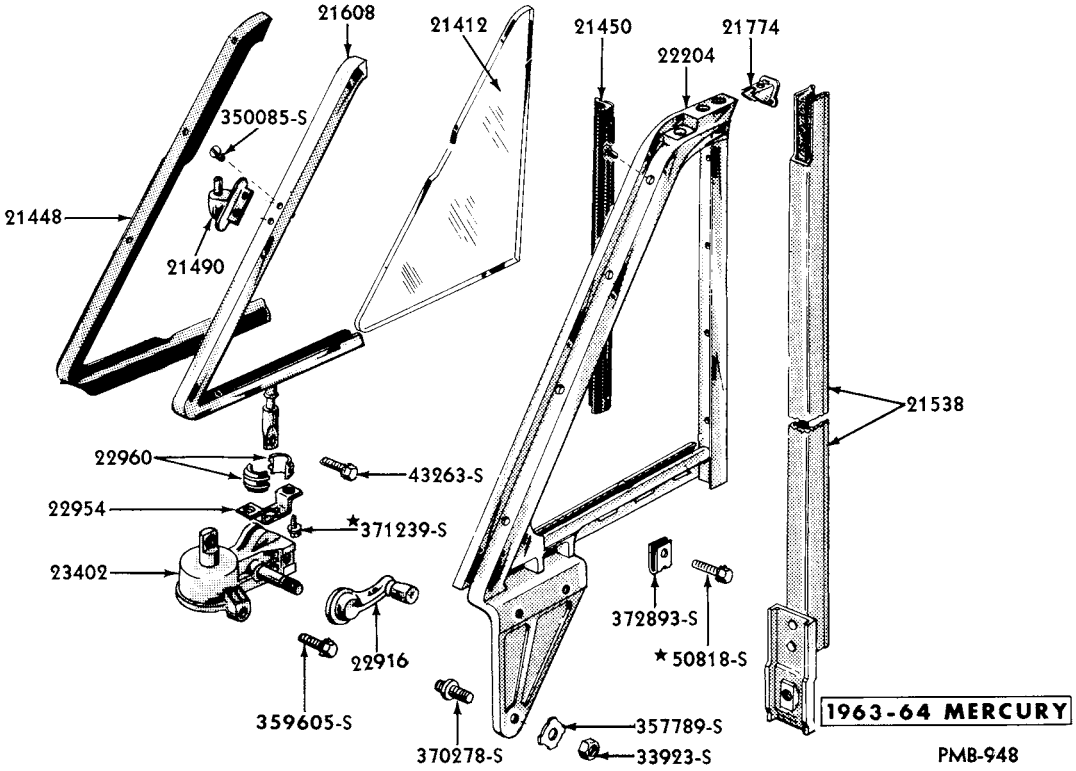

FRONT DOOR VENTILATOR WINDOW - MODELS 65, 75, 76

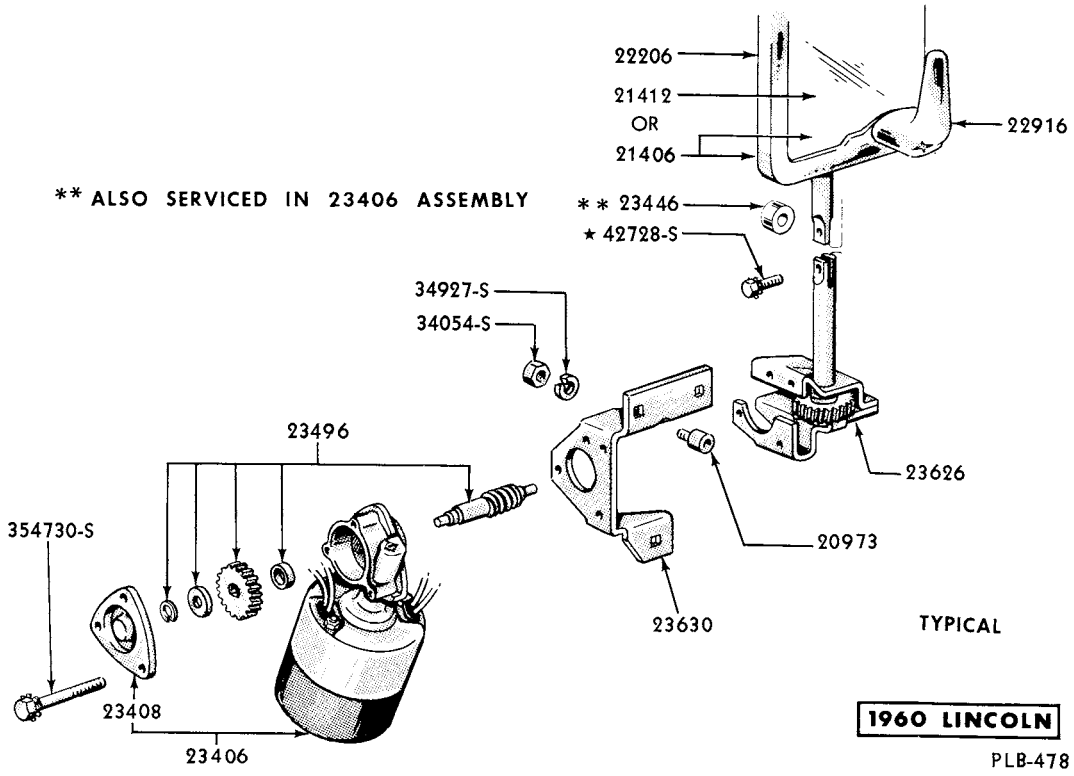

VENTILATOR WINDOW, ELECTRIC MOTOR and DRIVE

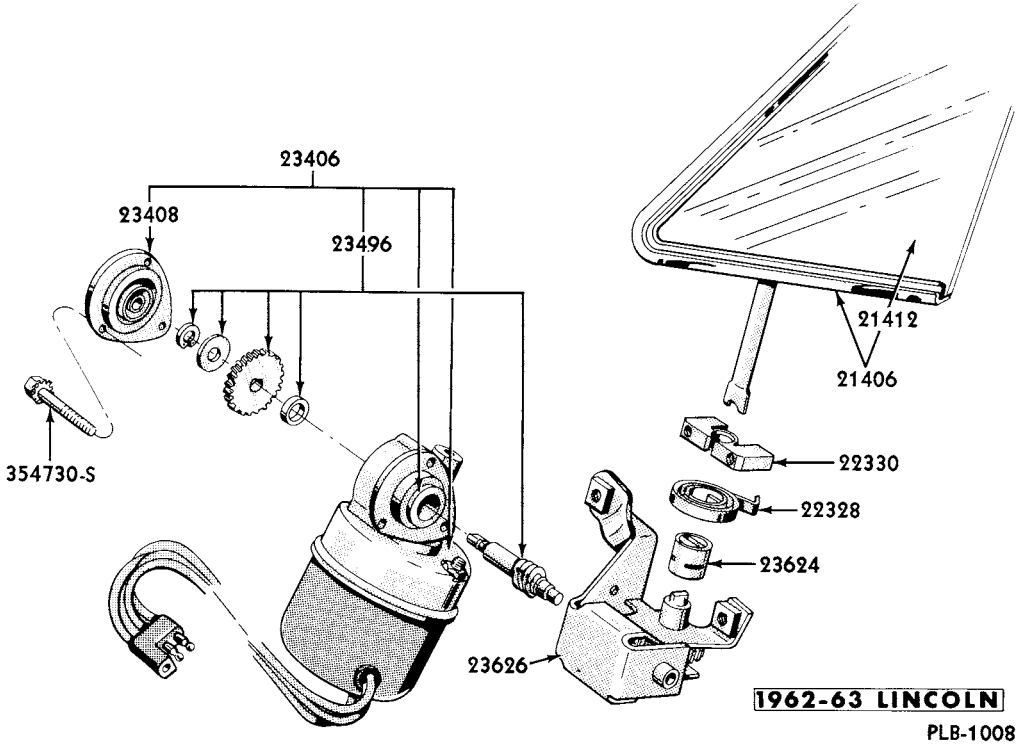

VENT WINDOW - ELECTRIC

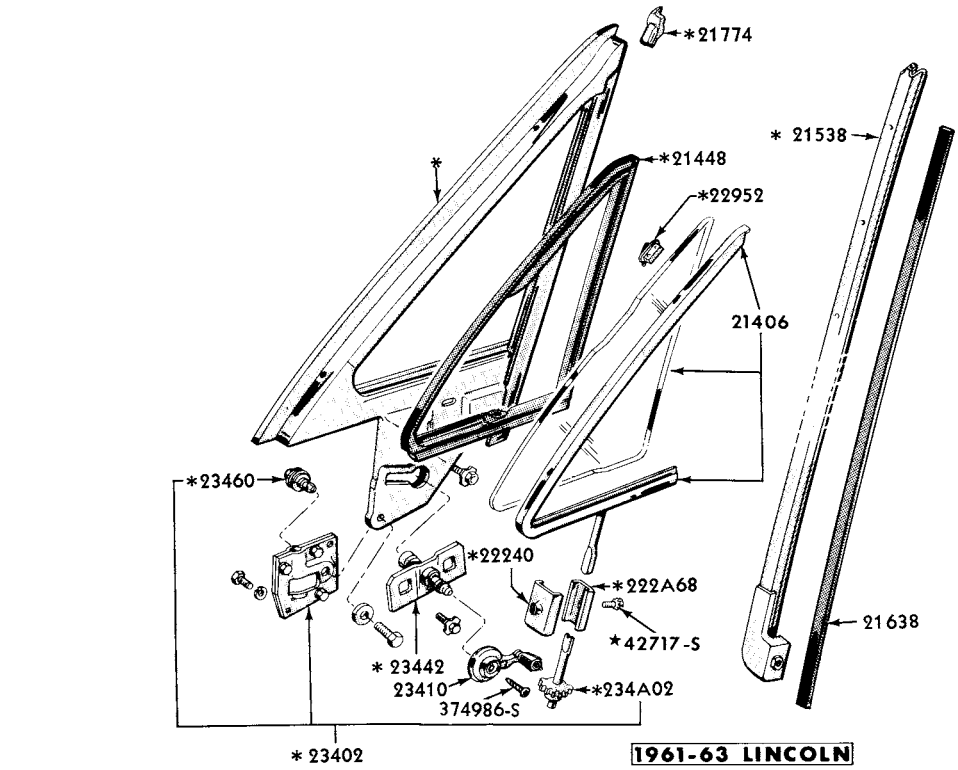

*ALSO SERVICED IN 21616-7 ASSEMBLY

VENTILATOR WINDOW, REGULATOR and DRIVE

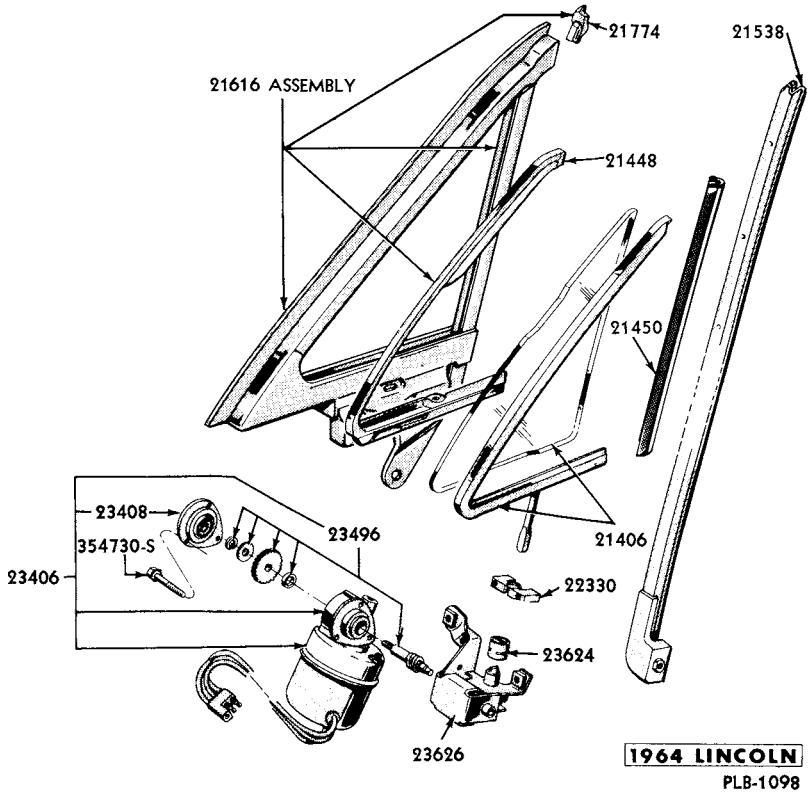

VENT WINDOW - ELECTRIC

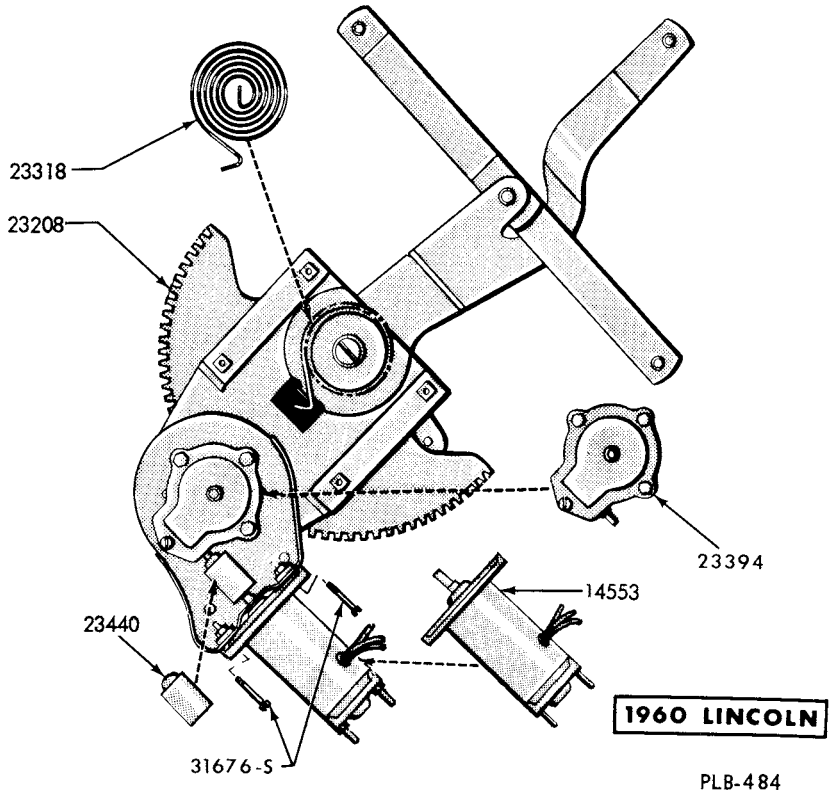

FRONT DOOR ELECTRICAL REGULATORS - TYPE A - HUPP

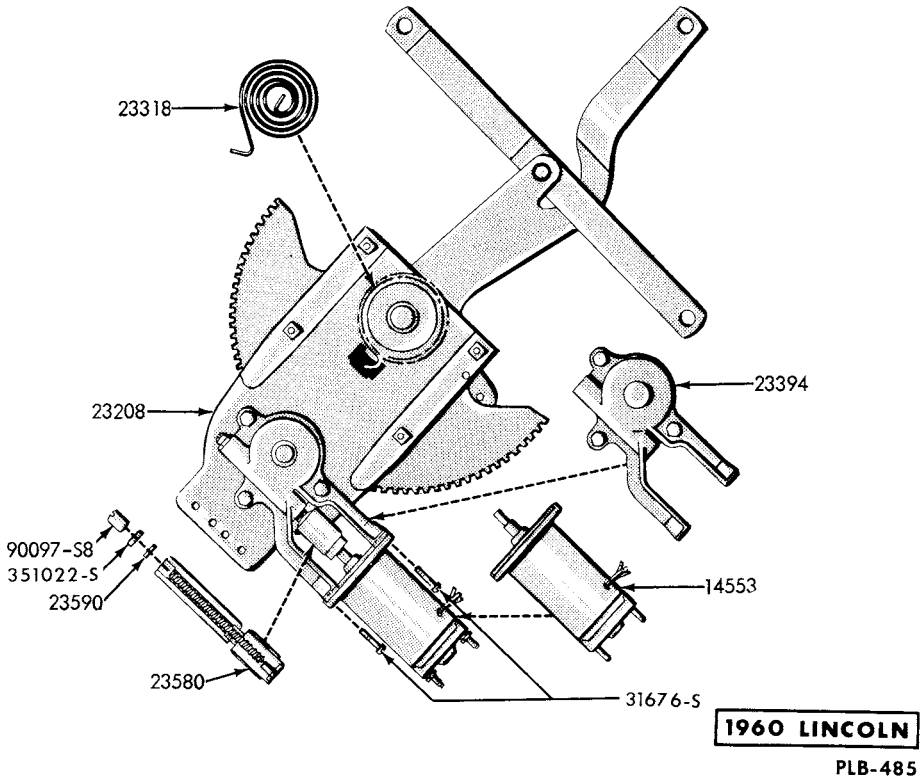

FRONT DOOR ELECTRICAL REGULATORS - TYPE B - DURA

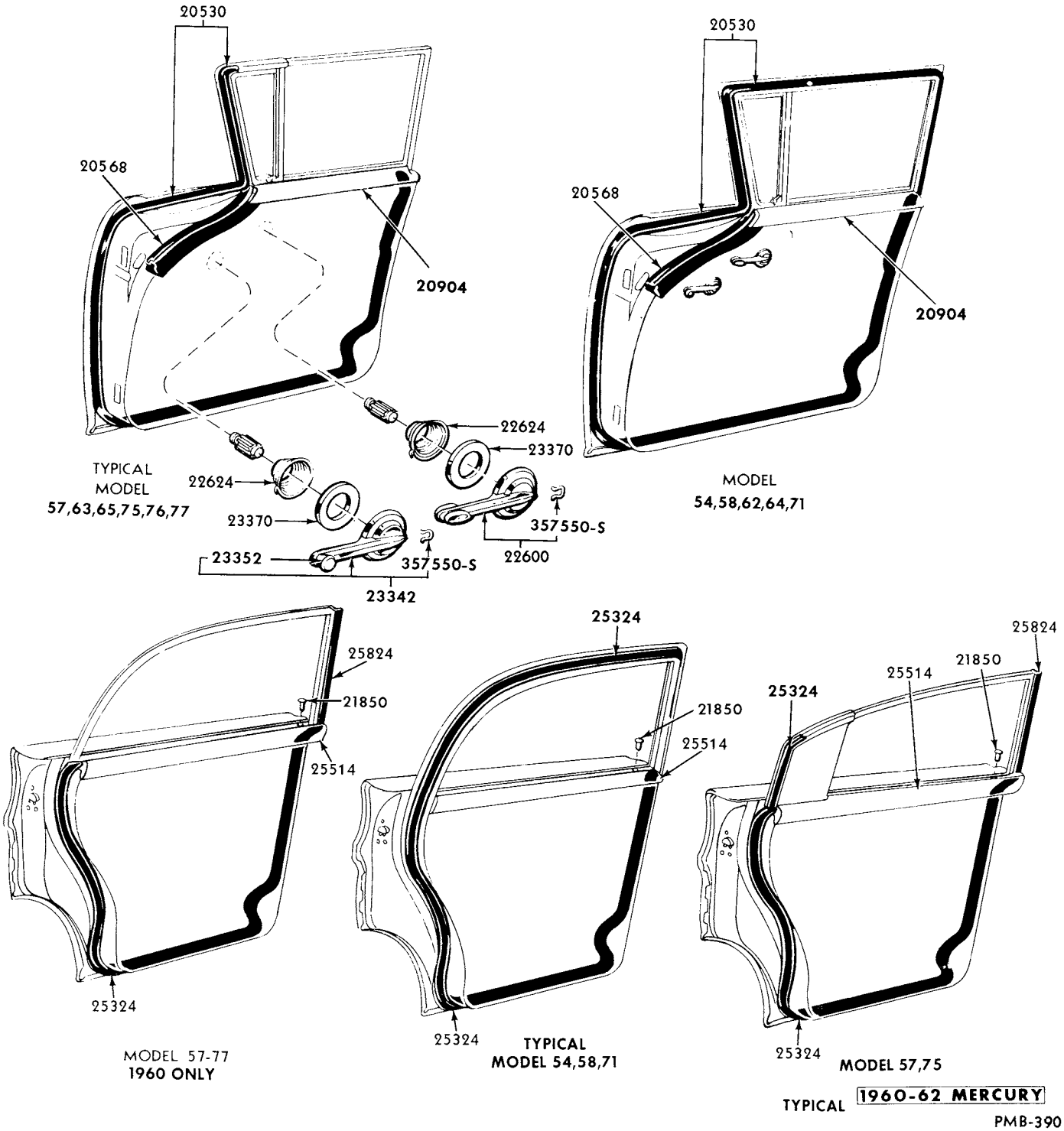

FRONT and REAR DOOR WEATHERSTRIPS and INSIDE HANDLES

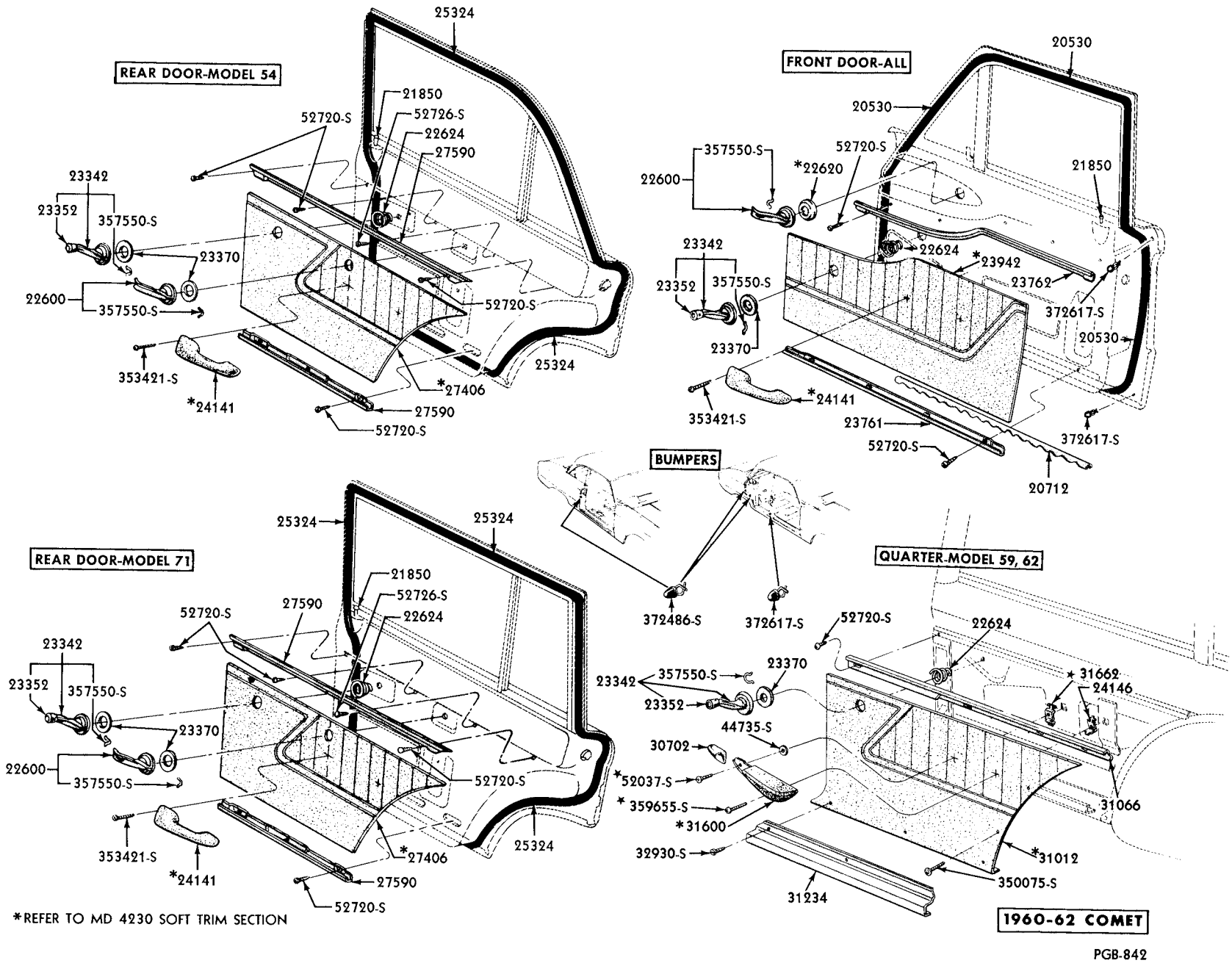

*REFER TO MD 4230 SOFT TRIM SECTION

DOORS and QUARTER TRIM PANELS, WEATHERSTRIPS, HANDLES and BUMPERS

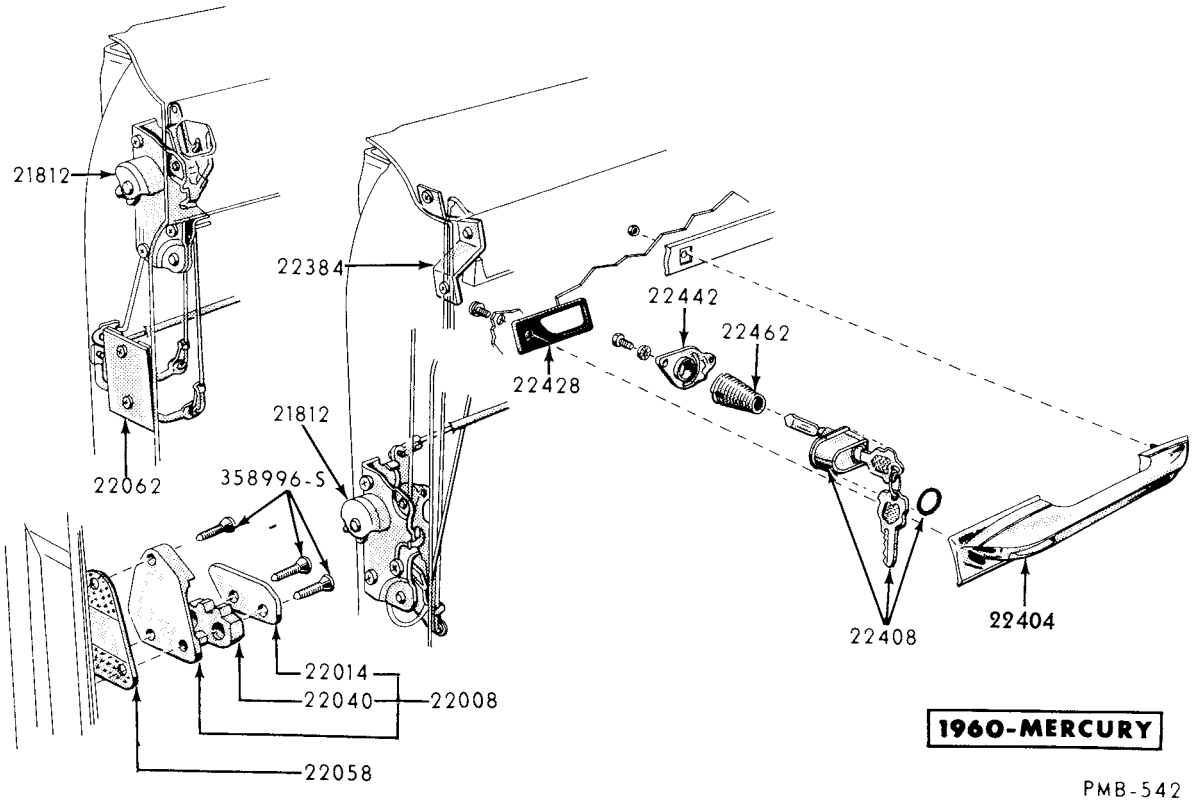

FRONT DOOR HANDLE and LOCK

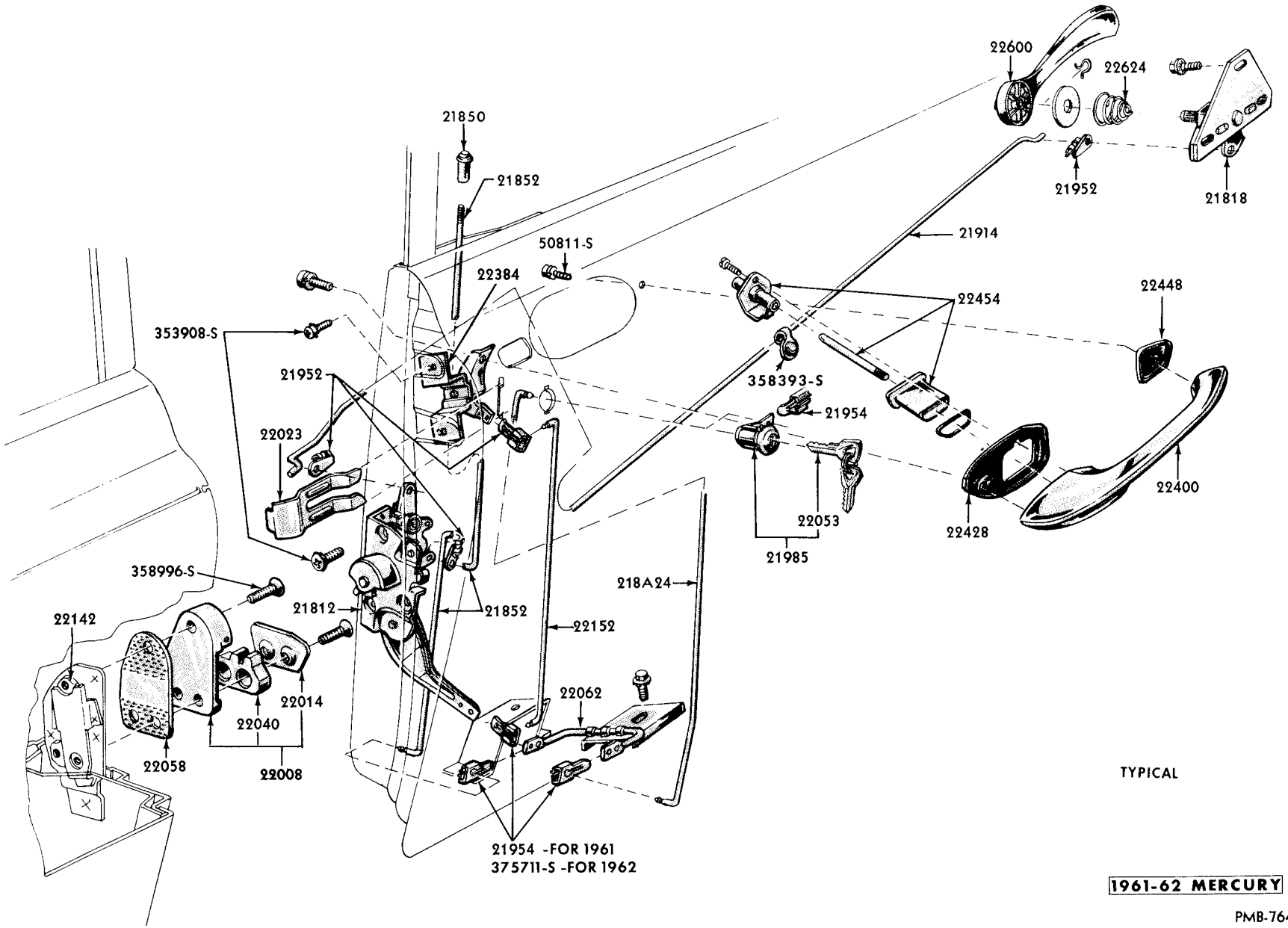

FRONT DOOR HANDLE and LOCK

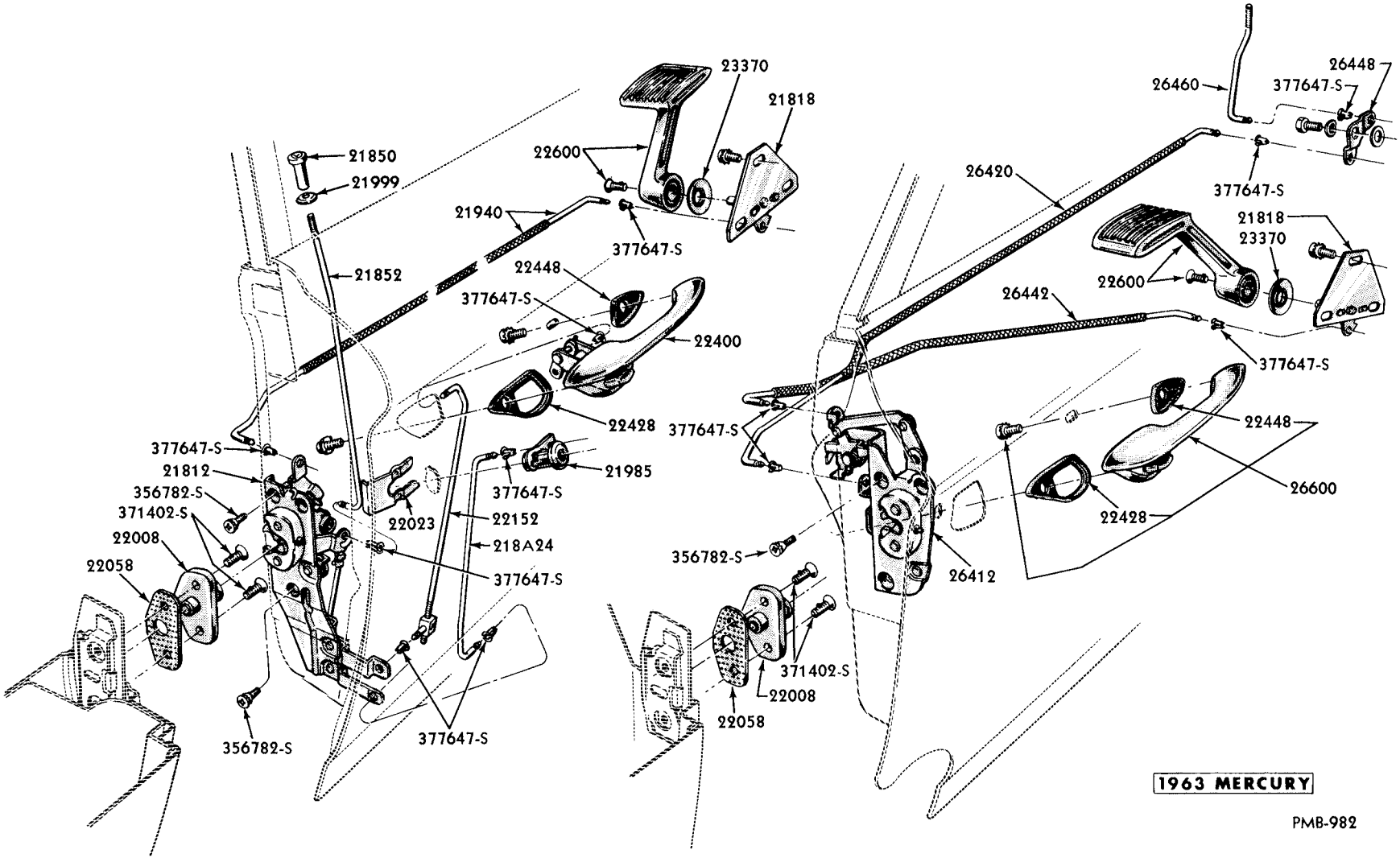

DOOR LOCK , HANDLES and CONTROLS

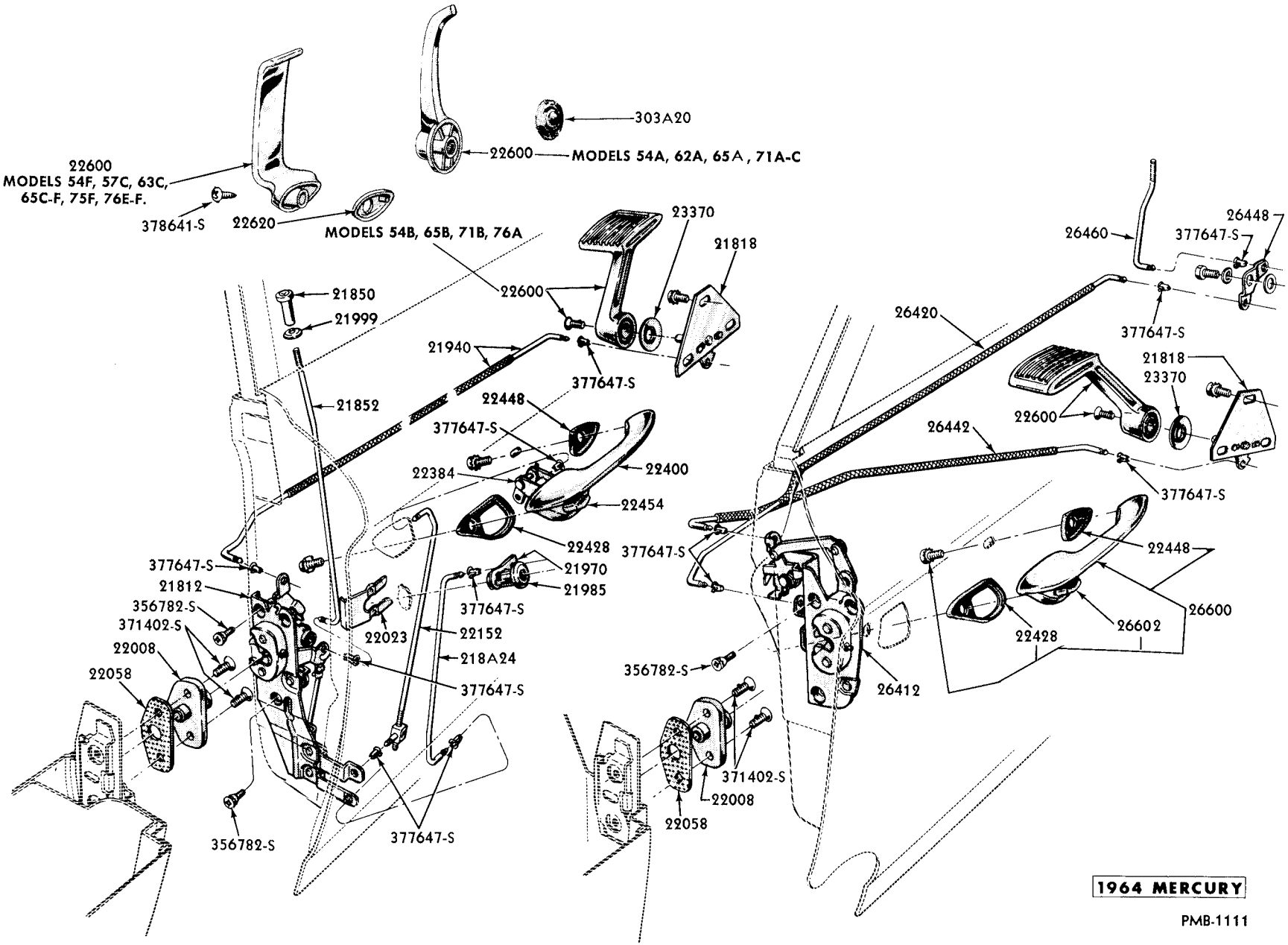

DOOR LOCK, HANDLES and RELATED PARTS

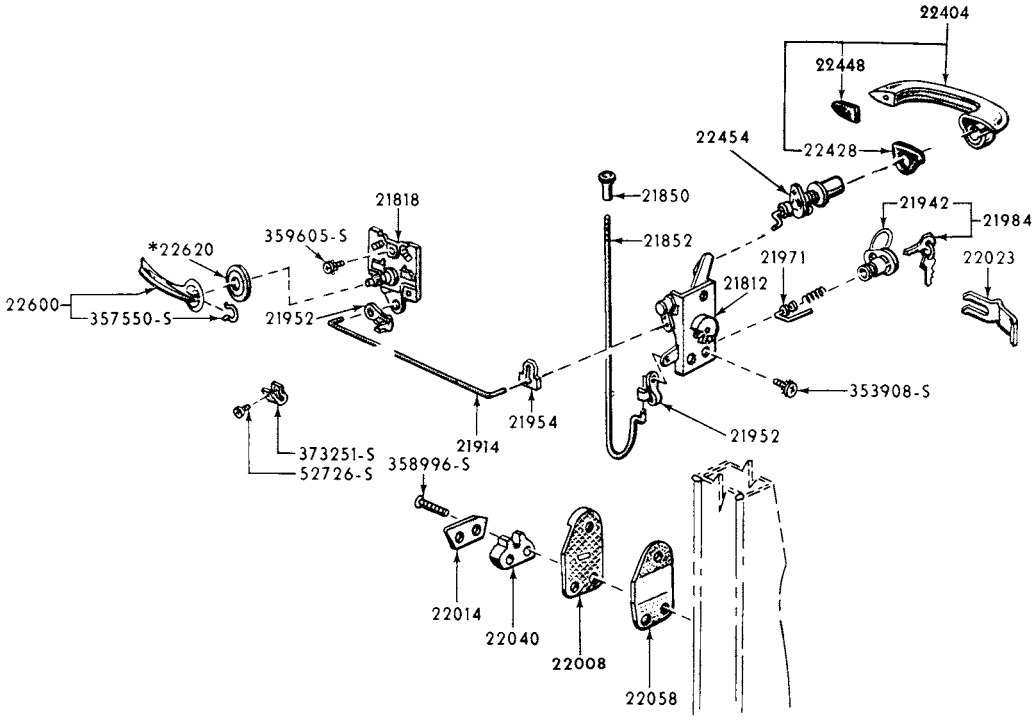

*REFER TO MD 4230 SOFT TRIM SECTION

1960-63 COMET
PGB-682

DOOR LOCK HANDLES and CONTROLS - MODELS 54, 59, 62, 71

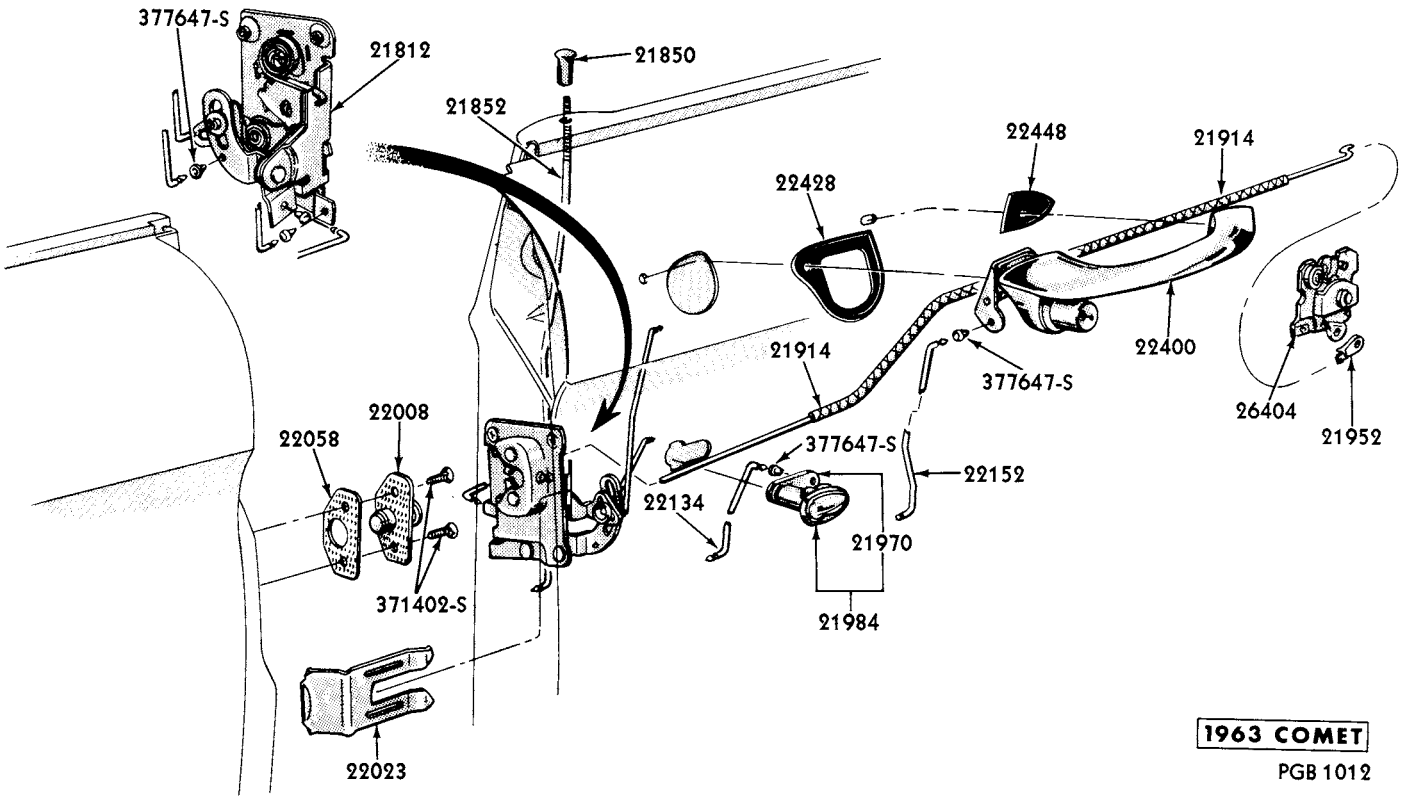

1963 COMET
PGB 1012

DOOR LOCK HANDLES and CONTROLS - MODELS 63, 76

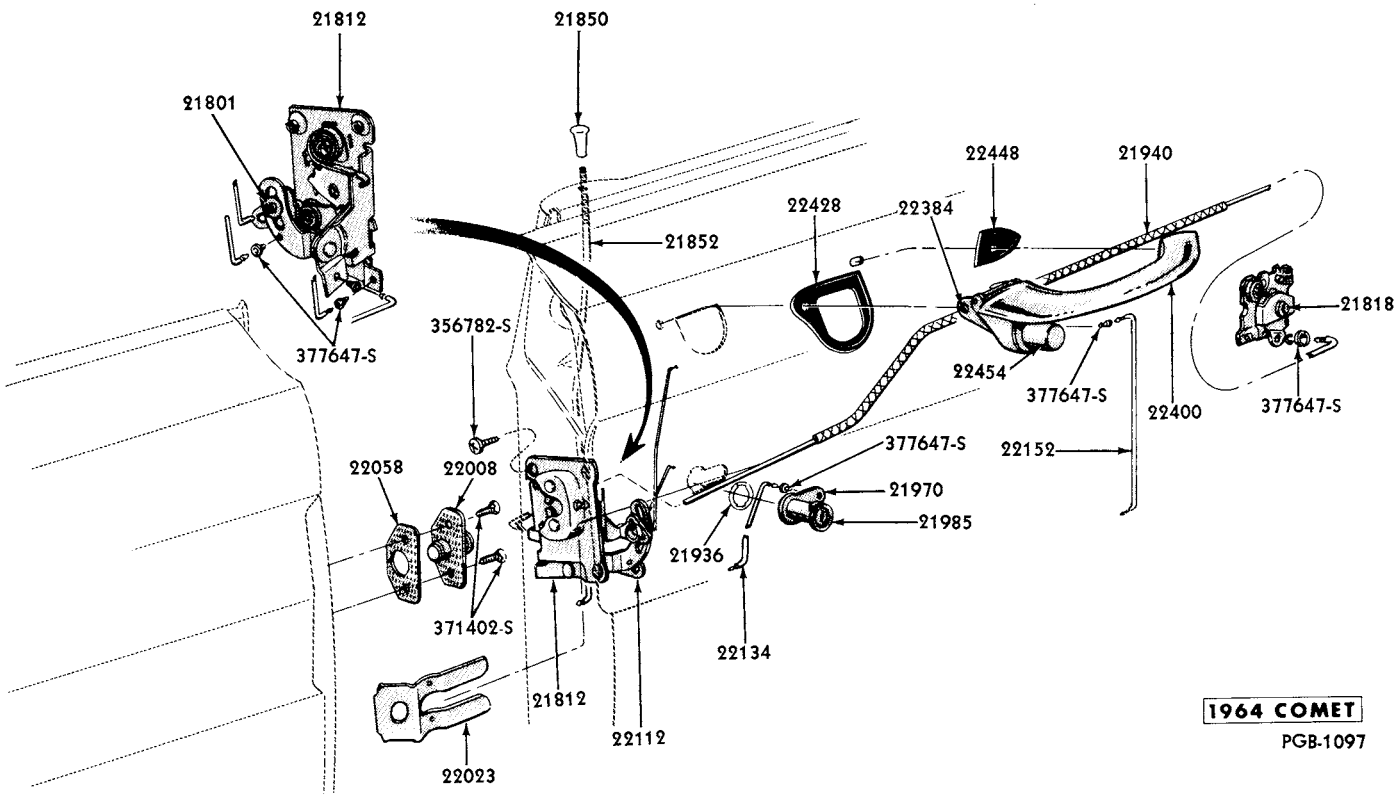

DOOR LOCK , HANDLES and CONTROLS

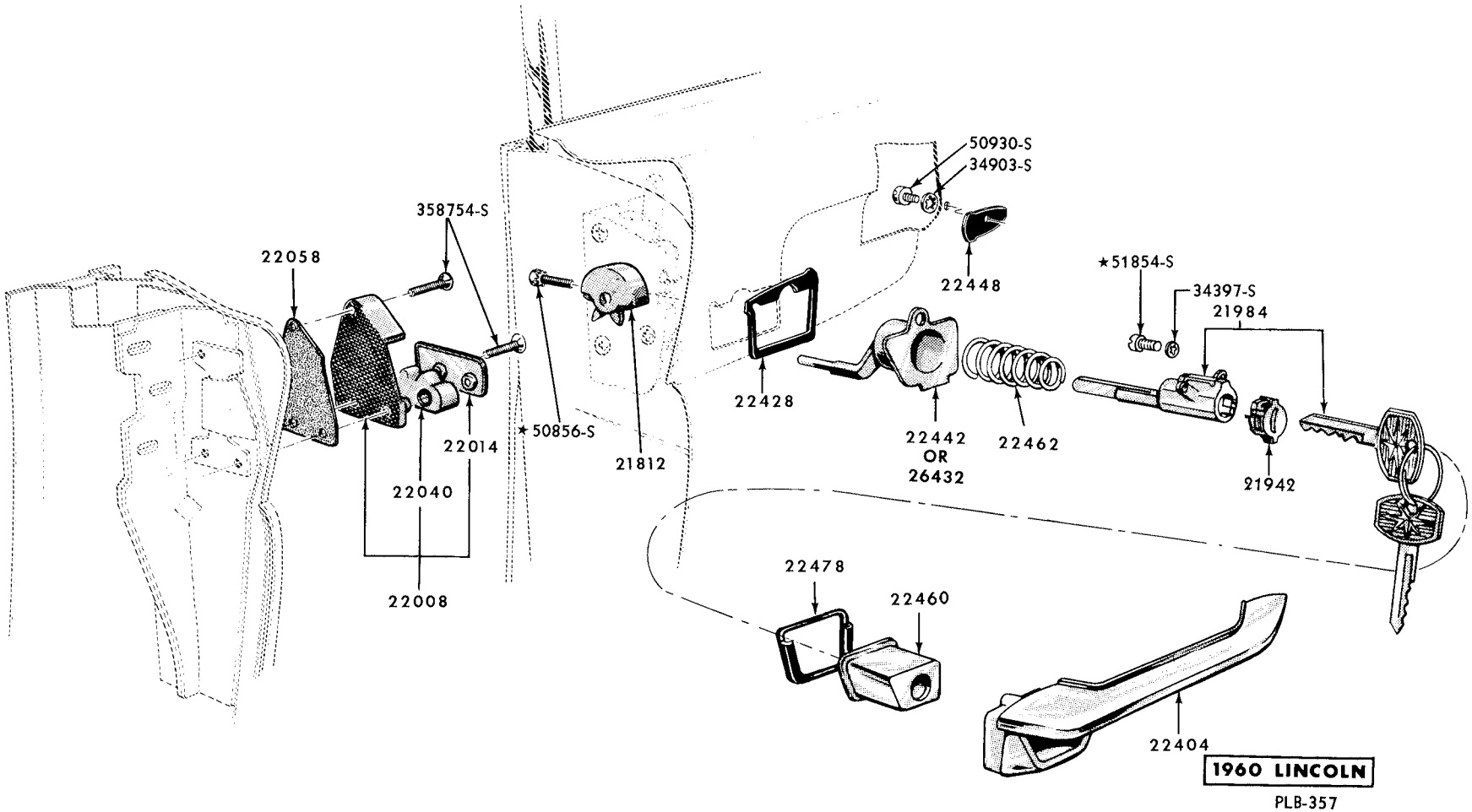

DOOR LOCK and HANDLE

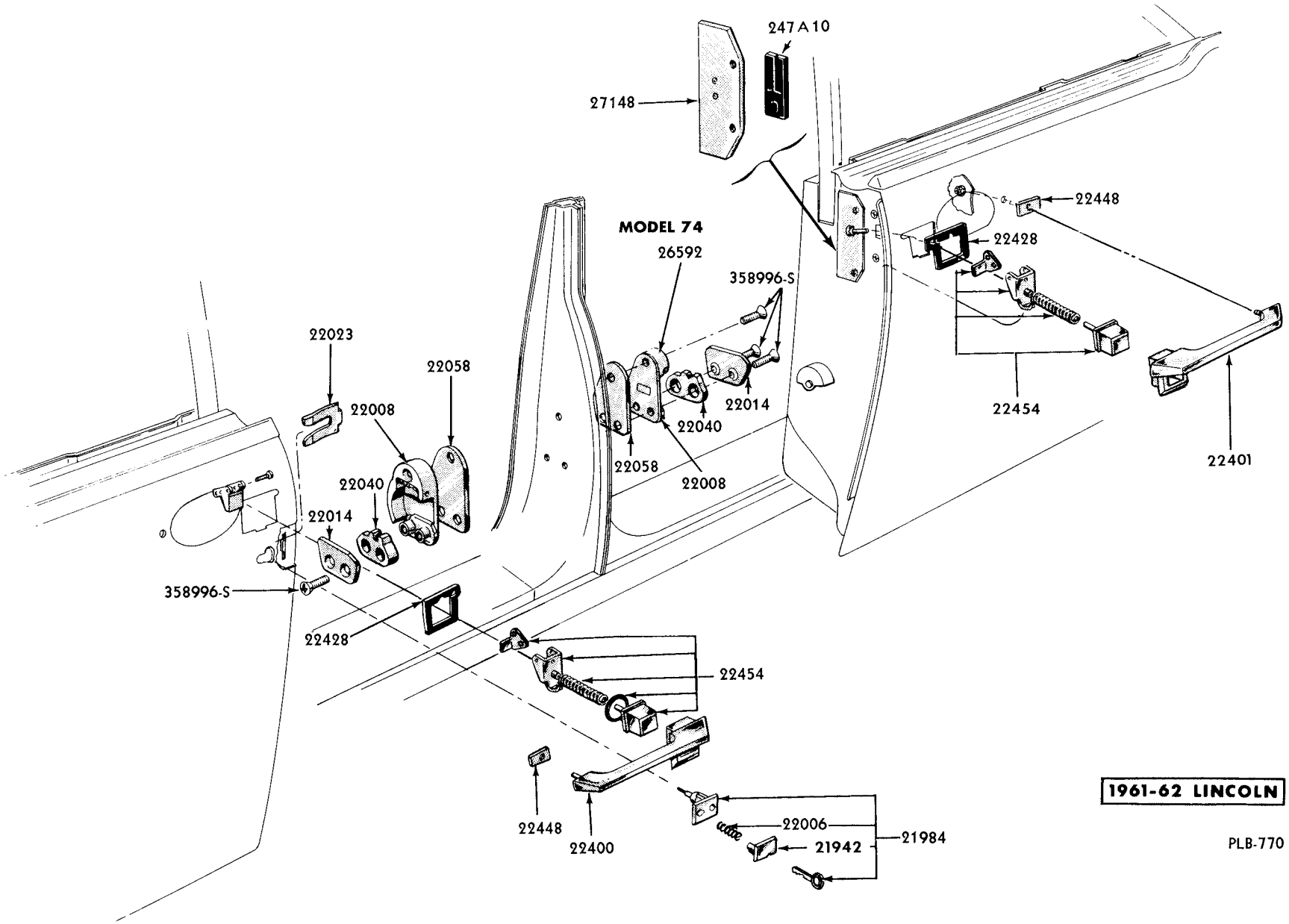

DOOR LOCK and HANDLE

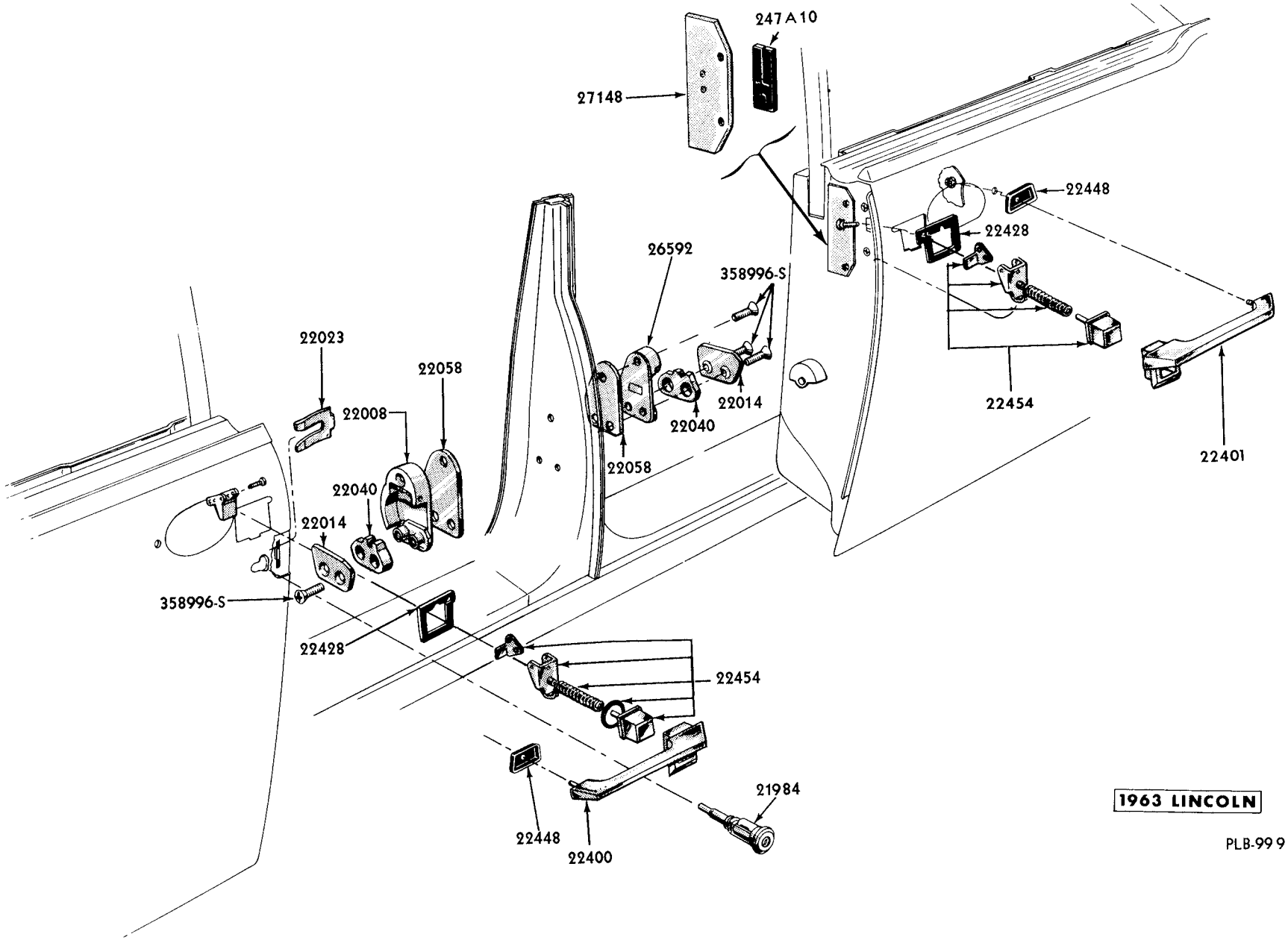

DOOR LOCK, HANDLES and CONTROLS

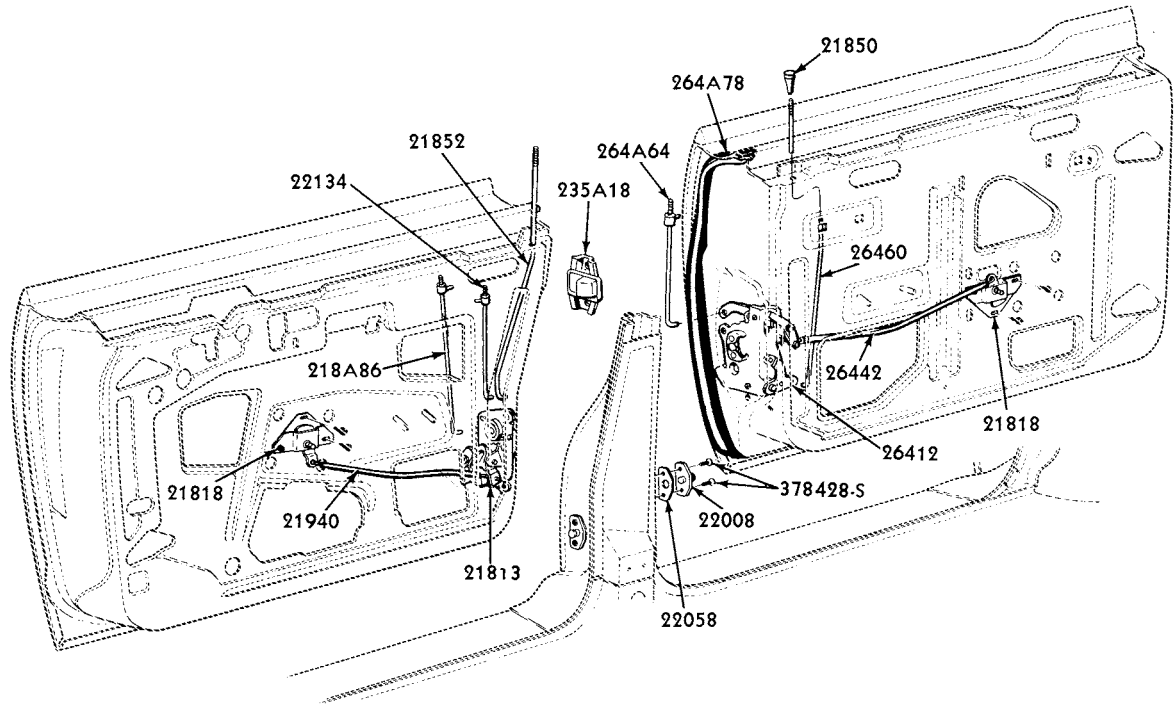

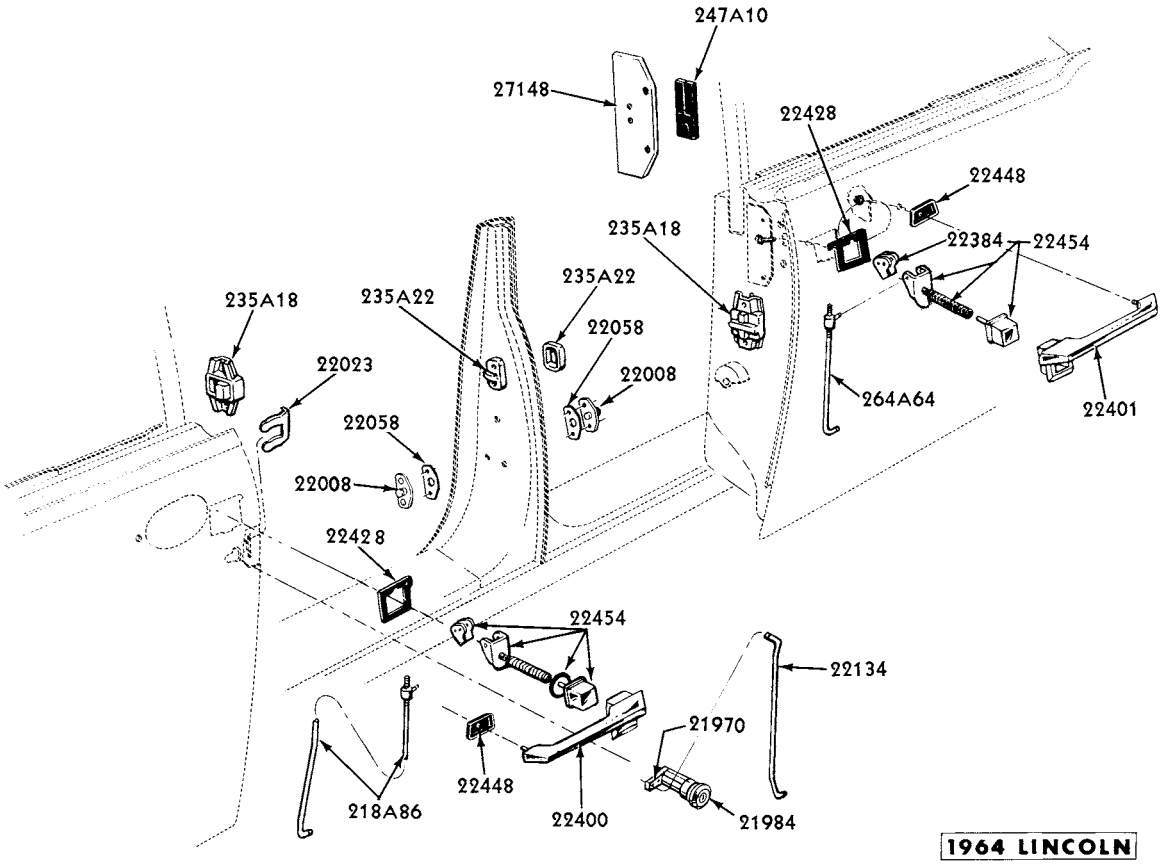

DOOR LOCK, HANDLES and RELATED PARTS

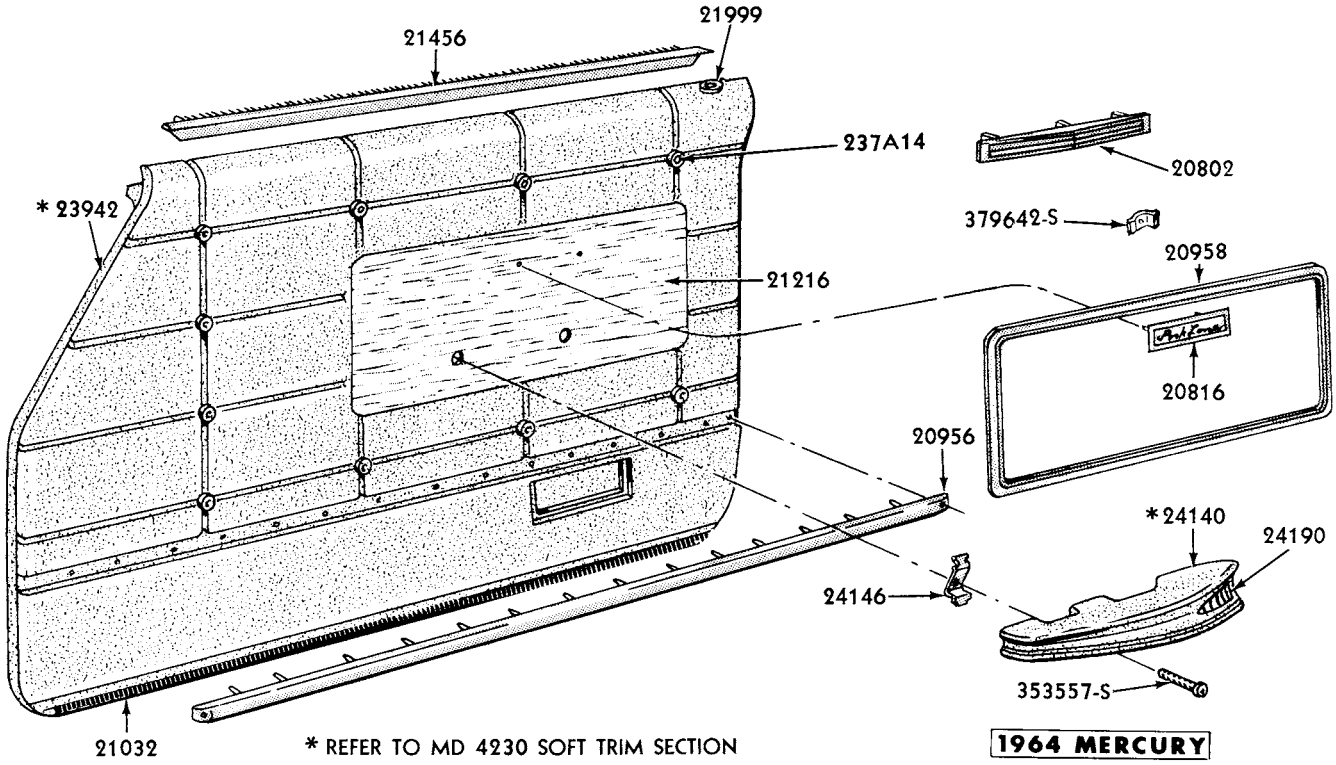

FRONT DOOR INSIDE PANEL and RELATED PARTS

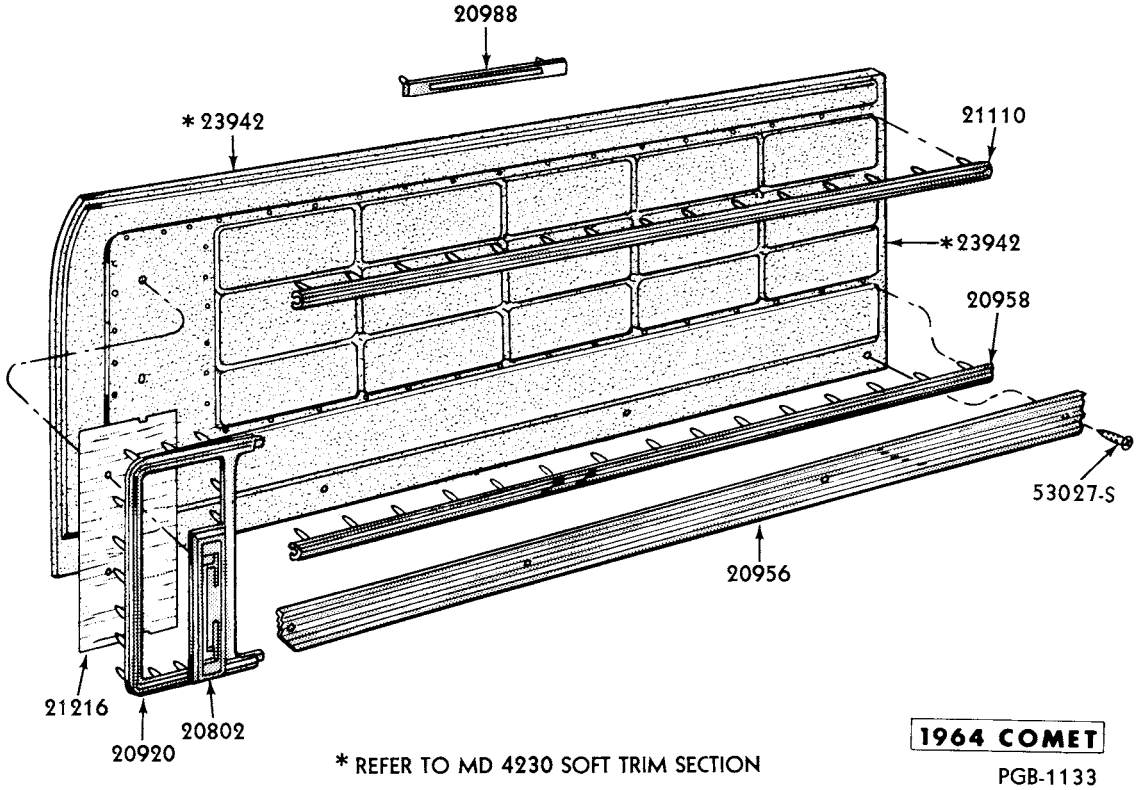

FRONT DOOR INSIDE PANEL and RELATED PARTS

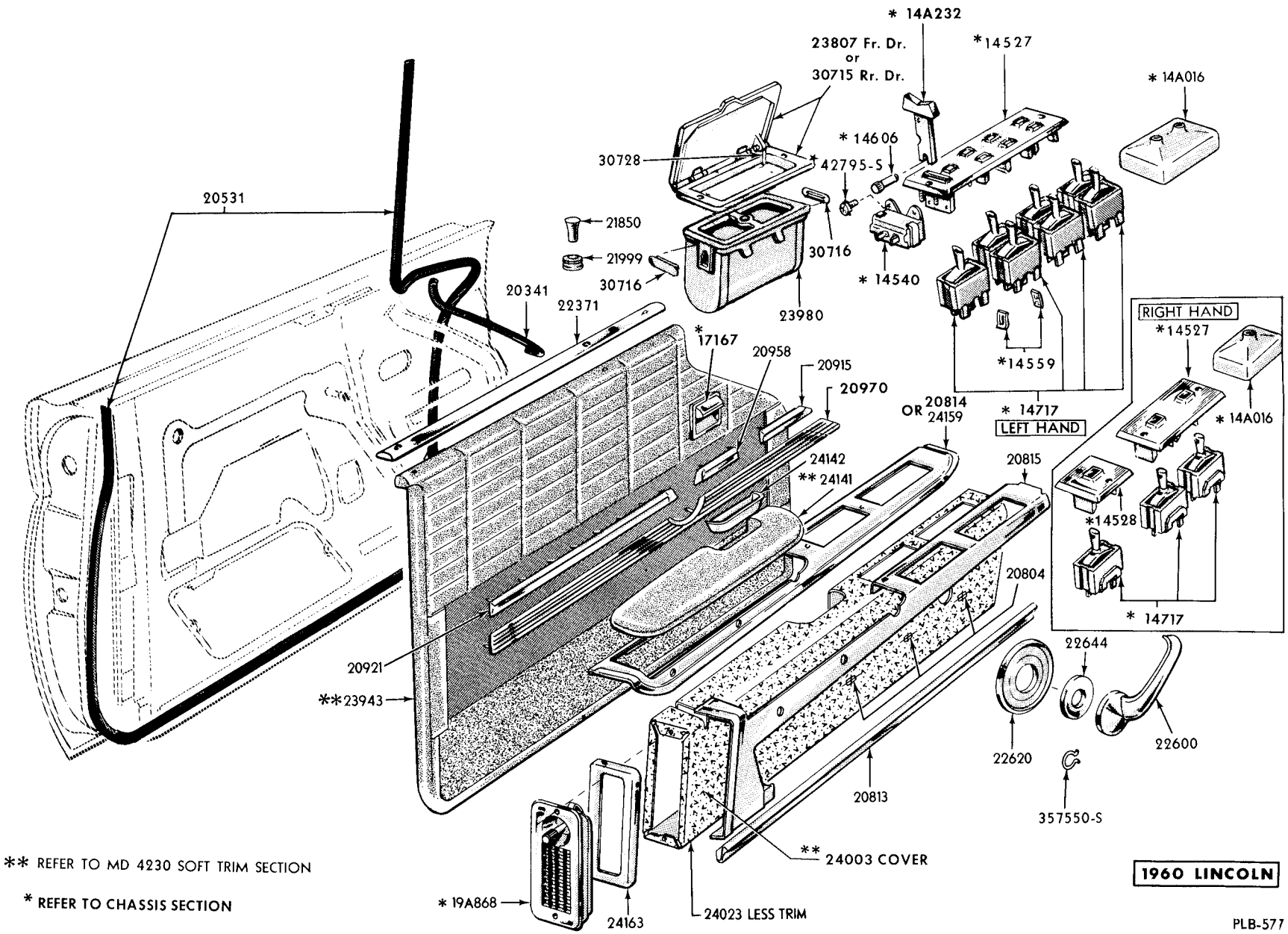

** REFER TO MD 4230 SOFT TRIM SECTION

* REFER TO CHASSIS SECTION

FRONT DOOR ARM REST and RELATED PARTS

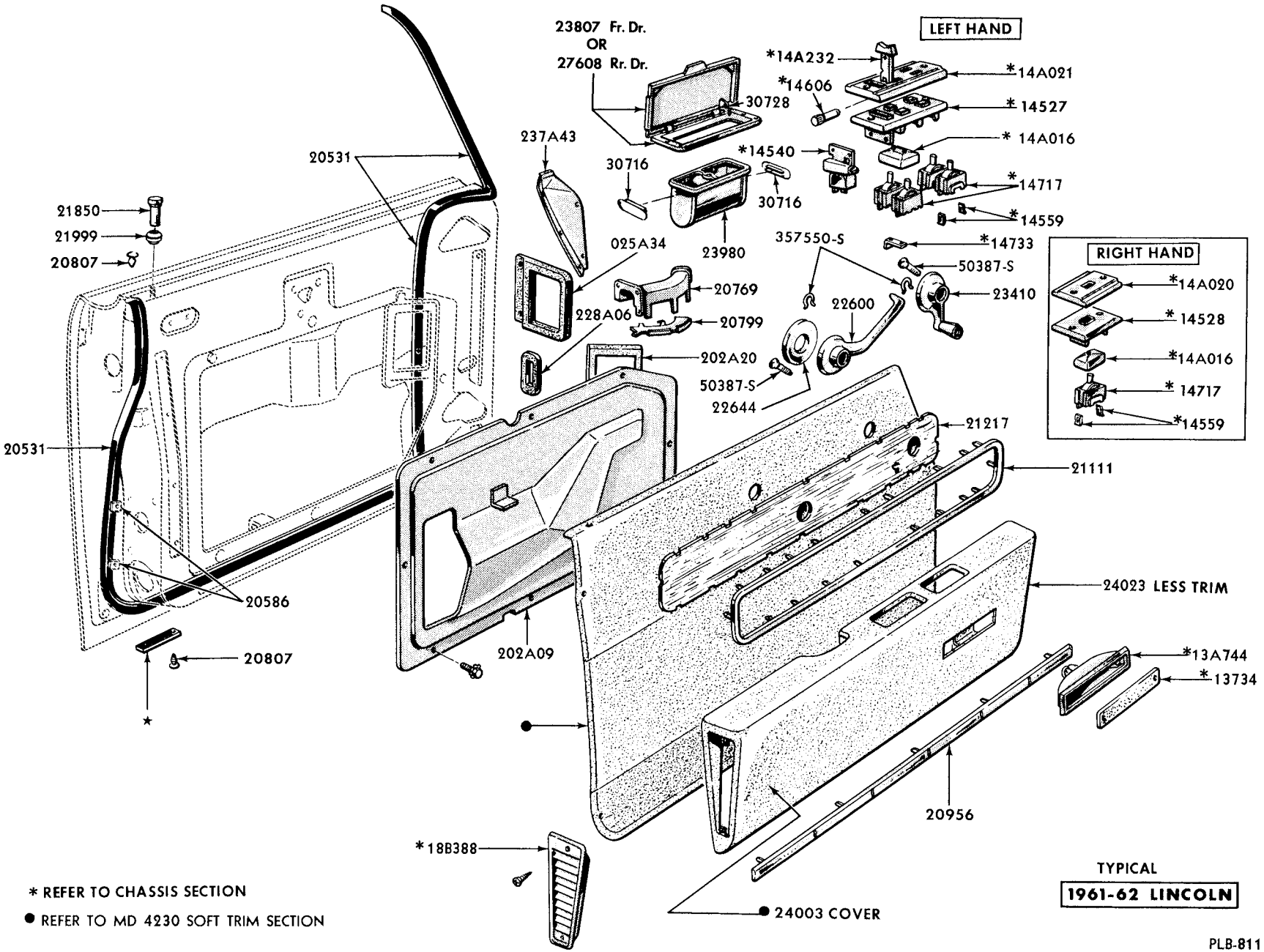

* REFER TO CHASSIS SECTION

● REFER TO MD 4230 SOFT TRIM SECTION

FRONT DOOR ARM REST and RELATED PARTS

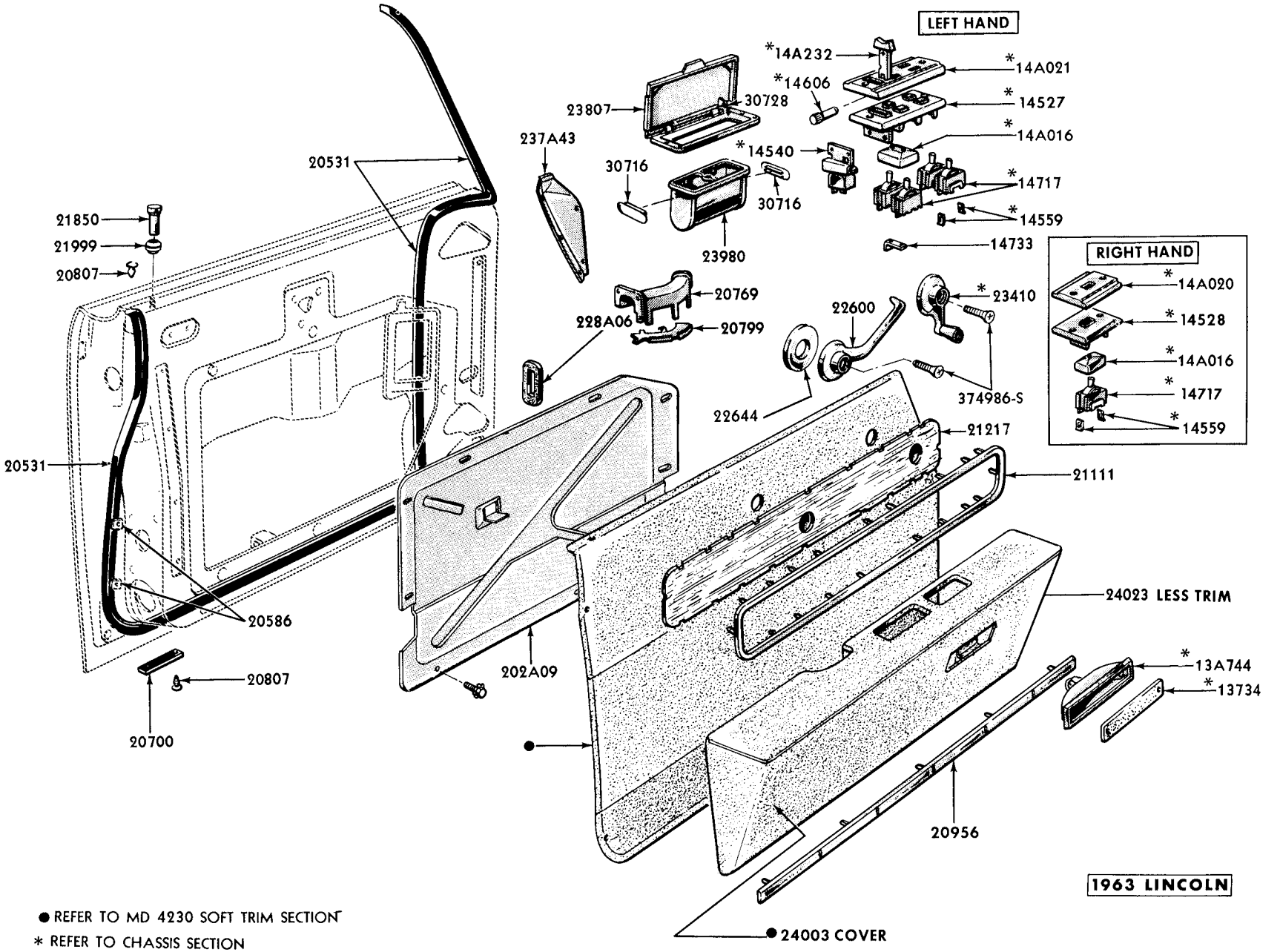

● REFER TO MD 4230 SOFT TRIM SECTION

* REFER TO CHASSIS SECTION

PLB-1006

FRONT DOOR INSIDE PANEL and RELATED PARTS

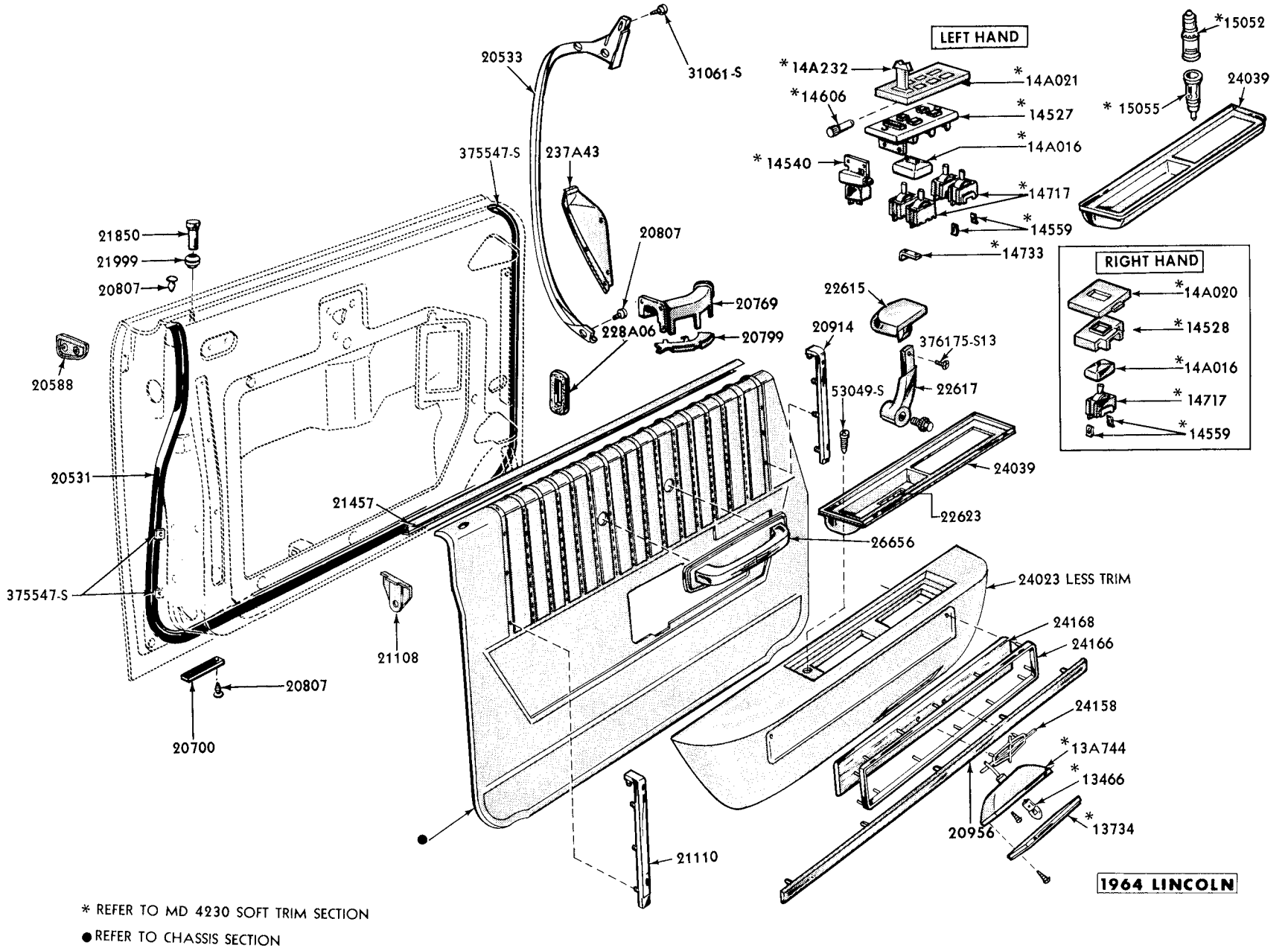

FRONT DOOR INSIDE PANEL and RELATED PARTS

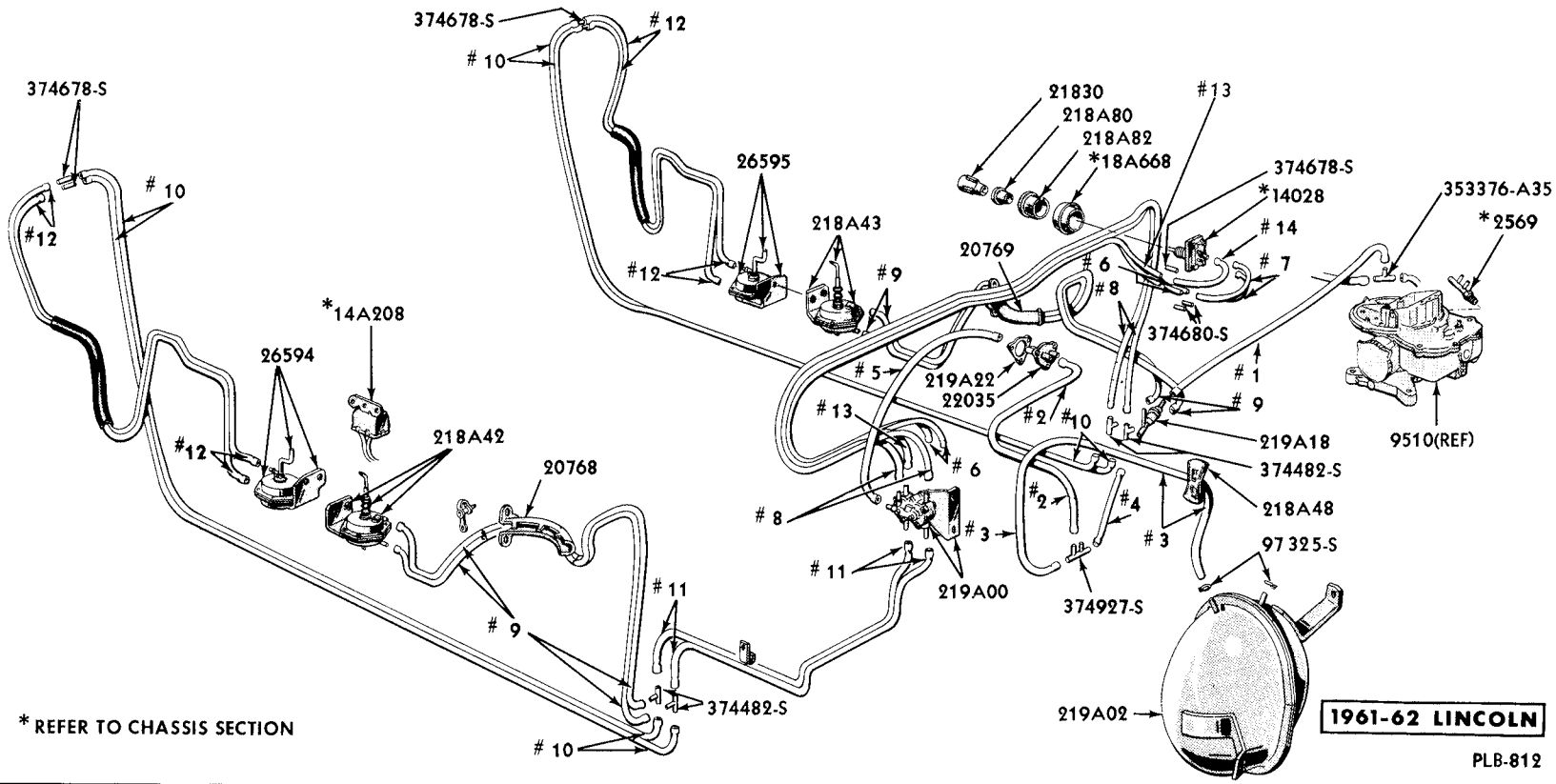

PART NUMBER	QUANTITY	LENGTH
#1. NOT SERVICED CUT FROM B7MY-17A605-B	1	17″ LONG
#2. NOT SERVICED CUT FROM B7MY-17A605-B	1	15″ LONG
#3. NOT SERVICED CUT FROM B7MY-17A605-B	1	54″ LONG
#4. NOT SERVICED CUT FROM B7MY-17A605-B	1	6″ LONG
#5. NOT SERVICED CUT FROM B7MY-17A605-B	1	9″ LONG
#6. NOT SERVICED CUT FROM COMY-17A605-B	2	48″ LONG
#7. NOT SERVICED CUT FROM COMY-17A605-B	2	8″ LONG

PART NUMBER	QUANTITY	LENGTH
#8. NOT SERVICED CUT FROM B7MY-17A605-B	2	78″ LONG
#9. NOT SERVICED CUT FROM COKY-17A605-A	4	65″ LONG
#10. NOT SERVICED CUT FROM COKY-17A605-A	4	108″ LONG
#11. NOT SERVICED CUT FROM B7MY-17A605-A	2	35″ LONG
#12. NOT SERVICED CUT FROM COKY-17A605-A	4	66″ LONG
#13. NOT SERVICED CUT FROM COKY-17A605-A	1	49″ LONG
#14. NOT SERVICED CUT FROM COKY-17A605-A	1	8″ LONG

VACUUM DOOR LOCK CONTROLS

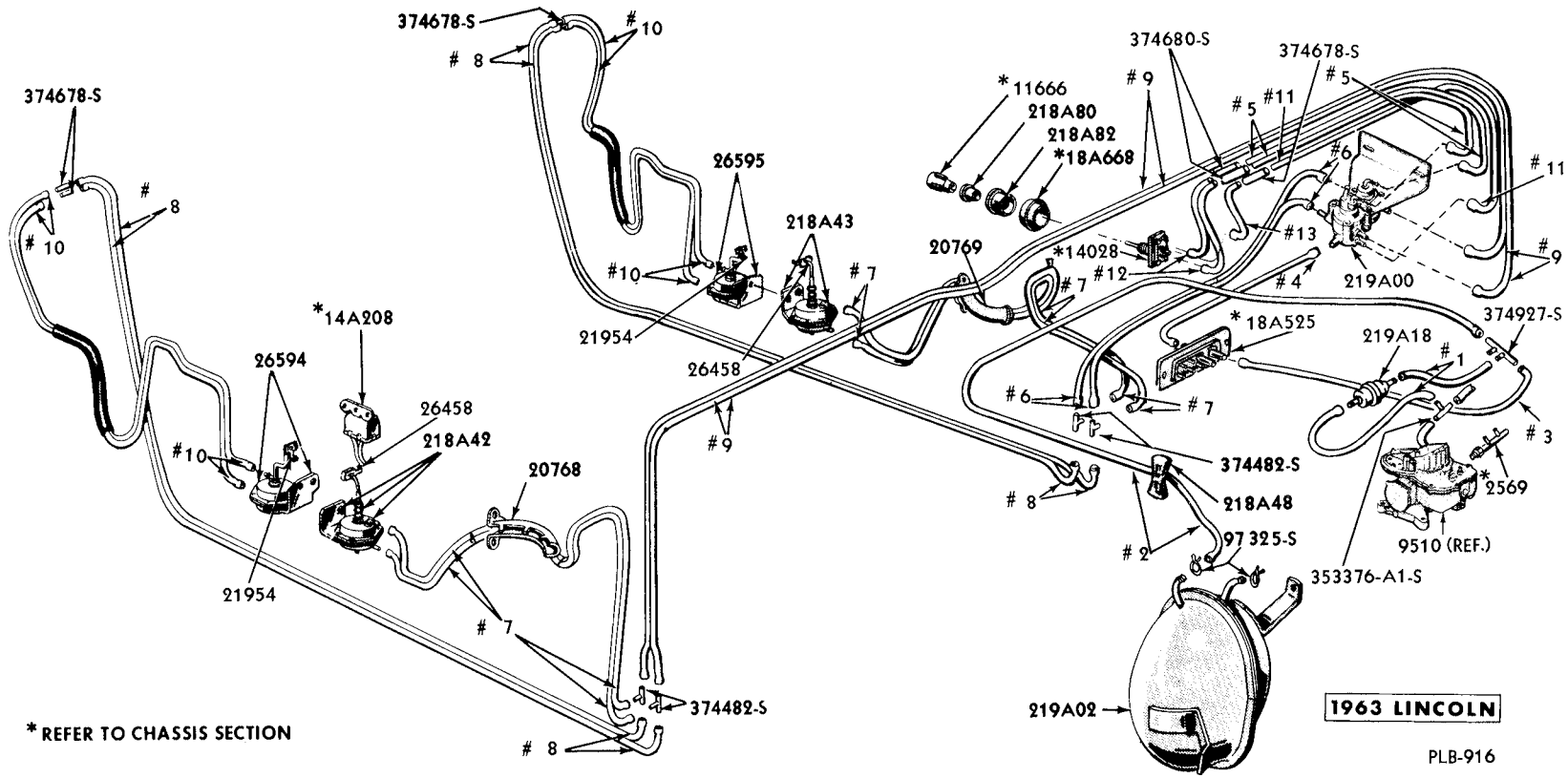

PART NUMBER	QUANTITY	LENGTH
#1. NOT SERVICED CUT FROM B7MY-17A605-B	2	6" LONG
#2. NOT SERVICED CUT FROM B7MY-17A605-B	1	79" LONG
#3. NOT SERVICED CUT FROM B7MY-17A605-B	1	11" LONG
#4. NOT SERVICED CUT FROM B7MY-17A605-B	1	45" LONG
#5. NOT SERVICED CUT FROM COMY-17A605-B	2	18" LONG
#6. NOT SERVICED CUT FROM B7MY-17A605-B	2	20" LONG
#7. NOT SERVICED CUT FROM COKY-17A605-A	4	65" LONG

PART NUMBER	QUANTITY	LENGTH
#8. NOT SERVICED CUT FROM COKY-17A605-A	4	108" LONG
#9. NOT SERVICED CUT FROM B7MY-17A605-B	2	87" LONG
#10. NOT SERVICED CUT FROM COKY-17A605-A	4	66" LONG
#11. NOT SERVICED CUT FROM COKY-17A605-A	1	18" LONG
#12. NOT SERVICED CUT FROM COMY-17A605-B	2	8" LONG
#13. NOT SERVICED CUT FROM COKY-17A605-A	1	8" LONG

VACUUM DOOR LOCK CONTROL

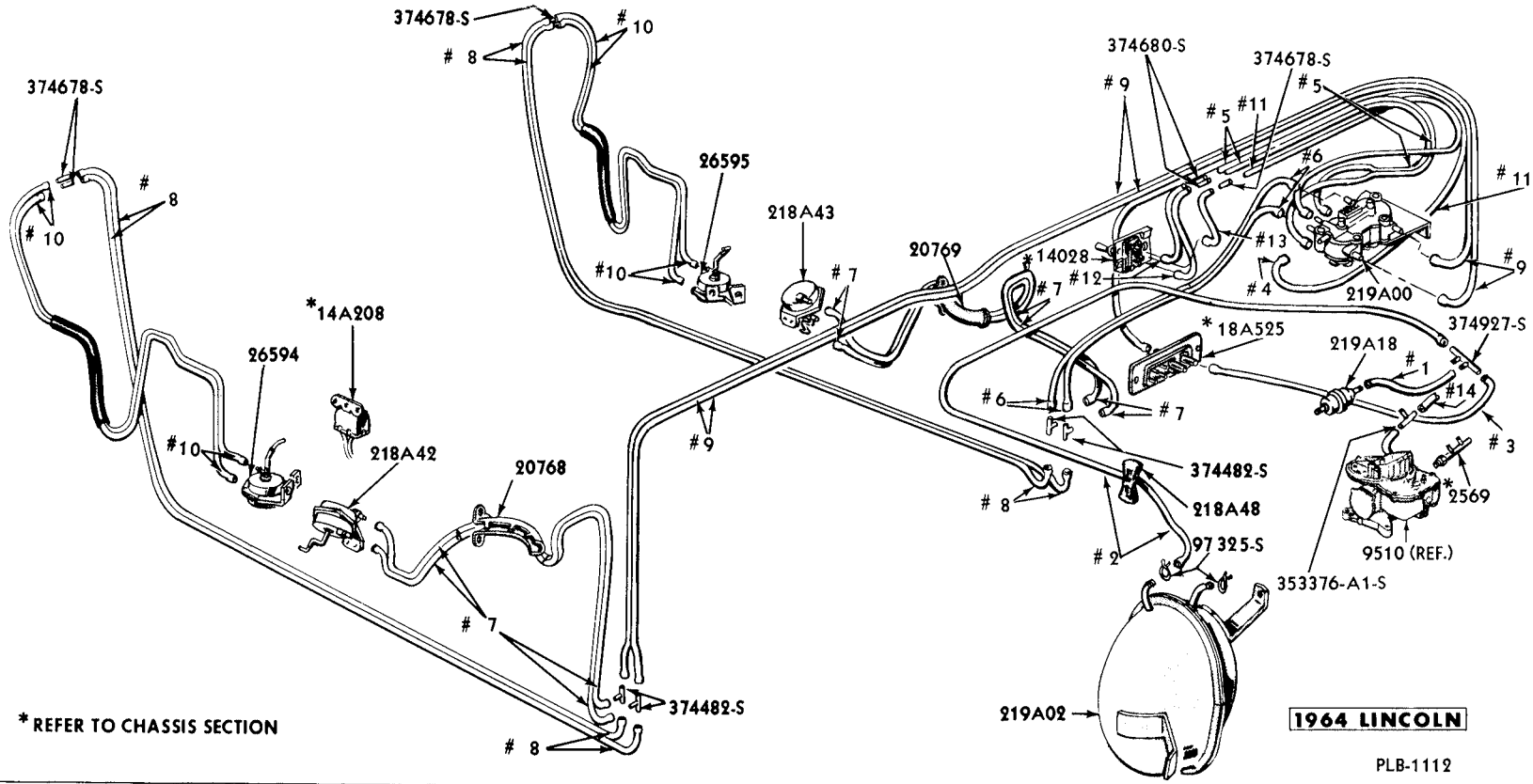

* REFER TO CHASSIS SECTION

	PART NUMBER	QUANTITY	LENGTH
#1.	NOT SERVICED CUT FROM B7MY-17A605-B	1	6" LONG
#2.	NOT SERVICED CUT FROM B7MY-17A605-B	1	79" LONG
#3.	NOT SERVICED CUT FROM B7MY-17A605-B	1	11" LONG
#4.	NOT SERVICED CUT FROM B7MY-17A605-B	1	32" LONG
#5.	NOT SERVICED CUT FROM COMY-17A605-B	2	34" LONG
#6.	NOT SERVICED CUT FROM B7MY-17A605-B	2	13" LONG
#7.	NOT SERVICED CUT FROM COKY-17A605-A	4	59" LONG

	PART NUMBER	QUANTITY	LENGTH
#8.	NOT SERVICED CUT FROM COKY-17A605-A	4	106" LONG
#9.	NOT SERVICED CUT FROM B7MY-17A605-B	2	74" LONG
#10.	NOT SERVICED CUT FROM COKY-17A605-A	4	66" LONG
#11.	NOT SERVICED CUT FROM COKY-17A605-A	1	31" LONG
#12.	NOT SERVICED CUT FROM COMY-17A605-B	2	8" LONG
#13.	NOT SERVICED CUT FROM COKY-17A605-A	1	8" LONG
#14.	NOT SERVICED CUT FROM B7MY17A605-B	1	2" LONG

VACUUM DOOR LOCK CONTROLS

GROUP AND PART NUMBER	DESCRIPTION, SIZE, ETC.		NO. REQ'D	MODEL OR ENGINE CUBIC INCH DISPLACEMENT	VEHICLE CODE	YEAR 19____
20124-5	DOOR (FRONT) LESS HINGES					
COMB 5720124-C	R.H.	(b)	1	57, 58, 77	A	60
COMB 5720125-C	L.H.	(b)	1	57, 58, 77	A	60
COMB 6320124-D	R.H.		1	63, 64, 76	A	60
COMB 6320125-D	L.H.		1	63, 64, 76	A	60
C1AB 5420124-L	R.H.	(a)	1	54, 58, 71, 75	A	61
C1AB 5420125-L	L.H.	(a)	1	54, 58, 71, 75	A	61
C1AB 6220124-L	R.H.		1	62, 64, 65,76	A	61
C1AB 6220125-L	L.H.		1	62, 64, 65, 76	A	61
C2AZ 5420124-B	R.H. - with frame	(a)	1	54	A	62
C2AZ 5420125-B	L.H. - with frame	(a)	1	54	A	62
C2AZ 6220124-A	R.H. - with frame		1	62	A	62
C2AZ 6220125-A	L.H. - with frame		1	62	A	62
C2AZ 6520124-A	R.H. - less frame		1	65,76	A	62
C2AZ 6520125-A	L.H. - less frame		1	65,76	A	62
C2AZ 7120124-B	R.H. - with frame	(a)	1	71	A	62
C2AZ 7120125-B	L.H. - with frame	(a)	1	71	A	62
C2AZ 7520124-B	R.H. - less frame	(a)	1	75	A	62
C2AZ 7520125-B	L.H. - less frame	(a)	1	75	A	62
C3AZ 7120124-A	R.H. - with frame	(a)	1	71	A	63
C3AZ 7120125-A	L.H. - with frame	(a)	1	71	A	63
C3AZ 5420124-A	R.H. - with frame	(a)	1	54	A	63/64
C3AZ 5420125-A	L.H. - with frame	(a)	1	54	A	63/64
C3AZ 6220124-A	R.H. - with frame		1	62	A	63/64
C3AZ 6220125-A	L.H. - with frame		1	62	A	63/64
C4MY 6320124-A	R.H. - less frame		1	63,65,76	A	63/64
C4MY 6320125-A	L.H. - less frame		1	63,65,76	A	63/64
C3AZ 7520124-A	R.H. - less frame	(a)	1	57,75	A	63/64
C3AZ 7520125-A	L.H. - less frame	(a)	1	57,75	A	63/64
C4MY 7120124-A	R.H. - with frame		1	71	A	64
C4MY 7120125-A	L.H. - with frame		1	71	A	64
C2YY 5420124-A	R.H. - with frame	(a)	1	54	B	62
C2YY 5420125-A	L.H. - with frame	(a)	1	54	B	62
C2YY 6220124-A	R.H. - with frame	(a, c)	1	62	B	62
C2YY 6220125-A	L.H. - with frame	(a, c)	1	62	B	62
C3YY 5420124-A	R.H. - with frame	(a, c)	1	54, 71	B	63
C3YY 5420125-A	L.H. - with frame	(a, c)	1	54, 71	B	63
C3YY 6220124-A	R.H. - with frame	(a, c)	1	62	B	63
C3YY 6220125-A	L.H. - with frame	(a, c)	1	62	B	63
C3YY 6520124-A	R.H. - less frame	(a, c)	1	65	B	63
C3YY 6520125-A	L.H. - less frame	(a, c)	1	65	B	63
CODZ 5820124-Z	R.H. - with frame	(a)	1	54, 71	C	60/63
CODZ 5820125-Z	L.H. - with frame	(a)	1	54, 71	C	60/63
C2DZ 6420124-A	R.H. - with frame	(a)	1	59, 62	C	60/63
C2DZ 6420125-A	L.H. - with frame	(a)	1	59, 62	C	60/63
C3DZ 7620124-B	R.H.		1	63, 76	C	63
C3DZ 7620125-B	L.H.		1	63, 76	C	63
C4DZ 5420124-A	R.H. - with frame		1	54, 71	C	64
C4DZ 5420125-A	L.H. - with frame		1	54, 71	C	64
C4DZ 6220124-A	R.H. - with frame		1	62	C	64
C4DZ 6220125-A	L.H. - with frame		1	62	C	64
C4DZ 6320124-A	R.H. - less frame		1	63, 76	C	64
C4DZ 6320125-B	L.H. - less frame		1	63, 76	C	64
COLB 5720124-B	R.H.		1	53, 54, 57, 75	D	60
COLB 5720125-B	L.H.		1	53, 54, 57, 75	D	60
COLB 6320124-B	R.H.		1	63, 65, 68	D	60
COLB 6320125-B	L.H.		1	63, 65, 68	D	60

CONTINUED ON NEXT PAGE

GROUP AND PART NUMBER	DESCRIPTION, SIZE, ETC.	NO. REQ'D	MODEL OR ENGINE CUBIC INCH DISPLACEMENT	VEHICLE CODE	YEAR 19____
20124-5	DOOR (FRONT) LESS HINGES (CONTINUED)				
C2VY 5720124-A	R.H. (d)	1	All	D	61/62
C2VY 5720125-A	L.H. (d)	1	All	D	61/62
C3VY 5720124-A	R.H. (d)	1	All	D	63
C3VY 5720125-A	L.H. (d)	1	All	D	63
C4VY 5320124-A	R.H. (e)	1	53	D	64
C4VY 5320125-A	L.H. (e)	1	53	D	64
C4VY 7420124-A	R.H.	1	74	D	64
C4VY 7420125-A	L.H.	1	74	D	64
C1VB 5723037-A	Bumper-rubber	AR	d, e		
C2OZ 6223030-A	Bumper - rubber	1	c		
357549-S	Bumper - rubber	2	b		
372617-S	Bumper - rubber	1or2	a, d		
20130	KIT (DOOR POCKET)				
C3RZ 6220130-A	BLACK	AR	All	A B C D	63/64
20200-1	PANEL (FRONT DOOR OUTSIDE)				
COMB 5720200-B	R.H. - skin	1	57, 58, 77	A	60
COMB 5720201-B	L.H. - skin	1	57, 58, 77	A	60
COMB 6320200-C	R.H. - skin	1	63, 64, 76	A	60
COMB 6320201-C	L.H. - skin	1	63, 64, 76	A	60
C2AZ 5420200-A	R.H.	1	54,58,71,75	A	61/62
C2AZ 5420201-A	L.H.	1	54,58,71,75	A	61/62
C2AZ 6220200-A	R.H.	1	62,64,65,76	A	61/62
C2AZ 6220201-A	L.H.	1	62,64,65,76	A	61/62
C3AZ 6520200-A	R.H. - skin	1	62,63,65,76	A	63
C3AZ 6520201-A	L.H. - skin	1	62,63,65,76	A	63
C4MY 7120200-A	R.H. - skin	1	54,57,71,75	A	63/64
C4MY 7120201-A	L.H. - skin	1	54,57,71,75	A	63/64
C4MY 6220200-A	R.H. - skin	1	62,63,65,76	A	64
C4MY 6220201-A	L.H. - skin	1	62,63,65,76	A	64
C3YY 5420200-A	R.H. - skin	1	54, 71	B	62/63
C3YY 5420201-A	L.H. - skin	1	54, 71	B	62/63
C3YY 6520200-A	R.H. - skin	1	62, 65	B	62/63
C3YY 6520201-A	L.H. - skin	1	62, 65	B	62/63
CODZ 5820200-E	R.H. - skin	1	54, 71	C	60/63
CODZ 5820201-E	L.H. - skin	1	54, 71	C	60/63
C3DZ 6220200-A	R.H. - skin	1	59, 62	C	60/63
C3DZ 6220201-A	L.H. - skin	1	59, 62	C	60/63
C3DZ 7620200-B	R.H. - skin	1	63, 76	C	63
C3DZ 7620201-B	L.H. - skin	1	63, 76	C	63
C4DZ 5420200-A	R.H. - skin	1	54, 71	C	64
C4DZ 5420201-A	L.H. - skin	1	54, 71	C	64
C4DZ 6220200-A	R.H. - skin	1	62	C	64
C4DZ 6220201-A	L.H. - skin	1	62	C	64
C4DZ 6320200-A	R.H. - skin	1	63, 76	C	64
C4DZ 6320201-A	L.H. - skin	1	63, 76	C	64
COLB 5720200-B	R.H. - skin	1	53, 54, 57, 75	D	60
COLB 5720201-B	L.H. - skin	1	53, 54, 57, 75	D	60
C2VY 5720200-A	R.H. - skin	1	All	D	61/63
C2VY 5720201-A	L.H. - skin	1	All	D	61/63
C4VY 5320200-A	R.H. - skin	1	All	D	64
C4VY 5320201-A	L.H. - skin	1	All	D	64

GROUP AND PART NUMBER	DESCRIPTION, SIZE, ETC.	NO. REQ'D	MODEL OR ENGINE CUBIC INCH DISPLACEMENT	VEHICLE CODE	YEAR 19____
20206-7	PANEL (FRONT DOOR OUTSIDE APPLIQUE)				
C4GY 5420206-A	R.H. - 38-1/8" long	1	54C, D	C	64
C4GY 5420207-A	L.H. - 38-1/8" long	1	54C, D	C	64
C4GY 6320206-A	R.H. - 49" long	1	63C, D, 76B, D	C	64
C4GY 6320207-A	L.H. - 49" long	1	63C, D, 76B, D	C	64
202A08-9	PANEL (FRONT DOOR AIR DUCT)				
C1VY 57202A08-A	R.H.	1	All	D	61/62
C1VY 57202A09-A	L.H.	1	All	D	61/62
C3VY 57202A08-A	R.H.	1	All	D	63
C3VY 57202A09-A	L.H.	1	All	D	63
20210-1	PANEL (FRONT DOOR EXTENSION OUTSIDE UPPER MOULDING)				
C3MY 5420210-A	R.H. (a)	1	54, 57, 71A, C, 75	A	63/64
C3MY 5420211-A	L.H. (a)	1	54, 57, 71A, C, 75	A	63/64
C3MY 6220210-A	R.H. (a)	1	62, 63, 65, 76	A	63/64
C3MY 6220211-A	L.H. (a)	1	62, 63, 65, 76	A	63/64
371492-S2	Screw and washer-hex.hd.-1/4"-20 x 3/4"	5or6	a		
376903-S40	Rivet-nut	5or6	a		
202A20	SEAL (FRONT DOOR AIR DUCT PANEL)				
C1VB 57202A20-A	Rubber	2	All	D	61/62
20232	RETAINER (FRONT DOOR OUTSIDE UPPER MOULDING)				
C1MB 5420232-A		AR	54B, 65B, 75B, 76,	A	61
202A46-7	REINFORCEMENT (DOOR INSIDE PANEL AT WINDOW REGULATOR)				
C3AZ 62202A46-A	R.H. - electric windows	1	All	A	63/64
C3AZ 62202A47-A	L.H. - electric windows	1	All	A	63/64
20318	SHIELD (DOOR TRIM) WATER				
COAB 6420318-C	Polyethylene - 28" x 54" sheet - use on all doors, quarters and tailgates by cutting to size	AR AR	All All	A B C	61/64 60/64
20340-1	KIT (WEATHERSTRIP FRONT DOOR FRONT) AT BELT				
COLY 6320340-A	R.H.	1	All	D	60
Consists of the following -					
(1) COLB-6320568-A weatherstrip	(1) 52720-S8 screw		(4) 1013046 clip		
COLY 6320341-A	L.H.	1	All	D	60
Consists of the following -					
(1) COLB-6320569-A weatherstrip	(1) 52720-S8 screw		(4) 1013046 clip		
20348-9	PLATE (DOOR VENTILATOR WINDOW MOUNTING ACCESS OPENING COVER)				
C3OZ 6520348-A	R.H. - steel - "L" shape - 4-1/4" long with (2) 3/16" diameter holes - located on front door edge at vent window	1	65	B	63
C3OZ 6520349-A	L.H. - steel - "L" shape - 4-1/4" long with (2) 3/16" diameter holes - located on front door edge at vent window	1	65	B	63
C3YY 6520348-A	Chrome finish - 1-5/16" wide x 3-7/8" long with (a) "Meteor" letters painted and with FoMoCo trade mark - located at vent window side on garnish moulding	2	65	B	63
354933-S32	Nut-3/16"-sleeve	2	a		
20402-3	REFER TO GROUP 20868-9				

GROUP AND PART NUMBER	DESCRIPTION, SIZE, ETC.	NO. REQ'D	MODEL OR ENGINE CUBIC INCH DISPLACEMENT	VEHICLE CODE	YEAR 19____
20442-3	MOULDING (FRONT DOOR WINDOW FRAME) OUTSIDE FRONT				
B9MB 6420442-A	R.H. - snap-on	1	58,64	A	60
B9MB 6420443-A	L.H. - snap-on	1	58,64	A	60
20492-3	MOULDING (FRONT DOOR WINDOW FRAME) OUTSIDE TOP				
B9MB 5820492-A	R.H. - snap-on - rustless steel	1	58	A	60
B9MB 5820493-A	L.H. - snap-on - rustless steel	1	58	A	60
B9MB 6420492-A	R.H. - snap-on - rustless steel	1	64	A	60
B9MB 6420493-A	L.H. - snap-on - rustless steel	1	64	A	60
COAB 5820492-A	R.H. - snap-on - rustless steel	1	54,58A,71	A	61/64
COAB 5820493-A	L.H. - snap-on - rustless steel	1	54,58A,71	A	61/64
COAB 6420492-B	R.H. - snap-on - rustless steel	1	62,64	A	61/64
COAB 6420493-B	L.H. - snap-on - rustless steel	1	62,64	A	61/64
C2OZ 5420492-A	R.H. - rustless steel	1	54,71	B	62/63
C2OZ 5420493-A	L.H. - rustless steel	1	54,71	B	62/63
C2OZ 6220492-A	R.H. - rustless steel	1	62	B	62/63
C2OZ 6220493-A	L.H. - rustless steel	1	62	B	62/63
CODB 5820846-C	R.H. - rustless steel	1	54,71	C	60/62
		1	54B,C,D,71B,C,D	C	63/64
CODB 5820847-C	L.H. - rustless steel	1	54,71	C	60/62
		1	54B,C,D,71B,C,D	C	63/64
CODB 6420846-D	R.H. - rustless steel	1	59,62	C	60/62
		1	59B, 62B, C	C	63/64
CODB 6420847-D	L.H. - rustless steel	1	59,62	C	60/62
		1	59B, 62B, C	C	63/64
20530-1	WEATHERSTRIP (FRONT DOOR)				
B9MB 5720530-B	R.H.	1	57,77	A	60
B9MB 5720531-B	L.H.	1	57,77	A	60
B9MB 5820530-A	R.H.	1	58	A	60
B9MB 5820531-A	L.H.	1	58	A	60
B9MB 6320530-B	R.H.	1	63,76	A	60
B9MB 6320531-B	L.H.	1	63,76	A	60
B9MB 6420530-A	R.H.	1	64	A	60
B9MB 6420531-A	L.H.	1	64	A	60
C1AB 5420530-A	R.H.	1	54,58,71	A	61
C1AB 5420531-A	L.H.	1	54,58,71	A	61
C1AZ 6220530-A	R.H.	1	62,64	A	61
C1AZ 6220531-A	L.H.	1	62,64	A	61
C1AB 6520530-A	R.H.	1	65	A	61
C1AB 6520531-A	L.H.	1	65	A	61
C1AB 7520530-A	R.H.	1	75	A	61
C1AB 7520531-A	L.H.	1	75	A	61
C1AB 7620530-A	R.H.	1	76	A	61
C1AB 7620531-A	L.H.	1	76	A	61
C2AZ 5420530-A	R.H.	1	54,71	A	62
C2AZ 5420531-A	L.H.	1	54,71	A	62
C2AZ 6220530-A	R.H.	1	62	A	62
C2AZ 6220531-A	L.H.	1	62	A	62
C2AZ 6520530-A	R.H.	1	65	A	62
C2AZ 6520531-A	L.H.	1	65	A	62
C2AZ 7520530-A	R.H.	1	75	A	62
C2AZ 7520531-A	L.H.	1	75	A	62
C2AZ 7620530-A	R.H.	1	76	A	62
C2AZ 7620531-A	L.H.	1	76	A	62
C3AZ 5420530-A	R.H.	1	54,71	A	63/64
C3AZ 5420531-A	L.H.	1	54,71	A	63/64

CONTINUED ON NEXT PAGE

GROUP AND PART NUMBER	DESCRIPTION, SIZE, ETC.	NO. REQ'D	MODEL OR ENGINE CUBIC INCH DISPLACEMENT	VEHICLE CODE	YEAR 19____
20530-1	WEATHERSTRIP (FRONT DOOR) CONTINUED				
C3AZ 6220530-A	R.H.	1	62	A	63/64
C3AZ 6220531-A	L.H.	1	62	A	63/64
C3AZ 6520530-A	R.H.	1	65	A	63/64
C3AZ 6520531-A	L.H.	1	65	A	63/64
C3AZ 7520530-A	R.H.	1	75	A	63/64
C3AZ 7520531-A	L.H.	1	75	A	63/64
C3AZ 7620530-B	R.H.	1	63,76	A	63/64
C3AZ 7620531-B	L.H.	1	63,76	A	63/64
C4AZ 5720530-A	R.H.	1	57	A	64
C4AZ 5720531-A	L.H.	1	57	A	64
C3OZ 5420530-A	R.H. (b)	1	54,71	B	62/63
C3OZ 5420531-A	L.H. (b)	1	54,71	B	62/63
C3OZ 6220530-A	R.H. (b)	1	62	B	62/63
C3OZ 6220531-A	L.H. (b)	1	62	B	62/63
C3OZ 6520530-B	R.H. (b)	1	65	B	63
C3OZ 6520531-B	L.H. (b)	1	65	B	63
C2DZ 5820530-A	R.H.	1	54,71	C	60/63
C2DZ 5820531-A	L.H.	1	54,71	C	60/63
C2DZ 6420530-A	R.H. (a)	1	59,62	C	60/63
C2DZ 6420531-A	L.H. (a)	1	59,62	C	60/63
C3DZ 7620530-B	R.H. (a)	1	63,76	C	63
C3DZ 7620531-B	L.H. (a)	1	63,76	C	63
C4DZ 5420530-A	R.H. - includes wire retainer at bottom	1	54,71	C	64
C4DZ 5420531-A	L.H. - includes wire retainer at bottom	1	54,71	C	64
C4DZ 5420530-B	R.H. - less wire retainer	1	54,71	C	64
C4DZ 5420531-B	L.H. - less wire retainer	1	54,71	C	64
C4DZ 6220530-A	R.H. - includes wire retainer at bottom (a)	1	62	C	64
C4DZ 6220531-A	L.H. - includes wire retainer at bottom (a)	1	62	C	64
C4DZ 6220530-B	R.H. - less wire retainer	1	62	C	64
C4DZ 6220531-B	L.H. - less wire retainer	1	62	C	64
C4DZ 6320530-A	R.H. - includes wire retainer at bottom (a)	1	63,76	C	64
C4DZ 6320531-A	L.H. - includes wire retainer at bottom (a)	1	63,76	C	64
C4DZ 6320530-B	R.H. - less wire retainer	1	63,76	C	64
C4DZ 6320531-B	L.H. - less wire retainer	1	63,76	C	64
B9LB 5720530-A	R.H.	1	All except 63,65,68	D	60
B9LB 5720531-A	L.H.	1	All except 63,65,68	D	60
B9LB 6320530-A	R.H.	1	63,65,68	D	60
B9LB 6320531-A	L.H.	1	63,65,68	D	60
C1VB 5720530-E	R.H. - use on vehicles built prior to 3-20-61 with C1VB-5721774-C bumper only (c)	1	All	D	61
C1VB 5720531-E	L.H. - use on vehicles built prior to 3-20-61 with C1VB-5721775-C bumper only (c)	1	All	D	61
C1VY 5720530-H	R.H. - use on vehicles built after 3-19-61 with C2VY-5721774-A bumper only - use without bumper after 9-30-61 (c)	1	All	D	61/63
C1VY 5720531-H	L.H. - use on vehicles built after 3-19-61 with C2VY-5721775-A bumper only - use without bumper after 9-30-61 (c)	1	All	D	61/63
C4VY 5320530-A	R.H. (d)	1	All	D	64
C4VY 5320531-A	L.H. (d)	1	All	D	64
C1VB 5720586-A	Retainer-also use for rear door	AR	c		
C1AB 6220807-A	Fastener	4	b		
CODB 6420712-A	Retainer-at door bottom-steel	AR	a		
375547-S	Plug-13/32"	AR	b,d		
20532-3	WEATHERSTRIP (FRONT DOOR) FRONT EDGE				
C4VY 5320532-A	R.H. (a)	1	All	D	64
C4VY 5320533-A	L.H. (a)	1	All	D	64
C1AB 6220807-A	Fastener	2	a		

GROUP AND PART NUMBER	DESCRIPTION, SIZE, ETC.	NO. REQ'D	MODEL OR ENGINE CUBIC INCH DISPLACEMENT	VEHICLE CODE	YEAR 19____
20568-9	WEATHERSTRIP (FRONT DOOR) AT BELT				
COMB 6420568-B	R.H. - inner	1	All	A	60
COMB 6420569-B	L.H. - inner	1	All	A	60
C3AZ 6220568-A	R.H. - inner - seal	1	All	A	61/64
C3AZ 6220569-A	L.H. - inner - seal	1	All	A	61/64
20586	RETAINER (FRONT DOOR WEATHERSTRIP)				
C1VB 5720586-A	Also use for rear door	AR	All	D	61/63
20700	SEAL (DOOR INNER PANEL BOTTOM DRAIN)				
C3AZ 6220700-B	Use as required for front and rear door and tailgate	AR	All	A B C	63
	Use as required for front and rear door	AR	All	D	63/64
20712	RETAINER (FRONT DOOR WEATHERSTRIP) BOTTOM				
CODB 6420712-A	Steel	2	59, 62, 63, 76	C	60/64
20748	DECAL (FRONT & REAR DOORS, FENDERS & QUARTER PANELS)				
C4MY 7120748-A	16-1/2" x 62" - WALNUT GRAIN	AR	71B, D☆	A	64
COMB 7720748-A	18" x 63" MAHOGANY - cut to size	AR	71B, D, 77B	A	60/63
		AR	71D, F	B	63
	For Comet - use on lower back panel	AR	71C	C	62
	For Comet - use on tailgate, fuel filler lid and quarter panel rear extension only	AR	71C, D	C	63
C3GY 7120748-A	13" x 62" MAHOGANY GRAIN with TAN plank lines	AR	71C, D	C	63
C4GY 7120748-A	10-7/16" x 53-5/16" - DARK MAHOGANY GRAIN	AR	71C☆	C	64
	☆ Use on front fender, front door, rear door and quarter				
20768-9	SHIELD (FRONT DOOR WIRING)				
BAK 5720768-A	R.H.	1	All	D	60
BAK 5720769-A	L.H.	1	All	D	60
C1VY 5720768-B	R.H.	1	All	D	61/63
C1VY 5720769-B	L.H.	1	All	D	61/63
C4VY 5320768-A	R.H.	1	All	D	64
C4VY 5320769-A	L.H.	1	All	D	64
20770	SHIELD (DOOR WIRING)				
B7A 7020770-A	For electric windows	AR	All	A	60/63
20774	SPACER (OUTSIDE FINISH RAIL)				
BV 7920774-B	Rubber - rear door only	2	77	A	60
	Use as spacer between shield - front seat back and front seat	4	65C, 76B	A	62
20780-1	REFER TO GROUP 20938-9				
20783	RETAINER (QUARTER WHEEL OPENING COVER FRONT MOULDING)				
BAK 5720783-A		4	All	D	60
20788	SEAL (DOOR INNER PANEL BOTTOM DRAIN)				
	NS-sponge rubber - improvise 3" long - front and rear door	8	All	A	60
	NS-sponge rubber - improvise 3-1/4" x 7/16" x 1/16" thick - front and rear door	AR	All	A B D	61/62

GROUP AND PART NUMBER	DESCRIPTION, SIZE, ETC.	NO. REQ'D	MODEL OR ENGINE CUBIC INCH DISPLACEMENT	VEHICLE CODE	YEAR 19____
20798-9	COVER (FRONT DOOR WIRING SHIELD)				
C1VB 5720798-A	R.H.	1	All	D	61/64
C1VB 5720799-A	L.H.	1	All	D	61/64
20802	ORNAMENT (DOOR TRIM PANEL)				
COMB 6320802-A	PARKLANE	2	57F, 63F, 76D	A	60
C4MY 5420802-A	Front door	2	54B, 57D, 63D, 65B, 71B, D	A	64
	Rear door	2	54B, 57D, 71B, D	A	64
	Quarter	2	63D, 65B	A	64
C4MY 7620802-A	Front door (a)	2	62A, 63A, 65A, 76A	A	64
	Quarter	2	62A, 65A	A	64
C4GY 5420802-B	Letter "C" - chrome (a)	2	54C, D, 63C, D, 76B, D	C	64
379642-S2	Spring-nut-5/32"	2	a		
20804	EMBLEM (DOOR ARM REST ORNAMENT)				
COLB 6520804-B	Front door	6	54, 65, 68, 75	D	60
	Quarter	4	65, 68	D	60
	Rear door	6	54, 75	D	60
20807	FASTENER (DOOR INNER PANEL BOTTOM DRAIN SEAL)				
C1AB 6220807-A	Front and rear door	AR	All	A D	61/62
		AR	All	B	62/63
		AR	59, 71	C	60/61
		AR	All	D	64
	Tailgate	2	59, 71	C	60/63
		AR	59, 71	A B	63
20808	CLIP (DOOR OUTSIDE UPPER MOULDING CENTER RETAINING)				
COMB 6420808-A	Painted RED	2	63, 64, 76	A	60
20810	CLIP (DOOR OUTSIDE UPPER MOULDING REAR RETAINING)				
COMB 6420810-A	Painted GREEN	6	All	A	60
208A10-1	MOULDING (DOOR OUTSIDE APPLIQUE)				
C2GB 62208A10-A	R.H. - 9-5/8" long (a)	1	62, 63, 76	C	62/63
C2GB 62208A11-A	L.H. - 9-5/8" long (a)	1	62, 63, 76	C	62/63
51855-S8	Screw-pan hd. cr. rec. -No. 8-32 x 3/8"	2	a		
20812-5	ORNAMENT (DOOR ARM REST SUPPORT)				
COLB 6520812-B	R.H. - "Lower" - moulding	1	54, 65, 68, 75	D	60
COLB 6520813-B	L.H. - "Lower" - moulding	1	54, 65, 68, 75	D	60
COLB 6520814-C	R.H. - "Upper" - cover	1	54, 65, 68, 75	D	60
COLB 6520815-C	L.H. - "Upper" - cover	1	54, 65, 68, 75	D	60
20816	PLATE (FRONT DOOR NAME) INSIDE				
C4MY 5420816-A	PARK LANE (a)	2	54F, 57C, F, 65C, F, 75F 76C, F	A	64
C4GY 6320816-A	CYCLONE	2	63E	C	64
379642-S2	Spring nut-5/32"	4	a		
20832	KIT (RETAINER - DOOR OUTSIDE MOULDING) FRONT				
COMY 6420832-A		2	All	A	60

Consists of the following -

(1) COMB-6420808-A clip (1) COMB-6421645-A retainer (1) 359155-S8 screw

(3) COMB-6420810-A clip

GROUP AND PART NUMBER	DESCRIPTION, SIZE, ETC.	NO. REQ'D	MODEL OR ENGINE CUBIC INCH DISPLACEMENT	VEHICLE CODE	YEAR 19____
20834	KIT (MOULDING FRONT DOOR OUTSIDE) CLIP				
COLY 6320834-A		1	53, 57, 63	D	60
	Consists of the following -				
(5) COLB-63290A96-A	retainer (1) COLB-6329316-C retainer (5) 354397-S100 nut				
(1) COLB-6329316-B	retainer (2) 50502-S8 screw				
20842	RETAINER (DOOR OUTSIDE UPPER MOULDING)				
C1MB 5420842-A	Front door	4	54B, 65B, 75B, 76	A	61
	Rear door	4	54B, 75B	A	61
	Rear door	4	54, 71A, 75	A	62
C1MY 6220842-A	Front Door	2	54A, 58, 62, 64, 65A, 71A, C, 75	A	61/62
	Rear door	6	54A, 71A, 75A	A	61
	Rear door	2	54, 71A, C, 75	A	62
C2MY 6220842-A	Front door	4	54, 62A, 65, 71, 75	A	62
	Rear door	2	54, 71, 75	A	62
	Lower back panel	2	54B, 65B, C, 75B	A	62
C3MY 5420842-A	Front door	2	All	A	63
		2	54, 57, 71, 75	A	64
C4MY 5420842-A	Front fender - front and rear door - lower	2	54B, 57D, 63D, 65B	A	64
C2DZ 6420842-A	Use to attach tailgate O/S finish panel moulding	5	59, 71	C	62
20846-7	REFER TO GROUP 20492-3				
20850	RETAINER (FRONT DOOR OUTSIDE UPPER MOULDING) CENTER				
C1MB 6220850-B		2	54A, 58A, 62A, 64A, 65A 71A, 75A	A	61
C2MY 6220850-A	(8) used on models 54, 71A, C, 75	AR	All except 71B, D	A	62
	(10) used on models 62, 65, 76				
	Vinyl roof cover moulding - use with C4DZ-63423A20-1A moulding	6	63	C	64
20852	RETAINER (DOOR OUTSIDE UPPER MOULDING) REAR				
C1MB 6220852-A		2	62A, 64A, 65A	A	61
C2MY 5420994-A		2	54, 71A, 75	A	62
20858-9	EXTENSION (FRONT DOOR OUTSIDE BELT MOULDING)				
C2MY 5420858-A	R.H. (a)	1	54B	A	62
C2MY 5420859-A	L.H. (a)	1	54B	A	62
C2MY 7520858-A	R.H. (a)	1	65B, 75B, 76	A	62
C2MY 7520859-A	L.H. (a)	1	65B, 75B, 76	A	62
52344-S13	Screw-oval hd. cr. rec. -No. 8-15 x 1/2"	1	a		
354933-S22	Nut-sleeve-3/16"	2	a		
20859	REFER TO GROUP 20934-5				
20860	INSERT (FRONT DOOR OUTSIDE UPPER MOULDING)				
C1MB 5420860-B	43-3/8" long	2	54B, 75B	A	61
C1MB 6320860-B	49-7/8" long	2	76	A	61
20863	REFER TO GROUP 20934-5				

GROUP AND PART NUMBER	DESCRIPTION, SIZE, ETC.	NO. REQ'D	MODEL OR ENGINE CUBIC INCH DISPLACEMENT	VEHICLE CODE	YEAR 19____
20864	MOULDING (FRONT DOOR OUTSIDE UPPER FINISH RAIL)				
C2MB 7120864-A	43-1/4" long (a)	2	71B	A	61/62
C1MY 7120872-A	Retainer	1	a		
C2MB 7120872-A	Retainer	1	a		
C1MY 7120892-A	Retainer	3	a		
B9AB 7150108-A	Fastener	3	a		
34655-S	Nut and washer-hex.-No.10-24	1	a		
50555-S8	Screw-pan hd.cr.rec.-No.10-32 x 1"	3	a		
20866-7	MOULDING (FRONT DOOR OUTSIDE LOWER FINISH RAIL)				
C1MB 7120866-B	R.H. (a)	1	71B	A	61
C1MB 7120867-B	L.H. (a)	1	71B	A	61
C2MB 7120866-A	R.H. - 47" long (a)	1	71B	A	62
C2MB 7120867-A	L.H. - 47" long (a)	1	71B	A	62
C1MY 7120872-A	Retainer	2	a		
C1MY 7120892-A	Retainer	5	a		
B9AB 7150108-A	Fastener	4	a		
34655-S	Nut and washer-hex.-No.10-24	2	a		
50555-S8	Screw-pan hd.cr.rec.-No.10-32 x 1"	4	a		
20868-9	RAIL (FRONT DOOR OUTSIDE FINISH) LOWER				
COMB 7720402-B	R.H. - fiberglas - oak grain	1	77B	A	60
COMB 7720403-B	L.H. - fiberglas - oak grain	1	77B	A	60
C1MY 7120868-A	R.H. - 46-3/4" long - oak grain	1	71B	A	61
C1MY 7120869-A	L.H. - 46-3/4" long - oak grain	1	71B	A	61
C2MY 7120868-B	R.H. - 47" long - fiberglas - oak grain	1	71B,D	A	62
C2MY 7120869-B	L.H. - 47" long - fiberglas - oak grain	1	71B,D	A	62
C3MY 7120868-A	R.H. - fiberglas (§)	1	71B,D	A	63/64
C3MY 7120869-A	L.H. - fiberglas (§)	1	71B,D	A	63/64
§ Package also includes -					
(5) C1AZ-71290B32-A fastener	(5) 358404-S cap		(5) 373702-S100 screw and washer-No. 10-32 x 1-1/4"		
C3YY 7120868-A	R.H. - fiberglas (a)	1	71D, F	B	63
C3YY 7120869-A	L.H. - fiberglas (a)	1	71D, F	B	63
C3DZ 7120868-A	R.H. - fiberglas (Δ)	1	71C	C	62
		1	71C, D	C	63
C3DZ 7120869-A	L.H. - fiberglas (Δ)	1	71C	C	62
		1	71C, D	C	63
Δ Package also includes -					
(3) C2DZ-71290B32-A fastener	(3) 358404-S cap		(3) 373702-S100 screw and washer-No. 10-32 x 1-1/4"		
C4DZ 7120868-A	R.H. - fiberglas (‡)	1	71C	C	64
C4DZ 7120869-A	L.H. - fiberglas (‡)	1	71C	C	64
‡ Package also includes -					
(3) C3AB-71290B32-A fastener	(3) 373702-S100 screw and wshr. No.10-32 x 1-1/4"		(1) 376592-S screw No.10-16 x 7/8"		
(1) 358403-S retainer					
(4) 358404-S cap					
370933-S100	Screw-truss hd.-No.10-12 x 3/4"	1	a		
373181-S	Nut-tee-No.10-32	1	a		
20872	RETAINER (DOOR OUTSIDE FINISH RAIL MOULDING)				
C2MY 7120872-A	Front and rear door	AR	71B,D	A	61/62
	Front fender	8	71B	A	61/62
	Quarter panel	14	71B	A	61/62
20876	RETAINER (FRONT DOOR OUTSIDE UPPER MOULDING)				
C1MB 6220876-B		2	54A,58A,62A,64A,65A,71A,75	A	61

GROUP AND PART NUMBER	DESCRIPTION, SIZE, ETC.	NO. REQ'D	MODEL OR ENGINE CUBIC INCH DISPLACEMENT	VEHICLE CODE	YEAR 19____
20878-9	MOULDING (FRONT DOOR OUTSIDE) LOWER				
C3MY 5420878-A	R.H. - 44" long (§)	1	54B, 75B, C	A	63
C3MY 5420879-A	L.H. - 44" long (§)	1	54B, 75B, C	A	63
C3MY 6520878-A	R.H. - 49-1/4" long (§)	1	63B, C, 65B, C, 76	A	63
C3MY 6520879-A	L.H. - 49-1/4" long (§)	1	63B, C, 65B, C, 76	A	63
§ Package also includes -					
(5) C2GY-16A076-A retainer	(1) C3MY-5420954-A retainer		(1) 378303-S	screw-No. 10-24	
(1) C3MY-5420952-A retainer	(1) 376792-S nut-No. 10-24				
C4MY 5420878-A	R.H. - 44-21/64" long (†)	1	54A, 57A, 71A, C	A	64
C4MY 5420879-A	L.H. - 44-21/64" long (†)	1	54A, 57A, 71A, C	A	64
C4MY 6220878-A	R.H. - 49-7/16" long (†)	1	62A, 63A, 65A, 76A	A	64
C4MY 6220879-A	L.H. - 49-7/16" long (†)	1	62A, 63A, 65A, 76A	A	64
† Package also includes -					
(4 or 5)C3OZ-59407A12-A retainer	(1) C2OZ-6240368-A retainer		(1) 378324-S	screw-No. 10-24 x 1/2"	
(1) C4MY-6221094-A retainer	(1) 376792-S nut				
C4MY 5420878-B	R.H. - 43-13/16" long (‡)	1	54B, 57D	A	64
C4MY 5420879-B	L.H. - 43-13/16" long (‡)	1	54B, 57D	A	64
C4MY 6320878-A	R.H. - 49-1/2" long (‡)	1	63D, 65B	A	64
C4MY 6320879-A	L.H. - 49-1/2" long (‡)	1	63D, 65B	A	64
‡ Package also includes -					
(1) C4MY-5420842-A retainer	(4 or 5)C4MY-5421094-A retainer		(1) 378321-S	screw	
(1) C4MY-5420954-A retainer	(1) 376792-S nut				
C4MY 5420878-C	R.H. - 44-1/4" long (ΔΔ)	1	54F, 57C, F, 75F	A	64
C4MY 5420879-C	L.H. - 44-1/4" long (ΔΔ)	1	54F, 57C, F, 75F	A	64
C4MY 6520878-A	R.H. (ΔΔ)	1	63C, F, 65C, F, 76C, F	A	64
C4MY 6520879-A	L.H. (ΔΔ)	1	63C, F, 65C, F, 76C, F	A	64
ΔΔ Package also includes -					
(6 or 7)C4MY-5420954-B retainer	(6 or 7) 359606-S nut				
C3YY 5420878-A	R.H. - 40" long (⊟)	1	54, 71A, B, C, E	B	63
C3YY 5420879-A	L.H. - 40" long (⊟)	1	54, 71A, B, C, E	B	63
⊟ Package also includes -					
(3) C2OZ-16A076-A retainer	(1) C2SZ-6320880-B retainer		(1) 378324-S	screw-No. 10-24	
(1) C3OZ-6220884-A retainer	(1) 376792-S nut-No. 10-24				
C3YY 6220878-A	R.H. - 46-1/2" long (Δ)	1	62, 65	B	63
C3YY 6220879-A	L.H. - 46-1/2" long (Δ)	1	62, 65	B	63
Δ Package also includes -					
(4) C2OZ-16A076-A retainer	(1) C2SZ-6320880-B retainer		(1) 378324-S	screw-No. 10-24	
(1) C3OZ-6220884-A retainer	(1) 376792-S nut-No. 10-24				
C3GY 5420878-A	39" long	2	54, 71A, B	C	63
Package also includes -					
(2) C2DZ-16A076-C retainer	(4) C2OZ-16A076-A retainer		(2) 359606-S8	nut	
C4GY 5420878-A	R.H. - 39-1/2" long (⊕)	1	54B, C, D, 71B	C	64
C4GY 5420879-A	L.H. - 39-1/2" long (⊕)	1	54B, C, D, 71B	C	64
⊕ Package also includes -					
(2) C3OZ-16A076-A retainer	(4) C4DB-16A076-A retainer		(2) 359606-S8	nut-No. 10-24	
20880	RETAINER (DOOR OUTSIDE BELT MOULDING)				
C2SZ 6320880-B	Front and rear doors	2or4	54B, 65B, C, 75B, 76	A	62
	Front door - rear	2	All except 71D, F	B	63
	Rear door - rear	2	71A, B, C, E	B	63
	(2) front and (2) rear door	AR	54B, C, D, 62B, C, 63C, D, E, 71B, 76	C	64

GROUP AND PART NUMBER	DESCRIPTION, SIZE, ETC.	NO. REQ'D	MODEL OR ENGINE CUBIC INCH DISPLACEMENT	VEHICLE CODE	YEAR 19____
20884	RETAINER (DOOR OUTSIDE LOWER MOULDING) FRONT				
C3OZ 6220884-A	Quarter panel	AR	54A,58A,65A,71A,75A	A	61
	Rear door	AR	75	A	63
	Front and rear door	AR	All	B	63
	Front fender and quarter panel	AR	All	B	62/63
	Quarter panel	AR	59,71	C	60
	Quarter panel, deck lid and lower back panel	AR	All	C	62
	Front fender, front and rear door and quarter panel	AR	All except 71C,D	C	63
	Front fender	8	54B,D,62B,C,63C,E, 71B,C,76	C	64
	Front door	6	54B,D,62B,C,63C,E, 71B,C,76	C	64
	Quarter panel	8	62B,C,63C,E,76	C	64
	Quarter panel	4	54B,D,71B,C	C	64
20886	SPACER (FRONT DOOR OUTSIDE MOULDING)				
C1VB 5720886-A	Plastic - also use on rear door	AR	All	D	61/64
20892	RETAINER (FRONT DOOR OUTSIDE FINISH RAIL MOULDING)				
C1MY 7120892-A	Front door	16	71B	A	61/62
	Rear door	12	71B	A	61/62
	Front fender	8	71B	A	61/62
	Quarter panel - (12) R.H. and (10) L.H.	22	71B	A	61/62
20894	RETAINER (DOOR OUTSIDE UPPER MOULDING) FRONT				
C1MB 6220894-B		2	54A,58A,62A,64A,65, 71A,75A	A	61
20904-5	MOULDING (FRONT DOOR WINDOW GARNISH)				
COAB 5720904-AP	R.H. - 34-1/8" long	1	75	A	61/62
COAB 5720905-AP	L.H. - 34-1/8" long	1	75	A	61/62
COAB 5820904-AP	R.H. - 33-7/8" long	1	54,58,71	A	61/62
COAB 5820905-AP	L.H. - 33-7/8" long	1	54,58,71	A	61/62
COAB 6320904-AP	R.H. - 41" long	1	65,76	A	61/62
COAB 6320905-AP	L.H. - 41" long	1	65,76	A	61/62
COAB 6420904-AP	R.H.	1	62,64	A	61/62
COAB 6420905-AP	L.H.	1	62,64	A	61/62
C2MY 7620904-A	R.H. - chrome finish	1	65C,76B	A	62
C2MY 7620905-A	L.H. - chrome finish	1	65C,76B	A	62
C3AZ 5420904-A	R.H. - Police Special and Taxi	1	54A	A	63
C3AZ 5420905-A	L.H. - Police Special and Taxi	1	54A	A	63
C3AZ 6220904-A	R.H. - Police Special and Taxi	1	62A	A	63
C3AZ 6220905-A	L.H. - Police Special and Taxi	1	62A	A	63
20910	KIT (DOOR OUTSIDE REAR EDGE MOULDING)				
C3AZ 5420910-A		1	54, 57, 71, 75	A	63/64
C3AZ 6220910-A		1	62, 63, 65, 76	A	63/64
C2DZ 5820910-A		1	54, 71	C	60/63
C2DZ 6420910-A		1	59, 62, 76	C	60/63
C4DZ 5420910-A		1	54, 71	C	64
C4DZ 6220910-A		1	62	C	64
C2VY 5720910-B		1	All	D	62/64

Consists of the following -

(1) C5VB-5320940-A mldg. - R.H. front door
(1) C5VB-5320941-A mldg. - L.H. front door
(1) C5VB-5325510-A mldg. - R.H. rear door front
(1) C5VB-5325511-A mldg. - L.H. rear door front

GROUP AND PART NUMBER	DESCRIPTION, SIZE, ETC.	NO. REQ'D	MODEL OR ENGINE CUBIC INCH DISPLACEMENT	VEHICLE CODE	YEAR 19____
20914-5	MOULDING (FRONT DOOR TRIM) UPPER FRONT				
COLB 6520914-B	R.H.	1	54,65,68,75	D	60
COLB 6520915-B	L.H.	1	54,65,68,75	D	60
C4VY 5320914-B		2	All	D	64
20920-1	MOULDING (FRONT DOOR TRIM)				
COMB 5720920-B	R.H. - 16-1/16" long - upper rear	1	57F	A	60
COMB 5720921-B	L.H. - 16-1/16" long - upper rear	1	57F	A	60
COMB 6320920-A	R.H. - 16-3/64" long - upper rear	1	63F	A	60
COMB 6320921-A	L.H. - 16-3/64" long - upper rear	1	63F	A	60
C4GY 6320920-A	Front	2	54C,D,63C,D,76B,D	C	64
COLB 6520920-B	R.H. - upper rear	1	65,68	D	60
COLB 6520921-B	L.H. - upper rear	1	65,68	D	60
COLB 7520920-B	R.H. - upper rear	1	54,75	D	60
COLB 7520921-B	L.H. - upper rear	1	54,75	D	60
20922	SPACER (DOOR WINDOW GARNISH MOULDING)				
COAB 6420922-A	Front door	4	All	A	61/62
	Rear door	4	54,71,75	A	61/62
C3MY 6220922-A	Front door	4	All	A	63
		4	54,57,71,75	A	64
	Rear door	4	54,75	A	63
	NOTE - for luggage compartment door bumper (20922) - refer to group 27224-5				
20932-3	MOULDING (FRONT DOOR) OUTSIDE UPPER				
COMB 5820932-A	R.H. - 39-1/2" long (†)(a)	1	57,58,77	A	60
COMB 5820933-A	L.H. - 39-1/2" long (†)(a)	1	57,58,77	A	60
COMB 6420932-A	R.H. - 46-1/2" long (†)(a)	1	63,64,76	A	60
COMB 6420933-A	L.H. - 46-1/2" long (†)(a)	1	63,64,76	A	60
† Package also includes -					
(3) COMB-6420810-A clip	(1) COMB-6421645-A retainer		(1) 359155-S8	screw	
C1MB 5420932-C	R.H. - 43-3/8" long (Δ)	1	54A,58A,71A,75A	A	61
C1MB 5420933-C	L.H. - 43-3/8" long (Δ)	1	54A,58A,71A,75A	A	61
Δ Package also includes -					
(1) C1MB-6220842-A retainer	(4) C1AZ-6421094-B retainer		(2) 34655-S7	nut and washer	
(1) C1MB-6220876-B retainer					
C1MB 5420936-B	R.H. (‡)	1	54B,75B	A	61
C1MB 5420937-B	L.H. (‡)	1	54B,75B	A	61
‡ Package also includes -					
(2) C1MB-5420842-A retainer	(4) C1AZ-6421094-B retainer		(2) 34655-S7	nut and washer	
C1MB 6220932-B	R.H. - 49-7/8" long (§)	1	62A,64A,65A	A	61
C1MB 6220933-B	L.H. - 49-7/8" long (§)	1	62A,64A,65A	A	61
§ Package also includes -					
(1) C1MB-6220842-A retainer	(5) C1AZ-6421094-B retainer		(1) 352396-S32	clip	
(1) C1MB-6220876-B retainer	(2) 34655-S7 nut and washer				
C1MB 6320936-B	R.H. (ΔΔ)	1	65B,76	A	61
C1MB 6320937-B	L.H. (ΔΔ)	1	65B,76	A	61
ΔΔ Package also includes -					
(2) C1MB-5420842-A retainer	(5) C1AZ-6421094-B retainer		(2) 34655-S7	nut and washer	
C2MY 5420932-A	R.H. - 46-1/4" long (§§)(b)	1	54,71A,75	A	62
C2MY 5420933-A	L.H. - 46-1/4" long (§§)(b)	1	54,71A,75	A	62
§§ Package also includes -					
(2) C2MY-6220842-A retainer	(4) C2MY-6220850-A retainer		(2) 34053-S8	nut	
C2MY 6220932-A	R.H. - 50" long (‡‡)	1	62,65,76	A	62
C2MY 6220933-A	L.H. - 50" long (‡‡)	1	62,65,76	A	62
‡‡ Package also includes -					
(2) C2MY-6220842-A retainer	(5) C2MY-6220850-A retainer		(2) 34053-S8	nut	

CONTINUED ON NEXT PAGE

GROUP AND PART NUMBER	DESCRIPTION, SIZE, ETC.	NO. REQ'D	MODEL OR ENGINE CUBIC INCH DISPLACEMENT	VEHICLE CODE	YEAR 19____
20932-3	MOULDING (FRONT DOOR) OUTSIDE UPPER (CONTINUED)				
C3GY 5420932-A	38-3/4" long	2	54, 71A, B	C	63
	Package also includes -				
	(2) C2DZ-16A076-C retainer (4) C2OZ-16A076-A retainer (2) 359606-S8 nut				
C4GY 5420932-A	R.H. - 39-3/8" long (⊟)	1	54B, C, D, 71B	C	64
C4GY 5420933-A	L.H. - 39-3/8" long (⊟)	1	54B, C, D, 71B	C	64
C4GY 6220932-A	R.H. - upper - L.H. lower - 48-15/16" long (⊟)	2	62B, C, 63C, D, 76B, D	C	64
C4GY 6220933-A	L.H. - upper - R.H. lower - 48-15/16" long (⊟)	2	62B, C, 63C, D, 76B, D	C	64
	⊟ Package also includes -				
	(1) C3OZ-16A076-A retainer (1) C4DB-6221094-C retainer (1) 378324-S screw				
	(4 or 5) C4DZ-16A076-A retainer (1 or 2) 359606-S nut-No. 10-24				
C2MY 5420994-A	Retainer	1	b		
COMB 6420808-A	Clip	1	b		
COMY 6420832-A	Clip kit	AR	a		
20934-5	MOULDING (FRONT DOOR) OUTSIDE BELT				
C2MY 5420934-A	R.H. - 28-3/4" long (a)	1	54B, 75B	A	62
C2MY 5420935-A	L.H. - 28-3/4" long (a)	1	54B, 75B	A	62
C2MY 7620934-A	R.H. - 36-3/8" long (a)	1	65B, C, 76	A	62
C2MY 7620935-A	L.H. - 36-3/8" long (a)	1	65B, C, 76	A	62
C4MY 5720934-A	R.H. - with weatherstrip 34" long	1	57	A	64
C4MY 5720935-A	L.H. - with weatherstrip 34" long	1	57	A	64
COLB 5721116-A	R.H. (c)	1	53, 54, 57, 75	D	60
COLB 5721117-A	L.H. (c)	1	53, 54, 57, 75	D	60
COLB 6321116-A	R.H. (c)	1	63, 65, 68	D	60
COLB 6321117-A	L.H. (c)	1	63, 65, 68	D	60
C1VB 5720934-B	R.H. (b)	1	All	D	61/63
C1VB 5720859-B	L.H. - front - use with belt mounted mirror on vehicles built prior to 11-15-60 (b)	1	All	D	61
C1VB 5720863-B	L.H. - rear - use with belt mounted mirror on vehicles built prior to 11-15-60 (b)	1	All	D	61
C1VB 5720935-B	L.H. - 33-7/8" long - one piece design - use on vehicles built after 11-14-60 (b)	1	All	D	61/63
C1VY 5721060-B	Retainer Front door - (5) R.H. and (5) L.H.	10	b		
BAK 6329128-A	Retainer	AR	c		
C2MY 5420946-A	Clip	4 or 5	a		
C2SZ 6320880-B	Retainer	1	a		
354613-S8	Screw-fill. hd. -No. 8-32 x 5/16" long	1	a		
20936-7	REFER TO GROUP 20932-3				
20938-9	MOULDING (FRONT DOOR) OUTSIDE				
C3MY 5420938-A	R.H. - 43-1/16" long (Δ)	1	54, 57, 71, 75	A	63/64
C3MY 5420939-A	L.H. - 43-1/16" long (Δ)	1	54, 57, 71, 75	A	63/64
	Δ Package also includes -				
	(1) C3MY-5420842-A retainer (5) C3MY-6229108-A retainer (1) 376358-S screw				
C3MY 6220938-A	R.H. - 50-3/8" long (§§)	1	62, 63, 65, 76	A	63/64
C3MY 6220939-A	L.H. - 50-3/8" long (§§)	1	62, 63, 65, 76	A	63/64
	§§ Package also includes -				
	(7) C3MY-6229108-A retainer				
C3YY 5420780-A	R.H. - 40" long (†)	1	54, 71A, B, C, E	B	62/63
C3YY 5420781-A	L.H. - 40" long (†)	1	54, 71A, B, C, E	B	62/63
C3YY 6220780-A	R.H. - 46-7/8" long (†)	1	62, 65	B	62/63
C3YY 6220781-A	L.H. - 46-7/8" long (†)	1	62, 65	B	62/63
	† Package also includes -				
	(3 or 4) C2GY-16A076-A retainer (1) 376792-S nut-No. 10-24 (1) 378324-S screw-No. 10-24				
	(1) C2YY-5725034-A retainer				

CONTINUED ON NEXT PAGE

GROUP AND PART NUMBER	DESCRIPTION, SIZE, ETC.	NO. REQ'D	MODEL OR ENGINE CUBIC INCH DISPLACEMENT	VEHICLE CODE	YEAR 19____
20938-9	MOULDING (FRONT DOOR) OUTSIDE (CONTINUED)				
C1KB 5420780-A	R.H. (⊟)	1	54,71	C	60/61
C1KB 5420781-A	L.H. (⊟)	1	54,71	C	60/61
C1KB 6220780-A	R.H. (⊟)	1	59,62	C	60/61
C1KB 6220781-A	L.H. (⊟)	1	59,62	C	60/61
⊟ Package also includes -					
(2) C1KB-6221094-A retainer	(2) 353911-S nut and washer		(1) 359155-S screw		
(4 or 5) C1AZ-6421094-C retainer					
C2GY 5420780-A	R.H. - 38-3/4" long (§)	1	54,71	C	62
C2GY 5420781-A	L.H. - 38-3/4" long (§)	1	54,71	C	62
C2GY 6220780-A	R.H. - 47-5/8" long (§)	1	59,62	C	62
C2GY 6220781-A	L.H. - 47-5/8" long (§)	1	59,62	C	62
§ Package also includes -					
(4) C2GY-16A076-A retainer	(1) 359606-S8 nut		(1) 376390-S100 screw		
(1) C2GY-16A076-B retainer					
C3GY 6220938-A	47-5/8" long - upper and lower	4	59, 62, 63, 76	C	63
Package also includes -					
(2) C2DZ-16A076-C retainer	(5) C2OZ-16A076-A retainer		(2) 359606-S8 nut		
COLB 5720938-A	R.H. - lower (a)	1	53, 57	D	60
COLB 5720939-A	L.H. - lower (a)	1	53, 57	D	60
COLB 6320938-A	R.H. - lower (a)	1	63	D	60
COLB 6320939-A	L.H. - lower (a)	1	63	D	60
C1VY 5720780-C	R.H. - 37-9/16" long (‡)	1	All	D	61/64
C1VY 5720781-C	L.H. - 37-9/16" long (‡)	1	All	D	61/64
‡ Package also includes -					
(3) C2VY-5721094-A retainer	(2) C1VY-57254A70-A retainer		(2) 34655-S8 nut and washer		
COLY 6320834-A	Kit-clip	AR	a		
20946	CLIP (DOOR OUTSIDE BELT MOULDING)				
C2MY 5420946-A		AR	54B, 65B, C, 75B, 76	A	62
20952	RETAINER (FRONT DOOR OUTSIDE LOWER MOULDING) FRONT				
C3MY 5420952-A		2	54B, 63B, C, 65B, C, 75B, C, 76	A	63
20954	RETAINER (DOOR OUTSIDE LOWER MOULDING) REAR				
C3MY 5420954-A	Front door	2	54B, 65B, C, 75B, 76	A	63
	Rear door	2	54, 75	A	63
C4MY 5420954-A	Front door	2	54B, 57D, 63D, 65B	A	64
	Rear door	2	54B, 57D	A	64
C4MY 5420954-B	Use on front fender, front door, rear door and quarter panel	AR	54F, 57C, F, 65C, F, 75F, 76C, F	A	64
20956-7	MOULDING (FRONT DOOR TRIM) LOWER				
COMB 5820956-A	37-1/2" long	2	57B, F, 58B, 77B, D	A	60
COMB 6320956-A	46-1/2" long	2	63B, F, 76D	A	60
C2MY 7620956-A	Front - 26-1/4" long	2	65C, 76B	A	62
C2MY 7621222-A	Rear - 12-7/8" long	2	65C, 76B	A	62
C3MY 6520956-A	Front - 26-1/4" long (Δ)	2	63C, 65C, 75C, 76B	A	63
C3MY 6521222-A	Rear - 12-7/8" long (Δ)	2	65C, 76B	A	63
Δ Package also includes -					
	(1) 52344-S13 screw				
C3MY 7521222-A	Rear - 12-7/8" long	2	75C	A	63
C4MY 5720956-A	38-1/2" long	2	54F, 57C, F, 75F	A	64
C4MY 6320956-A	44-13/64" long	2	63C, F, 65C, F, 76C, F	A	64

CONTINUED ON NEXT PAGE

GROUP AND PART NUMBER	DESCRIPTION, SIZE, ETC.	NO. REQ'D	MODEL OR ENGINE CUBIC INCH DISPLACEMENT	VEHICLE CODE	YEAR 19____
20956-7	MOULDING (FRONT DOOR TRIM) LOWER (CONTINUED)				
C4GY 5420956-A	R.H. - 34" long (‡)	1	54C, D	C	64
C4GY 5420957-A	L.H. - 34" long (‡)	1	54C, D	C	64
C4GY 6320956-A	R.H. - 43-1/2" long (‡)	1	63C, D, E, 76B, D	C	64
C4GY 6320957-A	L.H. - 43-1/2" long (‡)	1	63C, D, E, 76B, D	C	64
‡ Package also includes -					
	(3 or 4) 53027-S screw-No. 8-18 x 5/8"				
C1VY 5720956-A		2	All	D	61/63
C4VY 5320956-A	32" long	2	All	D	64
20958-9	MOULDING (FRONT DOOR TRIM) CENTER				
COMB 5720958-A	R.H. - 32-3/4" long	1	57F	A	60
COMB 5720959-A	L.H. - 32-3/4" long	1	57F	A	60
COMB 6320958-A	R.H. - 41-1/2" long	1	63F, 76D	A	60
COMB 6320959-A	L.H. - 41-1/2" long	1	63F, 76D	A	60
C1MB 5420958-C	29-1/8" long - off center crown	2	54B, 71A, B, 75B	A	61
C1MB 6320958-B		2	65A, B, 76	A	61
C2MB 5420958-A	R.H. - rear door	1	54B, 71B, 75B	A	62
C2MB 5420959-A	L.H. - rear door	1	54B, 71B, 75B	A	62
C2MB 7620958-A	R.H.	1	65B, 76	A	62
C2MB 7620959-A	L.H.	1	65B, 76	A	62
C4MY 6320958-A	Rectangle shaped - 19-1/4" x 8"	2	54F, 57C, 63C, 65C, F, 75F, 76C, F	A	64
C4GY 5420958-A	26-39/64" long	2	54C, D	C	64
C4GY 6320958-A	36" long	2	63C, D, 76B, D	C	64
COLB 6520958-B	L.H. - door only	1	54, 65, 68, 75	D	60
20960-1	RAIL (FRONT DOOR OUTSIDE FINISH) UPPER				
COMB 7720960-C	R.H. - fiberglas - oak grain	1	77B	A	60
COMB 7720961-C	L.H. - fiberglas - oak grain	1	77B	A	60
C1MY 7120960-A	R.H. - fiberglas - oak grain	1	71B	A	61
C1MY 7120961-A	L.H. - fiberglas - oak grain	1	71B	A	61
C2MY 7120960-B	R.H. - 43-3/8" long - fiberglas - oak grain	1	71B, D	A	62
C2MY 7120961-B	L.H. - 43-3/8" long - fiberglas - oak grain	1	71B, D	A	62
C3MY 7120960-A	R.H. - fiberglas (§)	1	71B, D	A	63/64
C3MY 7120961-A	L.H. - fiberglas (§)	1	71B, D	A	63/64
§ Package also includes -					
(1) C3MY-5420842-A retainer	(5) PB9M-7750108-A fastener		(5) 376910-S40 screw and washer		
(5) C3MY-7129192-A retainer	(1) 376358-S screw				
C3YY 7120960-A	R.H. - fiberglas (a)	1	71D, F	B	63
C3YY 7120961-A	L.H. - fiberglas (a)	1	71D, F	B	63
C3DZ 7120960-A	R.H. - fiberglas (Δ)	1	71C	C	62
		1	71C, D	C	63
C3DZ 7120961-A	L.H. - fiberglas (Δ)	1	71C	C	62
		1	71C, D	C	63
Δ Package also includes -					
(3) C2DZ-71290B32-A fastener	(3) 373702-S100 screw and washer		(2) 376376-S101 screw		
(3) 358404-S cap					
C4DZ 7120960-A	R.H. - fiberglas (‡)	1	71C	C	64
C4DZ 7120961-A	L.H. - fiberglas (‡)	1	71C	C	64
‡ Package also includes -					
(3) C3AB-71290B32-A fastener	(4) 358404-S cap		(1) 376592-S screw-No. 10-16 x 7/8"		
(1) 52775-S screw-No. 8-18 x 1/4"	(3) 373702-S screw-No. 10-32 x 1-1/4"				
(1) 358403-S retainer					
370933-S100	Screw-truss hd. -No. 10-12 x 3/4"	2	a		

GROUP AND PART NUMBER	DESCRIPTION, SIZE, ETC.	NO. REQ'D	MODEL OR ENGINE CUBIC INCH DISPLACEMENT	VEHICLE CODE	YEAR 19____
20970-1	MOULDING (FRONT DOOR TRIM)				
COLB 5720970-B	R.H.	1	53, 57	D	60
COLB 5720971-B	L.H.	1	53, 57	D	60
COLB 6320970-B	R.H.	1	63	D	60
COLB 6320971-B	L.H.	1	63	D	60
20973	SPACER (FRONT DOOR VENT WINDOW MOTOR MOUNTING BRACKET)				
BAK 5720973-A	Electric vents (1) end 5/16" long 12-24 external thread - other end 7/16" diameter 12-24 internal thread	6	All	D	60
20978	PLATE (DOOR OUTSIDE NAME)				
C1MB 6220978-B	Meteor "800"	2	54A, 62A, 65A, 75A	A	61
C1MB 6220978-C	Meteor "600"	2	58A, 64A	A	61
20980	REFER TO GROUP 517A20-1				
20982-3	MOULDING (FRONT DOOR WINDOW FRAME) OUTSIDE REAR				
B9MB 6420938-A	R.H. - snap-on - 14-1/2" long - rustless steel	1	64	A	60
B9MB 6420939-A	L.H. - snap-on - 14-1/2" long - rustless steel	1	64	A	60
C2AZ 5420982-A	R.H. - top rear - 14-7/8" long - rustless steel	1	54, 58	A	61/64
C2AZ 5420983-A	L.H. - top rear - 14-7/8" long - rustless steel	1	54, 58	A	61/64
C2AZ 6220982-A	R.H. - top rear - 14-3/4" long - rustless steel	1	62, 64	A	61/64
C2AZ 6220983-A	L.H. - top rear - 14-3/4" long - rustless steel	1	62, 64	A	61/64
C2AZ 7120982-A	R.H. - top rear - 15" long - rustless steel	1	71	A	61/64
C2AZ 7120983-A	L.H. - top rear - 15" long - rustless steel	1	71	A	61/64
C2YB 6220982-A	R.H. - rustless steel	1	All except 65	B	62/63
C2YB 6220983-A	L.H. - rustless steel	1	All except 65	B	62/63
CODB 5820982-B	R.H. - front door - rustless steel	1	54, 71	C	60/62
	L.H. - rear door front - rustless steel	1	54, 71	C	60/62
	R.H. - front door - rustless steel	1	54B, C, D, 71B, C, D	C	63/64
	L.H. - rear door front - rustless steel	1	54B, 71B, C, D	C	63
	L.H. - rear door front - rustless steel	1	54B, C, D	C	64
CODB 5820983-B	L.H. - front door - rustless steel	1	54, 71	C	60/62
	R.H. - rear door front - rustless steel	1	54, 71	C	60/62
	L.H. - front door - rustless steel	1	54B, C, D, 71B, C, D	C	63/64
	R.H. - rear door front - rustless steel	1	54B, 71B, C, D	C	63
	R.H. - rear door front - rustless steel	1	54B, C, D	C	64
CODB 6420982-B	R.H. - rustless steel	1	59, 62	C	60/62
	R.H. - rustless steel	1	59B, 62B, C	C	63/64
CODB 6420983-B	L.H. - rustless steel	1	59, 62	C	60/62
	L.H. - rustless steel	1	59B, 62B, C	C	63/64
20988	ORNAMENT (FRONT DOOR INSIDE PANEL)				
C4GY 5420988-A	Wood grain insert (a)	2	54C, D, 63C, D, 76B, D	C	64
375480-S	Sleeve nut	4	a		
20994	REFER TO GROUP 20852				
21032-3	RETAINER (FRONT DOOR TRIM PANEL)				
B9MB 58237A02-AP	R.H.	1	57, 58, 77	A	60
B9MB 58237A03-AP	L.H.	1	57, 58, 77	A	60
B9MB 64237A02-AP	R.H.	1	63, 64, 76	A	60
B9MB 64237A03-AP	L.H.	1	63, 64, 76	A	60

CONTINUED ON NEXT PAGE

GROUP AND PART NUMBER	DESCRIPTION, SIZE, ETC.	NO. REQ'D	MODEL OR ENGINE CUBIC INCH DISPLACEMENT	VEHICLE CODE	YEAR 19____
21032-3	RETAINER (FRONT DOOR TRIM PANEL) CONTINUED				
C1AB 5421032-BP	R.H.	1	54, 58, 71, 75	A	61/62
C1AB 5421033-BP	L.H.	1	54, 58, 71, 75	A	61/62
C1AB 6221032-BP	R.H.	1	62, 64, 65, 76	A	61/62
C1AB 6221033-BP	L.H.	1	62, 64, 65, 76	A	61/62
C3AZ 5421032-A	R.H.	1	54, 57, 71, 75	A	63/64
C3AZ 5421033-A	L.H.	1	54, 57, 71, 75	A	63/64
C3AZ 6221032-A	R.H.	1	62, 63, 65, 76	A	63/64
C3AZ 6221033-A	L.H.	1	62, 63, 65, 76	A	63/64
21060	RETAINER (FRONT DOOR OUTSIDE MOULDING)				
C1VY 5721060-B	Front door - belt - (5) R.H. and (5) L.H.	10	All	D	61/63
	Rear door - belt - (4) R.H. and (4) L.H.	8	All	D	61/63
C4VY 5321060-A	Front door - belt - (2) R.H. and (2) L.H.	4	All	D	64
21066	RETAINER (DOOR OUTSIDE LOWER MOULDING)				
BAM 5721066-F	Use on front fender	8	All	D	60
21069	RETAINER (DOOR OUTSIDE UPPER MOULDING) INTERMEDIATE				
C1MB 6221069-A		2	54A, 58A, 62A, 65A, 71A, 75A	A	61
21094	RETAINER (OUTSIDE MOULDINGS)				
C1AB 6221094-A	Front door	2	All	A	61/62
	Rear door	2	54B, 75B	A	61
	Rear door	2	All	A	62
	Front fender	2	All	A	61/62
	Quarter panel	2	All except 71B, D	A	61/62
COAZ 6421094-C	Rear door	6	54, 71A, 75	A	62
	Quarter	6	62, 65, 76	A	62
C4MY 5421094-A	Center - use on front and rear doors and quarter - lower	14	54B, 57D, 63D, 65B	A	64
C4MY 6221094-A	Use on front and rear doors - lower	4	54A, 62A, 65A, 71A, C, 76A	A	64
C1KB 6221094-A	Front fender	AR	54B, 65B, 75B, 76	A	61/62
	Front door	2	54B, 65B, 75B, 76	A	62
	Quarter	AR	All	B C	60/62
	Rear door	AR	All	C	60/62
	Tailgate	AR	All	C	62
C1AZ 6421094-A	Universal - fits moulding sizes 1-3/4" wide to 3" wide	AR	All	A B C D	60/63
C1AZ 6421094-B	Universal - fits moulding sizes 1" wide to 1-3/4" wide	AR	All	A B C D	60/63
C1AZ 6421094-C	Universal - fits moulding sizes 1/2" wide to 1" wide	AR	All	A B C D	60/63
C1VB 5721094-A	Front door	8	All	D	61
C2VY 5721094-A	Front door - lower	6	All	D	62/64
21108	STRIP (FRONT DOOR BELT INSIDE PANEL) REAR FINISH				
C4VY 5321108-A	Vinyl	2	53, 74	D	64

GROUP AND PART NUMBER	DESCRIPTION, SIZE, ETC.	NO. REQ'D	MODEL OR ENGINE CUBIC INCH DISPLACEMENT	VEHICLE CODE	YEAR 19____
21110-1	MOULDING (FRONT DOOR TRIM) UPPER				
COMB 5821110-B	R.H. - 73-1/2" long	1	57B, 58B, 77B, D	A	60
COMB 5821111-B	L.H. - 73-1/2" long	1	57B, 58B, 77B, D	A	60
COMB 5821110-C	R.H. - 73-1/4" long - "U" shaped	1	57A, 58A, 77A	A	60
COMB 5821111-C	L.H. - 73-1/4" long - "U" shaped	1	57A, 58A, 77A	A	60
COMB 6321110-A	R.H. - 36-5/8" long	1	57F, 63F, 76D	A	60
COMB 6321111-A	L.H. - 36-5/8" long	1	57F, 63F, 76D	A	60
COMB 6321110-B	R.H. - 81-3/8" long	1	63B	A	60
COMB 6321111-B	L.H. - 81-3/8" long	1	63B	A	60
COMB 6421110-A	R.H. - 87-3/4" long - "U" shaped	1	63A, 64A, 76A	A	60
COMB 6421111-A	L.H. - 87-3/4" long - "U" shaped	1	63A, 64A, 76A	A	60
C4GY 5421110-A		2	54, C, D	C	64
C4GY 6321110-A		2	63C, D, 76B, D	C	64
C1VY 5721110-D	R.H.	1	All	D	61/63
C1VY 5721111-D	L.H.	1	All	D	61/63
C4VY 5321110-A	Rear - use on vehicles built prior to 11-18-63	2	All	D	64
C4VY 5321110-B	Rear - use on vehicles built after 11-17-63	2	All	D	64
21116-7	REFER TO GROUP 20934-5				
21122-3	PLATE (FRONT DOOR INSIDE PANEL COVER)				
BAK 5721122-A	R.H.	1	All	D	60
BAK 5721123-A	L.H.	1	All	D	60
21216-7	PANEL (FRONT DOOR TRIM) FINISH				
C4MY 5421216-A	R.H. - wood grain	1	54F, 57C, F, 63C, F, 65C, F, 75F, 76C, F	A	64
C4MY 5421217-A	L.H. - wood grain	1	54F, 57C, F, 63C, F, 65C, F, 75F, 76C, F	A	64
C4MY 6321216-A	R.H. - chrome	1	57A, D, 63A, D	A	64
C4MY 6321217-A	L.H. - chrome	1	57A, D, 63A, D	A	64
C4GY 5421216-A	Wood grain	2	54C, D, 63C, D, 76B, D	C	64
C1VY 5721216-C	R.H. - front door - brushed aluminum finish - use when electric vent windows are not installed	1	All	D	61/63
C1VY 5721217-C	L.H. - front door - brushed aluminum finish - use when electric vent windows are not installed	1	All	D	61/63
C1VY 5721216-D	R.H. - front door - walnut grain finish - use when electric vent windows are not installed	1	All	D	61/63
C1VY 5721217-D	L.H. - front door - walnut grain finish - use when electric vent windows are not installed	1	All	D	61/63
C2VY 5721216-A	R.H. - front door - brushed aluminum finish - use when electric vent windows are installed	1	All	D	62/63
C2VY 5721217-A	L.H. - front door - brushed aluminum finish - use when electric vent windows are installed	1	All	D	62/63
C2VY 5721216-B	R.H. - front door - walnut grain finish - use when electric vent windows are installed	1	All	D	62/63
C2VY 5721217-B	L.H. - front door - walnut grain finish - use when electric vent windows are installed	1	All	D	62/63
21222	REFER TO GROUP 20956-7				
21294	ROD (FRONT DOOR LOCK PUSH BUTTON TO CYLINDER)				
COMB 5821294-A	18-3/4" long - "U" shaped	2	57, 58, 77	A	60

GROUP AND PART NUMBER	DESCRIPTION, SIZE, ETC.	NO. REQ'D	MODEL OR ENGINE CUBIC INCH DISPLACEMENT	VEHICLE CODE	YEAR 19____
21406-7	FRAME & GLASS (FRONT DOOR VENTILATOR WINDOW)				
C3VY 5721406-A	R.H. - manual - clear	1	All	D	61/63
C3VY 5721407-A	L.H. - manual - clear	1	All	D	61/63
C3VY 5721406-B	R.H. - manual - tinted	1	All	D	61/63
C3VY 5721407-B	L.H. - manual - tinted	1	All	D	61/63
C3VY 5721406-E	R.H. - electric - clear	1	All	D	61/63
C3VY 5721407-E	L.H. - electric - clear	1	All	D	61/63
C3VY 5721406-F	R.H. - electric - tinted	1	All	D	61/63
C3VY 5721407-F	L.H. - electric - tinted	1	All	D	61/63
C4VY 5321406-A	R.H. - electric - clear	1	All	D	64
C4VY 5321407-A	L.H. - electric - clear	1	All	D	64
C4VY 5321406-B	R.H. - electric - tinted	1	All	D	64
C4VY 5321407-B	L.H. - electric - tinted	1	All	D	64
21410-1	GLASS (FRONT DOOR WINDOW)				
PB9M 5621410-A	Clear	2	63, 76	A	60
PB9M 5621410-B	Tinted	2	63, 76	A	60
PB9M 5721410-A	Clear	2	57, 77	A	60
PB9M 5721410-B	Tinted	2	57, 77	A	60
B9MB 5821410-A	Clear	2	58	A	60
B9MB 5821410-B	Tinted	2	58	A	60
B9MB 6421410-A	Clear	2	64	A	60
B9MB 6421410-B	Tinted	2	64	A	60
C2AB 5421410-A	Clear	2	54,58, 71	A	61/62
C2AB 5421410-B	Tinted	2	54,58, 71	A	61/62
C1AB 6321410-A	Clear	2	76	A	61/62
C1AB 6321410-B	Tinted	2	76	A	61/62
COAB 6421410-C	Clear	2	62, 64	A	61/62
COAB 6421410-D	Tinted	2	62, 64	A	61/62
C1AB 6521410-C	Clear	2	65	A	61/62
C1AB 6521410-D	Tinted	2	65	A	61/62
C1AB 7521410-A	Clear	2	75	A	61/62
C1AB 7521410-B	Tinted	2	75	A	61/62
C3AZ 5421410-A	Clear	2	54, 71	A	63
		2	54	A	64
C3AZ 5421410-B	Tinted	2	54	A	63/64
C3AZ 7121410-C	Clear	2	71	A	64
C3AZ 7121410-D	Tinted	2	71	A	63/64
C3AZ 6221410-A	Clear	2	62	A	63/64
C3AZ 6221410-B	Tinted	2	62	A	63/64
C3AZ 6321410-A	Clear	2	63	A	63/64
C3AZ 6321410-B	Tinted	2	63	A	63/64
C3AZ 6521410-A	Clear	2	65	A	63/64
C3AZ 6521410-B	Tinted	2	65	A	63/64
C3AZ 7521410-A	Clear	2	75	A	63/64
C3AZ 7521410-B	Tinted	2	75	A	63/64
C3AZ 7621410-A	Clear	2	76	A	63/64
C3AZ 7621410-B	Tinted	2	76	A	63/64
C4AZ 5721410-A	Clear	2	57	A	64
C4AZ 5721410-B	Tinted	2	57	A	64
C2OZ 5421410-A	Clear	2	54, 71	B	62/63
C2OZ 5421410-B	Tinted	2	54, 71	B	62/63
C2OZ 6221410-A	Clear	2	62	B	62/63
C2OZ 6221410-B	Tinted	2	62	B	62/63
C3OZ 6521410-A	Clear	2	65	B	63
C3OZ 6521410-B	Tinted	2	65	B	63

CONTINUED ON NEXT PAGE

GROUP AND PART NUMBER	DESCRIPTION, SIZE, ETC.	NO. REQ'D	MODEL OR ENGINE CUBIC INCH DISPLACEMENT	VEHICLE CODE	YEAR 19____
21410-1	GLASS (FRONT DOOR WINDOW) CONTINUED				
CODZ 5821410-J	Clear	2	54, 71	C	60/64
CODZ 5821410-K	Tinted	2	54, 71	C	61/64
CODZ 6421410-J	Clear	2	59, 62	C	60/64
CODZ 6421410-K	Tinted	2	59, 62	C	61/64
C3DZ 7621410-A	Clear	2	76	C	63
C3DZ 7621410-B	Tinted	2	76	C	63
C4DZ 6321410-C	Clear	2	63	C	63/64
C3DZ 6321410-B	Tinted	2	63	C	63
C4DZ 6321410-D	Tinted	2	63	C	64
C4DZ 7621410-C	Clear	2	76	C	64
C4DZ 7621410-D	Tinted	2	76	C	64
BAK 5721410-A	Clear	2	53, 57	D	60
BAK 5721410-B	Tinted	2	53, 54, 57, 75	D	60
BAK 6321410-A	Clear	2	63	D	60
BAK 6321410-B	Tinted	2	63, 65, 68	D	60
C3VY 5721410-A	R. H. - clear	1	All	D	61/63
C3VY 5721411-A	L. H. - clear	1	All	D	61/63
C3VY 5721410-B	R. H. - tinted	1	All	D	61/63
C3VY 5721411-B	L. H. - tinted	1	All	D	61/63
C4VY 5321410-A	Clear	2	53	D	64
C4VY 5321410-B	Tinted	2	53	D	64
C4VY 7421410-A	Clear	2	74	D	64
C4VY 7421410-B	Tinted	2	74	D	64
21412-3	GLASS (FRONT DOOR VENTILATOR WINDOW)				
PB9M 5621412-A	Clear	2	All except 58, 64	A	60
PB9M 5621412-B	Tinted	2	All except 58, 64	A	60
PB9M 5821412-A	Clear	2	58, 64	A	60
PB9M 5821412-B	Tinted	2	58, 64	A	60
COAB 6321412-E	Clear	2	76	A	61/62
COAB 6321412-F	Tinted	2	76	A	61/62
COAZ 6421412-C	Clear	2	54, 58, 62, 64, 71	A	61/62
COAZ 6421412-D	Tinted	2	54, 58, 62, 64, 71	A	61/62
COAB 7521412-C	Clear	2	65, 75	A	61/62
COAB 7521412-D	Tinted	2	65, 75	A	61/62
C3AZ 6221412-C	Clear	2	54, 62, 71	A	63/64
C3AZ 6221412-D	Tinted	2	54, 62, 71	A	63/64
C3AZ 6521412-A	Clear - use on vehicles built prior to 6-14-63	2	65, 75	A	63
C3AZ 6521412-B	Tinted - use on vehicles built prior to 6-14-63	2	65, 75	A	63
C3AZ 6521412-C	Clear - use on vehicles built after 6-13-63	2	65, 75	A	63/64
C3AZ 6521412-D	Tinted - use on vehicles built after 6-13-63	2	65, 75	A	63/64
C3AZ 7621412-A	Clear - use on vehicles built prior to 6-14-63	2	63, 76	A	63
C3AZ 7621412-B	Tinted - use on vehicles built prior to 6-14-63	2	63, 76	A	63
C3AZ 7621412-C	Clear - use on vehicles built after 6-13-63	2	57, 63, 76	A	63/64
C3AZ 7621412-D	Tinted - use on vehicles built after 6-13-63	2	57, 63, 76	A	63/64
C2OZ 6221412-A	Clear	2	All except 65	B	62/63
C2OZ 6221412-B	Tinted	2	All except 65	B	62/63
C3OZ 6521412-A	Clear	2	65	B	63
C3OZ 6521412-B	Tinted	2	65	B	63
C2DZ 6421412-A	Clear	2	All except 63, 76	C	60/64
CODB 6421412-D	Tinted - use on vehicles built prior to 6-15-62	2	All	C	61/62
C2DZ 6421412-B	Tinted - use on vehicles built after 6-14-62	2	All except 63, 76	C	62/64
C3DZ 7621412-A	Clear	2	63, 76	C	63/64
C3DZ 7621412-B	Tinted	2	63, 76	C	63/64
BAK 5721412-A	Clear	2	53, 57, 63	D	60
BAK 5721412-B	Tinted	2	All	D	60

CONTINUED ON NEXT PAGE

GROUP AND PART NUMBER	DESCRIPTION, SIZE, ETC.	NO. REQ'D	MODEL OR ENGINE CUBIC INCH DISPLACEMENT	VEHICLE CODE	YEAR 19____
21412-3	GLASS (FRONT DOOR VENTILATOR WINDOW) CONTINUED				
C1VB 5721412-C	R.H. - clear - use on vehicles built prior to 11-15-60☆	1	All	D	61
C1VB 5721413-C	L.H. - clear - use on vehicles built prior to 11-15-60☆	1	All	D	61
	☆ Use 21406-7 for vehicles built after 11-14-60				
21448-9	WEATHERSTRIP (FRONT DOOR VENTILATOR WINDOW) FRONT				
PB9M 5821448-A	R.H.	1	58, 64	A	60
PB9M 5821449-A	L.H.	1	58, 64	A	60
COMB 6321448-A	R.H.	1	All except 58, 64	A	60
COMB 6321449-A	L.H.	1	All except 58, 64	A	60
C1AB 6321448-A	R.H.	1	76	A	61/62
COAB 6321449-D	L.H. - use on vehicles built prior to 12-1-60	1	76	A	61
C1AB 6321449-A	L.H. - use on vehicles built after 11-30-60	1	76	A	61/62
C1AB 7521448-A	R.H.	1	65, 75	A	61/62
C1AB 7521449-A	L.H.	1	65,75	A	61/62
C2AZ 6221448-A	R.H.	1	54,58,62,64,71	A	61/62
C2AZ 6221449-A	L.H.	1	54,58,62,64,71	A	61/62
C3AZ 6221448-A	R.H.	1	54, 62, 71	A	63/64
C3AZ 6221449-A	L.H.	1	54, 62, 71	A	63/64
C3AZ 6521448-A	R.H.	1	65, 75	A	63/64
C3AZ 6521449-A	L.H.	1	65, 75	A	63/64
C3AZ 7621448-B	R.H.	1	57, 63, 76	A	63/64
C3AZ 7621449-B	L.H.	1	57, 63, 76	A	63/64
C2OZ 6221448-B	R.H.	1	All except 65	B	62/63
C2OZ 6221449-B	L.H.	1	All except 65	B	62/63
C3OZ 6521448-B	R.H.	1	65	B	63
C3OZ 6521449-B	L.H.	1	65	B	63
C1DZ 6421448-A	R.H.	1	All except 63, 76	C	60/64
C1DZ 6421449-A	L.H.	1	All except 63, 76	C	60/64
C3DZ 7621448-B	R.H.	1	63, 76	C	63/64
C3DZ 7621449-B	L.H.	1	63, 76	C	63/64
BAK 5721448-A	R.H.	1	All	D	60
BAK 5721449-A	L.H.	1	All	D	60
C1VY 5721448-C	R.H.	1	All	D	61/63
C1VY 5721449-C	L.H.	1	All	D	61/63
C4VY 5321448-A	R.H.	1	All	D	64
C4VY 5321449-A	L.H.	1	All	D	64
21450-1	WEATHERSTRIP (FRONT DOOR VENTILATOR WINDOW DIVISION BAR)				
B9A 6421450-A	13" long	2	All	A	60
COAB 6321450-A		2	76	A	61/62
COAB 5721450-A		2	65, 75	A	61/64
COAB 6421450-A		2	54, 58, 62, 64, 71	A	61/64
C3AZ 7621450-A		2	57, 63, 76	A	63/64
C2OB 6221450-A		2	All except 65	B	62/63
C3OZ 6521450-A		2	65	B	63
CODB 6421450-A		2	All except 63, 76	C	60/64
C3DZ 7621450-A		2	63, 76	C	63/64
BAK 5721450-A		2	All	D	60
C4VY 5321450-A	R.H. (Δ)	1	All	D	64
C4VY 5321451-A	L.H. (Δ)	1	All	D	64

Δ Package also includes -

(4) 351603-S100 rivet

GROUP AND PART NUMBER	DESCRIPTION, SIZE, ETC.	NO. REQ'D	MODEL OR ENGINE CUBIC INCH DISPLACEMENT	VEHICLE CODE	YEAR 19____
21452-3	WEATHERSTRIP (FRONT DOOR GLASS AT BELT) OUTER				
COMB 5721452-A	R.H. - 22-1/4" long - with clips	1	57,77	A	60
COMB 5721453-A	L.H. - 22-1/4" long - with clips	1	57,77	A	60
COMB 5821452-A	R.H. - 21-5/8" long - with clips	1	58	A	60
COMB 5821453-A	L.H. - 21-5/8" long - with clips	1	58	A	60
COMB 6321452-A	R.H. - 27-5/8" long - with clips	1	63,76	A	60
COMB 6321453-A	L.H. - 27-5/8" long - with clips	1	63,76	A	60
COMB 6421452-A	R.H. - 26-7/8" long - with clips	1	64	A	60
COMB 6421453-A	L.H. - 26-7/8" long - with clips	1	64	A	60
COAB 5721452-A	R.H. - 21-7/8" long - remove clips for inside use	1	75	A	61/62
COAB 5721453-A	L.H. - 21-7/8" long - remove clips for inside use	1	75	A	61/62
COAB 5821452-A	R.H. - 21-1/4" long - remove clips for inside use	1	54,58,71	A	61/62
COAB 5821453-A	L.H. - 21-1/4" long - remove clips for inside use	1	54,58,71	A	61/62
COAB 6321452-A	R.H. - 28-7/8" long - remove clips for inside use	1	65,76	A	61/62
COAB 6321453-A	L.H. - 28-7/8" long - remove clips for inside use	1	65,76	A	61/62
COAB 6421452-A	R.H. - 28-1/4" long - remove clips for inside use	1	62, 64	A	61/62
COAB 6421453-A	L.H. - 28-1/4" long - remove clips for inside use	1	62, 64	A	61/62
C3AZ 5421452-A	R.H. - with clips	1	54, 71	A	63
C3AZ 5421453-A	L.H. - with clips	1	54, 71	A	63
C3AZ 7521452-A	R.H. - with clips	1	75	A	63
C3AZ 7521453-A	L.H. - with clips	1	75	A	63
C3AZ 6221452-A	R.H. - with clips	1	62	A	63/64
C3AZ 6221453-A	L.H. - with clips	1	62	A	63/64
C3AZ 6521452-A	R.H. - with clips	1	63, 65, 76	A	63/64
C3AZ 6521453-A	L.H. - with clips	1	63, 65, 76	A	63/64
C4AZ 5421452-A	R.H. - with clips	1	54, 71	A	64
C4AZ 5421453-A	L.H. - with clips	1	54, 71	A	64
C4MY 7521452-A	R.H. - with clips	1	75	A	64
C4MY 7521453-A	L.H. - with clips	1	75	A	64
C2OB 6221452-A	R.H. - with clips - remove clips for inside use	2	62	B	62
C2OB 6221453-A	L.H. - with clips - remove clips for inside use	2	62	B	62
C2OZ 5421452-A	R.H. - with clips - remove clips for inside use	2	54, 71	B	62/63
C2OZ 5421453-A	L.H. - with clips - remove clips for inside use	2	54, 71	B	62/63
C3OZ 6221452-A	R.H. - with clips	1	62	B	63
C3OZ 6221453-A	L.H. - with clips	1	62	B	63
C3OZ 6521452-A	With clips	2	65	B	63
CODZ 6421452-E	R.H. - 27-7/8" long - with clips - outside - cut to fit models 54, 71	1	54, 59, 62, 71	C	60/64
	R.H. - inside - necessary to remove clips	1	All except 63, 76	C	60/64
CODZ 6421453-E	L.H. - 27-7/8" long - with clips - outside - cut to fit models 54, 71	1	54, 59, 62, 71	C	60/64
	L.H. - inside - necessary to remove clips	1	All except 63, 76	C	60/64
C3DZ 7621452-A	R.H. - with clips	1	63, 76	C	63/64
C3DZ 7621453-A	L.H. - with clips	1	63, 76	C	63/64
BAK 5721452-B	R.H.	1	53,54,57,75	D	60
BAK 5721453-B	L.H.	1	53,54,57,75	D	60
BAK 6321452-B	R.H.	1	63,65,68	D	60
BAK 6321453-B	L.H.	1	63,65,68	D	60
C1VB 5721452-B	R.H.	1	All	D	61/62
C3VY 5721452-A	R.H.	1	All	D	63
C3VY 5721453-A	L.H.	1	All	D	61/63
C4VY 5321452-A	R.H.	1	All	D	64
C4VY 5321453-A	L.H.	1	All	D	64
C4VY 7421452-A	Rear - stabilizer - 4-3/4"	2	All	D	64
	For 1964 Mercury, model 57, refer to group 20934 For 1964 Comet model 62 inner refer to 21456-7				

GROUP AND PART NUMBER	DESCRIPTION, SIZE, ETC.	NO. REQ'D	MODEL OR ENGINE CUBIC INCH DISPLACEMENT	VEHICLE CODE	YEAR 19____
21456-7	WEATHERSTRIP (FRONT DOOR GLASS AT BELT) INNER				
COMB 5721456-B	R.H. - 25-7/8" long	1	57,77	A	60
COMB 5721457-B	L.H. - 25-7/8" long	1	57,77	A	60
COMB 5821456-B	R.H. - 26" long	1	58	A	60
COMB 5821457-B	L.H. - 26" long	1	58	A	60
COMB 6321456-B	R.H. - 31-7/8" long	1	63,76	A	60
COMB 6321457-B	L.H. - 31-7/8" long	1	63,76	A	60
COMB 6421456-B	R.H. - 34-3/8" long	1	64	A	60
COMB 6421457-B	L.H. - 34-3/8" long	1	64	A	60
C3AZ 5421456-A	R.H. - Police Special and Taxi	1	54A	A	63
C3AZ 5421457-A	L.H. - Police Special and Taxi	1	54A	A	63
C3MY 5421456-A	R.H. - 30-11/16" long - less clips	1	54, 71	A	63
C3MY 5421457-A	L.H. - 30-11/16" long - less clips	1	54, 71	A	63
C3AZ 6221456-A	R.H. - Police Special and Taxi	1	62A	A	63
C3AZ 6221457-A	L.H. - Police Special and Taxi	1	62A	A	63
C3MY 6221456-A	R.H. - 37-3/4" long - less clips	1	62	A	63
C3MY 6221457-A	L.H. - 37-3/4" long - less clips	1	62	A	63
C3MY 6521456-A	R.H. - 37-1/2" long - less clips	1	63, 65, 76	A	63
C3MY 6521457-A	L.H. - 37-1/2" long - less clips	1	63, 65, 76	A	63
C3MY 7521456-A	R.H. - 30-11/16" long - less clips	1	75	A	63
C3MY 7521457-A	L.H. - 30-11/16" long - less clips	1	75	A	63
C4AZ 5421456-A	R.H. - 30-11/16" long - less clips	1	54, 71	A	64
C4AZ 5421457-A	L.H. - 30-11/16" long - less clips	1	54, 71	A	64
C4AZ 5721456-A	R.H. - 30-11/16" long - less clips	1	57, 75	A	64
C4AZ 5721457-A	L.H. - 30-11/16" long - less clips	1	57, 75	A	64
C4AZ 6221456-A	R.H. - 37-3/4" long - less clips	1	62	A	64
C4AZ 6221457-A	L.H. - 37-3/4" long - less clips	1	62	A	64
C4AZ 6321456-A	R.H. - 37-1/2" long - less clips	1	63, 65, 76	A	64
C4AZ 6321457-A	L.H. - 37-1/2" long - less clips	1	63, 65, 76	A	64
C3OZ 6221456-A	R.H. - with clips	1	62	B	63
C3OZ 6221457-A	L.H. - with clips	1	62	B	63
C3OZ 6521456-A	R.H. - 23-5/8" long - with clips	1	65	B	63
C3OZ 6521457-A	L.H. - 23-5/8" long - with clips	1	65	B	63
C3DZ 7621456-A	R.H. - 26-5/8" long - with clips	1	63, 76	C	63/64
C3DZ 7621457-A	L.H. - 26-5/8" long - with clips	1	63, 76	C	63/64
C4DZ 6221456-A	R.H. - 27-7/8" long - with clips	1	62	C	64
C4DZ 6221457-A	L.H. - 27-7/8" long - with clips	1	62	C	64
C1VB 5721456-C	R.H.	1	All	D	61/63
C1VB 5721457-C	L.H.	1	All	D	61/63
C4VY 5321456-A	R.H. - 30-13/32" long - less clips	1	All	D	64
C4VY 5321457-A	L.H. - 30-13/32" long - less clips	1	All	D	64
21458-9	CHANNEL (FRONT DOOR WINDOW GLASS)				
PB9M 5721458-A	R.H.	1	57, 77	A	60
PB9M 5721459-A	L.H.	1	57, 77	A	60
B9MB 5821458-A	R.H.	1	58	A	60
B9MB 5821459-A	L.H.	1	58	A	60
B9MB 6321458-A	R.H.	1	63, 76	A	60
B9MB 6321459-A	L.H.	1	63, 76	A	60
B9MB 6421458-A	R.H.	1	64	A	60
B9MB 6421459-A	L.H.	1	64	A	60
COAB 5821458-A	R.H.	1	54, 58, 71	A	61/62
COAB 5821459-A	L.H.	1	54, 58, 71	A	61/62
COAB 6321458-B	R.H.	1	65, 76	A	61/62
COAB 6321459-B	L.H.	1	65, 76	A	61/62
COAB 6421458-A	R.H.	1	62, 64	A	61/62
COAB 6421459-A	L.H.	1	62, 64	A	61/62

CONTINUED ON NEXT PAGE

GROUP AND PART NUMBER	DESCRIPTION, SIZE, ETC.	NO. REQ'D	MODEL OR ENGINE CUBIC INCH DISPLACEMENT	VEHICLE CODE	YEAR 19____
21458-9	CHANNEL (FRONT DOOR WINDOW GLASS) CONTINUED				
COAB 7521458-A	R. H.	1	75	A	61/62
COAB 7521459-A	L. H.	1	75	A	61/62
C3AZ 5421458-A	R. H.	1	54, 71	A	63
C3AZ 5421459-A	L. H.	1	54, 71	A	63
C3AZ 6221458-A	R. H.	1	62	A	63
C3AZ 6221459-A	L. H.	1	62	A	63
C3AZ 6521458-A	R. H.	1	65	A	63
C3AZ 6521459-A	L. H.	1	65	A	63
C3AZ 7621458-A	R. H.	1	63, 76	A	63
C3AZ 7621459-A	L. H.	1	63, 76	A	63
C3AZ 7521458-A	R. H.	1	75	A	63/64
C3AZ 7521459-A	L. H.	1	75	A	63/64
C4AZ 5421458-A	R. H.	1	54, 71	A	64
C4AZ 5421459-A	L. H.	1	54, 71	A	64
C4AZ 5721458-A	R. H.	1	57	A	64
C4AZ 5721459-A	L. H.	1	57	A	64
C4AZ 6221458-A	R. H.	1	62	A	64
C4AZ 6221459-A	L. H.	1	62	A	64
C4AZ 6321458-A	R. H.	1	63, 76	A	64
C4AZ 6321459-A	L. H.	1	63, 76	A	64
C4MY 6521458-A	R. H.	1	65	A	64
C4MY 6521459-A	L. H.	1	65	A	64
C2OB 6221458-A	R.H.	1	62	B	62/63
C2OB 6221459-A	L.H.	1	62	B	62/63
C2OB 5421458-A	R.H. - use on vehicles built prior to 2-5-63	1	54, 71	B	62/63
C2OB 5421459-A	L.H. - use on vehicles built prior to 2-5-63	1	54, 71	B	62/63
C3OZ 5421458-A	R. H. - use on vehicles built after 2-4-63	1	54, 71	B	63
C3OZ 5421459-A	L. H. - use on vehicles built after 2-4-63	1	54, 71	B	63
C3OZ 6521458-A	R. H. - use on vehicles built prior to 2-1-63	1	65	B	63
C3OZ 6521459-A	L. H. - use on vehicles built prior to 2-1-63	1	65	B	63
C3OZ 6521458-B	R. H. - use on vehicles built between 1-31-62 and 5-16-63	1	65	B	63
C3OZ 6521459-B	L. H. - use on vehicles built between 1-31-63 and 5-16-63	1	65	B	63
C3OZ 6521458-C	R. H. - use on vehicles built after 5-15-63	1	65	B	63
C3OZ 6521459-C	L. H. - use on vehicles built after 5-15-63	1	65	B	63
CODB 5821458-A	R. H. - use on vehicles built prior to 2-5-63	1	54, 71	C	60/63
CODB 5821459-A	L. H. - use on vehicles built prior to 2-5-63	1	54, 71	C	60/63
C3DZ 5421458-A	R. H. - use on vehicles built after 2-4-63	1	54, 71	C	63/64
C3DZ 5421459-A	L. H. - use on vehicles built after 2-4-63	1	54, 71	C	63/64
CODB 6421458-A	R. H.	1	59, 62	C	60/64
CODB 6421459-A	L. H.	1	59, 62	C	60/64
C3DZ 7621458-B	R. H. - use on vehicles built prior to 4-15-63	1	63, 76	C	63
C3DZ 7621459-B	L. H. - use on vehicles built prior to 4-15-63	1	63, 76	C	63
C3DZ 7621458-C	R. H. - use on vehicles built after 4-14-63	1	63, 76	C	63/64
C3DZ 7621459-C	L. H. - use on vehicles built after 4-14-63	1	63, 76	C	63/64
BAK 5721458-A	R. H.	1	53, 54, 57, 75	D	60
BAK 5721459-A	L.H.	1	53, 54, 57, 75	D	60
BAK 6321458-A	R. H.	1	63, 65, 68	D	60
BAK 6321459-A	L. H.	1	63, 65, 68	D	60
C3VY 5721458-A	R. H.	1	All	D	61/63
C2VY 5721459-A	L. H. - use on vehicles built prior to 10-17-62	1	All	D	61/63
C3VY 5721459-A	L. H. - use on vehicles built after 10-16-62	1	All	D	63
C4VY 5321458-A	R. H.	1	All	D	64
C4VY 5321459-A	L. H.	1	All	D	64

GROUP AND PART NUMBER	DESCRIPTION, SIZE, ETC.	NO. REQ'D	MODEL OR ENGINE CUBIC INCH DISPLACEMENT	VEHICLE CODE	YEAR 19____
21464-5	BRACKET (FRONT DOOR VENTILATOR WINDOW) UPPER PIVOT				
COAB 6421464-C	R.H.	1	54, 58, 62, 64, 71	A	61/62
COAB 6421465-C	L.H.	1	54, 58, 62, 64, 71	A	61/62
C3AZ 6221464-A	R.H.	1	54, 62, 71	A	63/64
C3AZ 6221465-A	L.H.	1	54, 62, 71	A	63/64
C2OZ 6221464-A	R.H. (Δ)	1	All except 65	B	62/63
C2OZ 6221465-A	L.H. (Δ)	1	All except 65	B	62/63
Δ Package also includes - (2) 52720-S8 screw-No.8-18 x 3/4"					
CODZ 6421464-C	R.H.	1	All except 63, 76	C	60/64
CODZ 6421465-C	L.H.	1	All except 63, 76	C	60/64
21466-7	REFER TO GROUP 21490-1				
21490-1	HINGE (DOOR VENTILATOR WINDOW) PIVOT ON GLASS FRAME				
COAB 6421466-C	R.H.	1	54, 58, 62, 64, 71	A	61/62
COAB 6421467-C	L.H.	1	54, 58, 62, 64, 71	A	61/62
C3AZ 6521490-A	R.H.	1	65, 75	A	61/64
C3AZ 6521491-A	L.H.	1	65, 75	A	61/64
C3AZ 7621490-A	R.H.	1	57, 63, 76	A	63/64
C3AZ 7621491-A	L.H.	1	57, 63, 76	A	63/64
C3OZ 6521490-A	R.H.	1	65	B	63
C3OZ 6521491-A	L.H.	1	65	B	63
C3DZ 7621490-A	R.H.	1	63, 76	C	63/64
C3DZ 7621491-A	L.H.	1	63, 76	C	63/64
21508-9	RUN (FRONT DOOR GLASS) LOCK SIDE				
PB9M 5621508-A	R.H.	1	63, 76	A	60
PB9M 5621509-A	L.H.	1	63, 76	A	60
PB9M 5721508-A	R.H.	1	57, 77	A	60
PB9M 5721509-A	L.H.	1	57, 77	A	60
COAB 6321508-B	R.H.	1	65, 75, 76	A	61
COAB 6321509-B	L.H.	1	65, 75, 76	A	61
C2AZ 5421508-A	R.H. - with retainer	1	54	A	62
C2AZ 5421509-A	L.H. - with retainer	1	54	A	62
C2AZ 6221508-A	R.H. - with retainer	1	62	A	62
C2AZ 6221509-A	L.H. - with retainer	1	62	A	62
C2AZ 7121508-A	R.H. - with retainer	1	71	A	62
C2AZ 7121509-A	L.H. - with retainer	1	71	A	62
C2AZ 7521508-A	R.H. - with retainer	1	75	A	62
C2AZ 7521509-A	L.H. - with retainer	1	75	A	62
C2AZ 7621508-A	R.H. - with retainer	1	65, 76	A	62
C2AZ 7621509-A	L.H. - with retainer	1	65, 76	A	62
C3AZ 6521508-B	R.H. - with retainer - cut 2-3/4" off lower end	1	63, 65, 76	A	63
C3AZ 6521508-C	R.H. - with retainer	1	63, 65, 76	A	64
C3AZ 6521509-C	L.H. - with retainer	1	63, 65, 76	A	63/64
C3AZ 7521508-B	R.H. - with retainer	1	57, 75	A	63/64
C3AZ 7521509-B	L.H. - with retainer	1	57, 75	A	63/64

CONTINUED ON NEXT PAGE

GROUP AND PART NUMBER	DESCRIPTION, SIZE, ETC.	NO. REQ'D	MODEL OR ENGINE CUBIC INCH DISPLACEMENT	VEHICLE CODE	YEAR 19____
21508-9	RUN (FRONT DOOR GLASS) LOCK SIDE (CONTINUED)				
C3OZ 6521508-A	R. H. - with retainer - use on vehicles built prior to 4-16-63	1	65	B	63
C3OZ 6521509-A	L. H. - with retainer - use on vehicles built prior to 4-16-63	1	65	B	63
C3OZ 6521508-B	R. H. - with retainer - use on vehicles built after 4-15-63	1	65	B	63
C3OZ 6521509-B	L. H. - with retainer - use on vehicles built after 4-15-63	1	65	B	63
CODZ 5821508-E	R. H. - with retainer	1	54, 71	C	60/62
CODZ 5821509-E	L. H. - with retainer	1	54, 71	C	60/62
C3DZ 7621508-B	R. H. - with retainer	1	63, 76	C	63/64
C3DZ 7621509-B	L. H. - with retainer	1	63, 76	C	63/64
BAK 5721508-B	R. H.	1	53, 54, 57, 75	D	60
BAK 5721509-B	L. H.	1	53, 54, 57, 75	D	60
BAK 6321508-B	R. H.	1	63, 65, 68	D	60
BAK 6321509-B	L. H.	1	63, 65, 68	D	60
C1VY 5721508-D	R. H.	1	All	D	61/63
C1VY 5721509-D	L. H.	1	All	D	61/63
C4VY 5321508-A	R. H.	1	All	D	64
C4VY 5321509-A	L. H.	1	All	D	64
21510	WEATHERSTRIP (FRONT & REAR DOOR GLASS CHANNEL)				
C1SB 6321510-A	Rubber - 31-1/2" long - cut to size for all front doors, rear doors and quarter windows	AR	All	A	60
21524	RIVET (DOOR VENTILATOR WINDOW DIVISION BAR WEATHERSTRIP)				
OA 7021524	Front and rear door	16	All	A	60/62
		AR	All except 63, 65, 76	B C	60/64
	Front door	8	All	D	60
21538-9	RUN & BRACKET (FRONT DOOR VENTILATOR WINDOW DIVISION BAR GLASS)				
PB9M 5621538-A	30-7/8" long	2	All	A	60
COAB 6321538-B		2	76	A	61/62
COAB 6421538-B		2	All except 63, 76	A	61/63
		2	54, 62, 65, 71, 75	A	64
C3AZ 7621538-A		2	57, 63, 76	A	63/64
C2OZ 6221538-A		2	All except 65	B	62/63
C3OZ 6521538-A		2	65	B	63
CODZ 6421538-C		2	All except 63, 76	C	60/64
C3DZ 7621538-A		2	63, 76	C	63/64
C1VY 5721538-C	R. H. - use on vehicles built prior to 12-21-62	1	All	D	61/63
C1VY 5721539-C	L. H. - use on vehicles built prior to 12-21-62	1	All	D	61/63
C3VY 5721538-A	R. H. - use on vehicles built after 12-20-62	1	All	D	63
C3VY 5721539-A	L. H. - use on vehicles built after 12-20-62	1	All	D	63
C4VY 5321538-A	R. H.	1	All	D	64
C4VY 5321539-A	L. H.	1	All	D	64
21546	RUN (FRONT DOOR VENTILATOR WINDOW DIVISION BAR GLASS)				
BAK 5721546-A		2	All	D	60
21550	RUN (DOOR & QUARTER GLASS)				
BAC 5821550-A	28-1/16" long - use on rear door pillar side	2	58	A	60
	NS-cut from COAB-5825766-B - 31-3/4" long	2	54, 58, 62, 64, 71	A	61/62
C3AZ 6221550-A	60-3/8" long - cut to size for front and rear door and quarter windows	2or4	54, 62, 71	A	63/64
		2	All	C	63
		2	All except 63, 76	C	64
C2OZ 6221550-A	55-1/2" long - cut as required and notch - for front and rear of front door windows and quarter windows	4	All	B	62/63

GROUP AND PART NUMBER	DESCRIPTION, SIZE, ETC.	NO. REQ'D	MODEL OR ENGINE CUBIC INCH DISPLACEMENT	VEHICLE CODE	YEAR 19____
21566-7	TROUGH (FRONT DOOR GLASS CHANNEL DRAIN)				
BAK 5721566-A	R.H. - rubber	1	53, 54, 57, 75	D	60
BAK 5721567-A	L.H. - rubber	1	53, 54, 57, 75	D	60
BAK 6321566-A	R.H. - rubber	1	63, 65, 68	D	60
BAK 6321567-A	L.H. - rubber	1	63, 65, 68	D	60
21596	RUN (FRONT DOOR GLASS) TOP				
	NS-cut from COAB-5825766-B - 27-15/16" long	2	62, 64	A	61/62
21604-5	WINDOW (FRONT DOOR VENTILATOR)				
COMB 6321604-A	R.H. - less glass	1	All except 58, 64	A	60
COMB 6321605-A	L.H. - less glass	1	All except 58, 64	A	60
21608-9	FRAME (FRONT DOOR VENTILATOR WINDOW)				
B9MB 5721608-B	R.H. - less glass and handle	1	All except 58, 64	A	60
B9MB 5721609-B	L.H. - less glass and handle	1	All except 58, 64	A	60
B9MB 6421608-B	R.H. - less glass and handle	1	58, 64	A	60
B9MB 6421609-B	L.H. - less glass and handle	1	58, 64	A	60
COAB 6321608-E	R.H. - less glass and handle - with drain trough and locking button - use on vehicles built prior to 11-15-61	1	76	A	61/62
COAB 6321609-E	L.H. - less glass and handle - with drain trough and locking button - use on vehicles built prior to 11-15-61	1	76	A	61/62
C2AZ 7621608-A	R.H. - less glass, handle, drain trough and (a) lock button - use on vehicles built after 11-14-61	1	76	A	62
C2AZ 7621609-A	L.H. - less glass, handle, drain trough and (a) lock button - use on vehicles built after 11-14-61	1	76	A	62
COAB 6421608-F	R.H. - less glass and handle - with drain trough and lock button - use on vehicles built prior to 11-15-61	1	54, 58, 62, 64, 71	A	61/62
COAB 6421609-F	L.H. - less glass and handle - with drain trough and lock button - use on vehicles built prior to 11-15-61	1	54, 58, 62, 64, 71	A	61/62
C2AZ 6221608-A	R.H. - less glass, handle, drain trough and lock(a) button - use on vehicles built after 11-14-61	1	54, 62, 71	A	62
C2AZ 6221609-A	L.H. - less glass, handle, drain trough and lock(a) button - use on vehicles built after 11-14-61	1	54, 62, 71	A	62
COAB 7521608-D	R.H. - less glass - with drain trough and lock button - use on vehicles built prior to 11-15-61	1	65, 75	A	61/62
COAB 7521609-D	L.H. - less glass - with drain trough and lock button - use on vehicles built prior to 11-15-61	1	65, 75	A	61/62
C2AZ 6521608-A	R.H. - less glass, handle, drain trough and (a) lock button - use on vehicles built after 11-14-61	1	65, 75	A	62
C2AZ 6521609-A	L.H. - less glass, handle, drain trough and (a) lock button - use on vehicles built after 11-14-61	1	65, 75	A	62
C3AZ 6221608-C	R.H. - less glass and handle (a)	1	54, 62, 71	A	63/64
C3AZ 6221609-C	L.H. - less glass and handle (a)	1	54, 62, 71	A	63/64
C3AZ 6521608-C	R.H. - less glass and handle	1	65, 75	A	63/64
C3AZ 6521609-C	L.H. - less glass and handle	1	65, 75	A	63/64
C3AZ 7621608-C	R.H. - less glass and handle	1	57, 63, 76	A	63/64
C3AZ 7621609-C	L.H. - less glass and handle	1	57, 63, 76	A	63/64
C2OZ 6221608-A	R.H. - less glass and handle (a)	1	All except 65	B	62/63
C2OZ 6221609-A	L.H. - less glass and handle (a)	1	All except 65	B	62/63
C3OZ 6521608-A	R.H. - less glass and handle	1	65	B	63
C3OZ 6521609-A	L.H. - less glass and handle	1	65	B	63

CONTINUED ON NEXT PAGE

GROUP AND PART NUMBER	DESCRIPTION, SIZE, ETC.	NO. REQ'D	MODEL OR ENGINE CUBIC INCH DISPLACEMENT	VEHICLE CODE	YEAR 19___
21608-9	FRAME (FRONT DOOR VENTILATOR WINDOW) CONTINUED				
C2DZ 6421608-C	R.H. - less glass, handle and drain trough (a)	1	All except 63, 76	C	60/64
C2DZ 6421609-C	L.H. - less glass, handle and drain trough (a)	1	All except 63, 76	C	60/64
C3DZ 7621608-A	R.H. - less glass and handle	1	63, 76	C	63/64
C3DZ 7621609-A	L.H. - less glass and handle	1	63, 76	C	63/64
C2AZ 6222992-A	Stop	1	a		
C2AZ 6222963-A	Washer-friction-17/64" I.D. x 3/4" O.D.	1	a		
353618-S100	Locknut-hex. -5/16"-24	1	a		
375897-S8	Washer-flat-5/16"-acts as tensioner	2	a		
21616-7	FRAME & DIVISION BAR (FRONT DOOR VENTILATOR WINDOW)				
COLB 6321616-A	R.H.	1	All	D	60
COLB 6321617-A	L.H.	1	All	D	60
C3VY 5721616-B	R.H. - use with manual or electric operated ventilator window	1	All	D	61/63
C3VY 5721617-B	L.H. - use with manual or electric operated ventilator window	1	All	D	61/63
C4VY 5321616-A	R.H. - use with electric ventilator window	1	All	D	64
C4VY 5321617-A	L.H. - use with electric ventilator window	1	All	D	64
21622-3	SEAL (FRONT DOOR OUTSIDE PANEL TO VENTILATOR WINDOW FRONT)				
BAK 5721622-A	R.H. - "S" shaped	1	All	D	60
BAK 5721623-A	L.H. - "S" shaped	1	All	D	60
21638	STRIP (FRONT DOOR VENTILATOR WINDOW BAR GLASS RUN)				
C1VY 5721638-A	Plastic - 5/16" x 37-1/2" long	2	All	D	61
21645	RETAINER (FRONT DOOR OUTSIDE FRONT MOULDING)				
COMB 6421645-A		2	All	A	60
21662	LINK (FRONT DOOR LOCK REMOTE CONTROL BELLCRANK TO LOCK)				
COMB 6421662-A	7-1/2" long	2	63, 64, 76	A	60
21728	REFER TO GROUP 222A06				
21734-5	REFER TO GROUP 22400-5				
21756	STOP (FRONT DOOR WINDOW) UPPER				
B9MB 5721756-A	Stud type - rear door	2	77	A	60
COMB 57222A22-C	Bracket type	4	All except 58, 64	A	60
B9LB 5721756-A	(2) R.H. and (2) L.H.	4	All	D	60
21758	REFER TO GROUP 21768				
21760-1	BRACKET (DOOR WINDOW STOP)				
C3AZ 6221760-B	Lower - electric windows	2	All except 57, 63, 76	A	63/64
C3AZ 7621760-B	Lower - electric windows	2	57, 63, 76	A	63/64
C3OZ 6521760-A	R.H. - lower rear - use on vehicles built prior to 4-16-63	1	65	B	63
C3OZ 6521761-A	L.H. - lower rear - use on vehicles built prior to 4-16-63	1	65	B	63
C3OZ 6521760-B	Upper front	2	65	B	63
C3DZ 7621760-A	Upper rear	2	63, 76	C	63
		4	All	C	64
C3DZ 7621760-B	Upper front	2	63, 76	C	63/64
C4SZ 6321760-A	Front and rear doors	8	All	D	64

GROUP AND PART NUMBER	DESCRIPTION, SIZE, ETC.	NO. REQ'D	MODEL OR ENGINE CUBIC INCH DISPLACEMENT	VEHICLE CODE	YEAR 19____
21762	BUMPER (DOOR WINDOW STOP)				
C3AZ 6221762-A	Rubber - 1-1/2" thick - manual windows	2or4	All	A	63/64
C3AZ 6221762-B	Electric windows	2	All	A	63/64
C2OZ 6221762-A	Front and rear door	2or4	All	B	62/63
	Rear door	2or4	71	A	63
C4VY 5321762-A	Front door	4	All	D	64
21768	STOP (DOOR WINDOW)				
COMB 6421758-A	Lower - front and rear door	4	All	A	60
COAB 6421758-A	Lower - front and rear door	4	All	A	61/62
C3AZ 6521768-A	Upper - front door	4	57, 63, 65, 75, 76	A	63/64
C3AZ 7521768-A	Upper rear - rear door	2	57, 75	A	63/64
C3OZ 5421768-A	Lower - rear door	2	54, 71	B	63
C3OZ 6521768-A	R. H. - rear - front door	1	65	B	63
C3OZ 6521768-B	L. H. - rear - front door	1	65	B	63
C3OZ 6521770-A	R. H. - front - front door	1	65	B	63
C3OZ 6521770-B	L. H. - front - front door	1	65	B	63
CODB 6421758-A	Lower - front and rear door	AR	All	C	60/64
C3DZ 7621768-A	R. H. - upper rear - front door - use on vehicles built prior to 4-15-63	1	63, 76	C	63
C3DZ 7621768-B	L. H. - upper rear - front door - use on vehicles built prior to 4-15-63	1	63, 76	C	63
C3OZ 6521768-C	Upper rear - front door - use on vehicles built after 4-14-63	2	63, 76	C	63/64
C3DZ 7621770-E	R. H. - upper front - front door	1	63, 76	C	63/64
C3DZ 7621770-D	L. H. - upper front - front door	1	63, 76	C	63
C3DZ 7621770-F	L. H. - upper front - front door	1	63, 76	C	64
BAK 6321758-A	Lower - front door	2	All	D	60
C4VY 5321758-A	Lower - front and rear door	4	All	D	64
C4SZ 6321768-A	Upper	8	All	D	64
21770	REFER TO GROUP 21768				
21774-5	BUMPER (FRONT DOOR VENTILATOR WINDOW UPPER)				
B7A 7621774-A		2	All except 58, 64	A	60
C1AB 6321774-A	R. H.	2	65, 75, 76	A	61/62
		2	65, 75	A	63/64
C1AB 6321775-A	L. H.	2	65, 75, 76	A	61/62
		2	65, 75	A	63/64
C3AZ 7621774-A	R. H.	1	63, 76	A	63
C3AZ 7621775-A	L. H.	1	63, 76	A	63
C3AZ 7621774-B	R.H.	1	57,63,76	A	64
C3AZ 7621775-B	L.H.	1	57,63,76	A	64
C3OZ 6521774-A	R.H.	1	65	B	63
C3OZ 6521775-B	L.H.	1	65	B	63
C4DZ 7621774-A	R.H.	1	63, 76	C	63/64
C4DZ 7621775-A	L.H.	1	63, 76	C	63/64
BAK 5721774-A	R.H.	1	All	D	60
BAK 5721775-A	L.H.	1	All	D	60
C1VB 5721774-B	R.H. - with (1) rivet mounting hole	1	All	D	61
C1VB 5721775-B	L.H. - with (1) rivet mounting hole	1	All	D	61
C1VB 5721774-C	R.H. - with (2) rivet mounting holes	1	All	D	61
C1VB 5721775-C	L.H. - with (2) rivet mounting holes	1	All	D	61
C2VY 5721774-A	R.H.	1	All	D	62/63
C2VY 5721775-A	L.H.	1	All	D	62/63
C4VY 5321774-A	R.H.	1	All	D	64
C4VY 5321775-A	L.H.	1	All	D	64

GROUP AND PART NUMBER	DESCRIPTION, SIZE, ETC.	NO. REQ'D	MODEL OR ENGINE CUBIC INCH DISPLACEMENT	VEHICLE CODE	YEAR 19____
21782	PLATE (DOOR WINDOW UPPER STOP ANCHOR)				
B9MB 5721782-A	Rear door	2	77	A	60
B9A 5721782-A	Front door	4	All	D	60
	Rear door	4	53, 54, 57, 75	D	60
21790	BRACKET (FRONT DOOR WINDOW) LOWER STOP				
C1VB 5721790-B	Front and rear door	4	All	D	61/63
21801	BUSHING (FRONT DOOR LOCK PAWL)				
C3AZ 6221801-A	Nylon	2	All	A	63/64
	Package also includes -				
(1) 376112-S36	washer (1) 376737-S washer-flat				
C2OZ 6221801-A	Nylon	2	All	B	62/63
		2	63, 76	C	63
		2	All	C	64
	Package also includes -				
(1) 375673-S	washer (1) 376112-S36 washer				
C4SZ 6321801-A	Nylon	2	All	D	64
	Package also includes -				
(1) 376737-S	washer (1) 378826-S washer				
21812-3	LOCK (FRONT DOOR)				
COMB 5821812-A	R. H. (a)	1	57, 58, 77	A	60
COMB 5821813-A	L. H. (a)	1	57, 58, 77	A	60
COMB 6421812-A	R. H. (a)	1	All except 57, 58, 77	A	60
COMB 6421813-A	L. H. (a)	1	All except 57, 58, 77	A	60
C1AB 6221812-B	R. H. (a)	1	All	A	61
C1AB 6221813-B	L. H. (a)	1	All	A	61
C2AZ 6221812-B	R. H.	1	All	A	62
C2AZ 6221813-B	L. H.	1	All	A	62
C3AZ 6221812-D	R. H. (†)	1	All	A	63/64
C3AZ 6221813-D	L. H. (†)	1	All	A	63/64
	† Package also includes -				
(3) C3AZ-6221952-A retainer	(3) 356782-S7 screw & washer		(3) 377647-S sleeve nut		
(1) C3AZ-6221954-A retainer					
C3OZ 6221812-C	R. H. (a)	1	All	B	62/63
		1	63, 76	C	63
	Use on vehicles built prior to 3-1-64 using 377475-S sleeve nut - also use 22112 extension	1	All	C	64
C3OZ 6221813-C	L. H. (a)	1	All	B	62/63
		1	63, 76	C	63
	Use on vehicles built prior to 3-1-64 using 377475-S sleeve nut - also use 22112 extension	1	All	C	64
C3OZ-6221812-D	R.H. - use on vehicles built after 2-29-64 - also use 22112 extension (Δ)	1	All	C	64
C3OZ-6221813-D	L.H. - use on vehicles built after 2-29-64 - also use 22112 extension (Δ)	1	All	C	64
	Δ Package also includes -				
(4) C3AZ-6221952-A retainer	(3) 356782-S8 screw		(3) 377647-S sleeve nut		
C1DZ 6421812-B	R. H. (a)	1	All except 63, 76	C	60/63
C1DZ 6421813-B	L. H. (a)	1	All except 63, 76	C	60/63
B9LB 5721812-A	R. H.	1	All	D	60
B9LB 5721813-A	L. H.	1	All	D	60
C2VY 5721812-A	R. H. - less actuator	1	All	D	61/63
C2VY 5721813-A	L. H. - less actuator	1	All	D	61/63
C4SZ 6321812-A	R. H. - use on vehicles built prior to 4-3-64 (b)	1	All	D	64
C4SZ 6321813-A	L. H. - use on vehicles built prior to 4-3-64 (b)	1	All	D	64

CONTINUED ON NEXT PAGE

GROUP AND PART NUMBER	DESCRIPTION, SIZE, ETC.	NO. REQ'D	MODEL OR ENGINE CUBIC INCH DISPLACEMENT	VEHICLE CODE	YEAR 19____
21812-3	LOCK (FRONT DOOR) CONTINUED				
C4SZ 6321812-C	R. H. - use on vehicles built after 4-2-64 (§)	1	All	D	64
C4SZ 6321813-C	L. H. - use on vehicles built after 4-2-64 (§)	1	All	D	64
§ Package also includes -					
(4) 377647-S	sleeve nut (4) C3AZ-6221952-A retainer				
353908-S7	Screw and washer-flat hd.cr.rec.-No. 12-24 x 7/16"	3	a		
377647-S	Nut-sleeve	AR	b		
218A16	CLIP (FRONT DOOR LOCK PUSH BUTTON ROD) RETAINING				
CODB 64218A16-A		2	All	C	60
21818-9	CONTROL (FRONT DOOR LOCK REMOTE)				
COAB 6421818-C	R. H. - front and rear door	2	All	A	60/61
COAB 6421819-C	L. H. - front and rear door	2	All	A	60/61
C2AZ 6221818-A	R. H. - front and rear door	2	All	A	62
C2AZ 6221819-A	L. H. - front and rear door	2	All	A	62
C3AZ 6221818-A	R. H. - front and rear door (b)	1or2	All	A	63
C3AZ 6221818-B	R. H. - front and rear door (b)	1or2	All	A	64
C3AZ 6221819-B	L. H. - front and rear door (b)	1or2	All	A	63/64
C2OZ 6221818-A	R. H. (a, b)	1	All	B	62/63
C2OZ 6221819-A	L. H. (a, b)	1	All	B	62/63
CODZ 6221818-A	R. H. ‡ (a, b)	1	All except 63, 76	C	60/63
C2OZ 6221818-B	R. H.	1	All	C	64
C2OZ 6221819-B	L. H. ‡ (a, b)	1	All except 63, 76	C	60/63
	L. H.	1	All	C	64
	‡ For 1963 usage of models 63 and 76 - refer to groups 26404 and 26405				
B9LB 5721818-A	R. H.	1	All	D	60
B9LB 5721819-A	L. H.	1	All	D	60
C1VB 5721818-E	R. H. - front and rear door ☆ (b)	2	All	D	61
C1VB 5721819-E	L. H. - front and rear door ☆ (b)	2	All	D	61
	☆ Use with clip retained door handles				
C1VB 5721818-F	R. H. - front and rear door † (b)	2	All	D	61/63
C1VB 5721819-F	L. H. - front and rear door † (b)	2	All	D	61/63
	† Use with screw mounted door handles for 1961				
C4VY 5321818-A	R. H. - front and rear door	2	All	D	64
C4VY 5321819-A	L. H. - front and rear door	2	All	D	64
359605-S8	Screw and washer-hex. hd. -5/16"-24 x 5/8"	3	a		
377647-S	Nut-sleeve-nylon	AR	b		
218A24-5	ROD (DOOR LOCK ACTUATING) OUTER				
C1AB 62218A24-B		2	All	A	61
C2AZ 62218A24-A	(a)	1	All	A	62
C3AZ 62218A24-A	R. H. (a)	1	All	A	63
C3AZ 62218A25-A	L. H. (a)	1	All	A	63
C3AZ 62218A24-B	R. H. - Use on vehicles built prior to 3-1-64 using 377647-S sleeve nut	1	All	A	64
C3AZ 62218A25-B	L. H. - use on vehicles built prior to 3-1-64 using 377647-S sleeve nut	1	All	A	64
C3AZ 62218A24-C	R. H. - use on vehicles built after 2-29-64 (Δ)	1	All	A	64
C3AZ 62218A25-C	L. H. - use on vehicles built after 2-29-64 (Δ)	1	All	A	64
Δ Package also includes -					
	(2) C3AZ-6221952-A retainer				
C2OZ 62218A24-A	R. H. - control to cylinder (a)	1	All	B	62/63
C2OZ 62218A25-A	L. H. - control to cylinder (a)	1	All	B	62/63
377647-S	Nut-sleeve-nylon	AR	a		

GROUP AND PART NUMBER	DESCRIPTION, SIZE, ETC.	NO. REQ'D	MODEL OR ENGINE CUBIC INCH DISPLACEMENT	VEHICLE CODE	YEAR 19____
21830	REFER TO MD-4230 SOFT TRIM SECTION				
218A42-3	ACTUATOR (FRONT DOOR VACUUM LOCK)				
C1VB 57218A42-C	R.H.	1	All	D	61/62
C1VB 57218A43-C	L.H.	1	All	D	61/62
C3VY 57218A42-A	R.H.	1	All	D	63
C3VY 57218A43-A	L.H.	1	All	D	63
C4VY 53218A42-A	R.H.	1	All	D	64
C4VY 53218A43-A	L.H.	1	All	D	64
218A48	CLIP (FRONT DOOR LOCK VACUUM HOSE) RETAINING				
C1VB 57218A48-A		AR	All	D	61/64
21850	KNOB (DOOR LOCKING CONTROL ROD)				
	For colors refer to MD-4230 Soft Trim Section				
C1VB 5721850-B	Chrome - front and rear door	AR	All	A D	60/64
C1VB 5721850-A	Chrome	AR	All	B	62
		2	65B	B	63
OH 7321850-Z6	Chrome - all doors	4	All	D	60
C3VY 5721850-A	Zinc die cast - remote control lock - also used for electric antenna switch	2	All	D	63
21852-3	ROD (FRONT DOOR LOCK PUSH BUTTON)				
PB9M 5621852-A	R.H.	1	63, 64, 76	A	60
PB9M 5621853-A	L.H.	1	63, 64, 76	A	60
COAB 5821852-A	R.H.	1	54, 58, 71, 75	A	61
COAB 5821853-A	L.H.	1	54, 58, 71, 75	A	61
COAB 6421852-A		2	62, 64, 65, 76	A	61
C2AZ 5421852-A	R.H. (a)	1	54, 71, 75	A	62
C2AZ 5421853-A	L.H. (a)	1	54, 71, 75	A	62
C2AZ 6221852-A	(a)	2	62, 65, 76	A	62
C3AZ 5421852-A	(a)	2	54, 71, 75	A	63
C3AZ 6221852-A	(a)	2	62, 63, 65, 76	A	63
C3AZ 5421852-B	Use on vehicles built prior to 3-1-64 using 377647-S sleeve nut	2	54, 57, 71, 75	A	64
C3AZ 5421852-C	Use on vehicles built after 2-29-64 (Δ)	2	54, 57, 71, 75	A	64
C3AZ 6221852-B	Use on vehicles built prior to 3-1-64 using 377647-S sleeve nut	2	62, 63, 65, 76	A	64
C3AZ 6221852-C	Use on vehicles built after 2-29-64 (Δ)	2	62, 53, 65, 76	A	64

Δ Package also includes -

(1) C3AZ-6221952-A retainer

C2OZ 5421852-B	R.H. (a)	1	54, 71	B	62/63
C2OZ 5421853-B	L.H. (a)	1	54, 71	B	62/63
C2OZ 6221852-C	R.H. (a)	1	62, 65	B	62/63
C2OZ 6221853-C	L.H. (a)	1	62, 65	B	62/63
CODB 5821852-A	R.H. (a)	1	54, 71	C	60/63
CODB 5821853-A	L.H. (a)	1	54, 71	C	60/63
CODB 6421852-A	R.H. (a)	1	59, 62	C	60/63
CODB 6421853-A	L.H. (a)	1	59, 62	C	60/63
C3DZ 7621852-A	(a)	2	63, 76	C	63
C4DZ 6221852-A	Use on vehicles built prior to 3-1-64 using 377647-S sleeve nut	2	All except 63, 76	C	64
C4DZ 6221852-B	Use on vehicles built after 2-29-64 (§)	2	All except 63, 76	C	64

CONTINUED ON NEXT PAGE

GROUP AND PART NUMBER	DESCRIPTION, SIZE, ETC.	NO. REQ'D	MODEL OR ENGINE CUBIC INCH DISPLACEMENT	VEHICLE CODE	YEAR 19____
21852-3	ROD (FRONT DOOR LOCK PUSH BUTTON) CONTINUED				
C4DZ 6321852-A	Use on vehicles built prior to 3-1-64 using 377647-S sleeve nut	2	63, 76	C	64
C4DZ 6321852-B	Use on vehicles built after 2-29-64 (§)	2	63,76	C	64
§ Package also includes - (1) C3AZ-6221952-A retainer					
BAK 5721852-B	R. H.	1	All	D	60
BAK 5721853-B	L. H.	1	All	D	60
C1VB 5721852-B	(a)	2	All	D	61/63
C4VY 5321852-A	R. H. - use on vehicles built prior to 1-13-64 (a)	1	All	D	64
C4VY 5321853-A	L. H. - use on vehicles built prior to 1-13-64 (a)	1	All	D	64
C4VY 5321852-B	R. H. - use on vehicles built after 1-12-64 (†)	1	All	D	64
C4VY 5321853-B	L. H. - use on vehicles built after 1-12-64 (†)	1	All	D	64
† Package also includes - (1) C3AZ-6221952-A retainer					
377647-S	Nut-sleeve-nylon	AR	a		
218A74-5	BRACKET (FRONT DOOR LOCK OPERATING)				
C1VB 57218A74-A	R. H.	1	All	D	61/63
C1VB 57218A75-A	L. H.	1	All	D	61/63
218A80	NUT (FRONT DOOR LOCK CONTROL SWITCH)				
C1VF 57218A80-A		1	All	D	61/63
218A82	BEZEL (FRONT DOOR LOCK CONTROL)				
C1VB57218A82-B(07)	WOOD GRAIN - for vacuum locks	1	All	D	61/63
C1VB57218A82-B(08)	DARK GRAY - for vacuum locks	1	All	D	61/63
218A86-7	REFER TO GROUP 22152-3				
219A00	VALVE (DOOR LOCK VACUUM CONTROL)				
C1VB 57219A00-C		1	All	D	61/63
C4VY 53219A00-A		1	All	D	64
219A02	RESERVOIR (DOOR LOCK VACUUM CONTROL)				
C3MY 25219A02-A	Luggage compartment door	1	All except 71	A C	64
C2VY 57219A02-A		1	All	D	61/62
	Also use for heater and/or a/cond.	1	All	D	63/64
21910	SPRING (DOOR LOCK REMOTE CONTROL)				
CODZ 6421910-A	Front and rear	AR	All	B C	60/64
		AR	All	D	60
21914	REFER TO GROUP 21940-1				
219A18	VALVE (DOOR LOCK VACUUM CONTROL CHECK)				
C1VB 57219A18-B		1	All	D	61/64
219A22	GASKET (FRONT DOOR LOCK VACUUM CONTROL CONNECTOR)				
C1VB 57219A22-A	Rubber	1	All	D	61/62
21927	HOSE (VACUUM DOOR LOCK)				
	NS-cut from B7MY-17A605-B - 17" long (#1)	1	All	D	61/62
	NS-cut from B7MY-17A605-B - 15" long (#2)	1	All	D	61/62
	NS-cut from B7MY-17A605-B - 54" long (#3)	1	All	D	61/62
	NS-cut from B7MY-17A605-B - 6" long (#4)	1	All	D	61/62
	NS-cut from B7MY-17A605-B - 9" long (#5)	1	All	D	61/62

CONTINUED ON NEXT PAGE

GROUP AND PART NUMBER	DESCRIPTION, SIZE, ETC.	NO. REQ'D	MODEL OR ENGINE CUBIC INCH DISPLACEMENT	VEHICLE CODE	YEAR 19____
21927	HOSE (VACUUM DOOR LOCK) CONTINUED				
	NS-cut from COMY-17A605-B - 48" long (#6)	2	All	D	61/62
	NS-cut from COMY-17A605-B - 8" long (#7)	2	All	D	61/62
	NS-cut from B7MY-17A605-B - 78" long (#8)	2	All	D	61/62
	NS-cut from COKY-17A605-A - 65" long (#9)	4	All	D	61/62
	NS-cut from COKY-17A605-A - 108" long (#10)	4	All	D	61/62
	NS-cut from B7MY-17A605-B - 35" long (#11)	2	All	D	61/62
	NS-cut from COKY-17A605-A - 66" long (#12)	4	All	D	61/62
	NS-cut from COKY-17A605-A - 49" long (#13)(a)	1	All	D	61/62
	NS-cut from COKY-17A605-A - 8" long (#14)(a)	1	All	D	61/62
	NS-cut from B7MY-17A605-B - 6" long (#1)	2	All	D	63
	NS-cut from B7MY-17A605-B - 79" long (#2)	1	All	D	63
	NS-cut from B7MY-17A605-B - 11" long (#3)	1	All	D	63
	NS-cut from B7MY-17A605-B - 45" long (#4)	1	All	D	63
	NS-cut from COMY-17A605-B - 18" long (#5)	2	All	D	63
	NS-cut from B7MY-17A605-B - 20" long (#6)	2	All	D	63
	NS-cut from COKY-17A605-A - 65" long (#7)	4	All	D	63
	NS-cut from COKY-17A605-A - 108" long (#8)	4	All	D	63
	NS-cut from B7MY-17A605-B - 87" long (#9)	2	All	D	63
	NS-cut from COKY-17A605-A - 66" long (#10)	4	All	D	63
	NS-cut from COKY-17A605-A - 18" long (#11)(a)	1	All	D	63
	NS-cut from COMY-17A605-B - 8" long (#12)	2	All	D	63
	NS-cut from COKY-17A605-A - 8" long (#13)	1	All	D	63
	# Reference to vacuum door lock controls illustration				
374678-S	Brass tubing-nipple-3/16" dia.	1	a		
21928	LINK (FRONT DOOR LOCK CONTROL)				
BAK 5721928-B	20-1/2" long	4	53,54,57,75	D	60
BAK 6321928-B	26-1/2" long	4	63,65,68	D	60
21936	ESCUTCHEON (FRONT DOOR LOCK CYLINDER)				
C4GY 5421936-A		2	54C, D, 63C, D, 76B, D	C	64
21938-9	REFER TO GROUP 21952				
21940-1	LINK (FRONT DOOR LOCK REMOTE CONTROL)				
PB9M 5621914-A	Front door - 26-1/2" long (a)	2	63,64,76	A	60
	Rear door	2	57,58,77	A	60
PB9M 5721914-A	Front door - 18-7/8" long (a)	2	57,58,77	A	60
COAB 5821940-A	(a,e)	2	54,58,71,75	A	61
COAB 6421940-A	(a,e)	2	62,64,65,76	A	61
C2AZ 5421940-B	(d,e,f)	2	54,71,75	A	62
C2AZ 6221940-A	(d,e,f)	2	62,65,76	A	62
C3AZ 5421940-A	(d,f)	2	54,71,75	A	63
C3AZ 6221940-B	Use on vehicles built prior to 3-1-64 using 377647-S sleeve nut (d,f)	2	62,63,65,76	A	63/64
C3AZ 6221940-C	Use on vehicles built after 2-29-64 (Δ)	2	62,63,65,76	A	64
C3AZ 5421940-B	Use on vehicles built prior to 3-1-64 using 377647-S sleeve nut	2	54, 57, 71, 75	A	64
C3AZ 5421940-C	Use on vehicles built after 2-29-64 (Δ)	2	54,57,71,75	A	64

Δ Package also includes -

(2) C3AZ-6221952-A retainer

CONTINUED ON NEXT PAGE

GROUP AND PART NUMBER	DESCRIPTION, SIZE, ETC.	NO. REQ'D	MODEL OR ENGINE CUBIC INCH DISPLACEMENT	VEHICLE CODE	YEAR 19____
21940-1	LINK (FRONT DOOR LOCK REMOTE CONTROL) CONTINUED				
C2OB 5421940-A	(c)	2	54	B	62
	(c, f)	2	54, 71	B	63
C2OB 6221940-A	(c)	2	62	B	62
	(c, f)	2	62	B	63
C3OZ 6521940-A	R. H. (f)	1	65	B	63
C3OZ 6521941-A	L. H. (f)	1	65	B	63
CODB 5821940-A	(a, c)	2	54, 71	C	60/62
	(a, c, e, f)	2	54, 71	C	63
CODB 6421940-A	(a, c)	2	59, 62	C	60/62
	(a, c, e, f)	2	59, 62	C	63
C3DZ 7621940-A	R. H. (a, d)	1	63, 76	C	63
C3DZ 7621941-A	L. H. (a, d)	1	63, 76	C	63
C4DZ 5421940-A	Use on vehicles built prior to 3-1-64 using 377647-S sleeve nut	2	54, 71	C	64
C4DZ 5421940-C	Use on vehicles built after 2-29-64 (§)	2	54,71	C	64
C4DZ 6221940-A	Use on vehicles built prior to 3-1-64 using 377647-S sleeve nut	2	62	C	64
C4DZ 6221940-B	Use on vehicles built after 2-29-64 (§)	2	62	C	64
C4DZ 6321940-A	R. H. - use on vehicles built prior to 3-1-64 using 377647-S sleeve nut	1	63, 76	C	64
C4DZ 6321941-A	L. H. - use on vehicles built prior to 3-1-64 using 377647-S sleeve nut	1	63, 76	C	64
C4DZ 6321940-B	R.H. - use on vehicles built after 2-29-64 (§)	1	63,76	C	64
C4DZ 6321941-B	L.H. - use on vehicles built after 2-29-64 (§)	1	63,76	C	64

§ Package also includes -

(2) C3AZ-6221952-A retainer

C1VB 5721914-A		2	All	D	61/63
C4VY 5321940-A	R. H. - use on vehicles built prior to 1-13-64 (f)	1	All	D	64
C4VY 5321941-A	L. H. - use on vehicles built prior to 1-13-64 (f)	1	All	D	64
C4VY 5321940-B	R. H. - use on vehicles built after 1-12-64 (†)	1	All	D	64
C4VY 5321941-B	L. H. - use on vehicles built after 1-12-64 (†)	1	All	D	64

† Package also includes -

(2) C3AZ-6221952-A retainer

B9AB 6421952-A	Clip-front	2	e		
COAB 6421954-A	Clip-anti-rattler	2	a		
52726-S13	Screw-cr. rec. pan hd. -No. 8-15 x 1/2"	2	c		
353251-S2	Clip-anti-rattler	2	c		
358393-S2	Clip-anti-rattler	2	d		
377647-S	Nut-sleeve-nylon	AR	f		

21942	COVER (FRONT DOOR LOCK CYLINDER KEY HOLE)				
B9A 6421942-A		2	All	D	60
C1VB 5722004-A	R. H. - chrome finish - use on vehicles built prior to 9-15-61 only	1	All	D	61/62
C1VB 5722005-A	L. H. - chrome finish - use on vehicles built prior to 9-15-61 only	1	All	D	61/62

21942-3	KIT (DOOR LOCK CYLINDER COVER & SPRING)				
B2A 7021942-A	R. H.	1	All	C	60/63
B2A 7021943-A	L. H.	1	All	C	60/63

GROUP AND PART NUMBER	DESCRIPTION, SIZE, ETC.	NO. REQ'D	MODEL OR ENGINE CUBIC INCH DISPLACEMENT	VEHICLE CODE	YEAR 19____
21952	CLIP (DOOR LOCK ROD)				
C3AZ 6221952-A	BLACK and RED	AR	All	A C	64
B9AB 6421952-A	Front and rear door	AR	All	A	61/62
	Electric locks				
	Front door at lower end of link	AR	All	D	60
	Rear door at upper end of link	AR	All	D	60
	Front and rear door at remote control	4	All	D	61/62
	Front and rear door	AR	All	C D	63
B5A 7021952-A	Rear door	2	54, 71	C	60/62
BAE 6421938-A	R. H. - front door	1	All except 63, 65, 68	D	60
	Also use at lower end of link at solenoid R. H. rear door	1	All	D	60
BAE 6421939-A	L. H. - front door	1	All except 63, 65, 68	D	60
	Also use at lower end of link at solenoid L. H. rear door	1	All	D	60
21954-5	CLIP (FRONT DOOR LOCK CONTROL LINK RETAINING)				
PB9M 5721955-A	L. H.	1	57, 58, 77	A	60
B9AB 6421954-A	Front door	6	All	A	60/61
	Rear door	6	54, 71, 75	A	60/61
	Tailgate	2	71	A	60/61
COAB 6421954-A	Front door link	AR	All	A	60/61
		AR	All except 63, 76	C	60/63
C3AZ 6221954-A	WHITE and RED	AR	All	A C	64
BAD 7021954-A	R. H.	3	All	D	60
BAD 7021955-A	L. H.	3	All	D	60
C1VB 5721954-A	Front and rear doors	20	All	D	61/63
377647-S	Nut - sleeve - nylon	AR	All	A B C D	62/64
21970-1	LEVER (FRONT DOOR LOCK OPERATING)				
C2OZ 6221970-A		2	All	B	62/63
		2	All	A	63/64
		2	All	C D	64
CODB 6421971-B		2	All except 63, 76	C	60/63
C3DZ 7621970-A		2	63, 76	C	63
21980	LINK (FRONT DOOR LOCK CONTROL)				
COMB 6421980-A		2	63, 64, 76	A	60
21984-5	CYLINDER (FRONT DOOR LOCK) WITH KEYS				
C1MB 6221985-B		2	All	A	61
C4MY 6221985-A		2	All	A B	62/64
		2	All	C	64
C2GY 6221984-A	R. H.	1	All except 63, 76	C	60/63
C2GY 6221985-A	L. H.	1	All except 63, 76	C	60/63
C3GY 7621984-A	R. H.	1	63, 76	C	63
C3GY 7621985-A	L. H.	1	63, 76	C	63
B9LB 5721984-A		2	53, 54, 57, 75	D	60
B9LB 6321984-A		2	63, 65, 68	D	60
C1VB 5721984-C	Set - includes (1) R. H. and (1) L. H. cylinder - use on vehicles built prior to 9-15-61	1	All	D	61/62
C2VY 5721984-B	Use on vehicles built after 9-14-61	2	All	D	62/63
C4VY 5321985-A		2	All	D	64

GROUP AND PART NUMBER	DESCRIPTION, SIZE, ETC.	NO. REQ'D	MODEL OR ENGINE CUBIC INCH DISPLACEMENT	VEHICLE CODE	YEAR 19____
21999	GROMMET (DOOR LOCK KNOB)				
C3MY 6221999-A	Nylon - front and rear door	2or4	All	A	63
C4AZ 6221999-A	Nylon - front and rear door	4	All	A	64
B9MB 5721999-A	Nylon - front and rear door	4	All	A	60
		4	All	D	61/64
C2OZ 6221999-B	Nylon - front and rear door	AR	All	B	62/63
8M 7221999	Rubber - front and rear door	4	All	D	60
22004-5	REFER TO GROUP 21942				
22006-7	SPRING (FRONT DOOR LOCK CYLINDER KEY HOLE COVER)				
BA 7022006-A	R.H.	1	All	C	62/63
	R.H. - use on vehicles built prior to 9-15-61 - none required after	1	All	D	61/62
BA 7022007-A	L.H.	1	All	C	62/63
	L.H. - use on vehicles built prior to 9-15-61 - none required after	1	All	D	61/62
22008-9	PLATE (DOOR LOCK STRIKER)				
COAZ 6222008-A	R.H. - front and rear door (a)	2	All	A C	60/62
		1or2	All except 63, 76	C	63
COAZ 6222009-A	L.H. - front and rear door (a)	2	All	A C	60/62
		1or2	All except 63, 76	C	63
C2OZ 6222008-B	Front and rear door (b)	AR	All	B	62/63
	(b)	AR	All	A	63/64
		2	63, 76	C	63
	Front door (b)	AR	All	C	64
	Front and rear door (c)	AR	All	D	64
	For rear door 1964 Comet refer to group 265A04				
BAK 5722008-A	R.H. - front and rear door	2	All	D	60
BAK 5722009-A	L.H. - front and rear door	2	All	D	60
C1VY 5722008-A	R.H. - front - chrome finish	1	All	D	61/63
	R.H. - rear	1	53	D	61/62
C1VY 5722009-A	L.H. - front door - chrome finish	1	All	D	61/63
	L.H. - rear	1	53	D	61/62
358996-S8	Screw-5/16"-24	6	a		
371402-S13	Screw-flat hd. locking-5/16"-24 x 7/8"	AR	b		
378428-S8	Screw-flat hd. locking-5/16"-18 x 3/4"	AR	c		
22014-5	PLATE (DOOR LOCK STRIKER) AUXILIARY				
C3SZ 6322014-A	R.H. - front and rear door	2	All	A C	60/62
		1or2	All except 63, 76	C	63
C3SZ 6322015-A	L.H. - front and rear door	2	All	A C	60/62
		1or2	All except 63, 76	C	63
B7A 7022014-A	R.H. - front and rear door	2	All	D	60
B7A 7022015-A	L.H. - front and rear door	2	All	D	60
C1VB 5722014-A	R.H. - front and rear door - chrome finish	2	All	D	61/63
C1VB 5722015-A	L.H. - front and rear door - chrome finish	2	All	D	61/63
22021-2	RETAINER (DOOR LOCK STRIKER ANCHOR PLATE)				
CODB 6422021-A	R.H. - front and rear door	AR	All except 76	C	60/63
CODB 6422022-A	L.H. - front and rear door	AR	All except 76	C	60/63

GROUP AND PART NUMBER	DESCRIPTION, SIZE, ETC.	NO. REQ'D	MODEL OR ENGINE CUBIC INCH DISPLACEMENT	VEHICLE CODE	YEAR 19____
22023	RETAINER (FRONT DOOR LOCK CYLINDER)				
C1AB 6222023-B		2	All	A	61/62
C3AZ 6222023-A		2	62, 63, 65, 76	A	63
C4AZ 5422023-A		2	54, 71, 75	A	64
C2OZ 6222023-A		2	54, 71, 75	A	63
		2	All	B	62/63
C4AZ 6222023-A		2	62, 63, 65, 76	A	64
		2	All	D	64
CODZ 6422023-B		2	All	C	60/63
C4DZ 6222023-A		2	All	C	64
C1VB 5722023-B	Use on vehicles built prior to 9-15-61	2	All	D	61/62
C2VY 5722023-A	Use on vehicles built after 9-14-61	2	All	D	62/63
22024	PLATE (FRONT DOOR LOCK STRIKER ANCHOR)				
CODB 6422024-A	Front and rear door	AR	All	C	60/63
22035	CONNECTOR (VACUUM FRONT DOOR LOCK)				
C1VB 5722035-B		1	All	D	61/62
22040	INSERT (DOOR LOCK STRIKER PLATE)				
C2AZ 6222040-A	Front and rear door	4	All	A	60/62
		2or4	All except 63, 76	C	60/63
	Use on vehicles built after 5-27-62	4	All	D	61/63
B7A 7022040-A	Front and rear door	4	All	D	60
C1VB 5722040-A	Front door - use on vehicles built prior to 5-28-62	2	All	D	61/62
	Rear door - use on vehicles built prior to 5-28-62	2	53	D	61/62
22050	LOCK SET (DOOR & IGNITION)				
COMB 6422050-A	With keys	1	All	A	60
C1MB 6222050-C	With keys	1	All	A	61
C3MY 6222050-A	With keys	1	All	A B	62/63
C4MY 6222050-A		1	All	A	64
		1	All except 71	C	64
C3GY 6222050-A	With keys	1	All except 63, 76	C	60/63
C3GY 7622050-A	With keys	1	63, 76	C	63
C4GY 7122050-A		1	71	C	64
COLB 5722050-A		1	53, 54, 57, 75	D	60
COLB 6322050-A		1	63, 65, 68	D	60
C1VB 5722050-C	Use on vehicles built prior to 9-15-61	1	All	D	61/62
C3VY 5722050-A	Use on vehicles built after 9-14-61	1	All	D	62/63
C4VY 5322050-A		1	All	D	64
22053	KEY (DOOR & IGNITION LOCK)				
PB9M 3685-A		2	All	A	60
C1MY 6222053-A		2	All	A	61/64
		2	All	B C	60/64
B9LB 3685-A		2	All	D	60
C1VB 5722053-B		2	All	D	61/64
22058	SHIM (DOOR LOCK STRIKER PLATE)				
COAB 6422058-A	Front and rear door	AR	All	A C	60/62
		AR	All except 63, 76	C	63
		AR	All	D	61/63
	CONTINUED ON NEXT PAGE				

GROUP AND PART NUMBER	DESCRIPTION, SIZE, ETC.	NO. REQ'D	MODEL OR ENGINE CUBIC INCH DISPLACEMENT	VEHICLE CODE	YEAR 19____
22058	SHIM (DOOR LOCK STRIKER PLATE) CONTINUED				
C2OB 6222058-A	Front and rear door	AR	All	B	62/63
		AR	All	A	63/64
		AR	63, 76	C	63
	Front door	AR	All	C	64
	For rear door 1964 Comet refer to group 265A06				
		AR	All	D	64
B7A 7022058-A	Front and rear door	4	All	D	60
22062-3	PLATE & BELLCRANK (FRONT DOOR LOCK REMOTE CONTROL)				
PB9M 5622062-A	R.H.	1	63, 64, 76	A	60
PB9M 5622063-A	L.H.	1	63, 64, 76	A	60
COAB 6422062-A		2	All	A	61
C2AZ 6222062-A		2	All	A	62
22075	SPRING (FRONT DOOR LOCK OPERATING LEVER RETAINER)				
B5A 7022075-A		2	All	C	60/63
22100-1	LINK (FRONT DOOR LOCK CONTROL AUXILIARY BELLCRANK TO SOLENOID)				
PB9L 5322100-A	R.H. - use with electric door locks	1	All	D	60
PB9L 5322101-A	L.H. - use with electric door locks	1	All	D	60
22112	EXTENSION (DOOR LOCK CONTROL ROD LEVER)				
C4DZ 6222112-A		2	All	C	64

Package also includes -

(1) 51755-S8 screw

22134-5	ROD (FRONT DOOR LOCK CONTROL TO CYLINDER)				
COMB 6422134-A		2	63, 64, 76	A	60
C3DZ 7622134-A	R. H.	1	63, 76	C	63
C3DZ 7622135-A	L. H.	1	63, 76	C	63
C4DZ 6222134-A	R. H. - use on vehicles built prior to 3-1-64 using 377647-S sleeve nut	1	All except 63, 76	C	64
C4DZ 6222135-A	L. H. - use on vehicles built prior to 3-1-64 using 377647-S sleeve nut	1	All except 63, 76	C	64
C4DZ 6222134-B	R.H. - use on vehicles built after 2-29-64 (Δ)	1	All except 63,76	C	64
C4DZ 6222135-B	L.H. - use on vehicles built after 2-29-64 (Δ)	1	All except 63,76	C	64
C4DZ 6322134-A	R. H. - use on vehicles built prior to 3-1-64 using 377647-S sleeve nut	1	63, 76	C	64
C4DZ 6322135-A	L. H. - use on vehicles built prior to 3-1-64 using 377647-S sleeve nut	1	63, 76	C	64
C4DZ 6322134-B	R.H. - use on vehicles built after 2-29-64 (Δ)	1	63,76	C	64
C4DZ 6322135-B	L.H. - use on vehicles built after 2-29-64 (Δ)	1	63,76	C	64

Δ Package also includes -

(2) C3AZ-6221952-A retainer

C1VB 5722134-A	R.H.	1	All	D	61/63
C1VB 5722135-A	L.H.	1	All	D	61/63
C4VY 5322134-A	R.H. - use on vehicles built prior to 1-13-64 (a)	1	All	D	64
C4VY 5322135-A	L.H. - use on vehicles built prior to 1-13-64 (a)	1	All	D	64
C4VY 5322134-B	R.H. - use on vehicles built after 1-12-64 (†)	1	All	D	64
C4VY 5322135-B	L.H. - use on vehicles built after 1-12-64 (†)	1	All	D	64

† Package also includes -

(2) C3AZ-6221952-A retainer

377647-S	Nut-sleeve-nylon	AR	a		
22142-3	REINFORCEMENT (DOOR LOCK STRIKER ANCHOR PLATE)				
COAB 6422142-A	R.H.	1	62, 64, 65, 76	A	61/62
COAB 6422143-A	L.H.	1	62, 64, 65, 76	A	61/62

GROUP AND PART NUMBER	DESCRIPTION, SIZE, ETC.	NO. REQ'D	MODEL OR ENGINE CUBIC INCH DISPLACEMENT	VEHICLE CODE	YEAR 19____
22152-3	ROD (DOOR LOCK ACTUATING)				
C1AB 6222152-B		2	All	A	61
C2AZ 6222152-A	Includes nut	2	All	A	62
C3AZ 5422152-B	(c)	2	54, 71, 75	A	63
C3AZ 6222152-B	Includes adjusting nut (c)	2	62, 63, 65, 76	A	63
C3AZ 5422152-C	Use on vehicles built prior to 3-1-64 using 377647-S sleeve nut	2	54, 57, 71, 75	A	64
C3AZ 5422152-D	Use on vehicles built after 2-29-64 (Δ)	2	54,57,71,75	A	64
C4AZ 6222152-C	Use on vehicles built prior to 3-1-64 using 377647-S sleeve nut	2	62, 63, 65, 76	A	64
C3AZ 6222152-D	Use on vehicles built after 2-29-64 (Δ)	2	62,63,65,76	A	64
Δ Package also includes - (1) C3AZ-6221952-A retainer (1) C3AZ-6221954-A retainer					
C3YY 5422152-A	5-1/4" long (c)	2	54,71	B	62/63
C3YY 6222152-A	5" long (c)	2	62	B	62/63
C3DZ 7622152-A	R. H. (c)	1	63, 76	C	63
C3DZ 7622153-A	L. H. (c)	1	63, 76	C	63
C4DZ 6222152-A	Use on vehicles built prior to 3-1-64 using 377647-S sleeve nut	2	All	C	64
C4DZ 6222152-B	Use on vehicles built after 2-29-64	2	All	C	64
Package also includes - (2) C3AZ-6221952-A retainer					
C1VB 57218A86-A	R. H. (b)	1	All	D	61/63
C1VB 57218A87-A	L. H. (b)	1	All	D	61/63
C4VY 53218A86-B	To door handle - use on vehicles built prior to 1-13-64 (c)	2	All	D	64
C4VY 53218A86-C	Use on vehicles built after 1-12-64	2	All	D	64
Package also includes - (2) C3AZ-6221954-A retainer					
C1VB 5721954-A	Clip	AR	b		
377647-S	Nut-sleeve-nylon	AR	c		
222A00-1	RETAINER (FRONT DOOR GLASS RUN LOCK SIDE)				
C3AZ 54222A00-A	R. H.	1	54, 71	A	63/64
C3AZ 54222A01-A	L. H.	1	54, 71	A	63/64
C3AZ 62222A00-A	R. H.	1	62	A	63/64
C3AZ 62222A01-A	L. H.	1	62	A	63/64
C2OZ 54222A00-A	R. H. (a)	1	54, 71	B	62/63
C2OZ 54222A01-A	L. H. (a)	1	54, 71	B	62/63
C2OZ 62222A00-A	R. H. (a)	1	62	B	62/63
C2OZ 62222A01-A	L. H. (a)	1	62	B	62/63
C2DZ 58222A00-B	R. H. (a)	1	54, 71	C	62/64
C2DZ 58222A01-B	L. H. (a)	1	54, 71	C	62/64
C2DZ 64222A00-B	R. H. (a)	1	59, 62	C	62/64
C2DZ 64222A01-B	L. H. (a)	1	59, 62	C	62/64
373460-S7	Screw and washer-pan hd. cr. rec. -1/4"-20 x 1/2"	1	a		
22204-5	FRAME & DIVISION BAR (FRONT DOOR VENT WINDOW) LESS WEATHERSTRIP				
C1AZ 6222204-A	R.H.	1	54,58,62,64,71	A	61
C1AZ 6222205-A	L.H.	1	54,58,62,64,71	A	61
C2AZ 6522204-A	R.H.	1	65,75	A	61/62
C2AZ 6522205-A	L.H.	1	65,75	A	61/62
C2AZ 7622204-A	R.H.	1	76	A	61/62
C2AZ 7622205-A	L.H.	1	76	A	61/62
C2AZ 6222204-A	R.H.	1	54,62,71	A	62
C2AZ 6222205-A	L.H.	1	54,62,71	A	62
C3AZ 7622204-A	R.H. - includes weatherstrips	1	63,76	A	63
C3AZ 7622205-A	L.H. - includes weatherstrips	1	63,76	A	63

CONTINUED ON NEXT PAGE

GROUP AND PART NUMBER	DESCRIPTION, SIZE, ETC.	NO. REQ'D	MODEL OR ENGINE CUBIC INCH DISPLACEMENT	VEHICLE CODE	YEAR 19____
22204-5	FRAME & DIVISION BAR (FRONT DOOR VENT WINDOW) LESS WEATHERSTRIP (CONTINUED)				
C3AZ 6222204-A	R. H.	1	54, 62, 71	A	63/64
C3AZ 6222205-A	L. H.	1	54, 62, 71	A	63/64
C3AZ 6522204-A	R. H. - includes weatherstrips	1	65, 75	A	63/64
C3AZ 6522205-A	L. H. - includes weatherstrips	1	65, 75	A	63/64
C4AZ 6322204-A	R. H.	1	57,63,76	A	64
C4AZ 6322205-A	L. H.	1	57,63,76	A	64
C2OZ 6222204-A	R. H. (a)	1	All except 65	B	62/63
C2OZ 6222205-A	L. H. (a)	1	All except 65	B	62/63
C3OZ 6522204-B	R. H.	1	65	B	63
C3OZ 6522205-B	L. H.	1	65	B	63
C1DZ 6422204-B	R. H.	1	All except 63, 76	C	60/64
C1DZ 6422205-B	L. H.	1	All except 63, 76	C	60/64
C4DZ 7622204-B	R. H. - includes weatherstrips	1	63, 76	C	63/64
C4DZ 7622205-B	L. H. - includes weatherstrips	1	63,76	C	63/64
372893-S2	Nut and retainer-No. 10-32-"J" type	1	a		
376129-S8	Screw-truss hd. cr. rec. -No. 8-32 x 3/8"	3	a		
22206-7	FRAME (FRONT DOOR VENTILATOR WINDOW) LESS GLASS				
BAK 5722206-A	R. H. - manual vents	1	All except 54, 65, 68, 75	D	60
BAK 5722207-A	L. H. - manual vents	1	All except 54, 65, 68, 75	D	60
BAK 5722206-B	R. H. - electric vents	1	All	D	60
BAK 5722207-B	L. H. - electric vents	1	All	D	60
222A06	BRACKET (FRONT DOOR WINDOW GLASS RUN) LOWER				
PB9M 5621728-A	(2) R. H. and (2) L. H. - front door	4	All	A	60
	(1) R. H. and (1) L. H. - rear door	2	57, 77	A	60
COAB 64222A06-A	(a)	AR	All	A	61/64
CODB 64222A06-A	(a)	2	All	B C	60/64
359605-S8	Screw and washer-hex. hd. -5/16"-24 x 5/8"	4or8	a		
22215	SPACER (DOOR VENTILATOR WINDOW FRAME)				
COMB 6422215-A		AR	All	A	60
22216	FILLER (DOOR GLASS RUN)				
C1GY 6422216-A	Felt - 1/16" thick on steel backing - 18" long	AR	All	C	60/64
22220-1	FRAME (FRONT DOOR GLASS)				
PB9M 5622220-A	R. H.	1	63, 76	A	60
PB9M 5622221-A	L. H.	1	63, 76	A	60
PB9M 5722220-A	R. H.	1	57, 77	A	60
PB9M 5722221-A	L. H.	1	57, 77	A	60
C1AB 5422220-AP	R. H.	1	54,58,71	A	61
C1AB 5422221-AP	L. H.	1	54,58,71	A	61
C1AB 6222220-AP	R. H.	1	62,64	A	61
C1AB 6222221-AP	L. H.	1	62,64	A	61
COAB 5722220-A	R. H.	1	75	A	61/62
COAB 5722221-A	L. H.	1	75	A	61/62
COAB 6322220-A	R. H.	1	76	A	61/62
COAB 6322221-A	L. H.	1	76	A	61/62
C1AB 6522220-A	R. H.	1	65	A	61/62
C1AB 6522221-A	L. H.	1	65	A	61/62
C3AZ 6322220-A	R. H.	1	63	A	63/64
C3AZ 6322221-A	L. H.	1	63	A	63/64
C3AZ 6522220-A	R. H.	1	65	A	63/64
C3AZ 6522221-A	L. H.	1	65	A	63/64

CONTINUED ON NEXT PAGE

GROUP AND PART NUMBER	DESCRIPTION, SIZE, ETC.	NO. REQ'D	MODEL OR ENGINE CUBIC INCH DISPLACEMENT	VEHICLE CODE	YEAR 19____
22220-1	FRAME (FRONT DOOR GLASS) CONTINUED				
C3AZ 7522220-A	R.H.	1	75	A	63/64
C3AZ 7522221-A	L.H.	1	75	A	63/64
C3AZ 7622220-A	R.H.	1	76	A	63/64
C3AZ 7622221-A	L.H.	1	76	A	63/64
C4AZ 5722220-A	R.H.	1	57	A	64
C4AZ 5722221-A	L.H.	1	57	A	64
C3OZ 6522220-A	R.H.	1	65	B	63
C3OZ 6522221-B	L.H.	1	65	B	63
CODZ 5822220-B	R.H.	1	54,71	C	60/64
CODZ 5822221-B	L.H.	1	54,71	C	60/64
C3DZ 6322220-A	R.H.	1	63	C	63/64
C3DZ 6322221-A	L.H.	1	63	C	63/64
CODZ 6422220-B	R.H.	1	59,62	C	63/64
CODZ 6422221-B	L.H.	1	59,62	C	63/64
C3DZ 7622220-A	R.H.	1	76	C	63/64
C3DZ 7622221-A	L.H.	1	76	C	63/64
BAK 5722220-A	R.H.	1	53,54,57,75	D	60
BAK 5722221-A	L.H.	1	53,54,57,75	D	60
BAK 6322220-A	R.H.	1	63,65,68	D	60
BAK 6322221-A	L.H.	1	63,65,68	D	60
C1VB 5722220-C	R.H.	1	All	D	61/63
C1VB 5722221-C	L.H.	1	All	D	61/63
C4VY 5322220-A		2	53	D	64
C4VY 7422220-A		2	74	D	64
222A20-1	SHIELD (FRONT DOOR VENTILATOR WINDOW RAIN)				
COAB 63222A20-A	R.H.	1	76	A	61/62
COAB 63222A21-A	L.H.	1	76	A	61/62
CODB 64222A20-A	R.H. - rustless steel	1	All	C	60/61
CODB 64222A21-A	L.H. - rustless steel	1	All	C	60/61
222A22	REFER TO GROUP 21756				
222A24	STOP (DOOR WINDOW UPPER)				
C1SB 63222A24-A	Front and rear door	4or6	All	D	61/63
22240	COUPLER (FRONT DOOR VENT WINDOW LOWER PIVOT)				
C1VB 5722240-B		2	All	D	61/63
222A42	FILLER (DOOR VENTILATOR WINDOW WEATHERSTRIP TO VENT FRAME)				
CODB 64222A42-A		2	All	C	60/61
22248-9	FRAME & VENTILATOR WINDOW (FRONT DOOR) LESS GLASS & HANDLE				
COMB 5822248-AP	R.H.	1	58,64	A	60
COMB 5822249-AP	L.H.	1	58	A	60
B9MB 6422249-DP	L.H.	1	64	A	60
222A68	CLAMP (FRONT DOOR VENT WINDOW) LOWER PIVOT COUPLER				
C1VB 57222A68-B		2	All	D	61/63
222A78	SEAL (DOOR VENTILATOR WINDOW ADJUSTMENT OPENING AT BELT)				
C3AZ 65222A78-A		2	57, 63, 65, 75, 76	A	63/64

GROUP AND PART NUMBER	DESCRIPTION, SIZE, ETC.	NO. REQ'D	MODEL OR ENGINE CUBIC INCH DISPLACEMENT	VEHICLE CODE	YEAR 19____
22285-6	BUTTON (DOOR ACCESS HOLE)				
B7A 6422285-A	Lower plug	2	All	D	60
C1VB 5722286-A	Front - upper plug - window frame	4	All	D	61/63
C4VY 5322286-A	Lower and side	2	All	D	64
22288-9	BRACKET (DOOR VENTILATOR WINDOW FRAME STABILIZER BAR)				
C3OZ 6522288-A	R. H.	1	65	B	63
C3OZ 6522289-A	L. H.	1	65	B	63
22298-9	BAR (FRONT DOOR VENT WINDOW DIVISION)				
PB9M 5622298-A	Rustless steel - 15-7/8" long	2	All	A	60
C4VY 5322298-A	R.H. (Δ)	1	All	D	64
C4VY 5322299-A	L.H. (Δ)	1	All	D	64
	Δ Package also includes -				
(1) 50501-S	screw (2) 351879-S rivet				
22300	PLUG (DOOR GLASS RUN ACCESS)				
C2AZ 6222300-A		1	62, 65A, B, 76A	A	62
		1	62, 63, 65, 76	A	63/64
22304	PLUG (DOOR VENTILATOR WINDOW)				
C3DZ 7622304-A		2	63, 76	C	63/64
22328	SPRING (FRONT DOOR VENTILATOR WINDOW STABILIZER)				
C2VY 5722328-B	Use with electric operated ventilator window	2	All	D	62/63
22330	BEARING (FRONT DOOR VENT WINDOW PIVOT)				
C2VY 5722330-B	Lower - use with electric operated ventilator window	2	All	D	62/63
C4SB 6322330-A	Lower - outer	2	All	D	64
C4SZ 63223A30-A	Lower - inner	2	All	D	64
223A30	REFER TO GROUP 22330				
22364-5	SPACER (FRONT DOOR UPPER TRIM SUPPORT PANEL)				
BAK 5722364-C	R. H.	1	53, 54	D	60
BAK 5722365-C	L. H.	1	53, 54	D	60
BAK 6322364-A	R. H. - cut 5-11/16" off of rear end and add (1) 1/8" hole for models 57, 75	1	57, 63, 65, 68, 75	D	60
BAK 6322365-A	L. H. - cut 5-11/16" off of rear end and add (1) 1/8" hole for models 57, 75	1	57, 63, 65, 68, 75	D	60
22370-1	MOULDING (FRONT DOOR TRIM) BELT				
BAK 5722370-A	R. H. - 25-5/8" long	1	57, 75	D	60
BAK 5722371-A	L. H. - 25-5/8" long	1	57, 75	D	60
BAK 5722370-C	R. H. - 24-7/8" long	1	53, 54	D	60
BAK 5722371-C	L. H. - 24-7/8" long	1	53, 54	D	60
BAK 6322370-A	R. H. - 31-1/16" long	1	63, 65, 68	D	60
BAK 6322371-A	L. H. - 31-1/16" long	1	63, 65, 68	D	60
22381	ROD (FRONT DOOR LOCK ACTUATING)				
COMB 5822381-A	14-3/4" long	2	57, 58, 77	A	60

GROUP AND PART NUMBER	DESCRIPTION, SIZE, ETC.	NO. REQ'D	MODEL OR ENGINE CUBIC INCH DISPLACEMENT	VEHICLE CODE	YEAR 19____
22384-5	LEVER (FRONT DOOR LOCK ACTUATING ROD)				
COMB 5822384-A	R.H.	1	57, 58, 77	A	60
COMB 5822385-A	L.H.	1	57, 58, 77	A	60
C1AB 5422384-B	R.H. - use on vehicles built prior to 2-15-61	1	54, 58, 71, 75	A	61
C1AB 5422384-C	R.H. - use on vehicles built after 2-14-61	1	54, 58, 71, 75	A	61
C1AB 5422385-C	L.H.	1	54, 58, 71, 75	A	61
C1AB 6222384-C	R.H.	1	62, 64, 65, 76	A	61
C1AB 6222385-C	L.H.	1	62, 64, 65, 76	A	61
C2AZ 6222384-A	Use on vehicles built prior to 2-12-63 (a)	2	All	A	62/63
C3AZ 6222384-B	Use on vehicles built after 2-11-63	2	All	A	63/64
C2OZ 6222384-A		2	All	B	62/63
C4DZ 6222384-A	(b)	2	All	C	64
C4SZ 6322384-A		4	All	D	64
358678-S7	Pin-clevis	2	b		
373919-S8	Pin-clevis-3/16" x 1-3/16"	2	a		
22400-5	HANDLE (DOOR OUTSIDE)				
COMB 6421734-A	R.H. - front door - less button and lock cylinder	1	All	A	60
COMB 6421735-A	L.H. - front door - less button and lock cylinder	1	All	A	60
C1MB 6222400-B	R.H. - front and rear door	AR	All	A	61
C1MB 6222401-B	L.H. - front and rear door	AR	All	A	61
C2MY 6222400-A	R.H. - with button and pin (§)	1	All	A	62
C2MY 6222401-A	L.H. - with button and pin (§)	1	All	A	62

§ Package also includes -
(1) C2AZ-6222428 or 9-A pad
(1) C2AZ-6222448 or 9-A pad
(1) 50827-S7 screw and washer
(1) 376528-S7 nut and washer

C3MY 6222400-A	R.H. - front door - with button and pin (ΔΔ)	1	All	A	63
C3MY 6222401-A	L.H. - front door - with button and pin (ΔΔ)	1	All	A	63
C3MY 6222400-C	R.H. - front door - with button and pin (ΔΔ)	1	All	A	64
C3MY 6222401-C	L.H. - front door - with button and pin (ΔΔ)	1	All	A	64

ΔΔ Package also includes -
(1) C3AZ-6222428 or 9-A pad
(1) C3AZ-6222448 or 9-A pad
(1) 50811-S7 screw-No.12-24 x 1/2" long
(1) 377777-S7 screw and washer

C2YY 6222400-A	R.H. - front door - with button and pin (‡)	1	All	B	62/63
C2YY 6222401-A	L.H. - front door - with button and pin (‡)	1	All	B	62/63

‡ Package also includes -
(1) C2YY-6222428 or 9-A pad
(1) C2YY-6222448 or 9-A pad
(1) 50811-S8 screw-No.12-24 x 1/2" long
(1) 375803-S7 screw-No.12-24 x 1-5/8" long

CODB 6422404-B	R.H. - front and rear door (Δ)	AR	All	C	60/63
CODB 6422405-B	L.H. - front and rear door (Δ)	AR	All	C	60/63

Δ Package also includes -
(1) CODZ-6422428 or 9-B pad
(1) CODZ-6422448 or 9-B pad
(1) 50858-S7 screw and washer - No.10-32 x 1-3/8"
(1) 372978-S7 screw and washer - No.10-32 x 1-5/8"
(1) 50810-S7 screw and washer - No.10-32 x 1/2"
(1) 372601-S7 screw and washer - No.10-32 x 1-3/8"

C3DZ 7622404-A	R.H. (§§)	1	63, 76	C	63
C3DZ 7622405-A	L.H. (§§)	1	63, 76	C	63

§§ Package also includes -
(1) CODZ-6422428 or 9-B pad
(1) CODZ-6422448 or 9-B pad
(1) 50810-S7 screw and washer - No.10-32 x 1"
(1) 372966-S7 screw and washer - No.10-32 x 2"

CONTINUED ON NEXT PAGE

GROUP AND PART NUMBER	DESCRIPTION, SIZE, ETC.	NO. REQ'D	MODEL OR ENGINE CUBIC INCH DISPLACEMENT	VEHICLE CODE	YEAR 19____
22400-5	HANDLE (DOOR OUTSIDE) CONTINUED				
C4DZ 6222404-A	R. H. - front (Ⱨ)	1	All	C	64
	R. H. - rear	1	54, 71	C	64
C4DZ 6222405-A	L. H. - front (Ⱨ)	1	All	C	64
	L. H. - rear	1	54, 71	C	64
Ⱨ Package also includes -					
(1) CODZ-6422428 or 9-B pad	(1) 34655-S nut & washer		(1) 374904-S "o" ring		
(1) CODZ-6422448 or 9-B pad	(1) 54546-S screw & washer		(1) 378706-S screw & washer		
BAK 5722404-B	R.H. - front and rear door	2	All	D	60
BAK 5722405-B	L.H. - front and rear door	2	All	D	60
C2VY 5722400-A	R.H. - front door (†)	1	All	D	62/63
	L.H. - rear door	1	All	D	62/63
C2VY 5722401-A	L.H. - front door (†)	1	All	D	62/63
	R.H. - rear door	1	All	D	62/63
C4VY 5322400-A	R.H. - front door (†)	1	All	D	64
	L.H. - rear door	1	All	D	64
C4VY 5322401-A	L.H. - front door (†)	1	All	D	64
	R.H. - rear door	1	All	D	64
† Package also includes -					
(1) C1VB-5722428-D or 9-B pad	(1) 50834-S7 screw and washer		(1) 55733-S42 nut		
(1) C1VB-5722448-C or 9-B pad					
22408-9	BUTTON & LOCK CYLINDER (FRONT DOOR OUTSIDE HANDLE) WITH KEYS				
COMB 6422408-A	R.H. (Δ)	1	All	A	60
COMB 6422409-A	L.H. (Δ)	1	All	A	60
Δ Package also includes -					
(1) COMB-6422442-A or 3-A retainer	(1) B7A-7022462-A spring		(2) 371774-S7 screw and washer		
(1) COMB-6422478-A seal					
22428-9	PAD (DOOR OUTSIDE HANDLE) LARGE				
COMB 6422428-A		2	All	A	60
C1MB 6222428-B	R.H.	1	All	A	61
C1MB 6222429-B	L.H.	1	All	A	61
C2AZ 6222428-A	R.H. - front and rear door	2	All	A	62
C2AZ 6222429-A	L.H. - front and rear door	2	All	A	62
C3AZ 6222428-A	R.H. - front and rear door	1or2	All	A	63/64
C3AZ 6222429-A	L.H. - front and rear door	1or2	All	A	63/64
C2YY 6222428-A	R.H. - front and rear door	AR	All	B	62/63
C2YY 6222429-A	L.H. - front and rear door	AR	All	B	62/63
CODZ 6422428-B	R.H. - front and rear door	AR	All	C	60/64
CODZ 6422429-B	L.H. - front and rear door	AR	All	C	60/64
BAK 5722428-A	Front and rear door	4	All	D	60
C1VB 5722428-D	R.H. - front door	1	All	D	61/64
	L.H. - rear door	1	All	D	61/64
C1VB 5722429-B	L.H. - front door	1	All	D	61/64
	R.H. - rear door	1	All	D	61/64

GROUP AND PART NUMBER	DESCRIPTION, SIZE, ETC.	NO. REQ'D	MODEL OR ENGINE CUBIC INCH DISPLACEMENT	VEHICLE CODE	YEAR 19.___
22442-3	RETAINER (FRONT DOOR OUTSIDE HANDLE BUTTON)				
BAK 5722442-B	R.H. ☆	1	53,54,57,75	D	60
BAK 5722443-B	L.H. ☆	1	53,54,57,75	D	60
BAK 6322442-B	R.H.	1	63,65,68	D	60
BAK 6322443-B	L.H.	1	63,65,68	D	60
	☆ Refer to group 26432 for rear door				
22448-9	PAD (DOOR OUTSIDE HANDLE) SMALL				
C1MB 6222448-A	R.H. - front and rear door	2	All	A	61
C1MB 6222449-A	L.H. - front and rear door	2	All	A	61
C2AZ 6222448-A	R.H. - front and rear door	2	All	A	62
C2AZ 6222449-A	L.H. - front and rear door	2	All	A	62
C3AZ 6222448-A	R.H. - front and rear door	1or2	All	A	63/64
C3AZ 6222449-A	L.H. - front and rear door	1or2	All	A	63/64
C2YY 6222448-A	R.H. - front and rear door	AR	All	B	62/63
C2YY 6222449-A	L.H. - front and rear door	AR	All	B	62/63
CODZ 6422448-B	R.H. - front and rear door	AR	All	C	60/64
CODZ 6422449-B	L.H. - front and rear door	AR	All	C	60/64
BAK 5722448-A	Front and rear door	4	All	D	60
C1VB 5722448-C	Flat with lipped edges - R.H. - front door	1	All	D	61/64
	L.H. - rear door	1	All	D	61/64
C1VB 5722449-B	Flat with lipped edges - L.H. - front door	1	All	D	61/64
	R.H. - rear door	1	All	D	61/64
22454	KIT (BUTTON & PIN) DOOR OUTSIDE HANDLE				
C1MY 6222454-A	Front and rear door	4	All	A	61
	Consists of the following -				
(1) C1MB-6222442-A retainer	(1) C1MB-6222462-A spring		(1) 87022-S seal		
(1) C1MB-6222454-A button and pin	(1) 41553-S screw-No.6-32 x 3/8"				
C2AB 6222454-A	Front door - refer to group 26602 for rear door	2	All	A	62
	Consists of the following -				
(1) C2AB-6222442-B retainer	(1) 358524-S7 clip		(1) 374904-S seal "o" ring		
(1) C2OB-6222462-A spring	(1) 373017-S7 screw and washer				
C3AZ 6222454-A	Front door - refer to group 26602 for rear door - use on vehicles built prior to 2-12-63	2	All	A	63
	Consists of the following -				
(1) C3AB-6222442-B retainer	(1) 40514-S8 screw		(1) 374904-S seal "o" ring		
(1) C3AB-6222462-A spring	(1) 358524-S7 clip				
C3AZ 6222454-B	Front door - refer to group 26602 for rear door - use on vehicles built after 2-11-63	2	All	A	63/64
	Consists of the following -				
(1) C3AB-6222442-B retainer	(1) 40514-S8 screw		(1) 374904-S seal "o" ring		
(1) C3AB-6222462-A spring	(1) 358524-S7 clip				
C2YY 6222454-A	Front door - refer to group 26602 for rear door	2	All	B	62
	Consists of the following -				
(1) C2OZ-6222384-A lever	(1) C2OB-6222462-A spring		(1) 358524-S7 clip		
(1) C2OB-6222442-A retainer	(1) 40514-S7 screw		(1) 374904-S seal		
(1) C2OB-6222454-A button and pin	(1) 73878-S8 pin				

CONTINUED ON NEXT PAGE

GROUP AND PART NUMBER	DESCRIPTION, SIZE, ETC.	NO. REQ'D	MODEL OR ENGINE CUBIC INCH DISPLACEMENT	VEHICLE CODE	YEAR 19.___
22454	KIT (BUTTON & PIN) DOOR OUTSIDE HANDLE (CONTINUED)				
C2OZ 6222454-A	Front door - refer to group 26602 for rear door	2	All	B	63
	Consists of the following -				
(1) C2OB-6222442-C retainer	(1) C2OB-6222462-A spring		(1) 374904-S seal		
(1) C2OB-6222454-A button and pin	(1) 40514-S7 screw				
CODB 5822484-B	Front door - "S" shaped pin	2	54, 71	C	60/63
	Consists of the following -				
(1) button assembly	(1) 371774-S screw-No.6-32 x 3/8"		(1) 374904-S "o" ring		
CODB 6422454-B	Front door - straight pin	2	59, 62	C	60/63
	Rear door - use on vehicles built after 5-31-60 - use CODB-5826602-A on vehicles built prior to 6-1-60	2	54, 71	C	60/63
	Consists of the following -				
(1) button assembly	(1) B7A-7022462-A spring		(1) 374904-S "o" ring		
(1) CODB-6422442-B retainer	(1) 371774-S screw-No.6-32 x 3/8"				
C3DZ 7622454-A	Front door	2	63, 76	C	63
	Consists of the following -				
(1) button assembly	(1) BAC-7022462-A spring		(1) 358524-S7 clip		
(1) C3XB-6422458-B retainer	(1) 40514-S8 screw		(1) 374904-S seal		
C4DZ 6222454-A	Front door - refer to group 26602 for rear door	2	All	C	64
	Consists of the following -				
(1) C4DB-6222442-A retainer	(1) B7A-7022462-A spring		(1) 374904-S "o" ring		
(1) C3XB-6222454-B button and pin	(1) 40514-S7 screw-No. 8-32 x 3/8"				
C1VY 5722454-B	Front and rear door	4	All	D	61/63
	Consists of the following -				
(1) C1VB-57218A02-B lever	(1) C1VB-5722458-D retainer		(1) 373017-S7 screw and washer		
(1) C2VB-5722408-A anti-rattler	(1) B7A-7022462-A spring		(1) 373919-S18 pin		
(1) C1VB-5722454-A button and pin	(1) 358524-S8 pin		(1) 374904-S "o" ring		
C4VY 5322454-A	Front and rear door	4	All	D	64
	Consists of the following -				
(1) C4VB-5322422-A lever	(1) B7A-7022462-A spring		(1) 373919-S18 pin		
(1) C4VB-5322454-A button and pin	(1) 358524-S8 pin		(1) 376968-S washer		
(1) C4VB-5322458-A retainer	(1) 373017-S7 screw & washer		(1) 377682-S "o" ring		
22460-1	BUTTON (FRONT DOOR OUTSIDE HANDLE)				
BAK 5722460-B	R. H.	1	All	D	60
BAK 5722461-B	L. H.	1	All	D	60
22462	SPRING (DOOR OUTSIDE HANDLE PUSH BUTTON)				
B7A 7022462-A	Front and rear door - 13 coils - 2-15/32" long	4	All	A C	60
	Rear door	2	All	D	60/61
	Front door	2	All	D	61
BAK 5722462-A	Front door - 9 coils - 2-1/8" long	2	All	D	60
22478-9	SEAL (DOOR OUTSIDE HANDLE PUSH BUTTON)				
BAK 5722478-A	R.H. - front and rear door	2	All	D	60
BAK 5722479-A	L.H. - front and rear door	2	All	D	60
22484	REFER TO GROUP 22454				

GROUP AND PART NUMBER	DESCRIPTION, SIZE, ETC.		NO. REQ'D	MODEL OR ENGINE CUBIC INCH DISPLACEMENT	VEHICLE CODE	YEAR 19____
22600-1	HANDLE (DOOR INSIDE)					
COMB 6422600-A	Front and rear door	(a)	4	All	A	60
C3AZ 6222600-C	R.H. - front and rear door	(‡)	1or2	54B, 63, 65B, C, 71B, 75B, 76A, B	A	63
			1or2	54A, B, 57A, D, 63D, 65B, 71B, D, 76A	A	64
C3AZ 6222601-C	L.H. - front and rear door	(‡)	1or2	54B, 63, 65B, C, 71B, 75B, 76A, B	A	63
			1or2	54A, B, 57A, D, 63D, 65B, 71B, D, 76A	A	64
‡ Package also includes - (1) 377690-S13 screw						
C4AZ 6322600-A	R.H. - front and rear door	(Δ)	1	54F, 57C, F, 63C, F, 65C, F 75F, 76C, F	A	64
C4AZ 6322601-A	L.H. - front and rear door	(Δ)	1	54F, 57C, F, 63C, F, 65C, F 75F, 76C, F	A	64
Δ Package also includes - (1) 378641-S screw						
C3AZ 6222600-B	Front and rear door		2or4	54A, 62A, 65A, 75A	A	63
			2or4	54A, 57A, 62A, 63A, 65A, 71A, C, 76A	A	64
			2or4	All	C	64
COAZ 6422600-A	Front and rear door	(a)	4	All	A B	61/62
			AR	All	C	60/63
			AR	All	B	63
BAK 5722600-A	Front and rear door	(a)	4	All	D	60
C1VB 5722600-B	Front and rear door - clip retained	(a)	4	All	D	61
C1VB 5722614-C	Front and rear door - screw retained	(b)	4	All	D	61/63
Package also includes - (1) 374986-S13 screw						
C4VY 5322614-A	R.H. - upper half		2	All	D	64
C4VY 5322615-A	L.H. - upper half		2	All	D	64
C4VY 5322616-C	R.H. - lower half		2	All	D	64
C4VY 5322617-C	L.H. - lower half		2	All	D	64
50387-S13	Screw-oval hd. -No. 8-32 x 3/8"		AR	b		
357550-S	Retainer-spring		AR	a		
22614-7	REFER TO GROUP 22600-1					
22620	ESCUTCHEON (DOOR INSIDE HANDLE)					
	For colors refer to MD-4230 Soft Trim Section					
C4AZ 6322620-A	Front and rear - SILVER finish plastic		4	54F, 57C, F, 63C, F, 65C, F, 75F, 76C, F	A	64
COLB 6322620-A	Front and rear door - chrome		4	All	D	60
22622-3	SLIDE (DOOR INSIDE HANDLE OPENING)					
C4VY 5322622-A	R.H. - front and rear door		2	All	D	64
C4VY 5322623-A	L.H. - front and rear door		2	All	D	64
22624	SPRING (DOOR INSIDE HANDLE)					
B9BM 6422624-A	Front door		2	All	A	60
B7A 7022624-A	Front and rear door window handles and quarter window handles - 1-21/32" x 2" long		AR	All	A	60/64
C3DZ 6222624-A	Front, rear and quarters		AR	All	B C	62/64

GROUP AND PART NUMBER	DESCRIPTION, SIZE, ETC.	NO. REQ'D	MODEL OR ENGINE CUBIC INCH DISPLACEMENT	VEHICLE CODE	YEAR 19____
22626	COVER (DOOR WINDOW REGULATOR HANDLE OPENING)				
BAE 6422626-A	Use when electric windows are installed	2	All	A	60
22644	INSERT (DOOR INSIDE HANDLE INNER ESCUTCHEON)				
BAE 6522644-B	Front and rear door - nylon	4	All	D	60
	Window regulator - front door	2	53A, 57A, 63A	D	60
	Window regulator - rear door	2	53A, 57A	D	60
	Window regulator - quarter	2	63A	D	60
	Front and rear door	4	All	D	61/63
	Window regulator - front door	2	All	D	62/63
22800-1	HINGE (FRONT DOOR) UPPER				
PB9M 5622800-A	R. H.	1	All	A	60
PB9M 5622801-A	L. H.	1	All	A	60
COAB 6422800-A	R. H.	1	All	A	61/63
COAB 6422801-A	L. H.	1	All	A	61/63
C4AZ 6222800-A	R. H.	1	All	A	64
C4AZ 6222801-A	L. H.	1	All	A	64
C2OB 6222800-A	R. H.	1	All	B	62/63
C2OB 6222801-A	L. H.	1	All	B	62/63
CODB 6422800-A	R. H.	1	All	C	60/63
CODB 6422801-A	L. H.	1	All	C	60/63
C4DZ 6222800-A	R. H. (a)	1	All	C	64
C4DZ 6222801-A	L. H. (a)	1	All	C	64
BAK 5722800-A	R. H.	1	All	D	60
BAK 5722801-A	L. H.	1	All	D	60
C1VB 5722800-B	R. H.	1	All	D	61/63
C1VB 5722801-B	L. H.	1	All	D	61/63
C4VY 5322800-A	R. H.	1	All	D	64
C4VY 5322801-A	L. H.	1	All	D	64
379043-S2	Screw and washer-3/8"-16 x 1-1/2"-attach hinge to pillar	8	a		
22806-7	HINGE & CHECK (FRONT DOOR) LOWER				
COMB 6422806-A	R. H.	1	All	A	60
COMB 6422807-A	L. H.	1	All	A	60
C3DZ 6222806-A	R. H. - front door	1	All	B C	60/63
	Rear door	1	54, 71	B	62/63
C3DZ 6222807-A	L. H. - front door	1	All	B C	60/63
	Rear door	1	54, 71	B	62/63
COLB 6322806-A	R. H.	1	All	D	60
COLB 6322807-A	L. H.	1	All	D	60
C2VY 5722806-A	R. H.	1	All	D	61/63
C2VY 5722807-A	L. H.	1	All	D	61/63
C4VY 5322806-A	R. H.	1	All	D	64
C4VY 5322807-A	L. H.	1	All	D	64
228A06	SEAL (FRONT DOOR UPPER HINGE TO DOOR)				
C1VB 57228A06-A		4	All	D	61/64
22810-1	HINGE (FRONT DOOR) LOWER				
C3AZ 6222810-A	R. H.	1	All	A	61/63
C3AZ 6222811-A	L. H.	1	All	A	61/63
C4AZ 6222810-A	R. H. - includes check	1	All	A	64
C4AZ 6222811-A	L. H. - includes check	1	All	A	64
C4DZ 6222810-A	R. H. (a)	1	All	C	64
C4DZ 6222811-A	L. H. (a)	1	All	C	64
379043-S2	Screw and washer-3/8"-16 x 1-1/2"-attach hinge to pillar	8	a		

GROUP AND PART NUMBER	DESCRIPTION, SIZE, ETC.	NO. REQ'D	MODEL OR ENGINE CUBIC INCH DISPLACEMENT	VEHICLE CODE	YEAR 19____
228A10	BRACKET (FRONT DOOR HINGE SPRING)				
C1VB 57228A10-B		2	All	D	61/64
228A12	SPRING (FRONT DOOR HINGE)				
C1VB 57228A12-A	15-1/2 coils - 4" long	2	All	D	61/64
228A14	PIN (FRONT DOOR HINGE SPRING)				
C1VB 57228A14-B		2	All	D	61/64
228A16	BUSHING (FRONT DOOR HINGE SPRING)				
C1VB 57228A16-C	7/16" I.D. x 1-1/16" O.D.	2	All	D	61/64
228A20	BUMPER (FRONT DOOR ASSIST SPRING)				
C1VB 57228A20-A		2	All	D	61/64
228A22	WASHER (FRONT DOOR ASSIST SPRING)				
C1VB 57228A22-A		2	All	D	61/64
22841	BUSHING (DOOR HINGE)				
B7A 7022841-B	Front and rear door - bronze - use on vehicles built prior to 12-3-62	AR	All	A B C D	60/63
	Luggage compartment door	4	All	D	61/63
C3AZ 5422841-A	Front and rear door - bronze - use on vehicles built after 12-2-62	AR	All	A B C D	63/64
	Luggage compartment door	4	All	D	63/64
22846	BOLT (DOOR CHECK LINK)				
C2GY 6222846-A	For repair of door hinges	AR	All	B C	60/62
Package also includes -	(1) 55669-S8 nut				
22908-9	PIVOT (DOOR VENTILATOR WINDOW) LOWER				
C3AZ 6222908-A	R.H. - use on vehicles built prior to 12-7-62 (Δ)	1	All	A	63
C3AZ 6222909-A	L.H. - use on vehicles built prior to 12-7-62 (Δ)	1	All	A	63
C3AZ 6222908-B	R.H. - use on vehicles built between 12-6-62 and 6-14-63 (Δ)	1	All	A	63
C3AZ 6222909-B	L.H. - use on vehicles built between 12-6-63 and 6-14-63 (Δ)	1	All	A	63
Δ Package also includes -	(2) 359964-S rivet-special				
22910-1	TROUGH (DOOR VENTILATOR WINDOW DRAIN)				
CODB 6422910-A	R.H. - rustless steel	1	All	C	60
CODB 6422911-A	L.H. - rustless steel	1	All	C	60
22912	BRACKET (FRONT DOOR VENTILATOR WINDOW GLASS RUN LOWER) INNER				
BY 7322912-A		2	All	D	60
22916-7	HANDLE (FRONT DOOR VENTILATOR WINDOW)				
COAZ 6422916-A	R.H. - with lock button - use on vehicles built prior to 11-15-61 (Δ)	1	All	A	61/62
COAZ 6422917-A	L.H. - with lock button - use on vehicles built prior to 11-15-61 (Δ)	1	All	A	61/62

Δ Package also includes -
(1) COAB-6422920-A key (1) B7A-7022982-A washer (1) 352471-S8 pin
(1) B9A-6422986-A spring

CONTINUED ON NEXT PAGE

GROUP AND PART NUMBER	DESCRIPTION, SIZE, ETC.	NO. REQ'D	MODEL OR ENGINE CUBIC INCH DISPLACEMENT	VEHICLE CODE	YEAR 19____
22916-7	HANDLE (FRONT DOOR VENTILATOR WINDOW) CONTINUED				
C2AZ 6222916-A	R. H. - less locking button - use on vehicles built after 11-14-61 (‡)	1	All	A	62
C2AZ 6222917-A	L. H. - less locking button - use on vehicles built after 11-14-61 (‡)	1	All	A	62
‡ Package also includes -					
(1) B7A-7022982-A	washer (1) 352471-S8 pin				
C3MY 6223410-A		2	All	A	63
C4AZ 6222916-B		2	All	A	64
C3OZ 6222916-A	R. H. (§)	1	All	A	60
		1	All	B C	60/64
C3OZ 6222917-A	L. H. (§)	1	All	A	60
		1	All	B C	60/64
§ Package also includes -					
(1) 67527-S7	pin (1) 354617-S washer				
BAJ 5822916-A	R. H.	1	53A, 57A, 63A	D	60
BAJ 5822917-A	L. H.	1	53A, 57A, 63A	D	60
C1VB 5723410-B	Clip retained (b)	2	All	D	61
C1VB 5723410-C	Screw retained - use with manual operated ventilator window (a)	2	All	D	61/62
Package also includes -					
	(1) 374986-S13 screw				
C3VY 5723410-A	(c)	2	All	D	63
50387-S13	Screw-oval hd. cr. rec. -No. 8-32 x 3/8"	2	a		
357550-S	Retainer-spring	2	b		
374986-S13	Screw-oval hd. cr. rec. lock-No. 8-32 x 3/8"	2	c		
22920	KEY (FRONT DOOR VENTILATOR WINDOW HANDLE) LOCKING				
COAB 6422920-A		2	All	A	61/62
22926	SPRING (FRONT DOOR VENTILATOR WINDOW PIVOT)				
B5A 7022926-A		2	All	A	61/62
		2	All	B C	60/64
22952-3	PIVOT (FRONT DOOR VENTILATOR WINDOW) UPPER				
C1VB 5722952-A	R. H.	1	All	D	61/63
C1VB 5722953-A	L. H.	1	All	D	61/63
22954	BRACKET (FRONT DOOR VENTILATOR WINDOW) LOWER PIVOT				
B9MB 6422954-A		2	All	A	60
C3AZ 6222954-A		2	All	A	63/64
BAK 5722954-B	Electric control	2	All	D	60
B6A 7622954-A	Manual control	2	53A, 57A, 63A	D	60
22960	BUSHING (FRONT DOOR VENTILATOR WINDOW) LOWER PIVOT				
B9MB 6422960-A	Nylon - use with indented pivot shaft	2	All	A	60
C3AZ 6222960-A	Nylon	4	All	A	63/64
BY 7322960-A	Nylon - use with round pivot shaft	2	All	A D	60
22963	WASHER (DOOR VENTILATOR WINDOW PIVOT FRICTION)				
8A 7022963		2	All	A	61
		2	All	C	60/61
375897-S	Flat - resin - 5/16"	4	All	A C	62
C2AZ 6222963-A		2	All	A	62
		2	All	B C	62/64

GROUP AND PART NUMBER	DESCRIPTION, SIZE, ETC.	NO. REQ'D	MODEL OR ENGINE CUBIC INCH DISPLACEMENT	VEHICLE CODE	YEAR 19____
22982	WASHER (DOOR VENTILATOR WINDOW HANDLE)				
B7A 7022982-A		2	All	A	61/62
O1A 7022982		2	53A, 57A, 63A	D	60
22986	SPRING (DOOR VENTILATOR WINDOW HANDLE)				
B9A 6422986-A		2	All	A	61/62
22992	STOP (DOOR VENTILATOR WINDOW PIVOT)				
COAB 6422992-A		2	All	A	61
		2	All	C	60/61
C2AZ 6222992-A		2	All	A	62
		2	All	B C	62/64
23030	BUMPER (FRONT DOOR) UPPER				
11A 7023030-B	Rubber - 1/4" diameter - use as bumper auxiliary seat cushion floor well	2	77A, B	A	60
C3AZ 5423030-A	Rubber - rear	2	54, 71, 75	A	63
C2AZ 6223030-A	Rubber - at quarter pillar lower rear	2	62, 63, 65, 76	A	63/64
C2OZ 6223030-A	Rubber - door overslam	2	54, 62	B	62
372617-S7	Rubber - door overslam	2	54, 62	B	63
C3DZ 7623030-A	Rubber	2	63, 76	C	63/64
23036-8	BUMPER (DOOR TO PILLAR)				
C3AZ 6223037-A	R. H.	1	62	A	63
C3AZ 6223038-A	L. H.	1	62	A	63
C4MY 6223036-A	R. H.	1	62	A	64
C4MY 6223037-A	L. H.	1	62	A	64
C2OZ 5423036-A	R. H. - front door	1	54	B	62/63
C2OZ 5423037-A	L. H. - front door	1	54	B	62/63
C2OZ 6223036-A	R. H. - front door	1	62	B	62/63
C2OZ 6223037-A	L. H. - front door	1	62	B	62/63
C3OZ 6523036-A	R. H.	1	65	B	63
C3OZ 6523037-A	L. H.	1	65	B	63
C4DZ 6223036-A	R. H.	1	All	C	64
C4DZ 6223037-A	L. H.	1	All	C	64
C1VB 5723037-A	Front and rear door	4	All	D	61/64
23124	BRACKET (FRONT DOOR WINDOW REGULATOR PLATE)				
COLB 5723124-A		2	53,54,57,75	D	60
COLB 6323124-A		2	63,65,68	D	60
231A32-3	GUSSET (QUARTER PILLAR REINFORCEMENT) CENTER				
C1VY 57231A32-A	R. H.	1	All	D	61/64
C1VY 57231A33-A	L. H.	1	All	D	61/64
23200-3	REGULATOR (FRONT DOOR WINDOW)				
COMB 5823200-C	R. H. - manual	1	58	A	60
COMB 5823201-C	L. H. - manual	1	58	A	60
COMB 6423202-C	R. H. - manual	1	All except 58	A	60
COMB 6423203-C	L. H. - manual	1	All except 58	A	60
COAZ 5823200-B	R. H. - manual (a)	1	54,58,71	A	61/64
COAZ 5823201-B	L. H. - manual (a)	1	54,58,71	A	61/64
COAZ 6423202-B	R. H. - less arms - manual (a)	1	All except 54,58,71	A	61/64
COAZ 6423203-B	L. H. - less arms - manual (a)	1	All except 54,58,71	A	61/64

CONTINUED ON NEXT PAGE

GROUP AND PART NUMBER	DESCRIPTION, SIZE, ETC.	NO. REQ'D	MODEL OR ENGINE CUBIC INCH DISPLACEMENT	VEHICLE CODE	YEAR 19____
23200-3	REGULATOR (FRONT DOOR WINDOW) CONTINUED				
C3OZ 5423200-A	R. H. - manual (a)	1	54, 71	B	62/63
C3OZ 5423201-A	L. H. - manual (a)	1	54, 71	B	62/63
C2OZ 6223200-A	R. H. - manual (a)	1	62	B	62/63
C2OZ 6223201-A	L. H. - manual (a)	1	62	B	62/63
C3OZ 6523202-A	R. H. - less arm	1	65	B	63
C3OZ 6523203-A	L. H. - less arm	1	65	B	63
C3DZ 5423200-A	R. H. - manual (a)	1	54, 71	C	60/64
C3DZ 5423201-A	L. H. - manual (a)	1	54, 71	C	60/64
CODZ 6423200-A	R. H. - manual (a)	1	59, 62	C	60/64
CODZ 6423201-A	L. H. - manual (a)	1	59, 62	C	60/64
C3DZ 7623202-A	R. H. - less arm	1	63, 76	C	63/64
C3DZ 7623203-A	L. H. - less arm	1	63, 76	C	63/64
BAK 5723202-A	R. H. - less arms - manual	1	53A, 57A	D	60
BAK 5723203-A	L. H. - less arms - manual	1	53A, 57A	D	60
BAK 6323202-A	R. H. - less arms - manual	1	63A	D	60
BAK 6323203-A	L. H. - less arms - manual	1	63A	D	60
359605-S2	Screw and washer-hex. hd. -5/16"-24 x 5/8"	4	a		
23204-5	KIT (REGULATOR - DRIVE & COUPLING) FRONT DOOR WINDOW				
C1AZ 6223204-A	R. H. - electric	1	All	A	61
Consists of the following -					
(1) C1AZ-5723395-A drive	(1) C1VB-5723440-A coupling		(1) C2AZ-6223208-A regulator		
C1AZ 6223205-A	L. H. - electric	1	All	A	61
Consists of the following -					
(1) C1AZ-5723394-A drive	(1) C1VB-5723440-A coupling		(1) C2AZ-6223209-A regulator		
23208-9	REGULATOR (DOOR WINDOW) ELECTRIC				
COMB 6423208-A	R. H. - less motor	1	All	A	60
COMB 6423209-A	L. H. - less motor	1	All	A	60
C2AZ 6223208-A	R. H. - less motor - use on vehicles built prior to 2-11-63	1	All	A	61/63
C3AZ 6223208-A	R. H. - less motor - use on vehicles built after 2-10-63	1	All	A	63
C3AZ 6223209-A	L. H. - less motor	1	All	A	61/63
C4AZ 6223208-B	R. H. - less motor	1	All	A	64
C4AZ 6223209-A	L. H. - less motor	1	All	A	64
BAK 5723208-A	R. H. - less motor and drive type "A"	1	53, 54, 57, 75	D	60
BAK 5723209-A	L. H. - less motor and drive type "A"	1	53, 54, 57, 75	D	60
BAK 5723208-C	R. H. - less motor and drive type "B"	1	53, 54, 57, 75	D	60
BAK 5723209-C	L. H. - less motor and drive type "B"	1	53, 54, 57, 75	D	60
BAK 6323208-A	R. H. - less motor and drive type "A"	1	63, 65, 68	D	60
BAK 6323209-A	L. H. - less motor and drive type "A"	1	63, 65, 68	D	60
BAK 6323208-B	R. H. - less motor and drive type "B"	1	63, 65, 68	D	60
BAK 6323209-B	L. H. - less motor and drive type "B"	1	63, 65, 68	D	60
C1VY 5723208-E	R. H. - front door - less motor and drive	1	All	D	61/63
	L. H. - rear door - less motor and drive	1	All	D	61/63
C1VY 5723209-E	L. H. - front door - less motor and drive	1	All	D	61/63
	R. H. - rear door - less motor and drive	1	All	D	61/63
C4VY 5323208-A	R. H. - front door - less motor and drive	1	All	D	64
	L. H. - rear door - less motor and drive	1	All	D	64
C4VY 5323209-A	L. H. - front door - less motor and drive	1	All	D	64
	R. H. - rear door - less motor and drive	1	All	D	64

GROUP AND PART NUMBER	DESCRIPTION, SIZE, ETC.	NO. REQ'D	MODEL OR ENGINE CUBIC INCH DISPLACEMENT	VEHICLE CODE	YEAR 19____
23230-1	BRACKET (WINDOW REGULATOR EQUALIZER ARM)				
B9MB 6423230-A	Front door - manual	2	All except 58	A	60
	Rear door - manual	2	58	A	60
	Front and rear door - electric	4	58	A	60
C1AB 6223230-A	Front door	2	62, 64, 65, 75, 76	A	61/62
	Rear door	2	54, 58, 71	A	61/62
	Quarter window - manual	2	62, 64	A	60/64
C3AZ 5423230-A	R. H. - rear door - use with manual or electric windows	1	54, 71	A	63/64
C3AZ 5423231-A	L. H. - rear door - use with manual or electric windows	1	54, 71	A	63/64
C3AZ 6223230-A	Front door - manual	2	57, 62, 63, 65, 75, 76	A	63/64
	Front door - electric	2	54, 71	A	63/64
C3OZ 6523230-A	Manual	2	63, 65, 76	B C	63/64
BAK 5723230-A	Front door - 1-3/8" wide x 6-3/8" long	2	All	D	60
	Back light	1	54, 65, 75	D	60
C1VB 5723230-A	Front and rear door	4	All	D	61/64
C4VY 5323230-A	R. H. - front and rear door	2	All	D	64
C4VY 5323231-A	L. H. - front and rear door	2	All	D	64
23234-5	ARM & PLATE (FRONT DOOR WINDOW REGULATOR)				
COMB 6423234-A	R. H.	1	All except 58	A	60
COMB 6423235-A	L. H.	1	All except 58	A	60
COAZ 6423234-A	R. H. - manual	1	All except 54, 58, 71	A	61/64
COAZ 6423235-A	L. H. - manual	1	All except 54, 58, 71	A	61/64
C3OZ 6523234-A	R. H.	1	63, 65, 76	B C	63/64
C3OZ 6523235-A	L. H.	1	63, 65, 76	B C	63/64
B7A 7023234-A	R. H. - manual regulator	1	53A. 57A, 63A	D	60
B7A 7023235-A	L. H. - manual regulator	1	53A, 57A, 63A	D	60
23240	ROLLER (WINDOW REGULATOR ARM)				
COAB 6423240-B	3/4" diameter - front door - manual	2	54, 58, 71	A	60/62
	Front door - electric	6	58	A	60
	Front door - manual	6	All except 54, 58, 71	A	60/62
	Rear door - manual	6	54, 57, 58, 71, 75, 77	A	60/62
	Quarter window - manual	2	63	A	60&63
	Quarter window - manual	2	76	A	60/63
	Quarter window - manual	6	62, 64	A	60/64
	Quarter window - manual	4	65	A	61/64
	Quarter window - manual	2	63, 76	A	64
	Back window - manual or electric	3	77	A	60
	Back window - manual or electric	2	71	A	61/64
	Front door - manual or electric	6	All	A D	63/64
	Rear door - manual or electric	6	53, 54, 71, 74, 75	A D	63/64
	Front and rear door	AR	All	B	62/63
	Quarter	AR	62, 65	B	62/63
	Tailgate	AR	59, 71	B C	60/64
	Front and rear door	4	All	C	60/63
	Quarter	6	62	C	60/63
	Quarter	6	62, 63	C	64
	Front door	2	All	C	64
	Rear door	2	54, 71	C	64
	Back window	AR	All	D	60
	Front and rear door	AR	All	D	61/62
C3OZ 6523240-B	Quarter window - nylon - .96" long	2	65	B	63
C3DZ 7623240-A	Quarter window - 3/4" O. D. x 3/8" I. D. x 35/64" long	4	63, 76	C	63
		4	76	C	64

CONTINUED ON NEXT PAGE

GROUP AND PART NUMBER	DESCRIPTION, SIZE, ETC.	NO. REQ'D	MODEL OR ENGINE CUBIC INCH DISPLACEMENT	VEHICLE CODE	YEAR 19____
23240	ROLLER (WINDOW REGULATOR ARM) CONTINUED				
BA 7023240-A	Use with electric regulator				
	Front and rear door	AR	All	D	60
	Quarter window	10	63, 65, 68	D	60
	Back window	3	54, 65, 68	D	60
C1VB 5723240-A	Front and rear door - nylon - 31/32" long x 7/8" diameter	8	All	D	61/63
23279	COUPLING (SEAT REGULATOR MOTOR)				
BC 7023279-A		2	All	A	60
		1	All	A	61/62
23283	GROMMET (WINDOW REGULATOR MOTOR MOUNTING)				
BD 7323283-A	Use for power windows on all doors, quarters and back lights - 1/4" I.D. x 5/8" O.D.	AR	All	A D	60
23318	SPRING (WINDOW REGULATOR COUNTERBALANCE)				
COAB 5823318-A	Front door - manual	2	54, 58, 71	A	60/63
C3SZ 6323318-A	Front door - manual	2	All except 54, 58, 71	A	60/62
	Front door	2	57, 62, 63, 76	A	64
		2	62, 65	B	63
	Quarter	2	62, 65	B	63
BAC 7023318-A	Front and rear door - electric	2	All	A	60/63
	Quarter - electric	2	All	A	63
	Front and rear door - manual or electric type "B"	4	All	D	60
	Quarter window - electric	2	63, 65, 68	D	60
C1VB 5723318-A	Front and rear door	4	All	D	61/63
	Back window	1	54B, 65B, C, 75B	A	63
	Back window	1	54, 62, 65, 75	A	64
	Rear door	2	All	D	64
C4VY 5323318-A	Front door	2	All	D	64
23342	HANDLE (DOOR WINDOW & QUARTER WINDOW REGULATOR)				
COMB 6423342-A	Front and rear door	4	All	A	60
	Quarter window	2	63, 64, 76	A	60
C2AZ 6223342-A	Front and rear door	4	All	A	61
	Quarter window	2	62, 64, 65	A	61
C2AZ 7630322-A	Quarter window	2	65B, 76A	A	61
C3MY 6223342-A	Front door	2	All	A	63
	Rear door	2	54, 71, 75	A	63
	Quarter window	2	62, 65	A	63
C3MY 7630322-A	Quarter window	2	76	A	63
C4AZ 6223342-B	Front door	2	All	A	64
	Rear door	2	54, 57, 71, 75F	A	64
	Quarter window	2	62A, 63C, D, 65	A	64
C4AZ 7630322-B	Quarter window	2	76	A	64
	Use with integrated a/cond.	2	All except 65C, F	A	64
C2MY 6223342-A	Front and rear door	4	All	A	62
	Front door	2	All	B	63
	Rear door	2	54, 71	B	63
C2MY 7630322-A	Quarter window (a)	2	62, 65, 76	A	62
	Front and rear door	4	All	B	62
	Quarter window	2	62, 65	B	62/63
	Front door	2	62C, 63, 76A	C	62/63
	Quarter window	2	62C, 63, 76A	C	62/63

CONTINUED ON NEXT PAGE

GROUP AND PART NUMBER	DESCRIPTION, SIZE, ETC.	NO. REQ'D	MODEL OR ENGINE CUBIC INCH DISPLACEMENT	VEHICLE CODE	YEAR 19____
23342	HANDLE (DOOR WINDOW & QUARTER WINDOW REGULATOR) CONTINUED				
CODZ 6430322-B	Quarter window (a)	2	59, 62A, B	C	60/63
	Rear door	2	54, 71	C	60/63
	Front door	2	All except 62C, 63, 76A	C	60/63
C4GY 5423342-A	Front door	2	63C, D, 76B, D	C	64
	Front and rear door	2	54C, D	C	64
C4DZ 6223342-A	Front door	2	All except 54C, D, 63C, D, E, 76B, D	C	64
	Rear door	2	54A, B, 71A, B, C	C	64
C4DZ 6230322-A	Quarter window	2	62	C	64
C4SZ 6323342-A	Quarter	2	63, 76	C	64
BY 7323342-A	Front door	2	53A, 57A, 63A	D	60
	Rear door	2	53A, 57A	D	60
	Quarter window	2	63A	D	60
357550-S	Retainer-spring	2	a		
23352	KNOB (DOOR WINDOW REGULATOR HANDLE)				
COAB 6423352-B	BLACK - Front and rear door	4	All	A	61
	Quarter window	2	62, 64, 65, 76	A	61
C3MY 6223352-A	Chrome - front and rear door and quarter windows	AR	All	A	63
C3AZ 6223352-B	Chrome - front and rear door and quarter window	AR	All	A	64
Package also includes -					
(1) C4AB-6223360-A pin	(1) 357550-S retainer		(1) 372266-S washer		
C2YY 6223352-A	Zinc die cast - front and rear door	2	All	A B	62
	Quarter window	2	All	A B	62
	Quarter window	2	62, 65	B C	63
	Quarter window	2	62C	C	62
	Front door	2	62C	C	62/63
COAB 6423352-A	WHITE - front and rear door	4	All except 62C	C	60/62
	Quarter	2	59, 62 A, B	C	60/62
Package also includes -					
(1) B9AB-6423360-A pin	(1) 357550-S retainer		(1) 372266-S2 washer		
C4SZ 6323352-A	Chrome - front and rear door and quarter window (Δ)	AR	54C, D, 63C, D, 76B, D	C	64
C4DZ 6223352-A	BLACK - front and rear door and quarter window (Δ)	AR	All except 54C, D, 63C, D, 76B, D	C	64
Δ Package also includes -					
(1) C4AB-6223360-A pin	(1) 357550-S retainer		(1) 372266-S washer		
23358	STEM (FRONT DOOR WINDOW REGULATOR HANDLE)				
BAK 5723358-B	Inner (a)	2	53A, 57A, 63A	D	60
353925-S	Roll pin - 1/8" x 3/4"	2	a		
23370	PLATE (DOOR & WINDOW REGULATOR HANDLE)				
C3AZ 6223370-B	Nylon - 1-7/64" O.D. x 15/32" I.D.				
	Front door regulator	2	54B, 65B, C, 71B, 75B, 76A, B	A	63
	Rear door regulator	2	54B, 57D, 71B, 75B	A	63
	Front door	2	54A, B, 57D, 63D, 65B, 71B, D	A	64
	Rear door	2	54A, B, 57D, 71B	A	64

CONTINUED ON NEXT PAGE

GROUP AND PART NUMBER	DESCRIPTION, SIZE, ETC.	NO. REQ'D	MODEL OR ENGINE CUBIC INCH DISPLACEMENT	VEHICLE CODE	YEAR 19____
23370	PLATE (DOOR & WINDOW REGULATOR HANDLE) CONTINUED				
C3AZ 6223370-A	Nylon - 2" O.D. x 1-1/64" I.D. -				
	Front door and vent window regulator	4	All	A	63
	Rear door regulator	2	54, 71, 75	A	63
	Quarter regulator	2	62, 63, 65, 76	A	63
	Front door and vent window regulator	AR	All	A C	64
	Rear door regulator	2	54, 57, 71, 75	A C	64
	Quarter regulator	2	62, 63, 65, 76	A C	64
B7A 7023370-B	Nylon - front door and window regulator☆	AR	All	A	60/62
		AR	All	B C	60/63
	Rear door and window regulator	AR	54, 57, 58, 71, 75, 77	A B C	60/63
	Quarter window	AR	59, 62, 63, 64, 65, 76	A B C	60/62
	Quarter window	AR	62, 65, 76	B C	63
	☆ For 1962 and 1963 Comet and Meteor front door escutcheon usage - refer to group 22620 in the soft trim section of the Master Price and Reference List				
23394-5	DRIVE (WINDOW REGULATOR)				
B7A 6423394-A	Back window - 52 to 1 ratio	1	77	A	60
B5A 7023395-A	Back window - 27-1/2 to 1 ratio	1	77	A	60
C4AZ 6223394-A	R.H. - front and rear door - includes motor	2	All	A	64
	Quarter window	1	All except 76	A	64
C4AZ 6223395-A	L.H. - front and rear door - includes motor	2	All	A	64
	Quarter window	1	All except 76	A	64
COLB 6323394-A	Front door	2	All	A	60
	Quarter window	2	63, 76	A	60
	Front door - type "A" - HUPP	2	All	D	60
	Quarter window	2	68	D	60
COSB 6330305-A	Quarter - HUPP	2	64	A	60
	Rear door	2	57, 58, 77	A	60
	Quarter window - type "A" - HUPP	2	63, 65	D	60
	Rear door	2	53, 54, 57, 75	D	60
	Back window	1	54, 65, 75	D	60
C1AZ 5723394-A	R.H. side - rear door	1	54, 58, 71, 75	A	61/63
	L.H. side - front door	1	All	A	61/63
	R.H. side - quarter	1	62, 63, 64, 65, 76	A	61/63
	R.H. - quarter	1	76	A	64
	L.H. - quarter	1	76	A	64
	Tailgate	1	71	B	63
	Tailgate	1	59, 71	A C	61/64
	R.H. - front door	1	All	D	61/62
	L.H. - rear door	1	All	D	61/62
	R.H. side - rear door	1	All	D	63/64
	L.H. side - front door	1	All	D	63/64
C1AZ 5723395-A	L.H. side - rear door	1	54, 58, 71, 75	A	61/63
	R.H. side - front door	1	All	A	61/63
	L.H. side - quarter	1	62, 63, 64, 65, 76	A	61/63
	Retractable rear window	1	All except 57, 63, 71, 76	A	63/64
	L.H. - front door	1	All	D	61/62
	R.H. - rear door	1	All	D	61/62
	R.H. side - front door	1	All	D	63/64
	L.H. side - rear door	1	All	D	63/64
COAB 6423395-A	Use on tailgate only	1	59, 71	C	60

CONTINUED ON NEXT PAGE

GROUP AND PART NUMBER	DESCRIPTION, SIZE, ETC.	NO. REQ'D	MODEL OR ENGINE CUBIC INCH DISPLACEMENT	VEHICLE CODE	YEAR 19____
23394-5	DRIVE (WINDOW REGULATOR) CONTINUED				
BAK 5723394-D	R.H. - front door - type "B" - DURA - use on vehicles built prior to 4-8-60	1	All	D	60
BAK 5723395-D	L.H. - front door - type "B" - DURA - use on vehicles built prior to 4-8-60	1	All	D	60
COLB 6323394-B	R.H. - front door - type "B" - DURA - use on vehicles built after 4-7-60 - includes worm and coupling	1	All	D	60
COLB 6323395-B	L.H. - front door - type "B" - DURA - use on vehicles built after 4-7-60 - includes worm and coupling	1	All	D	60
BAK 5726081-B	R.H. - quarter window - "type B" - DURA R.H. - rear door Use on vehicles built prior to 4-8-60	1 1	63, 65, 68 53,54,57,75	D D	60 60
BAK 5726080-B	L.H. - quarter window - "type B" - DURA L.H. - rear door Use on vehicles built prior to 4-8-60	1 1	63, 65, 68 53,54,57,75	D D	60 60
COLB 5727144-A	R.H. - quarter window - type "B" - DURA R.H. - rear door Use on vehicles built after 4-7-60	1 1	63,65,68 53,54,57,75	D D	60 60
COLB 5727145-A	L.H. - quarter window - type "B" - DURA L.H. - rear door Use on vehicles built after 4-7-60	1 1	63,65,68 53,54,57,75	D D	60 60
B7A 6423395-A	Back window	1	68	D	60
23402-3	REGULATOR (FRONT DOOR VENTILATOR WINDOW)				
C3AZ 6223402-B	R.H.	1	All	A	63/64
C3AZ 6223403-B	L.H.	1	All	A	63/64
C2VY 5723402-A	R.H. - manual	1	All	D	61/63
C2VY 5723403-A	L.H. - manual	1	All	D	61/63
234A02-3	GEAR & SHAFT (FRONT DOOR VENTILATOR WINDOW REGULATOR)				
C1VB 57234A02-B	R.H.	1	All	D	61/63
C1VB 57234A03-B	L.H.	1	All	D	61/63
23406-7	MOTOR & COVER (FRONT DOOR VENTILATOR WINDOW REGULATOR GEAR) ELECTRIC				
BAK 5723406-A	R.H.	1	All	D	60
BAK 5723407-A	L.H.	1	All	D	60
C2VY 5723406-A	R.H.	1	All	D	62
C2VY 5723407-A	L.H.	1	All	D	62
C3VY 5723406-B	R.H. - 3 wire	1	All	D	63/64
C3VY 5723407-B	L.H. - 3 wire	1	All	D	63/64
23408	COVER (FRONT DOOR VENTILATOR WINDOW REGULATOR GEAR)				
BAK 5723408-A	Use with electric operated ventilator window	2	All	D	60/64
23410	REFER TO GROUP 22916-7				
23437	BUSHING (DOOR WINDOW REGULATOR PINION GEAR) ELECTRIC				
COAB 6423437-A	Front and rear door	AR	All	A	61/63
	Quarter	AR	62, 63, 64, 65, 76	A	61/63
	Tailgate	AR	71	A	61/64
	Tailgate	AR	59, 71	C	60/63
	Front door	AR	All	D	64

GROUP AND PART NUMBER	DESCRIPTION, SIZE, ETC.	NO. REQ'D	MODEL OR ENGINE CUBIC INCH DISPLACEMENT	VEHICLE CODE	YEAR 19____
23440	COUPLING (DOOR WINDOW & SEAT REGULATOR MOTOR)				
B5A 7023440-A	Rubber - 1-1/4" long with a 1/4" x 3/16" slotted hole in each end				
	Front and rear door ☆	4	All	A	60/61
	Quarter ☆	2	62, 63, 64, 65, 76	A	60/61
	6-Way power seat	1	All except 65C, 75C, 76B	A	63
	6-Way power seat	1	All	A D	64
	Tailgate window ☆	2	71, 77	A C	60/61
	Type "A"				
	Front and rear door	4	All	D	60
	Quarter window	2	63,65,68	D	60
	Back light	1	54,65,68,75	D	60
	Seat - 4 or 6-way	1	All	D	60/61
	☆ Use on vehicles built prior to 10-26-60				
C1VB 5723440-A	Rubber - 13/16" long with a 1/4" hole in each end				
	Front and rear door ☆	AR	All	A D	61/63
	Quarter ☆	AR	62, 63, 64, 65, 76	A	61/63
	Quarter	AR	76	A	64
	Tailgate ☆	AR	71	A B C	61/64
	Tailgate	AR	59	C	63
	Rear window	1	54,62,65,75	A	64
	☆ Use on vehicles built after 10-25-60				
23442	EXTENSION SHAFT & RETAINER (FRONT DOOR VENTILATOR WINDOW REGULATOR)				
C1VY 5723442-C	Use with screw or clip retained handle for manual operated ventilator window only	2	All	D	61/63
23446	SPACER (FRONT DOOR VENTILATOR WINDOW REGULATOR)				
C2VY 5723446-A	Use with electric operated ventilator window	2	All	D	62/63
23460	WORM (FRONT DOOR VENTILATOR WINDOW REGULATOR)				
C1VB 5723460-A		2	All	D	61/63
23496	KIT - DRIVE GEAR (FRONT DOOR VENTILATOR WINDOW REGULATOR MOTOR)				
C2VY 5723496-A	Use with electric operated ventilator window	2	All	D	60&62/64
	Consists of the following -				
(1) BAK-5723446-A	gear	(1) 97511-S	snap ring	(1) 359916-S	washer
(1) BAK-5723478-A	gear	(1) 358607-S	washer		
235A18	STABILIZER (FRONT & REAR DOOR)				
C4VY 74235A18-A	(a)	4	74	D	64
354831-S7	Screw	8	a		
235A22	STOP (FRONT DOOR STABILIZER)				
C4VY 74235A22-A	(a)	4	74	D	64
51059-S8	Screw	8	a		
23552	CHECK (FRONT DOOR)				
C3AZ 6223552-A		2	All	A D	60/64
23567	BUMPER (DOOR HINGE)				
B7A 7023567-A	Front door	4	All	A	60/64
		4	All	D	60/62
		4	All	D	64
	Rear door	2	All	D	61/64

GROUP AND PART NUMBER	DESCRIPTION, SIZE, ETC.	NO. REQ'D	MODEL OR ENGINE CUBIC INCH DISPLACEMENT	VEHICLE CODE	YEAR 19____
23580	WORM & COUPLING (FRONT DOOR WINDOW REGULATOR DRIVE) ELECTRIC				
BAK 5723580-B	Front door type "B"- ☆	2	All	D	60
	Rear door☆	2	53, 54, 57, 75	D	60
	Quarter window ☆	2	63, 65	D	60
	Back light	1	54, 65, 75	D	60
	☆ Use on vehicles built prior to 4-8-60 - for vehicles built after 4-7-60 use assembly 23394-5 front door - 27144-5 rear door				
23590	SPACER (FRONT DOOR WINDOW REGULATOR DRIVE WORM)				
BAK 5723590-A	Front door type "B" - ☆	2	All	D	60
	Rear door☆	2	53, 54, 57, 75	D	60
	Quarter window ☆	2	63, 65, 68	D	60
	Back light	1	54, 65, 75	D	60
	Retractable rear window	1	54,62,65,71B,D,75F	A	64
	☆ Use on vehicles built prior to 4-8-60 - for vehicles built after 4-7-60 use assembly 23394-5 front door - 27144-5 rear door				
23624	COUPLING (FRONT DOOR VENTILATOR WINDOW DRIVESHAFT)				
C2VY 5723624-B	Use with electric operated ventilator window	2	All	D	62/64
23626-7	GEAR (FRONT DOOR VENTILATOR WINDOW DRIVE)				
BAK 5723626-B	R.H. - with bracket - electric	1	All	D	60
BAK 5723627-B	L.H. - with bracket - electric	1	All	D	60
C3VY 5723626-A	R.H. - use with electric operated ventilator window	1	All	D	62/64
C3VY 5723627-A	L.H. - use with electric operated ventilator window	1	All	D	62/64
23630-1	SUPPORT (FRONT DOOR VENTILATOR WINDOW REGULATOR)				
BAK 5723630-A	R.H.	1	All	D	60
BAK 5723631-A	L.H.	1	All	D	60
237A02-3	REFER TO GROUP 21032-3				
237A14	BUTTON (FRONT DOOR TRIM PANEL)				
C4MY 54237A14-A	Chrome	AR	54F, 57C, F, 63C, F, 65C, F, 75F, 76C, F	A	64
237A42-3	COVER (FRONT DOOR TRIM PANEL SUPPORT) FRONT				
C1VB 57237A42-CP	R.H.	1	All	D	61/63
C1VB 57237A43-CP	L.H.	1	All	D	61/63
C4VY 53237A42-A	R.H. - chrome	1	All	D	64
C4VY 53237A43-A	L.H. - chrome	1	All	D	64
C4VY 53237A42-B	R.H. - prime - paint to match	1	All	D	64
C4VY 53237A43-B	L.H. - prime - paint to match	1	All	D	64
23761	RETAINER (FRONT DOOR TRIM PANEL) LOWER				
C2OB 5423761-B	Chrome finish - paint as required	2	54, 71	B	62/63
C2OB 6223761-B	Chrome finish - paint as required	2	62, 65	B	62/63
CODB 5823761-B	Chrome finish - paint as required (a)	2	54, 71	C	60/63
CODB 6423761-B	Chrome finish - paint as required (a)	2	All except 54, 71	C	60/63
		2	62	C	64
C4DZ 5423761-A	Chrome finish - paint as required	2	71	C	64
52720-S8	Screw-pan hd. cr. rec. -No. 8-15 x 3/8"	AR	a		

GROUP AND PART NUMBER	DESCRIPTION, SIZE, ETC.	NO. REQ'D	MODEL OR ENGINE CUBIC INCH DISPLACEMENT	VEHICLE CODE	YEAR 19____
23762-3	RETAINER (FRONT DOOR TRIM PANEL) UPPER				
C2OB 5423762-B	R. H. - paint as required	2	54	B	62
C2OB 5423763-B	L. H. - paint as required	2	54	B	62
C3OZ 6223762-B	R. H. - chrome finish - paint as required	1	62	B	62
		1	62B, 65	B	63
C3OZ 6223763-B	L. H. - chrome finish - paint as required	1	62	B	62
		1	62B, 65	B	63
C3OZ 5423762-A	R. H. - paint as required	1	54, 71B, E	B	63
C3OZ 5423763-A	L. H. - paint as required	1	54, 71B, E	B	63
C3OZ 6223762-A	R. H. - paint as required	1	62A	B	63
C3OZ 6223763-A	L. H. - paint as required	1	62A	B	63
CODB 5823762-E	R. H. - chrome finish - paint as required (a)	1	54, 71	C	60/62
CODB 5823763-E	L. H. - chrome finish - paint as required (a)	1	54, 71	C	60/62
CODB 6423762-E	R. H. - chrome finish - paint as required (a)	1	59, 62	C	60/62
CODB 6423763-E	L. H. - chrome finish - paint as required (a)	1	59, 62	C	60/62
C3DZ 5423762-A	R. H. - chrome finish - paint as required	1	54, 71	C	63
C3DZ 5423763-A	L. H. - chrome finish - paint as required	1	54, 71	C	63
C3DZ 6223762-A	R. H. - paint as required	1	59, 62	C	63
C3DZ 6223763-A	L. H. - paint as required	1	59, 62	C	63
C3DZ 7623762-A	R. H.	1	63, 76	C	63
C3DZ 7623763-A	L. H.	1	63, 76	C	63
C4DZ 5423762-A	Chrome finish - paint as required	2	54, 71	C	64
C4DZ 6223762-A	Chrome finish - paint as required	2	62, 63, 76	C	64
52720-S8	Screw-pan hd. cr. rec. -No. 8-15 x 3/8"	AR	a		
23798	RETAINER (REAR DOOR TRIM UPPER FRONT)				
COMB 5723798-A		2	57, 77	A	60
23806-7	RETAINER (FRONT DOOR ASH RECEPTACLE) LESS RECEPTACLE				
COLB 6323806-B	Lincoln (a)	2	53, 57, 63	D	60
COLB 6523806-A	Continental (a)	2	54, 65, 68, 75	D	60
C3VY 5723806-A	R. H.-use when a/cond. is installed for 1962-63 (a)	1	All	D	61/63
C3VY 5723807-A	L. H.-use when a/cond. is installed for 1962-63 (a)	1	All	D	61/63
352000-S	Bumper-rubber	2	a		
23876	COVER (DOOR WINDOW REGULATOR CONTROL OPENING)				
C2AZ 7623876-A	Located on console compartment - use when	1	57C, 63C, 65C, 75C, 76B, C	A	62/64
	electric windows are not installed	1	65B	B	63
Package also includes -	(1) 373503-S7 nut				
23980	RECEPTACLE (DOOR ASH)				
COLB 6323980-A	Front door - with light - use when a/cond. is installed for 1962-63	2	All	D	60/63
	Rear door	2	All	D	61/63
24022-3	SUPPORT (FRONT DOOR ARM REST) LESS TRIM				
COLB 6324022-V	R. H.	1	All	D	60
COLB 6324023-V	L. H.	1	All	D	60
C1VY 5724022-B	R. H.	1	All	D	61/62
C1VY 5724023-B	L. H.	1	All	D	61/62
C3VY 5724022-A	R. H.	1	All	D	63
C3VY 5724023-A	L. H.	1	All	D	63
C4VY 5324022-A	R. H.	1	All	D	64
C4VY 5324023-A	L. H.	1	All	D	64
24038-9	HOUSING (DOOR ARM REST WINDOW REGULATOR SWITCH PLATE)				
C4VY 5324038-A	R. H.	1	All	D	64
C4VY 5324039-A	L. H.	1	All	D	64

GROUP AND PART NUMBER	DESCRIPTION, SIZE, ETC.	NO. REQ'D	MODEL OR ENGINE CUBIC INCH DISPLACEMENT	VEHICLE CODE	YEAR 19____
24116	BRACKET (DOOR ARM REST MOUNTING)				
C1DB 6424116-A		2	62A(S-22)	C	61
24142	PLATE (DOOR ARM REST FINGERTIP)				
COLB 6324142-C	Chrome finish	2	All	D	60
24146	CLIP (DOOR ARM REST)				
B7A 7024146-A	Rear door	2	54, 58, 75	A	61
BA 7024146-A	Quarter	AR	64	A	60/61
	Front door	AR	All	A	62
	Front and rear door	AR	All	A C	63/64
	Front door	AR	54, 62, 71	B	63
	Front and rear door	AR	All	B C	60/62
	Quarter	AR	59, 62	B C	60/62
	Front and rear door	AR	All	D	64
24158-9	ORNAMENT (DOOR ARM REST SUPPORT)				
COLB 6324158-G	R.H. - use with manual vents	1	53B, 57B, 63B	D	60
COLB 6324158-H	R.H. - use with electric window and vents	1	53B, 57B, 63B	D	60
COLB 6324159-G	L.H. - use with electric window and vents	1	53B, 57B, 63B	D	60
C4VY 5324158-A	Front and rear door	4	All	D	64
24160	SUPPORT (FRONT DOOR ARM REST)				
BAK 5724160-B		2	All	D	60
24162-3	ORNAMENT (FRONT DOOR ARM REST SUPPORT) REAR				
COLB 6524162-A	R.H.	1	All	D	60
COLB 6524163-A	L.H.	1	All	D	60
24166	MOULDING (DOOR ARM REST)				
C4VY 5324166-A	Front and rear door	4	All	D	64
24168	PANEL (DOOR ARM REST FINISH)				
C4VY 5324168-A	Wood grain - front and rear door	4	All	D	64
24190-1	MOULDING (DOOR ARM REST)				
C3AZ 6224190-A	R.H. - front door	1	54B, 65B, C, 71, 75B, C, 76	A	63
		1	54B,57D,63D,65B,71B,D	A	64
	R.H. - rear door	1	54B,71B,D,75B,C	A	63/64
C3AZ 6224191-A	L.H. - front door	1	54B, 65B, C, 71, 75B, C, 76	A	63
		1	54B,57D,63D,65B,71B,D	A	64
	L.H. - rear door	1	54B,71B,D,75B,C	A	63/64
C3AZ 6224190-B	R.H. - front door	1	54A, 62A, 65A, 75A	A	63
		1	54A,62A,63A,65A,71A,C	A	64
C3AZ 6224191-B	L.H. - front door	1	54A, 62A, 65A, 75A	A	63
		1	54A,62A,63A,65A,71A,C	A	64
24205	BUMPER (DOOR ARM REST ASH RECEPTACLE LID)				
BAK 5724205-A	Front door	2	All	D	60/62
	Rear door	2	All	D	60/62
	Quarter arm rest	2	63, 65, 68	D	60
24290-1	FILLER (CENTER BODY PILLAR UPPER FRONT AT BELT)				
BAK 5724290-A	R.H.	1	53, 54	D	60
BAK 5724291-A	L.H.	1	53,54	D	60
24294-5	FILLER (CENTER BODY PILLAR UPPER REAR AT BELT)				
BAK 5724294-A	R.H.	1	53, 54	D	60
BAK 5724295-A	L.H.	1	53, 54	D	60

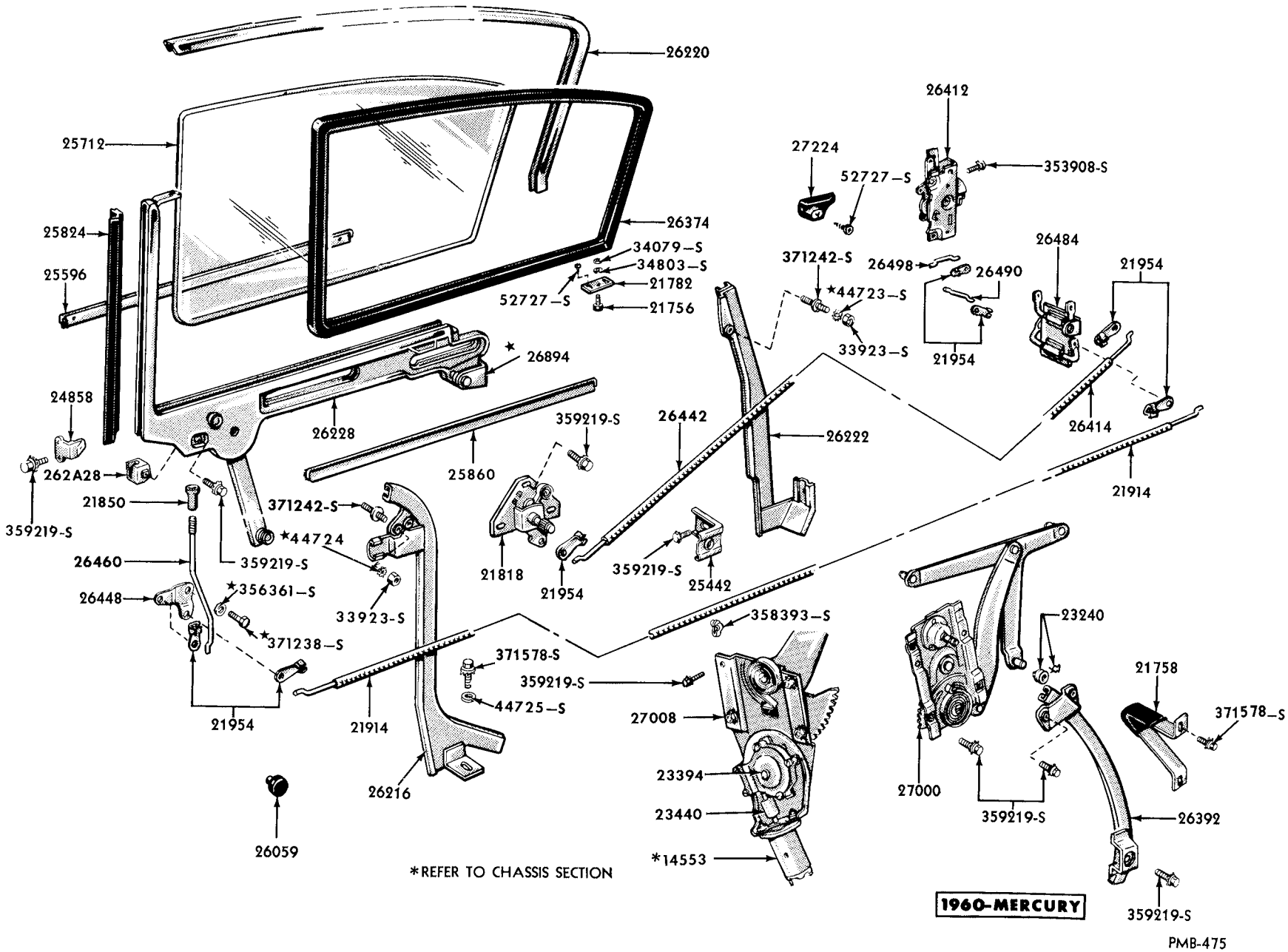

REAR DOOR WINDOW and RELATED PARTS-MODEL 57

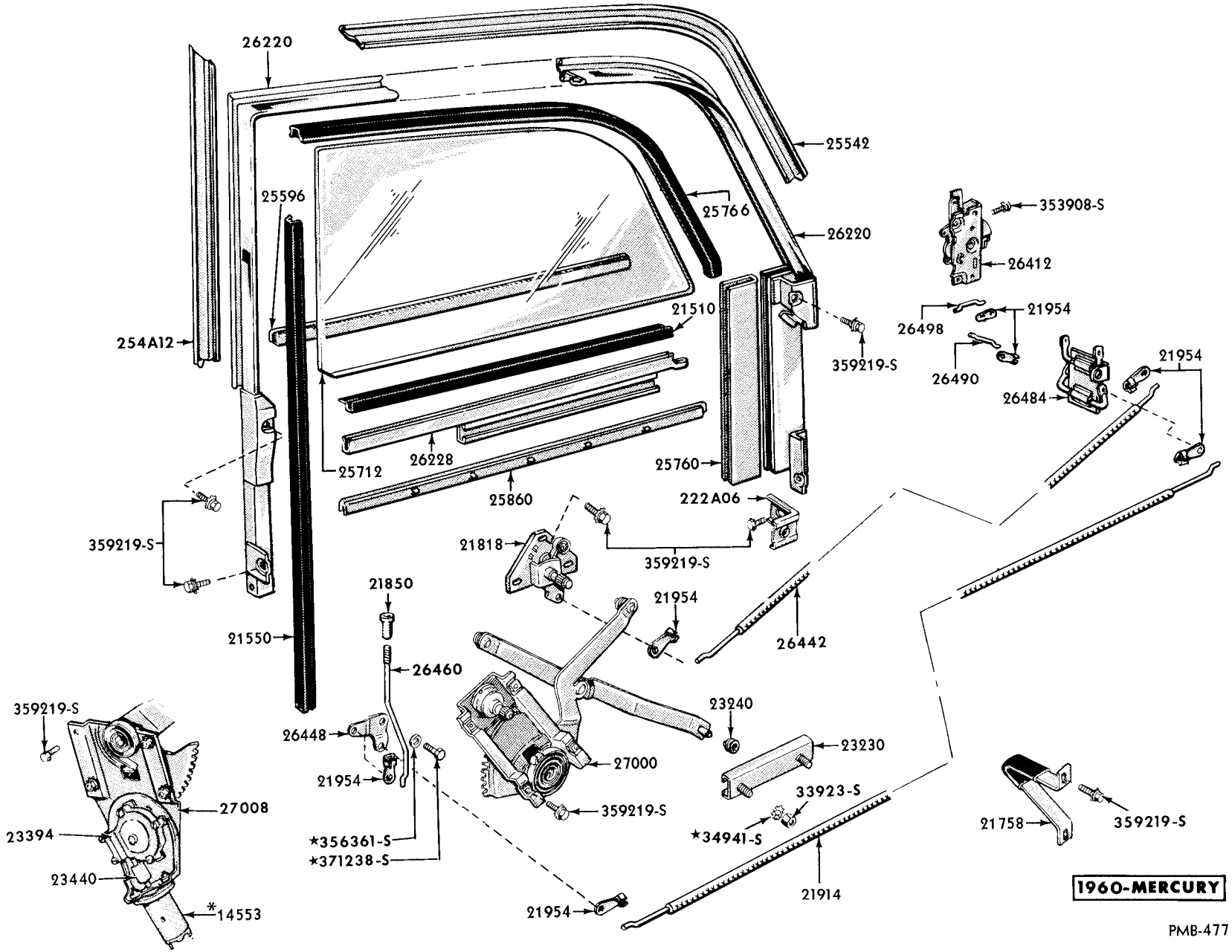

*REFER TO CHASSIS SECTION

REAR DOOR WINDOW and RELATED PARTS-MODEL 58

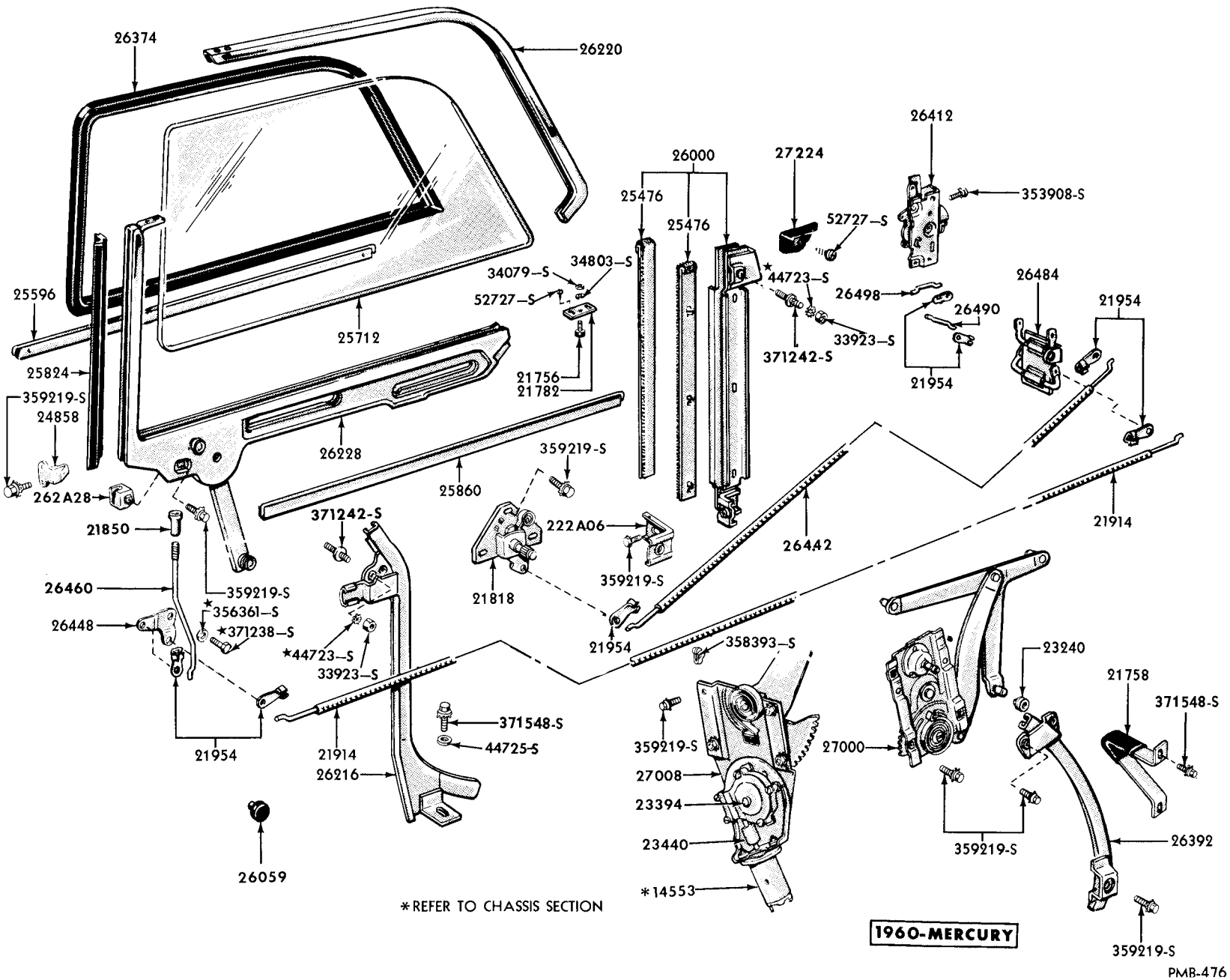

REAR DOOR WINDOW and RELATED PARTS- MODEL 77

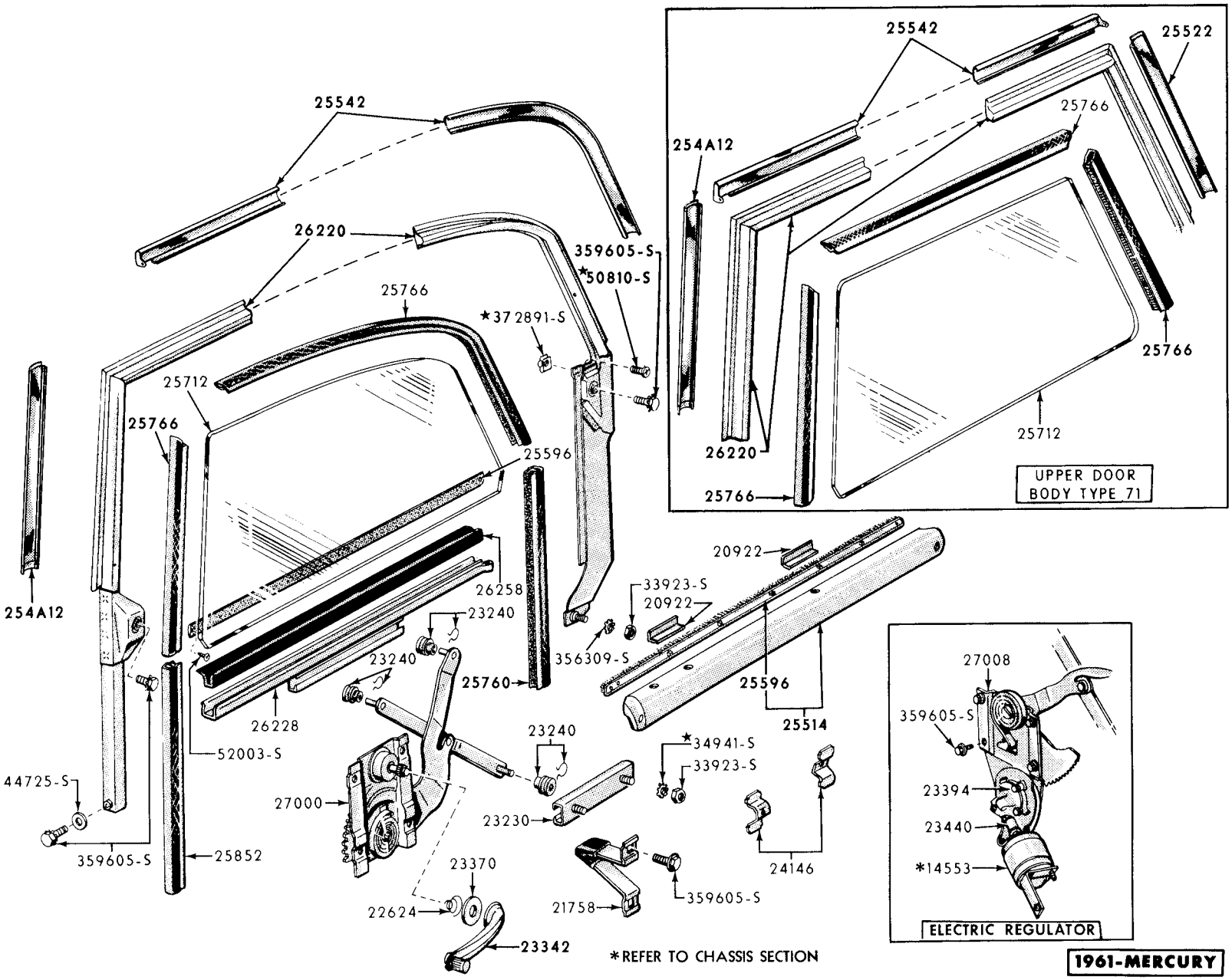

REAR DOOR WINDOW and RELATED PARTS - MODELS 54, 58, 71

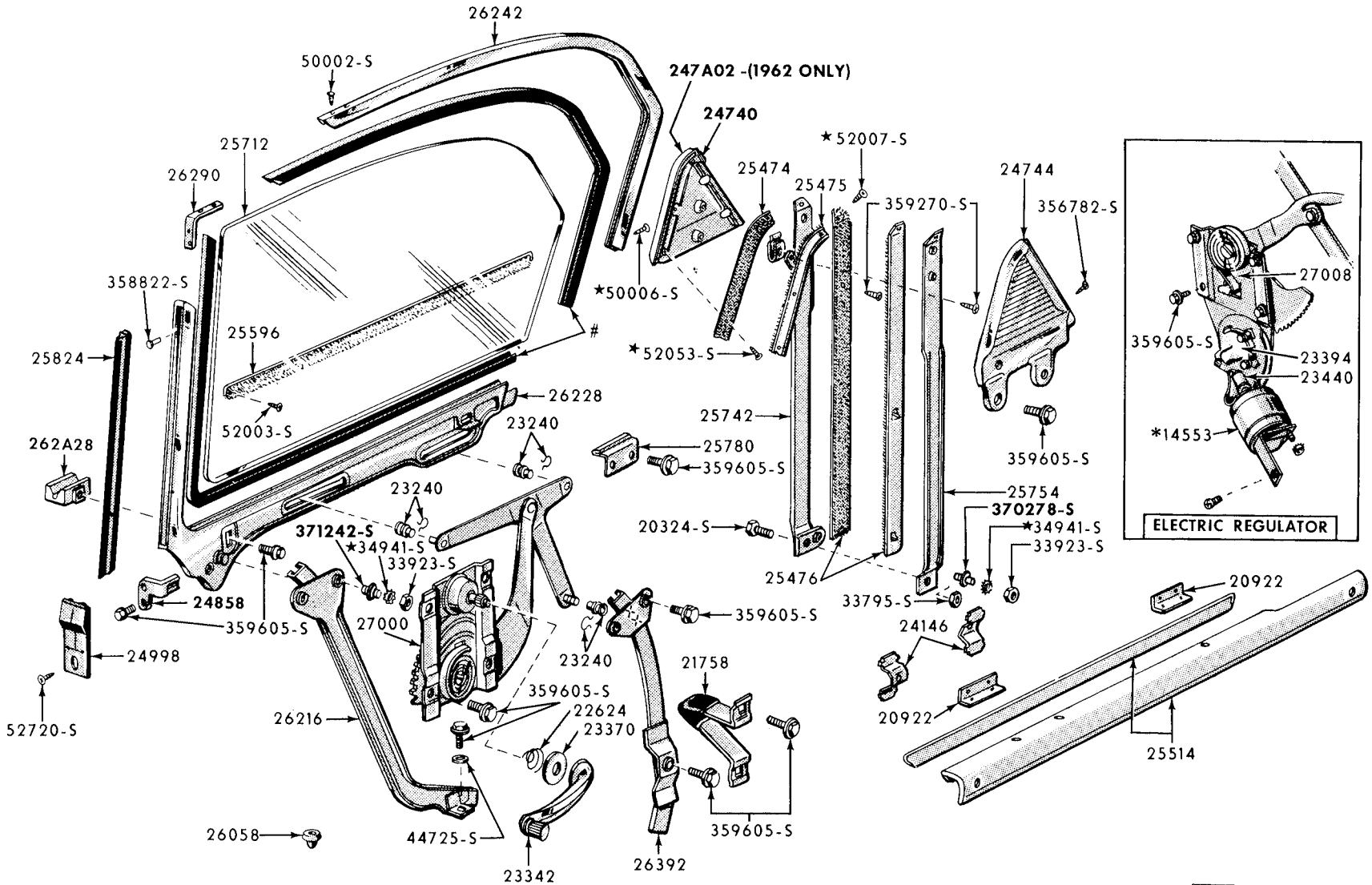

USE BULK GLASS TAPE
* REFER TO CHASSIS SECTION

1961-62 MERCURY

PEB 599

REAR DOOR WINDOW and RELATED PARTS - MODEL 75

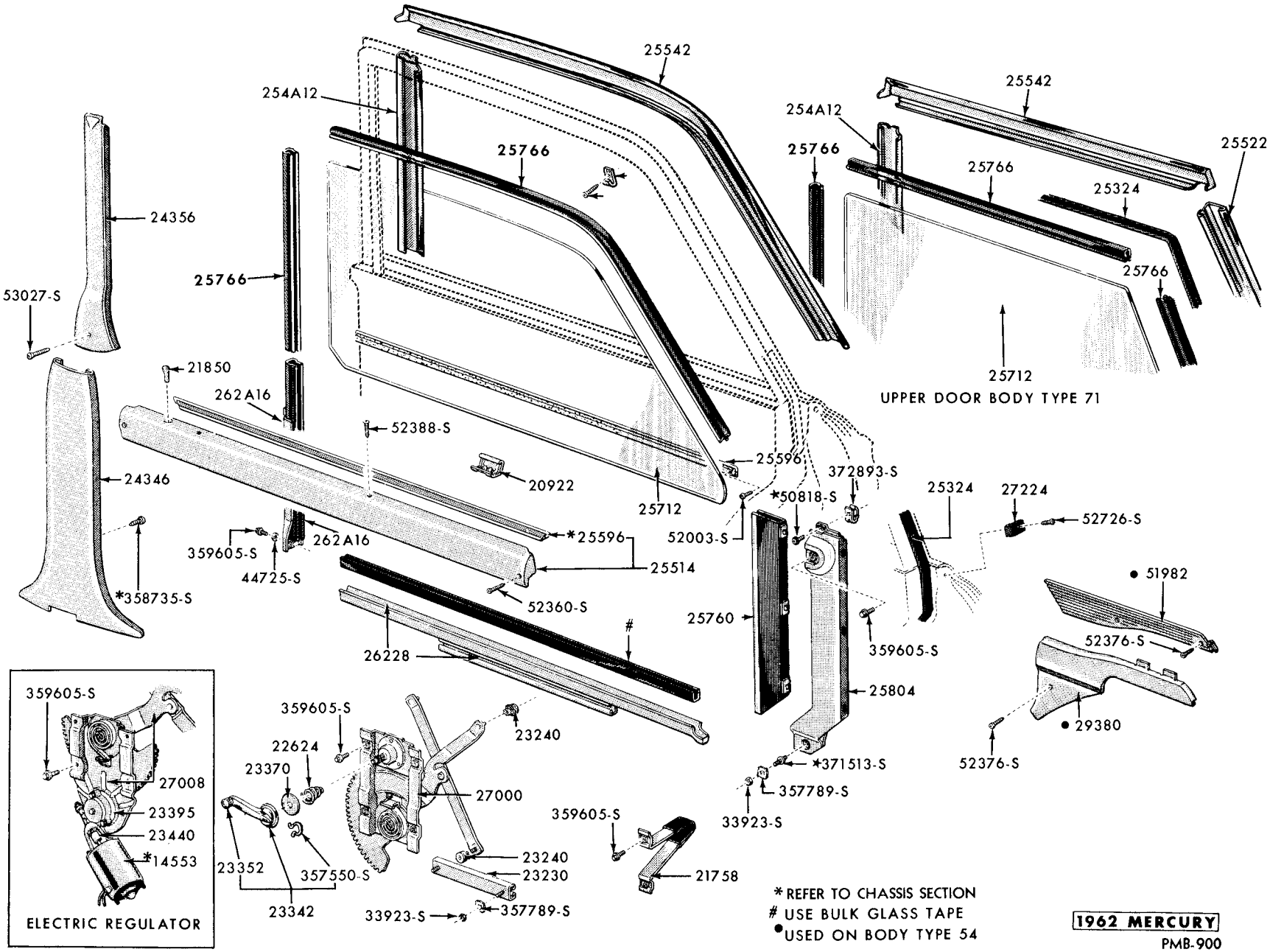

REAR DOOR WINDOW and RELATED PARTS - MODELS 54, 71

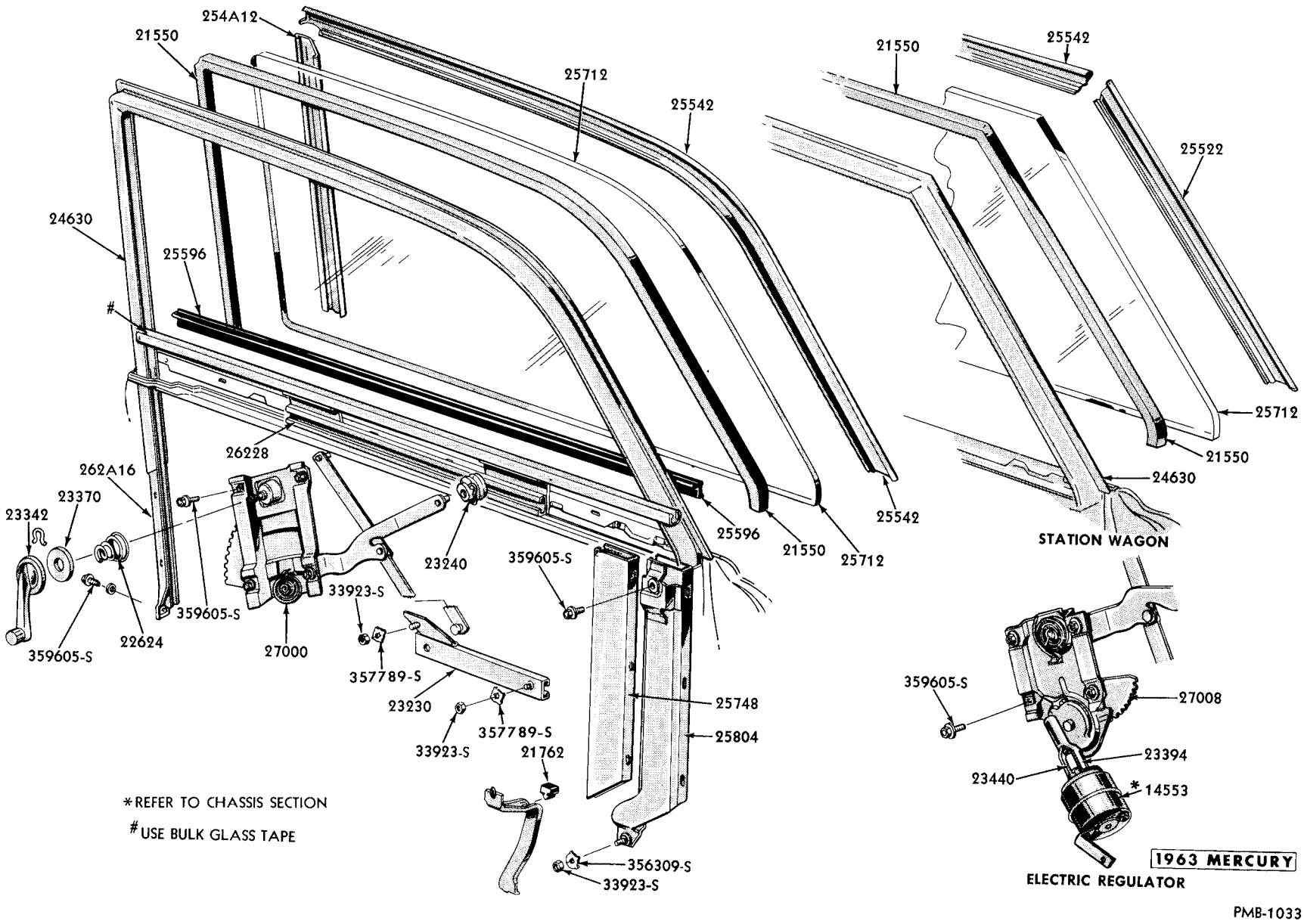

REAR DOOR WINDOW and RELATED PARTS - MODEL 54, 71

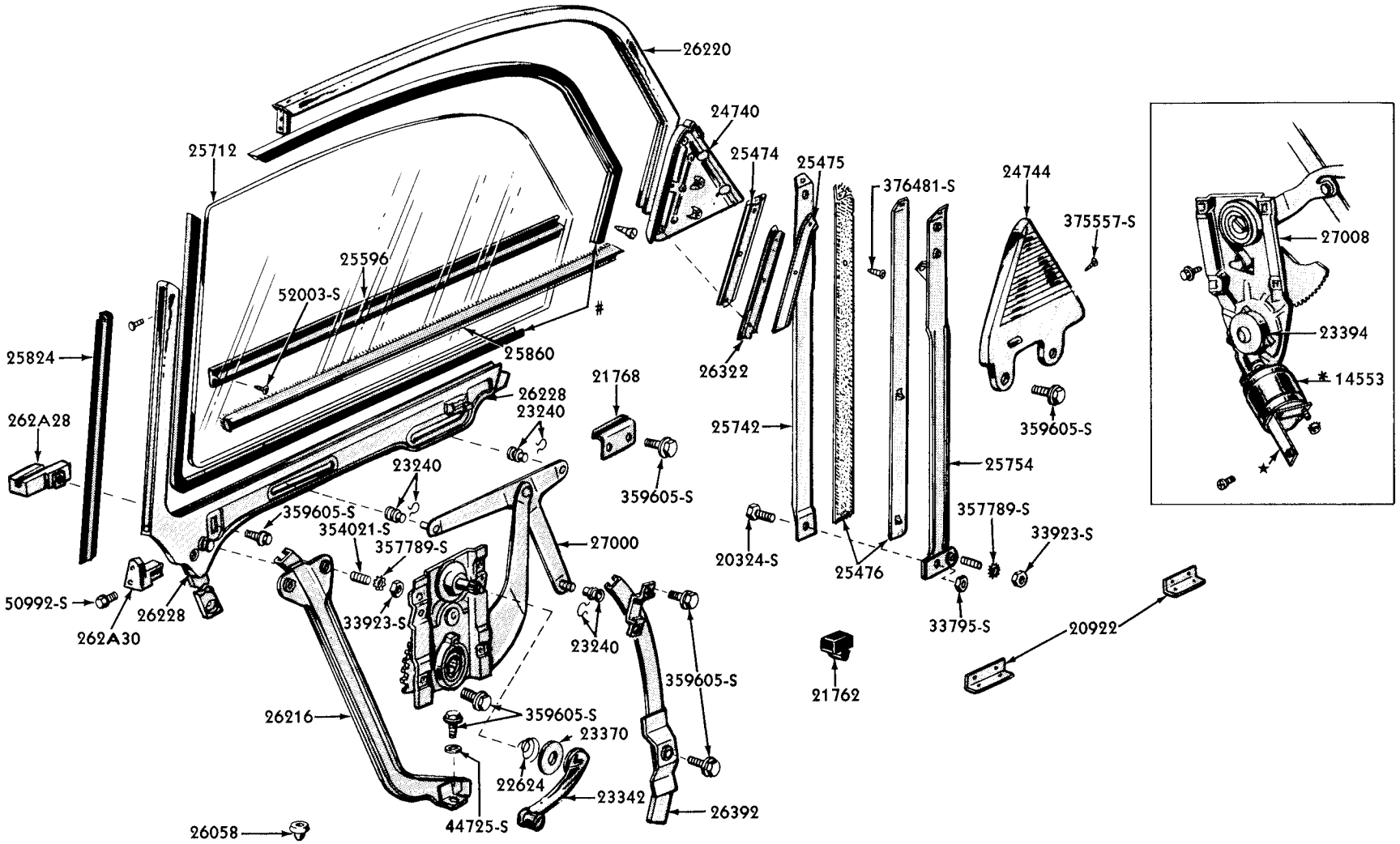

*REFER TO CHASSIS SECTION

USE BULK GLASS TAPE

1963 MERCURY

PMB-994

REAR DOOR WINDOW and RELATED PARTS - MODEL 75

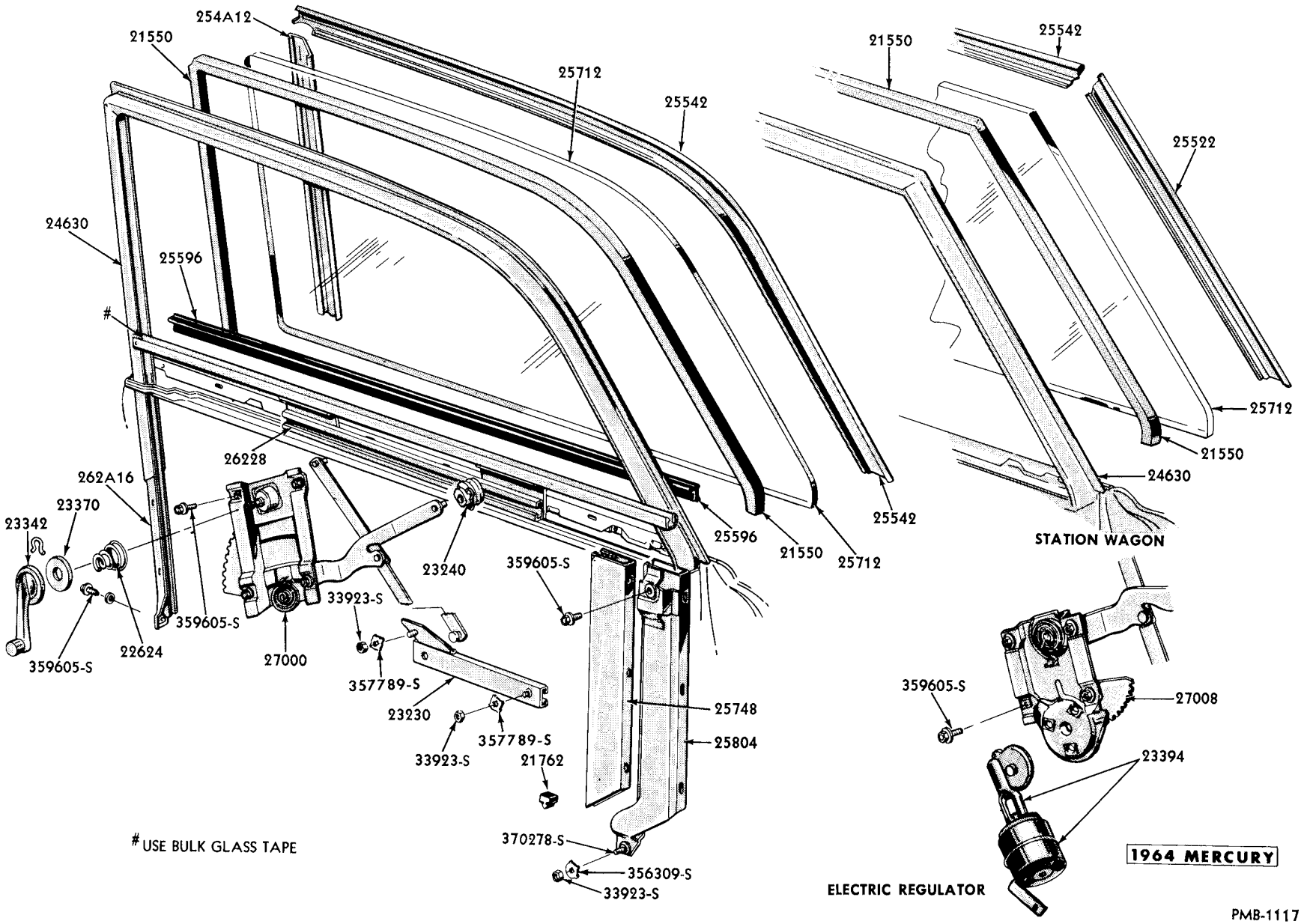

REAR DOOR WINDOW and RELATED PARTS - MODELS 54, 71

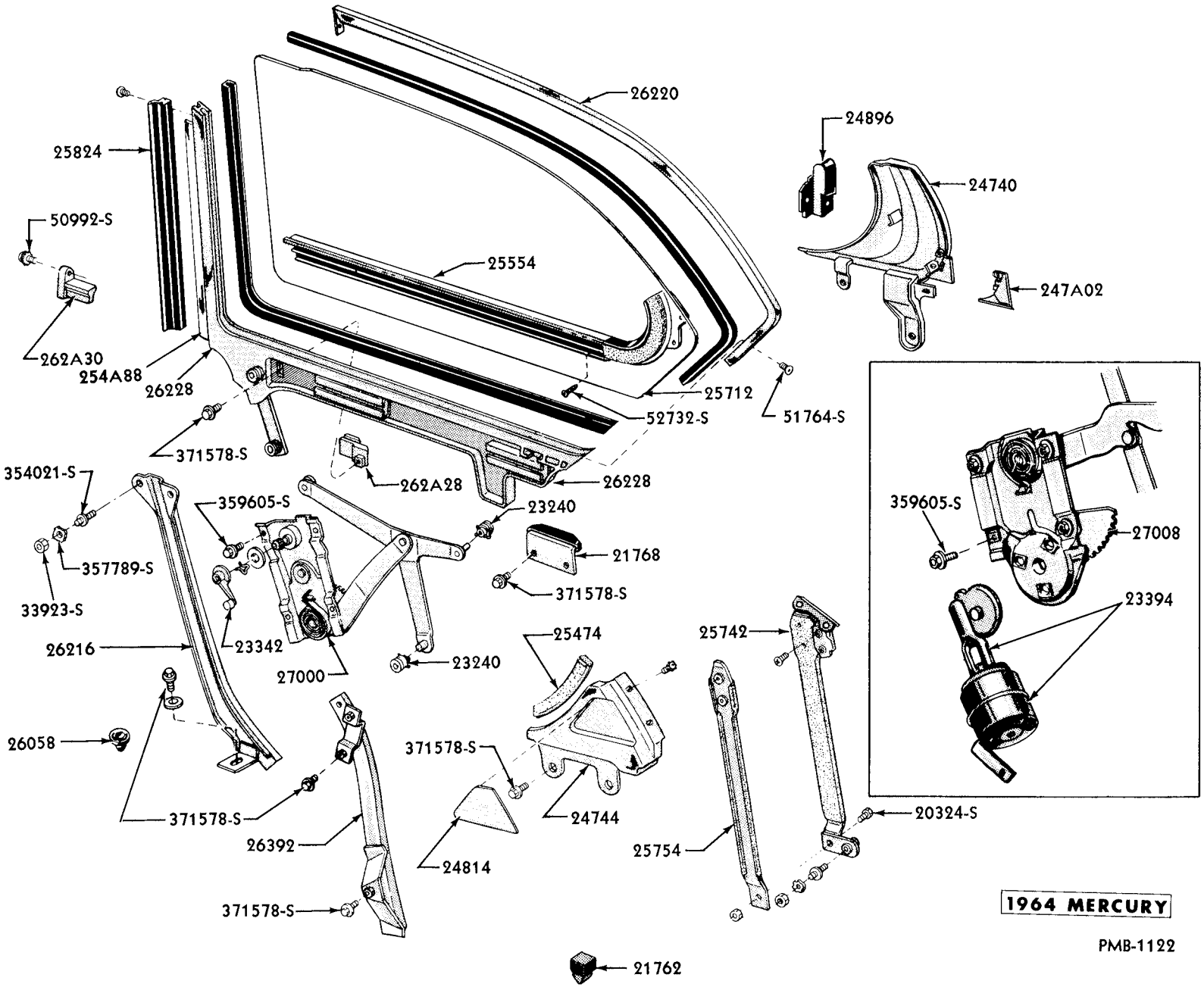

REAR DOOR WINDOW and RELATED PARTS - MODEL 57

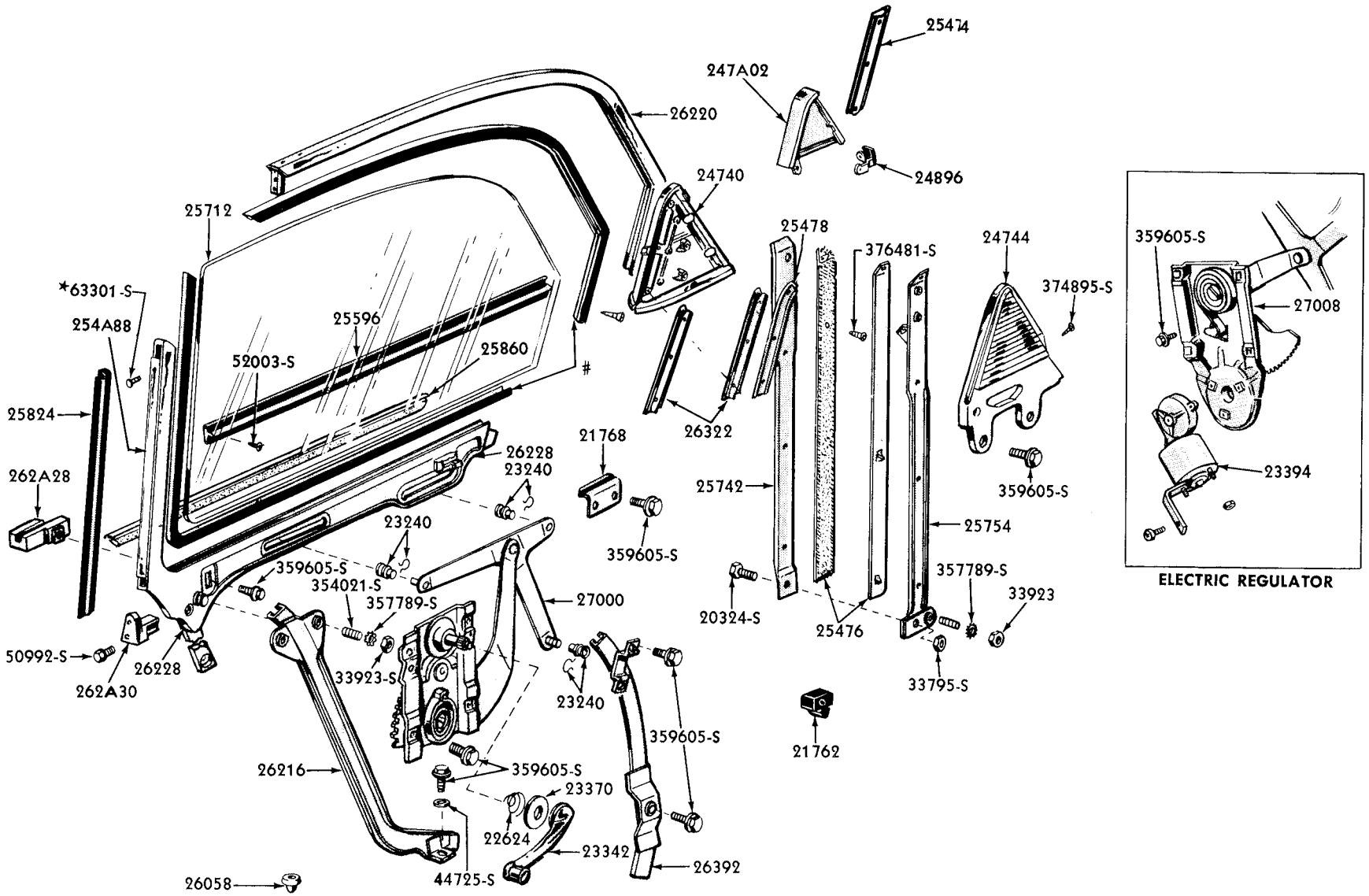

USE BULK GLASS TAPE

1964 MERCURY

PMB-1107

REAR DOOR WINDOW and RELATED PARTS - MODEL 75

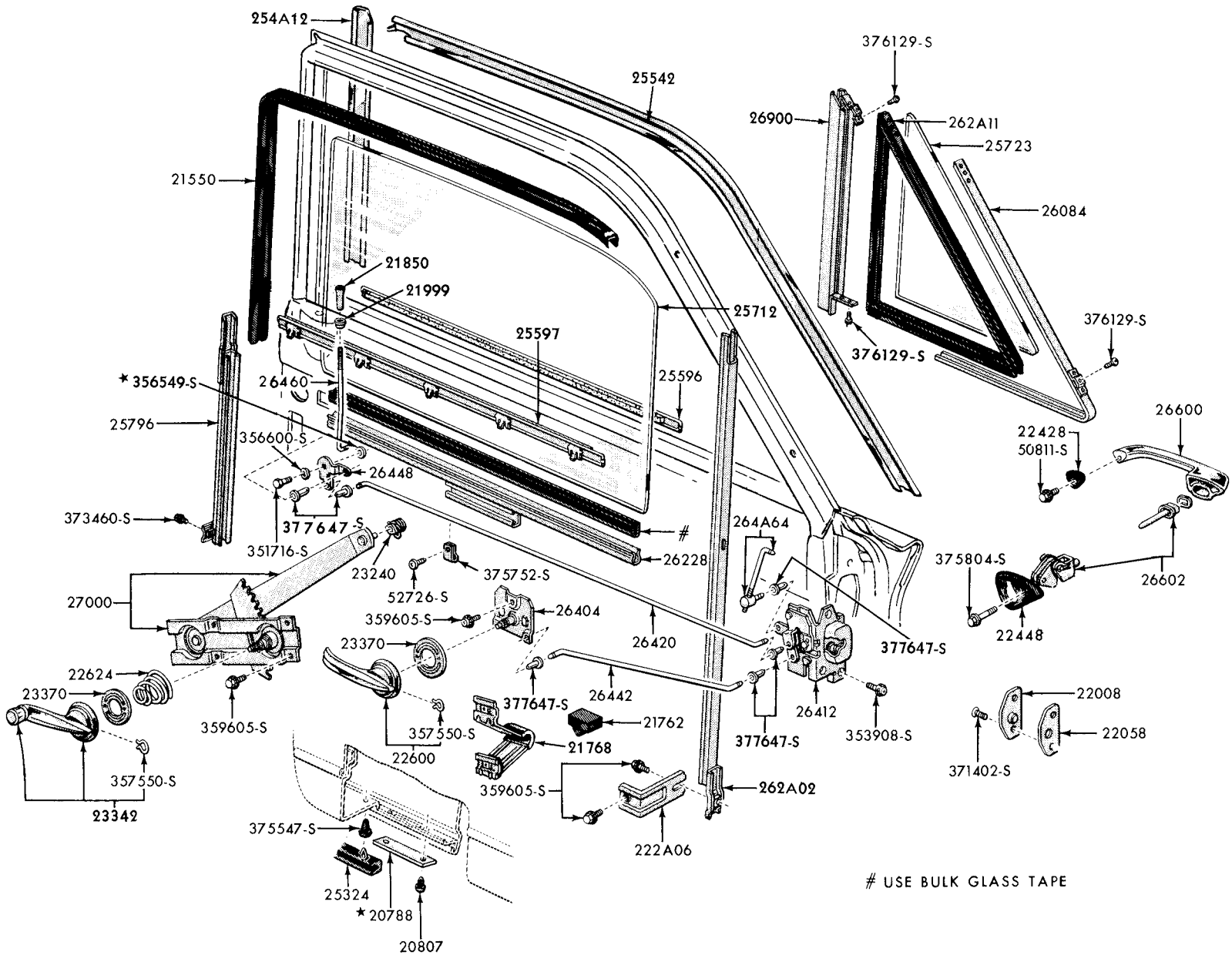

1962-63 METEOR

PYB-1034

REAR DOOR WINDOW and RELATED PARTS - MODEL 54, 71

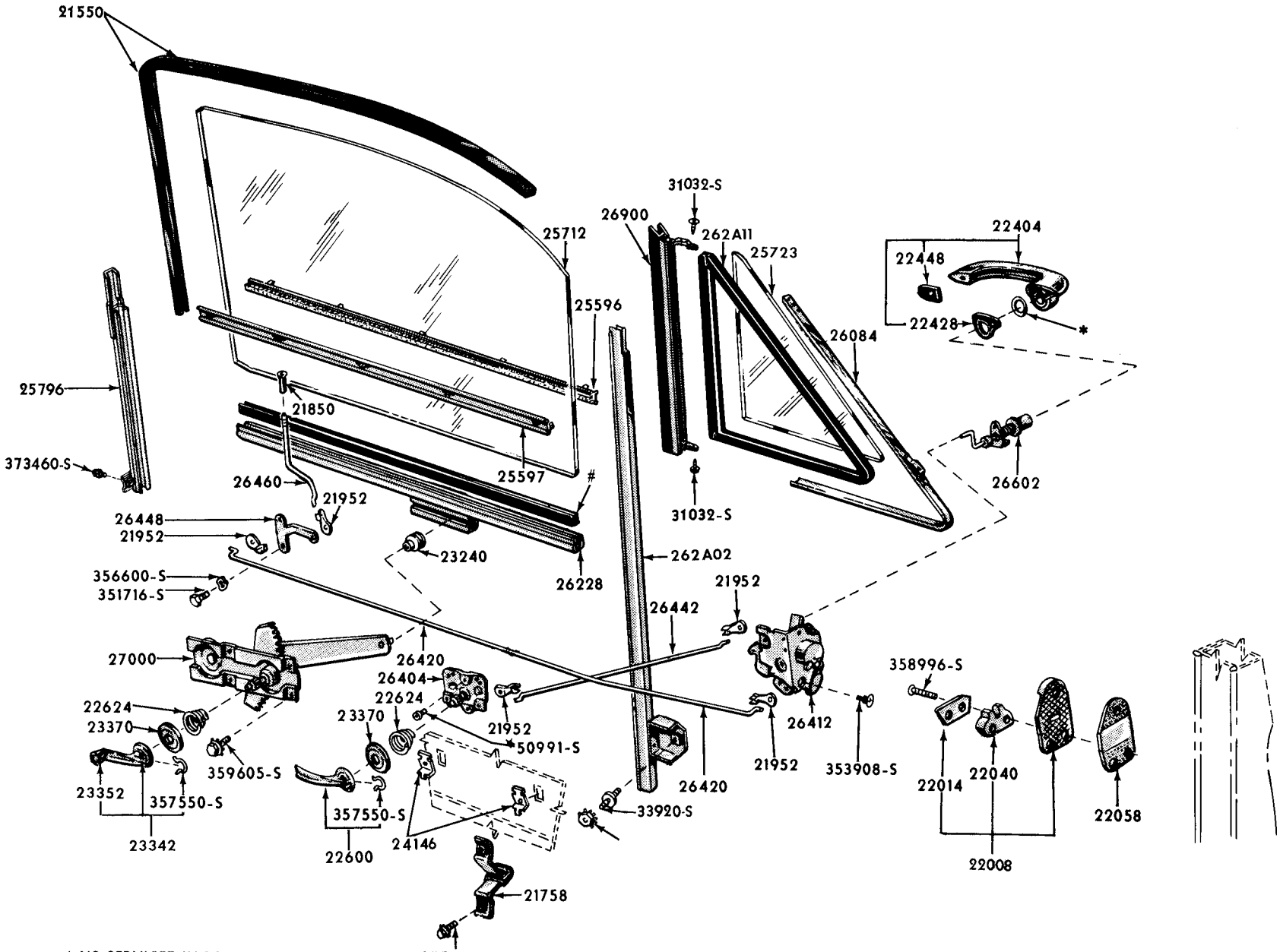

* NS-SERVICED IN 26602-3 ASSEMBLIES ONLY
# USE BULK GLASS TAPE

1960-63 COMET
PGB-655

REAR DOOR WINDOW and RELATED PARTS - MODEL 54

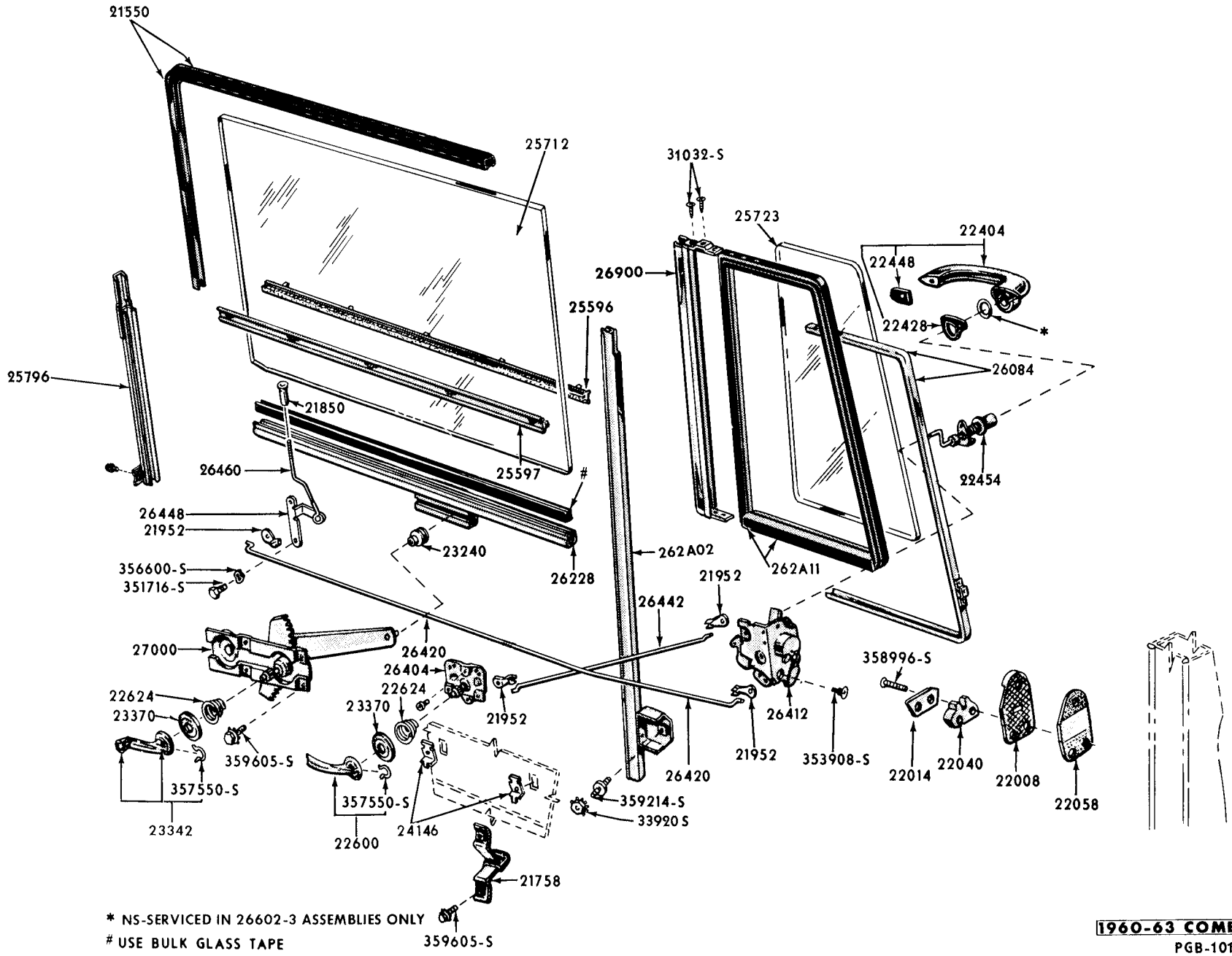

* NS-SERVICED IN 26602-3 ASSEMBLIES ONLY

\# USE BULK GLASS TAPE

1960-63 COMET

PGB-1019

REAR DOOR WINDOW and RELATED PARTS - MODEL 71

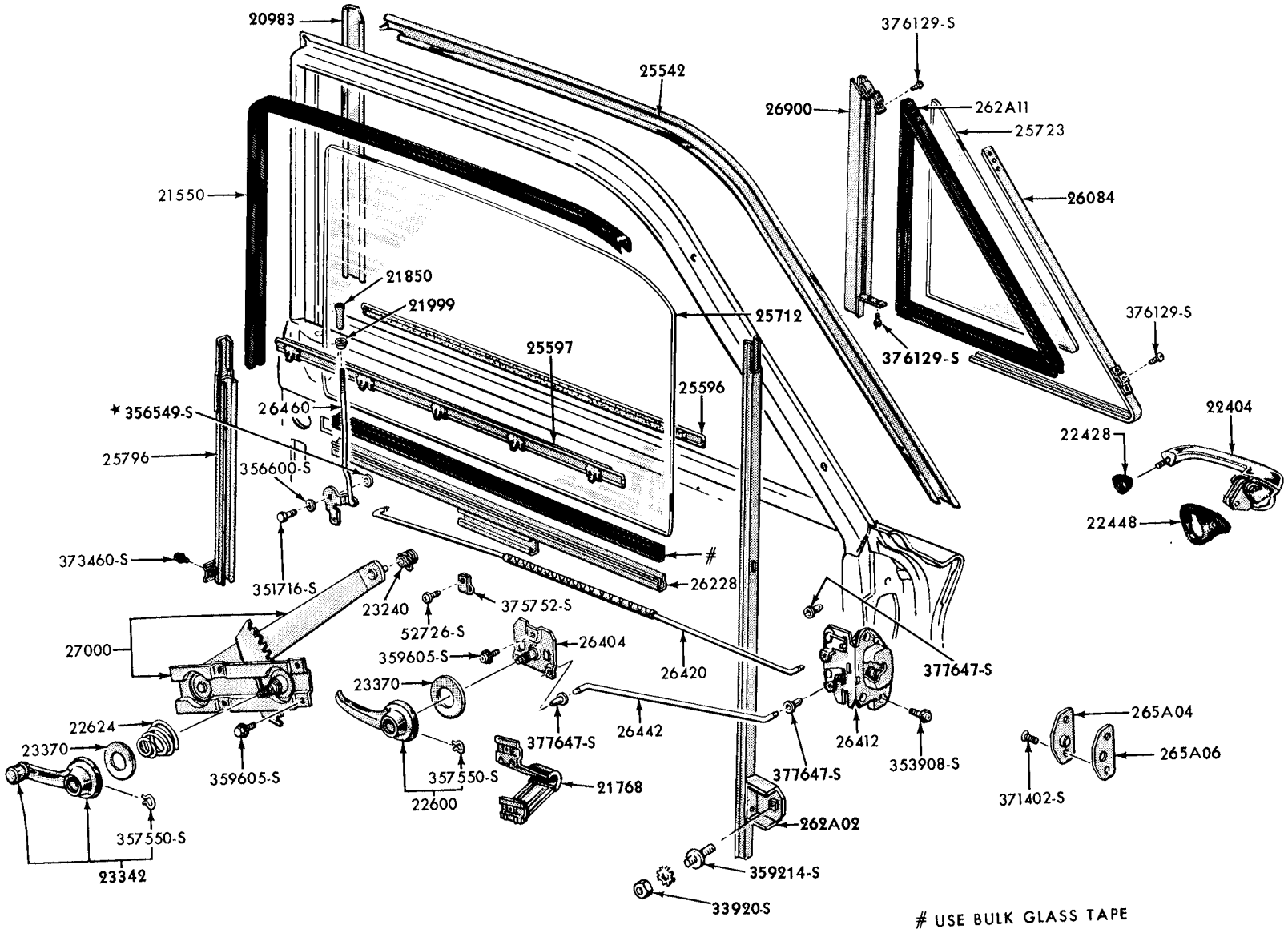

1964 COMET
PGB-1118

REAR DOOR WINDOW and RELATED PARTS-MODEL 54

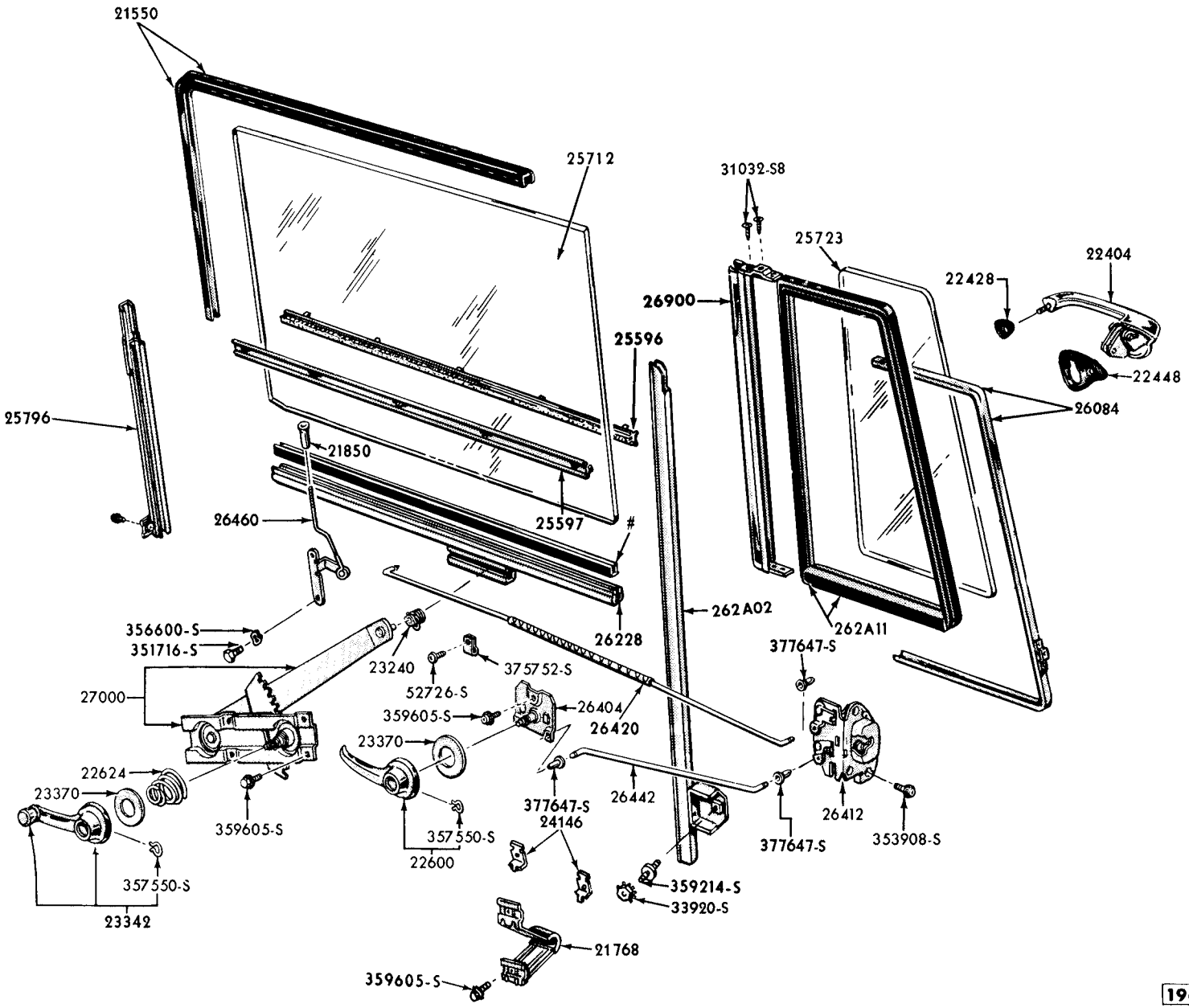

* NS-SERVICED IN 26602-3 ASSEMBLIES ONLY

USE BULK GLASS TAPE

1964 COMET

PGB-1119

REAR DOOR WINDOW and RELATED PARTS - MODEL 71

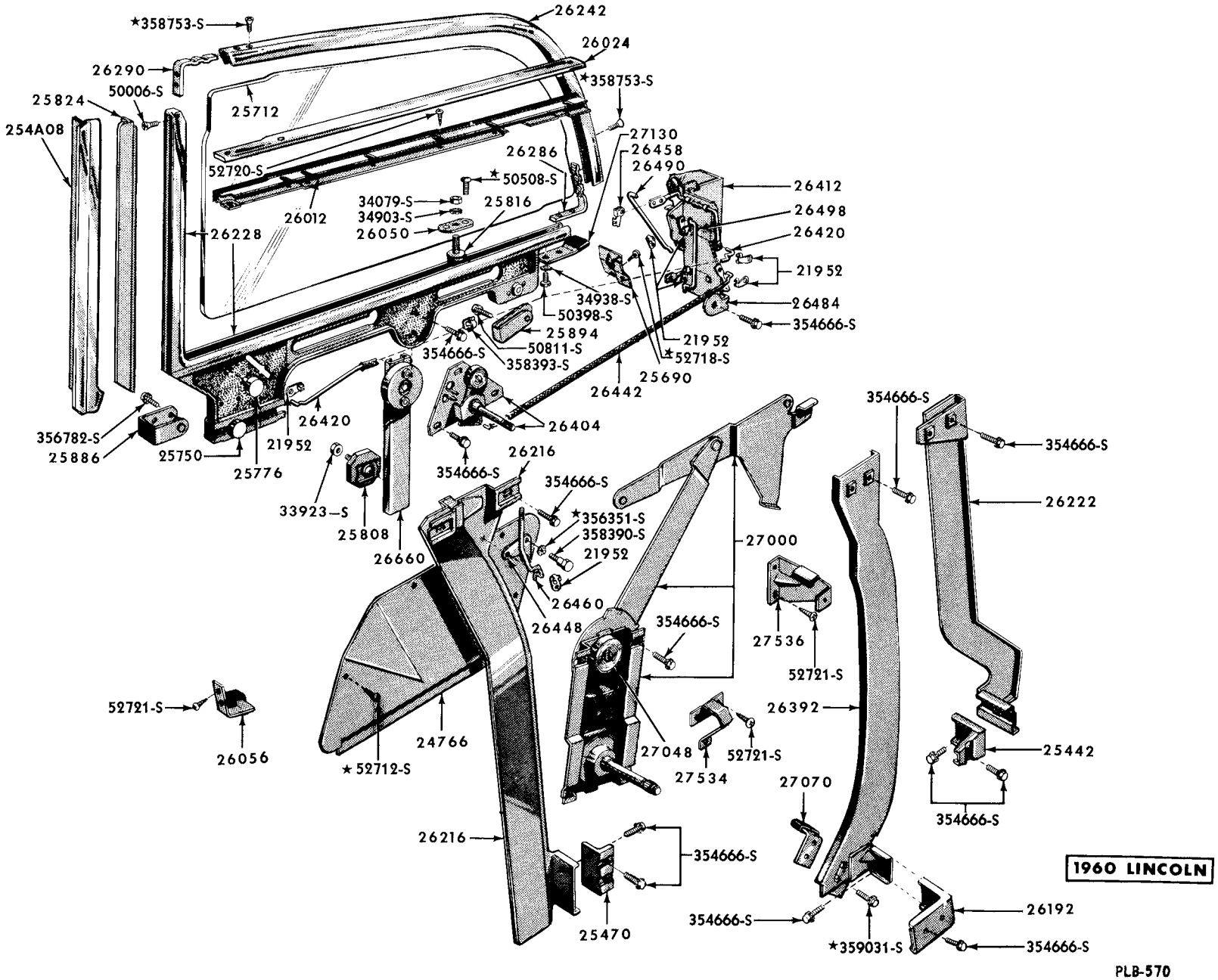

REAR DOOR WINDOW PARTS - MODEL 57, 75

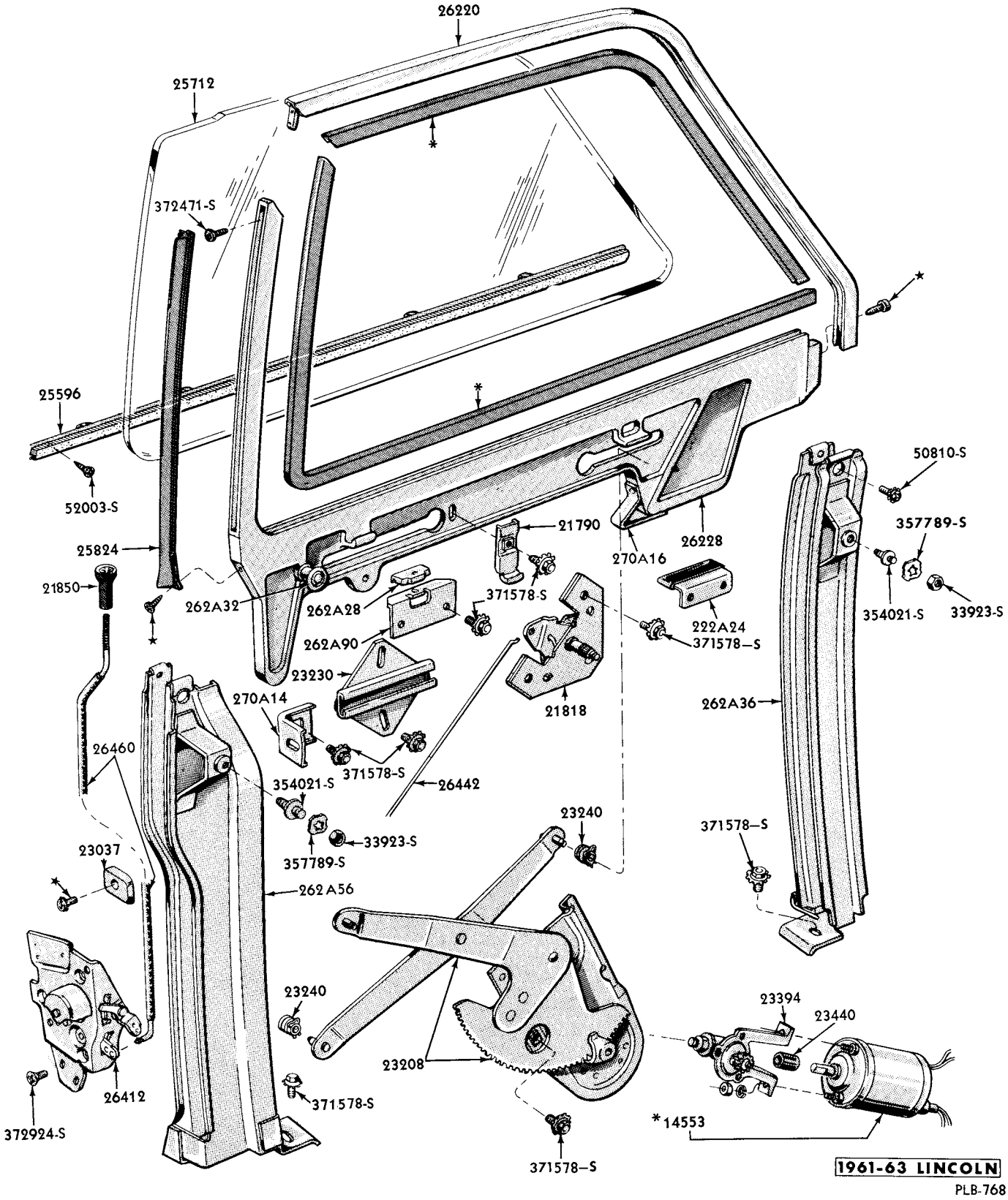

*REFER TO CHASSIS SECTION

REAR DOOR WINDOW and RELATED PARTS

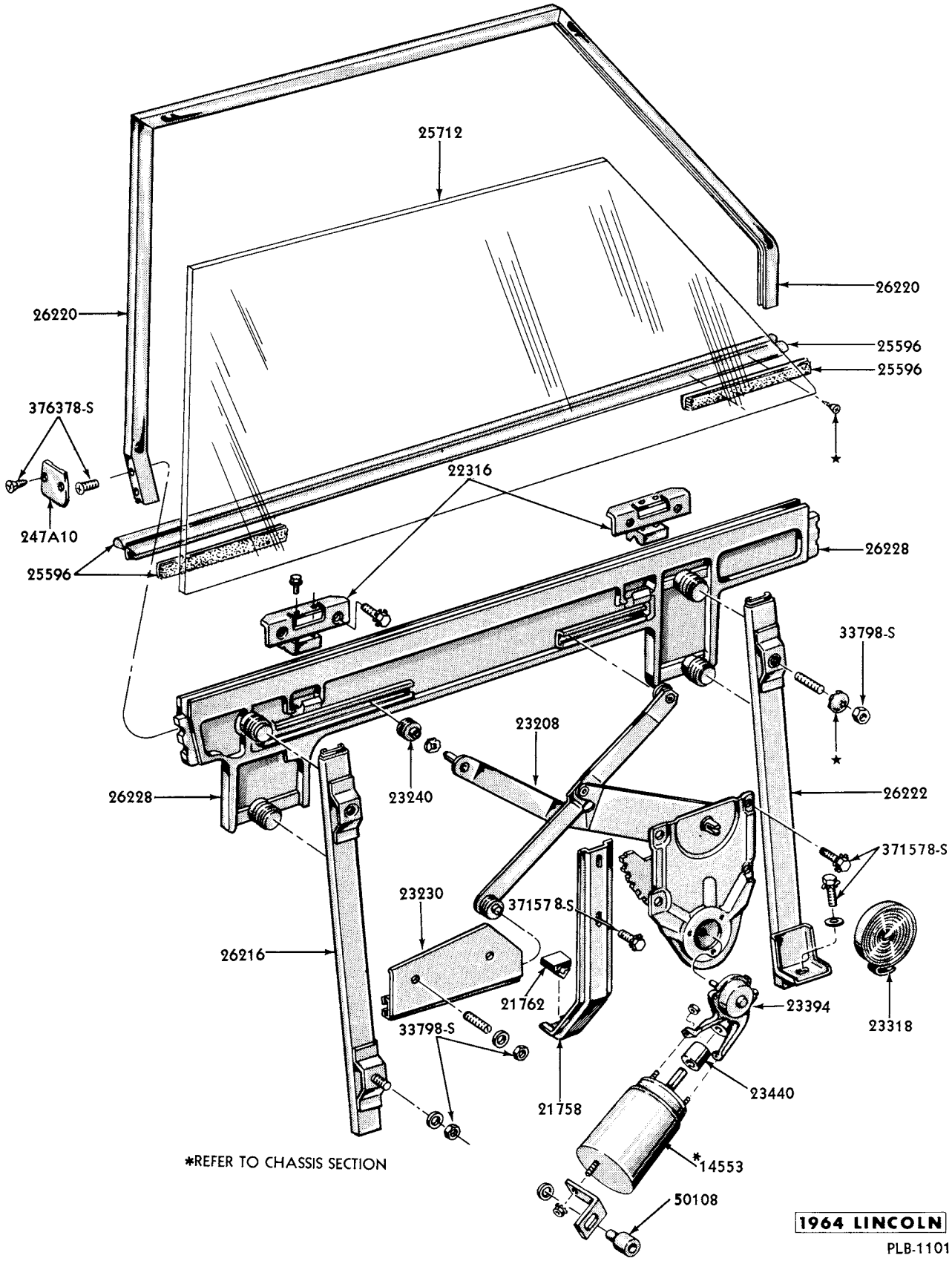

REAR DOOR WINDOW and RELATED PARTS - MODEL 53

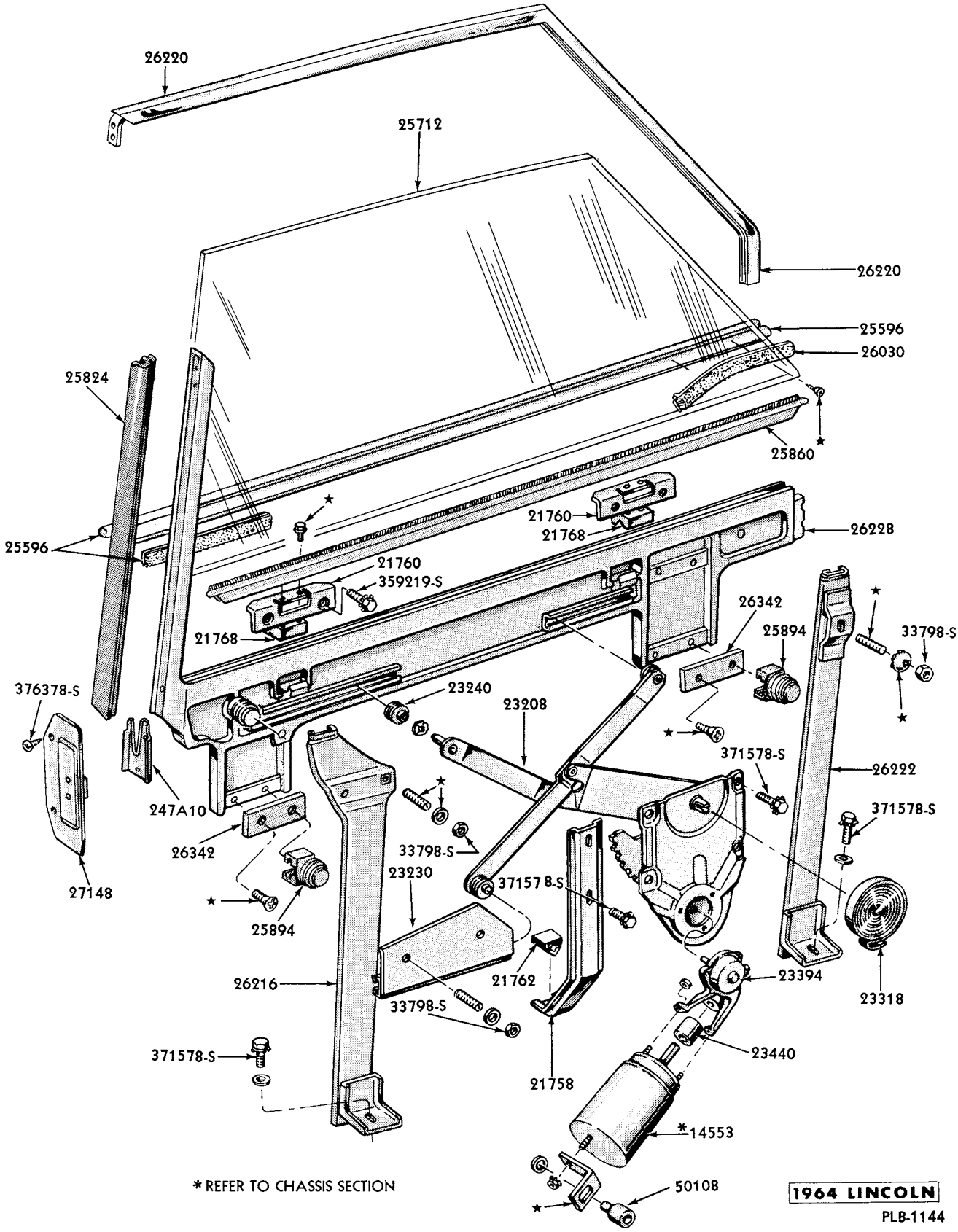

REAR DOOR WINDOW and RELATED PARTS - MODEL 74

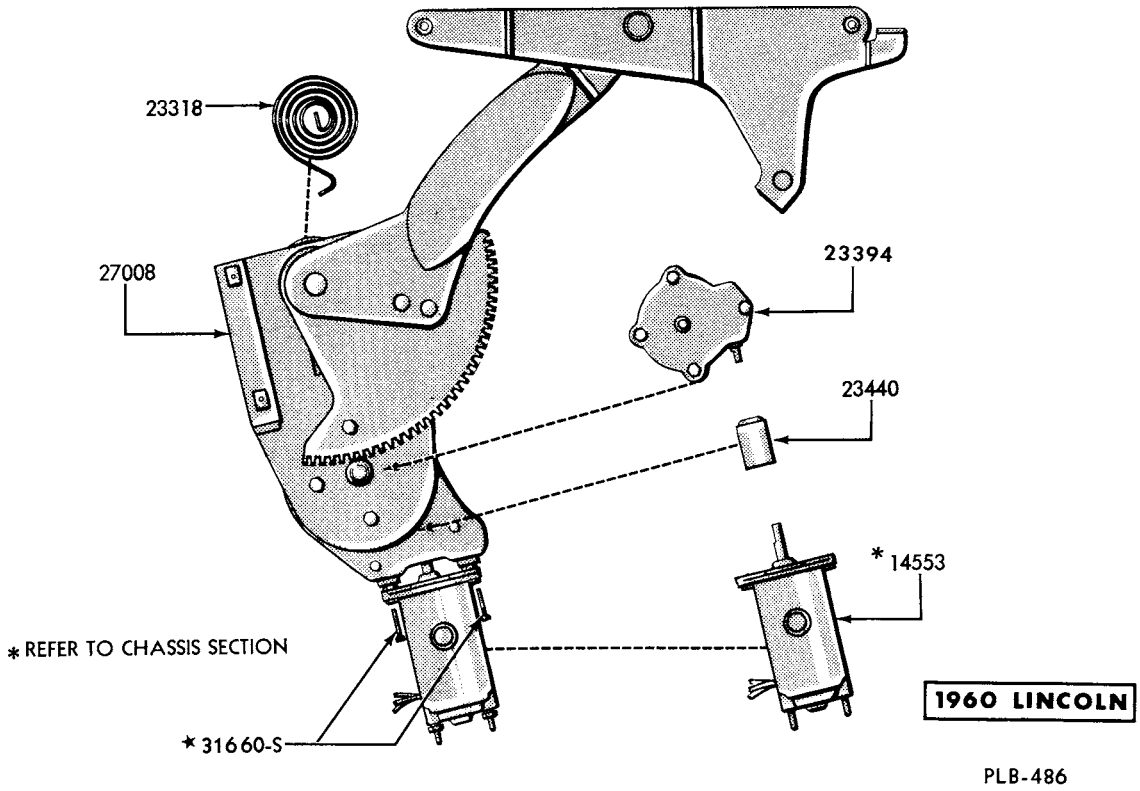

REAR DOOR WINDOW ELECTRIC REGULATOR - TYPE A - HUPP

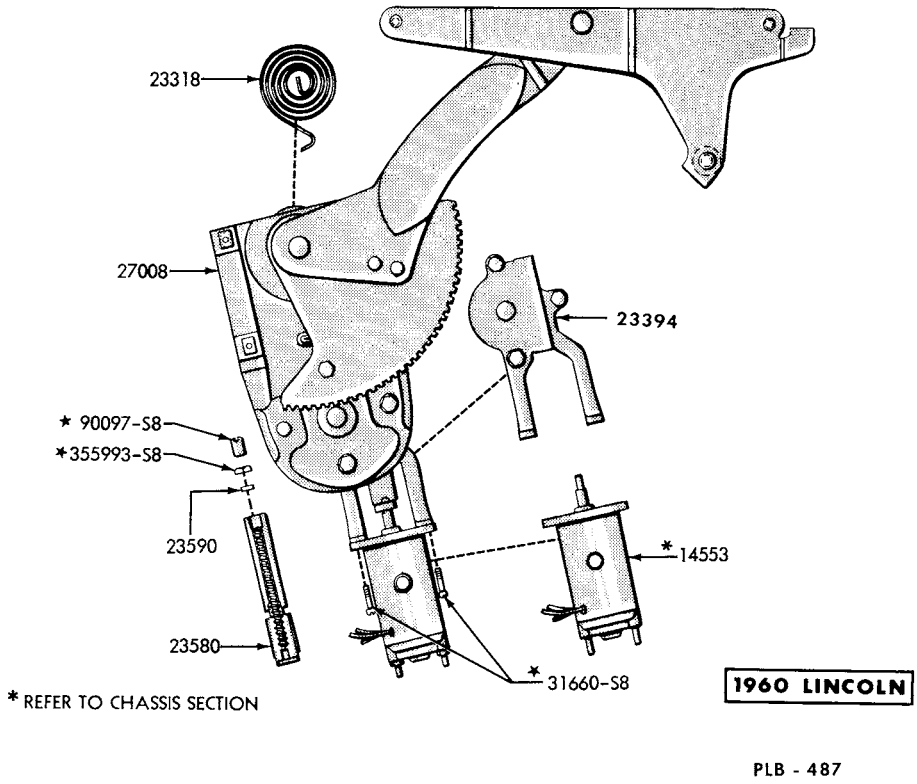

REAR DOOR WINDOW ELECTRIC REGULATOR - TYPE B - DURA

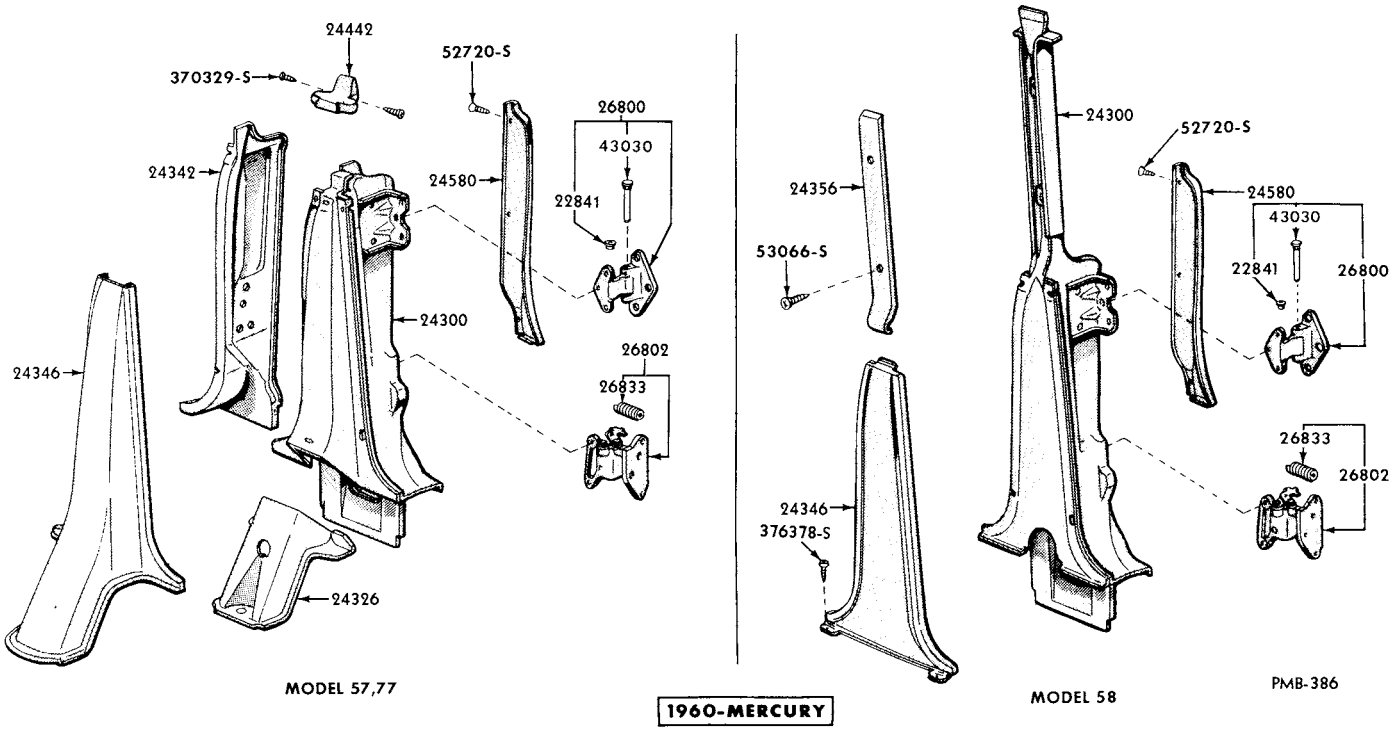

CENTER BODY PILLAR and RELATED PARTS

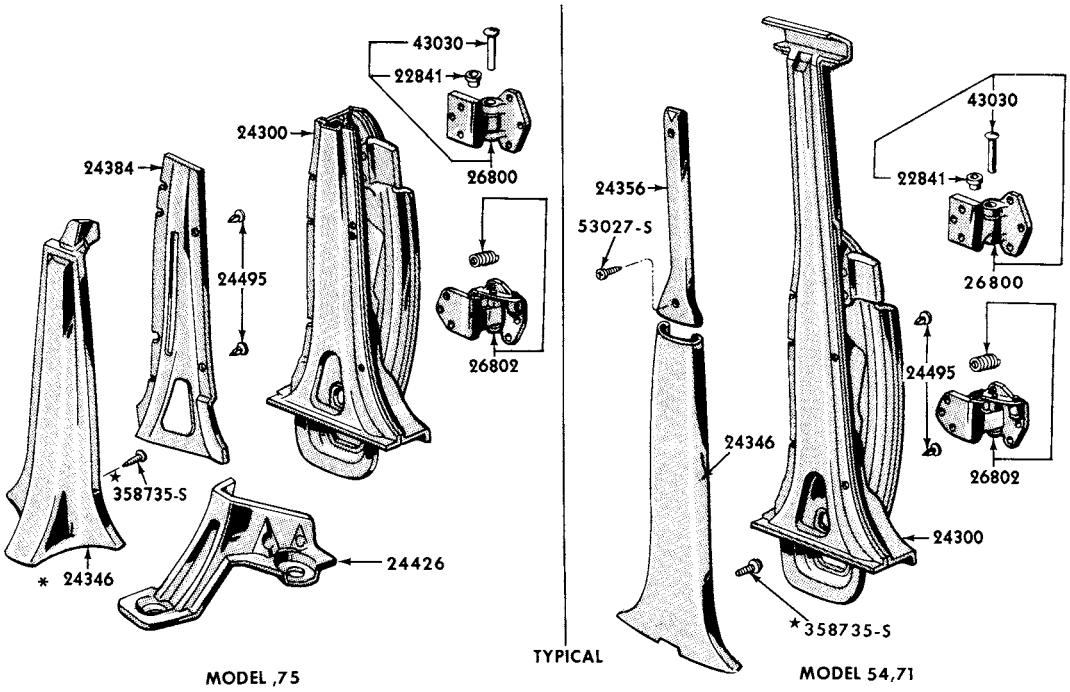

* FOR MODEL 75 (1961 ONLY) REFER TO THE 'SOFT TRIM SECTION' OF THE MASTER PRICE AND REFERENCE LIST

1961-63 MERCURY
PMB-774

CENTER BODY PILLAR and RELATED PARTS

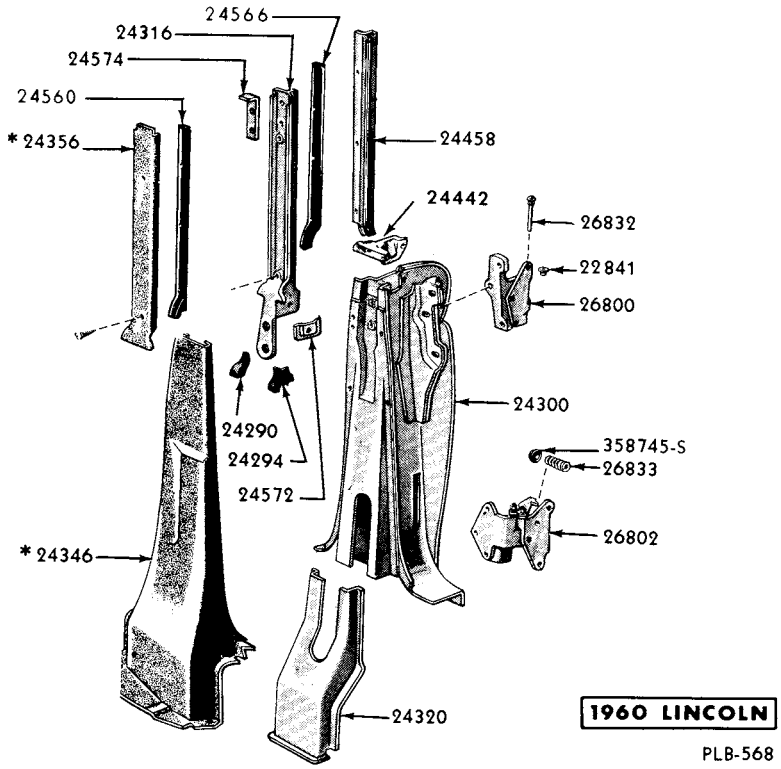

* REFER TO MD 4230 SOFT TRIM SECTION

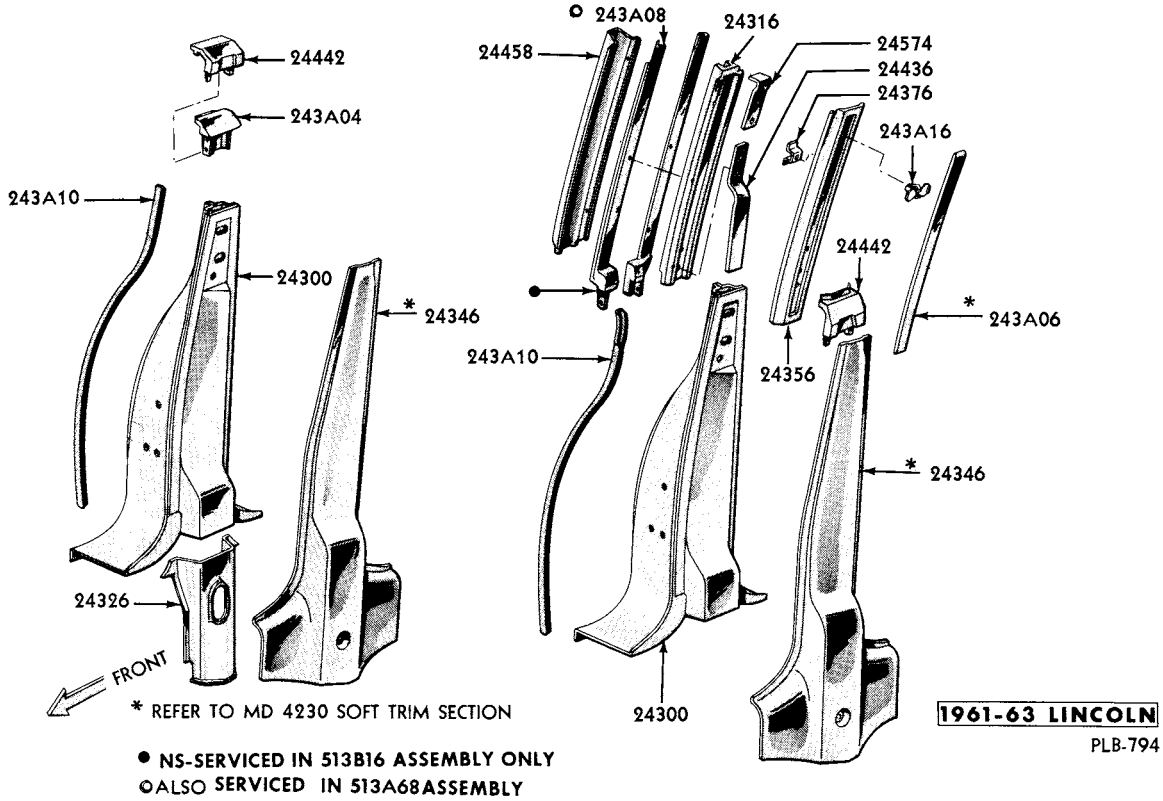

● NS-SERVICED IN 513B16 ASSEMBLY ONLY
○ALSO SERVICED IN 513A68ASSEMBLY

CENTER BODY PILLAR and RELATED PARTS

GROUP AND PART NUMBER	DESCRIPTION, SIZE, ETC.	NO. REQ'D	MODEL OR ENGINE CUBIC INCH DISPLACEMENT	VEHICLE CODE	YEAR 19____
24300-1	PILLAR (CENTER BODY)				
PB9M 5724300-A	R.H.	1	57, 77	A	60
PB9M 5724301-A	L.H.	1	57, 77	A	60
B9MB 5824300-B	R.H.	1	58	A	60
B9MB 5824301-B	L.H.	1	58	A	60
C1AZ 5424300-D	R.H.	1	54, 58	A	61/62
C1AZ 5424301-D	L.H.	1	54, 58	A	61/62
C1AZ 7124300-D	R.H.	1	71	A	61/62
C1AZ 7124301-D	L.H.	1	71	A	61/62
C1AZ 7524300-D	R.H.	1	75	A	61/62
C1AZ 7524301-D	L.H.	1	75	A	61/62
C3AZ 5424300-A	R.H.	1	54	A	63
C3AZ 5424301-A	L.H.	1	54	A	63
C3AZ 7124300-A	R.H.	1	71	A	63
C3AZ 7124301-A	L.H.	1	71	A	63
C3AZ 7524300-A	R.H.	1	75	A	63
C3AZ 7524301-A	L.H.	1	75	A	63
C4AZ 5424300-A	R.H.	1	54	A	64
C4AZ 5424301-A	L.H.	1	54	A	64
C4AZ 5724300-A	R.H.	1	57,75	A	64
C4AZ 5724301-A	L.H.	1	57,75	A	64
C4AZ 7124300-A	R.H.	1	71	A	64
C4AZ 7124301-A	L.H.	1	71	A	64
C2OZ 5424300-B	R.H.	1	54, 71	B	62/63
C2OZ 5424301-B	L.H.	1	54, 71	B	62/63
CODB 5824300-C	R.H. (a)	1	54, 71	C	60/63
CODB 5824301-C	L.H. (a)	1	54, 71	C	60/63
C4DZ 5424300-A	R.H.	1	54,71	C	64
C4DZ 5424301-A	L.H.	1	54,71	C	64
COLB 5724300-A	R.H.	1	53, 54, 57, 75	D	60
COLB 5724301-A	L.H.	1	53, 54, 57, 75	D	60
C2VY 5724300-B	R.H.	1	All	D	61/63
C2VY 5724301-B	L.H.	1	All	D	61/63
C4VY 5324300-A	R.H.	1	53	D	64
C4VY 5324301-A	L.H.	1	53	D	64
C4VY 7424300-A	R.H.	1	74	D	64
C4VY 7424301-A	L.H.	1	74	D	64
372617-S	Bumper-rubber	1	a		
243A00	WELT (CENTER BODY PILLAR)				
CODB 58243A00-C	BLACK - vinyl - 38-3/4" long - on pillar	4	54, 71	B C	60/64
	Quarter wheelhouse on flange inside of luggage compartment - 13-3/8" long	2	54, 62	B C	60/63
24302-3	STRIP (CENTER BODY PILLAR OUTSIDE FINISH)				
C1VY 5324302-A	R.H. - (2) piece assembly	1	53	D	61/63
C1VY 5324303-A	L.H. - (2) piece assembly	1	53	D	61/63
C1VY 5724302-A	R.H. - assembly - with clips	1	74	D	61/63
C1VY 5724303-A	L.H. - assembly - with clips ☆	1	74	D	61/63
C4VY 5324302-A	R.H. - when used on model 74 necessary to cut 1-27/32" off top end	1	All	D	64
C4VY 5324303-A	L.H. - when used on model 74 necessary to cut 1-27/32" off top end	1	All	D	64
	☆ Use on vehicles built after 4-11-61 - refer to group 243A11 for vehicles built prior to 4-12-61				

GROUP AND PART NUMBER	DESCRIPTION, SIZE, ETC.	NO. REQ'D	MODEL OR ENGINE CUBIC INCH DISPLACEMENT	VEHICLE CODE	YEAR 19____
243A04-5	WEATHERSTRIP (CENTER BODY PILLAR) UPPER				
C1VB 57243A04-C	R. H.	1	74	D	61/63
C1VB 57243A05-C	L. H.	1	74	D	61/63
C4VY 74243A04-A	R. H.	1	74	D	64
C4VY 74243A05-A	L. H.	1	74	D	64
243A08-9	WEATHERSTRIP (CENTER BODY PILLAR AT BELT) REAR				
C1VB 53243A08-C	R. H.	1	53	D	61
C1VB 53243A09-C	L. H.	1	53	D	61
243A11	STRIP (CENTER BODY PILLAR OUTSIDE FINISH)				
C1VB 57243A11-B	L. H. - (1) piece unit - without clips☆ ☆ Use on vehicles built prior to 4-12-61 - refer to group 24302-3 for R. H. side and for vehicles built after 4-11-61	1	74	D	61
24312-3	PILLAR (CENTER BODY INNER) UPPER				
C2OZ 5424312-A	R. H.	1	54	B	62
	R. H. and L. H.	2	54, 71	B	63
C2OB 5424313-A	L. H.	1	54	B	62
CODB 5824312-A		2	54, 71	C	60/64
24316-7	PILLAR (CENTER BODY) OUTER				
BAK 5724316-A	R. H. - upper	1	53, 54	D	60
BAK 5724317-A	L. H. - upper	1	53, 54	D	60
C1VY 5324316-C	R. H. - upper	1	53	D	61/63
C1VY 5324317-C	L. H. - upper	1	53	D	61/63
C4VY 5324316-A	R. H. - upper	1	53	D	64
C4VY 5324317-A	L. H. - upper	1	53	D	64
243A16	RETAINER (CENTER BODY PILLAR INSIDE FINISH UPPER PILLAR INSERT)				
C1VB 53243A16-A		8	53	D	61/63
24320-1	REINFORCEMENT (CENTER BODY PILLAR TO FLOOR SIDE MEMBER)				
BAK 5724320-A	R. H.	1	53, 54, 57, 75	D	60
BAK 5724321-A	L. H.	1	53, 54, 57, 75	D	60
24326-7	PILLAR (CENTER BODY INNER) LOWER				
B9MB 5724326-A		2	57, 77	A	60
C1VY 5724326-B	R. H.	1	All	D	61/63
C1VY 5724327-B	L. H.	1	All	D	61/63
C4VY 5324326-A	R. H.	1	All	D	64
C4VY 5324327-A	L. H.	1	All	D	64
24342-3	PILLAR (CENTER BODY) OUTER FRONT				
PB9M 5724342-A	R. H.	1	57, 77	A	60
PB9M 5724343-A	L. H.	1	57, 77	A	60
24346-7	PANEL (CENTER BODY PILLAR INSIDE FINISH) LOWER				
B9MB 5724346-AP	R. H.	1	57A, 77A	A	60
B9MB 5724346-BP	R. H. - simulated grain	1	57B, F, 77B	A	60
B9MB 5724347-BP	L. H. - simulated grain	1	57, 77	A	60
B9MB 5824346-BP	R. H.	1	58A	A	60
B9MB 5824347-BP	L. H.	1	58A	A	60
COMB 5824346-AP	R. H.	1	58B	A	60
COMB 5824347-AP	L. H.	1	58B	A	60
COAB 5824346-BP	R. H. (a)	1	54, 58, 71	A	61/64
COAB 5824347-BP	L. H. (a)	1	54, 58, 71	A	61/64

CONTINUED ON NEXT PAGE

GROUP AND PART NUMBER	DESCRIPTION, SIZE, ETC.	NO. REQ'D	MODEL OR ENGINE CUBIC INCH DISPLACEMENT	VEHICLE CODE	YEAR 19____
24346-7	PANEL (CENTER BODY PILLAR INSIDE FINISH) LOWER (CONTINUED)				
C2AZ 7524346-A	R.H. - paint to match	1	57,75	A	62/64
C2AZ 7524347-A	L.H. - paint to match	1	57,75	A	62/64
CODB 5824346-BP	R.H. - steel - in prime - paint to match (b)	1	54,71	C	60/64
CODB 5824347-BP	L.H. - steel - in prime - paint to match (b)	1	54,71	C	60/64
C1AB 5424495-A	Fastener	4	a		
52720-S8	Screw-pan hd.-No. 8-15 x 3/8"	6	a		
53038-S13	Screw-oval hd. cr. rec. tap.-No. 8-15 x 3/4"	5	b		
24356-7	PANEL (CENTER BODY PILLAR INSIDE FINISH) UPPER				
B9MB 5824356-AP	R.H.	1	58A	A	60
B9MB 5824357-AP	L.H.	1	58A	A	60
COMB 5824356-AP	R.H. - textured metal	1	58B	A	60
COMB 5824357-AP	L.H. - textured metal	1	58B	A	60
C1AB 5424356-AP	R.H. (a)	1	54, 58, 71	A	61/64
C1AB 5424357-AP	L.H. (a)	1	54, 58, 71	A	61/64
C1VB 5324356-C	Stainless steel - use on vehicles built prior to 11-23-60	2	53	D	61
C1VB 5324356-E	Stainless steel - use on vehicles built after 11-22-60	2	53	D	61/63
C4VY 5324356-A	R.H.	1	53	D	64
C4VY 5324357-A	L.H.	1	53	D	64
53027-S13	Screw-oval hd.-No. 8-15 x 5/8"	2	a		
24376	RETAINER (CENTER BODY PILLAR FINISH PANEL) UPPER				
C1VB 5324376-A		6	53	D	61/63
24382-5	REINFORCEMENT (CENTER BODY PILLAR) UPPER				
C1AZ 7524384-A	R.H.	1	57,75	A	61/64
C1AZ 7524385-A	L.H.	1	57,75	A	61/64
C4VY 5324382-A	R.H.	1	53	D	64
C4VY 5324383-A	L.H.	1	53	D	64
24395	REINFORCEMENT (CENTER BODY WEATHERSTRIP) UPPER				
C4VY 5324395-A		4	53	D	64
24426-7	REINFORCEMENT (CENTER BODY PILLAR) LOWER				
C1AB 7524426-A	R.H.	1	57,75	A	61/64
C1AB 7524427-A	L.H.	1	57,75	A	61/64
24436-7	BRACKET (CENTER BODY PILLAR) LOWER				
C1VB 5324436-A	R.H.	1	53	D	61/63
C1VB 5324437-A	L.H.	1	53	D	61/63
24442-3	CAP (CENTER BODY PILLAR FINISH)				
PB9M 5724442-AP	R.H.	1	57A, B, 77	A	60
PB9M 5724443-AP	L.H.	1	57A, B, 77	A	60
COMB 5724452-A	R.H. - chrome	1	57F	A	60
COMB 5724453-A	L.H. - chrome	1	57F	A	60
B9LB 5724452-A	R.H. - chrome	1	57, 75	D	60
B9LB 5724453-A	L.H. - chrome	1	57, 75	D	60
C1VB 5324442-C	R.H.	1	53	D	61/63
C1VB 5324443-C	L.H.	1	53	D	61/63
C2VY 5724442-A	R.H.	1	74	D	61/63
C2VY 5724443-A	L.H.	1	74	D	61/63

CONTINUED ON NEXT PAGE

GROUP AND PART NUMBER	DESCRIPTION, SIZE, ETC.	NO. REQ'D	MODEL OR ENGINE CUBIC INCH DISPLACEMENT	VEHICLE CODE	YEAR 19____
24442-3	CAP (CENTER BODY PILLAR FINISH) CONTINUED				
C4VY 5324442-B	R.H. (Δ)	1	53	D	64
C4VY 5324443-B	L.H. (Δ)	1	53	D	64
Δ Package also includes -					
	(2) 53027-S screw-No. 8-15 x 5/8"				
C4VY 7424442-A	R.H. - use on vehicles built prior to 11-19-63 (‡)	1	74	D	64
C4VY 7424443-A	L.H. - use on vehicles built prior to 11-19-63 (‡)	1	74	D	64
C4VY 7424442-B	R.H. - use on vehicles built after 11-18-63 (‡)	1	74	D	64
C4VY 7424443-B	L.H. - use on vehicles built after 11-18-63 (‡)	1	74	D	64
‡ Package also includes -					
	(4) 376387-S101 screw-No. 8-18 x 3/8"				
24452-3	REFER TO GROUP 24442-3				
24458-9	MOULDING (CENTER BODY PILLAR OUTSIDE) UPPER				
C2YB 5424458-A		2	54	B	62/63
Package also includes -					
	(4) 376374-S101 screw				
CODB 5824458-A	(a)	2	54, 71	C	60/62
		2	54B, 71B	C	63
		2	54B, C, D, 71B, C	C	64
BAK 5724458-A	R.H. - chrome	1	53, 54	D	60
BAK 5724459-A	L.H. - chrome	1	53, 54	D	60
C1VB 5324458-C	Chrome	2	53	D	61/63
C4VY 5324458-A		2	53	D	64
Package also includes -					
	(6) 376374-S101 screw-No. 6-18 x 3/8"				
376374-S101	Screw-flat hd.-No. 6-18 x 3/8"	8	a		
24470-1	MOULDING (CENTER BODY PILLAR OUTSIDE) LOWER				
COLB 5724470-A	R.H.	1	53, 57	D	60
COLB 5724471-A	L.H.	1	53, 57	D	60
24495	FASTENER (CENTER BODY PILLAR) INSIDE FINISH PANEL				
C1AB 5424495-A	(a)	AR	54, 71	A	61/63
		2	71	A	64
	Tailgate lock access cover	2	71	B	63
52720-S8	Screw-pan hd.-No. 8-15 x 3/8"	AR	a		
24560-1	WEATHERSTRIP (CENTER BODY PILLAR UPPER FRONT)				
BAK 5724560-A	R.H.	1	53, 54	D	60
BAK 5724561-A	L.H.	1	53, 54	D	60
24566-7	WEATHERSTRIP (CENTER BODY PILLAR UPPER REAR)				
B9LB 5324566-A	R.H. - 15-51/64" long	1	53, 54	D	60
B9LB 5324567-A	L.H. - 15-51/64" long	1	53, 54	D	60
C4VY 5324566-B	R.H.	1	53	D	64
C4VY 5324567-B	L.H.	1	53	D	64
24572-3	PLATE (CENTER BODY UPPER TO LOWER PILLAR)				
BAK 5724572-A	R.H.	1	53, 54	D	60
BAK 5724573-A	L.H.	1	53, 54	D	60

GROUP AND PART NUMBER	DESCRIPTION, SIZE, ETC.	NO. REQ'D	MODEL OR ENGINE CUBIC INCH DISPLACEMENT	VEHICLE CODE	YEAR 19____
24574-5	BRACKET (CENTER BODY UPPER PILLAR TO ROOF)				
C2OZ 5424574-A		2	54, 71	B	62/63
CODB 5824574-A		2	54,71	C	60/64
BAK 5724574-A	R. H.	1	53, 54	D	60
BAK 5724575-A	L. H.	1	53, 54	D	60
C1VB 5324574-A		2	53	D	61/63
24580-1	EXTENSION (CENTER BODY OUTER FRONT PILLAR)				
PB9M 5724580-A	R. H.	1	57, 58, 77	A	60
PB9M 5724581-A	L. H.	1	57, 58, 77	A	60
24630-1	DOOR (REAR) LESS HINGES				
COMB 5724630-C	R. H. (a)	1	57	A	60
COMB 5724631-C	L. H. (a)	1	57	A	60
COMB 5824630-F	R. H. (b)	1	58, 77	A	60
COMB 5824631-F	L. H. (b)	1	58, 77	A	60
C1MB 5424630-R	R. H. (c)	1	54,58,71,75	A	61
C1MB 5424631-R	L. H. (c)	1	54,58,71,75	A	61
C2AZ 5424630-C	R. H. - with frame (c)	1	54	A	62
C2AZ 5424631-C	L. H. - with frame (c)	1	54	A	62
C2AZ 7124630-B	R. H. - with frame (c)	1	71	A	62
C2AZ 7124631-B	L. H. - with frame (c)	1	71	A	62
C2AZ 7524630-B	R. H. - less frame (c)	1	75	A	62
C2AZ 7524631-B	L. H. - less frame (c)	1	75	A	62
C4MY 5424630-A	R. H. - with frame	1	54	A	63/64
C4MY 5424631-A	L. H. - with frame	1	54	A	63/64
C3AZ 7124630-A	R. H. - with frame	1	71	A	63/64
C3AZ 7124631-A	L. H. - with frame	1	71	A	63/64
C3AZ 7524630-A	R. H. - less frame	1	57,75	A	63/64
C3AZ 7524631-A	L. H. - less frame	1	57,75	A	63/64
C2YY 5424630-A	R. H. - with frame (d, e)	1	54	B	62
C2YY 5424631-A	L. H. - with frame (d, e)	1	54	B	62
C3YY 5424630-A	R. H. - with frame	1	54	B	63
C3YY 5424631-A	L. H. - with frame	1	54	B	63
C3YY 7124630-A	R. H. - with frame	1	71	B	63
C3YY 7124631-A	L. H. - with frame	1	71	B	63
C3GY 5424630-A	R. H.	1	54	C	60/63
C3GY 5424631-A	L. H.	1	54	C	60/63
C2DZ 7124630-A	R. H. - with frame	1	71	C	60/62
C2DZ 7124631-A	L. H. - with frame	1	71	C	60/62
C3DZ 7124630-A	R. H.	1	71	C	63
C3DZ 7124631-A	L. H.	1	71	C	63
C4DZ 5424630-A	R. H.	1	54	C	64
C4DZ 5424631-A	L. H.	1	54	C	64
C4DZ 7124630-A	R. H.	1	71	C	64
C4DZ 7124631-B	L. H.	1	71	C	64
COLB 5724630-A	R. H. (f)	1	53, 54, 57, 75	D	60
COLB 5724631-A	L. H. (f)	1	53, 54, 57, 75	D	60
C1VY 5324630-F	R. H. (e, g)	1	53	D	61/63
C1VY 5324631-F	L. H. (e, g)	1	53	D	61/63
C1VY 5724630-J	R. H. (e, g)	1	74	D	61/63
C1VY 5724631-J	L. H. (e, g)	1	74	D	61/63
C4VY 5324630-A	R. H.	1	53	D	64
C4VY 5324631-A	L. H.	1	53	D	64
C4VY 7424630-A	R. H.	1	74	D	64
C4VY 7424631-A	L. H.	1	74	D	64

CONTINUED ON NEXT PAGE

GROUP AND PART NUMBER	DESCRIPTION, SIZE, ETC.	NO. REQ'D	MODEL OR ENGINE CUBIC INCH DISPLACEMENT	VEHICLE CODE	YEAR 19____
24630-1	DOOR (REAR) LESS HINGES (CONTINUED)				
C1AB 5427224-B	R.H. - bumper - at belt	1	c		
C1AB 5427225-B	L.H. - bumper - at belt	1	c		
C2OZ 5427224-A	R.H. - bumper - at belt	1	d		
C2OZ 5427225-A	L.H. - bumper - at belt	1	d		
C1VB 5723037-A	Bumper-rubber- at belt	1	g		
B9MB 5727224-A	R.H. - bumper - at belt	1	a		
B9MB 5727225-A	L.H. - bumper - at belt	1	a		
PB9M 5727225-A	Bumper - at belt	2	b		
357549-S	Bumper-rubber	AR	f		
372617-S	Bumper-rubber-(1) each at center and lower level	2	c		
	Lower	1	e		
24636	ACTUATOR (REAR DOOR COURTESY LAMP SWITCH)				
C1VY 5724636-A	Nylon - located on rear door below upper hinge	2	All	D	61/63
24648	HANDLE (REAR DOOR INSIDE ASSIST)				
B9A 5824648-A	Police vehicles only - 16" long - rustless steel	1	58A	A	61
	Use for taxi cab only - 16" long - rustless steel	1	54	B	63
24650	PAD (REAR DOOR INSIDE ASSIST HANDLE)				
B6A 7324650-A	Use for taxi cab only	2	54	B	63
24700-1	PANEL (REAR DOOR OUTSIDE)				
COMB 5724700-B	R.H. - skin	1	57	A	60
COMB 5724701-B	L.H. - skin	1	57	A	60
COMB 7724700-B	R.H. - skin	1	58, 77	A	60
COMB 7724701-B	L.H. - skin	1	58, 77	A	60
C2AB 5424700-B	R.H. - skin	1	54, 71, 75	A	61/62
C2AB 5424701-B	L.H. - skin	1	54, 71, 75	A	61/62
C4MY 7124700-A	R.H. - skin	1	54, 57, 71, 75	A	63/64
C3AZ 5424701-A	L.H. - skin	1	54, 71, 75	A	63
C4MY 7124701-A	L.H. - skin	1	54, 57, 71, 75	A	64
C2YB 5424704-A	R.H. - skin	1	54	B	62
C2YB 5424705-A	L.H. - skin	1	54	B	62
C3YY 5424700-A	R.H. - skin	1	54, 71	B	63
C3YY 5424701-A	L.H. - skin	1	54, 71	B	63
C2DZ 5824700-A	R.H. - skin	1	54, 71	C	60/63
C2DZ 5824701-A	L.H. - skin	1	54, 71	C	60/63
C4DZ 5424700-A	R.H. - skin	1	54, 71	C	64
C4DZ 5424701-A	L.H. - skin	1	54, 71	C	64
COLB 5724700-A	R.H. - skin	1	53, 54, 57, 75	D	60
COLB 5724701-A	L.H. - skin	1	53, 54, 57, 75	D	60
C1VB 5324700-A	R.H. - skin	1	53	D	61/63
C1VB 5324701-A	L.H. - skin	1	53	D	61/63
C1VB 5724700-C	R.H. - skin	1	74	D	61/63
C1VB 5724701-C	L.H. - skin	1	74	D	61/63
C4VY 5324700-A	R.H. - skin	1	53	D	64
C4VY 5324701-A	L.H. - skin	1	53	D	64
C4VY 7424700-A	R.H. - skin	1	74	D	64
C4VY 7424701-A	L.H. - skin	1	74	D	64
24702-3	EXTENSION (REAR DOOR INSIDE PANEL TO OUTSIDE PANEL FRONT)				
C3AZ 7524702-A	R.H.	1	75	A	63
C3AZ 7524703-A	L.H.	1	75	A	63

GROUP AND PART NUMBER	DESCRIPTION, SIZE, ETC.	NO. REQ'D	MODEL OR ENGINE CUBIC INCH DISPLACEMENT	VEHICLE CODE	YEAR 19____
247A02-3	PANEL (REAR DOOR UPPER REAR EXTENSION)				
C2MB 75247A02-A	R.H.	1	75	A	62
C2MB 75247A03-A	L.H.	1	75	A	62
C4MY 57247A02-A	R.H.	1	57	A	64
C4MY 57247A03-A	L.H.	1	57	A	64
C4MY 75247A02-A	R.H.	1	75	A	64
C4MY 75247A03-A	L.H.	1	75	A	64
24704-5	REFER TO GROUP 24700-1				
247A10-1	SEAL (REAR DOOR WINDOW FRONT) UPPER				
C1VB 57247A10-A		2	All	D	61/63
C4VY 53247A10-A		2	53	D	64
C4VY 74247A10-A	R.H.	1	74	D	64
C4VY 74247A11-A	L.H.	1	74	D	64
24726	RECEPTACLE (REAR DOOR ASH)				
C4VY 5324726-A		2	All	D	64
24730-1	PANEL (REAR DOOR OUTSIDE APPLIQUE)				
C4GY 5424730-A	R.H.	1	54C,D	C	64
C4GY 5424731-A	L.H.	1	54C,D	C	64
247A30	RETAINER (REAR DOOR WEATHERSTRIP)				
C1VB 57247A30-B	(4) for R.H. and (4) for L.H. - rustless steel	8	All	D	61/63
24740-1	EXTENSION (REAR DOOR) OUTSIDE UPPER REAR				
C1MB 7524740-B	R.H. - chrome finish - textured	1	75	A	61
C1MB 7524741-B	L.H. - chrome finish - textured	1	75	A	61
C2MB 7524740-A	R.H. - chrome finish	1	75	A	62
C2MB 7524741-A	L.H. - chrome finish	1	75	A	62
C3MY 7524740-A	R.H.	1	75	A	63
C3MY 7524741-A	L.H.	1	75	A	63
C4MY 5724740-A	R.H.	1	57	A	64
C4MY 5724741-A	L.H.	1	57	A	64
C4MY 7524740-A	R.H.	1	75	A	64
C4MY 7524741-A	L.H.	1	75	A	64
24744-5	EXTENSION (REAR DOOR) INSIDE UPPER REAR				
COAB 7524744-A	R.H. - chrome finish	1	75	A	61
COAB 7524745-A	L.H. - chrome finish	1	75	A	61
C2AB 7524744-A	R.H.	1	75	A	62
C2AB 7524745-A	L.H.	1	75	A	62
C3MY 7524744-A	R.H. - chrome finish	1	75	A	63
C3MY 7524745-A	L.H. - chrome finish	1	75	A	63
C4MY 5724744-A	R.H.	1	57	A	64
C4MY 5724745-A	L.H.	1	57	A	64
C4MY 7524744-A	R.H. - chrome finish	1	75	A	64
C4MY 7524745-A	L.H. - chrome finish	1	75	A	64
24766-7	PLATE (REAR DOOR INSIDE PANEL COVER)				
BAK 5724766-B	R.H. - steel	1	53, 54, 57, 75	D	60
BAK 5724767-B	L.H. - steel	1	53, 54, 57, 75	D	60
C1VB 5724766-B	Steel	2	All	D	61/63
24780-1	PANEL (REAR DOOR EXTENSION TO OUTSIDE UPPER MOULDING)				
C3MY 5424780-A	R.H. (a)	1	54,57,71A,C,75	A	63/64
C3MY 5424781-A	L.H. (a)	1	54,57,71A,C,75	A	63/64
371492-S2	Screw and washer-hex. hd. -1/4"-20 x 3/4"	5	a		

GROUP AND PART NUMBER	DESCRIPTION, SIZE, ETC.	NO. REQ'D	MODEL OR ENGINE CUBIC INCH DISPLACEMENT	VEHICLE CODE	YEAR 19__
24784-7	SHIELD (REAR DOOR WIRING)				
PB9M 5724786-A	R.H. - use with electric windows (a)	1	57, 58, 77	A	60
PB9M 5724787-A	L.H. - use with electric windows (a)	1	57, 58, 77	A	60
COAB 5824784-A	R.H. - use with electric windows	1	54, 58, 71, 75	A	61/63
		1	54, 71	A	64
COAB 5824785-A	L.H. - use with electric windows	1	54, 58, 71, 75	A	61/63
		1	54, 71	A	64
BAK 5724784-A	R.H. - use with electric windows	1	53, 54, 57, 75	D	60
BAK 5724785-A	L.H. - use with electric windows	1	53, 54, 57, 75	D	60
359219-S2	Screw-hex. washer hd. -5/16"-24	1	a		
24814-5	PANEL (REAR DOOR UPPER REAR EXTENSION) INNER				
C4MY 5724814-A	R.H.	1	57	A	64
C4MY 5724815-A	L.H.	1	57	A	64
24856-7	REFER TO GROUP 262A28-9				
24858-9	REFER TO GROUP 262A30-1				
24896-7	SEAL (REAR DOOR UPPER REAR EXTENSION)				
C2AZ 7524896-A	R.H. - rubber	1	75	A	62
C2AZ 7524897-A	L.H. - rubber	1	75	A	62
C3MY 7524896-A	R.H. - rubber	1	75A, B	A	63
C3MY 7524897-A	L.H. - rubber	1	75A, B	A	63
C4MY 5724896-A	R.H.	1	57	A	64
C4MY 5724897-A	L.H.	1	57	A	64
24990-1	MOULDING (REAR DOOR OUTSIDE UPPER REAR EXTENSION)				
PB9M 5724990-A	R.H. - 11" long (a)	1	57	A	60
PB9M 5724991-A	L.H. - 11" long (a)	1	57	A	60
52003-S13	Screw-flat hd. cr. rec. -No. 4-24 x 3/8"	3	a		
24992-3	WEATHERSTRIP (REAR DOOR)				
B9LB 5324992-A	R.H. - rubber (a)	1	53, 54	D	60
B9LB 5324993-A	L.H. - rubber (a)	1	53, 54	D	60
B9LB 5724992-A	R.H. - rubber (a)	1	57, 75	D	60
B9LB 5724993-A	L.H. - rubber (a)	1	57, 75	D	60
C1VY 5324992-D	R.H. - inner - refer to group 264A78 for outer weatherstrip (b)	1	53	D	61/63
C1VY 5324993-D	L.H. - inner - refer to group 264A79 for outer weatherstrip (b)	1	53	D	61/63
C1VY 5724992-F	R.H. - rubber - inner - refer to group 264A78 for outer weatherstrip (b)	1	74	D	61/63
C1VY 5724993-F	L.H. - rubber - inner - refer to group 264A79 for outer weatherstrip (b)	1	74	D	61/63
C4VY 5324992-A	R.H. - inner - refer to group 264A78 for outer weatherstrip (c)	1	All	D	64
C4VY 5324993-A	L.H. - inner - refer to group 264A79 for outer weatherstrip (c)	1	All	D	64
C1VB 57247A30-B	Retainer	4	b		
51750-S8	Screw-pan hd. cr. rec. -No.-6-32 x 1/4"	1	a		
52718-S8	Screw-pan hd. cr. rec. -No. 6-18 x 3/8"	1	a		
375547-S	Plug-5/16"	AR	c		
376378-S101	Screw-truss hd. -No. 8-18 x 3/8"	6	b, c		
24998	SEAL (REAR DOOR) FRONT EXTENSION UPPER				
COAB 7524998-A		2	75	A	61

GROUP AND PART NUMBER	DESCRIPTION, SIZE, ETC.	NO. REQ'D	MODEL OR ENGINE CUBIC INCH DISPLACEMENT	VEHICLE CODE	YEAR 19____
25018-9	MOULDING (REAR DOOR OUTSIDE UPPER REAR EXTENSION)				
C3MY 7525018-A	R.H. - 7-9/16" long	1	75	A	63
C3MY 7525019-A	L.H. - 7-9/16" long	1	75	A	63
25034	RETAINER (DOOR UPPER MOULDING) OUTSIDE				
C2YY 5725034-A	Use on front door moulding	2	All except 71C, D	B	62/63
	Use on tailgate moulding	2	59,71	C	62
25300-1	RAIL (REAR DOOR OUTSIDE FINISH) LOWER				
COMB 7725300-B	R.H. - 29-1/2" long - oak grain (a)	1	77B	A	60
COMB 7725301-B	L.H. - 29-1/2" long - oak grain (a)	1	77B	A	60
C2MY 71254A02-B	R.H. - oak grain	1	71B, D	A	61/62
C2MY 71254A03-B	L.H. - oak grain	1	71B, D	A	61/62
C3MY 71254A26-A	R.H. - rail - fiberglas (‡)	1	71B,D	A	63/64
C3MY 71254A27-A	L.H. - rail - fiberglas (‡)	1	71B,D	A	63/64
‡ Package also includes -					
(4) C1AZ-71290B32-A fastener	(4) 373702-S100 screw and wshr. No.10-32 x 1-1/4"	(1) 376382-S100 screw			
(1) 358403-S100 retainer					
(5) 358404-S100 cap					
C3YY 7125300-A	R.H. (b)	1	71D, F	B	63
C3YY 7125301-A	L.H. (b)	1	71D, F	B	63
C3DZ 7125300-A	R.H. - fiberglas (Δ)	1	71C	C	62
		1	71C, D	C	63
C3DZ 7125301-A	L.H. - fiberglas (Δ)	1	71C	C	62
		1	71C, D	C	63
Δ Package also includes -					
(3) C2DZ-71290B32-A fastener	(3) 358404-S cap	(3) 373702-S100 screw and washer			
C4DZ 7125300-A	R.H. - fiberglas (Δ)	1	71C	C	64
C4DZ 7125301-A	L.H. - fiberglas (Δ)	1	71C	C	64
Δ Package also includes -					
(2) C3AB-71290B32-A fastener	(3) 358404-S100 cap	(1) 376592-S screw- No.10-16 x 7/8"			
(1) 52775-S screw- No.8-18 x 1/4"	(2) 373702-S100 screw and wshr. No.10-32 x 1-1/4"				
(1) 358403-S100 retainer					
B9AB 7150108-E	Fastener-1-3/32 x 3/4" O.D.	AR	a		
BV 7920774-B	Spacer	2	a		
51800-S8	Screw-pan hd. cr. rec. -No. 12-24 x 7/8"	2	a		
52756-S8	Screw-pan hd. cr. rec. -No. 12-11 x 1"	1	a		
357215-S32	Nut-No. 10A	1	a		
358403-S2	Retainer	3	a		
358404-S	Cap	3	a		
370933-S100	Screw-truss hd. -No. 10-12 x 3/4"	1	b		
25320-1	REFER TO GROUP 254A00-1				
25324-5	WEATHERSTRIP (REAR DOOR)				
B9BM 5725324-A	R.H.	1	57	A	60
B9MB 7725324-A	R.H.	1	77	A	60
B9MB 7725325-A	L.H.	1	57, 77	A	60
PB9M 5825324-A	R.H.	1	58	A	60
PB9M 5825325-A	L.H.	1	58	A	60
C1AB 5425324-C	R.H.	1	54, 58	A	61
C1AB 5425325-C	L.H.	1	54, 58	A	61
COAB 5725324-A	R.H. - rubber	1	75	A	61
COAB 5725325-A	L.H. - rubber	1	75	A	61
C1AZ 7125324-C	R.H.	1	71	A	61/62
C1AZ 7125325-C	L.H.	1	71	A	61/62

CONTINUED ON NEXT PAGE

GROUP AND PART NUMBER	DESCRIPTION, SIZE, ETC.	NO. REQ'D	MODEL OR ENGINE CUBIC INCH DISPLACEMENT	VEHICLE CODE	YEAR 19__
25324-5	WEATHERSTRIP (REAR DOOR) CONTINUED				
C2AZ 5425324-A	R. H.	1	54	A	62
C2AZ 5425325-A	L. H.	1	54	A	62
C2AZ 7525324-A	R. H.	1	75	A	62
C2AZ 7525325-A	L. H.	1	75	A	62
C3MY 5425324-B	R. H.	1	54	A	63/64
C3MY 5425325-B	L. H.	1	54	A	63/64
C3AZ 7125324-A	R. H. - use on vehicles built prior to 4-1-63	1	71	A	63
C3AZ 7125325-A	L. H. - use on vehicles built prior to 4-1-63	1	71	A	63
C3AZ 7125324-C	R. H. - use on vehicles built after 3-31-63	1	71	A	63/64
C3AZ 7125325-C	L. H. - use on vehicles built after 3-31-63	1	71	A	63/64
C3AZ 7525324-B	R. H.	1	75	A	63/64
C3AZ 7525325-A	L. H. - use on vehicles built prior to 4-1-63	1	75	A	63
C3AZ 7525325-B	L. H. - use on vehicles built after 3-31-63	1	75	A	63/64
C4AZ 5725324-A	R. H.	1	57	A	64
C4AZ 5725325-A	L. H.	1	57	A	64
C2OZ 5425324-A	R. H. (a)	1	54	B	62
C2OZ 5425325-A	L. H. (a)	1	54	B	62
C3OZ 5425324-B	R. H.	1	54	B	63
C3OZ 5425325-B	L. H.	1	54	B	63
C3OZ 7125324-B	R. H.	1	71	B	63
C3OZ 7125325-B	L. H.	1	71	B	63
C1DZ 5825324-A	R. H. - rubber	1	54	C	60/63
C1DZ 5825325-A	L. H. - rubber	1	54	C	60/63
C1DZ 7125324-A	R. H. - rubber	1	71	C	60/63
C1DZ 7125325-A	L. H. - rubber	1	71	C	60/63
C4DZ 5425324-A	R. H. - includes wire retainer at bottom	1	54	C	64
C4DZ 5425325-A	L. H. - includes wire retainer at bottom	1	54	C	64
C4DZ 5425324-B	R. H. - less wire retainer	1	54	C	64
C4DZ 5425325-B	L. H. - less wire retainer	1	54	C	64
C4DZ 7125324-A	R. H. - includes wire retainer at bottom	1	71	C	64
C4DZ 7125325-A	L. H. - includes wire retainer at bottom	1	71	C	64
C4DZ 7125324-B	R. H. - less wire retainer	1	71	C	64
C4DZ 7125325-B	L. H. - less wire retainer	1	71	C	64
C1AB 6220807-A	Fastener	4	a		
375547-S	Plug-5/16"	AR	a		
25400-1	PANEL (REAR DOOR INSIDE) UPPER REAR EXTENSION FINISH				
B9MB 5725400-AP	R. H. - in prime	1	57A, B	A	60
B9MB 5725401-AP	L. H. - in prime	1	57A, B	A	60
B9MB 5725400-BP	R. H. - in prime	1	57F	A	60
B9MB 5725401-BP	L. H. - in prime	1	57F	A	60
254A00-1	RAIL (REAR DOOR OUTSIDE FINISH) UPPER				
COMB 77254A00-A	R. H. - 35-3/4" long - oak grain - fiberglas (a)	1	77B	A	60
COMB 77254A01-A	L. H. - 35-3/4" long - oak grain - fiberglas (a)	1	77B	A	60
C1MY 71254A00-A	R. H. - 37-1/2" long - oak grain - fiberglas	1	71B	A	61
C1MY 71254A01-A	L. H. - 37-1/2" long - oak grain - fiberglas	1	71B	A	61
C2MY 71254A00-B	R. H. - 37-1/2" long - oak grain - fiberglas	1	71B, D	A	62
C2MY 71254A01-B	L. H. - 37-1/2" long - oak grain - fiberglas	1	71B, D	A	62
C3MY 71254A00-A	R. H. - fiberglas (Δ)	1	71B, D	A	63/64
C3MY 71254A01-A	L. H. - fiberglas (Δ)	1	71B, D	A	63/64

Δ Package also includes -

(1) C3MY-7129108-A retainer (5) PB9M-7750108-A fastener (5) 376910-S40 screw and washer
(6) C3MY-7129192-A retainer (1) 358610-S100 nut

CONTINUED ON NEXT PAGE

GROUP AND PART NUMBER	DESCRIPTION, SIZE, ETC.	NO. REQ'D	MODEL OR ENGINE CUBIC INCH DISPLACEMENT	VEHICLE CODE	YEAR 19.____
254A00-1	RAIL (REAR DOOR OUTSIDE FINISH) UPPER (CONTINUED)				
C3YY 71254A00-A	R. H. - fiberglas (b)	1	71D, F	B	63
C3YY 71254A01-A	L. H. - fiberglas (b)	1	71D, F	B	63
C3DZ 7125320-A	R. H. - fiberglas (§)	1	71C	C	62
		1	71C, D	C	63
C3DZ 7125321-A	L. H. - fiberglas (§)	1	71C	C	62
		1	71C, D	C	63
§ Package also includes -					
(4) C2DZ-71290B32-A fastener	(4) 358404-S cap		(4) 373702-S100 screw and washer		
C4DZ 7125320-A	R. H. - fiberglas (‡)	1	71C	C	64
C4DZ 7125321-A	L. H. - fiberglas (‡)	1	71C	C	64
‡ Package also includes -					
(2) C3AB-71290B32-A fastener	(3) 358404-S100 cap		(1) 376592-S screw-		
(1) 52775-S screw- No. 8-18 x 1/4"	(2) 373702-S100 screw and wshr. No. 10-32 x 1-1/4"		No. 10-16 x 7/8"		
(1) 358403-S100 retainer					
B9AB 7150108-E	Fastener-1-3/32" x 3/4" O. D.	AR	a		
52760-S8	Screw-pan hd. cr. rec. -No. 12-11 x 1-1/4"	AR	a		
357215-S32	Nut-No. 10A	AR	a		
358403-S2	Retainer	AR	a		
358404-S	Cap	AR	a		
370933-S100	Screw-truss hd. -No. 10-12 x 3/4"	1	b		
254A02-3	REFER TO GROUP 52300-1				
25404-5	ORNAMENT (REAR DOOR & QUARTER) OUTSIDE LOWER				
COMB 5825404-A	Rear door (a)	AR	57B, 57F, 58B	A	60
	Quarter	AR	63B, 63F, 76D	A	60
COMB 7725404-A	Rear door (a)	AR	77B	A	60
C2YY 6225404-A	R. H. (Δ)	3	All	B	62
	Front fender only	3	65B	B	63
C2YY 6225405-A	L. H. (Δ)	3	All	B	62
	Front fender only	3	65B	B	63
Δ Package also includes -					
(2) 354397-S100 nut and washer	(1) 375480-S102 nut-sleeve				
371107-S	Nut-3/16"	2	a		
254A04-5	MOULDING (REAR DOOR WINDOW FRAME) OUTSIDE REAR				
C3OZ 71254A04-A	R. H. - rustless steel	1	71	B	63
C3OZ 71254A05-A	L. H. - rustless steel	1	71	B	63
C1KB 71254A04-B	R. H. - rustless steel	1	71	C	60/62
		1	71B, C, D	C	63/64
C1KB 71254A05-B	L. H. - rustless steel	1	71	C	60/62
		1	71B, C, D	C	63/64
25406-7	MOULDING (REAR DOOR ARM REST & QUARTER) SUPPORT				
COLB 7525406-D	R. H. - use on vehicles built prior to 11-9-59	1	54, 65, 75	D	60
COLB 7525407-D	L. H. - use on vehicles built prior to 11-9-59	1	54, 65, 75	D	60
COLB 7525406-E	R. H. - use on vehicles built after 11-8-59	1	54, 65, 75	D	60
COLB 7525407-E	L. H. - use on vehicles built after 11-8-59	1	54, 65, 75	D	60
254A08-9	STRIP (REAR DOOR WINDOW INSIDE FINISH) FRONT				
B9LB 57254A08-A	R. H. - rustless steel	1	57, 75	D	60
B9LB 57254A09-A	L. H. - rustless steel	1	57, 75	D	60
25410-1	SEAL (REAR DOOR INSIDE PANEL AT BELT) REAR				
B9LB 5725410-A	R. H. - rubber and steel with (1) 3/16" diameter hole	1	53, 54, 57, 75	D	60
B9LB 5725411-A	L. H. - rubber and steel with (1) 3/16" diameter hole	1	53, 54, 57, 75	D	60

GROUP AND PART NUMBER	DESCRIPTION, SIZE, ETC.	NO. REQ'D	MODEL OR ENGINE CUBIC INCH DISPLACEMENT	VEHICLE CODE	YEAR 19__
25412-3	SEAL (REAR DOOR FRONT EXTENSION) UPPER				
BAK 5725412-A	R.H. - rubber and steel - 1-7/8" x 3-3/4" long (a)	1	53,54,57,75	D	60
BAK 5725413-A	L.H. - rubber and steel - 1-7/8" x 3-3/4" long (a)	1	53,54,57,75	D	60
51750-S8	Screw-pan hd. cr. rec. -No. 6-32 x 1/4"	2	a		
254A12-3	MOULDING (REAR DOOR OUTSIDE TOP FRONT) SNAP-ON				
B9A 7125586-A	R.H. - rear door - 14-1/2" long - rustless steel	1	58	A	60
	L.H. - front door	1	58	A	60
	Cut 1/4" off of end at belt moulding				
B9A 7125587-A	L.H. - rear door - 14-1/2" long - rustless steel	1	58	A	60
	R.H. - front door	1	58	A	60
	Cut 1/4" off of end at belt moulding				
COAZ 58254A12-B	R.H. - 14-7/8" long - rustless steel	1	54, 58	A	61/64
COAZ 58254A13-B	L.H. - 14-7/8" long - rustless steel	1	54, 58	A	61/64
COAZ 71254A12-B	R.H. - 14-7/8" long - rustless steel	1	71	A	61/64
COAZ 71254A13-B	L.H. - 14-7/8" long - rustless steel	1	71	A	61/64
C2OZ 54254A12-A	R.H. - rustless steel	1	54, 71	B	62/63
C2OZ 54254A13-A	L.H. - rustless steel	1	54, 71	B	62/63
254A16-7	REFER TO GROUP 25532-3				
25418	KIT (REAR DOOR OUTSIDE MOULDING) RETAINER				
COMY 5825418-A		AR	57, 58, 77	A	60
	Consists of the following -				
(3) COMB-64290A08-A retainer	(3) 354479-S7 nut and washer				
COLY 5725418-A		2	53, 57	D	60
	Consists of the following -				
(1) COLB-5729316-A retainer	(1) 50502-S8 screw	(4) 354672-S100 nut and washer			
(4) COLB-63290A96-A retainer					
254A18-9	REFER TO GROUP 25554-5				
254A26-7	REFER TO GROUP 25300-1				
254A26-7	MOULDING (REAR DOOR OUTSIDE LOWER FINISH RAIL) FRONT				
C1MB 71254A26-A	R.H. - 26" long (a)	1	71B, D	A	61/62
C1MB 71254A27-A	L.H. - 26" long (a)	1	71B, D	A	61/62
C1MY 7120892-A	Retainer	AR	a		
B9AB 7150108-A	Fastener	AR	a		
50555-S8	Screw-pan hd. cr. rec. -No. 10-32 x 1"	AR	a		
25432-3	WEATHERSTRIP (REAR DOOR UPPER REAR EXTENSION CORNER)				
B9MB 5725432-A	R.H. - rubber and steel - 2-3/8" (a)	1	57	A	60
B9MB 5725433-A	L.H. - rubber and steel - 2-3/8" (a)	1	57	A	60
52003-S13	Screw-flat hd. cr. rec. tap. -No. 4-24 x 3/8"	4	a		
254A34	RETAINER (REAR DOOR OUTSIDE UPPER MOULDING)				
C1MB 54254A34-A		6	54A, 58, 71A, 75A	A	61
C3MY 54254A34-A		AR	54, 57, 75	A	63/64
25442	BRACKET (REAR DOOR WINDOW REAR GUIDE ADJUSTING) LOWER				
PB9M 5725442-A	2-1/16" long (a)	2	57	A	60
B7A 5725442-A		2	53, 54, 57, 75	D	60
359219-S2	Screw-hex. washer hd. -5/16"-24	2	a		

GROUP AND PART NUMBER	DESCRIPTION, SIZE, ETC.	NO. REQ'D	MODEL OR ENGINE CUBIC INCH DISPLACEMENT	VEHICLE CODE	YEAR 19____
254A48-9	MOULDING (REAR DOOR OUTSIDE LOWER FINISH RAIL)				
C1MB 71254A48-A	R.H. - 12" long (a)	1	71B	A	61/62
C1MB 71254A49-A	L.H. - 12" long (a)	1	71B	A	61/62
C1MY 7120872-A	Retainer	1	a		
C1MY 71254A64-A	Retainer	2	a		
B9AB 7150108-A	Fastener	1	a		
34655-S	Nut and washer-hex. -No. 10-24	1	a		
50555-S8	Screw-pan hd. cr. rec. -No. 10-32 x 1"	1	a		
254A50-1	MOULDING (REAR DOOR OUTSIDE UPPER FINISH RAIL)				
C1MB 71254A50-A	R.H. - 37-1/2" long	1	71B	A	61
C1MB 71254A51-A	L.H. - 37-1/2" long	1	71B	A	61
C2MY 71254A50-A	37-1/8" long	2	71B	A	62
254A58	INSERT (REAR DOOR OUTSIDE UPPER MOULDING)				
C1MB 54254A58-B	36-7/8" long	2	54B,75B	A	61
25460-1	REFER TO GROUP 26460-1				
254A64	RETAINER (REAR DOOR OUTSIDE FINISH RAIL MOULDING)				
C1MY 71254A64-A		4or6	71B	A	61/62
254A68	SEAL (REAR DOOR OUTSIDE UPPER MOULDING RETAINER)				
COMB 58254A68-A	Plastic sealer	6	57,58,77	A	60
25470	BRACKET (REAR DOOR WINDOW FRONT GUIDE ADJUSTING) LOWER				
B7A 5725470-A		2	53,54,57,75	D	60
C4VY 5325470-A		4	53	D	64
254A70	CLIP (FRONT & REAR DOOR OUTSIDE MOULDING)				
C1VY 57254A70-A	(4) for front door and (2) for rear door	AR	All	D	61/64
25472	BUTTON (REAR DOOR WINDOW GUIDE) LOWER REAR				
B7A 5725472-A	Nylon	2	53, 54, 57, 75	D	60
25474-5	WEATHERSTRIP (REAR DOOR) OUTSIDE UPPER REAR EXTENSION				
COAB 5725474-A	R.H.	1	75	A	61
COAB 5725475-A	L.H.	1	75	A	61
C2AZ 7525474-A	R.H.	2	75	A	62
C2AZ 7525475-A	L.H.	2	75	A	62
C3MY 7525474-A	R.H.	2	75A,B	A	63
	Outer	1	75	A	64
C3MY 7525475-A	L.H.	2	75A,B	A	63
	Outer	1	75	A	64
C4MY 5725474-A	R.H. - inner	1	57	A	64
C4MY 5725475-A	L.H. - inner	1	57	A	64
254A74-5	ORNAMENT (REAR DOOR TRIM) UPPER				
C1VB 57254A74-D	R.H. - walnut finish	1	All	D	61/63
C1VB 57254A75-D	L.H. - walnut finish	1	All	D	61/63
C1VY 57254A74-C	R.H. - brushed aluminum finish	1	All	D	61/63
C1VY 57254A75-C	L.H. - brushed aluminum finish	1	All	D	61/63

GROUP AND PART NUMBER	DESCRIPTION, SIZE, ETC.	NO. REQ'D	MODEL OR ENGINE CUBIC INCH DISPLACEMENT	VEHICLE CODE	YEAR 19____
254A74-5	PANEL (REAR DOOR TRIM FINISH)				
C4MY 54254A74-A	R. H. - wood grain	1	54F, 57C, F, 75F	A	64
C4MY 54254A75-A	L. H. - wood grain	1	54F, 57C, F, 75F	A	64
25476	WEATHERSTRIP (REAR DOOR GLASS RUN) REAR				
B9MB 7725476-B	15-1/8" long - includes clips	4	77	A	60
COAB 5725476-A	20-3/8" long - (2) R. H. - (2) L. H.	4	75	A	61
C2AZ 7525476-B		4	75	A	62/64
25478-9	WEATHERSTRIP (REAR DOOR INSIDE UPPER REAR EXTENSION)				
C4MY 7525478-A	R.H.	1	75	A	64
C4MY 7525479-A	L.H.	1	75	A	64
254A78	MOULDING (REAR DOOR OUTSIDE APPLIQUE)				
C2GY 54254A78-A	(a)	2	54	C	62/63
51855-S8	Screw-pan hd. cr. rec. -No. 8-32 x 3/8"	4	a		
25482	SEAL (REAR DOOR OUTSIDE HANDLE) PUSH BUTTON				
COMB 5825482-A	Rubber	2	57, 58, 77	A	60
254A88-9	MOULDING (REAR DOOR GLASS WEATHERSTRIP RETAINER)				
C4AZ 57254A88-A	R. H. - front (§)	1	57	A	64
C4AZ 57254A89-A	L. H. - front (§)	1	57	A	64
§ Package also includes -					
	(2) 63309-S8 rivet				
C3AZ 75254A88-A	R. H. - front (Δ)	1	75	A	64
C3AZ 75254A89-A	L. H. - front (Δ)	1	75	A	64
Δ Package also includes -					
	(2) 63301-S8 rivet				
25502-3	MOULDING (REAR DOOR TRIM) CENTER				
COMB 5725502-B	R. H. - 27-1/8" long	1	57F	A	60
COMB 5725503-B	L. H. - 27-1/8" long	1	57F	A	60
C1MB 5425502-C	R. H. - 10-1/4" wide	1	54B, 71A, B, 75	A	61
C1MB 5425503-C	L. H. - 10-1/4" wide	1	54B, 71A, B, 75	A	61
C2MB 5425502-A	R. H.	1	54B, 71B, 75B	A	62
C2MB 5425503-A	L. H.	1	54B, 71B, 75B	A	62
C4GY 5425502-A	R. H. - 23-19/64" long	1	54C, D	C	64
C4GY 5425503-A	L. H. - 23-19/64" long	1	54C, D	C	64
25504-5	MOULDING (REAR DOOR TRIM) FRONT				
C4GY 5425504-A	R. H. - upper - 16-1/4" long	1	54C, D	C	64
C4GY 5425505-A	L. H. - upper - 16-1/4" long	1	54C, D	C	64
COLB 7525504-C	R. H.	1	54, 75	D	60
COLB 7525505-C	L. H.	1	54, 75	D	60
C4VY 5325504-A	Upper - use on vehicles built prior to 11-18-63	2	All	D	64
C4VY 5325504-B	Upper - use on vehicles built after 11-17-63	2	All	D	64

GROUP AND PART NUMBER	DESCRIPTION, SIZE, ETC.		NO. REQ'D	MODEL OR ENGINE CUBIC INCH DISPLACEMENT	VEHICLE CODE	YEAR 19____
255A04	RETAINER (REAR DOOR OUTSIDE LOWER MOULDING) REAR					
C4MY 54255A04-A			2	54B, 57D	A	64
255A06-7	PLATE (REAR DOOR OUTSIDE UPPER REAR EXTENSION)					
C4MY 57255A06-A	R.H.		1	57	A	64
C4MY 57255A07-A	L.H.		1	57	A	64
25514-5	MOULDING (REAR DOOR WINDOW GARNISH)					
COAB 7525514-AP	R.H. - in prime - includes weatherstrip	(a)	1	75	A	61
COAB 7525515-AP	L.H. - in prime - includes weatherstrip	(a)	1	75	A	61
C2AB 5425514-AP	R.H. - in prime - includes weatherstrip	(a)	1	54, 58, 71	A	61/62
C2AB 5425515-AP	L.H. - in prime - includes weatherstrip	(a)	1	54, 58, 71	A	61/62
C2AB 7525514-AP	R.H. - in prime - includes weatherstrip	(a)	1	75	A	62
C2AB 7525515-AP	L.H. - in prime - includes weatherstrip	(a)	1	75	A	62
53038-S	Screw-oval hd. cr. rec. -No. 8-15 x 3/4"		AR	a		
53066-S	Screw-oval hd. cr. rec. -No. 8-15 x 1-1/4"		AR	a		
25522-3	MOULDING (REAR DOOR) OUTSIDE TOP REAR					
COAZ 7125522-B	R.H. - rustless steel		1	71	A	61/64
COAZ 7125523-B	L.H. - rustless steel		1	71	A	61/64
25532-3	MOULDING (REAR DOOR) OUTSIDE					
C3MY 5425532-A	R.H. - 38" long	(Δ)	1	54,57,71,75	A	63/64
C3MY 5425533-A	L.H. - 38" long	(Δ)	1	54,57,71,75	A	63/64

Δ Package also includes -
(1) C3MY-54254A34-A retainer (1) C3MB-7129108-A retainer (2) 354397-S100 nut and washer-No. 10-24
(4) C3MY-6229108-A retainer (6) C3MY-7129192-A retainer (1963)

C3YY 54254A16-A	R.H. - upper - 36-3/5" long	(§)	1	54, 71A, B, C, E	B	62/63
C3YY 54254A17-A	L.H. - upper - 36-3/5" long	(§)	1	54, 71A, B, C, E	B	62/63

§ Package also includes -
(3) C2GY-16A076-A retainer (1) 376792-S nut-No. 10-24 (1) 378324-S screw-No. 10-24

C1KB 54254A16-C	R.H. - rustless steel - 36-21/32" long	(‡)	1	54	C	60/61
C1KB 54254A17-C	L.H. - rustless steel - 36-21/32" long	(‡)	1	54	C	60/61

‡ Package also includes -
(2) C1AZ-6421094-A retainer (3) 353911-S100 nut and washer - No. 10-24 (1) 359155-S8 screw-truss hd. - No. 8-32

C1KB 7125532-B	R.H. - rustless steel		1	71	C	60/61
C1KB 7125533-B	L.H. - rustless steel		1	71	C	60/61
C2GY 5425532-A	R.H. - 36-5/8" long	(§§)	1	54, 71	C	62
C2GY 5425533-A	L.H. - 36-5/8" long	(§§)	1	54, 71	C	62

§§ Package also includes -
(4) C2GY-16A076-A retainer (2) C2GY-16A076-B retainer (2) 359606-S8 nut

CONTINUED ON NEXT PAGE

GROUP AND PART NUMBER	DESCRIPTION, SIZE, ETC.		NO. REQ'D	MODEL OR ENGINE CUBIC INCH DISPLACEMENT	VEHICLE CODE	YEAR 19__
25532-3	MOULDING (REAR DOOR) OUTSIDE (CONTINUED)					
COLB 5725532-A	R. H. - rustless steel- rear	(a)	1	53, 57	D	60
COLB 5725533-A	L. H. - rustless steel - rear	(a)	1	53, 57	D	60
C1VY 57254A16-B	R. H. - rustless steel	(†)	1	All	D	61/63
C1VY 57254A17-B	L. H. - rustless steel	(†)	1	All	D	61/63

† Package also includes -
(1) C1VY-57254A70-A clip (2) C1VB-5729192-A retainer (1) 34053-S8 nut
(3) C1VY-5729144-A retainer

C4VY 5325532-A	R. H.	(‡‡)	1	All	D	64
C4VY 5325533-A	L. H.	(‡‡)	1	All	D	64

‡‡ Package also includes -
(1) C1VB-5720886-A retainer (3) C1VY-5729144-A retainer (1) 376792-S nut
(1) C1VY-57254A70-A clip (2) C1VB-5729192-A retainer

COLY 5725418-A	Kit-retainer		1	a		
COLB 5729316-A	Retainer		AR	a		
COLB 63290A96-A	Retainer		AR	a		
50502-S	Screw		AR	a		
354672-S	Nut and washer		AR	a		

25540-1	MOULDING (REAR DOOR) OUTSIDE UPPER					
COMB 5825540-B	R. H. - rustless steel - 32-1/2" long	(Δ)	1	57, 58, 77	A	60
COMB 5825541-B	L. H. - rustless steel - 32-1/2" long	(Δ)	1	57, 58, 77	A	60

Δ Package also includes -
(3) COMB-58254A68-A seal (3) COMB-64290A08-A retainer (3) 354479-S7 nut & wshr.assy.

C1MB 5425674-A	R. H. - rustless steel - 37-3/8" long	(§)(a)	1	54A, 58, 71A, 75A	A	61
C1MB 5425675-A	L. H. - rustless steel - 37-3/8" long	(§)(a)	1	54A, 58, 71A, 75A	A	61
C1MB 5425674-C	R. H. - rustless steel - 37-3/8" long	(§)(b)	1	54B, 75B	A	61
C1MB 5425675-C	L. H. - rustless steel - 37-3/8" long	(§)(b)	1	54B, 75B	A	61

§ Package also includes -
(2) C1MB-5420842-A retainer (3) C1AZ-6421094-B retainer (2) 34655-S7 nut & wshr.assy.
(2) C1MB-6220842-A retainer

C2MY 5425540-A	Rustless steel - 30-3/4" long		2	54, 71A, C, 75	A	62

Package also includes -
(1) C1MB-6220842-A retainer (1) 34655-S8 nut and washer (3) 353911-S100 nut and washer
(3) COAB-6421094-A retainer

C2YY 5425540-A	R. H. - lower - 24-1/4" long	(‡)	1	54	B	62
C2YY 5425541-A	L. H. - lower - 24-1/4" long	(‡)	1	54	B	62

‡ Package also includes -
(1) C2YY-5425553-A retainer (1) C2YY-6229144-A retainer (1) 359606-S8 nut
(2) C2AZ-62290B82-A retainer (1) 359167-S8 screw

C3GY 5425540-A	Rustless steel - 39-9/16" long		2	54, 71A, B	C	63

Package also includes -
(2) C2DZ-16A076-C retainer (4) C2OZ-16A076-A retainer (2) 359606-S8 nut

C4GY 5425540-A	R. H.	(†)	1	54B, C, D, 71B	C	64
C4GY 5425541-A	L. H.	(†)	1	54B, C, D, 71B	C	64

† Package also includes -
(1) C3OZ-16A076-A retainer (1) C4DB-6221094-C retainer (1) 378324-S screw-No. 10-24
(4) C4DZ-16A076-A retainer (1) 376792-S nut-No. 10-24

GROUP AND PART NUMBER	DESCRIPTION, SIZE, ETC.	NO. REQ'D	MODEL OR ENGINE CUBIC INCH DISPLACEMENT	VEHICLE CODE	YEAR 19____
25542-3	MOULDING (REAR DOOR OUTSIDE) TOP				
PB9M 5825542-A	R.H. - rustless steel - 30-1/8" long - snap-on	1	58	A	60
PB9M 5825543-A	L.H. - rustless steel - 30-1/8" long - snap-on	1	58	A	60
COAB 5825542-A	R.H. - rustless steel - snap-on	1	54,58	A	61
COAB 5825543-A	L.H. - rustless steel - snap-on	1	54,58	A	61
COAB 7125542-A	R.H. - rustless steel - snap-on	1	71	A	61/64
COAB 7125543-A	L.H. - rustless steel - snap-on	1	71	A	61/64
C2AB 5425542-A	R.H. - rustless steel	1	54	A	62
C2AB 5425543-A	L.H. - rustless steel	1	54	A	62
C3MY 5425542-A	R.H. - rustless steel - 41" long	1	54	A	63/64
C3MY 5425543-A	L.H. - rustless steel - 41" long	1	54	A	63/64
C2OZ 5425542-A	R.H. - rustless steel	1	54	B	62/63
C2OZ 5425543-A	L.H. - rustless steel	1	54	B	62/63
C3OZ 7125542-A	R.H. - rustless steel	1	71	B	63
C3OZ 7125543-A	L.H. - rustless steel	1	71	B	63
CODB 5825542-C	R.H. - rustless steel ☆	1	54	C	60/62
		1	54B	C	63
CODB 5825543-C	L.H. - rustless steel ☆	1	54	C	60/62
		1	54B	C	63
C1KB 7125542-B	R.H. - rustless steel ☆	1	71	C	60/62
		1	71B, C, D	C	63/64
C1KB 7125543-B	L.H. - rustless steel ☆	1	71	C	60/62
		1	71B, C, D	C	63/64
	☆Use 20982-3 for front moulding				
C3DZ 5425542-A	R.H. - rustless steel	1	54B, C, D	C	64
C3DZ 5425543-A	L.H. - rustless steel	1	54B, C, D	C	64
25546-7	MOULDING (REAR DOOR TRIM) REAR				
COLB 7525546-B	R.H.	1	54, 75	D	60
COLB 7525547-B	L.H.	1	54, 75	D	60
25553	RETAINER (REAR DOOR OUTSIDE LOWER MOULDING)				
C2YY 5425553-A		2	54	B	62
25554-5	MOULDING (REAR DOOR OUTSIDE BELT)				
C2MY 5425554-A	R.H. - 31-1/2" long (a,b)	1	54B	A	62
C2MY 5425555-A	L.H. - 31-1/2" long (a,b)	1	54B	A	62
C2MY 7525554-A	R.H. - 25-7/8" long (a,b)	1	75B	A	62
C2MY 7525555-A	L.H. - 25-7/8" long (a,b)	1	75B	A	62
C4MY 5725554-A	R.H. - includes weatherstrip	1	57	A	64
C4MY 5725555-A	L.H. - includes weatherstrip	1	57	A	64
COLB 57254A18-A	R.H. - rustless steel - 31-7/8" long (c)	1	53, 54, 57, 75	D	60
COLB 57254A19-A	L.H. - rustless steel - 31-7/8" long (c)	1	53, 54, 57, 75	D	60
C1VB 5725554-B	Rustless steel (d)	2	All	D	61/63
C2MY 5420946-A	Clip	1	a		
C1VY 5721060-B	Retainer - (4) R.H. and (4) L.H.	8	d		
C2SZ 6320880-B	Retainer	1	b		
BAK 6329128-A	Retainer	AR	c		
353577-S2	Nut-sleeve type-1/8"	AR	c		
354613-S8	Screw-fill. hd. -No. 8-32 x 5/16" long	1	b		

GROUP AND PART NUMBER	DESCRIPTION, SIZE, ETC.	NO. REQ'D	MODEL OR ENGINE CUBIC INCH DISPLACEMENT	VEHICLE CODE	YEAR 19____
25556-7	MOULDING (REAR DOOR OUTSIDE) LOWER				
C3MY 5425556-A	R.H. - rustless steel - 30-1/16" long (‡)	1	54B, 75B, C	A	63
C3MY 5425557-A	L.H. - rustless steel - 30-1/16" long (‡)	1	54B, 75B, C	A	63
‡ Package also includes -					
(1) C2MY-16A027-A retainer	(1) C3MY-5420954-A retainer		(1) 378303-S	screw-No.10-24 x 7/16" long	
(2) C2GY-16A076-A retainer	(3) 359606-S8 nut-No.10-24				
C4MY 5425556-A	R.H. - rustless steel - 29-3/4" (†)	1	54A, 57A, 71A, C	A	64
C4MY 5425557-A	L.H. - rustless steel - 29-3/4" (†)	1	54A, 57A, 71A, C	A	64
† Package also includes -					
(2) C3OZ-59407A12-A retainer	(1) 378321-S screw		(1) 376792-S	nut-No.10-24	
(1) C2OZ-6240368-A retainer					
C4MY 5425556-B	R.H. - 34-13/64" long (††)	1	54B, 57D	A	64
C4MY 5425557-B	L.H. - 34-13/64" long (††)	1	54B, 57D	A	64
†† Package also includes -					
(1) C4MY-5420842-A retainer	(1) C4MY-54255A04-A retainer		(1) 378321-S15	screw	
(3) C4MY-5421094-A retainer	(1) 376792-S nut				
C4MY 5425556-C	R.H. - 30-1/4" long (‡‡)	1	54F, 57C, F, 75F	A	64
C4MY 5425557-C	L.H. - 30-1/4" long (‡‡)	1	54F, 57C, F, 75F	A	64
‡‡ Package also includes -					
(4) C4MY-5420954-B retainer	(4) 359606-S nut				
C3YY 5425556-A	R.H. - rustless steel - 36-7/8" long (§)	1	54, 71A, B, C, E	B	63
C3YY 5425557-A	L.H. - rustless steel - 36-7/8" long (§)	1	54, 71A, B, C, E	B	63
§ Package also includes -					
(3) C2OZ-16A076-A retainer	(1) C2SZ-6320880-B retainer		(1) 378324-S	screw-No.10-24	
(1) C3OZ-6220884-A retainer	(1) 376792-S nut-No.10-24				
C3GY 5425556-A	R.H. - rustless steel - 25-61/64" long (Δ)	1	54, 71A, B	C	63
C3GY 5425557-A	L.H. - rustless steel - 25-61/64" long (Δ)	1	54, 71A, B	C	63
Δ Package also includes -					
(2) C2DZ-16A076-C retainer	(2) C2OZ-16A076-A retainer		(2) 359606-S8	nut-No.10-24	
C4GY 5425556-A	R.H. - rustless steel (§§)	1	54B, C, D, 71B	C	64
C4GY 5425557-A	L.H. - rustless steel (§§)	1	54B, C, D, 71B	C	64
§§ Package also includes -					
(2) C3OZ-16A076-A retainer	(4) C4DB-16A076-A retainer		(2) 359606-S8	nut-No.10-24	

25558-9	MOULDING (REAR DOOR TRIM)				
COMB 5725558-B	R.H. - rustless steel - 29-7/8" long - upper	1	57F	A	60
COMB 5725559-B	L.H. - rustless steel - 29-7/8" long - upper	1	57F	A	60
COMB 5825558-A	R.H. - rustless steel - 27-1/4" long - lower	1	57, 58, 77	A	60
COMB 5825559-A	L.H. - rustless steel - 27-1/4" long - lower	1	57, 58, 77	A	60
COMB 5825558-B	R.H. - rustless steel - 30-1/8" long - upper	1	57A, 58A, 77A	A	60
COMB 5825559-B	L.H. - rustless steel - 30-1/8" long - upper	1	57A, 58A, 77A	A	60
C4GY 5425558-A	R.H. - upper	1	54C, D	C	64
C4GY 5425559-A	L.H. - upper	1	54C, D	C	64
COLB 5725568-C	R.H. - 31-3/4" long	1	53, 57	D	60
COLB 5725569-C	L.H. - 31-3/4" long	1	53, 57	D	60
C1VY 5725558-C	R.H. - upper	1	All	D	61/63
C1VY 5725559-C	L.H. - upper	1	All	D	61/63
C4VY 5325558-A	Upper - use on vehicles built prior to 11-18-63	2	All	D	64
C4VY 5325558-B	Upper - use on vehicles built after 11-17-63	2	All	D	64

GROUP AND PART NUMBER	DESCRIPTION, SIZE, ETC.	NO. REQ'D	MODEL OR ENGINE CUBIC INCH DISPLACEMENT	VEHICLE CODE	YEAR 19____
25566-7	EXTENSION (REAR DOOR OUTSIDE BELT MOULDING)				
C2MY 5425566-A	R.H. (a)	1	54B, 65B	A	62
C2MY 5425567-A	L.H. (a)	1	54B, 65B	A	62
C2MY 7525566-A	R.H. (a)	1	75B	A	62
C2MY 7525567-A	L.H. (a)	1	75B	A	62
52344-S13	Screw-oval hd. cr. rec. -No. 8-15 x 1/2" long	1	a		
354933-S32	Nut-sleeve-3/16"	2	a		
25568-9	REFER TO GROUP 25558-9				
25576-7	REFER TO GROUP 27588-91				
25578-9	MOULDING (REAR DOOR TRIM) LOWER				
COMB 5725578-A	R.H. - rustless steel - 26-1/4" long	1	57F	A	60
COMB 5725579-A	L.H. - rustless steel - 26-1/4" long	1	57F	A	60
COMB 5825578-A	R.H. - rustless steel - 26-5/8" long	1	57B, 58B, 77B	A	60
COMB 5825579-A	L.H. - rustless steel - 26-5/8" long	1	57B, 58B, 77B	A	60
C3MY 7525578-A	26-5/16" long	2	75C	A	63
C4MY 5725578-A		2	54F, 57, 75F	A	64
C4GY 5425578-A	R.H. - 21-11/16" long (Δ)	1	54C, D	C	64
C4GY 5425579-A	L.H. - 21-11/16" long (Δ)	1	54C, D	C	64
Δ Package also includes - (3) 53027-S screw-No. 8-18 x 5/8"					
C1VY 5725578-A		2	All	D	61/63
C4VY 5325578-A		2	All	D	64
25586-7	MOULDING (REAR DOOR OUTSIDE) UPPER FRONT				
C2MY 5425586-A	R.H. - rustless steel - 25-1/8" long (Δ)	1	54, 71A, C, 75	A	62
C2MY 5425587-A	L.H. - rustless steel - 25-1/8" long (Δ)	1	54, 71A, C, 75	A	62
Δ Package also includes - (2) C2MY-16A027-A retainer (1) C2MY-6229108-A retainer (3) 359606-S8 nut (1) C2MY-6220842-A retainer (1) 34053-S8 nut					
25596-7	WEATHERSTRIP (REAR DOOR GLASS AT BELT) OUTSIDE				
COMB 5725596-A	R.H. - 23-1/4" long	1	57	A	60
COMB 5725597-A	L.H. - 23-1/4" long	1	57	A	60
COMB 5825596-A	With clips - 29-7/8" long	2	58	A	60
COMB 7725596-A	R.H. - with clips - 30-1/4" long	1	77	A	60
COMB 7725597-A	L.H. - with clips - 30-1/4" long	1	77	A	60
COAB 5725596-A	R.H.	1	75	A	61
COAB 5725597-A	L.H.	1	75	A	61
C2AB 5425596-A	R.H. - with clips - also used inside	1	54, 58, 71	A	61/62
C2AB 5425597-A	L.H. - with clips - also used inside	1	54, 58, 71	A	61/62
C2AB 7525596-A	R.H. - with clips - also (1) used at inside garnish	1	75	A	62
C2AB 7525597-A	L.H. - with clips - also (1) used at inside garnish	1	75	A	62
C3AZ 5425596-A	R.H. - with clips	1	54, 71	A	63
C3AZ 5425597-A	L.H. - with clips	1	54, 71	A	63
C3AZ 7525596-A	R.H. - with clips	1	75	A	63/64
C3AZ 7525597-A	L.H. - with clips	1	75	A	63/64
C4AZ 7125596-A	R.H. - with clips	1	54, 71	A	64
C4AZ 7125597-A	L.H. - with clips	1	54, 71	A	64
C2OZ 5425596-A	R.H. - with clips	2	54, 71	B	62/63
C2OZ 5425597-A	L.H. - with clips	2	54, 71	B	62/63
CODZ 5825596-E	R.H. - with clips - 24" long	2	54, 71	C	60/64
CODZ 5825597-E	L.H. - with clips - 24" long	2	54, 71	C	60/64
BAK 5725596-C	R.H. - rustless steel and rubber - 32-1/4" long	1	53, 54, 57, 75	D	60
BAK 5725597-C	L.H. - rustless steel and rubber - 32-1/4" long	1	53, 54, 57, 75	D	60
C1VY 5725596-B		2	All	D	61/63
C4VY 5325596-A		2	All	D	64
C4VY 7425596-A	Stabilizer	4	All	D	64

GROUP AND PART NUMBER	DESCRIPTION, SIZE, ETC.	NO. REQ'D	MODEL OR ENGINE CUBIC INCH DISPLACEMENT	VEHICLE CODE	YEAR 19____
25622	PLATE (QUARTER PANEL NAME)				
COLB 6525622-A	Aluminum - "MARK-V"	2	54, 65, 68, 75	D	60
C1VB 5725622-A	Aluminum - "CONTINENTAL" - (Δ) with (5) studs - use on vehicles built prior to 11-13-61	2	All	D	61/62
C1VY 5725622-A	Zinc die cast - "CONTINENTAL" - with (6) (Δ) studs - use on vehicles built after 11-12-61	2	All	D	61/63
	Δ Package also includes - (6) 375890-S102 nut-1/8" sleeve type				
C4VY 5325622-A	Zinc die cast - CONTINENTAL	2	All	D	64
	Package also includes - (5) 376725-S nut-1/8"-sleeve type				
25674-5	REFER TO GROUP 25540-1				
25690-1	STRIP (REAR DOOR BELT INNER PANEL) FINISH				
BAK 5725690-B	R. H. - rustless steel (a)	1	53, 54, 57, 75	D	60
BAK 5725691-B	L. H. - rustless steel (a)	1	53, 54, 57, 75	D	60
52718-S8	Screw-pan hd. cr. rec. -No. 6-18 x 3/8"	1	a		
25712-3	GLASS (REAR DOOR)				
PB9M 5725712-A	Clear	2	57	A	60
PB9M 5725712-B	Tinted	2	57	A	60
PB9M 5825712-A	Clear	2	58	A	60
PB9M 5825712-B	Tinted	2	58	A	60
PB9M 7725712-A	Clear	2	77	A	60
PB9M 7725712-B	Tinted	2	77	A	60
COAB 5825712-C	Clear	2	54, 58	A	61
COAB 5825712-D	Tinted	2	54, 58	A	61
COAB 7525712-A	Clear	2	75	A	61
COAB 7525712-B	Tinted	2	75	A	61
COAZ 7125712-C	Clear	2	71	A	61/62
COAZ 7125712-D	Tinted	2	71	A	61/62
C2AZ 5425712-A	Clear	2	54	A	62
C2AZ 5425712-B	Tinted	2	54	A	62
C2AB 7525712-A	Clear	2	75	A	62
C2AB 7525712-B	Tinted	2	75	A	62
C3MY 5425712-A	Clear	2	54	A	63/64
C3MY 5425712-B	Tinted	2	54	A	63/64
C3AZ 7125712-A	Clear	2	71	A	63/64
C3AZ 7125712-B	Tinted	2	71	A	63/64
C3MY 7525712-A	Clear	2	75	A	63/64
C3MY 7525712-B	Tinted	2	75	A	63/64
C4MY 5725712-A	Clear	2	57	A	64
C4MY 5725712-B	Tinted	2	57	A	64
C2OZ 5425712-A	Clear	2	54	B	62/63
C2OZ 5425712-B	Tinted	2	54	B	62/63
C3OZ 7125712-A	Clear	2	71B, E	B	63
C3OZ 7125712-B	Tinted	2	71B, E	B	63
CODZ 5825712-J	Clear	2	54	C	60/63
CODZ 5825712-K	Tinted	2	54	C	61/63
C1DZ 7125712-J	Clear	2	71	C	61/64
C1DZ 7125712-K	Tinted	2	71	C	61/64
C3DZ 5425712-A	Clear	2	54	C	64
C3DZ 5425712-B	Tinted	2	54	C	64
BAK 5725712-A	Clear	2	57	D	60
BAK 5725712-B	Tinted - GREEN	2	57, 75	D	60

CONTINUED ON NEXT PAGE

GROUP AND PART NUMBER	DESCRIPTION, SIZE, ETC.	NO. REQ'D	MODEL OR ENGINE CUBIC INCH DISPLACEMENT	VEHICLE CODE	YEAR 19____
25712-3	GLASS (REAR DOOR) CONTINUED				
BAK 5725712-C	Clear	2	53	D	60
BAK 5725712-D	Tinted - GREEN	2	53, 54	D	60
C3VY 5325712-A	R.H. - clear	1	53	D	61/63
C3VY 5325713-A	L.H. - clear	1	53	D	61/63
C3VY 5325712-B	R.H. - tinted - GREEN	1	53	D	61/63
C3VY 5325713-B	L.H. - tinted - GREEN	1	53	D	61/63
C3VY 5725712-A	R.H. - clear	1	74	D	61/63
C3VY 5725713-A	L.H. - clear	1	74	D	61/63
C3VY 5725712-B	R.H. - tinted - GREEN	1	74	D	61/63
C3VY 5725713-B	L.H. - tinted - GREEN	1	74	D	61/63
C4VY 5325712-A	Clear	2	53	D	64
C4VY 5325712-B	Tinted	2	53	D	64
C4VY 7425712-A	Clear	2	74	D	64
C4VY 7425712-B	Tinted	2	74	D	64
25723	GLASS (REAR DOOR STATIONARY WINDOW)				
C2OB 5426870-A	Clear	2	54	B	62/63
C2OB 5426870-B	Tinted	2	54	B	62/63
C3OZ 7126870-A	Clear	2	71	B	63
C3OZ 7126870-B	Tinted	2	71	B	63
CODB 5826870-E	Clear	2	54	C	60/63
CODB 5826870-F	Tinted	2	54	C	61/63
C1KB 7125723-A	Clear	2	71	C	60/64
C1KB 7125723-B	Tinted	2	71	C	61/64
C3DZ 5426870-A	Clear	2	54	C	64
C3DZ 5426870-B	Tinted	2	54	C	64
25742-3	RUN (REAR DOOR GLASS) REAR OUTER				
COAB 5725742-A	R.H.	1	75	A	61
COAB 5725743-A	L.H.	1	75	A	61
C2AZ 7525742-A	R.H.	1	75	A	62
C2AZ 7525743-A	L.H.	1	75	A	62
C3AZ 7525742-A	R.H.	1	75	A	63
C3AZ 7525743-A	L.H.	1	75	A	63
C4MY 5725742-A	R.H.	1	57	A	64
C4MY 5725743-A	L.H.	1	57	A	64
C4MY 7525742-A	R.H.	1	75	A	64
C4MY 7525743-A	L.H.	1	75	A	64
25748	RUN (REAR DOOR GLASS) LOCK SIDE				
PB9M 5825760-A		2	58	A	60
COAB 5825748-B	(a)	2	54, 58, 71	A	61
C2AZ 5425748-A		2	54, 71	A	62
C3AZ 5425748-A		2	54, 71	A	63/64
44725-S8	Washer-flat-5/16"	1	a		
359605-S2	Screw and washer assy.-5/16"-24 x 5/8"	3	a		
371513-S8	Stud-5/16"-24	1	a		
25750	ROLLER (REAR DOOR WINDOW FRONT GUIDE) LOWER				
B7A 5725750-A		2	53, 54, 57, 75	D	60
25754	RUN (REAR DOOR GLASS) REAR INNER				
COAB 5725754-A		2	75	A	61
C2AZ 7525754-A		2	75	A	62/64
C4MY 5725754-A		2	57	A	64

GROUP AND PART NUMBER	DESCRIPTION, SIZE, ETC.	NO. REQ'D	MODEL OR ENGINE CUBIC INCH DISPLACEMENT	VEHICLE CODE	YEAR 19____
25760	REFER TO GROUP 25748				
25764	RUN (REAR DOOR GLASS)				
	NS-87-1/2" long - cut from C3AZ-6221550-A	2	54, 71	A	63
		2	54, 71	C	62/63
25766	RUN (DOOR GLASS TOP)				
COAB 5825766-B	42" long	AR	All	A	60
	Front door - top - cut to 21-13/64"	2	58	A	60
	Front door - rear - cut to 30-1/8"	2	58	A	60
	Rear door - top - cut to 35-1/4"	2	58	A	60
	Front door - top - cut to 26-1/2"	2	64	A	60
	Front door - rear - cut to 29-13/64"	2	64	A	60
	Cut to length where required	2	54, 58, 64, 71	A	61/62
25776	ROLLER (REAR DOOR WINDOW FRONT GUIDE) UPPER				
B7A 5725776-A	Nylon - 1-1/64" top diameter - 21/64" neck diameter	2	53, 54, 57, 75	D	60
25780	STOP (DOOR WINDOW) UPPER				
B9A 5725780-A	(4) req'd. - for front door	4	65, 75, 76	A	61
	(2) req'd. - for rear door	2	75	A	61
25796-7	RETAINER (REAR DOOR GLASS RUN) FRONT				
C2OZ 5425796-A	R. H. (a)	1	54, 71	B	62/63
C2OZ 5425797-A	L. H. (a)	1	54, 71	B	62/63
C2DZ 5825796-B	R. H. (a)	1	54, 71	C	62/64
C2DZ 5825797-B	L. H. (a)	1	54, 71	C	62/64
373460-S7	Screw and washer-pan hd. cr. rec. -1/4"-20 x 1/2"	1	a		
25804-5	RETAINER (REAR DOOR GLASS RUN LOCK SIDE)				
C2AZ 5425804-A	R. H.	1	54, 71	A	62
C2AZ 5425805-A	L. H.	1	54, 71	A	62
C3AZ 5425804-B	R. H.	1	54, 71	A	63/64
C3AZ 5425805-B	L. H.	1	54, 71	A	63/64
25808	SLIDE (REAR DOOR WINDOW STABILIZER ARM)				
B7A 5725808-B	(a)	2	53, 54, 57, 75	D	60
33923-S8	Nut-hex. -5/16"	2	a		
25816	STOP (REAR DOOR WINDOW) REAR UPPER				
BAK 5725816-A	Steel and rubber capped - 5/8" diameter	2	53, 54, 57, 75	D	60
25824-5	WEATHERSTRIP (REAR DOOR GLASS) FRONT				
BAE 7725824-B	R. H. - 15-3/16" long - cut to 15"	1	57, 77	A	60
BAE 7725825-B	L. H. - 15-3/16" long - cut to 15"	1	57, 77	A	60
COAB 7525824-C	R. H.	1	75	A	61/62
C3AZ 7525824-A	R. H. - necessary to remove 1/4" from bottom for model 57	1	57, 75	A	63/64
C3AZ 7525825-A	L. H. - necessary to remove 1/4" from bottom for model 57	1	57, 75	A	61/64
B9LB 5725824-A	R.H. - 14-7/8" long	1	57,75	D	60
B9LB 5725825-A	L.H. - 14-7/8" long	1	57,75	D	60
C1VB 5725824-B	R.H. - 16" long	1	All	D	61/62
		1	74	D	63
C1VB 5725825-B	L.H. - 16" long	1	All	D	61/62
		1	74	D	63
C4VY 7425824-A	R. H.	1	74	D	64
C4VY 7425825-A	L. H.	1	74	D	64

GROUP AND PART NUMBER	DESCRIPTION, SIZE, ETC.	NO. REQ'D	MODEL OR ENGINE CUBIC INCH DISPLACEMENT	VEHICLE CODE	YEAR 19____
25852	RUN (REAR DOOR GLASS) LOWER HINGE SIDE				
COAB 5825852-B		2	54,58,71	A	61/62
25860-1	WEATHERSTRIP (REAR DOOR GLASS AT BELT) INSIDE				
COMB 5725860-B	24" long	2	57	A	60
COMB 5825860-B	27" long	2	58	A	60
COMB 7725860-B	30-1/2" long	2	77	A	60
C3MY 5425860-A	32-7/8" long	2	54,71	A	63
C3MY 7525860-A	29" long	2	75	A	63
C4AZ 5425860-A	R. H.	1	54A	A	64
C4AZ 5425861-A	L. H.	1	54A	A	64
C4MY 5725860-A	R. H. - less clips	1	57,75	A	64
C4MY 5725861-A	L. H. - less clips	1	57,75	A	64
C4AZ 7125860-A	Less clips - 32-7/8" long	2	54B,C,F,71	A	64
C1VB 5725860-B		2	All	D	61/63
C4VY 5325860-A		2	All	D	64
25886	BUTTON (REAR DOOR WINDOW) FRONT GUIDE				
BAK 5725886-B	Steel with nylon button	2	53, 54, 57, 75	D	60
25894	BUTTON (REAR DOOR WINDOW)				
BAK 5725894-B	Steel with nylon button - rear guide	2	53, 54, 57, 75	D	60
C4VY 7425894-B	Rear slide	6	74	D	64
26000-1	RUN & WEATHERSTRIP (REAR DOOR GLASS) REAR				
B9MB 7726000-B	R. H. - 16-7/8" long (a)	1	77	A	60
B9MB 7726001-B	L. H. - 16-7/8" long (a)	1	77	A	60
33923-S8	Nut-hex. -5/16"-24	1	a		
44723-S8	Washer-flat-5/16"	1	a		
371242-S8	Stud-socket hd. -5/16"-24 x 1-3/8" long	1	a		
26008-9	ORNAMENT (REAR DOOR OUTSIDE) UPPER				
B9MB 5726008-B	R. H. - zinc die cast - chrome finish (a)	1	57F	A	60
B9MB 5726009-B	L. H. - zinc die cast - chrome finish (a)	1	57F	A	60
COMB 5726008-A	R. H. - zinc die cast - chrome finish (a)	1	57A, B	A	60
COMB 5726009-A	L. H. - zinc die cast - chrome finish (a)	1	57A, B	A	60
371107-S100	Nut-3/16"	2	a		
26012-3	SPACER (REAR DOOR UPPER TRIM SUPPORT)				
BAK 5726012-A	R. H. - 31-3/8" long - includes weatherstrip (a)	1	53, 54, 57, 75	D	60
BAK 5726013-A	L. H. - 31-3/8" long - includes weatherstrip (a)	1	53, 54, 57, 75	D	60
34938-S8	Washer-external tooth lock-No. 8	6	a		
52720-S8	Screw-pan hd. cr. rec. -No. 8-15 x 3/8"	6	a		
26024-5	MOULDING (REAR DOOR TRIM) BELT				
BAK 5726024-B	R. H. - rustless steel - 33" long (a)	1	57, 75	D	60
BAK 5726025-B	L. H. - rustless steel - 33" long (a)	1	57, 75	D	60
BAK 5726024-C	R. H. - rustless steel - 31-3/8" long (a)	1	53, 54	D	60
BAK 5726025-C	L. H. - rustless steel - 31-3/8" long (a)	1	53, 54	D	60
BAK 6331320-C	Retainer	4	a		
45131-S8	Nut-spring type-No. 8-15	4	a		
53038-S13	Screw-oval hd. cr. rec. -No. 8-15 x 3/4"	2	a		
354146-S2	Screw-truss hd. cr. rec. -No. 8-15	1	a		
26030-1	WEATHERSTRIP (REAR DOOR WINDOW STABILIZER) REAR				
C4VY 5326030-A	R. H. - used inner and outer - 7-11/32" long	2	All	D	64
C4VY 5326031-A	L. H. - used inner and outer - 7-11/32" long	2	All	D	64

GROUP AND PART NUMBER	DESCRIPTION, SIZE, ETC.	NO. REQ'D	MODEL OR ENGINE CUBIC INCH DISPLACEMENT	VEHICLE CODE	YEAR 19__
26050	PLATE (REAR DOOR WINDOW UPPER REAR STOP) ANCHOR				
BAK 5726050-A	Steel (a)	2	53, 54, 57, 75	D	60
34903-S8	Washer-internal tooth lock-No. 10	2	a		
50508-S8	Screw-pan hd. cr. rec. -No. 10-32 x 3/8"	2	a		
26056-9	STOP (REAR DOOR WINDOW) LOWER FRONT				
B9MB 5726059-A	Rubber - 1-1/4" O.D. - (1) R.H. (1) L.H. doors	2	57, 77	A	60
COAB 5726058-A	Rubber	2	75	A	61/64
C4AZ 5726058-A		2	57	A	64
BAK 5726056-B	R.H. (a)	1	53, 54, 57, 75	D	60
BAK 5726057-B	L.H. (a)	1	53, 54, 57, 75	D	60
52721-S8	Screw-pan hd. cr. rec. -No. 10-16 x 3/8"	2	a		
26080-1	REFER TO GROUP 23394-5				
26084	RETAINER & BRACKET (REAR DOOR STATIONARY WINDOW WEATHERSTRIP)				
C2OZ 5426084-A	(a)	2	54	B	62/63
C3OZ 7126084-A		2	71	B	63
CODB 5826084-A		2	54	C	60/63
C3DZ 5426084-A		2	54	C	64
C1KB 71262A07-A		2	71	C	60/64
376129-S8	Screw-truss hd. cr. rec. -No. 8-32 x 3/8"	2	a		
376203-S8	NS-screw-truss hd. cr. rec. -No. 8-32 x 1/4"	2	a		
26096	BRACKET (REAR DOOR WINDOW GUIDE ADJUSTMENT)				
C1VB 5726096-A		2	All	D	61/62
26192-3	BRACKET (REAR DOOR WINDOW CENTER GUIDE ANCHOR)				
BAK 5726192-A	R.H.	1	53, 54, 57, 75	D	60
BAK 5726193-A	L.H.	1	53, 54, 57, 75	D	60
262A02-3	RUN & BRACKET (REAR DOOR STATIONARY WINDOW DIVISION BAR GLASS)				
C2OB 54262A02-A		2	54	B	62/63
C3OZ 71262A02-A		2	71	B	63
C3DZ 54262A02-A	R.H.	1	54	C	60/64
CODB 58262A03-C	L.H. (a)	1	54	C	60/62
C3DZ 54262A03-A	L.H.	1	54	C	63/64
C2DZ 71262A02-A	R.H. (a)	1	71	C	60/64
C2DZ 71262A03-A	L.H. (a)	1	71	C	60/64
359214-S8	Stud	1	a		
371598-S8	Washer-lock-1/4"	1	a		
372458-S8	Nut-hex. lock-1/4"-20	1	a		
262A07	REFER TO GROUP 26084				
262A11	REFER TO GROUP 26894				
26216-7	GUIDE (REAR DOOR WINDOW) FRONT				
B9MB 5726216-B	R.H. (a)	1	57	A	60
B9MB 5726217-B	L.H. (a)	1	57	A	60
B9MB 7726216-B	R.H. (a)	1	77	A	60
B9MB 7726217-B	L.H. (a)	1	77	A	60
COAZ 5726216-A	R.H. (b)	1	57, 75	A	61/64
COAZ 5726217-A	L.H. (b)	1	57, 75	A	61/64

CONTINUED ON NEXT PAGE

GROUP AND PART NUMBER	DESCRIPTION, SIZE, ETC.	NO. REQ'D	MODEL OR ENGINE CUBIC INCH DISPLACEMENT	VEHICLE CODE	YEAR 19____
26216-7	GUIDE (REAR DOOR WINDOW) FRONT (CONTINUED)				
BAK 5726216-A	R. H. (c)	1	53, 54, 57, 75	D	60
BAK 5726217-A	L. H. (c)	1	53, 54, 57, 75	D	60
C4VY 5326216-A		4	53	D	64
C4VY 7426216-A	R. H.	1	74	D	64
C4VY 7426217-A	L. H.	1	74	D	64
33923-S8	Nut-hex. -5/16"-24	2	a, b		
44725-S7	Washer-flat-5/16"	2	a, b		
50810-S8	Screw and washer-pan hd. -No. 10-32 x 1/2"	1	b		
354666-S2	Screw-hex. washer hd. -No. 12-24 x 3/8"	4	c		
356309-S7	Lockwasher-5/16"	1	b		
359219-S2	Screw-hex. washer hd. -5/16"-24	2	a		
359605-S8	Screw and washer assy. -5/16"-24 x 5/8"	3	b		
370278-S7	Stud-socket hd. -5/16"-24 x 1-1/2" long	1	b		
371242-S8	Stud-socket hd. -5/16"-24 x 1-3/8" long	1	a		
372891-S2	Nut and retainer-No. 10-32	1	b		
262A16-7	RUN & RETAINER (REAR DOOR GLASS) HINGE SIDE				
C2AZ 54262A16-A		2	54,71	A	62
C3AZ 54262A16-B	R. H.	1	54, 71	A	63/64
C3AZ 54262A17-B	L. H.	1	54, 71	A	63/64
C1KB 71262A16-D	R. H. ☆ (a)	1	71	C	60/61
C1KB 71262A17-D	L. H. ☆ (a)	1	71	C	60/61
CODZ 58262A16-E	R. H. with retainers	1	54	C	60/62
CODZ 58262A17-E	L. H. with retainers	1	54	C	60/62
	☆For 1962 usage refer to group 21550 and 25796-7				
373460-S7	Screw and washer assy. -pan hd. cr. rec. - 1/4"-20 x 1/2"	2	a		
26220-1	FRAME (REAR DOOR GLASS) UPPER				
PB9M 5726220-A	Rustless steel	2	57	A	60
B9MB 5826220-AP	R. H. - in prime	1	58	A	60
B9MB 5826221-AP	L. H. - in prime	1	58	A	60
PB9M 7726220-A	Rustless steel	2	77	A	60
COAB 5826220-BP	R. H. - in prime	1	54, 58	A	61
COAB 5826221-BP	L. H. - in prime	1	54, 58	A	61
COAB 7126220-BP	R. H. - in prime	1	71	A	61
COAB 7126221-BP	L. H. - in prime	1	71	A	61
C3MY 7526220-A		2	75	A	63/64
C4MY 5726220-A		2	57C, D	A	64
C1VY 5326220-B	R. H.	1	53	D	61/63
C1VY 5326221-B	L. H.	1	53	D	61/63
C1VY 5726220-C	R. H.	1	74	D	61/63
C1VY 5726221-C	L. H.	1	74	D	61/63
C4VY 5326220-A		2	53	D	64
C4VY 7426220-A		2	74	D	64
262A20-1	STOP (REAR DOOR WINDOW)				
B9MB 57262A20-A	R. H. - rubber dipped on end	1	57, 77	A	60
B9MB 57262A21-A	L. H. - rubber dipped on end	1	57, 77	A	60
26222-3	GUIDE (REAR DOOR WINDOW) REAR				
PB9M 5726222-A	R. H. (a)	1	57	A	60
PB9M 5726223-A	L. H. (a)	1	57	A	60
BAK 5726222-A	R. H. (b)	1	53, 54, 57, 75	D	60
BAK 5726223-A	L. H. (b)	1	53, 54, 57, 75	D	60

CONTINUED ON NEXT PAGE

GROUP AND PART NUMBER	DESCRIPTION, SIZE, ETC.	NO. REQ'D	MODEL OR ENGINE CUBIC INCH DISPLACEMENT	VEHICLE CODE	YEAR 19____
26222-3	GUIDE (REAR DOOR WINDOW) REAR (CONTINUED)				
C4VY 7426222-A	R. H.	1	74	D	64
C4VY 7426223-A	L. H.	1	74	D	64
33923-S8	Nut-hex. -5/16"-24	2	a		
44723-S	Washer-flat-5/16"	2	a		
354666-S2	Screw-hex. washer hd. -No. 12-24 x 3/8"	3	b		
371242-S8	Stud-socket hd. -5/16"-24 x 1-3/8" long	1	a		
26228-9	CHANNEL (REAR DOOR WINDOW GLASS) LOWER				
COMB 5726228-A	R. H.	1	57	A	60
COMB 5726229-A	L. H.	1	57	A	60
PB9M 5826228-A	R. H.	1	58	A	60
PB9M 5826229-A	L. H.	1	58	A	60
COMB 7726228-A	R. H.	1	77	A	60
COMB 7726229-A	L. H.	1	77	A	60
COAB 5826228-A	R. H.	1	54, 58, 71	A	61/62
COAB 5826229-A	L. H.	1	54, 58, 71	A	61/62
COAB 5726228-A	R. H.	1	75	A	61/62
COAB 5726229-A	L. H.	1	75	A	61/62
C3AZ 7526228-B	R. H.	1	75	A	63
C3AZ 7526229-B	L. H.	1	75	A	63
C3AZ 5426228-A	R. H.	1	54, 71	A	63/64
C3AZ 5426229-A	L. H.	1	54, 71	A	63/64
C4MY 5726228-B	R. H. - includes chrome moulding	1	57	A	64
C4MY 5726229-B	L. H. - includes chrome moulding	1	57	A	64
C3AZ 7526228-C	R. H. - includes chrome moulding	1	75	A	64
C3AZ 7526229-C	L. H. - includes chrome moulding	1	75	A	64
C2OB 5426228-A	R. H.	1	54, 71	B	62/63
C2OB 5426229-A	L. H.	1	54, 71	B	62/63
CODB 5826228-B	R. H.	1	54, 71	C	60/64
CODB 5826229-B	L. H.	1	54, 71	C	60/64
BAK 5726228-A	R. H. - chrome finish	1	57, 75	D	60
BAK 5726229-A	L. H. - chrome finish	1	57, 75	D	60
BAK 5726228-B	R. H. - chrome finish	1	53, 54	D	60
BAK 5726229-B	L. H. - chrome finish	1	53, 54	D	60
C1VY 5326228-B	R. H.	1	53	D	61/63
C1VB 5326229-B	L. H.	1	53	D	61/63
C1VB 5726228-C	R. H. - use on vehicles built prior to 3-1-61	1	74	D	61
C1VB 5726229-C	L. H. - use on vehicles built prior to 3-1-61	1	74	D	61
C1VB 5726228-D	R. H. - use on vehicles built after 2-28-61	1	74	D	61/63
C1VB 5726229-D	L. H. - use on vehicles built after 2-28-61	1	74	D	61/63
C4VY 5326228-A	R. H.	1	53	D	64
C4VY 5326229-A	L. H.	1	53	D	64
C4VY 7426228-A	R. H.	1	74	D	64
C4VY 7426229-A	L. H.	1	74	D	64
262A28-9	DOVETAIL (REAR DOOR WINDOW)				
PB9M 5724856-A	R. H. - zinc die cast (a)	1	57, 77	A	60
PB9M 5724857-A	L. H. - zinc die cast (a)	1	57, 77	A	60
C1AB 75262A28-A	R. H. - zinc die cast (b)	1	75	A	61/62
C1AB 75262A29-A	L. H. - zinc die cast (b)	1	75	A	61/62
C3AZ 75262A28-A	R. H. - zinc die cast (b)	1	57C, D, 75	A	63/64
C3AZ 75262A29-A	L. H. - zinc die cast (b)	1	57C, D, 75	A	63/64
BAK 5724856-A	R. H. - zinc die cast	1	53, 54, 57, 75	D	60
BAK 5724857-A	L. H. - zinc die cast	1	53, 54, 57, 75	D	60
C1VB 57262A28-A	Zinc die cast	2	All	D	61/63
359219-S2	Screw-hex. washer hd. -5/16"-24	1	a		
359605-S8	Screw and washer assy. -5/16"-24 x 5/8"	1	b		

GROUP AND PART NUMBER	DESCRIPTION, SIZE, ETC.	NO. REQ'D	MODEL OR ENGINE CUBIC INCH DISPLACEMENT	VEHICLE CODE	YEAR 19____
262A30-1	STRIKER (REAR DOOR WINDOW DOVETAIL)				
PB9M 5724858-A	R.H. - zinc die cast (a)	1	57, 77	A	60
PB9M 5724859-A	L.H. - zinc die cast (a)	1	57, 77	A	60
C1AB 75262A30-A	R.H. - zinc die cast (a)	1	75	A	61/62
C1AB 75262A31-A	L.H. - zinc die cast (a)	1	75	A	61/62
C3AZ 75262A30-A	R.H. - zinc die cast (a)	1	57C, D, 75	A	63/64
C3AZ 75262A31-A	L.H. - zinc die cast (a)	1	57C, D, 75	A	63/64
BAK 5724858-A	R.H. - zinc die cast (b)	1	53, 54, 57, 75	D	60
BAK 5724859-A	L.H. - zinc die cast (b)	1	53, 54, 57, 75	D	60
20326-S8	Bolt-hex. hd. -5/16"-18 x 5/8"	2	b		
34941-S8	Washer-external tooth-5/16"	2	b		
50992-S7	Screw and washer assy. -pan hd. cr. rec. -1/4"-20 x 1/2"	2	a		
359219-S2	Screw-hex. washer hd. -5/16"-24	2	a		
262A32	ROLLER (REAR DOOR WINDOW FRONT GUIDE)				
C1VB 57262A32-A	1" diameter at top	2	All	D	61/63
262A36-7	RUN (REAR DOOR GLASS) REAR				
C1VY 57262A36-F	R.H.	1	All	D	61/63
C1VY 57262A37-F	L.H.	1	All	D	61/63
26242	FRAME (REAR DOOR GLASS) UPPER				
COAB 5726242-A	Rustless steel (a)	2	75	A	61
C2AB 7526242-A	Rustless steel	2	75	A	62
BAK 5726242-A	Chrome finish	2	57, 75	D	60
BAK 5726242-B	Chrome finish	2	53, 54	D	60
50002-S13	Screw-flat hd. cr. rec. -No. 8-32 x 1/4"	2	a		
50006-S13	Screw-flat hd. cr. rec. -No. 8-32 x 3/8"	2	a		
262A56-7	GUIDE & RUN ASSEMBLY (REAR DOOR WINDOW) FRONT				
C1VY 57262A56-C	R.H.	1	All	D	61/63
C1VY 57262A57-C	L.H.	1	All	D	61/63
262A84-5	STOP (REAR DOOR WINDOW) UPPER REAR				
C1VB 57262A84-C	R.H.	1	74	D	61/63
C1VB 57262A85-C	L.H.	1	74	D	61/63
26286	REINFORCEMENT (REAR DOOR GLASS FRAME) LOWER REAR				
BAK 5726286-A	Steel	2	53, 54, 57, 75	D	60
26290	REINFORCEMENT (REAR DOOR GLASS FRAME) UPPER FRONT				
COAB 5726290-A		2	65, 75	A	61/62
	Quarter window	2	65	A	63/64
BAK 5726290-B	Steel	2	53, 54, 57, 75	D	60
262A90-1	RETAINER (REAR DOOR WINDOW DOVETAIL)				
C1VB 57262A90-A	R.H. - zinc die cast	1	All	D	61/63
C1VB 57262A91-A	L.H. - zinc die cast	1	All	D	61/63
263A20	SLIDE (REAR DOOR WINDOW BUTTON) FRONT				
C4VY 74263A20-A		2	74	D	64
26322	STABILIZER (REAR DOOR WINDOW)				
C3MY 7526322-A		4	75A, B, F	A	63/64
26342	SLIDE (REAR DOOR WINDOW BUTTON) REAR				
C4VY 7426342-A		4	74	D	64

GROUP AND PART NUMBER	DESCRIPTION, SIZE, ETC.		NO. REQ'D	MODEL OR ENGINE CUBIC INCH DISPLACEMENT	VEHICLE CODE	YEAR 19____
26374	WEATHERSTRIP (REAR DOOR WINDOW)					
PB9M 5726374-A	BLACK vinyl		2	57	A	60
PB9M 7726374-A	BLACK vinyl		2	77	A	60
26392-3	GUIDE (REAR DOOR WINDOW) CENTER					
PB9M 5726392-A	R.H.	(a)	1	57	A	60
PB9M 5726393-A	L.H.	(a)	1	57	A	60
PB9M 7726392-A	R.H.	(a)	1	77	A	60
PB9M 7726393-A	L.H.	(a)	1	77	A	60
COAB 5726392-A	R.H.	(a)	1	75	A	61/62
COAB 5726393-A	L.H.	(a)	1	75	A	61/62
C3AZ 7526392-A	R.H.		1	57, 75	A	63/64
C3AZ 7526393-A	L.H.		1	57, 75	A	63/64
BAK 5726392-B	R.H.	(b)	1	53, 54, 57, 75	D	60
BAK 5726393-B	L.H.	(b)	1	53, 54, 57, 75	D	60
354662-S2	Screw-hex. washer hd. -No. 12-24 x 3/8"		3	b		
359219-S2	Screw-hex. washer hd. -5/16"-24		3	a		
26404-5	CONTROL (REAR DOOR LOCK REMOTE)					
C2OZ 5426404-A	R.H.	(b)	1	54, 71	B	62/63
C2OZ 5426405-A	L.H.	(b)	1	54, 71	B	62/63
CODZ 5426404-A	R.H. - rear	(a)	1	54, 71	C	60/63
	R.H. - front		1	63, 76	C	63
C2OZ 5426404-B	R.H. - rear		1	54,71	C	64
C2OZ 5426405-B	L.H. - rear	(a)	1	54,71	C	60/64
	L.H. - front		1	63, 76	C	63
BAK 5726404-B	R.H.	(c)	1	53, 54, 57, 75	D	60
BAK 5726405-B	L.H.	(c)	1	53, 54, 57, 75	D	60
50991-S8	Screw and washer assy. -pan hd. cr. rec. - No. 12-24 x 1-1/4"		3	a		
354666-S2	Screw-hex. washer hd. -No. 12-24 x 3/8"		3	c		
359605-S8	Screw and washer-5/16"-24 x 5/8"		3	b		
26412-3	LOCK (REAR DOOR)					
C1AB 5426412-B	R.H.	(a)	1	54,57,58,71,75,77	A	60/61
C1AB 5426413-B	L.H.	(a)	1	54,57,58,71,75,77	A	60/61
C2AZ 5426412-B	R.H.	(a)	1	54,71,75	A	62
C2AZ 5426413-B	L.H.	(a)	1	54,71,75	A	62
C3AZ 5426412-B	R.H. - use on vehicles built prior to 3-1-64 using 377647-S sleeve nut		1	54,57,71,75	A	63/64
C3AZ 5426413-B	L.H. - use on vehicles built prior to 3-1-64 using 377647-S sleeve nut		1	54,57,71,75	A	63/64
C3AZ 5426412-C	R.H. - use on vehicles built after 2-29-64	(Δ)	1	54,57,71,75	A	64
C3AZ 5426413-C	L.H. - use on vehicles built after 2-29-64	(Δ)	1	54,57,71,75	A	64

Δ Package also includes -
(2) C3AZ-6221952-A retainer (3) 356782-S7 screw (2) 377647-S sleeve nut

C3OZ 5426412-B	R.H.		1	54,71	B	62/63
C3OZ 5426413-B	L.H.		1	54,71	B	62/63
C1DZ 5826412-E	R.H.	(a)	1	54,71	C	61/63
C1DZ 5826413-E	L.H.	(a)	1	54,71	C	61/63
C4DZ 5426412-A	R.H. - use on vehicles built prior to 3-1-64	(c)	1	54,71	C	64
C4DZ 5426413-A	L.H. - use on vehicles built prior to 3-1-64	(c)	1	54,71	C	64
C4DZ 5426412-B	R.H. - use on vehicles built after 2-29-64	(†)	1	54,71	C	64
C4DZ 5426413-B	L.H. - use on vehicles built after 2-29-64	(†)	1	54,71	C	64

† Package also includes -
(2) C3AZ-6221952-A retainer (3) 356782-S7 screw (2) 377647-S sleeve nut

CONTINUED ON NEXT PAGE

GROUP AND PART NUMBER	DESCRIPTION, SIZE, ETC.		NO. REQ'D	MODEL OR ENGINE CUBIC INCH DISPLACEMENT	VEHICLE CODE	YEAR 19____
26412-3	LOCK (REAR DOOR) CONTINUED					
B9LB 5726412-A	R. H.	(a)	1	53, 54, 57, 75	D	60
B9LB 5726413-A	L. H.	(a)	1	53, 54, 57, 75	D	60
C2VY 5726412-A	R. H. - less actuator assembly	(b)	1	All	D	61/63
C2VY 5726413-A	L. H. - less actuator assembly	(b)	1	All	D	61/63
C4VY 5326412-A	R. H. - use with C4VY-14018-A switch	(c)	1	All	D	64
C4VY 5326413-A	L. H. - use with C4VY-14018-A switch	(c)	1	All	D	64
C4VY 5326412-B	R. H. - use with C4VY-14018-B switch		1	All	D	64
C4VY 5326413-B	L. H. - use with C4VY-14018-B switch		1	All	D	64
353908-S7	Screw and washer assy. -flat hd. -No. 12-24 x 7/16"		3	a		
372924-S100	Screw-flat hd. locking-1/4"-28		3	b		
377647-S	Nut-sleeve-nylon		AR	c		
26414	REFER TO GROUP 26442-3					
26420-1	LINK (REAR DOOR LOCK CONTROL ROD)					
C1AB 5426420-A	R. H.	(b)	1	54,58,71,75	A	61
C1AB 5426421-A	L. H.	(b)	1	54,58,71,75	A	61
C2AZ 5426420-A	R. H.	(b)	1	54,71,75	A	62
C2AZ 5426421-A	L. H.	(b)	1	54,71,75	A	62
C3AZ 5426420-A	R. H. - use on vehicles built prior to 3-1-64 using 377647-S sleeve nut	(a)	1	54,57,71,75	A	63/64
C3AZ 5426421-B	L. H. - use on vehicles built prior to 3-1-64 using 377647-S sleeve nut	(a)	1	54,57,71,75	A	63/64
C3AZ 5426420-C	R.H. - use on vehicles built after 2-29-64	(Δ)	1	54,57,71,75	A	64
C3AZ 5426421-C	L.H. - use on vehicles built after 2-29-64	(Δ)	1	54,57,71,75	A	64
	Δ Package also includes - (2) C3AZ-6221952-A retainer					
C2OB 5426420-A		(a)	2	54,71	B	62/63
CODB 5826420-A	Steel	(c)	2	54,71	C	60/63
C4DZ 5426420-A	R. H. - use on vehicles built prior to 3-1-64	(a)	1	54,71	C	64
C4DZ 5426421-A	L. H. - use on vehicles built prior to 3-1-64	(a)	1	54,71	C	64
C4DZ 5426420-B	R. H. - use on vehicles built after 2-29-64	(†)	1	54,71	C	64
C4DZ 5426421-B	L. H. - use on vehicles built after 2-29-64	(†)	1	54,71	C	64
	† Package also includes - (2) C3AZ-6221952-A retainer					
BAK 5726420-C	R. H. - steel - 25-7/8" long		1	53, 54, 57, 75	D	60
BAK 5726421-C	L. H. - steel - 25-7/8" long		1	53, 54, 57, 75	D	60
358393-S2	Clip		2	b		
373251-S2	Clip		2	c		
375752-S2	Clip		2	a		
377647-S	Nut-sleeve-nylon		4	a		
26432	RETAINER (REAR DOOR OUTSIDE HANDLE BUTTON)					
BAK 5726432-B			2	53, 54, 57, 75	D	60
26442-3	LINK (REAR DOOR LOCK REMOTE CONTROL)					
PB9M 5726414-A	(1) R. H. (1) L. H. - 16-5/8" long		2	57, 58, 77	A	60
C1AB 5426442-A			2	54,58,71,75	A	61
C2AZ 5426442-A	R. H.	(a)	1	54,71,75	A	62
C2AZ 5426442-B	L. H.	(a)	1	54,71,75	A	62
C3AZ 5426442-A	R. H. - use on vehicles built prior to 3-1-64 using 377647-S sleeve nut	(a)	1	54,57,71,75	A	63/64
C3AZ 5426442-B	L. H. - use on vehicles built prior to 3-1-64 using 377647-S sleeve nut	(a)	1	54,57,71,75	A	63/64

CONTINUED ON NEXT PAGE

GROUP AND PART NUMBER	DESCRIPTION, SIZE, ETC.	NO. REQ'D	MODEL OR ENGINE CUBIC INCH DISPLACEMENT	VEHICLE CODE	YEAR 19.__
26442-3	LINK (REAR DOOR LOCK REMOTE CONTROL) CONTINUED				
C3AZ 5426442-D	R.H. - use on vehicles built after 2-29-64 (Δ)	1	54,57,71,75	A	64
C3AZ 5426443-D	L.H. - use on vehicles built after 2-29-64 (Δ)	1	54,57,71,75	A	64
	Δ Package also includes -				
	(2) C3AZ-6221952-A retainer				
C2OB 5426442-A	(a)	2	54,71	B	62/63
CODB 5826442-A	Steel (a)	2	54,71	C	60/63
C4DZ 5426442-A	Use on vehicles built prior to 3-1-64 (a)	2	54,71	C	64
C4DZ 5426442-B	Use on vehicles built after 2-29-64	2	54,71	C	64
	Package also includes -				
	(2) C3AZ-6221952-A retainer				
COLB 5726442-A	R.H. - steel - 15-1/4" long	1	53,54,57,75	D	60
COLB 5726443-A	L.H. - steel - 15-1/4" long	1	53,54,57,75	D	60
C1VB 5726442-A	16-1/4" long (a)	2	All	D	61/63
C4VY 5326442-A	Use on vehicles built prior to 1-13-64 (a)	2	All	D	64
C4VY 5326442-B	Use on vehicles built after 1-12-64	2	All	D	64
	Package also includes -				
	(2) C3AZ-6221952-A retainer				
377647-S	Nut-sleeve-nylon	2or4	a		
26448-9	BELLCRANK (REAR DOOR LOCK)				
B9A 5826448-A	(a)	2	57, 58, 77	A	60
	(b)	2	54,58,71,75	A	61
C2AZ 5426448-A		2	54,71,75	A	62
C3AZ 5426448-A		2	54,57,71,75	A	63/64
C2OZ 5426448-A	R.H. (b)	1	54	B	62
C2OZ 5426449-A	L.H. (b)	1	54	B	62
C3OZ 5426448-A	R.H. (d)	1	54,71	B	63
C3OZ 5426449-A	L.H. (d)	1	54,71	B	63
CODB 5826448-A	R.H.- refer to group 26460 for 1962 usage	1	54,71	C	60/61
CODB 5826449-A	L.H.- refer to group 26460 for 1962 usage	1	54,71	C	60/61
BAK 5726448-A	(c)	2	53, 54, 57, 75	D	60
351716-S8	Screw and washer-hd. cr. rec. -No. 8-15	2	b		
356296-S2	Spring-special-5/16"	1	c		
356361-S8	Washer-special spring-5/16"	1or2	a		
356397-S2	Washer-spring	1	d		
356600-S	Washer-spring	2	b		
358390-S8	Bolt-hex. shoulder-No. 12-24	1	c		
371238-S	Bolt-hex. shoulder-1/4"-20 x 7/16"	1or2	a		
376781-S8	Bolt-hex. shoulder-1/4" x 20	1	d		
26452	LEVER (REAR DOOR LOCK ACTUATING ROD)				
C2OB 5426452-A		2	54, 71	B	62/63
26458-9	CLIP (DOOR LOCK CONTROL LINK) RETAINING				
B7A 7326458-A	R.H. - front door	1	57, 58, 77	A	60
	R.H. - tailgate	1	77	A	60
	R.H. - rear door	1	53,54,57,75	D	60
B7A 7326459-A	L.H. - front door	1	57, 58, 77	A	60
	L.H. - tailgate	4	77	A	60
	L.H. - rear door	1	53,54,57,75	D	60
BAJ 5826458-A	Front door - electric door lock	2	All	D	60
C1VB 5726458-A	Front door	2	All	D	61/63

GROUP AND PART NUMBER	DESCRIPTION, SIZE, ETC.	NO. REQ'D	MODEL OR ENGINE CUBIC INCH DISPLACEMENT	VEHICLE CODE	YEAR 19____
26460-1	ROD (REAR DOOR LOCK) PUSH BUTTON				
PB9M 5725460-A	R.H.	1	57, 58, 77	A	60
PB9M 5725461-A	L.H.	1	57, 58, 77	A	60
COAB 5826460-A		2	54,58,71,75	A	61
C2AZ 5426460-A		2	54,71,75	A	62/63
C2AZ 5426460-B	Use on vehicles built prior to 3-1-64 using 377647-S sleeve nut	2	54, 57, 71, 75	A	64
C2AZ 5426460-C	Use on vehicles built after 2-29-64	2	54,57,71,75	A	64
	Package also includes - (1) C3AZ-6221952-A retainer				
C2OZ 5426460-A	R.H. (a)	1	54, 71	B	62/63
C2OZ 5426461-A	L.H. (a)	1	54, 71	B	62/63
C2DZ 5826460-A	R.H. - includes bellcrank	1	54, 71	C	60/63
CODB 5826461-A	L.H.	1	54, 71	C	60/61
C2DZ 5826461-A	L.H. - includes bellcrank	1	54, 71	C	62/63
C4DZ 5426460-A	R.H. - includes bellcrank (a)	1	54, 71	C	64
C4DZ 5426461-A	L.H. - includes bellcrank (a)	1	54, 71	C	64
BAK 5726460-A	R.H. - steel - 4-1/4" long	1	53,54,57,75	D	60
BAK 5726461-A	L.H. - steel - 4-1/4" long	1	53,54,57,75	D	60
C1VB 5726460-A	Steel	2	All	D	61/63
C4VY 5326460-A	Use on vehicles built prior to 1-13-64 (a)	2	All	D	64
C4VY 5326460-B	Use on vehicles built after 1-12-64	2	All	D	64
	Package also includes - (2) C3AZ-6221952-A retainer				
377647-S	Nut-sleeve-nylon	1	a		
264A64-5	ROD (REAR DOOR LOCK ACTUATING)				
C3YY 54264A64-C	R.H.	1	54, 71	B	62/63
C2YY 54264A65-B	L.H. (a)	1	54	B	62
C3YY 54264A65-C	L.H.	1	54, 71	B	63
C1VB 57264A64-A	R.H.	1	All	D	61/63
C1VB 57264A65-A	L.H.	1	All	D	61/62
C4VY 53264A64-A	Use on vehicles built prior to 1-13-64 (a)	2	All	D	64
C4VY 53264A64-B	Use on vehicles built after 1-12-64	2	All	D	64
	Package also includes - (2) C3AZ-6221954-A retainer				
377647-S	Nut-sleeve-nylon	AR	a		
264A76	FASTENER (DOOR LOCK STRIKER SHIELD)				
C1VB 57264A76-A	Nylon - rear door - (4) R.H. - (4) L.H.	AR	All	D	61/62
	Front door - (1) R.H. - (1) L.H.	AR	All	D	61/63
264A78-9	WEATHERSTRIP (REAR DOOR LOCK STRIKER)				
C2VY 57264A78-A	R.H. - rubber - outer☆	1	All	D	61/63
C2VY 57264A79-A	L.H. - rubber - outer☆	1	All	D	61/63
C4VY 53264A78-A	R.H. - rubber - outer☆ (a)	1	All	D	64
C4VY 53264A79-A	L.H. - rubber - outer☆ (a)	1	All	D	64
376378-S101	Screw-truss hd.-No.8-18 x 3/8"	AR	a		
	☆ Refer to group 24992-3 for inner weatherstrip				
26482-3	REINFORCEMENT (REAR DOOR LOCK STRIKER ANCHOR PLATE)				
C1AB 5426482-A	R.H.	1	54,58,71,75	A	61/63
C1AB 5426483-A	L.H.	1	54,58,71,75	A	61/63

GROUP AND PART NUMBER	DESCRIPTION, SIZE, ETC.	NO. REQ'D	MODEL OR ENGINE CUBIC INCH DISPLACEMENT	VEHICLE CODE	YEAR 19____
26484-5	BRACKET (REAR DOOR LOCK CONTROL REAR BELLCRANK PIVOT)				
COMB 5826484-A	R. H.	1	57, 58, 77	A	60
COMB 5826485-A	L. H.	1	57, 58, 77	A	60
C2AZ 5426484-A	R. H. (a)	1	54, 58, 71, 75	A	61/62
C2AZ 5426485-A	L. H. (a)	1	54, 58, 71, 75	A	61/62
B9LB 5726484-A	R. H. (b)	1	53, 54, 57, 75	D	60
B9LB 5726485-A	L. H. (b)	1	53, 54, 57, 75	D	60
51757-S8	Screw-pan hd. cr. rec. -No. 10-32 x 3/8"	2	b		
353908-S8	Screw and washer assy. -No. 12-24	3	a		
354666-S2	Screw-hex. washer hd. -No. 12-24 x 3/8"	2	b		
26490	LINK (REAR DOOR LOCK CONTROL) REAR				
PB9M 5726490-A	Steel - 1-7/8" long (b)	2	57, 58, 77	A	60
C2AZ 5426490-A	(a)	2	54, 58, 71, 75	A	61/62
BAK 5726490-A	Steel - 3-1/2" long	2	53, 54, 57, 75	D	60
B9AB 6421952-A	Clip	2	a		
B9AB 6421954-A	Clip	2	a, b		
377647-S	Nut-sleeve-nylon-for 1962 only	AR	a		
26498	LINK (REAR DOOR LOCK REMOTE CONTROL) REAR				
PB9M 5726498-A	Steel - 2-5/16" long	2	57, 58, 77	A	60
C1AB 5426498-A		2	54, 58, 75, 71	A	61
C2AZ 5426498-A		2	54, 71, 75	A	62
BAK 5726498-A	Steel - 4-7/32" long	2	53, 54, 57, 75	D	60
265A04	STRIKER (REAR DOOR LOCK)				
C4DZ 54265A04-A		2	54, 71	C	64
265A06	SHIM (REAR DOOR LOCK STRIKER PLATE)				
C4DZ 54265A06-A	Steel	2	54, 71	C	64
26592-3	PLATE (REAR DOOR LOCK STRIKER)				
C1VY 5726592-A	R. H.	1	74	D	61
		1	53	D	62/63
C1VY 5726593-A	L. H.	1	74	D	61
		1	53	D	62/63
C2VY 5726592-B	R. H.	1	74	D	62/63
C2VY 5726593-B	L. H.	1	74	D	62/63
26594-5	ACTUATOR (REAR DOOR VACUUM LOCK)				
C1VB 5726594-B	R. H.	1	All	D	61/62
C1VB 5726595-B	L. H.	1	All	D	61/62
C3VY 5726594-A	R. H.	1	All	D	63
C3VY 5726595-A	L. H.	1	All	D	63
C4VY 5326594-A	R. H.	1	All	D	64
C4VY 5326595-A	L. H.	1	All	D	64
26600-1	HANDLE (REAR DOOR) OUTSIDE				
COMB 5826600-A	R. H. - with button and pin	1	57, 58, 77	A	60
COMB 5826601-A	L. H. - with button and pin	1	57, 58, 77	A	60
C2AY 5426600-A	R. H. - with button and pin (†)	1	54, 71, 75	A	62
C2AY 5426601-A	L. H. - with button and pin (†)	1	54, 71, 75	A	62

† Package also includes -

(1) C2AZ-6222428 or 9-A pad (1) C2AZ-6222448 or 9-A pad (2) 375784-S7 nut and washer

CONTINUED ON NEXT PAGE

GROUP AND PART NUMBER	DESCRIPTION, SIZE, ETC.	NO. REQ'D	MODEL OR ENGINE CUBIC INCH DISPLACEMENT	VEHICLE CODE	YEAR 19____
26600-1	HANDLE (REAR DOOR) OUTSIDE (CONTINUED)				
C3MY 5426600-A	R.H. - use on vehicles built prior to 3-18-63 (Δ)	1	54, 71, 75	A	63
C3MY 5426601-A	L.H. - use on vehicles built prior to 3-18-63 (Δ)	1	54, 71, 75	A	63
C3MY 5426600-B	R.H. - use on vehicles built after 3-17-63 (Δ)	1	54, 71, 75	A	63
	With button and pin	1	54, 57, 71, 75	A	64
C3MY 5426601-B	L.H. - use on vehicles built after 3-17-63 (Δ)	1	54, 71, 75	A	63
	With button and pin	1	54, 57, 71, 75	A	64
Δ Package also includes -					
(1) C3AZ-6222428 or 9-A pad	(1) 50811-S7 screw		(1) 377777-S7 screw		
(1) C3AZ-6222448 or 9-A pad					
C2YY 5426600-A	R.H. - with button and pin (§)(a)	1	54, 71	B	62/63
C2YY 5426601-A	L.H. - with button and pin (§)(a)	1	54, 71	B	62/63
§ Package also includes -					
(1) C2YY-6222428 or 9-A pad	(1) C2YY-6222448 or 9-A pad				
50811-S8	Screw and washer-pan hd. -No. 12-24 x 1/2"	2	a		
375804-S7	Screw and washer-pan hd. -No. 12-24 x 2-1/2"	2	a		
26602-3	BUTTON (REAR DOOR OUTSIDE HANDLE)				
COMB 5826602-B	R.H.	1	57, 58, 77	A	60
COMB 5826603-B	L.H.	1	57, 58, 77	A	60
C2AZ 5426602-A	Refer to group 22454 for front door button	2	54, 71, 75	A	62
Package also includes -					
(1) C2AB-5426432-A retainer	(1) C2OB-6222462-A spring		(1) 374904-S seal "o" ring		
(1) C2AB-5426686-B button and pin	(1) 373017-S17 screw and washer				
C3AZ 5426602-A	Straight pin - use on vehicles built prior to 2-12-63	2	54, 71, 75	A	63
Package also includes -					
(1) C3AB-5426432-B retainer	(1) 40514-S8 screw		(1) 374904-S seal "o" ring		
(1) C3AB-6222462-A spring					
C3AZ 5426602-C	Curved pin - use on vehicles built after 2-11-63	2	54, 57, 71, 75	A	63/64
Package also includes -					
(1) C3AB-5426454-B retainer	(1) C3AB-6222462-A spring		(1) 374904-S seal "o" ring		
(1) C3AB-5426648-A sleeve	(1) 40514-S8 screw				
C2OZ 5426602-A		2	54, 71	B	62/63
Package also includes -					
(1) C2OB-5420432-C retainer	(1) C2OB-6222462-A spring		(1) 374904-S seal "o" ring		
(1) C2OB-5426686-A button and pin	(1) 40514-S7 screw				
CODB 5826602-A	With "L" shaped pin - use on vehicles built prior to 6-1-60 - use CODB-6422454-B on vehicles built after 5-31-60	2	54, 71	C	60
Package also includes -					
	(1) 87014-S91 seal				
C4DZ 5426602-A		2	54, 71	C	64
Package also includes -					
(1) C4DB-5426432-A retainer	(1) BAC-7022462-A spring		(1) 374904-S seal "o" ring		
(1) C3XB-6222454-B button and pin	(1) 40514-S7 screw				
	Refer to group 22454 for front door button				
26608	BUMPER (DOOR LOCK REMOTE CONTROL ROD LEVER)				
BAK 5726608-A	Rubber - 13/32" O.D. - rear doors	2	57, 58, 77	A	60
	Front doors	2	All	A	60/62
	Rear doors	2	54, 58, 71, 75	A	61/62
	Front and rear doors	4	All	D	60

GROUP AND PART NUMBER	DESCRIPTION, SIZE, ETC.	NO. REQ'D	MODEL OR ENGINE CUBIC INCH DISPLACEMENT	VEHICLE CODE	YEAR 19____
26636	LINK (REAR DOOR LOCK AUXILIARY BELLCRANK TO SOLENOID)				
PB9L 5326636-A	Steel - 14-7/8" long - use with electric door lock	2	53, 54, 57, 75	D	60
26640	PAD (DOOR OUTSIDE HANDLE) LARGE				
COMB 5826640-A	Rubber - rear door	2	57, 58, 77	A	60
26652	BRACKET (REAR DOOR LOCK CONTROL SOLENOID MOUNTING)				
PB9L 5326652-A	Use with electric door locks	2	53, 54, 57, 75	D	60
26656	HANDLE (DOOR PULL)				
C4VY 5326656-A	11-11/16" long	4	All	D	64
26686-7	BUTTON & PIN (REAR DOOR OUTSIDE HANDLE)				
COLB 5726686-A	R. H.	1	53,54,57,75	D	60
COLB 5726687-A	L. H.	1	53,54,57,75	D	60
26800-1	HINGE (REAR DOOR) UPPER				
PB9M 5726800-A	R. H.	1	57, 58, 77	A	60
PB9M 5726801-A	L. H.	1	57, 58, 77	A	60
C1AB 5426800-A	R. H.	1	54,58,71,75	A	61/63
C1AB 5426801-A	L. H.	1	54,58,71,75	A	61/63
C4AZ 5426800-A	R. H.	1	54,57,71,75	A	64
C4AZ 5426801-A	L. H.	1	54,57,71,75	A	64
C2OZ 5426800-A	R. H.	1	54,71	B	62/63
C2OZ 5426801-A	L. H.	1	54,71	B	62/63
CODB 5826800-A	R. H.	1	54,71	C	60/63
CODB 5826801-A	L. H.	1	54,71	C	60/63
C4DZ 5426800-A	R. H.	1	54,71	C	64
C4DZ 5426801-A	L. H.	1	54,71	C	64
BAK 5726800-A	R. H.	1	53, 54, 57, 75	D	60
BAK 5726801-A	L. H.	1	53, 54, 57, 75	D	60
C1VY 5726800-C	R. H.	1	All	D	61/63
C1VY 5726801-C	L. H.	1	All	D	61/63
C4VY 5326800-A	R. H.	1	All	D	64
C4VY 5326801-A	L. H.	1	All	D	64
26802-3	HINGE & CHECK (REAR DOOR)				
PB9M 5726802-A	R. H.	1	57, 58, 77	A	60
PB9M 5726803-A	L. H.	1	57, 58, 77	A	60
C3AZ 5426802-A	R. H.	1	54,58,71,75	A	61/63
C3AZ 5426803-A	L. H.	1	54,58,71,75	A	61/63
C4AZ 5426802-A	R. H.	1	54,57,71,75	A	64
C4AZ 5426803-A	L. H.	1	54,57,71,75	A	64
C3DZ 5426802-A	R. H.	1	54,71	C	60/63
C3DZ 5426803-A	L. H.	1	54,71	C	60/63
C4DZ 5426802-A	R. H.	1	54,71	C	64
C4DZ 5426803-A	L. H.	1	54,71	C	64
COLB 5726802-A	R. H.	1	53,54,57,75	D	60
COLB 5726803-A	L. H.	1	53,54,57,75	D	60
C1VY 5726802-B	R. H.	1	All	D	61/63
C1VY 5726803-B	L. H.	1	All	D	61/63
C4VY 5326802-A	R. H.	1	All	D	64
C4VY 5326803-A	L. H.	1	All	D	64
26804-5	LINK (REAR DOOR CHECK ON HINGE)				
B7A 7326804-A	R. H.	1	53, 54, 57, 75	D	60
B7A 7326805-A	L. H.	1	53, 54, 57, 75	D	60

GROUP AND PART NUMBER	DESCRIPTION, SIZE, ETC.	NO. REQ'D	MODEL OR ENGINE CUBIC INCH DISPLACEMENT	VEHICLE CODE	YEAR 19____
26832	PIN (REAR DOOR HINGE)				
BAK 5726832-A	Steel - upper - 3-1/8" long	2	53,54,57,75	D	60
C1VB 5726832-A	Upper - 2-3/4" long - use on vehicles built prior to 4-13-64	2	All	D	61/64
C4VY 5326832-A	Upper - 2-13/32" long - use on vehicles built after 4-12-64	2	All	D	64
C1VB 5726860-A	Lower - 3-3/8" long - use on vehicles built prior to 4-13-64	2	All	D	61/64
C4VY 5326860-A	Lower - 3" long - use on vehicles built after 4-12-64	2	All	D	64
26833	SPRING (REAR DOOR CHECK ON LOWER HINGE)				
PB9M 5726833-A	Spring - steel wire - 2-15/16" free length	2	57, 58, 77	A	60
B7A 7326833-A	Spring steel wire - 9-1/2 coils - 1-29/32" free length	2	53, 54, 57, 75	D	60
268A34	SPRING (REAR DOOR HINGE)				
C1VB 57268A34-A		2	All	D	61/64
268A36-7	BRACKET (REAR DOOR HINGE STRAP)				
C1VB 57268A36-A	R.H.	1	All	D	61/64
C1VB 57268A37-A	L.H.	1	All	D	61/64
268A38-9	COVER (REAR DOOR HINGE SPRING)				
C1VB 57268A38-B	R.H.	1	All	D	61/64
C1VB 57268A39-B	L.H.	1	All	D	61/64
268A40	CUP (REAR DOOR HINGE SPRING LUBRICANT)				
C1VB 57268A40-A		2	All	D	61/64
26860	REFER TO GROUP 26832				
268A62	SEAL (REAR DOOR LOWER HINGE)				
C4VY 53268A62-A	Rubber	4	All	D	64
26870	REFER TO GROUP 25723				
26894	WEATHERSTRIP (REAR DOOR STATIONARY WINDOW)				
C2OB 54262A11-A	Rubber	2	54	B	62/63
C3OZ 7126894-A	Rubber	2	71B,E	B	63
CODB 5826894-A	Rubber	2	54	C	60/63
C3DZ 5426894-A		2	54	C	64
C1KB 71262A11-A	Rubber	2	71	C	60/64
26894-5	BUTTON (REAR DOOR WINDOW) REAR GUIDE				
PB9M 5726894-A	R.H. (a)	1	57	A	60
PB9M 5726895-A	L.H. (a)	1	57	A	60
371299-S100	Screw and washer assy.-pan hd.-No.10-24 x 5/16"	AR	a		

GROUP AND PART NUMBER	DESCRIPTION, SIZE, ETC.	NO. REQ'D	MODEL OR ENGINE CUBIC INCH DISPLACEMENT	VEHICLE CODE	YEAR 19____
26900-1	BAR (REAR DOOR WINDOW DIVISION)				
C2OZ 5426900-A	R.H. - stationary window (b)	1	54	B	62/63
C2OZ 5426901-A	L.H. - stationary window (b)	1	54	B	62/63
C3OZ 7126900-A	R.H.	1	71	B	63
C3OZ 7126901-A	L.H.	1	71	B	63
CODZ 5826900-A	R.H. - stationary window (a)	1	54	C	60/63
CODZ 5826901-A	L.H. - stationary window (a)	1	54	C	60/63
C3DZ 5426900-A	R.H.	1	54	C	64
C3DZ 5426901-A	L.H.	1	54	C	64
C2DZ 7126900-A	R.H. - stationary window (a)	1	71	C	60/64
C2DZ 7126901-A	L.H. - stationary window (a)	1	71	C	60/64
37611-S7	Screw-fill. hd. -No. 8-32 x 1/4"	2	a		
376129-S8	Screw-truss hd. cr. rec. shoulder-No. 8-32 x 3/8"	1	b		
376203-S8	NS-screw-truss hd. cr. rec. shoulder-No. 8-32 x 1/4"	1	b		
27000-1	REGULATOR (REAR DOOR WINDOW) MANUAL				
COMB 5727000-C	R.H. - use with COMB-6423342-A (a)	1	57, 77	A	60
COMB 5727001-C	L.H. - use with COMB-6423342-A (a)	1	57, 77	A	60
COMB 5827000-C	R.H. - use with COMB-6423342-A (a)	1	58	A	60
COMB 5827001-C	L.H. - use with COMB-6423342-A (a)	1	58	A	60
COAZ 5827000-D	R.H. (a)	1	54, 58, 71	A	61/62
COAZ 5827001-D	L.H. (a)	1	54, 58, 71	A	61/62
COAZ 7527000-B	R.H. (a)	1	75	A	61/62
COAZ 7527001-B	L.H. (a)	1	75	A	61/62
C3AZ 5427000-A	R.H. - use on vehicles built prior to 12-14-62	1	54, 71	A	63
C3AZ 5427001-A	L.H. - use on vehicles built prior to 12-14-62	1	54, 71	A	63
C3AZ 5427000-B	R.H. - use on vehicles built after 12-13-62	1	54, 71	A	63/64
C3AZ 5427001-B	L.H. - use on vehicles built after 12-13-62	1	54, 71	A	63/64
C3AZ 7527000-A	R.H.	1	75	A	63
C3AZ 7527001-A	L.H.	1	75	A	63
C3AZ 7527000-B	R.H.	1	57, 75	A	64
C3AZ 7527001-B	L.H.	1	57, 75	A	64
C2OZ 5427000-A	R.H. (b)	1	54, 71	B	62/63
C2OZ 5427001-A	L.H. (b)	1	54, 71	B	62/63
CODZ 5827000-A	R.H. (b)	1	54, 71	C	60/64
CODZ 5827001-A	L.H. (b)	1	54, 71	C	60/64
COLB 5727000-A	R.H.	1	53A, 57A	D	60
COLB 5727001-A	L.H.	1	53A, 57A	D	60
359219-S2	Screw-hex. washer hd. -5/16"-24	AR	a		
359605-S8	Screw and washer assy. -5/16"-24 x 5/8"	4	b		
27002-3	KIT (REGULATOR - DRIVE & COUPLING) ELECTRIC REAR DOOR WINDOW				
C1AZ 5427002-A	R.H.	1	54,58,71	A	61
	Consists of the following -				
	(1) C2AZ-5427008-A regulator (1) C1AZ-5723395-A drive (1) C1VB-5723440-A coupling				
C1AZ 5427003-A	L.H.	1	54,58,71	A	61
	Consists of the following -				
	(1) C2AZ-5427009-A regulator (1) C1AZ-5723394-A drive (1) C1VB-5723440-A coupling				
C1AZ 7527002-A	R.H.	1	75	A	61
	Consists of the following -				
	(1) C2AZ-7527008-A regulator (1) C1AZ-5723395-A drive (1) C1VB-5723440-A coupling				
C1AZ 7527003-A	L.H.	1	75	A	61
	Consists of the following -				
	(1) C2AZ-7527009-A regulator (1) C1AZ-5723394-A drive (1) C1VB-5723440-A coupling				

GROUP AND PART NUMBER	DESCRIPTION, SIZE, ETC.	NO. REQ'D	MODEL OR ENGINE CUBIC INCH DISPLACEMENT	VEHICLE CODE	YEAR 19____
270A04	PLATE (REAR DOOR WINDOW STABILIZER ARM MOUNTING)				
COLB 57270A04-A		2	53, 54, 57, 75	D	60
27008-9	REGULATOR (REAR DOOR WINDOW) ELECTRIC				
COMB 5727008-A	R.H. - less motor and drive (a)	1	57, 77	A	60
COMB 5727009-A	L.H. - less motor and drive (a)	1	57, 77	A	60
COMB 5827008-A	R.H. - less motor and drive (a)	1	58	A	60
COMB 5827009-A	L.H. - less motor and drive (a)	1	58	A	60
C2AZ 5427008-A	R.H. - less motor and drive	1	54, 58, 71	A	61/62
C2AZ 5427009-A	L.H. - less motor and drive	1	54, 58, 71	A	61/62
C1AB 7527008-C	R.H. - less motor and drive - use on vehicles built prior to 3-5-62 (a)	1	75	A	61/62
C1AB 7527009-C	L.H. - less motor and drive - use on vehicles built prior to 3-5-62 (a)	1	75	A	61/62
C2AZ 7527008-A	R.H. - less motor and drive - use on vehicles built after 3-4-62	1	75	A	62
C2AZ 7527009-A	L.H. - less motor and drive - use on vehicles built after 3-4-62	1	75	A	62
C3AZ 5427008-A	R.H. - less motor and drive - use on vehicles built prior to 12-14-62	1	54, 71	A	63
C3AZ 5427009-A	L.H. - less motor and drive - use on vehicles built prior to 12-14-62	1	54, 71	A	63
C3AZ 5427008-B	R.H. - less motor and drive - use on vehicles built after 12-13-62	1	54, 71	A	63
C3AZ 5427009-B	L.H. - less motor and drive - use on vehicles built after 12-13-62	1	54, 71	A	63
C3AZ 7527008-A	R.H. - less motor and drive - use on vehicles built prior to 2-11-63	1	75	A	63
C3AZ 7527009-A	L.H. - less motor and drive - use on vehicles built prior to 2-11-63	1	75	A	63
C3AZ 7527008-B	R.H. - less motor and drive - use on vehicles built after 2-10-63	1	75	A	63
C3AZ 7527009-B	L.H. - less motor and drive - use on vehicles built after 2-10-63	1	75	A	63
C4AZ 5427008-A	R.H. - less motor and drive	1	54, 71	A	64
C4AZ 5427009-A	L.H. - less motor and drive	1	54, 71	A	64
C4AZ 5727008-A	R.H. - less motor and drive	1	57, 75	A	64
C4AZ 5727009-A	L.H. - less motor and drive	1	57, 75	A	64
BAK 5727008-A	R.H. - less motor and drive - "type A" - HUPP	1	53, 54, 57, 75	D	60
BAK 5727009-A	L.H. - less motor and drive - "type A" - HUPP	1	53, 54, 57, 75	D	60
BAK 5727008-B	R.H. - less motor and drive - "type B" - DURA	1	53, 54, 57, 75	D	60
BAK 5727009-B	L.H. - less motor and drive - "type B" - DURA	1	53, 54, 57, 75	D	60
359219-S	Screw-hex. washer hd. -5/16"-24	AR	a		
270A14	BRACKET (REAR DOOR WINDOW FRONT RUN ADJUSTING)				
C1VB 57270A14-A		2	All	D	61/63
270A16-7	BRACKET (REAR DOOR WINDOW REGULATOR BY-PASS SWITCH ACTUATING)				
C1VB 57270A16-B	R.H.	1	74	D	61/63
C1VB 57270A17-B	L.H.	1	74	D	61/63
27048	SPRING (REAR DOOR WINDOW REGULATOR - COUNTERBALANCE)				
BAC 7327048-A	Use with manual windows -(1) R.H. and (1) L.H.	2	54, 58, 71	A	61/64
COLB 5727048-A		2	53A, 57A	D	60

GROUP AND PART NUMBER	DESCRIPTION, SIZE, ETC.	NO. REQ'D	MODEL OR ENGINE CUBIC INCH DISPLACEMENT	VEHICLE CODE	YEAR 19____
27070	STOP (REAR DOOR WINDOW) LOWER				
BAK 5727070-A		2	53, 54, 57, 75	D	60
27130	BUMPER (REAR DOOR WINDOW) LOWER REAR				
BAK 5727130-A		2	53, 54, 57, 75	D	60
27144-5	REFER TO GROUP 23394-5				
27148	PLATE (REAR DOOR WINDOW CONTROL SWITCH) ACCESS HOLE COVER				
C1VB 5727148-A		2	74	D	61/62
C3VY 5727148-A		2	74	D	63
		2	53, 74	D	64
27154	PIN (REAR DOOR WINDOW CONTROL SWITCH TRIGGER)				
C1VB 5727154-A		2	74	D	61/63
C4VY 7427154-A		2	74	D	64
27156	ROLLER (REAR DOOR WINDOW CONTROL SWITCH TRIGGER PIN)				
C1VB 5727156-A	Nylon	2	74	D	61/64
27224-5	BUMPER (REAR DOOR) AT BELT				
B9MB 5727224-A	R.H. (a)	1	57	A	60
B9MB 5727225-A	L.H. (a)	1	57	A	60
PB9M 5727225-A	(1) R.H. and (1) L.H. (a)	2	58,77	A	60
C1AB 5427224-A	R.H. - use on vehicles built prior to 1-3-61 (b)	1	54,58,71,75	A	61
C1AB 5427225-A	L.H. - use on vehicles built prior to 1-3-61 (b)	1	54,58,71,75	A	61
C1AB 5427224-B	R.H. - use on vehicles built after 1-2-61 (c)	1	54,57,58,71,75	A	61/64
C1AB 5427225-B	L.H. - use on vehicles built after 1-2-61 (c)	1	54,57,58,71,75	A	61/64
C2OZ 5427224-A	R.H. (d)	1	54,71	B	62/63
C2OZ 5427225-A	L.H. (d)	1	54,71	B	62/63
B9S 6320922-A	(e)	2	53,54,57,75	D	60
	Use on luggage compartment only	2	74	D	61/63
51754-S8	Screw-pan hd. cr. rec. -No. 6-32 x 3/8"	2	e		
52724-S8	Screw-pan hd. cr. rec. -No. 6-18 x 1/2"	1	d		
52726-S8	Screw-pan hd. cr. rec. -No. 8-15 x 1/2"	1	c		
52727-S8	Screw-pan hd. cr. rec. -No. 10-12 x 1/2"	1	a		
357903-S	Screw-washer hd. -No. 8-15 x 3/4"	1	b		
274A08-9	SUPPORT (REAR DOOR ARM REST)				
C1VY 74274A08-A	R.H.	1	All	D	61/63
C1VY 74274A09-A	L.H.	1	All	D	61/63
C4VY 53274A08-A	R.H.	1	53	D	64
C4VY 53274A09-A	L.H.	1	53	D	64
C4VY 74274A08-A	R.H.	1	74	D	64
C4VY 74274A09-A	L.H.	1	74	D	64
27448	COVER (REAR DOOR ASH RECEPTACLE)				
C4VY 5327448-A		2	All	D	64

GROUP AND PART NUMBER	DESCRIPTION, SIZE, ETC.	NO. REQ'D	MODEL OR ENGINE CUBIC INCH DISPLACEMENT	VEHICLE CODE	YEAR 19____
27470-1	HOUSING (REAR DOOR ASH RECEPTACLE)				
C4VY 5327470-A	R. H. - use on vehicles built prior to 12-17-63	1	All	D	64
C4VY 5327471-A	L. H. - use on vehicles built prior to 12-17-63	1	All	D	64
C4VY 5327470-B	R. H. - use on vehicles built after 12-16-63	1	All	D	64
C4VY 5327471-B	L. H. - use on vehicles built after 12-16-63	1	All	D	64
27534	BRACKET (REAR DOOR ARM REST ATTACHING) FRONT				
B9LB 5727534-A	Steel	2	53, 54, 57, 75	D	60
C1VY 5727534-A	Steel	2	All	D	61/63
27538-9	SUPPORT (REAR DOOR ARM REST)				
C3AZ 5427538-A	R.H.	1	54,71,75	A	63
C3AZ 5427539-A	L.H.	1	54,71,75	A	63
C4AZ 5727538-A	R.H.	1	54, 57, 71	A	64
C4AZ 5727539-A	L.H.	1	54, 57, 71	A	64
27588-91	RETAINER (REAR DOOR TRIM PANEL)				
B9MB 5827590-AP	R.H. - in prime	1	57, 58, 77	A	60
B9MB 5827591-AP	L.H. - in prime	1	57, 58, 77	A	60
C1AB 5425576-AP	R.H.	1	54,58,71,75	A	61/62
C1AB 5425577-AP	L.H.	1	54,58,71,75	A	61/62
C3AZ 5425576-A	Lower	2	54,71,75	A	63/64
C2OB 5427588-B	Upper	2	54	B	62
C2OB 5427590-B	Steel - lower	2	54, 71	B	62/63
C3OZ 5427588-B	Upper - chrome finish - paint as required	2	54,71B,E	B	63
CODB 5827588-E	R.H. - upper - chrome finish - (a,b) paint if necessary	1	54,71	C	60/62
CODB 5827589-E	L.H. - upper - chrome finish - (a,b) paint if necessary	1	54,71	C	60/62
CODB 5827590-C	Steel - lower (a)	2	54,71	C	60/62
	Paint to match for models 54A and 71A	2	54, 71A, B	C	63
C3DZ 5427588-A	R.H. - upper - paint to match for models 54A, 71A	1	54, 71A, B	C	63
C3DZ 5427589-A	L.H. - upper - paint to match for models 54A, 71A	1	54,71A, B	C	63
C4DZ 5427588-A	R.H. - upper - paint to match	1	54,71	C	64
C4DZ 5427589-A	L.H. - upper - paint to match	1	54,71	C	64
C4DZ 5427590-A	Lower - chrome - paint to match	2	71	C	64
52720-S8	Screw-pan hd. cr. rec. -No. 8-15 x 3/8"	AR	a		
52726-S13	Screw-pan hd. cr. rec. -No. 8-15 x 1/2"	1	b		
27608-9	RETAINER (REAR DOOR ASH RECEPTACLE)				
C1VY 5727608-B	R.H. (a)	1	All	D	61/63
C1VY 5727609-B	L.H. (a)	1	All	D	61/63
352000-S	Bumper-rubber	2	a		

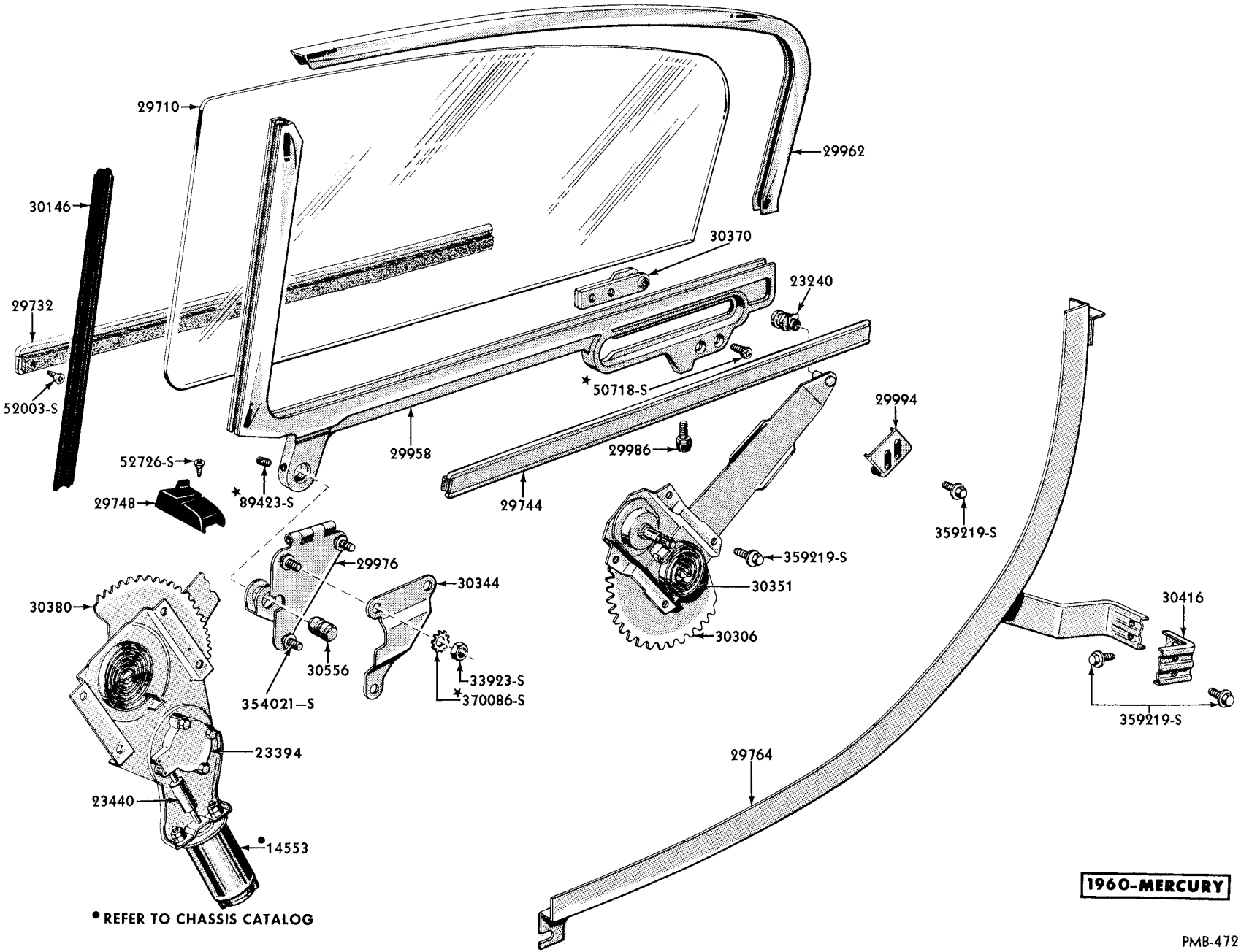

QUARTER WINDOW PARTS-MODEL 63

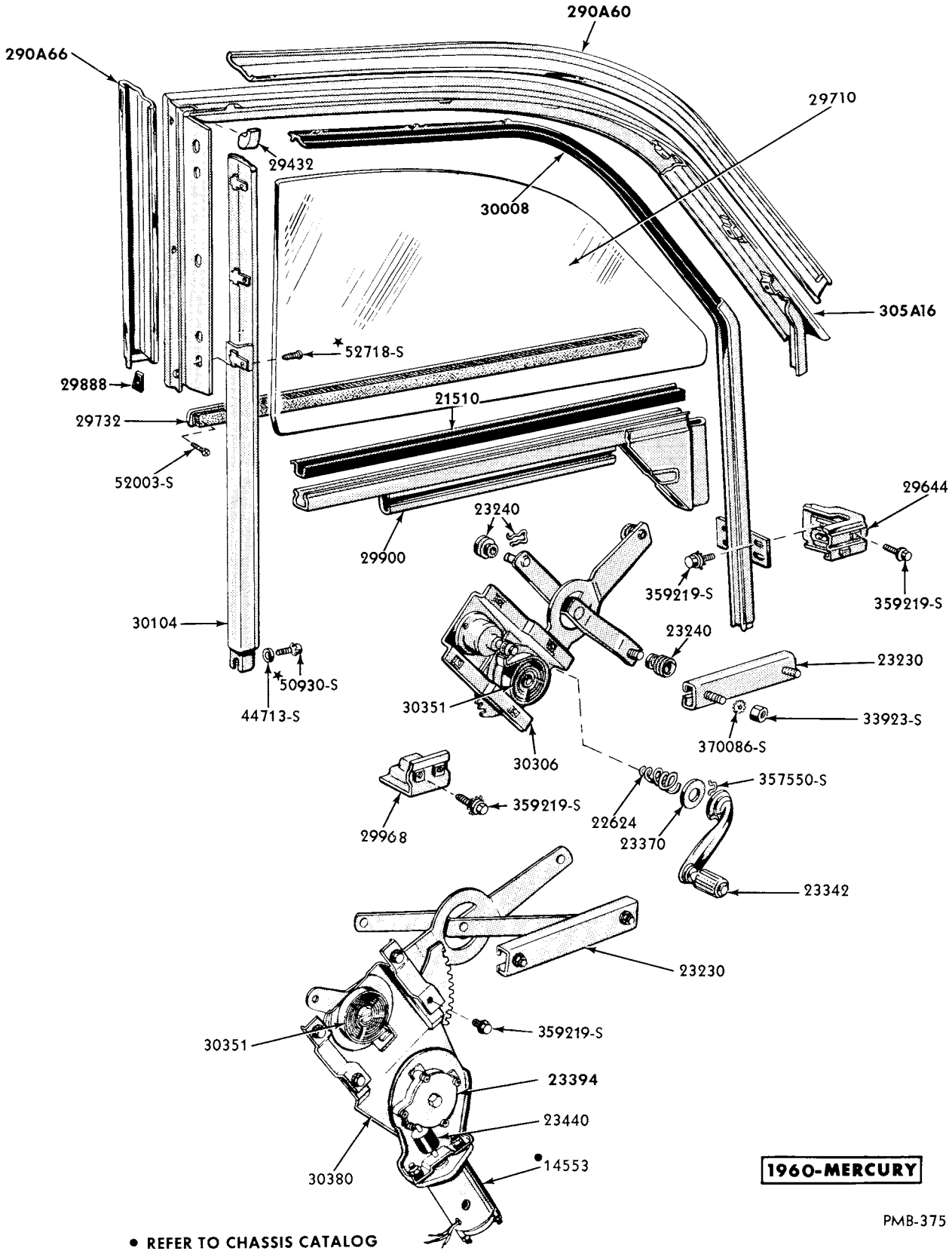

QUARTER WINDOW PARTS-MODEL 64

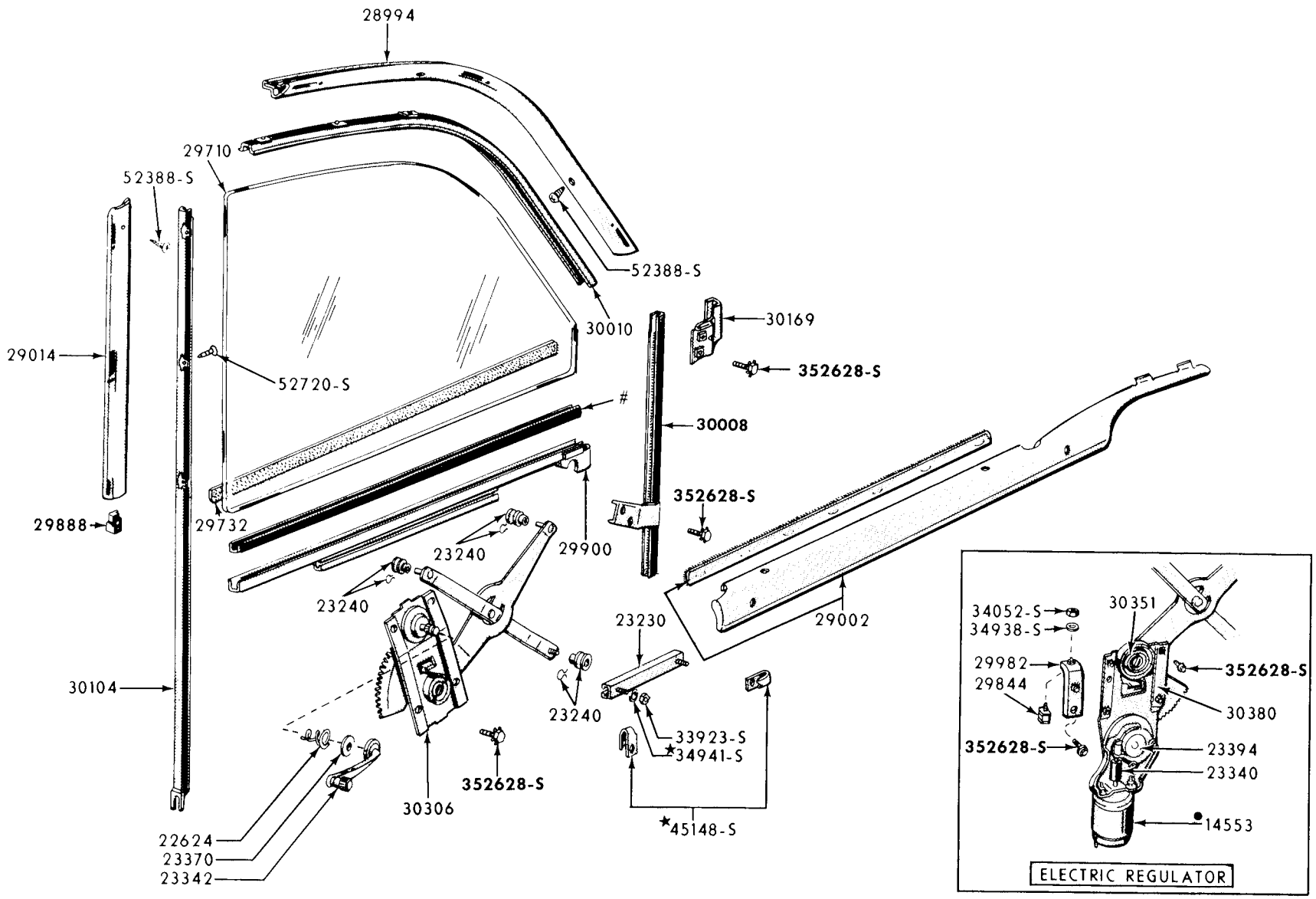

USE BULK GLASS TAPE
● **REFER TO CHASSIS CATALOG**

1961-62 MERCURY

PEB 601

QUARTER WINDOW PARTS–MODEL 62,64

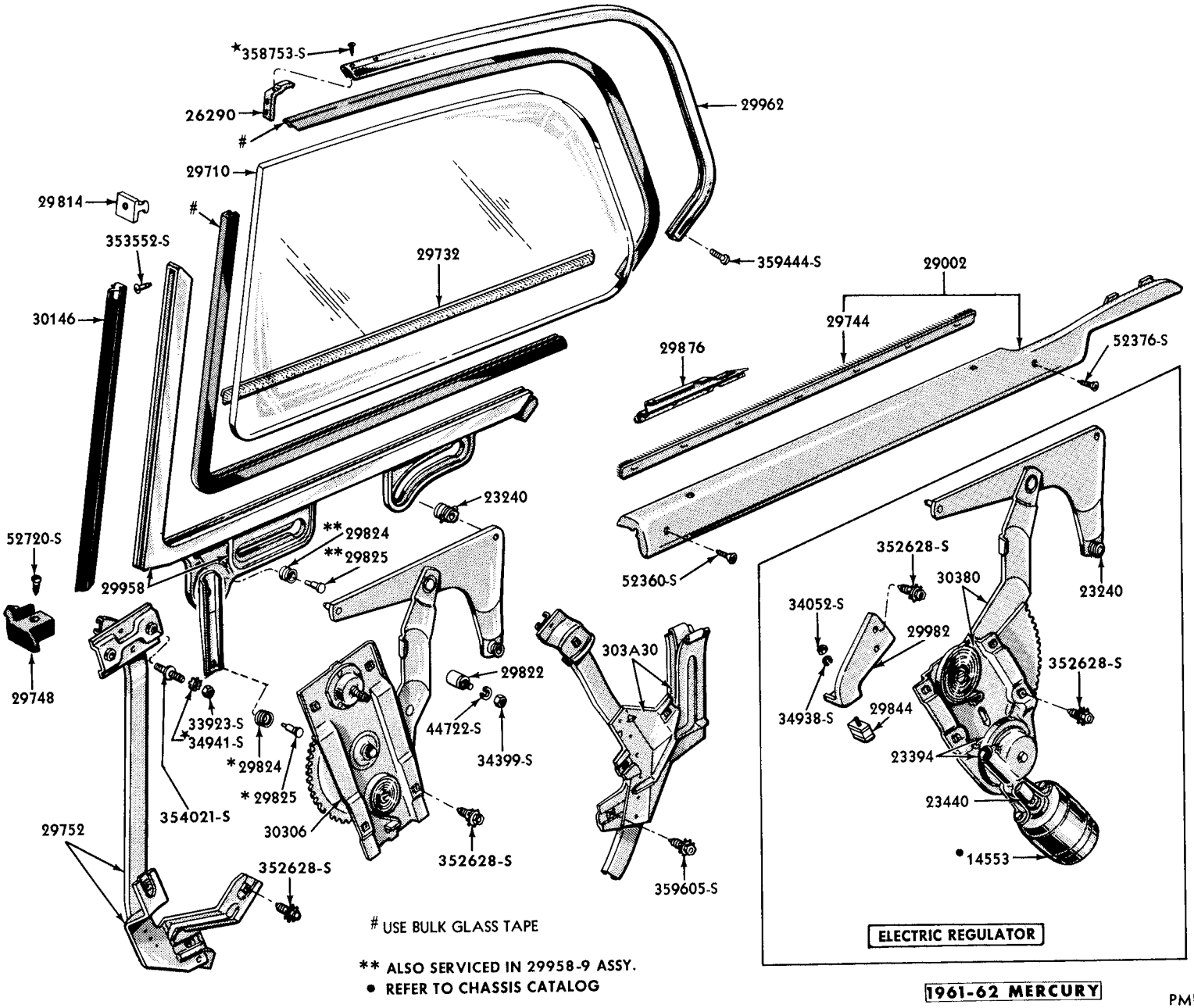

QUARTER WINDOW PARTS - MODEL 65

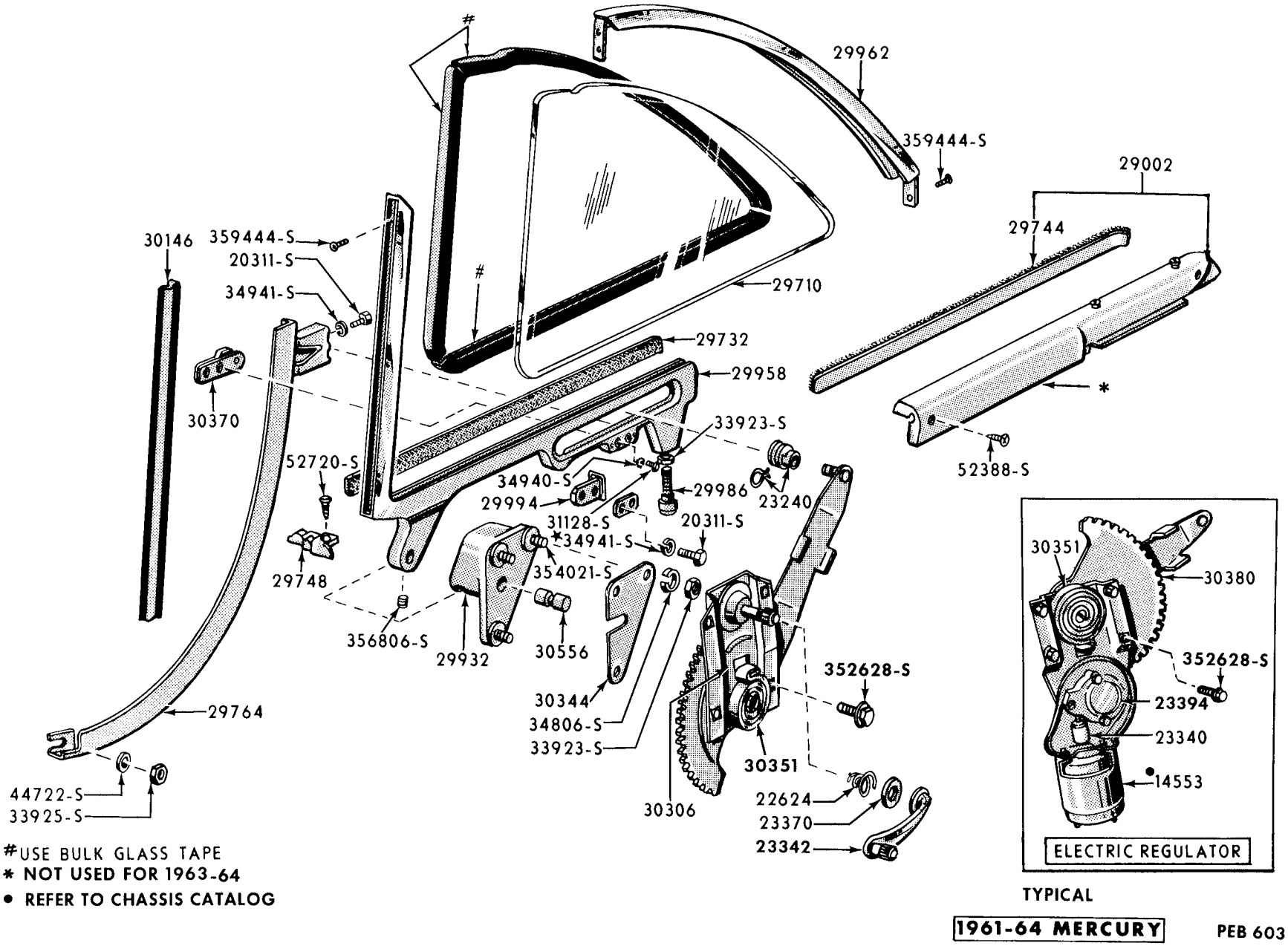

#USE BULK GLASS TAPE
* NOT USED FOR 1963-64
• REFER TO CHASSIS CATALOG

TYPICAL

1961-64 MERCURY

PEB 603

QUARTER WINDOW PARTS - MODEL 76

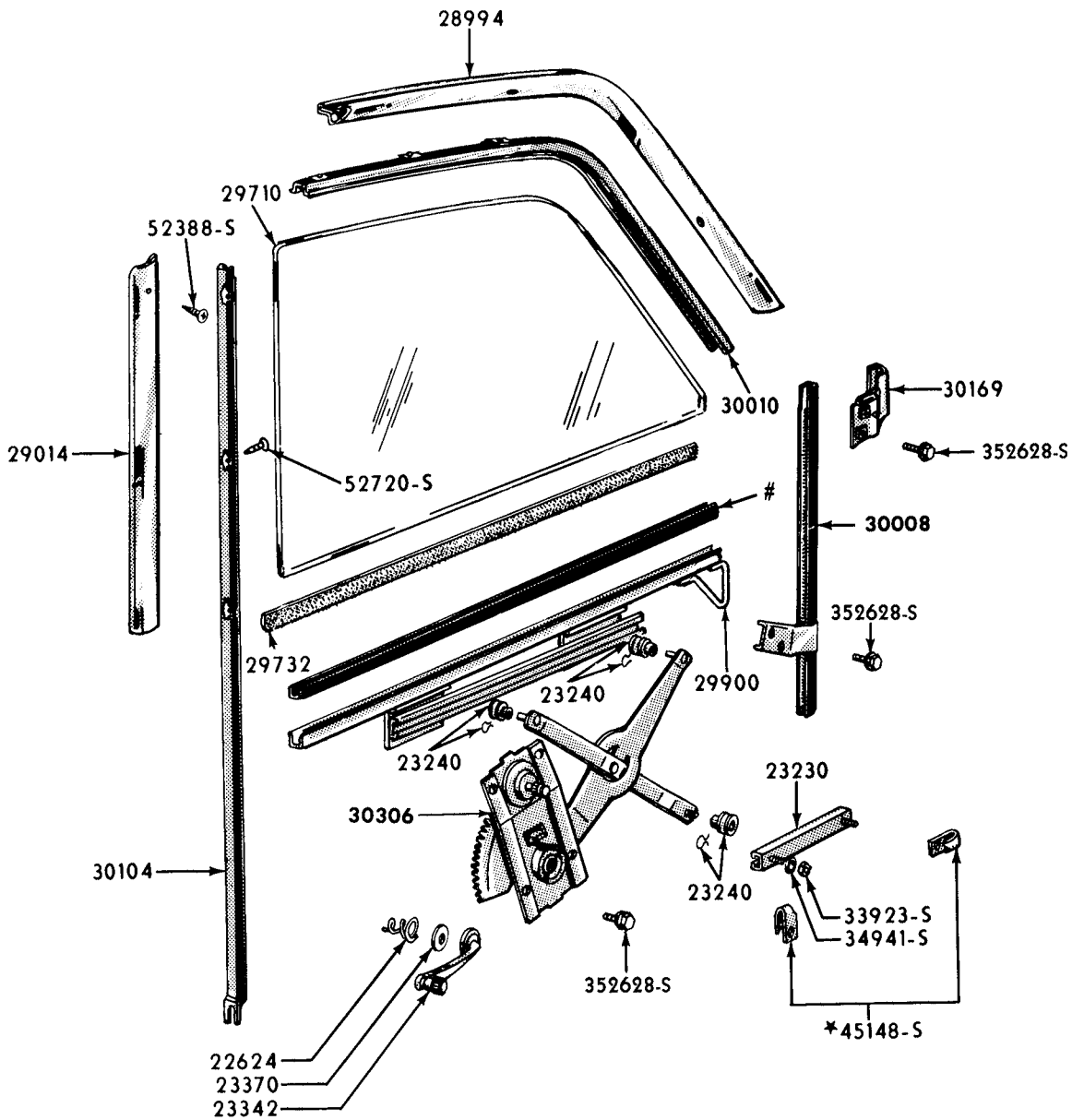

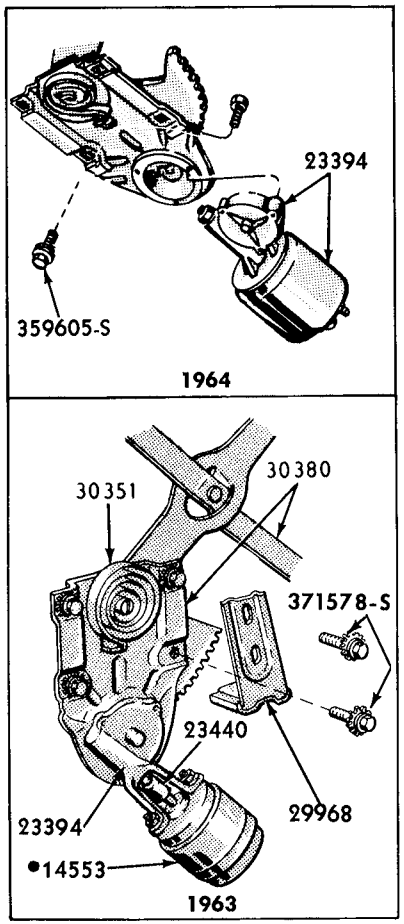

ELECTRIC REGULATOR

• REFER TO CHASSIS CATALOG
USE BULK GLASS TAPE
* ALSO INCLUDED IN 29002-3

1963-64 MERCURY

PMB-1022

QUARTER WINDOW and RELATED PARTS - MODEL 62

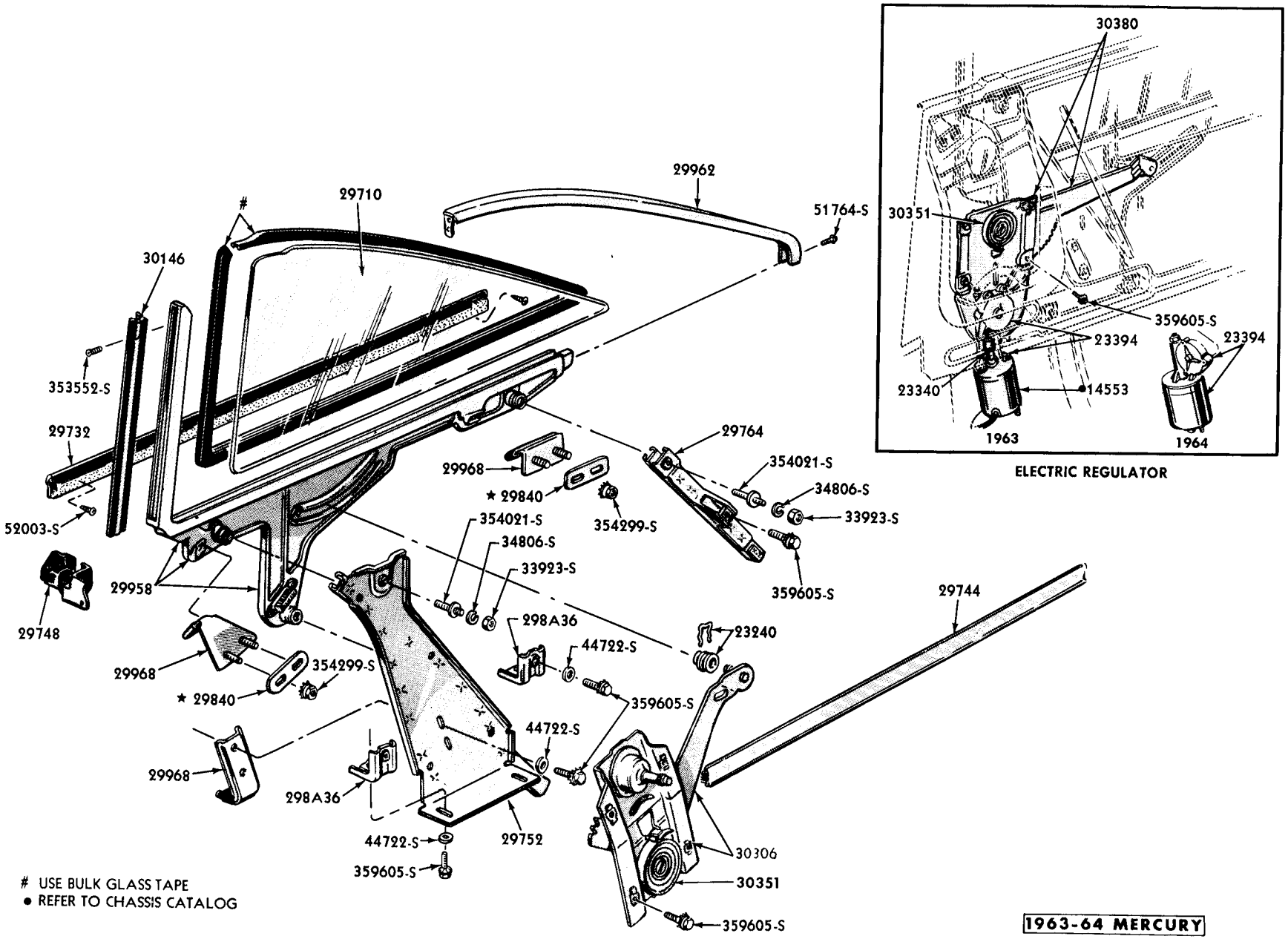

QUARTER WINDOW and RELATED PARTS - MODEL 63

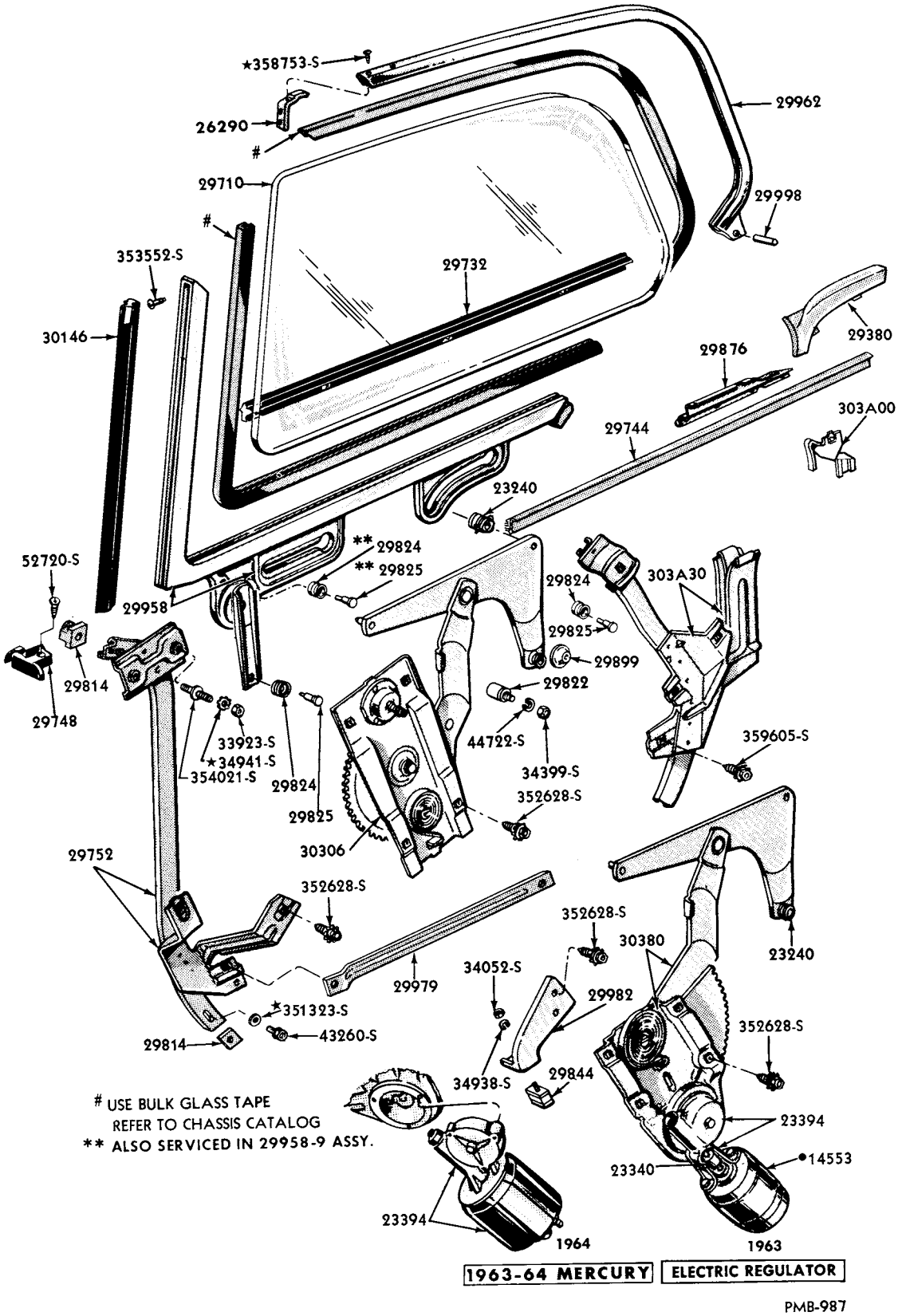

QUARTER WINDOW and RELATED PARTS - MODEL 65

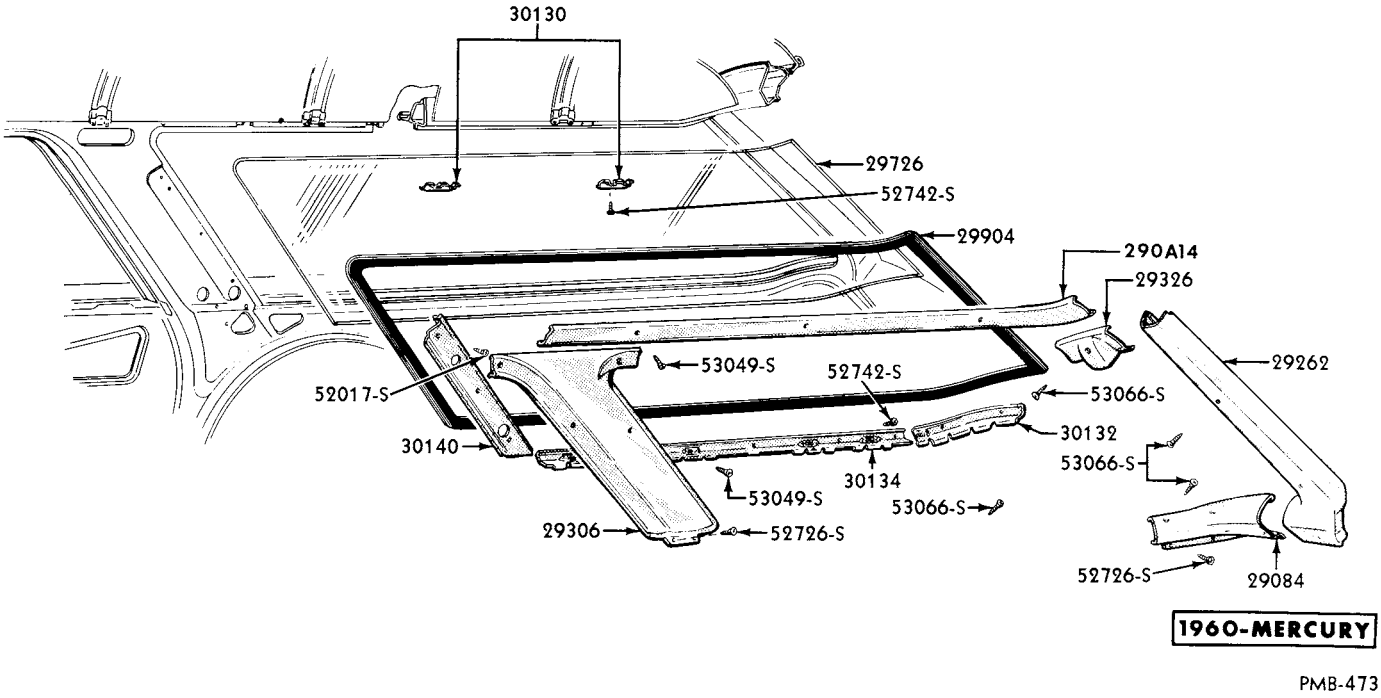

QUARTER STATIONARY WINDOW - MODEL 77

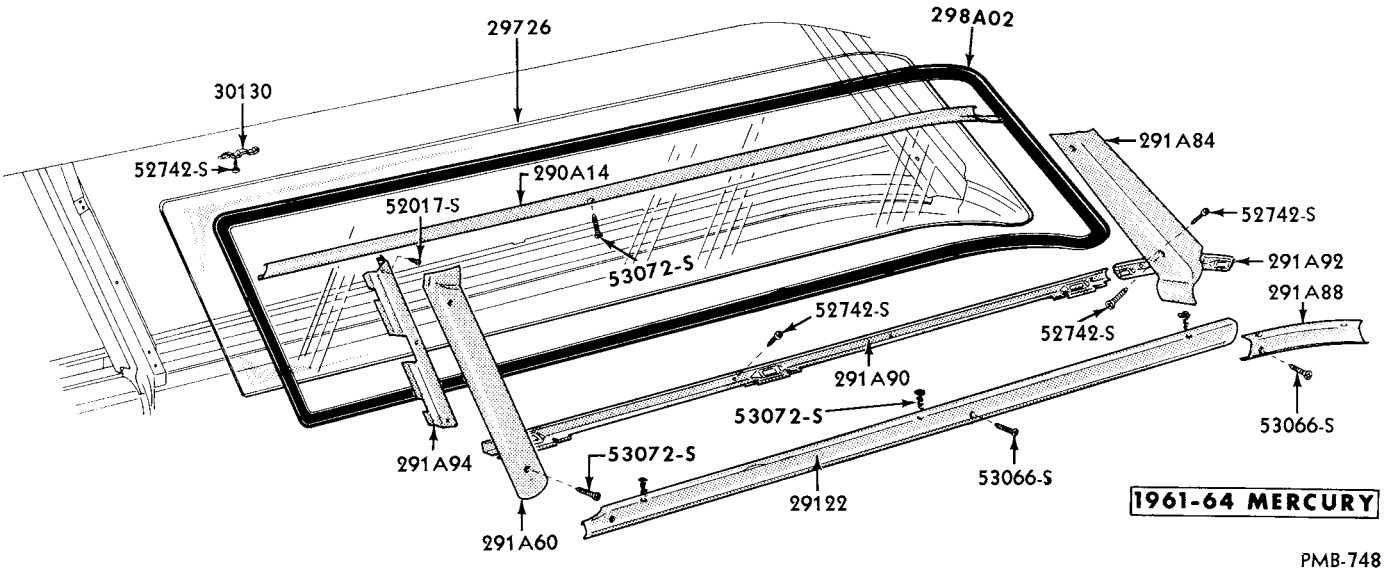

QUARTER STATIONARY WINDOW - MODEL 71

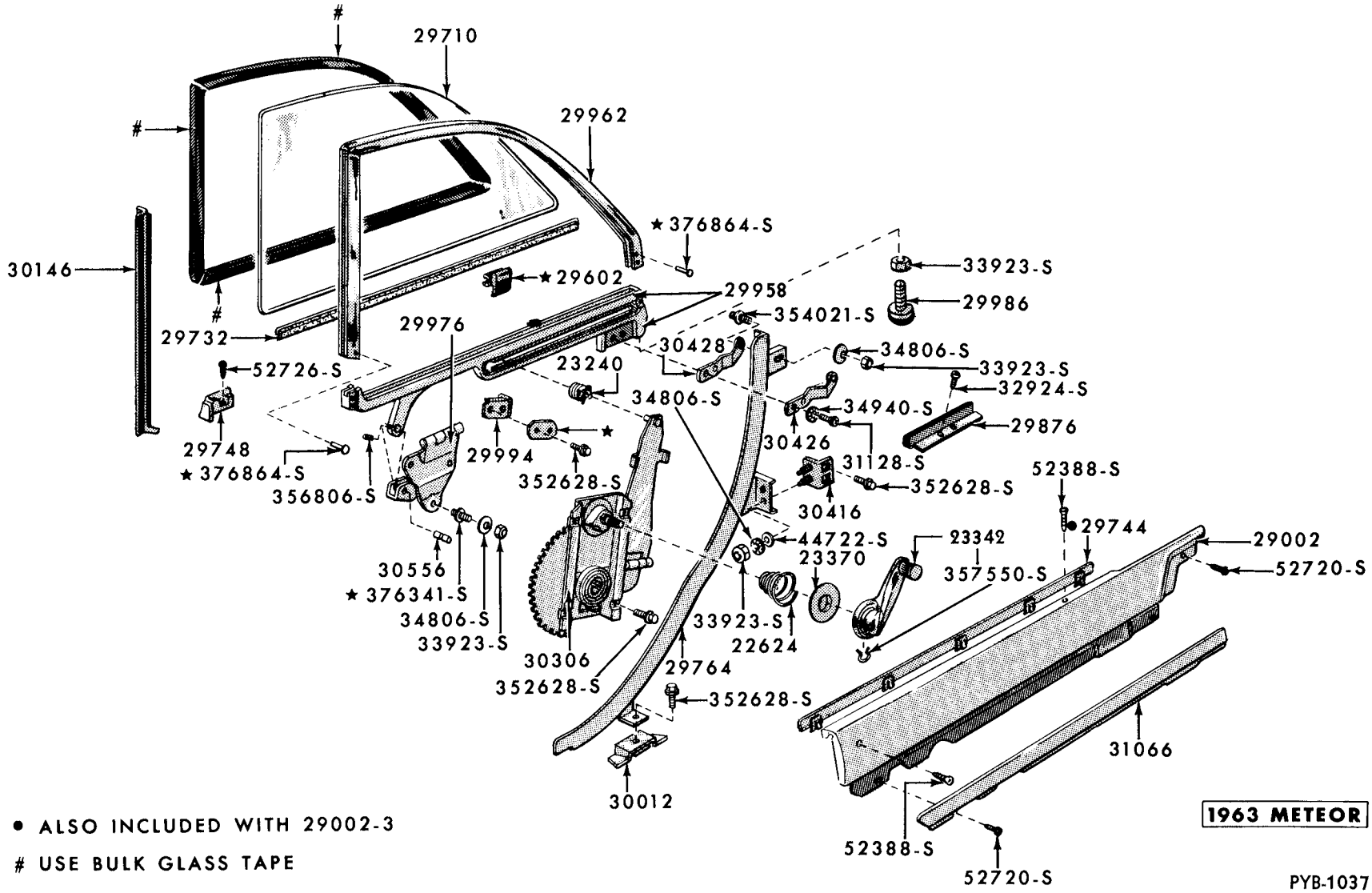

1963 METEOR

● ALSO INCLUDED WITH 29002-3

USE BULK GLASS TAPE

QUARTER WINDOW and RELATED PARTS - MODEL 65

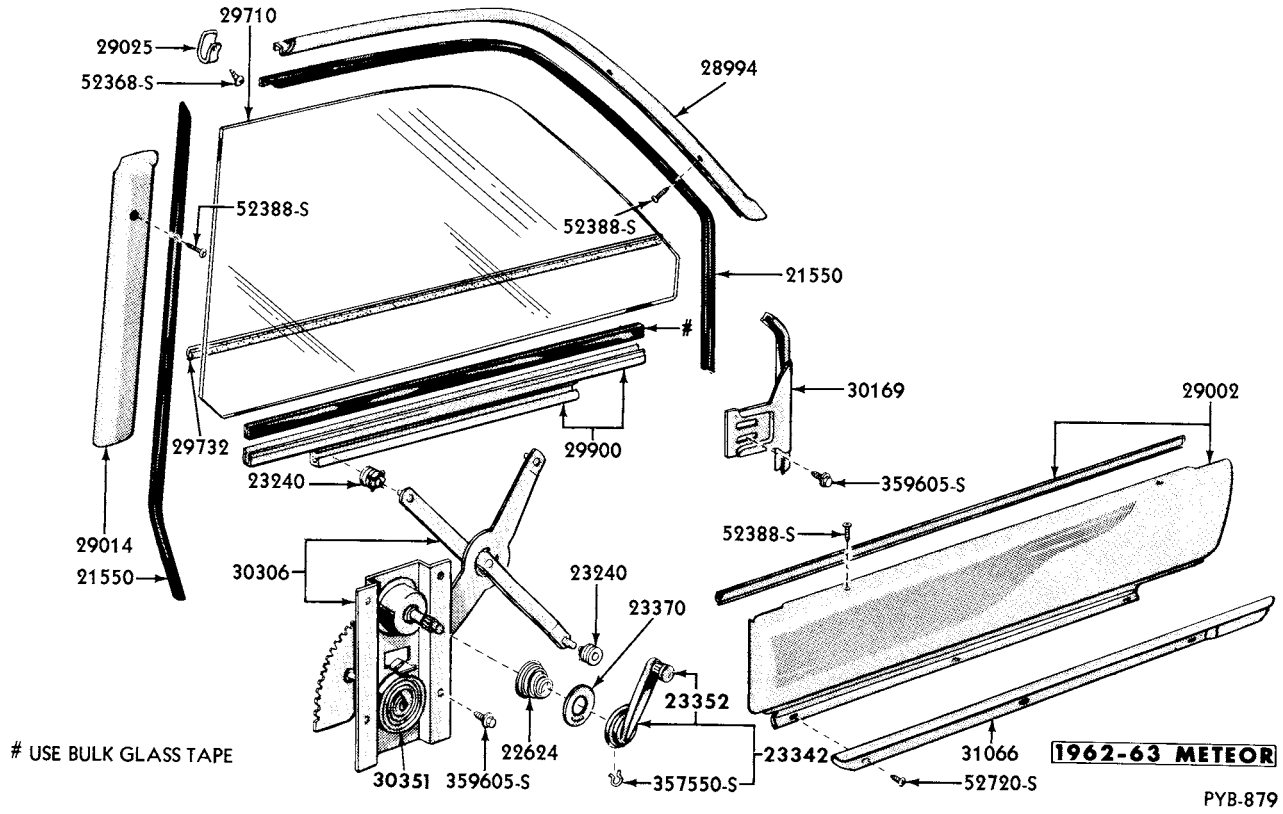

QUARTER WINDOW PARTS - MODEL 62

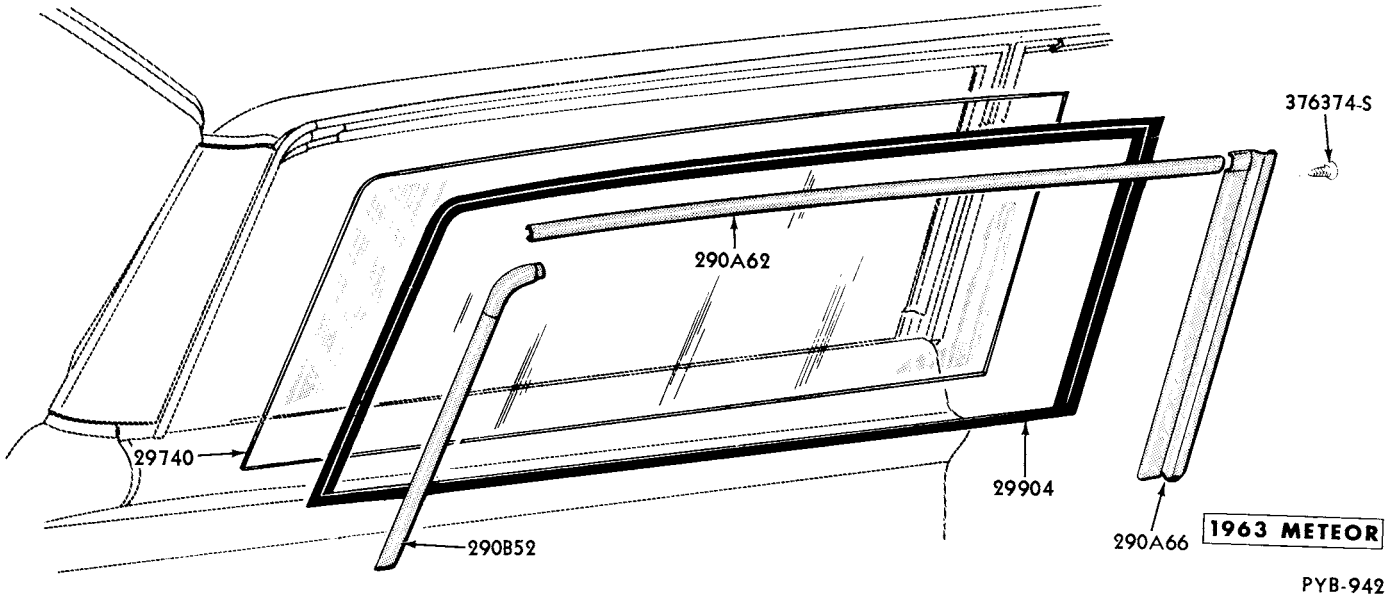

QUARTER STATIONARY WINDOW - MODEL 71

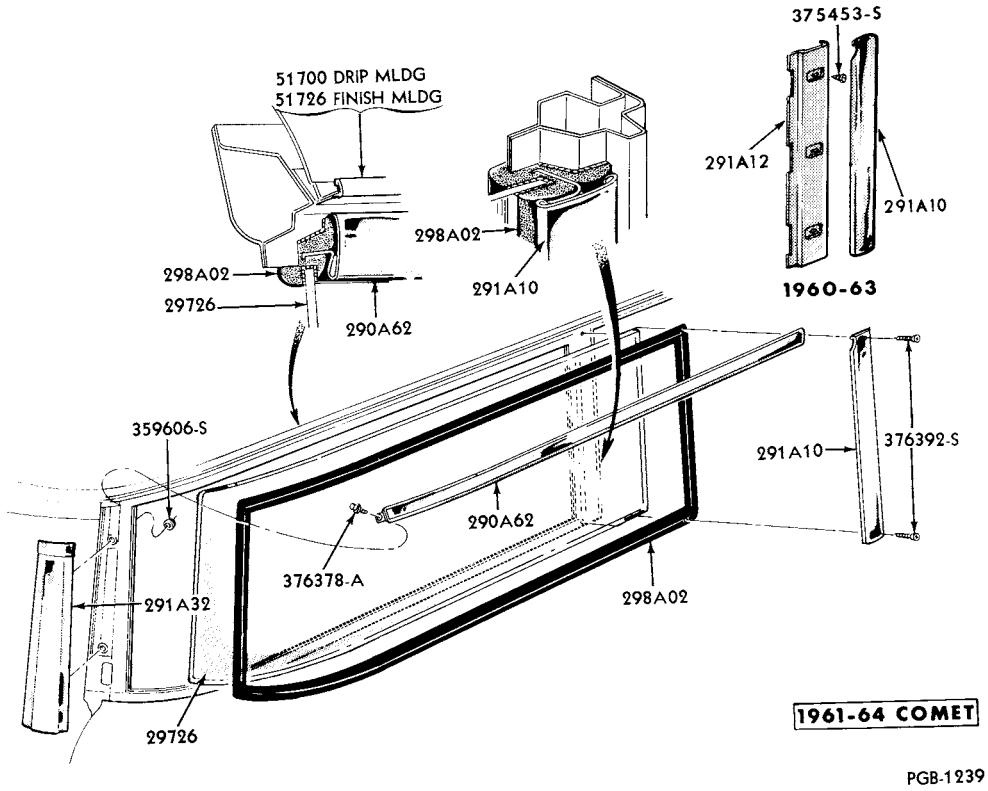

QUARTER STATIONARY WINDOW - MODELS 59, 71

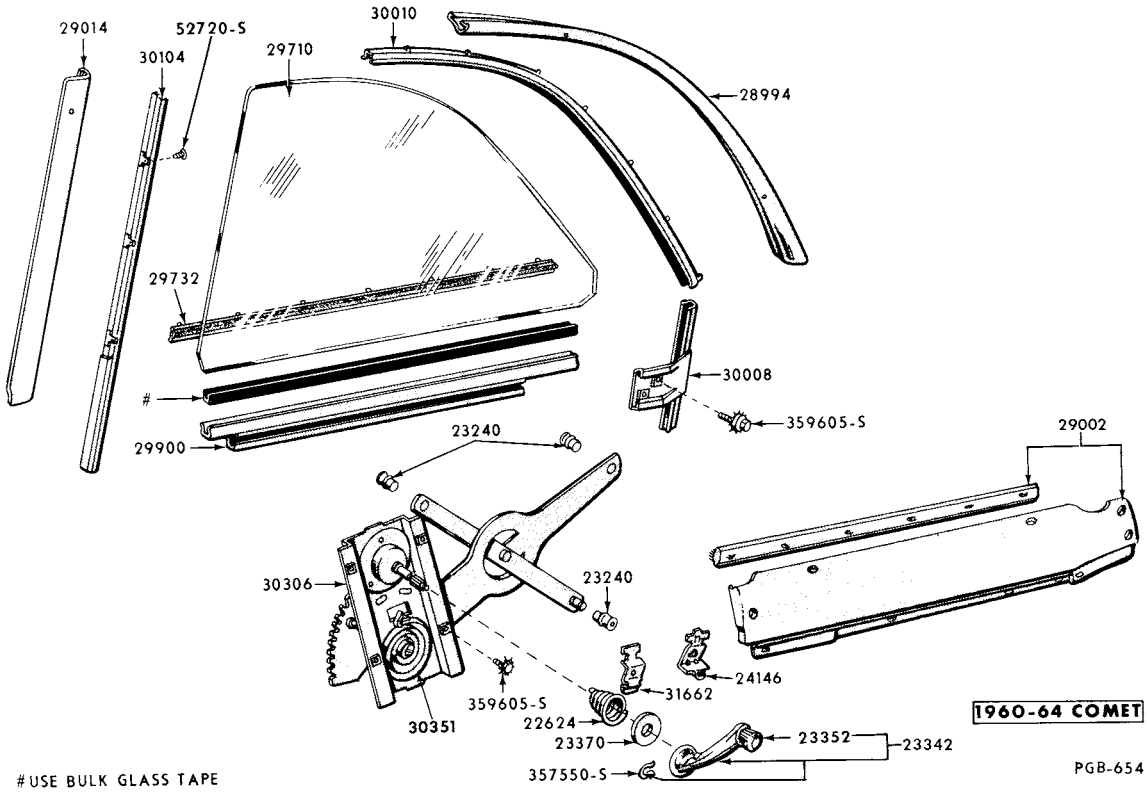

QUARTER WINDOW and RELATED PARTS - MODEL 62

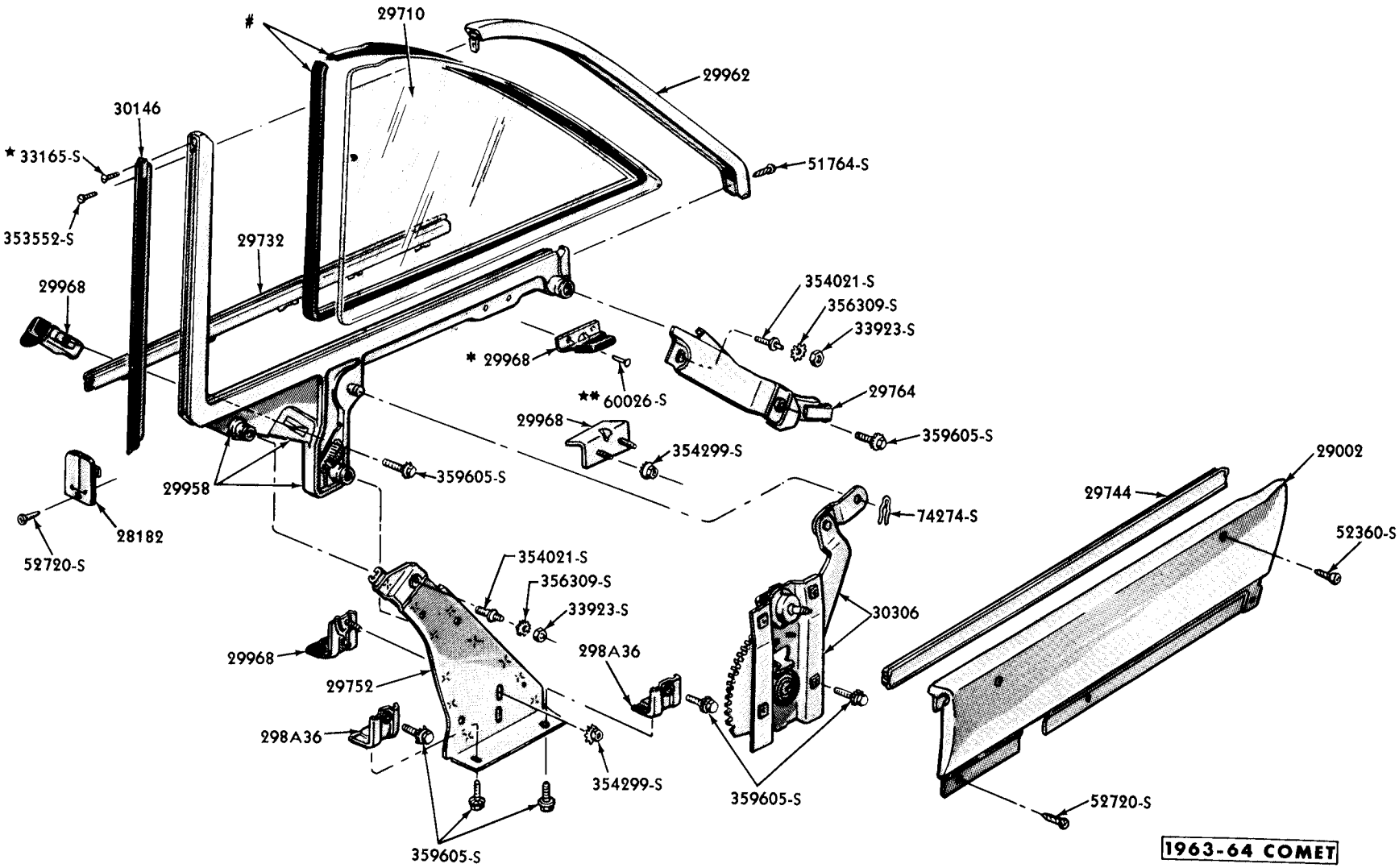

USE BULK GLASS TAPE
* ALSO INCLUDED IN 29958-9

QUARTER WINDOW and RELATED PARTS - MODEL 63

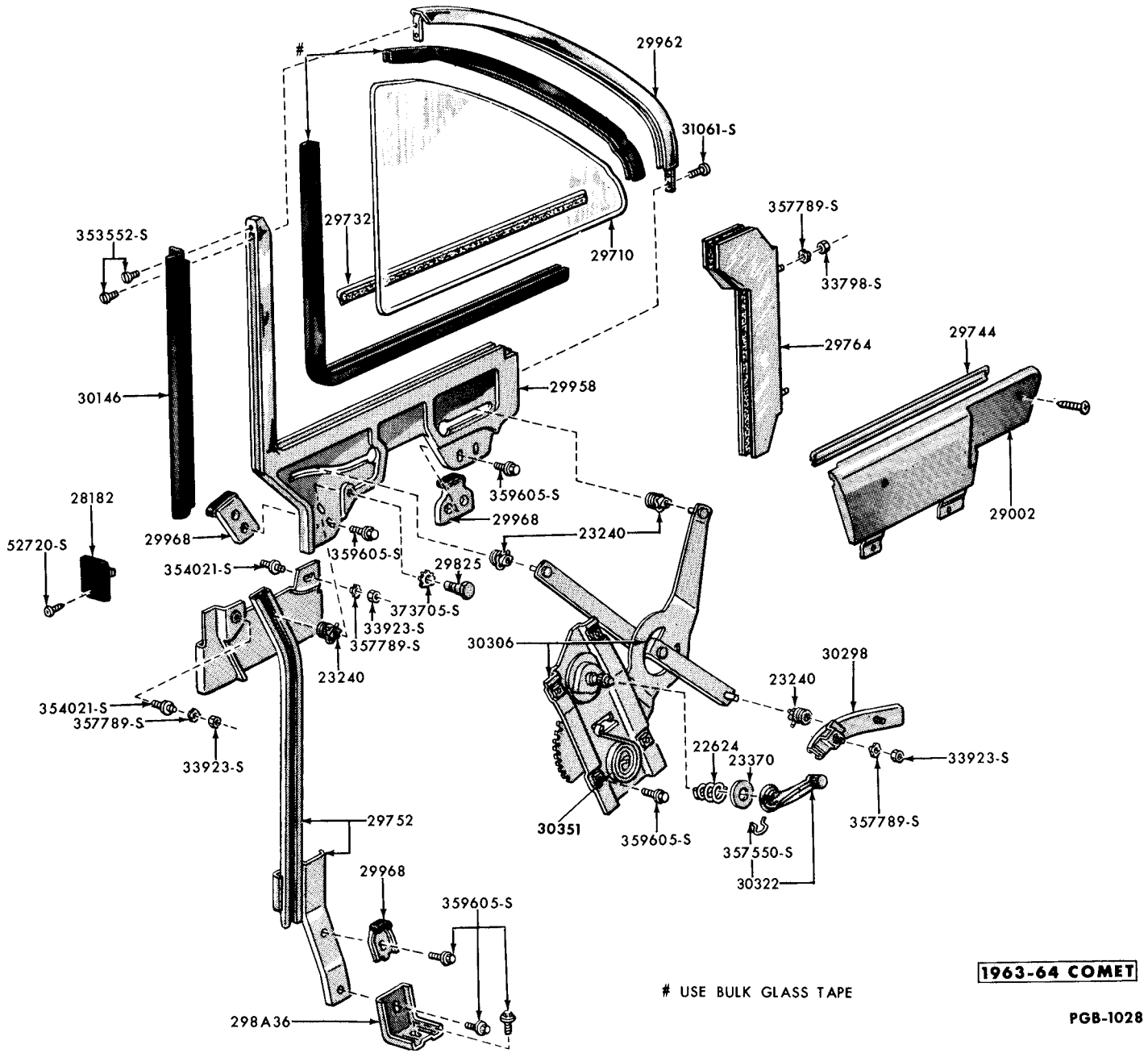

QUARTER WINDOW and RELATED PARTS - MODEL 76

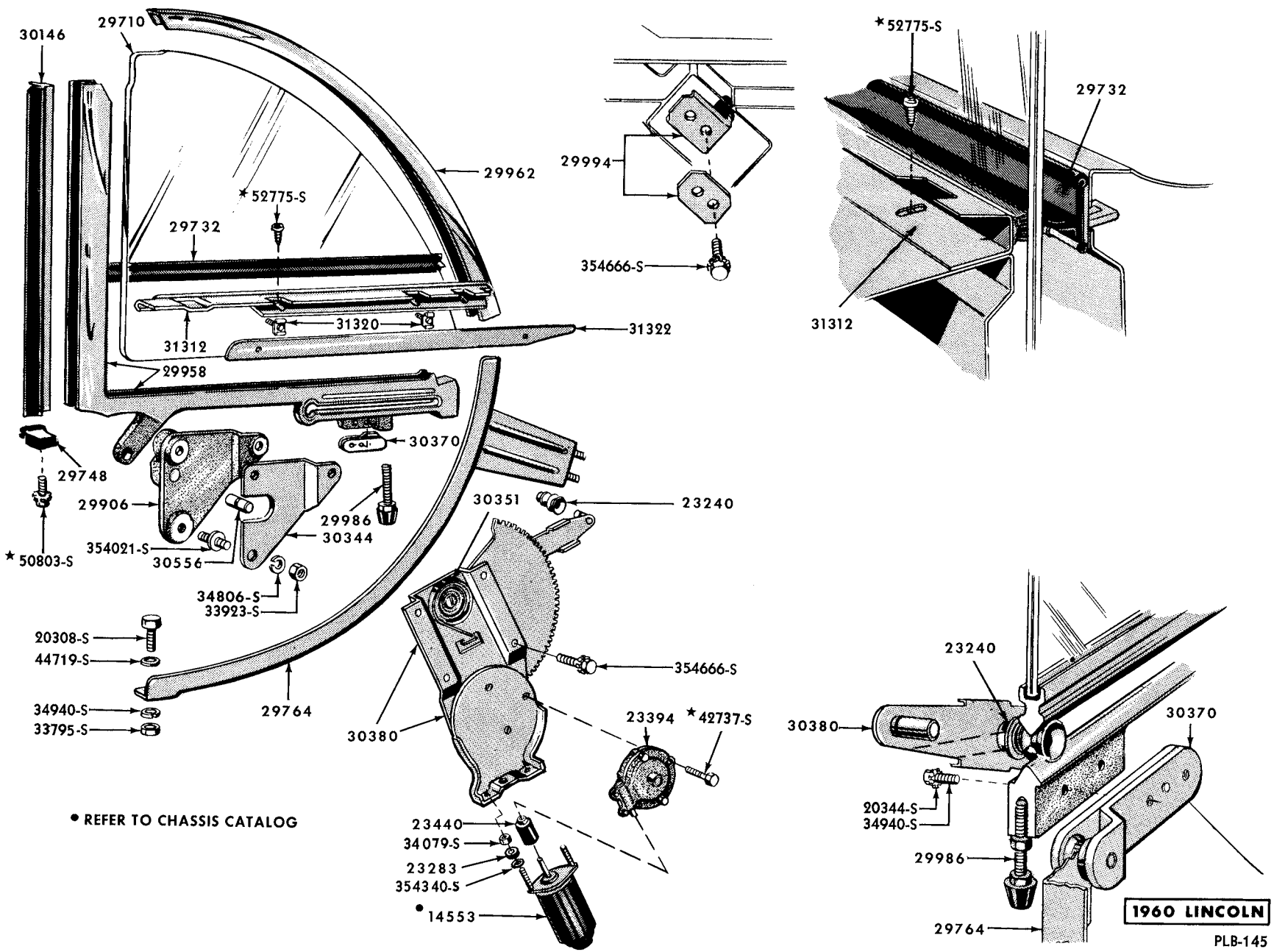

• REFER TO CHASSIS CATALOG

QUARTER WINDOW PARTS - MODEL 68

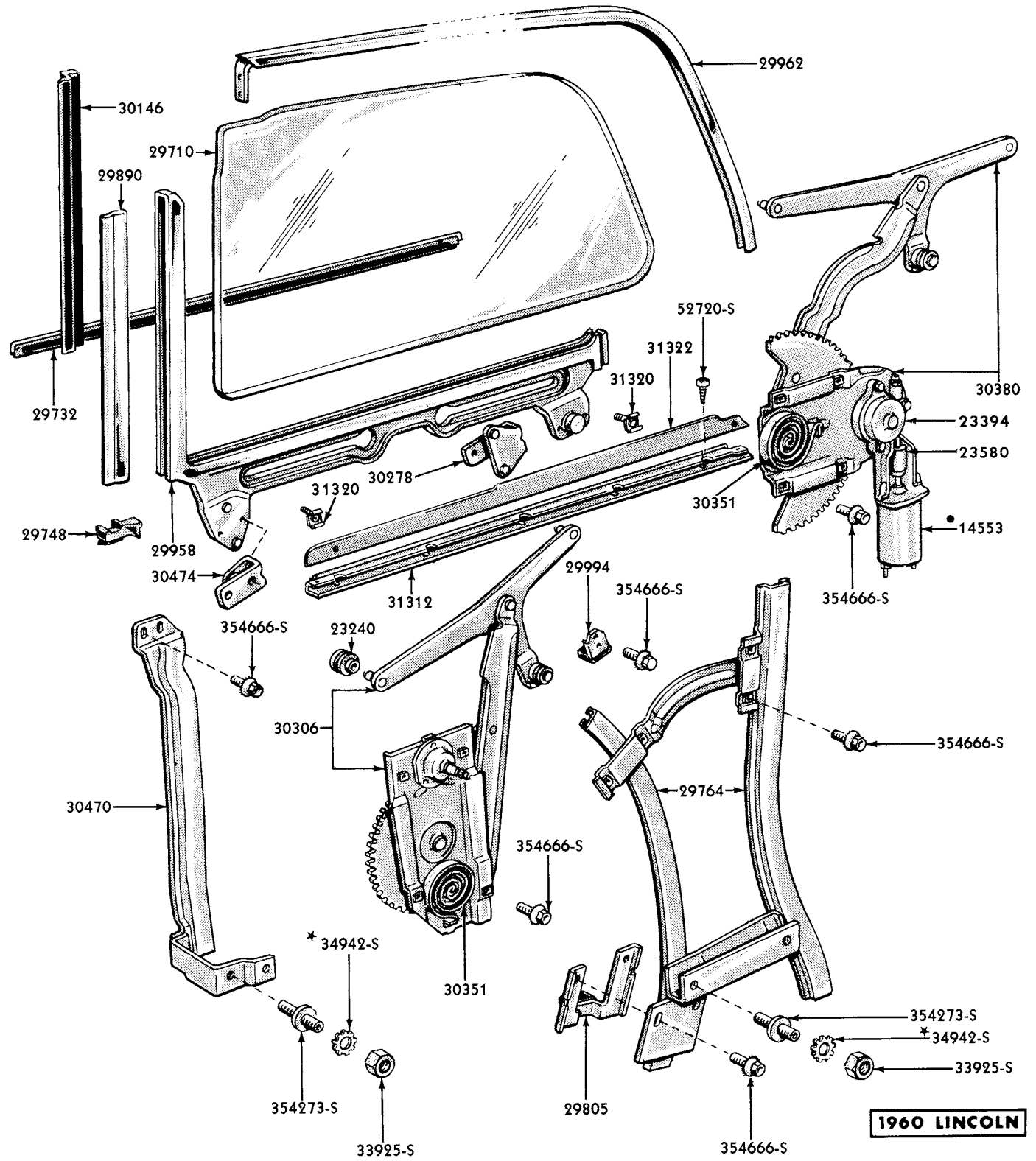

• REFER TO CHASSIS CATALOG

QUARTER WINDOW PARTS - MODELS 63, 65

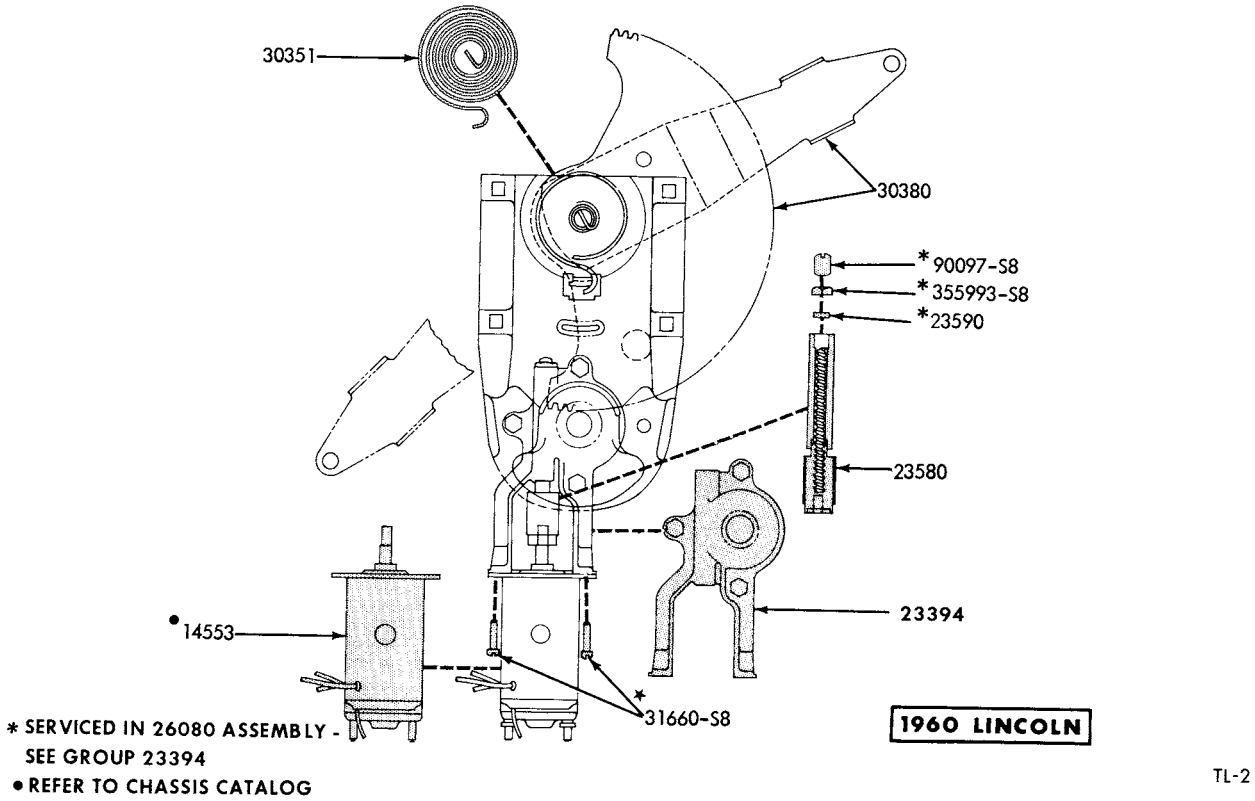

QUARTER WINDOW ELECTRIC REGULATOR - MODELS 63, 65

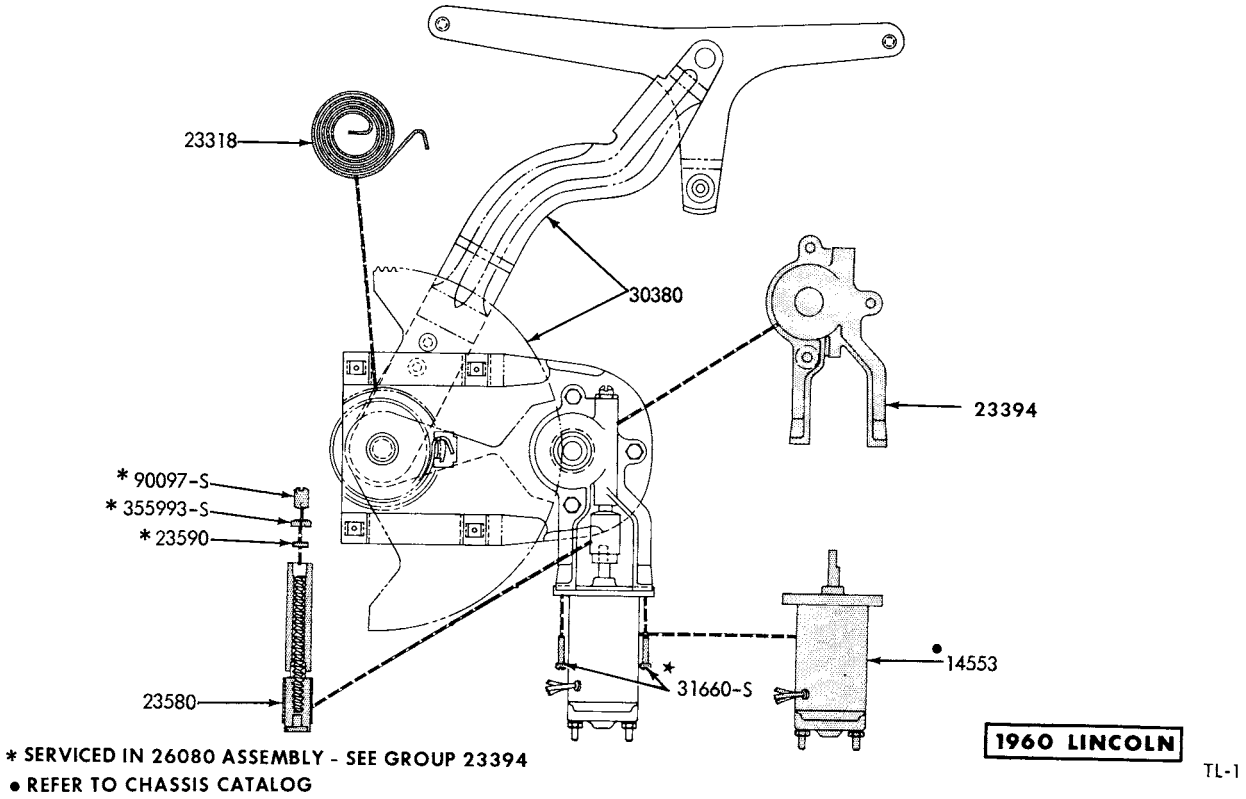

QUARTER WINDOW ELECTRIC REGULATOR - MODEL 68

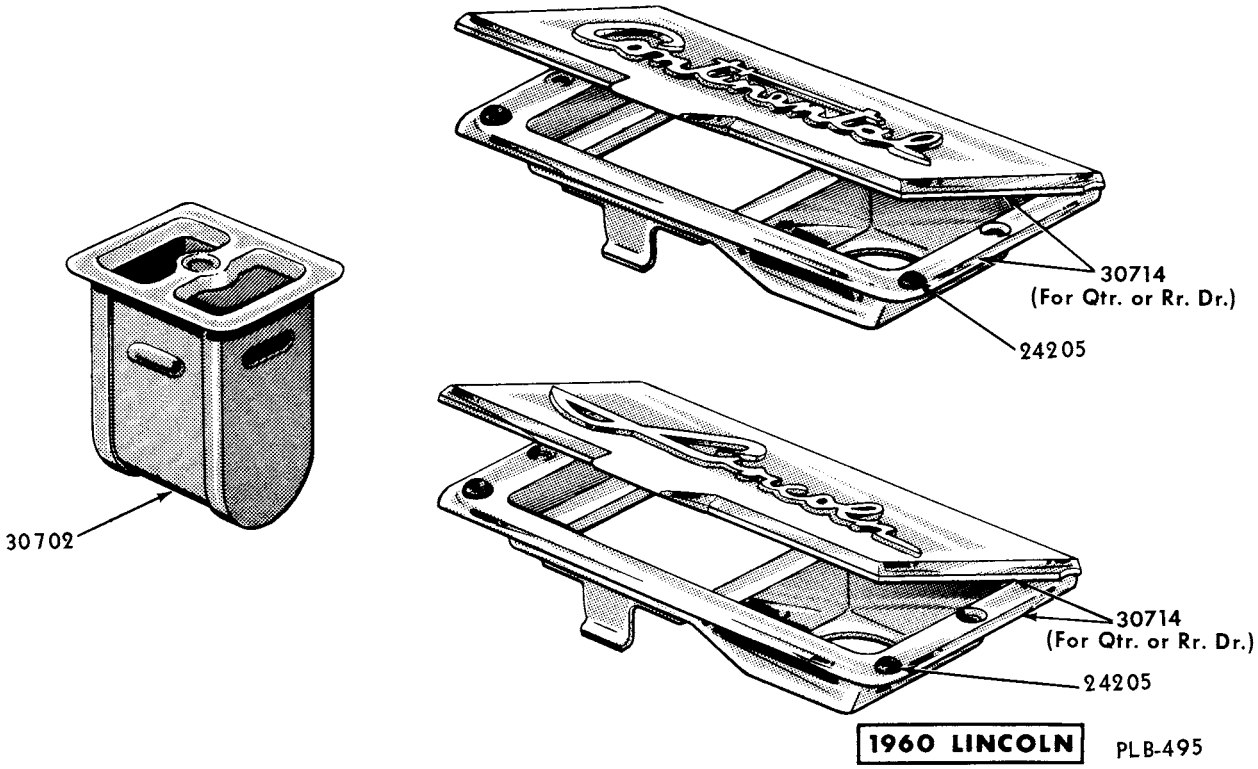

QUARTER ASH RECEPTACLE and RETAINER

GROUP AND PART NUMBER	DESCRIPTION, SIZE, ETC.	NO. REQ'D	MODEL OR ENGINE CUBIC INCH DISPLACEMENT	VEHICLE CODE	YEAR 19.___
27738-9	SEAL (QUARTER PANEL TO PACKAGE TRAY PANEL)				
C1VY 7427738-A	R.H. - sponge rubber - use on vehicles built prior to 9-1-61	1	74	D	61/62
C1VY 7427739-A	L.H. - sponge rubber - use on vehicles built prior to 9-1-61	1	74	D	61/62
C2VY 7427738-A	R.H. - sponge rubber - use on vehicles built after 8-31-61	1	74	D	62
C2VY 7427739-A	L.H. - sponge rubber - use on vehicles built after 8-31-61	1	74	D	62
C3VY 7427738-A	R.H.	1	74	D	63
C3VY 7427739-A	L.H.	1	74	D	63
27762-3	FILLER ASSEMBLY (QUARTER PANEL LOWER EXTENSION TO REAR FLOOR CROSS SILL)				
COMB 7727762-A	R.H.	1	77	A	60
COMB 7727763-A	L.H.	1	77	A	60
27766-7	MOULDING (QUARTER PANEL LOWER REAR EDGE)				
BAK 6827766-A	R.H. - rustless steel (a)	1	54, 65, 68, 75	D	60
BAK 6827767-A	L.H. - rustless steel (a)	1	54, 65, 68, 75	D	60
BAK 5729302-B	Retainer	AR	a		
51756-S8	Screw-pan hd. cr. rec. -No. 10-24 x 3/8"	AR	a		
354397-S100	Nut and washer-No. 10-24	AR	a		
27776-7	REFER TO GROUP 27970-1				
27782-3	REFER TO GROUP 27970-1				
27800-1	BRACE (QUARTER PANEL TO WHEELHOUSE)				
C2MB 7627800-A	R.H.	1	76	A	62
C2MB 7627801-A	L.H.	1	76	A	62
C3MY 6227800-A	R.H.	1	54,62,65,75	A	63/64
C3MY 6227801-A	L.H.	1	54,62,65,75	A	63/64
C3MY 7627800-A	R.H. - use on vehicles built prior to 2-4-63	1	63, 76	A	63
C3MY 7627801-A	L.H. - use on vehicles built prior to 2-4-63	1	63, 76	A	63
C3MY 7627800-B	R.H. - use on vehicles built after 2-3-63	1	57,63,76	A	63/64
C3MY 7627801-B	L.H. - use on vehicles built after 2-3-63	1	57,63,76	A	63/64
278B00-1	GUSSET (QUARTER PILLAR REINFORCEMENT) LOWER				
C4VY 53278B00-A	R.H.	1	All	D	64
C4VY 53278B01-A	L.H.	1	All	D	64
27802	SEAL (QUARTER PANEL EXTENSION TO REAR LAMP DOOR)				
C2YY 6227802-A		2	All	B	62
278B06-7	GUSSET (WHEELHOUSE TO DRAIN TROUGH)				
C3GY 76278B06-A	R.H.	1	76	C	63/64
C3GY 76278B07-A	L.H.	1	76	C	63/64
27816-7	REFER TO GROUP 27854-5				
278B16-7	RETAINER (REAR DOOR WIRING ON WHEELHOUSE)				
C1VB 57278B16-A	R.H.	1	All	D	61/62
C1VB 57278B17-A	L.H.	1	All	D	61/62
278B20-1	GUSSET (QUARTER PILLAR REINFORCEMENT) LOWER				
C1VY 57278B20-A	R.H.	1	All	D	61/63
C1VY 57278B21-A	L.H.	1	All	D	61/63

GROUP AND PART NUMBER	DESCRIPTION, SIZE, ETC.	NO. REQ'D	MODEL OR ENGINE CUBIC INCH DISPLACEMENT	VEHICLE CODE	YEAR 19____
278A36-7	PILLAR (QUARTER WHEELHOUSE TO ROOF) INNER				
C3OZ 71278A36-A	R.H.	1	71	B	63
C3OZ 71278A37-A	L.H.	1	71	B	63
CODB 59278A36-A	R.H.	1	59,71	C	60/64
CODB 59278A37-A	L.H.	1	59,71	C	60/64
278A38-9	PILLAR (QUARTER WHEELHOUSE TO ROOF) OUTER				
C3OZ 71278A38-A	R.H.	1	71	B	63
C3OZ 71278A39-A	L.H.	1	71	B	63
CODB 59278A38-A	R.H.	1	59,71	C	60/64
CODB 59278A39-A	L.H.	1	59,71	C	60/64
27846-7	PANEL (QUARTER)				
COMB 5827846-A	R.H. - lower (a)	1	57, 58, 77	A	60
COMB 5827847-A	L.H. - lower (a)	1	57, 58, 77	A	60
COMB 6427846-A	R.H. - lower (b)	1	63, 64, 76	A	60
COMB 6427847-A	L.H. - lower (b)	1	63, 64, 76	A	60
C1MB 7127846-E	R.H. - lower (c)	1	71	A	61
C1MB 7127847-E	L.H. - lower (c)	1	71	A	61
C2MB 5427846-A	R.H. - lower (c)	1	54,58,75	A	61/62
C2MB 5427847-A	L.H. - lower (c)	1	54,58,75	A	61/62
C2MY 6227846-A	R.H. - lower - when using for 1961, flange must be reworked to match angle of the mating flange on upper panel (b)	1	62,64,65,76	A	61/62
C2MY 6227847-A	L.H. - lower - when using for 1961, flange must be reworked to match angle of the mating flange on upper panel (b)	1	62,64,65,76	A	61/62
C2MB 7127846-A	R.H. - lower (c)	1	71	A	62
C2MB 7127847-A	L.H. - lower (c)	1	71	A	62
C3MY 6227846-A	R.H.	1	62	A	63
C3MY 6227847-A	L.H.	1	62	A	63
C3MY 6327846-A	R.H.	1	63	A	63
C3MY 6327847-A	L.H.	1	63	A	63
C3MY 6527846-A	R.H.	1	65	A	63
C3MY 6527847-A	L.H.	1	65	A	63
C3MY 7127846-A	R.H.	1	71	A	63
C3MY 7127847-A	L.H.	1	71	A	63
C3MY 7627846-A	R.H.	1	76	A	63
C3MY 7627847-A	L.H.	1	76	A	63
C3MY 5427846-A	R.H.	1	54,75	A	63/64
C3MY 5427847-A	L.H.	1	54,75	A	63/64
C4MY 5727846-A	R.H.	1	57	A	64
C4MY 5727847-A	L.H.	1	57	A	64
C4MY 6227846-A	R.H.	1	62	A	64
C4MY 6227847-A	L.H.	1	62	A	64
C4MY 6327846-A	R.H. - less lower moulding holes	1	63	A	64
C4MY 6327847-A	L.H. - less lower moulding holes	1	63	A	64
C4MY 6527846-A	R.H.	1	65	A	64
C4MY 6527847-A	L.H.	1	65	A	64
C4MY 7127846-A	R.H.	1	71	A	64
C4MY 7127847-A	L.H.	1	71	A	64
C4MY 7627846-A	R.H.	1	76	A	64
C4MY 7627847-A	L.H.	1	76	A	64
C2YY 5427846-A	R.H. (b)	1	54	B	62/63
C2YY 5427847-A	L.H. (b)	1	54	B	62/63
C2YY 6227846-A	R.H. (b)	1	62	B	62/63
C2YY 6227847-A	L.H. (b)	1	62	B	62/63

CONTINUED ON NEXT PAGE

GROUP AND PART NUMBER	DESCRIPTION, SIZE, ETC.	NO. REQ'D	MODEL OR ENGINE CUBIC INCH DISPLACEMENT	VEHICLE CODE	YEAR 19____
27846-7	PANEL (QUARTER) CONTINUED				
C3YY 6527846-A	R.H.	1	65	B	63
C3YY 6527847-A	L.H.	1	65	B	63
C3YY 7127846-A	R.H.	1	71	B	63
C3YY 7127847-A	L.H.	1	71	B	63
C1GB 5427846-C	R.H. - lower	1	54	C	60/61
C1GB 5427847-C	L.H. - lower	1	54	C	60/61
C1GB 6227846-E	R.H. - lower	1	62	C	60/61
C1GB 6227847-E	L.H. - lower	1	62	C	60/61
CODB 5927846-A	R.H. - includes upper panel (b)	1	59	C	60/63
CODB 5927847-A	L.H. - includes upper panel (b)	1	59	C	60/63
C3DZ 5927846-A	R.H. - includes upper panel - use on vehicles with 700 x 13 tires	1	59	C	63
C3DZ 7127846-A	R.H. - includes upper panel (b)	1	71	C	60/63
C1KB 7127847-A	L.H. - includes upper panel (b)	1	71	C	60/63
C3GY 5427846-A	R.H. - includes upper panel - less moulding holes (b)	1	54	C	62/63
C3GY 5427847-A	L.H. - includes upper panel - less moulding holes (b)	1	54	C	62/63
C3GY 6227846-A	R.H. - includes upper panel (b)	1	62	C	62/63
C3GY 6227847-A	L.H. - includes upper panel (b)	1	62	C	62/63
C3GY 6327846-A	R.H. - includes upper panel	1	63	C	63
C3GY 6327847-A	L.H. - includes upper panel	1	63	C	63
C3GY 7627846-A	R.H. - includes upper panel	1	76	C	63
C3GY 7627847-A	L.H. - includes upper panel	1	76	C	63
C4GY 5427846-A	R.H. - less moulding holes	1	54	C	64
C4GY 5427847-A	L.H. - less moulding holes	1	54	C	64
C4GY 6227846-A	R.H. - less moulding holes	1	62	C	64
C4GY 6227847-A	L.H. - less moulding holes	1	62	C	64
C4GY 6327846-B	R.H. - less moulding holes	1	63	C	64
C4GY 6327847-B	L.H. - less moulding holes	1	63	C	64
C4DZ 7127846-A	R.H. - less moulding holes	1	71	C	64
C4DZ 7127847-A	L.H. - less moulding holes	1	71	C	64
C4GY 7627846-A	R.H.	1	76	C	64
C4GY 7627847-A	L.H.	1	76	C	64
COLB 5727846-A	R.H.	1	53, 57	D	60
COLB 5727847-A	L.H.	1	53, 57	D	60
COLB 6327846-A	R.H.	1	63	D	60
COLB 6327847-A	L.H.	1	63	D	60
COLB 6527846-A	R.H.	1	65	D	60
COLB 6527847-A	L.H.	1	65	D	60
COLB 6827846-A	R.H.	1	68	D	60
COLB 6827847-A	L.H.	1	68	D	60
COLB 7527846-A	R.H.	1	54, 75	D	60
COLB 7527847-A	L.H.	1	54, 75	D	60
C1VY 5727846-D	R.H. - lower - less holes	1	All	D	61/64
C1VY 5727847-D	L.H. - lower - less holes	1	All	D	61/63
C4VY 5327847-A	L.H. - lower - less holes	1	All	D	64
C1AB 5427224-A	Bumper - upper - R.H. and L.H. - at belt - use on vehicles built prior to 1-3-61	1	c		
C1AB 5427225-A	Bumper - upper - R.H. and L.H. - at belt - use on vehicles built prior to 1-3-61	1	c		
C1AB 5427224-B	Bumper - upper - R.H. and L.H. - at belt - use on vehicles built after 1-2-61	1	c		
C1AB 5427225-B	Bumper - upper - R.H. and L.H. - at belt - use on vehicles built after 1-2-61	1	c		
357549-S	Bumper	AR	a		
372486-S	Bumper - rubber	1	b		

GROUP AND PART NUMBER	DESCRIPTION, SIZE, ETC.	NO. REQ'D	MODEL OR ENGINE CUBIC INCH DISPLACEMENT	VEHICLE CODE	YEAR 19____
27854-5	PANEL (QUARTER UPPER)				
COMB 5727854-C	R.H. - with holes	1	57	A	60
COMB 5727855-C	L.H. - with holes	1	57	A	60
COMB 5827854-C	R.H. - with holes	1	58	A	60
COMB 5827855-C	L.H. - with holes	1	58	A	60
COMB 6327854-C	R.H. - with holes	1	63	A	60
COMB 6327855-C	L.H. - with holes	1	63	A	60
COMB 6427854-C	R.H. - with holes	1	64	A	60
COMB 6427855-C	L.H. - with holes	1	64	A	60
COMB 7627854-C	R.H. - with holes	1	76	A	60
COMB 7627855-C	L.H. - with holes	1	76	A	60
COMB 7727854-E	R.H. - with holes	1	77	A	60
COMB 7727855-E	L.H. - with holes	1	77	A	60
C1MB 5427816-A	R.H. - with holes	1	54,75	A	61
C1MB 5427817-A	L.H. - with holes	1	54,75	A	61
C1MB 5827816-A	R.H. - with holes	1	58	A	61
C1MB 5827817-A	L.H. - with holes	1	58	A	61
C1MB 6227816-A	R.H. - with holes	1	62	A	61
C1MB 6227817-A	L.H. - with holes	1	62	A	61
C1MB 6427816-A	R.H. - with holes	1	64	A	61
C1MB 6427817-A	L.H. - with holes	1	64	A	61
C1MB 6527816-A	R.H. - with holes	1	65	A	61
C1MB 6527817-A	L.H. - with holes	1	65	A	61
C1MB 7127816-A	R.H. - with holes	1	71	A	61
C1MB 7127817-A	L.H. - with holes	1	71	A	61
C1MB 7627816-A	R.H. - with holes	1	76	A	61
C1MB 7627817-A	L.H. - with holes	1	76	A	61
C2MY 5427816-A	R.H. - with holes	1	54,75	A	62
C2MY 5427817-A	L.H. - with holes	1	54,75	A	62
C2MY 6227816-A	R.H. - with holes	1	62	A	62
C2MY 6227817-A	L.H. - with holes	1	62	A	62
C2MY 6527816-A	R.H. - with holes	1	65	A	62
C2MY 6527817-A	L.H. - with holes	1	65	A	62
C2MB 7127816-A	R.H. - with holes	1	71	A	62
C2MB 7127817-A	L.H. - with holes	1	71	A	62
C2MB 7627816-A	R.H. - with holes	1	76	A	62
C2MB 7627817-A	L.H. - with holes	1	76	A	62
C1GB 5427854-A	R.H.	1	54	C	60/61
C1GB 5427855-A	L.H.	1	54	C	60/61
C1GB 6227854-A	R.H.	1	62	C	60/61
C1GB 6227855-A	L.H.	1	62	C	60/61
C1VY 5727854-B	R.H.	1	All	D	61/63
C1VY 5727855-B	L.H.	1	All	D	61/63
27854-5	PANEL (QUARTER) UPPER REAR				
C4VY 5327854-A	R.H.	1	All	D	64
C4VY 5327855-A	L.H.	1	All	D	64
27858-9	PANEL (QUARTER INSIDE TO FLOOR PAN)				
COMB 5627858-A	R.H.	1	77	A	60
COMB 5627859-A	L.H.	1	77	A	60
C2DZ 5927859-A	L.H. side only	1	59,71	C	60/63
C4DZ 5927859-A	L.H. side only	1	71	C	64
278A64-5	REFER TO GROUP 278A80-1				

GROUP AND PART NUMBER	DESCRIPTION, SIZE, ETC.	NO. REQ'D	MODEL OR ENGINE CUBIC INCH DISPLACEMENT	VEHICLE CODE	YEAR 19____
27866-7	REFER TO GROUP 290B10-1				
27870-1	PANEL (QUARTER WINDOW REGULATOR)				
COMB 6427876-B	R.H.	1	63, 64	A	60
COMB 6427877-B	L.H.	1	63, 64	A	60
PB9M 7627870-A	R.H.	1	76	A	60
PB9M 7627871-A	L.H.	1	76	A	60
C1AB 6527870-D	R.H.	1	65	A	61
C1AB 6527871-D	L.H.	1	65	A	61
C1AB 6227870-B	R.H.	1	62, 64	A	61/62
C1AB 6227871-B	L.H.	1	62, 64	A	61/62
COAZ 7627870-A	R.H.	1	76	A	61/64
COAZ 7627871-A	L.H.	1	76	A	61/64
C2AZ 6527870-A	R.H.	1	65	A	62
C2AZ 6527871-A	L.H.	1	65	A	62
C3AZ 6227870-A	R.H. - use on vehicles built prior to 3-1-63	1	62	A	63
C3AZ 6227871-A	L.H. - use on vehicles built prior to 3-1-63	1	62	A	63
C3AZ 6327870-B	R.H.	1	63	A	63
C3AZ 6327871-B	L.H.	1	63	A	63
C3AZ 6227870-B	R.H. - use on vehicles built after 2-28-63	1	62	A	63/64
C3AZ 6227871-B	L.H. - use on vehicles built after 2-28-63	1	62	A	63/64
C3AZ 6527870-A	R.H.	1	65	A	63/64
C3AZ 6527871-A	L.H.	1	65	A	63/64
C4AZ 6327870-A	R.H.	1	63	A	64
C4AZ 6327871-A	L.H.	1	63	A	64
C2OZ 6227870-A	R.H.	1	62	B	62/63
C2OZ 6227871-A	L.H.	1	62	B	62/63
C3OZ 6527870-A	R.H.	1	65	B	63
C3OZ 6527871-A	L.H.	1	65	B	63
C3DZ 6227870-A	R.H.	1	59, 62	C	60/64
C3DZ 6227871-A	L.H.	1	59, 62	C	60/64
C3DZ 6327870-A	R.H.	1	63	C	63
C3DZ 6327871-A	L.H.	1	63	C	63
C3DZ 7627870-B	R.H. - use on vehicles built prior to 1-21-63	1	76	C	63
C3DZ 7627871-B	L.H. - use on vehicles built prior to 1-21-63	1	76	C	63
C3DZ 7627870-C	R.H. - use on vehicles built after 1-20-63	1	76	C	63/64
C3DZ 7627871-C	L.H. - use on vehicles built after 1-20-63	1	76	C	63/64
C3DZ 6327870-B	R.H.	1	63	C	64
C3DZ 6327871-B	L.H.	1	63	C	64
BAK 6327870-A	R.H. - in prime	1	63, 65	D	60
BAK 6327871-A	L.H. - in prime	1	63, 65	D	60
COLB 6827870-A	R.H. - in prime	1	68	D	60
COLB 6827871-A	L.H. - in prime	1	68	D	60
27876-7	REFER TO GROUP 27870-1				
278A80-1	FILLER (QUARTER PANEL REAR)				
COMB 64278A80-A	R.H.	1	All	A	60
COMB 64278A81-A	L.H.	1	All	A	60
C2GB 62278A64-A	R.H.	1	54, 62, 63	C	62/63
C2GB 62278A65-A	L.H.	1	54, 62, 63	C	62/63
27882-3	WHEELHOUSE (QUARTER)				
COMB 5627882-A	R.H.	1	77	A	60
COMB 6427882-A	R.H.	1	All except 77	A	60
COMB 6427883-A	L.H.	1	All	A	60
COLB 6327882-A	R.H. - in prime	1	All	D	60
COLB 6327883-A	L.H. - in prime	1	All	D	60
C4VY 5327882-A	R.H. - in prime	1	All	D	61/64
C4VY 5327883-A	L.H. - in prime	1	All	D	61/64

GROUP AND PART NUMBER	DESCRIPTION, SIZE, ETC.	NO. REQ'D	MODEL OR ENGINE CUBIC INCH DISPLACEMENT	VEHICLE CODE	YEAR 19____
278A82-3	REINFORCEMENT (QUARTER PILLAR) INNER				
C1VB 57278A82-A	R.H.	1	All	D	61/63
C1VB 57278A83-A	L.H.	1	All	D	61/63
C4VY 53278A82-A	R.H.	1	All	D	64
C4VY 53278A83-A	L.H.	1	All	D	64
27886-7	PANEL (QUARTER WHEELHOUSE) INNER				
COAB 6427886-A	R.H. - for 1961 serviced in assembly 27782	1	All	A	62/63
COAB 6427887-A	L.H.	1	All	A	61/63
C4AZ 6227886-A	R.H.	1	All	A	64
C4AZ 6227887-A	L.H.	1	All	A	64
C2OZ 6227886-A	R.H.	1	All	B	62/63
C2OZ 6227887-A	L.H.	1	All	B	62/63
CODB 5927886-A	R.H.	1	59,71	C	60/63
C4DZ 5927886-A	R.H.	1	71	C	64
CODB 5927887-A	L.H.	1	59,71	C	60/64
C3GY 6227886-A	R.H.	1	54,62,63,76	C	60/64
C1KB 6227887-A	L.H.	1	54,62	C	60/62
C3GY 6227887-A	L.H.	1	54,62,63,76	C	63/64
278A86-7	GUSSET (QUARTER PILLAR REINFORCEMENT)				
C1VB 57278A86-A	R.H.	1	All	D	61/64
C1VB 57278A87-A	L.H.	1	All	D	61/64
27894-5	PANEL (QUARTER WHEELHOUSE) OUTER				
C4MY 6227894-A	R.H.	1	All	A	61/64
C4MY 6227895-A	L.H.	1	All	A	61/64
C2OZ 6227894-A	R.H.	1	All	B	62/63
C2OZ 6227895-A	L.H.	1	All	B	62/63
CODZ 5927894-A	R.H.	1	59,71	C	60/63
CODZ 5927895-A	L.H.	1	59,71	C	60/63
C3GY 6327894-A	R.H.	1	All except 59,71	C	60/63
C3GY 6327895-A	L.H.	1	All except 59,71	C	60/63
C4DZ 5927894-A	R.H.	1	71	C	64
C4DZ 5927895-A	L.H.	1	71	C	64
C4GY 6227894-A	R.H.	1	All except 71	C	64
C4GY 6227895-A	L.H.	1	All except 71	C	64
279B00-1	REINFORCEMENT (QUARTER WHEELHOUSE PILLAR TO ROOF) OUTER				
C3OZ 71279B00-A	R.H.	1	71	A	63
C3OZ 71279B01-A	L.H.	1	71	A	63
279B02-3	PILLAR (QUARTER WHEELHOUSE TO ROOF INNER) UPPER				
C3OZ 71279B02-A	R.H.	1	71	B	63
C3OZ 71279B03-A	L.H.	1	71	B	63
27906	SEAL (QUARTER WHEEL OPENING COVER) FRONT				
B9MB 6427906-A	Rubber - 68-1/8" long	2	All except 57F, 63F, 76D, 77	A	60
27924-5	PANEL (REAR QUARTER INSIDE)				
BAK 5727924-A	R.H. - in prime	1	All except 68	D	60
BAK 5727925-A	L.H. - in prime	1	All except 68	D	60
BAK 6827924-A	R.H. - in prime	1	68	D	60
BAK 6827925-A	L.H. - in prime	1	68	D	60
27936	REFER TO GROUP 11310				

GROUP AND PART NUMBER	DESCRIPTION, SIZE, ETC.	NO. REQ'D	MODEL OR ENGINE CUBIC INCH DISPLACEMENT	VEHICLE CODE	YEAR 19____
27950-1	EXTENSION (QUARTER WHEELHOUSE) FRONT				
C2AZ 6227950-A	R.H.	1	All	A	61/62
C2AZ 6227951-A	L.H.	1	All	A	61/62
C3AZ 6227950-A	R.H.	1	All	A	63
C3AZ 6227951-A	L.H.	1	All	A	63
C4MY 6227950-A	R.H.	1	All	A	64
C4MY 6227951-A	L.H.	1	All	A	64
C1KB 6227950-A	R.H.	1	54,62,63,76	C	60/63
C1KB 6227951-A	L.H.	1	54,62,63,76	C	60/63
CODB 6427950-A	R.H.	1	59,71	C	60/63
CODB 6427951-A	L.H.	1	59,71	C	60/63
279A56-7	FILLER (QUARTER PANEL) UPPER REAR TO LOWER REAR EXTENSION				
C1MB 71279A56-A	R.H.	1	71	A	61
C1MB 71279A57-A	L.H.	1	71	A	61
C1AB 59279A56-A	R.H.	1	71	A	62
C1AB 59279A57-A	L.H.	1	71	A	62
279A58-9	COVER (REAR QUARTER WHEELHOUSE OPENING) INNER				
COAA 64279A58-C	R.H.	1	All except 71	A	61
COAA 64279A59-C	L.H.	1	All except 71	A	61
279A62-3	REINFORCEMENT (LUGGAGE COMPARTMENT DOOR OPENING SIDE)				
C1MB 62279A62-A	R.H.	1	All except 71	A	61
C1MB 62279A63-A	L.H.	1	All except 71	A	61
C2MB 62279A62-A	R.H.	1	All except 71	A	62
C2MB 62279A63-A	L.H.	1	All except 71	A	62
C3MY 6245100-A	R.H. - cut 10-57/64" from front end for models 57,63,76	1	All except 71	A	63/64
C3MY 6245101-A	L.H. - cut 10-57/64" from front end for models 57,63,76	1	All except 71	A	63/64
C3YY 62279A62-A	R.H.	1	All except 71	B	62/63
C3YY 62279A63-A	L.H.	1	All except 71	B	62/63
C4GY 6245100-A	R.H.	1	54,62,63,76	C	64
C4GY 6245101-A	L.H.	1	54,62,63,76	C	64
C1VB 57279A62-A	R.H.	1	53	D	61/63
	L.H. - cut to fit	2	53,74	D	61/63
C1VB 74279A62-A	R.H.	1	74	D	61/63
27964	KIT (FLUSH FENDER SHIELD)				
C2OZ 6227964-A		1	All	B	62/63
279B68	REFER TO GROUP 28714-5				
27970-1	REINFORCEMENT (REAR LAMP OPENING)				
C2MB 6227970-A	R.H.	1	All except 71	A	62
C2MB 6227971-A	L.H.	1	All except 71	A	62
C2MB 7127970-A	R.H.	1	71	A	62
C2MB 7127971-A	L.H.	1	71	A	62
C4MY 6227970-A		2	All except 71	A	64
C2YB 6227970-A	Front	2	All	B	62
C3YY 6227970-A	R.H. - front	1	All except 71	B	63
C3YY 6227971-A	L.H. - front	1	All except 71	B	63
C3YY 7127782-A	R.H.	1	71	B	63
C3YY 7127783-A	L.H.	1	71	B	63

CONTINUED ON NEXT PAGE

GROUP AND PART NUMBER	DESCRIPTION, SIZE, ETC.	NO. REQ'D	MODEL OR ENGINE CUBIC INCH DISPLACEMENT	VEHICLE CODE	YEAR 19____
27970-1	REINFORCEMENT (REAR LAMP OPENING) CONTINUED				
C1GB 6227970-A		2	54, 62	C	60/61
C1KB 7127776-A	R.H.	1	59, 71	C	60/61
C1KB 7127777-A	L.H.	1	59, 71	C	60/61
C4GY 7127970-A	R.H.	1	71	C	64
C4GY 7127971-A	L.H.	1	71	C	64
C1VB 5727970-A		2	All	D	61/63
C4VY 5327970-A		2	All	D	64
27974-5	PANEL (QUARTER WHEEL OPENING) COVER				
B9MB 6427974-A	R.H. - long type	1	All except 57F, 63F, 76D, 77	A	60
B9MB 6427975-A	L.H. - long type	1	All except 57F, 63F, 76D, 77	A	60
COMB 6427974-A	R.H. - flush type	1	All	A	60
COMB 6427975-A	L.H. - flush type	1	All	A	60
C2MY 6227974-A	R.H.	1	All	A	61/62
C2MY 6227975-A	L.H.	1	All	A	61/62
C3AZ 6227974-A	R.H.	1	All	A	63
C3AZ 6227975-A	L.H.	1	All	A	63
C2OZ 6227974-A	R.H. (Δ)	1	All	B	62/63
C2OZ 6227975-A	L.H. (Δ)	1	All	B	62/63
	Δ Package also includes -				
(3) 34656-S8	nut and washer (3) 370034-S8B pin				
BAK 5727974-B	R.H. - less holes	1	All	D	60
BAK 5727975-B	L.H. - less holes	1	All	D	60
279B84	BRACKET (QUARTER WHEELHOUSE TO SIDE MEMBER GUSSET)				
C2VY 74279B84-A		2	74	D	62/63
27986-7	SEAL (QUARTER WHEEL OPENING COVER)				
COMB 6327986-A	R.H. - rubber - flush type - 44-1/2" long	1	All	A	60
COMB 6327987-A	L.H. - rubber - flush type - 44-1/2" long	1	All	A	60
B9MB 6427986-A	Rubber - 10" long - long type - rear	2	All except 57F, 63F, 76D, 77	A	60
C1AB 6227986-A	R.H. - rubber	1	All	A	61
C1AB 6227987-A	L.H. - rubber	1	All	A	61
C2AB 6227986-A	R.H.	1	All	A	62
C2AB 6227987-A	L.H.	1	All	A	62
C2OZ 6227986-A	R.H.	1	All	B	62/63
C2OZ 6227987-A	L.H.	1	All	B	62/63
BAK 5727986-B	Rubber - 62" long	2	All	D	60
279B86-7	GUSSET (QUARTER WHEELHOUSE TO SIDE MEMBER)				
C2VY 74279B86-A	R.H.	1	74	D	62/63
C2VY 74279B87-A	L.H.	1	74	D	62/63
27994-5	EXTENSION (REAR QUARTER INSIDE PANEL) FRONT				
BAK 6827994-A	R.H. - in prime	1	68	D	60
BAK 6827995-A	L.H. - in prime	1	68	D	60
27996-7	REINFORCEMENT (REAR LAMP OPENING) REAR				
C2YB 6227996-A	R.H.	1	All	B	62
C2YB 6227997-A	L.H.	1	All	B	62
C3YY 6227996-A	R.H.	1	All except 71	B	63
C3YY 6227997-A	L.H.	1	All except 71	B	63
28000-1	BRACKET (QUARTER PANEL WHEEL OPENING COVER) FRONT				
BAK 5728000-A	R.H. - in prime	1	All	D	60
BAK 5728001-A	L.H. - in prime	1	All	D	60

GROUP AND PART NUMBER	DESCRIPTION, SIZE, ETC.	NO. REQ'D	MODEL OR ENGINE CUBIC INCH DISPLACEMENT	VEHICLE CODE	YEAR 19____
280A00-1	PANEL (QUARTER) UPPER FRONT				
C1VY 74280A00-B	R.H.	1	74	D	61/63
C1VY 74280A01-B	L.H.	1	74	D	61/63
C4VY 53280A00-A	R.H.	1	53	D	64
C4VY 53280A01-A	L.H.	1	53	D	64
C4VY 74280A00-A	R.H.	1	74	D	64
C4VY 74280A01-A	L.H.	1	74	D	64
28002-3	BRACKET (QUARTER PANEL WHEEL OPENING COVER) REAR				
BAK 5728002-A	R.H.	1	All	D	60
BAK 5728003-A	L.H.	1	All	D	60
28006	REINFORCEMENT (REAR WHEEL OPENING)				
BY 7328006-A	In prime	6	All	D	60
28009	SEAL (QUARTER PANEL LOWER EXTENSION TO REAR FLOOR CROSS SILL)				
COMB 5628009-A	Rubber - 1/4" x 50" x 4-3/4"	2	77	A	60
280A12-3	SUPPORT (QUARTER PANEL UPPER EXTENSION) TO WHEELHOUSE OUTER				
C1VB 74280A12-A	R.H.	1	74	D	61/63
C1VB 74280A13-A	L.H.	1	74	D	61/63
C4VY 74280A12-A	R.H.	1	74	D	64
C4VY 74280A13-A	L.H.	1	74	D	64
28014-5	BRACKET (QUARTER WINDOW REGULATOR PANEL TO WHEELHOUSE)				
BAK 6328014-A	R.H. - in prime	1	63, 65	D	60
BAK 6328015-A	L.H. - in prime	1	63, 65	D	60
28022-3	REINFORCEMENT (QUARTER WHEELHOUSE TO SEAT BACK BRACKET)				
C4VY 7428022-A	R.H.	1	74	D	64
C4VY 7428023-A	L.H.	1	74	D	64
28024-5	FILLER (QUARTER PANEL LOWER EXTENSION TO REAR FLOOR CROSS SILL)				
C1MB 7128024-B	R.H.	1	71	A	61
C1MB 7128025-B	L.H.	1	71	A	61
C2MB 7128024-A	R.H.	1	71	A	62
C2MB 7128025-A	L.H.	1	71	A	62
28032-3	ORNAMENT (QUARTER OUTSIDE)				
C3MY 5428032-A	(3) R.H. and (3) L.H. (§)	6	54B, 63B, C, 65B, C, 75B, C, 76	A	63
C3MY 7128032-A	R.H. (§)	3	71	A	63
C3MY 7128033-A	L.H. (§)	3	71	A	63
§ Package also includes -	(2) 373504-S7 nut and washer-self-thread-3/16"				
C4MY 5428032-A	3-1/4" long	2	54F, 57C, F, 63C, F, 65C, F 75F, 76C, F	A	64
Package also includes -	(2) 376725-S102 sleeve nut				
C4GY 5428032-A	Three stars on plate	2	54C, D, 63C, D, 76B, D	C	64
Package also includes -	(2) 378728-S8 nut				
280A32	STRAINER (UPPER QUARTER PANEL REINFORCEMENT) TO FLOOR FRONT				
C1VB 57280A32-A	(2) req'd. - model 53 - (1) req'd. - model 74	AR	All	D	61/63
C4VY 53280A32-A		2	53	D	64
		1	74	D	64

GROUP AND PART NUMBER	DESCRIPTION, SIZE, ETC.	NO. REQ'D	MODEL OR ENGINE CUBIC INCH DISPLACEMENT	VEHICLE CODE	YEAR 19.___
280A34	STRAINER (UPPER QUARTER PANEL REINFORCEMENT) TO FLOOR REAR				
C1VB 57280A34-A	(2) req'd. - model 53 - (1) req'd. - model 74	AR	All	D	61/63
C4VY 53280A34-A		2	53	D	64
		1	74	D	64
28036-7	PANEL (QUARTER OUTSIDE FINISH LOWER)				
C3YY 6228036-A	R.H. (Δ)	1	54B,62B,65	B	63
C3YY 6228037-A	L.H. (Δ)	1	54B,62B,65	B	63
Δ Package also includes -					
(2) C2YB-62102A78-A spacer	(3) C3YY-62291A66-A retainer		(2) 376366-S101	screw	
280A50	STRAINER (QUARTER PANEL) FRONT				
C3AZ 62280A50-A	Steel	2	62	A	63
C3AZ 65280A50-A	Steel	2	65, 76	A	63
C4AZ 62280A50-A	Steel	2	62,63,65,76	A	64
C2OZ 62280A50-A	Steel	2	62,65	B	62/63
280A52	BRACKET (QUARTER PANEL LOWER RUN EXTENSION)				
C1MB 71280A52-A		2	71	A	61
280A54-5	PANEL ASSEMBLY (QUARTER INSIDE)				
C1VB 74280A54-A	R.H.	1	74	D	61/63
C1VB 74280A55-A	L.H.	1	74	D	61/63
C4VY 74280A54-A	R.H.	1	74	D	64
C4VY 74280A55-A	L.H.	1	74	D	64
28058-9	EXTENSION (QUARTER PANEL) REAR				
COMB 5628058-A	R.H. - lower	1	77	A	60
COMB 5628059-A	L.H. - lower	1	77	A	60
COMB 6428058-A	R.H. - lower	1	All except 77	A	60
COMB 6428059-A	L.H. - lower	1	All except 77	A	60
C1MB 7128058-A	R.H. - lower	1	71	A	61
C1MB 7128059-A	L.H. - lower	1	71	A	61
C2MB 6228058-A	R.H. - lower	1	All except 71	A	62
C2MB 6228059-A	L.H. - lower	1	All except 71	A	62
C2MB 7128058-A	R.H. - lower	1	71	A	62
C2MB 7128059-A	L.H. - lower	1	71	A	62
C3MY 7128058-A	R.H. - lower	1	71	A	63
C3MY 7128059-A	L.H. - lower	1	71	A	63
C3MY 6228058-A	R.H.	1	All except 71	A	63/64
C3MY 6228059-A	L.H.	1	All except 71	A	63/64
C4MY 7128058-A	R.H.	1	71	A	64
C4MY 7128059-A	L.H.	1	71	A	64
C3YY 6228058-A	R.H.	1	All	B	62
		1	54,62,65	B	63
C3YY 6228059-A	L H.	1	All	B	62
		1	54,62,65	B	63
C3YY 7128058-A	R.H.	1	71	B	63
C3YY 7128059-A	L.H.	1	71	B	63
C1KB 7128058-A	R.H.	1	59,71	C	60/61
C1KB 7128059-A	L.H.	1	59,71	C	60/61
C2GB 5928058-A	R.H.	1	59,71	C	62
C3GY 5928058-A	R.H.	1	59,71	C	63
C3GY 5928059-A	L.H.	1	59,71	C	62/63
C4GY 6228058-A	R.H.	1	All except 71	C	64
C4GY 6228059-A	L.H.	1	All except 71	C	64
C4GY 7128058-A	R.H.	1	71	C	64
C4GY 7128059-A	L.H.	1	71	C	64

GROUP AND PART NUMBER	DESCRIPTION, SIZE, ETC.	NO. REQ'D	MODEL OR ENGINE CUBIC INCH DISPLACEMENT	VEHICLE CODE	YEAR 19____
28060-1	FILLER (QUARTER PANEL) UPPER FRONT				
PB9M 5628060-A	R.H.	1	63, 76	A	60
PB9M 5628061-A	L.H.	1	63, 76	A	60
C1AB 7628060-A	R.H.	1	76	A	61/62
C1AB 7628061-A	L.H.	1	76	A	61/62
C1AB 6328060-A	R.H.	1	65	A	62
C1AB 6328061-A	L.H.	1	65	A	62
C3AZ 6528060-A	R.H.	1	65	A	63/64
C3AZ 6528061-A	L.H.	1	65	A	63/64
C3AZ 7628060-A	R.H.	1	76	A	63/64
C3AZ 7628061-A	L.H.	1	76	A	63/64
28072-3	EXTENSION (QUARTER PANEL REAR) UPPER				
COMB 7728072-A	R.H. - with holes	1	77	A	60
COMB 7728073-A	L.H. - with holes	1	77	A	60
C3MY 7128072-A	R.H.	1	71	A	63
C3MY 7128073-A	L.H.	1	71	A	63
C4MY 7128072-A	R.H.	1	71	A	64
C4MY 7128073-A	L.H.	1	71	A	64
C3YY 7128072-A	R.H.	1	71	B	63
C3YY 7128073-A	L.H.	1	71	B	63
28078-9	RETAINER (WHEELHOUSE SIDE TRIM PANEL) REAR				
PB9M 5628078-A	R.H.	1	77	A	60
PB9M 5628079-A	L.H.	1	77	A	60
281A16-7	REINFORCEMENT (QUARTER PILLAR REAR)				
C1VB 57281A16-A	R.H.	1	All	D	61/63
C1VB 57281A17-A	L.H.	1	All	D	61/63
C4VY 53281A16-A	R.H.	1	All	D	64
C4VY 53281A17-A	L.H.	1	All	D	64
28128-9	REINFORCEMENT (QUARTER LOCK PILLAR) LOWER				
C1AB 6328128-A	R.H. - use on vehicles built prior to 11-1-60	1	65	A	61
C1AB 6328129-A	L.H. - use on vehicles built prior to 11-1-60	1	65	A	61
C1AB 6328128-B	R.H. - use on vehicles built after 10-31-60	1	65	A	61/62
C1AB 6328129-B	L.H. - use on vehicles built after 10-31-60	1	65	A	61/62
C3AZ 6528128-B	R.H.	1	63, 65	A	63
C3AZ 6528129-B	L.H.	1	63, 65	A	63
C4AZ 6328128-A	R.H.	1	63	A	64
C4AZ 6328129-A	L.H.	1	63	A	64
C4MY 6528128-A	R.H.	1	65	A	64
C4MY 6528129-A	L.H.	1	65	A	64
C3OZ 6528128-A	R.H.	1	65	B	63
C3OZ 6528129-A	L.H.	1	65	B	63
28136-7	REINFORCEMENT (QUARTER LOCK UPPER PILLAR)				
PB9M 6428136-A	R.H.	1	64	A	60
PB9M 6428137-A	L.H.	1	64	A	60
281A44-5	RETAINER (REAR DOOR WIRING ON QUARTER PILLAR)				
C1VY 57281A44-A	R.H.	1	All	D	61/63
C1VY 57281A45-A	L.H.	1	All	D	61/63
28152-3	PANEL (QUARTER PILLAR UPPER) OUTER				
PB9M 7728152-B	R.H. - less holes	1	77	A	60
PB9M 7728153-B	L.H. - less holes	1	77	A	60

GROUP AND PART NUMBER	DESCRIPTION, SIZE, ETC.		NO. REQ'D	MODEL OR ENGINE CUBIC INCH DISPLACEMENT	VEHICLE CODE	YEAR 19____
28160-1	PILLAR (QUARTER LOCK)					
COMB 5728160-C	R.H.	(b)	1	57	A	60
COMB 5728161-C	L.H.	(b)	1	57	A	60
COMB 5828160-B	R.H.	(b)	1	58, 77	A	60
COMB 5828161-B	L.H.	(b)	1	58, 77	A	60
COMB 6428178-A	R.H.	(a)	1	63, 64, 76	A	60
COMB 6428179-A	L.H.	(a)	1	63, 64, 76	A	60
C1AZ 6228160-A	R.H.	(c)	1	62,64,65,76	A	61/62
C1AZ 6228161-A	L.H.	(c)	1	62,64,65,76	A	61/62
C1MB 7128160-A	R.H.		1	54,58,71,75	A	61/62
C1MB 7128161-A	L.H.		1	54,58,71,75	A	61/62
C3MY 5428160-A	R.H.		1	54,75	A	63/64
C3MY 5428161-A	L.H.		1	54,75	A	63/64
C3AZ 6228160-A	R.H.	(e)	1	62,65,76	A	63/64
C3AZ 6228161-A	L.H.	(e)	1	62,65,76	A	63/64
C3MY 6328160-A	R.H.		1	63	A	63/64
C3MY 6328161-A	L.H.		1	63	A	63/64
C3AZ 7128160-A	R.H.		1	71	A	63/64
C3AZ 7128161-A	L.H.		1	71	A	63/64
C4MY 5728160-A	R.H.		1	57	A	64
C4MY 5728161-A	L.H.		1	57	A	64
C2YY 5428160-A	R.H.		1	54,71	B	62/63
C2YY 5428161-A	L.H.		1	54,71	B	62/63
C2YY 6228160-A	R.H.		1	62	B	62/63
C2YY 6228161-A	L.H.		1	62	B	62/63
C3YY 6528160-A	R.H.		1	65	B	63
C3YY 6528161-A	L.H.		1	65	B	63
CODZ 6428160-A	R.H.		1	62	C	60/61
		(d)	1	59	C	60/63
CODZ 6428161-A	L.H.		1	62	C	60/61
		(d)	1	59	C	60/63
C3DZ 7128160-A	R.H.		1	54	C	60/61
			1	71	C	60/63
C3DZ 7128161-A	L.H.		1	54	C	60/61
			1	71	C	60/63
C3GY 5428160-A	R.H.	(d)	1	54	C	62/63
C3GY 5428161-A	L.H.	(d)	1	54	C	62/63
C3GY 6228160-A	R.H.	(d)	1	62	C	62/63
C3GY 6228161-A	L.H.	(d)	1	62	C	62/63
C3GY 7628160-A	R.H.		1	63,76	C	63
C3GY 7628161-A	L.H.		1	63,76	C	63
C4DZ 5428160-A	R.H.		1	54	C	64
C4DZ 5428161-A	L.H.		1	54	C	64
C4DZ 6228160-A	R.H.		1	62	C	64
C4DZ 6228161-A	L.H.		1	62	C	64
C4DZ 6328160-A	R.H.		1	63,76	C	64
C4DZ 6328161-A	L.H.		1	63,76	C	64
C4DZ 7128160-A	R.H.		1	71	C	64
C4DZ 7128161-A	L.H.		1	71	C	64
BAK 5728160-A	R.H.		1	53, 54, 57, 75	D	60
BAK 5728161-A	L.H.		1	53, 54, 57, 75	D	60
BAK 6328178-A	R.H.		1	63, 65, 68	D	60
BAK 6328179-A	L.H.		1	63, 65, 68	D	60
C1VY 5728160-B	R.H.		1	53	D	61/63
C1VY 5728161-B	L.H.		1	53	D	61/63
C1VY 7428160-B	R.H.		1	74	D	61/63
C1VY 7428161-B	L.H.		1	74	D	61/63

CONTINUED ON NEXT PAGE

GROUP AND PART NUMBER	DESCRIPTION, SIZE, ETC.	NO. REQ'D	MODEL OR ENGINE CUBIC INCH DISPLACEMENT	VEHICLE CODE	YEAR 19____
28160-1	PILLAR (QUARTER LOCK) CONTINUED				
C4VY 5328160-A	R.H.	1	53	D	64
C4VY 5328161-A	L.H.	1	53	D	64
C4VY 7428160-A	R.H.	1	74	D	64
C4VY 7428161-A	L.H.	1	74	D	64
C2AZ 6223030-A	Bumper-rubber-at pillar-lower	1	e		
352848-S	Bumper-rubber	2	a		
357549-S	Bumper-rubber	1	b		
359933-S	Bumper-rubber-center level	1	c		
372486-S	Bumper-rubber-lower-floor level	1	c		
	Bumper-rubber	1or2	d		
281A60-1	SEAL (QUARTER HINGE PILLAR) LOWER				
C1VB 57281A60-A	R.H. - "L" shape - rubber - use on vehicles built prior to 11-1-61	1	All	D	61/62
C1VB 57281A61-A	L.H. - "L" shape - rubber - use on vehicles built prior to 11-1-61	1	All	D	61/62
C2VY 57281A60-A	R.H. - use on vehicles built after 10-31-61	1	All	D	62/64
C2VY 57281A61-A	L.H. - use on vehicles built after 10-31-61	1	All	D	62/64
28178-9	REFER TO GROUP 28160-1				
28182	SEAL (QUARTER LOCK PILLAR TO WINDOW FRAME)				
C3DZ 7628182-A	Use on vehicles built prior to 11-5-62	2	76	C	63
C3DZ 7628182-B	Use on vehicles built after 11-4-62 for model 76	2	63, 76	C	63/64
28188-9	PANEL (QUARTER PILLAR) UPPER INNER				
COMB 7728188-A	R.H.	1	77	A	60
COMB 7728189-A	L.H.	1	77	A	60
28198-9	BRACE (QUARTER LOCK PILLAR TO FLOOR)				
COMB 6328260-A	R.H.	1	63	A	60
COMB 6328261-A	L.H.	1	63	A	60
PB9M 7628260-A	R.H.	1	76	A	60
PB9M 7628261-A	L.H.	1	76	A	60
COAB 7628198-A	R.H.	1	76	A	61/62
COAB 7628199-A	L.H.	1	76	A	61/62
C3AZ 7628198-A	R.H.	1	76	A	63
C3AZ 7628199-A	L.H.	1	76	A	63
C4AZ 7628198-A	R.H.	1	76	A	64
C4AZ 7628199-A	L.H.	1	76	A	64
BAK 6328260-A	Inner - lower	2	63, 65	D	60
BAK 6828198-A	Inner - lower	2	68	D	60
28200-1	REINFORCEMENT (QUARTER PANEL LOCK SIDE)				
COMB 6328200-A	R.H.	1	63	A	60
COMB 6328201-A	L.H.	1	63	A	60
COMB 6428200-A	R.H.	1	64	A	60
COMB 6428201-A	L.H.	1	64	A	60
COMB 7628200-A	R.H.	1	76	A	60
COMB 7628201-A	L.H.	1	76	A	60
C1AB 6228200-A	R.H.	1	62, 64	A	61/62
C1AB 6228201-A	L.H.	1	62, 64	A	61/62
C1AB 7628200-A	R.H.	1	76	A	61/62
C1AB 7628201-A	L.H.	1	76	A	61/62
C3AZ 6228200-A	R.H.	1	62	A	63
C3AZ 6228201-A	L.H.	1	62	A	63

CONTINUED ON NEXT PAGE

GROUP AND PART NUMBER	DESCRIPTION, SIZE, ETC.	NO. REQ'D	MODEL OR ENGINE CUBIC INCH DISPLACEMENT	VEHICLE CODE	YEAR 19____
28200-1	REINFORCEMENT (QUARTER PANEL LOCK SIDE) CONTINUED				
C3AZ 7628200-A	R.H.	1	76	A	63
C3AZ 7628201-A	L.H.	1	76	A	63
C4AZ 6228200-A	R.H.	1	62	A	64
C4AZ 6228201-A	L.H.	1	62	A	64
C4AZ 7628200-A	R.H.	1	76	A	64
C4AZ 7628201-A	L.H.	1	76	A	64
C4DZ 5928200-A	R.H.	1	59	C	60/63
C4DZ 5928201-A	L.H.	1	59	C	60/63
C3DZ 7628200-A	R.H.	1	76	C	63
C3DZ 7628201-A	L.H.	1	76	C	63
C4DZ 6228200-A	R.H.	1	62	C	63/64
C4DZ 6228201-A	L.H.	1	62	C	63/64
C3DZ 6328200-A	R.H.	1	63	C	63/64
C3DZ 6328201-A	L.H.	1	63	C	63/64
C4DZ 7628200-A	R.H.	1	76	C	64
C4DZ 7628201-A	L.H.	1	76	C	64
BAK 6328201-A	L.H. - welded	1	63, 65	D	60
BAK 6828200-A	R.H. - welded	1	68	D	60
BAK 6828201-A	L.H. - welded	1	68	D	60
28206-7	EXTENSION (QUARTER PANEL UPPER TO REAR CORNER PILLAR LOWER REINFORCEMENT)				
COMB 5628206-A	R.H.	1	77	A	60
COMB 5628207-A	L.H.	1	77	A	60
C1AB 5928206-A	R.H.	1	71	A	61/64
C1AZ 5928207-A	L.H.	1	71	A	61/64
28208-9	REINFORCEMENT (QUARTER PANEL LOCK SIDE) UPPER				
C1AB 5928208-A	R.H. - cut to fit	1	62, 64	A	61/63
C1AB 5928209-A	L.H. - cut to fit	1	62, 64	A	61/63
C4AZ 6228208-A	R.H.	1	62	A	64
C4AZ 6228209-A	L.H.	1	62	A	64
CODB 5928208-A	R.H.	1	59, 71	C	60/64
CODB 5928209-A	L.H.	1	59, 71	C	60/64
28216-7	REINFORCEMENT (QUARTER PANEL LOCK SIDE) LOWER				
PB9M 5728216-A	R.H.	1	57, 58, 77	A	60
PB9M 5728217-A	L.H.	1	57, 58, 77	A	60
COAB 5828216-A	R.H.	1	54, 58, 71, 75	A	61/62
		1	54, 75	A	63
COAB 5828217-A	L.H.	1	54, 58, 71, 75	A	61/62
		1	54, 75	A	63
C4AZ 5428216-A	R.H.	1	54, 57, 71, 75	A	64
C4AZ 5428217-A	L.H.	1	54, 57, 71, 75	A	64
C2OB 5428216-A	R.H.	1	54	B	62/63
		1	71	B	63
C2OB 5428217-A	L.H.	1	54	B	62/63
		1	71	B	63
C2OZ 6228216-A	R.H.	1	62	B	62/63
C2OZ 6228217-A	L.H.	1	62	B	62/63
CODB 5828216-A	R.H.	1	54, 71	C	60/64
CODB 5828217-A	L.H.	1	54, 71	C	60/64
BAK 5728216-A	R.H.	1	53, 54, 57, 75	D	60
BAK 5728217-A	L.H.	1	53, 54, 57, 75	D	60

GROUP AND PART NUMBER	DESCRIPTION, SIZE, ETC.	NO. REQ'D	MODEL OR ENGINE CUBIC INCH DISPLACEMENT	VEHICLE CODE	YEAR 19____
28234-5	EXTENSION (QUARTER PILLAR) LOWER				
C4VY 5328234-A	R.H.	1	All	D	61/64
C4VY 5328235-A	L.H.	1	All	D	61/64
28238-9	EXTENSION (QUARTER PANEL LOCK SIDE) OUTER REINFORCEMENT				
CODB 5928238-A	R.H.	1	59	C	60/63
CODB 5928239-A	L.H.	1	59	C	60/63
28242	STRAINER (QUARTER WHEELHOUSE)				
BAK 6828242-A		1	68	D	60
28260-1	REFER TO GROUP 28198-9				
28262	BRACE (QUARTER LOCK PILLAR TO INNER FLOOR SIDE MEMBER) CENTER				
BAK 6828262-A		2	68	D	60
28278	BRACE (QUARTER LOCK PILLAR TO INNER FLOOR SIDE MEMBER) UPPER				
BAK 6328278-A		2	63, 65	D	60
BAK 6828278-A		2	68	D	60
28308-9	EXTENSION (QUARTER PILLAR UPPER INNER TO BELT RAIL)				
COMB 5628308-A	R.H.	1	77	A	60
COMB 5628309-A	L.H.	1	77	A	60
28324-5	PILLAR (QUARTER LOCK) UPPER				
PB9M 6428324-A	R.H.	1	64	A	60
PB9M 6428325-A	L.H.	1	64	A	60
COAB 6428324-A	R.H.	1	62,64	A	61/64
COAB 6428325-A	L.H.	1	62,64	A	61/64
C2OZ 6228324-A	R.H.	1	62	B	62/63
C2OZ 6228325-A	L.H.	1	62	B	62/63
CODZ 5928324-A	R.H.	1	59	C	60/63
CODZ 5928325-A	L.H.	1	59	C	60/63
CODZ 6428324-A	R.H.	1	62	C	60/64
CODZ 6428325-A	L.H.	1	62	C	60/64
28354-5	GUSSET (WHEELHOUSE INNER TO REAR FLOOR FRONT CROSSMEMBER)				
BAK 6828354-A	R.H.	1	68	D	60
BAK 6828355-A	L.H.	1	68	D	60
28357	SUPPORT (WHEELHOUSE STRAINER TO REAR FLOOR CROSSMEMBER)				
BAK 6828357-A		1	68	D	60
28360-1	BRACKET (QUARTER LOCK PILLAR TO ROOF RAIL)				
C2OZ 6228360-A	R.H.	1	62	B	62/63
C2OZ 6228361-A	L.H.	1	62	B	62/63
CODB 6428360-A	R.H.	1	62	C	60/64
CODB 6428361-A	L.H.	1	62	C	60/64
28376-7	FILLER (QUARTER PANEL EXTENSION TO REAR CORNER PILLAR)				
C3AZ 7128376-A	R.H.	1	71	A	63/64
C3AZ 7128377-A	L.H.	1	71	A	63/64
28436-7	FILLER (QUARTER PANEL) REAR				
COLB 6328436-A	R.H. - in prime	1	All	D	60
COLB 6328437-A	L.H. - in prime	1	All	D	60

GROUP AND PART NUMBER	DESCRIPTION, SIZE, ETC.	NO. REQ'D	MODEL OR ENGINE CUBIC INCH DISPLACEMENT	VEHICLE CODE	YEAR 19____
28486-7	REINFORCEMENT (QUARTER PANEL) UPPER FRONT				
C4VY 7428486-A	R.H.	1	74	D	64
C4VY 7428487-A	L.H.	1	74	D	64
28506	RETAINER (LOWER BACK PANEL LOWER MOULDING)				
C4GY 6228506-A	(8) used for rear end	AR	All	C	64
28507	RETAINER (QUARTER OUTSIDE FINISH PANEL)				
COMB 6328507-C	3/4" long - (6) R.H. and (6) L.H.	AR	57F, 63F, 76D	A	60
28520-1	PANEL (QUARTER WHEEL OPENING COVER FINISH)				
COMB 6328520-A	R.H. - rustless steel (a)	1	57F, 63F, 76D	A	60
COMB 6328521-A	L.H. - rustless steel (a)	1	57F, 63F, 76D	A	60
COMB 6328507-C	Retainer	4	a		
45242-S8	Nut-No. 10-24	4	a		
372556-S8	Screw	4	a		
28530-1	RAIL (QUARTER PANEL EXTENSION OUTSIDE FINISH) UPPER				
C2GY 7128530-B	R.H. - fiberglas (Δ)	1	71C	C	62
	(Δ)	1	71C, D	C	63
C2GY 7128531-B	L.H. - fiberglas (Δ)	1	71C	C	62
	(Δ)	1	71C, D	C	63

Δ Package also includes -
(2) C2DZ-71290B32-A fastener (2) 358404-S cap (2) 373702-S100 screw and washer

28534	STRAINER (QUARTER PANEL BELT TO SPARE TIRE WELL)				
COMB 7728534-A		1	77	A	60
CODB 5928534-A		1	59,71	C	60
28611	REFER TO GROUP 405A26				
28615	SPRING (FUEL FILLER OPENING LID)				
COLB 6328615-A	5-1/8" long	1	All	D	60
28616	PIN (FUEL FILLER OPENING LID HINGE)				
COLB 6328616-A	6-7/8" long	1	All	D	60
28622	SHIELD (FUEL FILLER OVERFLOW SPLASH)				
C1AB 5928622-D	In prime	1	71	A	61/62
28627	SLEEVE (FUEL FILLER OPENING LID) STOP				
PB9M 5628627-A	Rubber	2	All except 77	A	60
		2	All except 71	A	61
		2	All	D	61/63
28631	REFER TO GROUP 405A22				
28641	BRACKET (QUARTER PANEL FUEL FILLER OPENING LID BUMPER)				
B7A 5928641-A		1	71	A	61/62
28712-3	RAIL (QUARTER OUTSIDE FINISH)				
COMB 7728712-B	R.H. - fiberglas - oak grain - 69-7/8" long - upper front (a)	1	77B	A	60
COMB 7728713-B	L.H. - fiberglas - oak grain - 69-7/8" long - upper front (a)	1	77B	A	60

CONTINUED ON NEXT PAGE

GROUP AND PART NUMBER	DESCRIPTION, SIZE, ETC.	NO. REQ'D	MODEL OR ENGINE CUBIC INCH DISPLACEMENT	VEHICLE CODE	YEAR 19____
28712-3	RAIL (QUARTER OUTSIDE FINISH) CONTINUED				
C3MY 7128712-A	R.H. - fiberglas - upper rear (Δ)	1	71B, D	A	63/64
C3MY 7128713-A	L.H. - fiberglas - upper rear (Δ)	1	71B, D	A	63/64
	Δ Package also includes -				
	(2) C3MY-16A076-A retainer (1) 54598-S39 screw (4) 358610-S100 nut and washer				
B9AB 7150108-C	Fastener - 13/16" x 3/4" O.D.	AR	a		
B9AB 7150108-E	Fastener - 1-3/32" x 3/4" O.D.	AR	a		
28714-5	RAIL (QUARTER BELT) FRONT				
COMB 5628714-A	R.H.	1	77	A	60
COMB 5628715-A	L.H.	1	77	A	60
C1AB 5928714-A	R.H.	1	71	A	61/64
C1AB 5928715-A	L.H.	1	71	A	61/64
C3OZ 71279B68-A	R.H. - includes reinforcement	1	71	B	63
C3OZ 7128715-A	L.H.	1	71	B	63
CODB 5928714-C	R.H.	1	59,71	C	60/64
CODB 5928715-B	L.H.	1	59,71	C	60/64
28716-7	RAIL (QUARTER BELT) REAR				
C1AB 5928716-A	R.H.	1	71	A	61/64
C1AB 5928717-A	L.H.	1	71	A	61/64
28788-9	STRAINER (QUARTER PANEL BELT TO FLOOR)				
CODB 6428788-B	R.H.	1	59,62	C	60/63
CODB 6428789-B	L.H.	1	59,62	C	60/63
C3DZ 7628788-A		2	63,76	C	63
28810-1	COVER (QUARTER OUTSIDE BELT MOULDING JOINT)				
COMB 7728810-B	R.H. - rustless steel	1	77B	A	60
COMB 7728811-B	L.H. - rustless steel	1	77B	A	60
28818	NAME PLATE (QUARTER PANEL)				
COMB 5828818-A	MONTCLAIR - zinc die cast (a)	2	57B, 58B, 63B	A	60
COMB 6328818-A	PARK LANE - zinc die cast (a)	2	57F, 63F, 76D	A	60
COMB 5628818-A	COMMUTER - zinc die cast (a)	2	77A	A	60
	(a)	2	71A	A	61
COMB 6428818-A	MONTEREY - zinc die cast (a)	2	57A, 58A, 63A, 64, 76A	A	60
	Front door (a)	2	54B, 65B, 75B, 76	A	61
COMB 7728818-A	COLONY PARK - zinc die cast (a)	2	77B	A	60
	(a)	2	71B	A	61
C2MY 5428818-A	MONTEREY - zinc die cast (a)	2	All except 71	A	62
C4MY 5428818-B	MONTCLAIR	2	54B, 57D, 63D, 65B	A	64
	Package also includes -				
	(5) 376725-S102 sleeve nut				
C4MY 5428818-C	PARK LANE	2	54F, 57C, F, 63C, F, 65C, F, 75F, 76C, F	A	64
	Package also includes -				
	(4) 376725-S102 sleeve nut				
353577-S2	Nut-1/8"	AR	a		
28994-5	MOULDING (QUARTER WINDOW GARNISH) UPPER REAR				
COAB 6428994-AP	R.H. - in prime (b)	1	62,64	A	61&63/64
COAB 6428995-AP	L.H. - in prime (b)	1	62,64	A	61&63/64
C2AZ 62290A56-A	R.H. - in prime (b)	1	62	A	62
C2AZ 62290A57-A	L.H. - in prime (b)	1	62	A	62
C2OZ 6228994-AP	R.H. (a)	1	62	B	62/63
C2OZ 6228995-AP	L.H. (a)	1	62	B	62/63

CONTINUED ON NEXT PAGE

GROUP AND PART NUMBER	DESCRIPTION, SIZE, ETC.	NO. REQ'D	MODEL OR ENGINE CUBIC INCH DISPLACEMENT	VEHICLE CODE	YEAR 19____
28994-5	MOULDING (QUARTER WINDOW GARNISH) UPPER REAR (CONTINUED)				
CODB 6428994-AP	R.H. (b)	1	62	C	60/62
CODB 6428995-AP	L.H. (b)	1	62	C	60/62
C3GY 6228994-A	R.H. (b)	1	62	C	63/64
C3GY 6228995-A	L.H. (b)	1	62	C	63/64
52388-S13	Screw-cr. rec. tap. -No. 8-15 x 1-1/2"	3	a		
53066-S13	Screw-oval hd. cr. rec. tap. -No. 8-15 x 1-1/4"	2	b		
29000-1	RAIL (QUARTER PANEL EXTENSION OUTSIDE FINISH) LOWER				
C2GY 7129000-A	R.H. - fiberglas (Δ)(a)	1	71C	C	62
	(Δ)	1	71C, D	C	63
C2GY 7129001-A	L.H. - fiberglas (Δ)(a)	1	71C	C	62
	(Δ)	1	71C, D	C	63
Δ Package also includes - (2) 358403-S100 retainer (2) 358404-S cap (2) 376169-S100 screw-pan hd.					
52764-S8	Screw-self-tap. -No. 14-10 x 1-3/4"	3	a		
29002-3	MOULDING (QUARTER WINDOW GARNISH) LOWER				
PB9M 6329002-AP	R.H. - in prime	1	63A, B	A	60
PB9M 6329003-AP	L.H. - in prime	1	63A, B	A	60
PB9M 6429002-AP	R.H. - in prime - 26-1/4" long	1	64	A	60
PB9M 6429003-AP	L.H. - in prime - 26-1/4" long	1	64	A	60
PB9M 7629002-AP	R.H. - in prime - 26-1/8" long	1	76A	A	60
PB9M 7629003-AP	L.H. - in prime - 26-1/8" long	1	76A	A	60
C2AB 6229002-AP	R.H. - in prime - includes weatherstrip	1	62	A	61
C2AB 6229003-AP	L.H. - in prime - includes weatherstrip	1	62	A	61
C1AB 6429002-AP	R.H.	1	64	A	61
C1AB 6429003-AP	L.H.	1	64	A	61
C1AB 6529002-AP	R.H.	1	65	A	61
C1AB 6529003-AP	L.H.	1	65	A	61
C2AZ 7629002-AP	R.H.	1	76A	A	61/62
C2AZ 7629003-AP	L.H.	1	76A	A	61/62
C2AB 6229002-AP	R.H.	1	62	A	62
C2AB 6229003-AP	L.H.	1	62	A	62
C2AZ 6529002-A	R.H.	1	65A, B	A	62
C2AZ 6529003-A	L.H.	1	65A, B	A	62
C2MY 6529002-A	R.H. - chrome finish	1	65C	A	62
C2MY 6529003-A	L.H. - chrome finish	1	65C	A	62
C2AZ 7629002-B	R.H. - in prime	1	76B	A	62
C2AZ 7629003-B	L.H. - in prime	1	76B	A	62
C2MY 7629002-A	R.H. - chrome finish	1	76B	A	62
C2MY 7629003-A	L.H. - chrome finish	1	76B	A	62
C3MY 6229002-A	R.H. - Police Special and Taxi	1	62A	A	63
C3MY 6229003-A	L.H. - Police Special and Taxi	1	62A	A	63
C2OZ 6229002-A	R.H. - includes weatherstrip (a)	1	62	B	62/63
C2OZ 6229003-A	L.H. - includes weatherstrip (a)	1	62	B	62/63
C3OZ 6529002-B	R.H. - with extended end at windlace	1	65	B	63
C3OZ 6529003-B	L.H. - with extended end at windlace	1	65	B	63
CODB 5929002-BP	R.H. - in prime (b,c)	1	59	C	60/63
CODB 5929003-BP	L.H. - in prime (b,c)	1	59	C	60/63
CODB 6429002-CP	R.H. - in prime - includes weatherstrip (b)	1	62	C	60/64
CODB 6429003-CP	L.H. - in prime - includes weatherstrip (b)	1	62	C	60/64
C3DZ 6329002-A	R.H.	1	63	C	63/64
C3DZ 6329003-A	L.H.	1	63	C	63/64
C3DZ 7629002-A	R.H.	1	76	C	63/64
C3DZ 7629003-A	L.H.	1	76	C	63/64
52388-S13	Screw-cr. rec. tap. -No. 8-15 x 1-1/2"	2	a		
53027-S13	Screw-oval hd. cr. rec. tap. -No. 8-15 x 5/8"	2	b		
53072-S13	Screw-oval hd. cr. rec. tap. -No. 8-15 x 1-1/2"	3	c		

GROUP AND PART NUMBER	DESCRIPTION, SIZE, ETC.	NO. REQ'D	MODEL OR ENGINE CUBIC INCH DISPLACEMENT	VEHICLE CODE	YEAR 19____
290B02-3	MOULDING (QUARTER PANEL OUTSIDE REAR END)				
C3MY 62290B02-A	R.H. (‡)	1	All except 71	A	63/64
C3MY 62290B03-A	L.H. (‡)	1	All except 71	A	63/64
	‡ Package also includes -				
(2) C3MY-16A076-A	retainer (2) 359606-S8 nut				
C3MY 7129278-A	R.H. - 13" long (§)	1	71B, D	A	63/64
C3MY 7129279-A	L.H. - 13" long (§)	1	71B, D	A	63/64
C4MY 7129278-A	R.H. (§)	1	71A, C	A	64
C4MY 7129279-A	L.H. (§)	1	71A, C	A	64
	§ Package also includes -				
(2) C3MY-16A076-A	retainer (2) 358610-S100 nut and washer				
C2YY 62290B02-A	R.H. (Δ)	1	All except 71	B	62/63
C2YY 62290B03-A	L.H. (Δ)	1	All except 71	B	62/63
	Δ Package also includes -				
(4) C2YY-6242331-A	retainer (4) 375689-S nut				
C3GY 59290B02-A	R.H. (ΔΔ)	1	59, 71A, B	C	63
C3GY 59290B03-A	L.H. (ΔΔ)	1	59, 71A, B	C	63
	ΔΔ Package also includes -				
(2) C2DZ-16A076-C	retainer (2) 359606-S8 nut				
290A06-7	EXTENSION (QUARTER WINDOW OUTSIDE FRONT MOULDING)				
C1AB 71290A06-A	R.H. - rustless steel (a)	1	71	A	61/64
C1AB 71290A07-A	L.H. - rustless steel (a)	1	71	A	61/64
52720-S8	Screw-pan hd. -No. 8-15 x 3/8"	AR	a		
290B06-7	MOULDING (QUARTER OUTSIDE REAR FINISH RAIL)				
C1MB 71290B06-B	R.H. (a)	1	71B	A	61
C1MB 71290B07-B	L.H. (a)	1	71B	A	61
C2MY 71290B06-A	R.H. (a)	1	71B, D	A	62
C2MY 71290B07-A	L.H. (a)	1	71B, D	A	62
C1MY 7120872-A	Retainer	AR	a		
34655-S8	Nut and washer-hex. -No. 10-24	AR	a		
29007	MOULDING (QUARTER WINDOW GARNISH) UPPER				
PB9M 6429007-AP	L.H. - in prime - 46-1/2" long	1	64	A	60
290A08	RETAINER (QUARTER OUTSIDE UPPER MOULDING) REAR				
COMB 64290A08-A		AR	All	A	60
	Front fender	6	54B, 75B, 76	A	61
C4GY 62290A08-A		2	54B, C, D, 62B, C, 63C, D 76B, D	C	64
COLB 63290A08-A		6	53, 57, 63	D	60
290A09	RETAINER (QUARTER OUTSIDE REAR MOULDING)				
C2GY 62290A09-B		2	54, 62	C	62
290B10-1	PANEL (QUARTER OUTSIDE FINISH)				
COMB 6327866-A	R.H. - rustless steel (b)	1	57F, 63F, 76D	A	60
COMB 6327867-A	L.H. - rustless steel (b)	1	57F, 63F, 76D	A	60
C1MB 71290B10-A	R.H. - 60-5/8" long	1	71B	A	61
C1MB 71290B11-A	L.H. - 60-5/8" long	1	71B	A	61

CONTINUED ON NEXT PAGE

GROUP AND PART NUMBER	DESCRIPTION, SIZE, ETC.	NO. REQ'D	MODEL OR ENGINE CUBIC INCH DISPLACEMENT	VEHICLE CODE	YEAR 19____
290B10-1	PANEL (QUARTER OUTSIDE FINISH) CONTINUED				
C1MB 54290B10-C	R.H. (a)	1	54B,65B,C,75B,76	A	61/62
C1MB 54290B11-C	L.H. (a)	1	54B,65B,C,75B,76	A	61/62
C2MB 71290B10-A	R.H.	1	71B, D	A	62
C2MB 71290B11-A	L.H.	1	71B, D	A	62
C2YB 62290B10-A	R.H. (c)	1	All	B	62
C2YB 62290B11-A	L.H. (c)	1	All	B	62
C4GY 5427866-A	R.H. - aluminum - 48-1/8" long	1	54C, D	C	64
C4GY 5427867-A	L.H. - aluminum - 48-1/8" long	1	54C, D	C	64
C4GY 6327866-A	R.H. - aluminum - 76" long	1	63C, D, 76B, D	C	64
C4GY 6327867-A	L.H. - aluminum - 76" long	1	63C, D, 76B, D	C	64
C4VY 53290B10-B	R.H. (Δ)	1	All	D	64
C4VY 53290B11-B	L.H. (Δ)	1	All	D	64
	Δ Package also includes -				
	(3) C4VY-53291A66-A retainer (4) 376387-S101 screw				
COMB 6328507-C	Retainer	4	b		
COMB 63291A66-A	Retainer	1	b		
52376-S13	Screw-oval hd. cr. rec. tap. -No. 8-15 x 1" long	4	a		
353911-S100	Nut and washer-No. 10-24	5	b		
372556-S8	Screw-truss hd. -No. 8-18 x 3/8"	4	a, b		
376378-S101	Screw-truss hd. cr. rec. -No. 8-18	4	c		
290B12-3	PANEL (QUARTER OUTSIDE FINISH) FRONT				
C4MY 71290B12-A	R.H.	1	71A, C	A	64
C4MY 71290B13-A	L.H.	1	71A, C	A	64
29014-5	MOULDING (QUARTER WINDOW GARNISH) UPPER FRONT				
C1AB 6229014-AP	R.H. - in prime	1	62,64	A	61/64
C1AB 6229015-AP	L.H. - in prime	1	62,64	A	61/64
C2OB 6229014-AP	R.H. (a)	1	62	B	62/63
C2OB 6229015-AP	L.H. (a)	1	62	B	62/63
C3OZ 7129014-A	R.H. - use on vehicles built prior to 1-2-63	1	71	B	63
C3OZ 7129015-A	L.H. - use on vehicles built prior to 1-2-63	1	71	B	63
C3OZ 7129014-B	R.H. - use on vehicles built after 1-1-63	1	71	B	63
C3OZ 7129015-B	L.H. - use on vehicles built after 1-1-63	1	71	B	63
CODB 5929014-BP	R.H. (b)	1	59	C	60/62
CODB 5929015-BP	L.H. (b)	1	59	C	60/62
CODB 6429014-CP	R.H. (b)	1	62	C	60/62
CODB 6429015-CP	L.H. (b)	1	62	C	60/62
C1KB 7129014-BP	R.H. (c)	1	71	C	60/64
C1KB 7129015-BP	L.H. (c)	1	71	C	60/64
C2DZ 6229014-A	R.H.	1	59,62	C	63/64
C2DZ 6229015-A	L.H.	1	59,62	C	63/64
52388-S13	Screw-cr. rec. tap. -No. 8-15 x 1-1/2"	1	a		
52758-S8	NS-screw-pan hd. cr. rec. tap. -No. 8-15 x 1-1/4"	1	c		
53027-S13	Screw-oval hd. cr. rec. tap. -No. 8-15 x 5/8"	2	c		
53066-S13	Screw-oval hd. cr. rec. tap. -No. 8-15 x 1-1/4"	2	c		
53072-S13	Screw-oval hd. cr. rec. tap. -No. 8-15 x 1-1/2"	1	b		
290A14-5	MOULDING (REAR QUARTER STATIONARY WINDOW GARNISH) UPPER				
B9MB 56290A14-AP	R.H. - in prime 47-7/8" long (a)	1	77	A	60
B9MB 56290A15-AP	L.H. - in prime 47-7/8" long (a)	1	77	A	60
C1AB 59290A14-AP	R.H. - in prime (a)	1	71	A	61/62
C1AB 59290A15-AP	L.H. - in prime (a)	1	71	A	61/62

CONTINUED ON NEXT PAGE

GROUP AND PART NUMBER	DESCRIPTION, SIZE, ETC.	NO. REQ'D	MODEL OR ENGINE CUBIC INCH DISPLACEMENT	VEHICLE CODE	YEAR 19___
290A14-5	MOULDING (REAR QUARTER STATIONARY WINDOW GARNISH) UPPER (CONTINUED)				
C1AB 59290A14-BP	R.H. - in prime (a)	1	71	A	63
C1AB 59290A15-BP	L.H. - in prime (a)	1	71	A	63
C4AZ 71290A14-A	R.H. (b)	1	71	A	64
C4AZ 71290A15-A	L.H. (b)	1	71	A	64
53049-S13	Screw-oval hd. cr. rec. -No. 8-15 x 7/8"	3	a		
53072-S13	Screw-oval hd. cr. rec. -No. 8-15 x 1-1/2"	4	b		
290A22-3	MOULDING (QUARTER TRIM) UPPER FRONT				
COMB 64290A22-A	Rustless steel - 4-3/8" long	2	63A, 64, 76A	A	60
C4GY 63290A22-A	R.H. - 4-19/32"	1	63C, D	C	64
C4GY 63290A23-A	L.H. - 4-19/32"	1	63C, D	C	64
290B22-3	MOULDING (QUARTER WHEELHOUSE TRIM PANEL)				
C3OZ 71290B22-A	R.H.	1	71	B	63
C3OZ 71290B23-A	L.H.	1	71	B	63
CODB 59290B22-AP	R.H. - in prime (a)	1	59	C	60/63
CODB 59290B23-AP	L.H. - in prime (a)	1	59	C	60/63
C1KB 71290B22-AP	R.H. - in prime (a,b)	1	71	C	60/63
C1KB 71290B23-AP	L.H. - in prime (a,b)	1	71	C	60/63
C4DZ 71290B22-A	R.H.	1	71	C	64
C4DZ 71290B23-A	L.H.	1	71	C	64
52344-S13	Screw-oval hd. cr. rec. tap. -No. 8-15 x 1/2"	1	b		
53038-S13	Screw-oval hd. cr. rec. tap. -No. 8-15 x 3/4"	AR	a		
290A24-5	MOULDING (QUARTER TRIM) CENTER				
COMB 64290A24-A	Rustless steel - 11-1/8" long	2	64	A	60
C1MB 63290A24-B	R.H.	1	65	A	61
C1MB 63290A25-B	L.H.	1	65	A	61
C2MB 65290A24-A	R.H.	1	65B	A	62
C2MB 65290A25-A	L.H.	1	65B	A	62
C4MY 63290A24-A	R.H.	1	63C, 65C, F	A	64
	Rear door	1	54F, 57C, 75F	A	64
C4MY 63290A25-A	L.H.	1	63C, 65C, F	A	64
	Rear door	1	54F, 57C, 75F	A	64
C4GY 76290A24-A	R.H.	1	76B, D	C	64
C4GY 76290A25-A	L.H.	1	76B, D	C	64
290C24-5	MOULDING (QUARTER OUTSIDE) SPEAR				
C4GY 54290C24-A	R.H. - 52-1/2" long (Δ)	1	54B, C, D	C	64
C4GY 54290C25-A	L.H. - 52-1/2" long (Δ)	1	54B, C, D	C	64

Δ Package also includes -
(1) C4GY-62290C64-B retainer
(2) C4GY-62290C64-C retainer
(2) C4GY-62290C64-D retainer
(2) C3OZ-6229120-A retainer
(10) C4GY-6242364-B retainer
(10) 375689-S nut

C4GY 62290C24-A	R.H. - 52" long (§)	1	54A, 62A	C	64
C4GY 62290C25-A	L.H. - 52" long (§)	1	54A, 62A	C	64

§ Package also includes -
(2) C4GY-62290C64-C retainer
(2) C3OZ-6229120-A retainer
(10) C4GY-6242364-B retainer
(10) 375689-S nut

C4GY 62290C24-B	R.H. - 53-9/16" long (‡)	1	62B, C, 63C, D, 76B, D	C	64
C4GY 62290C25-B	L.H. - 53-9/16" long (‡)	1	62B, C, 63C, D, 76B, D	C	64

‡ Package also includes -
(2) C4GY-62290C64-C retainer
(2) C3OZ-6229120-A retainer
(2) C4GY-62290C64-D retainer
(10) C4GY-6242364-B retainer
(12) 375689-S nut

CONTINUED ON NEXT PAGE

GROUP AND PART NUMBER	DESCRIPTION, SIZE, ETC.	NO. REQ'D	MODEL OR ENGINE CUBIC INCH DISPLACEMENT	VEHICLE CODE	YEAR 19____
290C24-5	MOULDING (QUARTER OUTSIDE) SPEAR (CONTINUED)				
C4GY 71290C24-A	R.H. - 49-3/8" long NOTE - for L.H. refer to group 29397	1	71A, C	C	64
Package also includes -					
(2) C4GY-62290C64-C retainer	(12) C4GY-6242364-A retainer		(1) 359606-S8	nut	
29025-6	HOOK (COAT)				
BAE 5729025-B	Rustless steel (a)	2	All except 58, 64, 76	A	60
C4AZ 6229025-A		2	All except 76	A C	64
B2A 7029025-A	Rustless steel (a)	2	58, 64	A	60
	(a)	2	All except 76	A	61/63
	(b)	2	All except 76	B C	60/63
BY 7329026-B	Chrome finish (a)	2	All except 68	D	60
C1VB 5729025-A	Zinc die cast (c)	2	53	D	61/64
52368-S23	Screw-oval hd. cr. rec. -No. 8-15 x 7/8"	2	b		
52388-S13	Screw-oval hd. cr. rec. -No. 8-15 x 1-1/4"	2	a		
52926-S13	Screw-oval hd. cr. rec. tap. -No. 8-32 x 5/8"	1	c		
290A26-7	MOULDING (QUARTER TRIM) UPPER REAR				
COMB 76290A26-A	Rustless steel - 7-5/8" long	2	76	A	60
C4GY 63290A26-A	R.H.	1	63C, D	C	64
C4GY 63290A27-A	L.H.	1	63C, D	C	64
290B26	INSERT (QUARTER OUTSIDE UPPER MOULDING)				
C1MB 54290B26-B	62-1/8" long	2	54B, 75B	A	61
C1MB 63290B26-B	93-1/2" long	2	65B, 76	A	61
29028-9	MOULDING (QUARTER) OUTSIDE UPPER				
C1MB 5429028-C	Rustless steel (Δ)	2	54B, 75B	A	61
C1MB 6329028-B	R.H. - rustless steel (Δ)	1	65B, 76	A	61
C1MB 6329029-B	L.H. - rustless steel (Δ)	1	65B, 76	A	61
Δ Package also includes -					
(10) C1MB-5429108-A retainer	(2) C1AB-6221094-A retainer		(2) 353911-S100	nut and wshr. assy.	
C1VB 5729029-B	L.H. - front - 36-1/4" long Refer to group 290B35 for upper center and 29140 for R.H. upper	1	All	D	61/62
Package also includes -					
(1) C2VY-16234-A retainer	(3) C1VB-5729192-A retainer		(1) 359606-S8	nut-No. 10-24	
(3) C1VY-5729144-A retainer					
290A28-9	MOULDING (QUARTER TRIM LOWER)				
C2MY 65290A28-A	25-3/16" long	2	65C	A	62
C2MY 76290A28-A		2	76B	A	62
C3MY 63290A28-A	6-13/16" long	2	63C	A	63
C4MY 63290A28-A	6-3/4" long	2	63C	A	64
C4MY 65290A28-A	12" long	2	65C, F	A	64
C4MY 76290A28-A		2	76C, F	A	64
C4GY 63290A28-A	17-5/16" long	2	63C, D	C	64
C4GY 76290A28-A	R.H. - 23-1/2" long	1	76B, D	C	64
C4GY 76290A29-A	L.H. - 23-1/2" long	1	76B, D	C	64
29030	WELT (QUARTER OUTSIDE LOWER REAR MOULDING)				
C1VB 5729030-A	Rubber	2	All	D	61/64
290A30	MOULDING (QUARTER INSIDE UPPER REAR TRIM PANEL)				
COMB 76290A30-B	Rustless steel - 23-1/4" long	2	76A	A	60
C2MB 76290A30-A		2	76	A	62
		2	76B	A	63

GROUP AND PART NUMBER	DESCRIPTION, SIZE, ETC.	NO. REQ'D	MODEL OR ENGINE CUBIC INCH DISPLACEMENT	VEHICLE CODE	YEAR 19___
29032	SUPPORT (QUARTER OUTSIDE LOWER REAR MOULDING)				
C1VB 5729032-C		4	All	D	61/64
290B32	FASTENER (BODY FINISH PANEL)				
C1AZ 71290B32-A	Use at front and rear doors and quarters	AR	71	A B	63
		AR	71B, D	A	64
	Use at front and rear doors - quarter - tailgate and front fender	AR	71C	C	64
C2DZ 71290B32-A	Use at front and rear doors - quarter - tailgate and front fender	AR	71C, D	C	62/63
290C32	MOULDING (QUARTER OUTSIDE SPEAR) LOWER				
C4GY 71290C32-A	R.H. - aluminum - 39-9/16"	1	71B	C	64
Package also includes -					
(6) C4GY-6242364-A retainer	(6) 359606-S8 nut				
29034-5	MOULDING (QUARTER OUTSIDE BELT)				
COMB 7729034-A	R.H. - front - rustless steel - 37-1/2" long - use on vehicles built prior to 11-11-59 (a)	1	77B	A	60
COMB 7729035-A	L.H. - front - rustless steel - 37-1/2" long - use on vehicles built prior to 11-11-59 (a)	1	77B	A	60
COMB 7729034-C	R.H. - front - rustless steel - 38-1/4" long - use on vehicles built after 11-10-59 (a)	1	77B	A	60
COMB 7729035-C	L.H. - front - rustless steel - 38-1/4" long - use on vehicles built after 11-10-59 (a)	1	77B	A	60
C2MY 6529034-A	R.H. - 24" long (b)	1	65B	A	62
C2MY 6529035-A	L.H. - 24" long (b)	1	65B	A	62
C2MY 7629034-A	R.H. - 16-3/8" long (b)	1	76	A	62
C2MY 7629035-A	L.H. - 16-3/8" long (b)	1	76	A	62
C2MY 5420946-A	Clip	3or4	b		
COMB 77290A70-A	Retainer	6	a		
290A34-5	EXTENSION (QUARTER WINDOW OUTSIDE UPPER MOULDING)				
COMB 56290A34-A	R.H. - rustless steel	1	77A	A	60
COMB 56290A35-A	L.H. - rustless steel	1	77A	A	60
290C34-5	MOULDING (QUARTER OUTSIDE SPEAR) TIP				
C4GY 71290C34-B	R.H. - aluminum - 8" long (Δ)	1	71B	C	64
C4GY 71290C35-B	L.H. - aluminum - 8" long (Δ)	1	71B	C	64
Δ Package also includes -					
(2) C4GY-62290C64-A retainer	(1) C4GY-62290C64-B retainer				
C4GY 71290C35-A	L.H. - aluminum - front to gas cap	1	71A, C	C	64
Package also includes -					
(2) C4GY-62290C64-C retainer	(8) C4GY-6242364-A retainer		(8) 359606-S8 nut		
290B35	MOULDING (QUARTER OUTSIDE) UPPER CENTER				
C1VB 57290B35-B	L.H. Refer to group 29028-9 for upper front	1	All	D	61/62
Package also includes -					
(1) C2VY-16234-A retainer	(2) C1VB-5729192-A retainer		(1) 359606-S8 nut-No.10-24		
(1) C1VY-5729144-A retainer					

GROUP AND PART NUMBER	DESCRIPTION, SIZE, ETC.	NO. REQ'D	MODEL OR ENGINE CUBIC INCH DISPLACEMENT	VEHICLE CODE	YEAR 19.____
290B36-7	MOULDING (QUARTER BELT GARNISH) REAR				
C1VB 57290B36-A	R.H.	1	53	D	61/63
C1VB 57290B37-A	L.H.	1	53	D	61/63
C4VY 53290B36-A	R.H. - 19-1/2" long - use on vehicles built prior to 10-1-63 (Δ)	1	53	D	64
C4VY 53290B37-A	L.H. - 19-1/2" long - use on vehicles built prior to 10-1-63 (Δ)	1	53	D	64
C4VY 53290B36-B	R.H. - 19-1/2" long - use on vehicles built after 9-30-63 (Δ)	1	53	D	64
C4VY 53290B37-B	L.H. - 19-1/2" long - use on vehicles built after 9-30-63 (Δ)	1	53	D	64
Δ Package also includes - (4) 53060-S13 screw-self-tap.-No. 8-15					
29038-9	MOULDING (QUARTER OUTSIDE REAR)				
C3MY 5429038-A	R.H. - lower - 39" long (Δ)	1	54B,63B,C,65B,C,75B,C, 76A,B	A	63
C3MY 5429039-A	L.H. - lower - 39" long (Δ)	1	54B,63B,C,65B,C,75B,C, 76A,B	A	63
Δ Package also includes - (3) C3MY-5429124-A retainer (1) C3MY-54291B70-A retainer (1) 359606-S8 nut					
C4MY 5429038-A	R.H. - lower (§§)	1	54B,57D	A	64
C4MY 5429039-A	L.H. - lower (§§)	1	54B,57D	A	64
§§ Package also includes - (3) C4MY-5429144-A retainer (1) C4MY-5429144-C retainer (9) 353911-S100 nut and washer (2) C4MY-5429144-B retainer (3) C4MY-5429144-D retainer (4) 376387-S101 screw					
C4MY 5429038-B	R.H. (††)	1	54F,57C,F,63C,F,65C,F, 75F,76C,F	A	64
C4MY 5429039-B	L.H. (††)	1	54F,57C,F,63C,F,65C,F, 75F,76C,F	A	64
†† Package also includes - (5) C4MY-5420954-B retainer (5) 359606-S8 nut					
C4MY 6329038-A	R.H. (‡‡)	1	63D,65B	A	64
C4MY 6329039-A	L.H. (‡‡)	1	63D,65B	A	64
‡‡ Package also includes - (3) C4MY-5429144-A retainer (3) C4MY-5429144-D retainer (4) 376387-S101 screw (2) C4MY-5429144-B retainer (8) 353911-S100 nut and washer					
C2YY 5429038-A	R.H. - 59-7/8" long (‡)	1	54	B	62/63
C2YY 5429039-A	L.H. - 59-7/8" long (‡)	1	54	B	62/63
‡ Package also includes - (1) C2DZ-16A076-C retainer (1) C2GY-16A076-B retainer (2) 359606-S100 nut and washer (6) C2GY-16A076-A retainer					
C2YY 6229038-A	R.H. - 90-1/2" long (ΔΔ)	1	62,65	B	62/63
C2YY 6229039-A	L.H. - 90-1/2" long (ΔΔ)	1	62,65	B	62/63
ΔΔ Package also includes - (1) C2DZ-16A076-C retainer (2) C2GY-16A076-B retainer (3) 359606-S8 nut and washer (8) C2GY-16A076-A retainer					
C1KB 6229038-C	Rustless steel (a)	2	62	C	60
C1KB 5929038-B	R.H. - rustless steel (c)	1	59	C	60/61
C1KB 5929039-B	L.H. - rustless steel (c)	1	59	C	60/61
C1KB 7129038-B	R.H. - rustless steel (c)	1	71	C	60/61
CIKB 7129039-B	L.H. - rustless steel (c)	1	71	C	60/61
C2GY 5929038-A	R.H. - 75" long (†)	1	59	C	62
C2GY 5929039-A	L.H. - 75" long (†)	1	59	C	62
† Package also includes - (2) C2GY-16A076-B retainer (7) C2GY-7129120-A retainer (2) 359606-S8 nut					

CONTINUED ON NEXT PAGE

GROUP AND PART NUMBER	DESCRIPTION, SIZE, ETC.		NO. REQ'D	MODEL OR ENGINE CUBIC INCH DISPLACEMENT	VEHICLE CODE	YEAR 19__
29038-9	MOULDING (QUARTER OUTSIDE REAR) CONTINUED					
C2GY 7129038-A	R.H. - 46-7/8" long	(§)	1	71	C	62
C2GY 7129039-A	L.H. - 46-7/8" long	(§)	1	71	C	62
§ Package also includes -						
(1) C2GY-16A076-B retainer	(5) C2GY-7129120-A retainer		(1) 359606-S8 nut			
COLB 6329038-A	R.H. - rustless steel	(b)	1	53, 57, 63	D	60
COLB 6329039-A	L.H. - rustless steel	(b)	1	53, 57, 63	D	60
C1KB 6221094-A	Retainer-quarter moulding		AR	c		
C1KB 6229144-C	Retainer		AR	a		
353911-S	Nut and washer		AR	c		
372010-S	Screw-truss hd. cr. rec. -No. 8-18		AR	b		
290B38-9	COVER (QUARTER BELT REAR GARNISH MOULDING)					
C1VB 57290B38-A	R.H.		1	53	D	61/63
C1VB 57290B39-A	L.H.		1	53	D	61/63
29040	RETAINER (QUARTER OUTSIDE FRONT MOULDING) REAR					
C2GY 6229040-A			2	54, 62	C	62
290A40-1	RAIL (QUARTER OUTSIDE FINISH) UPPER					
C3DZ 71290A40-A	R.H. - fiberglas	(Δ)	1	71C	C	62
			1	71C, D	C	63
C3DZ 71290A41-A	L.H. - fiberglas	(Δ)	1	71C	C	62
			1	71C, D	C	63
Δ Package also includes -						
(3) C2DZ-71290B32-A fastener	(3) 358404-S cap		(3) 373702-S100 screw and wshr.			
C4GY 71290A40-A	R.H. - fiberglas	(§)	1	71C	C	64
C4GY 71290A41-A	L.H. - fiberglas	(§)	1	71C	C	64
§ Package also includes -						
(6) C2DZ-71290B32-A fastener	(6) 358404-S cap		(6) 373702-S100 screw and washer			
290B40-1	MOULDING (QUARTER WHEELHOUSE TRIM PANEL) FRONT					
C3OZ 71290B40-A	R.H.		1	71	B	63
C3OZ 71290B41-A	L.H.		1	71	B	63
C1KB 71290B40-AP	R.H. - in prime	(a)	1	71	C	60/63
C1KB 71290B41-AP	L.H. - in prime	(a)	1	71	C	60/63
C4DZ 71290B40-AP	R.H. - in prime		1	71	C	64
C4DZ 71290B41-AP	L.H. - in prime		1	71	C	64
53038-S13	Screw-oval hd.cr.rec.tap.-No.8-15 x 3/4"		2	a		
29042-3	MOULDING (QUARTER OUTSIDE BELT)					
COLB 6329042-A	R.H. - rustless steel - 26-1/2" long	(a)	1	63, 65	D	60
COLB 6329043-A	L.H. - rustless steel - 26-1/2" long	(a)	1	63, 65	D	60
COLB 6829042-A	R.H. - rustless steel - 18-1/2" long	(a)	1	68	D	60
COLB 6829043-A	L.H. - rustless steel - 18-1/2" long	(a)	1	68	D	60
BAK 6329128-A	Retainer		AR	a		
353577-S2	Nut-sleeve type-1/8"		AR	a		
290A42-3	MOULDING (QUARTER TRIM)					
C2MB 76290A42-A	R.H.		1	76	A	62
C2MB 76290A43-A	L.H.		1	76	A	62
C4GY 76290A42-A	R.H. - center front - 4-1/2" long		1	76B, D	C	64
C4GY 76290A43-A	L.H. - center front - 4-1/2" long		1	76B, D	C	64
COLB 65290A42-B	R.H.		1	65	D	60
COLB 65290A43-B	L.H.		1	65	D	60
COLB 68290A42-B	R.H.		1	68	D	60
COLB 68290A43-B	L.H.		1	68	D	60

GROUP AND PART NUMBER	DESCRIPTION, SIZE, ETC.	NO. REQ'D	MODEL OR ENGINE CUBIC INCH DISPLACEMENT	VEHICLE CODE	YEAR 19____
290B42-3	GUSSET (QUARTER BELT RAIL TO WHEELHOUSE)				
CODB 59290B42-A	R.H.	1	59,71	C	60/63
CODB 59290B43-A	L.H.	1	59,71	C	60/63
290A44-5	MOULDING (QUARTER TRIM) REAR				
C4GY 76290A44-A	R.H. - developed length 16-3/4"	1	76B,D	C	64
C4GY 76290A45-A	L.H. - developed length 16-3/4"	1	76B,D	C	64
29050-1	MOULDING (QUARTER WHEEL OPENING COVER)				
PB9M 5629050-A	R.H. - rustless steel - 69" long	1	All except 57, 63, 76, 77	A	60
PB9M 5629051-A	L.H. - rustless steel - 69" long	1	All except 57, 63, 76, 77	A	60
PB9L 5429050-A	R.H. - rustless steel (a)	1	54,65,68,75	D	60
PB9L 5429051-A	L.H. - rustless steel (a)	1	54, 65, 68, 75	D	60
372010-S	Screw-truss hd. cr. rec. -No. 8-18	AR	a		
290C50-1	PANEL (QUARTER SPEAR APPLIQUE)				
C4GY 62290C50-A	R.H. - 50-7/8" long - includes COMET block letters	1	54B,62B,C	C	64
C4GY 62290C51-A	L.H. - 50-7/8" long - includes COMET block letters	1	54B,62B,C	C	64
290B52-3	MOULDING (QUARTER WINDOW) OUTSIDE REAR				
C1AZ 71290B52-A	R.H. (a)	1	71	A	61/64
C1AZ 71290B53-A	L.H. (a)	1	71	A	61/64
C3OZ 71290B52-B	R.H.	1	71	B	63
C3OZ 71290B53-B	L.H.	1	71	B	63
C1AB 59291B14-A	Seal	2	a		
34655-S8	Nut and washer-No.10-24	3	a		
352954-S13	Screw-oval hd. cr. rec. -No. 8-15 x 2"	AR	a		
290A54	MOULDING (FRONT QUARTER WINDOW GARNISH) UPPER				
CODB 59290A54-AP	In prime (a)	2	59	C	60/62
C3DZ 59290A54-A	In prime	2	59	C	63
53066-S13	Screw-oval hd.cr.rec.tap.-No.8-15 x 1-1/4"	2	a		
29056-7	PANEL (QUARTER OUTSIDE UPPER REAR END MOULDING) FINISH				
C2MB 7129056-A	R.H. - 10" long - use without back-up lights	1	71	A	62
C2MB 7129057-A	L.H. - 10" long - use without back-up lights	1	71	A	62
C2MB 7129056-B	R.H. - 10" long - use with back-up lights	1	71	A	62
C2MB 7129057-B	L.H. - 10" long - use with back-up lights	1	71	A	62
290A56-7	MOULDING (FRONT QUARTER WINDOW GARNISH) REAR				
CODB 59290A56-AP	R.H. - in prime (a)	1	59	C	60/62
CODB 59290A57-AP	L.H. - in prime (a)	1	59	C	60/62
C3DZ 59290A56-A	R.H. - in prime	1	59	C	63
C3DZ 59290A57-A	L.H. - in prime	1	59	C	63
53066-S13	Screw-oval hd.cr.rec.tap.-No.8-15 x 1-1/4"	2	a		
290B58	BASE (COAT HOOK)				
C1VB 57290B58-A	Zinc die cast	2	53	D	61/63
290A60-1	MOULDING (QUARTER WINDOW OUTSIDE) UPPER				
PB9M 6429796-A	R.H. - rustless steel	1	64	A	60
PB9M 6429797-A	L.H. - rustless steel	1	64	A	60
COAB 6429796-A	R.H. - rustless steel	1	62,64,65	A	61
COAB 6429797-A	L.H. - rustless steel	1	62,64,65	A	61
C1AZ 71290A60-D	R.H. - rustless steel (a)	1	71	A	61/64
C1AZ 71290A61-D	L.H. - rustless steel (a)	1	71	A	61/64
C2AZ 62290A60-A	R.H. - rustless steel	1	62	A	62
C2AZ 62290A61-A	L.H. - rustless steel	1	62	A	62

CONTINUED ON NEXT PAGE

GROUP AND PART NUMBER	DESCRIPTION, SIZE, ETC.	NO. REQ'D	MODEL OR ENGINE CUBIC INCH DISPLACEMENT	VEHICLE CODE	YEAR 19__
290A60-1	MOULDING (QUARTER WINDOW OUTSIDE) UPPER (CONTINUED)				
C3MY 62290A60-A	R.H. - rustless steel	1	62	A	63/64
C3MY 62290A61-A	L.H. - rustless steel	1	62	A	63/64
C2OZ 62290A60-A	R.H. - rustless steel	1	All	B	62
		1	62	B	63
C2OZ 62290A61-A	L.H. - rustless steel	1	All	B	62
		1	62	B	63
CODB 59290A60-A	R.H. - rustless steel	1	59	C	60/62
		1	59B	C	63
CODB 59290A61-A	L.H. - rustless steel	1	59	C	60/62
		1	59B	C	63
CODB 64290A60-A	R.H. - rustless steel	1	62	C	60/62
		1	62B,C	C	63
CODB 64290A61-A	L.H. - rustless steel	1	62	C	60/62
		1	62B,C	C	63
C2DZ 62290A60-A	R.H. - rustless steel	1	62B,C	C	64
C2DZ 62290A61-A	L.H. - rustless steel	1	62B,C	C	64
52720-S8	Screw-pan hd. -No. 8-15 x 3/8"	1	a		
290B60-1	CAP (QUARTER WHEELHOUSE TRIM PANEL MOULDING)				
C1KB 71290B60-AP	R.H. - in prime	1	71	C	60/63
C1KB 71290B61-AP	L.H. - in prime	1	71	C	60/63
C4DZ 71290B60-AP	R.H. - in prime	1	71	C	64
C4DZ 71290B61-AP	L.H. - in prime	1	71	C	64
290A62-3	MOULDING (REAR QUARTER WINDOW) OUTSIDE UPPER				
C3OZ 71290A62-B	R.H.	1	71	B	63
C3OZ 71290A63-B	L.H.	1	71	B	63
CODB 59290A62-B	R.H. - rustless steel (Δ)	1	59,71	C	60/62
		1	59B,71B,C,D	C	63/64
CODB 59290A63-B	L.H. - rustless steel (Δ)	1	59,71	C	60/62
		1	59B,71B,C,D	C	63/64

Δ Package also includes -

(1) 358935-S8 screw

C1DB 59290A62-A	R.H. - in prime	1	59,71	C	60/62
		1	59A,71A	C	63/64
C1DB 59290A63-A	L.H. - in prime	1	59,71	C	60/62
		1	59A,71A	C	63/64
290A64-5	MOULDING (QUARTER WINDOW OUTSIDE UPPER)				
COMB 77290A64-B	R.H. - rustless steel - 42-1/2" long (a)	1	77	A	60
COMB 77290A65-B	L.H. - rustless steel - 42-1/2" long (a)	1	77	A	60
52388-S13	Screw-oval hd. -No. 8-15 x 1-1/2"	6	a		
290C64	RETAINER (QUARTER SPEAR FRONT MOULDING)				
C4GY 62290C64-B	Spring steel - 19/32" x 3/4" across top - (1) for R.H. - (1) for L.H.	2	54B	C	64
C4GY 62290C64-C	(2) for R.H. - (2) for L.H.	4	All	C	64
C4GY 62290C64-D	(2) for R.H. - (2) for L.H.	4	All except 63E, 71	C	64
29066-7	MOULDING (QUARTER OUTSIDE) LOWER REAR				
C1GB 5429066-A	Rustless steel - 54" long	2	54	C	60/61

Package also includes -

(6) C1KB-6229144-C retainer (1) 372719-S100 bolt & clip assy. (1) 373265-S7 nut and washer

CONTINUED ON NEXT PAGE

GROUP AND PART NUMBER	DESCRIPTION, SIZE, ETC.		NO. REQ'D	MODEL OR ENGINE CUBIC INCH DISPLACEMENT	VEHICLE CODE	YEAR 19____
29066-7	MOULDING (QUARTER OUTSIDE) LOWER REAR (CONTINUED)					
C1VB 5729066-D	R.H. - rustless steel	(§)	1	All	D	61/64
C1VB 5729067-D	L.H. - rustless steel	(§)	1	All	D	61/64

§ Package also includes -
(2) C1VB-5729032-B support (2) 376367-S101 screw-oval hd. - No.8-15 (1) 376379-S101 screw-hex.wshr. hd.-No.8-15 x 1/2"

290A66-7	MOULDING (QUARTER WINDOW) OUTSIDE FRONT					
PB9M 6429856-A	R.H. - rustless steel		1	64	A	60
PB9M 6429857-A	L.H. - rustless steel		1	64	A	60
COAZ 62290A66-A	R.H. - rustless steel		1	62,64	A	61/64
COAZ 62290A67-A	L.H. - rustless steel		1	62,64	A	61/64
C1AB 71290A66-C	R.H. - rustless steel	(a)	1	71	A	61/64
C1AB 71290A67-C	L.H. - rustless steel	(a)	1	71	A	61/64
C2OZ 62290A66-A	R.H. - rustless steel		1	62	B	62/63
C2OZ 62290A67-A	L.H. - rustless steel		1	62	B	62/63
C3OZ 71290A66-D	R.H. - rustless steel	(Δ)	1	71	B	63
C3OZ 71290A67-D	L.H. - rustless steel	(Δ)	1	71	B	63

Δ Package also includes -
(3) 376374 screws

CODB 59290A66-A	R.H. - rustless steel		1	59	C	60/62
			1	59B	C	63
CODB 59290A67-A	L.H. - rustless steel		1	59	C	60/62
			1	59B	C	63
CODB 64290A66-A	R.H. - rustless steel		1	62	C	60/62
			1	62B,C	C	63
CODB 64290A67-A	L.H. - rustless steel		1	62	C	60/62
			1	62B,C	C	63
C2DZ 62290A66-A	R.H. - rustless steel		1	62B,C	C	64
C2DZ 62290A67-A	L.H. - rustless steel		1	62B,C	C	64
52720-S8	Screw-pan hd.-No.8-15 x 3/8"		3	a		

29068-9	MOULDING (QUARTER OUTSIDE) UPPER FRONT					
C2MY 6229068-A	R.H. - 18-5/8" long	(Δ)	1	62,65,76	A	62
C2MY 6229069-A	L.H. - 18-5/8" long	(Δ)	1	62,65,76	A	62

Δ Package also includes -
(2) C2MY-16A027-A retainer (1) C2MY-6229108-A retainer (3) 359606-S8 nut

290A68-9	RAIL (QUARTER OUTSIDE FINISH) LOWER					
C1MY 71290A69-A	L.H. - fiberglas - less moulding		1	71B	A	61
C2MY 71290A69-B	L.H. - oak grain transfer		1	71B,D	A	62
C3DZ 71290A68-A	R.H. - fiberglas	(Δ)	1	71C	C	62
		(Δ)	1	71C,D	C	63
C3DZ 71290A69-A	L.H. - fiberglas	(Δ)	1	71C	C	62
		(Δ)	1	71C,D	C	63

Δ Package also includes -
(3) C2DZ-71290B32-A fastener (3) 358404-S cap (1) 376169-S101 screw
(1) 358403-S100 retainer (3) 373702-S100 screw and washer

C4GY 71290A68-A	R.H. - fiberglas	(§)	1	71C	C	64
C4GY 71290A69-A	L.H. - fiberglas	(§)	1	71C	C	64

§ Package also includes -
(6) C1AZ-71290B32-A fastener (7) 358404-S cap (1) 376592-S101 screw-No.10-16 x 7/8"
(1) 358403-S100 retainer (6) 373702-S100 screw and washer

290C68-9	RETAINER (QUARTER OUTSIDE FINISH REAR PANEL LOWER)					
C4MY 71290C68-A	R.H.		1	71A,C	A	64
C4MY 71290C69-A	L.H.		1	71A,C	A	64

GROUP AND PART NUMBER	DESCRIPTION, SIZE, ETC.		NO. REQ'D	MODEL OR ENGINE CUBIC INCH DISPLACEMENT	VEHICLE CODE	YEAR 19____
290A70	RETAINER (QUARTER OUTSIDE FRONT BELT MOULDING)					
COMB 77290A70-A			6	77B	A	60
290A72-3	RAIL (QUARTER OUTSIDE FINISH)					
C1MY 71290A72-A	R.H. - fiberglas - less moulding	(a)	1	71B	A	61
C2MY 71290A72-B	R.H. - oak grain transfer	(a)	1	71B, D	A	62
C3MY 71290A72-A	R.H. - fiberglas	(Δ)	1	71B, D	A	63/64
C3MY 71290A73-A	L.H. - fiberglas	(Δ)	1	71B, D	A	63/64

Δ Package also includes -

(7) C1AZ-71290B32-A retainer (8) 358404-S cap (1) 376788-S100 screw and washer
(2) C3MY-7129108-A retainer (2) 358610-S100 nut (5) 376910-S40 screw and washer
(6) C3MY-7129192-A retainer (6) 373702-S100 screw and washer
(6) PB9M-7750108-A fastener (1) 376725-S100 nut

C3YY 71290A72-A	R.H. - fiberglas	(b)	1	71D, F	B	63
C3YY 71290A73-A	L.H. - fiberglas	(b)	1	71D, F	B	63
34079-S	Nut-hex.-No. 10-32		1	b		
372010-S	Screw-truss hd. cr. rec.-No. 8-18 x 3/8"		AR	a		
373702-S	Screw and washer-No. 10-32 x 5/8"		1	b		
29076-7	MOULDING (QUARTER OUTSIDE) LOWER FRONT					
C3MY 6529076-A	R.H. - 23-3/16" long	(Δ)	1	63B, C, 65B, C, 76	A	63
C3MY 6529077-A	L.H. - 23-3/16" long	(Δ)	1	63B, C, 65B, C, 76	A	63

Δ Package also includes -

(2) C2MY-16A027-A retainer (2) C2GY-16A076-A retainer (2) 359606-S8 nut-No. 10-24

C4MY 5429076-A	R.H. - 3-1/2" long	(††)	1	54F, 75F	A	64
C4MY 5429077-A	L.H. - 3-1/2" long	(††)	1	54F, 75F	A	64

†† Package also includes -

(2) 353911-S100 nut and washer

C4MY 6229076-A	R.H. - 24-11/16" long	(§§)	1	62, 63A, 65A, 76A	A	64
C4MY 6229077-A	L.H. - 24-11/16" long	(§§)	1	62, 63A, 65A, 76A	A	64

§§ Package also includes -

(2) C2OZ-6204368-A retainer (2) C3OZ-59407A12-A retainer (2) 376792-S nut

C4MY 6329076-A	R.H. - 27-15/16" long	(‡‡)	1	63D, 65B	A	64
C4MY 6329077-A	L.H. - 27-15/16" long	(‡‡)	1	63D, 65B	A	64

‡‡ Package also includes -

(2) C4MY-5421094-A retainer (2) C3AZ-6229120-A retainer (2) 359606-S8 nut

C4MY 6529076-A	R.H. - 28" long	(ΔΔ)	1	63C, F, 65C, F, 76C, F	A	64
C4MY 6529077-A	L.H. - 28" long	(ΔΔ)	1	63C, F, 65C, F, 76C, F	A	64

ΔΔ Package also includes -

(4) C4MY-5420954-B retainer (4) 359606-S8 nut

C2GY 5429076-A	R.H. - 27" long	(‡)	1	54	C	62
C2GY 5429077-A	L.H. - 27" long	(‡)	1	54	C	62

‡ Package also includes -

(2) C2GY-16A076-A retainer (1) C2GY-6229040-A retainer (1) 375689-S nut

C2GY 6229076-A	R.H. - 55-1/4" long	(§)	1	62	C	62
C2GY 6229077-A	L.H. - 55-1/4" long	(§)	1	62	C	62

§ Package also includes -

(4) C2GY-16A076-A retainer (1) C2GY-6229040-A retainer (1) 375689-S nut
(1) C2GY-16A076-B retainer (1) 359606-S8 nut

GROUP AND PART NUMBER	DESCRIPTION, SIZE, ETC.	NO. REQ'D	MODEL OR ENGINE CUBIC INCH DISPLACEMENT	VEHICLE CODE	YEAR 19____
29078-9	REFER TO GROUP 29246-7				
290B78	RETAINER (QUARTER OUTSIDE FINISH PANEL MOULDING)				
C1AB 62290B78-B		4	71	A	61
290B82	RETAINER (QUARTER OUTSIDE LOWER MOULDING)				
C2AZ 62290B82-A	For quarters and rear doors	AR	All	B	62
C3AZ 62290B82-A	(1) for R.H. - (1) for L.H. front fender - (3) for R.H. - (3) for L.H. quarter panel	AR	All	D	64
29084-5	MOULDING (QUARTER STATIONARY WINDOW GARNISH) LOWER REAR				
COMB 5629084-AP	R.H. - in prime (a)	1	77	A	60
COMB 5629085-AP	L.H. - in prime (b)	1	77	A	60
52726-S13	Screw-pan hd. cr. rec. -No. 8-15 x 1/2"	3	a		
53066-S13	Screw-oval hd. cr. rec. -No. 8-15 x 1-1/4"	2	b		
358625-S13	Stud fastener	2	a		
290A92	KIT - RETAINER (QUARTER PANEL OUTSIDE UPPER MOULDING)				
COMY 64290A92-B		2	All	A	60
	Consists of the following -				
	(3) COMB-64290A08-A retainer (3) 353911-S100 nut and washer (2) 371265-S100 nut and washer				
	(8) COMB-6429108-A retainer				
290B92-3	MOULDING (QUARTER WINDOW) OUTSIDE FRONT OUTER				
C1AB 71290B92-A	R.H. - rustless steel (Δ)	1	71A, B	A	61/62
		1	71	A	63/64
C1AB 71290B93-A	L.H. - rustless steel (Δ)	1	71A, B	A	61/62
		1	71	A	63/64
	Δ Package also includes - (4) C1AZ-6421094-C clip				
290A93	KIT (MOULDING QUARTER OUTSIDE UPPER) CLIP				
COLY 63290A93-A		1	53, 57, 63	D	60
	Consists of the following -				
	(3) COLB-63290A08-A retainer (4) COLB-6329120-B retainer (6) 354672-S100 nut and washer				
	(3) COLB-63290A96-A retainer				
29094-5	MOULDING (QUARTER STATIONARY WINDOW GARNISH) LOWER				
COMB 7729094-AP	R.H. - in prime	1	77A, B	A	60
COMB 7729095-AP	L.H. - in prime	1	77A, B	A	60
290A96	RETAINER (QUARTER, FRONT & REAR DOOR OUTSIDE UPPER MOULDING) FRONT				
COLB 63290A96-A	Front door	AR	53, 57, 63	D	60
	Rear door	8	53, 57	D	60
	Quarter	6	63	D	60
29100	CLIP (QUARTER WINDOW FRONT) OUTER				
C1AZ 5929100-A	(4) for R.H. and (4) for L.H.	8	71	A	61/64
	Also use to retain Meteor quarter panel lower rear extension mouldings - 29368-9	4	71	B	63
29106	RETAINER (REAR WHEEL OPENING REAR MOULDING)				
C2YY 6229106-A		4	All	B	62

GROUP AND PART NUMBER	DESCRIPTION, SIZE, ETC.	NO. REQ'D	MODEL OR ENGINE CUBIC INCH DISPLACEMENT	VEHICLE CODE	YEAR 19___
29108	RETAINER (QUARTER OUTSIDE UPPER MOULDING)				
COMB 6429108-A		AR	All	A	60
C1MB 5429108-A		AR	54B, 65B, 75B, 76	A	61
C1MY 6229108-A		AR	54A, 58, 62, 64, 65A, 71A, 75A	A	61
		AR	All except 71B	A	62
C2AZ 6229108-A	(a)	2	All except 71	A	62
C2MY 6229108-A	Quarter panel (a)	4	54, 71A, 75	A	62
	Rear door	2	54, 71A, 75	A	62
	Quarter panel	6	62, 65, 76	A	62
C3MY 6229108-A	Also use for front fender and front and rear door mouldings (a)	AR	All except 71	A	63
C3MY 7129108-A	Also use for rear door moulding	2	54, 57, 71, 75	A	63/64
C4MY 6229108-A	Also use for front fender and front and rear door mouldings (a)	AR	All	A	64
359606-S	Nut-No. 10-24	AR	a		
291A10-1	MOULDING (REAR QUARTER WINDOW) OUTSIDE FRONT				
CODB 59291A10-B	R. H. - rustless steel (Δ)	1	59	C	60/62
		1	59B	C	63
CODB 59291A11-B	L. H. - rustless steel (Δ)	1	59	C	60/62
		1	59B	C	63
C1DB 59291A10-A	R. H. - in prime (a)	1	59, 71	C	60/62
	(Δ)	1	59A, 71A	C	63/64
C1DB 59291A11-A	L. H. - in prime (a)	1	59, 71	C	60/62
	(Δ)	1	59A, 71A	C	63/64
Δ Package also includes -					
	(3) 354146-S8 screw-truss hd. cr. rec. No. 8-15 x 1/2"				
C1KB 71291A10-A	R. H. - rustless steel (§)	1	71	C	60/62
		1	71B, C, D	C	63/64
C1KB 71291A11-A	L. H. - rustless steel (§)	1	71	C	60/62
		1	71B, C, D	C	63/64
§ Package also includes -					
	(3) 376374-S101 screw				
376392-S101	Screw oval hd. No. 6-20 x 1-1/8"	2	a		
291A12	RETAINER (REAR QUARTER WINDOW OUTSIDE FRONT MOULDING)				
CODZ 59291A12-A	(a)	2	59	C	60/63
375453-S100	Screw-rd. hd. -No. 8-18 x 5/8"	6	a		
29114-5	REFER TO GROUP 29138-9				
291B14	SEAL (QUARTER WINDOW OUTSIDE REAR MOULDING)				
C1AB 59291B14-A	Rubber - 4" x 3-1/2" x 1/16" thick	2	71	A	61/64
291A16	PAD (QUARTER OUTSIDE UPPER REAR END MOULDING)				
C2MY 71291A16-A		2	71	A	62
COLB 63291A16-C		2	All	D	60
291B18-9	REFER TO GROUP 29368-9				
29120	RETAINER (QUARTER OUTSIDE MOULDING)				
C3AZ 6229120-A	For quarter	4	65B	A	64
	For front fender	2	54B, 65B	A	64
C2GY 7129120-A		AR	59, 71	C	60/62
C3GY 5929120-A	R. H. only	1	59, 71A, B	C	63
C3OZ 6229120-A		AR	54A, 62, 76	C	63
	For quarter	AR	54, 62, 63, 76	C	64
COLB 6329120-B	Front	4	53, 57, 63	D	60
B7A 7029120-A	Lower	8	All	D	60

GROUP AND PART NUMBER	DESCRIPTION, SIZE, ETC.	NO. REQ'D	MODEL OR ENGINE CUBIC INCH DISPLACEMENT	VEHICLE CODE	YEAR 19____
291A20	RETAINER (QUARTER OUTSIDE BELT REAR MOULDING) INTERMEDIATE				
B9MB 64291A20-A		2	58, 64	A	60
291B20-1	MOULDING (QUARTER OUTSIDE) LOWER FRONT				
C2YY 54291B20-A	R.H. (Δ)	1	54	B	62
C2YY 54291B21-A	L.H. (Δ)	1	54	B	62
Δ Package also includes - (2) C2AZ-62290B82-A retainer (2) C2AZ-6229185-A retainer (5) 359606-S8 nut (2) C2YY-6229144-A retainer (1) C2YY-6229532-A retainer					
C2YY 62291B20-A	R.H. (§)	1	62	B	62
C2YY 62291B21-A	L.H. (§)	1	62	B	62
§ Package also includes - (4) C2AZ-62290B82-A retainer (2) C2AZ-6229185-A retainer (6) 359606-S8 nut (3) C2YY-6229144-A retainer (1) C2YY-6229532-A retainer					
C3YY 54291B20-A	R.H. - rustless steel - 59-7/8" long (†)	1	54	B	63
C3YY 54291B21-A	L.H. - rustless steel - 59-7/8" long (†)	1	54	B	63
† Package also includes - (6) C2OZ-16A076-A retainer (2) C3OZ-6220884-A retainer (2) 359606-S8 nut-No.10-24					
C3YY 62291B20-A	R.H. - rustless steel - 90-1/2" long (‡)	1	62,65	B	63
C3YY 62291B21-A	L.H. - rustless steel - 90-1/2" long (‡)	1	62,65	B	63
‡ Package also includes - (8) C2OZ-16A076-A retainer (3) C3OZ-6220884-A retainer (3) 359606-S8 nut-No.10-24					
C3YY 71291B20-A	R.H. - rustless steel - 53-3/16" long (††)	1	71A,B,C,E	B	63
C3YY 71291B21-A	L.H. - rustless steel - 53-3/16" long (††)	1	71A,B,C,E	B	63
†† Package also includes - (6) C2OZ-16A076-A retainer (1) C3OZ-6220884-A retainer (1) 359606-S8 nut-No.10-24					
C3GY 54291B20-A	R.H. - rustless steel - 55-1/2" long (ΔΔ)	1	54	C	63
C3GY 54291B21-A	L.H. - rustless steel - 55-1/2" long (ΔΔ)	1	54	C	63
ΔΔ Package also includes - (5) C2OZ-16A076-A retainer (2) C3OZ-6229120-A retainer (2) 375689-S nut-self-tap.-No.10					
C3GY 59291B20-A	(1) for R.H. and (1) for L.H. - rustless steel	2	59	C	63
Package also includes - (2) C2DZ-16A076-C retainer (1) C3GY-5929120-A retainer-R.H. side (2) 359606-S8 nut-No.10-24 (8) C2OZ-16A076-A retainer					
C3GY 62291B20-A	(1) for R.H. and (1) for L.H. - rustless steel - 72-3/4" long	2	62, 63B, 76	C	63
Package also includes - (1) C2DZ-16A076-C retainer (2) C3OZ-6229120-A retainer (2) 375689-S nut-self-tap.-No.10 (6) C2OZ-16A076-A retainer (1) 359606-S8 nut-No.10-24					
C3GY 71291B20-A	R.H. - rustless steel - 58-1/2" long (‡‡)	1	71A,B	C	63
C3GY 71291B21-A	L.H. - rustless steel - 58-1/2" long (‡‡)	1	71A,B	C	63
‡‡ Package also includes - (2) C2DZ-16A076-C retainer (1) C3GY-5929120-A retainer-R.H. side (2) 359606-S8 nut-No.10-24 (7) C2OZ-16A076-A retainer					
C4GY 62291B20-B	R.H. - aluminum - 26-13/16" long (§§)	1	62B,C,63C,D,76B,D	C	64
C4GY 62291B21-B	L.H. - aluminum - 26-13/16" long (§§)	1	62B,C,63C,D,76B,D	C	64
§§ Package also includes - (1) C3OZ-16A076-A retainer (4) C4DZ-16A076-A retainer (1) 359606-S8 nut					

GROUP AND PART NUMBER	DESCRIPTION, SIZE, ETC.	NO. REQ'D	MODEL OR ENGINE CUBIC INCH DISPLACEMENT	VEHICLE CODE	YEAR 19____
29122-3	MOULDING (REAR QUARTER WINDOW GARNISH) LOWER FRONT				
C2AZ 7129122-BP	R.H. - in prime - 45-1/4" long (a)	1	71	A	61/64
C2AZ 7129123-BP	L.H. - in prime - 45-1/4" long (a)	1	71	A	61/64
53066-S13	Screw-oval hd cr. rec. tap. -No. 8-15 x 1-1/4"	3	a		
53072-S13	Screw-oval hd. cr. rec. tap. -No. 8-15 x 1-1/2"	2	a		
29124	RETAINER (QUARTER OUTSIDE LOWER REAR MOULDING)				
C3MY 5429124-A	(3) for R.H. and (3) for L.H.	6	54B,65B,C,75B,76	A	63
291A24-5	REFER TO GROUP 29246-7				
291A26	RETAINER (QUARTER OUTSIDE BELT REAR MOULDING)				
B9MB 57291A26-A		2	57, 63	A	60
291B26	ORNAMENT & MEDALLION (QUARTER OUTSIDE)				
C1GB 62291B26-B	Located on quarter panel for 1961 and roof side for 1962	2	62A(S-22), 62C	C	61/62
Package also includes -					
(2) 359464-S7	nut	(1) MIS-1012	template and instruction sheet		
29128	RETAINER (OUTSIDE BELT MOULDING)				
PB9M 5729128-A	Quarter and rear end	AR	57, 63	A	60
PB9M 5829128-A	Quarter and rear end	AR	58, 64	A	60
BAK 6329128-A	Steel				
	Front door	8	53, 54, 57, 75	D	60
	Front door	10	63, 65, 68	D	60
	Rear door	10	53, 54, 57, 75	D	60
	Quarter panel	10	All except 68	D	60
	Quarter panel	8	68	D	60
	Windshield	18	All	D	60
291A28	RETAINER (QUARTER OUTSIDE BELT REAR MOULDING) REAR				
B9MB 57291A28-A		2	57, 63	A	60
291A30-1	MOULDING (REAR QUARTER WINDOW) INSIDE UPPER CORNER				
C3OZ 71291A30-A	R.H.	1	71	B	63
C3OZ 71291A31-A	L.H.	1	71	B	63
C2DZ 59291A30-A	R.H. - use on vehicles built prior to 5-1-63 (a)	1	59, 71	C	60/63
C2DZ 59291A31-A	L.H. - use on vehicles built prior to 5-1-63 (a)	1	59, 71	C	60/63
C3DZ 59291A30-A	R.H. - use on vehicles built after 4-30-63	1	59, 71	C	63
C3DZ 59291A31-A	L.H. - use on vehicles built after 4-30-63	1	59, 71	C	63
C3DZ 59291A30-B	R.H.	1	71	C	64
C3DZ 59291A31-B	L.H.	1	71	C	64
53038-S13	Screw-oval hd. cr. rec. tap. -No. 8-15 x 3/4"	1	a		
291A32-3	MOULDING (REAR QUARTER WINDOW) OUTSIDE REAR				
CODZ 59291A32-A	R.H. - in prime (Δ)	1	59, 71	C	60/62
		1	59A, 71A	C	63/64
CODZ 59291A33-A	L.H. - in prime (Δ)	1	59, 71	C	60/62
		1	59A, 71A	C	63/64
C1DZ 59291A32-A	R.H. - rustless steel (Δ)	1	59, 71	C	60/62
		1	59B, 71B, C, D	C	63/64
C1DZ 59291A33-A	L.H. - rustless steel (Δ)	1	59, 71	C	60/62
		1	59B, 71B, C, D	C	63/64
Δ Package also includes -					
	(2) 359606-S8	nut-No. 10-24			

GROUP AND PART NUMBER	DESCRIPTION, SIZE, ETC.		NO. REQ'D	MODEL OR ENGINE CUBIC INCH DISPLACEMENT	VEHICLE CODE	YEAR 19____
291A34-5	MOULDING (QUARTER OUTSIDE) FRONT					
C1KB 62291A34-B	R.H. - rustless steel		1	62	C	60/61
C1KB 62291A35-B	L.H. - rustless steel		1	62	C	60/61
291A36	PLATE (QUARTER PANEL NAME)					
C3MY 65291A36-B	"S-55" - with RED and BLACK backing plate	(Δ)	2	63C, 65C, 75C, 76B	A	63
C3YY 65291A36-A	"S-33"	(Δ)	2	65B	B	63

Δ Package also includes -

(4) 375890-S102 nut

29138-9	MOULDING (QUARTER OUTSIDE BELT) REAR					
PB9M 5729138-B	R.H. - rustless steel 32-3/4" long	(a)	1	57, 63	A	60
PB9M 5729139-B	L.H. - rustless steel 32-3/4" long	(a)	1	57, 63	A	60
B9MB 6429138-B	R.H. - rustless steel	(b)	1	58, 64	A	60
B9MB 6429139-B	L.H. - rustless steel	(b)	1	58, 64	A	60
COMB 7729114-A	R.H. - rustless steel - 20-1/2" long	(c)	1	77B	A	60
COMB 7729115-A	L.H. - rustless steel - 20-1/2" long	(c)	1	77B	A	60
B9MB 57291A26-A	Retainer		1	a		
PB9M 5729128-A	Retainer		3	a		
B9MB 57291A28-A	Retainer		1	a		
B9MB 64291A20-A	Retainer		1	b		
B9MB 6429176-A	Retainer		1	b		
B9MB 6429421-A	Retainer		1	b		
52726-S8	Screw-pan hd. cr. rec. -No. 8-15 x 1/2"		1	c		
353911-S100	Nut and washer assy. -No. 10-24		AR	a, b, c		
371589-S	Screw-flat hd. cr. rec. -No. 6-20 x 3/8"		2	c		
29140-1	MOULDING (QUARTER OUTSIDE UPPER)					
COMB 5829140-A	R.H. - rustless steel	(Δ)	1	57, 58, 77	A	60
COMB 5829141-A	L.H. - rustless steel	(Δ)	1	57, 58, 77	A	60

Δ Package also includes -

(2) COMB-64290A08-A retainer (6) COMB-6429108-A retainer (2) 353911-S100 nut and washer

C1MB 6229140-A	R.H. - rustless steel	(§)	1	62A, 64A, 65A	A	61
C1MB 6229141-A	L.H. - rustless steel	(§)	1	62A, 64A, 65A	A	61

§ Package also includes -

(2) C1AB-6221094-A retainer (10) C1MB-6229108-A retainer (2) 353911-S100 nut and washer

C1MB 5429140-A	Rustless steel	(‡)(a)	2	54, 58A, 75	A	61/62
C1MB 7129140-B	Rustless steel - 62-1/4" long	(‡)(a)	2	71A	A	61/62

‡ Package also includes -

(6) C1MY-6229108-A retainer (1) C2MY-6229108-A retainer (2) 359606-S8 nut

(1) C2AZ-6229108-A retainer

C3MY 5429140-A	Rustless steel - 67-1/16" long		2	54, 75	A	63/64

Package also includes -

(2) C3MY-16A076-A retainer (6) C3MY-6229108-A retainer (2) 359606-S8 nut-No. 10-24

C3MY 6229140-A	R.H. - rustless steel - 98-1/8" long	(§§)	1	62, 63, 65, 76	A	63/64
C3MY 6229141-A	L.H. - rustless steel - 98-1/8" long	(§§)	1	62, 63, 65, 76	A	63/64

§§ Package also includes -

(2) C3MY-16A076-A retainer (10) C3MY-6229108-A retainer (2) 359606-S8 nut-No. 10-24

C3MY 7129140-A	Rustless steel - 56-9/16" long		2	71	A	63/64

Package also includes -

(1) C3MY-7129108-A retainer (6) C3MY-7129192-A retainer (1) 358610-S100 nut and washer

CONTINUED ON NEXT PAGE

GROUP AND PART NUMBER	DESCRIPTION, SIZE, ETC.	NO. REQ'D	MODEL OR ENGINE CUBIC INCH DISPLACEMENT	VEHICLE CODE	YEAR 19____
29140-1	MOULDING (QUARTER OUTSIDE UPPER) CONTINUED				
C3YY 7129140-A	R.H. - rustless steel - 53-7/16" long (ΔΔ)	1	71A, B, E	B	63
C3YY 7129141-A	L.H. - rustless steel - 53-7/16" long (ΔΔ)	1	71A, B, E	B	63
	ΔΔ Package also includes -				
	(6) C2GY-16A076-A retainer (1) C2GY-16A076-B retainer (1) 359606-S8 nut-No.10-24				
C3GY 5429140-A	R.H. - rustless steel - 47" long (†)	1	54	C	63
C3GY 5429141-A	L.H. - rustless steel - 47" long (†)	1	54	C	63
	† Package also includes -				
	(4) C2OZ-16A076-A retainer (2) C3OZ-6229120-A retainer (2) 375690-S nut-No.10-24				
C3GY 5929140-A	Rustless steel	2	59	C	63
	Package also includes -				
	(1) C2DZ-16A076-C retainer (8) C2OZ-16A076-A retainer (1) 359606-S8 nut-No.10-24				
C3GY 6229140-A	R.H. - rustless steel - 75" long (††)	1	62, 63B, 76	C	63
C3GY 6229141-A	L.H. - rustless steel - 75" long (††)	1	62, 63B, 76	C	63
	†† Package also includes -				
	(1) C2DZ-16A076-C retainer (2) C3OZ-6229120-A retainer (2) 375689-S nut				
	(6) C2OZ-16A076-A retainer (1) 359606-S8 nut-No.10-24				
C3GY 7129140-A	Rustless steel	2	71A, B	C	63
	Package also includes -				
	(1) C2DZ-16A076-C retainer (5) C2OZ-16A076-A retainer (1) 359606-S8 nut-No.10-24				
C4GY 5429140-A	R.H. - aluminum - 48-29/32" long (§§§)	1	54B, C, D	C	64
C4GY 5429141-A	L.H. - aluminum - 48-29/32" long (§§§)	1	54B, C, D	C	64
	§§§ Package also includes -				
	(2) C3DZ-16A076-A retainer (1) C4GY-62290A08-A retainer (2) 375690-S nut-No. 10-24				
	(4) C4DZ-16A076-A retainer				
C4GY 6229140-A	R.H. - aluminum - 76-3/4" long (‡‡‡)	1	62B, C, 63C, D, 76B, D	C	64
C4GY 6229141-A	L.H. - aluminum - 76-3/4" long (‡‡‡)	1	62B, C, 63C, D, 76B, D	C	64
	‡‡‡ Package also includes -				
	(2) C3OZ-16A076-A retainer (1) C4GY-62290A08-B retainer (3) 375690-S nut				
	(4) C4DZ-16A076-A retainer				
C4GY 7129140-A	R.H. - 43-27/32" long (†††)	1	71B	C	64
C4GY 7129141-A	L.H. - 43-27/32" long (†††)	1	71B	C	64
	††† Package also includes -				
	(1) C3OZ-16A076-A retainer (4) C4DZ-16A076-A retainer (1) 359606-S8 nut				
COLB 5729140-A	R.H. - rustless steel (b)	1	53, 57	D	60
COLB 5729141-A	L.H. - rustless steel (b)	1	53, 57	D	60
COLB 6329140-A	R.H. - rustless steel (b)	1	63	D	60
COLB 6329141-A	L.H. - rustless steel (b)	1	63	D	60
C1VB 5729140-B	R.H. - rustless steel - 64-5/8" long☆ (‡‡)	1	All	D	61/64
	☆ Refer to groups 29029 and 290B35 for L.H. moulding for 1961-62				
C3VY 5729141-A	L.H. - rustless steel - 64-5/8" long (‡‡)	1	All	D	63/64
	‡‡ Package also includes -				
	(2) C2VY-16234-A retainer (6) C1VB-5729192-A retainer (2) 359606-S8 nut-No.10-24				
	(5) C1VY-5729144-A retainer				
C1AB 6221094-A	Retainer	2	a		
COLY 63290A93-A	Kit-retainer	1	b		

GROUP AND PART NUMBER	DESCRIPTION, SIZE, ETC.	NO. REQ'D	MODEL OR ENGINE CUBIC INCH DISPLACEMENT	VEHICLE CODE	YEAR 19___
291B40-1	PANEL (QUARTER LOWER REAR EXTENSION FINISH)				
C3MY 7129158-A	R.H.	1	71	A	63
C3MY 7129159-A	L.H.	1	71	A	63
C3YY 71291B40-C	R.H. - use on vehicles without back-up lights (Δ)	1	71	B	63
C3YY 71291B41-C	L.H. - use on vehicles without back-up lights (Δ)	1	71	B	63
C3YY 71291B40-D	R.H. - use on vehicles with back-up lights (Δ)	1	71	B	63
C3YY 71291B41-D	L.H. - use on vehicles with back-up lights (Δ)	1	71	B	63
	Δ Package also includes -				
(2) 376378-S101	screw (2) 376792-S nut				
C4MY 71291B40-A	R.H. - aluminum - 8-1/2" long (§)	1	71	A	64
C4MY 71291B41-A	L.H. - aluminum - 8-1/2" long (§)	1	71	A	64
	§ Package also includes -				
	(2) 52742-S8 screw-pan hd. No. 8-15 x 3/4"				
291A42	MOULDING (QUARTER OUTSIDE UPPER REAR CORNER)				
C1VY 57291A42-A		2	All	D	61/64
	Package also includes -				
(1) 353911-S100	nut and washer assembly-No. 10-24 (1) 372020-S screw-pan hd. cr. rec. -No. 8-18				
29144	RETAINER (QUARTER, REAR DOOR & FRONT FENDER OUTSIDE MOULDING)				
C4MY 5429144-A		6	54B, 57D, 63D, 65B	A	64
C4MY 5429144-B	(2) for R.H. - (2) for L.H.	4	54B, 57D, 63D, 65B	A	64
C4MY 5429144-C	(1) for R.H. - (1) for L.H.	2	54B, 57D	A	64
C4MY 5429144-D	(3) for R.H. - (3) for L.H.	6	54B, 57D, 63D, 65B	A	64
C2YY 6229144-A	Use on quarter and rear door lower mouldings	AR	All	B	62
C1KB 6229144-C	Quarter outside	AR	54, 62	C	60/61
C4GY 6229144-A	(2) for R.H. - (2) for L.H. at quarter panel - (8) for luggage compartment door	AR	All	C	64
C1VY 5729144-A		AR	All	D	61/64
291A46	RETAINER (QUARTER OUTSIDE UPPER REAR END MOULDING)				
COLB 63291A46-A		4	All	D	60
291B46	PANEL (QUARTER OUTSIDE REAR END FINISH)				
C3GY 59291B46-A	Rustless steel	2	59, 71A, B	C	63
291A48	MOULDING (QUARTER OUTSIDE) UPPER REAR				
COMB 6429506-B	R.H. - rustless steel - 98-3/4" long - one piece design	1	63, 64, 76	A	60
COMB 6429507-B	L.H. - rustless steel - 98-3/4" long - one piece design	1	63, 64, 76	A	60
C2MY 62291A48-A	95-3/4" long	2	62, 65, 76	A	62
	Package also includes -				
(6) C1MY-6229108-A retainer	(1) C2MY-6229108-A retainer (5) 359606-S8 nut				
(1) C2AZ-6229108-A retainer	(3) COAZ-6421094-C retainer				
291A50-1	MOULDING (QUARTER OUTSIDE FINISH PANEL) REAR				
C2YY 62291A50-A	R.H. - 7-1/2" long (Δ)	1	54B, 62B, C	B	62
C2YY 62291A51-A	L.H. - 7-1/2" long (Δ)	1	54B, 62B, C	B	62
	Δ Package also includes -				
(2) C2OZ-6240368-A retainer	(2) 359606-S8 nut (1) 376378-S101 screw				
29155	SEAL (QUARTER PANEL OUTSIDE REAR MOULDING)				
C2YY 6229155-A		4	All	B	62/63
29158-9	REFER TO GROUP 291B40-1				

GROUP AND PART NUMBER	DESCRIPTION, SIZE, ETC.	NO. REQ'D	MODEL OR ENGINE CUBIC INCH DISPLACEMENT	VEHICLE CODE	YEAR 19___
291A60-1	MOULDING (REAR QUARTER WINDOW GARNISH) FRONT				
C2AZ 71291A60-A	R.H. - in prime (a)	1	71	A	61/64
C2AZ 71291A61-A	L.H. - in prime (a)	1	71	A	61/64
53072-S13	Screw-oval hd. cr. rec. tap. -No. 8-15 x 1-1/2"	2	a		
29164-5	MOULDING (REAR WHEEL OPENING)				
COMB 5829164-A	R.H. - rustless steel (Δ)	1	All	A	60
COMB 5829165-A	L.H. - rustless steel (Δ)	1	All	A	60
C1MB 5429164-B	R.H. - rustless steel (Δ)	1	54B,65B,C,75B,76	A	61/62
C1MB 5429165-B	L.H. - rustless steel (Δ)	1	54B,65B,C,75B,76	A	61/62
Δ Package also includes - (5 or 6) 372556-S screw					
C3MY 5429164-A	R.H. - rustless steel (§§)	1	54B, 75B, C	A	63
C3MY 5429165-A	L.H. - rustless steel (§§)	1	54B, 75B, C	A	63
§§ Package also includes - (1) C3MY-54291B66-A retainer (2) 353911-S100 nut and washer (4) 372010-S101 screw (1) C3MY-54291B68-A retainer					
C3MY 6529164-A	R.H. - rustless steel (ΔΔ)	1	63B,C,65B,C,76	A	63
C3MY 6529165-A	L.H. - rustless steel (ΔΔ)	1	63B,C,65B,C,76	A	63
ΔΔ Package also includes - (1) C3MY-54291B68-A retainer (1) 353911-S100 nut and washer (4) 372010-S101 screw					
C4MY 5429164-A	R.H. - rustless steel (‡‡)	1	54F, 57C, F, 63C, F, 65C, F, 75F, 76C, F	A	64
C4MY 5429165-A	L.H. - rustless steel (‡‡)	1	54F, 57C, F, 63C, F, 65C, F, 75F, 76C, F	A	64
‡‡ Package also includes - (6) 376387-S101 screw					
C2YY 6229164-A	R.H. (†)	1	54B, 62B	B	62
C2YY 6229165-A	L.H. (†)	1	54B, 62B	B	62
† Package also includes - (2) C2YY-6229106-A retainer (1) 376378-S101 screw					
C3YY 6229164-A	R.H. - rustless steel (§)	1	54B, 62B, 65	B	63
C3YY 6229165-A	L.H. - rustless steel (§)	1	54B, 62B, 65	B	63
C3YY 7129164-A	R.H. - rustless steel (§)	1	71A, E	B	63
C3YY 7129165-A	L.H. - rustless steel (§)	1	71A, E	B	63
§ Package also includes - (7) 376378-S101 screw					
C4GY 6329164-B	R.H. - rustless steel (††)	1	63E	C	64
C4GY 6329165-B	L.H. - rustless steel (††)	1	63E	C	64
†† Package also includes - (7) 376387-S101 screw-pan hd. -No. 8-18 x 3/8"					
C1VB 5729164-C	R.H. - rustless steel (‡)	1	All	D	61/64
C1VB 5729165-C	L.H. - rustless steel (‡)	1	All	D	61/64
‡ Package also includes - (5) 359573-S100 screw-oval hd. cr. rec. -No. 8-15 x 5/8"					
291A66	RETAINER (QUARTER OUTSIDE FINISH PANEL)				
COMB 63291A66-A	1-1/4" long	2	57F, 63F, 76D	A	60
		2	54B, 65B, 75B, 76	A	61
C3YY 62291A66-A		6	54B, 62B, 65	B	63
29B166	RETAINER (QUARTER WHEEL OPENING MOULDING) FRONT				
C3MY 54291B66-A		2	54B, 75B, C	A	63
291B68	RETAINER (QUARTER WHEEL OPENING MOULDING) REAR				
C3MY 54291B68-A		2	54B, 63B, C, 65B, C, 75B, C, 76	A	63

GROUP AND PART NUMBER	DESCRIPTION, SIZE, ETC.	NO. REQ'D	MODEL OR ENGINE CUBIC INCH DISPLACEMENT	VEHICLE CODE	YEAR 19____
291B70	RETAINER (QUARTER OUTSIDE LOWER REAR MOULDING) REAR				
C3MY 54291B70-A		2	54B, 65B, C, 75B, C, 76	A	63
29176	RETAINER (QUARTER OUTSIDE REAR BELT MOULDING)				
B9MB 6429176-A		2	58, 64	A	60
291A76-7	MOULDING (QUARTER OUTSIDE LOWER FINISH RAIL)				
C1MB 71291A76-A	R. H. - rustless steel - 56-1/2" long (a)	1	71B, D	A	61/62
C1MB 71291A77-A	L. H. - rustless steel - 56-1/2" long (a)	1	71B, D	A	61/62
C1MY 7120872-A	Retainer	1	a		
C1MY 7120892-A	Retainer	6	a		
B9AB 7150108-A	Fastener	5	a		
34655-S8	Nut and washer-hex. -No. 10-24	1	a		
50555-S8	Screw-pan hd. cr. rec. -No. 10-32 x 1"	5	a		
291B76	RETAINER (QUARTER LOWER REAR EXTENSION)				
C3MY 71291B76-A		4	71	A	63/64
291A78	MOULDING (QUARTER OUTSIDE UPPER FINISH RAIL)				
C1MB 71291A78-A	R. H. - rustless steel - 56-1/2" long (a)	1	71B	A	61
C2MY 71291A78-A	R. H. - rustless steel - 55-1/2" long (a)	1	71B, D	A	62
C1MY 7120892-A	Retainer	AR	a		
B9AB 7150108-A	Fastener	AR	a		
50555-S8	Screw-pan hd. cr. rec. -No. 10-32 x 1"	AR	a		
291A81	MOULDING (QUARTER OUTSIDE UPPER FINISH RAIL) FRONT				
C1MB 71291A81-A	L. H. - rustless steel - 36-3/4" long (a)	1	71B, D	A	61/62
C1MY 7120892-A	Retainer	AR	a		
B9AB 7150108-A	Fastener	AR	a		
50555-S8	Screw-pan hd. cr. rec. -No. 10-32 x 1"	AR	a		
291A83	MOULDING (QUARTER OUTSIDE UPPER FINISH RAIL) REAR				
C1MB 71291A83-A	L. H. - rustless steel - 11-1/4" long (a)	1	71B, D	A	61/62
C2MY 71291A83-A	L. H. - rustless steel - 10-1/8" long (a)	1	71B, D	A	62
C1MY 7120872-A	Retainer	2	a		
34655-S8	Nut and washer-hex. -No. 10-24	2	a		
291A84-5	MOULDING (REAR QUARTER WINDOW GARNISH) REAR				
C2MY 71291A84-A	R. H. (a)	1	71	A	61/64
C2MY 71291A85-A	L. H. (a)	1	71	A	61/64
52742-S8	Screw-pan hd. cr. rec. tap. -No. 8-15 x 3/4"	3	a		
29185	RETAINER (QUARTER OUTSIDE REAR END MOULDING)				
C2AZ 6229185-A		4	All	B	62
29186	SUPPORT (QUARTER WINDOW GARNISH MOULDING) REAR				
PB9M 5629186-A		2	63, 64	A	60
291B86-7	MOULDING (QUARTER SPEAR) UPPER				
C4GY 71291B86-A	R. H. - aluminum - 40-7/16" long	1	71B	C	64
Package also includes -	(6) C4GY-6228506-A retainer				
C4GY 71291B87-A	L. H. - front - aluminum - 24-1/16" long	1	71B	C	64
Package also includes -					
(4) C4GY-6242364-A retainer	(4) 359606-S8 nut				

GROUP AND PART NUMBER	DESCRIPTION, SIZE, ETC.	NO. REQ'D	MODEL OR ENGINE CUBIC INCH DISPLACEMENT	VEHICLE CODE	YEAR 19____
291A88-9	MOULDING (REAR QUARTER WINDOW GARNISH) LOWER REAR				
C2AB 71291A88-AP	R.H. - in prime (a)	1	71	A	61/64
C2AB 71291A89-AP	L.H. - in prime (a)	1	71	A	61/64
53066-S13	Screw-pan hd. cr. rec. tap. -No. 8-15 x 1-1/4"	2	a		
53072-S13	Screw-pan hd. cr. rec. tap. -No. 8-15 x 1-1/2"	1	a		
291B89	MOULDING (QUARTER SPEAR TO FUEL FILLER CAP) UPPER REAR				
C4GY 71291B89-B	L.H. - aluminum - 11-7/8" long	1	71B	C	64
	Package also includes -				
(2) C4GY-6242364-A	retainer (2) 359606-S8 nut				
291A90-1	RETAINER (QUARTER WINDOW LOWER FRONT MOULDING)				
C1AB 59291A90-A	R.H.	1	71	A	61
C1AB 59291A91-A	L.H.	1	71	A	61
C2AZ 71291A90-A	R.H. (a)	1	71	A	62/64
C2AZ 71291A91-A	L.H. (a)	1	71	A	62/64
52742-S8	Screw-pan hd. cr. rec. tap. -No. 8-15 x 3/4"	5	a		
291B91	MOULDING (QUARTER SPEAR TO FUEL FILLER CAP) LOWER FRONT				
C4GY 71291B91-A	L.H. - aluminum - 24-3/8" long	1	71B	C	64
	Package also includes -				
(4) C4GY-6242364-A	retainer (4) 359606-S8 nut				
29192	RETAINER (QUARTER, REAR DOOR & FRONT FENDER OUTSIDE UPPER MOULDING)				
C3MY 7129192-A	Use on quarters - front fenders - front and rear doors	AR	71B, D	A	63/64
C1VB 5729192-A		AR	All	D	61/64
291A92-3	RETAINER (QUARTER WINDOW LOWER REAR MOULDING)				
C1AB 59291A92-A	R.H.	1	71	A	61
C1AB 59291A93-A	L.H.	1	71	A	61
C2AZ 71291A92-A	R.H. (a)	1	71	A	62/64
C2AZ 71291A93-A	L.H. (a)	1	71	A	62/64
52742-S8	Screw-pan hd. cr. rec. tap. -No. 8-15 x 3/4"	3	a		
291B93	MOULDING (QUARTER SPEAR TO FUEL FILLER CAP) LOWER REAR				
C4GY 71291B93-A	L.H. - aluminum - 11-3/16" long	1	71B	C	64
	Package also includes -				
(2) C4GY-6242364-A	retainer (2) 359606-S nut-No. 10-24				
291A94	RETAINER (QUARTER WINDOW) FRONT MOULDING				
C1AB 59291A94-A	(a)	2	71	A	61/64
52017-S8	Screw-flat hd. cr. rec. tap. -No. 8-15 x 5/8"	3	a		
291A97	RAIL (QUARTER OUTSIDE FINISH) UPPER FRONT				
C2MY 71291A97-B	L.H. - fiberglas - 37" long - less moulding (a)	1	71B, D	A	61/62
372010-S	Screw-truss hd. cr. rec. -No. 8-18 x 3/8"	AR	a		
29246-7	MOULDING (QUARTER OUTSIDE UPPER REAR END)				
COMB 5629246-A	R.H. - chrome finish (†)	1	77	A	60
COMB 5629247-A	L.H. - chrome finish (†)	1	77	A	60
	† Package also includes -				
	(3) 358902-S100 nut and washer				
COMB 6429246-B	R.H. - chrome finish (§)	1	All except 77	A	60
COMB 6429247-B	L.H. - chrome finish (§)	1	All except 77	A	60
	§ Package also includes -				
	(3) 354397-S100 nut and washer				

CONTINUED ON NEXT PAGE

GROUP AND PART NUMBER	DESCRIPTION, SIZE, ETC.		NO. REQ'D	MODEL OR ENGINE CUBIC INCH DISPLACEMENT	VEHICLE CODE	YEAR 19____
29246-7	MOULDING (QUARTER OUTSIDE UPPER REAR END) CONTINUED					
C1MB 54291A24-B	R.H. - chrome	(‡)	1	54B, 65B, 75B, 76	A	61
C1MB 54291A25-B	L.H. - chrome	(‡)	1	54B, 65B, 75B, 76	A	61
C1MB 62291A24-D	R.H. - painted	(‡)	1	54A, 58A, 62A, 64A, 65A, 75A	A	61
C1MB 62291A25-D	L.H. - painted	(‡)	1	54A, 58A, 62A, 64A, 65A, 75A	A	61
‡ Package also includes -						
	(4) 373265-S7	nut and washer				
C1MB 71291A24-A	R.H.		1	71B	A	61
C1MB 71291A25-A	L.H.		1	71B	A	61
C1MB 71291A24-B	R.H.		1	71A	A	61
C1MB 71291A25-B	L.H.		1	71A	A	61
C2MY 54291A24-A	R.H.	(ΔΔ)	1	54, 62, 65, 75, 76	A	62
C2MY 54291A25-A	L.H.	(ΔΔ)	1	54, 62, 65, 75, 76	A	62
ΔΔ Package also includes -						
	(4) 34655-S8	nut and washer				
C2MY 71291A24-A	R.H.	(§§)	1	71	A	62
C2MY 71291A25-A	L.H.	(§§)	1	71	A	62
§§ Package also includes -						
	(5) 34655-S8	nut and washer				
C3YY 7129078-A	R.H. - 15-3/8" long	(Δ)	1	71	B	63
C3YY 7129079-A	L.H. - 15-3/8" long	(Δ)	1	71	B	63
Δ Package also includes -						
	(2) 354479-S7	nut and washer				
C2GY 5929246-A	R.H.	(ΔΔΔ)	1	59, 71	C	62
C2GY 5929247-A	L.H.	(ΔΔΔ)	1	59, 71	C	62
ΔΔΔ Package also includes -						
(2) C2GY-16A076-B retainer	(2) 359606-S8	nut				
C2GY 62291A24-A	R.H.	(‡‡)	1	54, 62, 63, 76	C	62/63
C2GY 62291A25-A	L.H.	(‡‡)	1	54, 62, 63, 76	C	62/63
‡‡ Package also includes -						
	(4) 353958-S100	nut				
C4GY 6229246-A	R.H. - 8-15/16" long - paint to match body color	(††)	1	All except 71	C	64
C4GY 6229247-A	L.H. - 8-15/16" long - paint to match body color	(††)	1	All except 71	C	64
†† Package also includes -						
	(4) 359606-S8	nut and washer-No. 10-24				
COLB 6329246-C	R.H.	(a)	1	All	D	60
COLB 6329247-C	L.H.	(a)	1	All	D	60
359440-S100	Nut and washer assy.		3	a		
29255	LETTER (BODY OUTSIDE)					
C4GY 5929255-A	"M" - on fuel filler cap		1	71C	C	64
Package also includes -						
	(1) 359464-S7	nut				
C4GY 6229255-A	"C"	(§)	2	54A, C, D, 62A, 63C, D, 76B, D	C	64
C4GY 6229255-B	"O"	(§)	2	54A, C, D, 62A, 63C, D, 76B, D	C	64
C4GY 6229255-C	"M"	(§)	2	54A, C, D, 62A, 63C, D, 76B, D	C	64
C4GY 6229255-D	"E"	(§)	2	54A, C, D, 62A, 63C, D, 76B, D	C	64
C4GY 6229255-E	"T"	(§)	2	54A, C, D, 62A, 63C, D, 76B, D	C	64
C4GY 7129255-A	"C"	(§)	2	71A, B	C	64
C4GY 7129255-B	"O"	(§)	2	71A, B	C	64
C4GY 7129255-C	"M" - use on R.H. only	(§)	1	71A, B	C	64
C4GY 7129255-D	"E"	(§)	2	71A, B	C	64
C4GY 7129255-E	"T"	(§)	2	71A, B	C	64
§ Package also includes -						
	(1) 378728-S8	nut				

GROUP AND PART NUMBER	DESCRIPTION, SIZE, ETC.	NO. REQ'D	MODEL OR ENGINE CUBIC INCH DISPLACEMENT	VEHICLE CODE	YEAR 19____
29262-3	MOULDING (QUARTER STATIONARY WINDOW GARNISH) REAR				
PB9M 5629262-AP	R.H. - in prime	1	77	A	60
PB9M 5629263-AP	L.H. - in prime	1	77	A	60
29278-9	REFER TO GROUP 290B02-3				
29298-9	BRACKET (QUARTER PANEL TO WHEELHOUSE)				
PB9M 5729298-A	R.H.	1	57, 63	A	60
PB9M 5729299-A	L.H.	1	57, 63	A	60
29302	RETAINER (QUARTER OUTSIDE LOWER REAR CORNER MOULDING)				
BAK 5729302-B	Also used on luggage compartment door	AR	All	D	60
29306-7	MOULDING (QUARTER STATIONARY WINDOW GARNISH) FRONT				
COMB 5629306-AP	R.H. - in prime (a)	1	77	A	60
COMB 5629307-AP	L.H. - in prime (a)	1	77	A	60
52726-S13	Screw-pan hd. cr. rec. -No. 8-15 x 1/2"	4	a		
53049-S13	Screw-oval hd. cr. rec. -No. 8-15 x 7/8"	4	a		
29316	RETAINER (FRONT & REAR DOOR MOULDING) OUTSIDE				
COLB 5729316-A	Rear door	2	53, 57	D	60
COLB 6329316-B	Front door - 1-1/8" x 1-3/4"	2	53, 57, 63	D	60
COLB 6329316-C	Front door - 1-1/8" x 1-5/16"	2	53, 57, 63	D	60
29326-7	COVER (QUARTER STATIONARY WINDOW GARNISH MOULDING JOINT) UPPER REAR				
PB9M 5629326-AP	R.H. - in prime (a)	1	77	A	60
PB9M 5629327-AP	L.H. - in prime (a)	1	77	A	60
53066-S13	Screw-oval hd. cr. rec. -No. 8-15 x 1-1/4"	4	a		
29346-7	BRACKET (QUARTER PANEL TO CORNER PILLAR UPPER) REINFORCEMENT				
PB9M 5629346-A	R.H.	1	77	A	60
PB9M 5629347-A	L.H.	1	77	A	60
C1AZ 5929346-A	R.H.	1	71	A	61/64
C1AZ 5929347-A	L.H.	1	71	A	61/64
29368-9	MOULDING (QUARTER PANEL LOWER REAR EXTENSION)				
C3MY 62291B18-A	R.H. - rustless steel - 9-1/4" long (ΔΔ)	1	All except 71	A	63
C3MY 62291B19-A	L.H. - rustless steel - 9-1/4" long (ΔΔ)	1	All except 71	A	63
	ΔΔ Package also includes -				
	(2) C3MY-16A076-A retainer (2) 359606-S8 nut				
C3MY 71291B18-A	R.H. - rustless steel - 9-3/4" long (§)	1	71	A	63/64
C3MY 71291B19-A	L.H. - rustless steel - 9-3/4" long (§)	1	71	A	63/64
	§ Package also includes -				
	(2) C3MY-71291B76-A retainer (2) 358610-S100 nut and washer				
C4MY 62291B18-A	R.H. - rustless steel - 9-11/32" long (Δ)	1	All except 71	A	64
C4MY 62291B19-A	L.H. - rustless steel - 9-11/32" long (Δ)	1	All except 71	A	64
	Δ Package also includes -				
	(2) C3MY-16A076-A retainer (2) 359606-S8 nut				
C3YY 7129368-A	R.H. - "U" shaped - 18" long (‡)	1	71	B	63
C3YY 7129369-A	L.H. - "U" shaped - 18" long (‡)	1	71	B	63
	‡ Package also includes -				
	(2) C1AZ-5929100-A retainer (2) C2OZ-6240368-A retainer (2) 358610-S100 nut and washer				

CONTINUED ON NEXT PAGE

GROUP AND PART NUMBER	DESCRIPTION, SIZE, ETC.	NO. REQ'D	MODEL OR ENGINE CUBIC INCH DISPLACEMENT	VEHICLE CODE	YEAR 19____
29368-9	MOULDING (QUARTER PANEL LOWER REAR EXTENSION) CONTINUED				
C2GY 6229368-B	R.H. - identified by a radius at lower end (†)	1	54,62	C	62
		1	All except 59,71	C	63
C2GY 6229369-B	L.H. - identified by a radius at lower end (†)	1	54,62	C	62
		1	All except 59,71	C	63
† Package also includes -					
(4) C2DZ-16A076-C retainer	(4) 34053-S8 nut				
C4GY 6229368-A	R.H. - 7-1/4" long (§§)	1	All except 71	C	64
C4GY 6229369-A	L.H. - 7-1/4" long (§§)	1	All except 71	C	64
§§ Package also includes -					
(4) C4GY-6229144-A retainer	(4) 376792-S nut-hex. flange-No. 10-24				
29380-1	MOULDING (QUARTER BELT GARNISH)				
C1AB 5429380-AP	R.H.	1	54,75	A	61
C1AB 5429381-AP	L.H.	1	54,75	A	61
C1AB 5829380-AP	R.H.	1	58	A	61
C1AB 5829381-AP	L.H.	1	58	A	61
C2AB 5429380-AP	R.H.	1	54,75	A	62
C2AB 5429381-AP	L.H.	1	54,75	A	62
C3MY 6229380-A	R.H.	1	54,62,65	A	63/64
C3MY 6229381-A	L.H.	1	54,62,65	A	63/64
C3MY 7529380-A	R.H.	1	75	A	63/64
C3MY 7529381-A	L.H.	1	75	A	63/64
29386-7	BRACE (QUARTER LOCK PILLAR TO SIDE MEMBER) OUTER				
BAK 6329386-A	R.H.	1	63,65	D	60
BAK 6329387-A	L.H.	1	63,65	D	60
29388-9	BRACE (QUARTER LOCK PILLAR TO OUTER FLOOR SIDE MEMBER)				
BAK 6829388-A	R.H.	1	68	D	60
BAK 6829389-A	L.H.	1	68	D	60
29396-7	MOULDING (QUARTER OUTSIDE) REAR				
C1GB 6229396-A	Rustless steel - 54-3/8" long	2	62	C	60/61
Package also includes -					
(6) C1KB-6229144-C retainer	(1) 372719-S100 bolt and clip assy. (1) 373265-S7 nut and washer				
C2GY 6229396-A	R.H. - 24-1/4" long (§)	1	54,62	C	62
C2GY 6229397-A	L.H. - 24-1/4" long (§)	1	54,62	C	62
§ Package also includes -					
(1) C2GY-62290A09-B retainer	(3) 375689-S nut				
C3GY 6229396-A	"V" shaped - 8" long	2	54,62,63,76	C	63
Package also includes -					
(1) C3OZ-6229120-A retainer	(1) 375689-S nut				
C4GY 7129396-A	R.H. - spear end "U" shaped (Δ)	1	71B	C	64
C4GY 7129397-A	L.H. - spear end "U" shaped (Δ)	1	71B	C	64
Δ Package also includes -					
(1) C3OZ-16A076-A retainer	(2) 359606-S8 nut				
C4GY 7129397-B	L.H. - 13-3/4" - "U" shaped - rear to gas cap NOTE - for R.H. refer to group 290C24	1	71A,C	C	64
Package also includes -					
(4) C4GY-6242364-A retainer	(1) 359606-S8 nut				
COLB 6329396-A	R.H. (a)	1	53,57,63	D	60
COLB 6329397-A	L.H. (a)	1	53,57,63	D	60
354397-S100	Nut and washer-No.10-24	AR	a		
372010-S	Screw-truss hd. cr. rec. -No. 8-18	AR	a		
29421	RETAINER (QUARTER OUTSIDE BELT REAR MOULDING) REAR				
B9MB 6429421-A	Without end flanges (a)	2	58,64	A	60
353911-S100	Nut and washer assy. -No. 10-24	2	a		

GROUP AND PART NUMBER	DESCRIPTION, SIZE, ETC.	NO. REQ'D	MODEL OR ENGINE CUBIC INCH DISPLACEMENT	VEHICLE CODE	YEAR 19____
29432	FILLER (QUARTER WINDOW FRAME)				
PB9M 6429432-A	Rubber	2	64	A	60
29436-7	FILLER (REAR QUARTER WINDOW OPENING) FRONT CORNER LOWER				
C1AB 5929436-A	R.H.	1	71	A	61/64
C1AB 5929437-A	L.H.	1	71	A	61/64
C3OZ 7129436-A	R.H.	1	71	B	63
C3OZ 7129437-A	L.H.	1	71	B	63
29458-9	FILLER (REAR QUARTER WINDOW OPENING) REAR CORNER LOWER				
C3OZ 7129458-A	R.H.	1	71	B	63
C3OZ 7129459-A	L.H.	1	71	B	63
29506-7	REFER TO GROUP 291A48				
29519	INSERT (QUARTER WINDOW OUTSIDE UPPER MOULDING)				
PB9M 5629519-A	Rubber	2	77	A	60
29522	REFER TO GROUP 30008-9				
29532	RETAINER (QUARTER OUTSIDE LOWER CENTER MOULDING)				
C2YY 6229532-A		2	All	B	62
29534	RETAINER (QUARTER WHEEL OPENING COVER MOULDING)				
B9MB 6429534-A		AR	All except 57F, 63F, 76D, 77	A	60
29620-1	RETAINER (REAR QUARTER WINDOW) UPPER REAR				
C2AB 7129620-A	R.H. (a)	1	71	A	62/64
C2AB 7129621-A	L.H. (a)	1	71	A	62/64
52742-S8	Screw-pan hd. cr. rec. tap. -No. 8-15 x 3/4"	2	a		
29644-5	EXTENSION (QUARTER WINDOW REAR GLASS RUN BRACKET)				
PB9M 6429644-A	R.H. (a)	1	64	A	60
PB9M 6429645-A	L.H. (a)	1	64	A	60
359219-S	Screw-hex. washer hd. -5/16"-24	2	a		
29650-1	FILLER FRONT (QUARTER WINDOW OPENING) REAR CORNER UPPER				
COAB 5929650-A	R.H.	1	71	A	61/64
COAB 5929651-A	L.H.	1	71	A	61/64
29710	GLASS (QUARTER WINDOW)				
PB9M 6329710-A	Clear	2	63	A	60
PB9M 6329710-B	Tinted	2	63	A	60
PB9M 6429710-A	Clear	2	64	A	60
PB9M 6429710-B	Tinted	2	64	A	60
PB9M 7629710-A	Clear	2	76	A	60
PB9M 7629710-B	Tinted	2	76	A	60
COAB 6429710-E	Clear	2	62, 64	A	61
COAB 6429710-F	Tinted	2	62, 64	A	61
C1AB 6529710-A	Clear	2	65	A	61
C1AB 6529710-B	Tinted	2	65	A	61
COAB 7629710-C	Clear	2	76	A	61/62
COAB 7629710-D	Tinted	2	76	A	61/62
C2AB 6229710-A	Clear	2	62	A	62
C2AB 6229710-B	Tinted	2	62	A	62
C2AB 6529710-A	Clear	2	65	A	62
C2AB 6529710-B	Tinted	2	65	A	62

CONTINUED ON NEXT PAGE

GROUP AND PART NUMBER	DESCRIPTION, SIZE, ETC.	NO. REQ'D	MODEL OR ENGINE CUBIC INCH DISPLACEMENT	VEHICLE CODE	YEAR 19____
29710	GLASS (QUARTER WINDOW) CONTINUED				
C3MY 6229710-A	Clear	2	62	A	63/64
C3MY 6229710-B	Tinted	2	62	A	63/64
C3AZ 6329710-A	Clear	2	63	A	63/64
C3AZ 6329710-B	Tinted	2	63	A	63/64
C3MY 6529710-A	Clear	2	65	A	63/64
C3MY 6529710-B	Tinted	2	65	A	63/64
C3AZ 7629710-A	Clear	2	76	A	63/64
C3AZ 7629710-B	Tinted	2	76	A	63/64
C2OB 6229710-A	Clear	2	62	B	62/63
C2OB 6229710-B	Tinted	2	62	B	62/63
C3OZ 6529710-A	Clear	2	65	B	63
C3OZ 6529710-B	Tinted	2	65	B	63
CODB 5929710-E	Clear	2	59	C	60/62
CODB 5929710-F	Tinted	2	59	C	61/62
CODB 6429710-E	Clear	2	62	C	60/62
CODB 6429710-F	Tinted	2	62	C	61/62
C3DZ 5929710-A	Clear	2	59	C	63
C3DZ 5929710-B	Tinted	2	59	C	63
C3GY 6229710-A	Clear	2	62	C	63
C3GY 6229710-B	Tinted	2	62	C	63
C3DZ 6329710-A	Clear	2	63	C	63/64
C3DZ 6329710-B	Tinted	2	63	C	63/64
C3DZ 7629710-A	Clear	2	76	C	63/64
C3DZ 7629710-B	Tinted	2	76	C	63/64
C2DZ 6229710-A	Clear	2	62	C	64
C2DZ 6229710-B	Tinted	2	62	C	64
BAK 6329710-A	Clear	1	63, 65	D	60
BAK 6329710-B	Tinted	1	63, 65	D	60
BAK 6829710-B	Tinted	1	68	D	60
29724	WEATHERSTRIP (QUARTER WINDOW GLASS CHANNEL)				
PB9M 6329795-A		2	63	A	60
PB9M 7629724-A	Vinyl	2	76	A	60
29726	GLASS (QUARTER WINDOW STATIONARY)				
COMB 5629726-A	R.H. - clear	1	77	A	60
COMB 5629736-A	L.H. - clear	1	77	A	60
COMB 5629726-B	R.H. - tinted	1	77	A	60
COMB 5629736-B	L.H. - tinted	1	77	A	60
C1AB 5929740-C	R.H. - clear	1	71	A	61/64
C1AB 5929741-C	L.H. - clear	1	71	A	61/64
C1AB 5929740-D	R.H. - tinted	1	71	A	61/64
C1AB 5929741-D	L.H. - tinted	1	71	A	61/64
C3OZ 7129740-A	Clear	2	71	B	63
C3OZ 7129740-B	Tinted	2	71	B	63
CODB 5929726-A	R.H. - clear	1	59, 71	C	60/64
CODB 5929736-A	L.H. - clear	1	59, 71	C	60/64
CODB 5929726-B	R.H. - tinted	1	59, 71	C	61/64
CODB 5929736-B	L.H. - tinted	1	59, 71	C	61/64
29732-3	WEATHERSTRIP (QUARTER WINDOW GLASS) OUTER				
COMB 6329732-A	R.H. - with clips - 18-1/2" long (a)	1	63	A	60
COMB 6329733-A	L.H. - with clips - 18-1/2" long (a)	1	63	A	60
COMB 6429732-A	R.H. - with clips - 22-1/4" long (a)	1	64	A	60
COMB 6429733-A	L.H. - with clips - 22-1/4" long (a)	1	64	A	60
COMB 7629732-A	R.H. - with clips - 22-3/8" long (a)	1	76	A	60
COMB 7629733-A	L.H. - with clips - 22-3/8" long (a)	1	76	A	60

CONTINUED ON NEXT PAGE

GROUP AND PART NUMBER	DESCRIPTION, SIZE, ETC.	NO. REQ'D	MODEL OR ENGINE CUBIC INCH DISPLACEMENT	VEHICLE CODE	YEAR 19____
29732-3	WEATHERSTRIP (QUARTER WINDOW GLASS) OUTER (CONTINUED)				
COAB 6429732-A	With clips - 26-1/2" long	2	62, 64	A	61
C1AZ 6529732-A	With clips - 24-7/8" long	2	65	A	61/62
COAB 7629732-A	R.H. - with clips - 19-3/4" long	1	76	A	61/62
COAB 7629733-A	L.H. - with clips - 19-3/4" long	1	76	A	61/62
C2AB 6229732-A	R.H.	1	62	A	62
C2AB 6229733-A	L.H.	1	62	A	62
C3MY 6229732-A	R.H. - with clips	1	62	A	63/64
C3MY 6229733-A	L.H. - with clips	1	62	A	63/64
C3AZ 6329732-B	R.H. - with clips	1	63	A	63/64
C3AZ 6329733-B	L.H. - with clips	1	63	A	63/64
C3AZ 6529732-B	R.H. - with clips	1	65	A	63/64
C3AZ 6529733-C	L.H. - with clips	1	65	A	63/64
C3AZ 7629732-A	R.H. - with clips	1	76	A	63/64
C3AZ 7629733-A	L.H. - with clips	1	76	A	63/64
C2OZ 6229732-A		2	62	B	62/63
C3OZ 6529732-B	R.H.	1	65	B	63
C3OZ 6529733-B	L.H.	1	65	B	63
CODB 5929732-B	Rubber	2	59	C	60/63
CODB 6429732-B	Rubber	2	62	C	60/64
C3DZ 6329732-A		2	63	C	63/64
C3DZ 7629732-A	R.H.	1	76	C	63/64
C3DZ 7629733-A	L.H.	1	76	C	63/64
COLB 6329732-A	R.H. (a)	1	63, 65	D	60
COLB 6329733-A	L.H. (a)	1	63, 65	D	60
BAK 6829732-B	(a)	2	68	D	60
52003-S13	Screw-flat hd. cr. rec. -No. 4-24 x 3/8"	2	a		

29736 REFER TO GROUP 29726

29740-1 REFER TO GROUP 29726

29744-5	WEATHERSTRIP (QUARTER WINDOW GLASS AT BELT) INSIDE				
COMB 6329744-B	R.H. - 19-1/2" long	1	63	A	60
COMB 6329745-B	L.H. - 19-1/2" long	1	63	A	60
COMB 6429744-B	22-1/8" long	2	64	A	60
COMB 7629744-B	R.H. - 23-1/4" long	1	76	A	60
COMB 7629745-B	L.H. - 23-1/4" long	1	76	A	60
C1AZ 6529744-A	25-7/8" long	2	65	A	61/62
COAB 7629744-A	R.H.	1	76	A	61/62
COAB 7629745-A	L.H.	1	76	A	61/62
C3MY 6229744-A	26-3/8" long - less clips	2	62	A	63
C3MY 6229744-B	26-17/32" long - Police Special and Taxi	2	62	A	63
C3AZ 6329744-B	29-5/8" long	2	63	A	63
C3MY 6529744-A	28-7/8" long	2	65	A	63
C3MY 7629744-A	R.H. - 20-3/8" long	1	76	A	63
C3MY 7629745-A	L.H. - 20-3/8" long	1	76	A	63
C4AZ 6229744-A	R.H. - less clips - use with R.P.O. trim	1	62	A	64
C4AZ 6229745-A	L.H. - less clips - use with R.P.O. trim	1	62	A	64
C4MY 6229744-A	26-3/8" long - less clips	2	62	A	64
C4AZ 6329744-A	29-3/8" long - less clips	2	63	A	64
C4MY 6529744-A	25-7/8" long	2	65	A	64
C4AZ 7629744-A	R.H. - 20-3/8" long - less clips	1	76	A	64
C4AZ 7629745-A	L.H. - 20-3/8" long - less clips	1	76	A	64
C3AZ 6229744-A		2	65	B	63
C3DZ 6329744-A		2	63	C	63/64
C3DZ 7629744-A		2	76	C	63/64

GROUP AND PART NUMBER	DESCRIPTION, SIZE, ETC.	NO. REQ'D	MODEL OR ENGINE CUBIC INCH DISPLACEMENT	VEHICLE CODE	YEAR 19____
29748-9	WEATHERSTRIP (QUARTER WINDOW FRONT LOWER CORNER)				
B9MB 6329748-A	R.H. (a)	1	63, 76	A	60
B9MB 6329749-A	L.H. (a)	1	63, 76	A	60
COAB 6329748-B	R.H. (a)	1	76	A	61
COAB 6329749-B	L.H. (a)	1	76	A	61
C3AZ 7629748-A	R.H. (a)	1	65	A	61/64
		1	76	A	62/64
C3AZ 7629749-A	L.H. (a)	1	65	A	61/64
		1	76	A	62/64
C3AZ 6329748-B	R.H.	1	63	A	63/64
C3AZ 6329749-B	L.H.	1	63	A	63/64
C3OZ 6529748-B	R.H.	1	65	B	63
C3OZ 6529749-B	L.H.	1	65	B	63
BAK 6329748-B	R.H.	1	63, 65, 68	D	60
BAK 6329749-B	L.H.	1	63, 65, 68	D	60
52726-S13	Screw-pan hd. cr. rec. -No. 8-15 x 1/2"	1	a		
29752-3	GUIDE (QUARTER WINDOW) FRONT				
C1AB 6529752-B	R.H. - use on vehicles built prior to 2-1-61 (a)	1	65	A	61
C1AB 6529753-B	L.H. - use on vehicles built prior to 2-1-61 (a)	1	65	A	61
C1AB 6529752-D	R.H. - use on vehicles built after 1-31-61	1	65	A	61/64
C1AB 6529753-D	L.H. - use on vehicles built after 1-31-61	1	65	A	61/64
C3AZ 6329752-A	R.H.	1	63	A	63/64
C3AZ 6329753-A	L.H.	1	63	A	63/64
C3DZ 6329752-A	R.H.	1	63	C	63/64
C3DZ 6329753-A	L.H.	1	63	C	63/64
C3DZ 7629752-A	R.H.	1	76	C	63/64
C3DZ 7629753-A	L.H.	1	76	C	63/64
33923-S	Nut-hex. -5/16"-24	2	a		
34941-S7	Washer-external tooth-5/16"	2	a		
352158-S8	Screw-hex. washer hd. -5/16"-24 x 11/16"	2	a		
354021-S7	Screw-set-5/16"-24	2	a		
29764-5	GUIDE (QUARTER WINDOW)				
B9MB 6329764-A	R.H.	1	63	A	60
B9MB 6329765-A	L.H.	1	63	A	60
PB9M 7629764-A	R.H.	1	76	A	60
PB9M 7629765-A	L.H.	1	76	A	60
C1AB 7629764-A	R.H. (a)	1	76	A	61/64
C1AB 7629765-A	L.H. (a)	1	76	A	61/64
C3AZ 6329764-A	Rear	2	63	A	63/64
C3OZ 6529764-A	R.H.	1	65	B	63
C3OZ 6529765-A	L.H.	1	65	B	63
C3DZ 6329764-A	R.H. - rear	1	63	C	63/64
C3DZ 6329765-A	L.H. - rear	1	63	C	63/64
C3DZ 7629764-A	Rear	2	76	C	63/64
B9LB 6329764-A	R.H. - in prime	1	63, 65	D	60
B9LB 6329765-A	L.H. - in prime	1	63, 65	D	60
BAK 6829764-A	R.H. (b)	1	68	D	60
BAK 6829765-A	L.H. (b)	1	68	D	60
20308-S	Bolt-hex. hd. -1/4"-20 x 1/2"	2	b		
20311-S8	Bolt-hex. hd. -5/16"-24 x 1/2"	2	a		
33795-S	Nut-hex. -1/4"-20	2	b		
33925-S8	Nut-hex. -3/8"-24	2	a		
34940-S	Washer-lock-1/4"	2	b		
34941-S7	Washer-external tooth-5/16"	2	a		
44719-S	Washer-flat-1/4"	2	b		
44722-S8	Washer-flat-5/16"	2	a		
29795	REFER TO GROUP 29724				

GROUP AND PART NUMBER	DESCRIPTION, SIZE, ETC.	NO. REQ'D	MODEL OR ENGINE CUBIC INCH DISPLACEMENT	VEHICLE CODE	YEAR 19____
29796-7	REFER TO GROUP 290A60-1				
298A02-3	REFER TO GROUP 29904-5				
29805-6	STOP (QUARTER WINDOW) LOWER				
B9LB 6329805-A	R. H.	1	63, 65	D	60
B9LB 6329806-A	L. H.	1	63, 65	D	60
29814-5	STOP (QUARTER WINDOW UPPER) FRONT				
C1AB 6529814-A	Steel - to correct overtravel in quarter window	4	65	A	61
	Lower front	2	65	A	63/64
C3AZ 6529814-A	Nylon	2	65	A	62
	R. H.	1	65	A	63/64
C3AZ 6529815-A	L. H. - nylon	1	65	A	63/64
29822	STOP (QUARTER WINDOW REGULATOR ARM)				
B6A 6429822-A	Use on vehicles built prior to 12-30-60 (a)	2	65	A	61
C1AZ 6529822-A	Use on vehicles built after 12-29-60	2	65	A	61/64
34443-S8	Nut-hex. -5/16"-24	1	a		
44722-S8	Washer-flat-5/16"	1	a		
29824	SLIDE (REAR DOOR WINDOW STABILIZER ARM)				
PB9M 5729824-A	Outer - nylon	2	57, 77	A	60
PB9M 5729824-B	Inner - nylon	2	57, 77	A	60
29824	ROLLER (QUARTER WINDOW GUIDE)				
COAB 6329824-D	9/16" thick - nylon - use on vehicles built prior to 4-13-61	4	65	A	61
C1AB 6329824-A	Nylon - use on vehicles built after 4-12-61	AR	63, 65	A	61/64
		4	63	C	64
29825	STUD (QUARTER WINDOW) GUIDE ROLLER				
COAB 6329825-C	37/64" shoulder - use on vehicles built prior to 12-6-60	2	65	A	61
C1AB 6529825-A	37/64" shoulder - use on vehicles built after 12-5-60	2	65	A	61
C1AB 6329825-B	37/64" shoulder	2	65	A	62/64
		4	63	A	64
		AR	63	C	63/64
C3DZ 7629825-A		2	76	C	63/64
298A30	BRACKET (QUARTER WINDOW FRONT GUIDE) UPPER				
C3DZ 76298A30-A		2	76	C	63/64
298A36	BRACKET (QUARTER WINDOW FRONT GUIDE) LOWER				
C3DZ 63298A36-A		4	63	A C	63/64
C3DZ 76298A36-A		2	76	C	63/64
29844	BUMPER (QUARTER WINDOW REGULATOR STOP)				
COAB 6429844-A		2	62, 64, 65	A	61/62
C3AZ 6229844-A	Use on vehicles built prior to 3-1-63 - after 2-28-63 use assembly C3AZ-6229968-B	2	62, 65	A	63
	Use with power windows	2	62	A	64
29856-7	REFER TO GROUP 290A66-7				

GROUP AND PART NUMBER	DESCRIPTION, SIZE, ETC.	NO. REQ'D	MODEL OR ENGINE CUBIC INCH DISPLACEMENT	VEHICLE CODE	YEAR 19____
29876-7	PLATE (QUARTER WINDOW OUTSIDE SUPPORT)				
C2AZ 6529876-A	R.H.	1	65	A	62/64
C2AZ 6529877-A	L.H.	1	65	A	62/64
C3OZ 6529876-B		2	65	B	63
29888-9	FILLER (QUARTER WINDOW OUTSIDE FRONT MOULDING) LOWER				
PB9M 6429888-A	R.H. - rubber (a)	1	64	A	60
PB9M 6429889-A	L.H. - rubber (a)	1	64	A	60
COAB 6429888-A	R.H. - rubber (b)	1	62,64	A	61/62
COAB 6429889-A	L.H. - rubber (b)	1	62,64	A	61/62
52720-S	Screw-pan hd. cr. rec. -No. 8-15 x 3/8"	1	b		
52726-S	Screw-pan hd. cr. rec. -No. 8-15 x 1/2"	1	a		
29890-1	STRIP (QUARTER WINDOW INSIDE FRONT FINISH)				
BAK 6329890-A	R.H. - rustless steel	1	63,65	D	60
BAK 6329891-A	L.H. - rustless steel	1	63,65	D	60
29899	TENSIONER (QUARTER WINDOW GUIDE ROLLER)				
C1AB 6529899-A		2	65	A	61/64
29900-1	CHANNEL (QUARTER WINDOW GLASS)				
B9MB 6429900-A	R.H.	1	64	A	60
B9MB 6429901-A	L.H.	1	64	A	60
COAB 6429900-A	R.H.	1	62,64	A	61/62
COAB 6429901-A	L.H.	1	62,64	A	61/62
C3AZ 6229900-A	R.H.	1	62	A	63/64
C3AZ 6229901-A	L.H.	1	62	A	63/64
C2OB 6229900-A		2	62	B	62/63
CODB 6429900-A	R.H. - chrome finish	1	59,62	C	60/64
CODB 6429901-A	L.H. - chrome finish	1	59,62	C	60/64
29904-5	WEATHERSTRIP (QUARTER WINDOW STATIONARY GLASS)				
COMB 5629904-A	R.H. - rubber	1	77	A	60
COMB 5629905-A	L.H. - rubber	1	77	A	60
C1AB 59298A02-A	R.H. - rubber	1	71	A	61/64
C1AB 59298A03-A	L.H. - rubber	1	71	A	61/64
C3OZ 7129904-B	R.H. - rubber	1	71	B	63
C3OZ 7129905-B	L.H. - rubber	1	71	B	63
CODB 59298A02-A	R.H. - rubber	1	59,71	C	60/64
CODB 59298A03-A	L.H. - rubber	1	59,71	C	60/64
29906-7	BRACKET (QUARTER WINDOW HINGE) ON BODY				
BAK 6829906-A	R.H. (a)	1	68	D	60
BAK 6829907-A	L.H. (a)	1	68	D	60
354021-S	Screw-set-5/16"-24	2	a		
29920-1	WEATHERSTRIP & RETAINER (QUARTER WINDOW) UPPER				
PB9M 6329920-A	R.H.	1	63	A	60
PB9M 6329921-A	L.H.	1	63	A	60
C1AB 6529920-A	R.H.	1	65	A	61
C1AB 6529921-A	L.H.	1	65	A	61
C2AZ 6529920-A	R.H.	1	65	A	62
C2AZ 6529921-A	L.H.	1	65	A	62
C3MY 6529920-A	R.H.	1	65	A	63/64
C3MY 6529921-A	L.H.	1	65	A	63/64
BAK 6329920-A	Chrome finish (a)	2	63,65	D	60
52720-S	Screw-pan hd. cr. rec. tap. -No. 8-15 x 3/8"	5	a		

GROUP AND PART NUMBER	DESCRIPTION, SIZE, ETC.	NO. REQ'D	MODEL OR ENGINE CUBIC INCH DISPLACEMENT	VEHICLE CODE	YEAR 19____
29932-3	BRACKET (QUARTER WINDOW HINGE) ON BODY				
COAB 7629932-A	R.H.	1	76	A	61/64
COAB 7629933-A	L.H.	1	76	A	61/64
C3OZ 6529932-A	R.H.	1	65	B	63
C3OZ 6529933-A	L.H.	1	65	B	63
29958-9	CHANNEL (QUARTER WINDOW) LOWER				
PB9M 6329958-A	(a)	2	63	A	60
PB9M 7629958-A	(a)	2	76	A	60
C1AB 6529958-D	R.H.	1	65	A	61/62
C1AB 6529959-D	L.H.	1	65	A	61/62
C1AB 7629958-A		2	76	A	61/62
C3AZ 6329958-A	R.H.	1	63	A	63/64
C3AZ 6329959-A	L.H.	1	63	A	63/64
C3AZ 6529958-A	R.H.	1	65	A	63/64
C3AZ 6529959-A	L.H.	1	65	A	63/64
C3AZ 7629958-A	R.H.	1	76	A	63/64
C3AZ 7629959-A	L.H.	1	76	A	63/64
C3OZ 6529958-B		2	65	B	63
C3DZ 7629958-C	R.H.	1	76	C	63
C3DZ 7629959-C	L.H.	1	76	C	63
C3DZ 6329958-A	R.H.	1	63	C	63/64
C3DZ 6329959-A	L.H.	1	63	C	63/64
C4DZ 7629958-A	R.H.	1	76	C	64
C4DZ 7629959-A	L.H.	1	76	C	64
BAK 6329958-A	R.H.	1	63, 65	D	60
BAK 6329959-A	L.H.	1	63, 65	D	60
BAK 6829958-A	R.H. (b)	1	68	D	60
BAK 6829959-A	L.H. (b)	1	68	D	60
20344-S8	Bolt-hex. hd. -1/4"-20	2	b		
34940-S	Washer-lock-1/4"	2	b		
89423-S8	Screw-headless set-No.10-32 x 3/8"	1	a		
29962	CHANNEL (QUARTER WINDOW) UPPER				
PB9M 6329962-A	Rustless steel	2	63	A	60
PB9M 7629962-A	Rustless steel	2	76	A	60
C1AZ 6529962-B	Rustless steel	2	65	A	61
C2AZ 6529962-A	Rustless steel	2	65	A	62
C3AZ 6329962-A		2	63	A	63
COAB 7629962-A	Rustless steel	2	76	A	61/64
C3MY 6529962-A		2	65	A	63/64
C4AZ 6329962-A		2	63	A	64
Package also includes -					
(1) 51764-S8	screw (2) 353552-S8 screw				
C3OZ 6529962-B		2	65	B	63
C3DZ 6329962-A	Rustless steel	2	63	C	63/64
C3DZ 7629962-A		2	76	C	63/64
BAK 6329962-A	Chrome finish	2	63, 65	D	60
BAK 6829962-A	Chrome finish	2	68	D	60
29968	REFER TO GROUP 29986				
29976-7	BRACKET & HINGE (QUARTER WINDOW) ON BODY				
PB9M 5629976-A	R.H. (a)	1	63	A	60
PB9M 5629977-A	L.H. (a)	1	63	A	60
PB9M 7629976-A	R.H. (a)	1	76	A	60
PB9M 7629977-A	L.H. (a)	1	76	A	60
C3OZ 6529976-A	R.H.	1	65	B	63
C3OZ 6529977-A	L.H.	1	65	B	63
354021-S7	Screw-set-5/16"-24	3	a		

GROUP AND PART NUMBER	DESCRIPTION, SIZE, ETC.	NO. REQ'D	MODEL OR ENGINE CUBIC INCH DISPLACEMENT	VEHICLE CODE	YEAR 19____
29979	EXTENSION (QUARTER WINDOW FRONT GUIDE TO ACTUATOR GUIDE)				
C1AB 6529979-A		2	65	A	61/64
29982-3	BRACKET (QUARTER WINDOW) LOWER STOP				
COAB 6429982-A	Use on vehicles built prior to 3-1-63 - after 2-28-63 use C3AZ-6229968-B bracket	2	62	A	61/64
C1AB 6529982-B	R. H. - electric	1	65	A	61/64
C1AB 6529983-B	L. H. - electric	1	65	A	61/64
C3AZ 6329982-A	Use on vehicles built after 3-31-63 - prior to 4-1-63 use C3AZ-6329968-A stop	1	63	A	63
		2	63	A	64
29986	BUMPER (QUARTER WINDOW STOP) LOWER				
PB9M 6429968-A	(a)	2	64	A	60
B9A 5129986-A		2	76	A	61/64
C3AZ 6229968-B	Use on vehicles built after 2-28-63 - prior to 3-1-63 use C3AZ-6229844-A bumper and COAB-6429982-A bracket	2	62	A	63
C3AZ 6329968-A	Lower - use on vehicles built prior to 4-1-63 - after 3-31-63 use C3AZ-6329982-A bracket and C3AZ-6329994-A bumper	2	63	A	63
C3AZ 6329968-B	Upper - rear	2	63	A	63/64
C3AZ 6329968-C	R. H. - upper - front	1	63	A	63/64
C3AZ 6329968-D	L. H. - upper - front	1	63	A	63/64
C3AZ 6229968-B		2	62	A	64
B9AB 7629986-A		2	63, 65, 76	A B	60&63
C3DZ 7629968-A	Upper - rear	2	76	C	63
C3DZ 7629968-B	Upper - front	2	76	C	63
C3DZ 6329968-A	Upper - rear	2	63	C	63/64
C3DZ 6329968-B	R. H. - upper	1	63	C	63/64
C3DZ 6329968-C	L. H. - upper	1	63	C	63/64
C3DZ 6329968-D	Front	2	63	C	63/64
C3DZ 6329968-E	Lower	2	63	C	63/64
C3DZ 7629968-C	Lower	2	76	C	63/64
C4DZ 7629968-A	Upper - rear	2	76	C	64
C4DZ 7629968-B	Upper - front	2	76	C	64
B7A 7629986-A		1	68	D	60
359219-S2	Screw-hex. washer hd. -5/16"-24	2	a		
29994	BUMPER (QUARTER WINDOW STOP) UPPER				
PB9M 5629994-A	(a)	2	63, 76	A	60
COAB 7629994-A	(a)	2	76	A	61/64
C3AZ 6329994-A	Rubber	2	63	A	63/64
C3OZ 6529994-A		2	65	B	63
B7A 7629994-A	(b)	1	53, 63, 65, 68	D	60
354666-S2	Screw-hex. washer hd. -No. 12-24 x 3/8"	4	b		
359219-S2	Screw-hex. washer hd. -5/16"-24	2	a		

GROUP AND PART NUMBER	DESCRIPTION, SIZE, ETC.	NO. REQ'D	MODEL OR ENGINE CUBIC INCH DISPLACEMENT	VEHICLE CODE	YEAR 19___
29998-9	BRACKET (QUARTER WINDOW) UPPER STOP				
C1AZ 6529998-A	R.H.	1	65	A	61/64
C1AZ 6529999-A	L.H.	1	65	A	61/64
C3DZ 6329998-A		2	63	C	63/64
30008-9	RUN (QUARTER WINDOW GLASS) REAR				
PB9M 6429522-A	(a)	2	64	A	60
C1AB 6230008-A	R.H.	1	62,64	A	61/64
C1AB 6230009-A	L.H.	1	62,64	A	61/64
CODB 6430008-C	R.H. (a)	1	59,62	C	60/62
CODB 6430009-C	L.H. (a)	1	59,62	C	60/62
C2DZ 6230008-A		2	59,62	C	63/64
359219-S	Screw-hex. washer hd. -5/16"-24	2	a		
359605-S8	Screw and washer assy. -5/16"-24	2	a		
30010	RUN (QUARTER WINDOW GLASS) UPPER				
C1AZ 6230010-A		2	62,64	A	61
		2	62	A	63/64
C2AZ 6230010-A		2	62	A	62
CODB 5930010-B		2	59	C	60/62
CODB 6430010-C		2	62	C	60/63
C3DZ 5930010-A		2	59	C	63
30012	BRACKET (QUARTER WINDOW GUIDE SUPPORT TO MEMBER FLOOR SIDE)				
C3OZ 6530012-A		2	65	B	63
30022	RUN (QUARTER WINDOW GLASS) UPPER REAR				
C1DB 5930022-A		2	59	C	60/62
30046	BRACKET (QUARTER WINDOW GLASS RUN RETAINING)				
C2DZ 6230046-A		2	62	C	63/64
30104-5	RUN (QUARTER WINDOW GLASS) FRONT				
PB9M 6430104-A	R.H. - 30-1/2" (a)	1	64	A	60
PB9M 6430105-A	L.H. - 30-1/2" (a)	1	64	A	60
COAZ 6430104-C	R.H. (a)	1	62,64	A	61/64
COAZ 6430105-C	L.H. (a)	1	62,64	A	61/64
CODB 6430104-B	R.H. (b)	1	59,62	C	60/62
		1	62	C	63
CODB 6430105-B	L.H. (b)	1	59,62	C	60/62
		1	62	C	63
44713-S7	Washer-flat-No. 10	2	a		
50930-S8	Screw and washer assy. -No. 10-32 x 1/2"	2	a		
52718-S13	Screw-pan hd. cr. rec. -No. 6-18 x 3/8"	2	a		
52720-S8	Screw-pan hd. cr. rec. -No. 8-18 x 3/8"	2	b		
30130	RETAINER (QUARTER WINDOW STATIONARY GLASS) UPPER FRONT				
BAE 5630130-A	(a)	4	77	A	60
		4	71	A	61/64
52742-S13	Screw-pan hd. cr. rec. -No. 8-15 x 3/4"	4	a		

GROUP AND PART NUMBER	DESCRIPTION, SIZE, ETC.	NO. REQ'D	MODEL OR ENGINE CUBIC INCH DISPLACEMENT	VEHICLE CODE	YEAR 19____
30132-3	RETAINER (QUARTER STATIONARY WINDOW LOWER) REAR				
COMB 5630132-A	R.H.	1	77	A	60
COMB 5630133-A	L.H.	1	77	A	60
30134-5	RETAINER (QUARTER STATIONARY WINDOW LOWER) FRONT				
PB9M 5630134-A	R.H. (a)	1	77	A	60
PB9M 5630135-A	L.H. (a)	1	77	A	60
52742-S13	Screw-pan hd. cr. rec. -No. 8-15 x 3/4"	5	a		
30140-1	RETAINER (QUARTER STATIONARY WINDOW) FRONT				
COMB 5630140-A	R.H.	1	77	A	60
COMB 5630141-A	L.H.	1	77	A	60
30146-7	WEATHERSTRIP (QUARTER WINDOW) FRONT				
PB9M 5630146-A	R.H.	1	63, 76	A	60
PB9M 5630147-A	L.H.	1	63, 76	A	60
C3AZ 6530146-A	R.H.	1	65	A	61/64
C3AZ 6530147-A	L.H.	1	65	A	61/64
C3AZ 7630146-A	R.H.	1	76	A	61/64
COAB 6330147-C	L.H.	1	76	A	61
C3AZ 7630147-A	L.H.	1	76	A	62/64
C3AZ 6330146-A	R.H.	1	63	A	63/64
C3AZ 6330147-A	L.H.	1	63	A	63/64
C3OZ 6530146-C	R.H.	1	65	B	63
C3OZ 6530147-C	L.H.	1	65	B	63
C3DZ 6330146-A	R.H.	1	63	C	63/64
C3DZ 6330147-A	L.H.	1	63	C	63/64
C3DZ 7630146-A	R.H.	1	76	C	63/64
C3DZ 7630147-A	L.H.	1	76	C	63/64
B9LB 6330146-A	R.H. - rubber	1	63, 65, 68	D	60
B9LB 6330147-A	L.H. - rubber	1	63, 65, 68	D	60
30169	BRACKET (QUARTER WINDOW UPPER GLASS) RUN SUPPORT				
COAB 6430169-A		2	62, 64	A	61/64
C2OZ 6230169-A	R.H.	1	62	B	62/63
C2OZ 6230169-B	L.H.	1	62	B	62/63
30257-9	WEATHERSTRIP (QUARTER WINDOW INNER) LOWER				
B9MB 6330257-A	R.H.	1	63	A	60
B9MB 6330259-A	L.H.	1	63	A	60
30276	COVER (QUARTER WINDOW WEATHERSTRIP RETAINER JOINT)				
PB9M 6330276-A		2	63	A	60
30278	BUTTON (QUARTER WINDOW GUIDE)				
BAK 6330278-A		1	63, 65	D	60
30298-9	GUIDE (QUARTER WINDOW REGULATOR EQUALIZER ARM)				
C3DZ 7630298-A	R.H.	1	63,76	C	63
		1	76	C	64
C3DZ 7630299-A	L.H.	1	63,76	C	63
		1	76	C	64
303A00-1	STOP (QUARTER WINDOW) UPPER				
C1AZ 65303A00-A	R.H.	1	65	A	61/64
C1AZ 65303A01-A	L.H.	1	65	A	61/64

GROUP AND PART NUMBER	DESCRIPTION, SIZE, ETC.	NO. REQ'D	MODEL OR ENGINE CUBIC INCH DISPLACEMENT	VEHICLE CODE	YEAR 19____
30302-3	KIT (REGULATOR - DRIVE & COUPLING) QUARTER WINDOW ELECTRIC				
C1AZ 6230302-A	R.H.	1	62, 64	A	61
	Consists of the following -				
(1) C1AZ-5723395-A drive	(1) C1VB-5723440-A coupling		(1) C2AZ-6230380-A	regulator	
C1AZ 6230303-A	L.H.	1	62, 64	A	61
	Consists of the following -				
(1) C1AZ-5723394-A drive	(1) C1VB-5723440-A coupling		(1) C2AZ-6230381-A	regulator	
30305	REFER TO GROUP 23394-5				
30306-7	REGULATOR (QUARTER WINDOW) MANUAL				
COMB 6330306-B	R.H. - use with COMB-6423342-A (a)	1	63, 76	A	60
COMB 6330307-B	L.H. - use with COMB-6423342-A (a)	1	63, 76	A	60
COMB 6430306-D	R.H. - use with COMB-6423342-A (a)	1	64	A	60
COMB 6430307-D	L.H. - use with COMB-6423342-A (a)	1	64	A	60
COAZ 7630306-A	R.H.	1	76	A	61/63
COAZ 7630307-A	L.H.	1	76	A	61/63
COAZ 6430306-A	R.H.	1	62, 64	A	61/62
		1	62	A	64
COAZ 6430307-A	L.H.	1	62, 64	A	61/62
		1	62	A	64
C1AZ 6530306-F	R.H.	1	65	A	61/64
C1AZ 6530307-F	L.H.	1	65	A	61/64
C3AZ 6230306-A	R.H.	1	62	A	63
C3AZ 6230307-A	L.H.	1	62	A	63
C3AZ 6330306-A	R.H.	1	63	A	63
C3AZ 6330307-A	L.H.	1	63	A	63
C4AZ 6330306-A	R.H.	1	63	A	64
C4AZ 6330307-A	L.H.	1	63	A	64
C4AZ 7630306-A	R.H.	1	76	A	64
C4AZ 7630307-A	L.H.	1	76	A	64
C2OZ 6230306-A	R.H.	1	62	B	62/63
C2OZ 6230307-A	L.H.	1	62	B	62/63
C3OZ 6530306-A	R.H.	1	65	B	63
C3OZ 6530307-A	L.H.	1	65	B	63
C2DZ 6230306-A	R.H. (b)	1	59, 62	C	60/64
C2DZ 6230307-A	L.H. (b)	1	59, 62	C	60/64
C3DZ 6330306-A	R.H.	1	63	C	63/64
C3DZ 6330307-A	L.H.	1	63	C	63/64
C3DZ 7630306-A	R.H.	1	76	C	63/64
C3DZ 7630307-A	L.H.	1	76	C	63/64
BAK 6330306-A	R.H.	1	63A	D	60
BAK 6330307-A	L.H.	1	63A	D	60
359219-S2	Screw-hex. washer hd. -5/16"-24	4	a		
359605-S8	Screw and washer assy. -5/16"-24	3	b		
303A20	ESCUTCHEON (INSIDE DOOR HANDLE)				
C1SZ 63303A20-A	Front doors	2	54A, 62A, 65A, 75A	A	63
	Rear doors	2	54A, 75A	A	63
C1SZ 63303A20-C	Front and rear doors	AR	54A, 57D, 62A, 63D, 65A, 71A, C, 76A	A	64

GROUP AND PART NUMBER	DESCRIPTION, SIZE, ETC.	NO. REQ'D	MODEL OR ENGINE CUBIC INCH DISPLACEMENT	VEHICLE CODE	YEAR 19____
30322	REFER TO GROUP 23342				
303A30-1	GUIDE (QUARTER WINDOW ACTUATOR)				
C1AB 65303A30-B	R.H. - use on vehicles built prior to 4-13-61	1	65	A	61
C1AB 65303A31-B	L.H. - use on vehicles built prior to 4-13-61	1	65	A	61
C1AB 65303A30-C	R.H. - use on vehicles built after 4-12-61	1	65	A	61/64
C1AB 65303A31-C	L.H. - use on vehicles built after 4-12-61	1	65	A	61/64
30344-5	PLATE (QUARTER WINDOW HINGE RETAINING)				
PB9M 5630344-A	R.H.	1	63	A	60
PB9M 5630345-A	L.H.	1	63	A	60
PB9M 7630344-A	R.H.	1	76	A	60
PB9M 7630345-A	L.H.	1	76	A	60
COAB 7630344-A		2	76	A	61/64
BAK 6830344-A	R.H.	1	68	D	60
BAK 6830345-A	L.H.	1	68	D	60
30351	SPRING (QUARTER WINDOW REGULATOR COUNTERBALANCE)				
BN 6430351-A	Electric	2	62	A	63/64
	Manual	2	65	A	63/64
B5A 7630351-A	Manual	2	63, 76	A	60
		2	76	A	61/64
		2	63	A	63
	Electric	2	64	A	60
		2	65	B	63
BN 6430351-B	Electric	2	65	A	61/64
	Use with "HUPP" electric regulator	1	63, 65	D	60
B5A 7030351-A	Manual	2	64	A	60/62
		2	62	A B	61/63
		2	59, 62, 76	C	60/63
		1	68	D	60
30370	RETAINER (QUARTER WINDOW GUIDE BUTTON)				
B5A 7630370-A	(a)	2	63	A	60
	(a)	2	76	A	61/64
		2	68	D	60
50718-S8	Screw and washer assy. -1/4"-20 x 7/8"	4	a		
30380-1	REGULATOR (QUARTER WINDOW) ELECTRIC				
COMB 6330380-B	R.H. - less motor - "Hupp" design (a)	1	63, 76	A	60
COMB 6330381-B	L.H. - less motor - "Hupp" design (a)	1	63, 76	A	60
COMB 6430380-B	R.H. - less motor - "Dura" design (a)	1	64	A	60
COMB 6430381-B	L.H. - less motor - "Dura" design (a)	1	64	A	60
C1AB 6230380-D	R.H. - use on vehicles built prior to 4-16-62	1	62, 64	A	61/62
C1AB 6230381-D	L.H. - use on vehicles built prior to 4-16-62	1	62, 64	A	61/62
C1AB 6530380-D	R.H. - use on vehicles built prior to 3-5-62	1	65	A	61/62
C1AB 6530381-D	L.H. - use on vehicles built prior to 3-5-62	1	65	A	61/62
C2AZ 6230380-A	R.H. - less motor - use on vehicles built after 4-15-62	1	62	A	62/63
C2AZ 6230381-A	L.H. - less motor - use on vehicles built after 4-15-62	1	62	A	62/63
C2AZ 6530380-A	R.H. - less motor - use on vehicles built after 3-4-62	1	65	A	62/63
C2AZ 6530381-A	L.H. - less motor - use on vehicles built after 3-4-62	1	65	A	62/63

CONTINUED ON NEXT PAGE

GROUP AND PART NUMBER	DESCRIPTION, SIZE, ETC.	NO. REQ'D	MODEL OR ENGINE CUBIC INCH DISPLACEMENT	VEHICLE CODE	YEAR 19____
30380-1	REGULATOR (QUARTER WINDOW) ELECTRIC (CONTINUED)				
C1AB 7630380-B	R. H. - use on vehicles built prior to 3-5-62	1	76	A	61/62
C2AZ 7630380-A	R. H. - less motor and drive - use on vehicles built after 3-4-62	1	76	A	62/63
C2AZ 7630381-A	L. H. - less motor and drive	1	76	A	61/63
C3AZ 6330380-A	R. H. - less motor	1	63	A	63
C3AZ 6330381-A	L. H. - less motor	1	63	A	63
C4AZ 6230380-A	R. H. - less motor	1	62	A	64
C4AZ 6230381-A	L. H. - less motor	1	62	A	64
C4AZ 6330380-A	R. H. - less motor	1	63	A	64
C4AZ 6330381-A	L. H. - less motor	1	63	A	64
C4MY 6530380-A	R. H. - less motor and drive	1	65	A	64
C4MY 6530381-A	L. H. - less motor and drive	1	65	A	64
C2AZ 7630380-B	R. H. - less motor and drive	1	76	A	64
C2AZ 7630381-B	L. H. - less motor and drive	1	76	A	64
BAK 6330380-A	R. H. - less motor - type "HUPP" (b)	1	63, 65	D	60
BAK 6330381-A	L. H. - less motor - type "HUPP" (b)	1	63, 65	D	60
BAK 6330380-B	R. H. - less motor - type "DURA" (b)	1	63, 65	D	60
BAK 6330381-B	L. H. - less motor - type "DURA" (b)	1	63, 65	D	60
BAK 6830380-B	R. H. - less motor - type "HUPP" (b)	1	68	D	60
BAK 6830381-B	L. H. - less motor - type "HUPP" (b)	1	68	D	60
BAK 6830380-C	R. H. - less motor - type "DURA" (b)	1	68	D	60
BAK 6830381-C	L. H. - less motor - type "DURA" (b)	1	68	D	60
354666-S2	Screw-hex. washer hd. -No. 12-24 x 3/8"	AR	b		
359219-S2	Screw-hex. washer hd. -5/16"-24	2	a		
30416	EXTENSION (QUARTER WINDOW GUIDE BRACE)				
PB9M 7630416-A	(a)	2	76	A	60
C3OZ 6530416-A		2	65	B	63
359219-S2	Screw-hex. washer hd. -5/16"-24	2	a		
30426-9	RETAINER (QUARTER WINDOW GUIDE)				
C3OZ 6530426-A	R. H. - inner	1	65	B	63
C3OZ 6530427-A	L. H. - inner	1	65	B	63
C3OZ 6530428-A	R. H. - outer	1	65	B	63
C3OZ 6530429-A	L. H. - outer	1	65	B	63
30470-1	STABILIZER (QUARTER WINDOW GLASS FRAME)				
BAK 6330470-B	R. H.	1	63, 65	D	60
BAK 6330471-B	L. H.	1	63, 65	D	60
30474	BUTTON (QUARTER WINDOW STABILIZER)				
BAK 6330474-A		1	63, 65	D	60
30504-5	FRAME (QUARTER WINDOW)				
PB9M 6430504-A	R. H.	1	64	A	60
PB9M 6430505-A	L. H.	1	64	A	60
COAB 6430504-B	R. H.	1	62, 64	A	61
COAB 6430505-B	L. H.	1	62, 64	A	61
C1AZ 71305A16-B	R. H.	1	71	A	61/64
C1AZ 71305A17-B	L. H.	1	71	A	61/64
C2AZ 6230504-A	R. H.	1	62	A	62
C2AZ 6230505-A	L. H.	1	62	A	62
C3MY 6230505-A	L. H.	1	62	A	63/64
C3MY 6230504-A	R. H.	1	62	A	63/64

CONTINUED ON NEXT PAGE

GROUP AND PART NUMBER	DESCRIPTION, SIZE, ETC.	NO. REQ'D	MODEL OR ENGINE CUBIC INCH DISPLACEMENT	VEHICLE CODE	YEAR 19____
30504-5	FRAME (QUARTER WINDOW) CONTINUED				
C2OB 6230504-A	R.H.	1	62	B	62/63
C2OB 6230505-A	L.H.	1	62	B	62/63
CODB 5930504-A	R.H.	1	59	C	60/62
CODB 5930505-A	L.H.	1	59	C	60/62
CODB 6430504-A	R.H.	1	62	C	60/62
CODB 6430505-A	L.H.	1	62	C	60/62
C3DZ 5930504-A	R.H.	1	59	C	63
C3DZ 5930505-A	L.H.	1	59	C	63
C3GY 6230504-A	R.H.	1	62	C	63
C3GY 6230505-A	L.H.	1	62	C	63
C2DZ 6230504-A	R.H.	1	62	C	64
C2DZ 6230505-A	L.H.	1	62	C	64
305A16-7	REFER TO GROUP 30504-5				
30556	PIN (QUARTER WINDOW FRAME HINGE)				
B2A 7630556-A	(1) for R.H. - (1) for L.H.	2	76	A	60/64
		2	63	A	60
		2	65	B	63
		2	68	D	60
30560	BRACKET (QUARTER WINDOW STOP MOUNTING)				
PB9M 6430560-A		2	64	A	60
30598	EXTENSION (QUARTER WINDOW REGULATOR PANEL TO QUARTER WINDOW GUIDE)				
PB9M 5630598-A	Includes cage nuts	2	63	A	60
30702-3	RECEPTACLE (QUARTER ASH)				
PB9M 6430702-A	R.H. - lined cover - use on vehicles built prior to 1-4-60	1	64	A	60
PB9M 6430703-A	L.H. - lined cover - use on vehicles built prior to 1-4-60	1	64	A	60
COAB 6430702-D	R.H. - use on vehicles built after 1-3-60	1	64	A	60
	R.H.	1	62, 64, 65	A	61
		1	59, 62, 71D	B C	60/62
COAB 6430703-D	L.H. - use on vehicles built after 1-3-60	1	64	A	60
	L.H.	2	62, 64, 65	A	61
		1	59, 62, 71D	B C	60/62
BD 7630702-A	R.H. - without cigar lighter	1	63F, 76D	A	60
BV 7630702-A	L.H. - without cigar lighter	1	63F, 76D	A	60
	Without cigar lighter	2	63A, B, 76A	A	60
C2MY 6230702-A	R.H.	1	62, 65 A, B	A	62
C2MY 6230703-A	L.H.	1	62, 65 A, B	A	62
	NS-R.H. - Refer to the soft trim section of the Master Price and Reference List for color application	1	65C	A	62
	NS-L.H. - Refer to the soft trim section of the Master Price and Reference List for color application	1	65C	A	62
C4AZ 6230702-A	R.H.	1	62A, 63A, D, 65A, B	A	64
C4AZ 6230703-A	L.H.	1	62A, 63A, D, 65A, B	A	64
21A 7004821-A	Box and snuffer	2	76	A C	63
C4MY 6530702-A		2	65F	A	64
		2	54C, 63C, D	C	64

CONTINUED ON NEXT PAGE

GROUP AND PART NUMBER	DESCRIPTION, SIZE, ETC.	NO. REQ'D	MODEL OR ENGINE CUBIC INCH DISPLACEMENT	VEHICLE CODE	YEAR 19____
30702-3	RECEPTACLE (QUARTER ASH) CONTINUED				
C3OZ 6230702-A	R. H. - chrome cover	1	62A	B	63
		1	59B, 62B, C, 71C, D	C	63
		1	62A, B, C	C	64
C3OZ 6230703-A	L. H. - chrome cover	1	62A	B	63
		1	59B, 62B, C, 71C, D	C	63
		1	62A, B, C	C	64
	NOTE-for Mercury model 76 refer to group 04821 For colors refer to Soft Trim Section				
COLB 6330702-A	Quarter	2	63, 65, 68	D	60
	Rear door	2	53, 54, 57, 75	D	60
30710	KNOB (QUARTER ASH RECEPTACLE)				
BD 7630710-A	Plastic	2	63, 76	A	60
30714-5	RETAINER (QUARTER ASH RECEPTACLE)				
BU 6430714-A		1	63A, B, 76A	A	60
BD 7630714-A	R.H.	1	63F, 76D	A	60
BV 7630715-A	L.H.	1	63, 76	A	60
B8A 6330714-A	Painted finish	2	76	A	61
C4AZ 7630714-A		2	76	A	64
C1AB 7630714-A	Chrome finish	2	76	A	61/63
		2	76	C	61/64
C4MY 6530714-A		2	65F	A	64
		2	54C, 63C, D	C	64
COLB 6330714-B	R. H. - Lincoln cover - quarter (a)	1	63	D	60
	R. H. - Lincoln cover - rear door	1	53, 57	D	60
COLB 6330715-B	L. H. - Lincoln cover - quarter (a)	1	63	D	60
	L. H. - Lincoln cover - rear door	1	53, 57	D	60
COLB 6530714-A	R. H. - Continental cover - quarter (a)	1	65, 68	D	60
	R. H. - Continental cover - rear door	1	54, 75	D	60
COLB 6530715-A	L. H. - Continental cover - quarter (a)	1	65, 68	D	60
	L. H. - Continental cover - rear door	1	54, 75	D	60
352000-S	Bumper-rubber	2	a		
30716	SHIELD (QUARTER ASH RECEPTACLE)				
C2VY 5730716-A	Front and rear door	8	All	D	61/63
	Rear door	4	All	D	64
30728-9	SPRING (ASH RECEPTACLE RETAINER COVER TENSION) FRONT, REAR DOORS & QUARTER				
COLB 6330728-B	R.H. - front door - L.H. - rear door	2	All	D	60/63
	R. H. - quarter	1	All	D	60/62
COLB 6330729-B	L.H. - front door - R.H. - rear door	2	All	D	60/63
	L. H. - quarter	1	All	D	60/62
C4VY 5330729-A	R. H. - rear door	1	All	D	64
C4VY 5330728-A	L. H. - rear door	1	All	D	64
310A02-3	PANEL (QUARTER TRIM FINISH)				
C4MY 63310A02-C	R. H.	1	63C, F	A	64
C4MY 63310A03-C	L. H.	1	63C, F	A	64
C4MY 63310A02-B	R. H. - aluminum - with wood grain finish	1	65C, F	A	64
C4MY 63310A03-B	L. H. - aluminum - with wood grain finish	1	65C, F	A	64
310A08-9	REFER TO GROUP 31346-7				
31050	COVER (QUARTER TRIM PANEL JOINT)				
COMB 5631050-AP	In prime - 2-3/8" long	2	77	A	60

GROUP AND PART NUMBER	DESCRIPTION, SIZE, ETC.	NO. REQ'D	MODEL OR ENGINE CUBIC INCH DISPLACEMENT	VEHICLE CODE	YEAR 19____
31066-7	RETAINER (QUARTER TRIM PANEL)				
C2OB 6231066-B	R.H. - chrome finish (a)	1	62	B	62
C2OB 6231067-B	L.H. - chrome finish (a)	1	62	B	62
C2OZ 6231066-A	R.H. - in prime (a)	1	62	B	62/63
C2OZ 6231067-A	L.H. - in prime (a)	1	62	B	62/63
C3OZ 6231066-A	R.H. - chrome finish	1	62B	B	63
C3OZ 6231067-A	L.H. - chrome finish	1	62B	B	63
C3OZ 6531066-A	R.H. - chrome finish	1	65	B	63
C3OZ 6531067-A	L.H. - chrome finish	1	65	B	63
CODB 5931066-AP	R.H. - in prime - upper (a)	1	59	C	60/62
CODB 5931067-AP	L.H. - in prime - upper (a)	1	59	C	60/62
CODB 5931066-B	R.H. - chrome finish - upper (a)	1	59	C	60/62
		1	59A	C	63
CODB 5931067-B	L.H. - chrome finish - upper (a)	1	59	C	60/62
		1	59A	C	63
CODB 6431066-C	R.H. - chrome finish - upper (a)	1	62	C	60/62
		1	62A	C	63/64
CODB 6431067-C	L.H. - chrome finish - upper (a)	1	62	C	60/62
		1	62A	C	63/64
C3DZ 5931066-A	R.H. - chrome finish - upper	1	59B	C	63
C3DZ 5931067-A	L.H. - chrome finish - upper	1	59B	C	63
C3DZ 6231066-A	R.H. - chrome finish - upper - "S-22"	1	62B, C	C	63/64
C3DZ 6231067-A	L.H. - chrome finish - upper - "S-22"	1	62B, C	C	63/64
C3DZ 6331066-A	R.H.	1	63	C	63/64
C3DZ 6331067-A	L.H.	1	63	C	63/64
C3DZ 7631066-A	Chrome finish	2	76	C	63/64
52720-S8	Screw-pan hd. cr. rec. -No. 8-18 x 3/8"	3or4	a		
31090	SHIELD (QUARTER TRIM WATER)				
	NS-cut from COAB-6420318-C	1	62	B	63
31091	SHIELD (QUARTER, FRONT & REAR DOOR TRIM WATER)				
BY 6031091-C	30" x 34" - cut to size for front and rear doors	AR	All	D	63
31106-7	FILLER (QUARTER TRIM PANEL TO REAR SEAT CUSHION)				
C2OZ 6231106-B	R.H.	1	62	B	62
C2OZ 6231107-B	L.H.	1	62	B	62
C3OZ 6531106-A	R.H. - aluminum - scuff plate extension	1	65	B	63
C3OZ 6531107-A	L.H. - aluminum - scuff plate extension	1	65	B	63
CODB 5831106-B	R.H. - aluminum - scuff plate extension - use for vehicles built prior to 11-1-62 - after 10-31-62 cut from C3AZ-6221550-A	1	54	C	60/63
CODB 5831107-B	L.H. - aluminum - scuff plate extension - use for vehicles built prior to 11-1-62 - after 10-31-62 cut from C3AZ-6221550-A	1	54	C	60/63
CODB 6431107-A	Aluminum - scuff plate extension	2	62	C	60/64
		2	63	C	64
C4DB 5431106-A	NS-use C3AZ-6221550-A and cut to size	2	All except 63, 76	C	64
31140	MOULDING (QUARTER TRIM) REAR				
COMB 6331140-B	Rustless steel - 21-7/8" long	2	63F	A	60
31152-3	SUPPORT (QUARTER TRIM WATER SHIELD)				
BAK 6831152-A	R.H.	1	68	D	60
BAK 6831153-A	L.H.	1	68	D	60

GROUP AND PART NUMBER	DESCRIPTION, SIZE, ETC.	NO. REQ'D	MODEL OR ENGINE CUBIC INCH DISPLACEMENT	VEHICLE CODE	YEAR 19____
31158	BRACKET (QUARTER TRIM UPPER REAR TO ARM REST PANEL)				
COAB 7631158-A		4	76	A	61/64
		4	76	C	63
PB9L 6831158-A		6	68	D	60
31162-3	MOULDING (QUARTER TRIM)				
COLB 6331162-C	R. H. - manual windows	1	63A	D	60
COLB 6331163-C	L. H. - manual windows	1	63A	D	60
COLB 6331162-D	R. H. - electric windows	1	63	D	60
COLB 6331163-D	L. H. - electric windows	1	63	D	60
31204	MOULDING (QUARTER TRIM FRONT)				
COMB 6331204-A	Rustless steel - 4-1/2" long	2	63F	A	60
31232-3	RETAINER (QUARTER TRIM PANEL TO FLOOR SIDE OUTER MEMBER)				
C2OZ 6231232-A	R. H.	1	62	B	62/63
C2OZ 6231233-A	L. H.	1	62	B	62/63
C3OZ 6531232-A	R. H.	1	65	B	63
C3OZ 6531233-A	L. H.	1	65	B	63
CODB 6431232-A	Use for quarter panel to rocker panel	2	59	C	61/62
CODZ 6431232-A		2	59, 62	C	63/64
31234-5	FILLER (QUARTER TRIM PANEL TO WHEELHOUSE)				
CODB 5931234-B	R. H. - aluminum (a)	1	59	C	60/63
CODB 5931383-A	L. H. - aluminum (a)	1	59	C	60/63
C3DZ 6331234-A	R. H. - steel	1	63	C	63/64
C3DZ 6331235-A	L. H. - steel	1	63	C	63/64
32930-S7	Screw-pan hd. tap. -No. 8-15 x 5/8"	3	a		
31240-1	RETAINER (QUARTER TRIM WATER SHIELD)				
C3DZ 7631240-A	R. H.	1	76	C	63
		1	63, 76	C	64
C3DZ 7631241-A	L. H.	1	76	C	63
		1	63, 76	C	64
BAK 6831240-A	Forming board	2	68	D	60
31294-5	MOULDING (QUARTER WHEEL OPENING COVER FRONT)				
BAK 5731294-A	R. H. (a)	1	All	D	60
BAK 5731295-A	L. H. (a)	1	All	D	60
BAK 5720783-A	Retainer	AR	a		
34655-S8	Nut and washer-No. 10-24	AR	a		
44713-S8	Washer-flat-No. 10	AR	a		
31312-3	SPACER (QUARTER UPPER TRIM SUPPORT PANEL WITH WEATHERSTRIP)				
BAK 6331312-A	R. H. (a)	1	63, 65	D	60
BAK 6331313-A	L. H. (a)	1	63, 65	D	60
BAK 6831312-A	R. H. (a)	1	68	D	60
BAK 6831313-A	L. H. (a)	1	68	D	60
52775-S8	Screw-pan hd. cr. rec. -No. 8-18 x 1/4"	AR	a		
31320	RETAINER (QUARTER TRIM BELT MOULDING)				
BAK 6331320-C	Quarter	AR	63, 65, 68	D	60
	Front door	2	All	D	60
	Rear door	2	53, 54, 57, 75	D	60
31322-3	MOULDING (QUARTER TRIM BELT)				
BAK 6331322-A	R. H. - rustless steel - 27-3/4" long	1	63, 65	D	60
BAK 6331323-A	L. H. - rustless steel - 27-3/4" long	1	63, 65	D	60
BAK 6831322-A	R. H. - rustless steel - 14-1/4" long	1	68	D	60
BAK 6831323-A	L. H. - rustless steel - 14-1/4" long	1	68	D	60

GROUP AND PART NUMBER	DESCRIPTION, SIZE, ETC.	NO. REQ'D	MODEL OR ENGINE CUBIC INCH DISPLACEMENT	VEHICLE CODE	YEAR 19____
31346-7	RETAINER (QUARTER PILLAR WINDLACE) LOWER				
PB9M 5731346-A	R.H.	1	57, 58	A	60
PB9M 5731347-A	L.H.	1	57, 58	A	60
C3OZ 5431346-B		2	54	B	62/63
C3OZ 7131346-A	R.H.	1	71	B	63
C3OZ 7131347-A	L.H.	1	71	B	63
CODZ 58310A08-A	R.H. (a)	1	54	C	60/63
CODZ 58310A09-A	L.H. (a)	1	54	C	60/63
C1KB 7131346-B	R.H. (b)	1	71	C	60/64
C1KB 7131347-B	L.H. (b)	1	71	C	60/64
C4GY 5431346-A	R.H.	1	54	C	64
C4GY 5431347-A	L.H.	1	54	C	64
32930-S7	Screw-pan hd. tap. -No. 8-15 x 5/8"	1	a		
52368-S13	Screw-oval hd. cr. rec. tap. -No. 8-15 x 7/8"	1	a		
53038-S13	Screw-oval hd. cr. rec. tap. -No. 8-15 x 3/4"	5	b		
31358-9	MOULDING (QUARTER WHEEL OPENING COVER) REAR				
B9LB 7531358-A	R.H. - rustless steel (a)	1	54, 65, 68, 75	D	60
B9LB 7531359-A	L.H. - rustless steel (a)	1	54, 65, 68, 75	D	60
BAK 5729302-B	Retainer	AR	a		
34655-S8	Nut and washer-No. 10-24	AR	a		
44713-S8	Washer-flat-No. 10	AR	a		
372010-S8	Screw-truss hd. cr. rec. -No. 8-18	AR	a		
31383	REFER TO GROUP 31234-5				
31460-1	MOULDING (QUARTER WHEELHOUSE LOWER EXTENSION COVER) REAR				
PB9M 5631460-AP	R.H. - 5-1/2" in prime	1	77	A	60
PB9M 5631461-AP	L.H. - 5-1/2" in prime	1	77	A	60
31466	WELT (CENTER BODY PILLAR)				
	NS-cut from CODB-58243A00-C	AR	All	C	63
		AR	54, 76	C	64
31481	RETAINER (QUARTER BELT RAIL TRIM PANEL)				
C3OZ 7131481-A		1	71B	B	63
C3OZ 7131481-B		1	71E	B	63
CODB 5931481-CP	L.H. side only (a)	1	59, 71	C	60/62
C3DZ 5931481-A	L.H. - side only - chrome finish - paint to match models 59A, 71A	1	59, 71A, B	C	63
		1	71	C	64
351770-S8	NS-screw-stove hd. cr. rec. tap. -No. 6-18 x 3/8"	3	a		
31490-1	CAP (QUARTER TRIM PANEL) UPPER FRONT				
C1VB 5731490-A	R.H.	1	53	D	61/63
C1VB 5731491-A	L.H.	1	53	D	61/63
C1VB 7431490-A	R.H.	1	74	D	61/63
C1VB 7431491-A	L.H.	1	74	D	61/63
C4VY 5331490-A	R.H. - steel - use on vehicles built prior to 10-1-63 - not required after this date (Δ)	1	53	D	64
C4VY 5331491-A	L.H. - steel - use on vehicles built prior to 10-1-63 - not required after this date (Δ)	1	53	D	64

Δ Package also includes -

(1) 52720-S8 screw-No. 8-15 x 3/8"

C4VY 7431490-A	R.H. - steel (§)	1	74	D	64
C4VY 7431491-A	L.H. - steel (§)	1	74	D	64

§ Package also includes -

(2) 53038-S13 screw-No. 8-15 x 3/4"

GROUP AND PART NUMBER	DESCRIPTION, SIZE, ETC.	NO. REQ'D	MODEL OR ENGINE CUBIC INCH DISPLACEMENT	VEHICLE CODE	YEAR 19____
31494-5	RETAINER (QUARTER WHEELHOUSE TRIM PANEL)				
C3OZ 7131494-A	R.H. - in prime	1	71	B	63
C3OZ 7131495-A	L.H. - in prime	1	71	B	63
C1KB 7131494-A	R.H. - in prime (a)	1	59, 71	C	60/64
C1KB 7131495-A	L.H. - in prime (a)	1	59, 71	C	60/64
52748-S8	NS-screw-pan hd.cr.rec.tap.-No.8-15 x 7/8"	2	a		
31662	CLIP (QUARTER ARM REST)				
C2MY 6231662-A		2	62, 65	A	62
B5A 7031662-A		2	64	A	60
		2	59, 62	B C	60/63
31684	RETAINER (QUARTER ARM REST TO PILLAR)				
BAK 6831684-A		2	76	A	60
		4	68	D	60
31782	MOULDING (QUARTER ARM REST) UPPER				
COMB 6331782-A	Rustless steel - 3/8" x 10" long	2	63F	A	60
COMB 7631782-A	Rustless steel - 3/8" x 12-1/2" long	2	76D	A	60
31796-7	MOULDING (QUARTER ARM REST)				
COMB 6331796-A	Rustless steel - 1/2" x 10" long	2or4	63	A	60
COMB 7631796-A	Rustless steel - 1/2" x 12-1/2" long	2	76D	A	60
C3AZ 6231796-A	R.H. - rustless steel	1	62, 65A	A	63
		1	62A, 63A, 65A	A	64
		1	62, 65	B	63
C3AZ 6231797-A	L.H. - rustless steel	1	62, 65A	A	63
		1	62A, 63A, 65A	A	64
		1	62, 65	B	63
31800	BRACKET (QUARTER TRIM WATER SHIELD TO WHEELHOUSE SUPPORT)				
PB9M 5631800-A		1	63, 64	A	60
31822-3	BRACKET (QUARTER ARM REST ATTACHING) FRONT				
COLB 6331822-B	R.H.	1	63, 65	D	60
COLB 6331823-B	L.H.	1	63, 65	D	60
31824	BRACKET (REAR DOOR ARM REST ATTACHING) REAR				
COLB 6331824-A		2	63, 65	D	60

MEMO

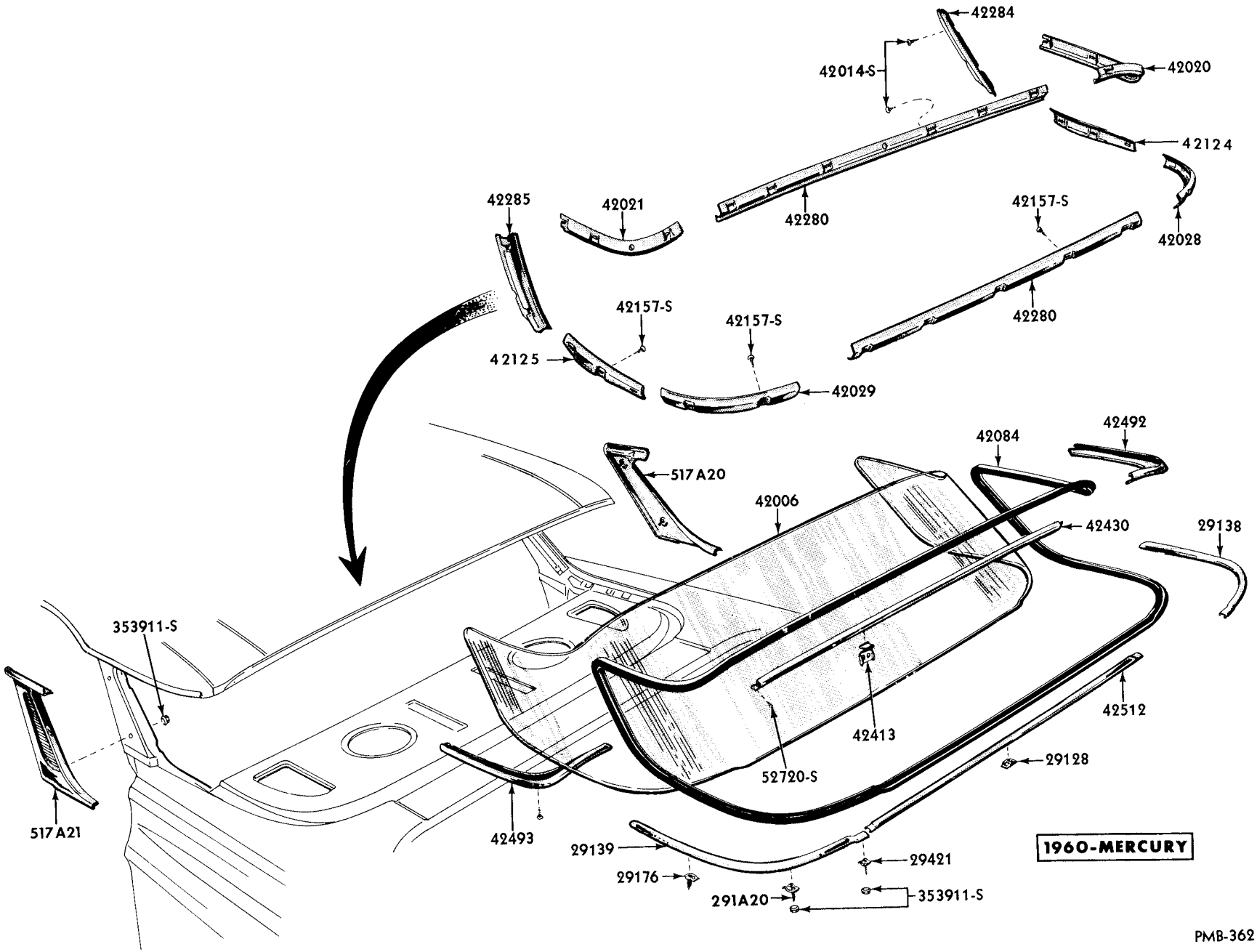

BACK WINDOW and EXTERIOR MOULDINGS - MODELS 58, 64

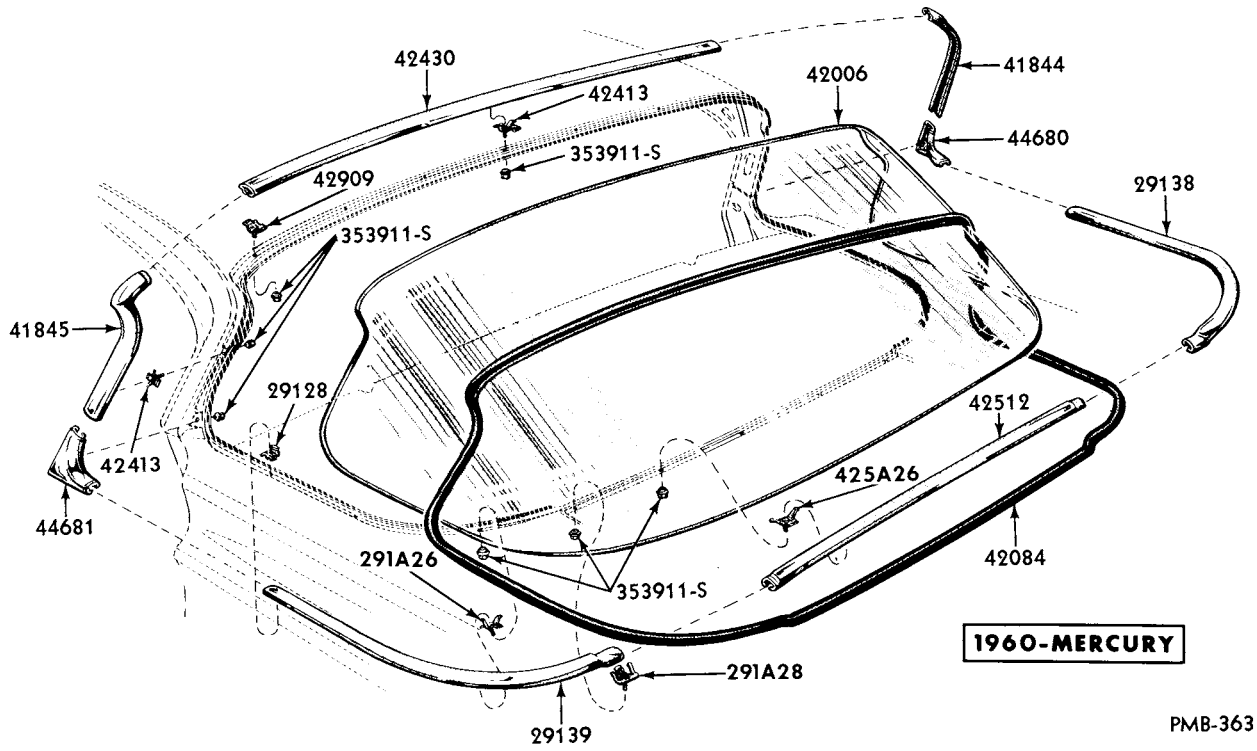

BACK WINDOW and EXTERIOR MOULDINGS - MODELS 57, 63

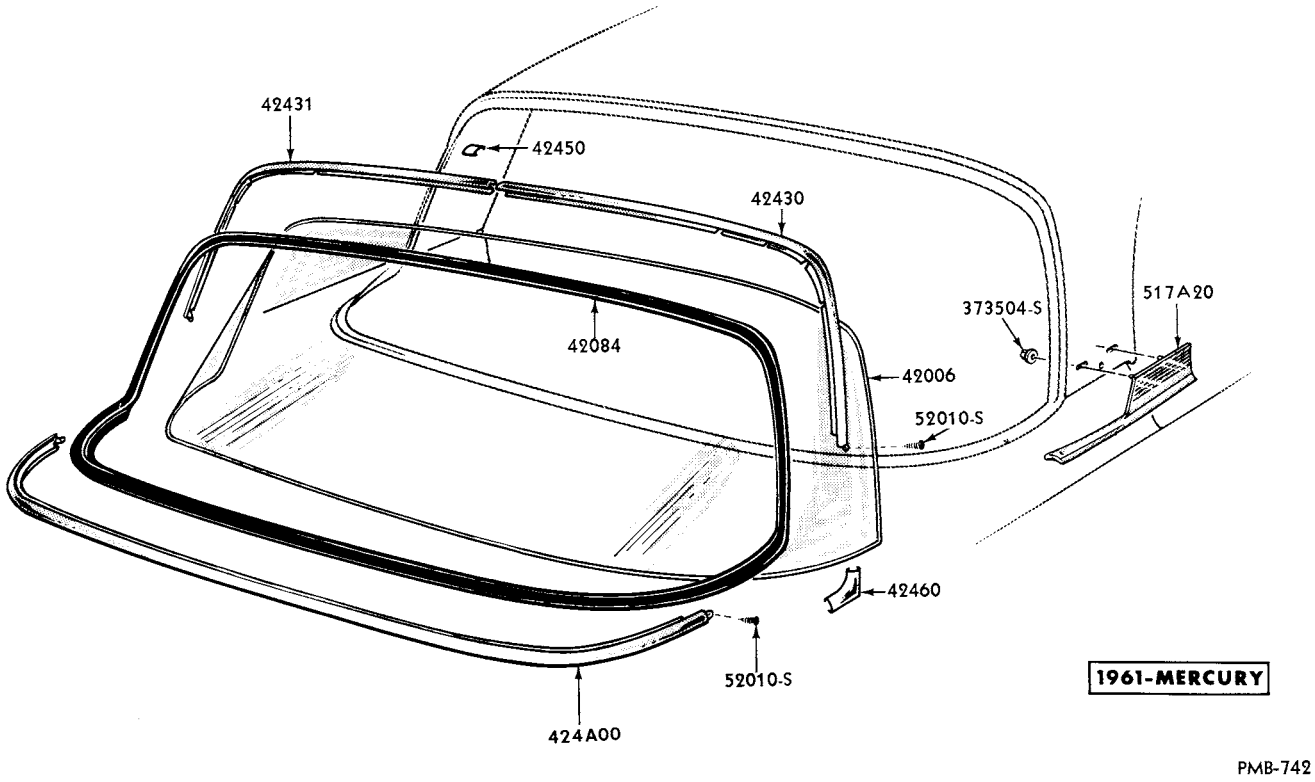

BACK WINDOW and EXTERIOR MOULDINGS - MODELS 58,64

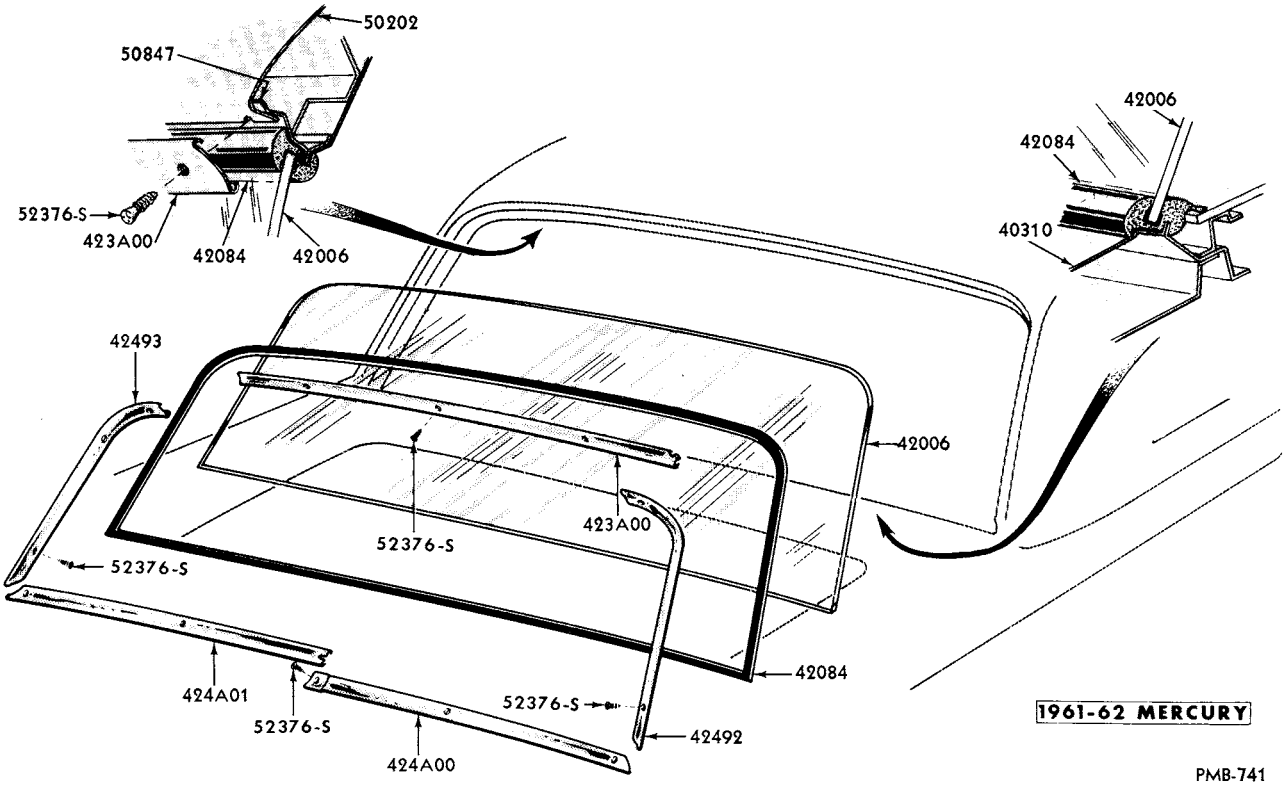

BACK WINDOW and EXTERIOR MOULDINGS - MODELS 54,62,65,75

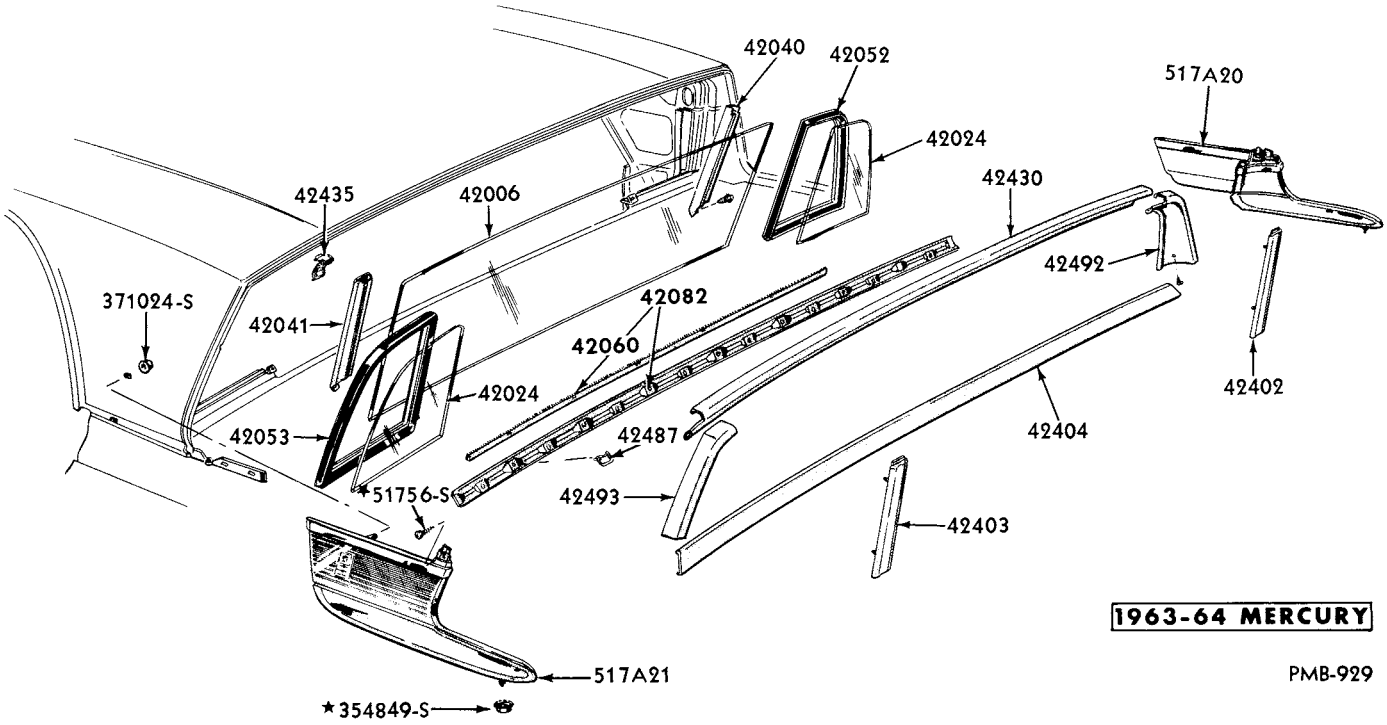

BACK WINDOW and EXTERIOR MOULDINGS - MODELS 54, 62, 65, 75

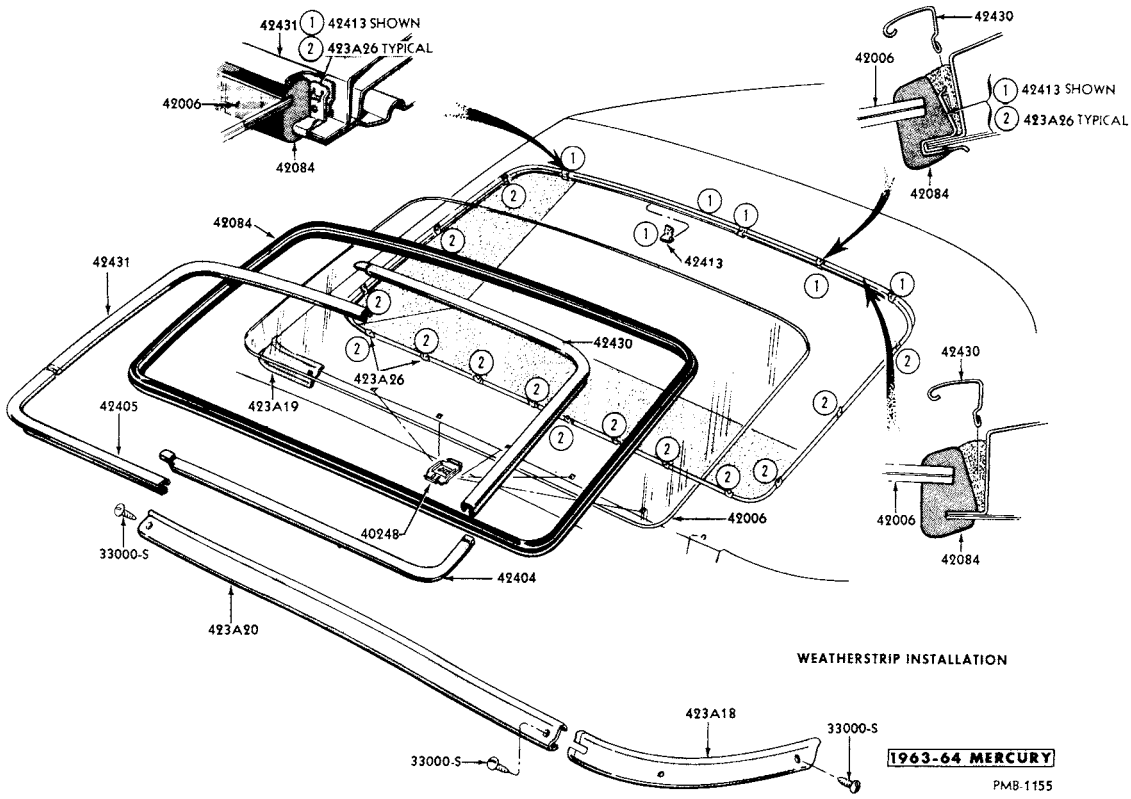

BACK WINDOW and EXTERIOR MOULDINGS - WEATHERSTRIP INSTALLATION-MODEL 63

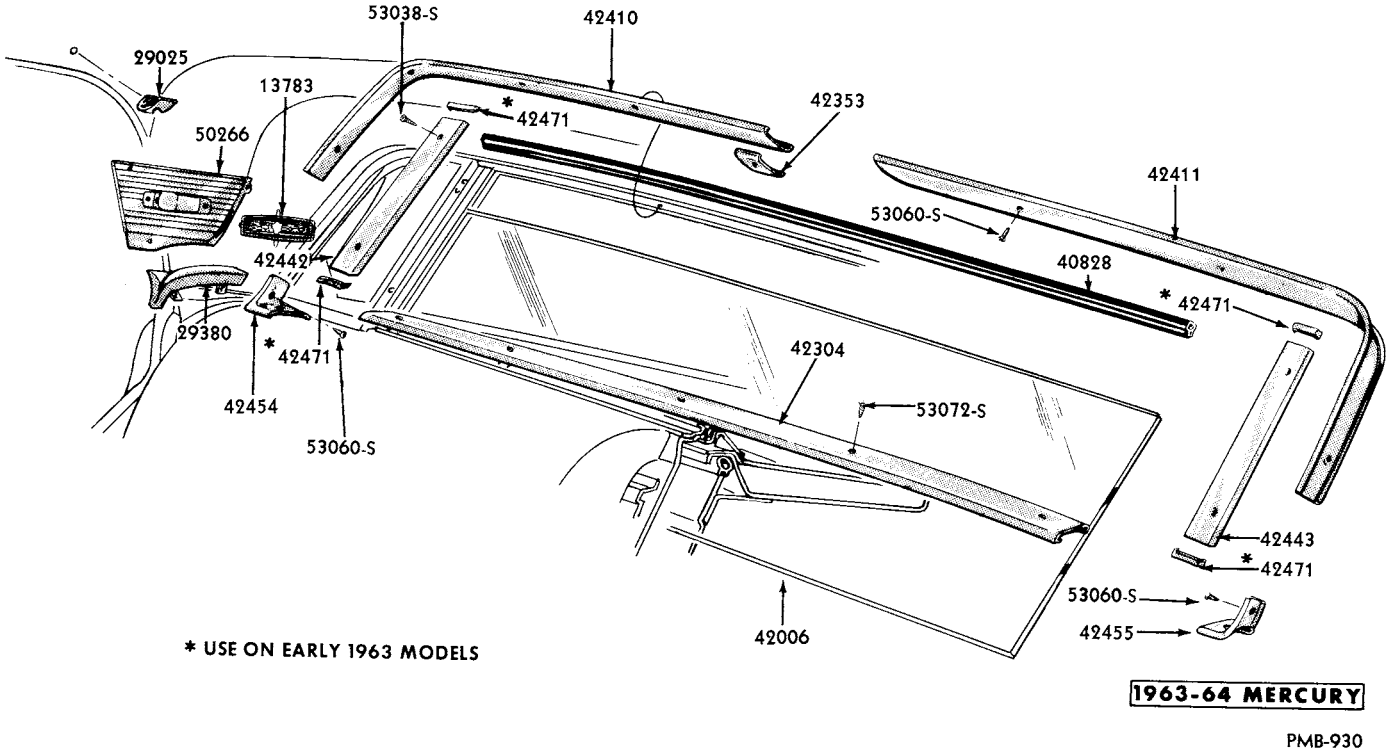

BACK WINDOW INTERIOR MOULDINGS - MODELS 54, 62, 65, 75

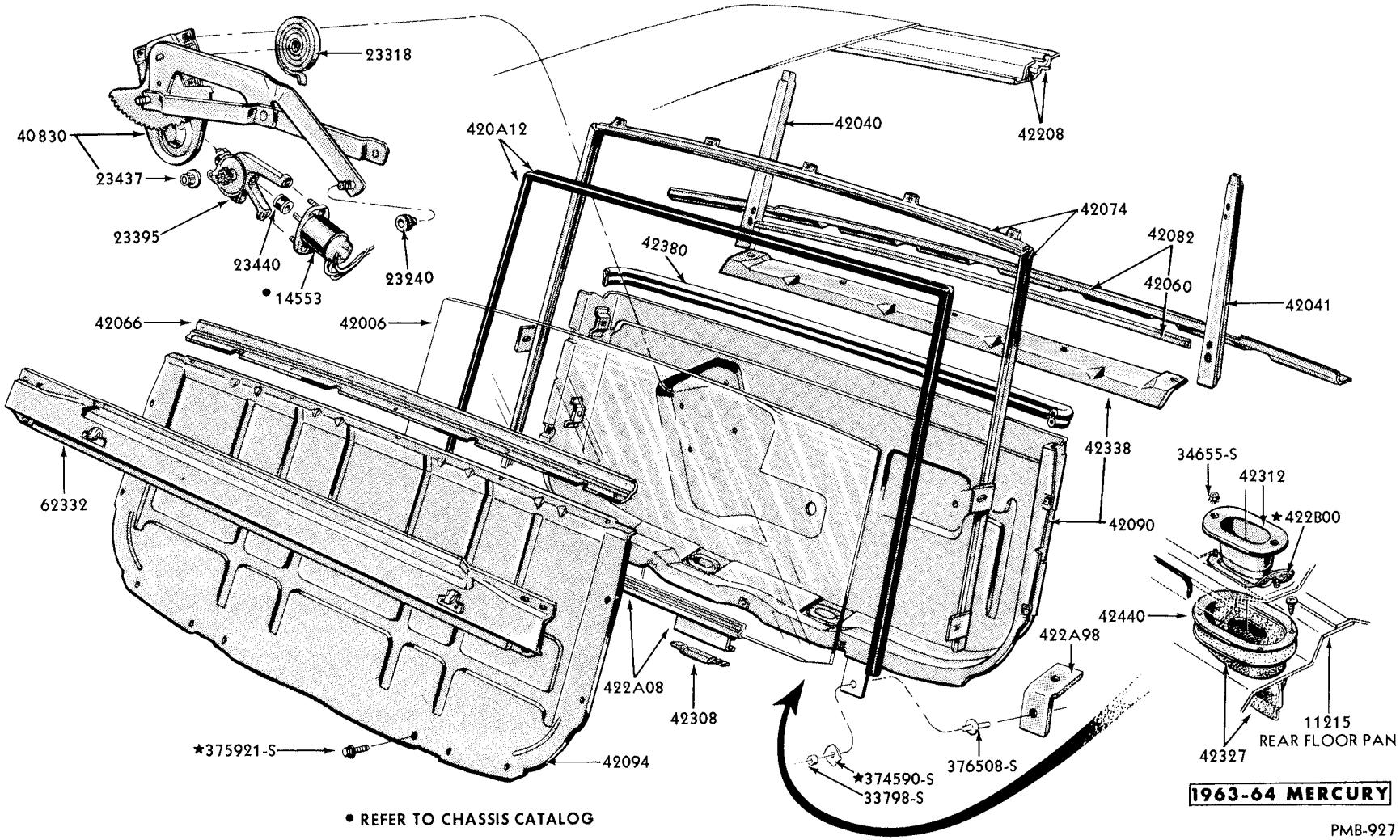

• REFER TO CHASSIS CATALOG

RETRACTABLE BACK WINDOW MECHANISM

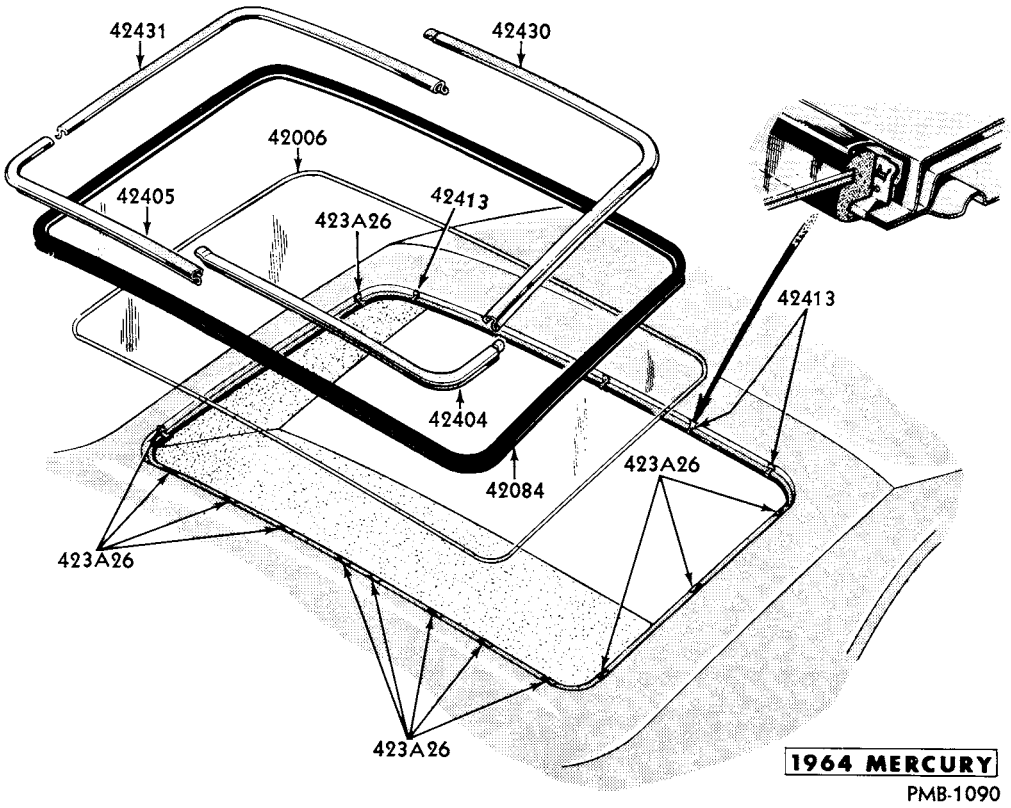

BACK WINDOW and EXTERIOR MOULDINGS - MODEL 57

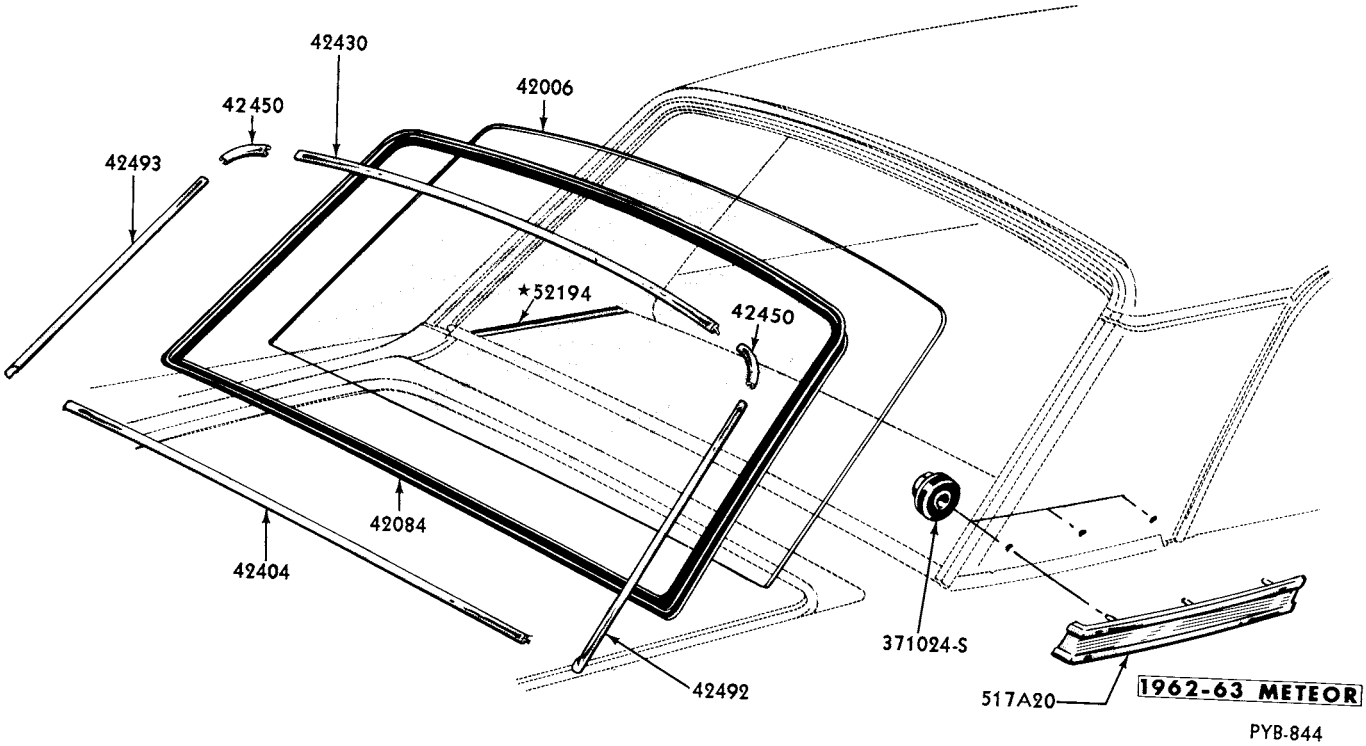

BACK WINDOW and EXTERIOR MOULDINGS - MODELS 54, 62

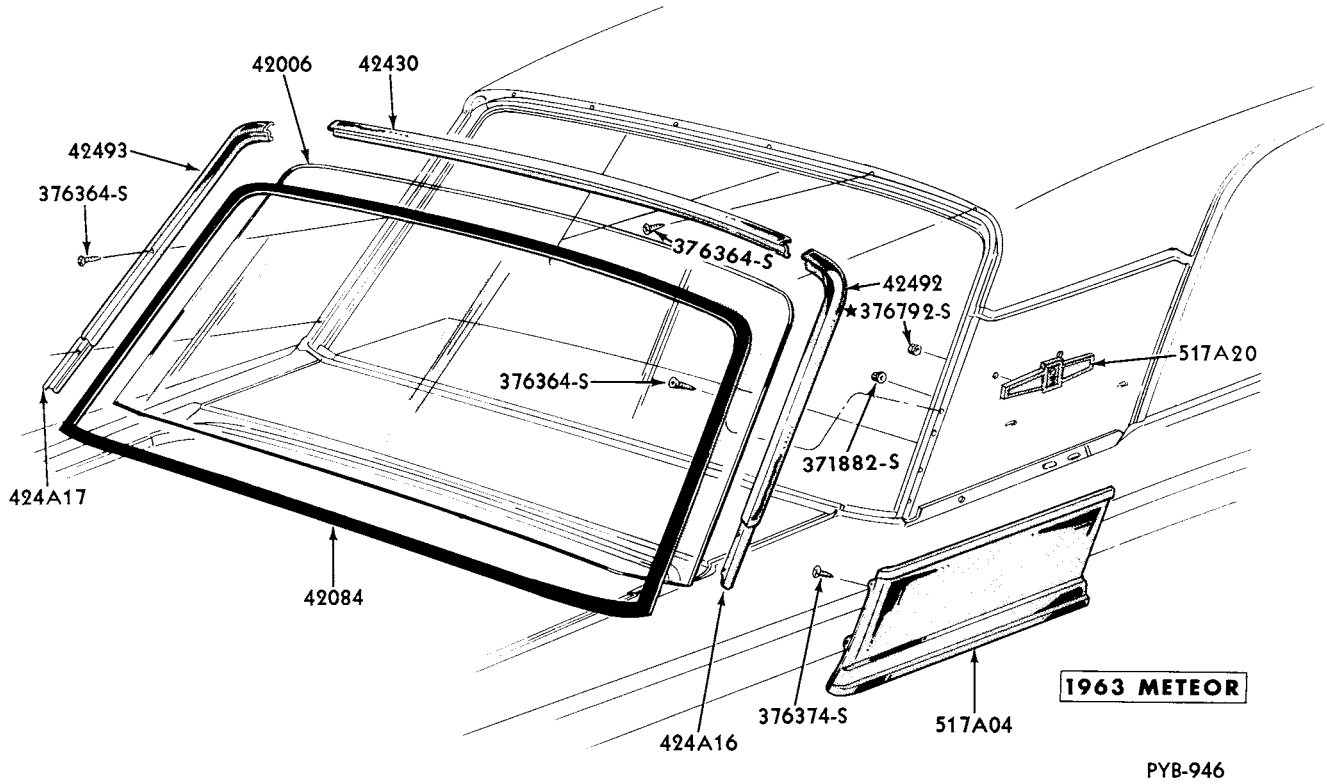

BACK WINDOW and EXTERIOR MOULDINGS - MODEL 65

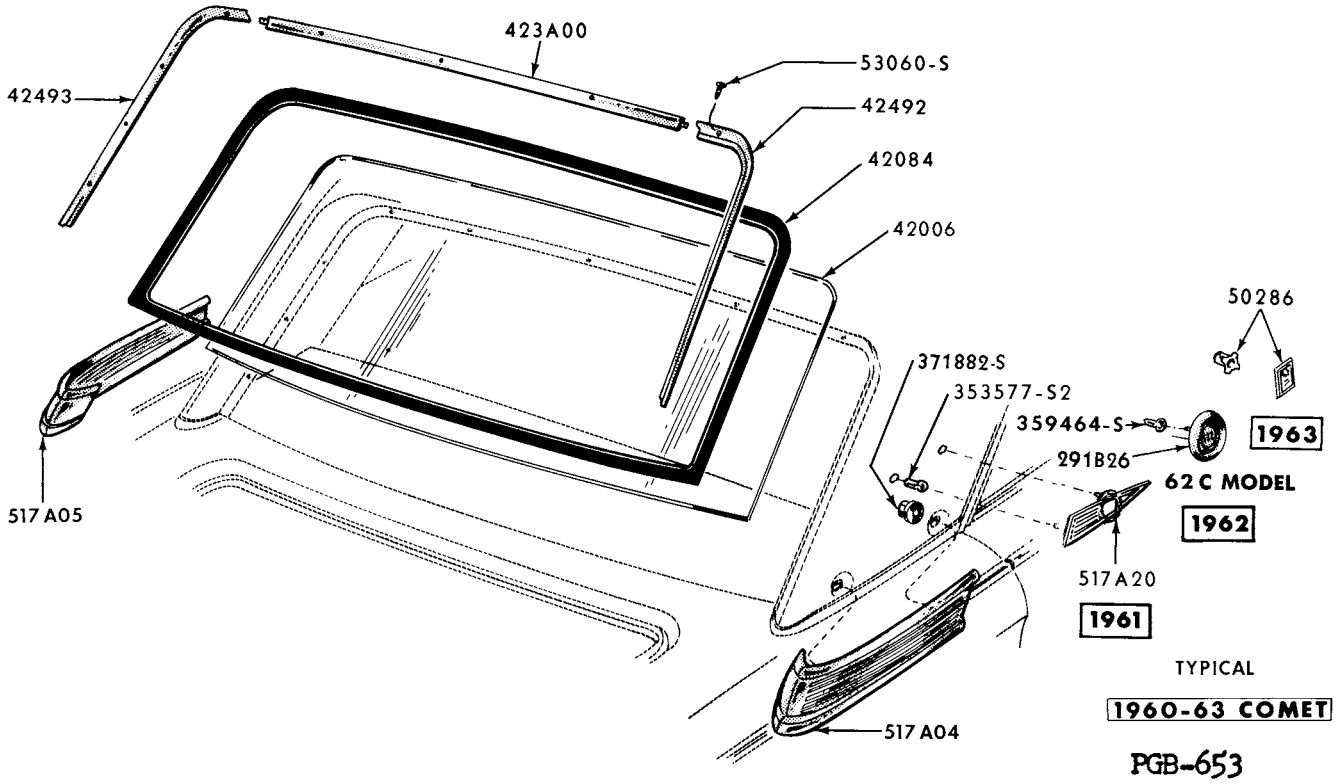

BACK WINDOW and EXTERIOR MOULDINGS - MODELS 54, 62

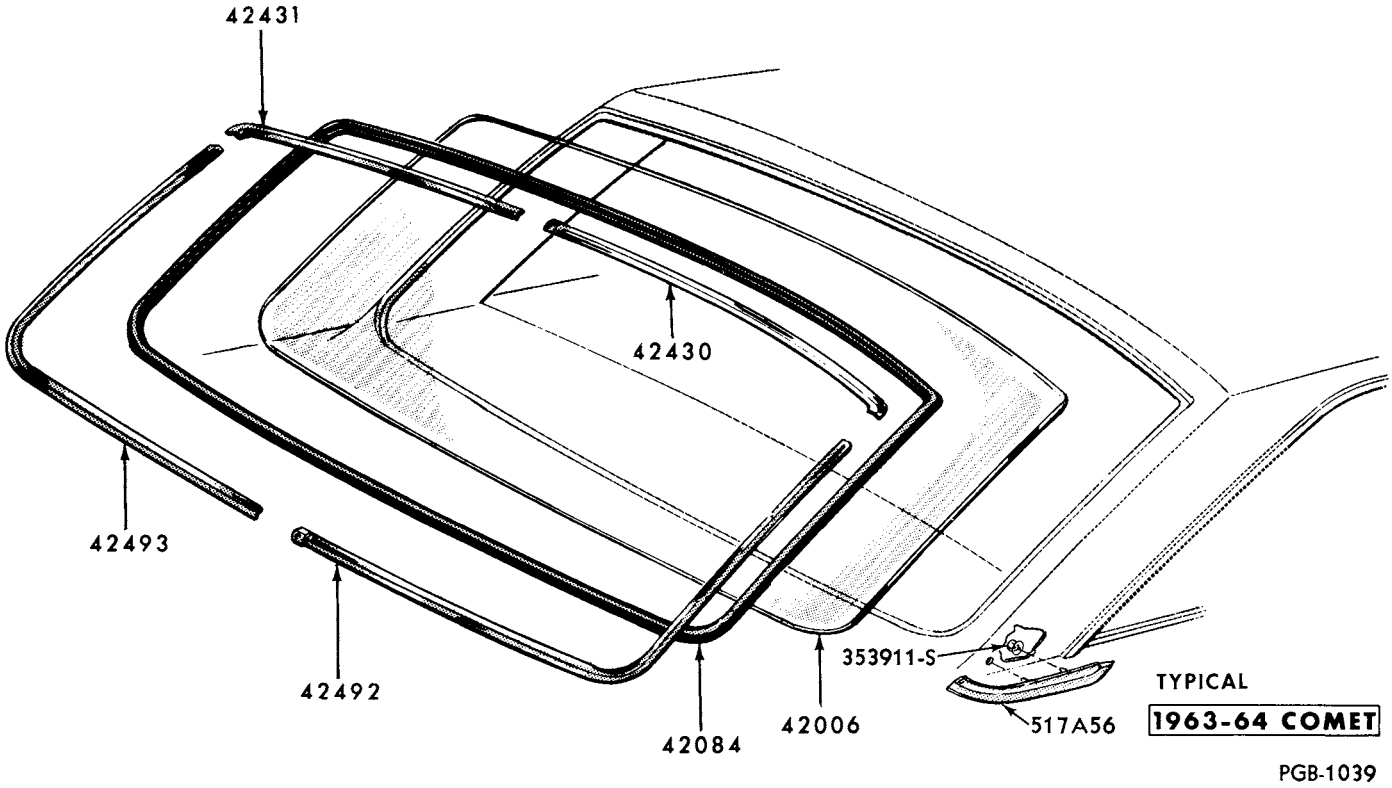

BACK WINDOW and EXTERIOR MOULDINGS - MODEL 63

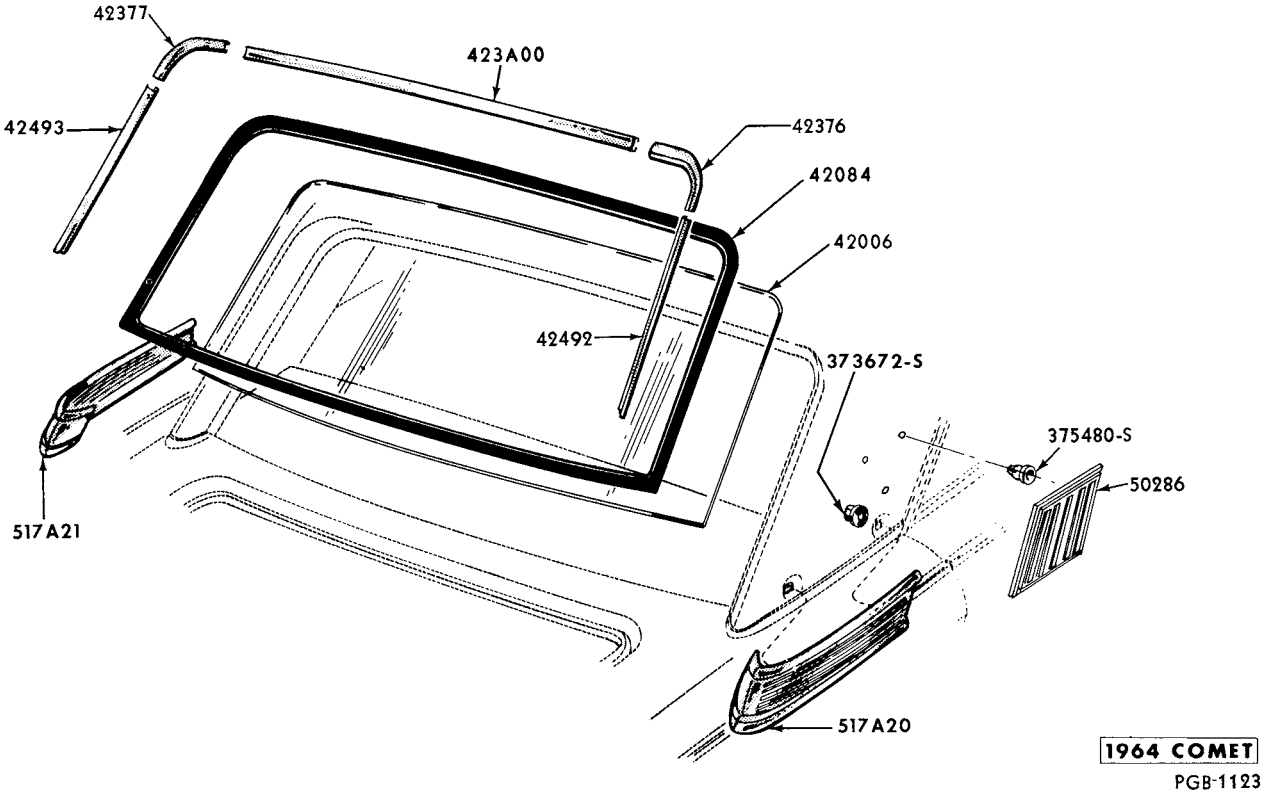

BACK WINDOW and EXTERIOR MOULDINGS - MODELS 54, 62

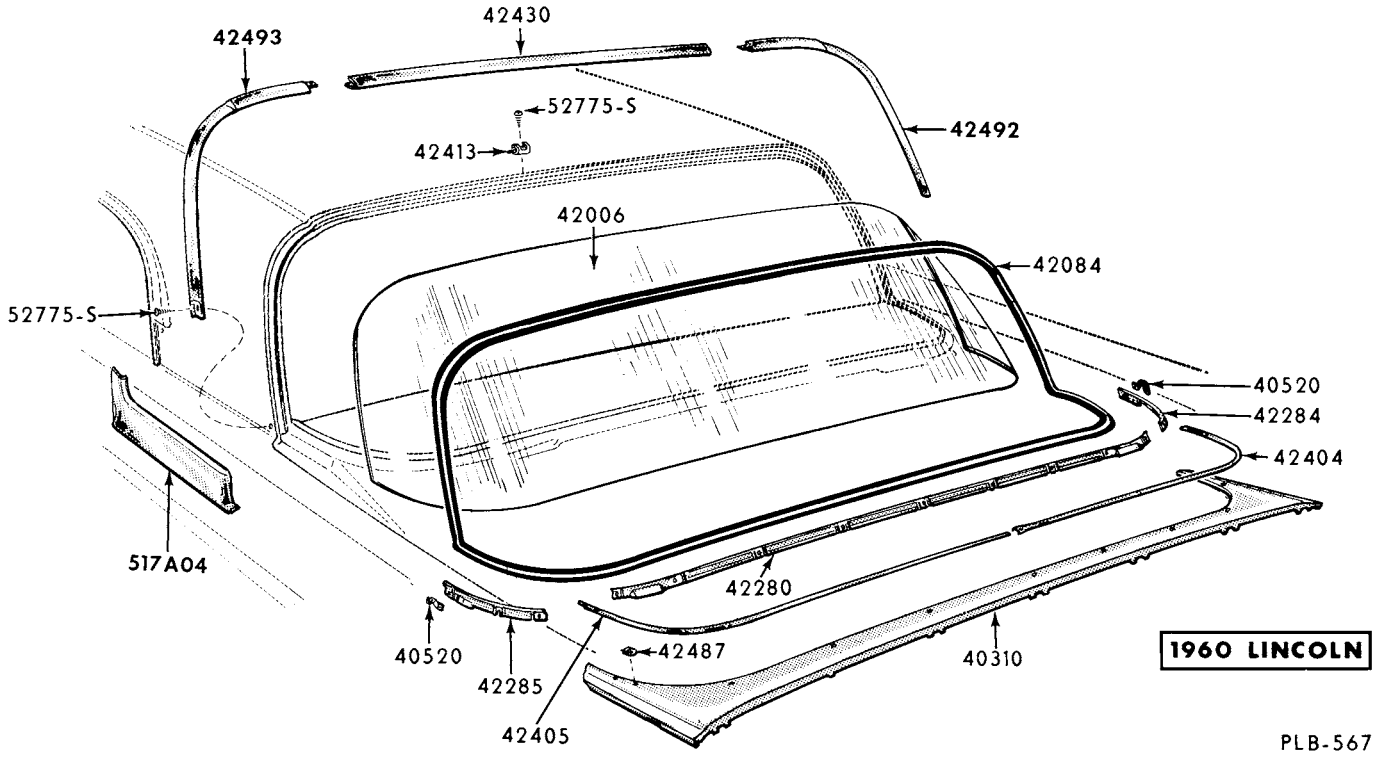

BACK WINDOW and EXTERIOR MOULDINGS - MODELS 53, 57, 63

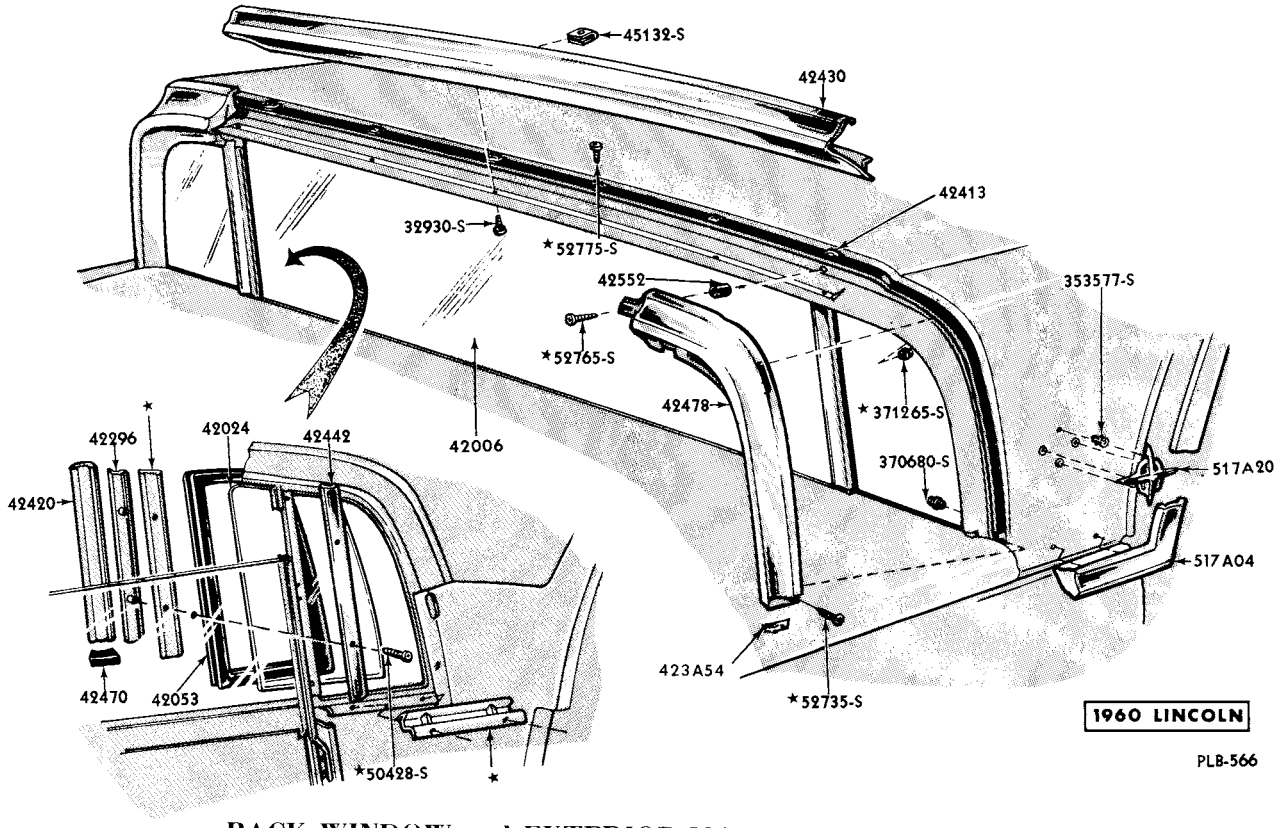

BACK WINDOW and EXTERIOR MOULDINGS - MODEL 65

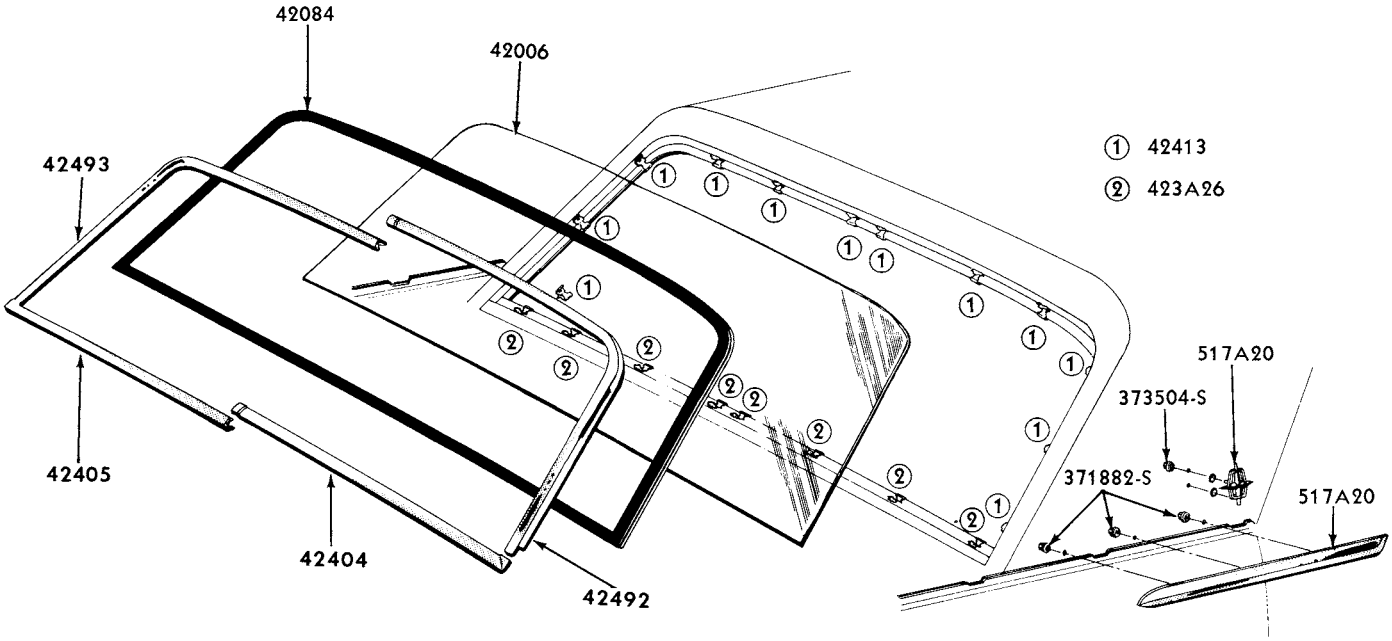

1964 LINCOLN

PLB-1070

BACK WINDOW and EXTERIOR MOULDING - MODEL 53

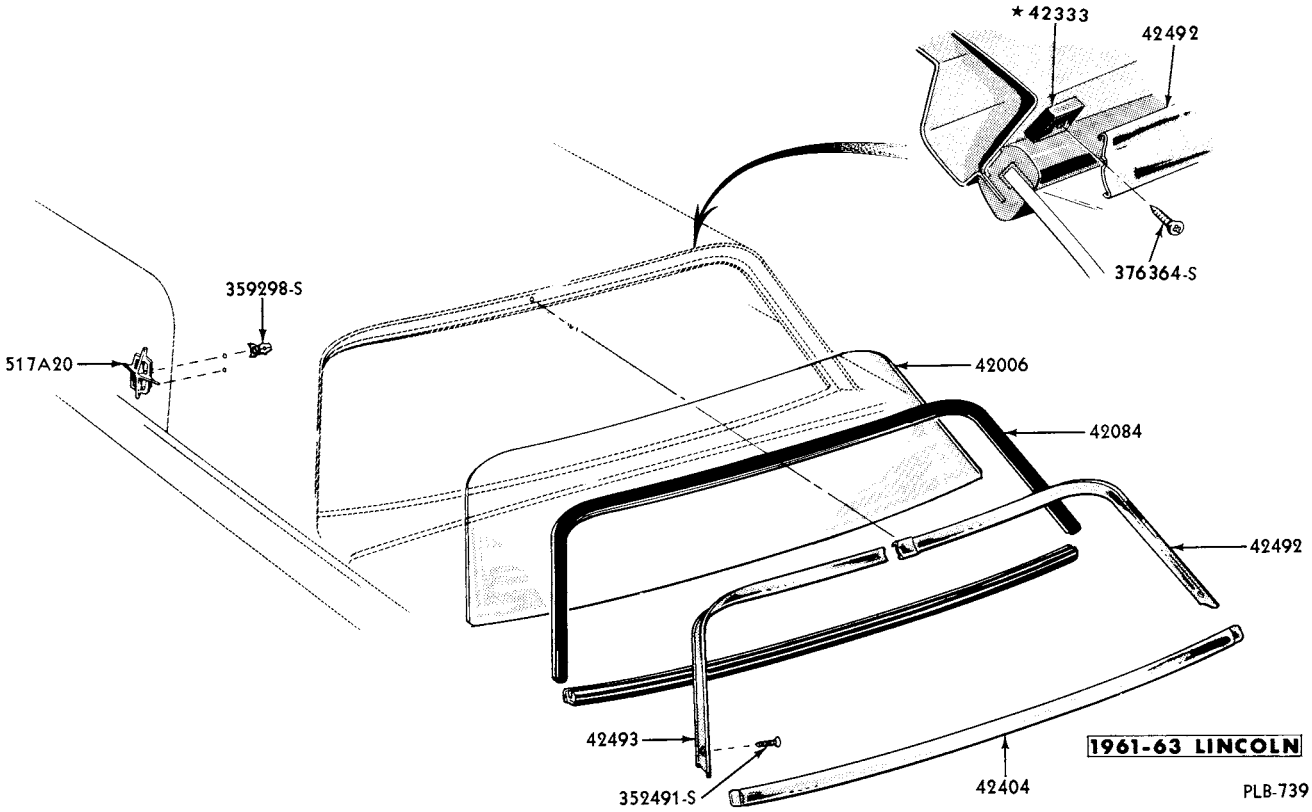

BACK WINDOW and EXTERIOR MOULDINGS - MODELS 53, 57

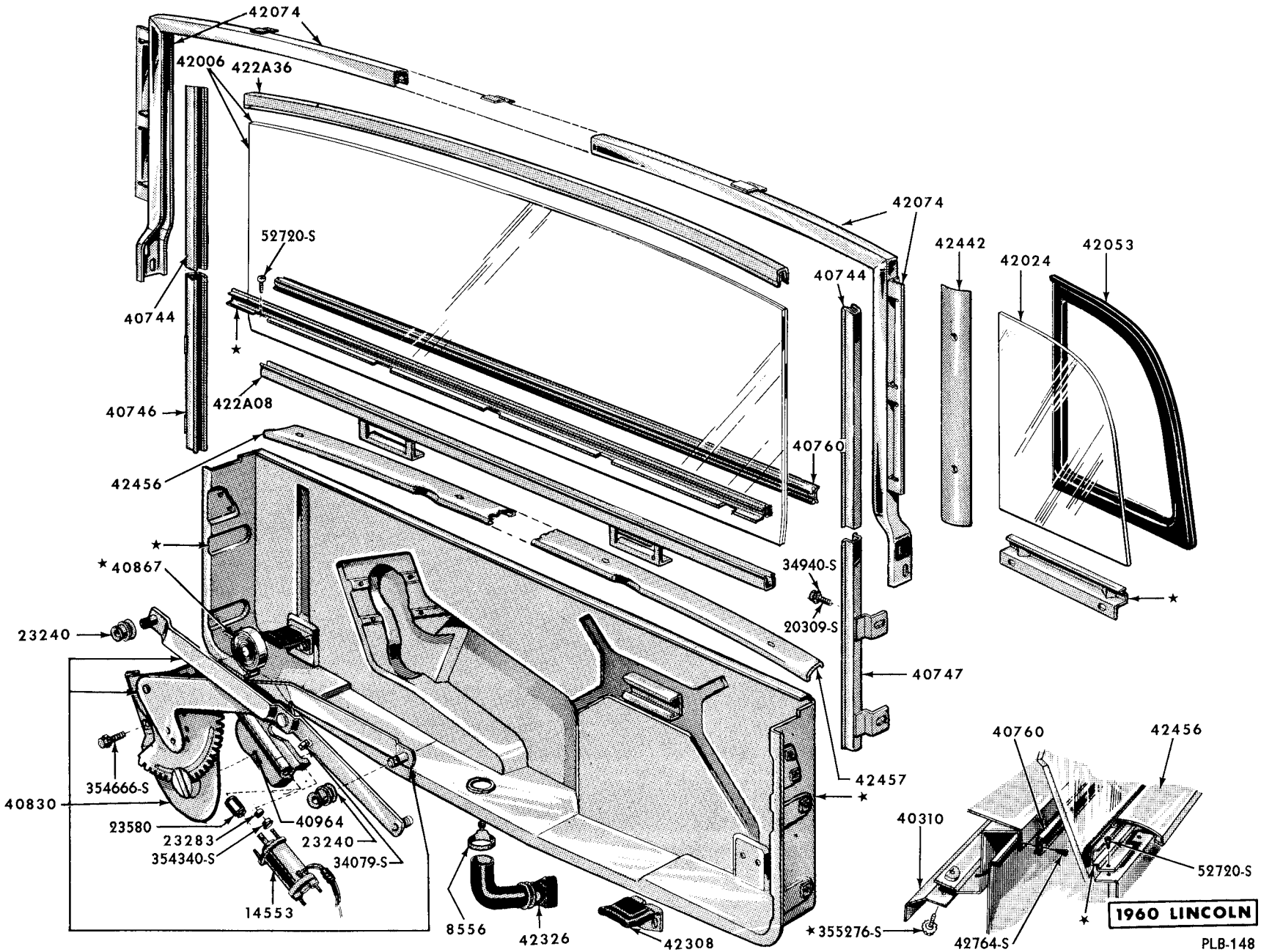

BACK WINDOW GLASS MECHANISM

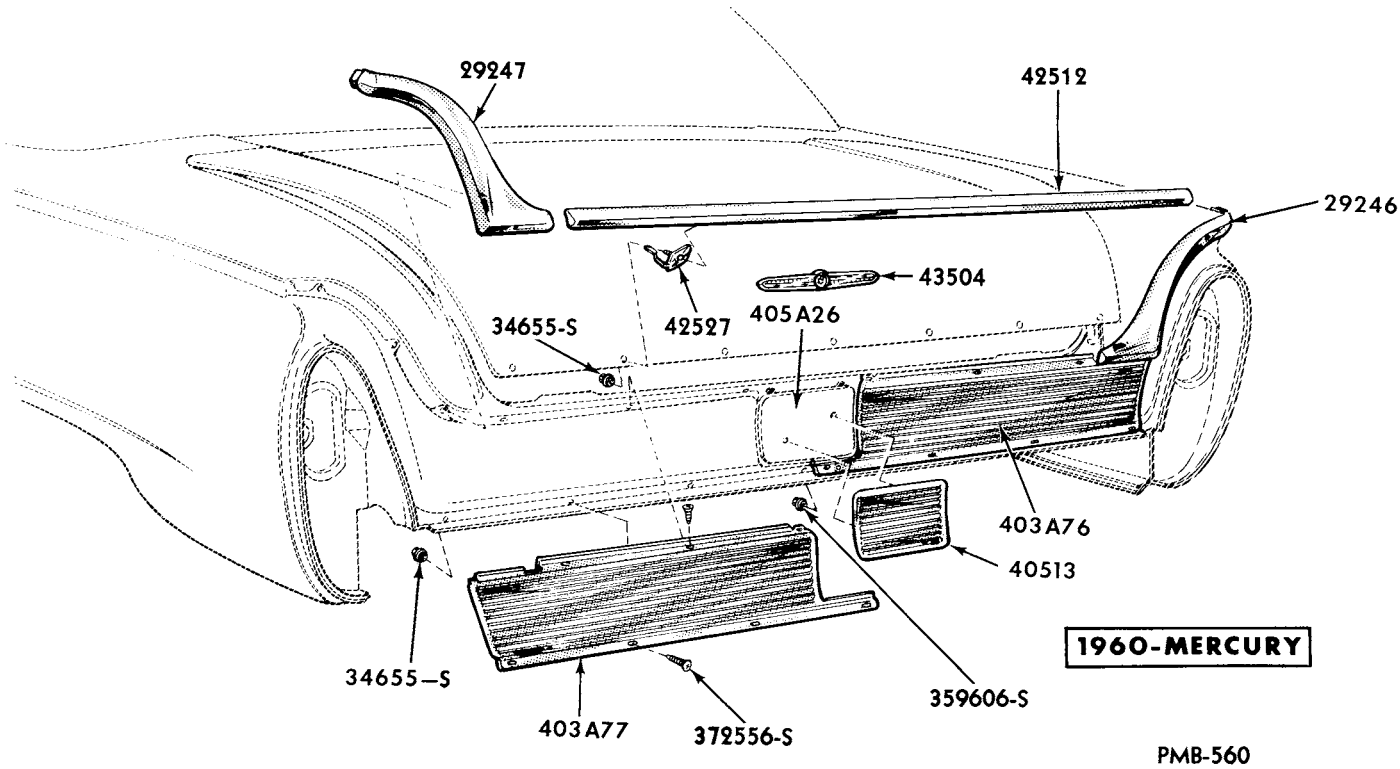

EXTERIOR MOULDINGS - LOWER REAR-PASSENGER

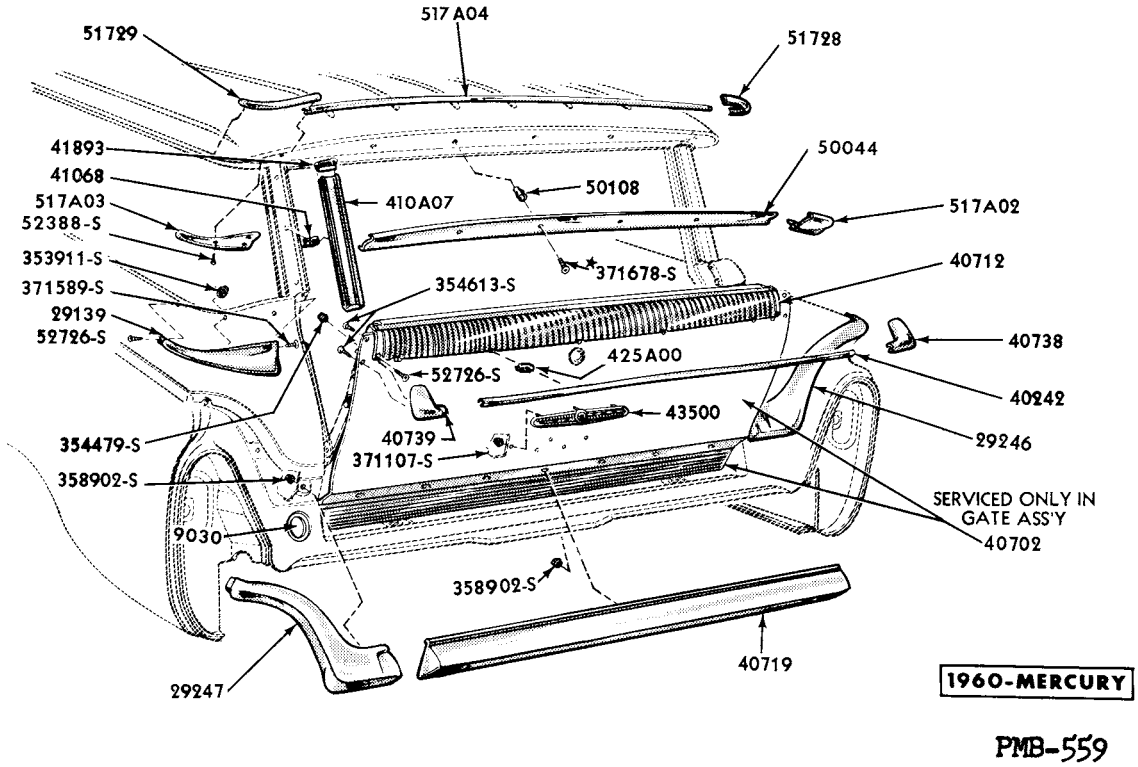

EXTERIOR MOULDINGS - LOWER REAR-STATION WAGON

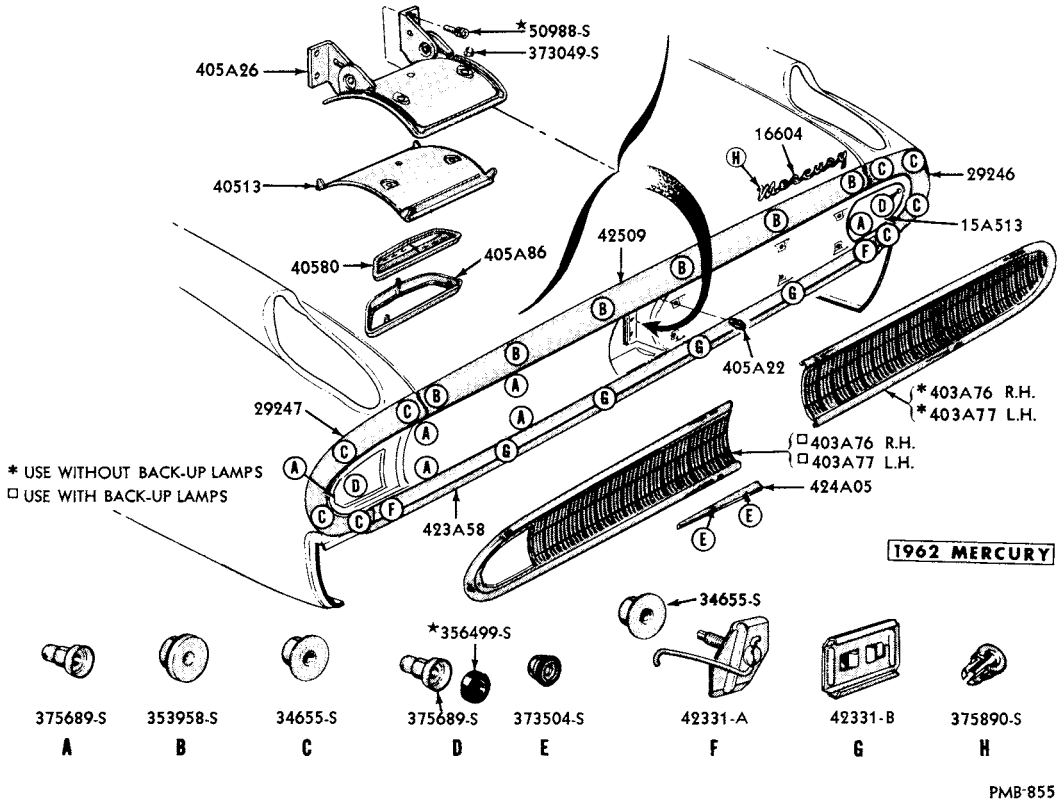

EXTERIOR MOULDINGS - LOWER REAR - PASSENGER

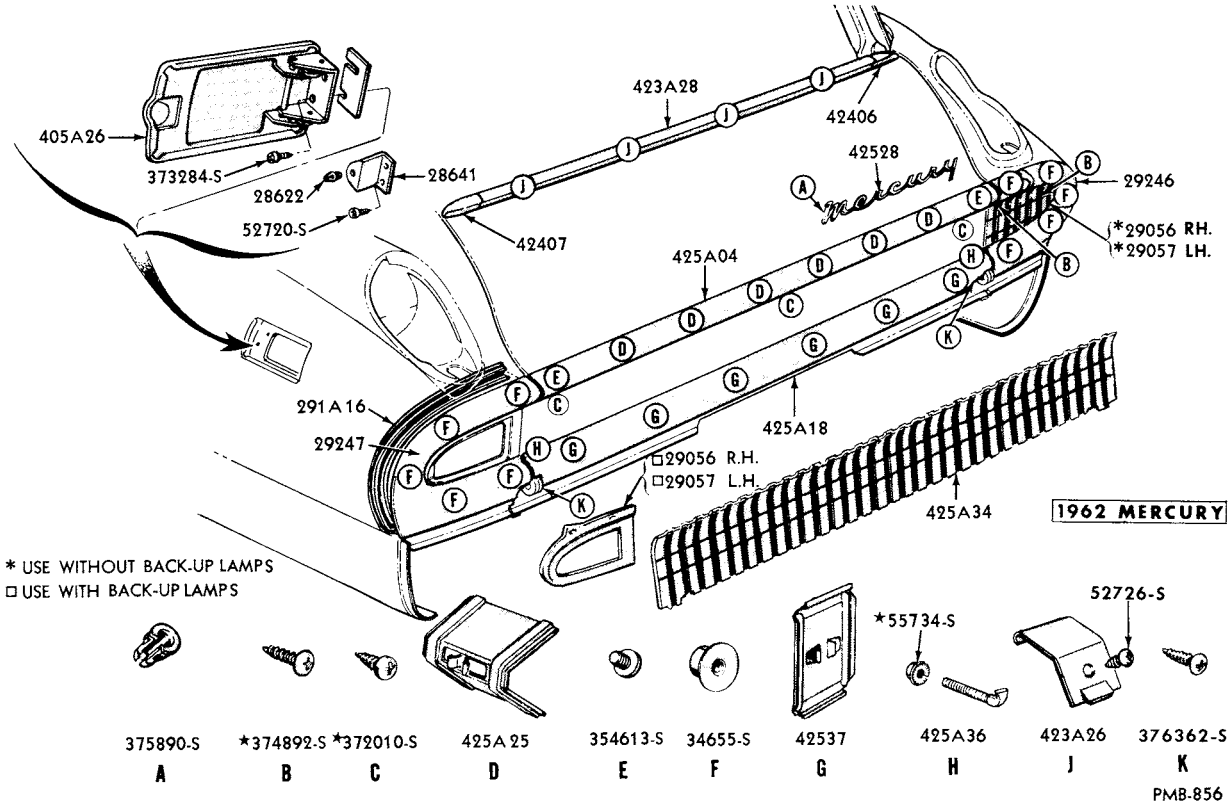

EXTERIOR MOULDINGS - LOWER REAR - STATION WAGON

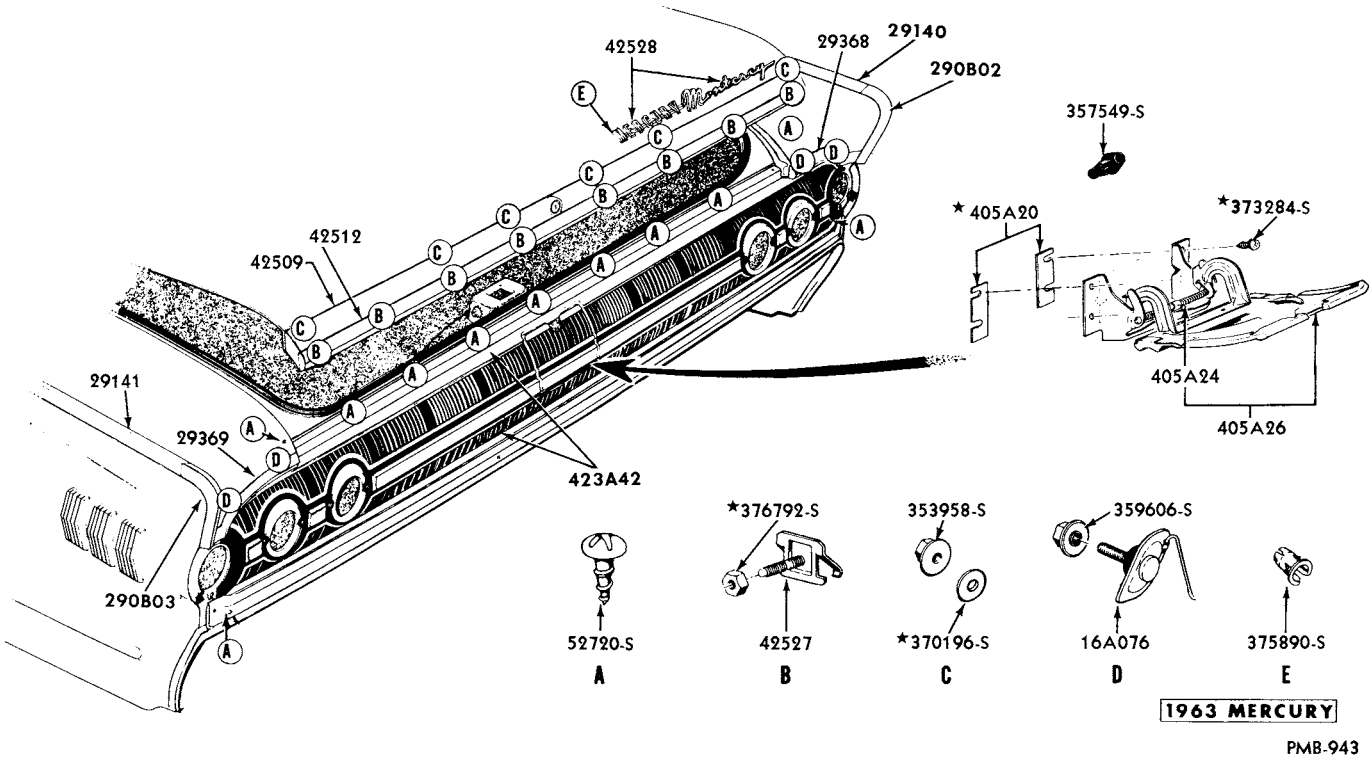

EXTERIOR MOULDINGS - LOWER REAR - PASSENGER

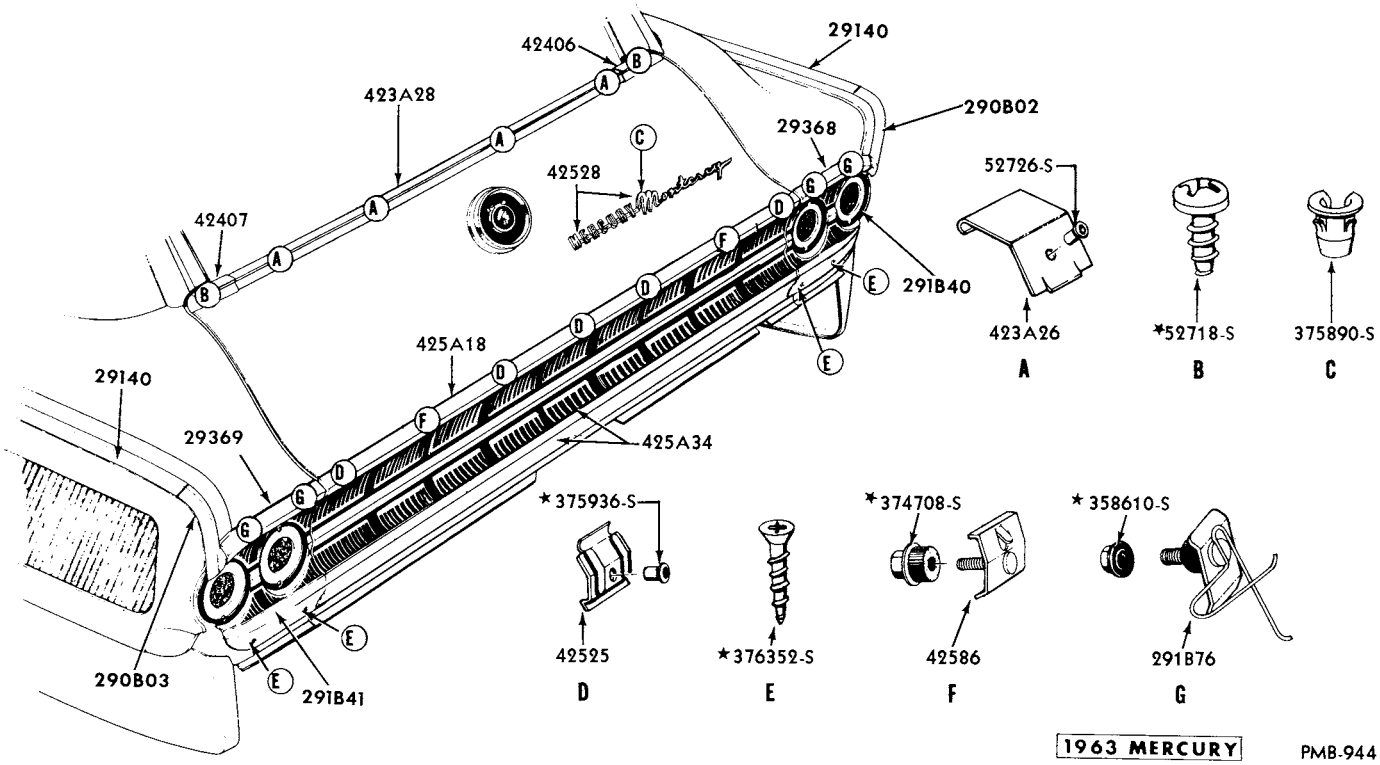

EXTERIOR MOULDINGS - LOWER REAR - STATION WAGON

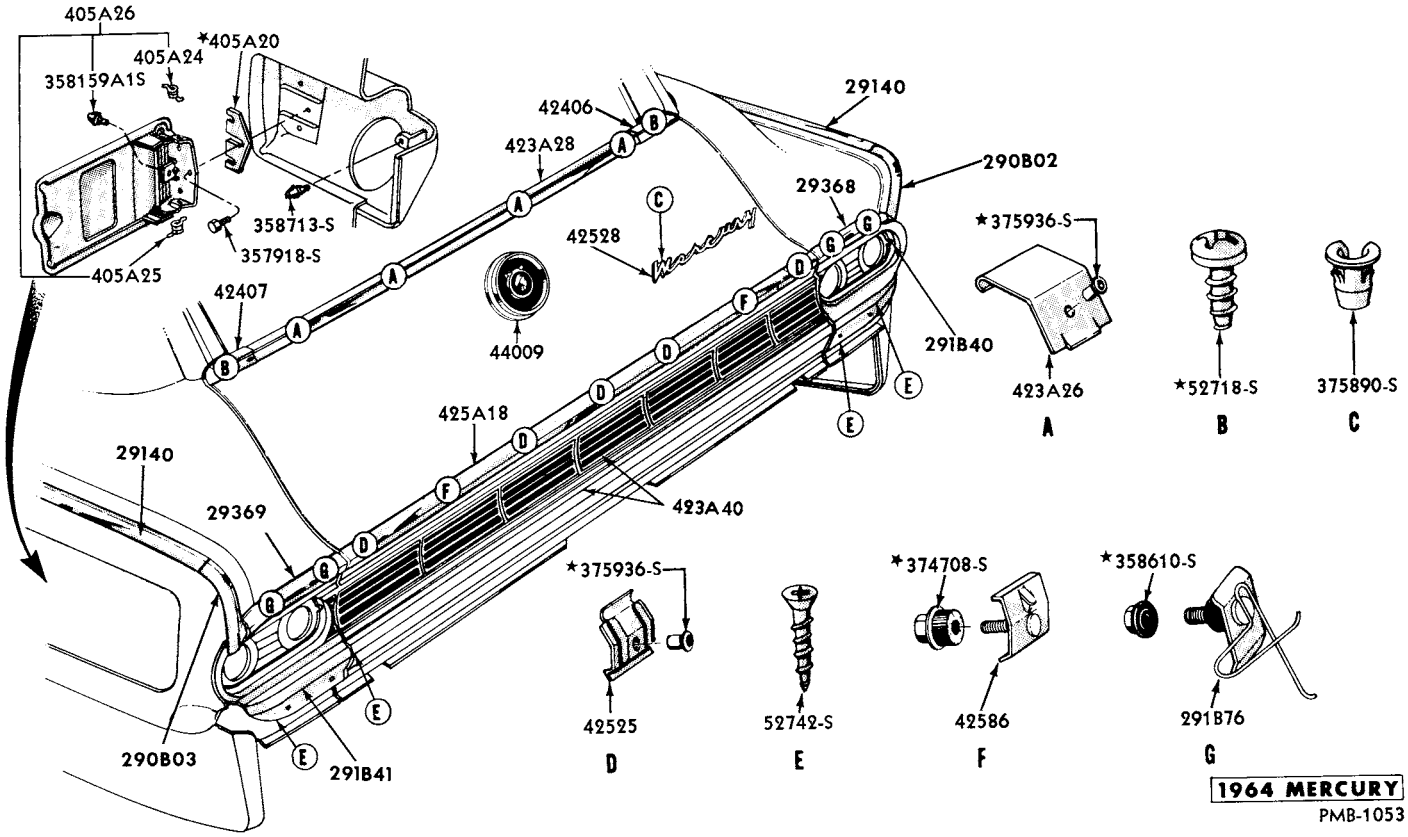

EXTERIOR MOULDINGS - LOWER REAR - STATION WAGON

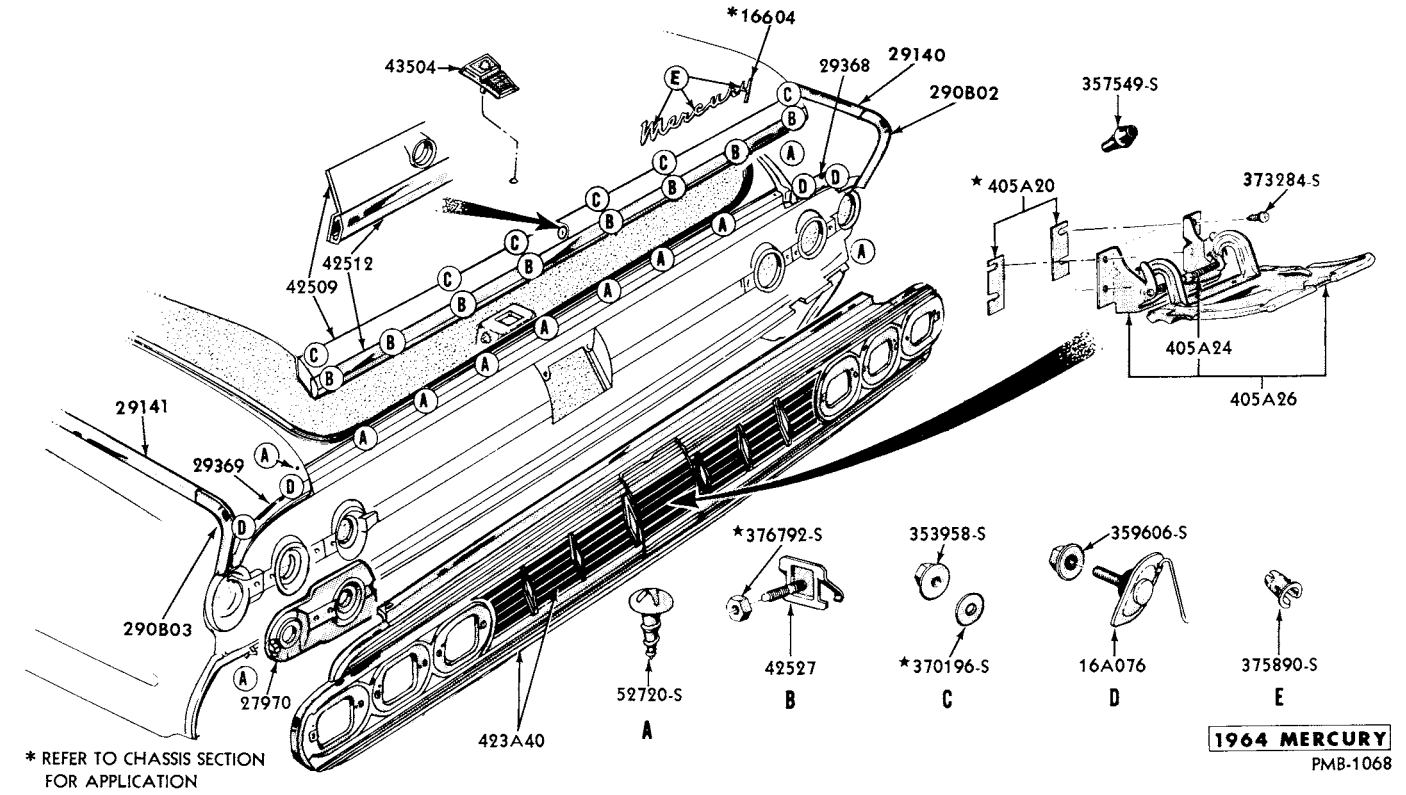

EXTERIOR MOULDINGS - LOWER REAR - PASSENGER

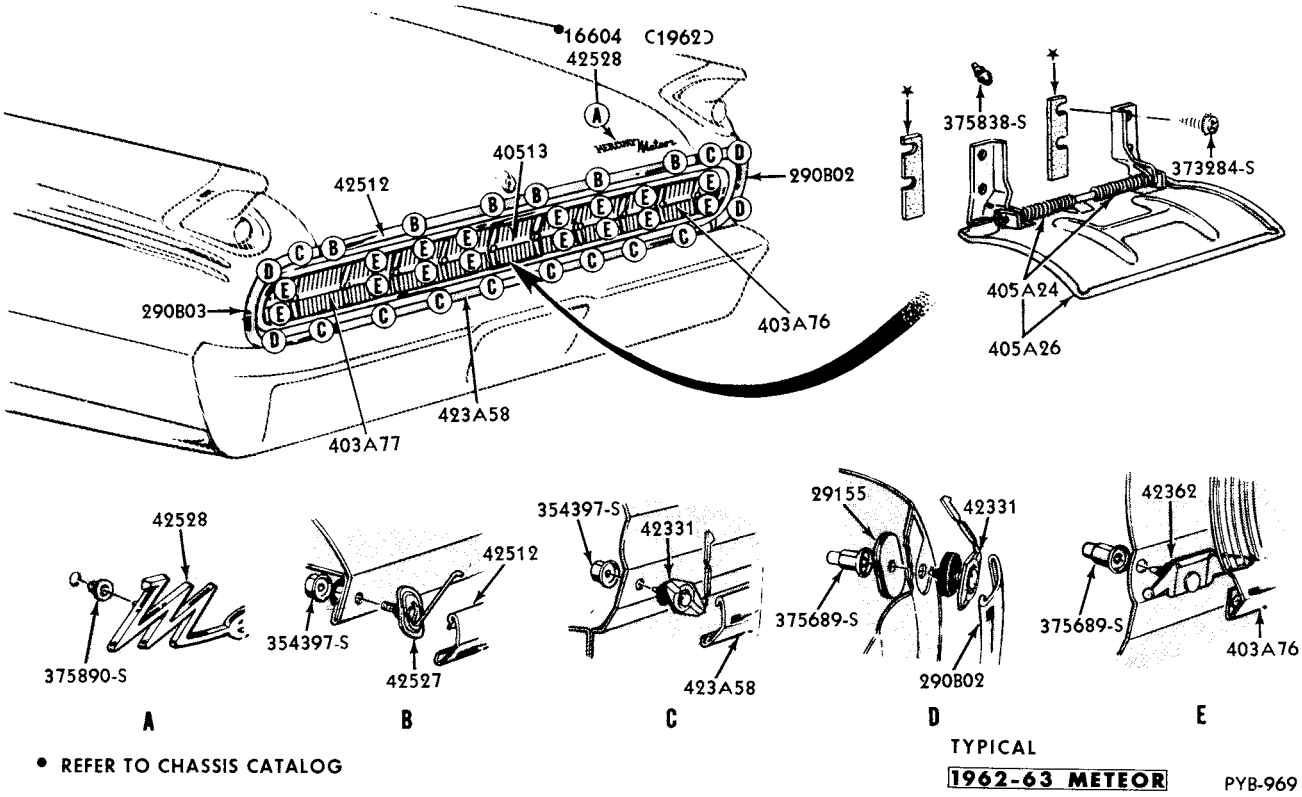

• REFER TO CHASSIS CATALOG

EXTERIOR MOULDINGS - LOWER REAR - PASSENGER

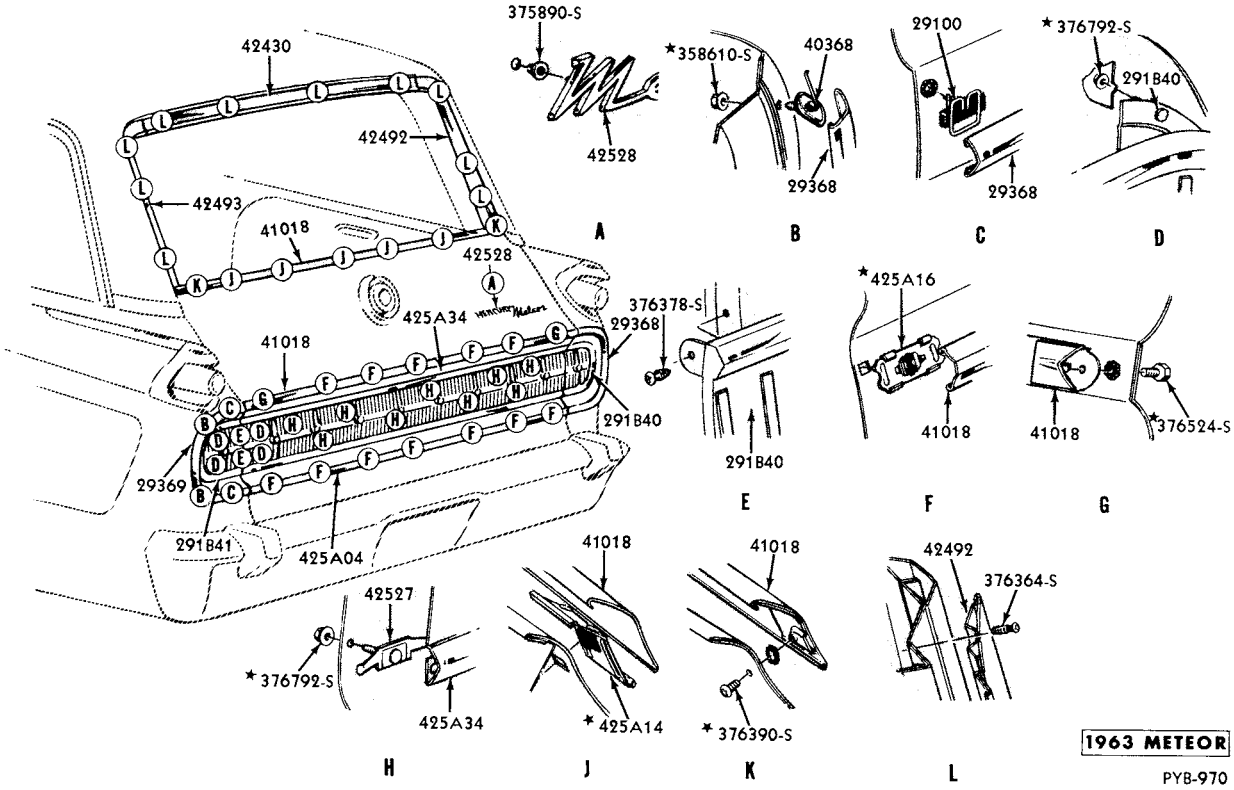

EXTERIOR MOULDINGS - BACK WINDOW & LOWER REAR - STATION WAGON

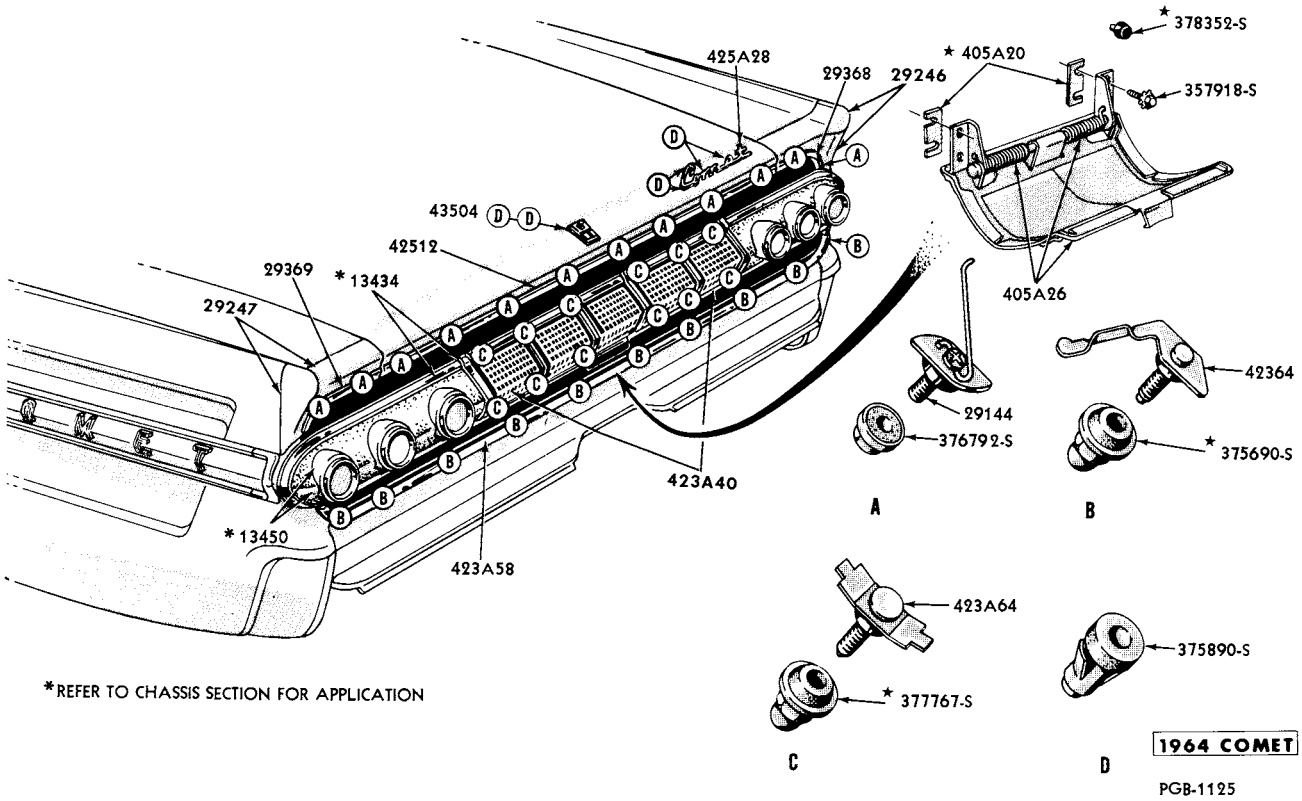

*REFER TO CHASSIS SECTION FOR APPLICATION

EXTERIOR MOULDINGS - LOWER REAR - PASSENGER

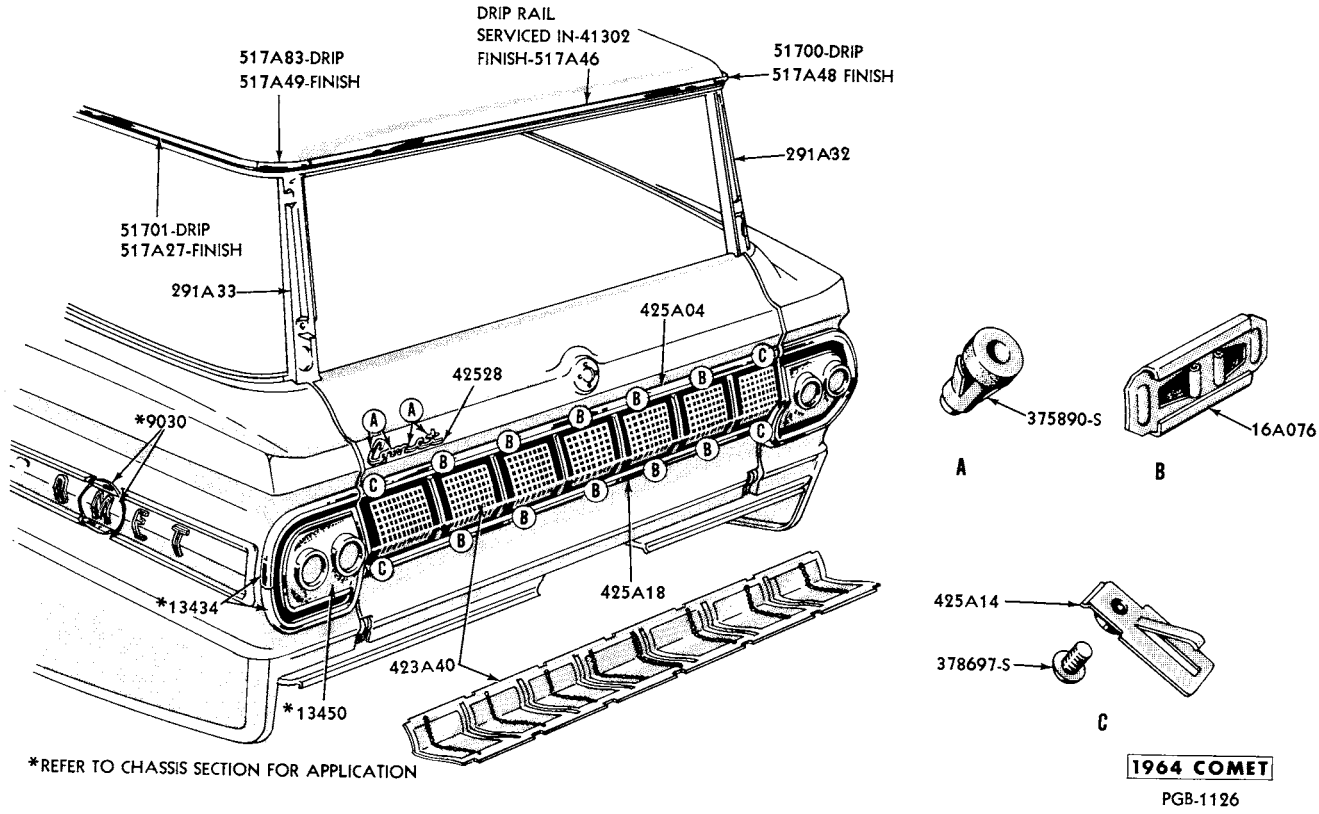

*REFER TO CHASSIS SECTION FOR APPLICATION

EXTERIOR MOULDINGS LOWER REAR - STATION WAGON

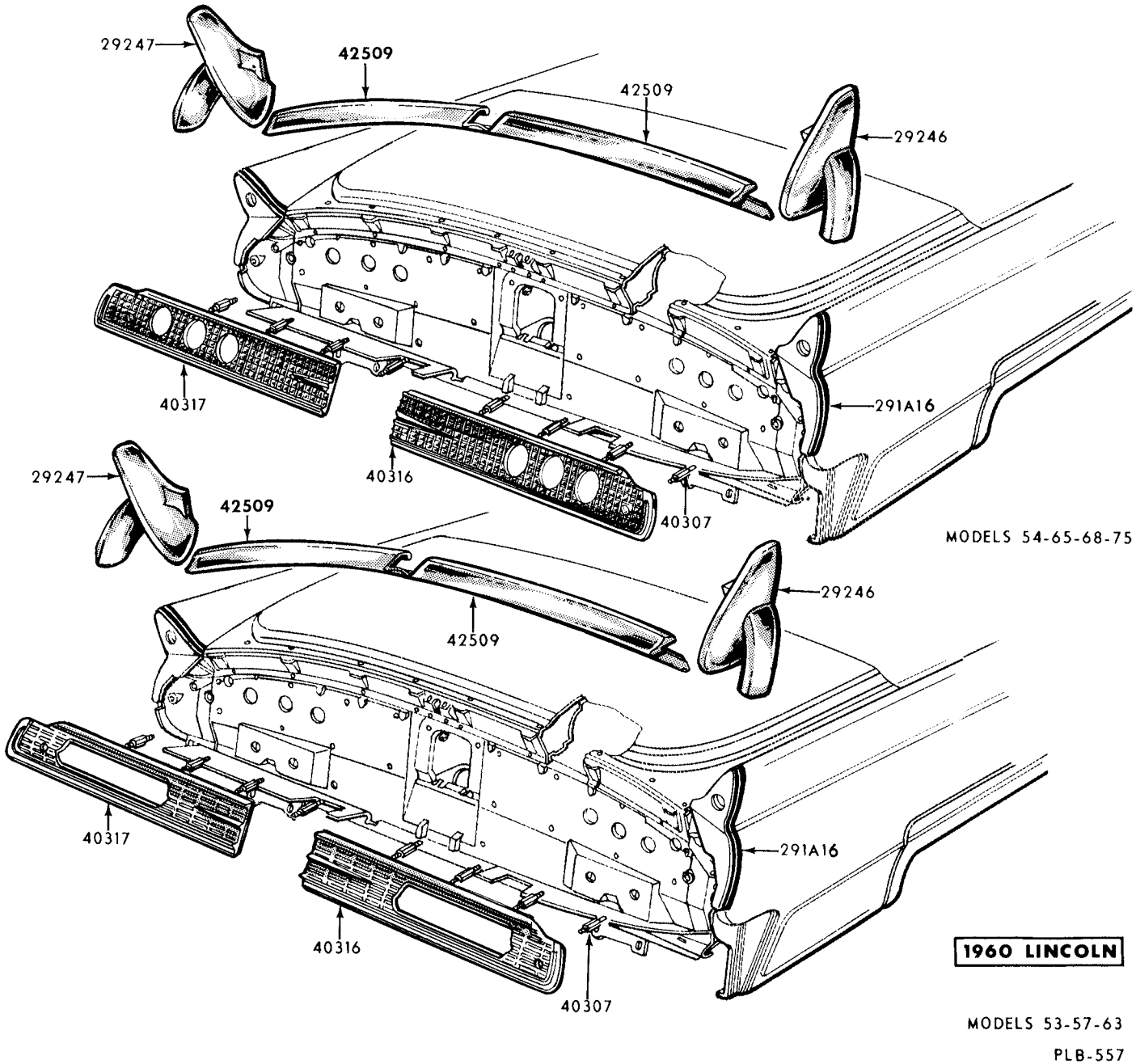

LOWER BACK PANEL MOULDINGS

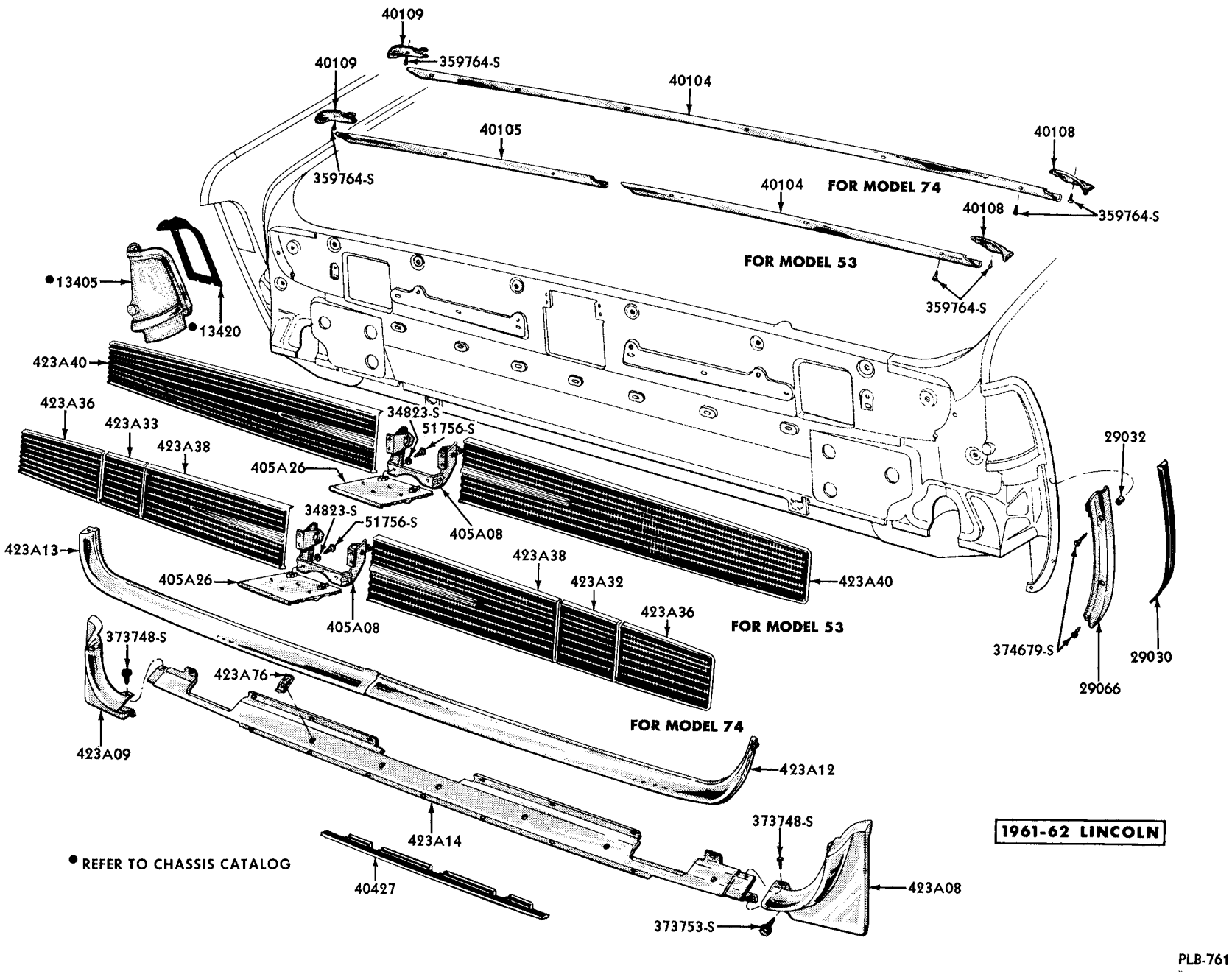

LOWER BACK PANEL MOULDINGS

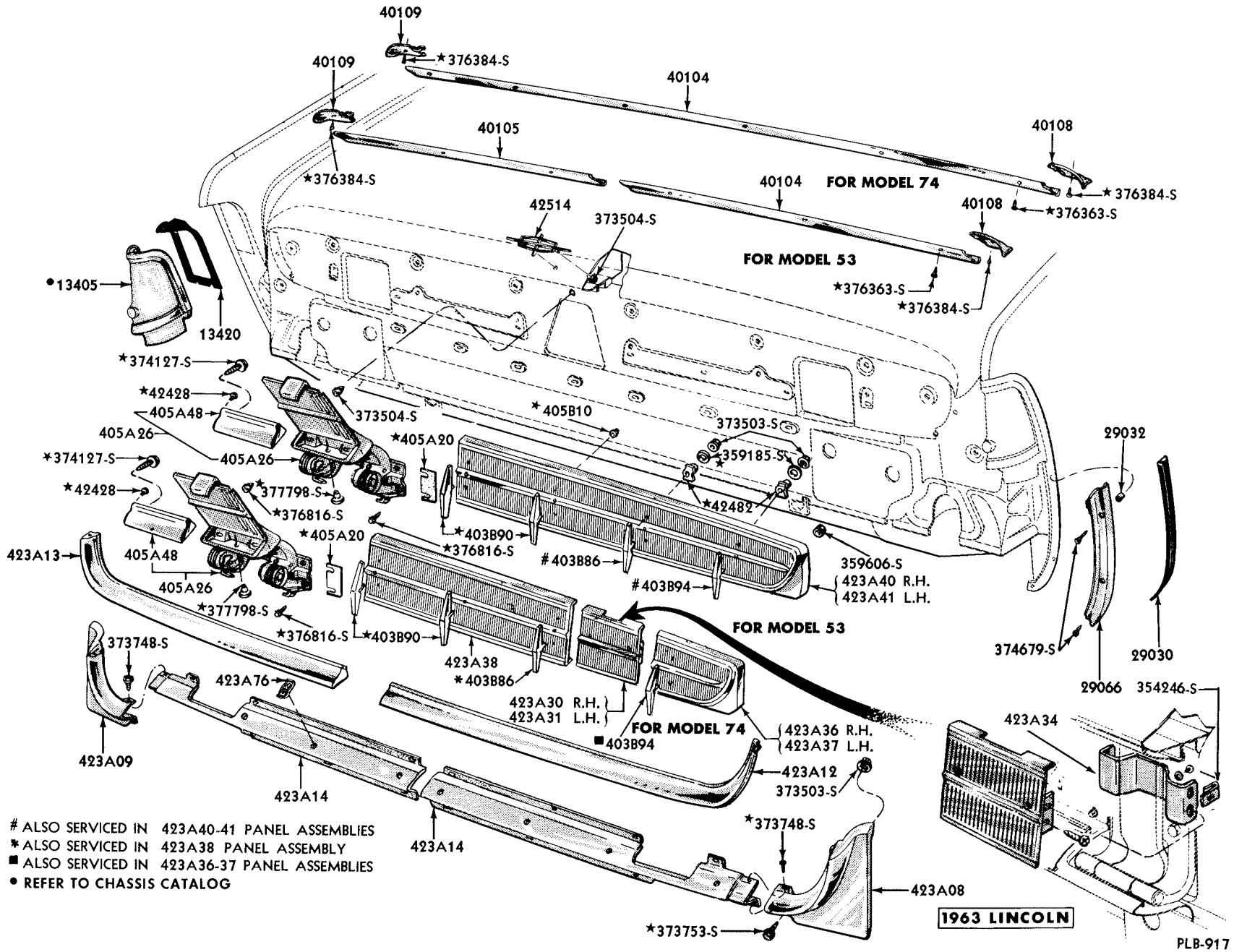

ALSO SERVICED IN 423A40-41 PANEL ASSEMBLIES
* ALSO SERVICED IN 423A38 PANEL ASSEMBLY
■ ALSO SERVICED IN 423A36-37 PANEL ASSEMBLIES
• REFER TO CHASSIS CATALOG

LOWER BACK PANEL MOULDINGS

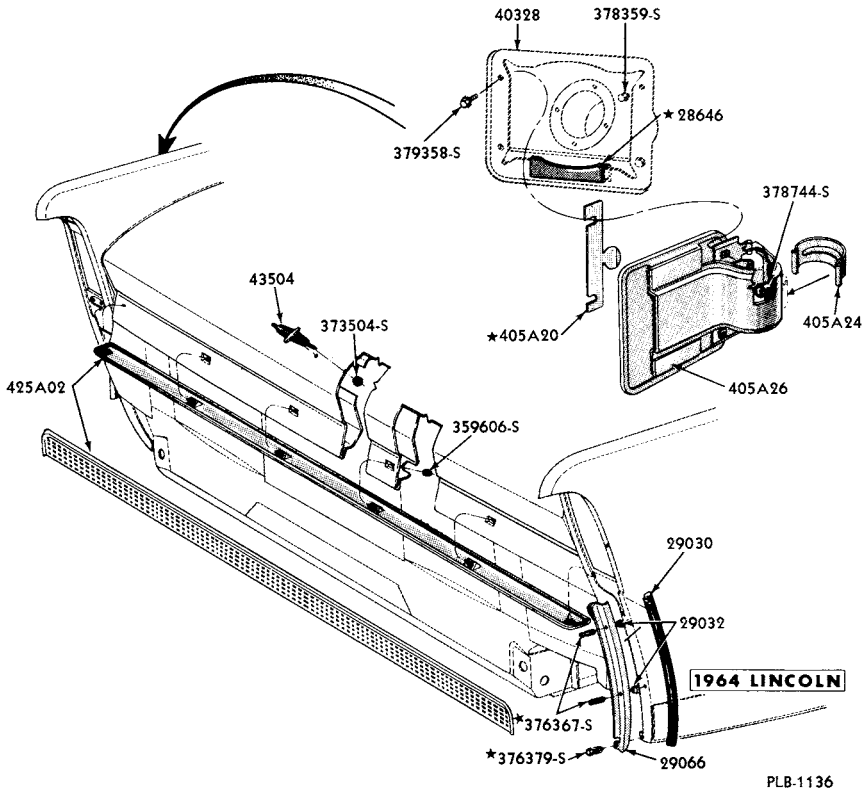

EXTERIOR MOULDINGS -LOWER REAR and FUEL FILLER DOOR

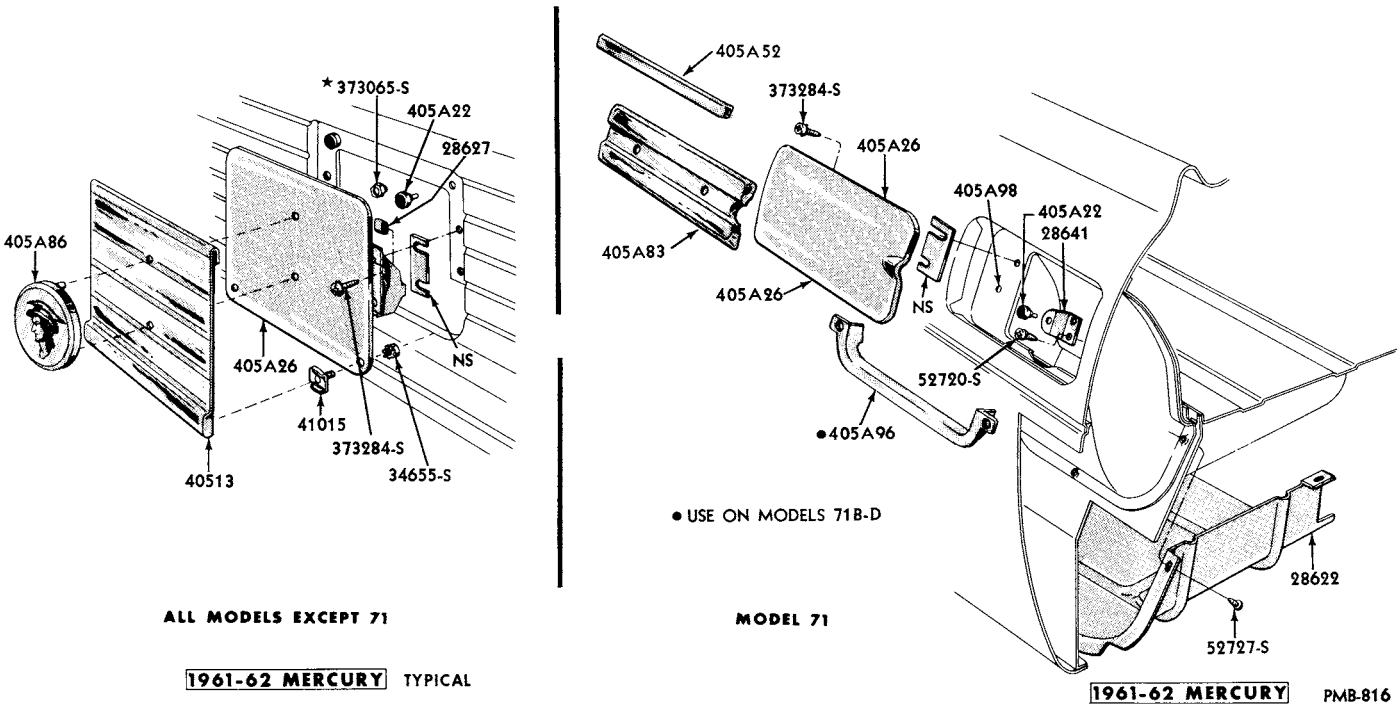

FUEL FILLER LID and SHIELD

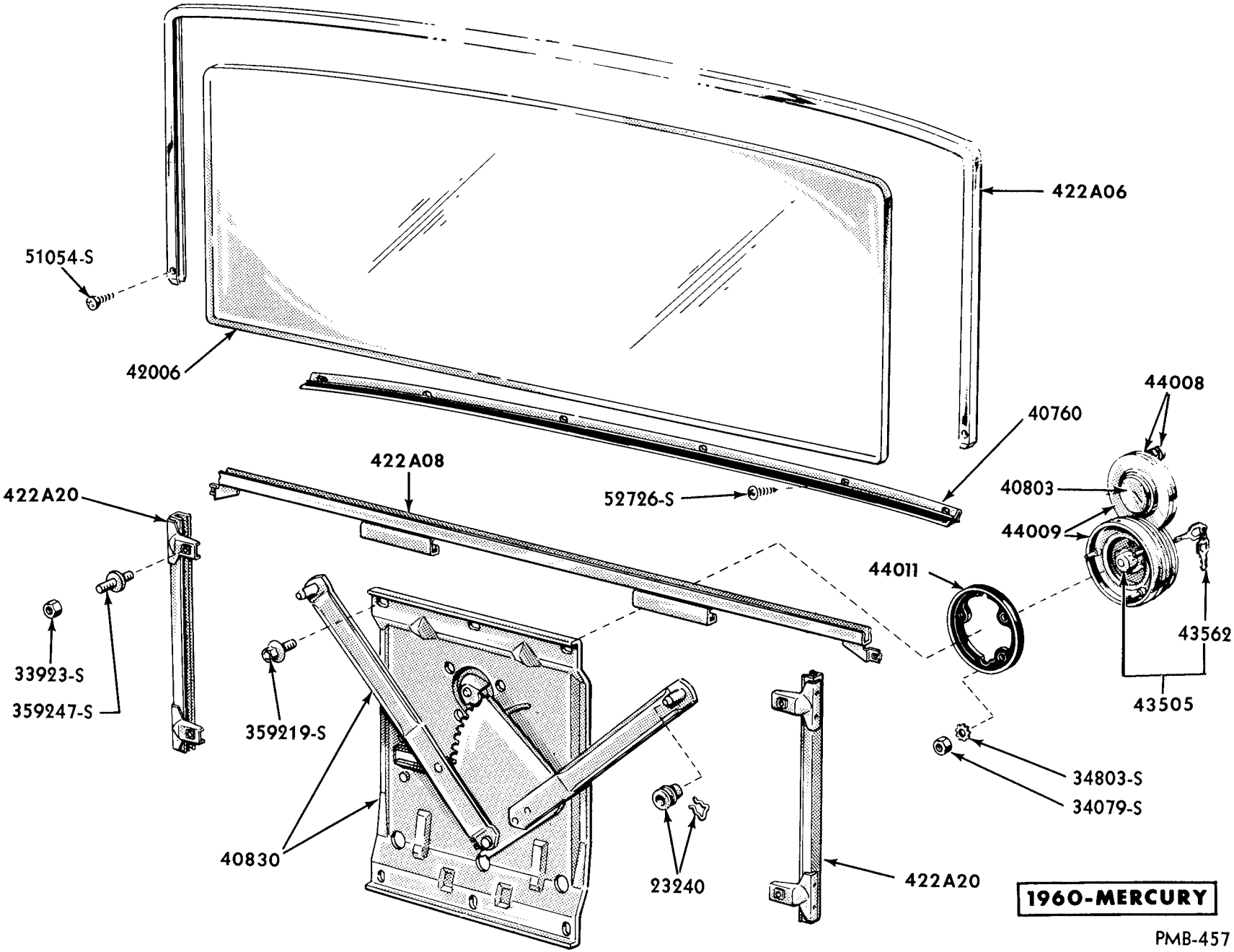

TAILGATE WINDOW REGULATOR - MANUAL

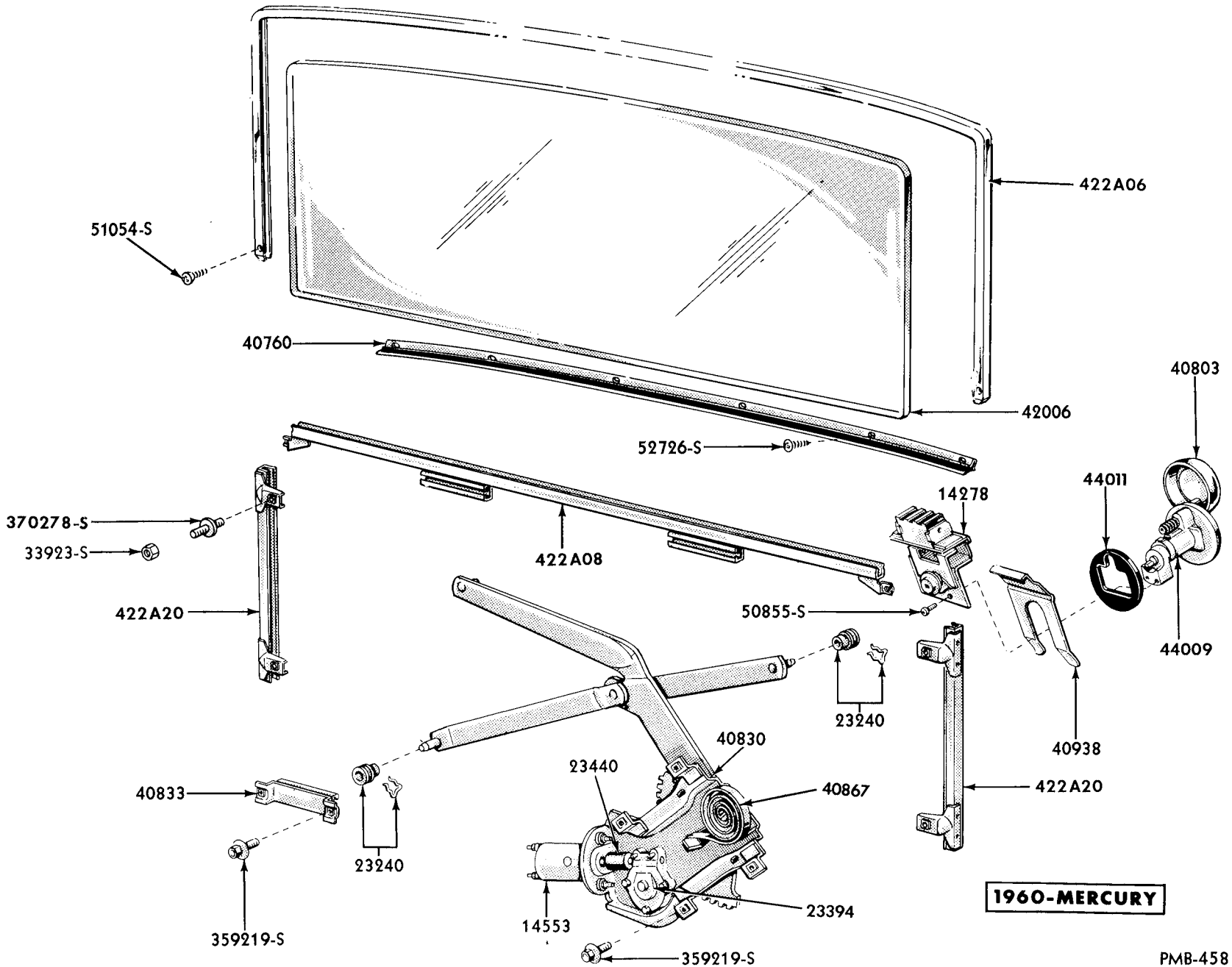

TAILGATE WINDOW REGULATOR - ELECTRIC

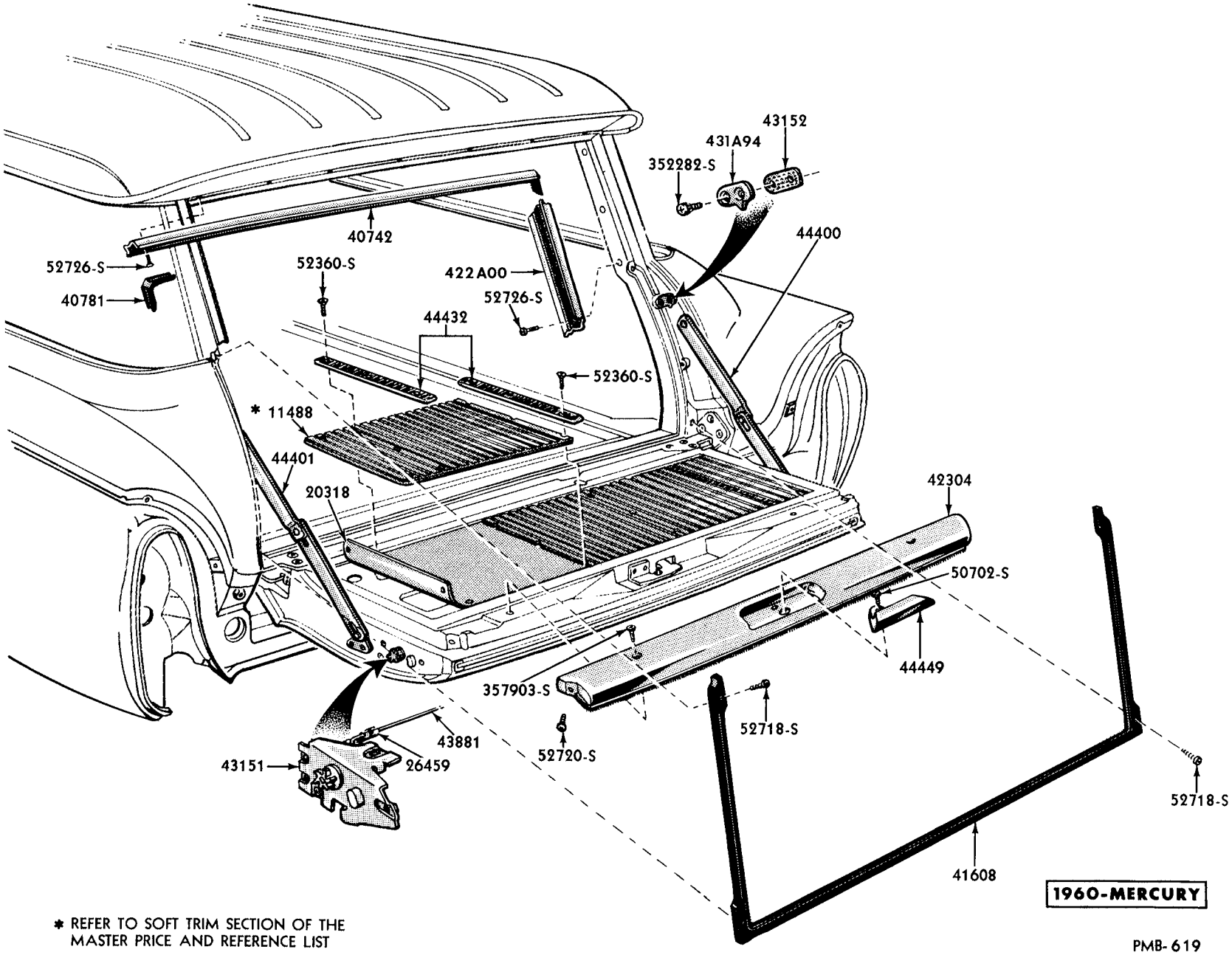

* REFER TO SOFT TRIM SECTION OF THE MASTER PRICE AND REFERENCE LIST

TAILGATE, RELATED PARTS and GLASS RUNS

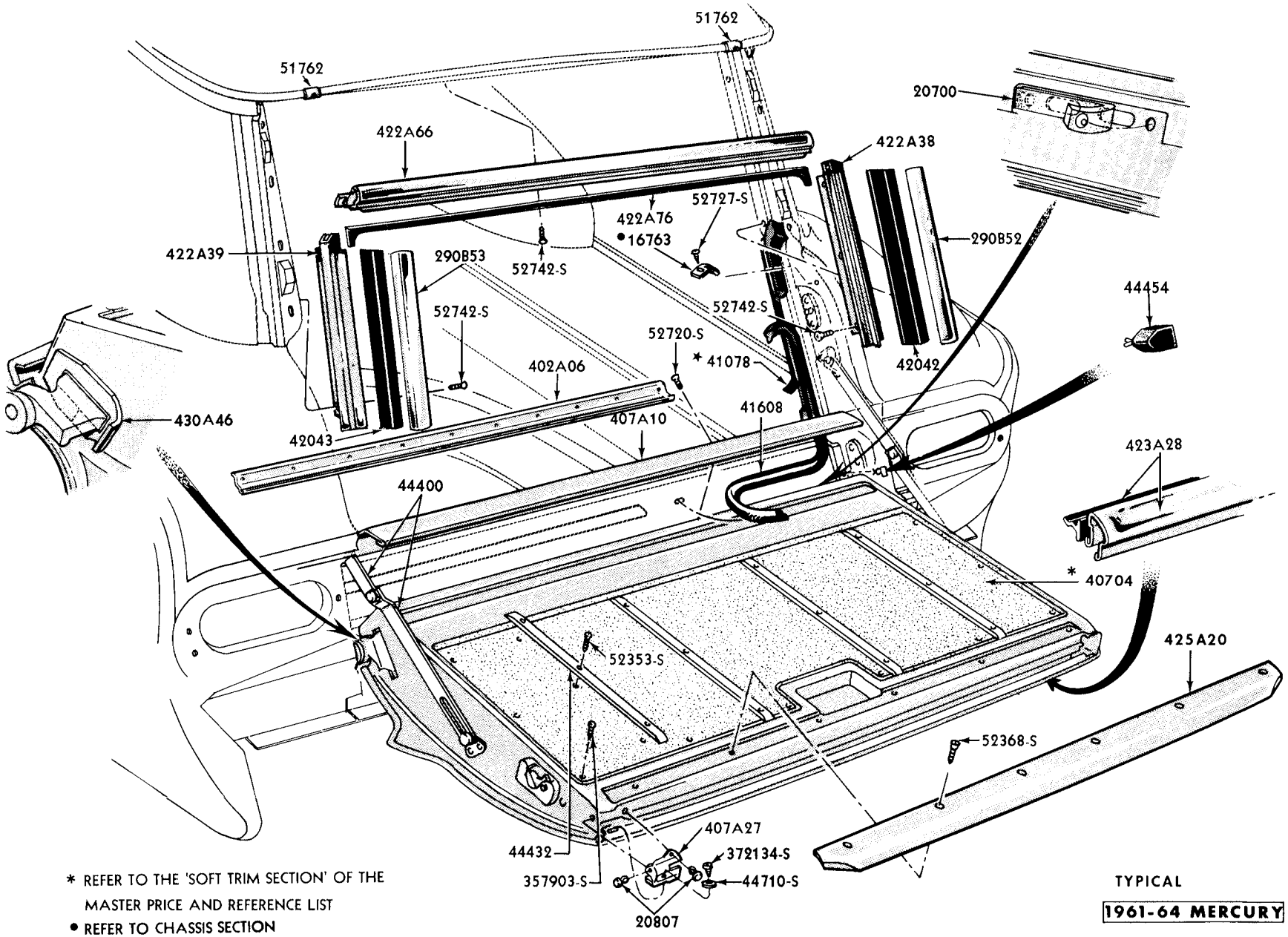

* REFER TO THE 'SOFT TRIM SECTION' OF THE MASTER PRICE AND REFERENCE LIST
• REFER TO CHASSIS SECTION

TYPICAL

1961-64 MERCURY

PMB-1091

TAILGATE and RELATED PARTS - MODEL 71

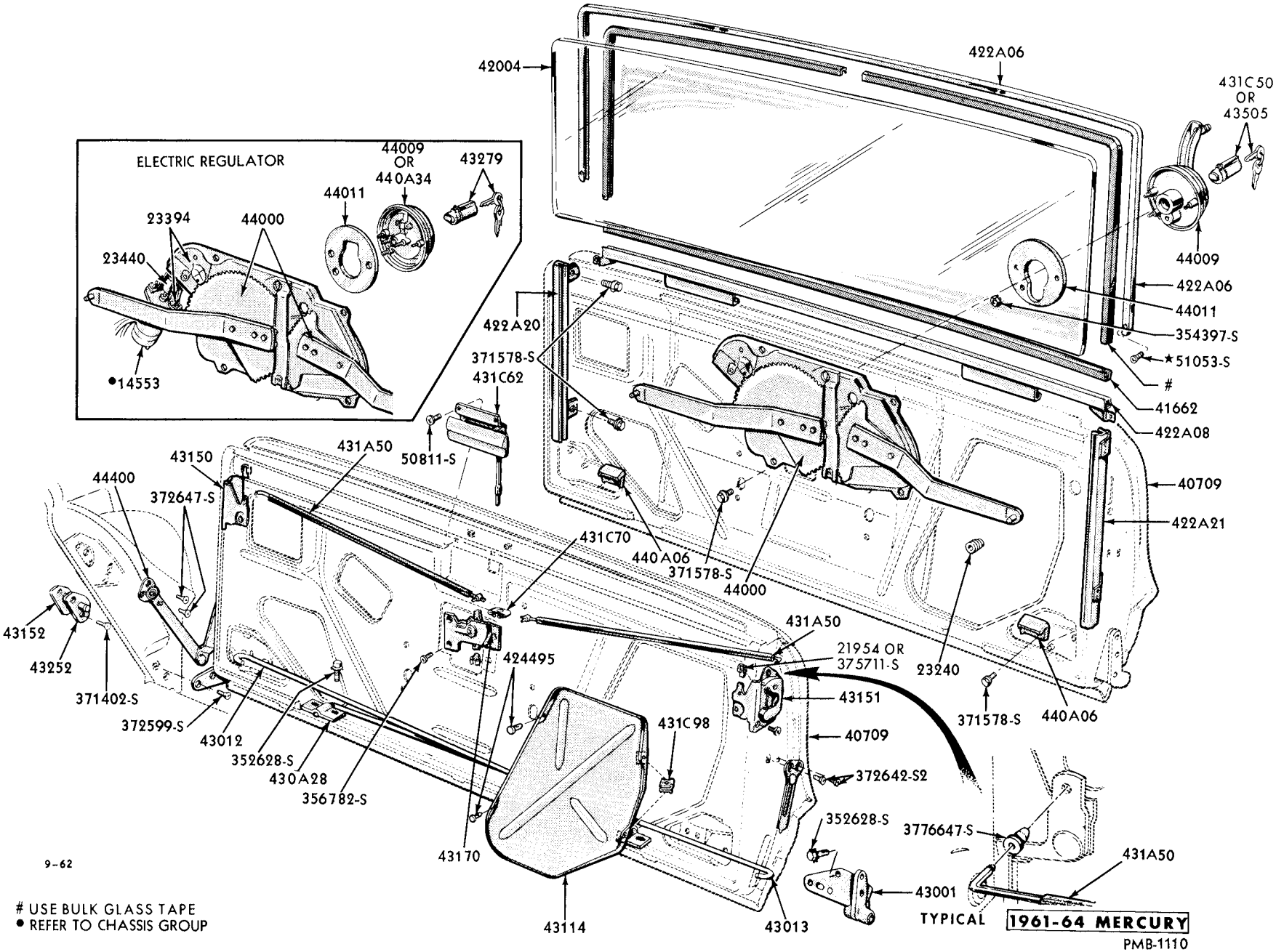

TAILGATE WINDOW MECHANISM

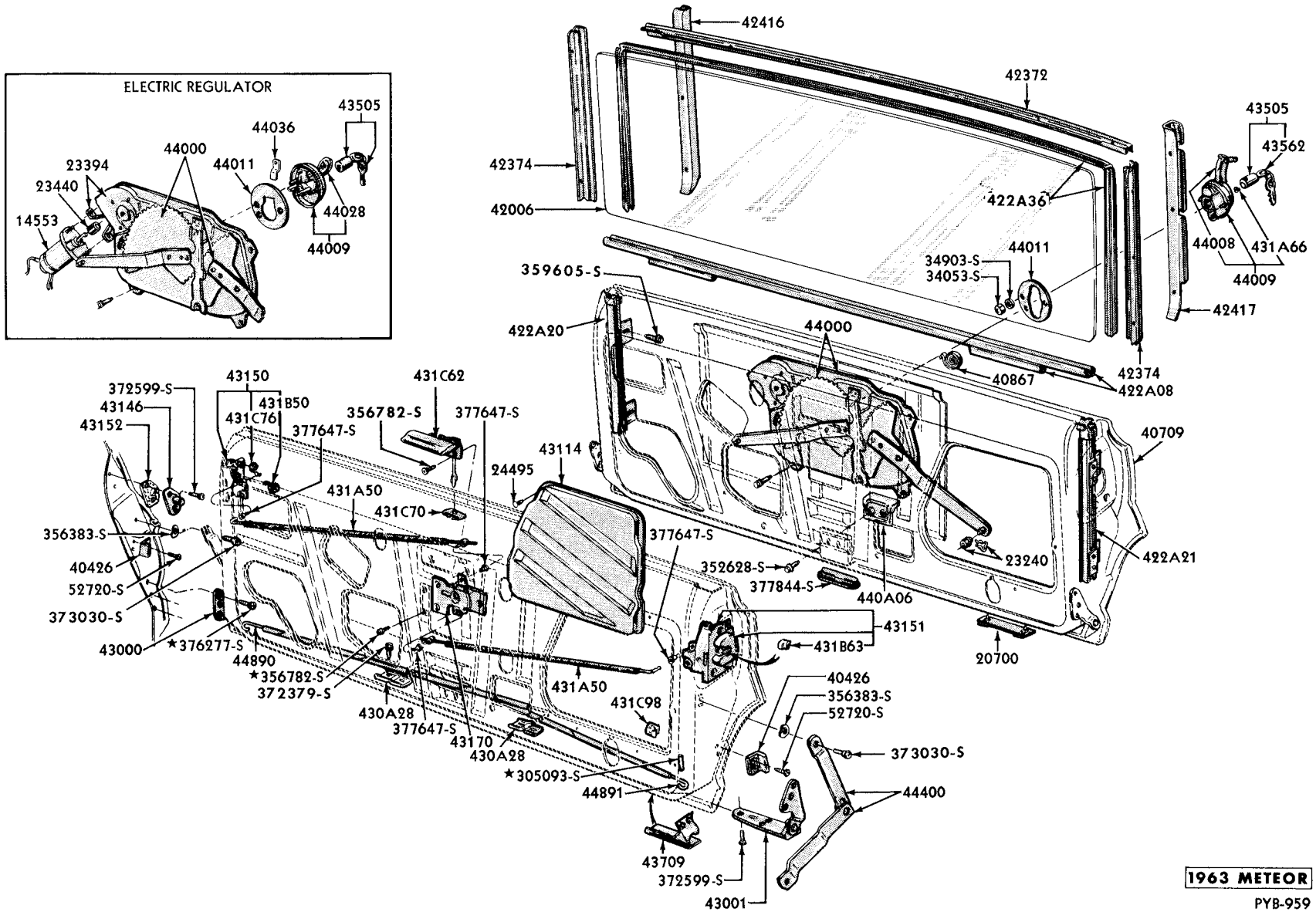

STATION WAGON TAILGATE WINDOW & RELATED PARTS

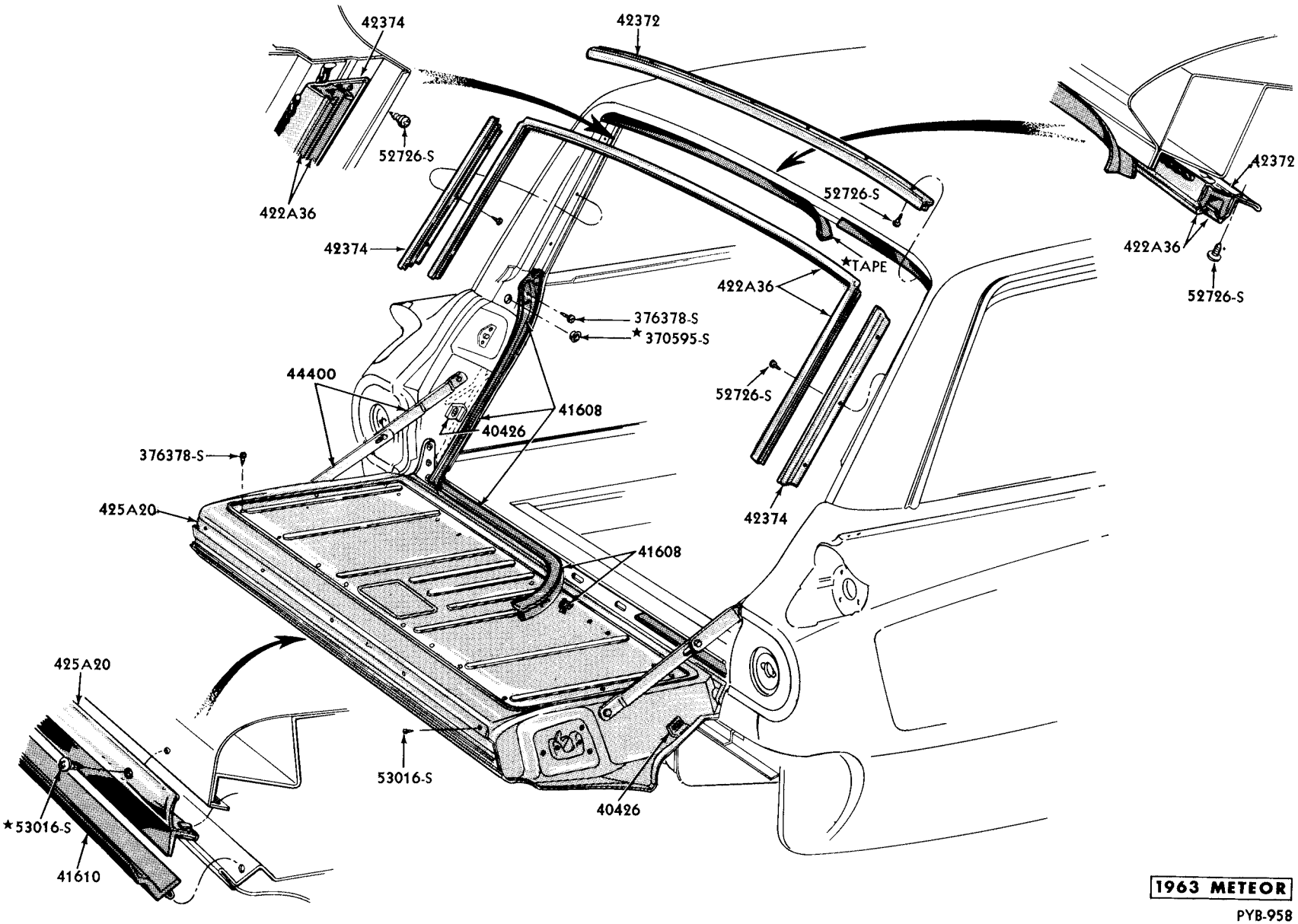

STATION WAGON TAILGATE W/STRIPS & RETAINERS

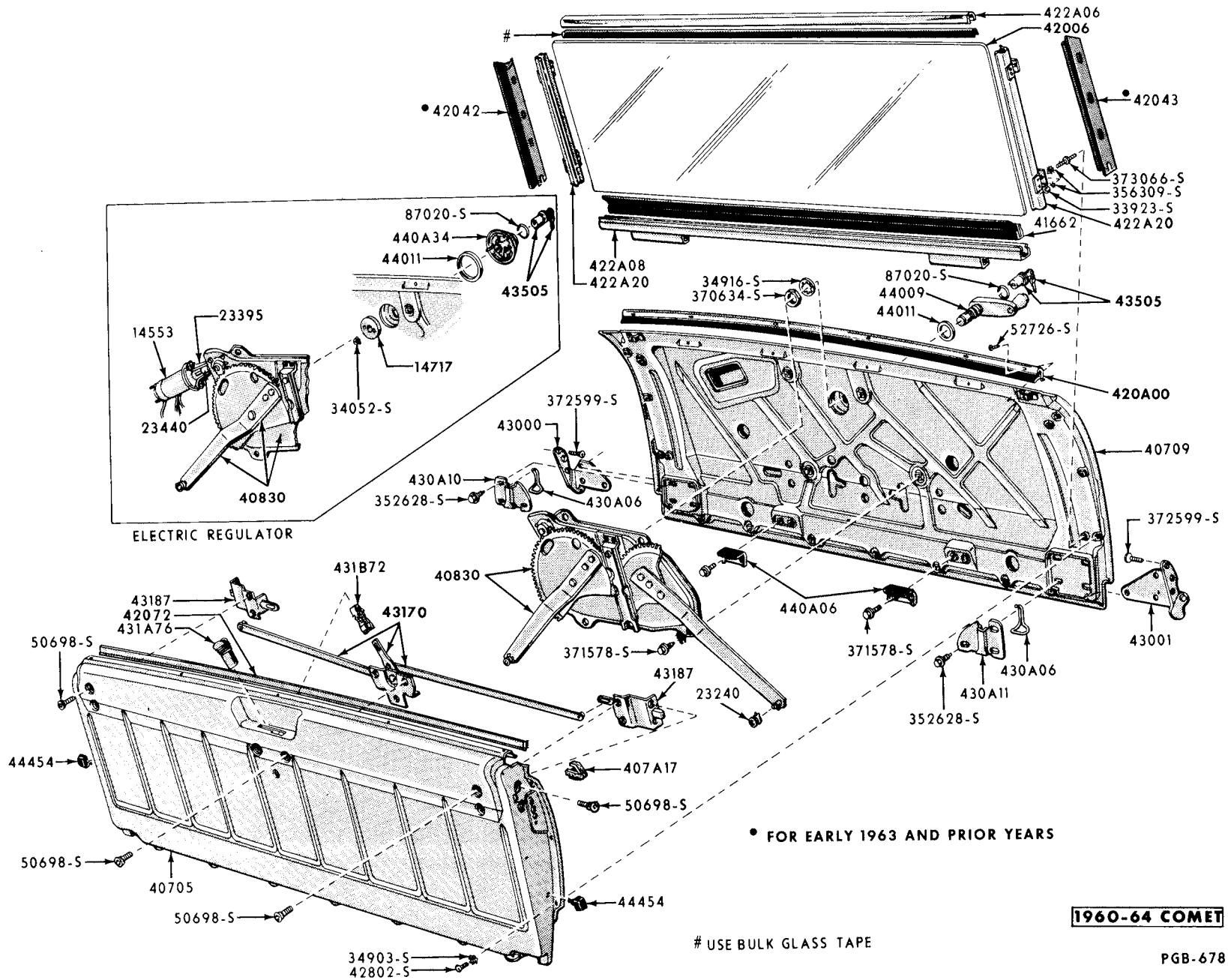

TAILGATE WINDOW MECHANISM

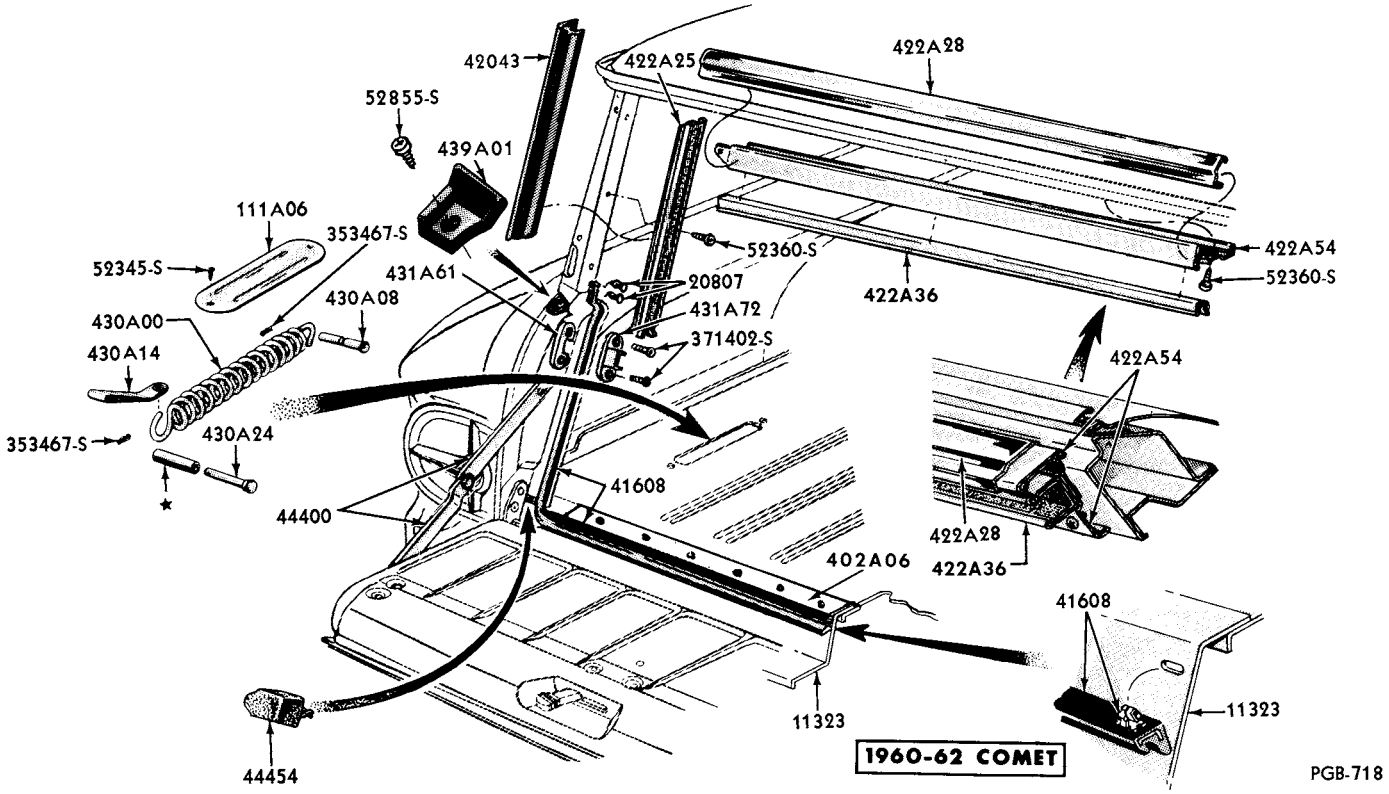

TAILGATE and RELATED PARTS

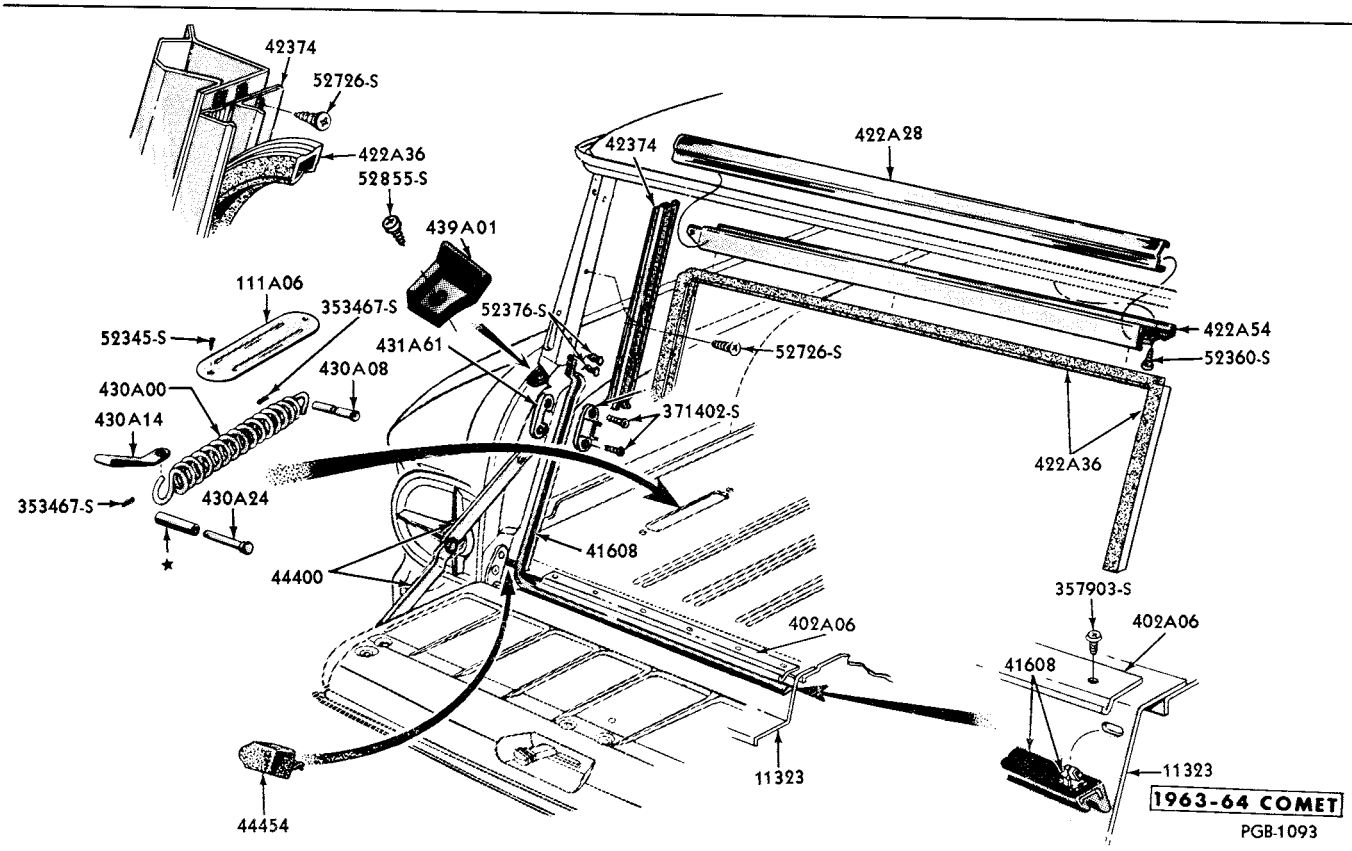

TAILGATE WEATHERSTRIPS and TRIM

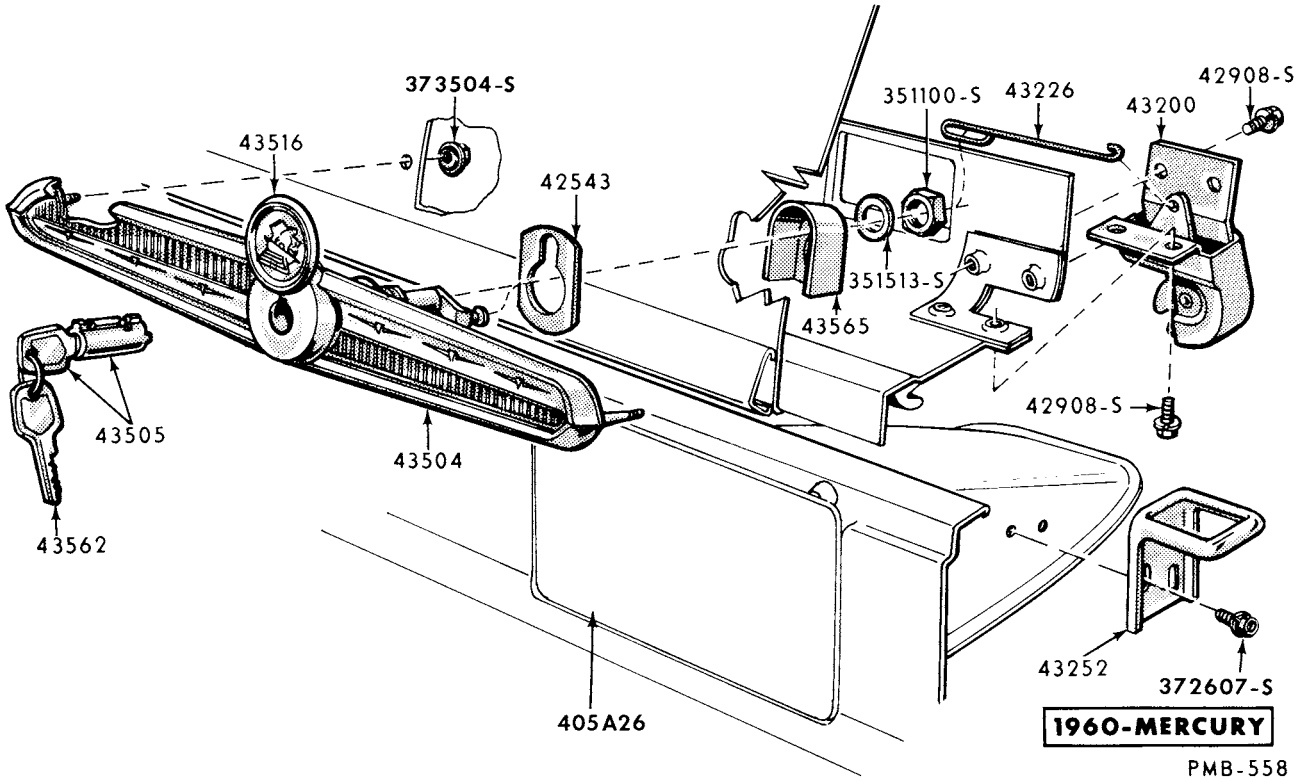

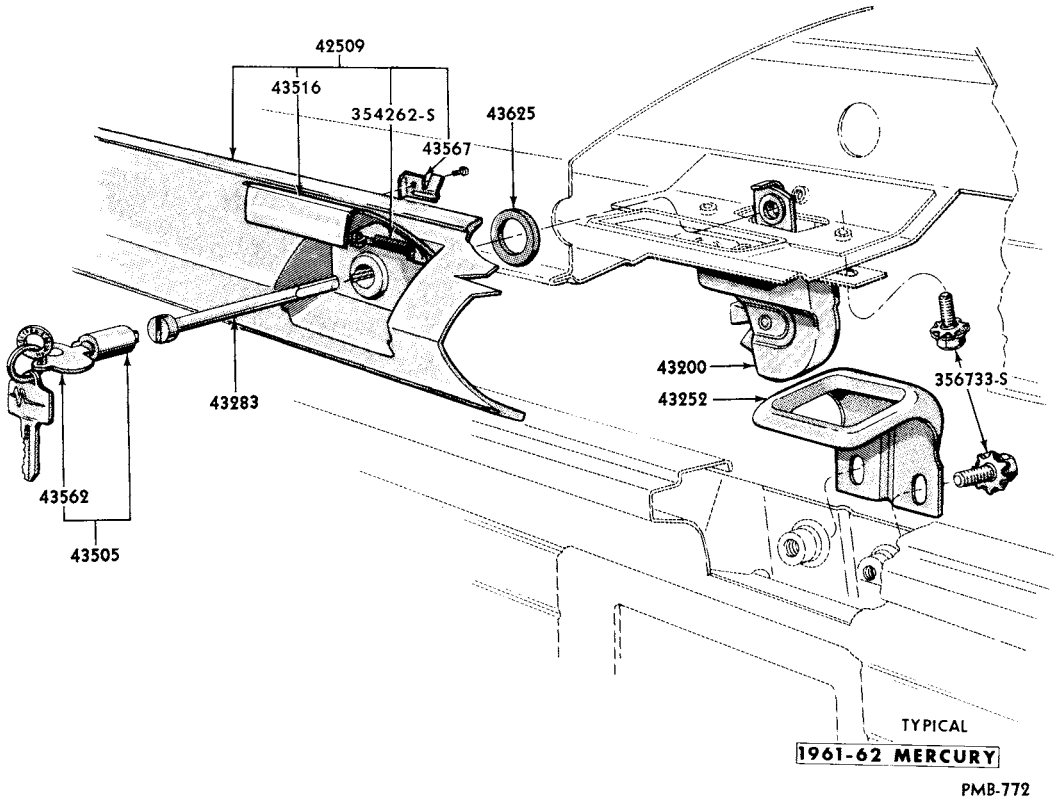

LUGGAGE COMPARTMENT DOOR LOCK MECHANISM

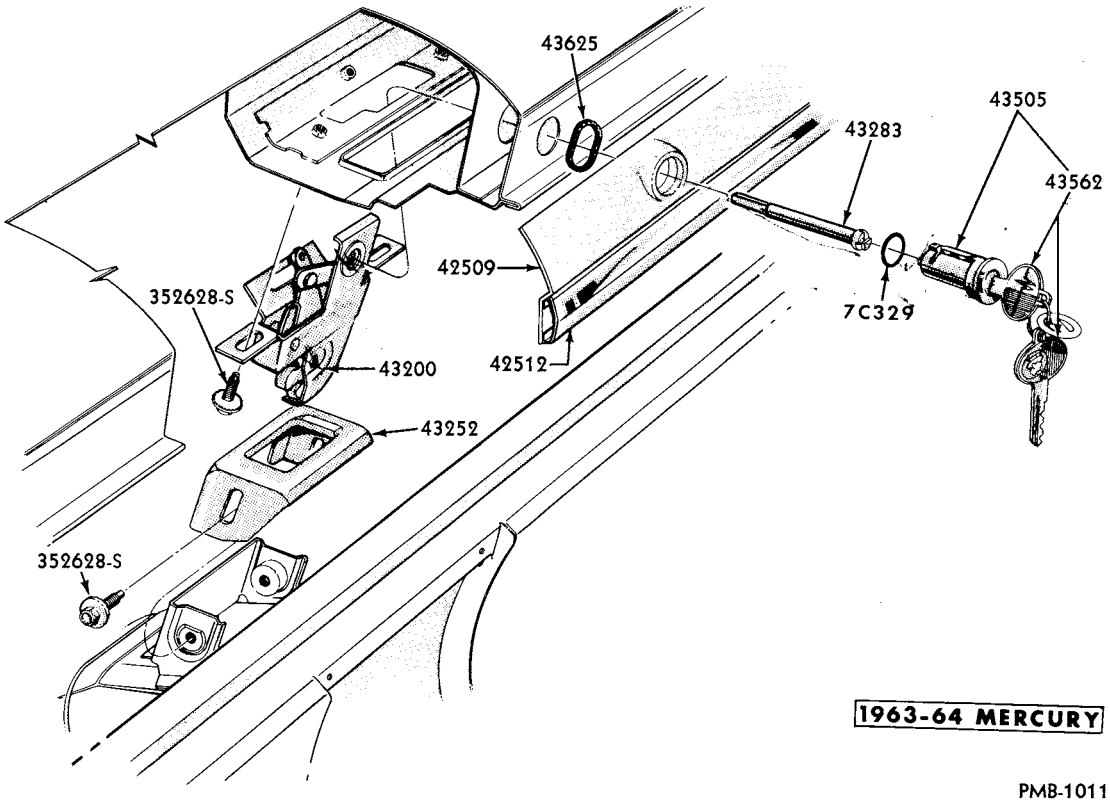

LUGGAGE COMPARTMENT DOOR LOCK MECHANISM

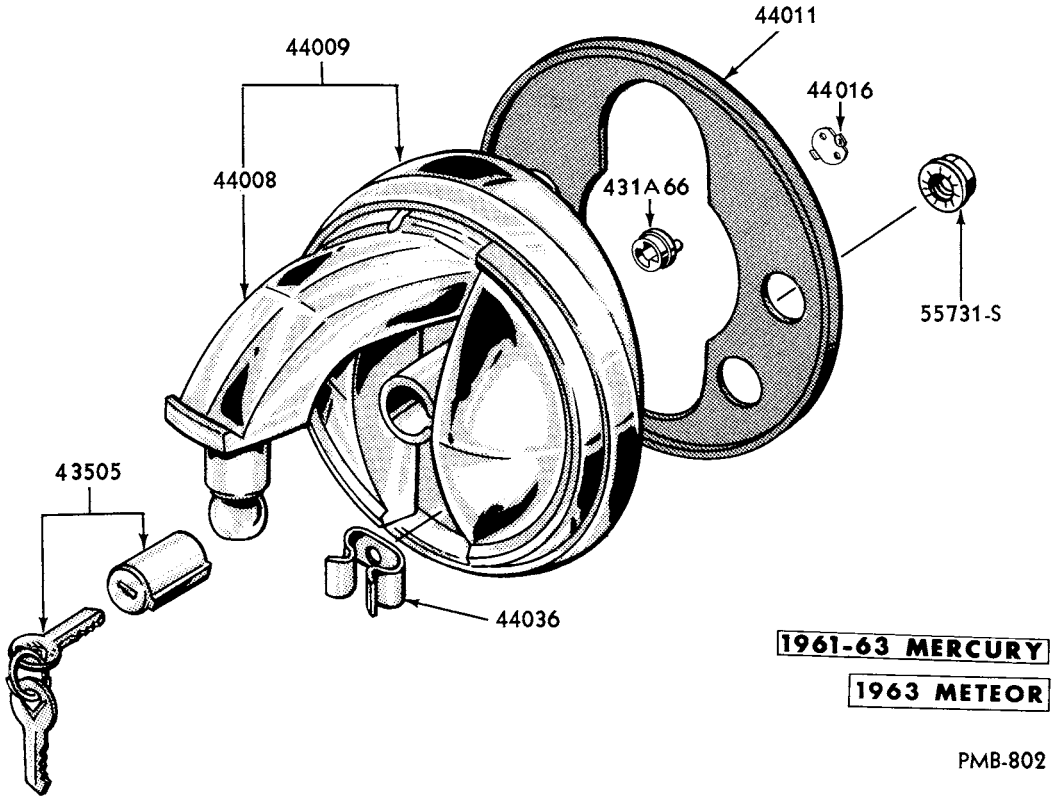

TAILGATE HANDLE - MANUAL

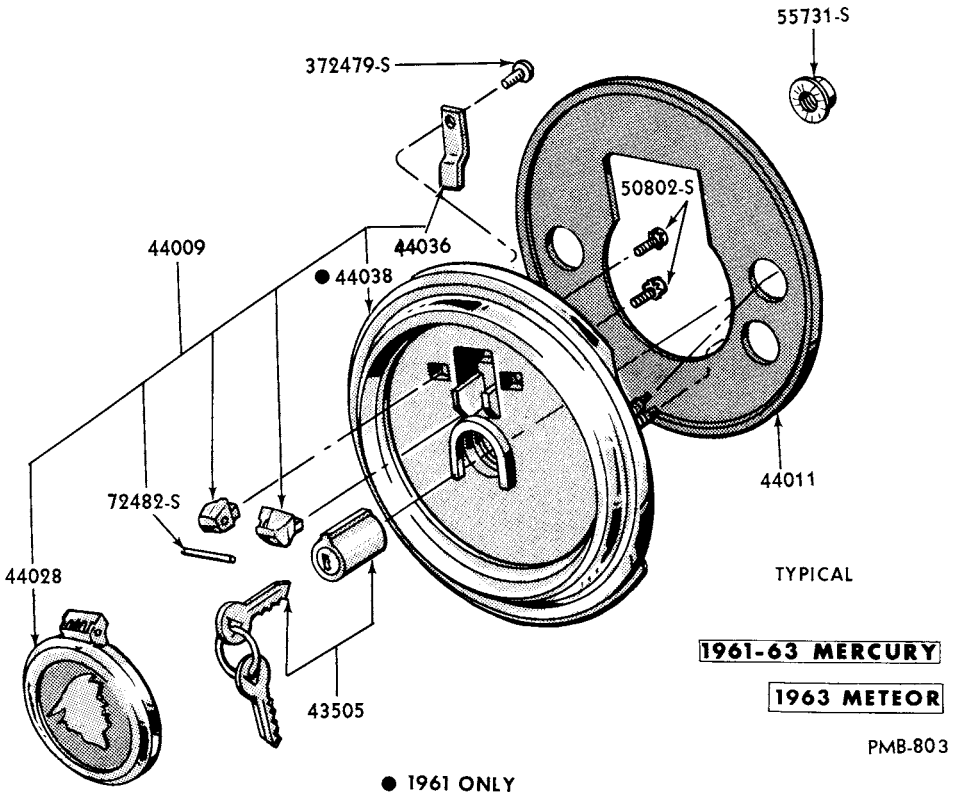

TAILGATE HANDLE - ELECTRIC

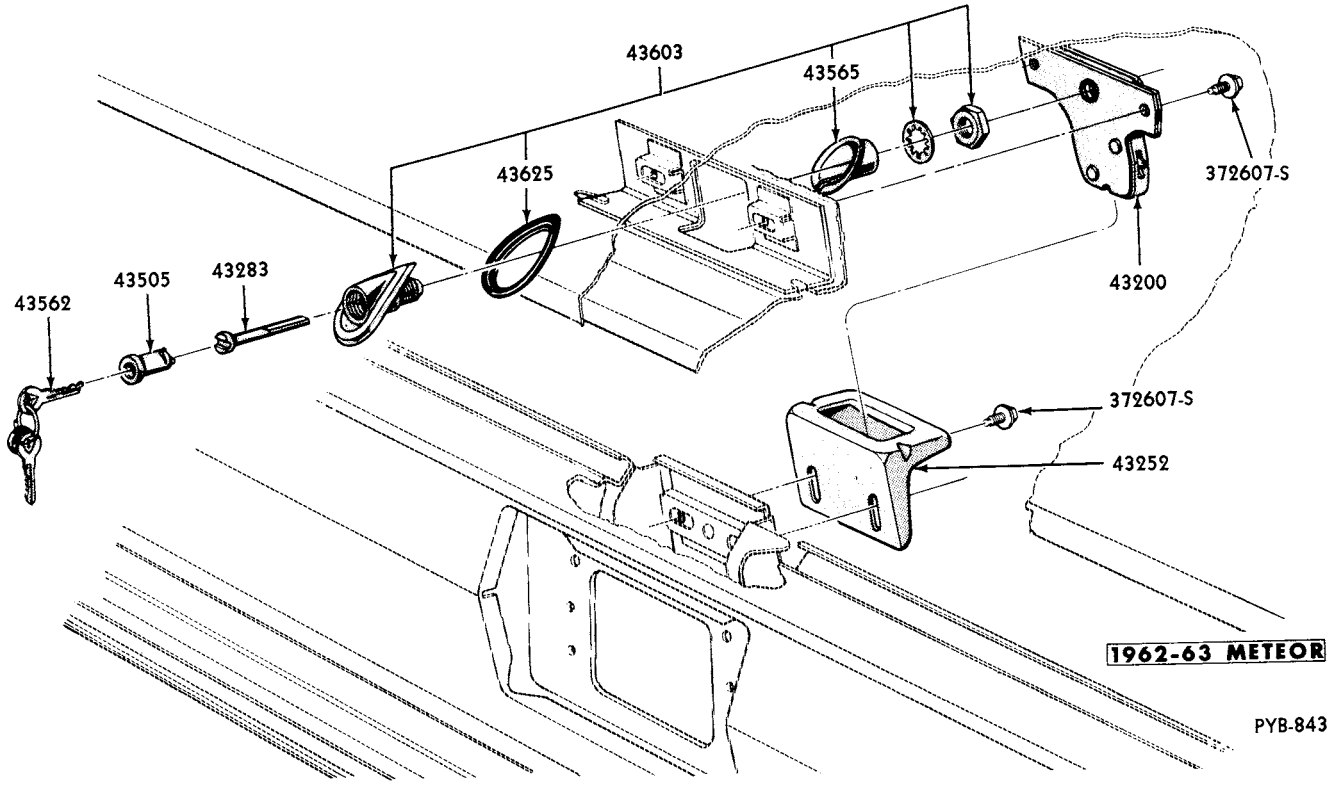

LUGGAGE COMPARTMENT DOOR LOCK MECHANISM

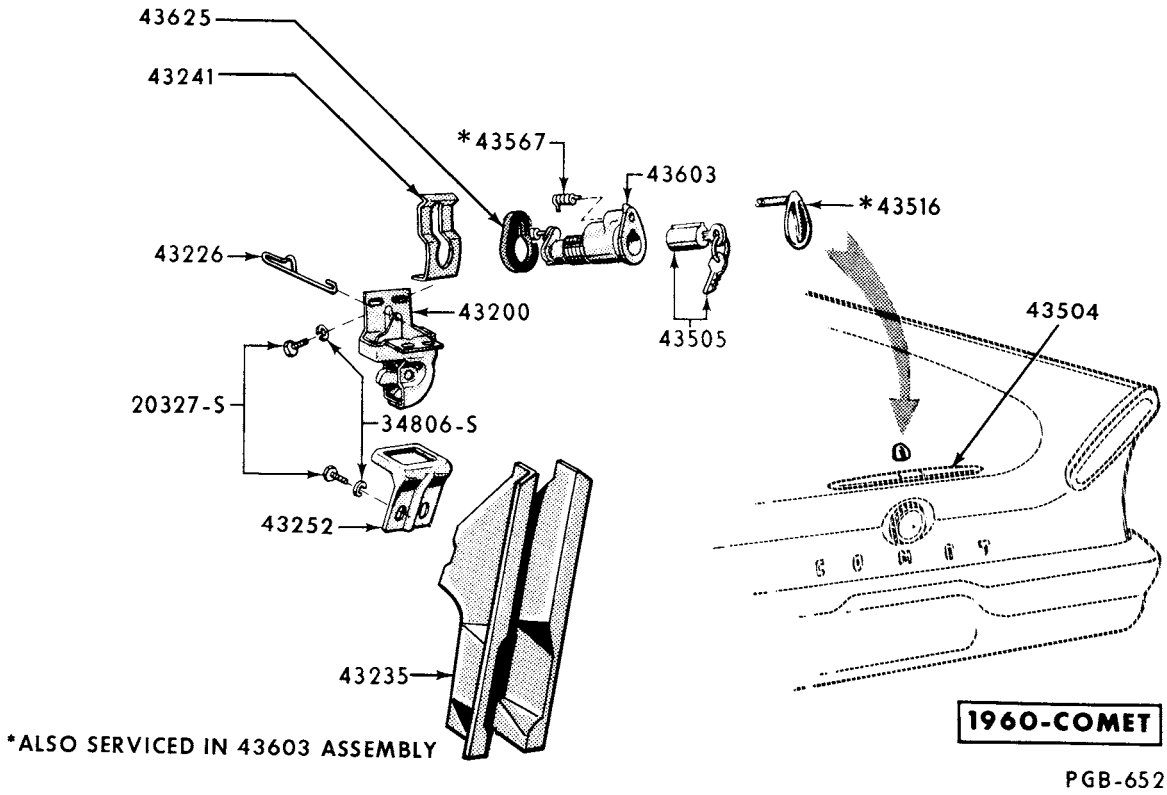

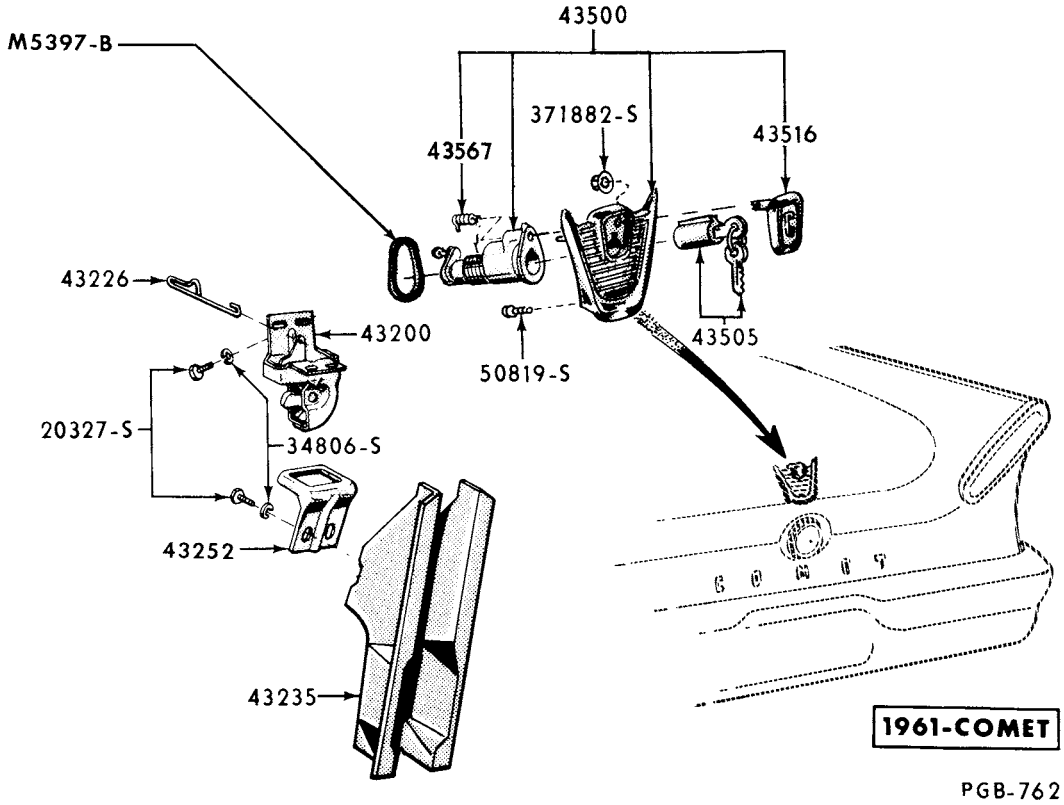

LUGGAGE COMPARTMENT DOOR LOCK MECHANISM

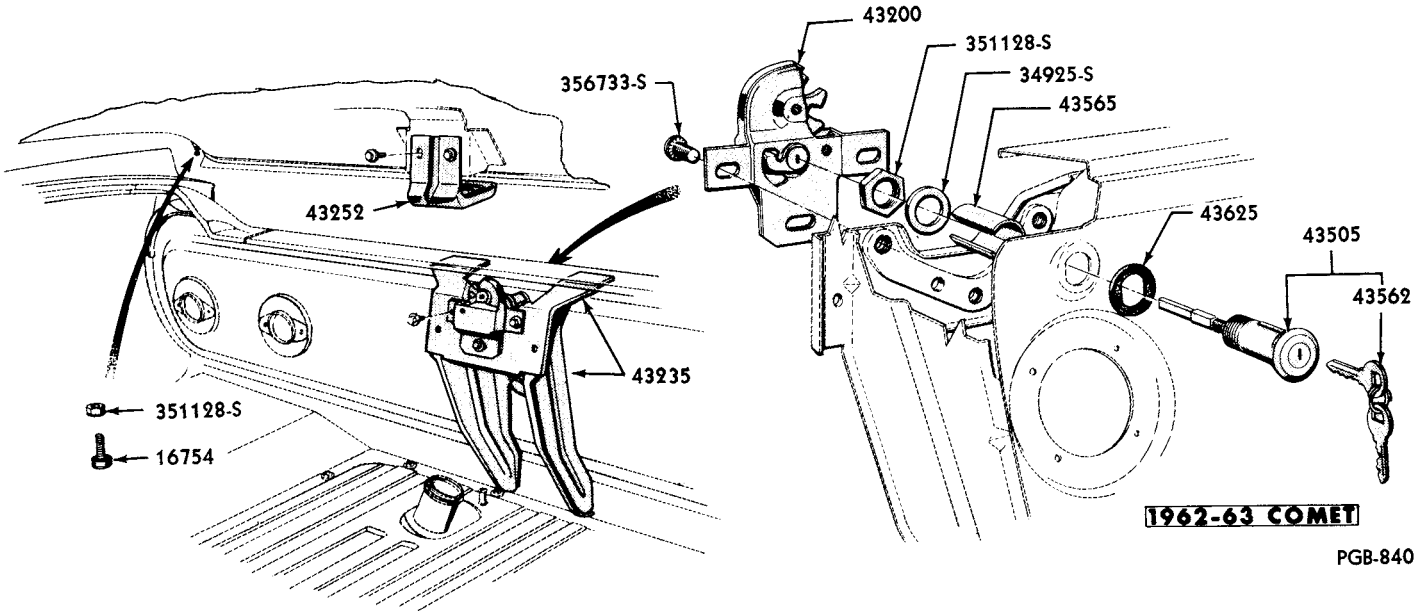

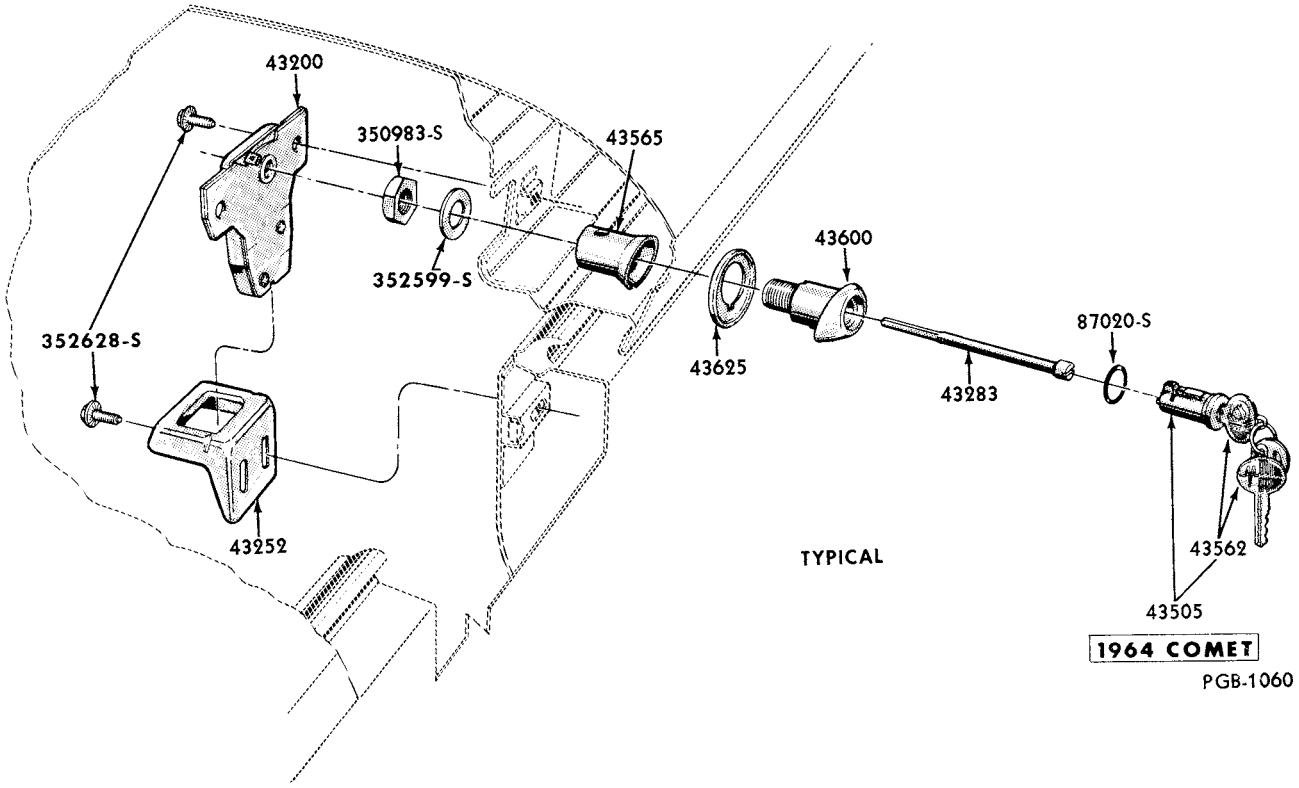

LUGGAGE COMPARTMENT DOOR LOCK MECHANISM

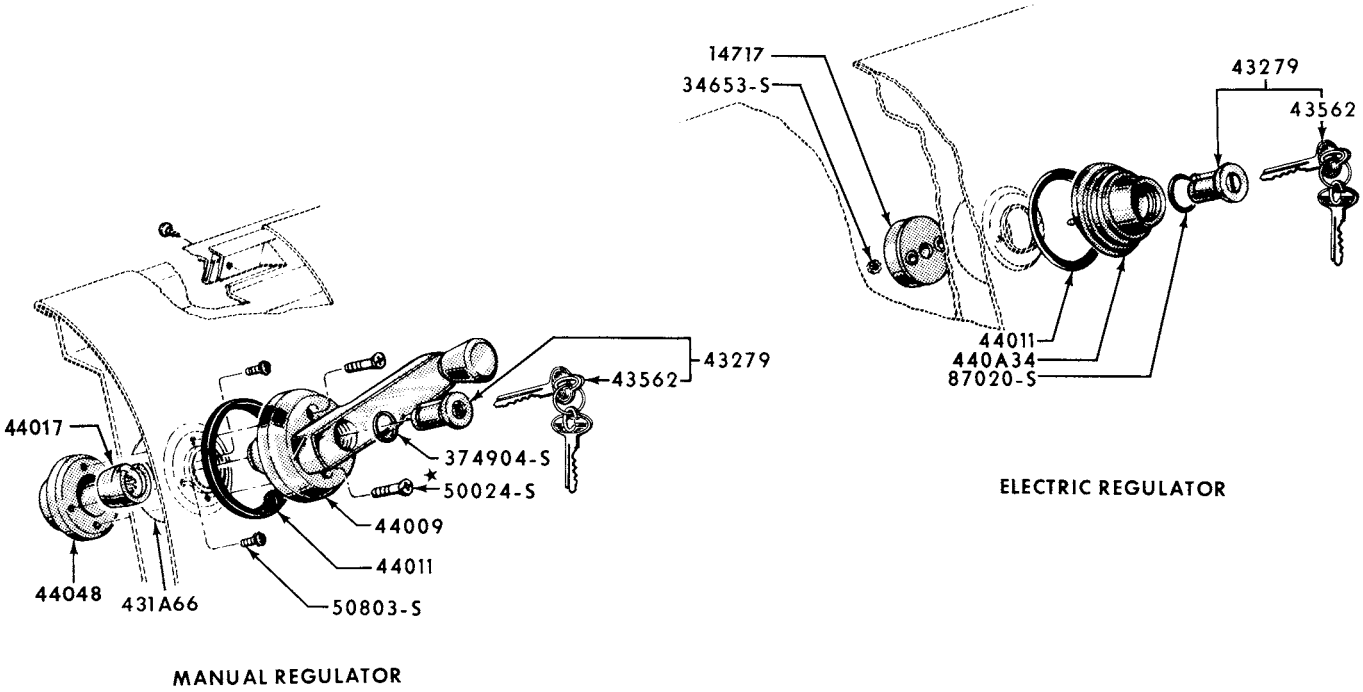

TAILGATE HANDLES - MANUAL & ELECTRICAL

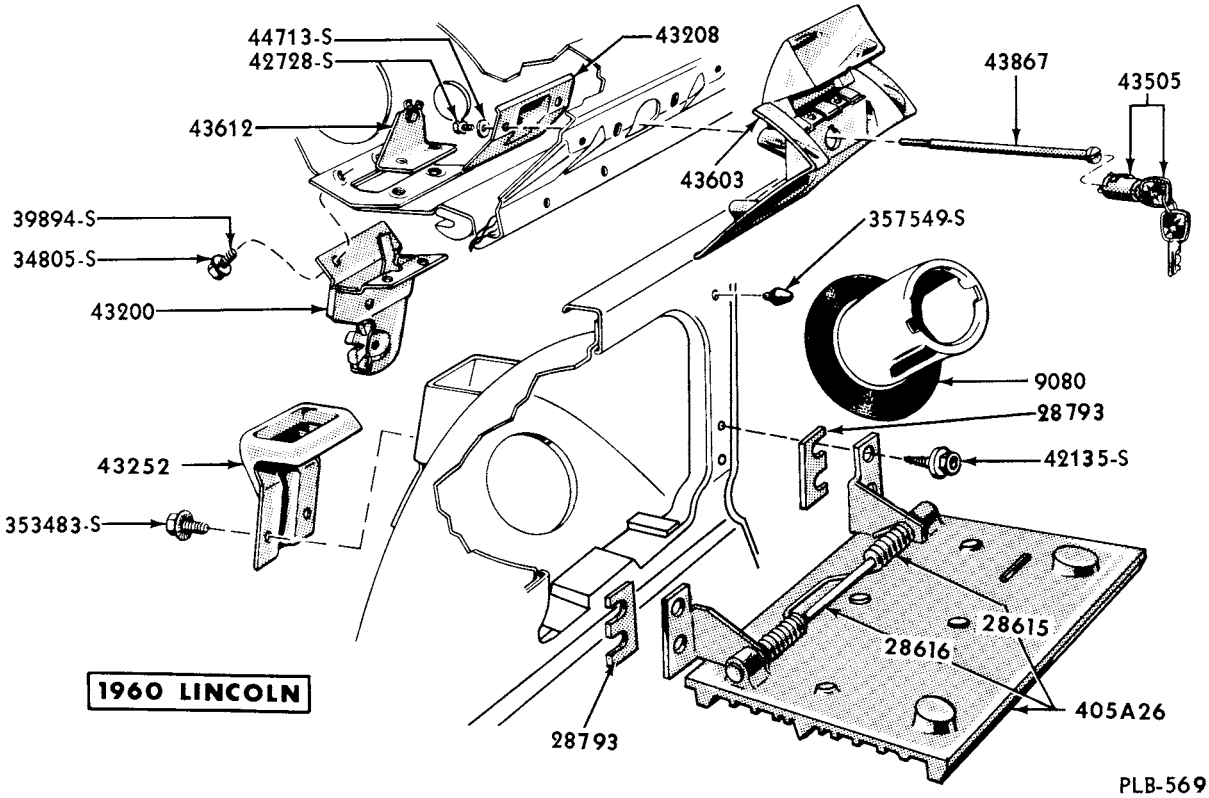

LUGGAGE COMPARTMENT DOOR LOCK MECHANISM

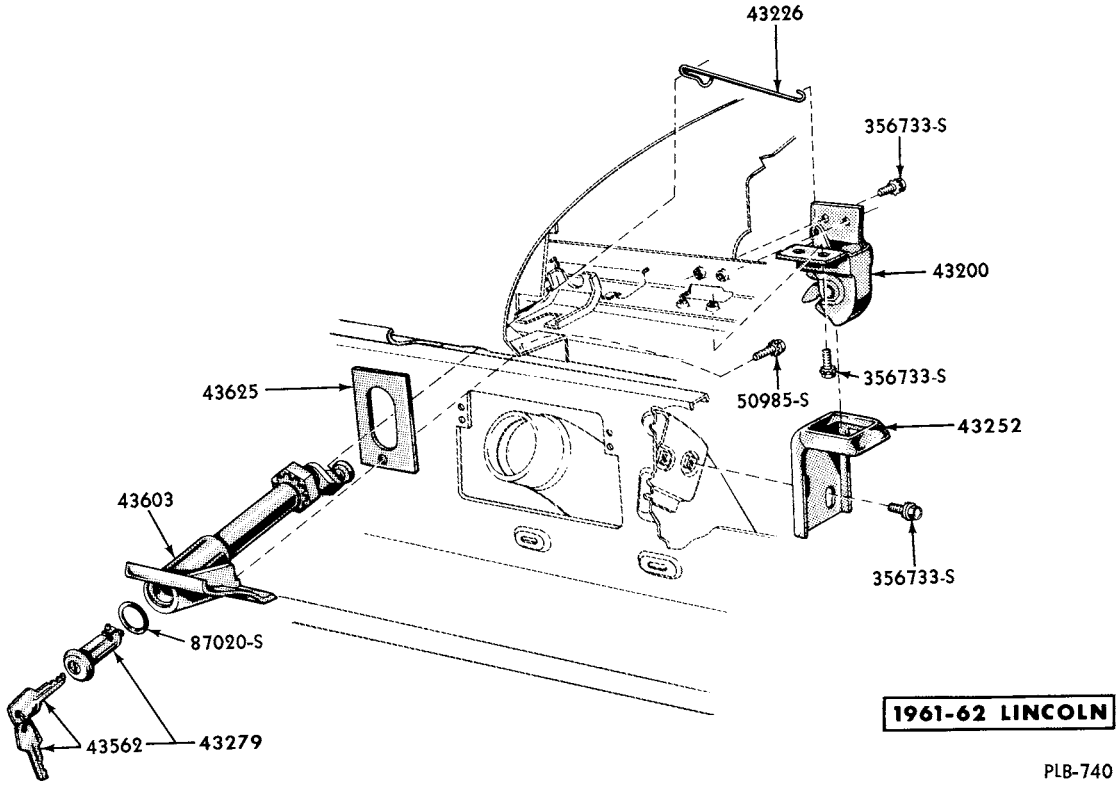

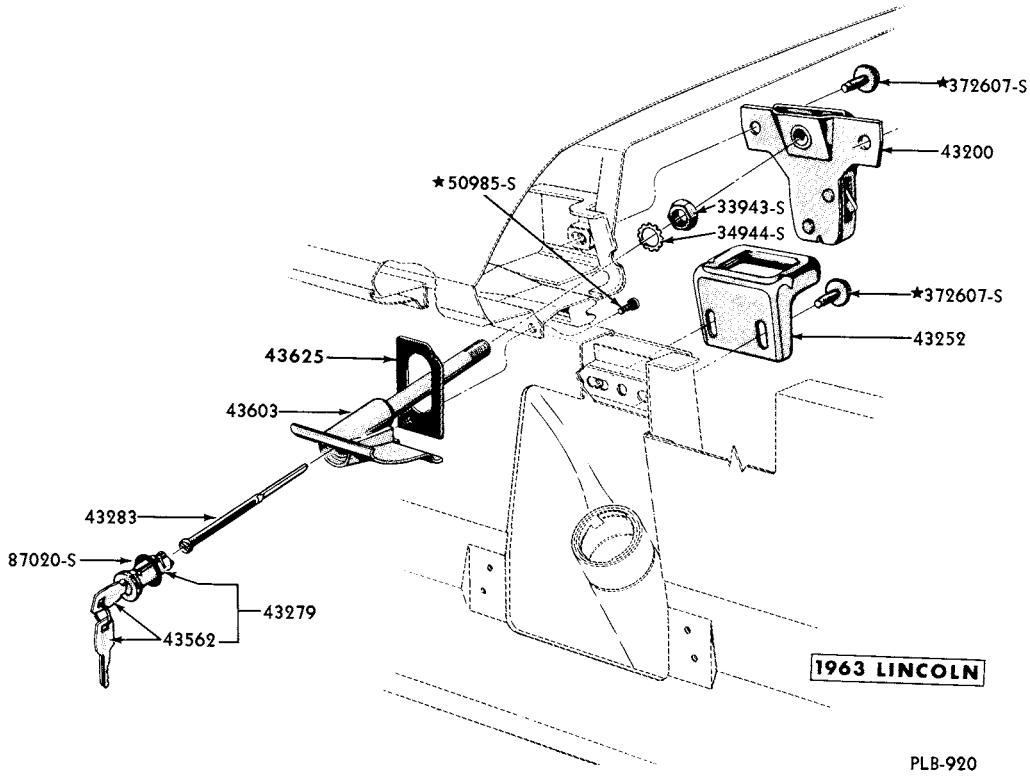

LUGGAGE COMPARTMENT DOOR LOCK MECHANISM

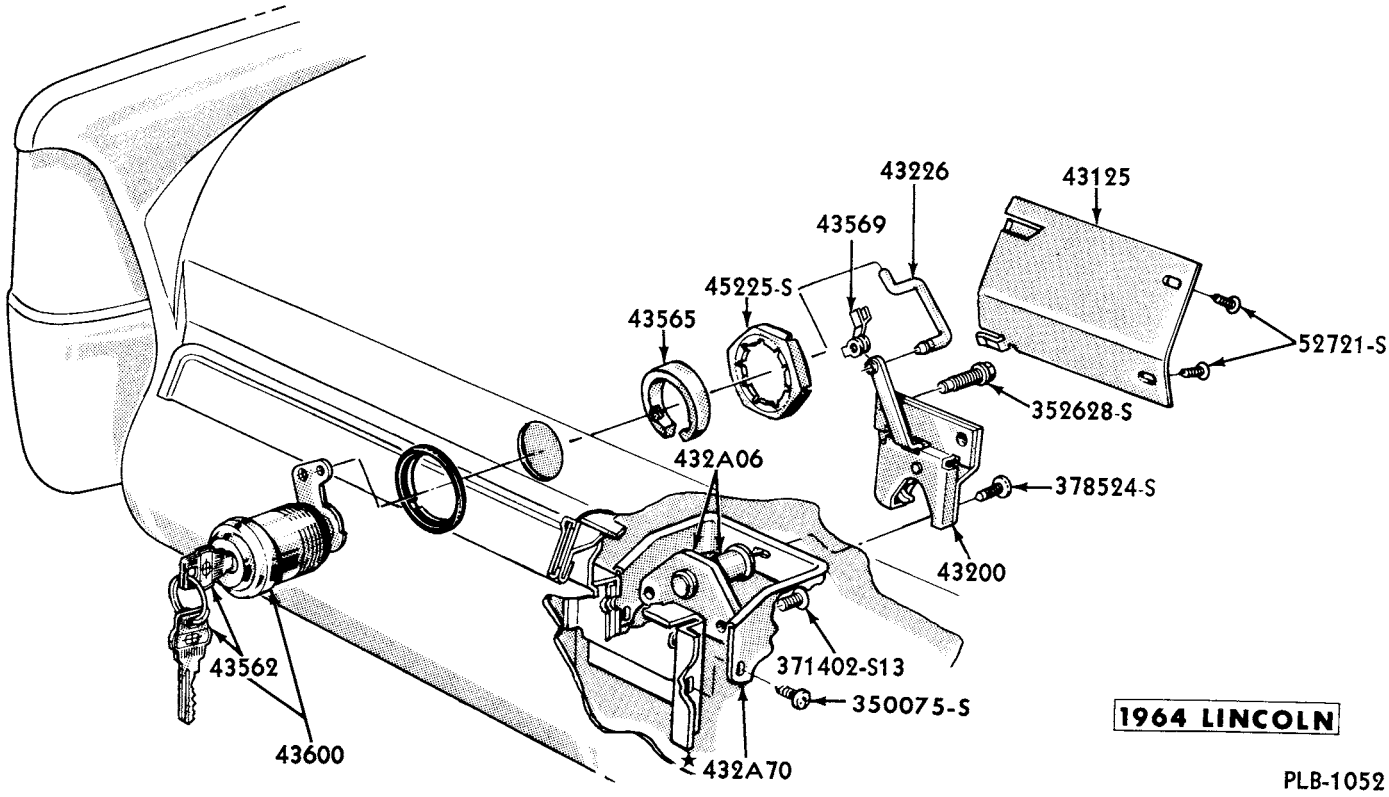

LUGGAGE COMPARTMENT DOOR LOCK MECHANISM

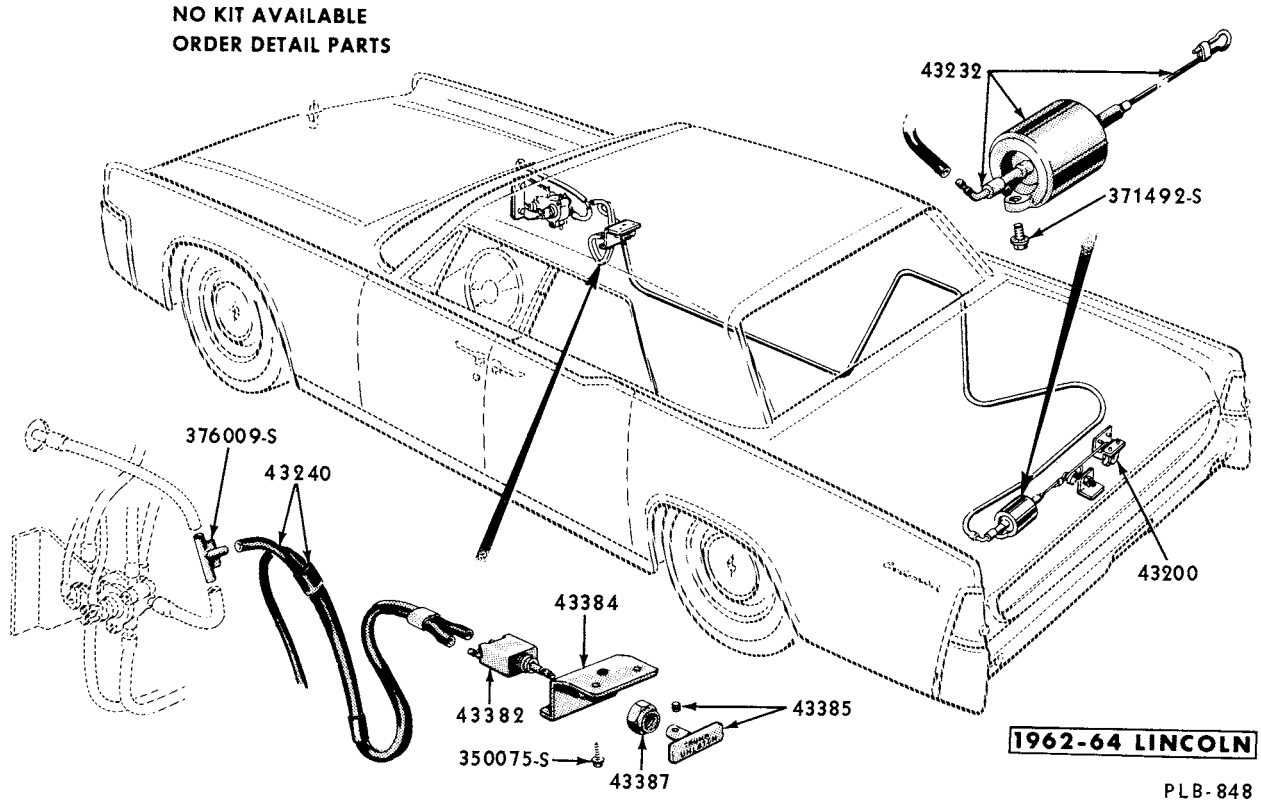

LUGGAGE COMPARTMENT DOOR VACUUM LOCK and RELATED PARTS

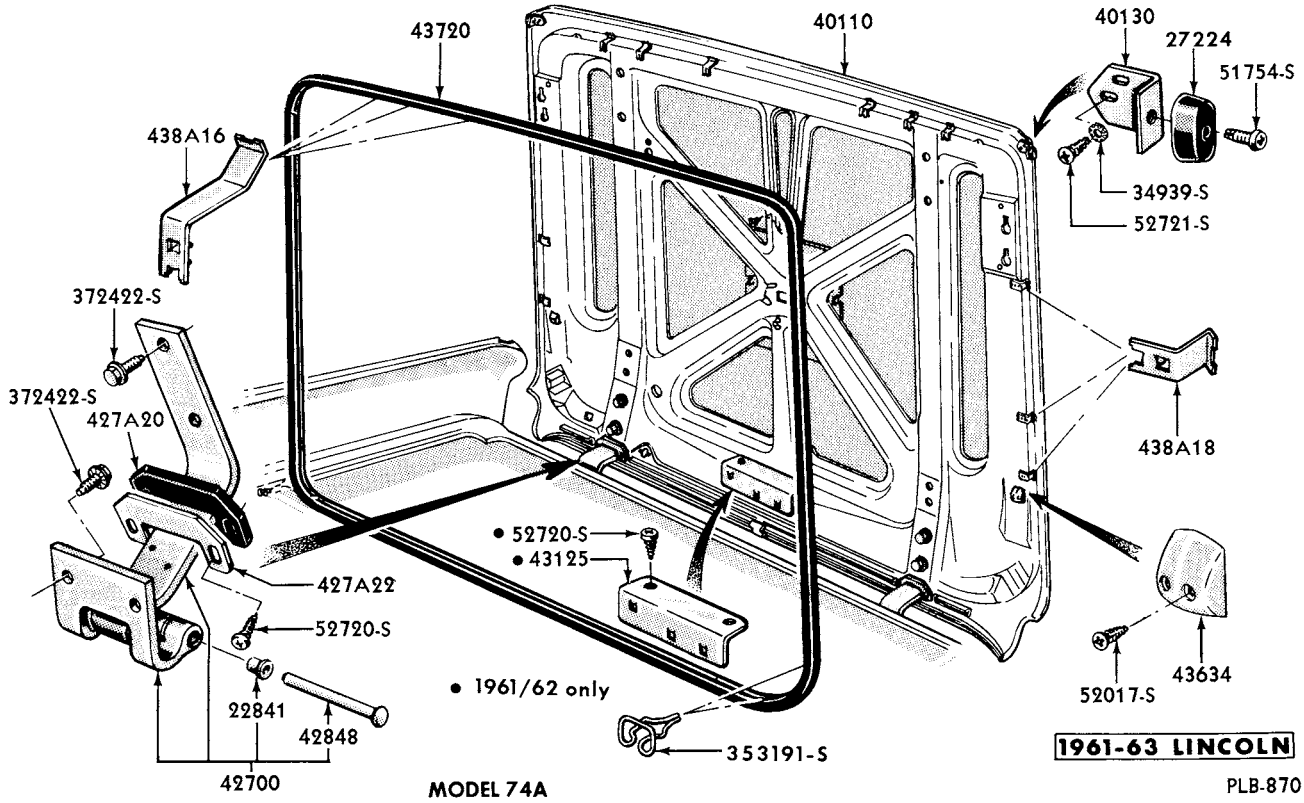

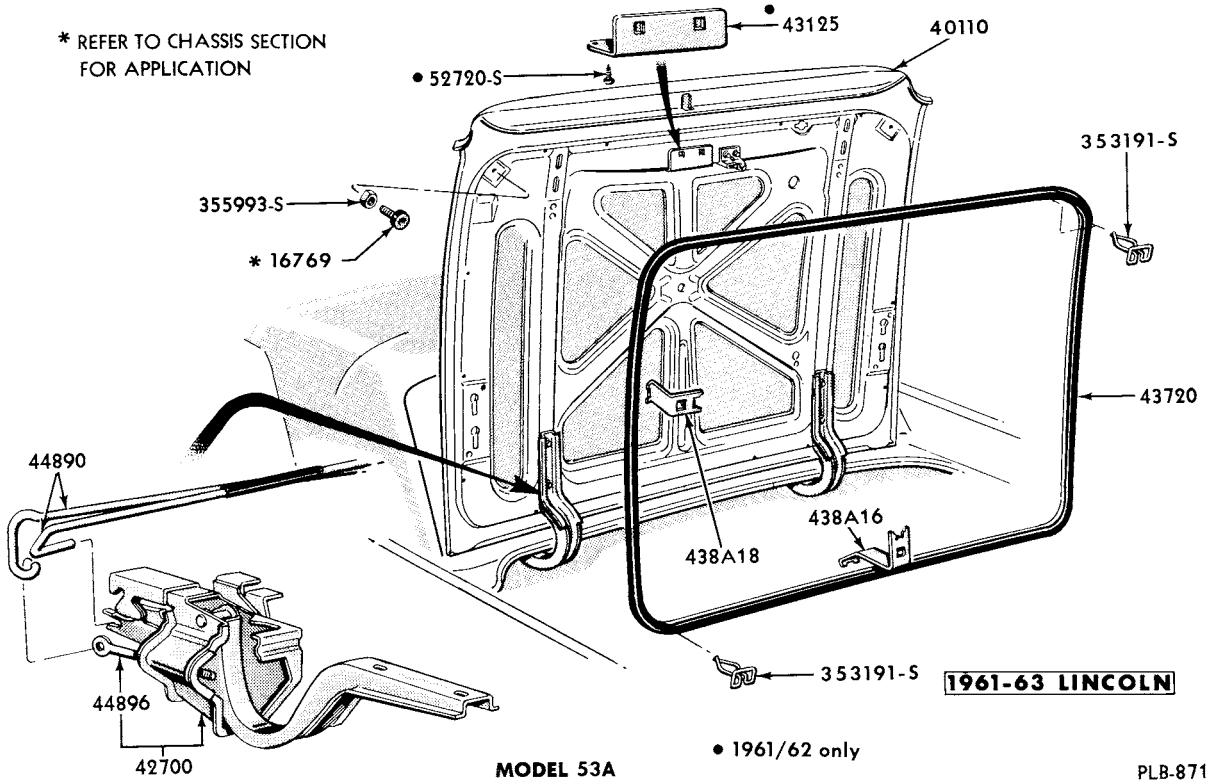

LUGGAGE COMPARTMENT DOOR and RELATED PARTS

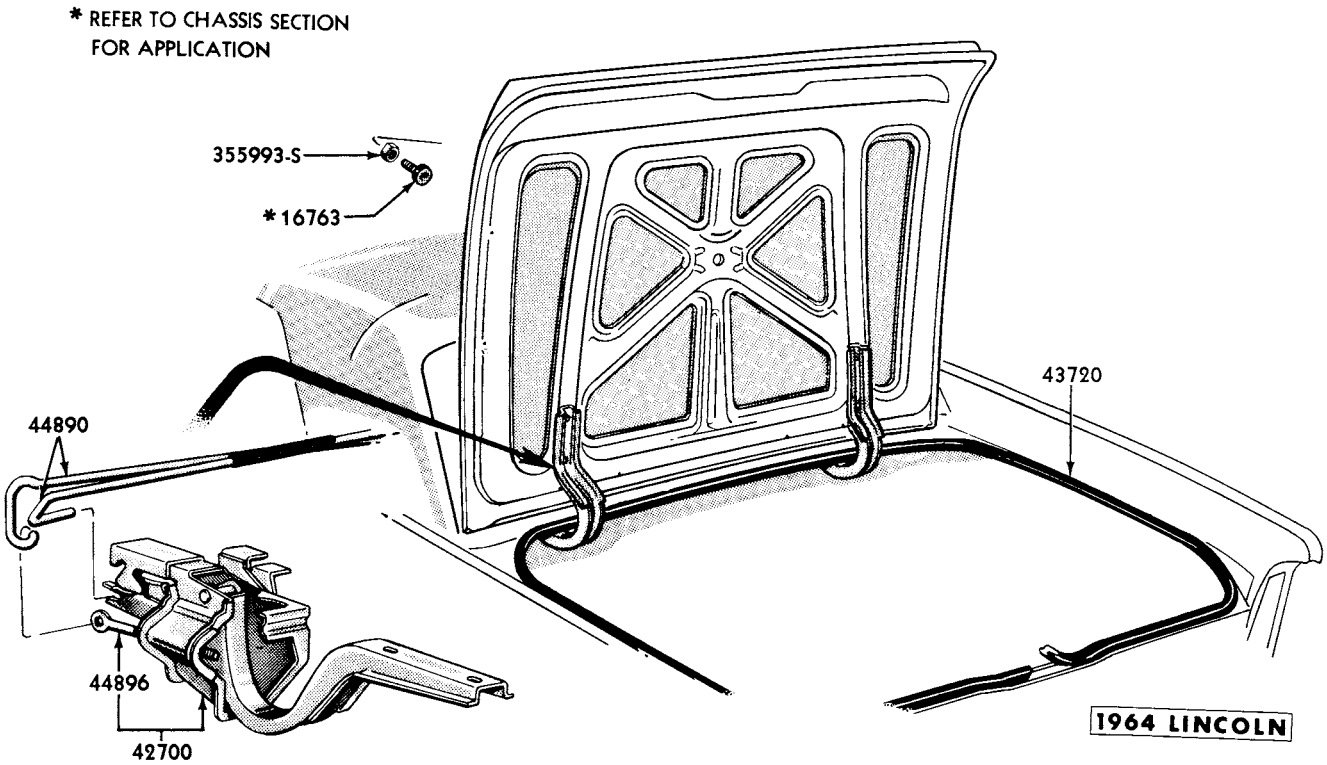

PLB-1148

LUGGAGE COMPARTMENT DOOR and RELATED PARTS - MODEL 53

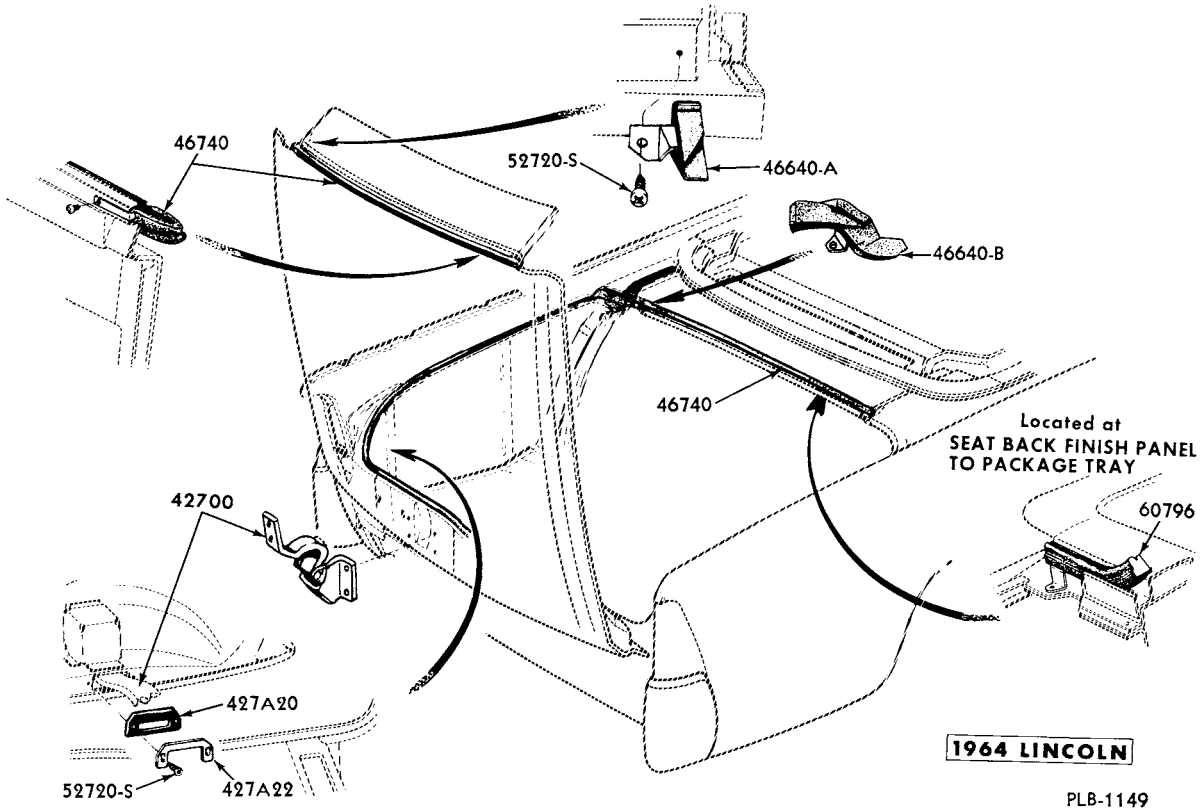

PLB-1149

LUGGAGE COMPARTMENT DOOR WEATHERSTRIPS - MODEL 74

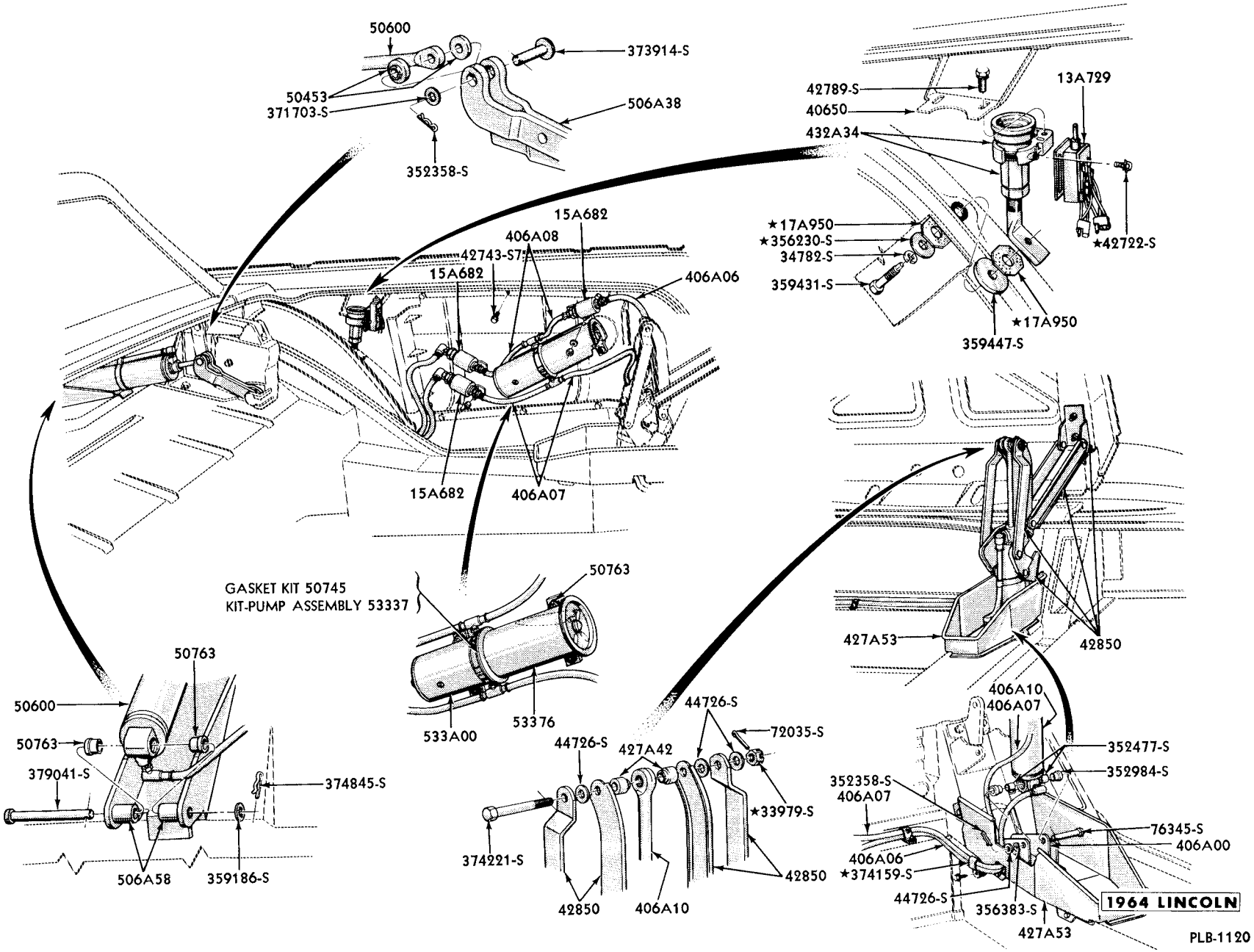

LUGGAGE COMPARTMENT DOOR and FOLDING TOP LIFT MECHANISM - MODEL 74

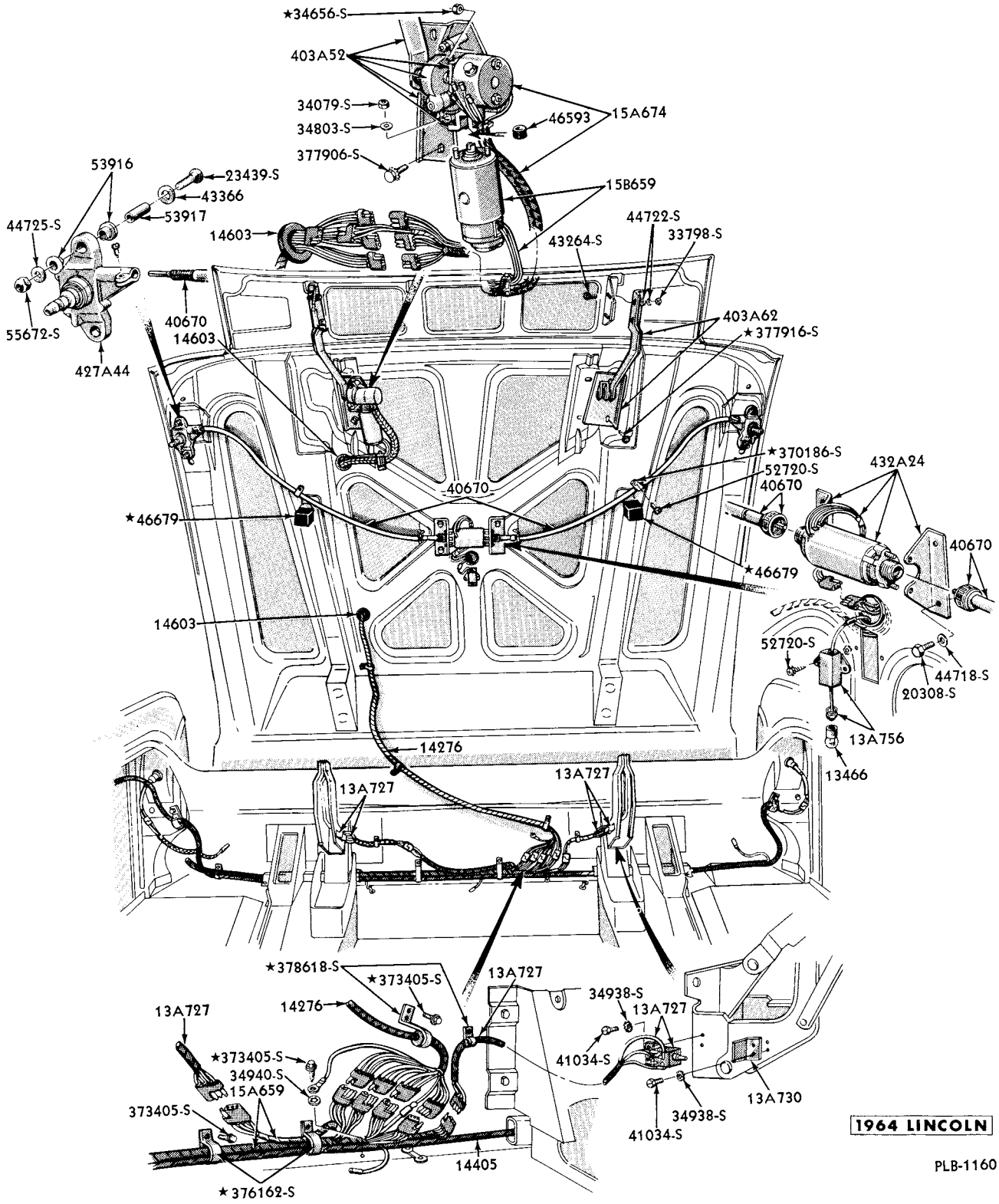

LUGGAGE COMPARTMENT DOOR UPPER BACK FINISH PANEL - MECHANISM

GROUP AND PART NUMBER	DESCRIPTION, SIZE, ETC.	NO. REQ'D	MODEL OR ENGINE CUBIC INCH DISPLACEMENT	VEHICLE CODE	YEAR 19____
40040	SCREEN (REAR WINDOW) STATION WAGON				
C2RZ 6240040-A		1	71	A	62/64
C2RZ 6240040-B		1	59,71	C	62/64
40104-5	MOULDING (LUGGAGE COMPARTMENT DOOR) LOWER CENTER				
C1VB 5740104-D	R.H. - rustless steel (Δ)	1	53	D	61/63
C1VB 5740105-D	L.H. - rustless steel (Δ)	1	53	D	61/63
C1VB 7440104-C	Rustless steel (Δ)	1	74	D	61/63
Δ Package also includes -					
(3 or 6) C1VB-5740106-C spacer	(3 or 6) 376364-S101 screw-No. 8-18 x 1"				
40108-9	MOULDING (LUGGAGE COMPARTMENT DOOR) LOWER END				
C1VB 5740108-A	R.H. - chrome finish (Δ)	1	All	D	61/63
C1VB 5740109-A	L.H. - chrome finish (Δ)	1	All	D	61/63
Δ Package also includes -					
(1) 359764-S screw	(1) 373696-S screw				
40110	DOOR (LUGGAGE COMPARTMENT)				
COMB 6440110-C		1	All except 77	A	60
C1MB 6340110-A		1	58,64,76	A	61
C1MY 6240110-A	Less holes	1	54,62,65,75	A	61/64
C1MY 6340110-A	Less holes	1	58,64,76	A	61
		1	57,63,76	A	62/64
C3YY 6240110-A		1	54,62,65	B	62/63
C1GB 6240110-B		1	54,62	C	60/61
C2GY 6240110-A		1	54,62,76	C	62/63
C4GY 6240110-A		1	All except 71	C	64
COLB 6340110-B		1	All	D	60
C2VY 5740110-A		1	53	D	61/62
C2VY 7440110-A		1	74	D	61/62
C3VY 5740110-A		1	53	D	63
C3VY 7440110-A		1	74	D	63
C4VY 5340110-A		1	53	D	64
C4VY 7440110-A		1	74	D	64
40130	BRACKET (LUGGAGE COMPARTMENT DOOR BUMPER)				
C1VY 7440130-A	(a)	2	74	D	61/63
B9S 6320922-A	Bumper-rubber	2	a		
34939-S8	Lockwasher-steel-No. 10	2	a		
52721-S8	Screw-pan hd. cr. rec.-No. 10-16 x 3/8"	2	a		
402A06	RETAINER (TAILGATE LOWER WEATHERSTRIP)				
C3AZ 71402A06-A	44" long	1	71	A	63/64
C3OZ 71402A06-A	48" long	1	71	B	63
C3DZ 59402A06-A	47" long	1	71	C	63/64
40228-9	REFER TO GROUP 423A18-9				
40242	MOULDING (TAILGATE OUTSIDE BELT)				
COMB 5640242-A	Rustless steel - 44-3/4" long	1	77B	A	60
40242	MOULDING (BACK BELT)				
PB9M 7640242-A	Rustless steel - 41-7/8" (a)	1	76	A	60
COMB 77425A00-A	Retainer	5	a		

GROUP AND PART NUMBER	DESCRIPTION, SIZE, ETC.	NO. REQ'D	MODEL OR ENGINE CUBIC INCH DISPLACEMENT	VEHICLE CODE	YEAR 19____
40248	RETAINER (BACK BELT MOULDING)				
C3AZ 6340248-B	Use with 423A20 moulding at center	3	63	A	63
C3AZ 6340248-C	Use with 423A20 moulding at outer location	2	63	A	63
C3AZ 6340248-D	Use with 423A20 moulding at intermediate location	2	63	A	63
		5	63C, D	A	64
C3DZ 6340248-A	Use with C3DZ-63423A20-1-A moulding	6	63	C	64
40274	BRACE (LOWER BACK PANEL) TO FLOOR				
C1MB 6240274-A		2	All except 71	A	61
C2MB 6240274-A		2	All except 71	A	62
40282	LETTERS (LOWER BACK PANEL)				
C1KB 6240282-S	"C"	1	54, 62	C	60
C1KB 6240282-L	"O"	1	54, 62	C	60
C1KB 6240282-T	"M"	1	54, 62	C	60
C1KB 6240282-N	"E"	1	54, 62	C	60
C1KB 6240282-U	"T"	1	54, 62	C	60
C1KB 7140282-E	"C"	1	59, 71	C	60/61
C1KB 7140282-F	"O"	1	59, 71	C	60/61
C1KB 7140282-G	"M"	1	59, 71	C	60/61
C1KB 7140282-H	"E"	1	59, 71	C	60/61
C1KB 7140282-J	"T"	1	59, 71	C	60/61
C2GY 7140282-A	"M" (Δ)	1	71C	C	62/63
		1	71D	C	63
C2GY 7140282-B	"E" (Δ)	1	71C	C	62/63
		1	71D	C	63
C2GY 7140282-C	"R" (Δ)	2	71C	C	62/63
		2	71D	C	63
C2GY 7140282-D	"C" (Δ)	1	71C	C	62/63
		1	71D	C	63
C2GY 7140282-E	"U" (Δ)	1	71C	C	62/63
		1	71D	C	63
C2GY 7140282-F	"Y" (Δ)	1	71C	C	62/63
		1	71D	C	63

Δ Package also includes -

(1) 373504-S7 nut and washer-self-tap. -3/16"

403A06-7	EXTENSION (UPPER BACK PANEL)				
C1VB 57403A06-B	R.H.	1	53	D	61/63
C1VB 57403A07-B	L.H.	1	53	D	61/63
40307	SPACER (LOWER BACK PANEL ORNAMENT)				
COLB 6340307-B		8	All	D	60
40310	PANEL (UPPER BACK)				
COMB 6340310-C		1	57, 63	A	60
COMB 6440310-C		1	58, 64	A	60
COMB 7640310-B		1	76	A	60
C1AB 6240310-A		1	54, 62, 65, 75	A	61
C1AB 6440310-A		1	58, 64	A	61
C1AB 7640310-A		1	76	A	61/62
C2MB 6240310-A		1	All except 71, 76	A	62
C3MY 6340310-B		1	63	A	63
C3MY 5440310-A	Use with retractable window	1	All except 63, 71, 76	A	63
		1	54, 62, 65, 75	A	64
C3MY 7640310-A		1	76A	A	63
		1	76	A	64
C4MY 5740310-A		1	57	A	64

CONTINUED ON NEXT PAGE

GROUP AND PART NUMBER	DESCRIPTION, SIZE, ETC.	NO. REQ'D	MODEL OR ENGINE CUBIC INCH DISPLACEMENT	VEHICLE CODE	YEAR 19____
40310	PANEL (UPPER BACK) CONTINUED				
C3MY 6340310-C		1	63	A	64
C2OZ 6240310-A		1	54,62	B	62/63
C3OZ 6540310-A		1	65A	B	63
C1KB 6240310-C		1	54, 62	C	60/61
C3GY 6240310-A		1	54,62	C	62/63
C3GY 6340310-A		1	63	C	63
C3GY 7640310-A		1	76	C	63
C4DZ 6240310-A	Use on vehicles built prior to 1-27-64	1	54,62	C	64
C4DZ-6240310-B	Use on vehicles built after 1-26-64	1	54,62	C	64
C4DZ 6340310-A		1	63	C	64
C4DZ 7640310-A		1	76	C	64
COLB 6340310-A	(a)	1	53, 57, 63	D	60
COLB 6540310-A	(a)	1	54, 65, 75	D	60
BAK 6840310-A	(a)	1	68	D	60
C1VY 5740310-C		1	53	D	61/62
C3VY 5740310-A		1	53	D	63
C4VY 5340310-A	Includes drain trough	1	53	D	64
52726-S13	Screw-pan hd. cr. rec. -No. 8-15 x 1/2"	2	a		
358902-S	Nut and washer assy. -1/4"-20	9	a		
359160-S2	Bolt and retainer-1/4"-20	9	a		
403B14-5	BRACKET (LUGGAGE COMPARTMENT DOOR OPENING SIDE REINFORCEMENT TO WHEELHOUSE)				
C2MB 62403B14-A	R. H.	1	All except 71	A	62
C2MB 62403B15-A	L. H.	1	All except 71	A	62
C3MY 62403B14-A	R. H.	1	54,62,65,75	A	63/64
C3MY 62403B15-A	L. H.	1	54,62,65,75	A	63/64
40316-7	ORNAMENT (LOWER BACK PANEL)				
COLB 6340316-B	R. H. (a)	1	53, 57, 63	D	60
COLB 6340317-A	L. H. (a)	1	53, 57, 63	D	60
COLB 6540316-A	R. H. (a)	1	54, 65, 68, 75	D	60
COLB 6540317-A	L. H. (a)	1	54, 65, 68, 75	D	60
COLB 6340307-B	Spacer	4	a		
359440-S100	Nut and washer assy.	8	a		
40320	REFER TO GROUP 40324				
40324	PANEL (LOWER BACK)				
PB9M 5640320-A		1	77	A	60
COMB 6440324-A		1	All except 77	A	60
C1MB 6240324-B	Add (8) 3/8" diameter holes for models 58,64	1	All except 71	A	61
C1MB 7140324-D		1	71	A	61
C2MY 6240320-A	With holes	1	All except 71	A	62
C3AZ 7140324-A		1	71	A	62/64
C3MY 6240320-A		1	All except 71	A	63
C4MY 6240320-A		1	All except 71	A	64
C2YY 6240320-A	Less holes	1	All except 71	B	62/63
C1KB 6240324-D		1	54, 62	C	60/61
C2GB 6240324-A	With holes	1	54,62,63,76	C	62/63
C4GY 6240320-A		1	All except 71	C	64
COLB 6340324-A	In prime	1	53, 57, 63	D	60
COLB 6540324-A	In prime	1	54, 65, 68, 75	D	60
C1VB 5740324-B		1	All	D	61/62
C3VY 5740324-A		1	All	D	63
C4VY 5340320-A		1	53	D	64
C4VY 7440320-A		1	74	D	64

GROUP AND PART NUMBER	DESCRIPTION, SIZE, ETC.	NO. REQ'D	MODEL OR ENGINE CUBIC INCH DISPLACEMENT	VEHICLE CODE	YEAR 19____
40328	HOUSING (FUEL TANK FILLER PIPE)				
C4VY 5340328-A	(a)	1	All	D	64
378359-S	Bumper-fuel door-7/16" dia. x 21/32" long	2	a		
40330-1	EXTENSION (LOWER BACK PANEL)				
COLB 6340330-B	R. H. - in prime	1	All	D	60
COLB 6340331-B	L. H. - in prime	1	All	D	60
C1VB 5740330-A	R. H. - in prime	1	All	D	61/63
C1VB 5740331-A	L. H. - in prime	1	All	D	61/63
403A40-1	BRACE (LOWER BACK PANEL - UPPER FLANGE TO FLOOR)				
C2YY 62403A40-A	R. H.	1	All except 71	B	62/63
C2YY 62403A41-A	L. H.	1	All except 71	B	62/63
403A52	LIFT ASSEMBLY (UPPER BACK FINISH PANEL) LESS MOTOR				
C3VY 74403A52-A	L. H. side - for R. H. see group 403A62	1	74	D	61/63
C4VY 74403A52-A	R. H. side - for L. H. side see group 403A62	1	74	D	64
403A62	HINGE ASSEMBLY (UPPER BACK FINISH PANEL)				
C1VB 74403A62-A	R. H. side - for L. H. see group 403A52	1	74	D	61/63
C4VY 74403A62-A	L. H. side - for R. H. side see group 403A52	1	74	D	64
40364-5	GUSSET (REAR CORNER PILLAR)				
C2DZ 5940364-A	R. H.	1	59, 71	C	60/64
C2DZ 5940365-A	L. H.	1	59, 71	C	60/64
40368	RETAINER (FENDER, DOORS, QUARTERS, ROOF & LOWER BACK PANEL)				
C1MB 5440368-A	Lower back panel	6	54B, 65B, 75B, 76	A	61
C1MB 7140368-A	Lower back panel	6	71	A	61
C2OZ 6240368-A	Front fenders, front and rear doors and quarter mouldings	AR	54A, 57A, 62A, 63A, 76A	A	64
	(4) use at quarter panel	4	71A, B, E	B	63
	Roof moulding - use with R. P. O. exterior trim	2	63C, D	C	64
403A76-7	PANEL (LOWER BACK FINISH)				
COMB 5840560-C	R. H. - rustless steel - 5/32" x 21/64" ribs - BLACK paint - use with COMB-5841804-B	1	57B, 58B, 63B	A	60
COMB 5840561-C	L. H. - rustless steel - 5/32" x 21/64" ribs - BLACK paint - use with COMB-5841804-B	1	57B, 58B, 63B	A	60
COMB 6340560-B	R. H. - rustless steel - 7/64" x 1/4" ribs	1	57F, 63F, 76D	A	60
COMB 6340561-B	L. H. - rustless steel - 7/64" x 1/4" ribs	1	57F, 63F, 76D	A	60
C1MB 54403A76-B	R. H. - rustless steel	1	54, 62, 65, 75, 76	A	61
C1MB 54403A77-B	L. H. - rustless steel	1	54, 62, 65, 75, 76	A	61
C2MY 5440584-A	R. H. - use with back-up lights (b)	1	All except 71	A	62
C2MY 5440585-A	L. H. - use with back-up lights (b)	1	All except 71	A	62
C2MY 6240584-A	R. H. - use without back-up lights (b)	1	54, 62, 65, 75	A	62
C2MY 6240585-A	L. H. - use without back-up lights (b)	1	54, 62, 65, 75	A	62
C1MB 71425A34-A	Rustless steel - 54" long	1	71	A	62
C3MY 71425A34-B	Aluminum - 42-5/16" long	1	71	A	63
	Package also includes -				
(5) C3MY-7142525-A retainer	(5) 375890-S100 nut-sleeve-1/8"				
C4MY 54403A76-A	Aluminum - 77" long (§)	1	54F, 57A, C, F, 63C, F, 65C, F 75F, 76C, F	A	64
C4MY 62403A76-A	Aluminum - 77" long (§)	1	54A, B, 57D, 62A, 63A, D 65A, B, 76A	A	64
	§ Package also includes -				
(6) 52721-S8	screw-pan hd. -No. 10-16 x 3/8"	(9) 376387-S101-No. 8 x 3/8"			

CONTINUED ON NEXT PAGE

GROUP AND PART NUMBER	DESCRIPTION, SIZE, ETC.	NO. REQ'D	MODEL OR ENGINE CUBIC INCH DISPLACEMENT	VEHICLE CODE	YEAR 19____
403A76-7	PANEL (LOWER BACK FINISH) CONTINUED				
C4MY 71425A34-A	54" long	1	71	A	64
C2YY 62403A76-A	R.H. - aluminum - when used with back-up lights cut necessary holes (Δ)	1	54, 62	B	62
C2YY 62403A77-A	L.H. - aluminum - when used with back-up lights cut necessary holes (Δ)	1	54, 62	B	62
Δ Package also includes - (8) C2YY-62423A62-A retainer (8) 375690-S nut					
C3YY 62403A76-A	R.H. - aluminum - when used with back-up lights cut necessary holes (‡)	1	54, 62, 65	B	63
C3YY 62403A77-A	L.H. - aluminum - when used with back-up lights cut necessary holes (‡)	1	54, 62, 65	B	63
‡ Package also includes - (8) C2YY-62423A62-A retainer (8) 375689-S nut					
C3YY 71425A34-A		1	71	B	63
Package also includes - (9) C3OZ-7142527-A retainer (13) 376792-S nut-No.10-24					
C1GB 62403A76-A	Rustless steel	1	54, 62	C	61
C2GY 62403A76-A	R.H. - with horizontal painted stripes - holes to be added for back-up lights - use on vehicles built prior to 4-23-62 (a)	1	54, 62A, B	C	62
C2GY 62403A77-A	L.H. - with horizontal painted stripes - holes to be added for back-up lights - use on vehicles built prior to 4-23-62 (a)	1	54, 62A, B	C	62
C2GY 62403A76-B	R.H. - bright finish - holes to be added for back-up lights - use on vehicles built after 4-22-62 (a)	1	54, 62A, B	C	62
C2GY 62403A77-B	L.H. - bright finish - holes to be added for back-up lights - use on vehicles built after 4-22-62 (a)	1	54, 62A, B	C	62
C2GY 62403A76-C	R.H. (a)	1	62C, 63C, 76B	C	62/63
C2GY 62403A77-C	L.H. (a)	1	62C, 63C, 76B	C	62/63
C2GY 59425A34-A	Aluminum - 47-1/2" long	1	59, 71	C	62
C3GY 59425A34-A	Aluminum - 48-13/16" long	1	59, 71A, B	C	63
Package also includes - (2) 376378-S101 screw-No.8-18 x 3/8"					
C3GY 62403A76-A	R.H. - not used with back-up lamp (†)	1	54, 62A, B, 63B, 76A	C	63
C3GY 62403A77-A	L.H. - not used with back-up lamp (†)	1	54, 62A, B, 63B, 76A	C	63
C3GY 62403A76-B	R.H. - use with back-up lamp (†)	1	54, 62A, B, 63B, 76A	C	63
C3GY 62403A77-B	L.H. - use with back-up lamp (†)	1	54, 62A, B, 63B, 76A	C	63
† Package also includes - (7) 375964-S7 nut-No.10-24 (7) 376364-S101 screw-No.8-18 x 1" (1) C2GY-6242444-A retainer					
C4GY 62423A40-A	Aluminum - 14-5/8" long	2	All except 71	C	64
Package also includes - (6) C4DZ-62423A64-A retainer (6) 377767-S nut-crown-No.10-24					
C4GY 71425A34-A	48-3/4" long	1	71	C	64
C1VB 57423A40-A		2	53	D	61
C2VY 57423A40-B		2	53	D	62
Package also includes - (7) 354397-S100 nut & washer-No.10-24					
C3VY 57423A40-A	R.H. (⊟)	1	53	D	63
C3VY 57423A41-A	L.H. (⊟)	1	53	D	63
⊟ Package also includes - (7) 359606-S8 nut-No.10-24					

CONTINUED ON NEXT PAGE

GROUP AND PART NUMBER	DESCRIPTION, SIZE, ETC.	NO. REQ'D	MODEL OR ENGINE CUBIC INCH DISPLACEMENT	VEHICLE CODE	YEAR 19____
403A76-7	PANEL (LOWER BACK FINISH) CONTINUED				
C2GY 6242444-A	Retainer	7	a		
356499-S	Washer-flat-asphalt sealer-3/16" x 9/16" x 1/8"	1	b		
375689-S	Nut-crown-No. 10-self-threading	5	b		
375964-S	Nut-crown-No. 10-24	7	a		
403A78	PANEL (UPPER BACK FINISH)				
C1VB 74403A78-A	In prime	1	74	D	61/63
C4VY 74403A78-A	In prime	1	74	D	64
403B86	ORNAMENT (LOWER BACK) INNER				
C3VY 57403B86-A	3-5/8" long	2	All	D	63
	Package also includes -				
(1) C3VB-5742482-A	bushing (1) 373503-S7 nut-3/16"				
403B94	ORNAMENT (LOWER BACK) OUTER				
C3VY 57403B94-A	3-5/16" long	2	All	D	63
	Package also includes -				
(1) C3VB-5742482-A	bushing (1) 373503-S7 nut-3/16"				
40396-7	BRACE (LOWER BACK PANEL)				
PB9M 5640396-A		2	77	A	60
C1MB 7140396-A		2	71	A	61
COLB 6340396-A	In prime	2	All	D	60
C1VB 5740396-A	R.H.	1	53	D	61/63
C1VB 5740397-A	L.H.	1	53	D	61/63
403A98-9	BRACE ASSEMBLY (LOWER BACK PANEL TO FLOOR OUTER)				
C1VB 74403A98-B	R.H. - in prime	1	74	D	61/63
C1VB 74403A99-B	L.H. - in prime	1	74	D	61/63
C4VY 74403A98-A	R.H. - in prime	1	74	D	64
C4VY 74403A99-A	L.H. - in prime	1	74	D	64
40426	BUMPER (TAILGATE)				
C3OZ 7140426-A	(2) for each side (a)	4	71	B	63
52720-S8	Screw-pan hd. cr. rec. tap. -No. 8-18 x 3/8"	8	a		
40427	SHIELD (REAR LICENSE PLATE LAMP)				
C1VB 5740427-A	Rubber	1	All	D	61/62
40462-3	PANEL (REAR CORNER INNER FINISH) LOWER				
COMB 7740463-AP	In prime	1	77	A	60
C1AB 5940462-AP	R.H.	1	71	A	61
C1AB 5940463-AP	L.H.	1	71	A	61
C2MY 7140462-A	R.H. - in prime	1	71	A	62/64
C2MY 7140463-A	L.H. - in prime	1	71	A	62/64
C3OZ 7140462-A	R.H.	1	71	B	63
C3OZ 7140463-B	L.H.	1	71	B	63
CODB 5940462-AP	R.H. - in prime (a)	1	59,71	C	60/63
CODB 5940463-AP	L.H. - in prime (a)	1	59,71	C	60/64
52342-S13	Screw-oval hd. cr. rec. tap. -No. 6-20 x 1/2"	3	a		
52376-S13	Screw-oval hd. cr. rec. tap. -No. 8-15 x 1"	4	a		
40497	SHIM (FUEL FILLER OPENING LID)				
COMB 6440497-A		2	All except 77	A	60
405A08	HINGE ASSEMBLY (FUEL FILLER OPENING LID)				
C1VB 57405A08-C		1	All	D	61/62

GROUP AND PART NUMBER	DESCRIPTION, SIZE, ETC.	NO. REQ'D	MODEL OR ENGINE CUBIC INCH DISPLACEMENT	VEHICLE CODE	YEAR 19____
40513	PANEL (FUEL FILLER OPENING LID APPLIQUE)				
COMB 5841804-B	Rustless steel - 5/32" x 21/64" ribs - BLACK paint ☆ ☆ Use with COMB-5840560-1-C	1	57B,58B,63B	A	60
COMB 6341804-A	Rustless steel - 7/64" x 1/4" ribs - BLACK paint	1	57F, 63F, 76D	A	60
C1MB 5440513-A	Rustless steel (a)	1	54,62,65,75,76	A	61
C2MB 6240513-A	Aluminum	1	All except 71	A	62
C2YY 6240513-A	Aluminum	1	All	B	62
C3YY 6240513-A	Aluminum - snaps over door assembly	1	All except 71	B	63
C3VY 5740513-A	Rustless steel	1	All	D	63
C1MB 5441015-A	Retainer	2	a		
34655-S8	Nut and washer-No. 10-24	2	a		
405A19	REFER TO GROUP 405A26				
40520	BRACKET (UPPER BACK PANEL MOUNTING)				
COLB 6340520-B	(a)	2	53, 57, 63	D	60
45132-S2	Nut-spring-No. 8-15	2	a		
52726-S13	Screw-pan hd. cr. rec. -No. 8-15 x 1/2"	2	a		
405A22	BUMPER (FUEL FILLER OPENING LID)				
COMB 6428631-A	Rubber	2	All except 77	A	60
		2	All except 71	A	61
C1MB 71405A22-A	Rubber	AR	71	A	61
		AR	All	A B	62
C1VB 57405A22-A	Rubber	1	All	D	61/63
405A24-5	SPRING (FUEL FILLER OPENING LID HINGE)				
C1MZ 71405A24-A		2	71	A	61/62
C3MY 62405A24-A		1	All except 71	A	63
C3AZ 71405A24-A	R.H. - painted BLACK	1	71	A	63/64
C3AZ 71405A25-A	L.H. - painted YELLOW	1	71	A	63/64
C4MY 62405A24-A		1	All except 71	A	64
C2OB 62405A24-A		1	All except 71	B	62/63
C4SZ 63405A24-A		1	All	D	64
40526	BUMPER (UPPER BACK PANEL)				
BAK 6840526-A		4	68	D	60
BAK 6840559-A	1-3/4" long	1	68	D	60
405A26	LID (FUEL FILLER OPENING)				
COMB 6428611-A	Add (2) 5/16" holes for models 57, 58, 63, 76 (a)	1	All except 77	A	60
C1MB 62405A26-A	(b)	1	All except 71	A	61
C1MB 71405A26-B	(b)	1	71	A	61/62
C2MB 62405A26-A	(c)	1	All except 71	A	62
C3MY 62405A26-A	Includes finish panel (b)	1	All except 71	A	63
C4AZ 71405A26-A		1	71	A	63/64
C4MY 62405A26-A	Includes finish panel	1	All except 71	A	64
C2YY 62405A26-A	(b)	1	All	B	62/63
C4GY 62405A26-B	Includes finish panel (e)	1	All except 71	C	64
COLB 6328611-A	(d)	1	53, 57, 63	D	60
COLB 6528611-A	(d)	1	54, 65, 68, 75	D	60
C1VB 57405A19-A	Includes ornament	1	All	D	61
C2VY 57405A26-B	Includes ornament	1	All	D	62
C3VY 57405A26-B	Includes finish panel	1	All	D	63
C4VY 53405A26-A	(f)	1	All	D	64

CONTINUED ON NEXT PAGE

GROUP AND PART NUMBER	DESCRIPTION, SIZE, ETC.	NO. REQ'D	MODEL OR ENGINE CUBIC INCH DISPLACEMENT	VEHICLE CODE	YEAR 19____
405A26	LID (FUEL FILLER OPENING) CONTINUED				
COLB 6328793-A	NS-shim-improvise	AR	d		
42135-S8	Screw-hex. washer hd. -No. 12-14 x 5/8"	AR	d		
50998-S7	Screw and spring-lockwasher-pan hd. cr. -No. 10-32 x 5/8"	4	c		
357918-S	Screw and washer-pan hd. -No. 10-24-NC-2A x 5/8"	2	e		
370697-S	Screw-flat hd. cr. rec. -No. 8-15 x 5/8"	2	a		
373284-S7	Screw and washer-pan hd. -No. 12-11 x 5/8"	2	b		
378359-S	Bumper-rubber-7/16" dia. x 21/32" long	2	f		
378744-S	Bumper-rubber-5/8" dia. x 1" long	1	f		
379358-S2	Screw and washer-hex. -washer head-No. 12-24 x 5/8"	2	f		
405B28	SEAL (FUEL TANK FILLER PIPE CENTER HOUSING INNER)				
C4VY 53405B28-A	Rubber	1	All	D	64
405B32	SHIELD (FUEL FILLER OPENING SPLASH)				
C3VY 57405B32-A		1	All	D	63
40540-1	SUPPORT (UPPER BACK PANEL LIFT TO FLOOR BRACKET)				
BAK 6840540-A	R. H.	1	68	D	60
BAK 6840541-A	L. H.	1	68	D	60
40546	COVER (UPPER BACK PANEL TO SEAT BACK OPENING)				
BAK 6840546-A		1	68	D	60
405A48	MOULDING (FUEL FILLER LID)				
C3VY 57405A48-A		1	All	D	63
Package also includes -					
(2) C3VB-5742428-A spacer	(2) 374127-S7 screw-No. 10-24 x 3/8"				
405A52	MOULDING (FUEL FILLER LID FINISH RAIL)				
C1MB 71405A52-A	Rustless steel - 7-9/16" long (a)	1	71B, D	A	61/62
C2MB 7120872-A	Retainer	2	a		
34655-S8	Nut and washer-hex. -No. 10-24	2	a		
40554	RETAINER & CLIP (UPPER BACK PANEL TO SEAT BACK OPENING COVER)				
BAK 6840554-A		3	68	D	60
40558	RETAINER (UPPER BACK PANEL TO SEAT BACK OPENING COVER)				
BAK 6840558-A		2	68	D	60
40559	REFER TO GROUP 40526				
40560-1	REFER TO GROUP 403A76-7				
40562-3	ORNAMENT (UPPER BACK PANEL)				
C3MY 7640562-A	R. H. (Δ)	1	76	A	63/64
C3MY 7640563-A	L. H. (Δ)	1	76	A	63/64
C4MY 5740562-A	(1) for R. H. - (1) for L. H. (Δ)	2	57C, D, 63	A	63/64
Δ Package also includes -					
	(2) 373503-S7 nut-self-threading-3/16"				
40572-3	STRIP (UPPER BACK PANEL TO SEAT BACK OPENING COVER)				
BAK 6840572-A	R. H. - rubber	1	68	D	60
BAK 6840573-A	L. H. - rubber	1	68	D	60

GROUP AND PART NUMBER	DESCRIPTION, SIZE, ETC.	NO. REQ'D	MODEL OR ENGINE CUBIC INCH DISPLACEMENT	VEHICLE CODE	YEAR 19____
405A72	REFER TO GROUP 405A86				
40580	MEDALLION (FUEL FILLER DOOR ORNAMENT)				
C2MY 6240580-A		1	All except 71	A	62
405A83	RAIL (FUEL FILLER LID) LESS INSERT				
C2MY 71405A83-B	Fiberglas - 7-3/4" long	1	71B	A	61
		1	71B, D	A	62
40584-5	REFER TO GROUP 403A76-7				
405A86	ORNAMENT (FUEL FILLER DOOR)				
C1MB 62405A86-A	(a)	1	All except 71	A	61
C2MB 62405A72-A	Less medallion (b)	1	All except 71	A	62
373049-S	Crown nut-self-threading 3/16"	2	b		
373065-S7	Crown nut-self-threading-1/8"	2	a		
40590-1	EXTENSION (REAR SEAT BACK SUPPORT)				
C3MY 6240590-A	R. H.	1	All except 71, 76	A	63
		1	54, 57, 62, 65, 75	A	64
C3MY 6240591-A	L. H.	1	All except 71, 76	A	63
		1	54, 57, 62, 65, 75	A	64
405A96	MOULDING (FUEL FILLER DOOR OPENING) LOWER				
C1MB 71405A96-A	(a)	1	71B, D	A	61/62
372010-S	Screw-truss hd. cr. tap. -No. 8-18 x 3/8"	AR	a		
405A98	COLLAR (FUEL FILLER OPENING)				
C2MB 71405A98-A		1	71	A	61/62
C4MY 71405A98-A		1	71	A	63/64
406A00	BRACKET (LUGGAGE COMPARTMENT DOOR HYDRAULIC LIFT TO FLOOR)				
C1VB 74406A02-A	(a)	2	74	D	61/63
C4VY 74406A00-A		2	74	D	64
34806-S7	Lockwasher-spring-5/16"	AR	a		
44725-S8	Washer-flat-5/16"	AR	a		
45555-S8	Bolt-hex. hd. -5/16"-24 x 3-3/4"	AR	a		
406A02	REFER TO GROUP 406A00				
406A06	HOSE ASSEMBLY (LUGGAGE COMPARTMENT DOOR LIFT) LOWER				
C1VB 74406A06-A		1	74	D	61/63
C4VY 74406A06-B	80" long	1	74	D	64
406A07	HOSE ASSEMBLY (LUGGAGE COMPARTMENT DOOR LIFT) UPPER TO PUMP				
C1VB 74406A07-A		1	74	D	61/63
C4VY 74406A07-B	94" long	1	74	D	64
406A08	HOSE ASSEMBLY (LUGGAGE COMPARTMENT DOOR LIFT) LOWER TO PUMP				
C1VB 74406A08-A		1	74	D	61/63
C4VY 74406A08-A	15-1/4" long	1	74	D	64

GROUP AND PART NUMBER	DESCRIPTION, SIZE, ETC.	NO. REQ'D	MODEL OR ENGINE CUBIC INCH DISPLACEMENT	VEHICLE CODE	YEAR 19____
406A10	LIFT ASSEMBLY (LUGGAGE COMPARTMENT DOOR)				
C1VB 74406A10-A		2	74	D	61/63
C4VY 74406A10-A	(a)	2	74	D	64
	Attach lift assembly to bracket to floor 406A00 with the following -				
44726-S8	Washer-flat-3/8"	1	a		
76345-S	NS-pin-clevis	1	a		
352358-S7	Pin-cotter	1	a		
352477-S8	Bushing	2	a		
352984-S	Grommet	2	a		
356383-S8	Washer-spring	1	a		
40628-9	REINFORCEMENT (LUGGAGE COMPARTMENT DOOR OPENING - SIDE FRONT)				
C4VY 5340628-A	R.H.	1	All	D	64
C4VY 5340629-A	L.H.	1	All	D	64
40639	BUMPER (SPARE WHEEL WELL COVER PANEL)				
C3AZ 7140639-A	Rubber - 11/32" long	4	71	A	61/64
40650-1	BRACKET (LUGGAGE COMPARTMENT DOOR LOCK NUT MOUNTING)				
C1VB 7440650-A	R.H.	1	74	D	61/63
C1VB 7440651-A	L.H.	1	74	D	61/63
C4VY 7440650-A	R.H.	1	74	D	64
C4VY 7440651-A	L.H.	1	74	D	64
40670	CASING & CABLE ASSEMBLY (LUGGAGE COMPARTMENT DOOR LOCK DRIVE)				
C1VB 7440670-A		2	74	D	61/64
40702	REFER TO GROUP 40709				
40705	PANEL (TAILGATE) INSIDE COVER				
CODB 5940705-EP	In prime	1	59,71	C	60/64
40709	GATE ASSEMBLY (TAIL)				
COMB 7740702-T	Manual or electric - less hinges (a)	1	77	A	60
C1MB 7140709-G	Manual or electric - less hinges	1	71	A	61
C2MY 7140709-A	Manual or electric - less hinges	1	71	A	62
C3AZ 7140709-A	Manual or electric - less hinges and moulding holes - use on vehicles built prior to 10-1-62	1	71	A	63
C3AZ 7140709-B	Manual or electric - less hinges and moulding holes - has 4" tailgate inside panel wiring access hole - use on vehicles built between 9-30-62 and 2-2-63	1	71	A	63
C3AZ 7140709-C	Less hinges - use on vehicles built after 2-1-63	1	71	A	63
C4MY 7140709-A	Manual or electric - less hinges and moulding holes	1	71	A	64
C3OZ 7140709-A	Less hinges (b)	1	71	B	63
C3DZ 5940709-A	Manual or electric - less hinges and moulding holes Note - also use parts shown in group 44009	1	59, 71	C	60/63
C4DZ 5940709-A	Manual or electric - less hinges and moulding holes	1	71	C	64
52726-S7	Screw-pan hd. cr. rec. -No. 8-15 x 1/2"	2	a		
377844-S	Plug button-vinyl-1-3/8" x 3-3/8"	1	b		
407A10	RETAINER (TAILGATE PANEL COVER)				
C1AB 59407A10-BP		1	71	A	61
C2AZ 71407A10-A		1	71	A	62
C3AZ 71407A10-A		1	71	A	63/64

GROUP AND PART NUMBER	DESCRIPTION, SIZE, ETC.	NO. REQ'D	MODEL OR ENGINE CUBIC INCH DISPLACEMENT	VEHICLE CODE	YEAR 19____
40712	PANEL (TAILGATE OUTSIDE UPPER FINISH)				
COMB 7740712-A	Aluminum	1	77	A	60
407A12	RETAINER (FRONT & REAR DOORS, TAILGATE & QUARTER PANEL MOULDINGS)				
C3OZ 59407A12-A	Tailgate	12	71A, B, C, E	B	63
	Tailgate	10	59, 71A, B	C	63
	Front doors, rear doors and quarter panel	AR	54A, 57A, 62A, 63A, 65A, 76A	A	64
C3OZ 71407A12-A		5	71A, D, E, F	B	63
C3GY 59407A12-A		4	59, 71	C	63
40713	PANEL (TAILGATE) OUTSIDE FINISH				
C1MB 7140713-F	Rustless steel	1	71A, B	A	61
40714	REFER TO GROUP 422A08				
407A16-7	STRIP (TAILGATE INSIDE COVER PANEL)				
C1DB 59407A16-B	R. H.	1	59, 71	C	60/64
C1DB 59407A17-B	L. H.	1	59, 71	C	60/64
407A18	SHIELD (TAILGATE INSIDE COVER PANEL DUST)				
CODB 59407A18-A		1	59, 71	C	60/64
40719	MOULDING (TAILGATE) LOWER				
COMB 7740719-A	51-3/16" long	1	77	A	60
Package also includes -					
	(6) 353958-S100 nut and washer assy. 1/4"-20				
407A26-7	WEATHERSTRIP (TAILGATE) INNER PANEL TO BELT REINFORCEMENT				
C1AZ 59407A26-D	R. H.	1	71	A	61
C1AZ 59407A27-D	L. H.	1	71	A	61
C2AZ 71407A26-A	R. H.	1	71	A	62/64
C2AZ 71407A27-A	L. H.	1	71	A	62/64
40738-9	MOULDING (TAILGATE OUTSIDE) BELT SIDE				
COMB 7740738-B	R. H. - rustless steel - 3-9/16" x 4-1/16" (Δ)	1	77	A	60
COMB 7740739-B	L. H. - rustless steel - 3-9/16" x 4-1/16" (Δ)	1	77	A	60
Δ Package also includes -					
(1) 354479-S7	nut-No. 10-24 (2) 354613-S8 screw-No. 8-32				
40740	RETAINER (TAILGATE OUTSIDE MOULDING)				
C1KB 7140740-A		3	59, 71	C	60/61
40742	REFER TO GROUP 422A36				
40743	TUBE (TAILGATE DRAIN)				
B9MB 5640743-A	Rubber	1	59, 71	C	60/62
40744-5	RUN (BACK WINDOW GLASS SIDE)				
BAK 6840744-A	R. H.	1	68	D	60
BAK 6840745-A	L. H.	1	68	D	60
BAK 7540744-A		2	54, 65, 75	D	60
40746-7	RUN (BACK WINDOW GLASS) SIDE - LOWER				
BAK 7540746-B	R. H.	1	54, 65, 75	D	60
BAK 7540747-B	L. H.	1	54, 65, 75	D	60

GROUP AND PART NUMBER	DESCRIPTION, SIZE, ETC.	NO. REQ'D	MODEL OR ENGINE CUBIC INCH DISPLACEMENT	VEHICLE CODE	YEAR 19____
40748	REFER TO GROUP 422A06				
40760	REFER TO GROUP 420A00				
40781	INSERT (BACK WINDOW GLASS UPPER SIDE RUN)				
B9MB 5640781-A	Rubber	2	77	A	60
40790	PLATE (WINDOW REGULATOR ACCESS HOLE COVER)				
PB9M 5640790-A		1	77	A	60
40803	COVER (TAILGATE LOCK KEYHOLE)				
BAF 5640803-A	Manual	1	77A	A	60
PB9M 5640803-A	Electric	1	77	A	60
40805	ARM (BACK WINDOW REGULATOR)				
BAK 6840805-B		1	68	D	60
40828	REFER TO GROUP 40830				
40828	SPACER (BACK WINDOW GARNISH MOULDING)				
C3MY 5440828-A	Vinyl - 42" long - use with retractable back window	1 1	All except 63, 71, 76 54, 62, 65, 75	A A	63 64
40830	REGULATOR (BACK WINDOW)				
COMB 7740828-C	Manual	1	77A	A	60
COMB 7740830-C	Electric less motor, spring and drive assembly	1	77	A	60
C4MY 7144000-A	Manual or electric - when used for electric (b) install electric drive first then drill out rivets retaining manual gear housing	1	71	A	61/64
C3MY 5440830-A	Electric - less motor - use with retractable window	1 1	All except 63, 71, 76 54, 62, 65, 75	A A	63 64
C3OZ 7144000-A	Manual	1	71	B	63
C3OZ 7144000-B	Electric - when used for electric regulator install motor - then remove rivets retaining manual gear housing	1	71	B	63
C3DZ 5944000-A	Manual and electric - when used for electric drill out (4) rivets and remove manual gear - use 1/8" shims at four attaching points	1	59, 71	C	60/63
C4DZ 5944000-A	Manual	1	71A, B	C	64
C4DZ 7144000-A	Electric - less motor	1	71A, B, C	C	64
B9LB 7540830-A	Less motor - use with "Hupp" electric windows (a)	1	54, 65, 75	D	60
354666-S2	Screw-hex. washer hd. -No. 12-24 x 3/8"	4	a		
371578-S2	Bolt and washer-hex. hd. -5/16"-24 x 11/16"	4	b		
40833	BRACKET (BACK WINDOW REGULATOR EQUALIZING ARM GUIDE)				
PB9M 5640833-A	Electric	1	77	A	60
40850	REFER TO GROUP 44009				
40853	REFER TO GROUP 44008				
40854	TRIGGER (TAILGATE LOCK RELEASE)				
PB9M 5640854-A		1	77	A	60

GROUP AND PART NUMBER	DESCRIPTION, SIZE, ETC.	NO. REQ'D	MODEL OR ENGINE CUBIC INCH DISPLACEMENT	VEHICLE CODE	YEAR 19____
40865	SPRING (BACK WINDOW REGULATOR HANDLE LOCKING PLUNGER)				
BAE 5640865-C	Manual	1	77A	A	60
40866	SPRING (BACK WINDOW REGULATOR HANDLE RETAINING)				
BAF 5640866-A		1	71, 77	A	60/61
40867	SPRING (BACK WINDOW REGULATOR COUNTERBALANCE)				
BAE 5640867-B	Spring steel - electric	1	71, 77	A	60/62
		1	59, 71	C	60/61
		1	59, 71	A B C	63
		1or2	71	A	64
		1	71A, B	C	64
40868	REFER TO GROUP 44048				
40871	REFER TO GROUP 44011				
40874	PIN (BACK WINDOW REGULATOR HANDLE HINGE) INNER				
BAE 5640874-B	Manual	1	77A	A	60
40877	PLUNGER (BACK WINDOW REGULATOR HANDLE LOCKING)				
PB9M 5640877-A	Manual	1	77A	A	60
40881	SPRING (TAILGATE LOCK KEYHOLE COVER)				
BAF 5640881-A	Manual	1	77A	A	60
40892	SUPPORT (BACK WINDOW REGULATOR MOTOR MOUNTING)				
BAK 6840892-A	Steel	1	68	D	60
40924	SPACER (TAILGATE OUTSIDE FINISH RAIL)				
BV 7940924-B	Rubber - 17/32" thick - used on front door	2	77B	A	60
40932	PANEL (BACK WINDOW REGULATOR MOUNTING)				
BAK 6840932-B		1	68	D	60
40938	RETAINER (BACK WINDOW REGULATOR HANDLE HINGE PIN)				
BAE 5640938-A	Manual	1	77A	A	60
PB9M 5640938-A	Electric	1	77	A	60
40940	BEARING (BACK WINDOW REGULATOR HANDLE HOUSING)				
BAE 5640940-B	Manual	3	77A	A	60
40964	DRIVE (BACK WINDOW REGULATOR)				
BAK 7540964-B	Type "Dura"	1	54, 65, 75	D	60
	Refer to group 30305 for "Hupp Design"				
40985	EXTENSION (REAR CORNER PILLAR REINFORCEMENT) TO INNER QUARTER PANEL				
COMB 7740985-A		1	77	A	60
410A06-7	MOULDING (REAR CORNER PILLAR OUTSIDE) UPPER				
COMB 77410A06-E	R.H. - rustless steel (a)	1	77	A	60
COMB 77410A07-E	L.H. - rustless steel (a)	1	77	A	60
C3OZ 71410A06-A	R.H. (Δ)	1	71	B	63
C3OZ 71410A07-A	L.H. (Δ)	1	71	B	63
Δ Package also includes -					
(2) 359606-S8	nut-No. 10-24 (1) 376378-S101	screw-truss hd.-No. 8-18 x 3/8"			
PB9M 5641068-A	Retainer	3	a		

GROUP AND PART NUMBER	DESCRIPTION, SIZE, ETC.	NO. REQ'D	MODEL OR ENGINE CUBIC INCH DISPLACEMENT	VEHICLE CODE	YEAR 19____
410A08	DEFLECTOR (REAR CORNER PILLAR) WATER				
B9MB 77410A08-A	Rubber - use with basic part number 410A06-7	2	77	A	60
410A10	BUTTON (REAR CORNER INNER PILLAR HOLE PLUG)				
CODB 59410A10-AP	In prime	2	59, 71	C	60/64
41015	RETAINER (LOWER BACK PANEL APPLIQUE)				
C1MB 5441015-A		4	54, 62, 65, 75, 76	A	61
C1GB 6241015-A		6	54, 62	C	61
41018	MOULDING (TAILGATE OUTSIDE) UPPER & LOWER				
C3YY 7141018-A	Lower - 53-5/8" long - located above finish panel	1	71	B	63
Package also includes - (5) C3OZ-71407A12-A retainers (2) 376390-S100 screw-No. 10-24 x 7/32"					
C3OZ 7141018-B	Upper - located at top of tailgate	1	71	B	63
Package also includes - (5) C2OB-71425A14-A retainer (2) 376390-S100 screw					
C1KB 7141018-C	Rustless steel - 48-3/4" long - use with electric regulator (a)	1	59, 71	C	60/61
C1KB 71425A14-A	Retainer	7	a		
353911-S100	Nut and washer-No. 10-24	7	a		
41022-3	PILLAR (REAR CORNER) LOWER				
CODZ 5941022-B	R. H.	1	59, 71	C	60/63
CODZ 5941023-B	L. H.	1	59, 71	C	60/63
C4DZ 5941022-A	R. H.	1	71	C	64
C4DZ 5941023-A	L. H.	1	71	C	64
410A29	EXTENSION (REAR CORNER PILLAR) LOWER				
	NS-use .048" thick steel - cut to size 1-5/8" x 2-11/16"	1	71	B	63
410A30	RETAINER (REAR CORNER PILLAR OUTSIDE MOULDING)				
C3OZ 71410A30-A		4	71	B	63
41032-3	PILLAR (REAR CORNER) OUTER				
COMB 7741032-A	R. H.	1	77	A	60
COMB 7741033-A	L. H.	1	77	A	60
C1AB 59412A04-C	R. H.	1	71	A	61
C1AB 59412A05-C	L. H.	1	71	A	61
C1AZ 5941032-A	R. H. - use on vehicles built prior to 1-7-63	1	71	A	62/63
C1AZ 5941033-A	L. H. - use on vehicles built prior to 1-7-63	1	71	A	62/63
C3AZ 7141032-A	R. H. - use on vehicles built after 1-6-63	1	71	A	63
C3AZ 7141033-A	L. H. - use on vehicles built after 1-6-63	1	71	A	63
C4MY 7141032-A	R. H.	1	71	A	64
C4MY 7141033-A	L. H.	1	71	A	64
C3OZ 7141038-A	R. H.	1	71	B	63
C3OZ 7141039-A	L. H.	1	71	B	63
C1DZ 5941038-A	R. H. - upper	1	59, 71	C	60/64
C1DZ 5941039-A	L. H. - upper	1	59, 71	C	60/64
41038-9	REFER TO GROUP 41032-3				
41050-1	FILLER (REAR CORNER PILLAR) UPPER				
C3OZ 7141050-A	R. H.	1	71	B	63
C3OZ 7141051-A	L. H.	1	71	B	63

GROUP AND PART NUMBER	DESCRIPTION, SIZE, ETC.	NO. REQ'D	MODEL OR ENGINE CUBIC INCH DISPLACEMENT	VEHICLE CODE	YEAR 19____
41058-9	REINFORCEMENT (REAR CORNER PILLAR) LOWER				
COMB 7741058-A	R. H.	1	77	A	60
COMB 7741059-A	L. H.	1	77	A	60
C1AB 5941058-A	R. H.	1	71	A	61/63
C1AB 5941059-A	L. H.	1	71	A	61/63
C4MY 7141058-A	R. H.	1	71	A	64
C4MY 7141059-A	L. H.	1	71	A	64
C2DB 5941058-A	R. H.	1	59, 71	C	60/62
C3DZ 5941058-A	R. H.	1	59, 71	C	63/64
CODB 5941059-A	L. H.	1	59, 71	C	60/64
41068	RETAINER (REAR CORNER PILLAR OUTSIDE REAR MOULDING)				
PB9M 5641068-A		6	77	A	60
41078	ANTI-SQUEAK (REAR CORNER PILLAR)				
B7A 5941078-A	Rubber - cut to size 16" long	2	71	A	61/62
412A02-3	REFER TO GROUP 412A06-7				
412A04-5	REFER TO GROUP 41032-3				
412A06-7	PILLAR (REAR CORNER) UPPER INNER				
C2AB 71412A06-A	R. H.	1	71	A	61/64
C2AB 71412A07-A	L. H.	1	71	A	61/64
C3OZ 71412A02-A	R. H. - use on vehicles built prior to 5-1-63	1	71	B	63
C3OZ 71412A03-A	L. H. - use on vehicles built prior to 5-1-63	1	71	B	63
C3OZ 71412A02-B	R. H. - use on vehicles built after 4-30-63	1	71	B	63
C3OZ 71412A03-B	L. H. - use on vehicles built after 4-30-63	1	71	B	63
C1DB 59412A02-A	R. H.	1	59, 71	C	60/61
C1DB 59412A03-A	L. H.	1	59, 71	C	60/61
C2DZ 59412A02-A	R. H. - use on vehicles built prior to 5-1-63	1	59, 71	C	62/63
C2DZ 59412A03-A	L. H. - use on vehicles built prior to 5-1-63	1	59, 71	C	62/63
C3DZ 59412A02-A	R. H. - use on vehicles built after 4-30-63	1	59, 71	C	63/64
C3DZ 59412A03-A	L. H. - use on vehicles built after 4-30-63	1	59, 71	C	63/64
41210-1	PILLAR (REAR CORNER) INNER FRONT UPPER				
C3OZ 7141210-A	R. H.	1	71	B	63
C3OZ 7141211-A	L. H.	1	71	B	63
41228-9	PILLAR (REAR CORNER) INNER FRONT LOWER				
C3OZ 7141228-A	R. H.	1	71	B	63
C3OZ 7141229-A	L. H.	1	71	B	63
41230-1	PANEL (REAR CORNER) OUTER				
C3OZ 7141230-A	R. H. - use on vehicles built prior to 11-26-62	1	71	B	63
C3OZ 7141231-A	L. H. - use on vehicles built prior to 11-26-62	1	71	B	63
C3DZ 7141230-B	R. H. - use on vehicles built after 11-25-62	1	71	B	63
C3DZ 7141231-B	L. H. - use on vehicles built after 11-25-62	1	71	B	63
413A00-1	EXTENSION (BACK WINDOW HEADER)				
C1AB 59413A00-B	R. H.	1	71	A	61
C1AB 59413A01-B	L. H.	1	71	A	61
C2AB 71413A00-A	R. H.	1	71	A	62/63
C2AB 71413A01-A	L. H.	1	71	A	62/63
C4AZ 71413A00-A	R. H.	1	71	A	64
C4AZ 71413A01-A	L. H.	1	71	A	64

GROUP AND PART NUMBER	DESCRIPTION, SIZE, ETC.	NO. REQ'D	MODEL OR ENGINE CUBIC INCH DISPLACEMENT	VEHICLE CODE	YEAR 19____
41302	RAIL (BACK WINDOW HEADER)				
PB9M 5641302-A		1	77	A	60
C1AZ 5941302-A		1	71	A	61
C2AZ 7141302-A	Includes moulding - roof drip rear	1	71	A	62/63
C2AZ 7141302-B	Includes moulding - roof drip rear	1	71	A	64
C3OZ 7141302-A	Includes moulding roof drip rear	1	71	B	63
CODB 5941302-A	Includes moulding roof drip rear - use on vehicles built prior to 5-1-63	1	59, 71	C	60/63
C3DZ 5941302-A	Includes moulding roof drip rear - use on vehicles built after 4-30-63	1	59, 71	C	63/64
41402-3	EXTENSION (BACK BELT MOULDING)				
PB9M 7641402-A	R.H. - chrome finish - 3-49/64" long	1	76	A	60
PB9M 7641403-A	L.H. - chrome finish - 3-49/64" long	1	76	A	60
41408-9	EXTENSION (BACK BELT MOULDING) FRONT				
COMB 7641408-A	R.H. - chrome finish	1	76	A	60
COMB 7641409-A	L.H. - chrome finish	1	76	A	60
41608	WEATHERSTRIP (TAILGATE)				
COMB 7741608-A	Rubber	1	77	A	60
C1AB 5941608-C	Rubber - use on vehicles built prior to 6-6-61	1	71	A	61
C1AZ 5941608-C	Rubber - use on vehicles built after 6-5-61	1	71	A	61
C2MY 7141608-A	Rubber	1	71	A	62
C3AZ 7141608-A	Rubber	1	71	A	63/64
C3OZ 7141608-B	Rubber (b)	1	71	B	63
C1DZ 5941608-C	Rubber	1	59, 71	C	60/62
C3DZ 5941608-A	Rubber	1	59, 71	C	63
C3DZ 5941608-B	Rubber (a)	1	71	C	64
52376-S13	Screw-oval hd. -No. 8-15 x 1"	3	a		
376378-S101	Screw-truss hd. No. 8-18 x 3/8"	AR	b		
41610	WEATHERSTRIP (TAILGATE OUTER PANEL TO BELT REINFORCEMENT)				
C3OZ 7141610-B		1	71	B	63
41662	WEATHERSTRIP (TAILGATE) LOWER GLASS CHANNEL				
C1AB 5941662-B	Rubber	1	71	A	61
C2AZ 7141662-A	Rubber	1	71	A	62/63
		1	71B	A	64
CODB 5941662-A	Rubber	1	59, 71	C	60/64
41708-9	REFER TO GROUP 41732-3				
41732-3	RAIL (BELT SIDE)				
COMB 6341746-A	R.H. - outer - remove extension for model 64	1	63, 64	A	60
COMB 6341747-A	L.H. - outer - remove extension for model 64	1	63, 64	A	60
PB9M 7641732-A	R.H.	1	76	A	60
PB9M 7641733-A	L.H.	1	76	A	60
C1MB 7641732-A	R.H.	1	76	A	61
C1MB 7641733-A	L.H.	1	76	A	61
C1AB 6341736-A	R.H. - outer	1	65	A	61/62
C1AB 6341737-A	L.H. - outer	1	65	A	61/62
C2MB 7641732-A	R.H.	1	76	A	62
C2MB 7641733-A	L.H.	1	76	A	62
C3AZ 6341736-A	R.H.	1	63	A	63
		1	63C	A	64
C3AZ 6341737-A	L.H.	1	63	A	63
		1	63C	A	64

CONTINUED ON NEXT PAGE

GROUP AND PART NUMBER	DESCRIPTION, SIZE, ETC.	NO. REQ'D	MODEL OR ENGINE CUBIC INCH DISPLACEMENT	VEHICLE CODE	YEAR 19____
41732-3	RAIL (BELT SIDE) CONTINUED				
C3AZ 6541736-A	R.H. - outer	1	65	A	63/64
C3AZ 6541737-A	L.H. - outer	1	65	A	63/64
C3AZ 7641732-A	R.H.	1	76	A	63/64
C3AZ 7641733-A	L.H.	1	76	A	63/64
C3OZ 6541736-A	R.H. - outer	1	65A, B	B	63
C3OZ 6541737-A	L.H. - outer	1	65A, B	B	63
C3DZ 7641732-A	R.H.	1	76	C	63
C3DZ 7641733-A	L.H.	1	76	C	63
C3DZ 7641708-B	R.H. - front - use on vehicles built prior to 5-1-63	1	76	C	63
C3DZ 7641709-B	L.H. - front - use on vehicles built prior to 5-1-63	1	76	C	63
C4DZ 7641708-A	R.H. - front - use on vehicles built after 5-31-63	1	76	C	63/64
C4DZ 7641709-A	L.H. - front - use on vehicles built after 5-31-63	1	76	C	63/64
C4DZ 7641732-A	R.H.	1	76	C	64
C4DZ 7641733-A	L.H.	1	76	C	64
BAK 6341736-B	R.H.	1	63, 65	D	60
BAK 6341737-B	L.H.	1	63, 65	D	60
BAK 6841736-B	R.H.	1	68	D	60
BAK 6841737-B	L.H.	1	68	D	60
41736-7	REFER TO GROUP 41732-3				
41745	STRIP (BELT TACKING) CENTER				
PB9M 7641745-A		1	76	A	60
C1AB 7641745-A		1	76	A	61
C2AB 7641745-A		1	76	A	62
C3AB 7641745-A	NS-steel-59-3/16" long with (7) slot holes - 1-3/8" long-improvise	1	76A	A	63
C3AZ 7641745-A	Steel - 59-3/16" long with (7) slot holes 1-3/8" long	1	76A	A	64
C3DZ 7641745-A		1	76	C	63/64
C4VY 7441745-A		1	74	D	64
41746-7	REFER TO GROUP 41732-3				
41758-9	TROUGH (BELT SIDE DRAIN)				
BAK 6841758-A	R.H.	1	68	D	60
BAK 6841759-A	L.H.	1	68	D	60
41772-3	STRIP (BELT TACKING) SIDE FRONT				
PB9M 7641772-A	R.H.	1	76	A	60
PB9M 7641773-A	L.H.	1	76	A	60
C1AB 7641772-A	R.H.	1	76	A	61/62
C1AB 7641773-A	L.H.	1	76	A	61/62
C4MY 7641772-A	R.H.	1	76	A	64
C4MY 7641773-A	L.H.	1	76	A	64
C3DZ 7641772-A	R.H.	1	76A	C	63
		1	76	C	64
C3DZ 7641773-A	L.H.	1	76A	C	63
		1	76	C	64
41782-3	STRIP (BELT TACKING) SIDE REAR				
PB9M 7641782-A	R.H.	1	76	A	60
PB9M 7641783-A	L.H.	1	76	A	60
C1VB 7441782-A	R.H. - fiberboard	1	74	D	61/63
C1VB 7441783-A	L.H. - fiberboard	1	74	D	61/63
C4VY 7441782-A	R.H.	1	74	D	64
C4VY 7441783-A	L.H.	1	74	D	64

GROUP AND PART NUMBER	DESCRIPTION, SIZE, ETC.	NO. REQ'D	MODEL OR ENGINE CUBIC INCH DISPLACEMENT	VEHICLE CODE	YEAR 19____
41804	REFER TO GROUP 40513				
41844-5	MOULDING (BACK WINDOW OUTSIDE SIDE) UPPER				
B9MB 5741844-B	R.H. - rustless steel (a)	1	57, 63	A	60
B9MB 5741845-B	L.H. - rustless steel (a)	1	57, 63	A	60
B9MB 5742463-B	Retainer	2	a		
B9MB 5742909-A	Retainer	2	a		
353911-S100	Nut and washer assy. -No. 10-24	2	a		
41876	RETAINER (REAR CORNER INNER FINISH) LOWER PANEL				
PB9M 5641876-A		1	77	A	60
41892-3	FILLER (REAR CORNER PILLAR OUTSIDE REAR MOULDING)				
COMB 7741892-A	R.H. - rubber	1	77	A	60
COMB 7741893-A	L.H. - rubber	1	77	A	60
41940	WEATHERSTRIP (UPPER BACK PANEL) FRONT				
BAK 6841940-B	Rubber NOTE - For rear use COMB-6443720-C deck lid weatherstrip and cut to size	1	68	D	60
41943	RETAINER (UPPER BACK PANEL FRONT WEATHERSTRIP) OUTER				
BAK 6841943-A	L.H.	1	68	D	60
41944	RETAINER (UPPER BACK PANEL FRONT WEATHERSTRIP) CENTER				
BAK 6841944-A		1	68	D	60
41948-9	RETAINER (TAILGATE COUNTERBALANCE TORQUE BAR) INNER				
PB9M 5641948-A	R.H.	1	77	A	60
PB9M 5641949-A	L.H.	1	77	A	60
41956	GUIDE (TAILGATE COUNTERBALANCE TORQUE BAR)				
PB9M 5641956-A		2	77	A	60
41974-5	FRAME (BACK WINDOW) LOWER SIDE				
C3AZ 6341974-B	R.H.	1	63	A	63/64
C3AZ 6341975-B	L.H.	1	63	A	63/64
C4AZ 5741974-A	R.H.	1	57	A	64
C4AZ 5741975-A	L.H.	1	57	A	64
420A00	WEATHERSTRIP (BACK WINDOW GLASS AT BELT)				
B9MB 5640760-A	46-3/32" long	1	77	A	60
CODB 59420A00-A		1	59, 71	C	60/62
C3DZ 59420A00-A		1	59, 71	C	63/64
BAK 7540760-B	Rustless steel and rubber - 42-5/32" long (a)	1	54, 65, 75	D	60
42764-S8	Screw and washer assy. -hex. hd. -5/16"-24 x 1/2"	AR	a		
42004	REFER TO GROUP 42006				
42006	GLASS (BACK WINDOW)				
PB9M 5642006-A	Clear	1	77	A	60
PB9M 5642006-B	Tinted	1	77	A	60
PB9M 5742006-C	Clear	1	57, 63	A	60
PB9M 5742006-D	Tinted	1	57, 63	A	60
PB9M 5842006-C	Clear	1	58, 64	A	60
PB9M 5842006-D	Tinted	1	58, 64	A	60

CONTINUED ON NEXT PAGE

GROUP AND PART NUMBER	DESCRIPTION, SIZE, ETC.	NO. REQ'D	MODEL OR ENGINE CUBIC INCH DISPLACEMENT	VEHICLE CODE	YEAR 19____
42006	GLASS (BACK WINDOW) CONTINUED				
C1AB 5942004-E	Clear	1	71	A	61
C1AB 5942004-F	Tinted	1	71	A	61
C1AB 6442006-A	Clear	1	58,64	A	61
C1AB 6442006-B	Tinted	1	58,64	A	61
C1AB 6242006-A	Clear	1	54,62,65,75	A	61/62
C1AB 6242006-B	Tinted	1	54,62,65,75	A	61/62
C2AB 7142006-C	Clear	1	71	A	62/64
C2AB 7142006-D	Tinted	1	71	A	62/64
C3MY 5442006-A	Clear - use with retractable window	1	All except 63,71,76	A	63
		1	54,62,65,75	A	64
C3MY 5442006-B	Tinted - use with retractable window	1	All except 63,71,76	A	63
		1	54,62,65,75	A	64
C3AZ 6342006-A	Clear - not used with Butyl tape installation	1	63	A	63/64
C3AZ 6342006-B	Tinted - not used with Butyl tape installation	1	63	A	63/64
C4AZ 5742006-A	Clear	1	57	A	64
C4AZ 5742006-B	Tinted	1	57	A	64
C4AZ 6342006-A	Clear - Butyl tape installation has identification notch at upper center line	1	63	A	64
C4AZ 6342006-B	Tinted - Butyl tape installation has identification notch at upper center line	1	63	A	64
C2OZ 6242006-A	Clear	1	54,62	B	62/63
C2OZ 6242006-B	Tinted	1	54,62	B	62/63
C3OZ 6542006-A	Clear	1	65	B	63
C3OZ 6542006-B	Tinted	1	65	B	63
C3OZ 7142006-A	Clear	1	71	B	63
C3OZ 7142006-B	Tinted	1	71	B	63
C1KB 6242006-C	Clear	1	54,62	C	60/63
C1KB 6242006-D	Tinted	1	54,62	C	60/63
CODB 5942004-C	Clear - use with CODB-59422A06-A frame on vehicles built prior to 5-1-63	1	59,71	C	60/63
C3DZ 5942006-A	Clear - use on vehicles built after 4-30-63	1	59,71	C	63/64
CODB 5942004-D	Tinted - use with CODB-59422A06-A frame on vehicles built prior to 5-1-63	1	59,71	C	60/63
C3DZ 5942006-B	Tinted - use on vehicles built after 4-30-63	1	59,71	C	63/64
C3DZ 6342006-A	Clear	1	63	C	63/64
C3DZ 6342006-B	Tinted	1	63	C	63/64
C2DZ 6242006-A	Clear	1	54,62	C	64
C2DZ 6242006-B	Tinted	1	54,62	C	64
COLB 6342006-A	Clear	1	53, 57, 63	D	60
COLB 6342006-B	Tinted	1	53, 57, 63	D	60
BAK 6842004-B	Tinted - center	1	68	D	60
BAK 7542004-B	Tinted - center	1	54, 65, 75	D	60
C1VB 5742006-A	Clear	1	53	D	61/63
C1VB 5742006-B	Tinted	1	53	D	61/63
C4VY 5342006-A	Clear	1	53	D	64
C4VY 5342006-B	Tinted	1	53	D	64
420A12	RUN (BACK WINDOW GLASS)				
C3MY 54420A12-A	Use with retractable window	1	All except 63,71,76	A	63
		2	54,62,65,75	A	64
42018	BRACKET (BACK WINDOW EQUALIZER ARM)				
C3MY 5442018-A		1	54B, 65B, C, 75B	A	63
		1	54,62,65,75	A	64

GROUP AND PART NUMBER	DESCRIPTION, SIZE, ETC.	NO. REQ'D	MODEL OR ENGINE CUBIC INCH DISPLACEMENT	VEHICLE CODE	YEAR 19____
42020-1	RETAINER (BACK WINDOW SIDE GLASS) UPPER				
PB9M 5842020-A	R.H.	1	58, 64	A	60
PB9M 5842021-A	L.H.	1	58, 64	A	60
420A22	SPACER (BACK WINDOW GLASS) LOWER				
C4AZ 63420A22-A	Butyl Tape installation	2	63	A	64
42024	GLASS (BACK WINDOW) SIDE				
C3MY 5442024-A	Clear - use with retractable window	2	All except 57,63,71,76	A	63/64
C3MY 5442024-B	Tinted - use with retractable window	2	All except 57,63,71,76	A	63/64
BAK 6842024-B	Tinted	2	68	D	60
BAK 7542024-B	Tinted	2	54, 65, 75	D	60
42028-9	RETAINER (BACK WINDOW SIDE GLASS BELT WEATHERSTRIP) REAR				
PB9M 5842028-A	R.H. (a)	1	58, 64	A	60
PB9M 5842029-A	L.H. (a)	1	58, 64	A	60
42157-S8	Screw-hex. washer hd. -No. 10-12 x 1-1/4"	2	a		
420A28	SEAL (BACK WINDOW GLASS)				
C4AZ 63420A28-A	Butyl Tape installation - 168" long	1	63	A	64
42040-1	BAR (BACK WINDOW DIVISION)				
C3MY 5442040-A	R.H. - use with retractable window	1	All except 57,63,71,76	A	63/64
C3MY 5442041-A	L.H. - use with retractable window	1	All except 57,63,71,76	A	63/64
42042-3	WEATHERSTRIP (BACK WINDOW) SIDE				
C1AB 5942042-C	R.H. - rubber	1	71	A	61/64
C1AB 5942043-C	L.H. - rubber	1	71	A	61/64
CODB 5942042-A	R.H. - rubber	1	59, 71	C	60
C1DB 5942042-A	R.H. - rubber - use on vehicles built prior to 5-1-63	1	59, 71	C	61/63
C1DB 5942043-A	L.H. - rubber - use on vehicles built prior to 5-1-63	1	59, 71	C	60/63
42052-3	WEATHERSTRIP (BACK WINDOW SIDE GLASS)				
C3MY 5442052-A	R.H. - use with retractable window	1	All except 57,63,71,76	A	63/64
C3MY 5442053-A	L.H. - use with retractable window	1	All except 57,63,71,76	A	63/64
BAK 7542052-A	R.H. - rubber	1	54, 65, 75	D	60
BAK 7542053-A	L.H. - rubber	1	54, 65, 75	D	60
42060	WEATHERSTRIP (BACK WINDOW CENTER GLASS INNER & OUTER) LESS RETAINER				
C3MY 5442060-A	(1) for inner (1) for outer - use with retractable window	2	All except 63, 71, 76	A	63/64
42066	WEATHERSTRIP (BACK WINDOW CENTER GLASS) INNER WITH RETAINER				
C3MY 5442066-A	Use with retractable window	1	All except 57,63,71,76	A	63/64
42072	WEATHERSTRIP (BACK WINDOW GLASS) INNER				
PB9M 5642072-A		1	77	A	60
C1AB 5942072-B		1	71	A	61
C2MB 7142072-A		1	71	A	62/63
C2DZ 5942072-A	43-3/16" long	1	59, 71	C	60/63
C3DZ 5942072-A	Run - upper	1	71	C	64
42074	RETAINER (BACK WINDOW GLASS TOP RUN)				
C3MY 5442074-A	Use with retractable window	1	All except 57,63,71,76	A	63/64
COLB 7542074-A		1	54, 65, 75	D	60

GROUP AND PART NUMBER	DESCRIPTION, SIZE, ETC.	NO. REQ'D	MODEL OR ENGINE CUBIC INCH DISPLACEMENT	VEHICLE CODE	YEAR 19____
42080	REINFORCEMENT (BACK WINDOW GLASS TOP RUN RETAINER)				
COLB 6542080-A		1	54, 65, 75	D	60
42082	WEATHERSTRIP (BACK WINDOW GLASS) OUTER				
C3MY 5442082-A	Use with retractable window - includes retainer	1	All except 57,63,71,76	A	63/64
42084	WEATHERSTRIP (BACK WINDOW)				
B9MB 5742084-A	Rubber	1	57, 63	A	60
COMB 6442084-A	Rubber	1	58, 64	A	60
C1AB 6442084-C	Rubber	1	58,64	A	61
C1AB 6242084-A	Rubber	1	54,62,65,75	A	61/62
C3AZ 6342084-A		1	63	A	63/64
C4AZ 5742084-A		1	57	A	64
C2OZ 6242084-A		1	54,62	B	62/63
C3OZ 6542084-A		1	65	B	63
C1KB 6242084-A	Rubber	1	54,62	C	60/63
C3DZ 6342084-A		1	63	C	63/64
C2DZ 6242084-A		1	54, 62	C	64
COLB 6342084-B	Rubber	1	53, 57, 63	D	60
C1VB 5742084-B	Rubber	1	53	D	61/63
C4VY 5342084-A		1	53	D	64
42090	HOUSING (BACK WINDOW)				
C3MY 5442090-A	Use with retractable window	1	All except 63, 71, 76	A	63
C4MY 6242090-A	Use with retractable window	1	54,62,65,75	A	64
42094	COVER (BACK WINDOW HOUSING)				
C3MY 5442094-A	Use with retractable window	1	All except 57,63,71,76	A	63/64
42124-5	RETAINER (BACK WINDOW SIDE GLASS BELT WEATHERSTRIP) FRONT				
B9BM 6442124-A	R.H. (a)	1	58, 64	A	60
B9BM 6442125-A	L.H. (a)	1	58, 64	A	60
42157-S8	Screw-hex. washer hd.-No. 10-12 x 1-1/4"	2	a		
422A00-1	REFER TO GROUP 422A38-9				
422A04-5	FRAME (BACK WINDOW LOWER) SIDE				
COMB 57422A04-A	R.H.	1	57, 63	A	60
COMB 57422A05-A	L.H.	1	57, 63	A	60
C1AB 64422A04-B	R.H.	1	58, 64	A	61
C1AB 64422A05-B	L.H.	1	58, 64	A	61
422B04	SEAL (BACK WINDOW HOUSING COVER)				
C3MY 62422B04-B	Use with retractable window	1	All except 57,63,71,76	A	63/64
422A06	FRAME (BACK WINDOW GLASS)				
PB9M 5640748-A	Rustless steel	1	77	A	60
C1AB 59422A06-A	Rustless steel	1	71	A	61
C2AZ 71422A06-A	Rustless steel	1	71	A	62/64
CODB 59422A06-A	Rustless steel - use on vehicles built prior to 5-1-63 - with CODB-59422A36-B run	1	59, 71	C	60/63
BAK 6840748-A		1	68	D	60

GROUP AND PART NUMBER	DESCRIPTION, SIZE, ETC.	NO. REQ'D	MODEL OR ENGINE CUBIC INCH DISPLACEMENT	VEHICLE CODE	YEAR 19____
42208	FRAME (BACK WINDOW) UPPER				
PB9M 5842208-A	Center	1	58, 64	A	60
B9MB 6342208-A		1	57, 63	A	60
C2AZ 6242220-A		1	54, 62, 65, 75	A	61/62
C3MY 6242208-A	Use with retractable window	1	All except 57, 63, 71, 76	A	63/64
C3AZ 6342220-A		1	63	A	63/64
C4AZ 5742220-A		1	57	A	64
C2OZ 6242220-A		1	54, 62	B	62/63
C3OZ 6542220-A		1	65	B	63
C1KB 6242220-A	In prime	1	54, 62	C	60/63
C3DZ 6342220-A		1	63	C	63/64
C2DZ 6242220-A		1	54, 62	C	64
BAK 5742208-A		1	54, 65, 75	D	60
COLB 6342208-B		1	53, 57, 63	D	60
C1VB 5742220-A		1	53	D	61/63
C4VY 5342220-A		1	53	D	64
422A08	CHANNEL (BACK WINDOW GLASS)				
PB9M 5640714-A	Manual	1	77	A	60
PB9M 5640714-B	Electric	1	77	A	60
C1AB 59422A08-A		1	71	A	61
C2AZ 71422A08-A		1	71	A	62/64
C3MY 54422A08-A	Use with retractable window	1	All except 57, 63, 71, 76	A	63/64
C3OZ 71422A08-A		1	71	B	63
C3DZ 59422A08-A		1	59, 71	C	60/64
BAK 6840714-A	Center glass	1	68	D	60
BAK 7540714-B	Center glass	1	54, 65, 75	D	60
42220	REFER TO GROUP 42208				
422A20-1	RUN (BACK WINDOW GLASS) SIDE LOWER				
COMB 77422A20-B	14-7/8" (a)	2	77	A	60
C1AB 59422A20-C	R. H. - 15-1/4" long	1	71	A	61
C1AB 59422A21-C	L. H. - 15-1/4" long	1	71	A	61
C2AB 71422A20-A	R. H. (b)	1	71	A	62/64
C2AB 71422A21-A	L. H. (b)	1	71	A	62/64
C3OZ 71422A20-B	R. H.	1	71	B	63
C3OZ 71422A21-B	L. H.	1	71	B	63
CODB 59422A20-E	14-1/2" long	2	59, 71	C	60/64
370278-S	Set screw-5/16"-24 x 1-1/2"	2	a		
371578-S2	Bolt and washer-hex. hd. -5/16"-24 x 11/16"	2	b		
422A24-5	RUN & MOULDING (BACK WINDOW GLASS) SIDE UPPER				
C1DZ 59422A24-AP	R. H. - use on vehicles built prior to 5-1-63 (a)	1	59, 71	C	60/63
C1DZ 59422A25-AP	L. H. - use on vehicles built prior to 5-1-63 (a)	1	59, 71	C	60/63
52360-S13	Screw-oval hd. -No. 8-15 x 3/4"	3	a		
	NOTE - for vehicles built after 4-30-63 see group 42374-5				
422A28	MOULDING (BACK WINDOW GLASS) TOP				
CODB 59422A28-B	Rustless steel	1	59, 71	C	60/62
		1	59B, 71B, C, D	C	63
		1	71	C	64

GROUP AND PART NUMBER	DESCRIPTION, SIZE, ETC.	NO. REQ'D	MODEL OR ENGINE CUBIC INCH DISPLACEMENT	VEHICLE CODE	YEAR 19____
422A36	RUN (BACK WINDOW GLASS) TOP				
PB9M 5640742-A	(a)	1	77	A	60
C3OZ 71422A36-A		1	71	B	63
CODB 59422A36-B	Use on vehicles built prior to 5-1-63	1	59, 71	C	60/63
C3DZ 59422A36-A	Top and sides - 1 piece - use on vehicles built after 4-30-63	1	59, 71	C	63/64
BAK 6840742-A		1	68	D	60
BAK 7540742-A		1	54, 65, 75	D	60
52726-S8	Screw-pan hd. cr. rec. tap. -No. 8-15 x 1/2"	7	a		
422A38-9	RUN (BACK WINDOW GLASS) UPPER SIDE				
COMB 77422A00-A	R. H. - rubber dipped end 1" long (a)	1	77	A	60
COMB 77422A01-A	L. H. - rubber dipped end 1" long (a)	1	77	A	60
C1AB 59422A38-D	R. H.	1	71	A	61/64
C1AB 59422A39-D	L. H.	1	71	A	61/64
52726-S8	Screw-pan hd. cr. rec. tap. -No. 8-15 x 1/2"	3	a		
42250-1	EXTENSION (BACK WINDOW UPPER FRAME) LOWER CORNER				
COLB 6342250-A	R. H.	1	53, 57, 63	D	60
COLB 6342251-A	L. H.	1	53, 57, 63	D	60
422A54	RETAINER & MOULDING ASSEMBLY (BACK WINDOW GLASS RUN) TOP				
C3DZ 59422A54-B	(a)	1	59, 71	C	60/64
52360-S13	Screw-oval hd. cr. rec. tap. -No. 8-15 x 3/4"	7	a		
422A66	RUN & MOULDING ASSEMBLY (BACK WINDOW GLASS) TOP				
C1AB 59422A66-C	48" long	1	71	A	61/64
422A76	SEAL (BACK WINDOW GLASS) TOP				
C1AB 59422A76-B	Sponge rubber - 46" long	1	71	A	61/63
		1	71A, B	A	64
42278-9	FRAME (BACK WINDOW) INNER SIDE UPPER				
B9MB 6442278-A	R. H.	1	58, 64	A	60
B9MB 6442279-A	L. H.	1	58, 64	A	60
COLB 6342278-B	R. H.	1	53, 57, 63	D	60
COLB 6342279-B	L. H.	1	53, 57, 63,	D	60
COLB 6542278-B	R. H.	1	54, 65, 75	D	60
COLB 6542279-B	L. H.	1	54, 65, 75	D	60
42280	RETAINER (BACK WINDOW) CENTER				
PB9M 5842280-A	Lower	1	58, 64	A	60
PB9M 6442280-A	Upper (a)	1	58, 64	A	60
COLB 6342280-A	(b)	1	53, 57, 63	D	60
42014-S8	Screw-hex. washer hd. -No. 10-12 x 5/8"	2	a		
370219-S8	Screw-rd. washer hd. -No. 8-15 x 1/2"	9	b		
42284-5	RETAINER (BACK WINDOW) SIDE				
B9MB 6442284-A	R. H.	1	58, 64	A	60
B9MB 6442285-A	L. H.	1	58, 64	A	60
BAK 5742284-A	R. H. (a)	1	53, 57, 63	D	60
BAK 5742285-A	L. H. (a)	1	53, 57, 63	D	60
370219-S8	Screw-rd. washer hd. -No. 8-15 x 1/2"	3	a		
42294	REFER TO GROUP 42296				
42296	RETAINER (BACK WINDOW DIVISION BAR OUTSIDE MOULDING)				
BAK 6842294-A		4	68	D	60

GROUP AND PART NUMBER	DESCRIPTION, SIZE, ETC.	NO. REQ'D	MODEL OR ENGINE CUBIC INCH DISPLACEMENT	VEHICLE CODE	YEAR 19__
422A98	PLATE (BACK WINDOW HOUSING ANCHOR)				
C3MY 54422A98-A		2	All except 63, 71, 76	A	63
423A00	REFER TO GROUP 42430-1				
42304	MOULDING (BACK WINDOW LOWER GARNISH)				
PB9M 5642304-AP	In prime - 47-15/32" long	1	77	A	60
C3MY 5442304-A	Chrome finish (a)	1	54B, F, 65B, C, F, 75B, F	A	63/64
C3MY 6242304-A	Painted (a)	1	54A, 62A, 65A, 75A	A	63/64
53072-S13	Screw-oval hd. cr. rec. tap. No. 8-15 x 1-1/2"	AR	a		
42308	STOP (BACK WINDOW) LOWER				
C3MY 5442308-A		1	All except 57, 63, 71, 76	A	63/64
BAE 6542308-A		2	54, 65, 75	D	60
423A08-9	MOULDING ASSEMBLY (LOWER BACK PANEL END) WITH ATTACHING PARTS				
C1VY 57423A08-B	R. H. (Δ)	1	All	D	61/63
C1VY 57423A09-B	L. H. (Δ)	1	All	D	61/63
	Δ Package also includes -				
(3) 359606-S8	nut-No. 10-24	(1) 376385-S101	screw-No. 8-18 x 1/4"	(1) 376386-S101	screw-No. 8-18 x 1/2"
(1) 373503-S7	nut-self-thd. -3/16"				
42312	NOZZLE (BACK WINDOW HOUSING DRAIN)				
C3MY 5442312-A	Use with retractable window	2	All except 57, 63, 71, 76	A	63/64
423A12-3	MOULDING (LOWER BACK PANEL CENTER FINISH) WITH ATTACHING PARTS				
C1VB 57423A12-C	R. H. - rustless steel - 33-1/4" long (Δ)	1	All	D	61/62
C1VY 57423A13-A	L. H. - rustless steel - 33-1/4" long (Δ)	1	All	D	61/62
	Δ Package also includes -				
(4) C1VY-57423A76-A retainer		(1) 376378-S101	screw-truss hd. cr. rec. -No. 8-18 x 3/8"		
C3VY 57423A12-A	R. H. - rustless steel - 31-1/2" (§)	1	All	D	63
C3VY 57423A13-A	L. H. - rustless steel - 31-1/2" (§)	1	All	D	63
	§ Package also includes -				
(4) C1VY-57423A76-A retainer		(1) 376380-S101	screw-truss hd. cr. rec. -No. 8-32 x 1/2"		
423A14	MOULDING (LOWER BACK PANEL)				
C1VB 57423A14-D	Center - 55" long	1	All	D	61/62
	Package also includes -				
		(15) 373748-S	screw-hex. washer hd. -No. 8-15 x 1/2"		
C3VY 57423A14-A	R. H. - side	1	All	D	63
C3VY 57423A14-B	L. H. - side	1	All	D	63
423A18-9	MOULDING (BACK BELT) SIDE				
PB9M 7640228-A	R. H. - rustless steel - 39-3/4" long	1	76	A	60
PB9M 7640229-A	L. H. - rustless steel - 39-3/4" long	1	76	A	60
C1MB 76423A18-A	R. H. - rustless steel (a)	1	76	A	61
C1MB 76423A19-A	L. H. - rustless steel (a)	1	76	A	61
C2MY 76423A22-A	R. H. (a)	1	76	A	62
C2MY 76423A23-A	L. H. (a)	1	76	A	62
C3MY 63423A18-A	R. H.	1	63	A	63
C3MY 63423A19-A	L. H.	1	63	A	63

CONTINUED ON NEXT PAGE

GROUP AND PART NUMBER	DESCRIPTION, SIZE, ETC.	NO. REQ'D	MODEL OR ENGINE CUBIC INCH DISPLACEMENT	VEHICLE CODE	YEAR 19____
423A18-9	MOULDING (BACK BELT) SIDE (CONTINUED)				
C3MY 76423A22-A	R.H. - 33-3/16" long (§)	1	76	A	63/64
C3MY 76423A23-A	L.H. - 33-3/16" long (§)	1	76	A	63/64
§ Package also includes -					
(4) 373248-S8	nut-tee-No. 8-32 (4) 376724-S100 stud-fastener				
C4MY 63423A18-A	R.H. (†)	1	63	A	64
C4MY 63423A19-A	L.H. (†)	1	63	A	64
† Package also includes -					
	(2) 376361-S101 screw				
C3DZ 76423A18-A	R.H. (Δ)	1	76	C	63
C3DZ 76423A19-A	L.H. (Δ)	1	76	C	63
Δ Package also includes -					
(5) 359283-S100	stud-No.8-32x7/16" (5) 373248-S8 nut-tee-No. 8-32				
C4DZ 76423A18-A	R.H.	1	76	C	64
C4DZ 76423A19-A	L.H.	1	76	C	64
373248-S8	Nut	4	a		
358620-S100	Stud-fastener-No. 8-32	4	a		
423A20-1	MOULDING (BACK BELT) CENTER				
C1MB 76423A20-A	Rustless steel - 49-7/16" long (a)	1	76	A	61/62
C3AZ 63423A20-A	Not used with "Landau" top (‡)	1	63	A	63
C3AZ 63423A20-B	Used with "Landau" top (‡)	1	63	A	63
‡ Package also includes -					
(2) C3AZ-6340248-C	retainer (5) C3AZ-6340248-D retainer (2) 376361-S101 screw				
C3MY 76423A20-A	48-1/2" long	1	76	A	63/64
Package also includes -					
(11) 373248-S8	nut-tee-No. 8-32 (11) 376724-S100 stud-fastener				
C4MY 63423A20-A	Not used with "Landau" top (Δ)	1	63	A	64
C4MY 63423A20-B	Use with "Landau" top (Δ)	1	63	A	64
Δ Package also includes -					
(5) C3AZ-6340248-D	retainer (2) 376361-S101 screw-oval hd.-No. 8-18 x 5/8"				
C3DZ 76423A20-A		1	76	C	63
Package also includes -					
(9) 359283-S100	stud-fastener (9) 373248-S8 nut-tee-No. 8-32				
C3DZ 63423A20-A	R.H. (b)	1	63	C	64
C3DZ 63423A21-A	L.H. (b)	1	63	C	64
C4DZ 76423A20-A		1	76	C	64
Package also includes -					
(9) 376759-S100	stud-fastener (9) 378427-S2 nut & retainer				
C2DZ 6240368-A	Retainer	1	b		
C3DZ 6340248-A	Retainer assembly	3	b		
353911-S100	Nut and washer assy.	1	b		
358620-S100	Stud-fastener-No. 8-32	9	a		
373248-S8	Nut	9	a		
423A22-3	REFER TO GROUP 423A18-9				
42324	REFER TO GROUP 42410-1				
42325	BRACKET (BACK WINDOW) LOWER STOP				
PB9M 5642325-A		2	77	A	60

GROUP AND PART NUMBER	DESCRIPTION, SIZE, ETC.	NO. REQ'D	MODEL OR ENGINE CUBIC INCH DISPLACEMENT	VEHICLE CODE	YEAR 19____
42326	HOSE (BACK WINDOW HOUSING DRAIN)				
B9LB 7542326-A	Rubber	1	54, 65, 75	D	60
423A26	RETAINER (BACK WINDOW OUTSIDE LOWER CENTER MOULDING)				
C1AB 59423A26-A		4	71	A	61
C2MY 71423A26-A		AR	71	A	62/64
C3AZ 63423A26-A	Use with moulding groups 42404-5 and 42430-1	14	63	A	63/64
C4AZ 57423A26-A		14	57	A	64
		8	53	D	64
42327	TUBE (BACK WINDOW HOUSING DRAIN)				
C3MY 5442327-A	Use with retractable window	2	All except 57,63,71,76	A	63/64
423A28	MOULDING (BACK WINDOW) OUTSIDE LOWER CENTER				
C1AB 59423A28-F	Assembly includes rubber seal 423A98 (b)	1	71	A	61
C3AZ 71423A28-A	Assembly includes rubber seal 423A98	1	71	A	62/64
	Package also includes -				
(4) C2MY-71423A26-A retainer	(4) 52726-S13 screw-pan hd.-No. 8				
C1AB 59423A26-A	Retainer	4	b		
52720-S8	Screw-pan hd. cr. rec. tap.-No. 8-15 x 3/8"	4	b		
423A30-3	PANEL (LOWER BACK) INNER FINISH				
C1VB 74423A32-A	R.H. - zinc die cast	1	74	D	61
C1VB 74423A33-A	L.H. - zinc die cast	1	74	D	61
C2VY 74423A30-A	R.H. (a)	1	74	D	62
C2VY 74423A31-A	L.H. (a)	1	74	D	62
C3VY 74423A30-A	R.H. (Δ)	1	74	D	63
C3VY 74423A31-A	L.H. (Δ)	1	74	D	63
	Δ Package also includes -				
(4) 376378-S101	screw-truss hd.-No. 8-18 x 3/8"	(4) 378243-S2	nut-spring-No. 10-24		
374789-S15	Screw-flat hd.-No. 8-18 x 7/8"	4	a		
42331	RETAINER (LOWER BACK PANEL MOULDING)				
C2MY 5442331-A		2	All except 71	A	62
C2MY 5442331-B	Attach lower back panel moulding	4	All except 71	A	62
	Rear door moulding	AR	71	C	60/61
	Attach front fender and front door moulding	AR	All except 71	C	60/61
C2YY 6242331-A	Also use for quarter panel moulding	AR	54, 62, 65	B	62/63
423A34-5	RETAINER (LOWER BACK INNER FINISH PANEL)				
C1VB 74423A34-B		2	74	D	61/62
C3VY 74423A34-B	R.H.	1	74	D	63
C3VY 74423A35-B	L.H.	1	74	D	63
423A36-7	PANEL (LOWER BACK) OUTER FINISH				
C1VB 74423A36-A		2	74	D	61
C2VY 74423A36-A		2	74	D	62
	Package also includes -				
	(3) 354397-S100	nut & washer-No. 10-24			
C3VY 74423A36-A	R.H. (Δ)	1	74	D	63
C3VY 74423A37-A	L.H. (Δ)	1	74	D	63
	Δ Package also includes -				
	(3) 359606-S8	nut-No. 10-24			
42338	SUPPORT (BACK WINDOW HOUSING) UPPER				
C3MY 5442338-A	Use with retractable window	1	All except 57,63,71,76	A	63/64

GROUP AND PART NUMBER	DESCRIPTION, SIZE, ETC.	NO. REQ'D	MODEL OR ENGINE CUBIC INCH DISPLACEMENT	VEHICLE CODE	YEAR 19____
423A38	PANEL (LOWER BACK) CENTER FINISH				
C1VB 74423A38-A		2	74	D	61
C2VY 74423A38-B		2	74	D	62
Package also includes -	(4) 354397-S100 nut & washer-No. 10-24				
C3VY 74423A38-A		2	74	D	63
Package also includes -	(4) 359606-S8 nut-No. 10-24				
423A40-1	REFER TO GROUP 403A76-7				
423A42	PANEL (LOWER BACK FINISH)				
C3MY 62423A42-A		1	All except 71	A	63
423A48	MOULDING (LOWER BACK PANEL APPLIQUE)				
C1MB 54423A48-A	Rustless steel - 5-11/16" long	1	54, 62, 65, 75, 76	A	61
42353	COVER (BACK WINDOW GARNISH UPPER MOULDING JOINT)				
C3MY 5442353-A	Chrome finish	1	54B, F, 65B, C, F, 75B, F	A	63/64
C3MY 6242353-A	Painted	1	54A, 62A, 65A, 75A	A	63/64
423A54	INSERT (BACK WINDOW OUTSIDE SIDE MOULDING)				
COLB 65423A54-B	Rubber	2	54, 65, 75	D	60
423A58	MOULDING (LOWER BACK PANEL)				
C1MB 54423A58-A	Rustless steel - 64-15/16" long (a)	1	54B, 65B, 75B, 76	A	61
C1MB 71423A58-A	Rustless steel - 54-15/16" long (b)	1	71B	A	61
C1MB 71423A58-C	In prime (b)	1	71A	A	61
C2MY 54423A58-A	Rustless steel - 65-3/8" long	1	All except 71	A	62
Package also includes -	(2) C2MB-5442331-A retainer (4) C2MY-5442331-B retainer (2) 34655-S8 nut				
C2YY 62423A58-A	Aluminum - 53" long	1	All except 71	B	62/63
Package also includes -	(6) C2YY-6242331-A retainer (6) 354397-S100 nut & washer-No. 10-24				
C4GY 62423A58-A	Aluminum - 60-3/16" long	1	All except 71	C	64
Package also includes -	(9) C4GY-6242364-B retainer (9) 375690-S nut				
C1MB 5440368-A	Retainer	6	a		
C1MB 7140368-A	Retainer	6	b		
423A62	RETAINER (LOWER BACK APPLIQUE PANEL - INNER)				
C2YY 62423A62-A		16	All except 71	B	62/63
42364	RETAINER (LOWER BACK PANEL - LOWER MOULDING & QUARTER PANEL)				
C4GY 6242364-A	Lower back panel lower moulding	2	All except 71	C	64
	Quarter panel moulding	2	All except 63E	C	64
423A64	RETAINER (LOWER BACK FINISH PANEL)				
C4DZ 62423A64-A		12	All except 71	C	64
42368-9	MOULDING (LOWER BACK FINISH PANEL) UPPER				
C2GY 6242368-A	R.H. - rustless steel - 12-7/16" long (Δ)	1	62C, 63C, 76B	C	62/63
C2GY 6242369-A	L.H. - rustless steel - 12-7/16" long (Δ)	1	62C, 63C, 76B	C	62/63
Δ Package also includes -	(2) C2OZ-6242527-A retainer (2) 375964-S7 nut-No. 10-24				

GROUP AND PART NUMBER	DESCRIPTION, SIZE, ETC.	NO. REQ'D	MODEL OR ENGINE CUBIC INCH DISPLACEMENT	VEHICLE CODE	YEAR 19____
42370	MOULDING (LOWER BACK FINISH PANEL) LOWER				
C2GY 6242370-A	Rustless steel - 26-3/16" long	1	62C, 63C, 76B	C	62/63
	Package also includes -				
(4) C2OZ-6242527-A	retainer (4) 375964-S7 nut-No. 10-24				
423A70	RAIL (TAILGATE OUTSIDE FINISH) UPPER				
C3DZ 71423A70-A	Fiberglas	1	71C	C	62
		1	71C, D	C	63
	Package also includes -				
(4) C2DZ-71290B32-A	fastener (4) 358404-S cap (4) 373702-S100 screw and washer				
42372	RETAINER (BACK WINDOW GLASS RUN) UPPER				
C3OZ 7142372-A	(a)	1	71	B	63
52726-S13	Screw-pan hd. cr. rec. tap. -No. 8-15 x 1/2"	7	a		
42374-5	RETAINER (BACK WINDOW GLASS RUN) UPPER SIDE				
C3OZ 7142374-A	Use on vehicles built prior to 5-1-63	2	71	B	63
C3OZ 7142374-B	Use on vehicles built after 4-30-63	2	71	B	63
C3DZ 5942374-A	Use on vehicles built prior to 11-1-63 (a)	2	71	C	64
C3DZ 5942374-B	R.H. - use on vehicles built after 4-30-63 - for vehicles built prior to 5-1-63 see group 422A24-5	1	59,71	C	63
	Use on vehicles built after 10-31-63	1	71	C	64
C3DZ 5942375-B	L.H. - use on vehicles built after 4-30-63 - for vehicles built prior to 5-1-63 see group 422A24-5	1	59,71	C	63
	Use on vehicles built after 10-31-63	1	71	C	64
52726-S13	Screw-pan hd. tap. -No. 8-15 x 1/2"	3	a		
42376-7	MOULDING (BACK WINDOW OUTSIDE) UPPER CORNER				
C2DZ 6242376-A	R.H.	1	54,62	C	64
C2DZ 6242377-A	L.H.	1	54,62	C	64
423A76	RETAINER (LOWER BACK PANEL) CENTER FINISH MOULDING				
C1VY 57423A76-A		8	All	D	61/63
423A78	RETAINER (REAR CORNER INNER FINISH) LOWER PANEL				
C1AB 59423A78-A		2	71	A	61/64
42380	SEAL (BACK WINDOW HOUSING) UPPER				
C3MY 5442380-A	Use with retractable window	1	All except 57,63,71,76	A	63/64
423A80	RETAINER (LOWER BACK PANEL APPLIQUE JOINT)				
C1MB 54423A80-A		2	54,62,65,71,76	A	61
423A92-3	MOULDING (TAILGATE OUTSIDE UPPER END)				
C1KB 71423A92-A	R.H. - rustless steel - 16-7/8" long (Δ)	1	59,71	C	60/61
C1KB 71423A93-A	L.H. - rustless steel - 16-7/8" long (Δ)	1	59,71	C	60/61
	Δ Package also includes -				
(4) C1KB-71425A14-A	retainer (4) 353911-S100 nut & washer-No. 10-24				
423A96	MOULDING (TAILGATE) OUTSIDE UPPER CENTER				
C1KB 71423A96-A	Chrome finish - use with manual window regulator (a)	1	59,71	C	60/61
353911-S100	Nut and washer assy. -No. 10-24	3	a		
423A98	SEAL (BACK WINDOW OUTSIDE LOWER CENTER MOULDING)				
C1AB 59423A98-D	Rubber - also serviced in moulding assembly 423A28	1	71	A	61

GROUP AND PART NUMBER	DESCRIPTION, SIZE, ETC.	NO. REQ'D	MODEL OR ENGINE CUBIC INCH DISPLACEMENT	VEHICLE CODE	YEAR 19__
424A00-1	REFER TO GROUP 42404-5				
42402-3	MOULDING (BACK WINDOW DIVISION BAR) OUTSIDE				
C3MY 5442402-A	R. H. - use with retractable window	1	All except 57,63,71,76	A	63/64
C3MY 5442403-A	L. H. - use with retractable window	1	All except 57,63,71,76	A	63/64
42404-5	MOULDING (BACK WINDOW) OUTSIDE LOWER				
C1AB 6442404-A	Rustless steel (b)	1	58A,64	A	61
C1MY 62424A00-A	R. H. (a)	1	54,62,65,75	A	61
		1	All except 71,76	A	62
C1MY 62424A01-A	L. H. (a)	1	54,62,65,75	A	61
		1	All except 71,76	A	62
C3MY 6242404-A	Use with retractable window	1	All except 57,63,71,76	A	63/64
C3AZ 6342404-A	R. H. (Δ)	1	63	A	63/64
C3AZ 6342405-A	L. H. (Δ)	1	63	A	63/64
Δ Package also includes - (5) C3AZ-63423A26-A retainer					
C4AZ 5742404-A	R. H. - rustless steel	1	57	A	64
C4AZ 5742405-A	L. H. - rustless steel	1	57	A	64
C4AZ 6342404-A	R. H. - use with Butyl Tape installation (§)	1	63	A	64
C4AZ 6342405-A	L. H. - use with Butyl Tape installation (§)	1	63	A	64
§ Package also includes - (7) C3AZ-63423A26-A retainer or (7) C4AZ-57423A26-A retainer					
C2OB 6242404-A		1	54,62	B	62/63
COLB 6342404-A	R. H. - rustless steel (c)	1	53, 57, 63	D	60
COLB 6342405-A	L. H. - rustless steel (c)	1	53, 57, 63	D	60
C1VB 5742404-C	Rustless steel - insert moulding into weatherstrip	1	53	D	61/63
C4VY 5342404-A	R. H. - rustless steel - 31-11/32" long	1	53	D	64
C4VY 5342405-A	L. H. - rustless steel - 31-11/32" long	1	53	D	64
B9LB 5742487-A	Retainer	AR	c		
52010-S	Screw-flat hd. cr. rec. -No. 6-18 x 1/2"	2	b		
52376-S13	Screw-oval hd. cr. rec. -No. 8-15 x 1"	2	a		
424A04-5	ORNAMENT (LOWER BACK PANEL) SIDE				
C2MY 62424A04-A	R. H. - chrome finish (a)	1	All except 71	A	62
C2MY62424A05-A	L. H. - chrome finish (a)	1	All except 71	A	62
373504-S	Nut and washer-self-thread-3/16"	2	a		
42406-7	MOULDING (BACK WINDOW) OUTSIDE LOWER CORNER				
C1AZ 5942406-D	R. H. - rustless steel	1	71	A	61/64
C1AZ 5942407-D	L. H. - rustless steel	1	71	A	61/64
424A06	SPACER (LOWER BACK INNER FINISH PANEL)				
C2VB 74424A06-A		AR	74	D	61/62
42410-1	MOULDING (BACK WINDOW GARNISH) UPPER				
PB9M 5642324-AP	In prime - 45-31/32" long	1	77	A	60
PB9M 5742410-AP	In prime - use on models 57F,63F prior to 11-2-59	1	57,63	A	60
COMB 6342410-A	Chrome finish - use on vehicles built after 11-1-59	1	57F,63F	A	60
PB9M 5842410-AP	R. H. - in prime	1	58, 64	A	60
PB9M 5842411-AP	L. H. - in prime	1	58, 64	A	60
C2AZ 7142410-AP	In prime	1	71	A	61/64
C3AZ 6342410-A	Not used with Thiokol installation	1	63	A	63
Package also includes - (4) 53060-S13 screws					

CONTINUED ON NEXT PAGE

GROUP AND PART NUMBER	DESCRIPTION, SIZE, ETC.	NO. REQ'D	MODEL OR ENGINE CUBIC INCH DISPLACEMENT	VEHICLE CODE	YEAR 19____
42410-1	MOULDING (BACK WINDOW GARNISH) UPPER (CONTINUED)				
C3MY 5442410-A	R.H. - chrome finish (a)	1	54B, F, 65B, C, F, 75B, F	A	63/64
C3MY 5442411-A	L.H. - chrome finish (a)	1	54B, F, 65B, C, F, 75B, F	A	63/64
C3MY 6242410-A	R.H. - painted (a)	1	54A, 62A, 65A, 75A	A	63/64
C3MY 6242411-A	L.H. - painted (a)	1	54A, 62A, 65A, 75A	A	63/64
C4AZ 5742410-A	Aluminum (a)	1	57	A	64
C4AZ 6342410-A	Not used with Butyl Tape installation	1	63A	A	64
C4MY 6342410-A	Use with Butyl Tape installation	1	63	A	64
C4MY 6342410-B	Not used with Butyl Tape installation	1	63C, D, F	A	64
COLB 6342410-DP	R.H. - in prime	1	53, 57, 63	D	60
COLB 6342411-DP	L.H. - in prime	1	53, 57, 63	D	60
COLB 6542410-A	R.H. - chrome finish	1	54, 65, 75	D	60
COLB 6542411-A	L.H. - chrome finish	1	54, 65, 75	D	60
C4VY 5342410-A	47-21/32" long	1	53	D	64
Package also includes -	(2) 53038-S13 screw-flat hd.-No.8-15 x 1-1/4"				
53060-S13	Screw-oval hd. cr. rec. tap. -No. 8-15 x 1"	AR	a		
42413	RETAINER (BACK WINDOW) OUTSIDE UPPER MOULDING				
PB9M 5742413-A	(a)	5	57, 63	A	60
B9MB 5742463-B		2	57, 63	A	60
PB9M 5842413-A	(a)	4	58, 64	A	60
C3AZ 6342413-A	Not used with Thiokol installation - use with moulding group 42430-1	6	63	A	63
	Not used with Butyl Tape installation	6	63	A	64
C4AZ 6342413-A	Use with Butyl Tape installation	AR	63	A	64
C4AZ 5742413-A		6	57	A	64
		6	53	D	64
COLB 6342413-A	23/32" x 1-9/32"	6	53, 57, 63	D	60
COLB 6542413-A	9/16" x 1"	6	54, 65, 75	D	60
353911-S100	Nut and washer assy. -No. 10-24	2	a		
42416-7	MOULDING (BACK WINDOW GARNISH) SIDE				
C3AZ 6342416-A	R.H. (Δ)	1	63	A	63
C3AZ 6342417-A	L.H. (Δ)	1	63	A	63
Δ Package also includes -	(1) C3AB-63424A24-A support (2) 52727-S8 screw-pan hd. cr. rec. -No.10-12 x 1/2" (5) 53060-S13 screw-oval hd. trim-No.8-15 x 1" (1) 52718-S8 screw-pan hd. cr. rec. -No.6-18 x 3/8"				
C4AZ 5742416-A	R.H. - use on vehicles built prior to 3-2-64 (§)	1	57	A	64
C4AZ 5742417-A	L.H. - use on vehicles built prior to 3-2-64 (§)	1	57	A	64
§ Package also includes -	(2) 53060-S13 screw (1) 53066-S13 screw				
C4AZ 5742416-B	R.H. - use on vehicles built after 3-1-64 (‡)	1	57	A	64
C4AZ 5742417-B	L.H. - use on vehicles built after 3-1-64 (‡)	1	57	A	64
‡ Package also includes -	(2) 53060-S13 screw				
C4AZ 6342416-A	R.H. - not used with Butyl Tape installation	1	63A	A	64
C4AZ 6342417-A	L.H. - not used with Butyl Tape installation	1	63A	A	64
C4MY 6342416-A	R.H. - use with Butyl Tape installation	1	63	A	64
C4MY 6342417-A	L.H. - use with Butyl Tape installation	1	63	A	64
C4MY 6342416-B	R.H. - not used with Butyl Tape installation	1	63C, D, F	A	64
C4MY 6342417-B	L.H. - not used with Butyl Tape installation	1	63C, D, F	A	64

CONTINUED ON NEXT PAGE

GROUP AND PART NUMBER	DESCRIPTION, SIZE, ETC.	NO. REQ'D	MODEL OR ENGINE CUBIC INCH DISPLACEMENT	VEHICLE CODE	YEAR 19____
42416-7	MOULDING (BACK WINDOW GARNISH) SIDE (CONTINUED)				
C3OZ 7142416-A	R.H.	1	71	B	63
C3OZ 7142417-A	L.H.	1	71	B	63
C1VB 5742416-A	R.H. - chrome finish (a)	1	53	D	61/63
C1VB 5742417-A	L.H. - chrome finish (a)	1	53	D	61/63
C4VY 5342416-A	R.H. (Δ)	1	53	D	64
C4VY 5342417-A	L.H. (Δ)	1	53	D	64
Δ Package also includes - (3) 53038-S13 screw-self-tap.-No. 8-15 x 3/4"					
C1VB 57517A80-C	Support-gasket material-9/32" x 1"	2	a		
53060-S13	Screw-oval hd. cr. rec. tap.-No. 8-15 x 1"	2	a		
359578-S13	Screw-oval hd. cr. rec.-No. 8-15 x 1-3/4"	2	a		
424A16-7	EXTENSION (BACK WINDOW OUTSIDE MOULDING)				
C3YY 65424A16-A	R.H. (Δ)	1	65	B	63
C3YY 65424A17-A	L.H. (Δ)	1	65	B	63
Δ Package also includes - (1) 376364-S101 screw-oval hd. trim-No. 8-18 x 1"					
42420-1	MOULDING (BACK WINDOW DIVISION BAR) OUTSIDE				
BAK 6842420-A	R.H. - rustless steel	1	68	D	60
BAK 6842421-A	L.H. - rustless steel	1	68	D	60
BAK 7542420-B	Rustless steel (a)	2	54, 65, 75	D	60
50438-S13	Screw-oval hd. cr. rec.-No. 8-32 x 1"	2	a		
424A22	SPACER (LOWER BACK PANEL SIDE MOULDING)				
	NS-washer steel 3/16" I.D. - 1/2" O.D. x 1/8" thick - for service secure locally	2	All	D	63
424A24	SUPPORT (BACK WINDOW GARNISH MOULDING)				
C3AZ 63424A24-A	Steel (a)	6	63	A	63
C4AZ 63424A24-A	Steel	6	63	A	64
52727-S8	Screw-pan hd. cr. rec. tap.-No. 10-12 x 1/2"	6	a		
42430-1	MOULDING (BACK WINDOW) OUTSIDE UPPER				
PB9M 5742430-A	53-5/32" long - rustless steel (b)	1	57, 63	A	60
PB9M 5842430-A	47" long - rustless steel (c)	1	58, 64	A	60
C1AB 6442430-A	R.H. - rustless steel (a)	1	58, 64	A	61
C1AB 6442431-A	L.H. - rustless steel (a)	1	58, 64	A	61
COAZ62423A00-A	Rustless steel (f)	1	54, 62, 65, 75	A	61/62
C3MY 6242430-A	Rustless steel - use on vehicles built prior to 10-15-63	1	All except 57, 63, 71, 76	A	63/64
C3MY 6242430-B	Rustless steel - use on vehicles built after 10-14-63	1	54, 62, 65, 75	A	64
C3AZ 6342430-A	R.H. (§)	1	63	A	63
	Not used with Butyl Tape installation (§)	1	63	A	64
C3AZ 6342431-A	L.H. (§)	1	63	A	63
	Not used with Butyl Tape installation (§)	1	63	A	64
§ Package also includes - (3) C3AZ-63423A26-A retainer (3) C3AZ-6342413-A retainer					
C4AZ 5742430-A	R.H. - rustless steel	1	57	A	64
C4AZ 5742431-A	L.H. - rustless steel	1	57	A	64
C4AZ 6342430-A	R.H. - use with Butyl Tape installation (‡)	1	63	A	64
C4AZ 6342431-A	L.H. - use with Butyl Tape installation (‡)	1	63	A	64
‡ Package also includes - (7) C4AZ-6342413-A retainer or (7) C4AZ-5742413-A retainer					

CONTINUED ON NEXT PAGE

GROUP AND PART NUMBER	DESCRIPTION, SIZE, ETC.	NO. REQ'D	MODEL OR ENGINE CUBIC INCH DISPLACEMENT	VEHICLE CODE	YEAR 19____
42430-1	MOULDING (BACK WINDOW) OUTSIDE UPPER (CONTINUED)				
C2OB 6242430-A		1	54, 62	B	62/63
C3OZ 6542430-A	(Δ)	1	65	B	63
C3OZ 7142430-A	(Δ)	1	71	B	63
Δ Package also includes - (4) 376364-S101 screw-oval hd. trim-No. 8-18 x 1"					
C1KB 62423A00-A	Rustless steel	1	54, 62	C	60/63
C3DZ 6342430-A	R. H.	1	63	C	63/64
C3DZ 6342431-A	L. H.	1	63	C	63/64
C2DZ 6242430-A	Rustless steel	1	54, 62	C	64
COLB 6342430-A	Rustless steel (e)	1	53, 57, 63	D	60
COLB 6542430-A	Rustless steel (d)	1	54, 65, 75	D	60
PB9M 5742413-A	Retainer	5	b		
PB9M 5842413-A	Retainer	4	c		
COLB 6342413-A	Retainer	6	e		
COLB 6542413-A	Retainer	6	d		
32930-S7	Screw-pan hd. cr. rec. -No. 8-18 x 5/8"	6	d		
45132-S2	Spring nut-No. 8-15	6	d		
52010-S	Screw-flat hd. cr. rec. -No. 6-18 x 1/2"	2	a		
52376-S13	Screw-oval hd. cr. rec. -No. 8-15 x 1"	3	f		
52720-S8	Screw-pan hd. cr. rec. tap. -No. 8-18 x 3/8"	2	c		
52775-S8	Screw-pan hd. cr. rec. -No. 8-18 x 1/4"	6	d, e		
424A30	SUPPORT (BACK WINDOW GARNISH SIDE MOULDING LOWER)				
C3AZ 63424A30-A	Steel	2	63	A	63
C4AZ 63424A30-A		2	63	A	64
42435	RETAINER (BACK WINDOW OUTSIDE UPPER MOULDING)				
C3MY 6242435-A	(3) for R. H. - (3) for L. H.	6	All except 57, 63, 71, 76	A	63/64
42440	PLATE (BACK WINDOW HOUSING DRAIN TUBE)				
C3MY 5442440-A		2	All except 57, 63, 71, 76	A	63/64
42442-3	MOULDING (BACK WINDOW DIVISION BAR) INSIDE				
C3MY 5442442-A	R. H. - chrome finish - use on vehicles built prior to 11-30-62 (a)	1	54B, 65B, C, 75B, C	A	63
C3MY 5442443-A	L. H. - chrome finish - use on vehicles built prior to 11-30-62 (a)	1	54B, 65B, C, 75B, C	A	63
C3MY 5442442-B	R. H. - chrome finish - use on vehicles built after 11-29-62 (a)	1 1	54B, 65B, C, 75B, C 54, 62, 65, 75	A A	63 64
C3MY 5442443-B	L. H. - chrome finish - use on vehicles built after 11-29-62 (a)	1 1	54B, 65B, C, 75B, C 54, 62, 65, 75	A A	63 64
C3MY 6242442-A	R. H. - painted - use on vehicles built prior to 11-30-62 (a)	1	54A, 62A, 65A, 75A	A	63
C3MY 6242443-A	L. H. - painted - use on vehicles built prior to 11-30-62 (a)	1	54A, 62A, 65A, 75A	A	63
C3MY 6242442-B	R. H. - in prime - use on vehicles built after 11-29-62 (a)	1	54A, 62A, 65A, 75A	A	63/64
C3MY 6242443-B	L. H. - in prime - use on vehicles built after 11-29-62 (a)	1	54A, 62A, 65A, 75A	A	63/64
BAK 7542442-A	Rustless steel	2	54, 65, 75	D	60
53038-S13	Screw-oval hd. cr. rec. tap. -No. 8-15 x 3/4"	AR	a		
42444	RETAINER (LOWER BACK FINISH PANEL APPLIQUE)				
C2GY 6242444-A		7	54, 62	C	62
	Not used with back-up lights	7	54, 62A, B, 76A	C	63

GROUP AND PART NUMBER	DESCRIPTION, SIZE, ETC.	NO. REQ'D	MODEL OR ENGINE CUBIC INCH DISPLACEMENT	VEHICLE CODE	YEAR 19__
42450	COVER (BACK WINDOW) OUTSIDE UPPER MOULDING JOINT				
COAB 6442450-A	Rustless steel	1	58,64	A	61
C2OZ 6242450-A	Rustless steel	2	54,62	B	62/63
42454-5	MOULDING (BACK WINDOW GARNISH) LOWER CORNER				
C3MY 5442454-A	R.H. - chrome finish (a)	1	54B,F,65B,C,F,75B,F	A	63/64
C3MY 5442455-A	L.H. - chrome finish (a)	1	54B,F,65B,C,F,75B,F	A	63/64
C3MY 6242454-A	R.H. - in prime (a)	1	54A,62A,65A,75A	A	63/64
C3MY 6242455-A	L.H. - in prime (a)	1	54A,62A,65A,75A	A	63/64
53060-S13	Screw-oval hd.cr.rec.tap.No.8-15 x 1"	AR	a		
42456-7	MOULDING (BACK WINDOW GARNISH) LOWER				
C3AZ 6342456-A	Aluminum - not used with Thiokol installation	1	63	A	63
Package also includes -					
(4) C3AB-63424A24-A supports	(8) 52727-S8 screws				
C4AZ 5742456-A	Use on vehicles built prior to 12-9-63 (Δ)	1	57	A	64
C4AZ 5742456-B	Use on vehicles built after 12-8-63 (Δ)	1	57	A	64
Δ Package also includes -					
	(4) 53060-S13 screw				
C4AZ 6342456-A	Rustless steel - not to be used with Butyl Tape installation	1	63A	A	64
C4MY 6342456-A	Aluminum - use with Butyl Tape installation	1	63	A	64
C4MY 6342456-B	Aluminum - not to be used with Butyl Tape installation	1	63C, D, F	A	64
B9LB 7542456-A	R.H. - chrome finish (a)	1	54, 65, 75	D	60
B9LB 7542457-A	L.H. - chrome finish (a)	1	54, 65, 75	D	60
C1VB 5742456-A	R.H. - chrome finish (b)	1	53	D	61/63
C1VB 5742457-A	L.H. - chrome finish (b)	1	53	D	61/63
52720-S8	Screw-pan hd. cr. rec. -No. 8-15 x 3/8"	AR	a		
359578-S13	Screw-oval hd.cr.rec.-No.8-15 x 1-3/4"	AR	b		
42458	COVER (BACK WINDOW GARNISH MOULDING JOINT)				
BAK 5742458-AP	In prime	1	53, 57, 63	D	60
BAK 7542458-A	Chrome finish	2	54, 65, 75	D	60
42460-1	COVER (BACK WINDOW) OUTSIDE MOULDING JOINT				
COAB 6442460-A	R.H. - rustless steel	1	58,64	A	61
COAB 6442461-A	L.H. - rustless steel	1	58,64	A	61
42463	REFER TO GROUP 42413				
42469	SEAL (BACK WINDOW OUTSIDE LOWER MOULDING RETAINER)				
B9BM 5742469-A		2	57F, 63F	A	60
42470	TIP (BACK WINDOW DIVISION BAR OUTSIDE MOULDING)				
BAK 7542470-A	Rubber	2	54, 65, 75	D	60
42471	TIP (BACK WINDOW DIVISION BAR INSIDE MOULDING)				
C3MY 5442471-A	Rubber	1	All except 63, 71, 76	A	63
42478-9	REFER TO GROUP 42492-3				
42487	RETAINER (BACK WINDOW OUTSIDE LOWER MOULDING)				
C3AZ 6342487-A		14	63	A	63
C3MY 6242487-A		7	All except 57,63,71,76	A	63/64
B9LB 5742487-A		10	53, 57, 63	D	60

GROUP AND PART NUMBER	DESCRIPTION, SIZE, ETC.	NO. REQ'D	MODEL OR ENGINE CUBIC INCH DISPLACEMENT	VEHICLE CODE	YEAR 19____
42492-3	MOULDING (BACK WINDOW) OUTSIDE SIDE				
PB9M 5842492-A	R.H. - rustless steel (e)	1	58, 64	A	60
PB9M 5842493-A	L.H. - rustless steel (e)	1	58, 64	A	60
C1MB 6242492-B	R.H. - rustless steel (d)	1	54, 62, 65, 75	A	61
C1MB 6242493-B	L.H. - rustless steel (d)	1	54, 62, 65, 75	A	61
C2MB 6242492-B	R.H. - rustless steel	1	54, 62, 65, 75	A	62
C2MB 6242493-B	L.H. - rustless steel	1	54, 62, 65, 75	A	62
C3MY 6242492-A	R.H. - rustless steel (Δ)	1	54, 62, 65, 75	A	63
C3MY 6242493-A	L.H. - rustless steel (Δ)	1	54, 62, 65, 75	A	63
Δ Package also includes -					
(1) 45177-S32	nut-spring-No. 8-15 (1) 376360-S101	screw-No. 8-18 x 1/2"	(1) 376365-S101	screw-No. 8-18 x 1-1/4"	
C4MY 6242492-A	R.H. - rustless steel (‡)	1	54, 62, 65, 75	A	64
C4MY 6242493-A	L.H. - rustless steel (‡)	1	54, 62, 65, 75	A	64
‡ Package also includes -					
	(2) 376365-S101	screw-No. 8-18 x 1-1/4"			
C2OZ 6242492-A	R.H. - rustless steel	1	54, 62	B	62/63
C2OZ 6242493-A	L.H. - rustless steel	1	54, 62	B	62/63
C3YY 6542492-A	R.H. (§)	1	65	B	63
C3YY 6542493-A	L.H. (§)	1	65	B	63
C3OZ 7142492-A	R.H. (§)	1	71	B	63
C3OZ 7142493-A	L.H. (§)	1	71	B	63
§ Package also includes -					
	(3) 376364-S101	screw-oval hd.-No. 8-18 x 1"			
C1KB 6242478-A	R.H. - rustless steel	1	54, 62	C	60/63
C1KB 6242479-A	L.H. - rustless steel	1	54, 62	C	60/63
C3DZ 6342492-A	R.H.	1	63	C	63/64
C3DZ 6342493-A	L.H.	1	63	C	63/64
C2DZ 6242492-A	R.H. - rustless steel	1	54, 62	C	64
C2DZ 6242493-A	L.H. - rustless steel	1	54, 62	C	64
COLB 6342478-A	R.H. (b)	1	53, 57, 63	D	60
COLB 6342479-A	L.H. (b)	1	53, 57, 63	D	60
COLB 6542478-B	R.H. (a)	1	54, 65, 75	D	60
COLB 6542479-A	L.H. - use on vehicles built prior to 1-18-60 (a)	1	54, 65, 75	D	60
COLB 6542479-B	L.H. - use on vehicles built after 1-17-60 (a)	1	54, 65, 75	D	60
C1VB 5742492-E	R.H. - rustless steel (c)	1	53	D	61/63
C1VB 5742493-E	L.H. - rustless steel (c)	1	53	D	61/63
C4VY 5342492-A	R.H. - rustless steel	1	53	D	64
C4VY 5342493-A	L.H. - rustless steel	1	53	D	64
COLB 6542552-A	Spacer	1	a		
52376-S13	Screw-oval hd. cr. rec.-No. 8-15 x 1"	2	d		
52735-S8	Screw-pan hd. cr. rec.-No. 10-12 x 5/8"	1	a		
52765-S8	Screw	1	a		
52775-S8	Screw-pan hd. cr. rec.-No. 8-18 x 1/4"	2	b		
352491-S8	Screw-oval hd. cr. rec.-No. 8-15 x 1"-use with early type mouldings	3	c		
354397-S100	Nut and washer assy.-No. 10-24	2	b		
359485-S13	Screw-oval hd. cr. rec.-No. 8-14 x 1/2"	1	e		
371265-S100	Nut and washer-No. 10-24	1	a		
371876-S34	Stud-No. 10-24	1	a		
376364-S101	Screw-oval hd. cr. rec.-No. 8-18 x 1"	AR	c		
425A00	RETAINER (TAILGATE OUTSIDE BELT MOULDING)				
COMB 77425A00-A		5	77B	A	60
425A02	PANEL (LUGGAGE COMPARTMENT DOOR OUTSIDE FINISH)				
C4VY 53425A02-A	Rustless steel - 4-21/32 x 66-27/32"	1	All	D	64
Package also includes -					
	(6) 359606-S8	nut-No. 10-24			

GROUP AND PART NUMBER	DESCRIPTION, SIZE, ETC.	NO. REQ'D	MODEL OR ENGINE CUBIC INCH DISPLACEMENT	VEHICLE CODE	YEAR 19____
425A04	MOULDING (TAILGATE OUTSIDE FINISH PANEL)				
C2MY 71425A04-A	Rustless steel - upper (a)	1	71	A	62
C3YY 71425A04-A	Lower - aluminum - 53-3/16" long - located below finish panel	1	71	B	63
Package also includes -					
(5) C3GY-59425A16-A retainer	(2) C2OZ-6240368-A retainer		(2) 376792-S	nut-hex.flange-No.10-24	
C2GY 59425A04-A	Rustless steel - upper	1	59, 71	C	62
Package also includes -					
(5) C2GY-16A076-A retainer	(2) C2YY-5725034-A retainer		(2) 34053-S8	nut-hex. -No.10-24	
C3GY 59425A04-A	Upper and lower - rustless steel - 48-3/4" long	2	59, 71A, B	C	63
Package also includes -					
(2) C3GY-59407A12-A retainer	(5) C3OZ-59407A12-A retainer		(2) 376783-S	nut-hex.-No.10-24	
C4GY 71425A04-A	Upper - aluminum - 48-11/16"	1	71	C	64
Package also includes -					
(5) C4DZ-16A076-A retainer	(2) C4GY-71424A14-A retainer		(2) 378697-S	screw-pan hd. - No. 10-24	
C2MB 7142525-A	Retainer	6	a		
354613-S8	Screw-truss hd. -No. 8-32 x 5/16"	2	a		
42509-12	MOULDING (LUGGAGE COMPARTMENT DOOR)				
COMB 6442512-A	Chrome finish	1	All except 77	A	60
Package also includes -					
(7) COMB-6442527-A retainer	(7) 359606-S8 nut				
C1MB 5442509-D	Bright finish - includes keyhole cover	1	54B, 65B, 75B, 76	A	61
C1MB 6242509-E	Painted surface - includes keyhole cover (b)	1	54A, 58A, 62A, 64A, 65A, 75A	A	61
C2MY 5442509-A	Length 57" - includes keyhole cover (b)	1	All except 71	A	62
Package also includes -					
	(6) 353958-S100 nut and washer				
C3MY 6242509-A	Die cast - 57" long - with lock hole	1	All except 71	A	63/64
Package also includes -					
(6) 353958-S100	nut & washer-1/4"-20 (4) 375545-S washer-flat-1/4"		(2) 375546-S	washer-flat-1/4"	
(6) 370196-S8	washer-flat-1/4"				
C3MY 6242512-A	Rustless steel - 56-15/16" long	1	All except 71	A	63/64
Package also includes -					
(8) C3MY-6242527-A retainer	(8) 376792-S nut-hex. flange-No. 10-24				
C2YY 6242512-A		1	54, 62, 65	B	62/63
Package also includes -					
(6) C2OZ-6242527-A retainer	(6) 376783-S nut-hex.-No.10-24				
C2GY 6242512-A		1	54, 62, 63, 76	C	62/63
Package also includes -					
(7) C2OZ-6242527-A retainer	(7) 376792-S nut-hex. flange-No. 10-24				
C4GY 6242512-A	Aluminum - 49-1/2" long	1	All except 71	C	64
Package also includes -					
(8) C4GY-6229144-A retainer	(8) 376792-S nut				
COLB 6342509-B	R. H. - chrome finish (a)	1	All	D	60
COLB 6342515-B	L. H. - chrome finish (a)	1	All	D	60
COMB 6328507-C	Retainer	4	a		
52727-S8	Screw-pan hd. cr. rec. -No. 10-12 x 1/2"	4	a		
354262-S	Pin-roll 3/8" x 3/4"	1	b		
358627-S7	Screw and washer assy.	4	a		
373182-S2	Nut	4	a		
373265-S7	Nut and washer assy.	4	a		

GROUP AND PART NUMBER	DESCRIPTION, SIZE, ETC.	NO. REQ'D	MODEL OR ENGINE CUBIC INCH DISPLACEMENT	VEHICLE CODE	YEAR 19____
42512	MOULDING (UPPER BACK PANEL)				
PB9M 5742512-A	41-19/64" long - rustless steel (a)	1	57, 63	A	60
PB9M 5842512-A	41-3/8" long - rustless steel (b)	1	58, 64	A	60
PB9M 5829128-A	Retainer	AR	b		
COMB 63425A26-A	Retainer	3	a		
353911-S100	Nut and washer	3	a		
42514	REFER TO GROUP 43504				
425A14	RETAINER (TAILGATE OUTSIDE UPPER MOULDING)				
C1MB 71425A14-A	Tailgate outside upper moulding	4	71	A	61
	Use on lower quarter panel moulding - group 291A50-1	AR	54B, 62B	B	62
	Quarter and front fender	AR	All	D	61
C1KB 71425A14-A	Tailgate	4	59, 71	C	60/61
C4GY 71425A14-A		2	71	C	64
42515	REFER TO GROUP 42509-12				
425A16	RETAINER (TAILGATE) OUTSIDE LOWER MOULDING				
C1KB 71425A16-A		2	59, 71	C	60/61
C4GY 71425A16-A		2	71	C	64
425A18	MOULDING (TAILGATE OUTSIDE FINISH PANEL) LOWER				
C1MB 71425A18-C	Rustless steel - 54" long (a)	2	71	A	61
C2MY 71425A18-A	Rustless steel - 54" long x 2-3/4" wide (a)	1	71	A	62
C3MY 71425A18-A	Rustless steel - 54" long	1	71	A	63/64
	Package also includes -				
(2) C3MY-7142586-A retainer	(2) 374708-S8 nut & washer-No. 10-24				
C2GY 59425A18-A	Rustless steel - 42-13/16" long (b)	1	59, 71	C	62
C4GY 71425A18-A	Aluminum - 48-11/16"	1	71	C	64
	Package also includes -				
(5) C4DZ-16A076-A retainer	(2) C4GY-71425A16-A retainer	(2) 378697-S screw-pan hd. - No. 10-24			
C2DZ 16A076-C	Retainer	2	b		
C2DZ 6420842-A	Retainer	5	b		
C2MY 71425A36-A	Bolt	2	a		
C2MY 7142537-A	Retainer	6	a		
353911-S100	Nut and washer-No. 10-24	2	b		
354397-S100	Nut-hex. hd. lock-1/4" x 20	2	a		
376362-S101	Screw-oval hd. cr. rec. -No. 8-15 x 3/4"	2	a		
425A20	PANEL (TAILGATE INSIDE BELT FINISH GARNISH MOULDING)				
C1AB 59425A20-BP		1	71	A	61
C2MB 71425A20-AP		1	71	A	62/64
C3OZ 71425A20-A		1	71	B	63
	Package also includes -				
(5) 53016-S13	screw-oval hd. cr. rec. tap.-No. 8-15 x 1/2"	(2) 378735-S8 screw-No. 8-15 x 3/8"			
425A22	MOULDING (TAILGATE OUTSIDE)				
C1MB 71425A22-D	Chrome finish - 54-1/32" long (a)	1	71B	A	61
C1MB 71425A22-E	Painted - 54-1/32" long (a)	1	71A	A	61
358902-S	Nut and washer-1/4"-20	6	a		
42525	RETAINER (TAILGATE OUTSIDE FINISH PANEL UPPER MOULDING)				
C3MY 7142525-A		5	71	A	63/64

GROUP AND PART NUMBER	DESCRIPTION, SIZE, ETC.	NO. REQ'D	MODEL OR ENGINE CUBIC INCH DISPLACEMENT	VEHICLE CODE	YEAR 19____
425A25	RETAINER (TAILGATE OUTSIDE FINISH PANEL UPPER MOULDING)				
C2MY 71425A25-A		6	71	A	62
425A26	RETAINER (UPPER BACK PANEL MOULDING)				
COMB 63425A26-A	(a)	3	57,63	A	60
353911-S100	Nut and washer assy. -No. 10-24	3	a		
42527	RETAINER (LUGGAGE COMPARTMENT DOOR MOULDING)				
COMB 6442527-A		7	All except 77	A	60
C3MY 6242527-A		8	All except 71	A	63/64
C4AZ 6242527-B	Use with back belt center moulding group 423A20-1 on vehicles built after 4-30-64	1	63	A	64
C2OZ 6242527-A		6	All except 71	B	62/63
	For lower back finish panel moulding upper and lower	8	62C, 76B	C	62/63
	Used in grille area	4	All	A	64
C3OZ 7142527-A	Tailgate finish panel	9	71	B	63
C3GY 6242527-A		7	54, 62, 76	C	63
42528	PLATE (TAILGATE, DECK LID OR HOOD OUTSIDE) NAME				
C1MB 7142528-B	Chrome finish - tailgate (a)	1	71	A	61/62
	MERCURY	1	71	A	64
	NOTE - For MERCURY all except 71 refer to group 16604 chassis section				
C3MY 6242528-A	"MERCURY MONTEREY"	1	All except 63B, C	A	63
	Package also includes - (5) 375890-S102 nut-sleeve-1/8"				
C3MY 6342528-A	"MARAUDER"	1	63	A	63
	Package also includes - (5) 375890-S100 nut-sleeve-1/8"				
C1MY 16604-B	"MERCURY" - use on deck lid	1	54,62	B	62
C3YY 6242528-A	"MERCURY METEOR"	1	All	B	63
	Package also includes - (3) 375890-S102 nut-sleeve-1/8"				
C2GB 6242528-A	Use for deck lid (a)	1	54, 62	C	62
	"MERCURY" - chrome finish - hood	1	All	C	63
C3GY 5942528-A	"MERCURY COMET" (‡)	1	59, 71A, B	C	63
C3GY 6242528-A	"MERCURY COMET" (‡)	1	All except 59, 71	C	63
	‡ Package also includes - (6) 375890-S102 nut-sleeve-1/8"				
C4GY 6242528-A	COMET (†)	1	All except 71	C	64
C4GY 7142528-A	COMET (†)	1	71	C	64
	† Package also includes - (6) 375890-S102 nut-sleeve-1/8"				
375890-S100	Nut-sleeve-1/8"	4	a		
	NOTE-Also refer to chassis group 16604 for additional applications				
425A30	MOULDING (TAILGATE OUTSIDE LOWER)				
C1KB 71425A30-B		1	59,71	C	60/61
	Package also includes - (3) C1KB-7140740-A retainer (2) 52193-S8 screw (2) 353911-S100 nut & washer-No. 10-24 (2) C1KB-71425A16-A retainer				
42534	REFER TO GROUP 43504				
425A34	REFER TO GROUP 403A76-7				

GROUP AND PART NUMBER	DESCRIPTION, SIZE, ETC.	NO. REQ'D	MODEL OR ENGINE CUBIC INCH DISPLACEMENT	VEHICLE CODE	YEAR 19____
425A36	BOLT (TAILGATE OUTSIDE LOWER MOULDING RETAINING)				
C2MY 71425A36-A		2	71	A	62
42537	RETAINER (TAILGATE OUTSIDE FINISH PANEL LOWER MOULDING)				
C2MY 7142537-A		6	71	A	62
42543	PAD (LUGGAGE COMPARTMENT DOOR ORNAMENT)				
COMB 6442543-A	Rubber	1	All except 77	A	60
42552	SPACER (BACK WINDOW OUTSIDE) SIDE MOULDING				
COLB 6542552-A	Rubber	2	54, 65, 75	D	60
42564	RAIL (TAILGATE OUTSIDE FINISH) LOWER				
C3DZ 7142564-A	Fiberglas	1	71C	C	62
		1	71C, D	C	63
Package also includes -					
(4) 358403-S100	tee nut (4) 358404-S cap		(4) 376169-S101	screw	
42576-7	MOULDING (TAILGATE OUTSIDE PANEL) END				
C2GY 5942576-A	R. H. (a)	1	59, 71	C	62
C2GY 5942577-A	L. H. (a)	1	59, 71	C	62
50507-S8	Screw-pan hd. cr. rec. -No. 8-32 x 3/8"	1	a		
55730-S8	Nut-hex. lock. -No. 8-32	1	a		
42586	RETAINER (TAILGATE FINISH PANEL UPPER MOULDING)				
C3MY 7142586-A		2	71	A	63/64
42598	PAD (LOWER BACK FINISH PANEL)				
	NS-sponge rubber - 4" x 1-1/4" x 23/64"	2	All except 71	A	64
42700-1	HINGE (LUGGAGE COMPARTMENT DOOR)				
COMB 6442700-A	R. H.	1	All except 77	A	60
COMB 6442701-A	L. H.	1	All except 77	A	60
C2AZ 6242700-A	R. H.	1	All except 71	A	61/64
C2AZ 6242701-A	L. H.	1	All except 71	A	61/64
C3OZ 6242700-A	R. H.	1	54, 62, 65	B	63
C3OZ 6242701-A	L. H.	1	54, 62, 65	B	63
C2OZ 6242700-B	R. H.	1	All	B	62
		1	54, 62, 63	C	62/63
C2OZ 6242701-B	L. H.	1	All	B	62
		1	54, 62, 63	C	62/63
CODZ 6442700-B	R. H.	1	54, 62	C	60/61
CODZ 6442701-B	L. H.	1	54, 62	C	60/61
C3GY 7642700-A	R. H.	1	76	C	63
C3GY 7642701-A	L. H.	1	76	C	63
C4DZ 6242700-A	R. H. - use on vehicles built prior to 2-3-64	1	All except 71	C	64
C4DZ 6242701-A	L. H. - use on vehicles built prior to 2-3-64	1	All except 71	C	64
C4DZ 6242700-B	R. H. - use on vehicles built after 2-2-64	1	All except 71	C	64
C4DZ 6242701-B	L. H. - use on vehicles built after 2-2-64	1	All except 71	C	64
BAK 5742700-D	R. H.	1	All	D	60
BAK 5742701-D	L. H.	1	All	D	60
C1VY 5742700-A	R. H.	1	53	D	61/64
C1VY 5742701-A	L. H.	1	53	D	61/64
C1VB 7442700-B	Assembly includes (1) C1VB-7442848-A pin and (2) BAC-7022841-B bushing	2	74	D	61/63
C4VY 7442700-A		2	74	D	64

GROUP AND PART NUMBER	DESCRIPTION, SIZE, ETC.	NO. REQ'D	MODEL OR ENGINE CUBIC INCH DISPLACEMENT	VEHICLE CODE	YEAR 19____
42704-5	BRACKET (LUGGAGE COMPARTMENT DOOR HINGE TO WHEELHOUSE) UPPER				
COMB 6442704-A	R. H.	1	All except 77	A	60
COMB 6442705-A	L. H.	1	All except 77	A	60
C1AB 6442704-B	R. H.	1	58, 64	A	61
C1AB 6442705-B	L. H.	1	58, 64	A	61
C1AB 6242704-B	R. H.	1	54, 62, 65, 75, 76	A	61
		1	All except 71	A	62
C1AB 6242705-B	L. H.	1	54, 62, 65, 75, 76	A	61
		1	All except 71	A	62
C2AB 6242704-A	R. H.	1	54, 62, 65, 75	A	63/64
C2AB 6242705-A	L. H.	1	54, 62, 65, 75	A	63/64
C3MY 7642704-A	R. H.	1	57, 63, 76	A	63/64
C3MY 7642705-A	L. H.	1	57, 63, 76	A	63/64
C3OZ 6242704-A	R. H.	1	All except 71	B	63
C3OZ 6242705-A	L. H.	1	All except 71	B	63
C2GB 6242704-A	R. H.	1	All	B	62
	Used on vehicles built after 1-30-61	1	54, 62	C	61/63
C2GB 6242705-A	L. H.	1	All	B	62
	Used on vehicles built after 1-30-61	1	54, 62	C	61/63
CODB 6442704-B	R. H. - used on vehicles built prior to 1-31-61	1	54, 62	C	60/61
CODB 6442705-B	L. H. - used on vehicles built prior to 1-31-61	1	54, 62	C	60/61
C3GY 7642704-A	R. H.	1	76	C	63
C3GY 7642705-A	L. H.	1	76	C	63
C4DZ 6242704-A	R. H.	1	All except 71	C	64
C4DZ 6242705-A	L. H.	1	All except 71	C	64
BAK 5742704-B	R. H.	1	All	D	60
BAK 5742705-B	L. H.	1	All	D	60
427A10	CLAMP (LUGGAGE COMPARTMENT DOOR LIFT VALVE)				
C1SB 76427A10-A		3	74	D	61/63
427A20	SEAL (LUGGAGE COMPARTMENT DOOR HINGE)				
C1VB 57427A20-A	Rubber	2	All	D	61/62
C3VY 74427A20-A	Rubber	2	74	D	63
C4VY 74427A20-A	Rubber	2	74	D	64
427A22	RETAINER (LUGGAGE COMPARTMENT DOOR HINGE OPENING SEAL)				
C1VB 57427A22-A	Use with C1VB-57401105-A door only to 5-15-61- after this date improvise locally	2	53	D	61
C1VB 74427A22-A		1	74	D	61/62
C3VY 74427A22-A		2	74	D	63
C4VY 74427A22-A		2	74	D	64
42738-9	BRACKET (LUGGAGE COMPARTMENT DOOR HINGE TO WHEELHOUSE) UPPER				
C1VB 5742738-A	R.H.	1	53	D	61/63
C1VB 5742739-A	L.H.	1	53	D	61/63
C4VY 5342738-A	R. H.	1	53	D	64
C4VY 5342739-A	L.H.	1	53	D	64
427A42	BUSHING (LUGGAGE COMPARTMENT DOOR LIFT)				
C1VB 74427A42-A	Nylon	4	74	D	61/64
42744-5	BRACKET (LUGGAGE COMPARTMENT DOOR HINGE TO WHEELHOUSE) LOWER				
PB9M 5742744-A	R. H.	1	All except 77	A	60
PB9M 5742745-A	L. H.	1	All except 77	A	60
C1AB 6242744-A	R. H.	1	54, 62, 65, 75	A	61
		1	All except 57, 63, 71, 76	A	62/64
C1AB 6242745-A	L. H.	1	54, 62, 65, 75	A	61
		1	All except 57, 63, 71, 76	A	62/64

CONTINUED ON NEXT PAGE

GROUP AND PART NUMBER	DESCRIPTION, SIZE, ETC.	NO. REQ'D	MODEL OR ENGINE CUBIC INCH DISPLACEMENT	VEHICLE CODE	YEAR 19____
42744-5	BRACKET (LUGGAGE COMPARTMENT DOOR HINGE TO WHEELHOUSE) LOWER (CONTINUED)				
C1AB 6342744-A	R. H.	1	57,58,63,64,76	A	61/64
C1AB 6342745-A	L. H.	1	57,58,63,64,76	A	61/64
C3OZ 6242744-A	R. H. - use on vehicles built prior to 5-22-63	1	54,62,65	B	62/63
C3OZ 6242745-A	L. H. - use on vehicles built prior to 5-22-63	1	54,62,65	B	62/63
C3OZ 6242744-B	R. H. - use on vehicles built after 5-21-63	1	54, 62, 65	B	62/63
C3OZ 6242745-B	L. H. - use on vehicles built after 5-21-63	1	54, 62, 65	B	62/63
C1KB 6242744-A	R. H.	1	54,62	C	60/61
C1KB 6242745-A	L. H.	1	54,62	C	60/61
C4GY 6242744-A	R. H.	1	All except 59,71	C	62/64
C4GY 6242745-A	L. H.	1	All except 59,71	C	62/64
BAK 5742744-A	R. H.	1	All	D	60
BAK 5742745-A	L. H.	1	All	D	60
C1VB 5742744-A	R.H.	1	53	D	61/63
C1VB 5742745-A	L.H.	1	53	D	61/63
C4VY 5342744-A		2	53	D	64
427A44-5	TRANSMISSION ASSEMBLY (LUGGAGE COMPARTMENT DOOR LOCK) LESS CASING & CABLE				
C1SB 76427A44-A	R.H.	1	74	D	61/63
C1SB 76427A45-A	L.H.	1	74	D	61/63
C4SZ 76427A44-A	R.H. (a)	1	74	D	64
C4SZ 76427A45-A	L.H. (a)	1	74	D	64
B7A 5153916-A	Bushing	4	a		
B7A 5153917-A	Sleeve	2	a		
23439-S8	Bolt-carriage-5/16"-24 x 1-1/4"	2	a		
44725-S8	Washer-flat-steel-5/16"	2	a		
55672-S8	Nut-hex. lock-5/16"-24	2	a		
427A52-3	SHIELD (LUGGAGE COMPARTMENT DOOR LIFT)				
C4VY 74427A52-A	R. H. - steel - in prime	1	74	D	64
C4VY 74427A53-A	L. H. - steel - in prime	1	74	D	64
427A62	BUMPER (LUGGAGE COMPARTMENT DOOR HINGE)				
C1VB 74427A62-A		2	74	D	61/63
42848	PIN (LUGGAGE COMPARTMENT DOOR HINGE PIVOT)				
C1VB 7442848-A		2	74	D	61/63
42850-1	ARM ASSEMBLY (LUGGAGE COMPARTMENT DOOR LIFT TO BODY)				
C1VB 7442850-B	R.H.	1	74	D	61/63
C1VB 7442851-B	L.H.	1	74	D	61/63
C4VY 7442850-A	(a)	2	74	D	64
	Attach arm assembly to lift assembly luggage compartment door with the following -				
C1VB 74427A42-A	Bushing	2	a		
33979-S8	NS-nut-slotted	1	a		
44726-S8	Washer-flat-3/8"	3	a		
72035-S8	Pin-cotter-1/8" x 1	1	a		
374221-S8	Bolt-hex. hd. -drilled end	1	a		
42892	SPRING (LUGGAGE COMPARTMENT DOOR HINGE)				
BAK 5742892-A		1	All	D	60
42909	RETAINER (BACK WINDOW OUTSIDE UPPER MOULDING END)				
B9MB 5742909-A	(a)	2	57, 63	A	60
353911-S100	Nut and washer assy. -No.10-24	2	a		

GROUP AND PART NUMBER	DESCRIPTION, SIZE, ETC.	NO. REQ'D	MODEL OR ENGINE CUBIC INCH DISPLACEMENT	VEHICLE CODE	YEAR 19____
43000-1	HINGE (TAILGATE)				
PB9M 5643000-A	R.H.	1	77	A	60
PB9M 5643001-A	L.H.	1	77	A	60
C3AZ 7143000-A	R.H. (a)	1	71	A	61/64
C3AZ 7143001-A	L.H. (a)	1	71	A	61/64
C3OZ 7143000-A	R.H.	1	71	B	63
C3OZ 7143001-A	L.H.	1	71	B	63
CODB 5943000-A	R.H.	1	59, 71	C	60/64
CODB 5943001-A	L.H.	1	59, 71	C	60/64
352628-S2	Screw-hex. washer hd. -5/16"-24 x 7/8"	3	a		
430A00	SPRING (TAILGATE COUNTERBALANCE)				
CODZ 59430A00-B	Steel wire	2	59, 71	C	60/64
430A06	BRACKET (TAILGATE COUNTERBALANCE SPRING)				
CODB 59430A06-B		2	59, 71	C	60/64
430A08	PIN (TAILGATE COUNTERBALANCE SPRING)				
CODB 59430A08-B		2	59, 71	C	60/64
430A10-1	REINFORCEMENT (TAILGATE COUNTERBALANCE SPRING BRACKET)				
CODB 59430A10-A	R.H.	1	59, 71	C	60/64
CODB 59430A11-A	L.H.	1	59, 71	C	60/64
43012-3	REFER TO GROUP 44890-1				
430A14	STRAP (TAILGATE COUNTERBALANCE SPRING)				
CODZ 59430A14-D		2	59, 71	C	60/64
430A24	PIN (TAILGATE COUNTERBALANCE STRAP TENSION)				
CODB 59430A24-B		2	59, 71	C	60/64
430A28	PLATE (TAILGATE COUNTERBALANCE TORQUE BAR MOUNTING)				
C1AB 59430A28-B	(a)	2	71	A	61/64
C3OZ 71430A28-A		2	71	B	63
352628-S2	Screw-hex. washer hd. -5/16"-24 x 7/8"	2	a		
43030	PIN (REAR DOOR HINGE)				
B9A 5943030-A	Upper and lower - steel - 3-9/16" long	AR	All	A B C	60/62
	Rear - lower - 3-9/16" long	2	53, 57, 74	D	60/62
430A38-9	SEAL (TAILGATE HINGE TO COVER)				
CODB 59430A38-A	R.H. - rubber	1	59,71	C	60/61
CODB 59430A39-A	L.H. - rubber	1	59,71	C	60/61
430A46	SEAL (TAILGATE HINGE TO INNER PANEL)				
C1MB 71430A46-A	Sponge rubber	2	71	A	61
C4MY 71430A46-A	Sponge rubber	2	71	A	64
43114	COVER (TAILGATE LOCK ACCESS)				
COMB 5643114-A		1	77	A	60
C1AZ 5943114-B	(a)	1	71	A	61/64
C3OZ 7143114-A		1	71	B	63
C1AB 5424495-A	Fastener	2	a		
C1AB 59431C98-A	Retainer	2	a		
43116	PLATE (TAILGATE INNER PANEL LOCK ACCESS OPENING COVER)				
PB9M 5643116-A		1	77	A	60

GROUP AND PART NUMBER	DESCRIPTION, SIZE, ETC.	NO. REQ'D	MODEL OR ENGINE CUBIC INCH DISPLACEMENT	VEHICLE CODE	YEAR 19____
43125	COVER (LUGGAGE COMPARTMENT DOOR LOCK ACCESS HOLE)				
C1VB 5743125-A		1	53	D	61/62
C1VB 7443125-A		1	74	D	61/62
C4VY 5343125-A	(a)	1	53	D	64
52721-S8	Screw-pan hd. cr. rec. tap. -No. 10-16 x 3/8"	2	a		
43146	STRIKER (TAILGATE LOCK)				
C2AZ 7143146-A	(a)	2	71A, 71B	A	61/62
	(b)	2	71	A B	63/64
	(b)	2	71	C	64
372599-S7	Screw and washer-oval hd. -5/16"-24 x 1"	2	b		
373263-S8	Screw-flat hd. cr. locking-5/16"-24 x 3/4"	2	a		
43150-1	LOCK ASSEMBLY (TAILGATE)				
COMB 7743150-C	R. H. - round dovetail	1	77	A	60
COMB 7743151-C	L. H. - round dovetail	1	77	A	60
C1AB 5943150-E	R. H.	1	71	A	61
C1AB 5943151-E	L. H.	1	71	A	61
C3AZ 7143150-A	R. H.	1	71	A B	62/64
		1	71	C	64
C3AZ 7143151-A	L. H.	1	71	A B	62/64
		1	71	C	64
431A50	LINK (TAILGATE LOCK RELEASE)				
C2AZ 71431A50-C	Use with 377647-S sleeve nut - use on vehicles built prior to 3-1-64 (a)	2	71	A	64
C2AZ 71431A50-D	Use on vehicles built after 2-29-64	2	71	A	64
	Package also includes -				
	(1) C5OB-62219A36-A retainer (1) C5OB-62219A36-B retainer				
C2AZ 71431A50-B	24-1/4" long (a)	2	71	A	61/63
		2	71	B	63
C4DZ 59431A50-A		2	71	C	64
377647-S	Nut-sleeve	4	a		
431B50	SPRING (TAILGATE LATCH)				
C1AB 59431B50-B		1	71	A	61/62
		2	71	A B	63/64
		2	71	C	64
431C50	REFER TO GROUP 43505				
431D50	SHIELD (TAILGATE HANDLE LOCK RELEASE WATER)				
	NS-waterproof asphalt board 4" x 6"	1	71	A	63
43152	SHIM (TAILGATE LOCK STRIKER PLATE)				
COMB 5643152-A		AR	77	A	60
C1AB 5943152-A	Steel	AR	71	A	61/64
		AR	71	B	63
		AR	71	C	64
431C54	REFER TO GROUP 43507				
431C56	CLIP (DOOR LOCK & TAILGATE CONTROL) LINK RETAINING				
COAB 59431C56-A	Front door	2	All except 71	A	61/62
	Tailgate	2	71	A	61/62

GROUP AND PART NUMBER	DESCRIPTION, SIZE, ETC.	NO. REQ'D	MODEL OR ENGINE CUBIC INCH DISPLACEMENT	VEHICLE CODE	YEAR 19____
431D60	BOOT (TAILGATE RELEASE HANDLE)				
C3AZ 71431D60-A		1	71	A	63/64
431A61	SHIM (TAILGATE LATCH STRIKER PLATE)				
CODB 59431A61-A	Steel	AR	59, 71	C	61/64
431B62-3	BUMPER (TAILGATE LATCH)				
C1AZ 71431B62-A	R. H. - rubber	1	71	A	61/64
		1	71	B	63
		1	71	C	64
C1AZ 71431B63-A	L. H. - rubber	1	71	A	61/64
		1	71	B	63
		1	71	C	64
431C62	HANDLE (TAILGATE LOCK RELEASE)				
C1AB 59431C62-B	Manual control	1	71	A	61/64
C3AZ 71431C62-B	(a)	1	71	A	63/64
C3OZ 71431C62-B	(a)	1	71	B	63
50811-S8	Screw and washer-pan hd. cr. rec. -No. 12-24 x 1/2"	2	a		
431A66	EXTENSION (TAILGATE LOCK CYLINDER)				
C1AB 59431A66-A	Zinc die cast - 1/2" O. D. - manual	1	71A	A	61/62
		1	71	A B	63
CODB 59431A66-C	Zinc die cast	1	59, 71	C	60/64
43170	CONTROL (TAILGATE LOCK RELEASE)				
COMB 7743170-A		1	77	A	60
C2AZ 7143170-A		1	71	A	61/64
		1	71	B	63
CODZ 5943170-A		1	59, 71	C	60/64
431C70	ANTI-RATTLER (TAILGATE LOCK RELEASE)				
C1AB 59431C70-A	Steel	1	71	A	61/64
		1	71	B	63
C4DZ 59431C70-A	Steel	1	71	C	64
431A72	PLATE (TAILGATE LATCH STRIKER)				
CODB 59431A72-B	(a)	2	59, 71	C	60/64
371402-S13	Screw	AR	a		
431B72	CLIP (TAILGATE LATCH RELEASE LEVER KNOB RETAINING)				
CODB 59431B72-B		1	59, 71	C	60/64
431A76	KNOB (TAILGATE LATCH RELEASE LEVER)				
CODB 59431A76-B		1	59, 71	C	60/64
431C76	SPRING (TAILGATE LOCK PAWL)				
C1AB 59431C76-A		2	71	A	60/64
		2	71	B	63
		2	71	C	64
43187	LATCH (TAILGATE)				
CODZ 5943187-D		2	59, 71	C	60/64
431A88	BUMPER (TAILGATE LOCK STRIKER PLATE)				
COMB 77431A88-A	Rubber	1	77	A	60
431A94-5	PLATE (TAILGATE LOCK STRIKER) WITH BUMPER				
COMB 77431A94-A	R. H.	1	77	A	60
COMB 77431A95-A	L. H.	1	77	A	60

GROUP AND PART NUMBER	DESCRIPTION, SIZE, ETC.	NO. REQ'D	MODEL OR ENGINE CUBIC INCH DISPLACEMENT	VEHICLE CODE	YEAR 19____
43196	SPRING (LIFTGATE LATCH)				
B7A 5943196-A		2	59, 71	C	60/64
431C98	RETAINER (TAILGATE LOCK ACCESS HOLE COVER)				
C1AB 59431C98-A	Spring steel	2	71	A	61/64
		2	71	B	63
43200	LOCK (LUGGAGE COMPARTMENT DOOR)				
C3SZ 6343200-A	(e)	1	All except 71	A	61/64
C1DZ 6443200-A	(a)	1	All except 77	A	60
		1	54, 62	C	60/61
		1	53	D	61/62
C2OZ 6243200-A	(c)	1	All except 71	B	62/63
C2GY 6243200-A		1	54A, B, 62, 76A	C	62/63
C2OZ 6243200-B	(e)	1	All except 71	C	64
BAK 5743200-A	Manual lock (d)	1	All	D	60
BAK 5743200-B	Electric lock (d)	1	All	D	60
C3VY 5743200-A		1	53	D	63
C4AZ 6243200-A	(e)	1	53	D	64
34805-S8	Washer-spring lock-1/4"	AR	d		
39894-S8	Screw-hex. hd. -1/4"-20 x 5/8"	AR	d		
42908-S7	Screw and washer-hex. hd. -5/16"-24 x 5/8"	2	a		
352628-S2	Screw-hex. washer hd. -5/16"-24 x 7/8"	2	e		
356733-S7	Screw and washer-hex. hd. -5/16"-24 x 5/8"	3	b		
372607-S7	Screw and washer-hex. hd. -5/16"-24 x 3/4"	2	c		
432A00	KIT (REMOTE CONTROL LUGGAGE COMPARTMENT DOOR LOCK RELEASE)				
COMB 64432A00-A		1	All except 77	A	60
		1	All except 71	A	61/63
C4MY 25432A00-A		1	All except 71	A C	64

Consists of the following -

(1) C3RA-2543232-A	actuator	(1) C3RA-25432A94-A	res. assy.	(2) 370087-S7	washer
(1) C3RA-2543240-A	hose	(1) C3RA-2546149-A	coupler	(1) 372047-S100	clip
(1) C3RA-2543240-B	hose	(1) C4VB-5343383-A	valve and bracket	(1) 379160-S	grommet
(1) C3RA-2543240-C	hose	(2) 20308-S8	screw	(1) 379172-S	connector
(1) C3RA-2543283-B	extension	(2) 42367-S8	screw	(1) 379173-S	connector
(1) C3RA-25432A92-A	grommet	(1) 357903-S8	screw	(1) 379174-S	connector

43202 REFER TO GROUP 43235

432A02	SPACER (LUGGAGE COMPARTMENT DOOR LOCK STRIKER BRACKET)				
C3VY 57432A02-A	Steel	1	53	D	63

432A06 REFER TO GROUP 43252

43208	SHIELD (LUGGAGE COMPARTMENT DOOR LOCK) INSIDE				
BAK 5743208-A	(a)	1	All	D	60
42728-S8	Screw and washer assy. -hex. hd. -No. 10-32 x 1/2"	AR	a		
44713-S8	Washer-flat-No. 10	AR	a		
432A24	MOTOR & BRACKET ASSEMBLY (LUGGAGE COMPARTMENT DOOR LOCK)				
C1VY 74432A24-A		1	74	D	61/64
43226	LINK (LUGGAGE COMPARTMENT DOOR LOCK)				
COMB 6443226-B		1	All except 77	A	60
CODB 6443226-C		1	54, 62	C	60/61
C1VB 5743226-A		1	53	D	61/63
C4AZ 6243226-A		1	53	D	64

GROUP AND PART NUMBER	DESCRIPTION, SIZE, ETC.	NO. REQ'D	MODEL OR ENGINE CUBIC INCH DISPLACEMENT	VEHICLE CODE	YEAR 19____
43232	ACTUATOR (LUGGAGE COMPARTMENT DOOR LOCK VACUUM)				
C4MY 2543232-A		1	All except 71	A C	64
C2VY 5743232-A	Vacuum locking (a)	1	53	D	62
C3VY 5743232-A	Vacuum locking	1	53	D	63
C4VY 5343232-A		1	53	D	64
371492-S2	Screw and washer-hex. washer hd. -1/4"-20 x 5/8"	1	a		
432A34	NUT & HOUSING ASSEMBLY (LUGGAGE COMPARTMENT DOOR LOCK)				
C1VB 74432A34-A		2	74	D	61/62
C3SZ 76432A34-A		2	74	D	63
C4VY 74432A34-A	(a)	2	74	D	64
C1SB 17A950-A	NS-plate	2	a		
34782-S7	Lock washer-3/8"	1	a		
42789-S8	Screw and washer-hex. hd. -5/16"-18 x 5/8"	2	a		
356230-S2	NS-washer-flat	1	a		
359431-S8	Bolt-hex. hd. -3/8"-24 x 1-5/8"	1	a		
43235	BRACKET (LUGGAGE COMPARTMENT DOOR LOCK STRIKER)				
C1MB 6243235-A		1	71	A	61
C2YY 6243235-A		1	All except 71	B	62/63
C1KB 6243235-D		1	54, 62	C	60/61
C2GY 6243202-A		1	54, 62, 76	C	62/63
C4GY 6243202-A		1	All except 71	C	64
C3VY 5743235-B		1	53	D	63
C4VY 5343235-A		1	All	D	64
43240	HOSE (LUGGAGE COMPARTMENT DOOR LOCK VACUUM CONTROL)				
C4MY 2543240-A	216.50" long	1	All except 71	A C	64
C4MY 2543240-B	37" long	1	All except 71	A C	64
	NS-98" long - from deck lid switch to hose glove compartment switch - for service cut from COMY-17A605-B	AR	53	D	62
	NS-consists of (1) C2VB-5743240-A 152" long and (1) C2VB-5743240-B 24" long - for service cut from COMY-17A605-B	AR	53	D	62
	NS-86" for service - cut from COMY-17A605-B	AR	53	D	63
	NS-52" for service - cut from COMY-17A605-B	AR	53	D	64
	NS-72" for service - cut from COMY-17A605-B	AR	53	D	64
	NS-143" for service - cut from COMY-17A605-B	AR	53	D	64
43241	RETAINER (LUGGAGE COMPARTMENT DOOR LOCK SLEEVE)				
COAB 6443241-B		1	54, 62	C	60
432A42	SUPPORT (LUGGAGE COMPARTMENT DOOR LOCK STRIKER BRACKET)				
C1MB 62432A42-A		1	All except 71	A	61
43246	REFER TO GROUP 43240				
43252	STRIKER (LUGGAGE COMPARTMENT DOOR LOCK)				
COAB 6443252-A	(a)	1	All except 77	A	60
C1MB 6243252-A	(b)	1	All except 71	A	61
C3MY 6243252-A	(d)	1	All except 71	A	62/63
	(e)	1	All except 71	A	64
C2OZ 6243252-A	(a)	1	All except 71	B	62/63
		1	53	D	63

CONTINUED ON NEXT PAGE

GROUP AND PART NUMBER	DESCRIPTION, SIZE, ETC.	NO. REQ'D	MODEL OR ENGINE CUBIC INCH DISPLACEMENT	VEHICLE CODE	YEAR 19____
43252	STRIKER (LUGGAGE COMPARTMENT DOOR LOCK) CONTINUED				
C4OZ 6243252-A		1	All except 71	C	64
B9LB 57432A06-A		1	54, 62	C	60/62
		1	All except 71	C	63
	(c)	1	All	D	60
COAB 6443252-A		1	53	D	61/62
C4VY 53432A06-A	(e)	1	53	D	64
352628-S2	Screw-hex. washer hd. -5/16"-24 x 7/8"	2	d		
353483-S2	Screw-hex. washer hd.-5/16"-24 x 1-1/8"	AR	c		
356733-S7	Screw and washer-hex. hd. -5/16"-24 x 9/16"	3	b		
371402-S13	Bolt-flat hd. -5/16"-24 x 57/64"	2	e		
372607-S7	Screw-hex. washer hd. -5/16"-24 x 3/4"	2	a		
43266	BRACKET (LUGGAGE COMPARTMENT DOOR LOCK SOLENOID MOUNTING)				
BAK 5743266-A	Use with electric lock luggage compartment	1	All	D	60
432A70	SHIELD (LUGGAGE COMPARTMENT DOOR LOCK STRIKER)				
C4SZ 63432A70-A	Plastic (a)	1	53	D	64
357903-S8	NS-screw-washer hd. cr. rec. -No. 8-15 x 1/2"	2	a		
43279	CASE & CYLINDER ASSEMBLY (LUGGAGE COMPARTMENT DOOR LOCK) WITH KEYS				
C1VY 5743279-B		1	53	D	61/63
Consists of the following -					
(1) C1VB-5743562-B key	(1) COSB-6343262-A lock		(1) 1013035 key		
43283	EXTENSION (LUGGAGE COMPARTMENT DOOR LOCK)				
C1MB 6243283-B		1	All except 71	A	61/62
C3MY 6243283-B		1	All except 71	A	63/64
C2YB 6243283-A		1	All except 71	B	62/63
C4GY 2543283-A	Vacuum	1	All except 71	C	64
C4GY 6243283-A	2-3/4" long	1	All except 71	C	64
C3VY 5743283-A		1	53	D	63
432A92	GROMMET (LUGGAGE COMPARTMENT DOOR LOCK VACUUM CONTROL)				
C4MY 25432A92-A	Rubber	1	All except 71	A C	64
43352	PLATE (LUGGAGE COMPARTMENT DOOR LOCK REMOTE CONTROL)				
C3VY 5743352-A		1	53	D	63
C4VY 5343352-A		1	53	D	64
43366	WASHER (TRANSMISSION ASSEMBLY LUGGAGE COMPARTMENT VACUUM DOOR LOCK)				
C4SZ 7643366-A	Steel	4	74	D	64
43382	VALVE (LUGGAGE COMPARTMENT DOOR LOCK RELEASE CONTROL)				
C2VY 5743382-A	Vacuum locking - for 1964 usage flatten top	1	53	D	62/64
	of thread	1	All except 71	C	64
43384	BRACKET (LUGGAGE COMPARTMENT DOOR LOCK RELEASE CONTROL VALVE)				
C2VY 5743384-A	Vacuum locking (a)	1	53	D	62
C3VY 5743384-A	Vacuum locking (a)	1	53	D	63
C4VY 5343384-A	Vacuum locking	1	53	D	64
350075-S13	Screw-washer hd. cr. -No. 8-15 x 3/4"	2	a		
43385	HANDLE (LUGGAGE COMPARTMENT DOOR LOCK RELEASE CONTROL VALVE)				
C2VY 5743385-A	Vacuum locking	1	53	D	62/64
		1	All except 71	C	64

GROUP AND PART NUMBER	DESCRIPTION, SIZE, ETC.	NO. REQ'D	MODEL OR ENGINE CUBIC INCH DISPLACEMENT	VEHICLE CODE	YEAR 19____
43387	NUT (LUGGAGE COMPARTMENT DOOR LOCK RELEASE CONTROL)				
C2VY 5743387-A	Vacuum locking	1	53	D	62/64
		1	All except 71	C	64
43483	LINK (LUGGAGE COMPARTMENT DOOR LOCK SOLENOID)				
BAK 5743483-A	Use with electric lock luggage compartment	1	All	D	60
43500	ORNAMENT (TAILGATE) LESS CYLINDER				
COMB 7743500-A	(a)	1	77	A	60
373503-S7	Nut and washer assy. -3/16"	5	a		
43500	HANDLE (LUGGAGE COMPARTMENT DOOR)				
CIGB 6243500-A		1	54, 62	C	61
43504	ORNAMENT (LUGGAGE COMPARTMENT DOOR)				
COMB 6443504-A	Includes bellcrank (a)	1	All except 77	A	60
C4MY 6243504-A		1	All except 71	A	64
Package also includes -					
	(1) 354397-S100 nut & washer-No. 10-24				
C1KB 6242534-A	Chrome finish	1	54, 62	C	60
C4GY 6243504-A		1	All except 71	C	64
Package also includes -					
	(2) 375890-S102 nut-sleeve-1/8"				
C3VY 5742514-A	Chrome finish	1	All	D	63/64
Package also includes -					
	(2) 373504-S7 nut & washer-self-threading-3/16"				
373504-S7	Nut and washer assy-3/16"	2	a		
43505	CYLINDER (LUGGAGE COMPARTMENT & TAILGATE) WITH KEYS				
PB9M 5643505-A		1	All	A	60
	Use for electric back window regulator handle	1	77	A	60
C1MB 71431C50-B	Manual - use on vehicles built prior to 2-1-61	1	71A	A	61
C1MY 6243505-A	Manual - when used for model 71A restrict to vehicles built after 1-31-61	1	All except 71B	A	61/62
		1	71A, C	A	64
		1	71	B	63
C1MY 71431C50-A	Electric	1	71	A	61/62
	Manual or electric	1	All	A	63
	Manual	1	All except 71A, C	A	64
	Electric	1	71	A	64
	Manual	1	All except 71	B	62/63
	Electric	1	71	B	63
	Manual or electric	1	59, 71	C	60/63
	Manual	1	54, 62, 63, 76	C	64
C1KB 6243505-B	Manual	1	54, 62	C	60/61
C2GY 6243505-A	Manual	1	54, 62, 76	C	62/63
C4GY 7143505-A	Manual or electric - tailgate only NOTE - for glove compartment refer to group 06081	1	71	C	64
B9LB 5743505-A		1	All	D	60
43507	LOCK SET (LUGGAGE, TAILGATE & GLOVE COMPARTMENT DOOR)				
PB9M 3689-A	With keys	1	All except 77	A	60
B9MB 5643507-C	Electric	1	77	A	60
B9MB 5643507-D	Manual	1	77	A	60
C1MB 71431C54-D	Manual - use on vehicles built prior to 2-1-61	1	71A	A	61
C1MB 6243507-C	Manual - when used for model 71A restrict to vehicles built after 1-31-61	1	All except 71B	A	61

CONTINUED ON NEXT PAGE

GROUP AND PART NUMBER	DESCRIPTION, SIZE, ETC.	NO. REQ'D	MODEL OR ENGINE CUBIC INCH DISPLACEMENT	VEHICLE CODE	YEAR 19____
43507	LOCK SET (LUGGAGE, TAILGATE & GLOVE COMPARTMENT DOOR) CONTINUED				
C1MB 7143507-B	Electric	1	71	A	61
C2MY 6243507-A	Manual	1	All	A	62
C2MY 7143507-A	Electric	1	71	A	62
C3MY 6243507-A		1	All	A	63
C4MY 6243507-A	Manual	1	All except 71A, C	A	64
	Electric	1	71	A	64
	NOTE - manual for 71A, C, serviced as details 43505 cylinder and 06081 lock glove compartment				
C3YY 7143507-A	Manual - without stowage lock	1	71B	B	63
C3YY 7143507-B	Manual - with stowage lock	1	71A, C, D, E, F	B	63
C3YY 7143507-C	Electric	1	71A, C, D, E, F	B	63
C2YY 6243507-A	Manual	1	54, 62, 65	B	62/63
	Electric	1	71B	B	63
		1	59, 71	C	61/62
C1GB 6243507-A		1	54, 62	C	61
C1KB 7143507-B	Manual and electric - with push button type for glove compartment - with keys for tailgate only	1	59, 71	C	61
C2GY 6243507-A		1	54, 62	C	62
		1	54B, 62B, C, 76A	C	63
C4GY 6243507-A	Manual NOTE - for Comet station wagon refer to group 22050 - includes ignition, door and tailgate	1	54, 62, 63, 76	C	64
B9LB 3689-A		1	All	D	60
C1VB 5743507-B	With keys	1	53	D	61/62
Consists of the following -					
(1) C1VB-5706072-A glove compt. lock	(1) COSB-6343262-A luggage lock		(1) 1013035	key	
(2) C1VB-5743562-B key					
C3VY 5743507-A		1	53	D	63
Consists of the following -					
(1) C3VB-5706072-A glove compt. lock	(1) COSB-6343262-A luggage lock		(1) 1013035	key	
(2) C3VB-5743562-A key					
C4VY 5343507-B	With console	1	53	D	64
C4VY 5343507-H	Without console	1	53	D	64
43516	COVER (LUGGAGE COMPARTMENT DOOR LOCK KEY HOLE)				
COMB 6443516-B	Chrome finish - "Mercury Head" - 1-9/16" diameter	1	All except 77	A	60
C1MB 5443516-B	Chrome finish	1	54B, 65B, 75B, 76	A	61
C1MB 6243516-D		1	54A, 58, 62, 64, 65A, 75A	A	61
C2MB 5443516-A	Chrome finish - use with (2) spring type	1	All except 71	A	62
COKB 6443516-A	Chrome finish	1	54, 62	C	60
C1GB 6243516-A	Chrome finish	1	54, 62	C	61
43562	KEY BLANK (LUGGAGE & GLOVE COMPARTMENT DOOR LOCK)				
PB9M 5643562-A		2	All	A	60
C1MB 6243562-A	Brass	2	All	A	61
C1MY 6243562-A		2	All	A B	62/64
		2	All	C	60/64
B9LB 5743562-A	"V" grooved slot in key	2	All	D	60
C1VY 5743562-B	Brass	2	All	D	61/64
43565	SPACER (LUGGAGE COMPARTMENT DOOR LOCK CYLINDER)				
COMB 6443565-B		1	All except 77	A	60
C2OB 6243565-A		1	All except 71	B	62/63
C1AB 6243565-B		1	54, 62, 76	C	62/63
C4GY 6243565-A		1	All except 71	C	64
C4VY 5343565-A		1	53	D	64

GROUP AND PART NUMBER	DESCRIPTION, SIZE, ETC.	NO. REQ'D	MODEL OR ENGINE CUBIC INCH DISPLACEMENT	VEHICLE CODE	YEAR 19____
43567-8	SPRING (LUGGAGE COMPARTMENT DOOR LOCK KEYHOLE COVER)				
C1MB 6243567-B	R. H.	1	All except 71	A	61
C1MB 6243568-B	L. H.	1	All except 71	A	61
C2MY 6243567-A	R. H. - use with cover requiring (2) springs	1	All except 71	A	62
C2MY 6243568-A	L. H. - use with cover requiring (2) springs	1	All except 71	A	62
B9A 6443567-A	Use with electric handle back window	1	77	A	60
		1	54, 62	C	60
B5A 7043567-A		1	All except 77	A	60
		1	54, 62	C	61
COLB 6343567-A		1	All	D	60
43569	CLIP (LUGGAGE COMPARTMENT DOOR LOCK LINK)				
C4AZ 6243569-A		1	53	D	64
43600	SLEEVE & CYLINDER ASSEMBLY (LUGGAGE COMPARTMENT DOOR LOCK)				
C2OZ 6243603-A		1	All except 71	B	62/63
Package also includes -					
(1) C2OB-6243565-A spacer	(1) 34925-S7	washer-3/4"	(1) 374904-S	seal	
(2) C2OB-6243625-A pad	(1) 351128-S	nut-hex. -3/4"-16			
C1KB 6243603-B		1	54, 62	C	60
C4GY 6243600-A		1	All except 71	C	64
COLB 6343603-C		1	All	D	60
COLB 6343603-D	Use with directed power differential	1	All	D	60
C1VY 5743603-B		1	53	D	61/62
C3VY 5743600-A		1	53	D	63
C4VY 5343600-A		1	53	D	64
43603	REFER TO GROUP 43600				
43612	SUPPORT (LUGGAGE COMPARTMENT DOOR LOCK CYLINDER SHAFT)				
BAK 5743612-A		1	All	D	60
43625	PAD (LUGGAGE COMPARTMENT DOOR LOCK CYLINDER SLEEVE)				
C1MB 6243625-A	Sponge rubber	1	All except 71	A	61
C3MY 6243625-A	Sponge rubber	1	All	A	63
		1	All except 71	A	64
C2OB 6243625-A		1	All except 71	B	62/63
COKB 6443625-A	Rubber Note - for 1961 use M5397-B sealer	1	54, 62	C	60
C2GB 6243625-A		1	54, 62, 76	C	62/63
C4GY 6243625-A		1	54, 62, 63, 76	C	64
C1VB 5743625-B	Rubber	1	53	D	61/63
C4VY 5343625-A	Vinyl	1	All	D	64
43634	BUMPER (LUGGAGE COMPARTMENT)				
C2OZ 6243634-A	Rubber - inside	2	All except 71	B	62/63
C1VB 7443634-A	Nylon - door to folding top rear side rail	2	74	D	61/63
43708-9	SEAL (TAILGATE LOWER CORNER)				
C3OZ 7143708-A	R. H.	1	71	B	63
C3OZ 7143709-A	L. H.	1	71	B	63
43720-1	WEATHERSTRIP (LUGGAGE COMPARTMENT DOOR)				
C3AZ 6243720-A	Rubber - 208" long - cut to size	1	All except 71	A	63/64
		1	All except 71	B	62/63
		1	54, 62, 63, 76	C	64

CONTINUED ON NEXT PAGE

GROUP AND PART NUMBER	DESCRIPTION, SIZE, ETC.	NO. REQ'D	MODEL OR ENGINE CUBIC INCH DISPLACEMENT	VEHICLE CODE	YEAR 19____
43720-1	WEATHERSTRIP (LUGGAGE COMPARTMENT DOOR) CONTINUED				
COMB 6443720-C	Rubber - 210" long - cut to size	1	All except 68, 77	A D	60
		1	All except 71	A	61/62
		1	All except 59, 71	C	60/62
		1	54, 62, 76	C	63
	Cut to 111-55/64"	1	68	D	60
	Also used for upper back panel - rear - cut to size	AR	68	D	60
	Cut to 202" long	1	53	D	61/62
C1VB 74438A00-A		1	74	D	61
C1VY 74438A00-A		1	74	D	62
C3VY 5743720-A		1	53	D	63
C3VY 7443720-A		1	74	D	63
C4VY 5343720-A	Rubber - 213" long	1	53	D	64
C4VY 7443720-B	R.H.	1	74	D	64
C4VY 7443721-A	L.H.	1	74	D	64
438A00	REFER TO GROUP 43720				
438A10	RETAINER (LUGGAGE COMPARTMENT DOOR WEATHERSTRIP)				
C1VB 74438A10-A		1	74	D	61/62
438A12	RETAINER (LUGGAGE COMPARTMENT DOOR WEATHERSTRIP) OUTER				
C1VB 74438A12-A		2	74	D	61/62
43815	CYLINDER (TAILGATE LOCK WITH KEYS)				
PB9M 5643815-A		1	56A, 77A	A	60
438A16-7	RETAINER (LUGGAGE COMPARTMENT DOOR WEATHERSTRIP) FRONT				
C1VB 57438A16-A	Spring steel	6	All	D	61/62
C3VY 57438A16-A		12	All	D	63
C4VY 74438A16-A	R.H.	1	74	D	64
C4VY 74438A17-A	L.H.	1	74	D	64
438A18	RETAINER (LUGGAGE COMPARTMENT DOOR WEATHERSTRIP) SIDE				
C1VB 57438A18-A	Spring steel	AR	All	D	61/63
43867	SHAFT (LUGGAGE COMPARTMENT DOOR LOCK CYLINDER)				
BAK 5743867-A		1	All	D	60
43880-1	ROD (TAILGATE LOCK CONTROL)				
COMB 7743880-A	R.H.	1	77	A	60
COMB 7743881-A	L.H.	1	77	A	60
43894	ROD (TAILGATE LOCK TRIGGER RELEASE)				
PB9M 5643894-A		1	77	A	60
439A00-1	BUMPER (TAILGATE ON PILLAR)				
C3OZ 71439A00-A		2	71	B	63
CODZ 66439A00-B	R.H. - rubber (a)	1	59, 71	C	60/64
CODZ 66439A01-B	L.H. - rubber (a)	1	59, 71	C	60/64
52855-S8	Screw-pan hd. cr. rec. tap-No. 8-16 x 5/8"	1	a		
43994-5	WEATHERSTRIP (TAILGATE - UPPER CORNER ON BODY)				
COMB 7743994-A	R.H.	1	77	A	60
COMB 7743995-A	L.H.	1	77	A	60
44000	REFER TO GROUP 40830				

GROUP AND PART NUMBER	DESCRIPTION, SIZE, ETC.	NO. REQ'D	MODEL OR ENGINE CUBIC INCH DISPLACEMENT	VEHICLE CODE	YEAR 19____
440A06	BUMPER (BACK WINDOW STOP) LOWER				
COMB 77440A06-A	Rubber dipped 1"	2	77	A	60
C1AB 59440A06-A	(a)	2	71	A	61/64
C3OZ 71440A06-A		1	71	B	63
CODB 59440A06-A		2	59, 71	C	60/62
C3DZ 59440A06-A		2	59, 71	C	63/64
371578-S2	Bolt and washer-hex. hd. -5/16"-24 x 11/16"	2	a		
44008	HANDLE & KNOB (BACK WINDOW REGULATOR)				
B9MB 5640853-A	Manual	1	77A	A	60
C1AB 5944008-D	Manual - with (3) 10-24 x 1" studs in handle - use on vehicles built prior to 12-7-60	1	71A	A	61
C1AZ 5944008-G	Manual - with (3) 10-24 x 1-1/4" studs in handle - use on vehicles built after 12-6-60	1	71A	A	61/62
		1	71	B	63
		1	71A, C	A	64
44009	HANDLE ASSEMBLY (BACK WINDOW REGULATOR)				
B9MB 5640850-A	Manual - with keys	1	77A	A	60
B9MB 7740850-A	Electric - without lock and keys	1	77	A	60
C1MB 7144009-E	Electric	1	71	A	61/62
C4MY 7144009-A	Electric	1	71	A	64
C1AZ 5944009-H	Manual	1	71A	A	61/62
	(a)	1	71A, C	A	64
		1	71	B	63
C3MY 7144009-A	Electric	1	71	A B	63
CODB 5944009-G	Manual - use with (3) piece tailgate moulding	1	59, 71	C	60/63
		1	71A, B	C	64
	NOTE - when servicing for 1960 vehicle with (1) piece moulding also order -				
	(1) CODB-5944048-A plate				
	(1) CODB-5944017-D socket				
	(1) CODB-5944011-B pad				
	(1) C1KB-71423A92-A moulding				
	(1) C1KB-71423A93-A moulding				
	(1) C1KB-71423A96-A moulding				
	(2) 50803-S screw and washer - pan hd. cr. rec. - No. 8-32 x 3/8"				
	(2) 353908-S7 screw and washer - flat hd. cr. rec. - No. 12-24				
354397-S100	Nut and washer-No. 10-24	1	a		
44011	PAD (BACK WINDOW REGULATOR HANDLE)				
BAE 5640871-A	Manual	1	77A	A	60
PB9M 5640871-A	Electric	1	77	A	60
C1MB 7144011-A	Manual	1	71	A	62
C1AB 5944011-C	Manual	1	71A	A	61
		1	71	A B	63
	Manual back window	1	71A, C	A	64
C1AB 7144011-B	Electric	1	71	A B	61/63
	Electric back window	1	71A, B, C	A	64
CODB 5944011-A	Manual regulator handle	1	59, 71	C	60
CODB 5944011-B	Electric regulator handle	1	59, 71	C	60
	Manual and electric regulator handle	1	59, 71	C	61/64

GROUP AND PART NUMBER	DESCRIPTION, SIZE, ETC.	NO. REQ'D	MODEL OR ENGINE CUBIC INCH DISPLACEMENT	VEHICLE CODE	YEAR 19____
44016	SPRING (BACK WINDOW REGULATOR HANDLE PAWL)				
C1AB 5944016-D		1	71A	A	61/62
		1	71A,C	A	64
CODZ 5944016-A		1	59,71	C	60/63
		1	71A,B	C	64
44017	SOCKET (BACK WINDOW REGULATOR STEM)				
CODB 5944017-D	Use with manual regulator	1	59,71	C	60/64
44028	COVER (BACK WINDOW REGULATOR HANDLE) ELECTRIC				
C1MB 7144028-B		1	71	A B	61/63
		1	71B,D	A	64
44034-5	PIVOT (BACK WINDOW REGULATOR HANDLE) ELECTRIC				
C1AB 7144034-B	R.H.	1	71	A	61
C1AB 7144035-B	L.H.	1	71	A	61
440A34	HOUSING ASSEMBLY (TAILGATE LOCK CYLINDER) ELECTRIC				
CODZ 59440A34-B		1	59,71	C	60/63
		1	71A,B,C	C	64
Consists of the following -					
(1) CODB-5944011-B pad	(2) 34653-S7	nut & washer-No.8-32			
44036	SPRING (BACK WINDOW REGULATOR HANDLE)				
C1AB 5944036-B	Manual	2	71	A	61/62
		1	71A,C	A	64
C1AB 7144036-B	Electric	1	71	A B	61/63
		1	71B,D	A	64
44038	HANDLE (BACK WINDOW REGULATOR) LESS ORNAMENT				
C1AB 7144038-D	Electric	1	71	A	61
44048	PLATE (BACK WINDOW REGULATOR HANDLE ANCHOR)				
PB9M 5640868-A	Manual	1	77A	A	60
CODB 5944048-A	Zinc die cast	1	59,71	C	60/63
	Manual	1	71A,B	C	64
44400-1	SUPPORT (TAILGATE)				
B9MB 5644400-A		2	77	A	60
C1AB 5944400-B	R.H.	1	71	A	61/64
C1AB 5944401-B	L.H.	1	71	A	61/64
C3OZ 7144400-A	(1) for R.H. - (1) for L.H. - use on vehicles built prior to 12-21-62	2	71	B	63
C3OZ 7144400-B	R.H. - use on vehicles built after 12-20-62	1	71	B	63
C3OZ 7144401-A	L.H. - use on vehicles built after 12-20-62	1	71	B	63
CODZ 5944400-A		2	59,71	C	60/64
444A00-1	PLATE (TAILGATE SUPPORT TO PILLAR ANCHOR)				
CODB 59444A00-A	R.H.	1	59,71	C	60/64
CODB 59444A01-A	L.H.	1	59,71	C	60/64
44432	STRIP (TAILGATE SKID)				
C1AB 5944432-B	Rustless steel	4	71	A	61/63
44449	HANDLE (TAILGATE LATCH)				
PB9M 5644449-A	Chrome finish	1	77	A	60

GROUP AND PART NUMBER	DESCRIPTION, SIZE, ETC.	NO. REQ'D	MODEL OR ENGINE CUBIC INCH DISPLACEMENT	VEHICLE CODE	YEAR 19____
44454	ANTI-RATTLER (TAILGATE SUPPORT ON PILLAR)				
COAB 5944454-A	Tailgate - support	1	71	A	61/63
C4AZ 7144454-A	Rubber	1	71	A	64
CODB 5944454-A	For front fender	AR	All	A	61/62
	For tailgate support	4	59, 71	C	60/64
44482	BUMPER (TAILGATE SUPPORT)				
PB9M 5644482-A		2	77	A	60
44553	SHIM (TAILGATE SUPPORT)				
COMB 7744553-A		2	77	A	60
44680-1	MOULDING (BACK WINDOW OUTSIDE SIDE) LOWER				
PB9M 5744680-A	R.H. (a)	1	57, 63	A	60
PB9M 5744681-A	L.H. (a)	1	57, 63	A	60
353911-S100	Nut and washer assy.-No. 10-24	2	a		
44802	REINFORCEMENT (LUGGAGE COMPARTMENT DOOR OPENING) UPPER				
BAK 6844802-B		1	68	D	60
44806	REINF. (LUGGAGE COMPT. DOOR OPENING REAR DRAIN TROUGH AT LOWER BACK PANEL)				
C4VY 5344806-A		1	All	D	64
44808-9	REINFORCEMENT (LUGGAGE COMPARTMENT DOOR OPENING REAR CORNER DRAIN TROUGH)				
C4VY 5344808-A	R.H.	1	All	D	64
C4VY 5344809-A	L.H.	1	All	D	64
44820-1	EXTENSION (LUGGAGE COMPARTMENT DOOR OPENING UPPER REINFORCEMENT)				
C2OB 6244820-A	Steel - (1) R.H. and (1) L.H.	2	54, 62, 65	B	62/63
BAK 5744820-A	R.H.	1	All	D	60
BAK 5744821-A	L.H.	1	All	D	60
44822-3	REINFORCEMENT (LUGGAGE COMPARTMENT DOOR OPENING FRONT CORNER DRAIN TROUGH)				
C4VY 5344822-A	R.H.	1	53	D	64
C4VY 5344823-A	L.H.	1	53	D	64
C4VY 7444822-A	R.H.	1	74	D	64
C4VY 7444823-A	L.H.	1	74	D	64
44838-9	SUPPORT (LUGGAGE COMPARTMENT DOOR OPENING UPPER REINFORCEMENT)				
BAK 6844838-A	R.H.	1	68	D	60
BAK 6844839-A	L.H.	1	68	D	60
44842-3	TROUGH (UPPER BACK PANEL END DRAIN)				
BAK 6844842-A	R.H.	1	68	D	60
BAK 6844843-A	L.H.	1	68	D	60
44890-1	BAR (LUGGAGE COMPARTMENT DOOR & TAILGATE TORSION)				
B9MB 5643012-B	R.H.	1	77	A	60
B9MB 5643013-B	L.H.	1	77	A	60
B9A 5844890-A	R.H.	1	All except 77	A	60
B9A 5844891-A	L.H.	1	All except 77	A	60
C1AB 5943012-A	R.H.	1	71	A	61/64
C1AB 5943013-A	L.H.	1	71	A	61/64
C1MZ 6244890-A	R.H.	1	All except 71	A	61/64
C1MZ 6244891-A	L.H.	1	All except 71	A	61/64

CONTINUED ON NEXT PAGE

GROUP AND PART NUMBER	DESCRIPTION, SIZE, ETC.	NO. REQ'D	MODEL OR ENGINE CUBIC INCH DISPLACEMENT	VEHICLE CODE	YEAR 19____
44890-1	BAR (LUGGAGE COMPARTMENT DOOR & TAILGATE TORSION) CONTINUED				
C2YY 6244890-A	R.H.	1	54, 62, 65	B	62/63
C2YY 6244891-A	L.H.	1	54, 62, 65	B	62/63
C3OZ 7144890-A	R.H.	1	71	B	63
C3OZ 7144891-A	L.H.	1	71	B	63
C1KB 6244890-B	R.H.	1	54, 62	C	60/61
C1KB 6244891-B	L.H.	1	54, 62	C	60/61
C2GB 6244890-A	R.H. - YELLOW strip 1" long near end identifies right hand side	1	54, 62	C	62/63
C2GB 6244891-A	L.H.	1	54, 62	C	62/63
C3GY 7644890-A	R.H.	1	76	C	63
C3GY 7644891-A	L.H.	1	76	C	63
C4GY 6244890-A	R.H.	1	All except 71	C	64
C4GY 6244891-A	L.H.	1	All except 71	C	64
C1VB 5744890-A	R.H.	1	53	D	61/63
C1VB 5744891-A	L.H.	1	53	D	61/63
C4VY 5344890-A	R.H.	1	53	D	64
C4VY 5344891-A	L.H.	1	53	D	64
44896	LINK (LUGGAGE COMPARTMENT DOOR HINGE TORSION BAR ADJUSTER)				
C1VB 5744896-A		2	53	D	61/64
45004-5	TROUGH (BACK WINDOW SIDE DRAIN)				
B9MB 6445004-B	R.H.	1	58, 64	A	60
B9MB 6445005-B	L.H.	1	58, 64	A	60
45028	ANTI-RATTLER (LUGGAGE COMPARTMENT DOOR)				
	NS-9" long - cut from B9A-17543-A hose	1	71	A	62
45100-1	REFER TO GROUP 279A62-3				
45102	TROUGH ASSEMBLY (LUGGAGE COMPARTMENT DOOR OPENING) UPPER DRAIN				
BAK 6845102-A		1	68	D	60
45104-5	REFER TO GROUP 45120-1				
451A06-7	SUPPORT (LUGGAGE COMPARTMENT DOOR OPENING UPPER CORNER DRAIN TROUGH) UPPER				
C1VB 57451A06-A	R.H.	1	53	D	61/63
C1VB 57451A07-A	L.H.	1	53	D	61/63
C1VB 74451A06-A		2	74	D	61/63
451A08-9	SUPPORT (LUGGAGE COMPARTMENT DOOR OPENING UPPER CORNER DRAIN TROUGH) LOWER				
C1VB 57451A08-A	R.H.	1	All	D	61/63
C1VB 57451A09-A	L.H.	1	All	D	61/63
45114-5	TROUGH (LUGGAGE COMPARTMENT DOOR OPENING DRAIN) SIDE				
BAK 5745114-A	R.H.	1	All	D	60
BAK 5745115-A	L.H.	1	All	D	60
45118-9	TROUGH (LUGGAGE COMPARTMENT DOOR OPENING) LOWER CORNER DRAIN				
COMB 6445118-B	R.H.	1	All except 77	A	60
COMB 6445119-B	L.H.	1	All except 77	A	60
C1MB 6245118-A	R.H.	1	All except 71	A	61
C1MB 6245119-A	L.H.	1	All except 71	A	61

CONTINUED ON NEXT PAGE

GROUP AND PART NUMBER	DESCRIPTION, SIZE, ETC.	NO. REQ'D	MODEL OR ENGINE CUBIC INCH DISPLACEMENT	VEHICLE CODE	YEAR 19____
45118-9	TROUGH (LUGGAGE COMPARTMENT DOOR OPENING) LOWER CORNER DRAIN (CONTINUED)				
C2MB 6245118-A	R.H.	1	All except 71	A	62
C2MB 6245119-A	L.H.	1	All except 71	A	62
C3MY 6245118-A	R.H.	1	All except 71	A	63/64
C3MY 6245119-A	L.H.	1	All except 71	A	63/64
C1KB 6245118-B	R.H.	1	54, 62	C	60/61
C1KB 6245119-B	L.H.	1	54, 62	C	60/61
C2GB 6245118-A	R.H.	1	54, 62, 76	C	62/63
C2GB 6245119-A	L.H.	1	54, 62, 76	C	62/63
C4GY 6245118-A	R.H.	1	54A, B, 62, 63, 76	C	64
C4GY 6245119-A	L.H.	1	54A, B, 62, 63, 76	C	64
B9BL 6345118-A	R.H.	1	All	D	60
B9BL 6345119-A	L.H.	1	All	D	60
C1VB 5745118-A	R.H.	1	All	D	61/63
C1VB 5745119-A	L.H.	1	All	D	61/63
C4VY 5345118-A	R.H.	1	All	D	64
C4VY 5345119-A	L.H.	1	All	D	64
45120-1	TROUGH (LUGGAGE COMPARTMENT DOOR OPENING) UPPER CORNER DRAIN				
C3MY 6245120-A		2	All except 57, 63, 71, 76	A	63/64
C3MY 7645120-A		2	57, 63, 76	A	63/64
C2GB 6245120-A	R.H.	1	54, 62	C	62/63
		1	54, 62, 63	C	64
C2GB 6245121-A	L.H.	1	54, 62	C	62/63
		1	54, 62, 63	C	64
BAK 6845104-A	R.H.	1	68	D	60
BAK 6845105-A	L.H.	1	68	D	60
C1VB 7445120-B	R.H.	1	74	D	61/63
C1VB 7445121-B	L.H.	1	74	D	61/63
45128	CLIP (LUGGAGE COMPARTMENT SIDE LINING BOARD) RETAINING				
PB9M 5645128-A		2	All except 77	A	60
45494-5	COVER (LUGGAGE COMPARTMENT FLOOR)				
C1VB 5745494-B	R.H. - plastic - located under floor covering - use on vehicles built prior to 4-24-61	1	53	D	61
C1VB 5745494-C	R.H. - plastic - located under floor covering - use on vehicles built after 4-23-61	1	53	D	61/63
C1VB 5745495-C	L.H. - plastic - located under floor covering	1	53	D	61/62
C3VY 5745495-A	L.H. - plastic - located under floor covering	1	53	D	63
C1VB 7445494-B	R.H. - plastic - located under floor covering - use on vehicles built prior to 4-24-61	1	74	D	61
C1VB 7445495-B	L.H. - plastic - located under floor covering - use on vehicles built prior to 4-24-61	1	74	D	61
C1VB 7445494-C	R.H. - plastic - located under floor covering - use on vehicles built after 4-23-61	1	74	D	61/62
C1VB 7445495-C	L.H. - plastic - located under floor covering - use on vehicles built after 4-23-61	1	74	D	61/62
C3VY 7445494-A	R.H. - plastic - located under floor covering	1	74	D	63
C3VY 7445495-C	L.H. - plastic - located under floor covering	1	74	D	63
C4VY 5345494-A	R.H. - plastic - located under floor covering	1	53	D	64
C4VY 5345495-A	L.H. - plastic - located under floor covering	1	53	D	64
C4VY 7445494-A	R.H. - plastic - located under floor covering	1	74	D	64
C4VY 7445495-A	L.H. - plastic - located under floor covering	1	74	D	64
45530	SUPPORT (LUGGAGE COMPARTMENT SIDE LINING BOARD)				
C1VB 5745530-A		2	All	D	61/63

GROUP AND PART NUMBER	DESCRIPTION, SIZE, ETC.	NO. REQ'D	MODEL OR ENGINE CUBIC INCH DISPLACEMENT	VEHICLE CODE	YEAR 19____
45619	RETAINER (LUGGAGE COMPARTMENT SIDE LINING BOARD)				
B9KB 5845619-A		2 4	All except 71 54, 62	A C	61/62 62
C2VY 6345619-A	(2) for model 53 - (3) for model 74 - use to attach shield front suspension upper arm bushing front 3A257 to under body	AR	All	D	62/64
45806	PANEL (STOWAGE WELL FLOOR) LESS COVER				
B9MB 5645806-BP	In prime - also use lock assembly B9MB-5611663-C	1	77	A	60
45836	CHAIN (SPARE WHEEL WELL PANEL CHECK)				
C1AB 5945836-A	Length 8"	1	71	A	61/64
45842-3	ARM (SPARE WHEEL FLOOR PIVOT)				
COAB 5945842-AP	R. H.	1	71	A	61/64
COAB 5945843-AP	L. H.	1	71	A	61/64
45870	REFER TO GROUP 47028				
45872	REFER TO GROUP 47030				
465A00	MOULDING (PACKAGE TRAY FINISH) INTERMEDIATE				
C1VB 57465A00-A	Rustless steel (a)	2	All	D	61/64
C1VB 57465A26-A	Retainer	4	a		
465A02	MOULDING (PACKAGE TRAY FINISH) CENTER				
C1VB 57465A02-A	Zinc die cast (a)	1	All	D	61/64
359464-S7	Nut-spring-1/8"	5	a		
465A04-5	MOULDING (PACKAGE TRAY FINISH) END				
C1VB 57465A04-B	R. H. - zinc die cast (a)	1	All	D	61/64
C1VB 57465A05-B	L. H. - zinc die cast (a)	1	All	D	61/64
52338-S13	Screw-oval hd. cr. rec. tap. -No. 8-18 x 3/8"	1	a		
52360-S13	Screw-oval hd. cr. rec. tap. -No. 8-15 x 3/4"	1	a		
46506	PANEL (PACKAGE TRAY)				
COMB 6346506-A		1	57, 63	A	60
COMB 6446506-A		1	58, 64	A	60
C1AZ 6246506-A		1	54, 62, 65, 75	A	61/62
C2AZ 6546506-A		1	65C	A	62
C3AZ 6346506-B		1	63	A	63/64
C4AZ 5746506-A		1	57	A	64
C2OZ 6246506-A		1	54, 62	B	62/63
C3OZ 6546506-A		1	65	B	63
C1KB 6246506-B		1	54, 62	C	60/63
C3DZ 6346506-A		1	63	C	63
C3DZ 6346506-B		1	63	C	64
C4GY 6246506-A		1	54, 62	C	64
C1VY 7446506-B		1	74	D	61/63
C4VY 7446506-A	Includes drain trough - use on vehicles built prior to 10-28-63	1	74	D	64
C4VY 7446506-B	Includes drain trough - use on vehicles built after 10-27-63	1	74	D	64

GROUP AND PART NUMBER	DESCRIPTION, SIZE, ETC.	NO. REQ'D	MODEL OR ENGINE CUBIC INCH DISPLACEMENT	VEHICLE CODE	YEAR 19____
465A08-9	RETAINER (PACKAGE TRAY BALANCE LINK OPENING SEAL) VINYL COVERED				
	Refer to MD-4230 Soft Trim Section				
46514-5	PANEL (PACKAGE TRAY END)				
C1VB 5746514-A	R.H. - in prime	1	53	D	61/63
C1VB 5746515-A	L.H. - in prime	1	53	D	61/63
C4VY 5346514-A	R.H. - in prime	1	53	D	64
C4VY 5346515-A	L.H. - in prime	1	53	D	64
465A26	RETAINER (PACKAGE TRAY) INTERMEDIATE FINISH MOULDING				
C1VB 57465A26-A		8	All	D	61/64
46530-1	MOULDING (PACKAGE TRAY) REAR				
C3AZ 6346530-A	R.H. - use on vehicles built prior to 6-10-63 (a)	1	63	A	63
C3AZ 6346531-A	L.H. - use on vehicles built prior to 6-10-63 (a)	1	63	A	63
C3AZ 6346530-B	R.H. - use on vehicles built after 6-9-63 (a)	1	63	A	63/64
C3AZ 6346531-B	L.H. - use on vehicles built after 6-9-63 (a)	1	63	A	63/64
53060-S13	Screw-oval hd. cr. rec. self-tap. -No. 8-15 x 1"	5	a		
53066-S13	Screw-oval hd. cr. rec. self-tap. -No. 8-15 x 1-1/4"	1	a		
46534-5	EXTENSION (PACKAGE TRAY TO QUARTER PANEL)				
COLB 6346534-A	R.H.	1	53, 57, 63	D	60
COLB 6346535-A	L.H.	1	53, 57, 63	D	60
COLB 6546534-A	R.H.	1	54, 65, 75	D	60
COLB 6546535-A	L.H.	1	54, 65, 75	D	60
46538-9	LIFT (UPPER BACK PANEL)				
BAK 6846538-A	R.H.	1	68	D	60
BAK 6846539-A	L.H.	1	68	D	60
46593	LINK (PACKAGE TRAY LIFT ASSEMBLY TO MOTOR)				
BAD 5146593-A	Rubber with steel insert	1	74	D	61/64
46608-9	BRACKET (PACKAGE TRAY STRAINER TO WHEELHOUSE)				
PB9M 5746608-A	R.H.	1	57, 63	A	60
PB9M 5746609-A	L.H.	1	57, 63	A	60
PB9M 5846608-A	R.H.	1	58, 64	A	60
PB9M 5846609-A	L.H.	1	58, 64	A	60
COAB 7646608-A	R.H.	1	76	A	61/62
COAB 7646609-A	L.H.	1	76	A	61/62
C3AZ 6346608-A	R.H.	1	63	A	63/64
C3AZ 6346609-A	L.H.	1	63	A	63/64
C3AZ 7646608-A	R.H.	1	76	A	63/64
C3AZ 7646609-A	L.H.	1	76	A	63/64
C4AZ 5746608-A	R.H.	1	57	A	64
C4AZ 5746609-A	L.H.	1	57	A	64
46610-1	STRAINER (PACKAGE TRAY TO FLOOR)				
COMB 6346610-A	R.H.	1	57, 63	A	60
COMB 6346611-A	L.H.	1	57, 63	A	60
COMB 6446610-A	R.H.	1	58, 64	A	60
COMB 6446611-A	L.H.	1	58, 64	A	60
PB9M 7646610-A	R.H.	1	76	A	60
PB9M 7646611-A	L.H.	1	76	A	60

CONTINUED ON NEXT PAGE

GROUP AND PART NUMBER	DESCRIPTION, SIZE, ETC.	NO. REQ'D	MODEL OR ENGINE CUBIC INCH DISPLACEMENT	VEHICLE CODE	YEAR 19____
46610-1	STRAINER (PACKAGE TRAY TO FLOOR) CONTINUED				
C1AB 6246610-C	R. H.	1	54,62,64,65,75	A	61
		1	All except 71,76	A	62
C1AB 6246611-C	L. H.	1	54,62,64,65,75	A	61
		1	All except 71,76	A	62
COAB 7646610-A	R. H.	1	76	A	61/62
COAB 7646611-A	L. H.	1	76	A	61/62
C3AZ 6346610-A	R. H.	1	63	A	63
C3AZ 6346611-A	L. H.	1	63	A	63
C3AZ 7646610-A	R. H.	1	76	A	63
C3AZ 7646611-A	L. H.	1	76	A	63
C4AZ 6346610-A	R. H.	1	57,63	A	64
C4AZ 6346611-A	L. H.	1	57,63	A	64
C4AZ 7646610-A	R. H.	1	76	A	64
C4AZ 7646611-A	L. H.	1	76	A	64
C2OB 6246610-A	R. H.	1	54,62	B	62/63
C2OZ 6246611-A	L. H.	1	54,62	B	62/63
C3OZ 6546610-A	R. H.	1	65	B	63
C3OZ 6546611-A	L. H.	1	65	B	63
CODB 6446610-A	R. H.	1	54,62	C	60/63
CODB 6446611-A	L. H.	1	54,62	C	60/63
C3DZ 6346610-A	R. H.	1	63	C	63/64
C3DZ 6346611-A	L. H.	1	63	C	63/64
C3DZ 7646610-A		1	76	C	63/64
C4GY 6246610-A	R. H.	1	54,62	C	64
C4GY 6246611-A	L. H.	1	54,62	C	64
BAK 5746610-B	R. H.	1	All except 68	D	60
BAK 5746611-B	L. H.	1	All except 68	D	60
C1VY 5746610-B	R. H.	1	53	D	61/63
C1VY 5746611-B	L. H.	1	53	D	61/63
C4VY 5346610-A	R. H.	1	53	D	64
C4VY 5346611-A	L. H.	1	53	D	64
46632-3	BRACKET (PACKAGE TRAY PANEL TO INNER ROOF RAIL)				
	NS-improvise locally	2	63	A	63
C3DZ 6346632-A	R. H. - use on vehicles built prior to 6-10-63	1	63	C	63
C3DZ 6346633-A	L. H. - use on vehicles built prior to 6-10-63	1	63	C	63
C3DZ 6346632-B	R. H. - use on vehicles built after 6-9-63	1	63	C	63/64
C3DZ 6346633-B	L. H. - use on vehicles built after 6-9-63	1	63	C	63/64
46640-1	SEAL (UPPER BACK FINISH PANEL & UPPER BACK PANEL)				
C4VY 7446640-A	R. H. - at upper back finish panel (a)	1	74	D	64
C4VY 7446641-A	L. H. - at upper back finish panel (a)	1	74	D	64
C4VY 7446640-B	R. H. - at upper back panel (a)	1	74	D	64
C4VY 7446641-B	L. H. - at upper back panel (a)	1	74	D	64
52720-S8	Screw-pan hd. cr. rec. tap. -No. 8-18 x 3/8"	4	a		
46668	PANEL (PACKAGE TRAY TRIM)				
C3AZ 6346668-A	In prime - drill holes 3/4" outboard from existing holes - emblem holes are 5/32" diameter	1	63C	A	63
46684-5	BRACKET (PACKAGE TRAY PANEL ANCHOR) INNER				
COLB 6346684-A	R. H.	1	53, 57, 63	D	60
COLB 6346685-A	L. H.	1	53, 57, 63	D	60
46720	BRACKET (UPPER BACK PANEL LIFT TO FLOOR)				
BAK 6846720-A		2	68	D	60
46724	HINGE (UPPER BACK PANEL)				
BAK 6846724-B		2	68	D	60

GROUP AND PART NUMBER	DESCRIPTION, SIZE, ETC.	NO. REQ'D	MODEL OR ENGINE CUBIC INCH DISPLACEMENT	VEHICLE CODE	YEAR 19____
46740	WEATHERSTRIP (UPPER BACK FINISH PANEL & UPPER BACK PANEL)				
C4VY 7446740-A	(1) used for upper back finish panel to deck lid (1) used for upper back panel at trough	2	74	D	64
46748	PLATE (UPPER BACK PANEL LIFT TO FLOOR BRACKET ANCHOR)				
BAK 6846748-A		4	All	D	60
46752	MOTOR & BRACKET (UPPER BACK PANEL LIFT)				
BAK 6846752-A		1	68	D	60
46754	CASING & CABLE (UPPER BACK PANEL LIFT DRIVE)				
BAK 6846754-A		2	68	D	60
46768	ORNAMENT (PACKAGE TRAY)				
C1VB 5746768-A	Zinc die cast (a)	1	All	D	61
373503-S7	Nut-self-threading-3/16"	1	a		
46802	SUPPORT (PACKAGE TRAY TRIM PANEL)				
C4AZ 5746802-A	Steel	1	57C	A	64
C4AZ 6346802-A	Steel	1	63C	A	64
46910-1	SEAL (PACKAGE TRAY UPPER TRIM PANEL TO QUARTER)				
C1VB 7446910-A	R. H.	1	74	D	61/64
C1VB 7446911-A	L. H.	1	74	D	61/64
47000	BRACE (SPARE WHEEL INNER PANEL)				
	NS-improvise locally	1	71B, E	B	63
47007	PANEL (SPARE WHEEL WELL FLOOR) LESS COVER				
C2AZ 7147007-A		1	71	A	61/64
47009	INSULATOR (FAN SHROUD TO RADIATOR)				
B9AB 5947009-A	Rubber - use with a/cond. in fan shroud	AR	All	D	61/63
47017	ANTI-RATTLER (SPARE WHEEL COVER PANEL)				
COAB 5947017-A	Steel - use on vehicles built prior to 5-22-61	2	71	A	61
C1AB 5947017-A	Steel - use on vehicles built after 5-21-61	2	71	A	61/64
47020	EXTENSION (SPARE WHEEL WELL PANEL) LOWER				
C3OZ 7147020-A		1	71	B	63
47026	KIT -LOCK (STOWAGE COMPARTMENT DOOR)				
C3OZ 7147026-A		1	71	B	63
47028	PANEL (SPARE WHEEL WELL SIDE) INNER				
COMB 5645870-A		1	77	A	60
C3OZ 7147028-A		1	71	B	63
CODB 5947028-B		1	59, 71	C	60/63
C4DZ 5947028-A		1	71	C	64
47030	PANEL (SPARE WHEEL WELL SIDE) LOWER				
COMB 5645872-A		1	77	A	60
CODZ 5947030-B		1	59, 71	C	60/63
C4DZ 5947030-A		1	71	C	64
47032	PANEL (SPARE WHEEL WELL) UPPER				
CODB 5947032-B		1	59, 71	C	60/63
C4DZ 5947032-A		1	71	C	64

GROUP AND PART NUMBER	DESCRIPTION, SIZE, ETC.	NO. REQ'D	MODEL OR ENGINE CUBIC INCH DISPLACEMENT	VEHICLE CODE	YEAR 19____
47042	COVER (SPARE WHEEL WELL)				
C3OZ 7147042-A		1	71	B	63
47044	KIT (SPARE WHEEL MOUNTING) RELOCATING				
C4VY 5347044-A		1	53	D	64
	Consists of the following -				
(1) C4VB-5347054-A cover	(4) 20386-S8	bolt-5/16" x 18 x 1"	(4) 34781-S7	washer-spring lock	
(1) C4VB-5347056-A pad	(4) 33797-S8	nut-hex. -5/16"-18	(4) 44725-S8	washer-flat-5/16"	
(1) C4SB-6347076-A bracket					
47065	REFER TO GROUP 47076				
47076	BRACKET (SPARE WHEEL MOUNTING)				
BAF 5747076-B		1	All except 77	A	60
C3MY 5447076-A	Brace	1	All except 57,63,71,76	A	63/64
	NS-improvise locally	1	54,62	B	63
C1KB 6247065-A		1	54,62,76	C	60/63
C4GY 6247065-A		1	All except 71	C	64
47120	EXTENSION (SPARE WHEEL WELL SIDE LOWER) RIGHT REAR				
CODZ 5947120-A		1	59,71	C	60/62
C3DZ 5947120-A		1	59,71	C	63
C4DZ 5947120-A	Use on vehicles with 13" tires - 650 x 13	1	71	C	64
47126	RETAINER (SPARE WHEEL WELL FLOOR WING SCREW)				
COAB 5947126-A	Plastic	1	71	A	61
47154	CLIP (SPARE WHEEL WELL COVER PANEL) UPPER				
CODB 5947154-B		1	59,71	B C	60/64
47248	RETAINER (SPARE WHEEL COVER)				
C2VB 7447248-A	Elastic cord - 5-1/4" long with eyelet at both ends	1	74	D	61/62

MEMO

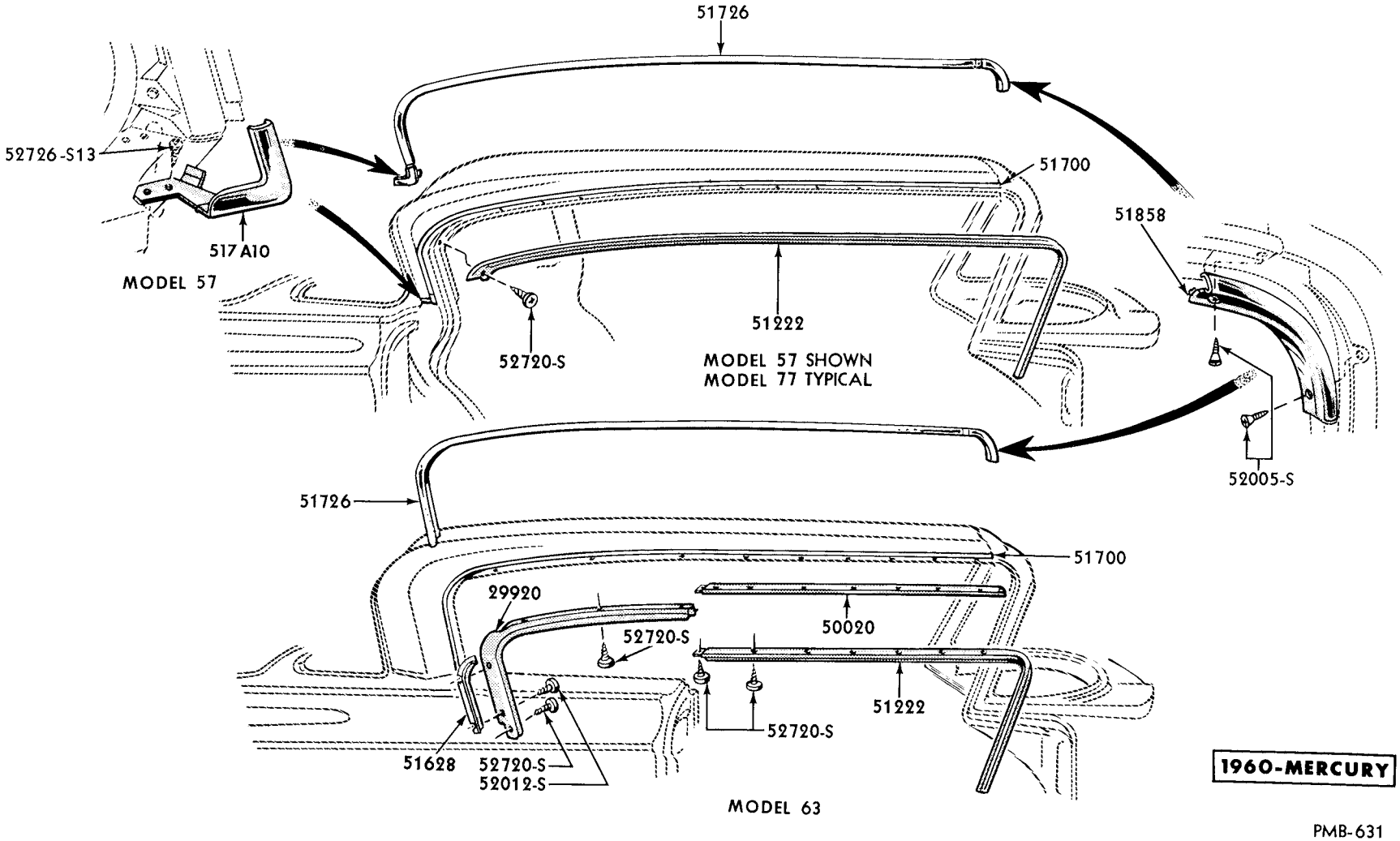

ROOF SIDE RAIL and WEATHERSTRIPS

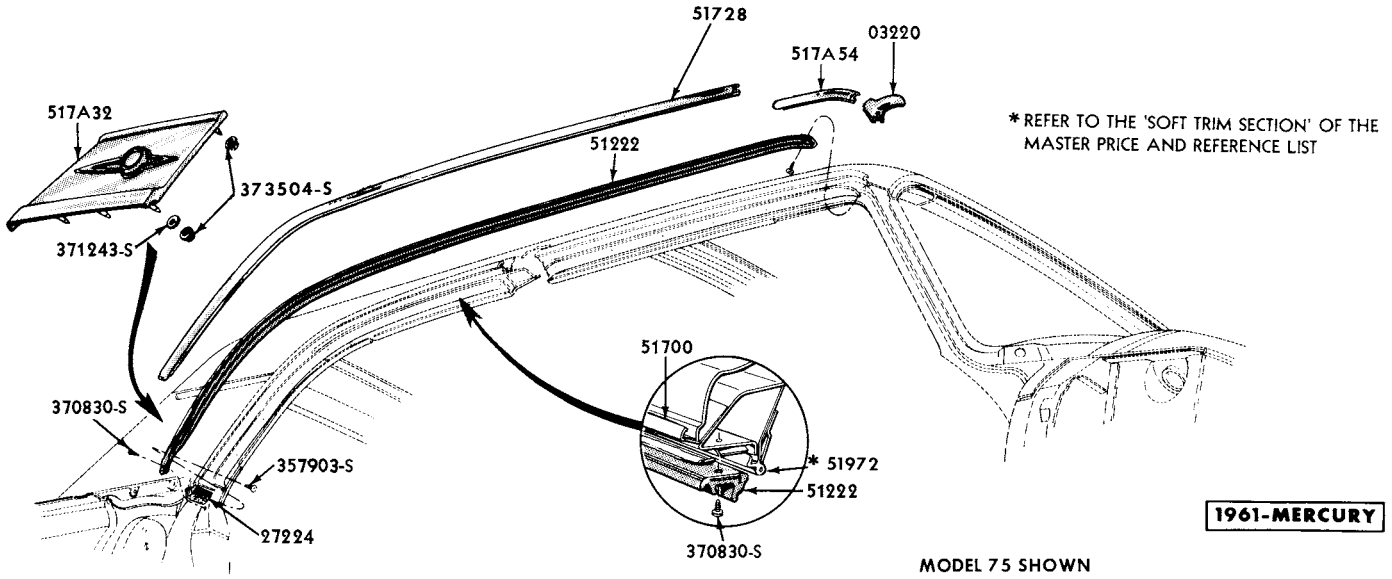

ROOF SIDE WEATHERSTRIPS, MOULDINGS and ORNAMENTS - MODELS 54 - 75

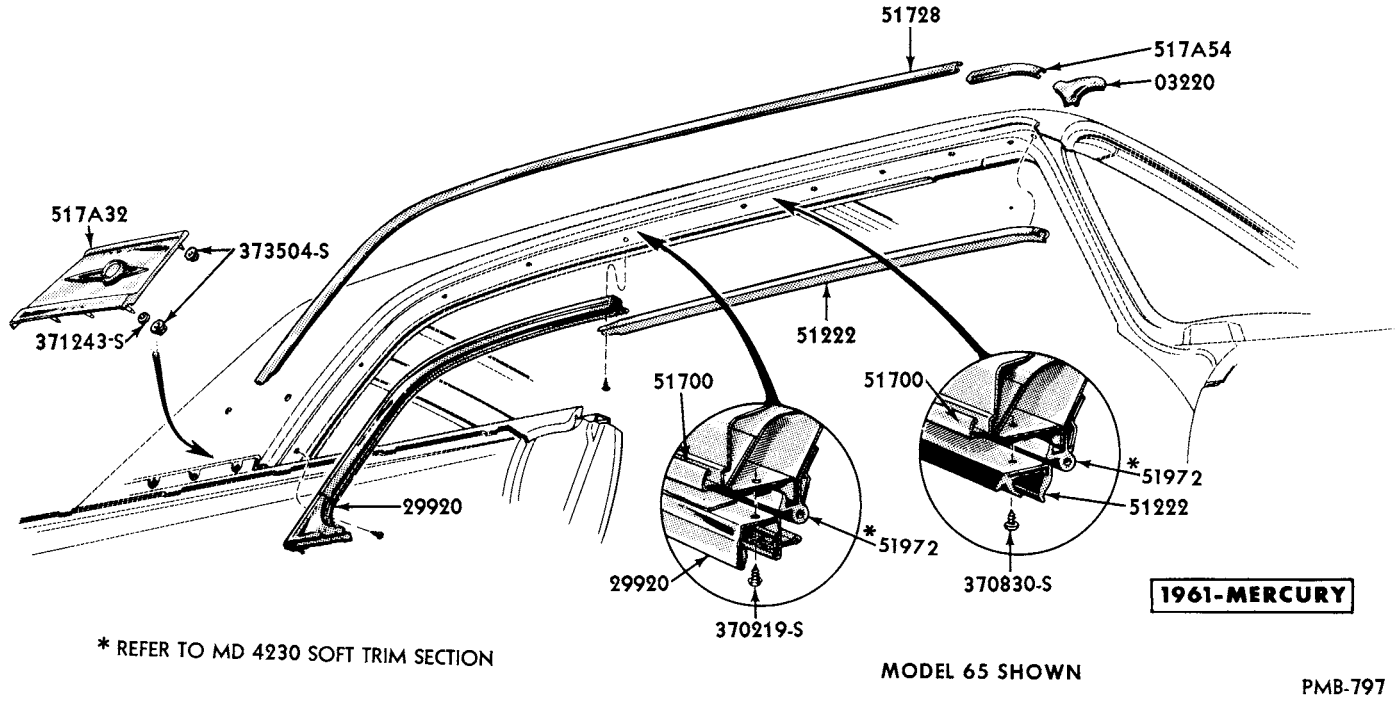

ROOF SIDE WEATHERSTRIPS, MOULDINGS and ORNAMENTS - MODELS 62 - 65

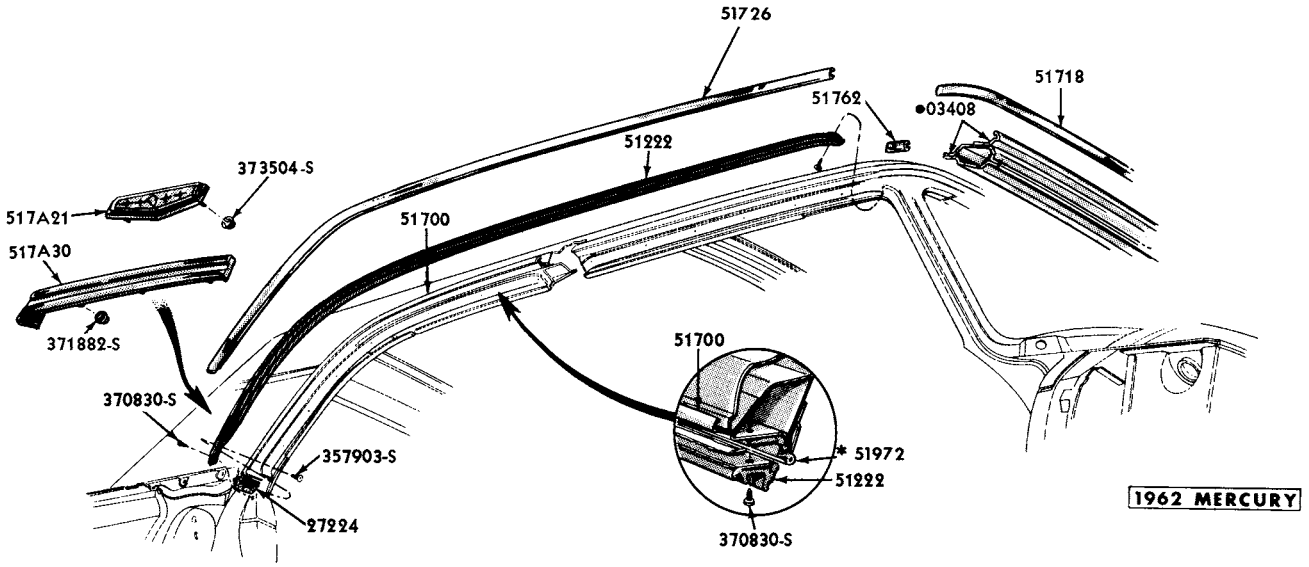

* REFER TO MD 4230 SOFT TRIM SECTION

• INCLUDES ROOF FRONT DRIP MOULDING

MODEL 75 SHOWN

PMB-896

ROOF SIDE WEATHERSTRIPS , MOULDINGS and ORNAMENTS - MODELS 54 - 75

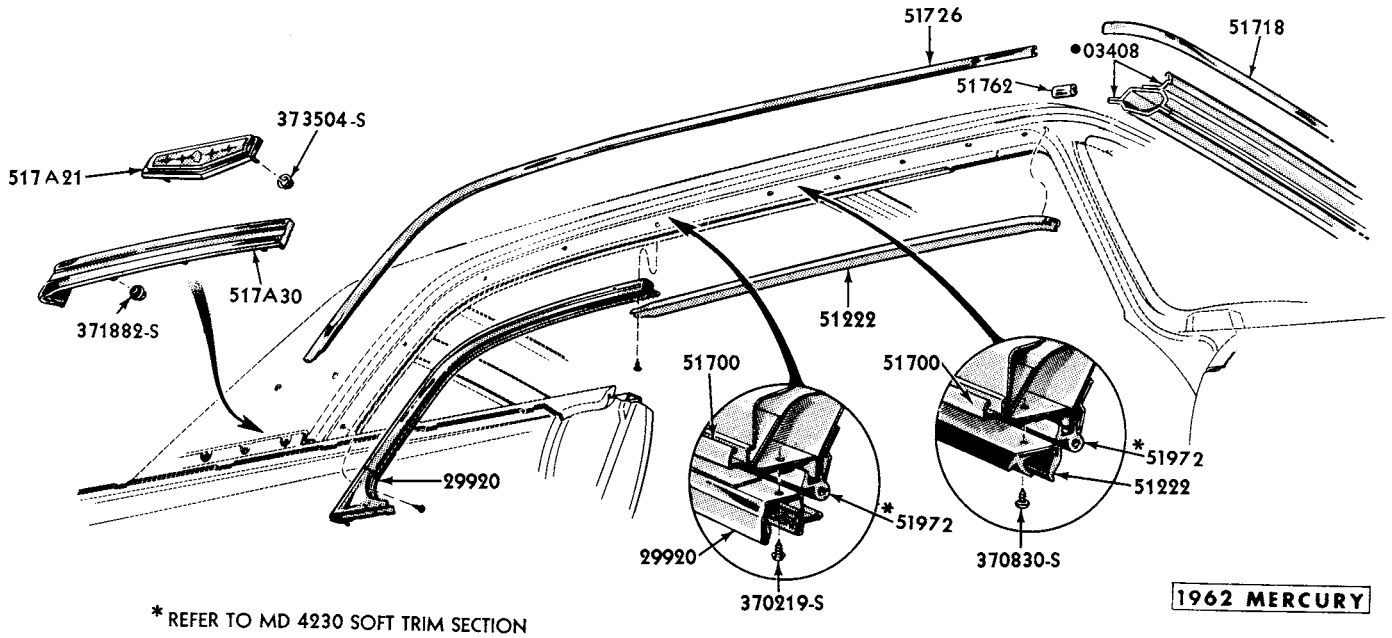

* REFER TO MD 4230 SOFT TRIM SECTION

• INCLUDES ROOF FRONT DRIP MOULDING

MODEL 65 SHOWN

PMB- 895

ROOF SIDE WEATHERSTRIPS , MOULDINGS and ORNAMENTS - MODELS 62 - 65

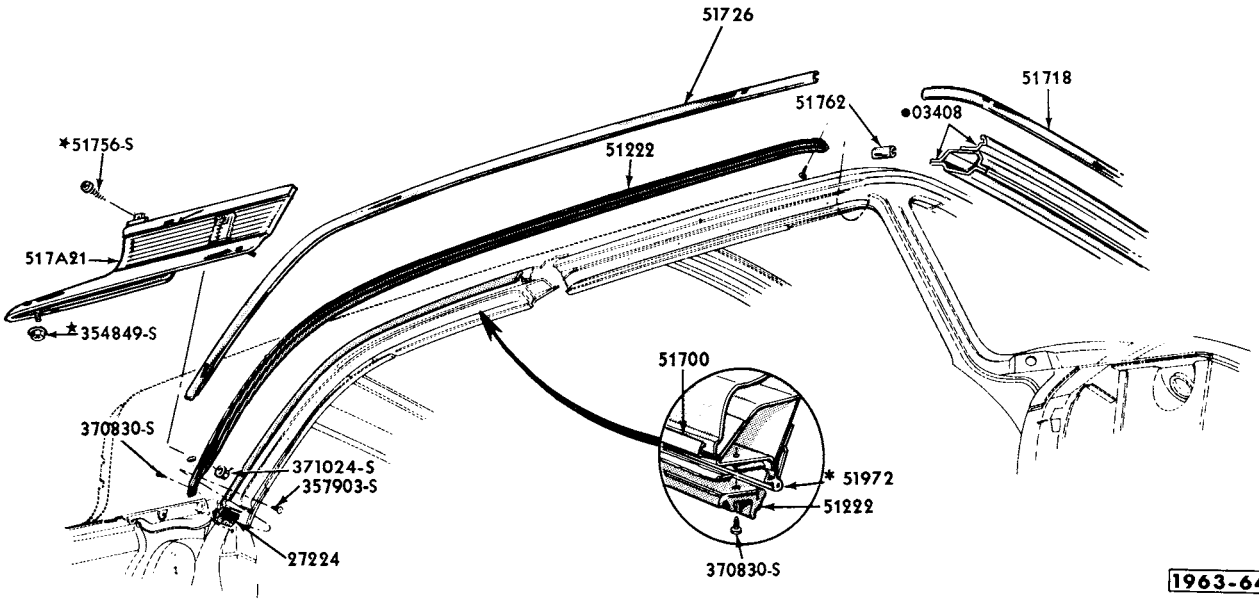

TYPICAL
1963-64 MERCURY
PMB-980

* REFER TO MD 4230 SOFT TRIM SECTION

• INCLUDES ROOF FRONT DRIP MOULDING

MODEL 75 SHOWN

ROOF SIDE WEATHERSTRIPS, MOULDINGS and ORNAMENTS - MODELS 54, 75

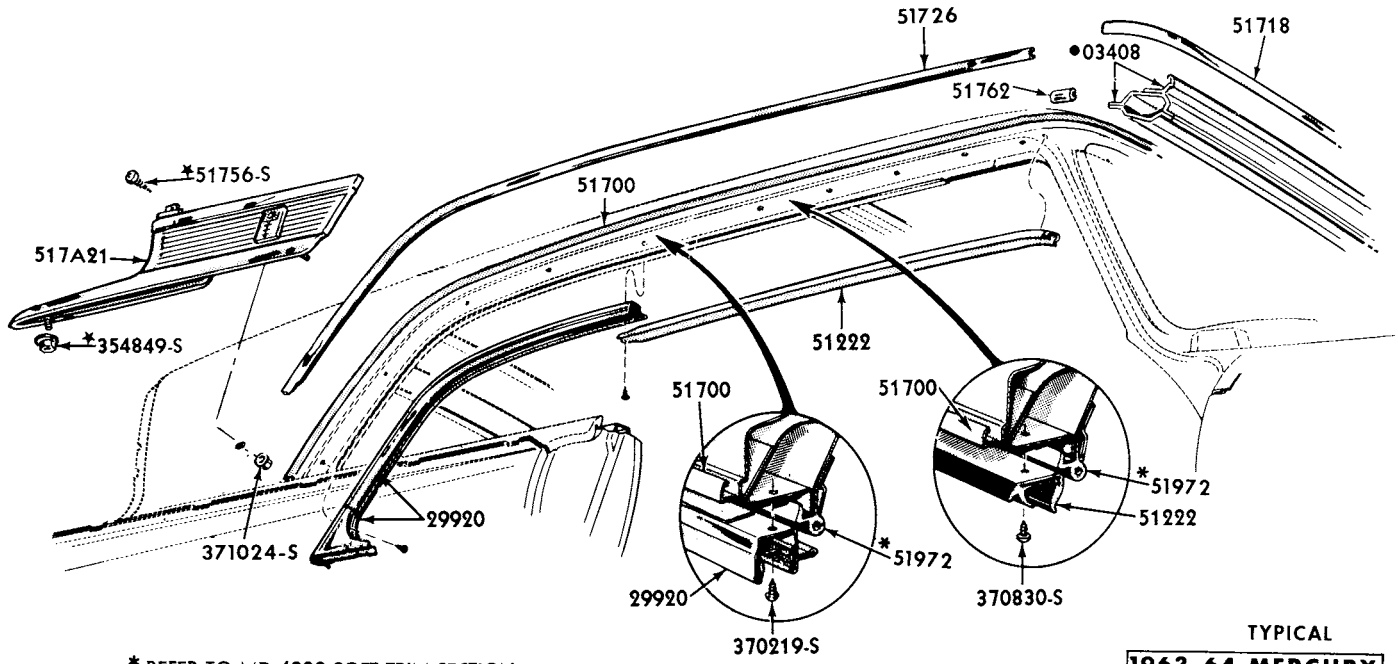

TYPICAL
1963-64 MERCURY
PMB-979

* REFER TO MD 4230 SOFT TRIM SECTION

• INCLUDES ROOF FRONT DRIP MOULDING

MODEL 65 SHOWN

ROOF SIDE WEATHERSTRIPS, MOULDINGS and ORNAMENTS - MODELS 62, 65

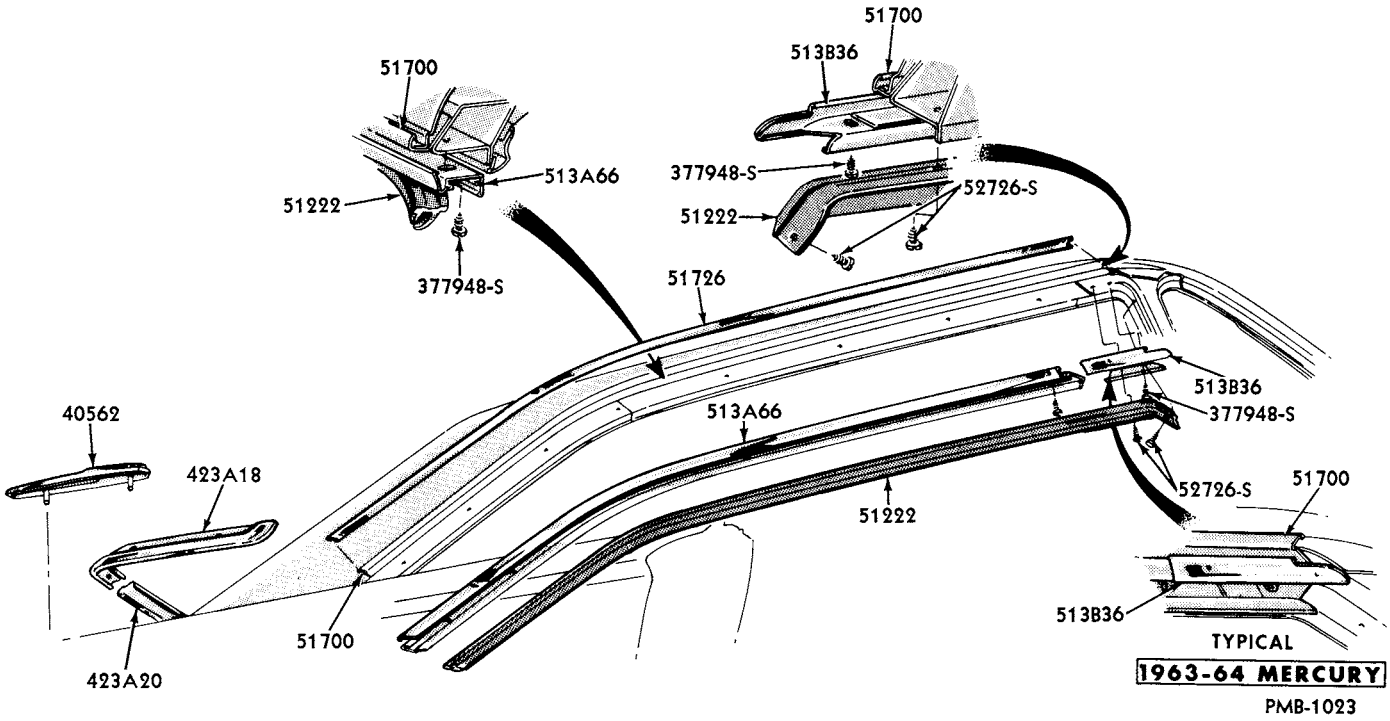

ROOF SIDE WEATHERSTRIPS, MOULDINGS and ORNAMENTS - MODEL 63

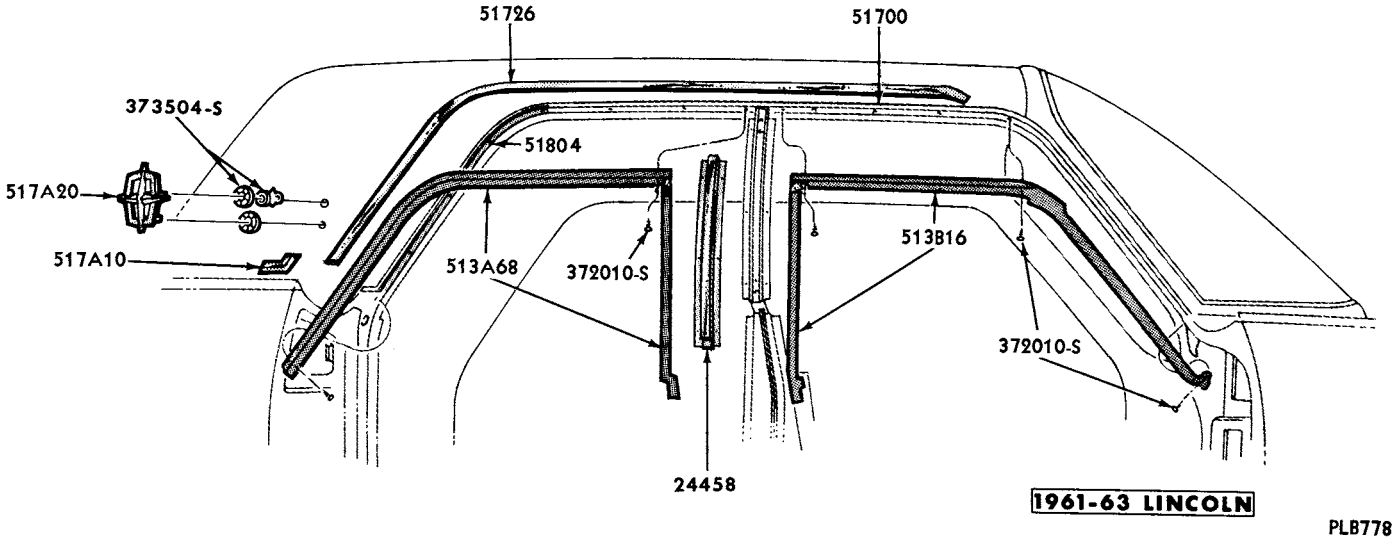

ROOF SIDE WEATHERSTRIPS, MOULDINGS and ORNAMENTS - MODEL 53

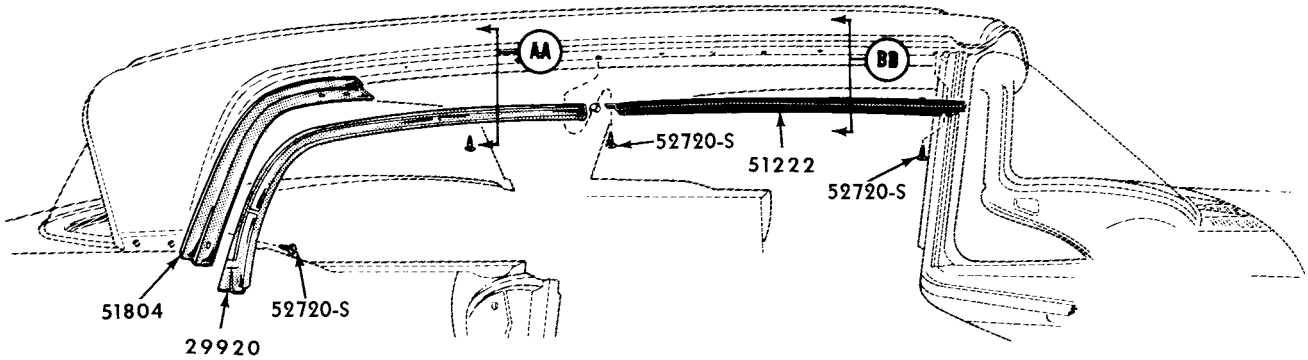

BODY TYPES 63-65

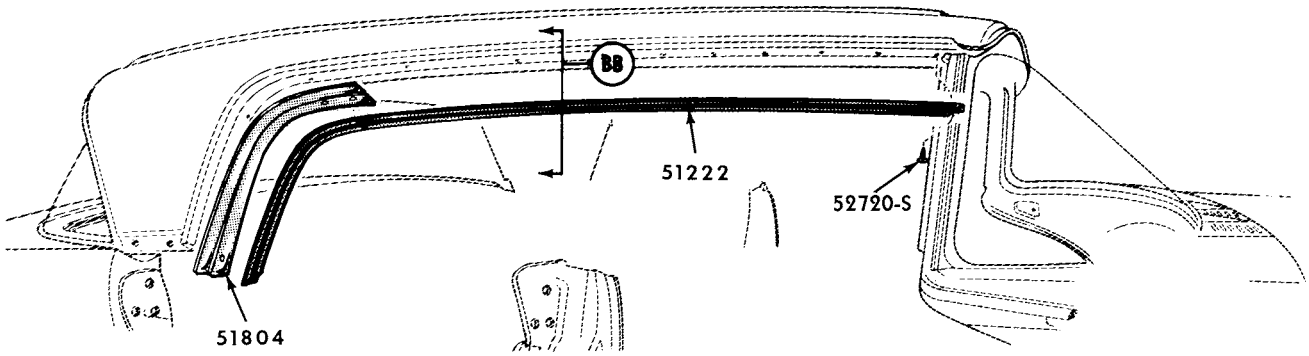

BODY TYPES 57-75

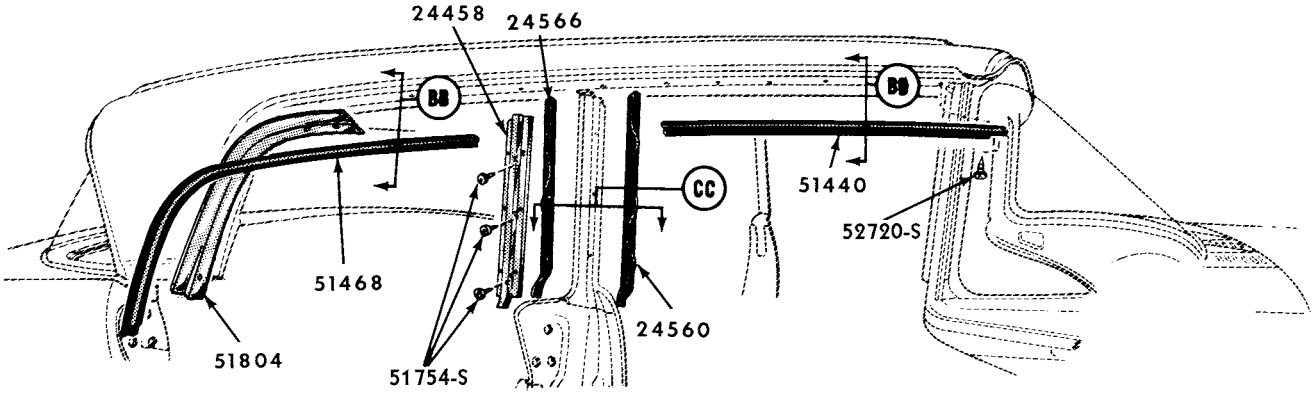

BODY TYPES 53-54

1960 LINCOLN

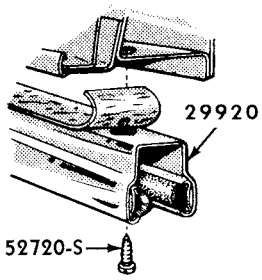

VIEW–AA

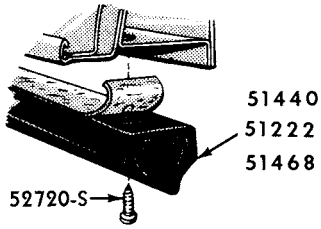

VIEW–BB

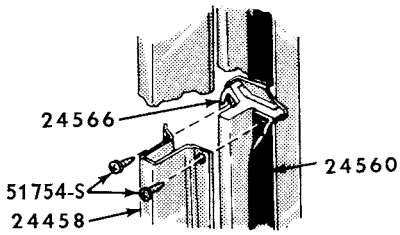

VIEW–CC

PLB-347

ROOF SIDE RAIL and WEATHERSTRIPS

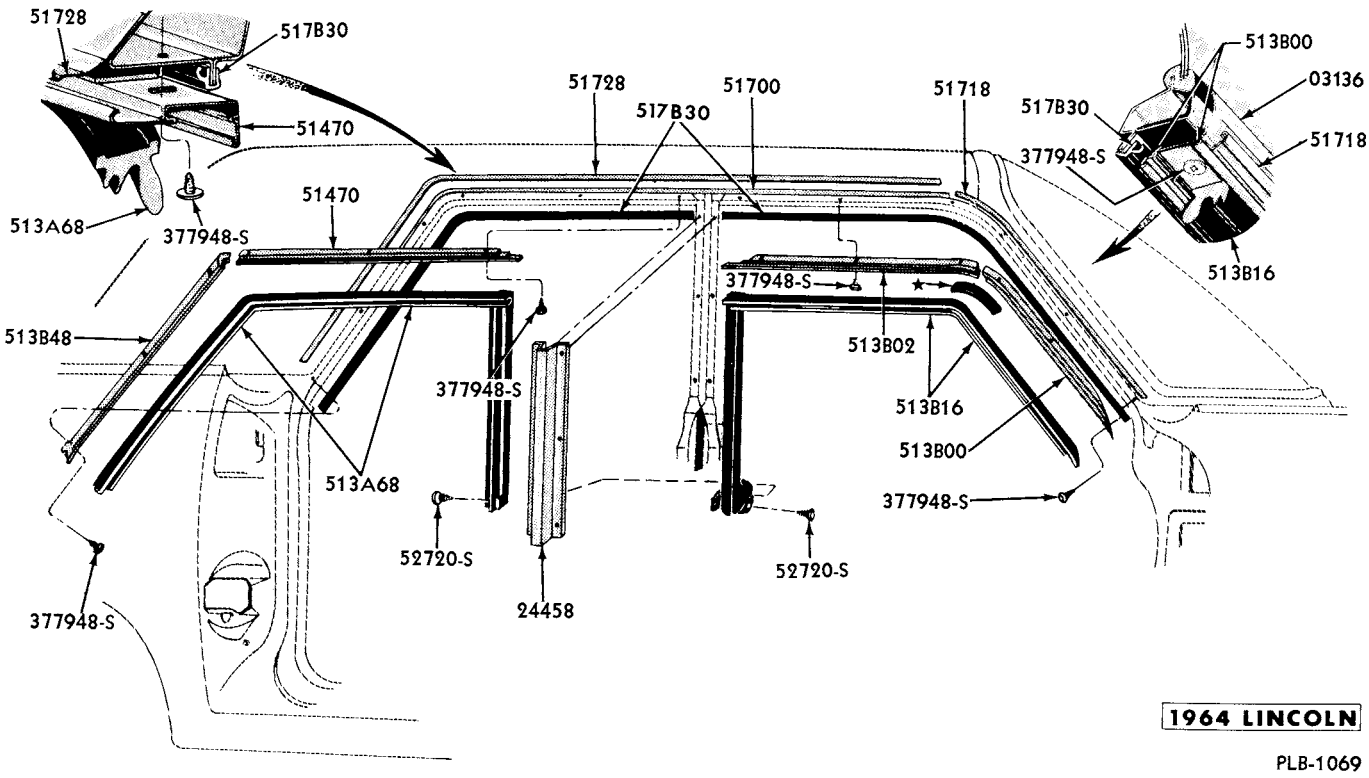

ROOF SIDE WEATHERSTRIPS and MOULDINGS - MODEL 53

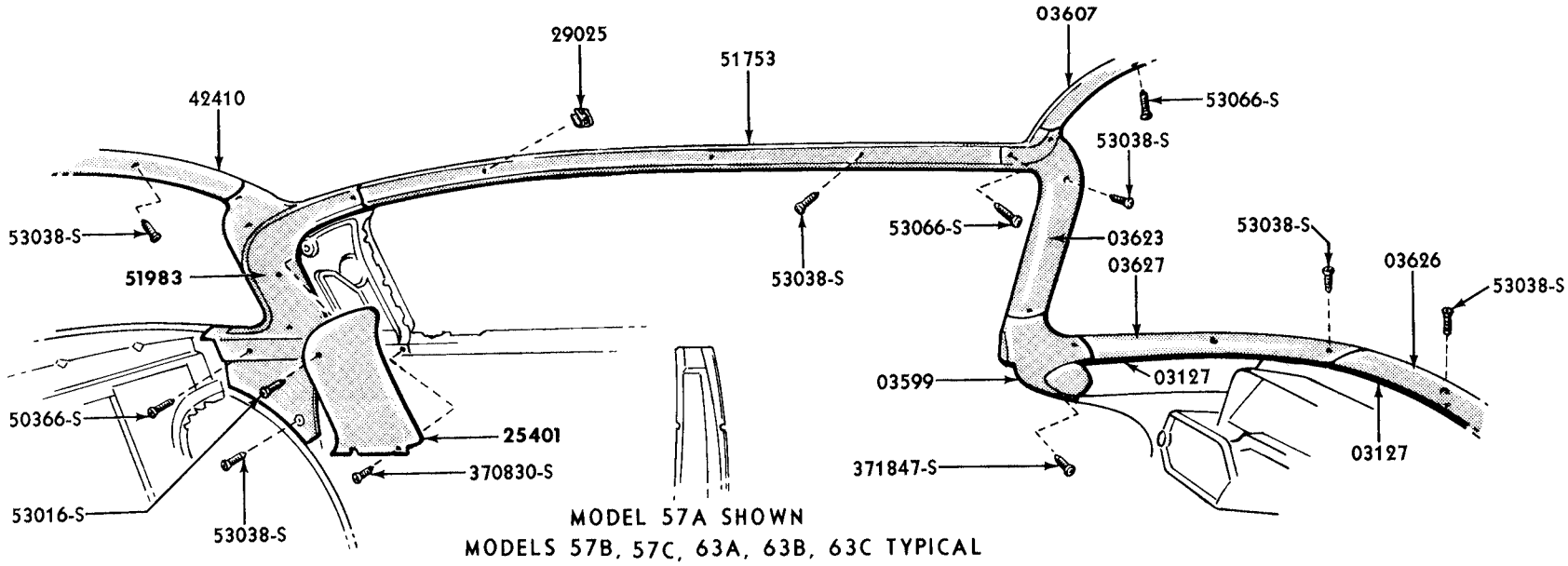

MODEL 57A SHOWN
MODELS 57B, 57C, 63A, 63B, 63C TYPICAL

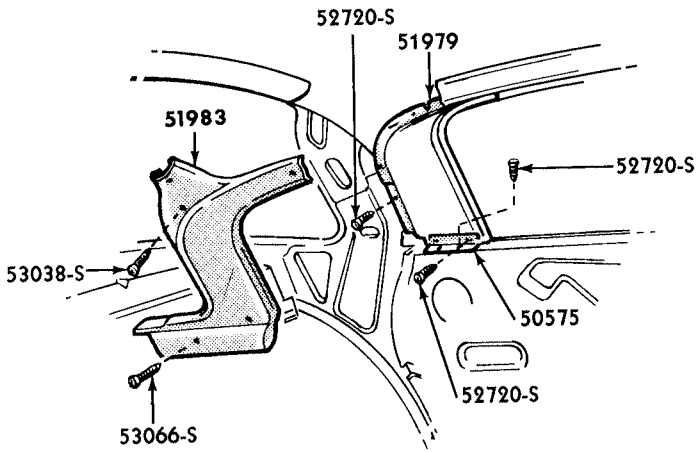

MODELS 63A, 63B

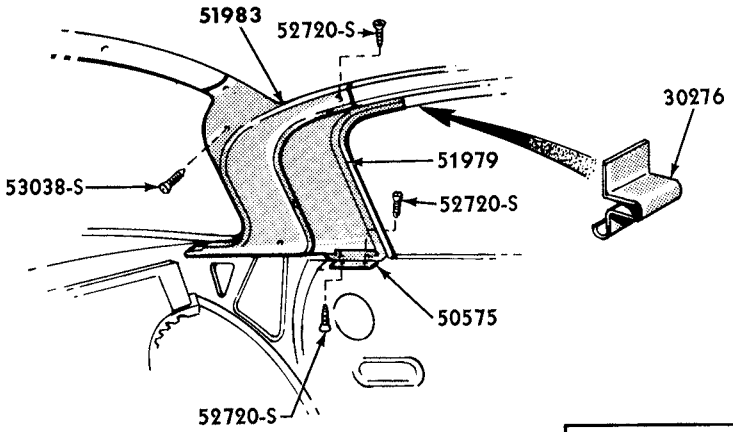

MODEL 63C SHOWN
MODEL 57C TYPICAL

1960-MERCURY

PMB-635

INTERIOR MOULDINGS - MODELS 57, 63

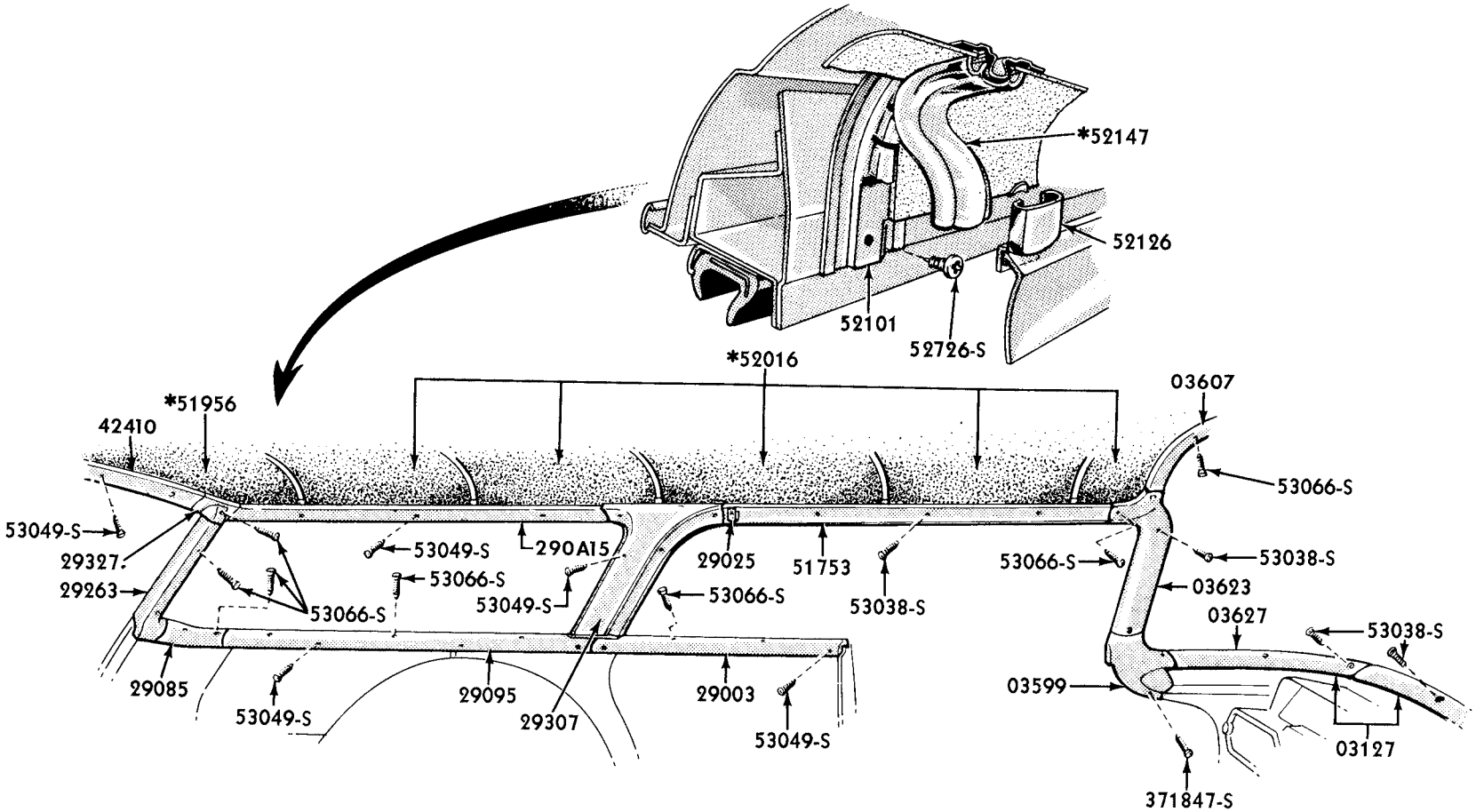

MODEL 77

1960-MERCURY

* REFER TO MD 4230 SOFT TRIM SECTION

PMB-668

INTERIOR MOULDINGS - STATION WAGON

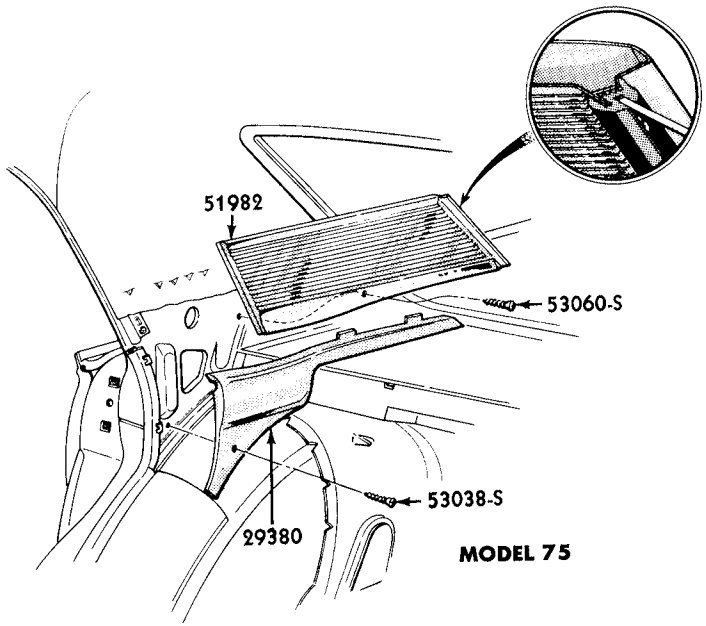

MODEL 75

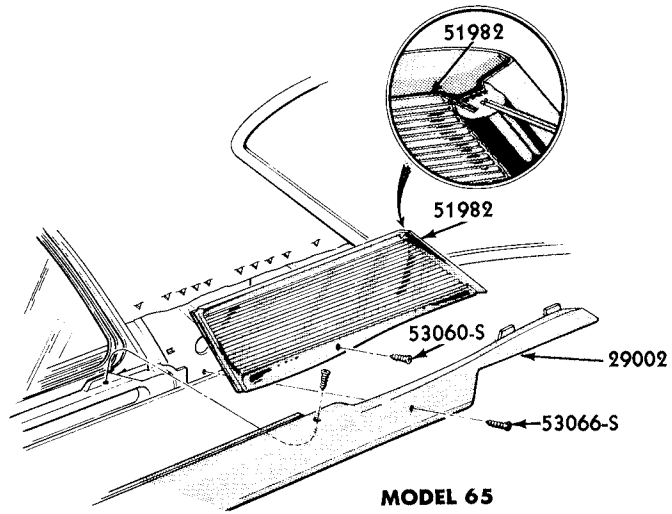

MODEL 65

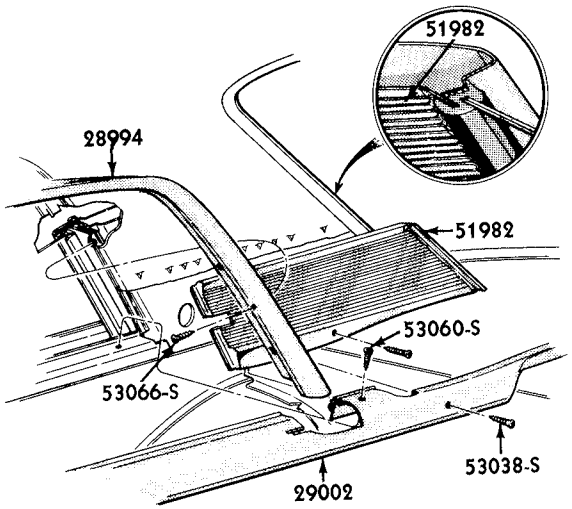

MODEL 62

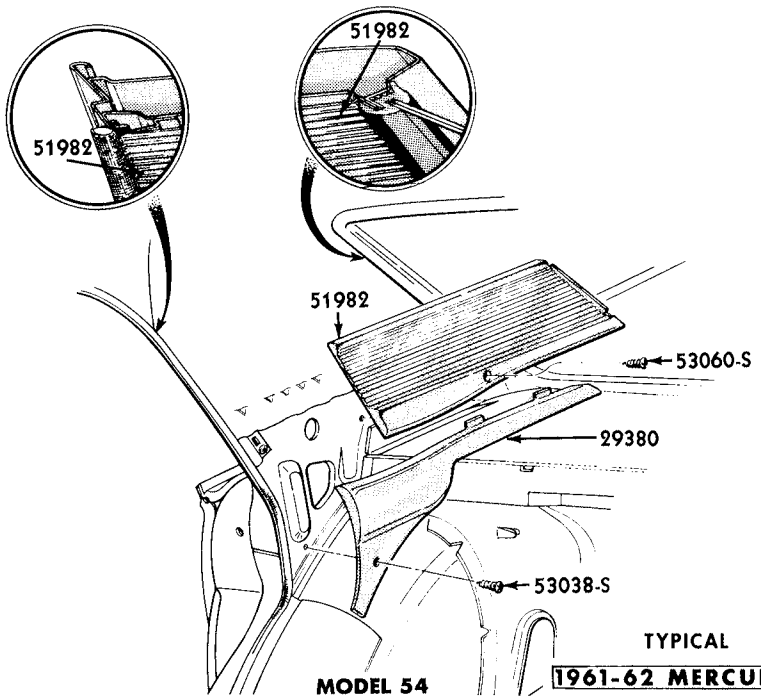

MODEL 54

TYPICAL
1961-62 MERCURY

PMB-799

ROOF SIDE and REAR QUARTER INTERIOR MOULDINGS and ORNAMENTS

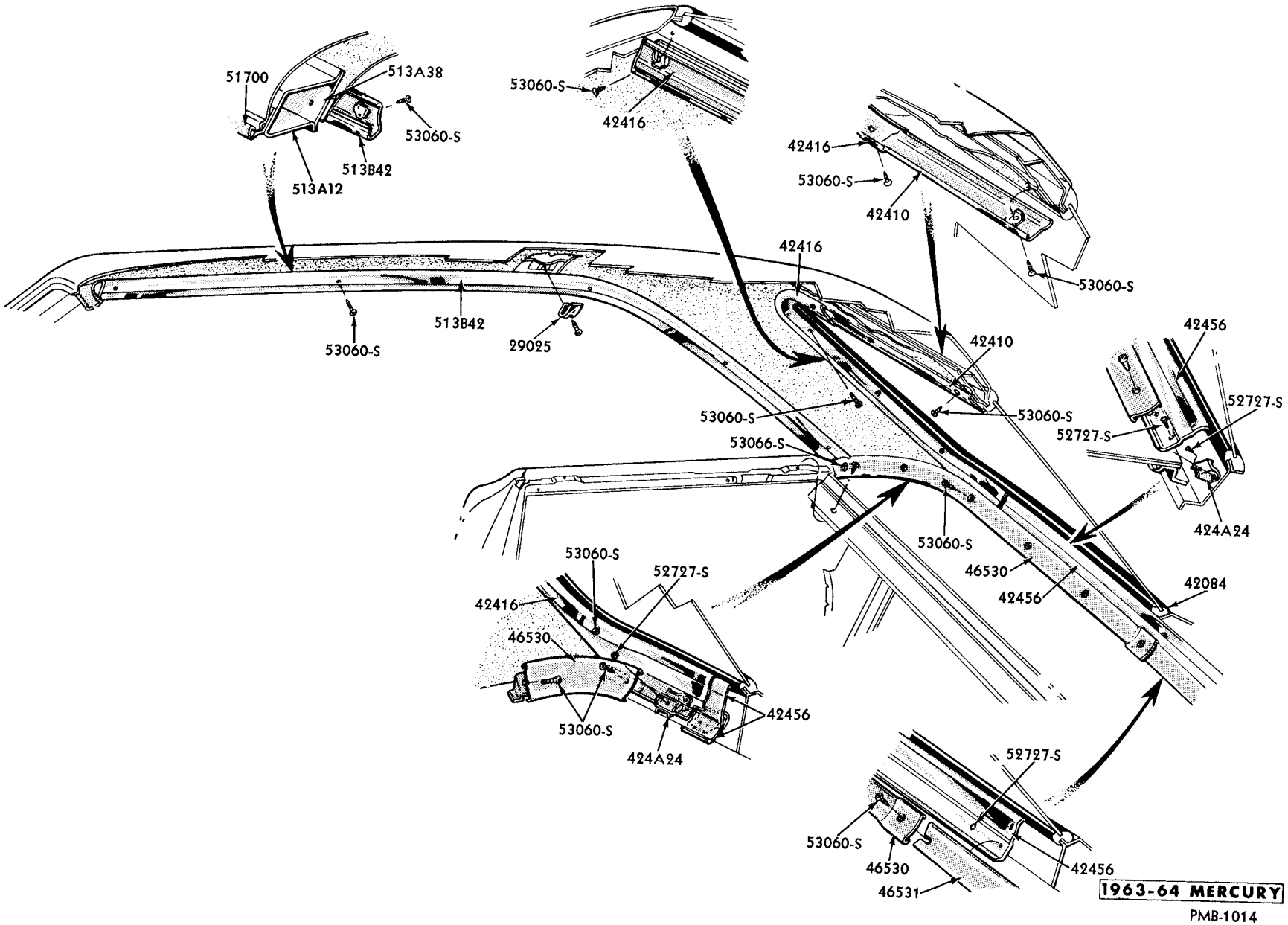

INTERIOR MOULDINGS - ROOF SIDE and BACK WINDOW - MODEL 63

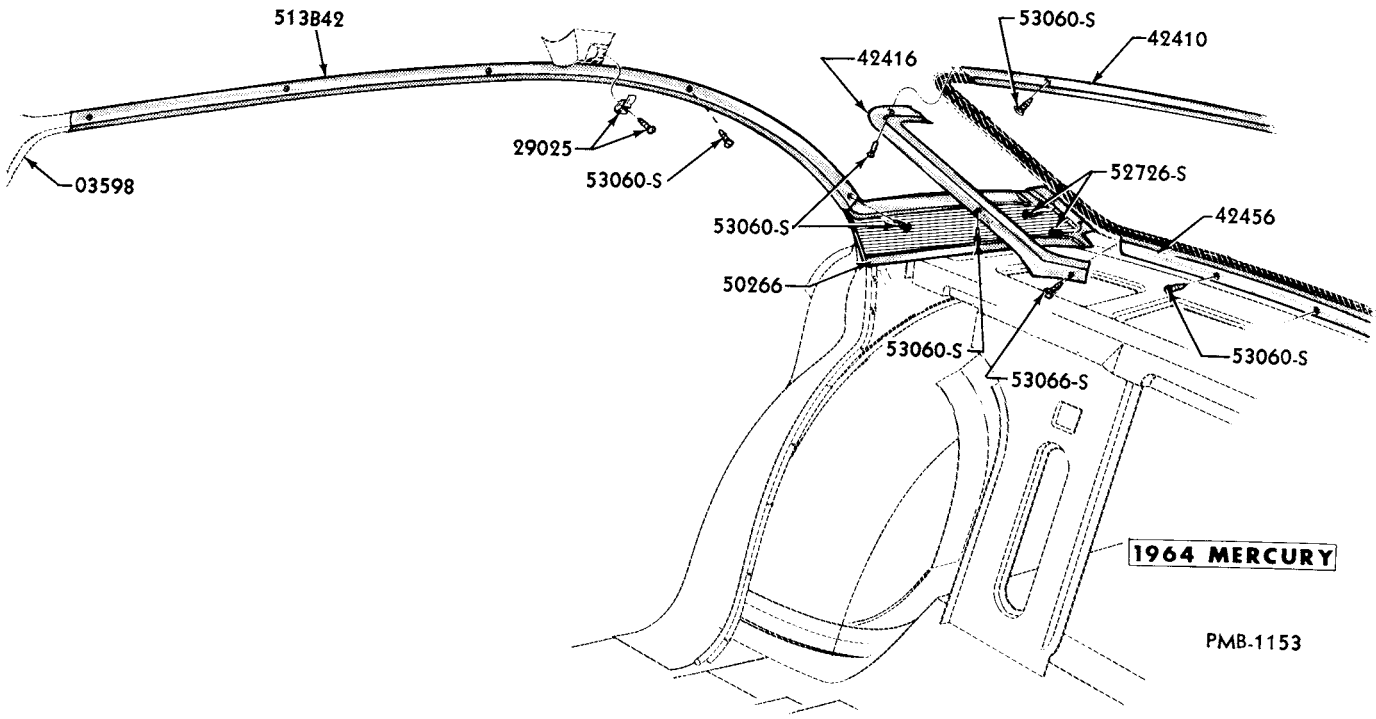

INTERIOR MOULDINGS - ROOF SIDE and BACK WINDOW - MODEL 57

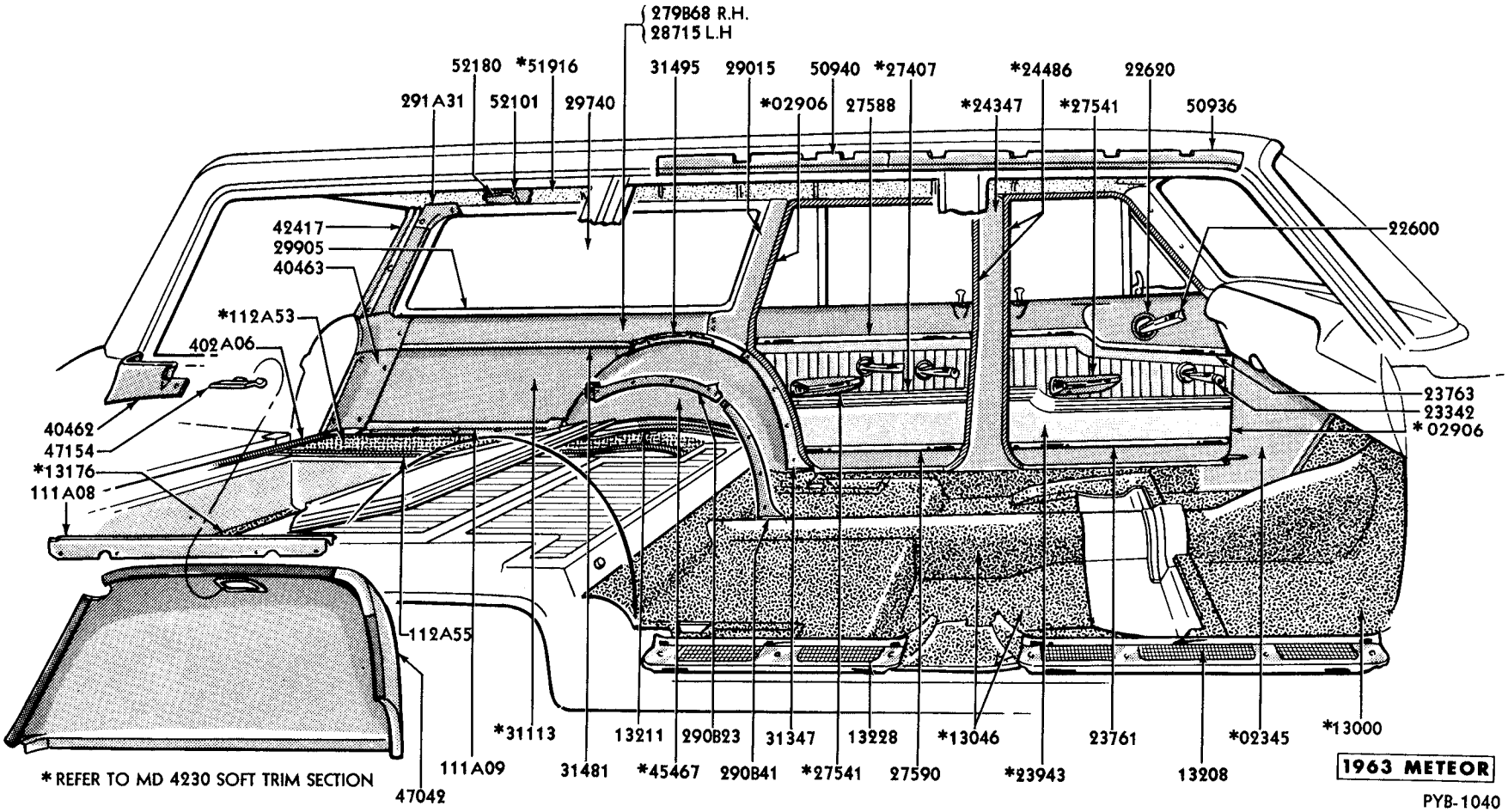

BODY SIDE INTERIOR - MODEL 71

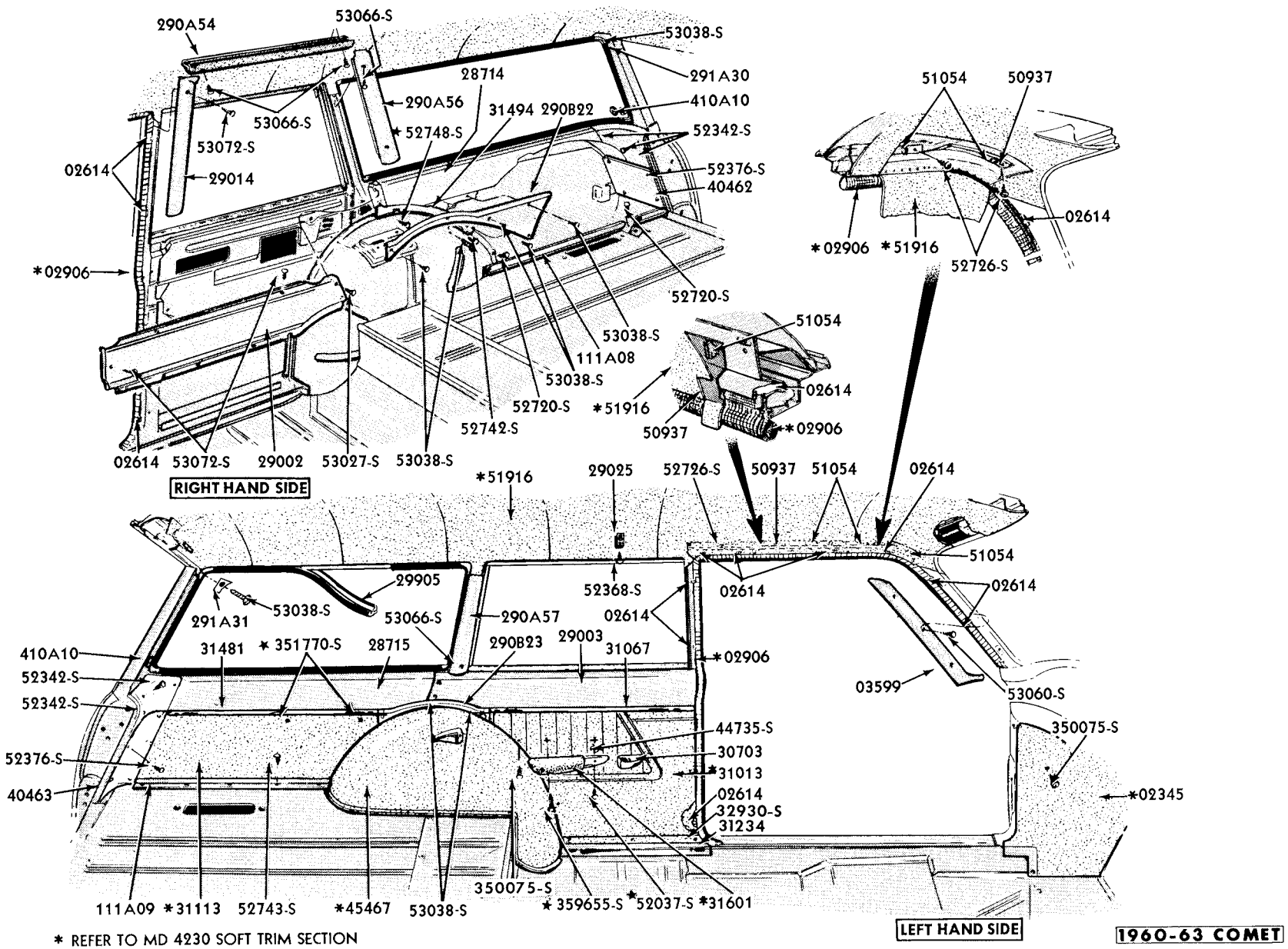

* REFER TO MD 4230 SOFT TRIM SECTION

PGB-887

BODY SIDE INTERIOR - LESS DOORS - MODEL 59

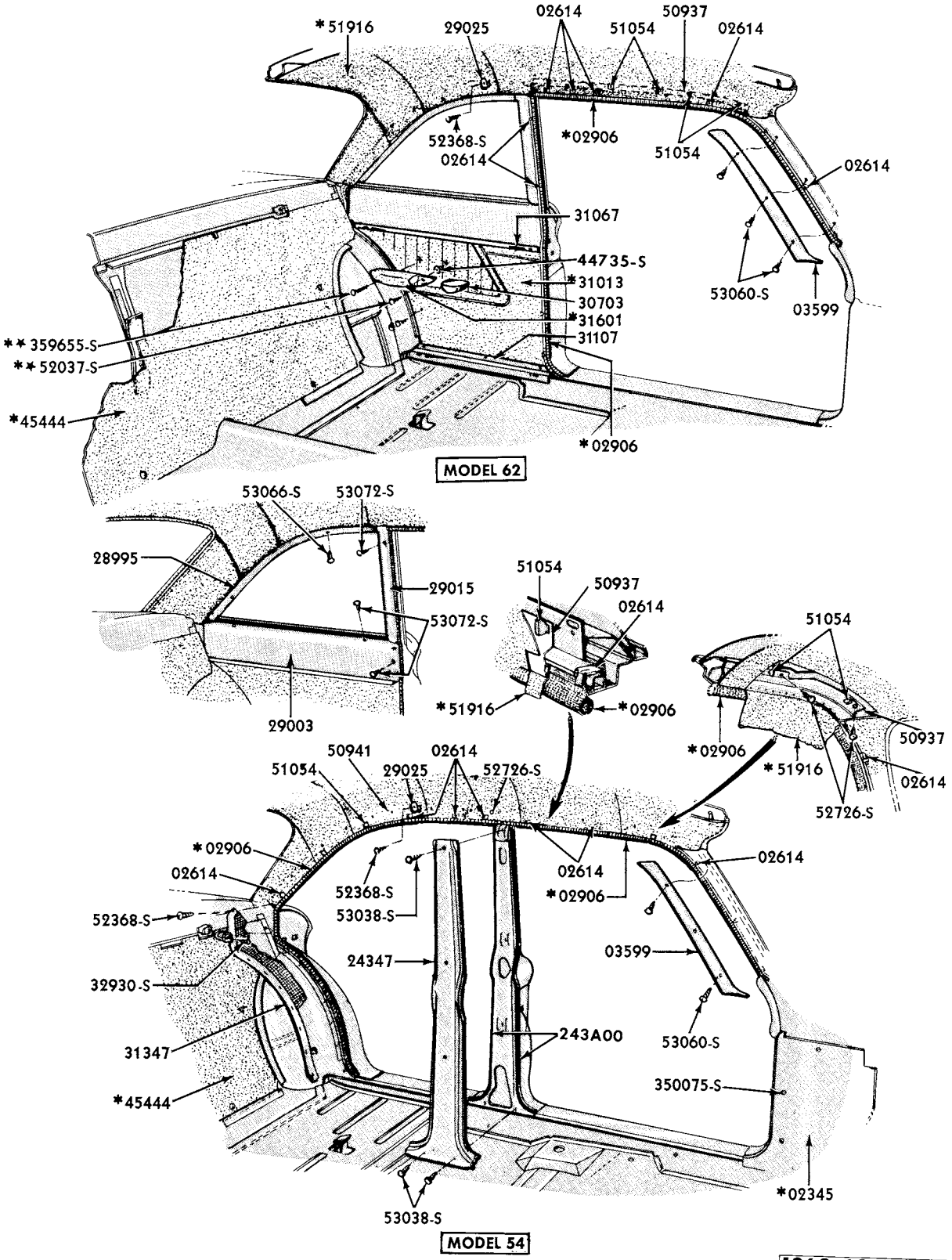

* REFER TO MD 4230 SOFT TRIM SECTION

1960-63 COMET

PGB-886

BODY SIDE INTERIOR - LESS DOORS - MODELS 54, 62

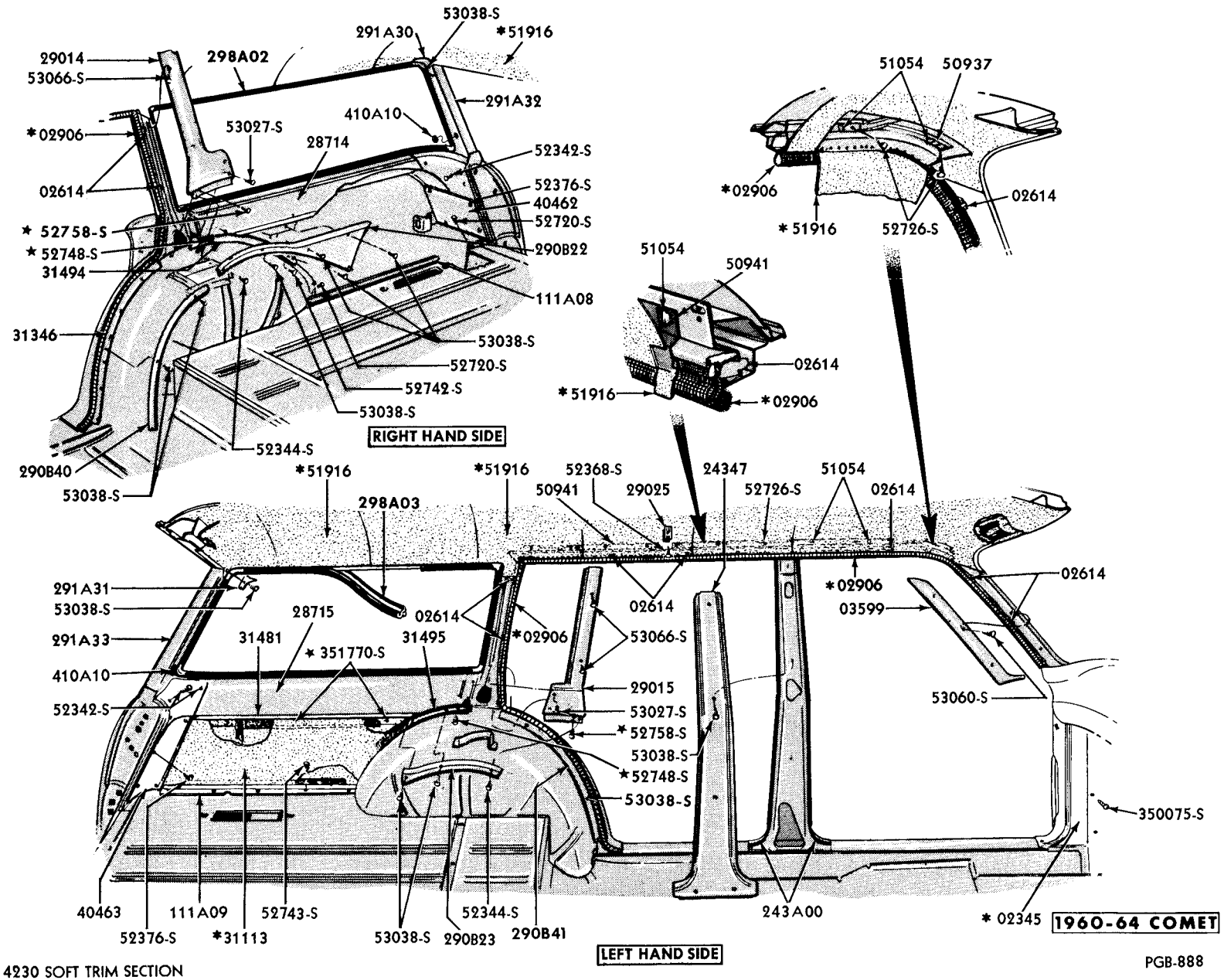

* REFER TO MD 4230 SOFT TRIM SECTION

BODY SIDE INTERIOR - LESS DOORS - MODEL 71

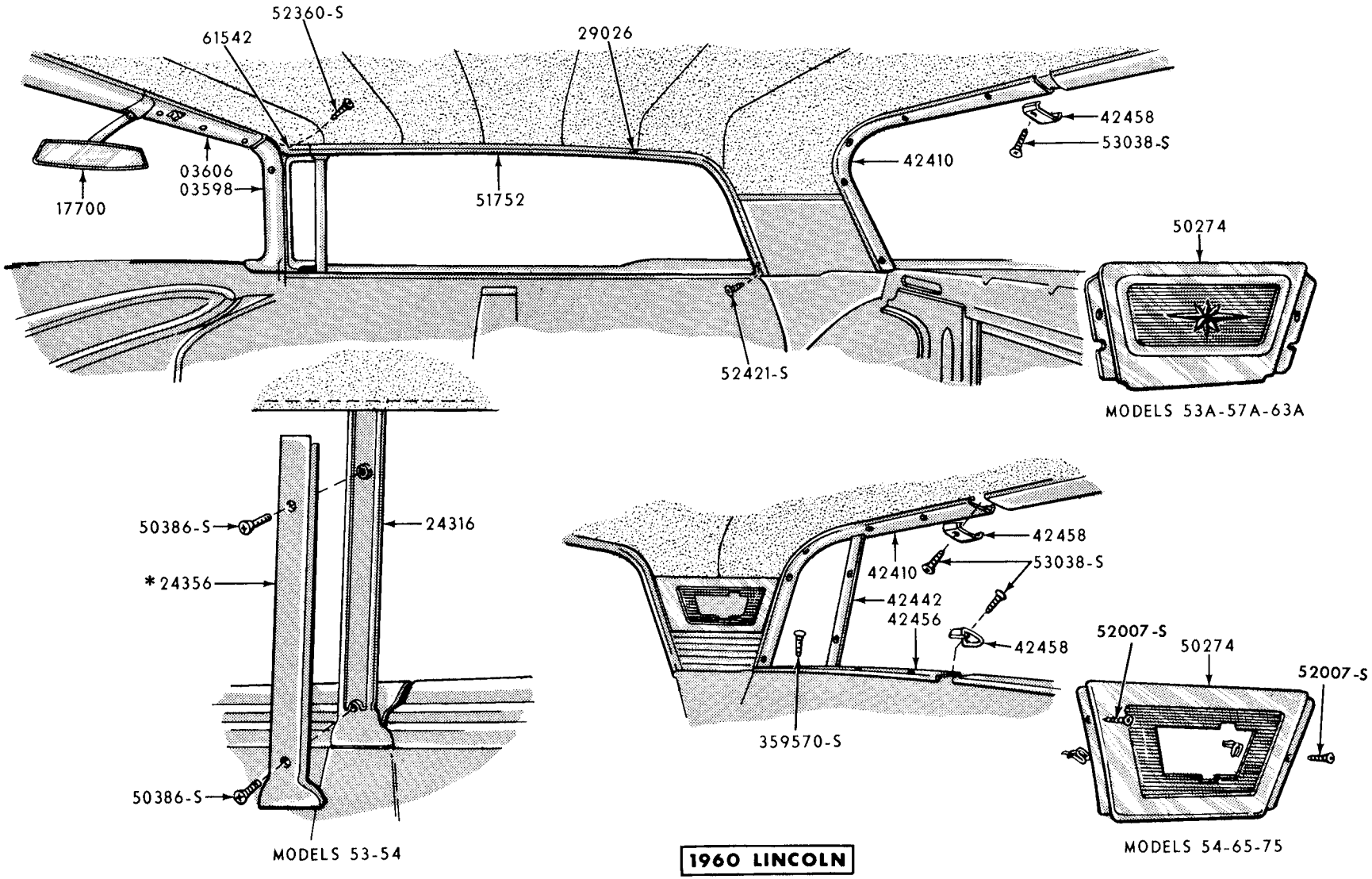

* REFER TO MD 4230 SOFT TRIM SECTION

PLB-573

INTERIOR MOULDINGS and ORNAMENTS

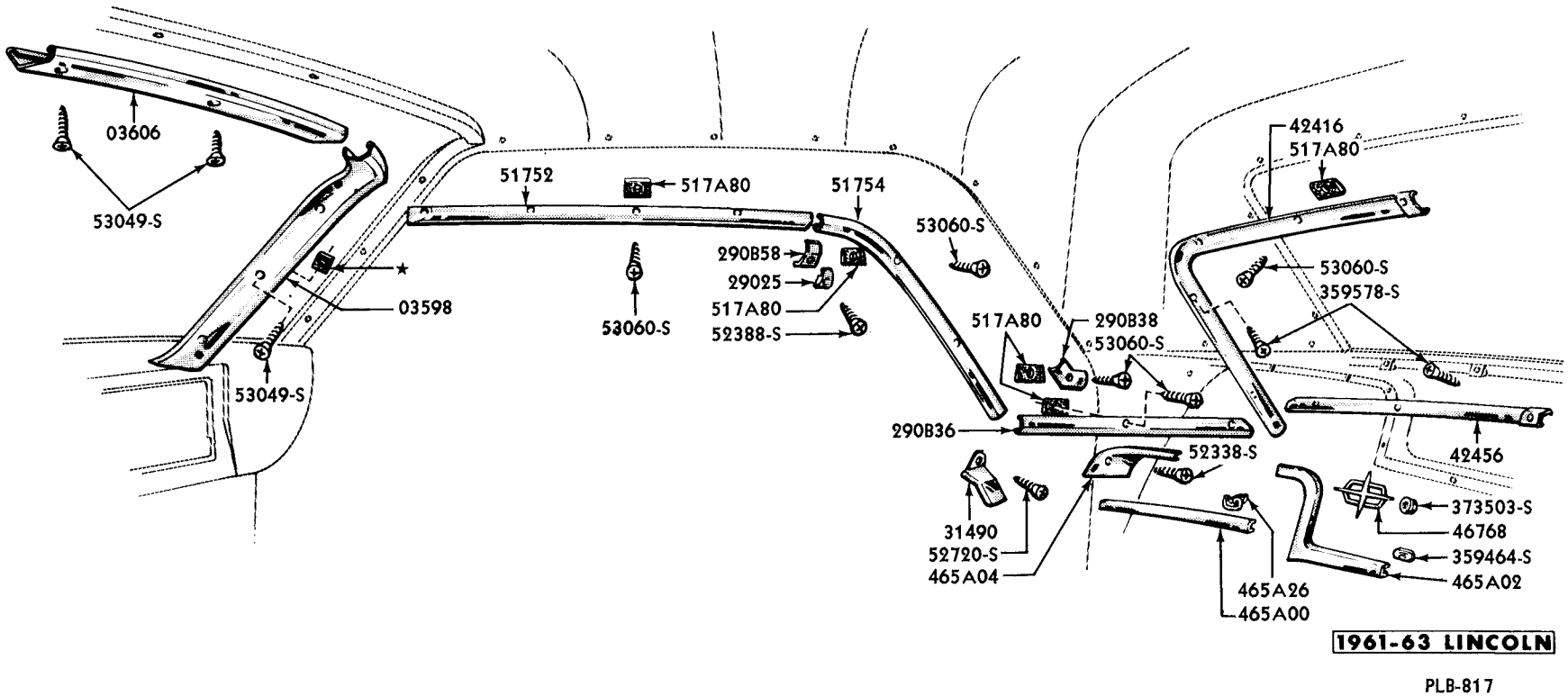

INTERIOR MOULDINGS and ORNAMENTS

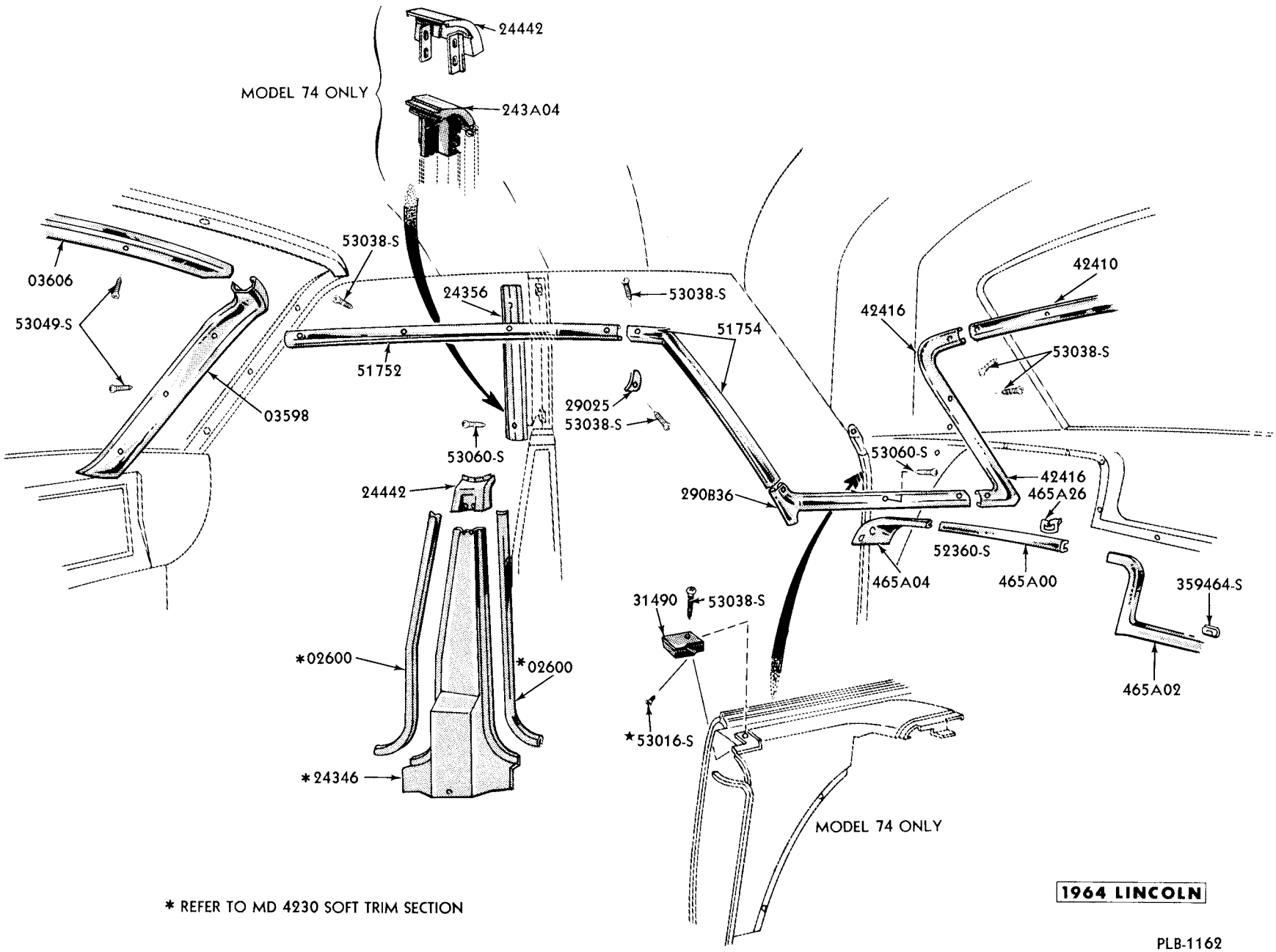

INTERIOR MOULDINGS - ROOF SIDE and BACK WINDOW

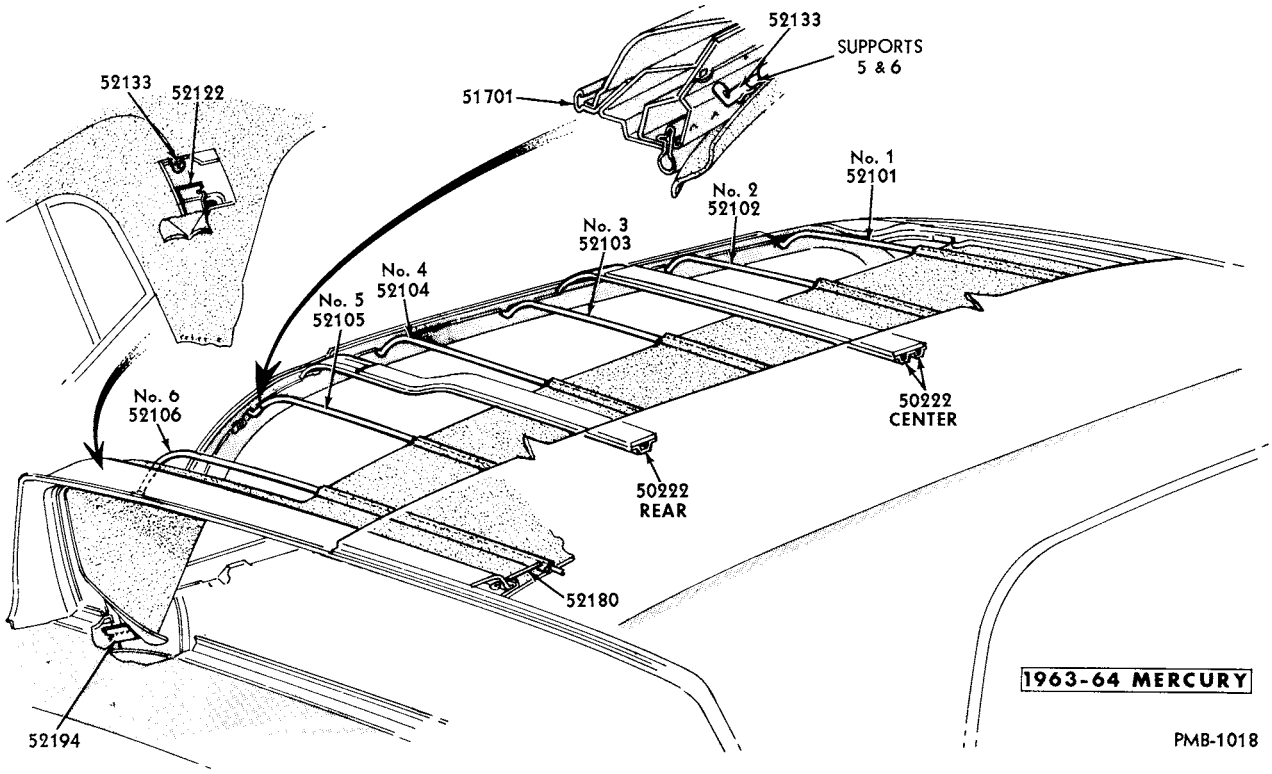

ROOF BOWS - MODELS 54, 62, 65, 75

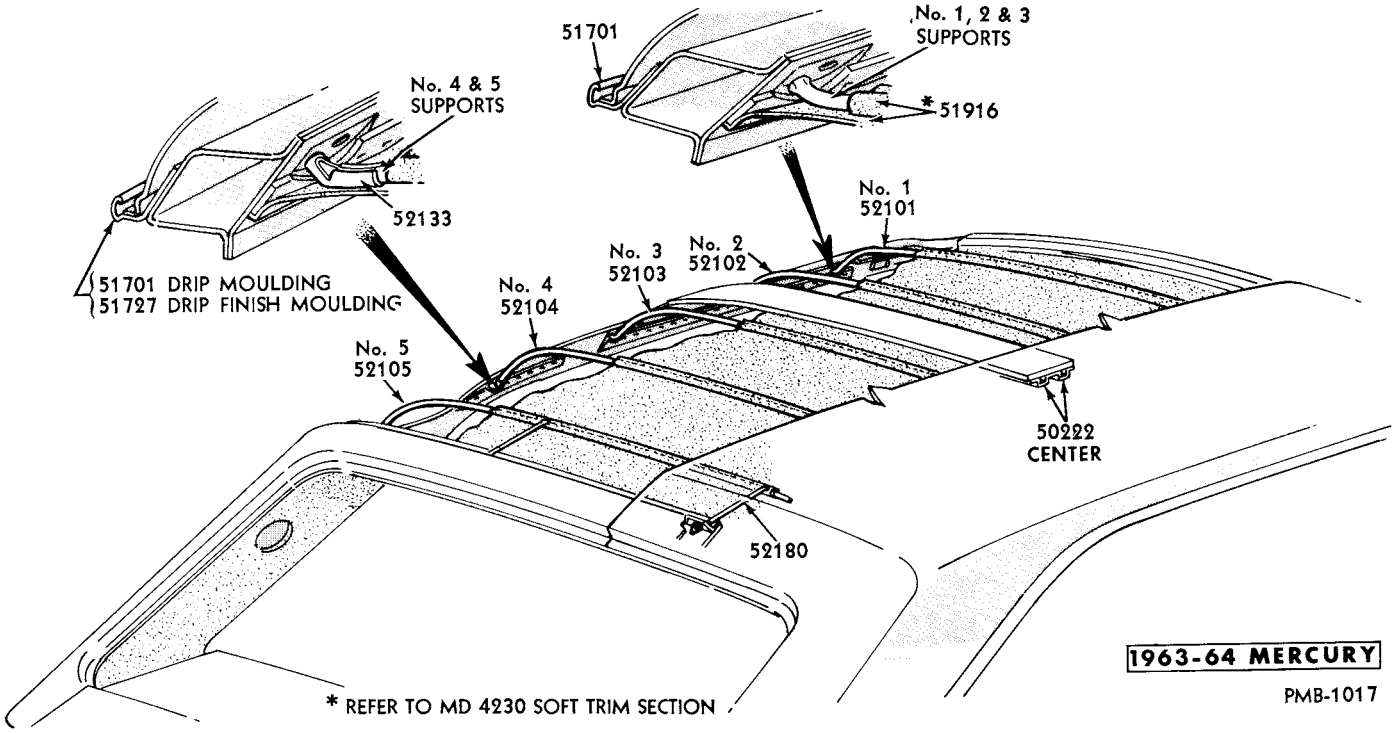

ROOF BOWS - MODEL 63

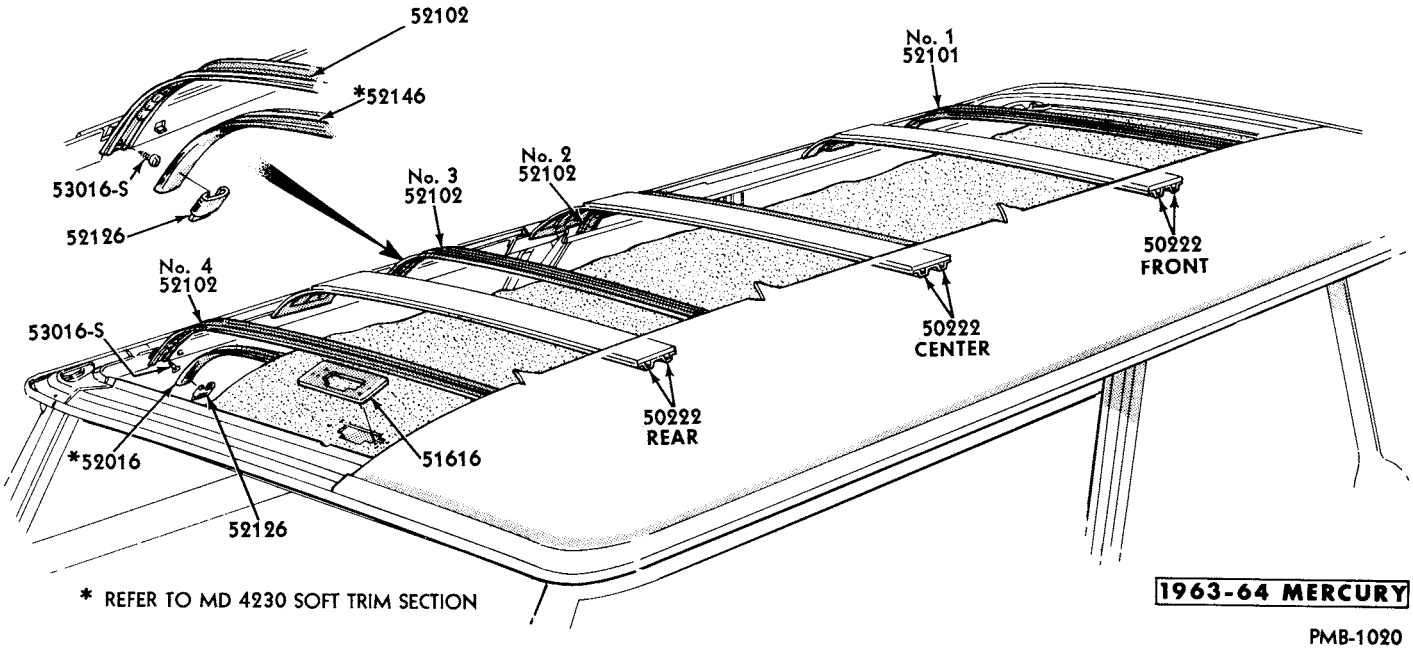

ROOF BOWS - MODEL 71

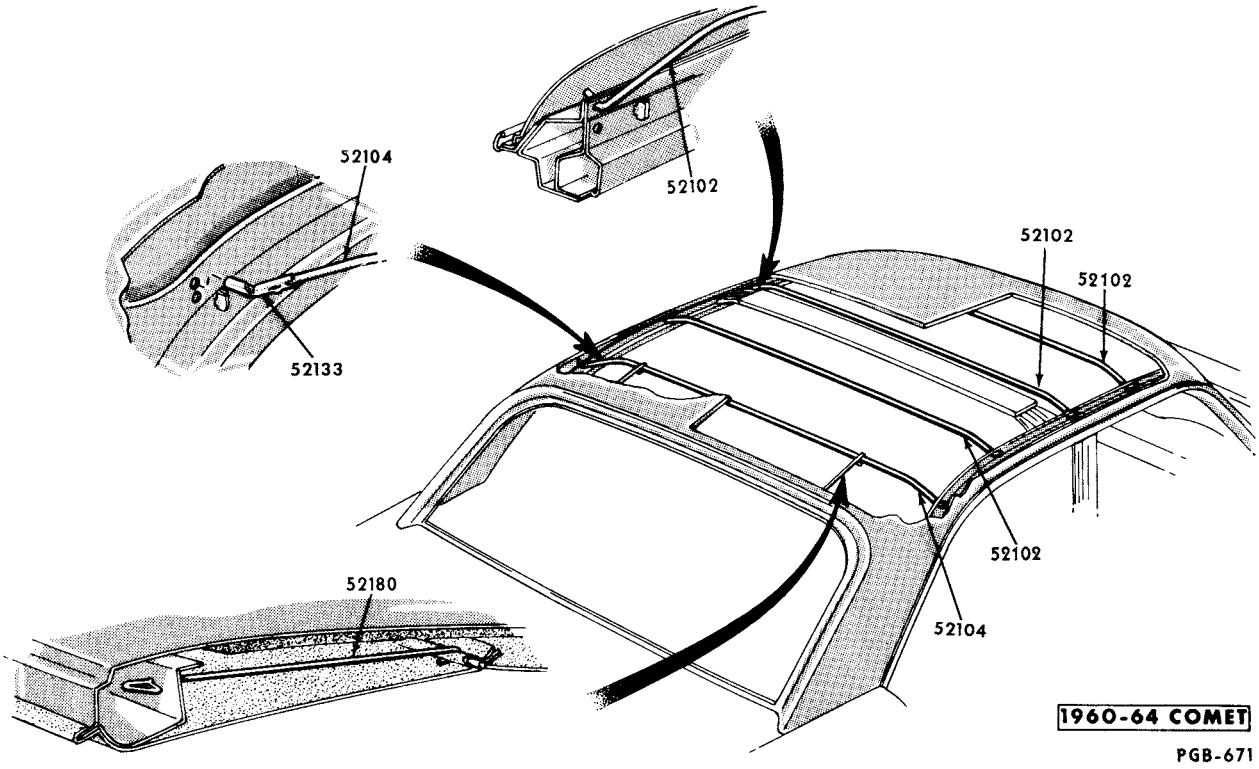

ROOF HEADLINING SUPPORTS

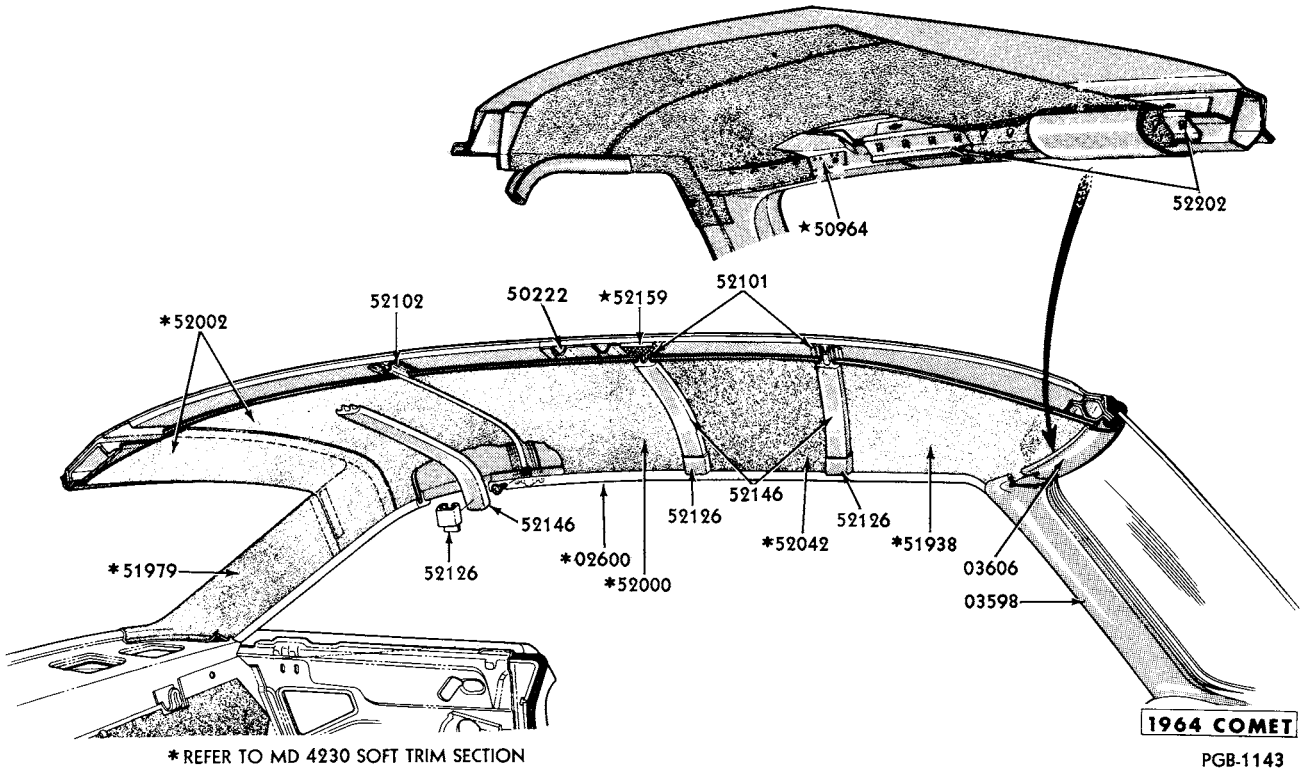

*REFER TO MD 4230 SOFT TRIM SECTION

ROOF INTERIOR TRIM - MODEL 63

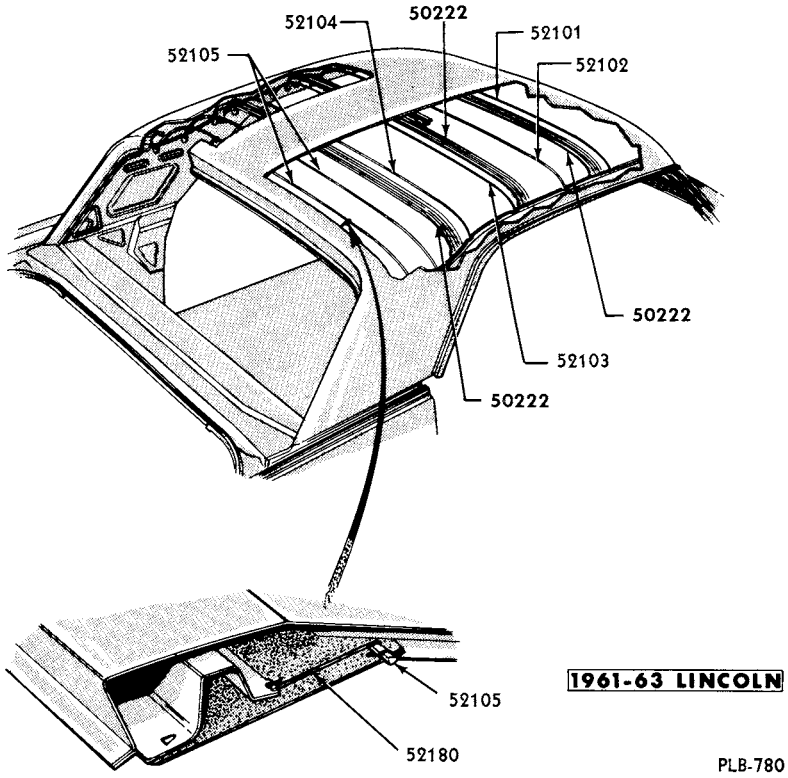

ROOF BOWS

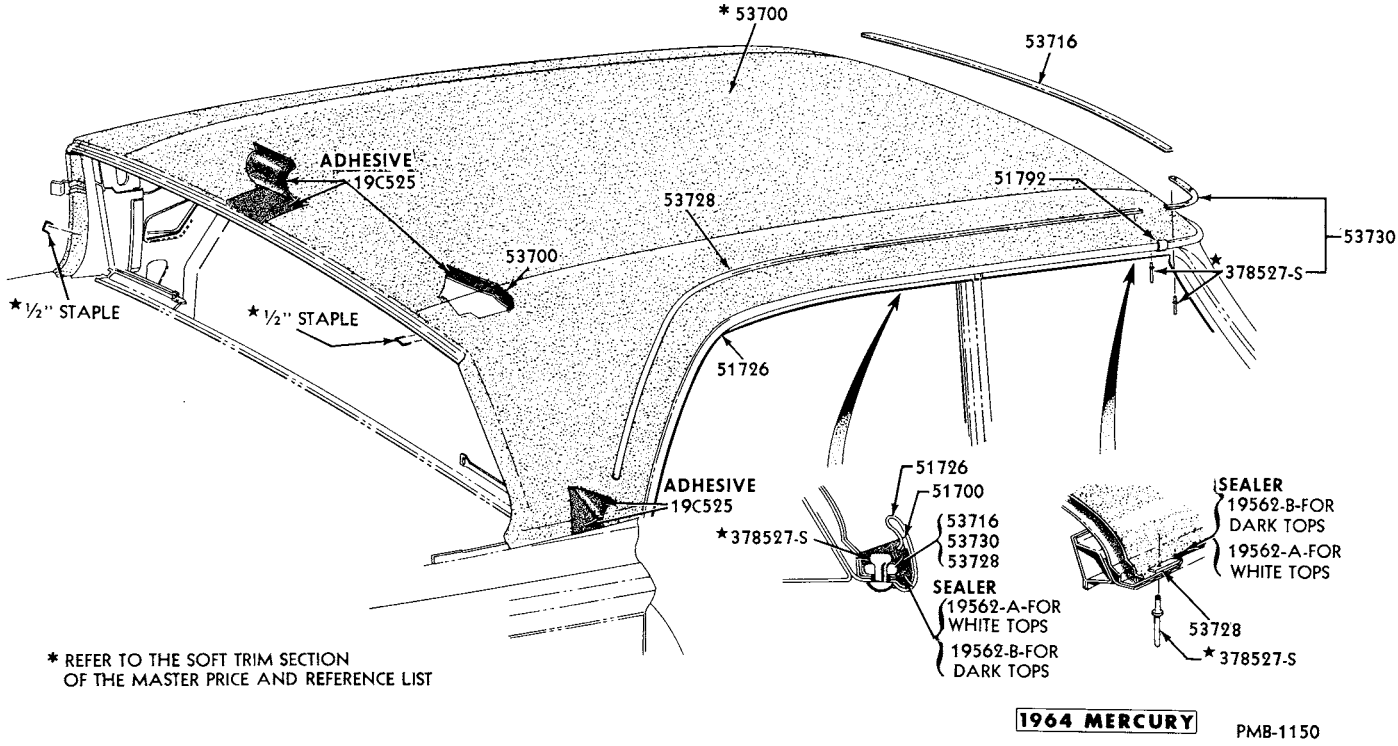

LANDAU TOP-MODEL 54

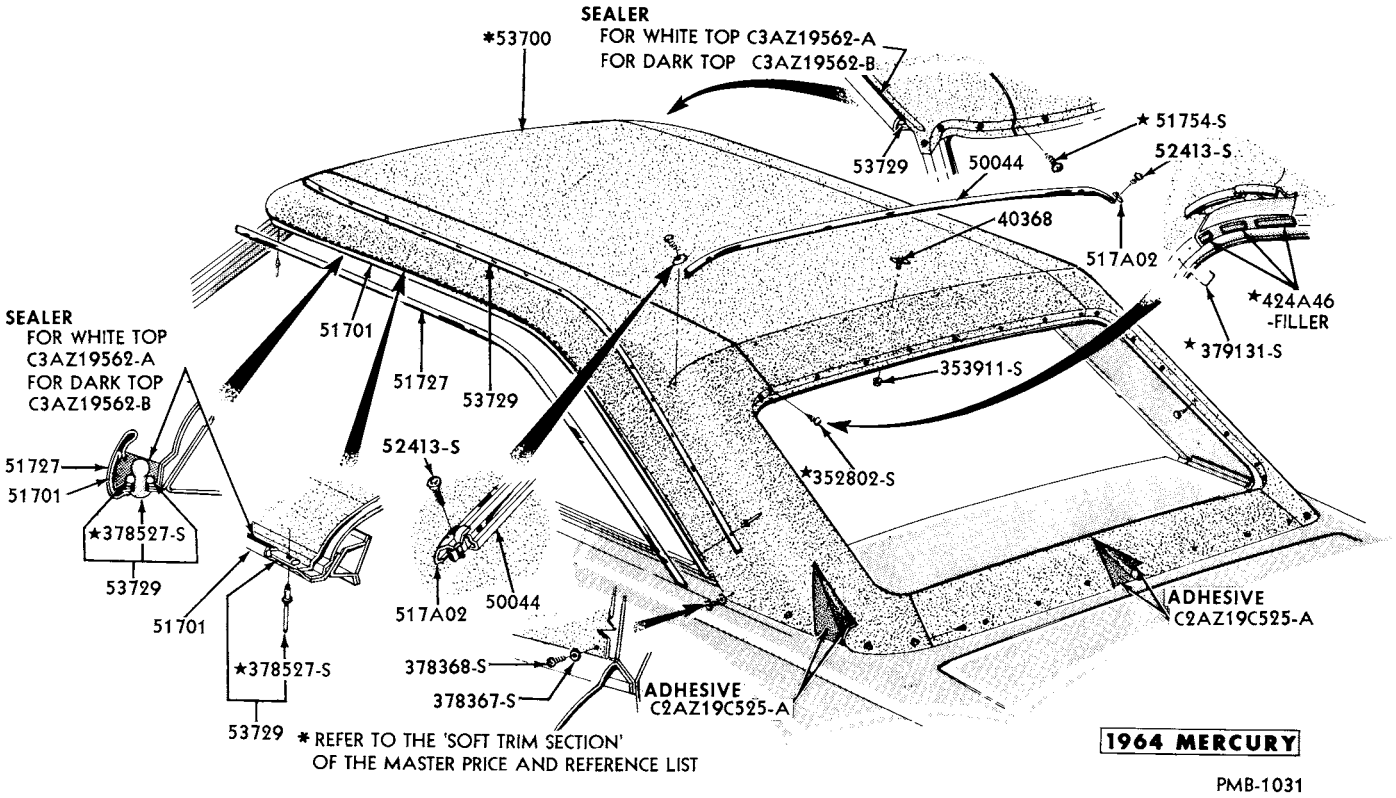

LANDAU TOP - MODEL 63

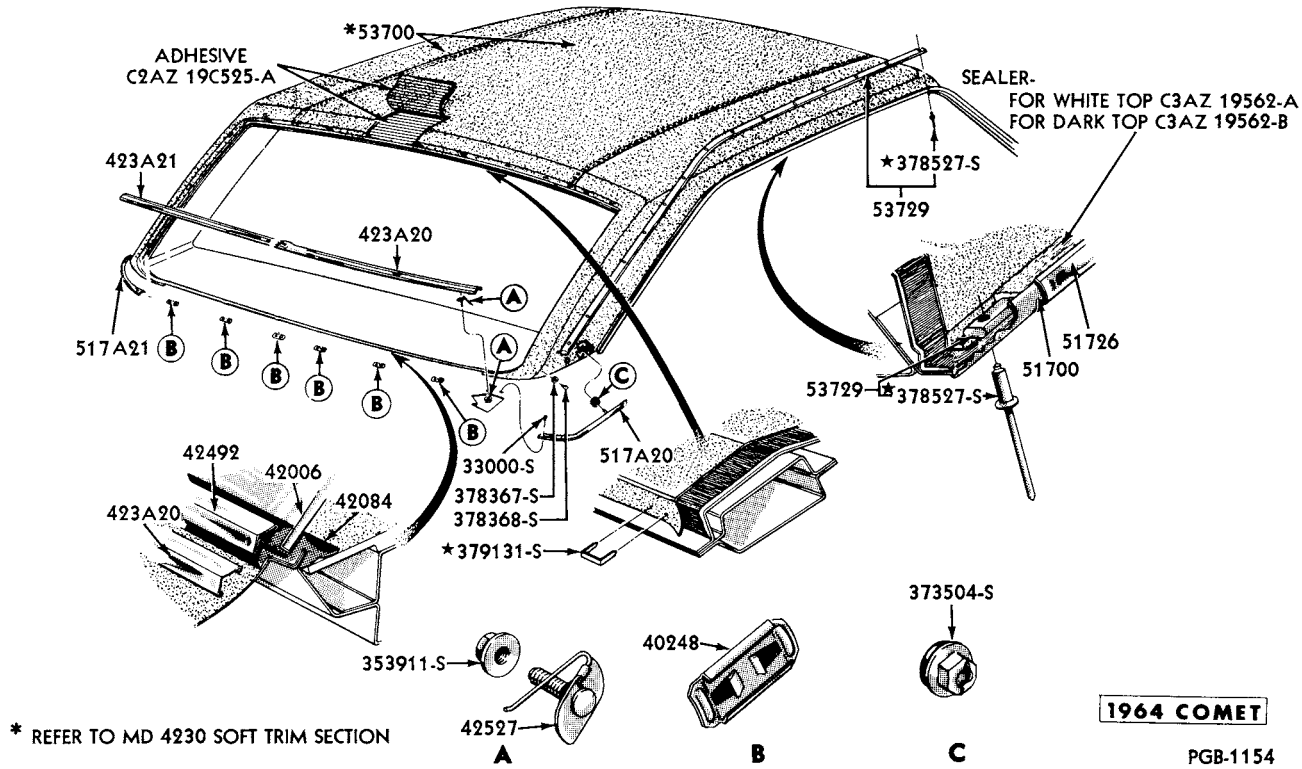

LANDAU TOP

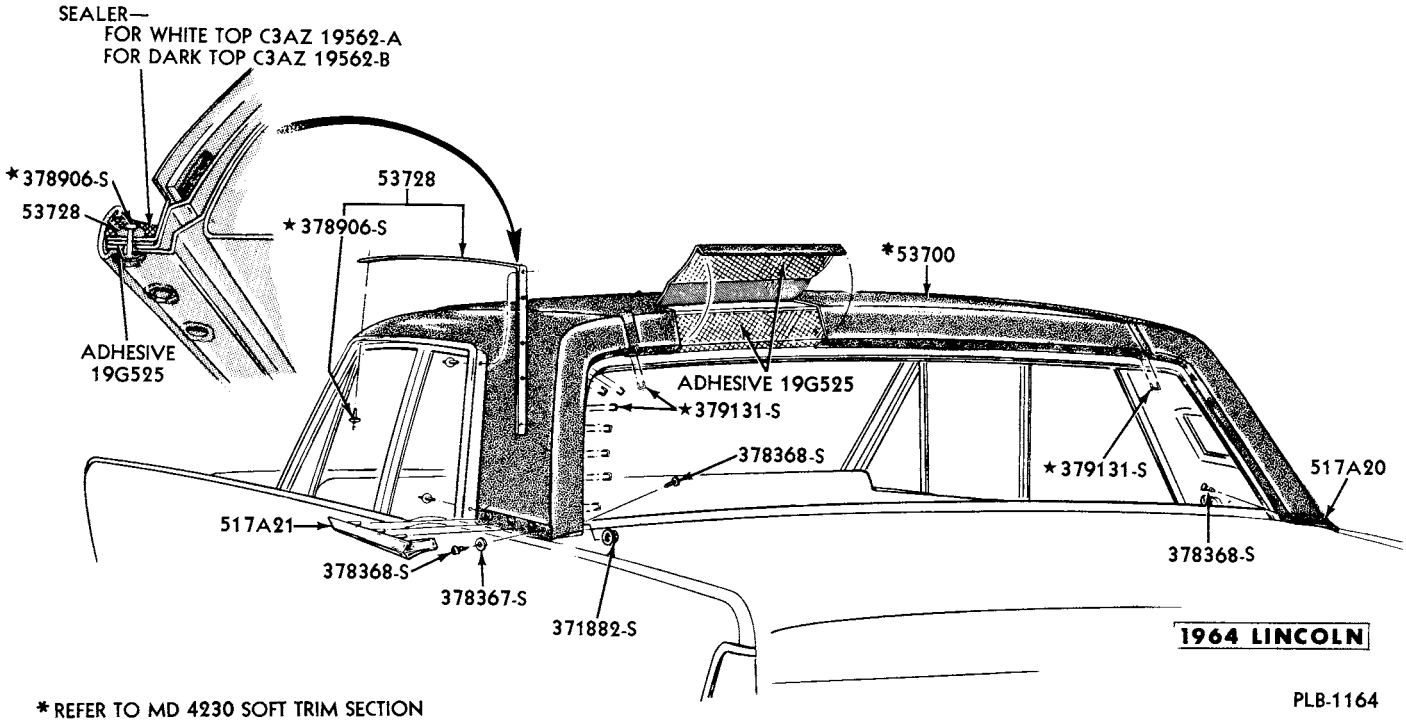

VINYL COVERED ROOF - MODEL 53

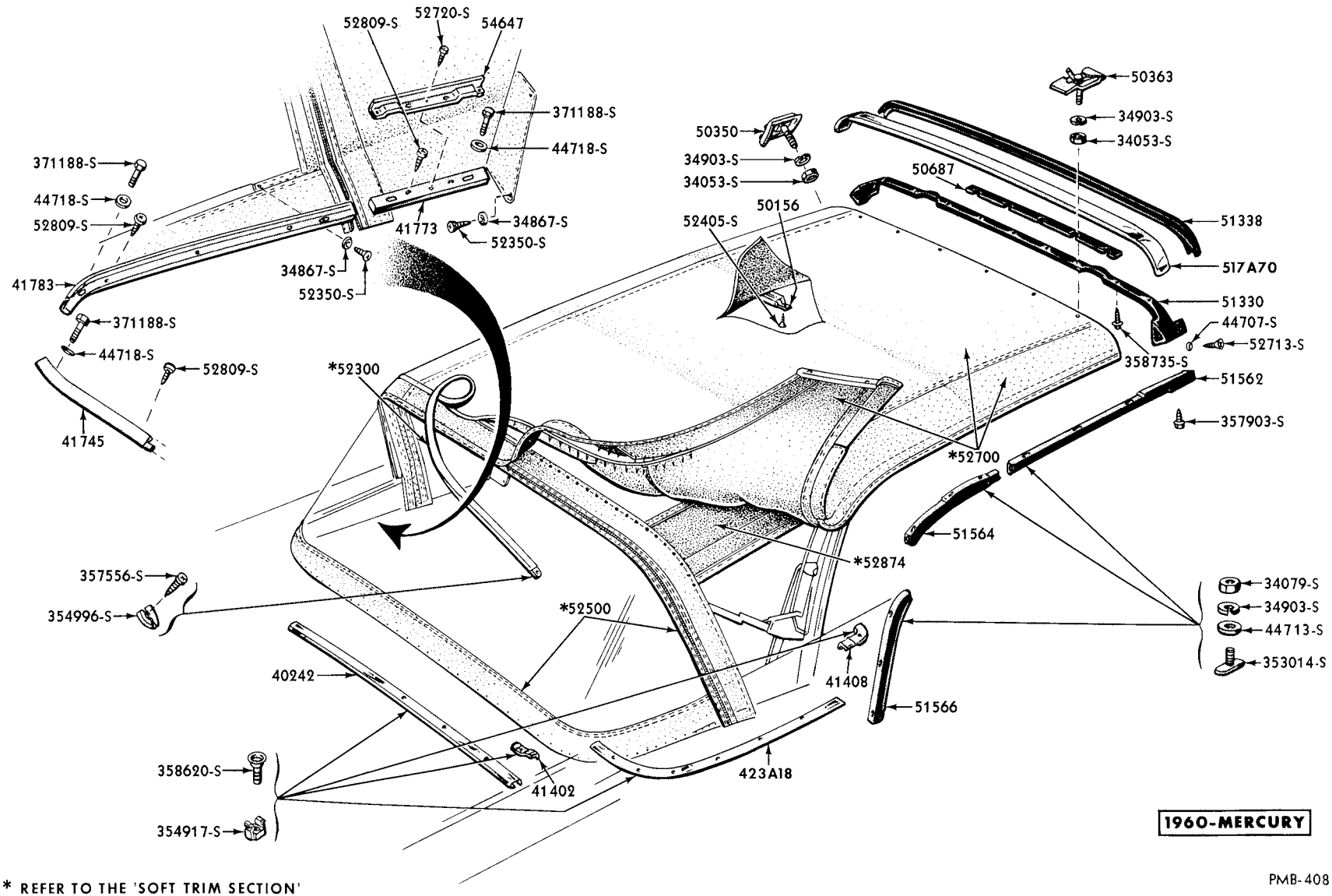

* REFER TO THE 'SOFT TRIM SECTION' OF THE MASTER PRICE And REFERENCE LIST

CONVERTIBLE TOP - TRIM and WEATHERSTRIPS

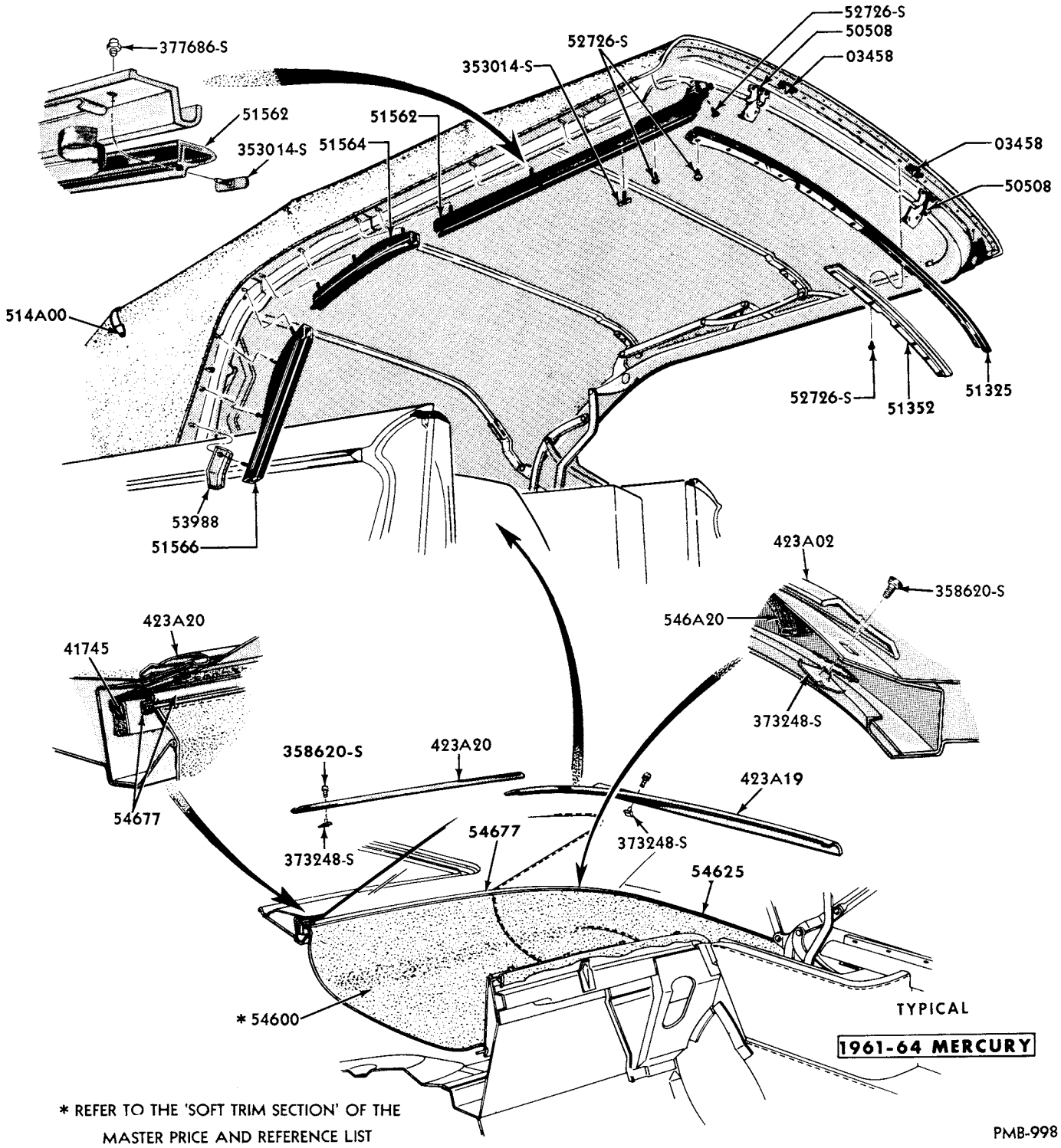

CONVERTIBLE TOP WEATHERSTRIPS and BELT MOULDINGS

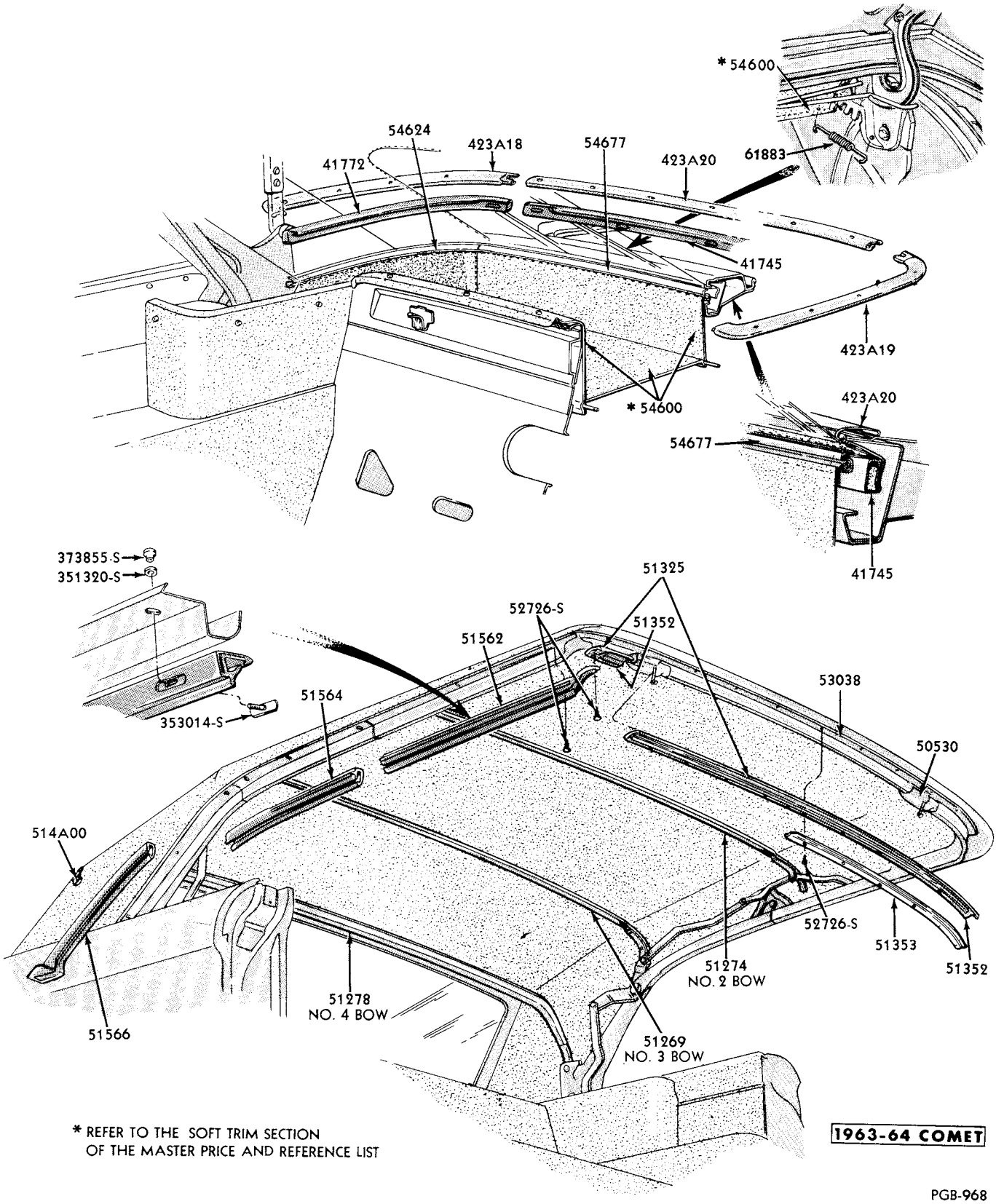

CONVERTIBLE TOP WEATHERSTRIPS & BELT MOULDINGS

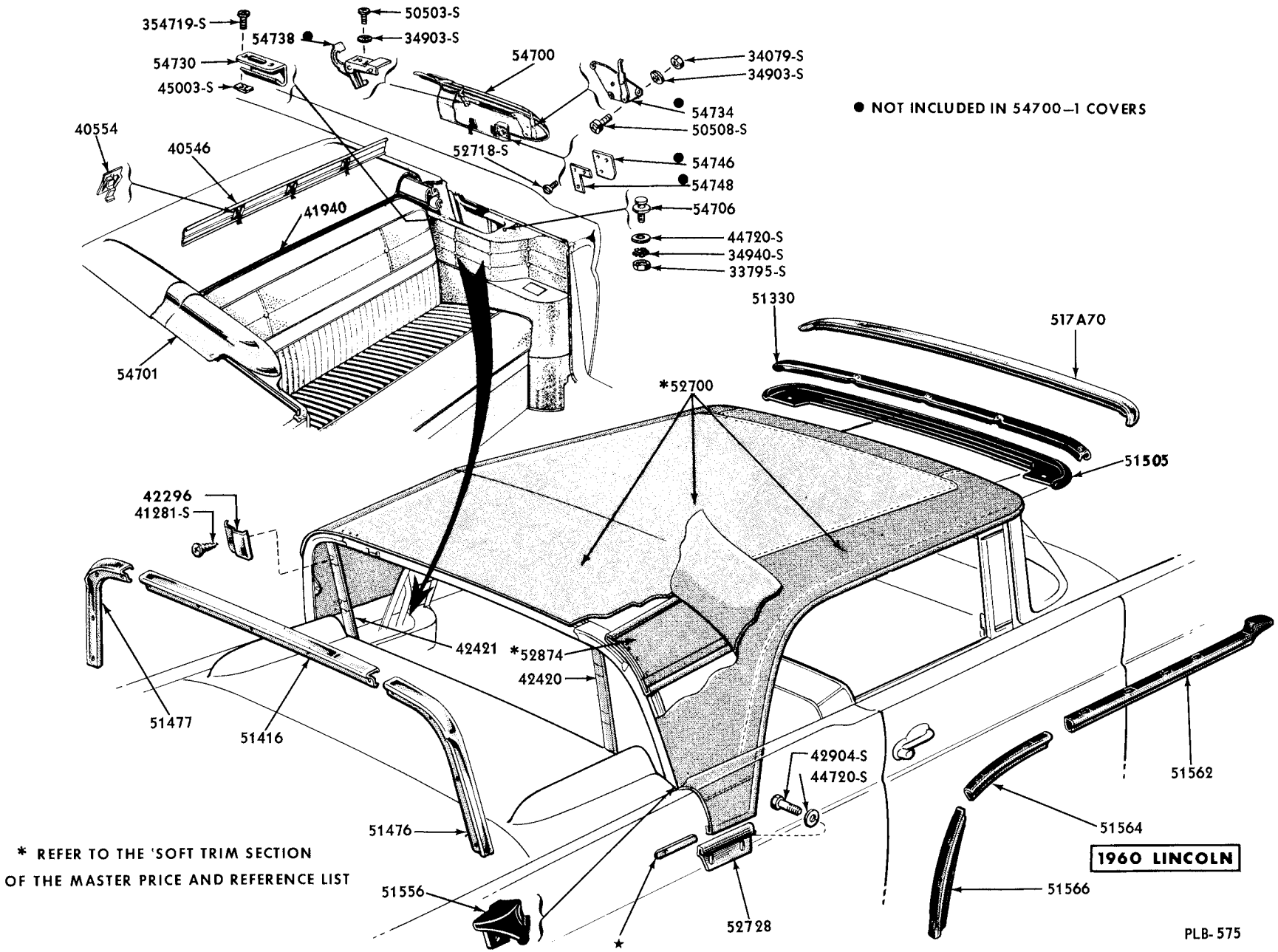

CONVERTIBLE TOP WEATHERSTRIPS and MOULDINGS

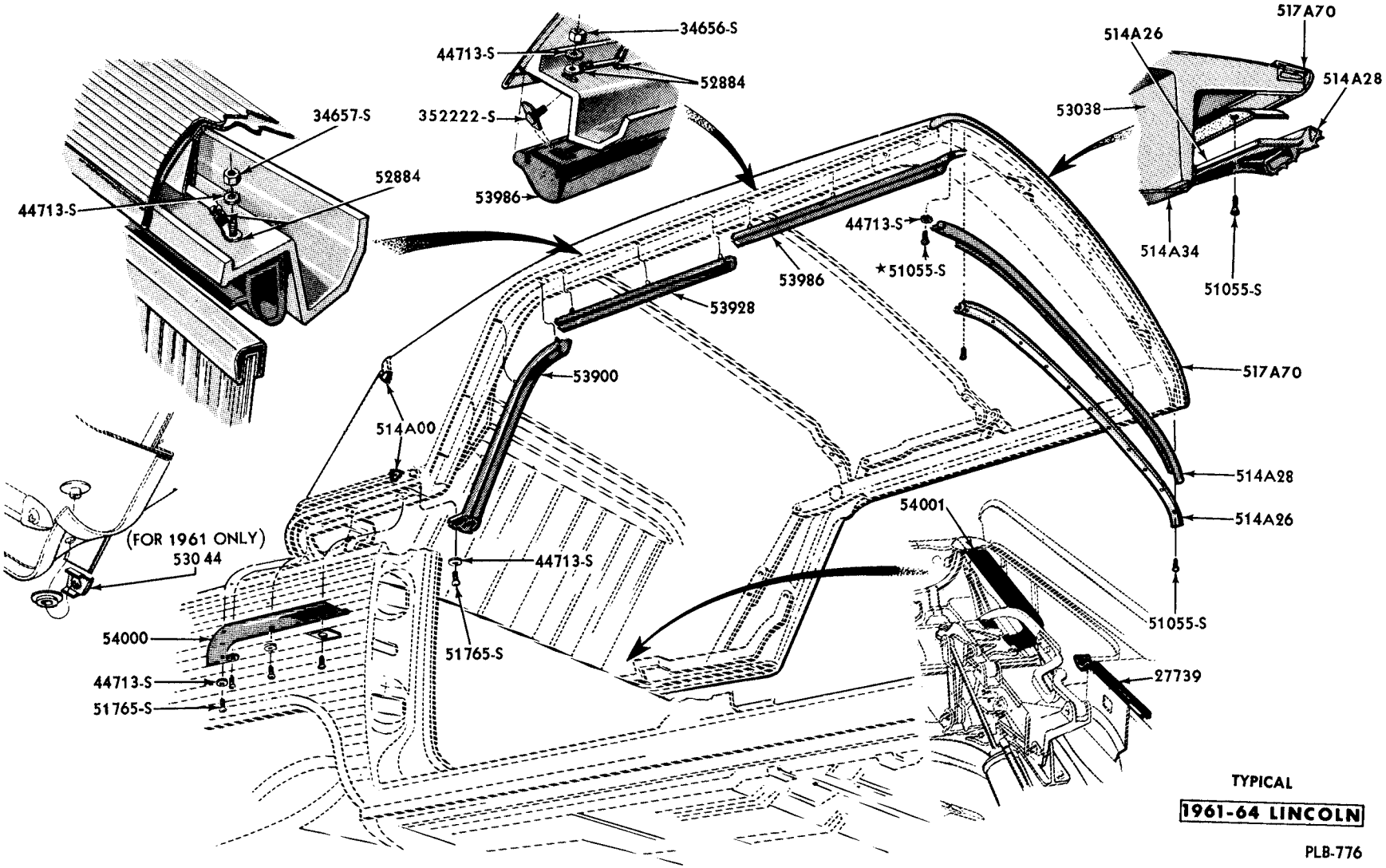

CONVERTIBLE TOP WEATHERSTRIPS and MOULDINGS

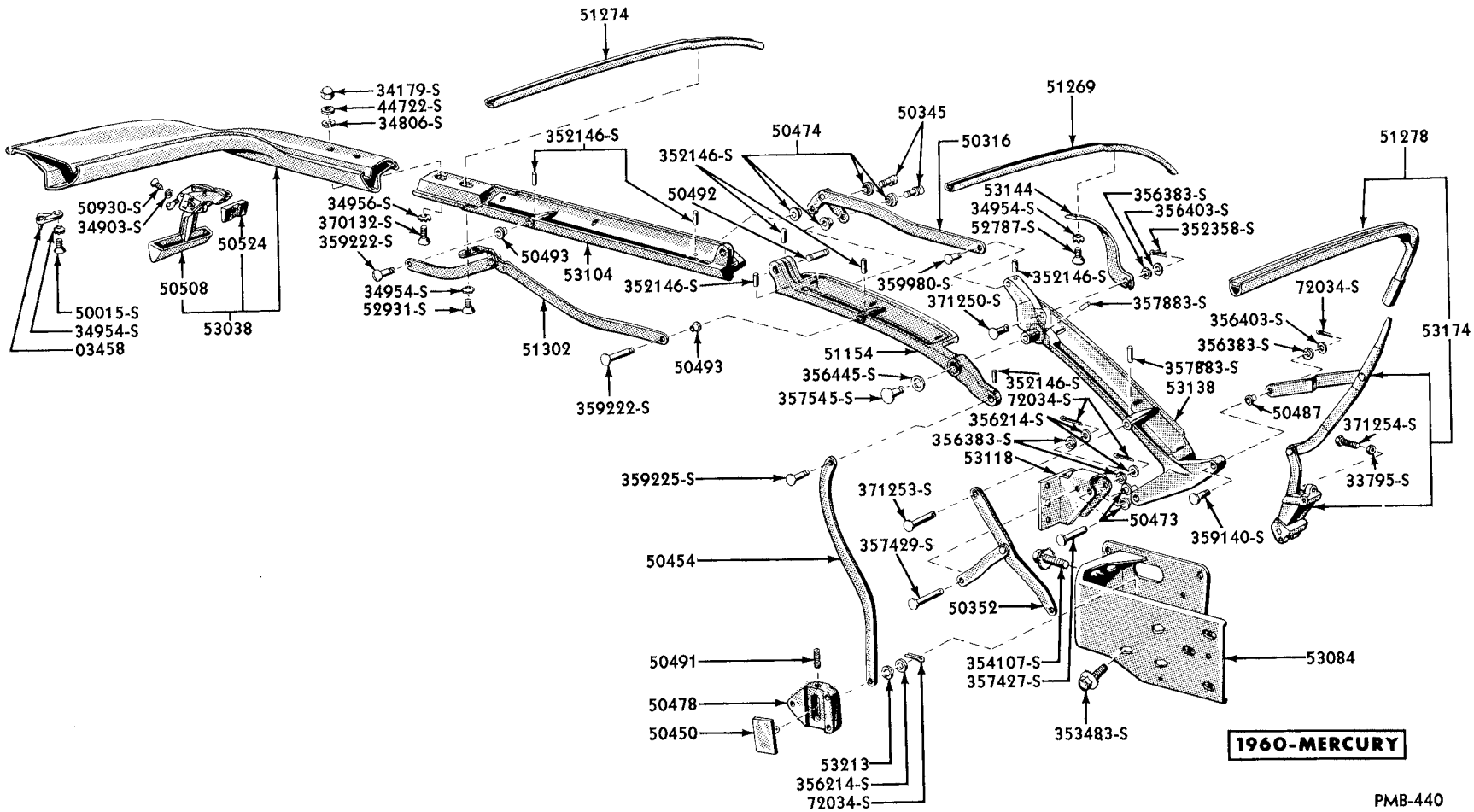

CONVERTIBLE TOP - LESS TRIM

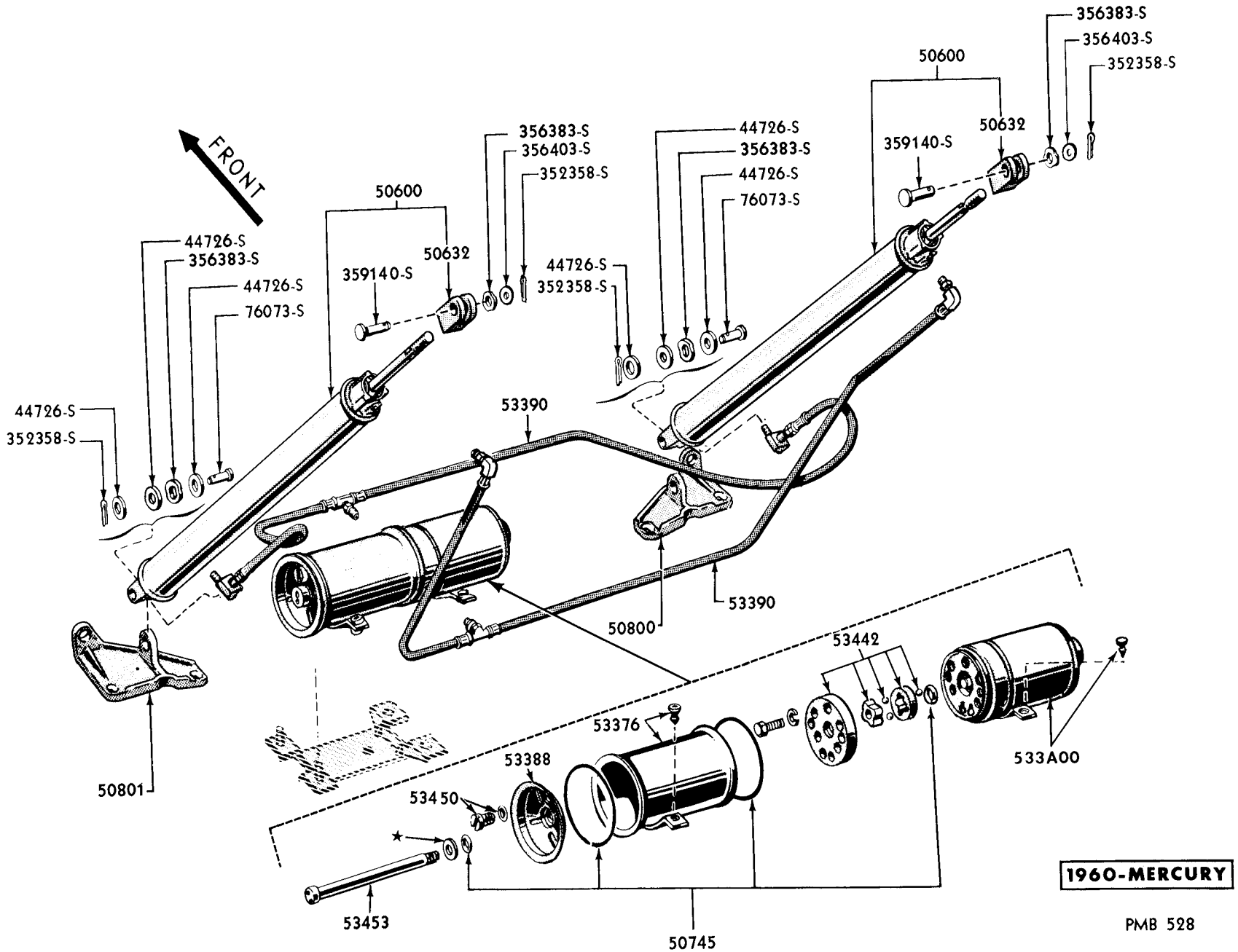

CONVERTIBLE TOP LIFT MECHANISM

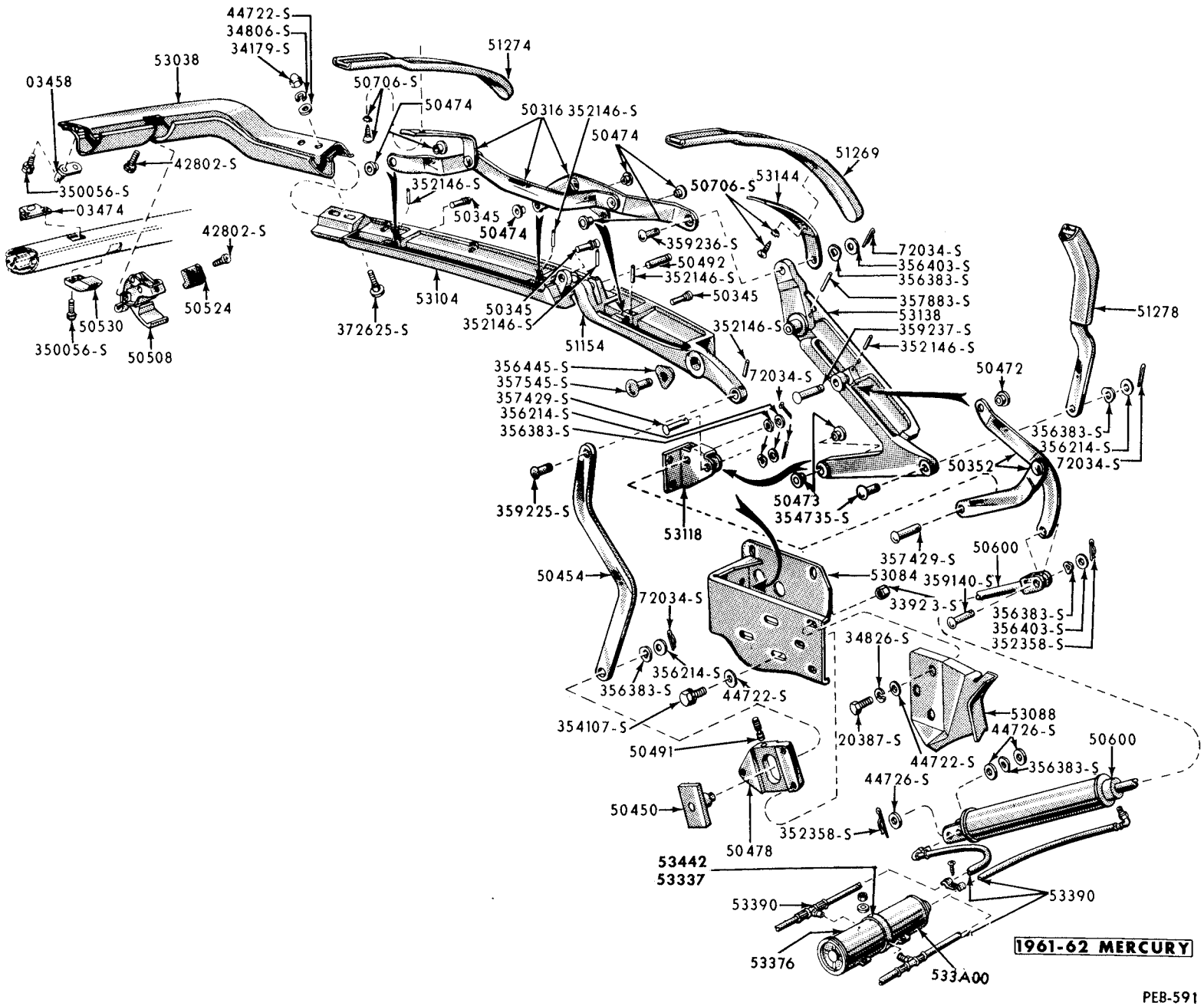

CONVERTIBLE TOP - LESS TRIM

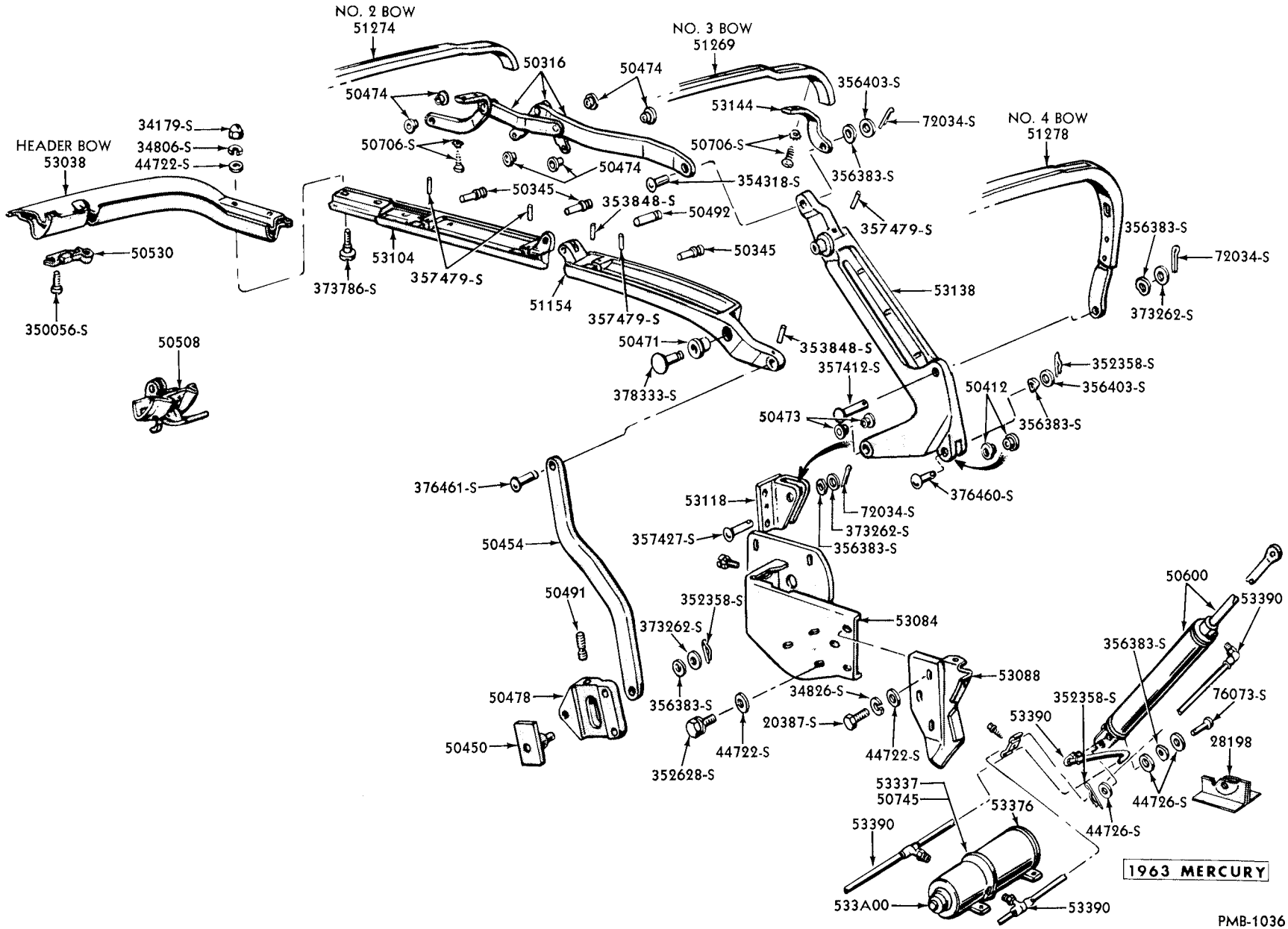

CONVERTIBLE TOP - LESS TRIM

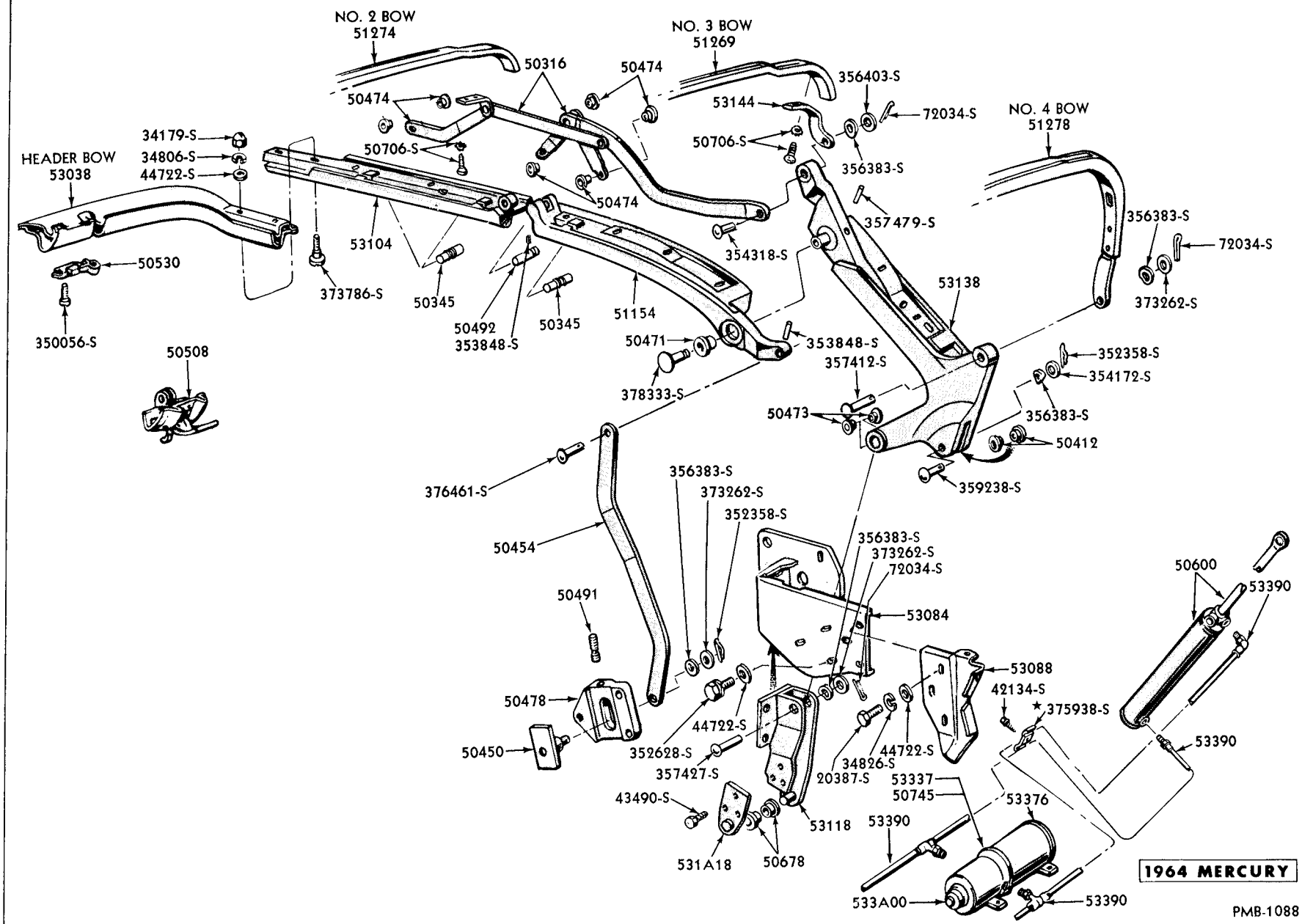

CONVERTIBLE TOP LESS TRIM

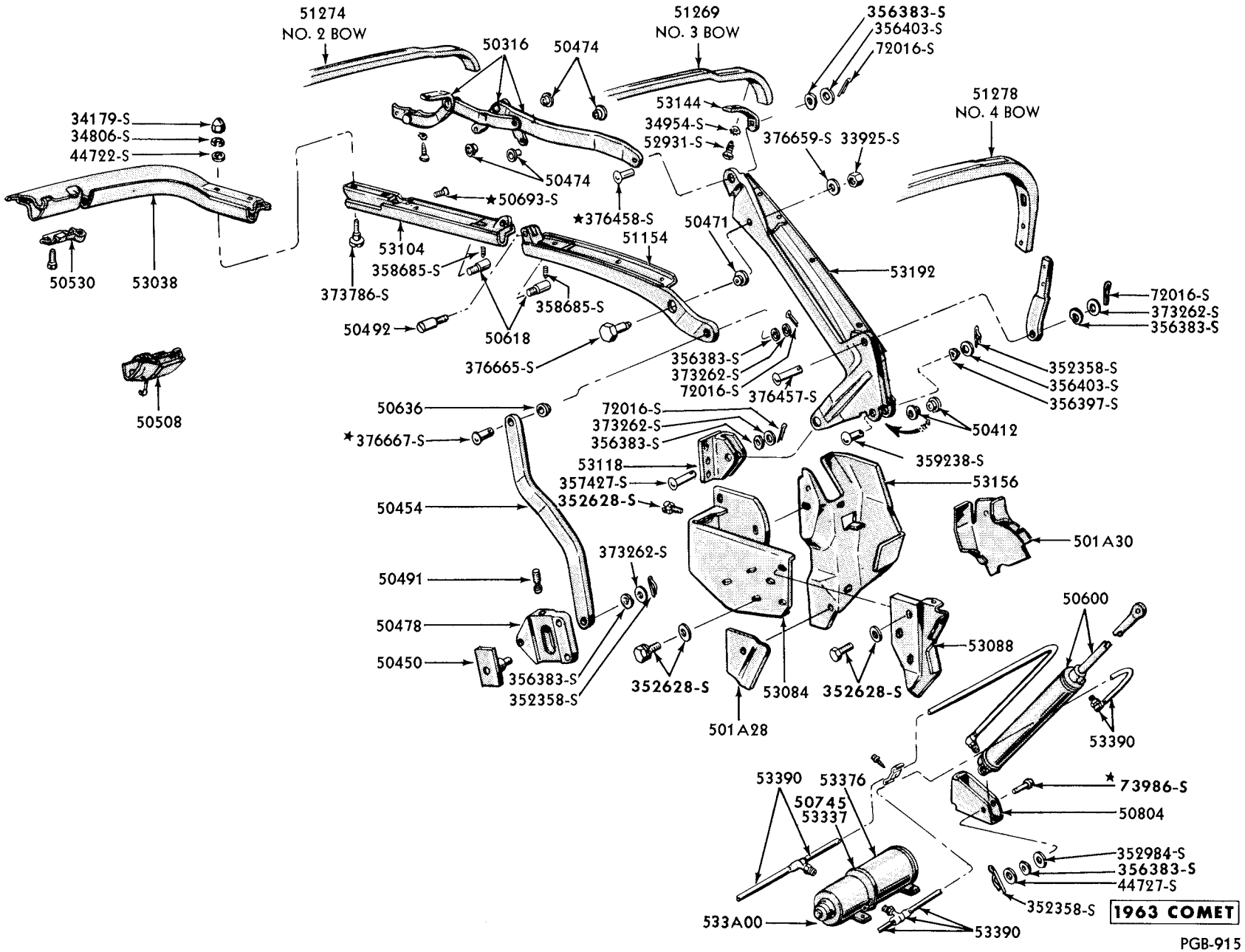

CONVERTIBLE TOP - LESS TRIM

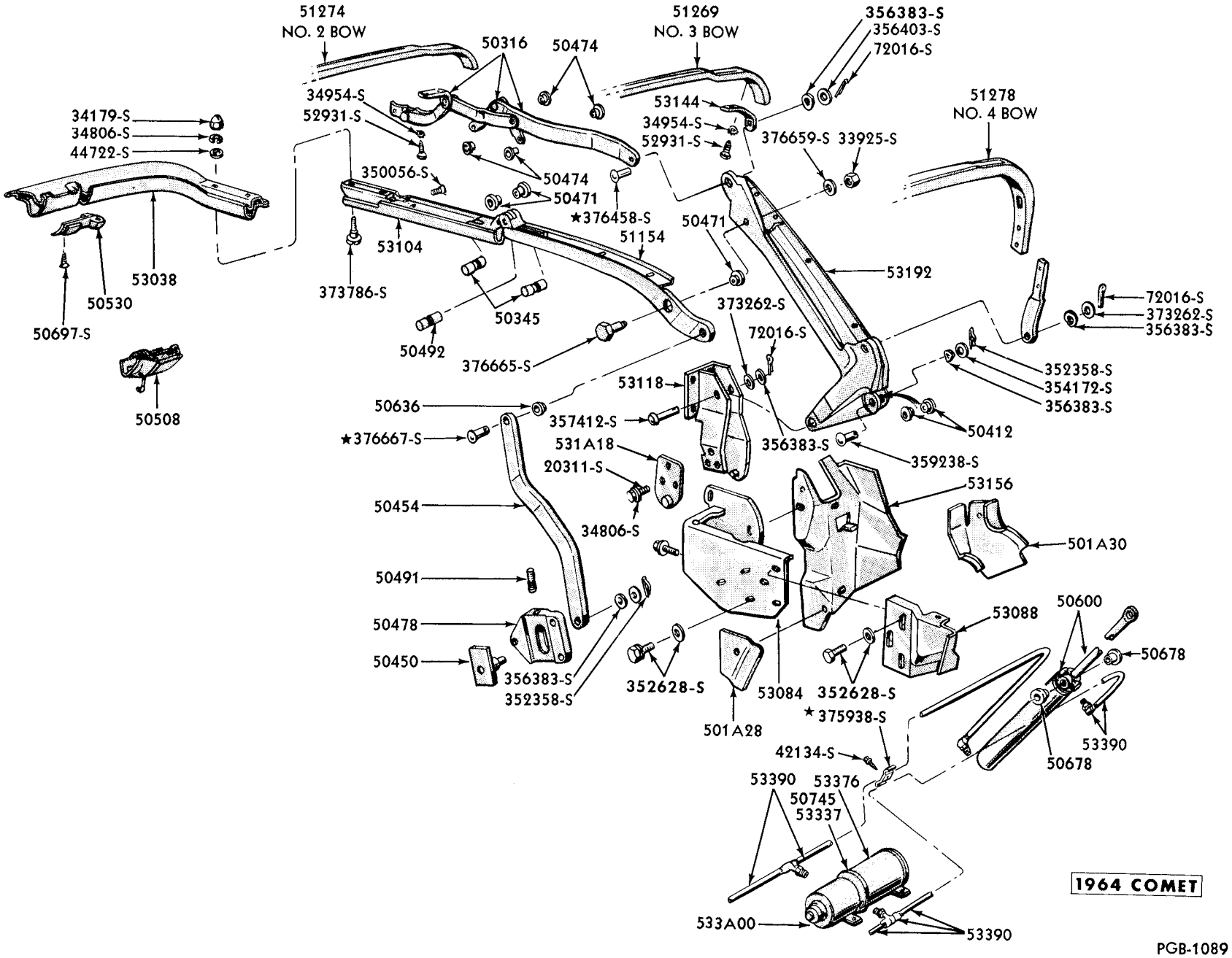

CONVERTIBLE TOP LESS TRIM

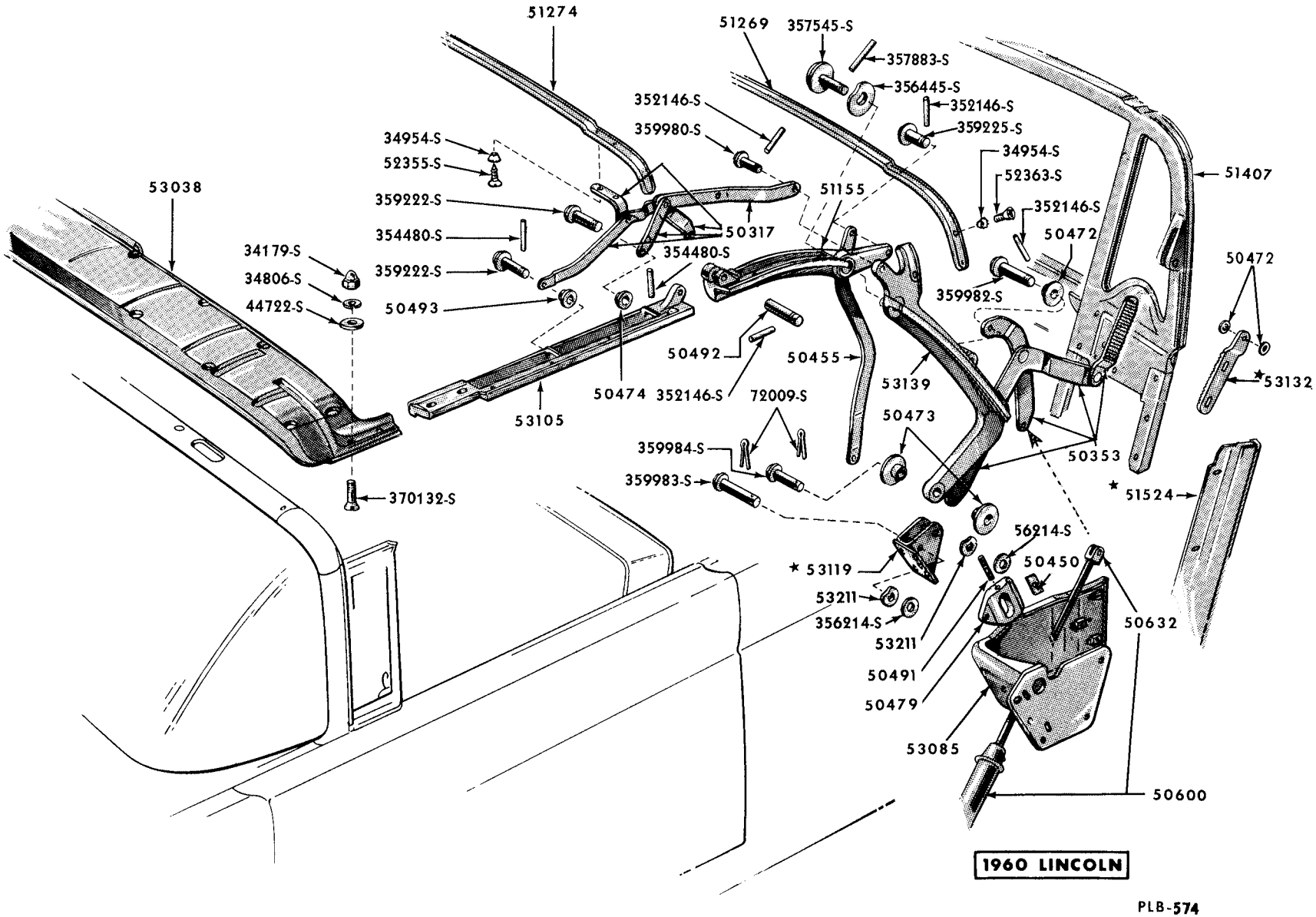

CONVERTIBLE TOP RAILS

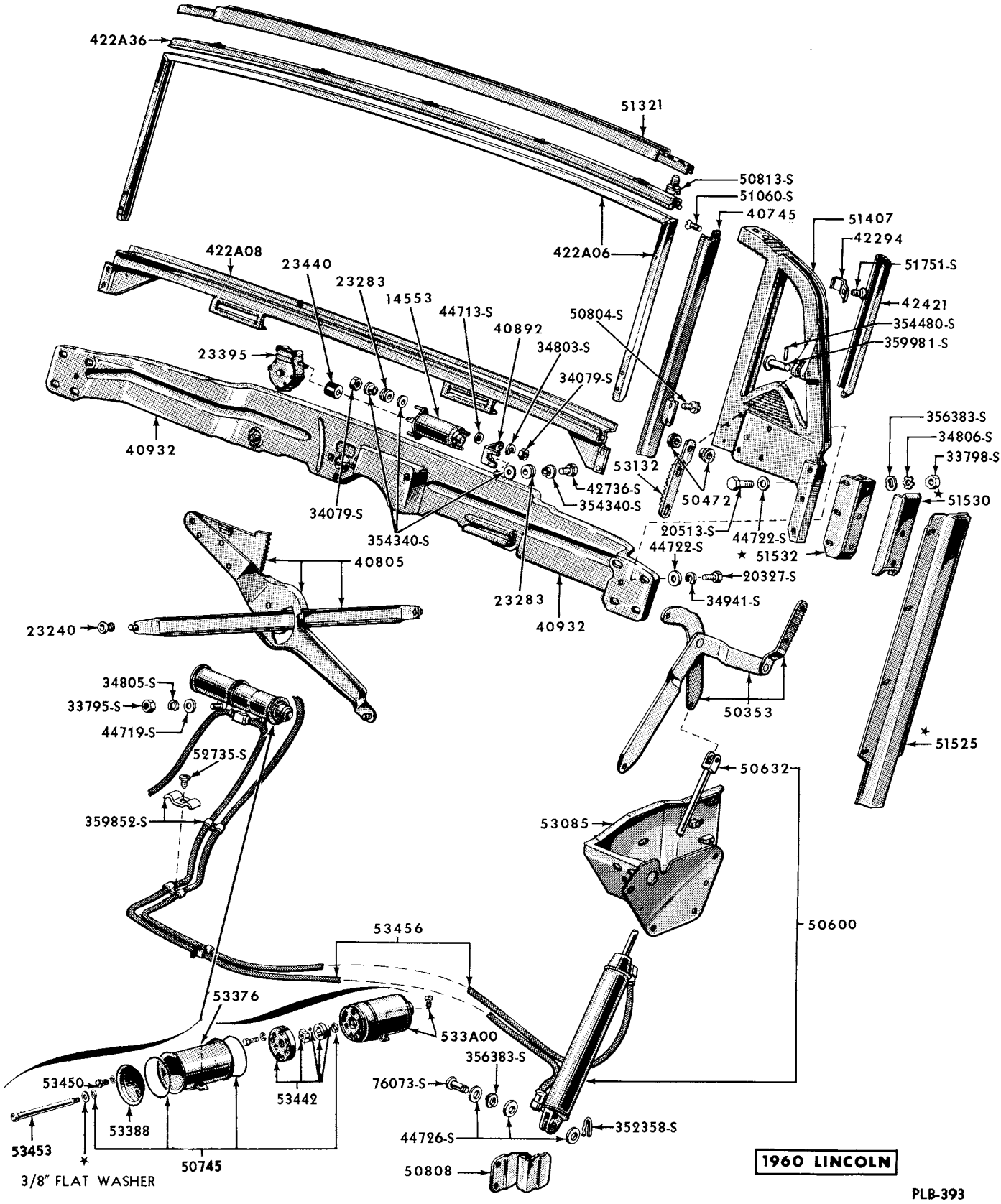

CONVERTIBLE TOP BACK WINDOW and LIFT MECHANISM

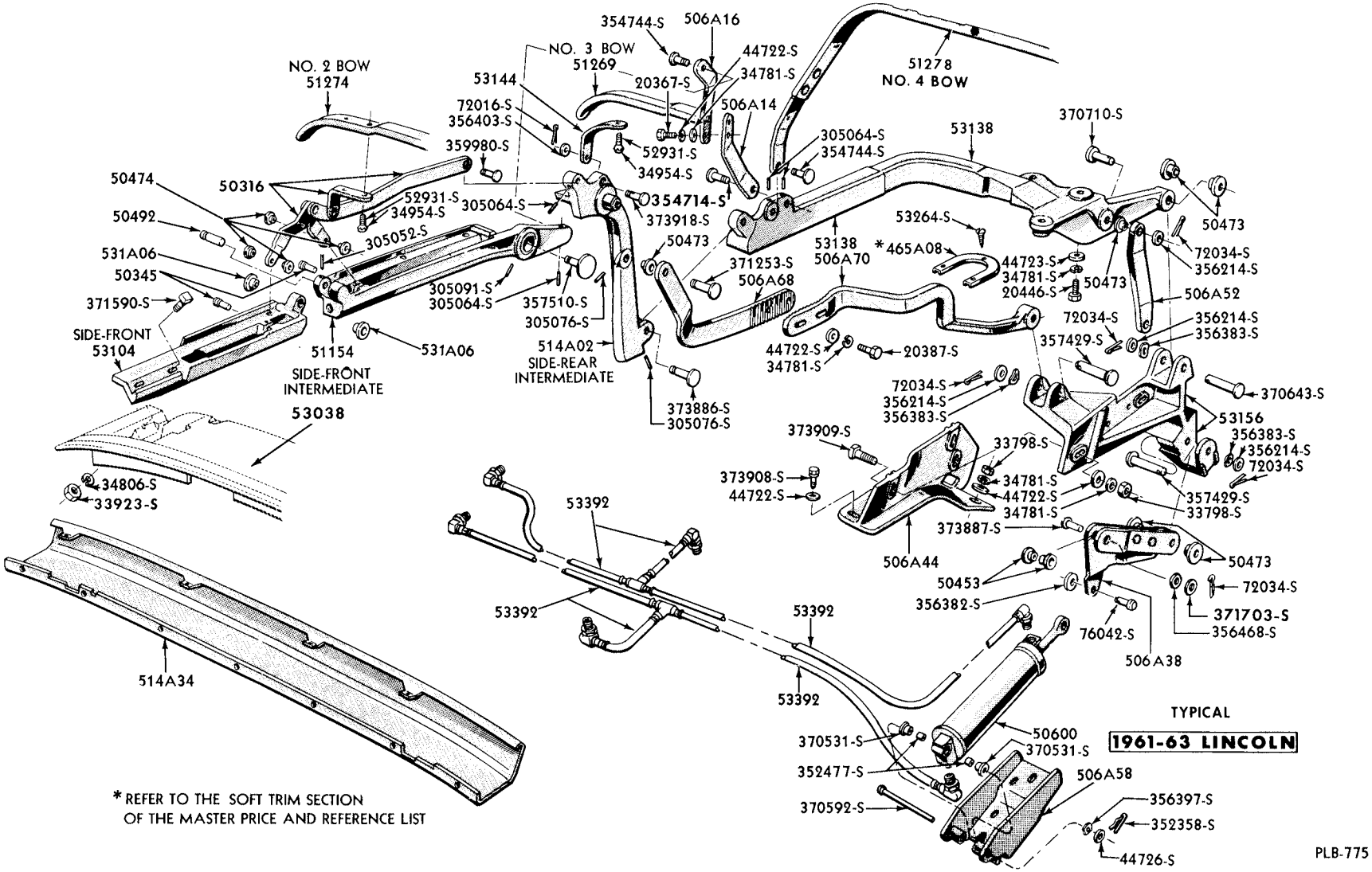

CONVERTIBLE TOP RAILS

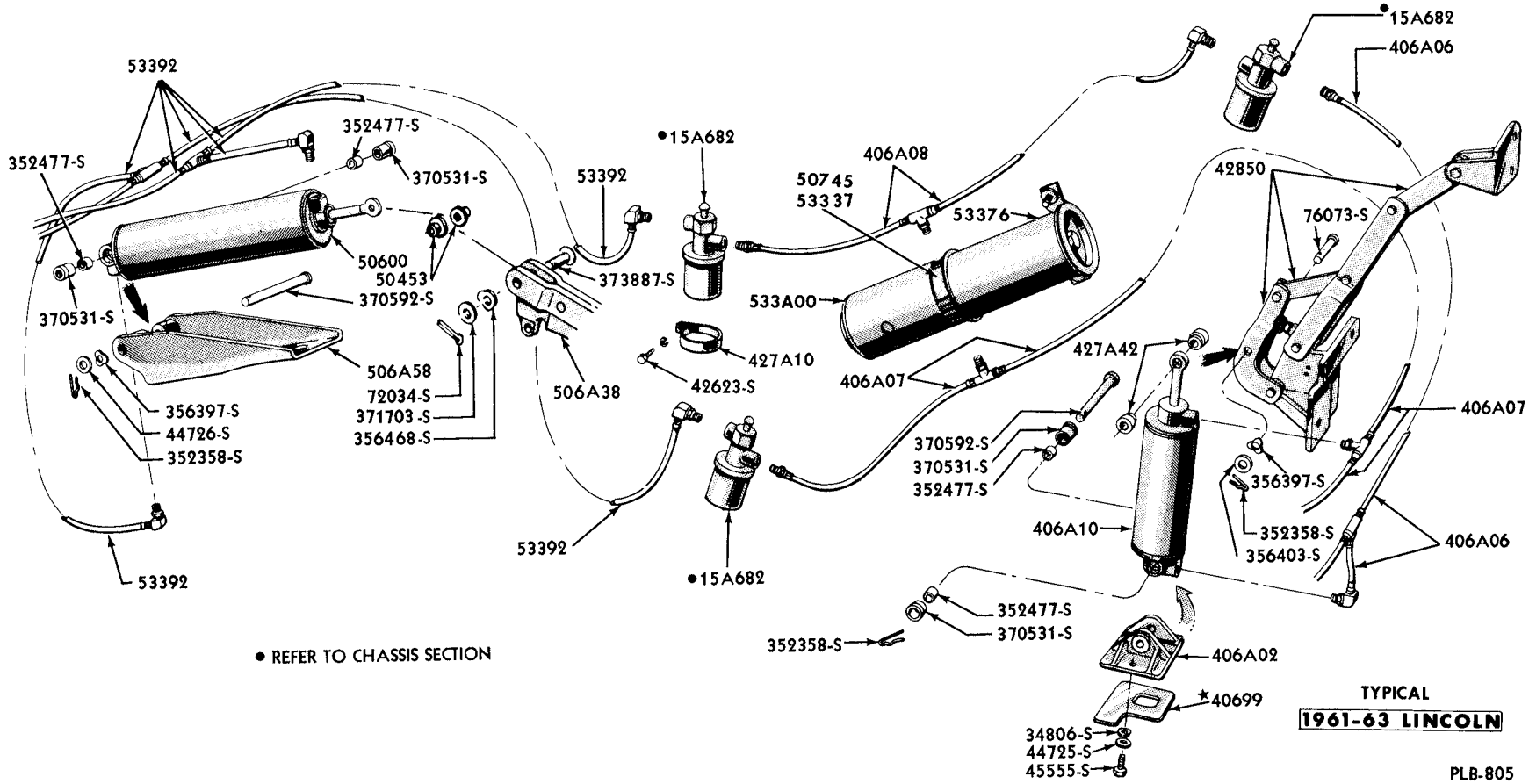

CONVERTIBLE TOP HYDRAULIC PUMP and LIFT

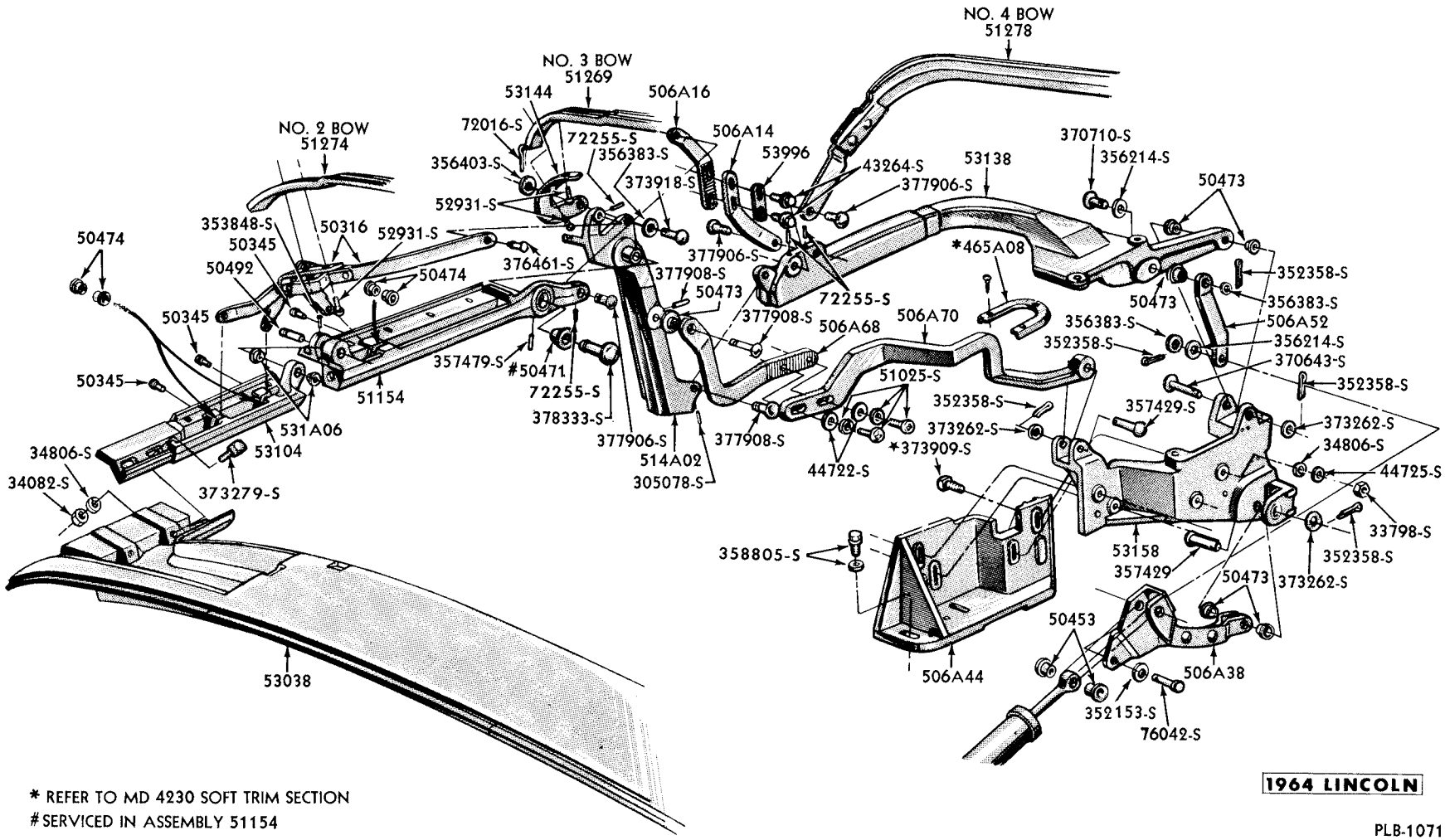

* REFER TO MD 4230 SOFT TRIM SECTION
# SERVICED IN ASSEMBLY 51154

1964 LINCOLN

PLB-1071

CONVERTIBLE TOP LESS TRIM

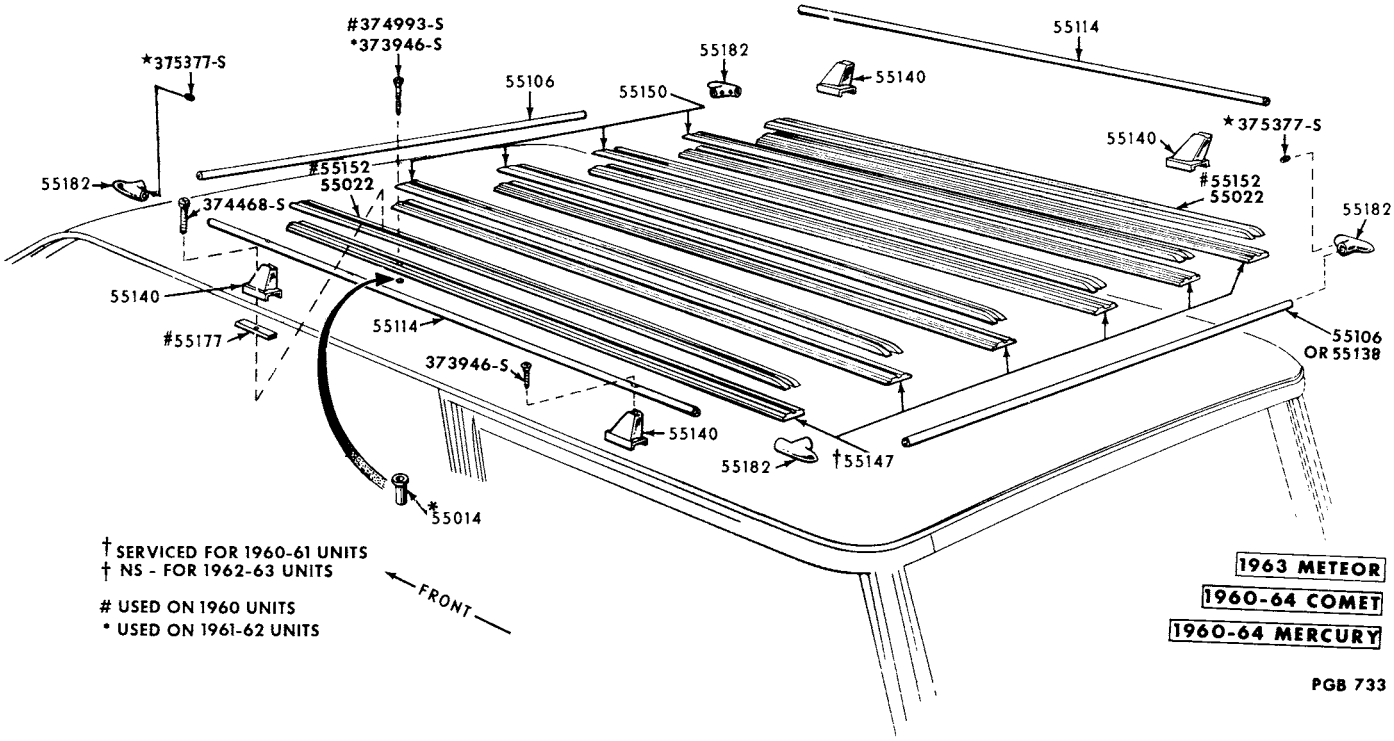

ROOF LUGGAGE CARRIER - STATION WAGON

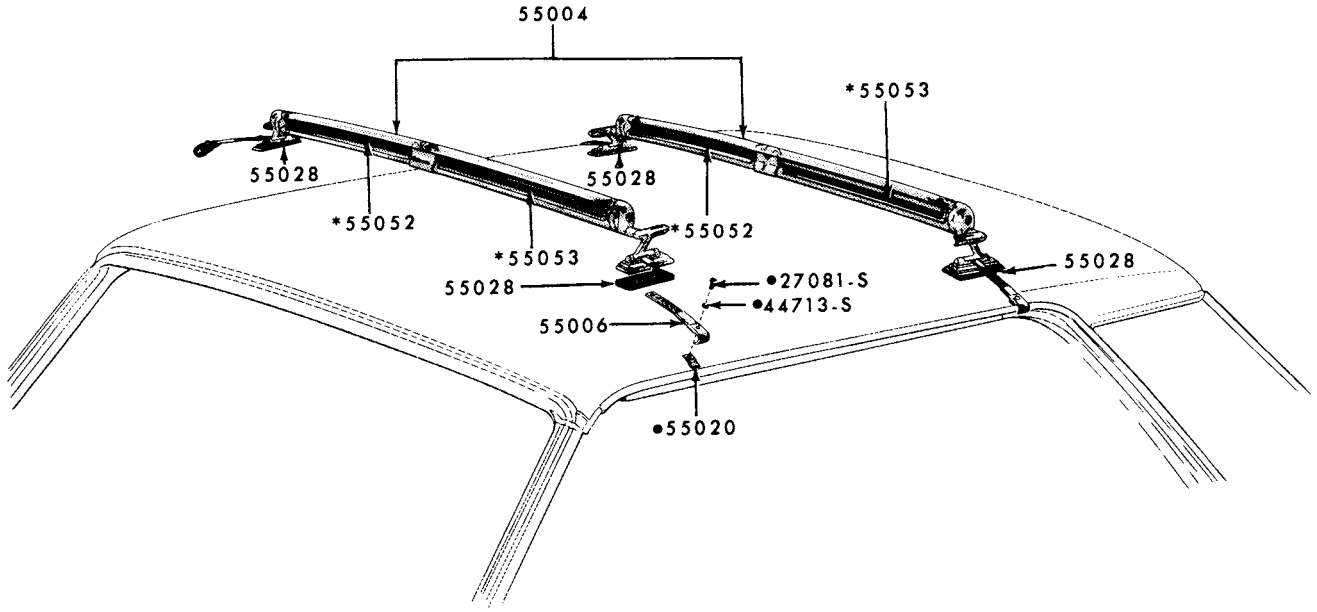

ROOF SKI CARRIER

GROUP AND PART NUMBER	DESCRIPTION, SIZE, ETC.	NO. REQ'D	MODEL OR ENGINE CUBIC INCH DISPLACEMENT	VEHICLE CODE	YEAR 19____
50004	RETAINER (ROOF OUTSIDE SIDE MOULDING)				
COLB 6350004-A	Used to attach mouldings 50062-3	10	All except 68	D	60
50020-1	MOULDING (ROOF SIDE RAIL) OUTSIDE				
PB9M 5650020-A	R.H. - rustless steel - 34-13/64" long	1	63	A	60
PB9M 5650021-A	L.H. - rustless steel - 34-13/64" long	1	63	A	60
50044	MOULDING (ROOF OUTSIDE REAR) CENTER				
PB9M 5650044-A	Rustless steel - 49-7/16" long (a)	1	77	A	60
C3AZ 6350044-A	Rustless steel - 58-13/16" long - use with Tonneau top	1	63	A	63
	Use with Landau top (b)	1	63	A	64
C2OZ 6240368-A	Retainer	9	b		
B9AB 7150108-B	Fastener	4	a		
371678-S	Screw-oval hd. cr. rec. -No. 10-32 x 1-1/4"	4	a		
50062-3	MOULDING (ROOF OUTSIDE SIDE) FRONT				
COLB 6550062-A	R.H. (a)	1	All except 68	D	60
COLB 6550063-A	L.H. (a)	1	All except 68	D	60
COLB 6350004-A	Retainer	10	a		
50070-1	MOULDING (ROOF OUTSIDE SIDE) REAR				
COLB 6350070-A	R.H. (a)	1	All except 68	D	60
COLB 6350071-A	L.H. (a)	1	All except 68	D	60
51755-S8	Screw-pan hd. cr. rec. tap. -No. 8-32 x 3/8"	2	a		
370680-S100	Nut and washer-self-threading-3/16"	2	a		
50108	FASTENER (BODY OUTSIDE FINISH RAIL)				
B9AB 7150108-B	Use with rear roof moulding group 50044	4	77	A	60
B9AB 7150108-C	(8) req'd. - on front doors - R.H. (8) req'd. - on front doors - L.H. (4) req'd. - on front fenders - R.H. (4) req'd. - on front fenders - L.H. (4) req'd. - on quarters - R.H. (4) req'd. - on quarters - L.H.	AR	77B	A	60
B9AB 7150108-E	(3) req'd. - on rear doors - R.H. (3) req'd. - on rear doors - L.H. (1) req'd. - on front fenders - R.H. (1) req'd. - on front fenders - L.H. (8) req'd. - on quarters - R.H. (8) req'd. - on quarters - L.H.	AR	77B	A	60
PB9M 7750108-A	(3) req'd. - on rear doors - R.H. (3) req'd. - on rear doors - L.H. (3) req'd. - on front fenders - R.H. (3) req'd. - on front fenders - L.H. (2) req'd. - on quarters - R.H. (2) req'd. - on quarters - L.H.	AR	77B	A	60
	Quarter panel and front and rear doors (5) req'd. - R.H. (5) req'd. - L.H.	AR	71	A	63
	Quarter panel and front and rear doors (5) req'd. - R.H. - L.H. front and rear doors (6) req'd. - R.H. - L.H. quarters	AR	71B, D	A	64

CONTINUED ON NEXT PAGE

GROUP AND PART NUMBER	DESCRIPTION, SIZE, ETC.	NO. REQ'D	MODEL OR ENGINE CUBIC INCH DISPLACEMENT	VEHICLE CODE	YEAR 19____
50108	FASTENER (BODY OUTSIDE FINISH RAIL) CONTINUED				
B9AB 7150108-A		AR	71B	A	61/62
	(8) req'd. - on front fenders				
	(14) req'd. - on front doors				
	(14) req'd. - on rear doors				
	(18) req'd. - on quarter panels				
		AR	71D, F	B	63
	Front fenders	AR	71	A	63
	(7) req'd. - R.H.				
	(7) req'd. - L.H.				
	Front fenders	AR	71	A	64
	(6) req'd. - R.H.				
	(6) req'd. - L.H.				
50108	FASTENER (DOOR WINDOW REGULATOR MOTOR BRACKET TO DOOR)				
B9AB 7150108-A	Use for front and rear doors	1	All	A	61/63
B9AB 7150108-C	Use for front and rear doors	2	All	D	64
501A28-9	BRACKET (FOLDING TOP MAIN PIVOT SUPPORT TO WHEELHOUSE) INNER				
C3DZ 76501A28-A	R.H.	1	76A	C	63
		1	76B, D	C	64
C3DZ 76501A29-A	L.H.	1	76A	C	63
		1	76B, D	C	64
501A30-1	BRACKET (FOLDING TOP MAIN PIVOT SUPPORT TO WHEELHOUSE) OUTER				
C3DZ 76501A30-A	R.H.	1	76A	C	63
C3DZ 76501A31-A	L.H.	1	76A	C	63
C4GY 76501A30-B	R.H.	1	76	C	64
C4GY 76501A31-B	L.H.	1	76	C	64
50156	RETAINER (FOLDING TOP BOW LISTING)				
PB9M 7650156-A	Steel - 7/16" x 45"	2	76	A	60
COAB 7650156-B	Steel - 43-1/2" long	2	76	A	61/62
C3AZ 7650156-A		2	76	A	63/64
C3DZ 7650156-A	(a)	2	76	C	63/64
BAK 6850156-A	Steel - 7/16" x 46-15/32"	2	68	D	60
C1VB 7450156-A		1	74	D	61/63
C4VY 7450156-A	Steel - 41" long	2	74	D	64
52405-S13	Screw-oval hd. cr. rec. No. 6-20 x 1/8"	4	a		
50200	REFER TO GROUP 50202				
502A00-1	ORNAMENT (ROOF OUTSIDE) REAR				
COMB 64502A00-A	R.H. - assembly includes retainers (a)	1	58, 64	A	60
COMB 64502A01-A	L.H. - assembly includes retainers (a)	1	58, 64	A	60
52720-S13	Screw-pan hd. cr. rec. tap. -No. 8-18 x 3/8"	2	a		
353911-S100	Nut and washer-No. 10-24	4	a		
50202	PANEL (ROOF)				
PB9M 5650202-A		1	77	A	60
PB9M 5750202-A	Less holes	1	57, 63	A	60
PB9M 5850202-A	Less holes	1	58, 64	A	60
C1AB 5950202-B		1	71	A	61
COAB 6250202-B		1	54, 62, 65, 75	A	61
COAB 6450202-A		1	58, 64	A	61
C2AB 6250202-B		1	All except 71, 76	A	62

CONTINUED ON NEXT PAGE

GROUP AND PART NUMBER	DESCRIPTION, SIZE, ETC.	NO. REQ'D	MODEL OR ENGINE CUBIC INCH DISPLACEMENT	VEHICLE CODE	YEAR 19____
50202	PANEL (ROOF) CONTINUED				
C2AZ 7150202-A		1	71	A	62/64
C3MY 6250202-A		1	54, 62, 65, 75	A	63
C3AZ 6350202-A		1	63	A	63/64
C4AZ 5750202-A		1	57	A	64
C4MY 6250202-A		1	54, 62, 65, 75	A	64
C2OB 6250202-A		1	All	B	62
		1	54, 62	B	63
C3OZ 6550202-A		1	65	B	63
C3OZ 7150202-A		1	71	B	63
C1KB 6250202-A		1	54, 62	C	60/63
CODB 5950202-B		1	59, 71	C	60/64
C3DZ 6350202-A		1	63	C	63/64
C2DZ 6250200-A		1	54, 62	C	64
COLB 6550202-A		1	54, 65, 75	D	60
C1VY 5750202-A		1	53	D	61/63
C4VY 5350202-A		1	53	D	64
50206-7	PANEL (ROOF SIDE REAR EXTENSION)				
COMB 6350206-A	R. H.	1	63	A	60
COMB 6350207-A	L. H.	1	63	A	60
50212	PANEL ASSEMBLY (ROOF) WELDED				
COLB 6350212-A		1	53, 57, 63	D	60
50217	REFER TO GROUP 50222				
502C18	REINFORCEMENT (ROOF PANEL) REAR SIDE EXTENSION				
C1VB 57502C18-B		2	53	D	61/63
50222	REINFORCEMENT (ROOF PANEL)				
PB9M 5750217-A	Rear	1	57, 58, 63, 64	A	60
PB9M 5750222-A	Front	1	57, 58, 63, 64	A	60
COMB 6450244-B	Center	1	All except 76, 77	A	60
COMB 7750222-A	Rear	1	77	A	60
C1AB 5950217-A	Rear	1	71	A	61
C1AB 5950222-A	Front	1	71	A	61
C1AB 5950244-A	Center	1	71	A	61
COAB 6450244-B	Center	1	All except 71, 76	A	61/62
C2AB 7150217-A	Rear	1	71	A	62/64
C2AZ 7150222-A	Front	1	71	A	62/64
C2AB 7150244-A	Center	1	71	A	62/64
C3MY 6250244-A	Center	1	All except 63, 71, 76	A	63
C3MY 6250217-A	Rear - use on vehicles built prior to 12-2-62	1	All except 63, 71, 76	A	63
C3MY 6250217-B	Rear - use on vehicles built after 12-1-62	1	54, 57, 62, 65, 75	A	63/64
C3AZ 6350244-A	Center	1	57, 63	A	63/64
C3AZ 6250244-A	Center	1	All except 57, 63, 71, 76	A	64
C2OB 6250290-A	Center	1	54, 62, 65	B	62/63
C3OZ 7150217-A	Rear	2	71	B	63
C3OZ 7150263-A	Front	1	71	B	63
CODZ 5950291-A	Rear - steel - 47-23/32"	1	59, 71	C	60/64
C1DB 6450290-A	Center - use when dome lamp is located at roof center	1	All	C	61
	(1) for front - (1) for center	AR	59, 71	C	62/64
	(1) for center	1	54, 62	C	62/64
C3DZ 6350290-A	Center	1	63	C	63
C3DZ 6350244-A	Center	1	63	C	64

CONTINUED ON NEXT PAGE

GROUP AND PART NUMBER	DESCRIPTION, SIZE, ETC.	NO. REQ'D	MODEL OR ENGINE CUBIC INCH DISPLACEMENT	VEHICLE CODE	YEAR 19____
50222	REINFORCEMENT (ROOF PANEL) CONTINUED				
BAK 5750244-B	Center	1	All except 68	D	60
BAK 5750263-B	Front	1	All except 68	D	60
BAK 5750291-B	Rear	1	All except 68	D	60
C1VB 5750222-A	Front	1	53	D	61/62
C1VB 5750244-A	Center	1	53	D	61/62
	Front and center	2	53	D	63
C1VB 5750291-A	Rear	1	53	D	61/63
C4VY 5350244-A	Front and center	2	53	D	64
C4VY 5350291-A	Rear	1	53	D	64
50244	REFER TO GROUP 50222				
50250-1	REFER TO GROUP 517A20-1				
50263	REFER TO GROUP 50222				
50266-7	ORNAMENT (ROOF SIDE) INNER				
COMB 57517A00-BP	R.H. - chrome finish - use on vehicles built prior to 11-2-59	1	57F	A	60
COMB 57517A01-BP	L.H. - chrome finish - use on vehicles built prior to 11-2-59	1	57F	A	60
COMB 57517A00-D	R.H. - chrome finish - use on vehicles built after 11-1-59	1	57F	A	60
COMB 57517A01-D	L.H. - chrome finish - use on vehicles built after 11-1-59	1	57F	A	60
COMB 57517A00-CP	R.H. - in prime	1	57A, B	A	60
COMB 57517A01-CP	L.H. - in prime	1	57A, B	A	60
COMB 58517A00-AP	R.H. - in prime	1	58	A	60
COMB 58517A01-AP	L.H. - in prime	1	58	A	60
COMB 63517A00-BP	R.H. - chrome finish - use on vehicles built prior to 11-2-59	1	63F	A	60
COMB 63517A01-BP	L.H. - chrome finish - use on vehicles built prior to 11-2-59	1	63F	A	60
COMB 63517A00-C	R.H. - chrome finish - use on vehicles built after 11-1-59	1	63F	A	60
COMB 63517A01-C	L.H. - chrome finish - use on vehicles built after 11-1-59	1	63F	A	60
COMB 63517A00-AP	R.H. - in prime	1	63A, B	A	60
COMB 63517A01-AP	L.H. - in prime	1	63A, B	A	60
COAB 5451982-B	R.H. - chrome finish (a)	1	54, 65, 75	A	61
COAB 5451983-B	L.H. - chrome finish (a)	1	54, 65, 75	A	61
COAB 6251982-B	R.H. - chrome finish (a)	1	62	A	61
COAB 6251983-B	L.H. - chrome finish (a)	1	62	A	61
C2AZ 5451982-A	R.H. (†)	1	54, 65	A	62
C2AZ 5451983-A	L.H. (†)	1	54, 65	A	62
C2AZ 6251982-A	R.H. (†)	1	62	A	62
C2AZ 6251983-A	L.H. (†)	1	62	A	62
C2AZ 7551982-A	R.H. (†)	1	75	A	62
C2AZ 7551983-A	L.H. (†)	1	75	A	62

† Package also includes -

(2) 53061-S13 screw-oval trim hd. cr. rec. tap. -No. 10-12 x 1"

CONTINUED ON NEXT PAGE

GROUP AND PART NUMBER	DESCRIPTION, SIZE, ETC.		NO. REQ'D	MODEL OR ENGINE CUBIC INCH DISPLACEMENT	VEHICLE CODE	YEAR 19____
50316-7	LINK (FOLDING TOP CONTROL)					
PB9M 7650316-AP	R.H. - in prime	(a, b)	1	76	A	60
PB9M 7650317-AP	L.H. - in prime	(a, b)	1	76	A	60
COAB 7650316-AP	R.H. - in prime	(b, c)	1	76	A	61/62
COAB 7650317-AP	L.H. - in prime	(b, c)	1	76	A	61/62
C3AZ 7650316-A	R.H.	(f)	1	76	A	63/64
C3AZ 7650317-A	L.H.	(f)	1	76	A	63/64
C3DZ 7650316-A	R.H.	(g)	1	76	C	63/64
C3DZ 7650317-A	L.H.	(g)	1	76	C	63/64
BAK 6850316-AP	R.H. - in prime	(d)	1	68	D	60
BAK 6850317-AP	L.H. - in prime	(d)	1	68	D	60
C1VB 74506A22-AP	R.H.	(e)	1	74	D	61
C1VB 74506A23-AP	L.H.	(e)	1	74	D	61
C2VY 74506A22-A	R.H.	(e)	1	74	D	62/63
C2VY 74506A23-A	L.H.	(e)	1	74	D	62/63
C4VY 74506A22-A	R.H.	(h)	1	74	D	64
C4VY 74506A23-A	L.H.	(h)	1	74	D	64
	Attach link to rear side rail with the following -					
352146-S	Pin-roll-1/8" x 7/8"		2	a		
359980-S13	Pin-3/8"		2	a		
	Attach link to front rail and to center rail with the following -					
352146-S	Pin-roll-1/8" x 7/8"		AR	b		
B6A 7650345-A	Pin-19/64" x 27/32"		AR	b		
B7A 7650474-A	Bushing-nylon		AR	b		
	Attach link to bracket and rear side rail at No. 3 bow with the following -					
72034-S8	Pin-cotter-3/32" x 1"		2	c		
356383-S2	Washer-spring three wave		2	c		
356403-S8	Washer-flat-steel-3/8"		2	c		
359236-S13	Pin-oval hd.		2	c		
	Attach link to front side rail with the following -					
BAK 6850474-A	Bushing-19/64" I.D. x 7/8" O.D.		2	d		
BAE 7650493-A	Bushing-19/64" I.D. x 3/4" O.D.		1	d		
354480-S	Pin-1/8" x 1-1/8"		3	d		
359222-S	Pin-oval hd.-5/16"		3	d		
	Attach link to No. 2 bow with the following -					
34954-S7	Lockwasher-external tooth countersunk-1/4"		2	e		
50706-S13	Screw and washer-oval hd.cr.rec.tap.-1/4"-28 x 5/8"		2	e		
52931-S13	Screw-oval hd.cr.rec.tap.-1/4"-28 x 5/8"		2	e		
	Attach link to front side rail and side front intermediate rail with the following -					
B6A 7650345-A	Pin		2	e		
B7A 7650474-A	Bushing		4	e		
67555-S	Pin-spring-1/8" x 3/4"		2	e		
	Attach link to side rear intermediate rail with the following-					
305064-S	Pin-spring rolled-1/8" x 7/8"		1	e		
359980-S13	Pin-oval hd.-3/8"		1	e		
	Attach control link to front and center side rails with the following -					
C3SZ 7650345-A	Pin		3	f		
C3SZ 7650474-A	Bushing		3	f		
357479-S15	Pin-roll-3/16" x 1"		3	f		

CONTINUED ON NEXT PAGE

GROUP AND PART NUMBER	DESCRIPTION, SIZE, ETC.	NO. REQ'D	MODEL OR ENGINE CUBIC INCH DISPLACEMENT	VEHICLE CODE	YEAR 19___
50266-7	ORNAMENT (ROOF SIDE) INNER (CONTINUED)				
C3MY 5450266-A	R.H. - body with lamp socket shell - less lens (a)	1	54B, 65B, C, 75B, C	A	63
	Use when there is no radio speaker	1	54B, F, 65B, C, F, 75F	A	64
C3MY 5450267-A	L.H. - body with lamp socket shell - less lens (a)	1	54B, 65B, C, 75B, C	A	63
	Use when there is no radio speaker	1	54B, F, 65B, C, F, 75F	A	64
C4MY 5450266-A	R.H. - use when there is a radio speaker	1	54, 62, 65, 75	A	64
C4MY 5450267-A	L.H. - use when there is a radio speaker	1	54, 62, 65, 75	A	64
C4AZ 5751982-A	R.H. - aluminum (Δ)	1	57	A	64
C4AZ 5751983-A	L.H. - aluminum (Δ)	1	57	A	64
	Δ Package also includes -				
	(2) 52726-S8 screw				
53060-S13	Screw-oval hd. self-tap. -No. 8-15 x 1"	AR	a		
50274-5	ORNAMENT (ROOF SIDE) INNER				
COMB 6450274-AP	R.H. - in prime	1	64	A	60
COMB 6450275-AP	L.H. - in prime	1	64	A	60
PB9L 5350274-A	Aluminum (a)	2	53A, 57A, 63A	D	60
COLB 6550274-A	R.H. - aluminum (a)	1	54, 65, 75	D	60
COLB 6550275-A	L.H. - aluminum (a)	1	54, 65, 75	D	60
52007-S8	Screw-flat hd. cr. rec. tap. -No. 8-18 x 3/8"	2	a		
502A81	EXTENSION ASSEMBLY (ROOF PANEL) REAR SIDE				
C1VB 57502A81-C	L.H. For R.H. refer to C1VB-57403A06-B and C1VY-5750866-C	1	53	D	61
50282-3	EXTENSION (ROOF BACK WINDOW UPPER INNER FRAME)				
C3DZ 6350282-A	R.H.	1	63	C	63/64
C3DZ 6350283-A	L.H.	1	63	C	63/64
50284-5	ORNAMENT (ROOF OUTSIDE SIDE) UPPER				
COMB 5650284-A	R.H. - rustless steel (a)	1	77	A	60
COMB 5650285-A	L.H. - rustless steel (a)	1	77	A	60
353911-S100	Nut and washer-No. 10-24	1	a		
372624-S	Screw	1	a		
50286-7	ORNAMENT (ROOF SIDE & FENDER) OUTER				
COMB 5650286-A	R.H. - lower - rustless steel (a)	1	77	A	60
COMB 5650287-A	L.H. - lower - rustless steel (a)	1	77	A	60
COMB 6350286-B	R.H. - CRUISER - zinc die cast (b)	1	63	A	60
COMB 6350287-B	L.H. - CRUISER - zinc die cast (b)	1	63	A	60
C3GY 6250286-B	With Mercury head - 1-5/16" x 2-3/32"				
	Front fender	2	71, 76	A	63
	Front fender	2	71B, E	B	63
	Roof	2	54, 62	B C	63
	Front fender	2	All except 63C, 76B	C	63
	Package also includes -				
	(2) 373704-S nut-sleeve-3/16"				
52726-S8	Screw-pan hd. cr. rec. tap. -No. 8-15 x 1/2"	2	a		
370680-S100	Nut and washer-self-threading-3/16"	2	b		
50286-7	ORNAMENT (ROOF OUTSIDE SIDE) UPPER				
C4GY 6250286-A	R.H. (Δ)	1	54B, C, D, 62B, C	C	64
C4GY 6250287-A	L.H. (Δ)	1	54B, C, D, 62B, C	C	64
	Δ Package also includes -				
	(4) 375480-S102 nut-sleeve				
50290-1	REFER TO GROUP 50222				

GROUP AND PART NUMBER	DESCRIPTION, SIZE, ETC.	NO. REQ'D	MODEL OR ENGINE CUBIC INCH DISPLACEMENT	VEHICLE CODE	YEAR 19____
50316-7	LINK (FOLDING TOP CONTROL) CONTINUED				
	Attach control link to rear side rail with the following -				
72034-S	Pin-cotter-3/32" x 1"	1	f		
354318-S13	Pin-clevis-3/8"	1	f		
356383-S8	Washer-spring	1	f		
356403-S8	Washer-flat	1	f		
	Attach control link to No. 2 bow 51274 with the following -				
34954-S2	Washer-external tooth countersunk 1/4"	2	g		
52931-S2	Screw-oval hd. tap. -1/4"-28 x 5/8"	2	g		
	Attach control link to front side rail front with the following -				
50693-S	NS-screw and washer-oval hd. cr. rec. - No. 10-31 x 3/8"	2	g		
	Attach control link to front side rail rear 53104-5 with the following -				
C3SZ 7650345-A	Pin	1	g		
C3SZ 7650474-A	Bushing	2	g		
	Attach control link to rear side rail front with the following -				
C3SZ 7650345-A	Pin	1	g		
C3SZ 7650474-A	Bushing	2	g		
	Attach control link to rail and reinforcement 53192-3 with the following -				
C3DZ 7650487-A	Bushing	2	g		
72016-S	Pin-cotter-3/32" x 3/4"	1	g		
356383-S8	Washer-spring	1	g		
356403-S8	Washer-flat-3/8"	1	g		
376458-S	NS-pin-clevis-3/8"	1	g		
	Attach control link to front side rail with the following -				
C3SZ 7650345-A	Pin	2	h		
C3SZ 7650474-A	Bushing	4	h		
	Attach control link to front side intermediate rail with the following -				
C3SZ 7650474-A	Bushing	2	h		
C3SZ 7650475-A	Pin	1	h		
	Attach control link to rear side intermediate rail with the following -				
72255-S8	Pin-grooved-3/16" x 1"	1	h		
376461-S13	Pin-oval hd. -7/16 x 53/64"	1	h		
50340-1	SLAT (FOLDING TOP NO. 4 BOW)				
C1AB 7650340-A	R. H.	1	76	A	61
C1AB 7650341-A	L. H.	1	76	A	61
50345	PIN (FOLDING TOP CONTROL LINK)				
B6A 7650345-A	Chrome finish - 19/64" diameter x 27/32"	AR	76	A	60/62
	Use on vehicles built prior to 9-4-62	AR	74	D	61/63
C3AZ 7650345-A	Use on vehicles built prior to 1-18-63	AR	76	A	63
		6	74	D	64
C3SZ 7650345-A	Rear - use on vehicles built after 1-17-63	AR	76	A	63/64
		4	76	C	64
	Use on vehicles built after 9-3-62	AR	74	D	63/64
50348-9	PAD (NO. 1 BOW TO FLOOR)				
C4VY 7450348-A	R. H. - phenolic moulding compound	1	74	D	64
C4VY 7450349-A	L. H. - phenolic moulding compound	1	74	D	64

GROUP AND PART NUMBER	DESCRIPTION, SIZE, ETC.	NO. REQ'D	MODEL OR ENGINE CUBIC INCH DISPLACEMENT	VEHICLE CODE	YEAR 19____
50350	RETAINER (FOLDING TOP NO. 1 BOW MOULDING END)				
B9MB 7650350-A	(a)	2	76	A	60
34053-S	Nut-hex.-No.10-24	1	a		
34903-S	Washer-internal tooth lock-No. 10	1	a		
50352-3	LINK (FOLDING TOP POWER)				
PB9M 7650352-AP	R.H. - in prime (a)	1	76	A	60
PB9M 7650353-AP	L.H. - in prime (a)	1	76	A	60
COAB 7650352-AP	R.H. - in prime (a)	1	76	A	61/62
COAB 7650353-AP	L.H. - in prime (a)	1	76	A	61/62
BAK 6850352-AP	R.H. - in prime (b)	1	68	D	60
BAK 6850353-AP	L.H. - in prime (b)	1	68	D	60
	Attach link to main pivot bracket with the following -				
72034-S	Pin-cotter-3/32" x 1"	2	a		
356214-S8	Washer-steel-29/64" I.D. x 3/4" O.D.	2	a		
356383-S2	Washer-spring	2	a		
357429-S13	Pin-oval hd.	2	a		
	Attach link to lift with the following -				
352358-S	Pin-self-locking	2	a		
356383-S2	Washer-spring three wave	2	a		
356403-S8	Washer	2	a		
359140-S13	Pin	2	a		
	Attach link to rear rail with the following -				
COAB 7650472-A	Bushing-nylon-7/16" I.D. x 1-1/4" O.D.	2	a		
352146-S	Pin-roll-1/8"-7/8"	2	a		
359237-S13	Pin-oval hd.	2	a		
COAB 7650472-A	Bushing	4	b		
359982-S13	Pin-7/16"	4	b		
50363	RETAINER (FOLDING TOP NO. 1 BOW OUTSIDE MOULDING CENTER)				
B9MB 7650363-A	(a)	1	76	A	60
34053-S	Nut-hex.-No.10-24	1	a		
34903-S	Washer-internal tooth lock-No.10	1	a		
50412	BUSHING (FOLDING TOP REAR SIDE RAIL TO POWER CYLINDER)				
C3AZ 7650412-A		AR	76	A C	63/64
50450	BRACKET (FOLDING TOP BALANCE LINK PIVOT)				
B7A 7650450-A		2	76	A C	60/64
		2	68	D	60
50453	BUSHING (FOLDING TOP LOWER POWER LINK)				
C1VB 7450453-A	Nylon - 1-1/8" O.D. - neck 1/2" I.D. x 5/8" O.D. - attach 506A38 to 50600	4	74	D	61/63
COSB 7650453-A		4	74	D	64
50454-5	LINK (FOLDING TOP BALANCE)				
PB9M 7650454-AP	R.H. - in prime (a)	1	76	A	60
PB9M 7650455-AP	L.H. - in prime (a)	1	76	A	60
COAB 7650454-AP	R.H. - in prime (a)	1	76	A	61/62
COAB 7650455-AP	L.H. - in prime (a)	1	76	A	61/62
C3AZ 7650454-A	R.H. - in prime	1	76	A	63
C3AZ 7650455-A	L.H. - in prime	1	76	A	63
C3AZ 7650454-B	R.H. - in prime (c)	1	76	A	64
C3AZ 7650455-B	L.H. - in prime (c)	1	76	A	64
C3DZ 7650454-A	R.H. - in prime	1	76	C	63/64
C3DZ 7650455-A	L.H. - in prime	1	76	C	63/64

CONTINUED ON NEXT PAGE

GROUP AND PART NUMBER	DESCRIPTION, SIZE, ETC.	NO. REQ'D	MODEL OR ENGINE CUBIC INCH DISPLACEMENT	VEHICLE CODE	YEAR 19____
50454-5	LINK (FOLDING TOP BALANCE) CONTINUED				
BAK 6850454-A	R.H. - chrome finish (b)	1	68	D	60
BAK 6850455-A	L.H. - chrome finish (b)	1	68	D	60
	Attach link to center side rail with the following -				
352146-S	Pin-roll-1/8" x 7/8"	2	a		
359225-S13	Pin-oval hd.-7/16"	2	a		
	Attach link to bracket balance link adjusting 50450 with the following -				
72034-S	Pin-cotter-3/32" x 1"	2	a		
356214-S8	Washer-plain-steel	2	a		
356383-S2	Washer-spring	2	a		
	Attach balance link to center side rail with the following -				
353848-S8	Pin-roll-3/16" x 11/16"	1	c		
376461-S13	Pin-oval hd. -7/16" x 27/32"	1	c		
8M 7653213	Washer-3-wave	1	b		
72034-S	Cotter pin-3/32" x 1"	1	b		
352146-S	Pin-1/8" x 7/8"	1	b		
356214-S	Washer	1	b		
359225-S	Pin-oval hd.-7/16"	1	b		
50471	BUSHING (FOLDING TOP CENTER RAIL)				
C3AZ 7650471-A	Nylon	AR	76	A	63/64
C3DZ 7650471-A	Nylon	2	76	C	63
C4DZ 7650471-A	Nylon	4	76	C	64
50472	BUSHING (FOLDING TOP TO REAR SIDE RAIL)				
COAB 7650472-A	Nylon - 7/16" I.D. x 1-1/4" O.D.	2	76	A	60/62
	Upper lower link	2	68	D	60
50472	BUSHING (FOLDING TOP REAR BOW CONTROL LINK UPPER TO REAR BOW OUTER)				
B5A 7650472-A	Nylon - 7/16" I.D. x 1" O.D. with 9/64" shoulder	4	68	D	60
50473	BUSHING (FOLDING TOP REAR SIDE RAIL)				
C3AZ 7650473-A	Nylon	4	76	A C	63
		8	76	C	64
B7A 7650473-A	Nylon and aluminum - 7/16" I.D. x 1-1/4" O.D.	4	76	A	60/62
		4	74	D	61/63
	(1) req'd. - each side link 506A68 to rail 514A02	4	74	D	64
	(1) req'd. - each side link 506A52 to rail 53138				
BAK 6850473-A	Nylon and aluminum - 7/16" I.D. x 1-1/2" O.D.	4	68	D	60
COSB 7650473-A	Nylon	8	74	D	61/64
50474	BUSHING (FOLDING TOP CONTROL LINK TO SIDE RAIL)				
C3AZ 7650474-A	Nylon - use on vehicles built prior to 1-18-63	12	76	A	63
		12	76	C	63
B7A 7650474-A	Nylon - 19/64" I.D. x 3/4" O.D.	12	76	A	60/62
	Use on vehicles built prior to 9-4-62	4	74	D	61/63
C3SZ 7650474-A	Use on vehicles built after 1-17-63	12	76	A	63/64
		8	76	C	64
	Use on vehicles built after 9-3-62	AR	74	D	63/64
BAK 6850474-A	Nylon and aluminum - 19/64" I.D. x 7/8" O.D.	4	68	D	60

GROUP AND PART NUMBER	DESCRIPTION, SIZE, ETC.	NO. REQ'D	MODEL OR ENGINE CUBIC INCH DISPLACEMENT	VEHICLE CODE	YEAR 19____
50478-9	BRACKET (FOLDING TOP BALANCE LINK ADJUSTING)				
B7A 7650478-A	R. H. (a)	1	76	A C	60/63
		1	76	C	64
		1	68	D	60
B7A 7650479-A	L. H. (a)	1	76	A C	60/63
		1	76	C	64
		1	68	D	60
20347-S	Bolt-hex. hd.-5/16"-24 x 3/4"	3	a		
34806-S	Washer-spring lock-5/16"	3	a		
44724-S	Washer-flat-5/16"	3	a		
50487	BUSHING (FOLDING TOP MAIN CONTROL REAR)				
BAC 7650487-A	Nylon	2	76	A	60/62
C3DZ 7650487-A	Nylon	4	76	C	63/64
50491	SCREW (FOLDING TOP BALANCE LINK VERTICAL ADJUSTING)				
B7A 7650491-A	Hex. hd. set-5/32" R. H. thd. on end 3/8"-24 and	2	76	A C	60/63
	L. H. thd. 3/8"-24 and overall length 2-5/32"	2	68	D	60
		2	76	C	64
50492	PIN (FOLDING TOP CENTER SIDE RAIL) FRONT				
B8S 7650492-A	Chrome finish No. 8-32 x 1-9/16" overall (a)	2	76	A	60/62
	Use on vehicles built prior to 9-4-62	2	68	D	60
		2	74	D	61/63
C3AZ 7650492-A	(a)	2	76	A	63/64
	Use on vehicles built after 9-3-62	2	74	D	63/64
C3DZ 7650492-A		2	76	C	63
C4DZ 7650492-A		2	76	C	64
352146-S	Pin-roll-1/8" x 7/8"	2	a		
50493	BUSHING (FOLDING TOP NO. 2 BOW REAR LINK TO SIDE RAIL)				
BAE 7650493-A	Nylon - 19/64" I. D. x 3/4" O. D.	4	76	A	60
		4	68	D	60
50508	CLAMP (ROOF HOLD DOWN)				
PB9M 7650508-A		2	76	A	60
COAB 7650508-A	(a)	2	76	A	61/62
C3AZ 7650508-A	R. H.	1	76	A C	63/64
C3AZ 7650508-B	L. H.	1	76	A C	63/64
42802-S8	Screw and washer-flat hd. cr. rec.-No. 10-32 x 1/2"	2	a		
50524	BUMPER (ROOF HOLD DOWN CLAMP LEVER)				
B9A 7650524-A	Rubber and steel - 1-1/2" x 3/4" with 1/4" diameter hole	2	76	A	60
COAB 7650524-A		2	76	A	61/62
50530-1	PLATE (ROOF HOLD DOWN CLAMP LATCH)				
PB9M 7650530-A	Chrome finish	2	76	A	60
COAB 7650530-A	Chrome finish (a)	2	76	A	61/62
C3AZ 7650530-A	R. H.	1	76	A C	63
		1	76	C	64
C3AZ 7650531-A	L. H.	1	76	A C	63
		1	76	C	64
350056-S2	Screw and washer-flat hd. cr. rec.-No. 32 x 1/2"	2	a		
50575	BRACKET (ROOF TRIM SIDE PANEL TO QUARTER WINDOW REGULATOR PANEL)				
PB9M 6350575-A	4" long (a)	2	63	A	60
52720-S8	Screw-pan hd. cr. rec.-No. 8-15 x 3/8"	2	a		

GROUP AND PART NUMBER	DESCRIPTION, SIZE, ETC.	NO. REQ'D	MODEL OR ENGINE CUBIC INCH DISPLACEMENT	VEHICLE CODE	YEAR 19____
50600	LIFT (FOLDING TOP HYDRAULIC)				
C2AZ 7650600-A		2	76	A	62
C3AZ 7650600-A	17-3/32" length retracted position	2	76	A	63
C4DZ 7650600-A	Length retracted 11-13/32" extended 19" (c)	2	76	A C	64
B7A 7650600-A		2	76	A	60/61
	(a)	2	68	D	60
C3DZ 7650600-A	14-13/64" length retracted position	2	76	C	63
C1VB 7450600-A	15-7/32" length retracted position (b)	2	74	D	61/63
C4VY 7450600-A	Length retracted 14-1/8" extended 23-1/2" (d)	2	74	D	64
	Attach lift to support with following -				
44726-S	Washer-flat-3/8"	3	b		
352358-S	Pin-self-locking	3	b		
352477-S8	Bushing	4	b		
356397-S2	Washer-spring-3-wave	2	b		
370531-S	Grommet	4	b		
370592-S	Pin-clevis	2	b		
	Attach lift to link lower power 506A38-9 with the following -				
C1VB 7450453-A	Bushing	2	b		
72034-S7	Pin-self-locking	1	b		
356468-S13	Washer-spring	1	b		
371703-S	Washer-flat-1/2"	1	b		
373887-S8	Pin-1/2" x 1-11/32"	1	b		
	Attach lift to bracket on floor with the following -				
44726-S8	Washer-flat-3/8"	1	c		
73986-S8	NS-pin-clevis	1	c		
352358-S13	Pin-self-locking	1	c		
356383-S7	Washer-wave	1	c		
	Attach lift to rail and reinforcement rear side 53192-3 with the following -				
C3AZ 7650412-A	Bushing	2	c		
352358-S7	Pin-self-locking	1	c		
354172-S8	Washer-flat-3/8"	1	c		
356383-S2	Washer-spring	1	c		
359238-S13	Pin-clevis-3/8" x 1-1/16"	1	c		
	Attach lift to support 506A58 with the following -				
C4SB 7650763-A	Grommet	2	d		
359186-S8	Washer	1	d		
374845-S2	NS-pin	1	d		
379041-S8	Pin	1	d		
	Attach lift to link lower power 506A38 with the following -				
COSB 7650453-A	Bushing	2	d		
352358-S2	Pin-cotter	1	d		
371703-S8	Washer-flat-1/2"	1	d		
373914-S8	Pin	1	d		
44726-S	Washer-flat-3/8"	3	a		
76073-S	Pin-clevis	3	a		
352358-S	Pin-self locking	3	a		
356383-S7	Washer-spring-three wave	3	a		
506A14-5	LINK (FOLDING TOP BALANCE) LOWER				
C1VB 74506A14-AP	In prime	2	74	D	61/63
C4VY 74506A14-A	R. H. - in prime (a)	1	74	D	64
C4VY 74506A15-A	L. H. - in prime (a)	1	74	D	64
	Attach link to side rear rail 53138 with the following -				
72255-S8	Pin-grooved-3/16" x 1"	1	a		
377906-S13	NS-pin-oval hd.-7/16"	1	a		

GROUP AND PART NUMBER	DESCRIPTION, SIZE, ETC.	NO. REQ'D	MODEL OR ENGINE CUBIC INCH DISPLACEMENT	VEHICLE CODE	YEAR 19____
506A16-7	LINK (FOLDING TOP BALANCE) UPPER				
C1VB 74506A16-AP	In prime	2	74	D	61/63
C4VY 74506A16-A	R.H. (a)	1	74	D	64
C4VY 74506A17-A	L.H. (a)	1	74	D	64
	Attach link to rail front side intermediate with the following -				
72255-S8	Pin-grooved-3/16" x 1"	1	a		
377906-S13	NS-pin-oval hd. -7/16"	1	a		
50618	BOLT (FOLDING TOP SIDE LINK)				
C3DZ 7650618-A	1/4"-20 x 5/16" overall 1"	4	76	C	63
50622	SHAFT (FOLDING TOP LOCK DRIVE)				
BAK 6850622-A		2	68	D	60
506A22-3	REFER TO GROUP 50316-7				
50632	YOKE (FOLDING TOP HYDRAULIC LIFT PISTON SHAFT)				
BAC 7650632-A	Chrome finish	2	76	A	60/62
		2	68	D	60
50636	BUSHING (FOLDING TOP BALANCE LINK TO CENTER SIDE RAIL)				
C3DZ 7650636-A	Nylon	2	76	C	63/64
506A38-9	LINK (FOLDING TOP LOWER POWER)				
C1VB 74506A38-AP	R.H. - in prime (a)	1	74	D	61/63
C1VB 74506A39-AP	L.H. - in prime (a)	1	74	D	61/63
C4VY 74506A38-A	R.H. (b)	1	74	D	64
C4VY 74506A39-A	L.H. (b)	1	74	D	64
	Attach link to main pivot bracket with following -				
COSB 7650473-A	Bushing	1	a		
72034-S8	Pin-cotter-3/32" x 1"	1	a		
356214-S8	Washer-plain	1	a		
356383-S2	Washer-spring-three wave	1	a		
357429-S13	Pin	1	a		
	Attach link to folding top lift with following -				
C1VB 7450453-A	Bushing	4	a		
72034-S8	Pin-cotter-3/32" x 1"	2	a		
	NS-washer-spring-three wave	2	a		
	NS-washer-flat-steel-1/2"	2	a		
373887-S8	Pin-1/2" x 1-11/32"	2	a		
	Attach link to support main pivot bracket 53158-9 with the following -				
COSB 7650473-A	Bushing	2	b		
352358-S2	Pin-self-locking	1	b		
357429-S13	Pin-oval hd. -. 433/. 430 x 2. 095"	1	b		
373262-S36	Washer-flat-7/16"	1	b		
506A44-5	BASE (FOLDING TOP MAIN PIVOT SUPPORT)				
C1VY 74506A44-A	R.H. - in prime	1	74	D	61/63
C1VY 74506A45-A	L.H. - in prime	1	74	D	61/63
C4VY 74506A44-A	R.H. - in prime - use on vehicles built prior to 10-21-63 (a)	1	74	D	64
C4VY 74506A45-A	L.H. - in prime - use on vehicles built prior to 10-21-63 (a)	1	74	D	64

CONTINUED ON NEXT PAGE

GROUP AND PART NUMBER	DESCRIPTION, SIZE, ETC.	NO. REQ'D	MODEL OR ENGINE CUBIC INCH DISPLACEMENT	VEHICLE CODE	YEAR 19____
506A44-5	BASE (FOLDING TOP MAIN PIVOT SUPPORT) CONTINUED				
C4VY 74506A44-B	R. H. - in prime - use on vehicles built after 10-20-63 (a)	1	74	D	64
C4VY 74506A45-B	L. H. - in prime - use on vehicles built after 10-20-63 (a)	1	74	D	64
	Attach base to support main pivot bracket 53158-9 with the following -				
33798-S8	Nut-hex. -5/16"-24	2	a		
34806-S7	Lockwasher-5/16"	2	a		
44725-S8	Washer-flat-5/16"	2	a		
373909-S8	NS-bolt	2	a		
	Attach base to floor with the following -				
358805-S7	Screw and washer-hex. hd. -5/16"-18 x 1/4"	4	a		
506A52	LINK (FOLDING TOP UPPER POWER)				
C1VB 74506A52-AP	In prime	2	74	D	61/63
C4VY 74506A52-A	In prime (a)	2	74	D	64
	Attach link to side rear rail 53138-9 with the following -				
B7A 7650473-A	Bushing	1	a		
352358-S2	Pin-self-locking	1	a		
356214-S8	Washer-plain-7/16"	1	a		
356383-S7	Washer-spring	1	a		
370710-S8	Pin-oval hd. -7/16" x 1-9/32"	1	a		
	Attach link to lower power 506A38-9 with the following -				
76042-S8	NS-pin-clevis	1	a		
352153-S	Washer-15/32" I. D. x 15/16" O. D.	1	a		
352358-S2	Pin-self-locking	1	a		
356214-S8	Washer-spring	1	a		
356383-S7	Washer-flat	1	a		
506A58	SUPPORT (FOLDING TOP LIFT TO FLOOR)				
C1VB 74506A58-A	(a)	2	74	D	61/63
C4VY 74506A58-A		2	74	D	64
34806-S7	Lockwasher-spring-5/16"	AR	a		
44725-S8	Washer-flat-5/16"	AR	a		
45555-S8	Bolt-hex. hd. -5/16"-24 x 3-3/4"	AR	a		
506A60-1	REINFORCEMENT (FOLDING TOP MAIN PIVOT SUPPORT BASE MOUNTING)				
C1VB 74506A60-A	R.H.	1	74	D	61/63
C1VB 74506A61-A	L.H.	1	74	D	61/63
C4VY 74506A60-A	R.H.	1	74	D	64
C4VY 74506A61-A	L.H.	1	74	D	64
506A68-9	LINK (FOLDING TOP BALANCE TO EXTENSION)				
C1VY 74506A68-AP	R. H. - in prime (a)	1	74	D	61/63
C1VY 74506A69-AP	L. H. - in prime (a)	1	74	D	61/63
C4VY 74506A68-AP	R. H. - in prime	1	74	D	64
C4VY 74506A69-AP	L. H. - in prime	1	74	D	64
	Attach link to rail side - rear intermediate rail with the following -				
B7A 7650473-A	Bushing	1	a		
305076-S	Pin-spring-1/8" x 1"	1	a		
371253-S13	Pin-oval hd. -7/16"	1	a		

GROUP AND PART NUMBER	DESCRIPTION, SIZE, ETC.	NO. REQ'D	MODEL OR ENGINE CUBIC INCH DISPLACEMENT	VEHICLE CODE	YEAR 19____
506A70-1	EXTENSION (FOLDING TOP BALANCE LINK TO SUPPORT)				
C1VY 74506A70-AP	R.H. - in prime (a)	1	74	D	61/63
C1VY 74506A71-AP	L.H. - in prime (a)	1	74	D	61/63
C4VY 74506A70-A	R.H. - in prime (b)	1	74	D	64
C4VY 74506A71-A	L.H. - in prime (b)	1	74	D	64
	Attach extension to link folding top balance with the following -				
20387-S13	Bolt-hex.hd.-5/16"-24 x 1"	2	a		
34781-S7	Lockwasher-spring-5/16"	2	a		
44722-S8	Washer-flat-5/16"	2	a		
	Attach extension to support main pivot bracket with the following -				
72034-S8	Pin-cotter-3/32" x 1"	1	a		
356214-S8	Washer-plain	1	a		
356383-S2	Washer-spring-three wave	1	a		
357429-S13	Pin	1	a		
	Attach extension to top balance link with the following -				
44722-S8	Washer-plain-5/16"	2	b		
51025-S13	NS-screw and washer-pan hd.-5/16"-24 x 1"	2	b		
	Attach extension to support main pivot bracket 53138-9 with the following -				
352358-S2	Pin-self-locking	1	b		
357429-S13	Pin-oval hd. -7/16" x 2-7/64"	1	b		
373262-S36	Washer-flat-7/16"	1	b		
50678	BUSHING (FOLDING TOP HYDRAULIC LIFT)				
C4DZ 7650678-A		4	76	A C	64
50687	SPACER (FOLDING TOP NO. 1 BOW REAR WEATHERSTRIP)				
B9A 7650687-A	Rubber	AR	76	A	60
50745	KIT (GASKET FOLDING TOP MOTOR & RESERVOIR)				
59MK 7650745-A		AR	68, 74, 76	A C D	60/64
	Consists of the following -				
(1) FDH-15686-A	"o" ring	(2) BN-7650745-A	"o" ring	(2) BN-7650745-E	"o" ring
(1) 1P-77265-B	"o" ring				
50747	BRACKET (FOLDING TOP LIFT MOTOR MOUNTING)				
PB9M 7650747-A		1	76	A	60/63
50763	GROMMET (FOLDING TOP HYDRAULIC PUMP MOUNTING)				
C4SZ 7650763-A		4	74	D	64
50800-1	BRACKET (FOLDING TOP LIFT TO FLOOR)				
PB9M 7650800-A	R.H.	1	76	A	60
PB9M 7650801-A	L.H.	1	76	A	60
50804	BRACKET (FOLDING TOP LIFT TO FLOOR)				
C3DZ 7650804-A		2	76	C	63
50808	BRACKET (FOLDING TOP LIFT TO BRACE)				
BAK 6850808-A		2	68	D	60
50812	STRIP (ROOF HEADLINING CORNER FRONT TACKING)				
C4VY 5350812-A		2	53	D	64

GROUP AND PART NUMBER	DESCRIPTION, SIZE, ETC.	NO. REQ'D	MODEL OR ENGINE CUBIC INCH DISPLACEMENT	VEHICLE CODE	YEAR 19____
50847	EXTENSION (ROOF PANEL) REAR				
COAZ 6250847-A		1	54, 62, 65, 75	A	61
		1	All except 71, 76	A	62
C1KB 6250847-A		1	54, 62	C	60/63
50866-7	EXTENSION (ROOF PANEL REAR SIDE)				
C1VY 5750866-C	R.H.	1	53	D	61/63
C1VY 5750867-C	L.H.	1	53	D	61/63
50900-1	STRIP (ROOF HEADLINING SIDE RETAINING) REAR LOWER				
COAB 6450900-A	Steel (a)	1	58A, 64A	A	61
B9AB 6550900-A	Steel (a)	1	54, 62, 65, 75	A	61
C4AZ 5750900-A	R.H. - steel	1	57	A	64
C4AZ 5750901-A	L.H. - steel	1	57	A	64
52726-S8	Screw-pan hd. cr. rec. tap. -No. 8-15 x 1/2"	3	a		
50936-7	STRIP (ROOF HEADLINING SIDE RETAINING) FRONT				
PB9M 5850952-A	R.H. (a)	1	58, 64	A	60
PB9M 5850953-A	L.H. (a)	1	58, 64	A	60
C2AB 6250952-A	R.H. (a)	1	54, 58, 62, 64	A	61
		1	54, 62	A	62
C2AB 6250953-A	L.H. (a)	1	54, 58, 62, 64	A	61
		1	54, 62	A	62
C2AB 7550952-A	R.H. (a)	1	65, 75	A	61/62
C2AB 7550953-A	L.H. (a)	1	65, 75	A	61/62
C3AZ 6250952-A	R.H. - steel	1	54, 62	A	63/64
C3AZ 6250953-A	L.H. - steel	1	54, 62	A	63/64
C3AZ 6550952-A	R.H. - steel	1	65, 76	A	63/64
C3AZ 6550953-A	L.H. - steel	1	65, 76	A	63/64
C2OZ 6250936-A	R.H.	1	All	B	62
		1	54, 62	B	63
C2OZ 6250937-A	L.H.	1	All	B	62
		1	54, 62	B	63
C3OZ 6550936-A	R.H.	1	65	B	63
C3OZ 6550937-A	L.H.	1	65	B	63
C3OZ 7150936-A	R.H.	1	71	B	63
C3OZ 7150937-A	L.H.	1	71	B	63
C1DB 6450936-A	R.H. (a)	1	54	C	60/62
C1DB 6450937-A	L.H. (a)	1	54	C	60/62
C2DZ 6450936-A	R.H. (a)	1	62	C	60/62
	R.H. - for model 62 cut 1" from rear end	1	54, 62	C	63
C2DZ 6450937-A	L.H. (a)	1	62	C	60/62
	L.H. - for model 62 cut 1" from rear end	1	54, 62	C	63
C1DZ 5950936-A	R.H. (a)	1	59, 71	C	60/64
C1DZ 5950937-A	L.H. (a)	1	59, 71	C	60/64
C2DZ 6250936-A	R.H. - for model 62 cut 1" from rear end (a)	1	54, 62	C	64
C2DZ 6250937-A	L.H. - for model 62 cut 1" from rear end (a)	1	54, 62	C	64
BJ 7051054-A	Clip	AR	a		
52726-S8	Screw-pan hd. cr. rec. tap. -No. 8-15 x 1/2"	2	a		
50940-1	STRIP (ROOF HEADLINING SIDE RETAINING) REAR				
PB9M 5850956-A	R.H. - steel - 51-1/2" long (a)	1	58	A	60
PB9M 5850957-A	L.H. - steel - 51-1/2" long (a)	1	58	A	60
COAB 5750956-A	R.H. (a)	1	65, 75	A	61
COAB 5750957-A	L.H. (a)	1	65, 75	A	61
COAB 5850956-A	R.H. (a)	1	54, 58	A	61
COAB 5850957-A	L.H. (a)	1	54, 58	A	61
C2AB 5450956-A	R.H.	1	54	A	62
C2AB 5450957-A	L.H.	1	54	A	62

CONTINUED ON NEXT PAGE

GROUP AND PART NUMBER	DESCRIPTION, SIZE, ETC.	NO. REQ'D	MODEL OR ENGINE CUBIC INCH DISPLACEMENT	VEHICLE CODE	YEAR 19____
50940-1	STRIP (ROOF HEADLINING SIDE RETAINING) REAR (CONTINUED)				
C2AB 7550956-A	R. H.	1	65, 75	A	62
C2AB 7550957-A	L. H.	1	65, 75	A	62
C3MY 5450956-A	R. H. - 33-1/2" long	1	54, 62	A	63/64
C3MY 5450957-A	L. H. - 33-1/2" long	1	54, 62	A	63/64
C3MY 6550956-A	R. H.	1	65, 75	A	63/64
C3MY 6550957-A	L. H.	1	65, 75	A	63/64
C2OZ 6250940-A	R. H.	1	54	B	62/63
C2OZ 6250941-A	L. H.	1	54	B	62/63
C3OZ 6550940-A	R. H.	1	65	B	63
C3OZ 6550941-A	L. H.	1	65	B	63
C3OZ 7150940-A	R. H.	1	71	B	63
C3OZ 7150941-A	L. H.	1	71	B	63
C1DB 5850940-A	R. H. (a)	1	54	C	60/62
C1DB 5850941-A	L. H. (a)	1	54	C	60/62
C1DB 7150940-A	R.H. (a)	1	71	C	60/64
C1DB 7150941-A	L.H. (a)	1	71	C	60/64
C3GY 5450940-A	R. H.	1	54	C	63
C3GY 5450941-A	L. H.	1	54	C	63
C3DZ 5450940-A	R.H.	1	54	C	64
C3DZ 5450941-A	L.H.	1	54	C	64
BJ 7051054-A	Clip	AR	a		
52726-S8	Screw-pan hd. cr. rec. tap. -No. 8-15 x 1/2"	2	a		
50952-3	REFER TO GROUP 50936-7				
50956-7	REFER TO GROUP 50940-1				
50964	STRIP (ROOF HEADLINING) FRONT TACKING				
PB9M 5750964-A	24-1/4" long	2	All except 76, 77	A	60
COAB 6450964-A		2	All except 71, 76	A	61
50994	STRIP (ROOF HEADLINING) SIDE FRONT TACKING				
B9MB 5750994-A		2	57, 63	A	60
50996	STRIP (ROOF HEADLINING) SIDE REAR TACKING				
PB9M 5750996-A	26-23/32" long	2	57, 63	A	60
51016-7	STRIP (ROOF HEADLINING HEADER TACKING)				
C1VB 5751016-A	R.H.	1	53	D	61/63
C1VB 5751017-A	L.H.	1	53	D	61/63
51054	CLIP (ROOF HEADLINING SIDE RETAINING STRIP)				
BJ 7051054-A		AR	All except 76	A C	60/63
		AR	54, 62, 65, 71B, 75	A	64
		AR	54, 62, 65	B	62/63
51114-5	EXTENSION (ROOF SIDE OUTER RAIL TO BACK WINDOW HEADER OUTER RAIL)				
PB9M 5651114-A	R.H.	1	77	A	60
PB9M 5651115-A	L.H.	1	77	A	60
51116-7	EXTENSION (ROOF SIDE INNER RAIL TO BACK WINDOW HEADER INNER RAIL)				
PB9M 5651116-A	R.H.	1	77	A	60
PB9M 5651117-A	L.H.	1	77	A	60

GROUP AND PART NUMBER	DESCRIPTION, SIZE, ETC.	NO. REQ'D	MODEL OR ENGINE CUBIC INCH DISPLACEMENT	VEHICLE CODE	YEAR 19____
51154-5	RAIL (FOLDING TOP) SIDE CENTER & FRONT SIDE INTERMEDIATE				
PB9M 7651154-AP	R.H. - center - in prime (a)	1	76	A	60
PB9M 7651155-AP	L.H. - center - in prime (a)	1	76	A	60
COAZ 7651154-BP	R.H. - center - in prime (a)	1	76	A	61/62
COAZ 7651155-BP	L.H. - center - in prime (a)	1	76	A	61/62
C3AZ 7651154-A	R.H. - center	1	76	A	63
C3AZ 7651155-A	L.H. - center	1	76	A	63
C3AZ 7651154-B	R.H. - center (d)	1	76	A	64
C3AZ 7651155-B	L.H. - center (d)	1	76	A	64
C3DZ 7651154-A	R.H. - center	1	76	C	63
C3DZ 7651155-A	L.H. - center	1	76	C	63
C4DZ 7651154-A	R.H. - center (c)	1	76	C	64
C4DZ 7651155-A	L.H. - center (c)	1	76	C	64
BAK 6851154-CP	R.H. - center - in prime	1	68	D	60
BAK 6851155-CP	L.H. - center - in prime	1	68	D	60
C3VY 7451154-A	R.H. - front side intermediate - in prime (b)	1	74	D	61/63
C3VY 7451155-A	L.H. - front side intermediate - in prime (b)	1	74	D	61/63
C4VY 7451154-A	R.H. - front side intermediate - includes bushing BAK-6850471-B (e)	1	74	D	64
C4VY 7451155-A	L.H. - front side intermediate - includes bushing BAK-6850471-B (e)	1	74	D	64
	Attach center side rail to front side rail with the following -				
B8S 7650492-A	Pin	2	a		
352146-S	Pin-roll-1/8" x 7/8"	2	a		
	Attach center side rail to rear side rail with the following -				
356445-S8	Washer-wave-3/8" x 1-1/8"	1	a		
357545-S13	Pin-oval hd.-3/8" x 1-1/8"	1	a		
357883-S8	Pin-roll	1	a		
	Attach side front intermediate rail to side front rail with the following -				
C1VB 74531A06-A	Bushing	2	b		
B8S 7650492-A	Pin-No.8-32 x 1-9/16"	1	b		
305052-S	Pin-spring-1/8" x 3/4"	1	b		
	Attach side front intermediate to side - rear intermediate rail with the following -				
305091-S	Pin-spring-1/8" x 1-1/4"	1	b		
357510-S13	Pin-oval hd.-3/8" x 1-3/8"	1	b		
	Attach center side rail to front side rail with the following -				
C4DZ 7650471-A	Bushing	2	c		
C4DZ 7650492-A	Pin	1	c		
	Attach center side rail to rail and reinforcement 53192-3 with the following -				
C3DZ 7650471-A	Bushing	1	c		
33925-S7	Nut-jam-light hex. -3/8"-24	1	c		
376659-S	Washer-flat-5/8"	1	c		
376660-S	Bolt-hex. hd. shoulder-3/8"-24 x 1-5/64"	1	c		
	Attach center side rail to front side rail with the following -				
C3AZ 7650492-A	Pin	1	d		
353848-S8	Pin-roll-3/16" x 11/16"	1	d		

CONTINUED ON NEXT PAGE

GROUP AND PART NUMBER	DESCRIPTION, SIZE, ETC.	NO. REQ'D	MODEL OR ENGINE CUBIC INCH DISPLACEMENT	VEHICLE CODE	YEAR 19____
51154-5	RAIL (FOLDING TOP) SIDE CENTER & FRONT SIDE INTERMEDIATE (CONTINUED)				
	Attach center side rail to rear side rail with the following -				
C3AZ 7650471-A	Bushing	2	d		
357479-S15	Pin-roll-3-16" x 1"	1	d		
378333-S13	Pin-oval hd. grooved end-7/16" x 1-1/8"	1	d		
	Attach side front intermediate rail to side rear intermediate with the following -				
357479-S15	Pin-roll-3/16" x 1"	1	e		
378333-S13	Pin-oval hd. -7/16" x 1-1/8"	1	e		
51180-1	REFER TO GROUP 513A38-9				
51184-5	REFER TO GROUP 513A38-9				
51186-7	REFER TO GROUP 513A12-3				
51206-7	EXTENSION (ROOF SIDE OUTER REAR RAIL)				
C1MB 62513A46-A	R.H.	1	54, 62, 65, 75	A	61
C1MB 62513A47-A	L.H.	1	54, 62, 65, 75	A	61
C1AZ 5951206-A	R.H.	1	71	A	61/63
C1AZ 5951207-A	L.H.	1	71	A	61/63
C4AZ 7151206-A	R.H.	1	71	A	64
C4AZ 7151207-A	L.H.	1	71	A	64
C2DZ 5951206-A	R.H.	1	59, 71	C	60/64
C2DZ 5951207-A	L.H.	1	59, 71	C	60/64
51212-3	REFER TO GROUP 513A18-21				
51214-5	REFER TO GROUP 513A18-21				
51216-7	REFER TO GROUP 513A16-7				
51218-9	REFER TO GROUP 513A12-3				
51220-1	EXTENSION (ROOF SIDE) INNER REAR RAIL				
COLB 6351220-B	R.H.	1	53,57,63	D	60
COLB 6351221-B	L.H.	1	53,57,63	D	60
51222-3	WEATHERSTRIP (ROOF SIDE RAIL)				
B9MB 5751222-C	R.H. (a)	1	57	A	60
B9MB 5751223-C	L.H. (a)	1	57	A	60
COMB 6351222-A	R.H. (a)	1	63	A	60
COMB 6351223-A	L.H. (a)	1	63	A	60
B9MB 7751222-C	R.H. (a)	1	77	A	60
B9MB 7751223-C	L.H. (a)	1	77	A	60
C1AB 6551222-B	R.H. (b)	1	65	A	61/64
C1AB 6551223-B	L.H. (b)	1	65	A	61/64

CONTINUED ON NEXT PAGE

GROUP AND PART NUMBER	DESCRIPTION, SIZE, ETC.	NO. REQ'D	MODEL OR ENGINE CUBIC INCH DISPLACEMENT	VEHICLE CODE	YEAR 19____
51222-3	WEATHERSTRIP (ROOF SIDE RAIL) CONTINUED				
C3MY 7551222-A	R.H.	1	75	A	61&63/64
C3MY 7551223-A	L.H.	1	75	A	61&63/64
C3AZ 7551222-A	R.H.	1	75	A	62
C2AB 7551223-A	L.H.	1	75	A	62
C3AZ 6351222-A	R.H. (a)	1	63	A	63
C3AZ 6351223-A	L.H. (a)	1	63	A	63
C4AZ 5751222-A	R.H. - use on vehicles built prior to 3-14-64	1	57	A	64
C4AZ 5751223-A	L.H. - use on vehicles built prior to 3-14-64	1	57	A	64
C4AZ 5751222-B	R.H. - use on vehicles built after 3-13-64	1	57	A	64
C4AZ 5751223-B	L.H. - use on vehicles built after 3-13-64	1	57	A	64
C3AZ 6351222-B	R.H. (d)	1	63	A	64
C3AZ 6351223-B	L.H. (d)	1	63	A	64
C3OZ 6551222-C	R.H.	1	65	B	63
C3OZ 6551223-C	L.H.	1	65	B	63
C3DZ 6351222-A	R.H.	1	63	C	63/64
C3DZ 6351223-A	L.H.	1	63	C	63/64
B9LB 5751222-B	R.H. (c)	1	57,75	D	60
B9LB 5751223-B	L.H. (c)	1	57,75	D	60
B9LB 6351222-A	R.H. (c)	1	63,65	D	60
B9LB 6351223-A	L.H. (c)	1	63,65	D	60
M 5397-B	Sealer	AR	a		
52720-S8	Screw-pan hd. cr. rec. -No. 8-15 x 3/8"	AR	a, c		
52726-S2	Screw-pan hd.cr.rec.tap.-No.8-15 x 1/2"	AR	d		

51224-5 REFER TO GROUP 513A16-7

51242-3 REFER TO GROUP 513A56-7

51269	BOW (FOLDING TOP) NO. 3				
PB9M 7651269-AP	In prime	1	76	A	60
C1AB 7651269-AP	In prime	1	76	A	61/62
C3AZ 7651269-A	In prime	1	76	A	63/64
C3DZ 7651269-A	In prime	1	76	C	63/64
BAK 6851269-AP	In prime (a)	1	68	D	60
C1VB 7451269-BP	In prime	1	74	D	61
C2VY 7451269-A		1	74	D	62/63
C4VY 7451269-A	In prime	1	74	D	64
34954-S	Washer-external tooth countersunk lock-1/4"	4	a		
52363-S	NS-screw-oval hd. cr. rec. -No. 14-10 x 3/4"	4	a		

51274	BOW (FOLDING TOP) NO. 2				
PB9M 7651274-AP	In prime	1	76	A	60
COAB 7651274-AP	In prime	1	76	A	61/62
C3AZ 7651274-A		1	76	A	63/64
C3DZ 7651274-A		1	76	C	63/64
BAK 6851274-AP	Steel - in prime (a)	1	68	D	60
C1VB 7451274-AP		1	74	D	61
C2VY 7451274-A		1	74	D	62/63
C4VY 7451274-A		1	74	D	64
34954-S	Washer-external tooth countersunk lock-1/4"	4	a		
52355-S	Screw-oval hd.cr.rec.-No.14-10 x 5/8"	4	a		

GROUP AND PART NUMBER	DESCRIPTION, SIZE, ETC.	NO. REQ'D	MODEL OR ENGINE CUBIC INCH DISPLACEMENT	VEHICLE CODE	YEAR 19____
51278	BOW (FOLDING TOP) NO. 4				
PB9M 7651278-AP	In prime - assembly includes R.H. and L.H. link assembly PB9M-7653174-5-A	1	76	A	60
C1AB 7651278-AP	In prime	1	76	A	61/62
C3AZ 7651278-B		1	76	A	63/64
C3DZ 7651278-A		1	76	C	63/64
C1VB 7451278-BP	In prime - use on vehicles built prior to 4-4-61	1	74	D	61
C1VY 7451278-CP	In prime - use on vehicles built after 4-3-61	1	74	D	61
C2VY 7451278-A		1	74	D	62/63
C4VY 7451278-A	(a)	1	74	D	64
	Attach bow to side rail rear 53138-9 with the following -				
72255-S8	Pin-grooved-3/16" x 1"	1	a		
377906-S13	Pin-oval hd. -7/16"	1	a		
513B00-1	RETAINER (FRONT SIDE RAIL WEATHERSTRIP)				
C4VY 53513B00-A	R.H. - rustless steel - 24-3/8" long (a)	1	53	D	64
C4VY 53513B01-A	L.H. - rustless steel - 24-3/8" long (a)	1	53	D	64
C4VY 74513B00-A	R.H. - rustless steel - 25-1/2" long	1	74	D	64
C4VY 74513B01-A	L.H. - rustless steel - 25-1/2" long	1	74	D	64
377948-S2	Screw-flat hd.-No.8-18 x 1/2"	3	a		
51302-3	LINK (FOLDING TOP NO. 2 BOW CONTROL)				
PB9M 7651302-AP	R.H. (a)	1	76	A	60
PB9M 7651303-AP	L.H. (a)	1	76	A	60
	Attach link to No. 2 bow with the following -				
34954-S13	Lockwasher-steel-ext. tooth countersunk-1/4"	4	a		
52931-S13	Screw-oval hd. cr. rec. tap.-1/4"-28 x 5/8"	4	a		
	Attach link to front side rail with the following -				
BAE 7650493-A	Bushing-nylon	2	a		
352146-S	Pin-roll-1/8" x 7/8"	2	a		
359222-S13	Pin-dual hd-5/16"	2	a		
	Attach link to center side rail with the following -				
BAE 7650493-A	Bushing-nylon	2	a		
352146-S	Pin-roll-1/8" x 7/8"	2	a		
359222-S13	Pin-dual hd.-5/16"	2	a		
513B02-3	RETAINER (ROOF SIDE RAIL FRONT WEATHERSTRIP) REAR				
C4VY 53513B02-A	R.H. - rustless steel - 21-9/32" long (a)	1	53	D	64
C4VY 53513B03-A	L.H. - rustless steel - 21-9/32" long (a)	1	53	D	64
377948-S2	Screw-flat hd.-No.8-18 x 1/2"	3	a		
513B08-9	GROMMET (ROOF SIDE RAIL WIRING OPENING) LOWER				
C4VY 53513B08-A	R.H. - poly vinyl	1	53	D	64
C4VY 53513B09-A	L.H. - poly vinyl	1	53	D	64
513A12-3	RAIL (ROOF SIDE) OUTER FRONT				
PB9M 5651218-A	R.H.	1	77	A	60
PB9M 5651219-A	L.H.	1	77	A	60
PB9M 5751218-A	R.H.	1	57,63	A	60
PB9M 5751219-A	L.H.	1	57,63	A	60
PB9M 5851218-A	R.H.	1	58	A	60
PB9M 5851219-A	L.H.	1	58	A	60
PB9M 6451218-A	R.H.	1	64	A	60
PB9M 6451219-A	L.H.	1	64	A	60

CONTINUED ON NEXT PAGE

GROUP AND PART NUMBER	DESCRIPTION, SIZE, ETC.	NO. REQ'D	MODEL OR ENGINE CUBIC INCH DISPLACEMENT	VEHICLE CODE	YEAR 19____
513A12-3	RAIL (ROOF SIDE) OUTER FRONT (CONTINUED)				
COAB 5851186-B	R. H.	1	54, 58	A	61
	Cut 9-1/4" from rear end - for model 62 also add cut-out to accomodate (2) door lock pillar and fill (4) door hinge pillar cut-out	1	54, 62	A	62
COAB 5851187-B	L. H.	1	54, 58	A	61
	Cut 9-1/4" from rear end - for model 62 also add cut-out to accomodate (2) door lock pillar and fill (4) door hinge pillar cut-out	1	54, 62	A	62
COAB 6451186-B	R. H.	1	62, 64	A	61
		1	54, 62	A	63/64
COAB 6451187-B	L. H.	1	62, 64	A	61
		1	54, 62	A	63/64
C1AZ 7151186-A	R.H.	1	71	A	61/64
C1AZ 7151187-A	L.H.	1	71	A	61/64
COAB 7551186-A	R.H. - for 1962 and 1964 cut 9-1/4" from rear end and seal unused holes	1	65, 75	A	61/64
COAB 7551187-A	L.H. - for 1962 and 1964 cut 9-1/4" from rear end and seal unused holes	1	65, 75	A	61/64
C3AZ 6351186-A	R. H.	1	63	A	63/64
C3AZ 6351187-A	L. H.	1	63	A	63/64
C4AZ 5751186-A	R.H.	1	57	A	64
C4AZ 5751187-A	L.H.	1	57	A	64
C2OB 54513A12-A	R.H. - for model 62 add 5/8" x 2-5/64" cut-out for reinforcement quarter panel lockside	1	54, 62	B	62/63
C2OB 54513A13-A	L.H. - for model 62 add 5/8" x 2-5/64" cut-out for reinforcement quarter panel lockside	1	54, 62	B	62/63
C3OZ 6551186-A	R. H.	1	65	B	63
C3OZ 6551187-A	L. H.	1	65	B	63
C3OZ 7151186-A	R. H.	1	71	B	63
C3OZ 7151187-A	L. H.	1	71	B	63
CODB 6451186-A	R. H. - use when dome lamp is located at roof front	1	54, 62	C	60/61
CODB 6451187-A	L. H. - use when dome lamp is located at roof front	1	54, 62	C	60/61
C1KB 71513A12-A	R.H.	1	59, 71	C	60/64
C1KB 71513A13-A	L.H.	1	59, 71	C	60/64
C1DB 58513A12-A	R.H. - use when dome lamp is located at roof center	1	54, 62	C	61/63
C1DB 58513A13-A	L. H. - use when dome lamp is located at roof center	1	54, 62	C	61/63
C3DZ 6351186-A	R. H.	1	63	C	63/64
C3DZ 6351187-A	L. H.	1	63	C	63/64
C3DZ 5451186-A		1	54, 62	C	64
C3DZ 5451187-A		1	54, 62	C	64
COLB 6351186-A	R.H.	1	All except 68	D	60
COLB 6351187-A	L.H.	1	All except 68	D	60
C1VY 57513A12-A	R. H.	1	53	D	61/63
C1VY 57513A13-A	L. H.	1	53	D	61/63
C4VY 53513A12-A	R.H.	1	53	D	64
C4VY 53513A13-A	L.H.	1	53	D	64
513A16-7	RAIL (ROOF SIDE) OUTER REAR				
PB9M 5651216-A	R.H.	1	77	A	60
PB9M 5651217-A	L.H.	1	77	A	60
COMB 5751216-B	R.H.	1	57	A	60
COMB 5751217-B	L.H.	1	57	A	60

CONTINUED ON NEXT PAGE

GROUP AND PART NUMBER	DESCRIPTION, SIZE, ETC.	NO. REQ'D	MODEL OR ENGINE CUBIC INCH DISPLACEMENT	VEHICLE CODE	YEAR 19.____
513A16-7	RAIL (ROOF SIDE) OUTER REAR (CONTINUED)				
COMB 5851224-A	R.H.	1	58	A	60
COMB 5851225-A	L.H.	1	58	A	60
COMB 6351216-A	R.H.	1	63	A	60
COMB 6351217-A	L.H.	1	63	A	60
COMB 6451224-A	R.H.	1	64	A	60
COMB 6451225-A	L.H.	1	64	A	60
C1AB 58513A16-B	R.H.	1	58	A	61
C1AB 58513A17-B	L.H.	1	58	A	61
C1AB 62513A16-C	R.H.	1	54, 62	A	61
C1AB 62513A17-C	L.H.	1	54, 62	A	61
C1AB 64513A16-B	R.H.	1	64	A	61
C1AB 64513A17-B	L.H.	1	64	A	61
C1AB 75513A16-C	R.H.	1	65, 75	A	61
C1AB 75513A17-C	L.H.	1	65.75	A	61
C2AZ 6251216-A	R.H.	1	54, 62	A	62
C2AZ 6251217-A	L.H.	1	54, 62	A	62
C2AZ 7551216-A	R.H.	1	65, 75	A	62
C2AZ 7551217-A	L.H.	1	65, 75	A	62
C3MY 54513A16-A	R.H.	1	54	A	63
C3MY 54513A17-A	L.H.	1	54	A	63
C3MY 62513A16-A	R.H.	1	62	A	63
C3MY 62513A17-A	L.H.	1	62	A	63
C3MY 75513A16-A	R.H. - for model 65 trim lower end	1	65, 75	A	63
C3MY 75513A17-A	L.H. - for model 65 trim lower end	1	65, 75	A	63
C3AZ 6351216-A	R.H.	1	63	A	63/64
C3AZ 6351217-A	L.H.	1	63	A	63/64
C4MY 54513A16-A	R.H.	1	54	A	64
C4MY 54513A17-A	L.H.	1	54	A	64
C4MY 57513A16-A	R.H.	1	57	A	64
C4MY 57513A17-A	L.H.	1	57	A	64
C4MY 62513A16-A	R.H.	1	62	A	64
C4MY 62513A17-A	L.H.	1	62	A	64
C4MY 75513A16-A	R.H. - for model 65 trim lower end	1	65, 75	A	64
C4MY 75513A17-A	L.H. - for model 65 trim lower end	1	65, 75	A	64
C3OZ 6251216-A	R.H.	1	All	B	62
		1	54, 62	B	63
C3OZ 6251217-A	L.H.	1	All	B	62
		1	54, 62	B	63
C3OZ 6551216-B	R.H.	1	65	B	63
C3OZ 6551217-B	L.H.	1	65	B	63
C3OZ 7151216-A	R.H.	1	71	B	63
C3OZ 7151217-A	L.H.	1	71	B	63
C2GB 62513A16-A	R.H.	1	54, 62	C	60&62/63
C2GB 62513A17-A	L.H.	1	54, 62	C	60&62/63
CODB 59513A16-A	R.H.	1	59, 71	C	60/64
CODB 59513A17-A	L.H.	1	59, 71	C	60/64
C1GB 62513A16-A	R.H.	1	54, 62	C	61
C1GB 62513A17-A	L.H.	1	54, 62	C	61
C3GY 63513A16-A	R.H.	1	63	C	63
C3GY 63513A17-A	L.H.	1	63	C	63
C4GY 62513A16-A	R.H.	1	54, 62	C	64
C4GY 62513A17-A	L.H.	1	54, 62	C	64
C4DZ 6351216-A	R.H.	1	63	C	64
C4DZ 6351217-A	L.H.	1	63	C	64

CONTINUED ON NEXT PAGE

GROUP AND PART NUMBER	DESCRIPTION, SIZE, ETC.	NO. REQ'D	MODEL OR ENGINE CUBIC INCH DISPLACEMENT	VEHICLE CODE	YEAR 19——
513A16-7	RAIL (ROOF SIDE) OUTER REAR (CONTINUED)				
COLB 6351224-A	R.H.	1	53,57,63	D	60
COLB 6351225-A	L.H.	1	53,57,63	D	60
COLB 6551224-A	R.H.	1	54,65,75	D	60
COLB 6551225-A	L.H.	1	54,65,75	D	60
C1VB 57513A22-A	R. H.	1	53	D	61/63
C1VB 57513A23-A	L. H.	1	53	D	61/63
C4VY 53513A22-A	R.H.	1	53	D	64
C4VY 53513A23-A	L.H.	1	53	D	64
513B16-7	WEATHERSTRIP ASSEMBLY (ROOF SIDE RAIL) FRONT				
C1VB 53513B16-E	R. H. (a)	1	53	D	61
C1VB 53513B17-E	L. H. (a)	1	53	D	61
C2VY 53513B16-A	R. H. (a)	1	53	D	62/63
C2VY 53513B17-A	L. H. (a)	1	53	D	62/63
C4VY 53513B16-A	R.H.	1	53	D	64
C4VY 53513B17-A	L.H.	1	53	D	64
372010-S	Screw-truss hd.cr.rec.tap.-No.8-18	6	a		
513A18-21	RAIL (ROOF SIDE) INNER REAR				
PB9M 5651212-A	R.H.	1	77	A	60
PB9M 5651213-A	L.H.	1	77	A	60
COMB 5751212-B	R.H. - lower	1	57	A	60
COMB 5751213-B	L.H. - lower	1	57	A	60
COMB 5851214-A	R.H.	1	58	A	60
COMB 5851215-A	L.H.	1	58	A	60
COMB 6351212-A	R.H. - lower	1	63	A	60
COMB 6351213-A	L.H. - lower	1	63	A	60
COMB 6451214-A	R.H.	1	64	A	60
COMB 6451215-A	L.H.	1	64	A	60
C1AB 54513A18-C	R. H. - lower	1	54	A	61
C1AB 54513A19-C	L. H. - lower	1	54	A	61
C1AB 58513A42-A	R. H. - lower	1	58	A	61
C1AB 58513A43-A	L. H. - lower	1	58	A	61
C1AB 62513A18-C	R. H. - lower	1	62	A	61
C1AB 62513A19-C	L. H. - lower	1	62	A	61
C1AB 64513A42-A	R. H. - lower	1	64	A	61
C1AB 64513A43-A	L. H. - lower	1	64	A	61
C1AB 75513A18-C	R. H. - lower	1	65, 75	A	61
C1AB 75513A19-C	L. H. - lower	1	65, 75	A	61
C1AB 59513A18-A	R.H.	1	71	A	61/64
C1AB 59513A19-A	L.H.	1	71	A	61/64
C2AB 54513A18-A	R. H.	1	54	A	62
C2AB 54513A19-A	L. H.	1	54	A	62
C2AB 62513A18-A	R. H.	1	62	A	62
C2AB 62513A19-A	L. H.	1	62	A	62
C2AB 65513A18-A	R. H.	1	65	A	62
C2AB 65513A19-A	L. H.	1	65	A	62
C2AB 75513A18-A	R. H.	1	75	A	62
C2AB 75513A19-A	L. H.	1	75	A	62
C3AZ 6351212-A	R. H. - lower	1	63	A	63
C3AZ 6351213-A	L. H. - lower	1	63	A	63
C3MY 62513A18-A	R.H.	1	All except 57, 63, 71, 76	A	63/64
C3MY 62513A19-A	L.H.	1	All except 57, 63, 71, 76	A	63/64

CONTINUED ON NEXT PAGE

GROUP AND PART NUMBER	DESCRIPTION, SIZE, ETC.	NO. REQ'D	MODEL OR ENGINE CUBIC INCH DISPLACEMENT	VEHICLE CODE	YEAR 19____
513A18-21	RAIL (ROOF SIDE) INNER REAR (CONTINUED)				
C4AZ 5751212-A	R.H. - lower	1	57	A	64
C4AZ 5751213-A	L.H. - lower	1	57	A	64
C4AZ 6351212-A	R.H. - lower	1	63	A	64
C4AZ 6351213-A	L.H. - lower	1	63	A	64
C2OZ 6251212-A	R.H. Lower	1 1	All 54,62	B B	62 63
C2OZ 6251213-A	L.H. Lower	1 1	All 54,62	B B	62 63
C3OZ 6551212-A	R.H. - lower - use on vehicles built prior to 6-12-63	1	65	B	63
C3OZ 6551213-A	L.H. - lower - use on vehicles built prior to 6-12-63	1	65	B	63
C3OZ 6551212-B	R.H. - lower - use on vehicles built after 6-11-63	1	65	B	63
C3OZ 6551213-B	L.H. - lower - use on vehicles built after 6-11-63	1	65	B	63
C3OZ 71513A18-A	R.H.	1	71	B	63
C3OZ 71513A19-A	L.H.	1	71	B	63
C1KB 62513A42-C	R.H.	1	54,62	C	60/63
C1KB 62513A43-C	L.H.	1	54,62	C	60/63
C1DB 59513A18-A	R.H.	1	59,71	C	60/64
C1DB 59513A19-A	L.H.	1	59,71	C	60/64
C3GY 63513A18-A	R.H.	1	63	C	63/64
C3GY 63513A19-A	L.H.	1	63	C	63/64
C4GY 62513A42-A	R.H.	1	54,62	C	64
C4GY 62513A43-A	L.H.	1	54,62	C	64
COLB 5751214-B	R.H.	1	53,54,57,75	D	60
COLB 5751215-B	L.H.	1	53,54,57,75	D	60
COLB 6351212-B	R.H.	1	63,65	D	60
COLB 6351213-B	L.H.	1	63,65	D	60
C1VY 57513A20-B	R.H.	1	53	D	61/63
C1VY 57513A21-B	L.H.	1	53	D	61/63
C4VY 53513A20-A	R.H.	1	53	D	64
C4VY 53513A21-A	L.H.	1	53	D	64
513A22-3	REFER TO GROUP 513A16-7				
513B24-5	RAIL (ROOF SIDE INNER) REAR UPPER				
PB9M 5751618-A	R.H.	1	57,63	A	60
PB9M 5751619-A	L.H.	1	57,63	A	60
COAB 6251618-A	R.H.	1	54,62	A	61
COAB 6251619-A	L.H.	1	54,62	A	61
COAB 6451618-A	R.H.	1	58,64	A	61
COAB 6451619-A	L.H.	1	58,64	A	61
COAB 7551618-A	R.H.	1	65,75	A	61
COAB 7551619-A	L.H.	1	65,75	A	61
C2AB 62513B24-A	R.H.	1	54,62	A	62
C2AB 62513B25-A	L.H.	1	54,62	A	62
C2AB 75513B24-A	R.H.	1	65,75	A	62
C2AB 75513B25-A	L.H.	1	65,75	A	62
C3MY 54513B24-A	R.H.	1	54	A	63
C3MY 54513B25-A	L.H.	1	54	A	63

CONTINUED ON NEXT PAGE

GROUP AND PART NUMBER	DESCRIPTION, SIZE, ETC.	NO. REQ'D	MODEL OR ENGINE CUBIC INCH DISPLACEMENT	VEHICLE CODE	YEAR 19____
513B24-5	RAIL (ROOF SIDE INNER) REAR UPPER (CONTINUED)				
C3MY 62513B24-A	R.H.	1	62	A	63
C3MY 62513B25-A	L.H.	1	62	A	63
C3MY 75513B24-A	R.H.	1	65, 75	A	63
C3MY 75513B25-A	L.H.	1	65, 75	A	63
C3AZ 6351618-A	R.H.	1	63	A	63/64
C3AZ 6351619-A	L.H.	1	63	A	63/64
C4MY 54513B24-A	R.H.	1	54	A	64
C4MY 54513B25-A	L.H.	1	54	A	64
C4AZ 57513B24-A	R.H.	1	57	A	64
C4AZ 57513B25-A	L.H.	1	57	A	64
C4MY 62513B24-A	R.H.	1	62	A	64
C4MY 62513B25-A	L.H.	1	62	A	64
C4MY 65513B24-A	R.H.	1	65	A	64
C4MY 65513B25-A	L.H.	1	65	A	64
C4MY 75513B24-A	R.H.	1	75	A	64
C4MY 75513B25-A	L.H.	1	75	A	64
C2OZ 6251618-A	R.H.	1	54, 62	B	62/63
C2OZ 6251619-A	L.H.	1	54, 62	B	62/63
C3OZ 6551618-A	R.H. - use on vehicles built prior to 6-12-63	1	65	B	63
C3OZ 6551619-A	L.H. - use on vehicles built prior to 6-12-63	1	65	B	63
C3OZ 6551618-B	R.H. - use on vehicles built after 6-11-63	1	65	B	63
C3OZ 6551619-B	L.H. - use on vehicles built after 6-11-63	1	65	B	63
C1KY 62513A26-A	R.H.	1	54, 62	C	60/63
C1KY 62513A27-A	L.H.	1	54, 62	C	60/63
C3DZ 6351618-A	R.H.	1	63	C	63/64
C3DZ 6351619-A	L.H.	1	63	C	63/64
C2DZ 6251618-A	R.H.	1	54, 62	C	64
C2DZ 6251619-A	L.H.	1	54, 62	C	64
51325	WEATHERSTRIP (FOLDING TOP NO.1 BOW) REAR				
B9MB 7651330-B	58" long (a)	1	76	A	60
COAB 7651325-A	Rubber - 53-29/32" long	1	76	A	61/62
C3AZ 7651325-A		1	76	A	63/64
C3DZ 7651325-A		1	76	C	63/64
BAK 6851330-B	58" long (b)	1	68	D	60
51855-S	Screw-pan hd. cr. rec. tap. -No. 8-32 x 3/8"	7	b		
358735-S	Screw-washer hd. cr. rec. -No. 8-15	11	a		
513A26-7	REFER TO GROUP 513B24-5				
51330	REFER TO GROUP 51325				
513A30-1	REFER TO GROUP 513A38-9				
513A34-5	EXTENSION (ROOF SIDE INNER REAR RAIL)				
C2AB 71513A34-A	R.H.	1	71	A	61/64
C2AZ 71513A35-A	L.H.	1	71	A	61/63
C2AB 71513A35-A	L.H.	1	71	A	64
C2DZ 59513A34-A	R.H.	1	59, 71	C	60/64
C2DZ 59513A35-A	L.H.	1	59, 71	C	60/64
513B34-5	REINFORCEMENT (ROOF SIDE OUTER REAR RAIL)				
C4AZ 57513B34-A	R.H.	1	57	A	64
C4AZ 57513B35-A	L.H.	1	57	A	64

GROUP AND PART NUMBER	DESCRIPTION, SIZE, ETC.	NO. REQ'D	MODEL OR ENGINE CUBIC INCH DISPLACEMENT	VEHICLE CODE	YEAR 19___
513A36-7	RAIL (ROOF SIDE) INNER - CENTER UPPER				
C1AB 59513A36-A	R.H.	1	71	A	61/64
C1AB 59513A37-A	L.H.	1	71	A	61/64
513B36-7	RETAINER (ROOF SIDE WEATHERSTRIP CAP)				
C3AZ 63513B36-B	R.H.	1	63	A	63/64
C3AZ 63513B37-A	L.H. - use on vehicles built prior to 4-1-63	1	63	A	63
C3AZ 63513B37-B	L.H. - use on vehicles built after 3-31-63	1	63	A	63/64
C4AZ 57513B36-A	R.H. - use on vehicles built prior to 3-14-64	1	57	A	64
C4AZ 57513B37-A	L.H. - use on vehicles built prior to 3-14-64	1	57	A	64
C3DZ 63513B36-A	R.H.	1	63	C	63/64
C3DZ 63513B37-A	L.H.	1	63	C	63/64
51338	WEATHERSTRIP (FOLDING TOP NO. 1 BOW) FRONT				
B9MB 7651338-A	58" long	1	76	A	60
C3AZ 7651338-A	BLACK	1	76	A C	63/64
C3AZ 7651338-B	WHITE	1	76	A C	63/64
C3AZ 7651338-C	BLUE	1	76	A C	63/64
513A38-9	RAIL (ROOF SIDE) INNER FRONT				
PB9M 5651184-A	R.H.	1	77	A	60
PB9M 5651185-A	L.H.	1	77	A	60
PB9M 5751184-A	R.H.	1	57,63	A	60
PB9M 5751185-A	L.H.	1	57,63	A	60
COMB 5851180-A	R.H.	1	58	A	60
COMB 5851181-A	L.H.	1	58	A	60
COMB 6451180-A	R.H.	1	64	A	60
COMB 6451181-A	L.H.	1	64	A	60
COAB 6451180-A	R.H.	1	62, 64	A	61
COAB 6451181-A	L.H.	1	62, 64	A	61
COAB 5751180-A	R.H. - for 1962 application cut 9-1/4" from rear end	1	65, 75	A	61/62
COAB 5751181-A	L.H. - for 1962 application cut 9-1/4" from rear end	1	65, 75	A	61/62
COAB 5851180-A	R.H. Cut 9-1/4" from rear end - for model 62 also add cut-out for (2) door lock pillar	1 1	54, 58 54, 62	A A	61 62
COAB 5851181-A	L.H. Cut - 9-1/4" from rear end - for model 62 also add cut-out for (2) door lock pillar	1 1	54, 58 54, 62	A A	61 62
COAZ 7151180-A	R.H.	1	71	A	61/64
COAZ 7151181-A	L.H.	1	71	A	61/64
C3MY 54513A38-A	R.H.	1	54, 62	A	63/64
C3MY 54513A39-A	L.H.	1	54, 62	A	63/64
C3AZ 6351180-A	R.H.	1	63	A	63/64
C3AZ 6351181-A	L.H.	1	63	A	63/64
C3MY 65513A38-A	R.H.	1	65, 75	A	63/64
C3MY 65513A39-A	L.H.	1	65, 75	A	63/64
C4AZ 5751180-A	R.H.	1	57	A	64
C4AZ 5751181-A	L.H.	1	57	A	64
C2OZ 6251180-A	R.H.	1	54, 62	B	62/63
C2OZ 6251181-A	L.H.	1	54, 62	B	62/63
C3OZ 6551180-A	R.H. - use on vehicles built prior to 6-12-63	1	65	B	63
C3OZ 6551180-B	R.H. - use on vehicles built after 6-11-63	1	65	B	63
C3OZ 6551181-B	L.H.	1	65	B	63
C3OZ 7151180-A	R.H.	1	71	B	63
C3OZ 7151181-A	L.H.	1	71	B	63

CONTINUED ON NEXT PAGE

GROUP AND PART NUMBER	DESCRIPTION, SIZE, ETC.	NO. REQ'D	MODEL OR ENGINE CUBIC INCH DISPLACEMENT	VEHICLE CODE	YEAR 19____
513A38-9	RAIL (ROOF SIDE) INNER FRONT (CONTINUED)				
CODZ 6451180-A	R. H.	1	54, 62	C	60/63
CODZ 6451181-A	L. H.	1	54, 62	C	60/63
C1DB 59513A38-B	R. H.	1	59, 71	C	60/64
C1DB 59513A39-B	L. H.	1	59, 71	C	60/64
C3DZ 6351180-A	R. H.	1	63	C	63/64
C3DZ 6351181-A	L. H.	1	63	C	63/64
C2DZ 6251180-A	R. H.	1	54, 62	C	64
C2DZ 6251181-A	L. H.	1	54, 62	C	64
BAK 5751184-B	R.H.	1	All except 68	D	60
BAK 5751185-B	L.H.	1	All except 68	D	60
C1VB 57513A30-A	R. H.	1	53	D	61/63
C1VB 57513A31-A	L. H.	1	53	D	61/63
C4VY 53513A30-A	R. H.	1	53	D	64
C4VY 53513A31-A	L. H.	1	53	D	64
513A42-3	REFER TO GROUP 513A18-21				
513B42-3	MOULDING (ROOF SIDE RAIL) INNER				
C3AZ 63513B42-A	R. H. (Δ)	1	63	A	63
C4AZ 63513B43-A	L. H. (Δ)	1	63	A	63
C4AZ 57513B42-A	R. H. (a)	1	57C, F	A	64
C4AZ 57513B43-A	L. H. (a)	1	57C, F	A	64
C4AZ 63513B42-B	R. H. (Δ)	1	63	A	64
C4AZ 63513B43-B	L. H. (Δ)	1	63	A	64
Δ Package also includes - (5) 53060-S13 screw-oval hd. self-tap. -No. 8-15 x 1"					
52726-S8	Screw-pan hd. cr. rec. tap. -No. 8-15 x 1/2"	5	a		
513A44-5	EXTENSION (ROOF OUTER REAR RAIL TO WHEELHOUSE)				
C1AB 64513A44-A	R. H.	1	58, 64	A	61
C1AB 64513A45-A	L. H.	1	58, 64	A	61
C2AZ 62513A44-A	R. H.	1	All except 63, 71, 76	A	62
C2AZ 62513A45-A	L. H.	1	All except 63, 71, 76	A	62
C3AZ 63513A44-A	R. H.	1	63	A	63
C3AZ 63513A45-A	L. H.	1	63	A	63
C4AZ 63513A44-A	R.H.	1	63	A	64
C4AZ 63513A45-A	L.H.	1	63	A	64
C2OZ 62513A44-A	R. H.	1	54, 62	B	62/63
C2OZ 62513A45-A	L. H.	1	54, 62	B	62/63
C3OZ 65513A44-A	R. H.	1	65	B	63
C3OZ 65513A45-A	L. H.	1	65	B	63
C3GY 63513A44-A	R. H.	1	63	C	63/64
C3GY 63513A45-A	L. H.	1	63	C	63/64
513A46-7	REFER TO GROUP 51206-7				
513B48-9	RETAINER (ROOF SIDE RAIL) REAR LOWER				
C4VY 53513B48-A	R.H. - chrome finish - 17-1/4" long (a)	1	53	D	64
C4VY 53513B49-B	L.H. - chrome finish - 17-1/4" long (a)	1	53	D	64
377948-S2	Screw-flat hd. -No. 8-18 x 1/2"	3	a		
513A50-1	RAIL (ROOF SIDE) INNER - CENTER LOWER				
C1AB 71513A50-A	R.H.	1	71	A	61/64
C1AB 71513A51-A	L.H.	1	71	A	61/64

GROUP AND PART NUMBER	DESCRIPTION, SIZE, ETC.	NO. REQ'D	MODEL OR ENGINE CUBIC INCH DISPLACEMENT	VEHICLE CODE	YEAR 19____
51352-3	RETAINER (FOLDING TOP NO.1 BOW REAR WEATHERSTRIP)				
COAB 7651352-A	R. H.	1	76	A	61/62
COAB 7651353-A	L. H.	1	76	A	61/62
C3AZ 7651352-A	(a)	1	76A, B, C	A	63/64
C3DZ 7651352-A	R. H. (a)	1	76	C	63/64
C3DZ 7651353-A	L. H. (a)	1	76	C	63/64
52726-S13	Screw-pan hd. cr. rec. tap. -No. 8-15 x 1/2"	6	a		
513A56-7	BRACKET (ROOF SIDE REAR OUTER RAIL TO WHEELHOUSE)				
BAK 6351242-A	R.H.	1	65	D	60
BAK 6351243-A	L.H.	1	65	D	60
C1VY 57513A56-A	R. H.	1	53	D	61/63
C1VY 57513A57-A	L. H.	1	53	D	61/63
C4VY 53513A56-A	R.H.	1	53	D	64
C4VY 53513A57-A	L.H.	1	53	D	64
513A62-3	EXTENSION (FRONT ROOF RAIL) OUTER				
C1AB 59513A62-A	R.H.	1	71	A	61/64
C1AB 59513A63-A	L.H.	1	71	A	61/64
513A66-7	RETAINER (ROOF SIDE RAIL WEATHERSTRIP)				
C3AZ 63513A66-B	R.H. - with daub of YELLOW paint	1	63	A	63/64
C3AZ 63513A67-B	L.H. - with daub of YELLOW paint	1	63	A	63/64
C4AZ 57513A66-B	R. H.	1	57	A	64
C4AZ 57513A67-B	L. H.	1	57	A	64
C3DZ 63513A66-A	R. H.	1	63	C	63/64
C3DZ 63513A67-A	L. H.	1	63	C	63/64
513A68-9	WEATHERSTRIP ASSEMBLY (ROOF SIDE RAIL) REAR				
C1VY 53513A68-E	R. H. (a)	1	53	D	61/63
C1VY 53513A69-E	L. H. (a)	1	53	D	61/63
C4VY 53513A68-A	R. H. - use on vehicles built prior to 5-4-64	1	53	D	64
C4VY 53513A69-A	L. H. - use on vehicles built prior to 5-4-64	1	53	D	64
C4VY 53513A68-B	R. H. - use on vehicles built after 5-3-64	1	53	D	64
C4VY 53513A69-B	L. H. - use on vehicles built after 5-3-64	1	53	D	64
372010-S	Screw-truss hd. cr. rec. tap. -No. 8-18	8	a		
51384	REFER TO GROUP 517A70				
513A86-7	EXTENSION ASSEMBLY (ROOF SIDE REAR RAIL TO WHEELHOUSE)				
C1AB 65513A86-B	R. H.	1	54, 62, 65, 75	A	61
C1AB 65513A87-B	L. H.	1	54, 62, 65, 75	A	61
C3MY 62513A86-A	R. H.	1	54, 62, 65, 75	A	63/64
C3MY 62513A87-A	L. H.	1	54, 62, 65, 75	A	63/64
C4AZ 57513A86-A	R.H.	1	57	A	64
C4AZ 57513A87-A	L.H.	1	57	A	64
514A00-1	TIP (REAR BOW BINDING)				
COAB 76514A00-B	R. H.	1	76	A	61/62
	Use at belt end	1	74	D	61/64
COAB 76514A01-B	L. H.	1	76	A	61/62
	Use at belt end	1	74	D	61/64
C3AZ 76514A00-A		2	76	A	63
	Use at rear bow binding	2	74, 76	A C D	64

GROUP AND PART NUMBER	DESCRIPTION, SIZE, ETC.	NO. REQ'D	MODEL OR ENGINE CUBIC INCH DISPLACEMENT	VEHICLE CODE	YEAR 19____
514A02-3	RAIL (FOLDING TOP) SIDE REAR - INTERMEDIATE				
C1VY 74514A02-AP	R.H. - in prime (a)	1	74	D	61
C1VY 74514A03-AP	L.H. - in prime (a)	1	74	D	61
C2VY 74514A02-A	R.H.	1	74	D	62/63
C2VY 74514A03-A	L.H.	1	74	D	62/63
C4VY 74514A02-A	R.H. (b)	1	74	D	64
C4VY 74514A03-A	L.H. (b)	1	74	D	64
	Attach side rear intermediate rail to side rear rail with the following -				
305076-S	Pin-spring-1/8" x 1"	1	a		
373886-S13	Pin-oval hd.-7/16" x 1-1/2"	1	a		
	Attach rail side rear intermediate to rail side rear 53138-9 with the following -				
305078-S	Pin-spring-3/16" x 1"	1	b		
377908-S13	Pin-oval hd. -7/16" x 1-1/2"	1	b		
51406-7	BOW (FOLDING TOP) REAR OUTER - LESS GLASS				
BAK 6851406-AP	R.H. - in prime	1	68	D	60
BAK 6851407-AP	L.H. - in prime	1	68	D	60
514A14	BRACKET (FOLDING TOP NO. 1 BOW MOTOR MOUNTING)				
C1VB 74514A14-A		1	74	D	61/64
51416	MOULDING (FOLDING TOP REAR BOW OUTSIDE) CENTER				
BAK 6851416-A	Rustless steel - 47-1/4" long (a)	1	68	D	60
52338-S	Screw-oval hd. cr. rec. -No. 8-15	3	a		
514A26	RETAINER (FOLDING TOP NO.1 BOW WEATHERSTRIP)				
C1VB 74514A26-A	Steel - length 47-13/32" with (11) countersunk holes (a)	1	74	D	61/63
C4VY 74514A26-A	Steel - 52" long	1	74	D	64
51055-S8	Screw-flat hd. cr. rec. tap. -No. 10-32 x 3/8"	11	a		
514A28	WEATHERSTRIP (FOLDING TOP NO. 1 BOW)				
C1VY 74514A28-C	Rubber	1	74	D	61/63
C4VY 74514A28-A	Rubber	1	74	D	64
514A32-3	PLATE (FOLDING TOP NO.1 BOW SCUFF)				
C1VB 74514A32-A	R.H. - chrome finish	1	74	D	61/63
C1VB 74514A33-A	L.H. - chrome finish	1	74	D	61/63
C4VY 74514A32-A	R.H. - rustless steel - approximately 1" x 1" with holes 5/32" diameter	1	74	D	64
C4VY 74514A33-A	L.H. - rustless steel - approximately 1" x 1" with holes 5/32" diameter	1	74	D	64
514A34	PANEL (FOLDING TOP NO.1 BOW) INNER				
C1VB 74514A34-AP	Steel - in prime	1	74	D	61/63
C4VY 74514A34-A	Steel - in prime	1	74	D	64
51440-1	WEATHERSTRIP (ROOF SIDE RAIL) FRONT				
B9LB 5351440-A	R.H. (a)	1	53,54	D	60
B9LB 5351441-A	L.H. (a)	1	53,54	D	60
52720-S	Screw-pan hd.cr.rec.tap.-No.8-15 x 3/8"	6	a		
514A42	GEAR & SHAFT (FOLDING TOP NO.1 BOW SECTOR)				
C1VB 74514A42-A		1	74	D	61/64

GROUP AND PART NUMBER	DESCRIPTION, SIZE, ETC.	NO. REQ'D	MODEL OR ENGINE CUBIC INCH DISPLACEMENT	VEHICLE CODE	YEAR 19____
514A48-9	GUIDE (FOLDING TOP NO.1 BOW LOCKING HOOK)				
C1VB 74514A48-A	R. H. - chrome finish	1	74	D	61/63
C1VB 74514A49-A	L. H. - chrome finish	1	74	D	61/63
C4VY 74514A48-A	R.H. - chrome finish	1	74	D	64
C4VY 74514A49-A	L.H. - chrome finish	1	74	D	64
514A58	COUPLING (FOLDING TOP NO. 1 BOW DRIVE)				
C1VB 74514A58-A	Steel	1	74	D	61/64
514A62	LOCK (FOLDING TOP NO.1 BOW) LESS MOTOR				
C1VB 74514A62-A		1	74	D	61/64
514A66	BUMPER ASSEMBLY (FOLDING TOP NO.1 BOW LOCK)				
C1VB 74514A66-A	Use on vehicles built prior to 12-1-60	1	74	D	61
C1VB 74514A66-B	Use on vehicles built after 11-30-60	1	74	D	61/64
51468-9	WEATHERSTRIP (ROOF SIDE RAIL) REAR				
B9LB 5351468-A	R.H. (a)	1	53,54	D	60
B9LB 5351469-A	L.H. (a)	1	53,54	D	60
52720-S	Screw-pan hd.cr.rec.tap.-No.8-15 x 3/8"	8	a		
51470-1	RETAINER (ROOF SIDE RAIL REAR UPPER WEATHERSTRIP)				
C4VY 5351470-A	R.H. - rustless steel (a)	1	53	D	64
C4VY 5351471-A	L.H. - rustless steel (a)	1	53	D	64
377948-S2	Screw-flat hd. -No. 8-18 x 1/2"	3	a		
51476-7	MOULDING (FOLDING TOP REAR BOW OUTSIDE) SIDE				
BAK 6851476-A	R.H. - chrome finish	1	68	D	60
BAK 6851477-A	L.H. - chrome finish	1	68	D	60
514A76	FILLER (FOLDING TOP BOW)				
C4VY 74514A76-A		2	74	D	64
51496	BRACKET (DOME LAMP MOUNTING)				
C2MY 5451496-A		1	54B, 65B, 75B	A	62
C1DB 6451496-B	Use on vehicles built prior to 12-16-60	1	All	C	61
51505	DEFLECTOR ASSEMBLY (FOLDING TOP NO. 1 BOW-WATER)				
B9LB 6851505-A	Rubber - 56-9/32" long	1	68	D	60
51522-3	REINFORCEMENT (FOLDING TOP REAR BOW TRACK)				
BAK 6851522-A	R.H.	1	68	D	60
BAK 6851523-A	L.H.	1	68	D	60
51556-7	WEATHERSTRIP (FOLDING TOP NO.4 BOW TO QUARTER PANEL)				
BAK 6851556-A	R.H.	1	68	D	60
BAK 6851557-A	L.H.	1	68	D	60

GROUP AND PART NUMBER	DESCRIPTION, SIZE, ETC.	NO. REQ'D	MODEL OR ENGINE CUBIC INCH DISPLACEMENT	VEHICLE CODE	YEAR 19____
51562-3	WEATHERSTRIP (FOLDING TOP SIDE RAIL) FRONT				
PB9M 7651562-A	R.H. - 30-23/32" long (a)	1	76	A	60
PB9M 7651563-A	L.H. - 30-23/32" long (a)	1	76	A	60
COAB 7651562-B	R.H. (b)	1	76	A	61/62
COAB 7651563-B	L.H (b)	1	76	A	61/62
C3AZ 7651562-A	R.H. (d,e)	1	76	A	63/64
C3AZ 7651563-A	L.H. (d,e)	1	76	A	63/64
C3DZ 7651562-A	R.H. (d)	1	76	C	63
	(f)	1	76	C	64
C3DZ 7651563-A	L.H. (d)	1	76	C	63
	(f)	1	76	C	64
BAK 6851562-A	R.H. - rubber - 21-3/4" long - reinforced with steel (c)	1	68	D	60
BAK 6851563-A	L.H. - rubber - 21-3/4" long - reinforced with steel (c)	1	68	D	60
34079-S	Nut-hex. hd.-cold punched-No. 10-32	AR	a, c		
34176-S8	Nut	1	b		
34903-S	Washer-internal tooth lock-No. 10	AR	a, c		
44713-S	Washer-flat-No. 10	AR	a, c		
51855-S	Screw-pan hd. cr. rec. tap. No. 8-32 x 3/8"	4	c		
52726-S8	Screw-pan hd. cr. rec. tap. -No. 8-15 x 1/2"	AR	b, d, e		
351320-S8	NS-washer-special flat	3	f		
353014-S	Bolt-special hd. -No. 10-32 x 7/16"	AR	a, b, c, d, e, f		
357903-S	Screw-washer-hex. hd. cr. rec. -No. 8-15	1	a		
373855-S8	Nut	3	b, d, f		
377686-S8	Nut-tee-No. 10-32	3	e		
51564-5	WEATHERSTRIP (FOLDING TOP SIDE RAIL) CENTER				
PB9M 7651564-A	R.H. - 14-3/4" long (a)	1	76	A	60
PB9M 7651565-A	L.H. - 14-3/4" long (a)	1	76	A	60
COAB 7651564-A	R.H. (b)	1	76	A	61/62
COAB 7651565-A	L.H. (b)	1	76	A	61/62
C3AZ 7651564-A	R.H. (c,d)	1	76	A	63/64
C3AZ 7651565-A	L.H. (c,d)	1	76	A	63/64
C3DZ 7651564-A	R.H. (e)	1	76	C	63/64
C3DZ 7651565-A	L.H. (e)	1	76	C	63/64
BAK 6851564-A	R.H. - rubber - 12-11/16" long (a)	1	68	D	60
BAK 6851565-A	L.H. - rubber - 12-11/16" long (a)	1	68	D	60
34079-S	Nut-hex. hd. -cold punched-No. 10-32	AR	a		
34903-S	Washer-internal tooth lock-No. 10	AR	a		
44713-S	Washer-flat-No. 10	AR	a		
351320-S8	NS-washer-special flat	3	e		
353014-S8	Bolt-special hd. -No. 10-32	AR	a, b, c, d, e		
373855-S8	Nut	3	b, c, e		
377686-S8	Nut-tee-No. 10-32	4	d		
51566-7	WEATHERSTRIP (FOLDING TOP SIDE RAIL) REAR				
PB9M 7651566-A	R.H. - 16-1/2" long (a)	1	76	A	60
PB9M 7651567-A	L.H. - 16-1/2" long (a)	1	76	A	60
COAB 7651566-A	R.H. (b)	1	76	A	61/62
COAB 7651567-A	L.H. (b)	1	76	A	61/62
C3AZ 7651566-A	R.H. (c,d)	1	76	A	63/64
C3AZ 7651567-A	L.H. (c,d)	1	76	A	63/64

CONTINUED ON NEXT PAGE

GROUP AND PART NUMBER	DESCRIPTION, SIZE, ETC.	NO. REQ'D	MODEL OR ENGINE CUBIC INCH DISPLACEMENT	VEHICLE CODE	YEAR 19____
51566-7	WEATHERSTRIP (FOLDING TOP SIDE RAIL) REAR (CONTINUED)				
C3DZ 7651566-B	R.H. (e)	1	76	C	63/64
C3DZ 7651567-B	L.H. (e)	1	76	C	63/64
BAK 6851566-B	R.H. (a)	1	68	D	60
BAK 6851567-B	L.H. (a)	1	68	D	60
34079-S	Nut-hex. hd. -cold punched-No. 10-32	3	a		
34176-S	Nut-blind-No. 10-32	3	b		
34903-S	Washer-internal tooth lock-No. 10	3	a		
44713-S	Washer-flat-No. 10	3	a		
351320-S8	NS-washer-special flat	3	e		
353014-S	Bolt-special hd.-No. 10-32	AR	a, b, c, d, e		
373855-S8	Nut	3	b, c, e		
377686-S8	Nut-tee-No. 10-32	4	d		
51616	BRACKET (ROOF INTERIOR REAR LAMP MOUNTING)				
BAF 5651616-B	Steel - 3-1/8" x 6-7/8"	1	77	A	60
		1	71	A	61/64
51618-9	REFER TO GROUP 513B24-5				
51628-9	MOULDING (ROOF SIDE)				
PB9M 6351628-A	R.H. - rustless steel - 10-3/8" long	1	63	A	60
PB9M 6351629-A	L.H. - rustless steel - 10-3/8" long	1	63	A	60
51668-9	BRACKET (ROOF SIDE REAR OUTER RAIL TO WHEELHOUSE) UPPER				
PB9M 5651668-A	R.H.	1	63,64	A	60
PB9M 5651669-A	L.H.	1	63,64	A	60
51670-1	BRACKET (ROOF SIDE REAR OUTER RAIL TO WHEELHOUSE) LOWER				
PB9M 5651670-A	R.H.	1	63,64	A	60
PB9M 5651671-A	L.H.	1	63,64	A	60
51686-7	MOULDING (ROOF DRIP SIDE - BELT)				
B9MB 5651686-B	R.H. - painted - "U" shaped	1	77A	A	60
B9MB 5651687-B	L.H. - painted - "U" shaped	1	77A	A	60
B9MB 7751686-B	R.H. - rustless steel - "U" shaped	1	77B	A	60
B9MB 7751687-B	L.H. - rustless steel - "U" shaped	1	77B	A	60
51700-1	MOULDING (ROOF DRIP) SIDE				
B9MB 5651700-A	R. H.	1	77	A	60
B9MB 5651701-A	L. H.	1	77	A	60
COMB 5751700-B	R.H.	1	57	A	60
COMB 5751701-B	L.H.	1	57	A	60
COMB 6351700-A	R.H.	1	63	A	60
COMB 6351701-A	L.H.	1	63	A	60
COMB 6451700-A	R.H.	1	58,64	A	60
COMB 6451701-A	L.H.	1	58,64	A	60
COAB 7551700-A	R. H.	1	65, 75	A	61
COAB 7551701-A	L. H.	1	65, 75	A	61
C1AB 5951700-A	R.H. - for 1962 and 1964 cut-off wrap around end 4-1/8" from the forward end	1	71	A	61/64
C1AB 5951701-A	L.H. - for 1962 and 1964 cut-off warp around end 4-1/8" from the forward end	1	71	A	61/64
COAB 6451700-C	R. H.	1	54, 58, 62, 64	A	61
	Cut to fit	1	All except 57, 63, 71, 76	A	63/64
COAB 6451701-C	L. H.	1	54, 58, 62, 64	A	61
	Cut to fit	1	All except 57, 63, 71, 76	A	63/64

CONTINUED ON NEXT PAGE

GROUP AND PART NUMBER	DESCRIPTION, SIZE, ETC.	NO. REQ'D	MODEL OR ENGINE CUBIC INCH DISPLACEMENT	VEHICLE CODE	YEAR 19____
51700-1	MOULDING (ROOF DRIP) SIDE (CONTINUED)				
C2AZ 6251700-B	R. H.	1	54, 62	A	62
C2AZ 6251701-B	L. H.	1	54, 62	A	62
C2AZ 7551700-B	R. H.	1	65, 75	A	62
C2AZ 7551701-B	L. H.	1	65, 75	A	62
C3AZ 6351700-A	R. H.	1	63	A	63/64
C3AZ 6351701-A	L. H.	1	63	A	63/64
C4AZ 5751700-A	R.H.	1	57	A	64
C4AZ 5751701-A	L.H.	1	57	A	64
C2OZ 6251700-A	R. H. - rear	1	54, 62	B	62/63
C2OZ 6251701-A	L. H. - rear	1	54, 62	B	62/63
C2OZ 62025A20-A	R. H. - front - at windshield side (Δ)	1	54, 62, 71	B	62/63
C2OZ 62025A21-A	L. H. - front - at windshield side (Δ)	1	54, 62, 71	B	62/63
	Δ Package also includes - (5) 374892-S100 screw-pan hd. -No. 6-18 x 3/8"				
C3OZ 6551700-A	R. H.	1	65	B	63
C3OZ 6551701-A	L. H.	1	65	B	63
C3OZ 7151700-A	R. H. - front	1	71	B	63
C3OZ 7151701-A	L. H. - front	1	71	B	63
C3OZ 7151700-B	R. H. - rear	1	71	B	63
C3OZ 7151701-B	L. H. - rear	1	71	B	63
CODZ 6451700-C	R. H.	1	54, 62	C	60/63
CODZ 6451701-C	L. H.	1	54, 62	C	60/63
CODB 5951700-B	R. H.	1	59, 71	C	60/64
CODB 5951701-B	L. H.	1	59, 71	C	60/64
C3DZ 6351700-A	R. H.	1	63	C	63/64
C3DZ 6351701-A	L. H.	1	63	C	63/64
C2DZ 6251700-A	R. H.	1	54, 62	C	64
C2DZ 6251701-A	L. H.	1	54, 62	C	64
COLB 6351700-B	R. H.	1	All except 68	D	60
COLB 6351701-B	L. H.	1	All except 68	D	60
C1VY 5751700-A	R. H.	1	53	D	61/63
C1VY 5751701-A	L. H.	1	53	D	61/63
C4VY 5351700-A	R.H.	1	53	D	64
C4VY 5351701-A	L.H.	1	53	D	64
517A00-1	REFER TO GROUP 50266-7				
517A02-3	MOULDING (ROOF OUTSIDE REAR) SIDE				
B9MB 56517A02-A	R. H. (a)	1	77	A	60
B9MB 56517A03-A	L. H. (a)	1	77	A	60
C3AZ 63517A02-A	Rustless steel - use with Tonneau top	2	63	A	63
	Use with Landau top (b)	2	63	A	64
52388-S13	Screw-oval hd. cr. rec. tap. -No. 8-15 x 1-1/2"	6	a		
52413-S13	Screw-oval hd. cr. rec. tap. -No. 8-18 x 1/2"	2	b		
51704	REFER TO GROUP 517A46				
517A04-5	MOULDING (ROOF OUTSIDE BELT)				
PB9M 5651828-A	R. H. - use on vehicles built prior to 12-1-59	1	77	A	60
PB9M 5651829-A	L. H. - use on vehicles built prior to 12-1-59	1	77	A	60
COMB77517A04-A	R. H. - use on vehicles built after 11-30-59	1	77	A	60
COMB77517A05-A	L. H. - use on vehicles built after 11-30-59	1	77	A	60

CONTINUED ON NEXT PAGE

GROUP AND PART NUMBER	DESCRIPTION, SIZE, ETC.		NO. REQ'D	MODEL OR ENGINE CUBIC INCH DISPLACEMENT	VEHICLE CODE	YEAR 19____
517A04-5	MOULDING (ROOF OUTSIDE BELT) CONTINUED					
C3YY 65517A04-A	R.H.	(c)	1	65	B	63
C3YY 65517A05-A	L.H.	(c)	1	65	B	63
C1GB 62517A04-A	R.H.	(a)	1	54,62A	C	60/61
C1GB 62517A05-A	L.H.	(a)	1	54,62A	C	60/61
C2GB 62517A04-A	R.H.	(a)	1	54,62A,B	C	62
C2GB 62517A05-A	L.H.	(a)	1	54,62A,B	C	62
C2GY 62517A04-A	R.H.		1	62C	C	62
C2GY 62517A05-A	L.H.		1	62C	C	62
COLB 6351814-B	R.H. - chrome finish - zinc die cast	(b)	1	53,57,63	D	60
COLB 6351815-B	L.H. - chrome finish - zinc die cast	(b)	1	53,57,63	D	60
COLB 6551814-A	R.H. - chrome finish - zinc die cast - use on vehicles built prior to 1-18-60	(b)	1	54A, 65A, 75A	D	60
COLB 6551815-A	L.H. - chrome finish - zinc die cast - use on vehicles built prior to 1-18-60	(b)	1	54A, 65A, 75A	D	60
COLB 65517A04-A	R. H. - chrome finish - zinc die cast - use on vehicles built after 1-17-60	(b)	1	54A, 65A, 75A	D	60
COLB 65517A05-A	L.H. - chrome finish - zinc die cast - use on vehicles built after 1-17-60	(b)	1	54A, 65A, 75A	D	60
353911-S100	Nut and washer-No. 10-24		AR	a		
370680-S100	Nut and washer-self-threading-3/16"		3	b		
371882-S7	Nut and washer-1/4"		3	c		
376374-S101	Screw-flat hd. -No. 6-18 x 3/8"		2	c		
517A10-1	EXTENSION (ROOF DRIP SIDE FINISH MOULDING)					
COMB 57517A10-D	R.H. - rear		1	57	A	60
COMB 57517A11-D	L.H. - rear		1	57	A	60
C1VY 57517A10-B	R.H. - chrome finish - snap on over drip moulding		1	53	D	61/63
C1VY 57517A11-B	L.H. - chrome finish - snap on over drip moulding		1	53	D	61/63
51718-9	MOULDING (ROOF DRIP FINISH) FRONT					
C3AZ 6251718-A	R.H.		1	54B, 65B, C, 71B, D, 75B, C	A	62/63
C3AZ 6251719-A	L.H.		1	54B, 65B, C, 71B, D, 75B, C	A	62/63
C4AZ 6251718-A	R.H.		1	54B, 65B, C, F, 71, 75	A	64
C4AZ 6251719-A	L.H.		1	54B, 65B, C, F, 71, 75	A	64
C3OZ 6551718-A	R.H.		1	65	B	63
C3OZ 6551719-A	L.H.		1	65	B	63
C4VY 5351718-A	R.H. - rustless steel - 21-21/32" long	(Δ)	1	53	D	64
C4VY 5351719-A	L.H. - rustless steel - 21-21/32" long	(Δ)	1	53	D	64

Δ Package also includes -

(4) 375740-S100 screw-self-tap. -No. 8-15 x 3/8"

C4VY 7451718-A	R.H. - rustless steel - 20" long	(§)	1	74	D	64
C4VY 7451719-A	L.H. - rustless steel - 20" long	(§)	1	74	D	64

§ Package also includes -

(4) 375740-S101 screw-self-tap. -No. 8-15 x 3/8"

51720-1	MOULDING (ROOF DRIP SIDE) REAR					
COMB 5651720-A	R.H.		1	77	A	60
COMB 5651721-A	L.H.		1	77	A	60

GROUP AND PART NUMBER	DESCRIPTION, SIZE, ETC.		NO. REQ'D	MODEL OR ENGINE CUBIC INCH DISPLACEMENT	VEHICLE CODE	YEAR 19____
517A20-1	ORNAMENT (ROOF OUTSIDE) SIDE					
COMB 5850250-B	R.H.	(b)	1	58	A	60
COMB 5850251-B	L.H.	(b)	1	58	A	60
COMB 6450250-A	R.H.	(b)	1	64	A	60
COMB 6450251-A	L.H.	(b)	1	64	A	60
C1MB 64517A20-B	R.H. - chrome finish	(a)	1	58A, 64A	A	61
C1MB 64517A21-B	L.H. - chrome finish	(a)	1	58A, 64A	A	61
C2MY 62517A56-A	Chrome finish		2	All except 71, 76	A	62
Package also includes -						
	(2) 373504-S7	nut & washer-self-tap. -3/16"				
C3MY 62517A20-B	R.H.	(Δ)	1	All except 63, 71, 76	A	63
C3MY 62517A21-B	L.H.	(Δ)	1	All except 63, 71, 76	A	63
C4MY 62517A20-A	R.H.	(Δ)	1	54, 62, 65, 75	A	64
C4MY 62517A21-A	L.H.	(Δ)	1	54, 62, 65, 75	A	64
Δ Package also includes -						
(1) 51756-S40	screw-No. 10-24 x 3/8"	(1) 354849-S2	nut & washer assy.	(2) 371024-S7	nut-1/4"	
C4MY 57517A20-A	Medallion		2	57	A	64
Package also includes -						
	(3) 373503-S7	nut-self-thread-3/16"				
C2YY 62517A20-B	R.H. - 3-5/8" x 19-5/16"	(c)	1	54B, 62B, C	B	62
C2YY 62517A21-B	L.H. - 3-5/8" x 19-5/16"	(c)	1	54B, 62B, C	B	62
C2YY 62517A20-A	R.H. - 2" x 17-31/32"	(c)	1	54A, 62A	B	62
			1	54, 62	B	63
C2YY 62517A21-A	L.H. - 2" x 17-31/32"	(c)	1	54A, 62A	B	62
			1	54, 62	B	63
C3YY 65517A20-A	(1) for R.H. - (1) for L.H.		2	65	B	63
Package also includes -						
	(2) 376792-S	nut-hex. -No. 10-24				
C1GB 62517A20-B	R.H.	(†)	1	54, 62	C	61
C1GB 62517A21-B	L.H.	(†)	1	54, 62	C	61
† Package also includes -						
	(2) 353577-S2	nut-sleeve type-1/8"				
C3GY 62517A20-A	R.H.	(‡)	1	54, 62	C	63
C3GY 62517A21-A	L.H.	(‡)	1	54, 62	C	63
‡ Package also includes -						
	(2) 375526-S7	nut and washer assy.				
C4DZ 62517A56-A	R.H. - lower	(§)	1	54, 62	C	64
C4DZ 62517A57-A	L.H. - lower	(§)	1	54, 62	C	64
§ Package also includes -						
	(2) 375526-S35	nut and washer				
C3DZ 63517A56-A	R.H. - use with Landau top	(f)	1	63C, D	C	64
C3DZ 63517A57-A	L.H. - use with Landau top	(f)	1	63C, D	C	64
C4DZ 63517A56-A	R.H. - not used with Landau top	(§§)	1	63	C	64
C4DZ 63517A57-A	L.H. - not used with Landau top	(§§)	1	63	C	64
§§ Package also includes -						
	(2) 353911-S100	nut and washer				
BAK 6820980-A	Continental star - GOLD finish	(e)	2	54, 65, 75	D	60
C1VB 57517A20-B	Lincoln emblem - chrome finish	(d)	2	53	D	61/64
C4VY 53517A20-A	R.H. - chrome finish - 21-7/32" long - not used with Landau top	(‡‡)	1	53	D	64
C4VY 53517A21-A	L.H. - chrome finish - 21-7/32" long - not used with Landau top	(‡‡)	1	53	D	64

CONTINUED ON NEXT PAGE

GROUP AND PART NUMBER	DESCRIPTION, SIZE, ETC.	NO. REQ'D	MODEL OR ENGINE CUBIC INCH DISPLACEMENT	VEHICLE CODE	YEAR 19____
517A20-1	ORNAMENT (ROOF OUTSIDE) SIDE (CONTINUED)				
C4VY 53517A20-B	R.H. - use with Landau top (‡‡)	1	53	D	64
C4VY 53517A21-B	L.H. - use with Landau top (‡‡)	1	53	D	64
‡‡ Package also includes - (3) 371882-S7 nut and washer					
M 5397-B	Sealer-bulk	AR	a,c,d		
33000-S13	Screw-oval hd. cr. rec. tap. -No. 6-18 x 1/2"	1	f		
353577-S2	Nut-self-tap.	8	e		
353911-S100	Nut and washer-No. 10-24	2	b		
359573-S8	Screw-oval hd. cr. rec. -No. 8-15 x 5/8"	1	a		
371024-S7	Nut-self-tap. -1/4"	AR	c		
371882-S7	Nut and washer assy. -self-threading-1/4"	1	f		
373504-S7	Nut and washer-self-threading-3/16"	2	a, d		
51726-9	MOULDING (ROOF DRIP FINISH) SIDE				
B9MB 5751726-B	R.H. - rustless steel	1	57	A	60
B9MB 5751727-B	L.H. - rustless steel	1	57	A	60
PB9M 5851726-A	R.H. - rustless steel	1	58,64	A	60
PB9M 5851727-A	L.H. - rustless steel	1	58,64	A	60
PB9M 6351726-A	R.H. - rustless steel	1	63	A	60
PB9M 6351727-A	L.H. - rustless steel	1	63	A	60
PB9M 7751726-A	R.H. - rustless steel	1	77B	A	60
PB9M 7751727-A	L.H. - rustless steel	1	77B	A	60
C1AB 7151726-A	R.H. - rustless steel	1	71B, D	A	61/62
C1AB 7151727-A	L.H. - rustless steel	1	71B, D	A	61/62
C2AZ 6251726-A	R.H.	1	54B, 65B, 75B	A	62
C2AZ 6251727-A	L.H.	1	54B, 65B, 75B	A	62
C3MY 5451728-A	R.H.	1	54B, 65B, C, 75B, C	A	63
C3MY 5451729-A	L.H.	1	54B, 65B, C, 75B, C	A	63
C3AZ 7151726-A	R.H. - rustless steel	1	71	A	63
C3AZ 7151727-A	L.H. - rustless steel	1	71	A	63
C3AZ 6351726-A	R.H. - rustless steel	1	63	A	63/64
C3AZ 6351727-A	L.H. - rustless steel	1	63	A	63/64
C4MY 5751726-A	R.H.	1	57	A	64
C4MY 5751727-A	L.H.	1	57	A	64
C4MY 6251728-A	R.H. - side rear	1	54B, F, 65B, C, F, 75	A	64
C4MY 6251729-A	L.H. - side rear	1	54B, F, 65B, C, F, 75	A	64
C4AZ 7151726-A	R.H. - rustless steel	1	71	A	64
C4AZ 7151727-A	L.H. - rustless steel	1	71	A	64
C2OB 6251726-A	R.H.	1	54, 62	B	62/63
C2OB 6251727-A	L.H.	1	54, 62	B	62/63
C3OZ 6551726-B	R.H.	1	65	B	63
C3OZ 6551727-B	L.H.	1	65	B	63
C3OZ 7151726-A	R.H.	1	71	B	63
C3OZ 7151727-A	L.H.	1	71	B	63
C3OZ 7151728-A	R.H. - side rear	1	71	B	63
C3OZ 7151729-A	L.H. - side rear	1	71	B	63
CODB 6451726-C	R.H. - rustless steel - snap on over drip moulding	1	54, 62	C	60/63
CODB 6451727-C	L.H. - rustless steel - snap on over drip moulding	1	54, 62	C	60/63
CODB 5951726-A	R.H. - rustless steel - snap on over drip moulding	1	59, 71	C	60/63
		1	71A, C	C	64
CODB 5951727-A	L.H. - rustless steel - snap on over drip moulding	1	59, 71	C	60/63
		1	71A, C	C	64

CONTINUED ON NEXT PAGE

GROUP AND PART NUMBER	DESCRIPTION, SIZE, ETC.	NO. REQ'D	MODEL OR ENGINE CUBIC INCH DISPLACEMENT	VEHICLE CODE	YEAR 19____
51726-9	MOULDING (ROOF DRIP FINISH) SIDE (CONTINUED)				
C3DZ 6351726-A	R. H.	1	63	C	63
	Rustless steel - use with or without Landau top on vehicles built prior to 3-17-64 - use with Landau top only after 3-16-64	1	63	C	64
C3DZ 6351727-A	L. H.	1	63	C	63
	Rustless steel - use with or without Landau top on vehicles built prior to 3-17-64 - use with Landau top only after 3-16-64	1	63	C	64
C4DZ 6351726-A	R. H. - use without Landau top on vehicles built after 3-16-64	1	63	C	64
C4DZ 6351727-A	L. H. - use without Landau top on vehicles built after 3-16-64	1	63	C	64
C3DZ 6251726-A	R.H. - rustless steel	1	54A, C, D, 62A	C	64
C3DZ 6251727-A	L.H. - rustless steel	1	54A, C, D, 62A	C	64
COLB 6351726-A	R. H. - rustless steel - snap-on over drip moulding	1	All except 68	D	60
COLB 6351727-A	L. H. - rustless steel - snap-on over drip moulding	1	All except 68	D	60
C1VB 5751726-C	R. H. - chrome finish - snap-on over drip moulding	1	53	D	61/63
C1VB 5751727-C	L. H. - chrome finish - snap-on over drip moulding	1	53	D	61/63
C4VY 5351726-A	R.H. - rustless steel - 41-1/2" long	1	53	D	64
C4VY 5351727-A	L.H. - rustless steel - 41-1/2" long	1	53	D	64
C4VY 5351728-A	R.H. - rustless steel - side rear	1	53	D	64
C4VY 5351729-A	L.H. - rustless steel - side rear	1	53	D	64
51728-9	MOULDING (ROOF DRIP SIDE FINISH) REAR & REAR CORNER				
PB9M 5651728-A	R.H. - rear	1	77B	A	60
PB9M 5651729-A	L.H. - rear	1	77B	A	60
PB9M 7751728-A	R.H. - rear corner	1	77B	A	60
PB9M 7751729-A	L.H. - rear corner	1	77B	A	60
COAB 7551728-A	R. H. - rear - approximate overall length 59-5/8"	1	54, 62, 65, 75	A	61
COAB 7551729-A	L. H. - rear - approximate overall length 59-5/8"	1	54, 62, 65, 75	A	61
517A30-1	ORNAMENT (ROOF SIDE) LOWER				
C2MY62517A30-A	R. H. - chrome finish - 16-31/32" (Δ)	1	All except 71, 76	A	62
C2MY62517A31-A	L. H. - chrome finish - 16-31/32" (Δ)	1	All except 71, 76	A	62
	Δ Package also includes - (3) 371882-S7 nut & washer-self-threading-1/4"				
517B30	SEAL (ROOF SIDE INNER REAR MOULDING)				
C4VY 53517B30-A	Plastic - 40" long - cut to fit front pillar garnish moulding roof side front and rear mouldings	2	53	D	64
517A32-3	PANEL (ROOF OUTSIDE SIDE ORNAMENT)				
C1MB 54517A32-B	R. H. (a)	1	54,62,65,75	A	61
C1MB 54517A33-B	L. H. (a)	1	54,62,65,75	A	61
M 5397-B	Sealer-bulk	AR	a		
359573-S8	Screw-oval hd. cr. rec. -No. 8-15 x 5/8"	1	a		
371243-S	Washer-flat-steel-3/16"	3	a		
373504-S7	Nut and washer-self-thread-3/16"	5	a		
517A42-3	EXTENSION (ROOF DRIP SIDE MOULDING) REAR				
C1VB 57517A42-A	R. H. - steel	1	53	D	61/63
C1VB 57517A43-A	L. H. - steel	1	53	D	61/63
517A46	MOULDING (ROOF DRIP FINISH) REAR				
PB9M 7751704-A	Rustless steel - 47-3/4" long	1	77B	A	60
C1AB 71517A46-A	Rustless steel	1	71B, D	A	61/63
		1	71	A	64
CODB 59517A46-A	Rustless steel - snap-on over drip moulding	1	59, 71	C	60/63
		1	71A, C	C	64

GROUP AND PART NUMBER	DESCRIPTION, SIZE, ETC.	NO. REQ'D	MODEL OR ENGINE CUBIC INCH DISPLACEMENT	VEHICLE CODE	YEAR 19____
517A48-9	MOULDING (ROOF DRIP SIDE FINISH) REAR CORNER				
C1AZ 71517A48-A	R. H. - rustless steel	1	71B	A	61
		1	71	A	62/64
C1AZ 71517A49-A	L. H. - rustless steel	1	71B	A	61
		1	71	A	62/64
CODB 59517A48-A	R. H. - rustless steel - snap-on over drip moulding	1	59, 71	C	60/63
		1	71A, C	C	64
CODB 59517A49-A	L. H. - rustless steel - snap-on over drip moulding	1	59, 71	C	60/63
		1	71A, C	C	64
51752-3	MOULDING (ROOF SIDE INNER)				
PB9M 5651752-A	R.H. - in prime - developed length 44-1/4" (a)	1	77	A	60
PB9M 5651753-A	L.H. - in prime - developed length 44-1/4" (a)	1	77	A	60
B9MB 5751752-A	R.H. - developed length 54" (a)	1	57F, 63F	A	60
B9MB 5751753-A	L.H. - developed length 54" (a)	1	57F, 63F	A	60
PB9M 5751752-A	R.H. - in prime - developed length 54" (a)	1	57A, B, 63A, B	A	60
PB9M 5751753-A	L.H. - in prime - developed length 54" (a)	1	57A, B, 63A, B	A	60
BAK 5751752-K	R.H. - rustless steel (c)	1	57, 63, 65, 75	D	60
BAK 5751753-K	L.H. - rustless steel (c)	1	57, 63, 65, 75	D	60
BAK 5751752-M	R.H. - rustless steel (c)	1	53, 54	D	60
BAK 5751753-M	L.H. - rustless steel (c)	1	53, 54	D	60
C1VB 5751752-A	R.H. - chrome finish (b)	1	53	D	61/63
C1VB 5751753-A	L.H. - chrome finish (b)	1	53	D	61/63
C4VY 5351752-A	R.H. - front (Δ)	1	53	D	64
C4VY 5351753-A	L.H. - front (Δ)	1	53	D	64
	Δ Package also includes - (3) 53038-S13 screw-No. 8-15 x 3/4"				
BAK 5751756-A	Retainer	4	c		
C1VB 57517A80-C	Support-gasket material-9/32" x 1"	4	b		
52344-S	Screw-oval hd. cr. rec.-No. 8-15 x 1/2"	4	c		
52421-S	Screw-oval hd. cr. rec. tap.-No. 8-15 x 5/8"	1	c		
53038-S	Screw-oval-hex. hd. cr. rec. tap.-No. 8-15 x 3/4"	AR	a		
53060-S13	Screw-oval trim hd. cr. rec. tap.-No. 8-15 x 1"	4	b		
51754-5	MOULDING (ROOF SIDE INNER) REAR				
C1VB 5751754-A	R. H. - chrome finish (a)	1	53	D	61/63
C1VB 5751755-A	L. H. - chrome finish (a)	1	53	D	61/63
C4VY 5351754-A	R.H. (Δ)	1	53	D	64
C4VY 5351755-A	L.H. (Δ)	1	53	D	64
	Δ Package also includes - (2) 53038-S13 screw-No. 8-15 x 3/4"				
C1VB 57517A80-C	Support-gasket material-9/32" x 1"	2	a		
53060-S13	Screw-oval trim hd. cr. rec. tap.-No. 8-15 x 1"	2	a		
517A54-5	MOULDING (ROOF DRIP SIDE FINISH) FRONT				
COAB 75517A54-A	R. H. - rustless steel - 4" long	1	54, 62, 65, 75	A	61
COAB 75517A55-A	L. H. - rustless steel - 4" long	1	54, 62, 65, 75	A	61
51756	RETAINER (ROOF SIDE INNER MOULDING)				
BAK 5751756-A	(a)	8	All except 68	D	60
52344-S	Screw-oval hd. cr. rec.-No. 8-15 x 1/2"	1	a		
517A56-7	REFER TO GROUP 517A20-1				

GROUP AND PART NUMBER	DESCRIPTION, SIZE, ETC.	NO. REQ'D	MODEL OR ENGINE CUBIC INCH DISPLACEMENT	VEHICLE CODE	YEAR 19____
51762	COVER (ROOF DRIP MOULDING FRONT CORNER JOINT)				
B5A 7051762-A	Terne plate - 3/4" long	2	77A	A	60
		AR	71	A	61
		AR	All except 76	A	62/64
		2	65	B	63
		2	59, 71	C	60/61
		AR	62B, C, 71B	C	64
517A70	MOULDING (FOLDING TOP NO. 1 BOW) OUTSIDE				
PB9M 7651384-B	Rustless steel (a)	1	76	A	60
BAK 6851384-B	Chrome finish - assembly is (3) piece (b) design - includes center, R.H. and L.H. end pieces	1	68	D	60
C1VB 74517A70-C	Rustless steel	1	74	D	61/63
C4VY 74517A70-A	Rustless steel	1	74	D	64
B9MB 7650350-A	Retainer-end	2	a		
B9MB 7650363-A	Retainer-center	6	a		
34053-S	Nut-hex.-No. 10-14	8	a		
34903-S	Washer-internal tooth lock-No. 10	8	a		
34952-S	Washer-external tooth countersunk-No. 10	2	b		
50388-S	Screw-oval hd. cr. rec.-No. 10-32 x 3/8"	2	b		
51054-S	Screw-flat hd. cr. rec. tap.-No. 10-24 x 3/8"	7	b		
517A74	SEAL (ROOF SIDE ORNAMENT)				
	NS-improvise locally	2	All except 71, 76	A	63
517A80	SUPPORT (INTERIOR GARNISH MOULDINGS)				
C1VB 57517A80-C	Gasket material - 9/32" x 1" with (1) 3/8" diameter hole (8) req'd. - for roof side inner front moulding (4) req'd. - for roof side inner rear moulding (4) req'd. - for quarter belt rear moulding (2) req'd. - for cover quarter belt rear moulding (4) req'd. - for back window side moulding	AR	53	D	61/63
517A82-3	MOULDING (ROOF DRIP) REAR CORNER				
CODB 59517A82-A	R.H.	1	59, 71	C	60/64
CODB 59517A83-A	L.H.	1	59, 71	C	60/64
51792	COVER (ROOF DRIP SIDE FINISH MOULDING JOINT)				
C4AZ 6251792-A	(1) for R.H. - (1) for L.H. - 2-1/16" long	2	54B, F, 65B, C, F, 71, 75F	A	64
51804-5	MOULDING (ROOF DRIP SIDE FINISH) LOWER REAR				
COLB 6351804-A	R.H. - rustless steel	1	All except 68	D	60
COLB 6351805-A	L.H. - rustless steel	1	All except 68	D	60
C1VB 5751804-A	R.H. - rustless steel	1	53	D	61/62
C1VB 5751805-A	L.H. - rustless steel	1	53	D	61/62
51814-5	REFER TO GROUP 517A04-5				
51828-9	REFER TO GROUP 517A04-5				
51858-9	EXTENSION (ROOF DRIP SIDE MOULDING) FRONT				
B9MB 6451858-A	R.H. - rustless steel (a)	1	All except 76	A	60
B9MB 6451859-A	L.H. - rustless steel (a)	1	All except 76	A	60
52005-S13	Screw-flat-hex. hd. cr. rec. tap.-No. 6-18 x 3/8"	2	a		

GROUP AND PART NUMBER	DESCRIPTION, SIZE, ETC.	NO. REQ'D	MODEL OR ENGINE CUBIC INCH DISPLACEMENT	VEHICLE CODE	YEAR 19____
519A16	RETAINER (ROOF SIDE REAR TRIM FOUNDATION)				
C3AZ 63519A16-A		6	63	A	63/64
51978-9	PANEL (ROOF TRIM) SIDE				
B9MB 6351978-AP	R.H. - in prime - roof to quarter panel (a)	1	63A,B	A	60
B9MB 6351979-AP	L.H. - in prime - roof to quarter panel (a)	1	63A,B	A	60
B9MB 6351978-BP	R.H. - textured metal - roof to quarter panel (a)	1	63F	A	60
B9MB 6351979-BP	L.H. - textured metal - roof to quarter panel (a)	1	63F	A	60
52720-S	Screw-pan hex. hd. cr. rec. tap. -No. 8-15 x 3/8"	AR	a		
51982-3	REFER TO GROUP 50266-7				
52101-7	SUPPORT (ROOF HEADLINING RETAINING)				
B9MB 5652101-A	No. 1 - 60" long - painted RED	1	77	A	60
B9MB 5652102-A	No. 2 and 5 - 61-1/2" long - painted BLUE	2	77	A	60
B9MB 5652103-A	No. 3 and 4 - 62-1/4" long - painted GREEN	2	77	A	60
PB9M 5752103-A	No. 1 and 2 - developed length 57-11/16" - one end RED for 3" - other end ORANGE for 3"	2	57,63	A	60
B9MB 5752103-A	No. 3 - developed length 58-1/16" - one end RED for 3" - other end BLUE for 3"	1	57,63	A	60
PB9M 5752104-A	No. 4 - developed length 58-5/16" - one end RED for 3" - other end YELLOW for 3"	1	57,63	A	60
PB9M 5752105-A	No. 5 - developed length 59-1/8" - both ends RED for 3"	1	57,63	A	60
B9MB 6452101-A	No. 1 - developed length 57-1/16" - one end GREEN for 3" - other end ORANGE for 3"	1	58,64	A	60
B9MB 6452102-A	No. 2 - developed length 58-1/16" - one end GREEN for 3" - other end PURPLE	1	58,64	A	60
B9MB 6452103-A	No. 3 - developed length 58-1/16" - one end GREEN for 3" - other end BLUE	1	58,64	A	60
B9MB 6452104-A	No. 4 - developed length 58-7/16" - one end GREEN for 3" - other end YELLOW	1	58,64	A	60
PB9M 5852105-A	No. 5 - developed length 60-5/8" - both ends GREEN for 3"	1	58,64	A	60
PB9M 5852106-A	No. 6 - developed length 58-1/2" - one end GREEN for 3" - other end ALUMINUM for 3"	1	58,64	A	60
C1AB 5952103-C	No. 3 - 57-1/2" - no color	1	71	A	61
COAB 6252105-A	No. 5 - 60-3/4"	1	54, 62, 65, 75	A	61
COAB 6452105-A	No. 5 - 60-1/2" - painted ALUMINUM	1	58, 64	A	61
COAB 6452101-B	No. 1 - one end painted GREEN	1	All except 71,76	A	61/62
COAB 6452102-B	No. 2 - one end painted PURPLE	1	All except 71,76	A	61/62
COAB 6452103-C	No. 3 - one end painted BROWN	1	All except 71,76	A	61/62
C2AZ 6252104-A	No. 4 - one end painted GRAY	1	All except 71,76	A	61/62
C2AZ 6252105-A	No. 5	1	All except 71,76	A	62
C1AB 5952101-B	No. 1 - 55-7/8" - painted BROWN	1	71	A	61/64
C1AB 5952102-C	No. 2,4 and 5 - 56-7/16" - painted RED No. 3 and 4	AR AR	71 71	A A	61 62/64
C2AZ 7152102-A	No. 2	1	71	A	62/64
C3MY 6252101-B	No. 1 - developed length 53-3/8" - one end PINK - other end BLACK	1	54, 62, 65, 75	A	63/64
C3MY 6252102-A	No. 2 - developed length 54-1/16" - one end PINK - other end PURPLE - use on vehicles built prior to 9-21-62	1	All except 63, 71, 76	A	63
C3MY 6252102-B	No. 2 - developed length 54-1/16" - one end PINK - other end PURPLE - use on vehicles built after 9-20-62	1	54, 62, 65, 75	A	63/64

CONTINUED ON NEXT PAGE

GROUP AND PART NUMBER	DESCRIPTION, SIZE, ETC.	NO. REQ'D	MODEL OR ENGINE CUBIC INCH DISPLACEMENT	VEHICLE CODE	YEAR 19____
52101-7	SUPPORT (ROOF HEADLINING RETAINING) CONTINUED				
C3MY 6252103-A	No. 3 - developed length 54-11/16" - both ends PINK	1	54, 62, 65, 75	A	63/64
C3MY 6252104-A	No. 4 - developed length 55-1/8" - one end PINK - other end BLUE - use on vehicles built prior to 9-21-62	1	All except 63, 71, 76	A	63
C3MY 6252104-B	No. 4 - developed length 55-1/8" - one end PINK - other end BLUE - use on vehicles built after 9-20-62	1	54, 62, 65, 75	A	63/64
C3MY 6252105-B	No. 5 - developed length 66-7/8" - one end PINK - other end GREEN	1	54, 62, 65, 75	A	63/64
C3MY 6252106-A	No. 6 - developed length 66" - one end PINK - other end RED - use on vehicles built prior to 9-21-62	1	All except 63, 71, 76	A	63
C3MY 6252106-B	No. 6 - developed length 66" - one end PINK - other end RED - use on vehicles built after 9-20-62	1	54, 62, 65, 75	A	63/64
C3AZ 6352101-A	No. 1 - developed length 54-1/8" - one end BRONZE - other end BLACK	1	63	A	63/64
C3AZ 6352102-A	No. 2 - developed length 55" - one end BRONZE - other end WHITE	1	63	A	63/64
C3AZ 6352103-A	No. 3 - developed length 55-9/16" - one end BRONZE - other end BLUE	1	63	A	63/64
C3AZ 6352104-A	No. 4 - developed length 57-11/16" - one end BRONZE - other end RED	1	63	A	63/64
C3AZ 6352105-A	No. 5 - developed length 58-9/16" - one end BRONZE - other end YELLOW	1	63	A	63/64
C4AZ 5752101-A	No. 1 - developed length 54" - one end GRAY - other end RED	1	57	A	64
C4AZ 5752102-A	No. 2 - developed length 56-1/16" - one end GRAY - other end WHITE	1	57	A	64
C4AZ 5752103-A	No. 3 - developed length 55-1/8" - one end GRAY - other end BLUE	1	57	A	64
C4AZ 5752104-A	No. 4 - developed length 57-1/8" - one end GRAY - other end BROWN	1	57	A	64
C4AZ 5752105-A	No. 5 - developed length 63-1/4" - both ends GRAY	1	57	A	64
C2OZ 6252101-A	No. 1 - one end RED other end BLACK	1	All	B	62
		1	54, 62, 71	B	63
	No. 2	1	65	B	63
C2OZ 6252102-A	No. 2 - one end RED other end WHITE	1	All	B	62
		1	54, 62, 71	B	63
C2OZ 6252103-A	No. 3 - both ends RED	1	54, 62	B	62/63
	No. 8	1	71	B	63
C2OZ 6252104-A	No. 4 - one end RED - other end GREEN	1	54, 62	B	62/63
C2OZ 6252105-A	No. 5 - one end RED - other end YELLOW	1	54, 62	B	62/63
C3OZ 6552101-A	No. 1 - developed length 51" - both ends BLUE	1	65	B	63
C3OZ 6552103-A	No. 3 - developed length 51-5/8" - one end BLUE - other end RED	1	65	B	63
C3OZ 6552104-A	No. 4 - developed length 55-11/16" - one end BLUE - other end BLACK	1	65	B	63
C3OZ 6552105-A	No. 5 - developed length 58-9/16" - one end BLUE - other end GRAY	1	65	B	63
C3OZ 7152101-A	No. 3, 5, 6 and 7 - developed length 51-5/8" - one end RED - other end BLACK	4	71	B	63
C3OZ 7152102-A	No. 4 - developed length 51-29/32" - one end RED - other end WHITE	1	71	B	63

CONTINUED ON NEXT PAGE

GROUP AND PART NUMBER	DESCRIPTION, SIZE, ETC.	NO. REQ'D	MODEL OR ENGINE CUBIC INCH DISPLACEMENT	VEHICLE CODE	YEAR 19____
52101-7	SUPPORT (ROOF HEADLINING RETAINING) CONTINUED				
CODB 6452101-B	No. 1 - 49-11/16" long - one end painted BLACK - other end painted YELLOW	1	54,62	C	60/62
CODB 6452102-B	No. 2 - 49-15/16" long - one end painted WHITE - other end painted YELLOW	1	54,62	C	60/62
CODB 6452103-B	No. 3 - 50-3/16" long - one end painted BLUE - other end painted YELLOW	1	54,62	C	60
C1DB 6452103-A	No. 3	1	54, 62	C	61/62
C3GY 6252104-A	No. 4 - both ends painted YELLOW	1	54,62	C	60/63
CODB 5952101-A	No. 1 - developed length 49-1/2" long - one end BLACK - other end WHITE	1	59, 71	C	60/64
CODB 5952102-A	No. 2 - developed length 49-11/16" long - both ends WHITE (1) use when lamp is located at roof center (2) use on vehicles with dome lamp at roof front	1or2 1	59, 71 71	C C	60/63 64
CODB 5952103-A	No. 3 - developed length 49-7/8" long - one end BLUE - other end WHITE (3) use on vehicles with dome lamp at roof front (4) use when lamp is located at roof center	3or4 4	59, 71 71	C C	60/63 64
CODB 5952104-A	No. 4 - developed length 49-7/16" long - one end RED - other end WHITE	1	59, 71	C	60/64
C3DZ 6352101-A	No. 1 and 2 - one end plain - other end BLACK	2	63	C	63
C3DZ 6352103-A	No. 3 - one end painted BLUE - other end BLACK	1	63	C	63
C3DZ 6352104-A	No. 4 - one end painted RED - other end BLACK	1	63	C	63
C3DZ 6252102-A	No. 1, 2 and 3 - developed length 49-15/16" long - one end WHITE - other end YELLOW	3	54, 62	C	63/64
C4GY 6352101-A	No. 1 and 2 - 52-5/8" long	2	63	C	64
C4GY 6352102-A	No. 3 - 51-1/8" long	1	63	C	64
C3DZ 6252104-B	No. 4 - one end YELLOW	1	54, 62	C	64
BAK 5752101-A	No. 1 - 57-5/64" across ends - one end BLACK for 3" - other end BROWN for 3"	1	All except 68	D	60
BAK 5752102-A	No. 2 - 68-11/16" across ends - one end WHITE for 3" - other end BROWN for 3"	1	All except 68	D	60
BAK 5752103-A	No. 3 - 58-1/16" across ends - one end BLUE for 3" - other end BROWN for 3"	1	All except 68	D	60
BAK 5752104-A	No. 4 - 54-31/64" across ends - one end YELLOW for 3" - other end BROWN for 3"	1	All except 68	D	60
BAK 5752105-A	No. 5 - 58-49/64" across ends - one end RED for 3" - other end BROWN for 3"	1	All except 68	D	60
BAK 5752106-A	No. 6 - 60-9/64" across ends - one end GREEN for 3" - other end BROWN for 3"	1	All except 68	D	60
BAK 5752107-A	No. 7 - 65-1/4" across ends - one end ALUMINUM for 3" - other end BROWN for 3"	1	54, 65, 75	D	60
C1VB 5752101-A	No. 1 - painted BLACK for 3" other end BROWN	1	53	D	61/62
C1VB 5752102-A	No. 2 - painted WHITE for 3" other end BROWN	1	53	D	61/62
C1VB 5752103-A	No. 3 - painted BLUE for 3" other end BROWN	1	53	D	61/62
C1VB 5752104-A	No. 4 - painted YELLOW for 3" other end BROWN	1	53	D	61/62
C1VB 5752105-A	No. 5 and 6 - painted RED for 3" other end BROWN	2	53	D	61/62
C3VY 5752101-A	No. 1 - painted BLACK for 3" - other end BROWN	1	53	D	63
C3VY 5752102-A	No. 2 - painted WHITE for 3" - other end BROWN	1	53	D	63
C3VY 5752103-A	No. 3 - painted BLUE for 3" - other end BROWN	1	53	D	63
C3VY 5752104-A	No. 4 - painted YELLOW for 3" - other end BROWN	1	53	D	63
C3VY 5752105-A	No. 5 and 6 - painted RED for 3" - other end BROWN	2	53	D	63

CONTINUED ON NEXT PAGE

GROUP AND PART NUMBER	DESCRIPTION, SIZE, ETC.	NO. REQ'D	MODEL OR ENGINE CUBIC INCH DISPLACEMENT	VEHICLE CODE	YEAR 19____
52101-7	SUPPORT (ROOF HEADLINING RETAINING) CONTINUED				
C4VY 5352101-A	No. 1 and 2 - painted BLACK for 3" - other end BROWN	2	53	D	64
C4VY 5352103-A	No. 3 - painted WHITE for 3" - other end BROWN	1	53	D	64
C4VY 5352104-A	No. 4 - painted BLUE for 3" - other end BROWN	1	53	D	64
C4VY 5352105-A	No. 5 - painted YELLOW for 3" - other end BROWN	1	53	D	64
C4VY 5352106-A	No. 6 - painted RED for 3" - other end BROWN	1	53	D	64
52122	STRIP (ROOF HEADLINING SIDE RETAINER) REAR UPPER				
C3MY 6252122-A		2	54, 62, 65, 75	A	63/64
52126	CAP (ROOF HEADLINING SUPPORT)				
B9A 5152126-B	Chrome finish - use with meadboard headlining	10	77	A	60
B9KB 7152126-A	Chrome finish	AR	71	A	61/64
	Use on vehicles built after 10-9-63	6	63	C	64
B9AB 5952126-A	Paint - use on vehicles built prior to 10-10-63	6	63	C	64
52133	EXTENSION (ROOF HEADLINING SUPPORT)				
B9A 5752133-A		2	All except 63, 71, 76	A	61/63
	(1) req'd. - for No. 4 and 5	2	54, 62, 63, 65, 75	A	64
		2	54, 62, 65	B	62/63
	(1) req'd. - for No. 3 and 4 support	2	54, 62	C	60/64
52136-7	RETAINER (ROOF HEADLINING) SIDE FRONT				
COAZ 7152136-B	R. H. (a)	1	71	A	61/64
COAZ 7152137-B	L. H. (a)	1	71	A	61/64
BJ 7051054-A	Clip	9	a		
52726-S8	Screw-pan hd. cr. rec. tap. -No. 8-15 x 1/2"	1	a		
52138-9	RETAINER (ROOF HEADLINING SIDE LOWER)				
C4VY 5352138-A	R. H.	1	53	D	64
C4VY 5352139-A	L. H.	1	53	D	64
52146	RETAINER (ROOF HEADLINING) NO. 1, 2 & 3				
C4GY 6352146-AAB	Bright finish - cut to size	3	63C, D	C	64
52148-9	RETAINER (ROOF HEADLINING SIDE REAR)				
C4VY 5352148-A	R. H.	1	53	D	64
C4VY 5352149-A	L. H.	1	53	D	64
52180	RETAINER (ROOF HEADLINING SUPPORT)				
PB9M 5752180-A	Rear - steel wire	2	57, 58, 63, 64	A	60
	(2) also use between No. 1 headlining support and windshield header				
BAC 6652180-A		2	All except 76	A	63/64
		2	54, 62, 65, 71	B	63
		2	All except 76	C	60/63
		2	63, 71	C	64
BAE 5652180-A		2	54, 62	C	64
BAK 5752180-A	Rear	2	54, 65, 75	D	60
COLB 6352180-A	Rear	2	53, 57, 63	D	60
C1VB 5752180-A	Rear	2	53	D	61/64

GROUP AND PART NUMBER	DESCRIPTION, SIZE, ETC.	NO. REQ'D	MODEL OR ENGINE CUBIC INCH DISPLACEMENT	VEHICLE CODE	YEAR 19____
52194	STRIP (ROOF HEADLINING SIDE RETAINING) REAR - LOWER				
C3MY 6252194-A		2	All except 71, 76	A	63
		2	54, 62, 65, 75	A	64
	NS-improvise locally	2	54, 62	B	63
C1KB 6252194-B		2	54, 62	C	60/63
C1VB 5752194-A	Steel	2	53	D	61/63
52202	STRIP (ROOF HEADLINING HEADER RETAINING)				
C3DZ 6352202-A	Steel	1	63	C	63/64
C1VB 5752202-A	Steel	2	53	D	61/63
52542	RETAINER (FOLDING TOP NO. 4 BOW ZIPPER)				
C4AZ 7652542-A		1	76	A	64
C4VY 7452542-A	Steel - 50-5/8" long	1	74	D	64
52566-7	SUPPORT (PACKAGE TRAY TO REAR ROOF RAIL INNER)				
C1AB 6252566-B	R. H.	1	54, 62, 65, 75	A	61/62
C1AB 6252567-B	L. H.	1	54, 62, 65, 75	A	61/62
52728-9	RETAINER (TOP SIDE QUARTER COVER) LOWER				
BAK 6852728-A	R.H. - steel - 2-25/32" x 7-1/8" (a)	1	68	D	60
BAK 6852729-A	L.H. - steel - 2-25/32" x 7-1/8" (a)	1	68	D	60
42904-S	Screw and washer-hex.hd.-1/4"-20 x 5/8"	2	a		
44720-S	Washer-flat-1/4"	2	a		
52884	RETAINER ASSEMBLY (QUARTER PAD CASE)				
C1AZ 7652884-A		2	76	A	61/62
C3AZ 7652884-A		2	76	A	63/64
C3DZ 7652884-A		2	76	C	63/64
C1VB 7452884-B		1	74	D	61/63
C4VY 7452884-A	22-1/2" long - use on vehicles built prior to 4-1-64	1	74	D	64
C4VY 7452884-B	Use on vehicles built after 3-31-64	1	74	D	64
53000	TOP (FOLDING) LESS TRIM				
PB9M 7653000-AP	In prime	1	76	A	60
C1AZ 7653000-AP	In prime	1	76	A	61/62
C3AZ 7653000-A		1	76	A	63
C4AZ 7653000-A		1	76	A	64
C3DZ 7653000-A		1	76	C	63
C4DZ 7653000-A		1	76	C	64
C1VB 7453000-DP	Use on vehicles built prior to 1-23-61	1	74	D	61
C1VY 7453000-FP	Use on vehicles built after 1-22-61	1	74	D	61
C2VY 7453000-A	Use on vehicles built prior to 7-1-62	1	74	D	62
C3VY 7453000-A	Use on vehicles built after 6-30-62	1	74	D	62/63
C4VY 7453000-A		1	74	D	64
53038	BOW (FOLDING TOP) NO. 1				
PB9M 7653038-AP	In prime	1	76	A	60
COAB 7653038-AP	In prime	1	76	A	61/62
C3AZ 7653038-A	(b)	1	76	A	63/64
C3DZ 7653038-A	(b)	1	76	C	63/64
BAK 6853038-CP	In prime (a)	1	68	D	60
C1VB 7453038-BP	In prime	1	74	D	61
C2VY 7453038-A	Use on vehicles built prior to 7-1-62 - where No. 1 bow joins the side rail, the O/S edge has a 45° step towards the center	1	74	D	62

CONTINUED ON NEXT PAGE

GROUP AND PART NUMBER	DESCRIPTION, SIZE, ETC.	NO. REQ'D	MODEL OR ENGINE CUBIC INCH DISPLACEMENT	VEHICLE CODE	YEAR 19____
53038	BOW (FOLDING TOP) NO. 1 (CONTINUED)				
C3VY 7453038-A	Use on vehicles built after 6-30-62 - where No. 1 bow joins the side rail, the O/S edge has a 90° step towards the center	1	74	D	62/63
C4VY 7453038-A		1	74	D	64
34179-S	Nut-crown-5/16"	1	a		
34806-S	Washer-spring lock-5/16"	1	a		
44722-S	Washer-flat-5/16"	1	a		
370132-S	Screw-flat head-5/16"-24 x 1-1/8"	1	a		
	Attach bow to front side rail 53104-5 with the following -				
34179-S13	Nut-crown-5/16"-24	2	b		
34806-S7	Washer-lock-5/16"	2	b		
44722-S8	Washer-flat-5/16"	2	b		
373786-S8	Bolt-5/16"-24 x 27/32"	2	b		
53044-5	FASTENER (FOLDING TOP TO ROOF SIDE RAIL FRONT)				
B5S 4053044-A	R.H. - chrome finish	1	74	D	61
B5S 4053045-A	L.H. - chrome finish	1	74	D	61
53084-5	PLATE (FOLDING TOP MAIN PIVOT BRACKET SUPPORT MOUNTING)				
PB9M 7653084-A	R.H.	1	76	A	60
PB9M 7653085-A	L.H.	1	76	A	60
COAB 7653084-A	R.H.	1	76	A	61/62
COAB 7653085-A	L.H.	1	76	A	61/62
C3AZ 7653084-A	R.H.	1	76	A	63
C3AZ 7653085-A	L.H.	1	76	A	63
C4AZ 7653084-A	R.H.	1	76	A	64
C4AZ 7653085-A	L.H.	1	76	A	64
C3DZ 7653084-A	R.H.	1	76	C	63
C3DZ 7653085-A	L.H.	1	76	C	63
C3DZ 7653084-C	R.H.	1	76	C	64
C3DZ 7653085-C	L.H.	1	76	C	64
BAK 6853084-A	R.H.	1	68	D	60
53088-9	SUPPORT (FOLDING TOP MAIN PIVOT BRACKET TO WHEELHOUSE)				
PB9M 7653088-A	R.H.	1	76	A	60
PB9M 7653089-A	L.H.	1	76	A	60
COAB 7653088-A	R.H.	1	76	A	61/62
COAB 7653089-A	L.H.	1	76	A	61/62
C3AZ 7653088-A	R.H.	1	76	A	63/64
C3AZ 7653089-A	L.H.	1	76	A	63/64
C3DZ 7653088-A	R.H. - use on vehicles built prior to 12-10-62	1	76	C	63
C3DZ 7653089-A	L.H. - use on vehicles built prior to 12-10-62	1	76	C	63
C3DZ 7653088-B	R.H. - use on vehicles built after 12-9-62 (a)	1	76	C	63/64
C3DZ 7653089-B	L.H. - use on vehicles built after 12-9-62 (a)	1	76	C	63/64
352628-S8	Bolt-hex-washer hd.-5/16"-24 x 7/8"	3	a		
53104-5	RAIL (FOLDING TOP) SIDE FRONT				
PB9M 7653104-AP	R.H. - in prime (a)	1	76	A	60
PB9M 7653105-AP	L.H. - in prime (a)	1	76	A	60
COAZ 7653104-AP	R.H. - in prime	1	76	A	61/62
COAZ 7653105-AP	L.H. - in prime	1	76	A	61/62
C3AZ 7653104-A	R.H. - in prime	1	76	A	63
C3AZ 7653105-A	L.H. - in prime	1	76	A	63
C3AZ 7653104-B	R.H. - in prime	1	76	A	64
C3AZ 7653105-B	L.H. - in prime	1	76	A	64

CONTINUED ON NEXT PAGE

GROUP AND PART NUMBER	DESCRIPTION, SIZE, ETC.	NO. REQ'D	MODEL OR ENGINE CUBIC INCH DISPLACEMENT	VEHICLE CODE	YEAR 19____
53104-5	RAIL (FOLDING TOP) SIDE FRONT (CONTINUED)				
C3DZ 7653104-A	R. H.	1	76	C	63
C3DZ 7653105-A	L. H.	1	76	C	63
C4DZ 7653104-A	R. H.	1	76	C	64
C4DZ 7653105-A	L. H.	1	76	C	64
BAK 6853104-AP	R. H.	1	68	D	60
BAK 6853105-AP	L. H.	1	68	D	60
C1VB 7453104-BP	R. H. - use on vehicles built prior to 7-1-62 (b) where No. 1 bow joins the rail, the O/S edge has a 45° step towards the center	1	74	D	61/62
C1VB 7453105-BP	L. H. - use on vehicles built prior to 7-1-62 - (b) where No. 1 bow joins the rail, the O/S edge has a 45° step towards the center	1	74	D	61/62
C3VY 7453104-A	R. H. - use on vehicles built after 6-30-62 - where No. 1 bow joins the rail, the O/S edge has a 90° step towards the center	1	74	D	62/63
C3VY 7453105-A	L. H. - use on vehicles built after 6-30-62 - where No. 1 bow joins the rail, the O/S edge has a 90° step towards the center	1	74	D	62/63
C4VY 7453104-A	R. H. (c)	1	74	D	64
C4VY 7453105-A	L. H. (c)	1	74	D	64
	Attach rail to header bow with the following				
34179-S13	Nut-crown-chrome plated 5/16"-24	4	a		
34806-S7	Lockwasher-steel-5/16"	4	a		
34956-S7	Lockwasher-steel-external tooth countersunk 5/16"	4	a		
44722-S8	Washer-steel-flat-5/16"	4	a		
370132-S8	Nut-hex-5/16"-24	4	a		
	Attach front rail to No. 1 bow with the following -				
33923-S7	Nut-jam hex. -5/16"-24	2	b		
34806-S7	Lockwasher-5/16"	2	b		
371590-S8	Bolt-square hd. -5/16"-24 x 7/8"	2	b		
	Attach front side rail to header bow with the following -				
34082-S8	Nut-hex. hd. -5/16"-24	4	c		
34806-S7	Lockwasher-5/16"	4	c		
373279-S2	Bolt-5/16"-24	4	c		
	Attach front side rail to front side intermediate rail with the following -				
353848-S8	Pin-roll-3/16" x 11/16"	2	c		
C1VB 74531A06-A	Bushing	2	c		
C3AZ 7650492-A	Pin	2	c		
531A06	BUSHING (FOLDING TOP FRONT SIDE RAIL JOINT)				
C1VB 74531A06-A		4	74	D	61/64
53118-9	BRACKET (FOLDING TOP MAIN PIVOT)				
PB9M 7653118-AP	R.H. - in prime	1	76	A	60
PB9M 7653119-AP	L.H. - in prime	1	76	A	60
COAB 7653118-AP	R. H.	1	76	A	61/62
COAB 7653119-AP	L. H.	1	76	A	61/62
C3AZ 7653118-A	R. H.	1	76	A	63
C3AZ 7653119-A	L. H.	1	76	A	63
C4AZ 7653118-A	R. H.	1	76	A	64
C4AZ 7653119-A	L. H.	1	76	A	64
C3DZ 7653118-A	R. H.	1	76	C	63
C3DZ 7653119-A	L. H.	1	76	C	63
C4DZ 7653118-A	R. H.	1	76	C	64
C4DZ 7653119-A	L. H.	1	76	C	64

GROUP AND PART NUMBER	DESCRIPTION, SIZE, ETC.	NO. REQ'D	MODEL OR ENGINE CUBIC INCH DISPLACEMENT	VEHICLE CODE	YEAR 19____
531A18	EXTENSION (FOLDING TOP MAIN PIVOT BRACKET)				
C4DZ 76531A18-A	(a)	2	76	A C	64
20311-S8	Bolt-hex. hd-5/16"-24 x 1/2"	3	a		
34806-S7	Lockwasher-5/16"	3	a		
53138-9	RAIL (FOLDING TOP) SIDE REAR				
PB9M 7653138-AP	R.H. - in prime	1	76	A	60
PB9M 7653139-AP	L.H. - in prime	1	76	A	60
C1AZ 7653138-A	R.H. - in prime	1	76	A	61/62
C1AZ 7653139-A	L.H. - in prime	1	76	A	61/62
C3AZ 7653138-A	R.H. - in prime	1	76	A	63
C3AZ 7653139-A	L.H. - in prime	1	76	A	63
C4AZ 7653138-A	R.H. - in prime (b)	1	76	A	64
C4AZ 7653139-A	L.H. - in prime (b)	1	76	A	64
BAK 6853138-BP	R.H. - in prime	1	68	D	60
BAK 6853139-BP	L.H. - in prime	1	68	D	60
C3VY 7453138-A	R.H. - in prime - use with 377906-S13 pin - (a) 7/16" and 305066-S pin - 3/16" x 7/8" for 1961-62	1	74	D	61/63
C3VY 7453139-A	L.H. - in prime - use with 377906-S13 pin - (a) 7/16" and 305066-S pin - 3/16" x 7/8" for 1961-62	1	74	D	61/63
C4VY 7453138-A	R.H. - in prime (c)	1	74	D	64
C4VY 7453139-A	L.H. - in prime (c)	1	74	D	64
	Attach rear side rail to main pivot bracket 53118 with the following -				
C3AZ 7650473-A	Bushing	2	b		
72016-S	Pin-cotter-3/32" x 3/4"	1	b		
356383-S2	Washer-spring	1	b		
357427-S13	Pin-clevis-7/16" x 1-3/8"	1	b		
373262-S36	Washer-flat-7/16"	1	b		
	Attach rear side rail to support main pivot bracket with the following -				
COSB 7650473-A	Bushing	2	c		
352358-S2	Pin-self-locking	1	c		
370643-S8	Pin-clevis-7/16"	1	c		
373262-S36	Washer-flat-7/16"	1	c		
373262-S36	Washer-flat-7/16"	2	a		
374515-S100	Clip-attach panel 15A665 to top rear side rail 53138	1	a		
53144-5	BRACKET (FOLDING TOP NO. 3 BOW)				
PB9M 7653144-AP	R.H. - in prime (a)	1	76	A	60
PB9M 7653145-AP	L.H. - in prime (a)	1	76	A	60
C1AB 7653144-A	R.H. (b)	1	76	A	61/62
C1AB 7653145-A	L.H. (b)	1	76	A	61/62
C3AZ 7653144-A	R.H.	1	76	A	63/64
C3AZ 7653145-A	L.H.	1	76	A	63/64
C3DZ 7653144-A	(1) for R.H. - (1) for L.H.	2	76	C	63/64
C1VB 7453144-AP	In prime (c)	2	74	D	61
C2VY 7453144-A		2	74	D	62/63
C4VY 7453144-A	R.H. (d)	1	74	D	64
C4VY 7453145-A	L.H. (d)	1	74	D	64
	Attach bracket to rear side rail with the following				
352358-S	Pin-self-locking	2	a		
356383-S	Washer-spring 3 wave	2	a		
356403-S8	Washer-plain-3/8"-steel	2	a		
371250-S13	Pin	2	a		

CONTINUED ON NEXT PAGE

GROUP AND PART NUMBER	DESCRIPTION, SIZE, ETC.	NO. REQ'D	MODEL OR ENGINE CUBIC INCH DISPLACEMENT	VEHICLE CODE	YEAR 19____
53144-5	BRACKET (FOLDING TOP NO. 3 BOW) CONTINUED				
	Attach bracket to No. 3 bow with the following				
34954-S7	Lockwasher-external tooth countersunk-1/4"	2	c		
34954-S13	Lock washer-external tooth countersunk-1/4"	2	a		
52787-S15	Screw-pan hd. cr. rec. tap. -No. 10-16 x 1/2"	2	a		
52931-S13	Screw-oval hd. cr. rec. tap. -1/4"-28 x 5/8"	2	c		
	Attach bracket to rail side rear intermediate with the following -				
72016-S8	Pin-cotter-3/32" x 3/4"	1	c		
356397-S2	Washer-spring-3/8"	1	c		
356403-S8	Washer-plain-3/8"	1	c		
373918-S13	Pin-oval hd. -3/8"	1	c		
	Attach bracket to No. 3 bow with the following -				
34954-S7	Lockwasher-external tooth-countersunk-1/4"	4	d		
52931-S13	Screw-oval hd. cr. rec. top-1/4"-28 x 5/8"	4	d		
	Attach bracket to rear side rail intermediate with the following -				
72016-S8	Pin-cotter-3/32" x 3/4"	1	d		
356383-S8	Washer-flat-3/8"	1	d		
356403-S8	Washer-spring-3/8"	1	d		
373918-S13	Pin-oval hd. -3/8" x 7/8"	1	d		
50706-S13	Screw and washer-oval hd. cr. rec. -1/4-28 x 5/8"	2	b		
53152-3	BRACE (FOLDING TOP MAIN PIVOT BRACKET SUPPORT)				
PB9M 7653152-A	R.H.	1	76	A	60
PB9M 7653153-A	L.H.	1	76	A	60
COAB 7653152-A	R.H.	1	76	A	61/64
COAB 7653153-A	L.H.	1	76	A	61/64
C3DZ 7653152-A	(1) for R.H. - (1) for L.H.	2	76	C	63
C4GY 7653152-A	R.H.	1	76	C	64
C4GY 7653153-A	L.H.	1	76	C	64
53156-9	SUPPORT (FOLDING TOP MAIN PIVOT BRACKET)				
PB9M 7653156-A	R.H.	1	76	A	60
PB9M 7653157-A	L.H.	1	76	A	60
C1AB 7653156-A	R.H.	1	76	A	61/63
C1AB 7653157-A	L.H.	1	76	A	61/63
C4AZ 7653156-A	R.H.	1	All	A	64
C4AZ 7653157-A	L.H.	1	All	A	64
C3DZ 7653156-A	R.H.	1	76	C	63
C3DZ 7653157-A	L.H.	1	76	C	63
C4DZ 7653156-A	R.H.	1	76	C	64
C4DZ 7653157-A	L.H.	1	76	C	64
C1VY 7453158-A	R.H. - in prime (a)	1	74	D	61/63
C1VY 7453159-A	L.H. - in prime (a)	1	74	D	61/63
C4VY 7453158-A	R.H. - use on vehicles built prior to 10-21-63	1	74	D	64
C4VY 7453159-A	L.H. - use on vehicles built prior to 10-21-63	1	74	D	64
C4VY 7453158-B	R.H. - use on vehicles built after 10-20-63	1	74	D	64
C4VY 7453159-B	L.H. - use on vehicles built after 10-20-63	1	74	D	64
33798-S8	Nut-hex. -5/16"-24	2	a		
34781-S7	Lockwasher-spring-5/16"	2	a		
44722-S8	Washer-flat-steel-5/16"	2	a		
373908-S8	Bolt	2	a		
53174-5	LINK (FOLDING TOP NO. 4 BOW)				
PB9M 7653174-A	R.H. - in prime	1	76	A	60
PB9M 7653175-A	L.H. - in prime	1	76	A	60

GROUP AND PART NUMBER	DESCRIPTION, SIZE, ETC.	NO. REQ'D	MODEL OR ENGINE CUBIC INCH DISPLACEMENT	VEHICLE CODE	YEAR 19____
53192-3	RAIL & REINFORCEMENT (FOLDING TOP) REAR SIDE				
C3DZ 7653192-A	R. H.	1	76	C	63
C3DZ 7653193-A	L. H.	1	76	C	63
C4DZ 7653192-A	R. H. (a)	1	76	C	64
C4DZ 7653193-A	L. H. (a)	1	76	C	64
	Attach rail and reinforcement to hydraulic lift with the following -				
C3AZ 7650412-A	Bushing	2	a		
352358-S7	Pin-self-locking	1	a		
354172-S8	Washer-flat-3/8"	1	a		
356383-S7	Washer-wave	1	a		
359238-S13	Pin-clevis	1	a		
	Attach rail and reinforcement to bracket main pivot 53118 with the following -				
72016-S	Pin-cotter-3/32" x 3/4"	1	a		
356383-S7	Washer-spring	1	a		
357412-S13	Pin	1	a		
373262-S36	Washer-flat-7/16"	1	a		
53211	WASHER (SPRING)				
8M 7653211	3 Wave - 29/64" I.D. x 3/4" O.D.	6	68	D	60
533A00	KIT - MOTOR & PLATE (FOLDING TOP HYDRAULIC LIFT)				
C2AZ 76533A00-A		1	76	A C	62/63
Consists of the following -					
(2) H-1029	screw	(1) H-10073	grommet	(1) H-10217	"o" ring
(1) H-1056	lockwasher	(1) H-10074	grommet	(1) 103104	motor & pump
(1) H-1146	grommet	(1) H-10075	mounting bracket		end plate
(2) H-1599	plug	(2) H-10093	seal		
C4DZ 76533A00-A		1	76	A C	64
Consists of the following -					
(2) H-1039	screw	(2) H-1599	plug	(1) 1031041	motor & pump
(2) H-1056	lockwasher	(2) 10093	seal	(1) 1037506	mounting bracket
(2) H-1146	grommet	(1) 10217	"o" ring		
COAB 76533A00-A		1	76	A	60/61
		1	68	D	60
Consists of the following -					
(2) H-1029	screw	(2) H-10073	sleeve	(1) 1010928	motor & pump
(2) H-1056	lockwasher	(2) H-10074	grommet		end plate assy.
(2) H-1146	grommet	(1) H-10075	bracket	(1) 1012353	connector
(1) H-1158	"o" ring				
C1SZ 15667-A		1	74	D	61/62
Consists of the following -					
(2) H-1039	screw	(1) H-10073	grommet	(1) H-10075	bracket
(2) H-1056	lockwasher	(1) H-10074	grommet	(1) 1019509	motor & end plate
(1) H-1158	"o" ring				
C3SZ 76533A00-A		1	74	D	63/64
Consists of the following -					
(2) H-1039	screw	(2) H-10074	grommet	(1) 1012353	connector adaptor
(2) H-1056	lockwasher	(1) H-10075	bracket	(1) 1019564	inner rotor
(2) H-1146	grommet	(2) H-10093	hydraulic packing	(1) 1031014	motor & end plate
(2) H-10073	sleeve	(1) H-10217	"o" ring-flat		

GROUP AND PART NUMBER	DESCRIPTION, SIZE, ETC.	NO. REQ'D	MODEL OR ENGINE CUBIC INCH DISPLACEMENT	VEHICLE CODE	YEAR 19____
533A04	PANEL (FOLDING TOP MOTOR, PUMP & RELAY PANEL MOUNTING)				
C2VY 74533A04-A	Located behind R. H. side luggage compartment trim panel - dealer to rework - add 3/4" diameter clearance hole for name plate stud	1	74	D	61/63
C4VY 74533A04-A	Located behind R. H. side luggage compartment (a) trim panel	1	74	D	64
42743-A	Screw and washer-hex. hd. -1/4"-20 x 5/8"	6	a		
53316	SUPPORT (FOLDING TOP MOTOR & PUMP MOUNTING PANEL)				
C4VY 7453316-A	Steel	1	74	D	64
53337	KIT - PUMP (FOLDING TOP HYDRAULIC LIFT)				
C2AZ 7653337-A		1	76	A C	62/63
	Consists of the following -				
(2) H-10081	ball-steel-1/4"	(2) H-10217	"o" ring-motor shaft	(1) 1031068	rotor-inner
(1) H-10084	"o" ring-reservoir	(1) H-22042	cover-plate	(1) 1031069	rotor-outer
C4DZ 7653337-A		1	76	A C	64
	Consists of the following -				
(2) H-10081	ball-steel-1/4"	(1) H-10217	"o" ring motor shaft	(1) 1031069	rotor outer
(1) H-10084	"o" ring reservoir	(1) 1031068	rotor inner	(1) 1031179	pump cover plate
B8S 7653337-A		1	74	D	61/62
	Consists of the following -				
(1) H-1158	"o" ring	(1) H-21915	pump cover plate	(1) BAP-7653452-A	rotor-outer 5/16"
(2) H-10081	ball-steel-1/4"	(1) BAP-7653451-A	rotor-inner 5/16"		thick - H-10282
(2) H-10084	"o" ring		thick - H-10283		
(1) H-10087	drive ball-1/8"				
C3SZ 7653337-A		1	74	D	63/64
	Consists of the following -				
(2) H-10081	ball-steel-1/4"	(1) H-10217	"o" ring-motor shaft	(1) H-031320	pump cover plate
(2) H-10084	"o" ring-riser	(1) H-10282	rotor-outer	(1) 1019564	rotor-inner
(1) H-10087	drive ball-1/8"	(1) H-10283	rotor-inner		
53376	KIT - RESERVOIR (FOLDING TOP HYDRAULIC LIFT)				
C4DZ 7653376-A		1	76	A C	64
	Consists of the following -				
(1) H-21917	filler plug & "o" ring	(1) 1031286	bolt washer & ring	(1) 1037504	reservoir & bracket
(1) H-100840	ring				
PB9M 7653376-A		1	76	A	60/61
		1	68, 74	D	60/61
	Consists of the following -				
(2) H-1146	grommet	(2) H-10074	grommet	(1) H-21907	reservoir & bracket
(2) H-10073	sleeve				
B5A 7653376-A		1	74, 76	A C D	62/63
		1	74	D	64
	Consists of the following -				
(2) H-2198	bolt	(1) H-21917	filler plug &	(1) 101444	reservoir &
(2) H-10084	"o" ring		"o" ring assy.		bracket assy.
(1) H-10092	end plate-resvr. tube				
53382	SPACER (FOLDING TOP LIFT MOTOR SUPPORT)				
BA 7653382-A	Rubber	4	74	D	61/64
53388	PLATE (FOLDING TOP HYDRAULIC LIFT RESERVOIR END)				
BN 7653388-A		1	76	A	60/62
		1	68, 74	D	60/62

GROUP AND PART NUMBER	DESCRIPTION, SIZE, ETC.	NO. REQ'D	MODEL OR ENGINE CUBIC INCH DISPLACEMENT	VEHICLE CODE	YEAR 19____
53390-2	HOSE (FOLDING TOP LIFT)				
PB9M 7653390-A		2	76	A	60
COAB 7653390-A		2	76	A	61
C2AZ 7653390-A		2	76	A	62/63
C4AZ 7653390-A	Upper	1	76	A	64
C4AZ 7653392-A	Lower	1	76	A	64
C3DZ 7653390-A		2	76	C	63
C4DZ 7653390-A	Upper - 78" long	1	76	C	64
C4DZ 7653392-A	Lower- 86" long	1	76	C	64
C1VB 7453392-A	Upper and lower	2	74	D	61/64
53395	HOUSING (FOLDING TOP HYDRAULIC PUMP)				
B8S 7653395-A		1	74	D	61/62
53442	KIT - PLATE & ROTOR (FOLDING TOP HYDRAULIC LIFT PUMP)				
B5MY 7653442-A		1	68, 76	A D	60/61
Consists of the following -					
(1) BN-7653451-A	rotor-inner	(1) BN-7653454-A	plate	(1) 357186-S	ball-1/8" dia.
(1) BN-7653452-A	rotor-outer	(2) 353076-S	ball-1/4" dia.		
53450	PLUG (FOLDING TOP HYDRAULIC LIFT RESERVOIR FILLER HOLE)				
BN 7653450-A		1	68, 74, 76	A D	60/62
53453	BOLT (FOLDING TOP HYDRAULIC LIFT RESERVOIR ATTACHING)				
BN 7653453-A	5/16"-18 x 5-1/4" round head shoulder bolt	1	68, 74, 76	A D	60/62
53456	HOSE (FOLDING TOP HYDRAULIC LIFT)				
BAK 6853456-B	3/16" I.D. x 3/8" O.D. x 132" long (a)	2	68	D	60
52735-S	Screw-pan hd. cr. rec. tap. -No. 12-12 x 5/8"	3	a		
359852-S	Clip	3	a		
53506	CASING & CABLE (FOLDING TOP LOCK DRIVE)				
BAK 6853506-A		2	68	D	60
53510	NUT ASSEMBLY (LUGGAGE COMPARTMENT DOOR LOCK)				
B7A 5153510-A		2	74	D	61/64
53514	HOUSING (FOLDING TOP LOCK NUT)				
BAK 6853514-A	(a)	2	68	D	60
31628-S	Screw-fill. hd. -No. 10-32 x 5/8"	2	a		
34804-S	Washer-lock-No. 10	2	a		
53540-1	TRANSMISSION (FOLDING TOP LOCK)				
BAK 6853540-A	R.H. (a)	1	68	D	60
BAK 6853541-A	L.H. (a)	1	68	D	60
34941-S	Washer-external tooth lock-5/16"	2	a		
370476-S	Bolt-socket hd. -5/16"-18	2	a		
53542-3	COVER (FOLDING TOP LOCK NUT HOUSING)				
BAK 6853542-A	R.H. - chrome finish - 2-5/16" x 5-11/32" (a)	1	68	D	60
BAK 6853543-A	L.H. - chrome finish - 2-5/16" x 5-11/32" (a)	1	68	D	60
50641-S	Screw and washer-rd. hd. -1/4"-28 x 1/2"	2	a		
53547	COVER (FOLDING TOP LOCK TRANSMISSION)				
BAK 6853547-AP	L.H. - in prime - 3-1/4" x 7-5/8" with one hole 1-1/16" diameter - one hole 3/4" diameter - one hole 9/16" diameter (a)	1	68	D	60
51058-S	Screw-flat hd. -No. 8-3 x 1/2"	2	a		

GROUP AND PART NUMBER	DESCRIPTION, SIZE, ETC.	NO. REQ'D	MODEL OR ENGINE CUBIC INCH DISPLACEMENT	VEHICLE CODE	YEAR 19____
53559	CLAMP (FOLDING TOP LOCK CABLE)				
BJ 7653559-A	Steel - 5/8" diameter	2	68	D	60
53716	RETAINER (ROOF OUTSIDE COVER) FRONT				
C4MY 5453716-A	Use with vinyl covered roof	1	54	A	64
	Package also includes - (9) 376527-S rivet-oval hd. blind-1/8"				
53728	RETAINER (ROOF OUTSIDE COVER) SIDE				
C4MY 5453728-A	Use with vinyl covered roof	2	54	A	64
	Package also includes - (13) 378527-S rivet-oval hd. blind-1/8"				
C4VY 5353728-A	Use with vinyl covered roof	2	53	D	64
	Package also includes - (15) 378527-S oval-hd. rivet				
53729	RETAINER (ROOF OUTSIDE COVER)				
C3AZ 6353729-A	Use with vinyl covered roof	2	63	A	63/64
	Package also includes - (16) 378527-S rivet				
C3DZ 6353729-A	Aluminum	2	63C, D	C	64
53730-1	RETAINER (ROOF OUTSIDE COVER) FRONT CORNER				
C4MY 5453730-A	R. H. - used with vinyl covered roof (Δ)	1	54	A	64
C4MY 5453731-A	L. H. - used with vinyl covered roof (Δ)	1	54	A	64
	Δ Package also includes - (4) 378527-S rivet-oval hd. blind-1/8"				
53900-1	WEATHERSTRIP (FOLDING TOP SIDE REAR RAIL - INTERMEDIATE)				
C1VB 7453900-B	R. H. (a)	1	74	D	61/63
C1VB 7453901-B	L. H. (a)	1	74	D	61/63
C4VY 7453900-A	R. H. (b)	1	74	D	64
C4VY 7453901-A	L. H. (b)	1	74	D	64
34656-S7	Nut and washer assy. -hex. -No. 10-32	3	a		
44713-S8	Washer-flat-steel-No. 10	AR	a, b		
51765-S8	Screw-pan hd. cr. rec. tap. -No. 10-24 x 1/2"	1	a, b		
352222-S8	Bolt-special hd. moulding-No. 10-32 x 9/16"	AR	a, b		
376686-S8	Nut-tee capped-No. 10-32	4	b		
53916	BUSHING (REAR ROOF LOCK MOUNTING BOLT)				
B7A 5153916-A		8	74	D	61/64
53917	SLEEVE (REAR ROOF LOCK MOUNTING BOLT)				
B7A 5153917-A		4	74	D	61/64
53928-9	WEATHERSTRIP (FOLDING TOP SIDE FRONT RAIL) INTERMEDIATE				
C1VB 7453928-C	R. H. (a)	1	74	D	61/63
C1VB 7453929-C	L. H. (a)	1	74	D	61/63
C4VY 7453928-A	R. H. (b)	1	74	D	64
C4VY 7453929-A	L. H. (b)	1	74	D	64
34656-S7	Nut and washer assy. -hex. -No. 10-32	3	a		
44713-S8	Washer-flat-steel-No. 10	3	a		
352222-S8	Bolt-special hd. moulding-No. 10-32 x 9/16"	AR	a, b		
377686-S8	Nut-tee capped-No. 10-32	2	b		
53938	BUSHING (ROOF LIFT MOUNTING BOLT)				
B7A 5153938-A	Rubber - head 1" O.D. - neck 1/2" I.D. x 3/4" O.D. - 3/4" long located at lift and lift bracket	4	68	D	60

GROUP AND PART NUMBER	DESCRIPTION, SIZE, ETC.	NO. REQ'D	MODEL OR ENGINE CUBIC INCH DISPLACEMENT	VEHICLE CODE	YEAR 19____
53939	SLEEVE (ROOF LIFT MOUNTING BOLT BUSHING)				
B7A 5153939-A	Steel tubing - 25/64" I.D. x 1/2" O.D. - 1-1/2" long	2	68	D	60
53986-7	WEATHERSTRIP (FOLDING TOP FRONT SIDE RAIL)				
C2VY 7453986-A	R.H. (a)	1	74	D	61
C2VY 7453986-B	R.H. - when replacing for 1961-62 vehicles, must also use (1) C2VY-7403198-A (a)	1	74	D	62/63
C2VY 7453987-B	L.H. - when replacing for 1961-62 vehicles, must also use (1) C2VY-7403199-A (a)	1	74	D	61/63
C4VY 7453986-A	R.H. (b)	1	74	D	64
C4VY 7453987-A	L.H. (b)	1	74	D	64
34656-S7	Nut and washer assy.-hex.-No. 10-32	2	a		
44713-S8	Washer-flat-steel-No. 10	2	a		
51055-S8	NS-screw-flat hd. cr. rec. tap. -No. 10-32 x 3/8"	1	a, b		
352222-S8	Bolt-special hd. moulding-No. 10-32	2	a, b		
377686-S8	Nut-tee capped-No. 10-32	2	b		
53988-9	DEFLECTOR (FOLDING TOP REAR RAIL - LOWER)				
COAB 7653988-A	R.H.	1	76	A	61/64
COAB 7653989-A	L.H.	1	76	A	61/64
53996	COVER (FOLDING TOP BALANCE LINK)				
C4SZ 7653996-A	(a)	1	74	D	64
43264-S13	Screw and washer-hex. hd. -5/16"-24 x 7/8"	2	a		
54000-1	WEATHERSTRIP (FOLDING TOP REAR SIDE RAIL)				
C1VY 7454000-A	R.H. (a)	1	74	D	61/63
C1VY 7454001-A	L.H. (a)	1	74	D	61/63
C4VY 7454000-A	R.H.	1	74	D	64
C4VY 7454001-A	L.H.	1	74	D	64
44713-S8	Washer-flat-steel-No. 10	3	a		
51765-S8	Screw-pan hd. cr. rec. tap. -No. 10-24 x 1/2"	4	a		
54014-5	PLATE (FOLDING TOP REAR SIDE RAIL TO LUGGAGE COMPARTMENT DOOR BUMPER)				
C1VB 7454014-A	R.H. - rustless steel	1	74	D	61/63
C1VB 7454015-A	L.H. - rustless steel	1	74	D	61/63
54601	SCREW (FOLDING TOP LOCK)				
B9LB 6854601-A	Chrome finish - located at header bow	2	68	D	60
546A02	SEAL (FOLDING TOP COMPARTMENT OPENING)				
C3AZ 76546A02-A	BLACK - 5/16" x 7/8" x 120" - use on vehicles built after 1-2-63	1	76	A	63/64
54624-5	RETAINER (FOLDING TOP COMPARTMENT TRIM SIDE) FRONT				
PB9M 7654624-A	Rustless steel - 7-15/16" long	2	76	A	60
C1AB 7654624-A	R.H. - rustless steel	1	76	A	61/62
C1AB 7654625-A	L.H. - rustless steel	1	76	A	61/62
C3AZ 7654624-A	R.H.	1	76	A	63/64
C3AZ 7654625-A	L.H.	1	76	A	63/64
C3DZ 7654624-A	R.H.	1	76	C	63/64
C3DZ 7654625-A	L.H.	1	76	C	63/64
54646-7	SUPPORT (FOLDING TOP COMPARTMENT SIDE TRIM RETAINER)				
PB9M 7654646-A	R.H. - steel - 7-7/8" long (a)	1	76	A	60
PB9M 7654647-A	L.H. - steel - 7-7/8" long (a)	1	76	A	60
52720-S	Screw-pan hd. cr. rec. tap. -No. 8-15 x 3/8"	3	a		

GROUP AND PART NUMBER	DESCRIPTION, SIZE, ETC.	NO. REQ'D	MODEL OR ENGINE CUBIC INCH DISPLACEMENT	VEHICLE CODE	YEAR 19____
54668	FASTENER (FOLDING TOP COMPARTMENT DRAIN SCREEN)				
B5A 7654668-A		1	76	A	60/63
54672-3	RETAINER (FOLDING TOP COMPARTMENT TRIM) SIDE REAR				
PB9M 7654672-A	R.H. - rustless steel - 19-23/64" long	1	76	A	60
PB9M 7654673-A	L.H. - rustless steel - 19-23/64" long	1	76	A	60
54674-5	RETAINER (FOLDING TOP COMPARTMENT TRIM) REAR				
PB9M 7654674-A	R.H. - rustless steel - 29-7/16" long	1	76	A	60
PB9M 7654675-A	L.H. - rustless steel - 29-7/16" long	1	76	A	60
54677	RETAINER (FOLDING TOP COMPARTMENT TRIM) CENTER				
C1AB 7654677-A	Rustless steel	1	76	A	61/62
C3AZ 7654677-A		1	76	A	63/64
C3DZ 7654677-A		1	76	C	63/64
54700-1	COVER (FOLDING TOP SIDE RAIL) LESS LATCHES				
BAK 6854700-A	R.H. - does not include front and rear latches	1	68	D	60
BAK 6854701-A	L.H. - does not include front and rear latches	1	68	D	60
54704-5	RETAINER (FOLDING TOP NO. 1 BOW REAR WEATHERSTRIP END)				
C3AZ 7654704-A	R.H. (a)	1	76	A	63/64
C3AZ 7654705-A	L.H. (a)	1	76	A	63/64
52726-S8	Screw-pan hd. tap.-No. 8-15 x 1/2"	1	a		
54706	STUD (FOLDING TOP SIDE RAIL COVER FRONT LATCH)				
BAK 6854706-A	Steel (a)	2	68	D	60
33795-S	Nut-hex.-1/4"-20	2	a		
34940-S	Washer-lock-1/4"	2	a		
44720-S	Washer-flat-1/4"	2	a		
54730	PLATE (FOLDING TOP SIDE RAIL COVER REAR LATCH STRIKER)				
BAK 6854730-A	Steel (a)	2	68	D	60
45003-S	Spring-nut-No. 6-18	4	a		
354719-S	Screw-oval head-No. 6-18 x 3/8"	4	a		
54734-5	LATCH (FOLDING TOP SIDE RAIL COVER) FRONT				
BAK 6854734-A	R.H. (a)	1	68	D	60
BAK 6854735-A	L.H. (a)	1	68	D	60
34079-S	Nut-hex.-No. 10-32	6	a		
34903-S	Washer-internal tooth lock-No. 10	4	a		
50508-S	Screw-pan hd.-No. 10-32 x 3/8"	6	a		
54738-9	LATCH (FOLDING TOP SIDE RAIL COVER) REAR				
BAK 6854738-A	R.H. (a)	1	68	D	60
BAK 6854739-A	L.H. (a)	1	68	D	60
34903-S	Washer-internal tooth lock-No. 10	4	a		
50503-S	Screw-pan hd.-No. 10-32 x 1/4"	4	a		
54746	FILLER (FOLDING TOP SIDE RAIL COVER TO QUARTER WINDOW)				
BAK 6854746-A	Rubber - 2-59/64" x 1-55/64" with (3) 5/32" diameter holes	2	68	D	60
54748	RETAINER (FOLDING TOP SIDE RAIL COVER TO QUARTER WINDOW FILLER)				
BAK 6854748-A	Steel - "L" shaped - 2-49/64" x 1-27/32" with (3) 5/32" diameter holes (a)	2	68	D	60
52718-S	Screw-pan hd.-No. 6-18 x 3/8"	6	a		

GROUP AND PART NUMBER	DESCRIPTION, SIZE, ETC.	NO. REQ'D	MODEL OR ENGINE CUBIC INCH DISPLACEMENT	VEHICLE CODE	YEAR 19____
55004	CARRIER (SKI) LESS SIDE RAIL				
C3AZ 6255004-A		2	All except 76	A B C	63/64
		2	All	D	64
55006	CLAMP & STRAP (SKI CARRIER)				
C3AZ 6255006-A		AR	All except 76	A B C	60/64
		4	All	D	64
55008	CLAMP (DECK MOUNT LUGGAGE)				
C3AZ 2555008-A		1	All	A B C D	60/64
55014	FASTENER ASSEMBLY (ROOF LUGGAGE CARRIER)				
CODB 5955014-A		28	59, 71	C	60/61
55020	CLIP (SKI CARRIER HOLD DOWN CLAMP RETAINER)				
C3AZ 6255020-A		4	All except 76	A B C	63/64
		4	All	D	64
55022	SLAT ASSEMBLY (ROOF LUGGAGE CARRIER) OUTER				
C2DZ 5955022-A	63" long with 7/32" x 7/16" slot each end - used (a) with 6 slat carrier on vehicles built prior to 3-2-64	2	59, 71	A B C	60/64
CODB 5955022-B	58" long - assembly includes plate - can replace part numbers 55152 slat and 55177 plate on prior vehicles by adding holes in proper locations	2	59, 71	C	60/62
354610-S40	Washer-flat steel-1/4"	AR	a		
375388-S101	Screw-pan hd. -No. 10-16 x 3/8"	AR	a		
55028	PAD (SKI CARRIER BOTTOM SUPPORT)				
C3AZ 6255028-A	(2) for R.H. (2) for L.H. - when using for L.H. cut off nipples	4	All except 76	A B C	63/64
		4	All	D	64
55052	RETAINER (SKI)				
C3AZ 6255052-A		4	All except 76	A B C	63/64
		4	All	D	64
55062	KIT (CARRIER ROOF LUGGAGE) WITH COVER				
C3RY 5955062-A	3'4" x 5' - use on station wagons with luggage rack	1	59, 71, 77	A B C	60/64
C3RY 6255062-A	3' x 4' - use without luggage rack	1	All except 76	A B C	60/64
		1	All except 74	D	64
C3RY 6255062-B	4' x 5' - use without luggage rack	1	All except 76	A B C	60/64
		1	All except 74	D	64
55078	KIT - BRACKET & SCREW (ROOF & DECK MOUNTING) LUGGAGE CARRIER				
C3AZ 2555078-A		1	All	A B C D	60/64
Consists of the following -					
(2) C3RZ-2555078-B	bracket (2) 379290-S37 screw				
55100	KIT (ROOF & DECK LID LUGGAGE CARRIER)				
C3AZ 2555100-G	Kit - ski carrier adaptor - use for all station wagon racks with 3/4" or 7/8" diameter side rails	1	71	A C	64
C4AZ 7155100-A	Roof - permanent and removable installation - for removable also use (1) C4AZ-7155196-A strap	1	71	A C	64
C1DZ 5955100-A	Roof - permanent installation - slats 63" long - 5 slats low profile	1	59, 71	A B C	60/64
C3AZ 5455100-A		1	All except 76	A B C	63

CONTINUED ON NEXT PAGE

GROUP AND PART NUMBER	DESCRIPTION, SIZE, ETC.	NO. REQ'D	MODEL OR ENGINE CUBIC INCH DISPLACEMENT	VEHICLE CODE	YEAR 19____
55100	KIT (ROOF & DECK LID LUGGAGE CARRIER) CONTINUED				
C3AZ 2555100-A	Kit - rear deck luggage rack sides - removable installation when used as luggage rack kit C3AZ-2555100-B is required when used as ski rack kit C3AZ-2555100-C is required for permanent rear deck luggage rack kit C3AZ-2555196-A is required	1	All except 71	A C D	64
C3AZ 2555100-B	Kit - rear deck luggage rack - must be used with C3AZ-2555100-A kit	1	All except 71	A C D	64
C3AZ 2555100-C	Kit - rear deck ski carrier - must be used with C3AZ-2555100-A kit	1	All except 71	A C D	64
C3AZ 2555100-D	Kit - rail luggage rack side roof mount - use on all vehicles except convertibles, and on station wagons without luggage rack universal type NOTE - must be used with either C3AZ-2555100-E or C3AZ-2555100-F kit	1	All	A C D	64
C3AZ 2555100-E	Kit - ski carrier assembly - roof mount - use on all vehicles except convertible, and on all station wagons without luggage rack universal type NOTE - must be used with C3AZ-2555100-D kit	1	All	A C D	64
C3AZ 2555100-F	Kit - rack assembly - roof mount - use on all vehicles except convertible, and station wagons without luggage rack universal type NOTE - must be used with C3AZ-2555100-D kit	1	All	A C D	64
55106	RAIL (ROOF LUGGAGE CARRIER) FRONT				
C4DZ 5955106-A	Use with 5 slat carrier	1	71	A	64
C3AZ 7155106-A	Use with 6 slat carrier	1	59,71	A B C	60/64
55114	RAIL (ROOF LUGGAGE CARRIER) SIDE				
C1DZ 5955114-A	Chrome finish - 63" long (a)	2	59,71	A B C	61/64
CODB 5955114-B	Chrome finish - 58" long	2	59, 71	C	60/61
373946-S100	Screw-oval hd.-No. 10-32 x 1"	4	a		
55138	RAIL (ROOF LUGGAGE CARRIER) REAR				
C4DZ 5955138-A	Use with 5 slat carrier	1	71	A	64
C3AZ 7155138-A	Use with 6 slat carrier	1	59,71	A B C	60/64
55140	SUPPORT (ROOF LUGGAGE CARRIER)				
C4DZ 5955140-A	Use with 5 slat carrier	4	71	A	64
CODZ 5955140-B	Chrome finish - use with 6 slat carrier (a)	4	59, 71. 77	A C	60/64
		4	71	B	63
374468-S13	Screw-special fill. hd. -No. 10-32 x 1-3/16"	4	a		
55147	PAD (ROOF LUGGAGE CARRIER SLAT)				
CODB 5955147-C	Rubber (a)	6	59, 71	C	60/61
354610-S40	Washer-flat-steel-1/4"	AR	a		
55150	SLAT (ROOF LUGGAGE CARRIER) INNER				
C2DZ 5955150-A	63" long with 7/32" x 7/16" slot each end - (a) (4) req'd. - for 6 slat carrier - (5) req'd. - for 5 slat carrier	AR	59,71	A B C	60/64
CODB 5955150-C	Rustless steel - 58" long	4	59, 71	C	60/61
354610-S40	Washer-flat-steel-1/4"	AR	a		
375388-S101	Screw-pan hd. -No. 10-16 x 3/8"	AR	a		

GROUP AND PART NUMBER	DESCRIPTION, SIZE, ETC.	NO. REQ'D	MODEL OR ENGINE CUBIC INCH DISPLACEMENT	VEHICLE CODE	YEAR 19____
55152	SLAT (ROOF LUGGAGE CARRIER) OUTER				
CODB 5955152-A	58" long - less plate 55177 (a)	2	59, 71	C	60
354610-S40	Washer-flat-steel-1/4"	AR	a		
55156	KIT - PAD & RETAINER (ROOF & DECK MOUNTING LUGGAGE RACK)				
C3AZ 2555156-A		1	All	A C D	64
Consists of the following -					
(1) C3RA-2555156-C	base pad (2) C3RA-2555072-B retainer				
55177	PLATE (ROOF LUGGAGE CARRIER SUPPORT)				
CODB 5955177-A	Use with 55152 slat	4	59, 71	C	60
55180	FASTENER (ROOF LUGGAGE CARRIER SUPPORT)				
BAE 6455180-A	Aluminum - also serviced in C1KB-7155100-A roof luggage carrier kit	8	59, 71	C	60/61
55182	CAP (ROOF LUGGAGE CARRIER RAIL FINISH)				
CODZ 5955182-A	Chrome finish - includes set screw 375377-S	4	59, 71, 77	A B C	60/64
55196	KIT - STRAP ASSEMBLY (ROOF CARRIER HOLD DOWN)				
C4AZ 7155196-A	Use with carrier C4AZ-7155100-A for removable installation only	1	71	A C	64
55196	KIT - HARDWARE (REAR DECK LUGGAGE RACK)				
C3AZ 2555196-A	Permanent installation - must be used with C3AZ-2555100-A kit	1	All except 71	A C D	64

MEMO

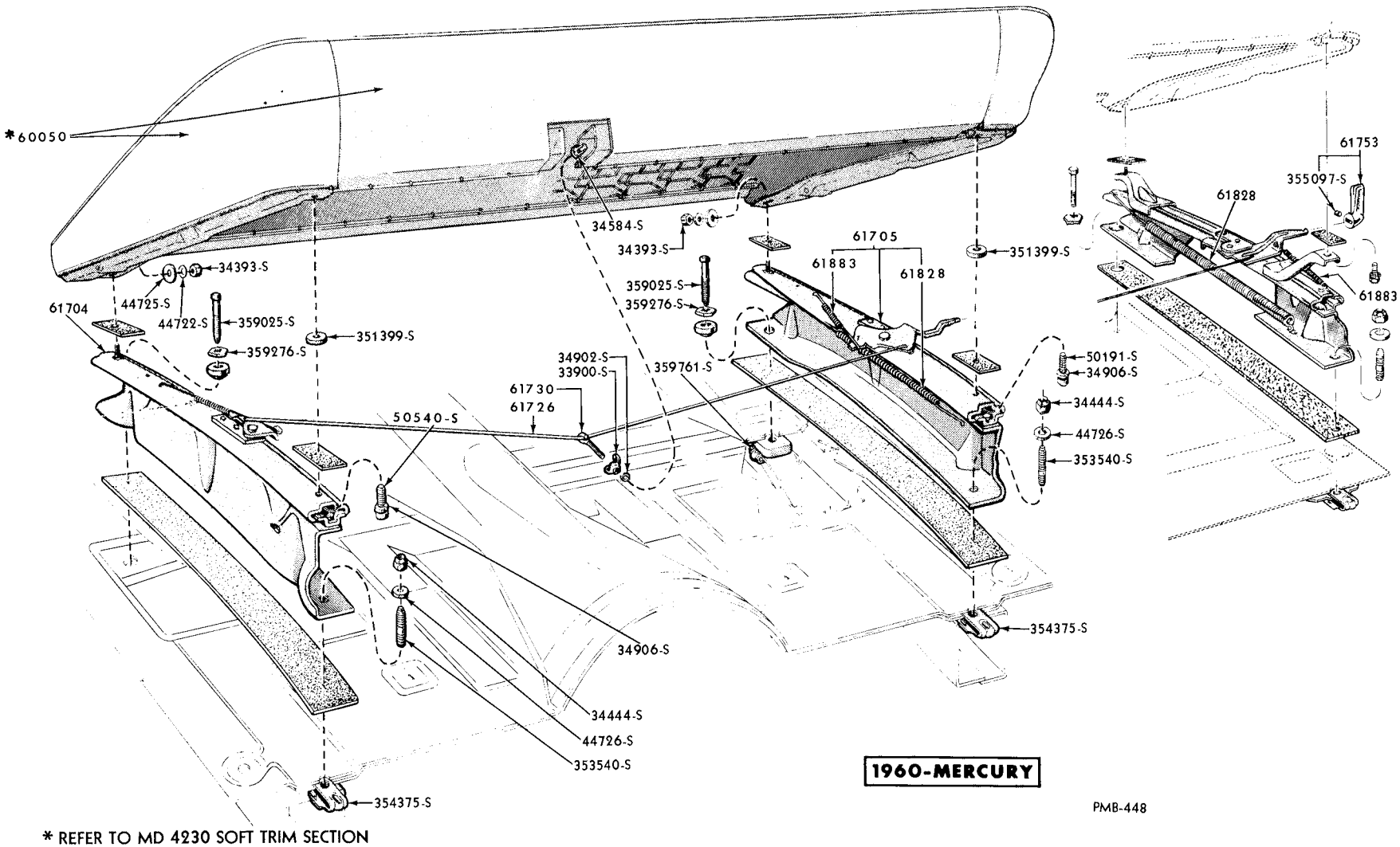

* REFER TO MD 4230 SOFT TRIM SECTION

FRONT SEAT - MANUAL CONTROL

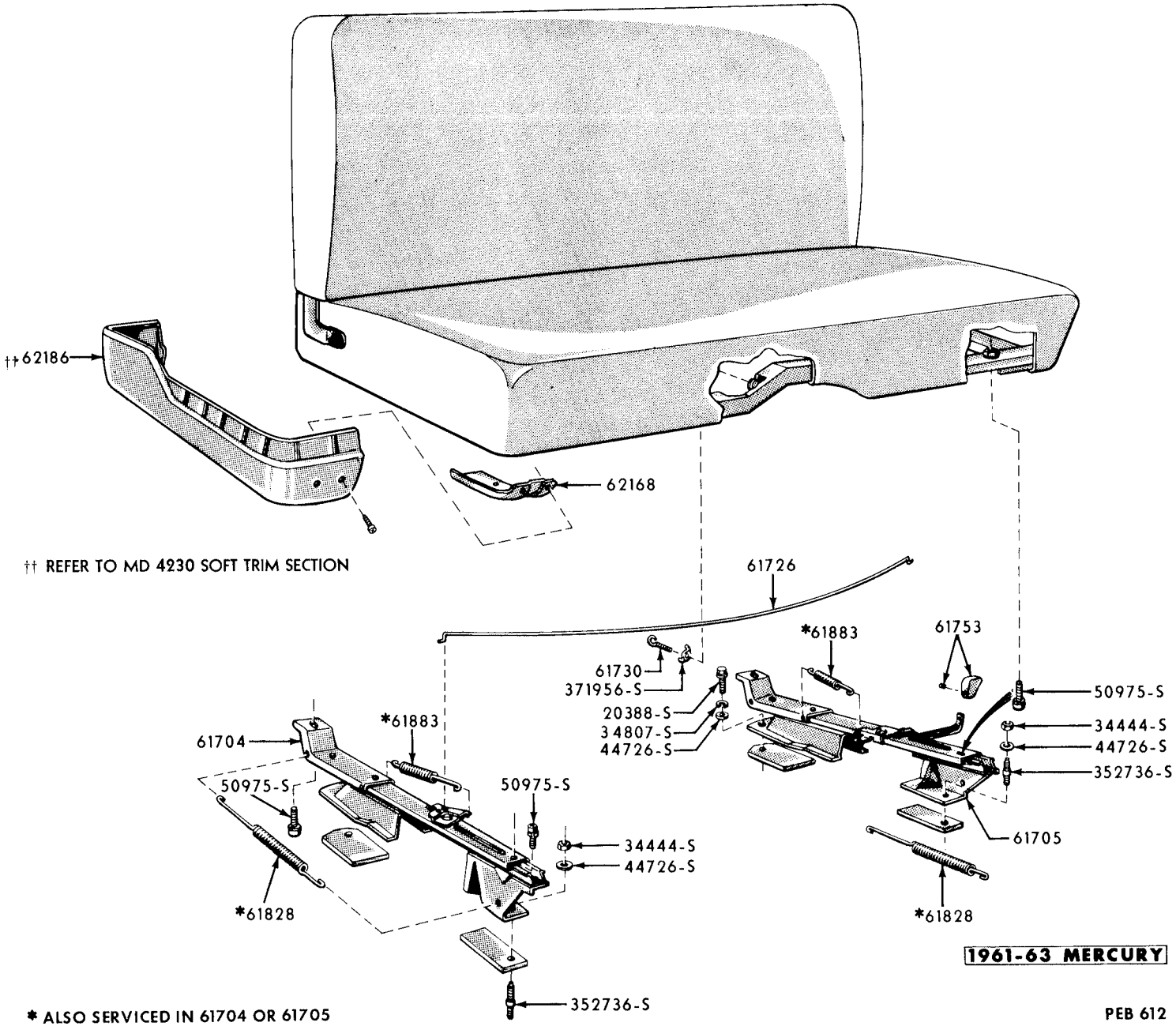

†† REFER TO MD 4230 SOFT TRIM SECTION

* ALSO SERVICED IN 61704 OR 61705

FRONT SEAT - MANUAL CONTROL

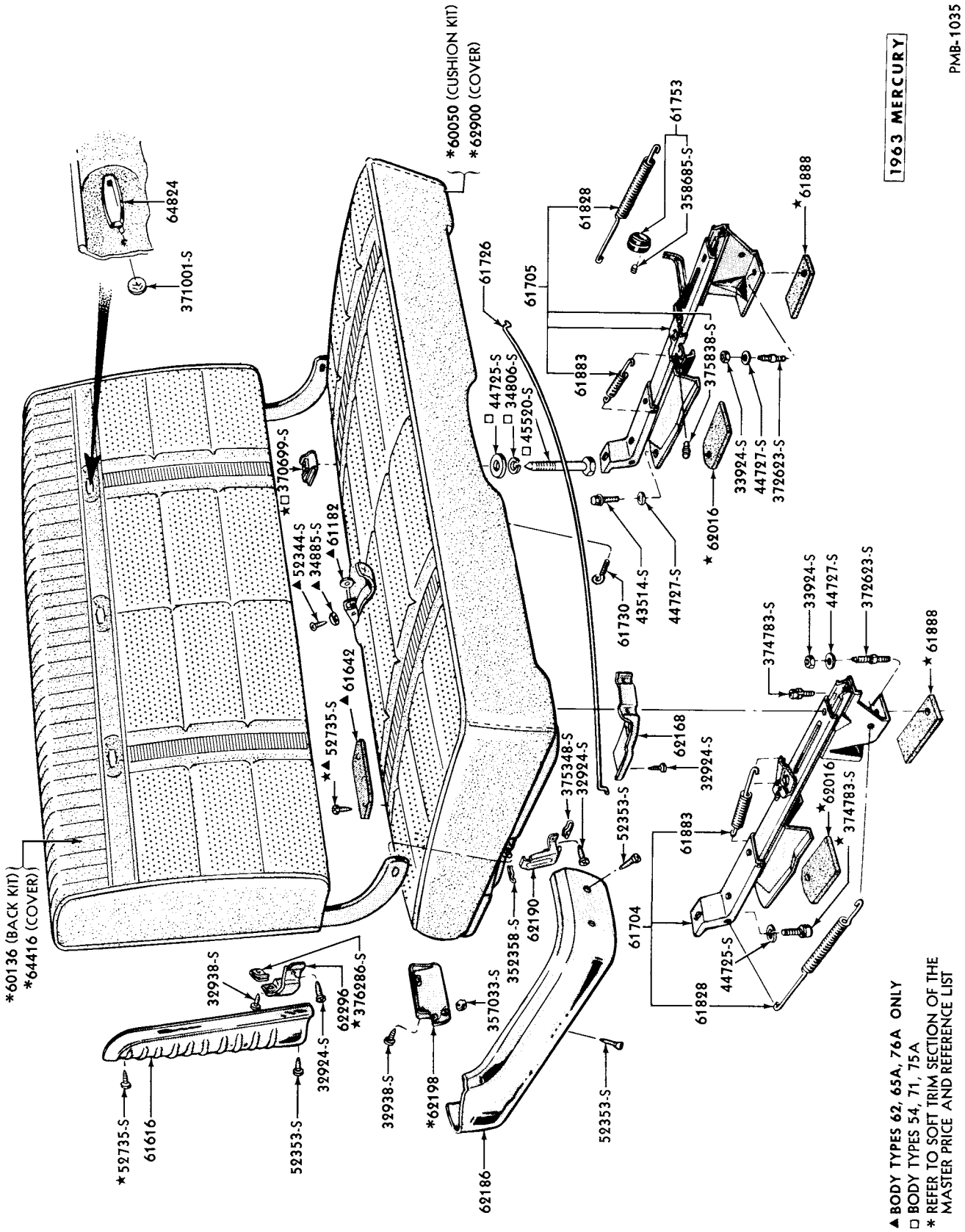

FRONT SEAT - MANUAL CONTROL

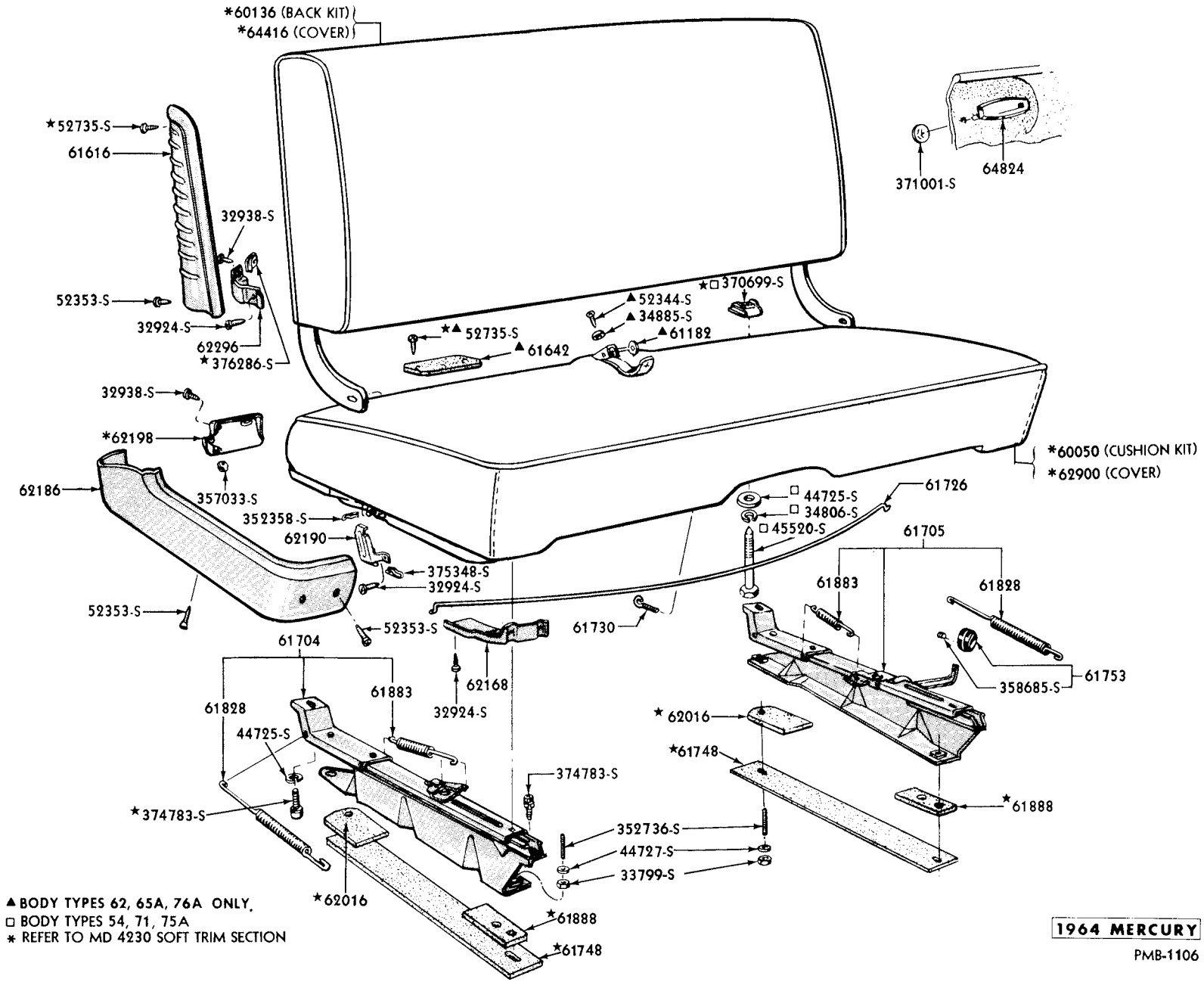

SEAT - FULL - MANUAL

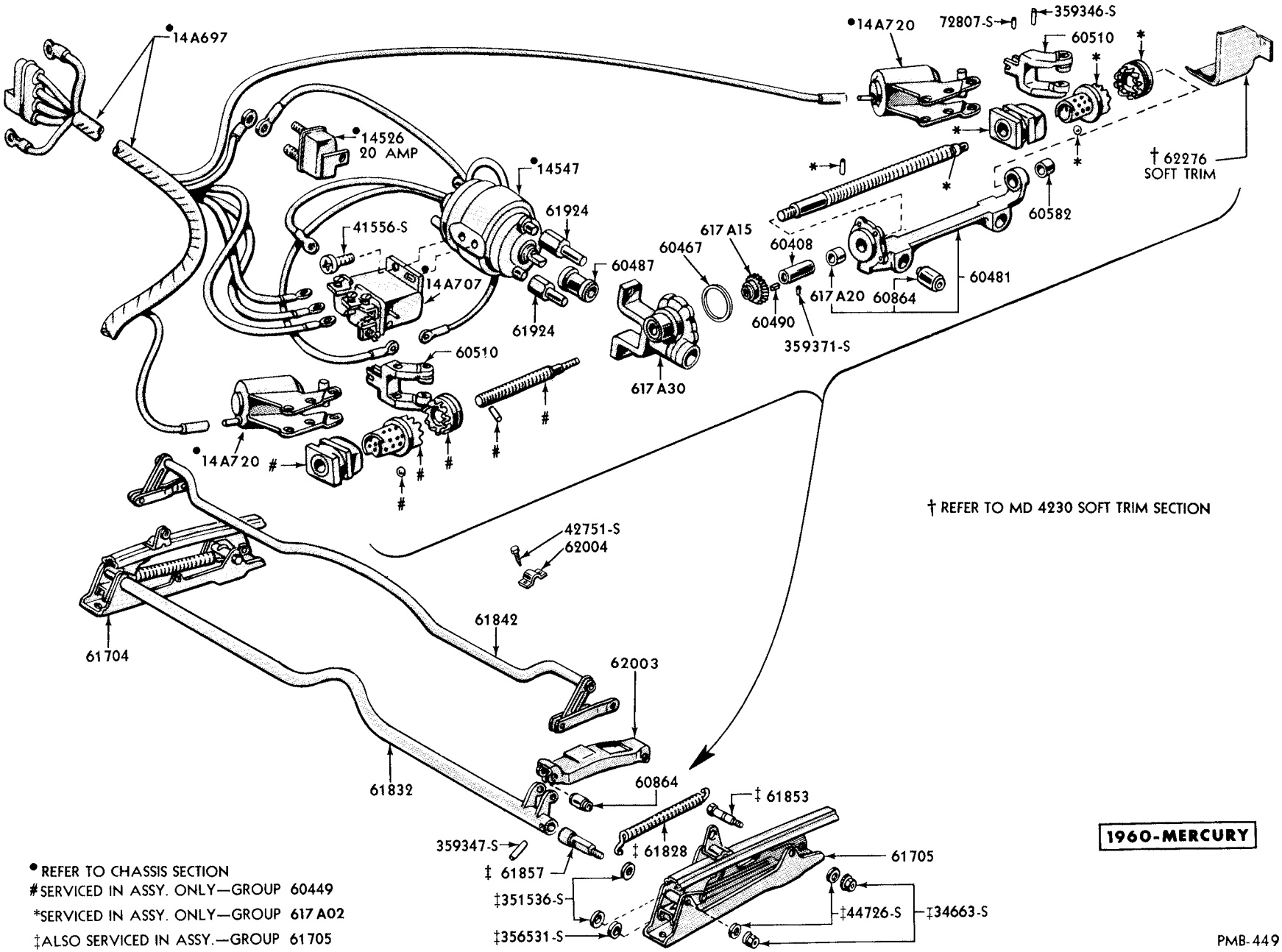

POWER SEAT, 4 - WAY MECHANISM

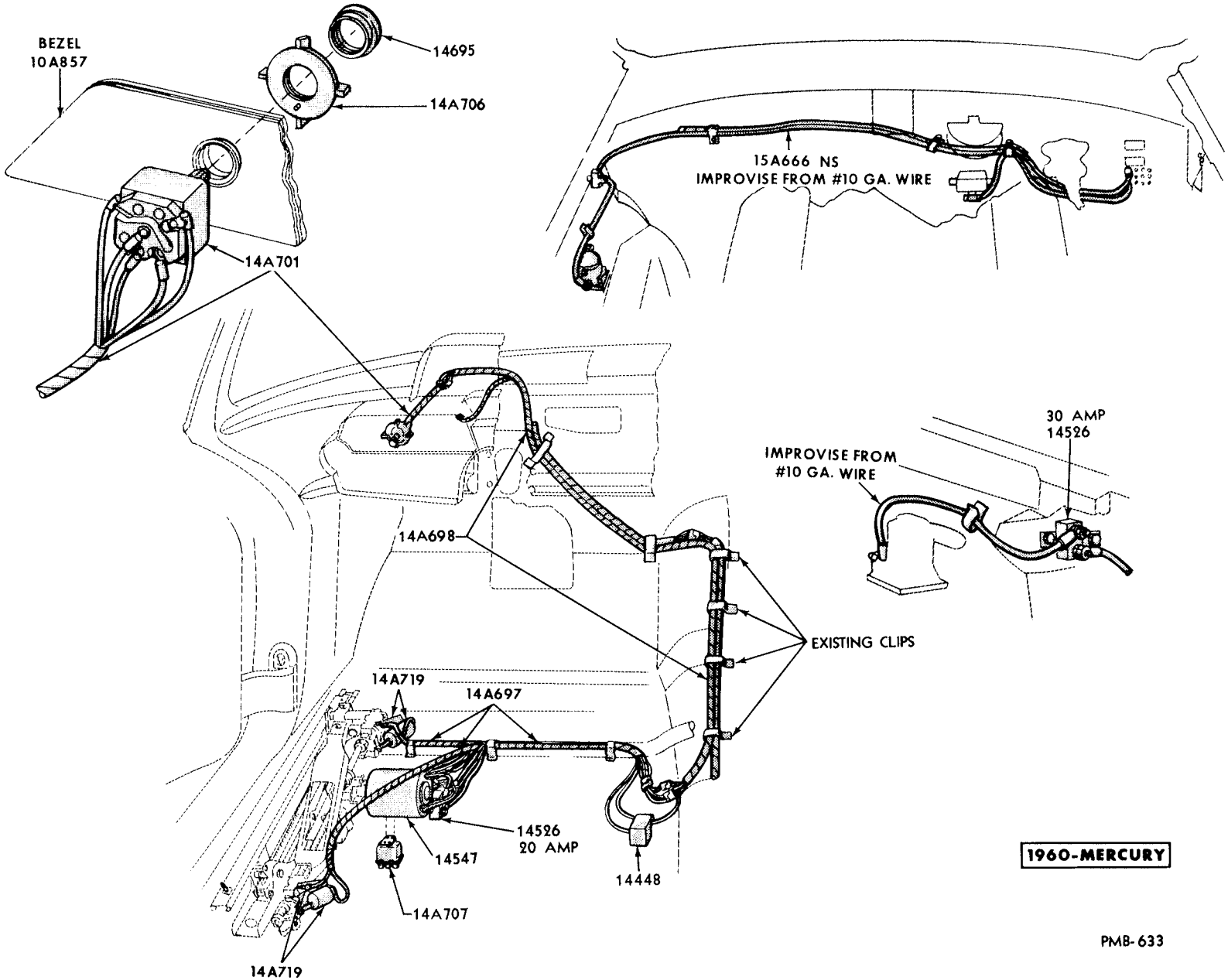

POWER SEAT, 4 - WAY ELECTRICAL DIAGRAM

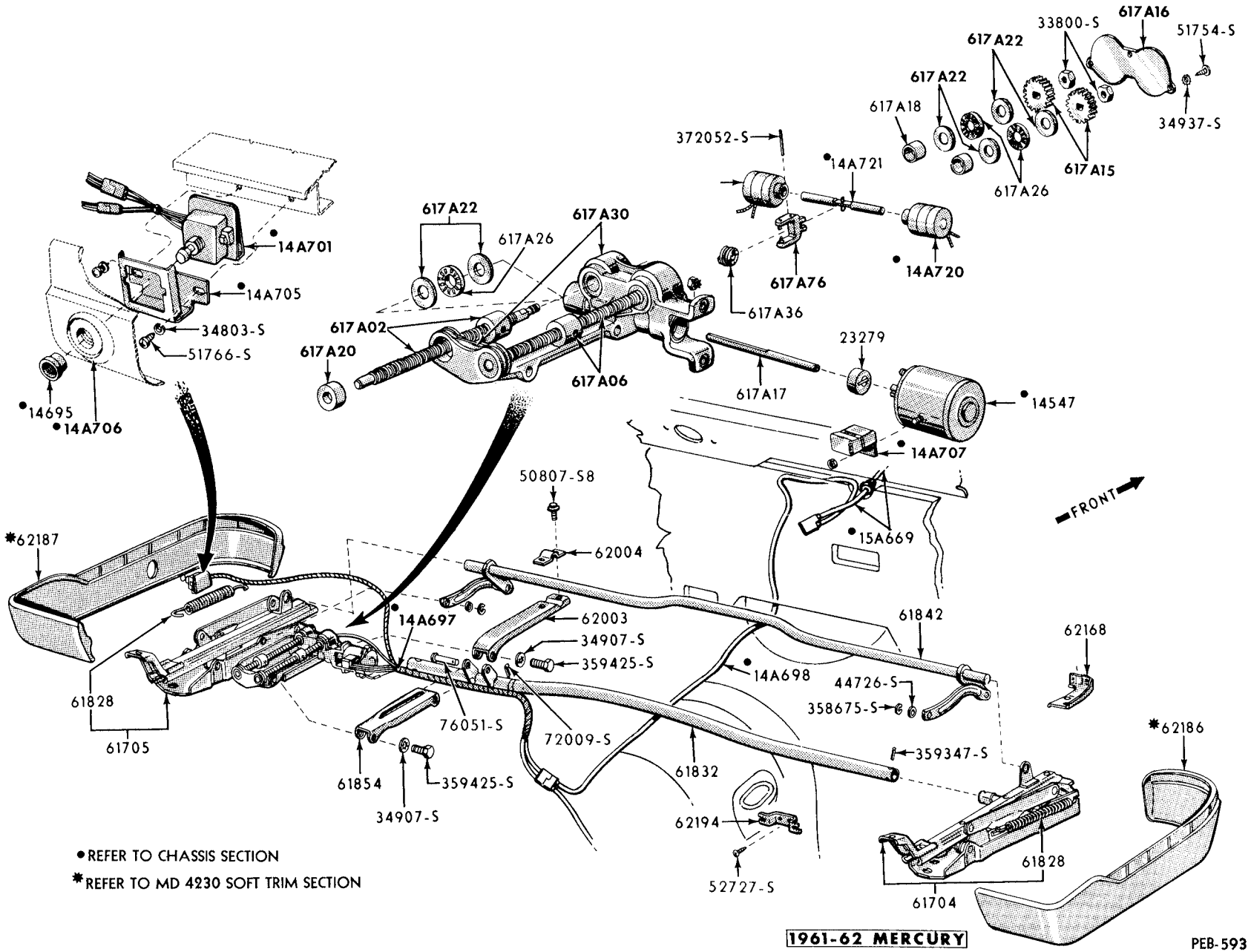

POWER SEAT, 4-WAY MECHANISM

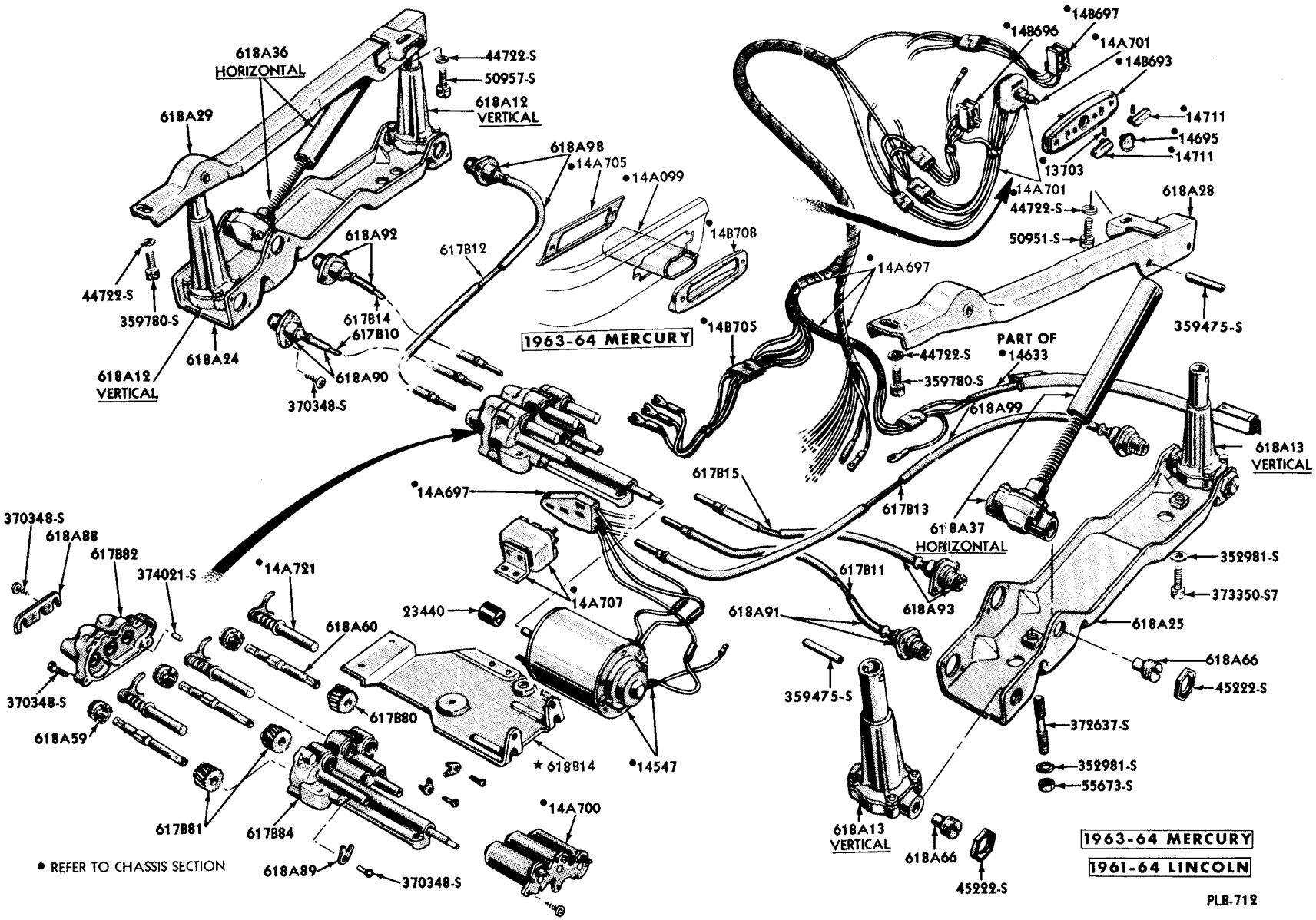

POWER SEAT 6-WAY MECHANISM

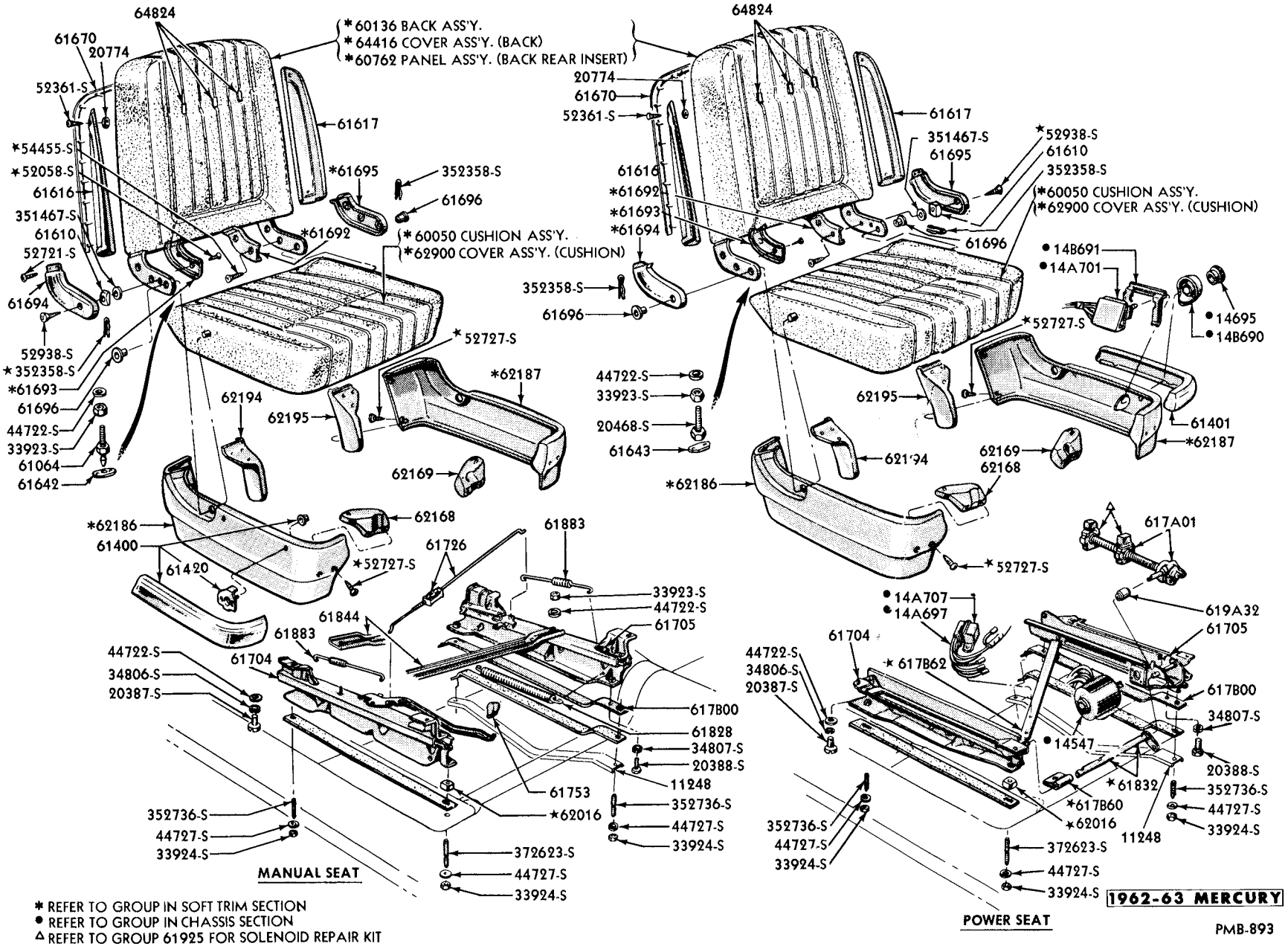

FRONT SEAT - MANUAL and ELECTRIC CONTROL - 65C, 76B

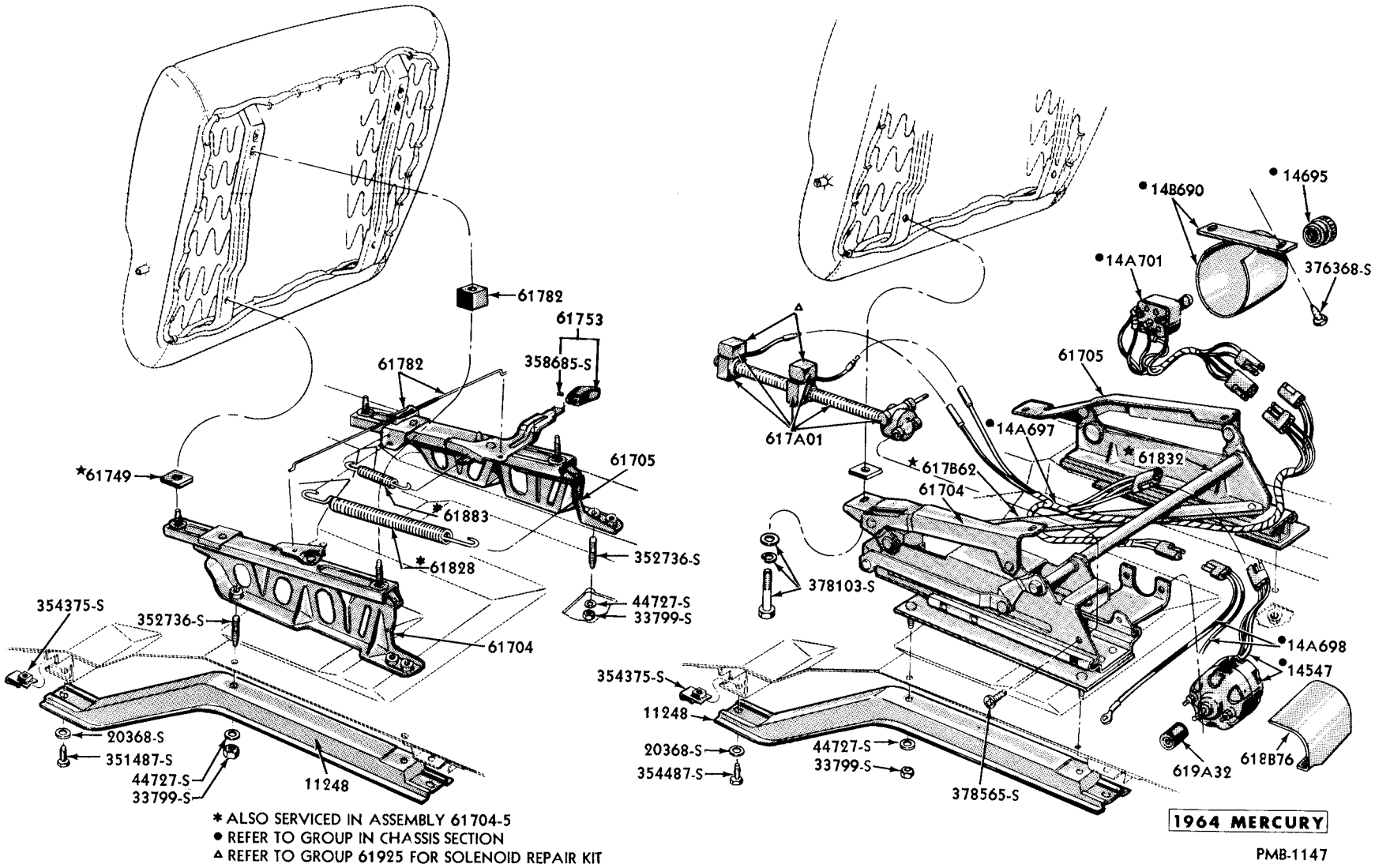

* ALSO SERVICED IN ASSEMBLY 61704-5
• REFER TO GROUP IN CHASSIS SECTION
△ REFER TO GROUP 61925 FOR SOLENOID REPAIR KIT

BUCKET SEAT MECHANISM - MANUAL and 4 WAY

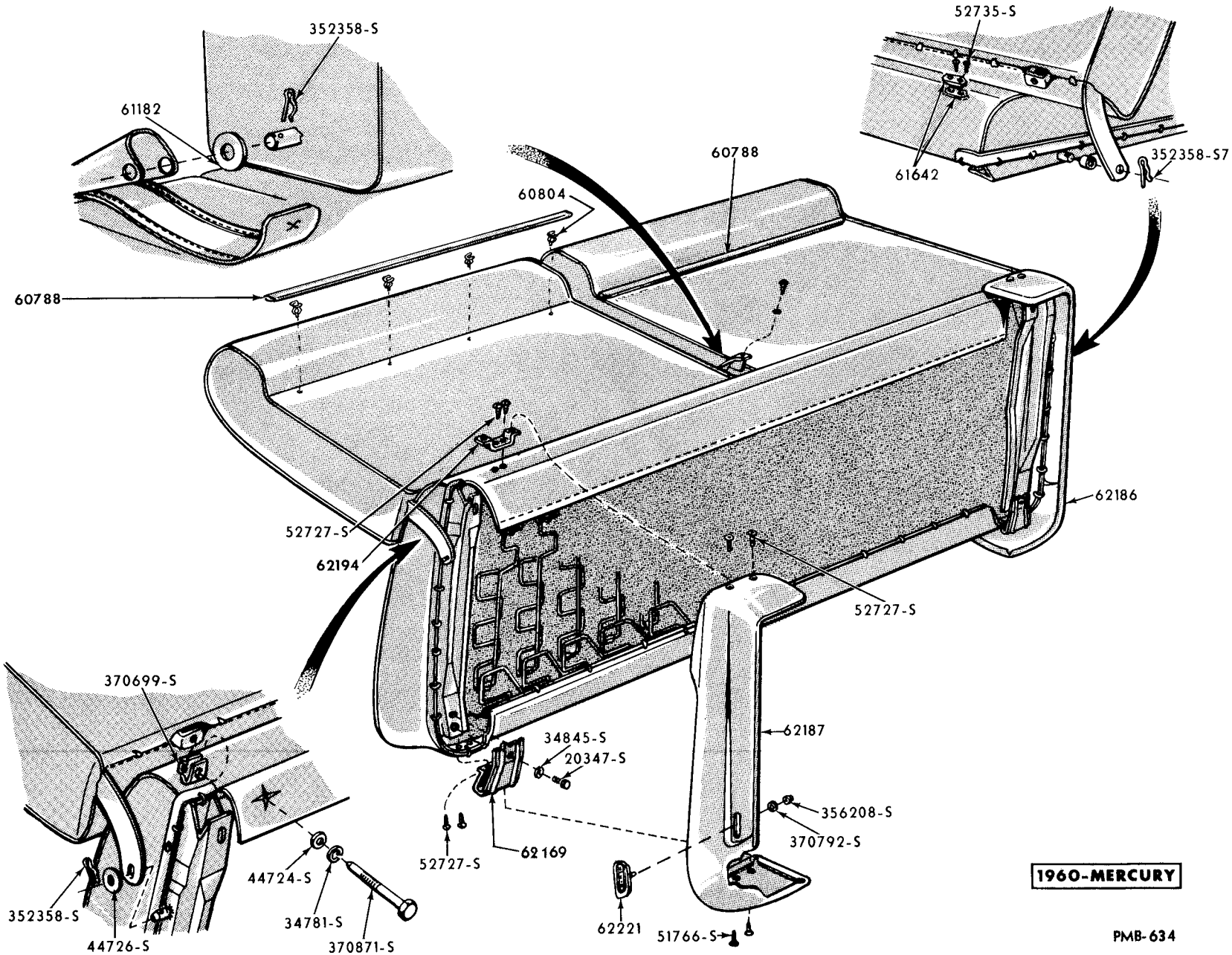

FRONT SEAT BACK and CUSHION - FULL

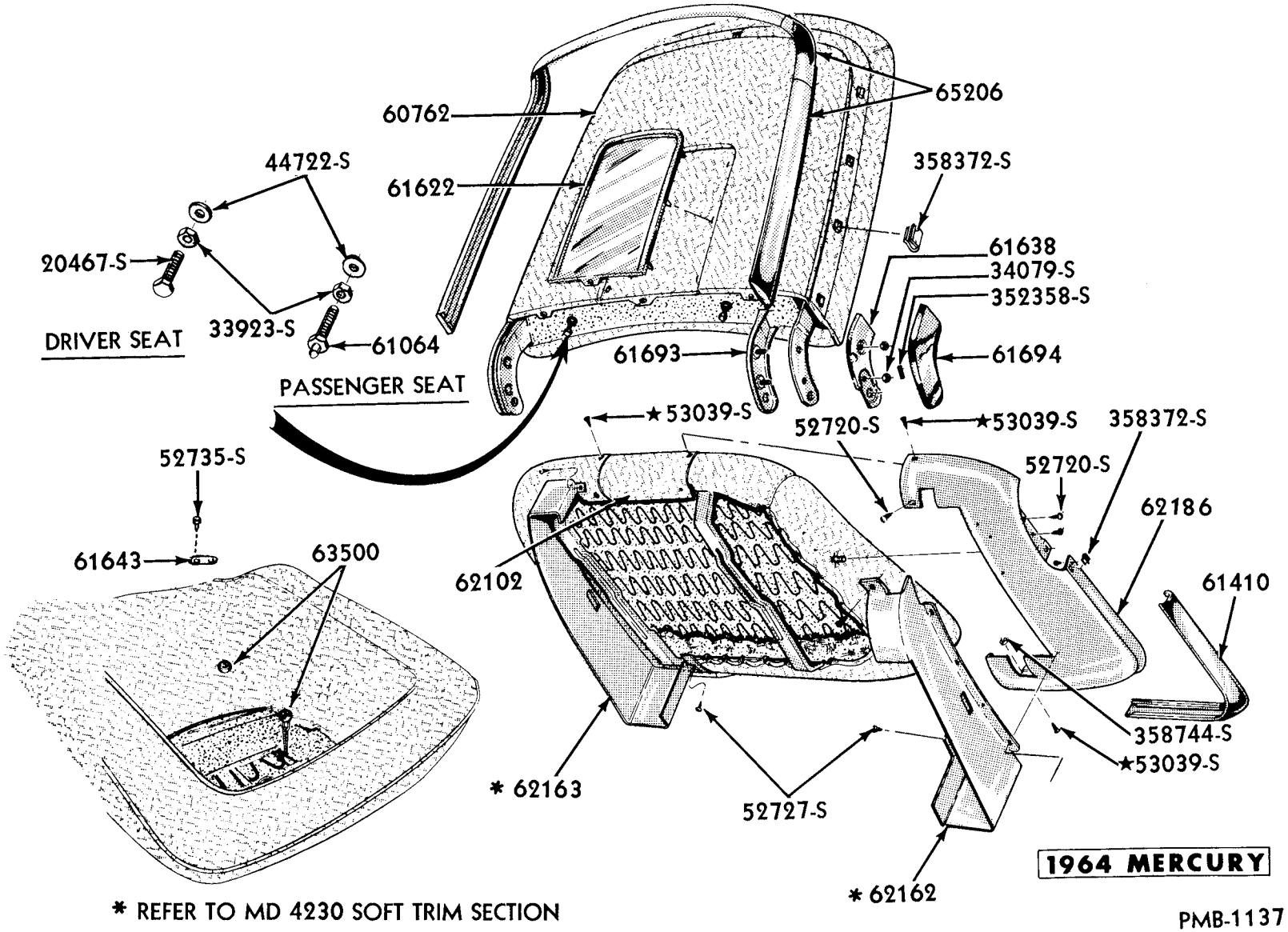

FRONT SEAT BACK, CUSHION, MOULDINGS and SIDESHIELDS - BUCKET SEATS

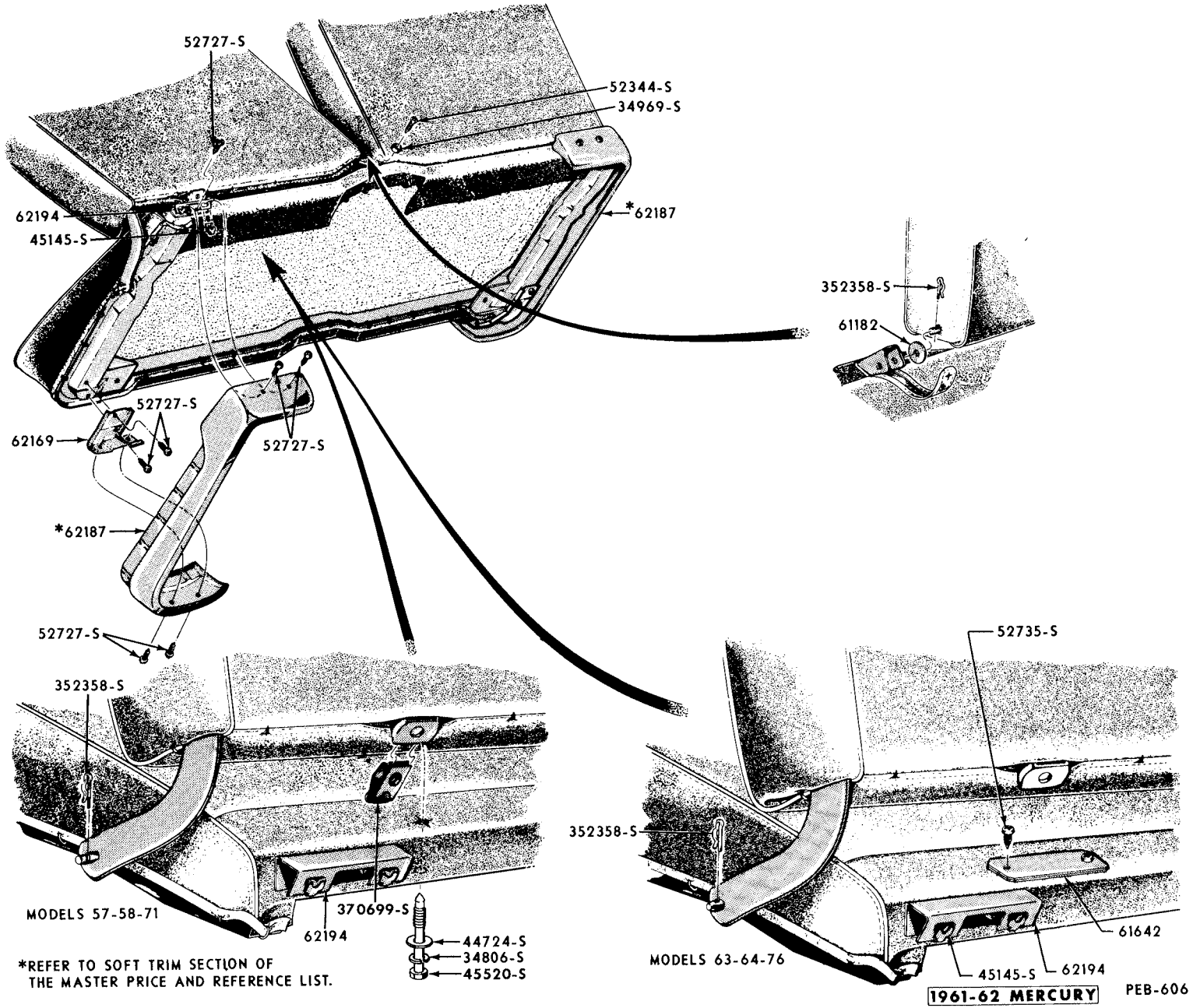

FRONT SEAT BACK and CUSHION

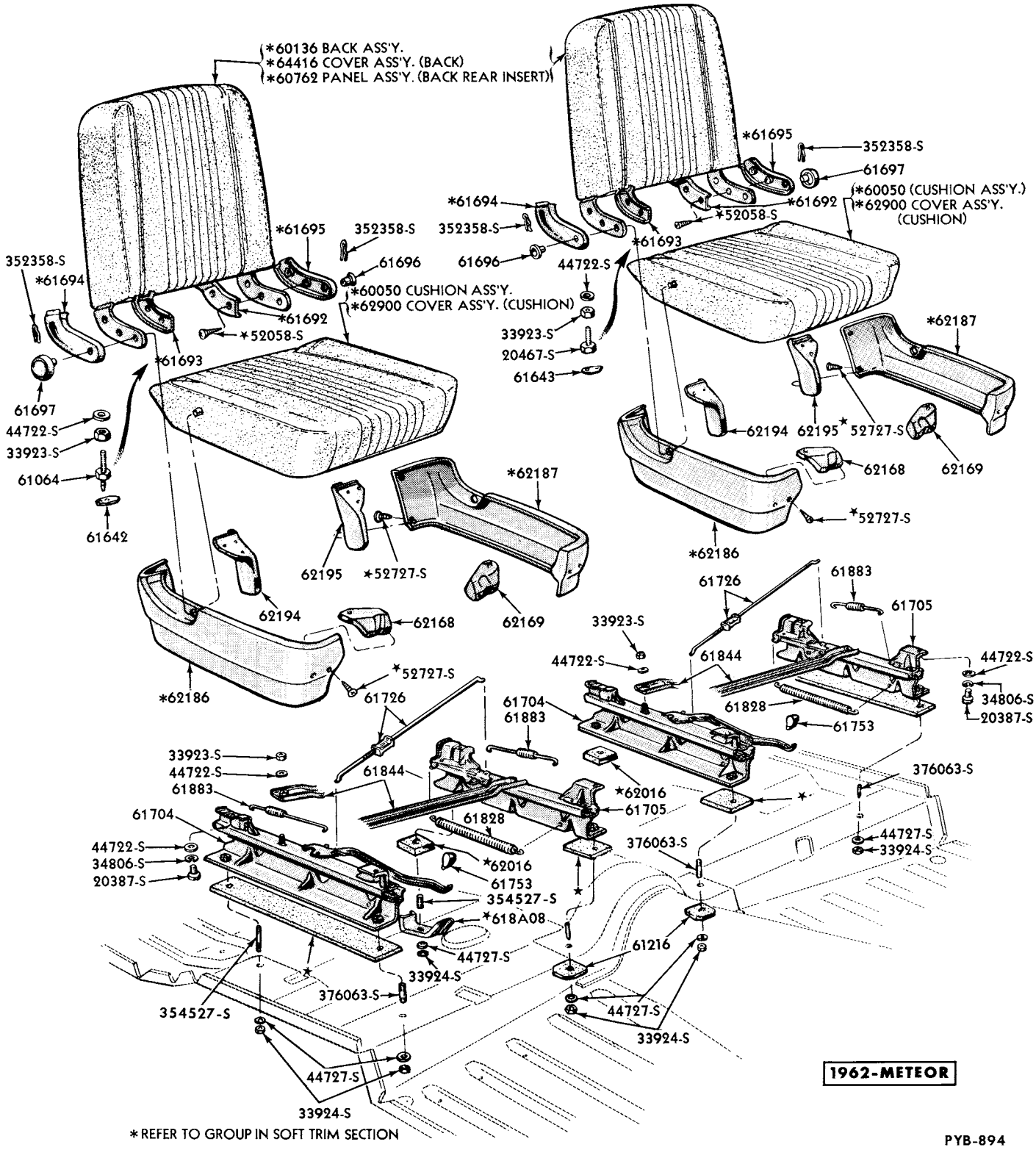

FRONT SEAT(BUCKET)- MANUAL CONTROL - 62C

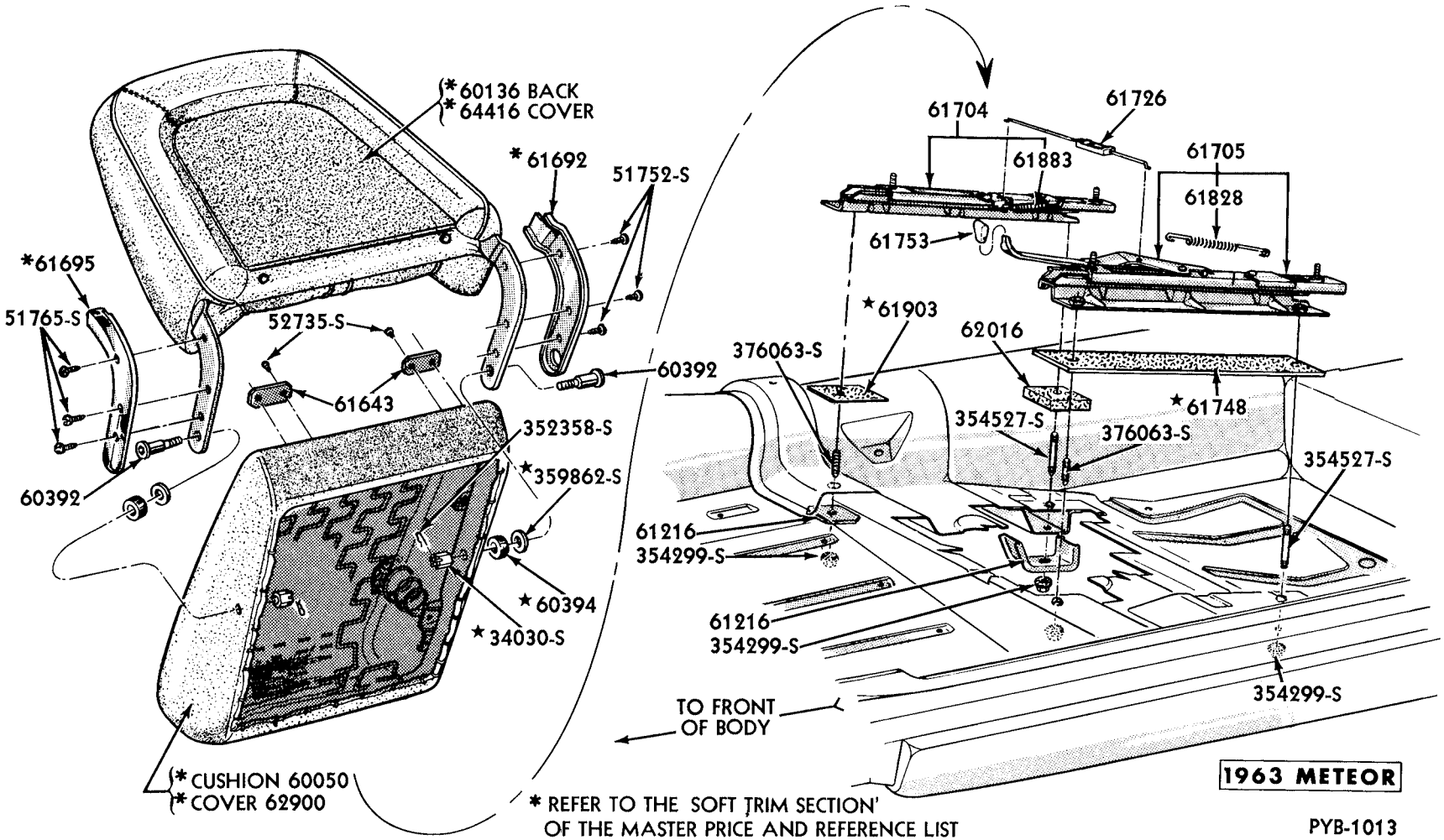

FRONT SEAT (BUCKET) - MANUAL CONTROL - MODEL 65B

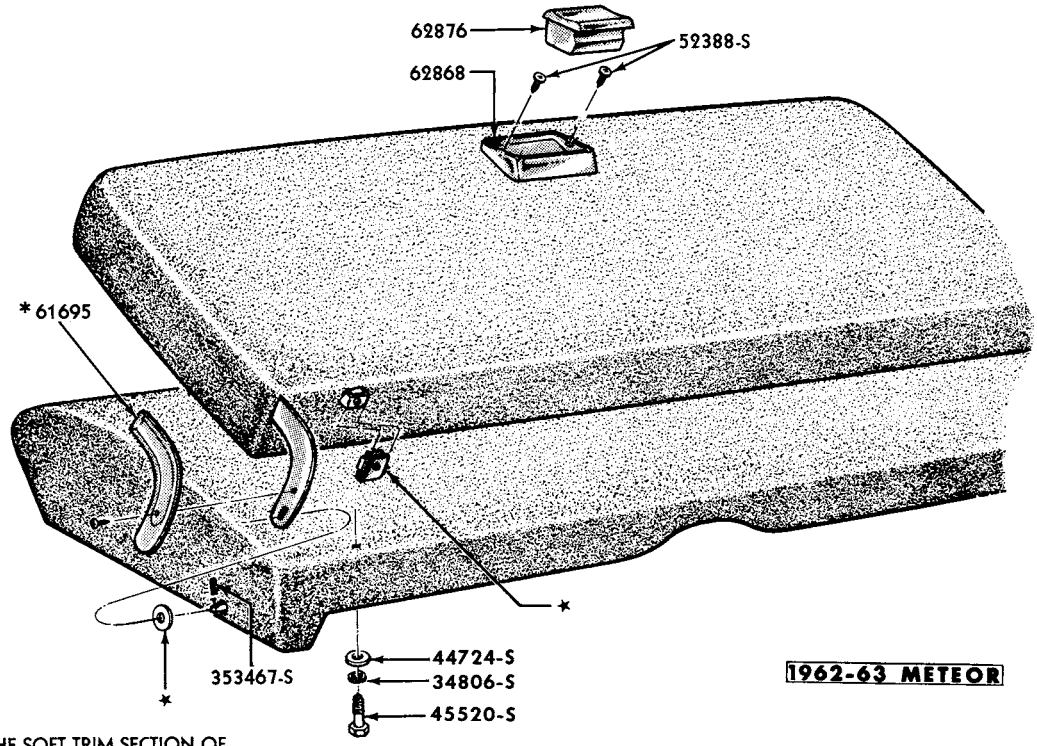

* REFER TO THE SOFT TRIM SECTION OF THE MASTER PRICE AND REFERENCE LIST.

MODEL 54

PYB-876

FRONT SEAT BACK and CUSHION

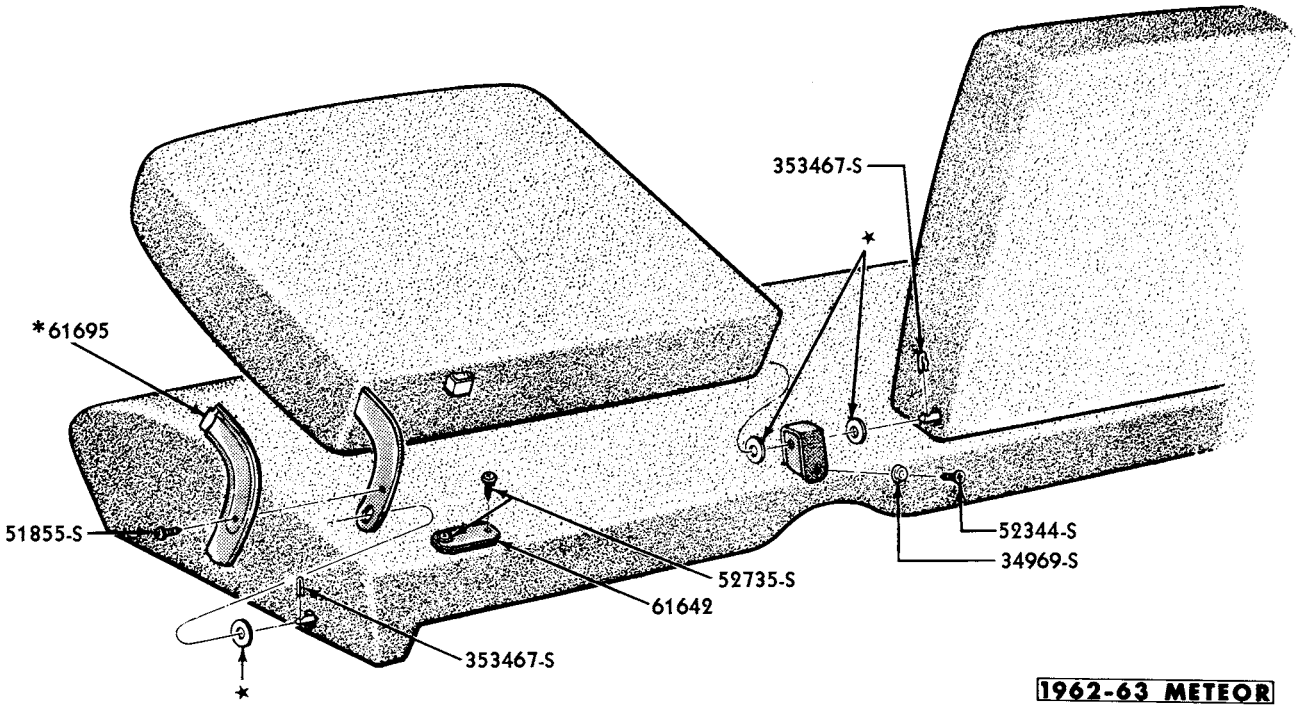

* REFER TO THE SOFT TRIM SECTION OF THE MASTER PRICE AND REFERENCE LIST.

MODEL 62

PYB-877

FRONT SEAT BACK and CUSHION

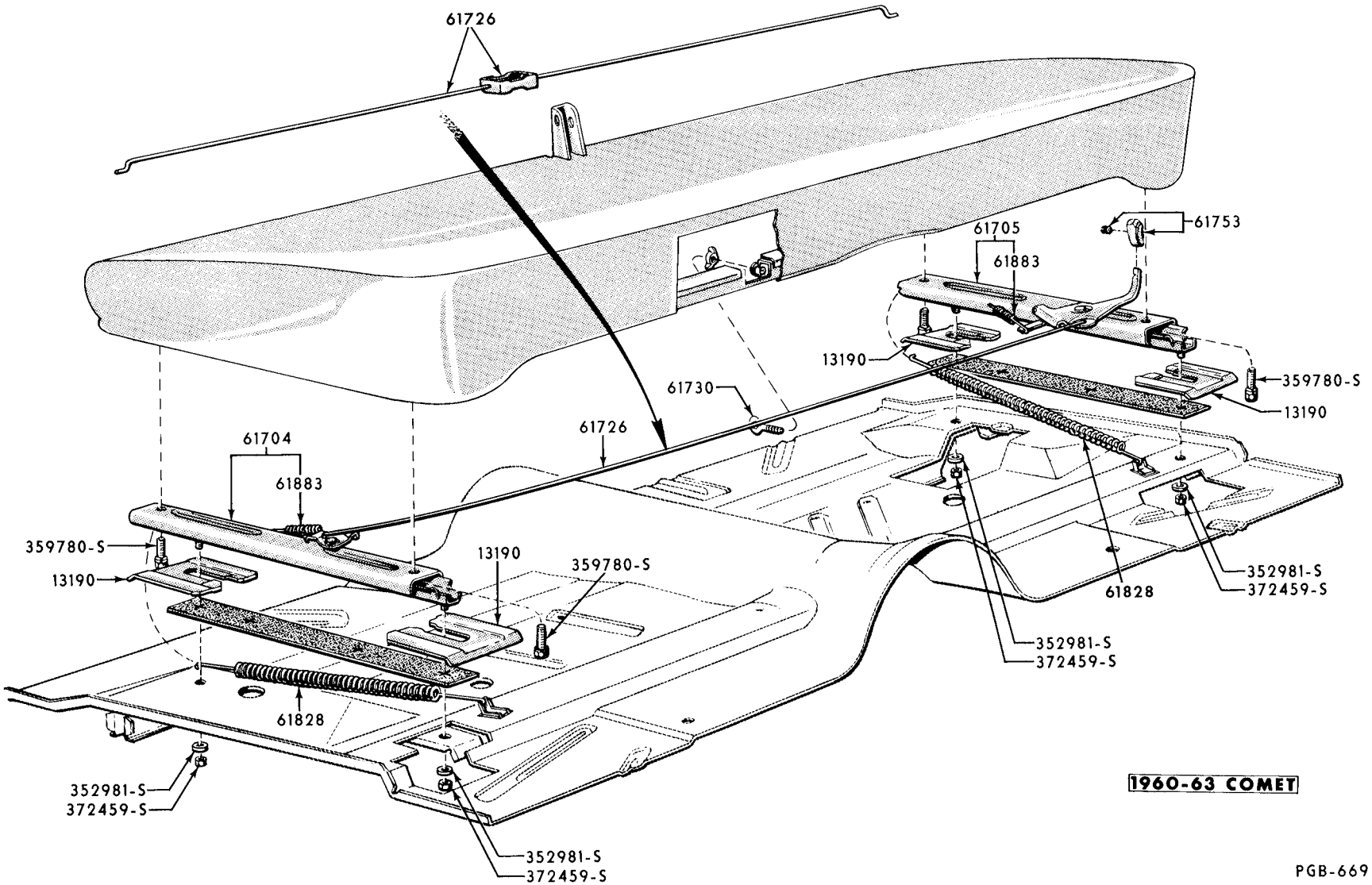

FRONT SEAT - MANUAL CONTROL - EXCEPT MODELS 62A(S-22), 62C

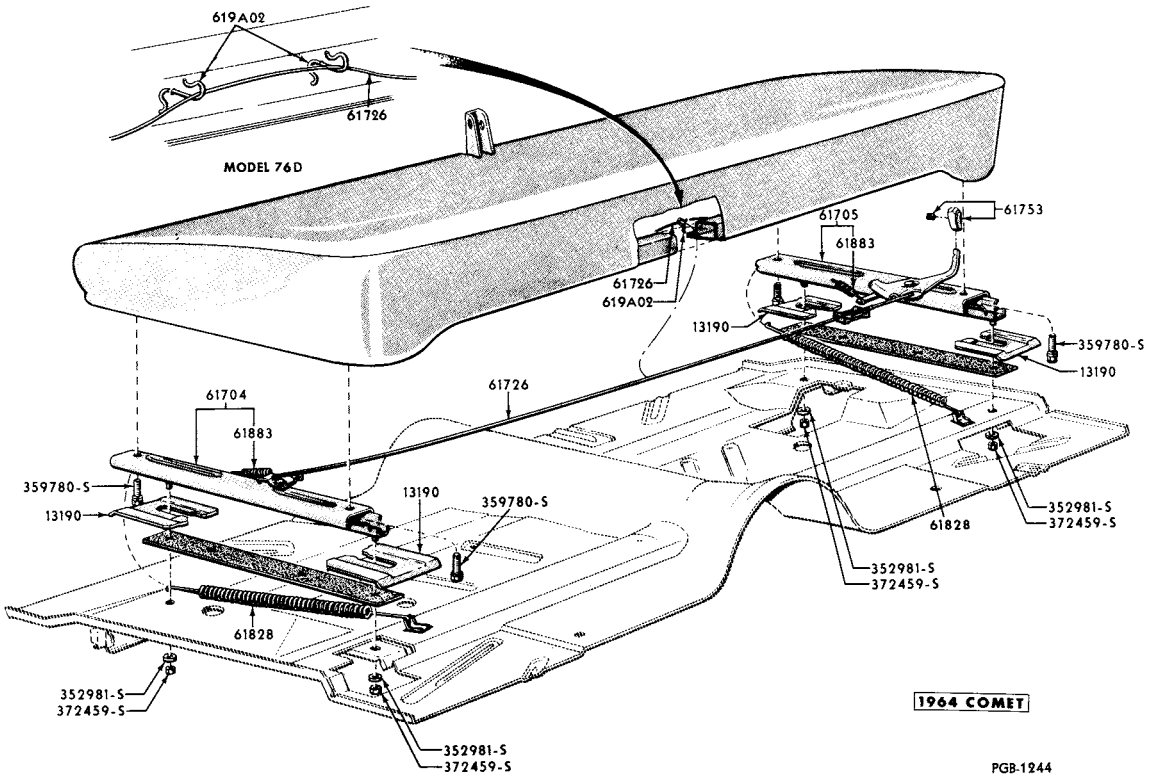

SEAT - FULL - FRONT - MANUAL CONTROL

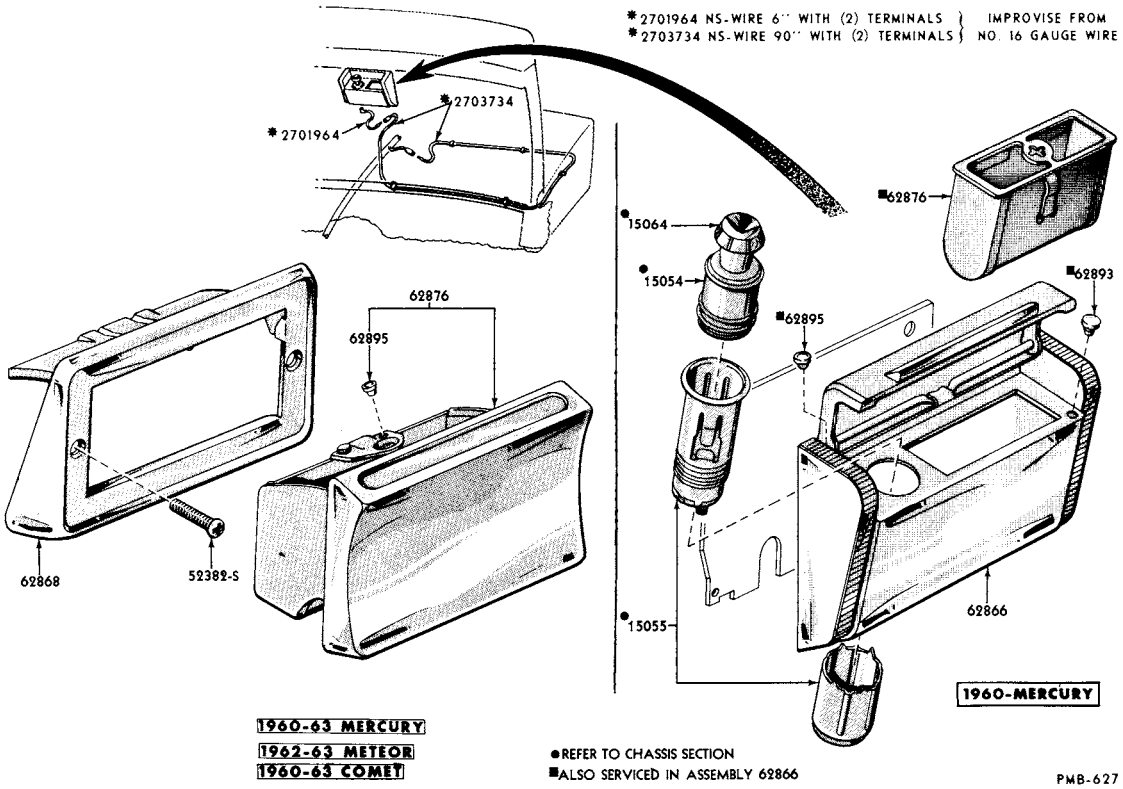

ASH TRAY and RECEPTACLE - FRONT SEAT BACK

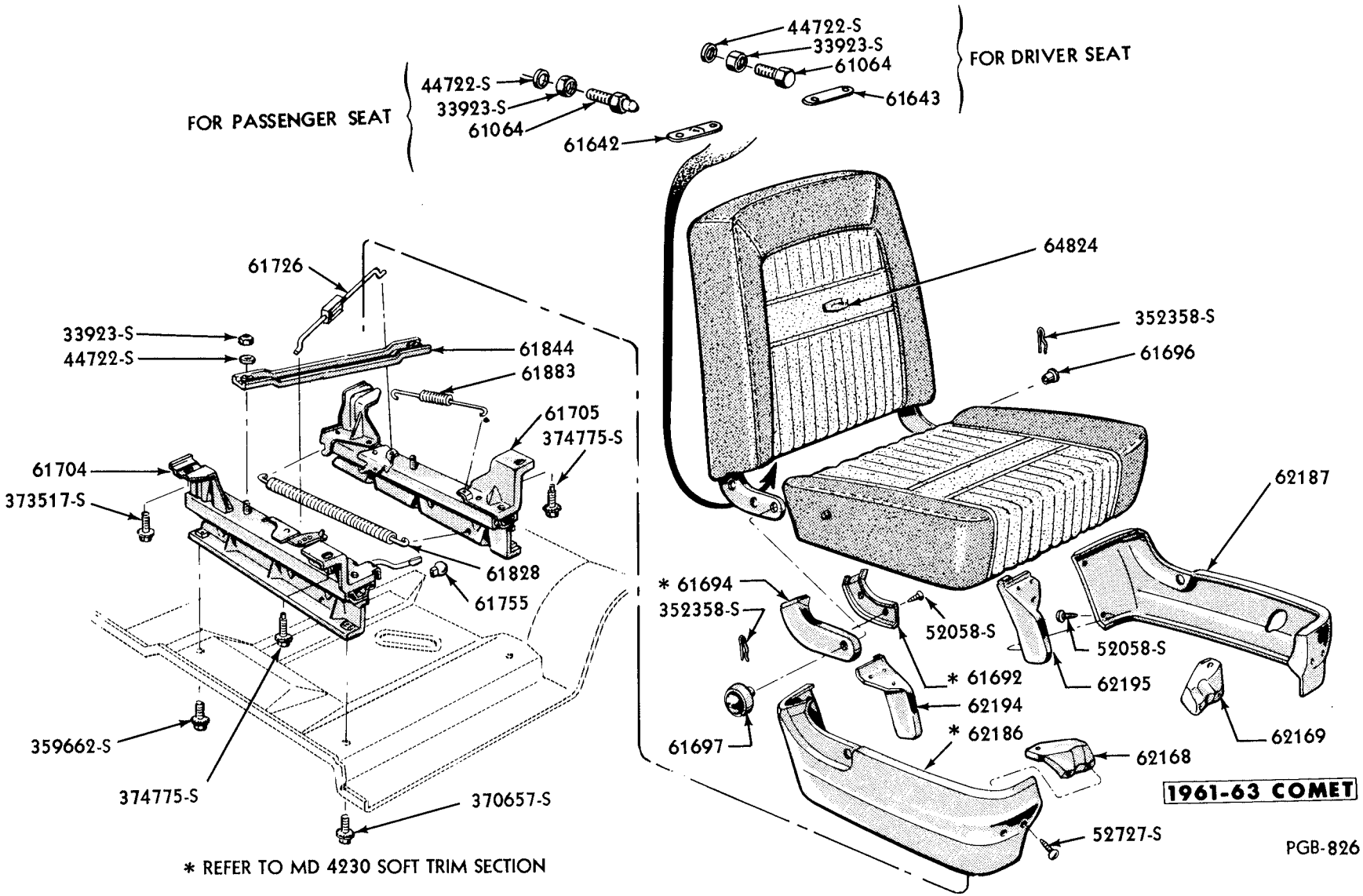

FRONT SEAT (BUCKET) - MANUAL CONTROL - 62A (S-22), and 62C

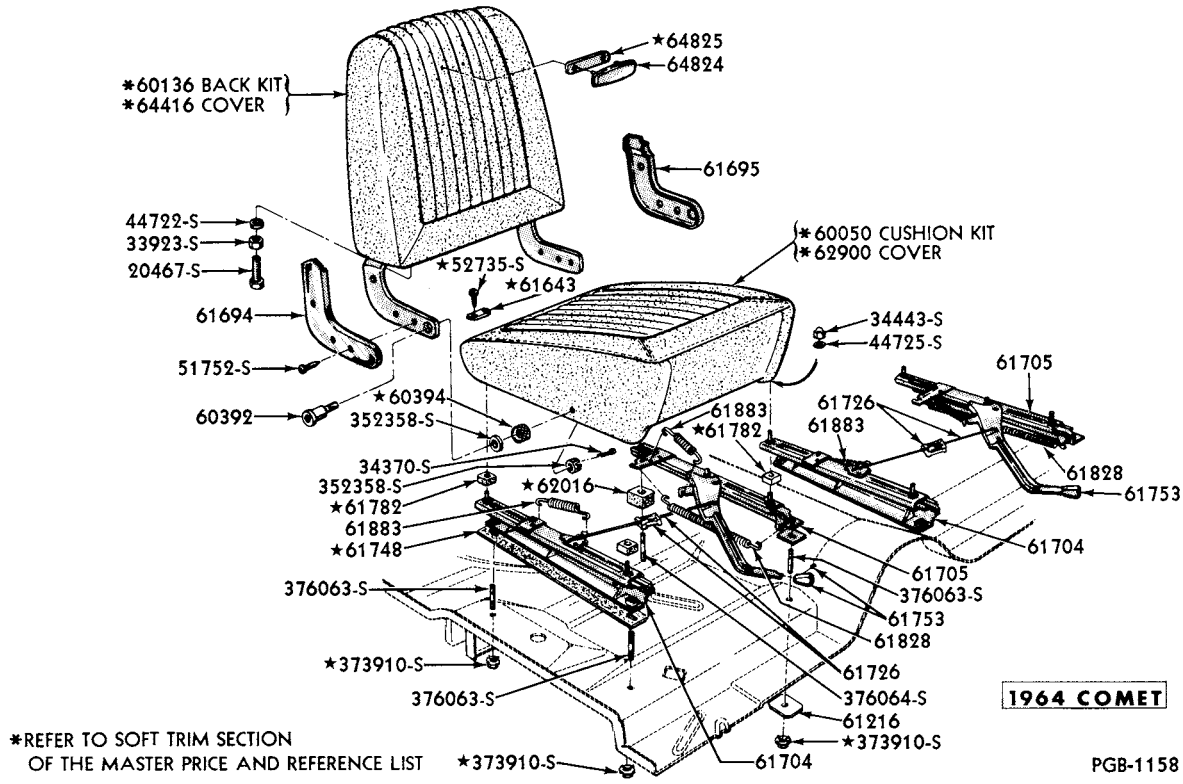

BUCKET SEATS - MODELS ALL EXCEPT 76B

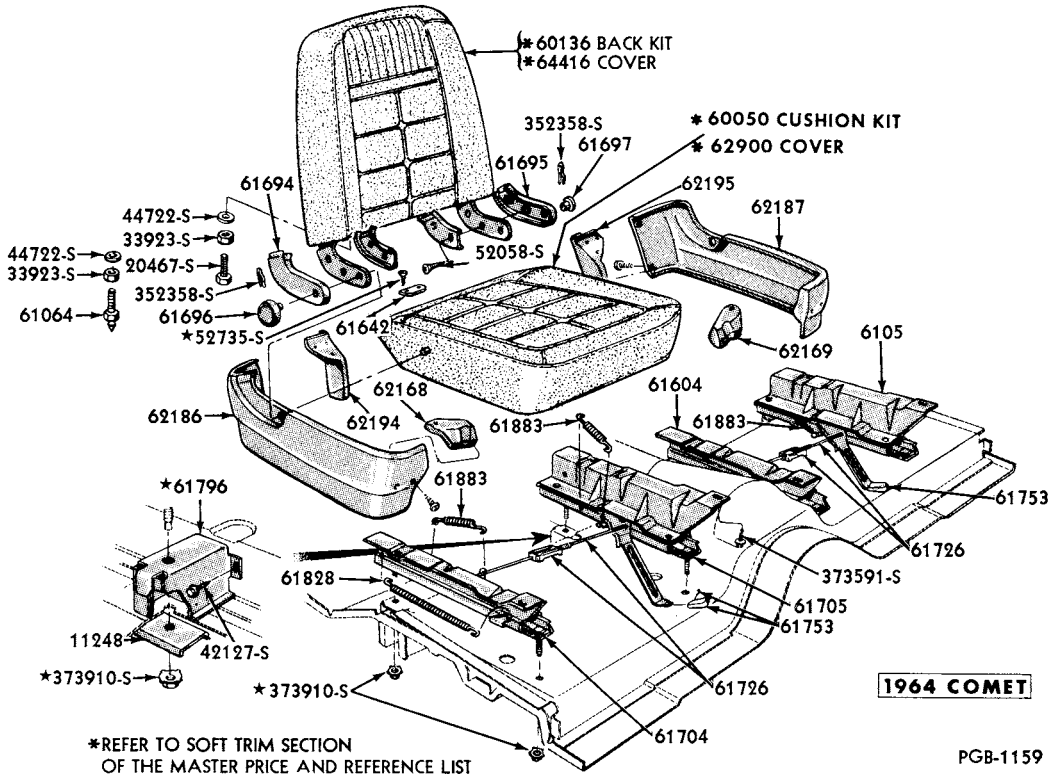

BUCKET SEATS - MODEL 76B

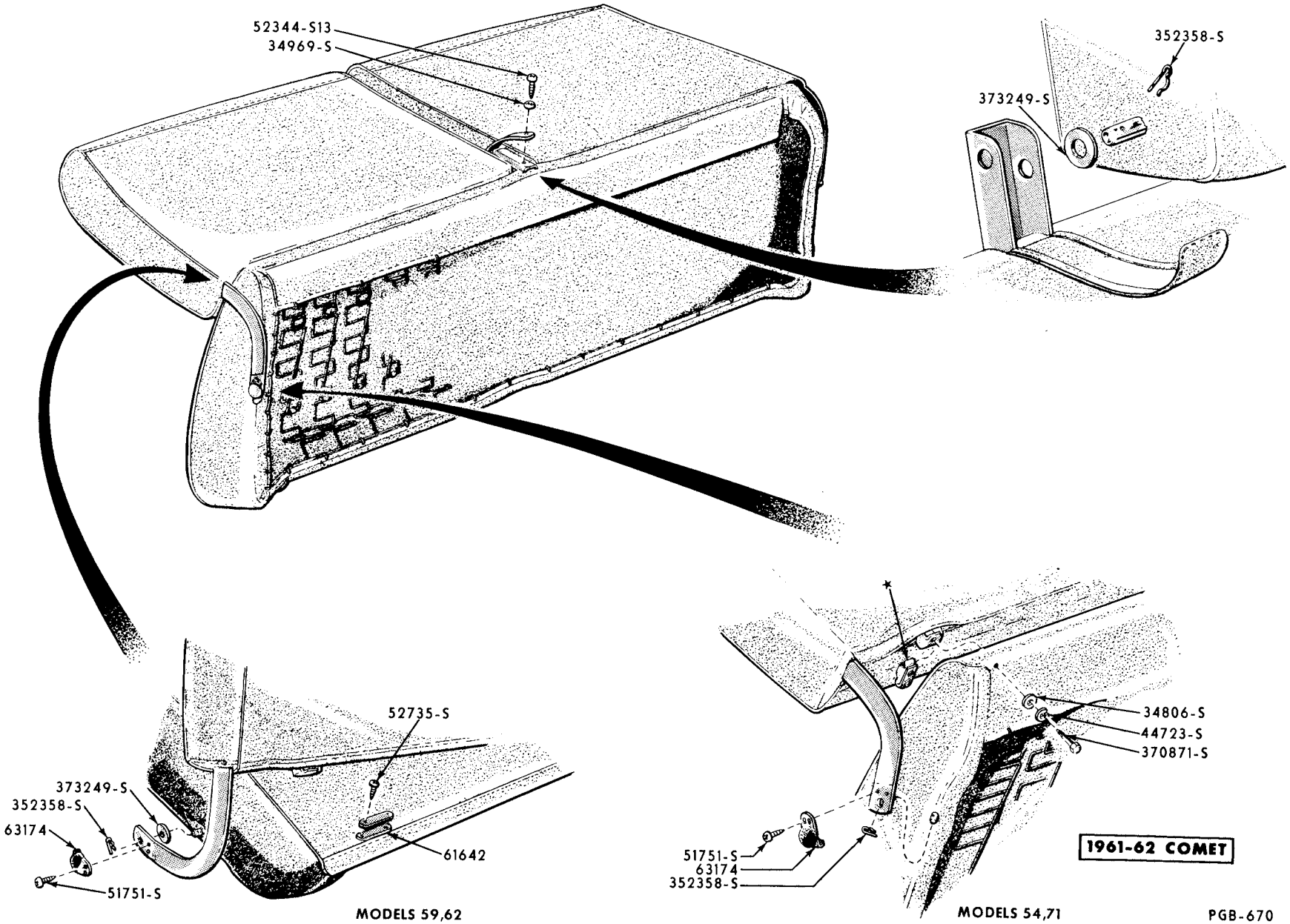

FRONT SEAT BACK and CUSHION

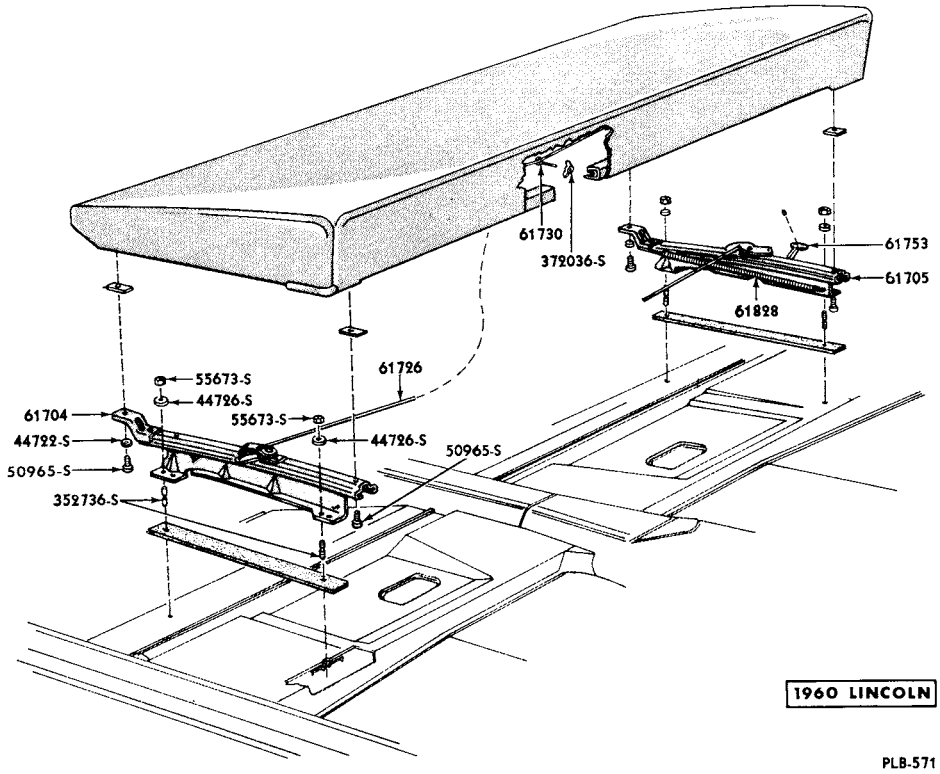

FRONT SEAT(FULL) - MANUAL CONTROL

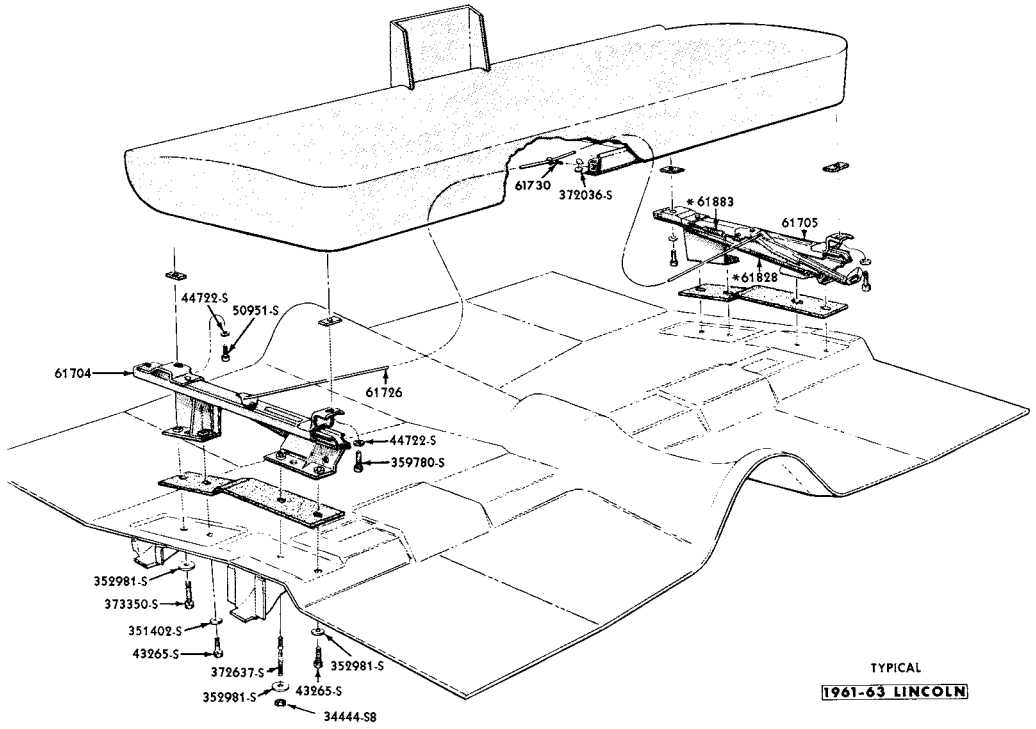

* ALSO SERVICED IN 61704-5 ASSEMBLY

PLB-779

FRONT SEAT(FULL) - MANUAL CONTROL

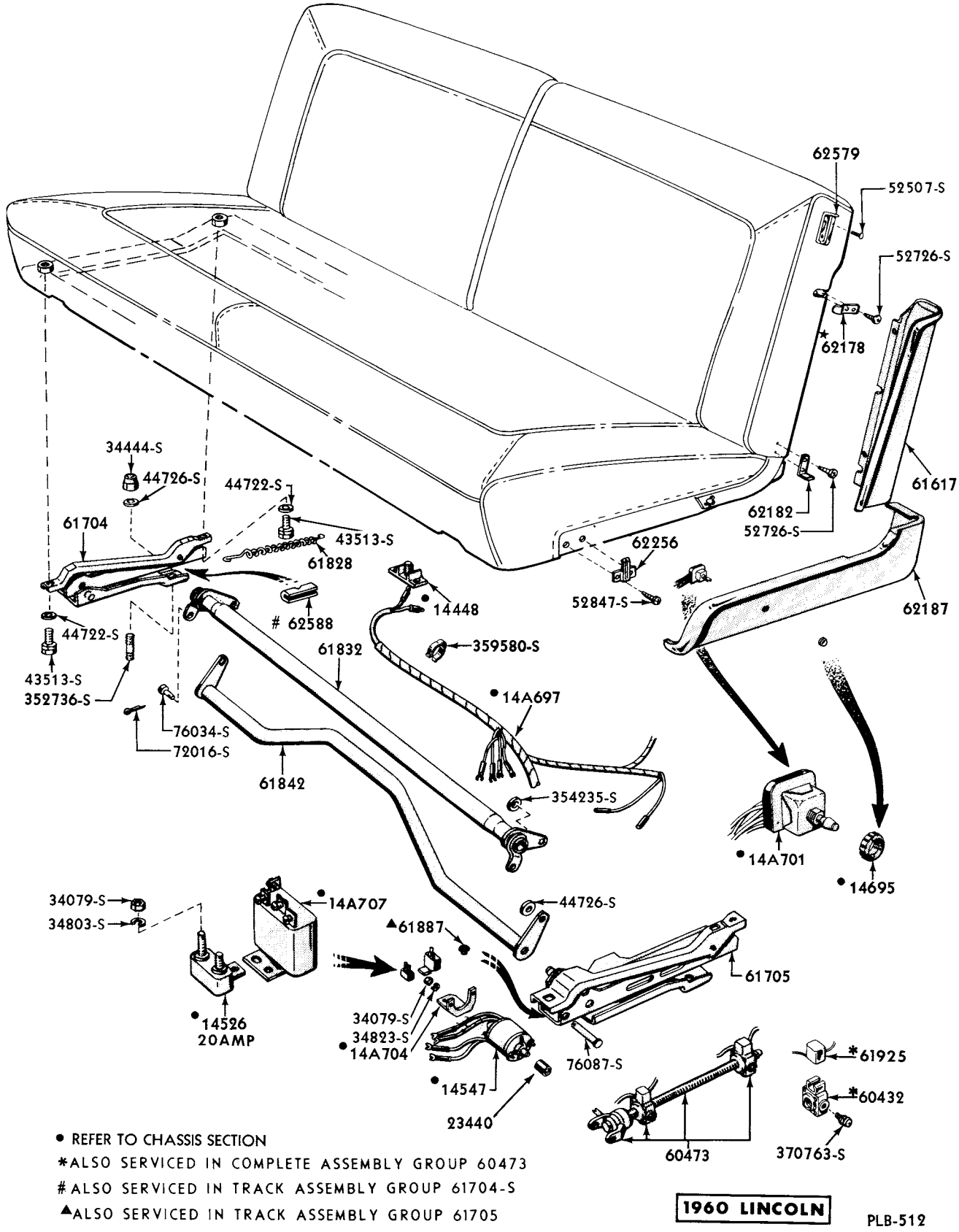

POWER SEAT 4 - WAY MECHANISM

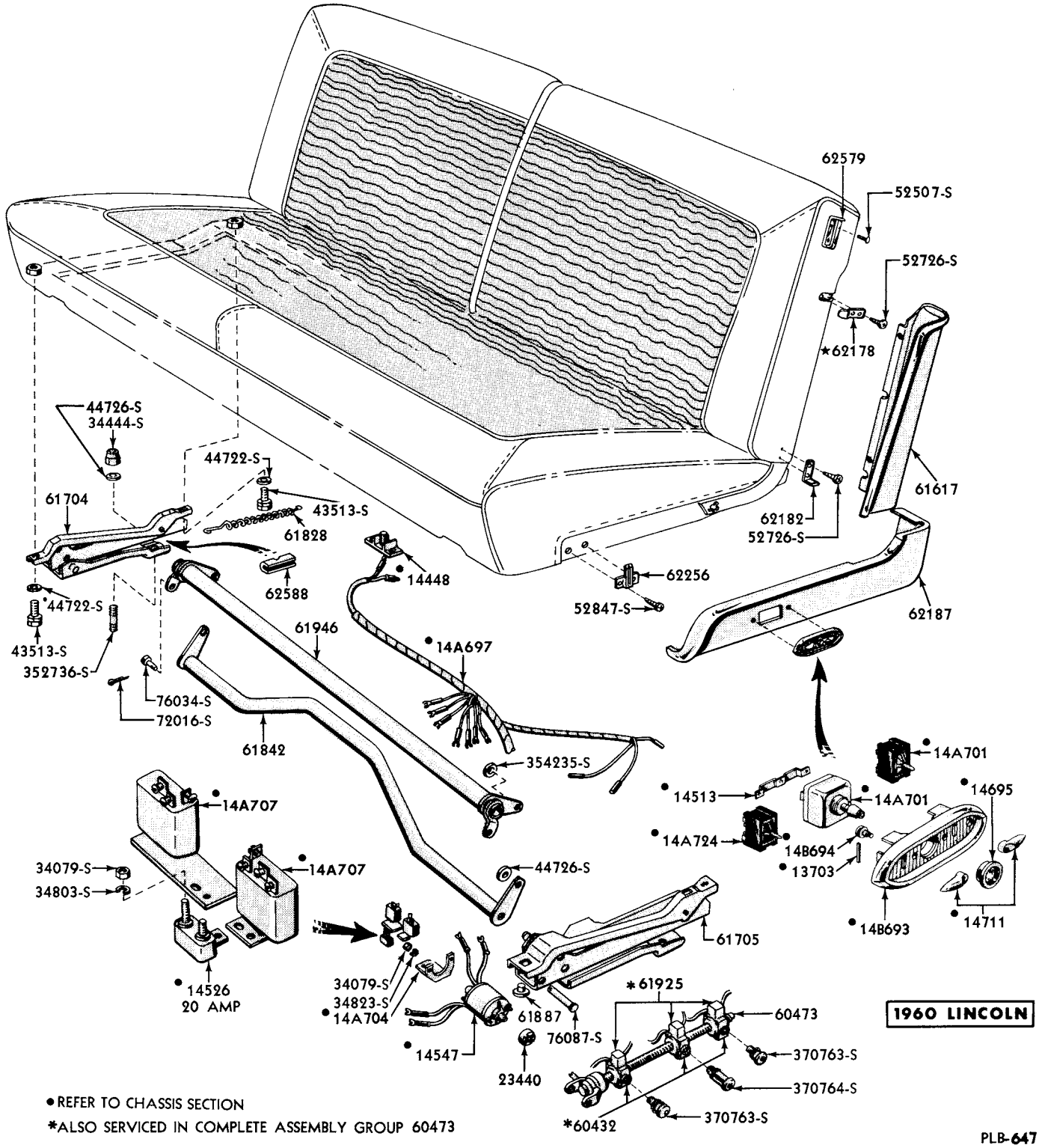

POWER SEAT - 6 WAY MECHANISM

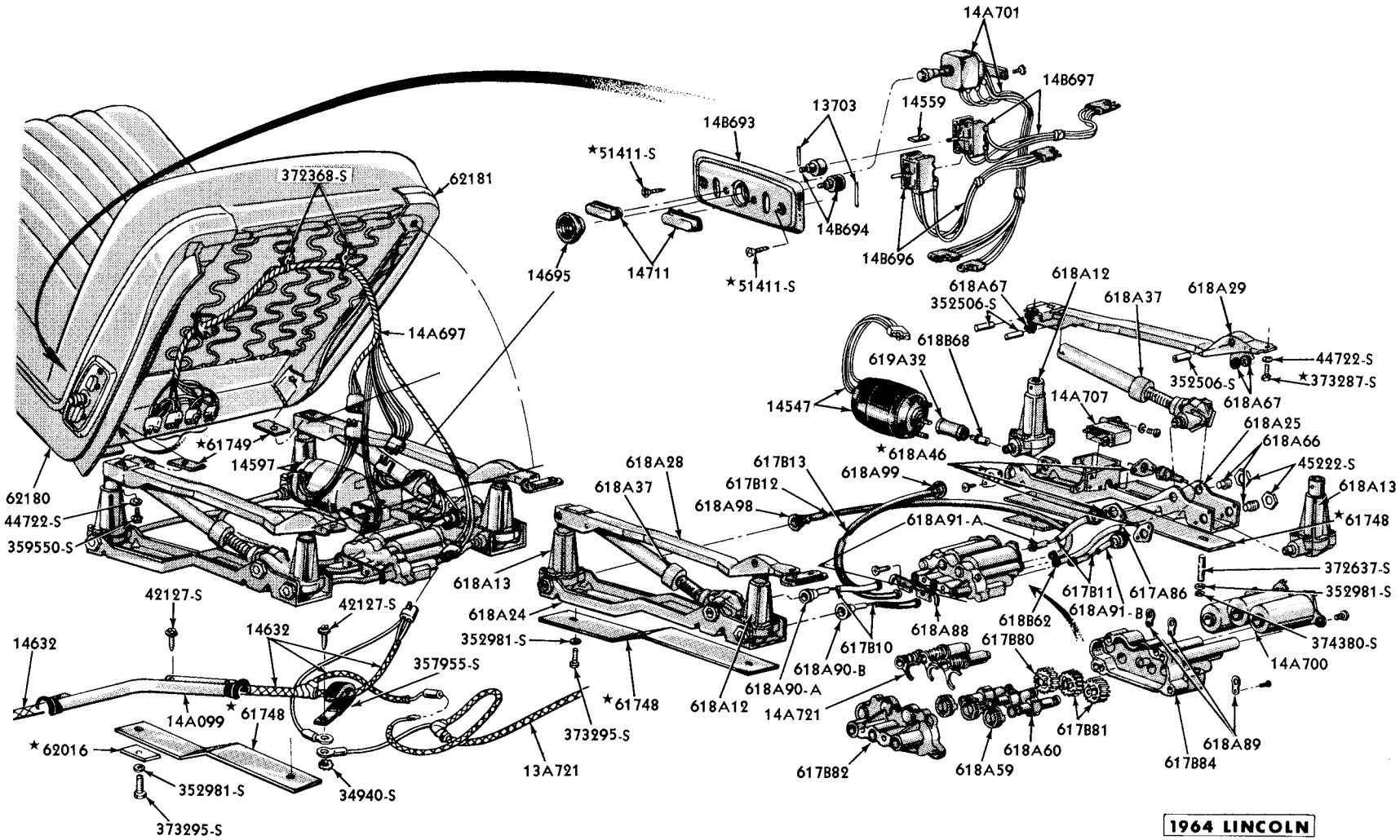

1964 LINCOLN

PLB-1087

BUCKET SEAT - 6 WAY MECHANISM

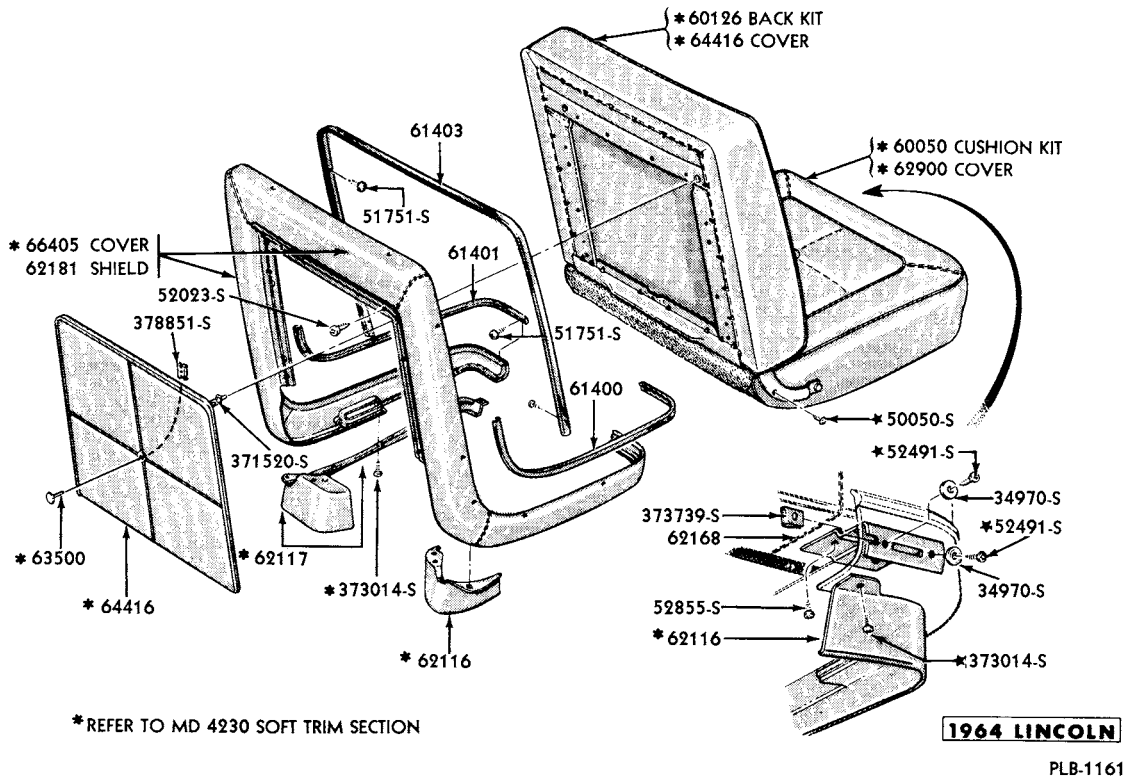

BUCKET SEAT MOULDINGS and SIDE SHIELD

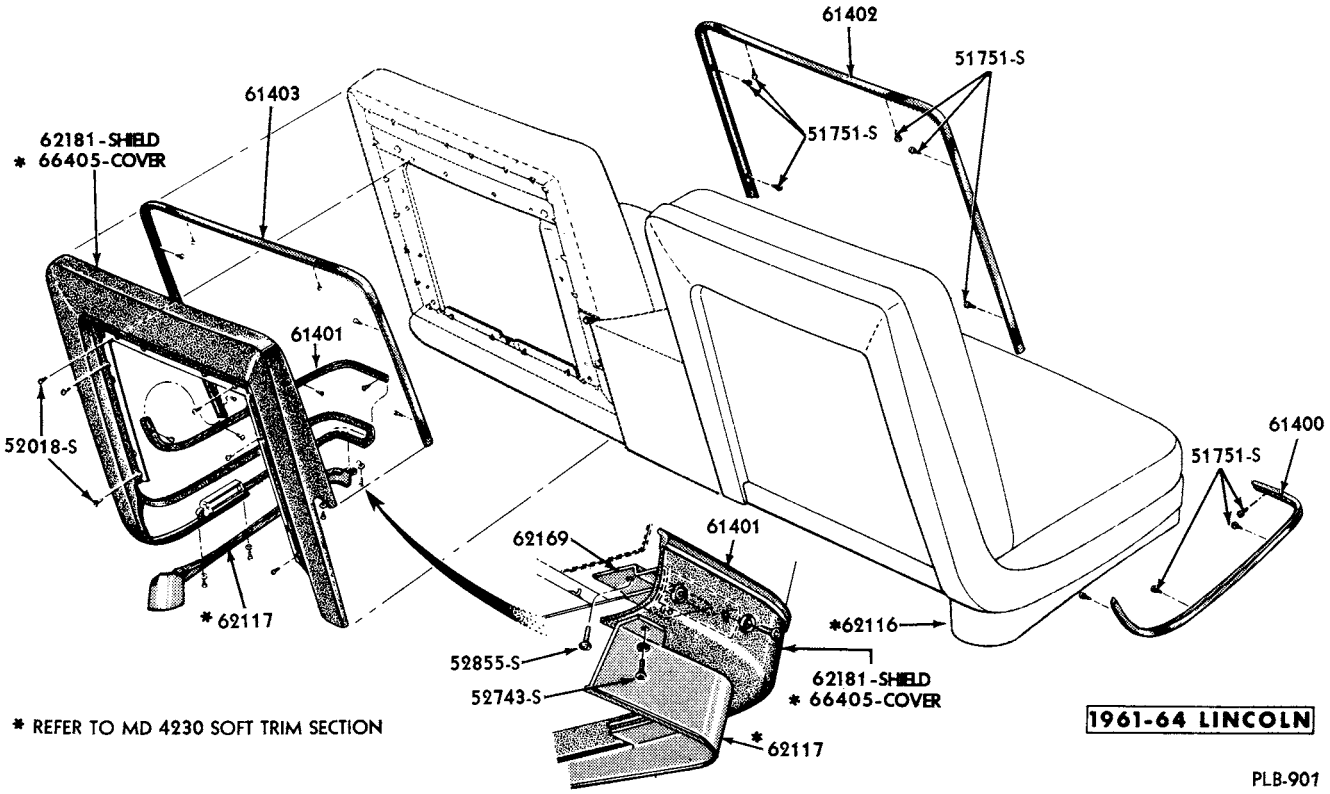

FRONT SEAT MOULDINGS and SIDE SHIELDS

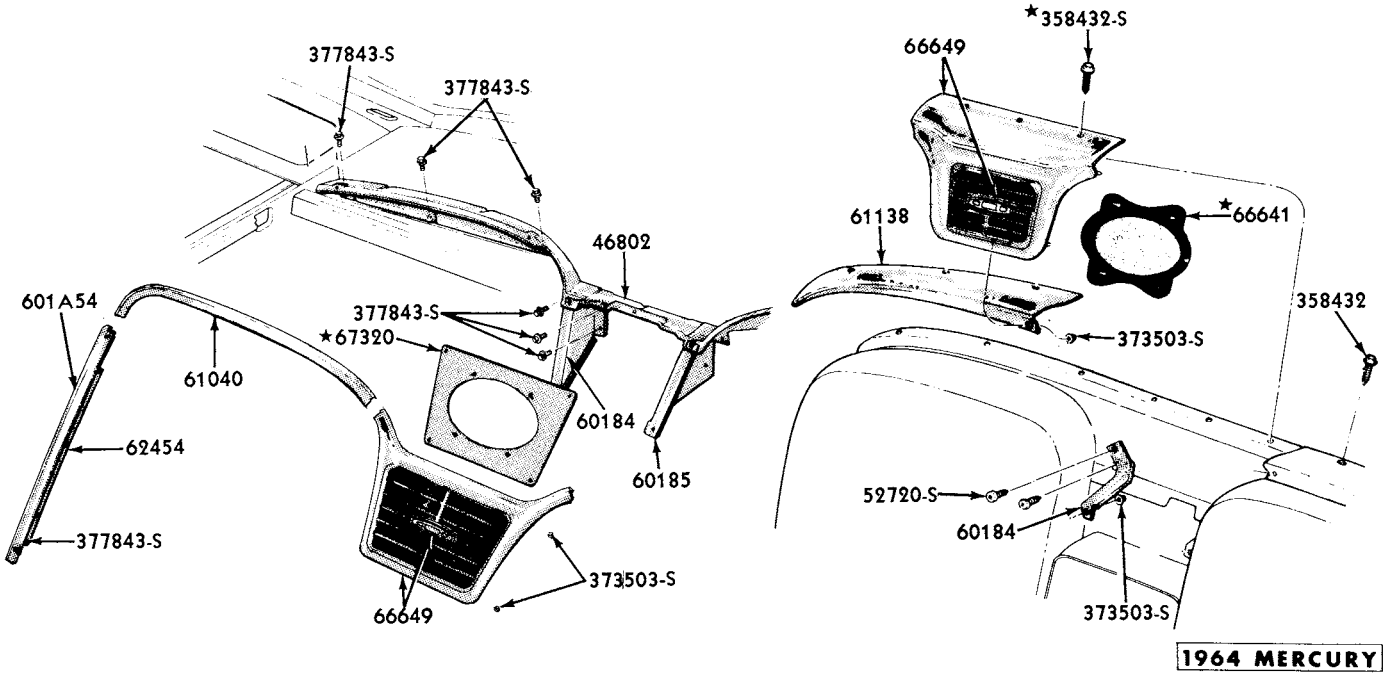

REAR SEAT BACK MOULDINGS and RADIO SPEAKER GRILLE

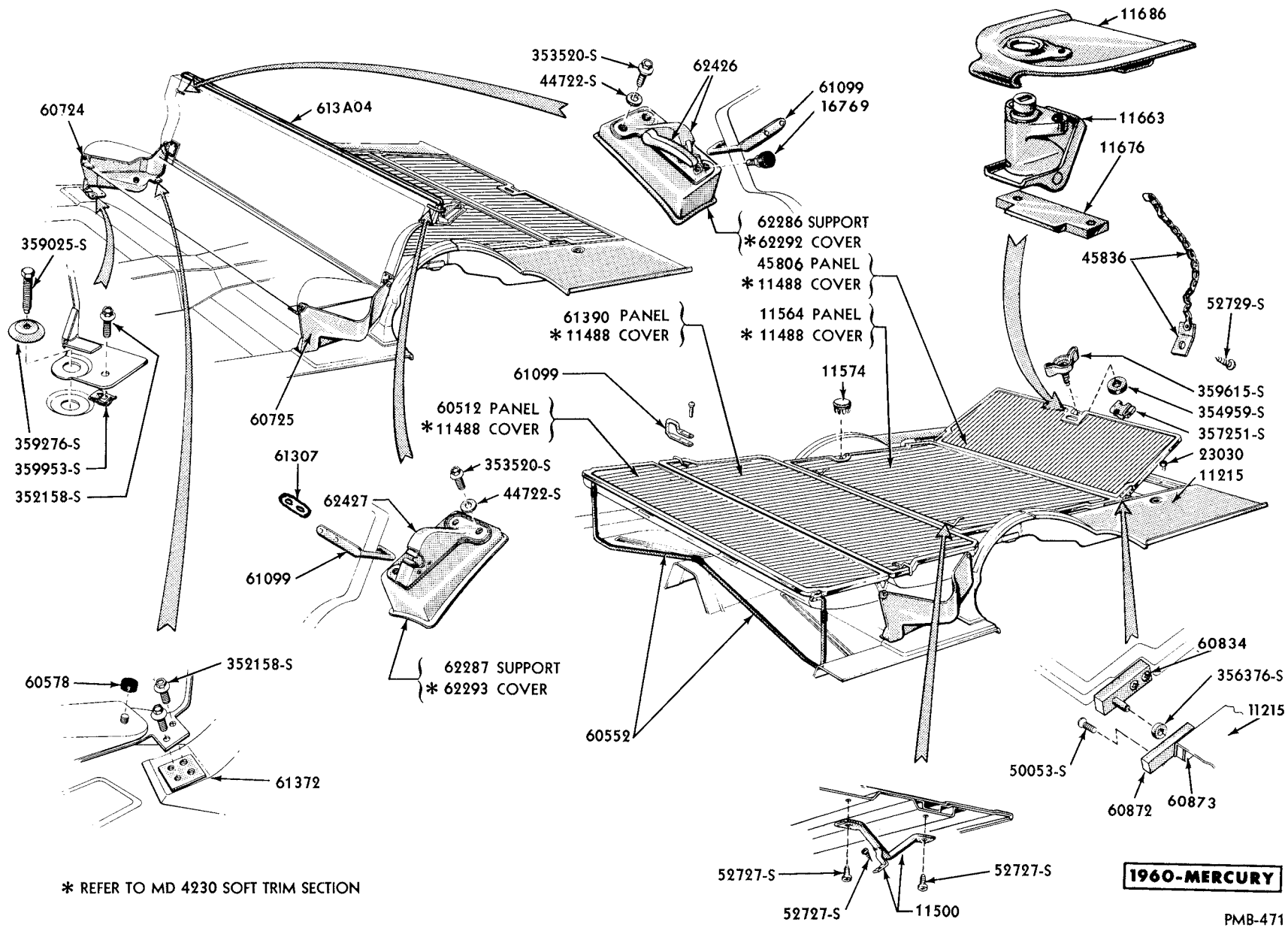

* REFER TO MD 4230 SOFT TRIM SECTION

STATION WAGON SEATS FOLDED - 6 PASSENGER

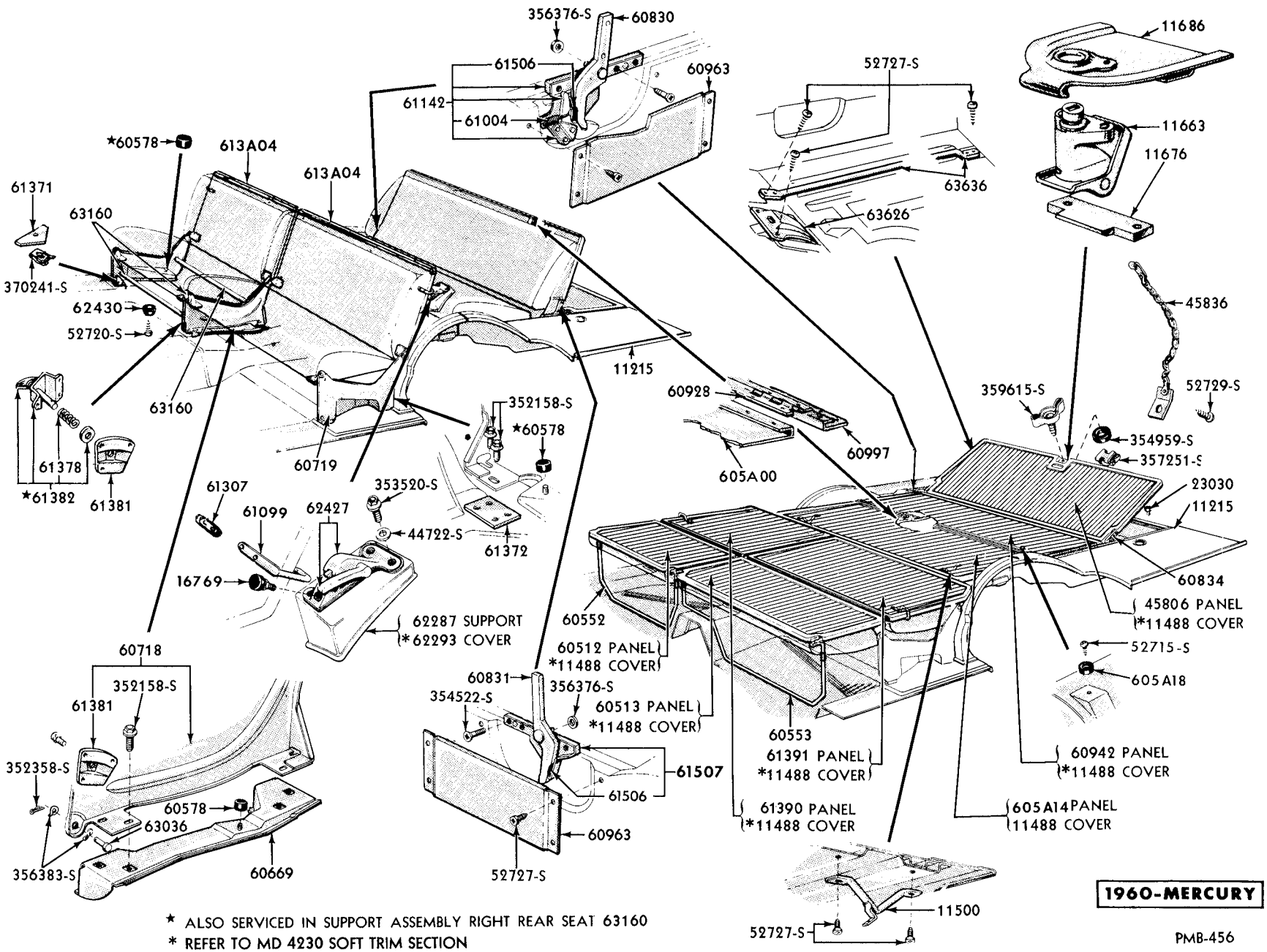

★ ALSO SERVICED IN SUPPORT ASSEMBLY RIGHT REAR SEAT 63160

* REFER TO MD 4230 SOFT TRIM SECTION

STATION WAGON SEATS FOLDED - 8 PASSENGER

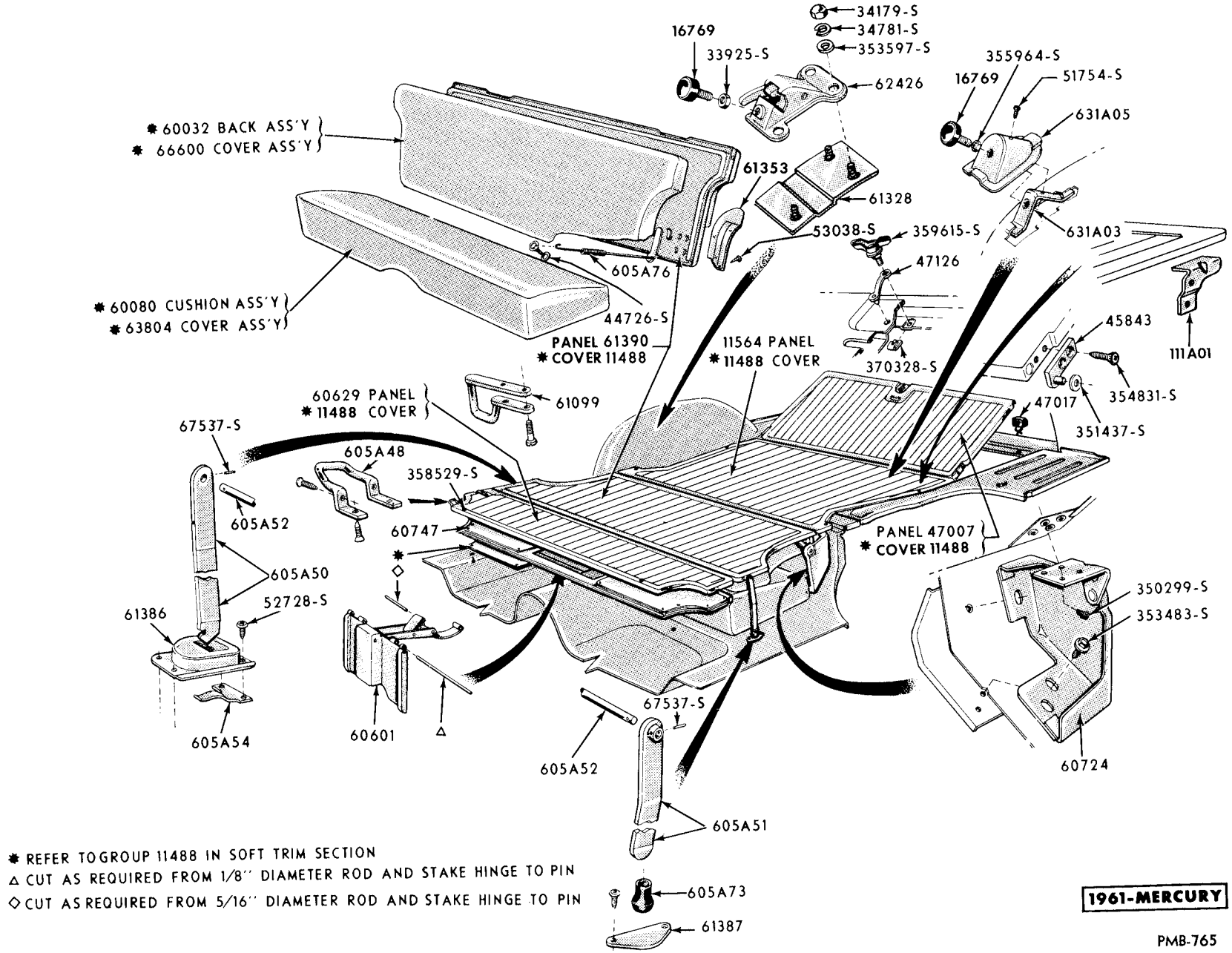

✱ REFER TO GROUP 11488 IN SOFT TRIM SECTION

△ CUT AS REQUIRED FROM 1/8" DIAMETER ROD AND STAKE HINGE TO PIN

◇ CUT AS REQUIRED FROM 5/16" DIAMETER ROD AND STAKE HINGE TO PIN

1961-MERCURY

PMB-765

STATION WAGON SEATS FOLDED - 6 PASSENGER

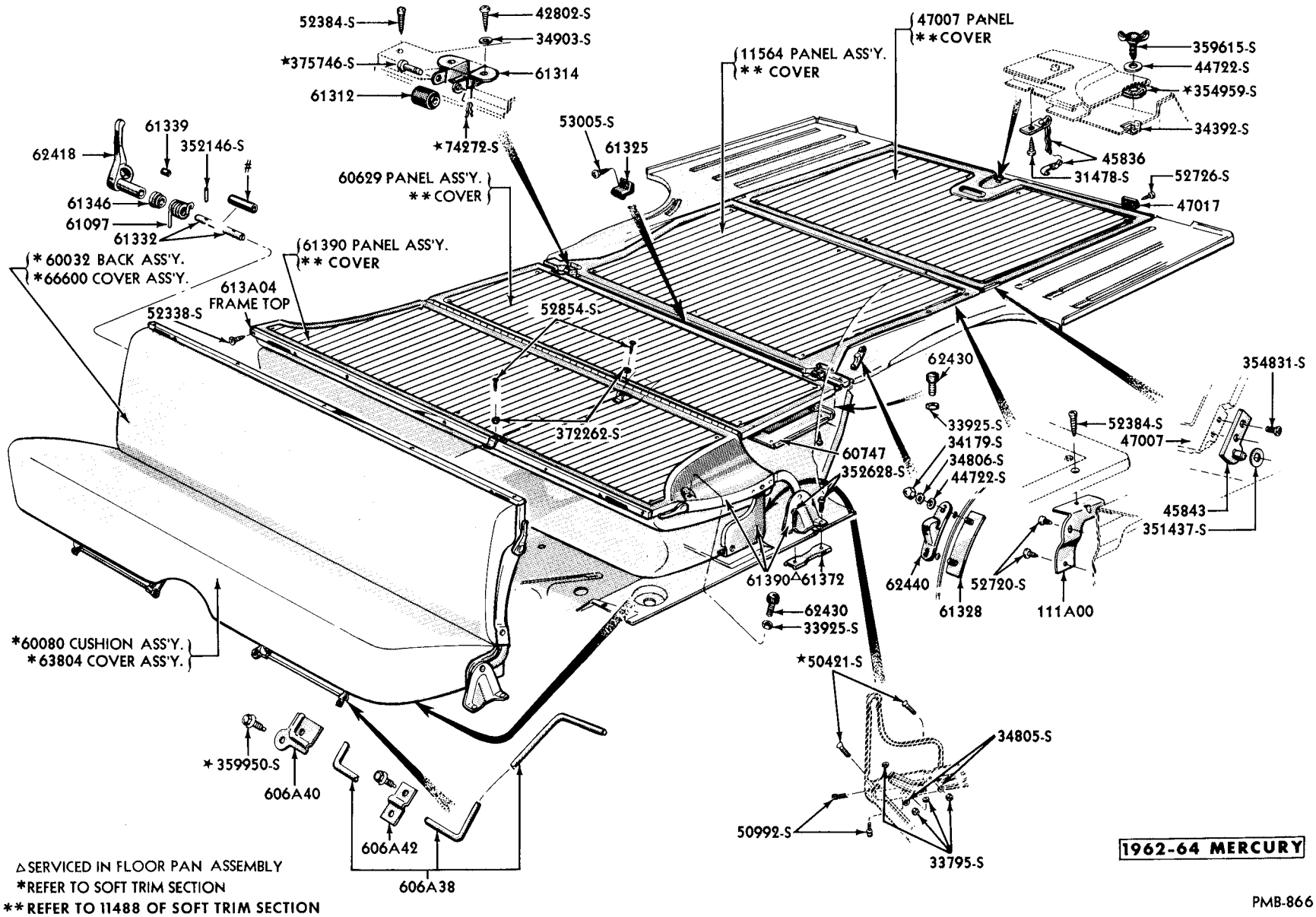

STATION WAGON SEATS-FOLDED 6 PASSENGER

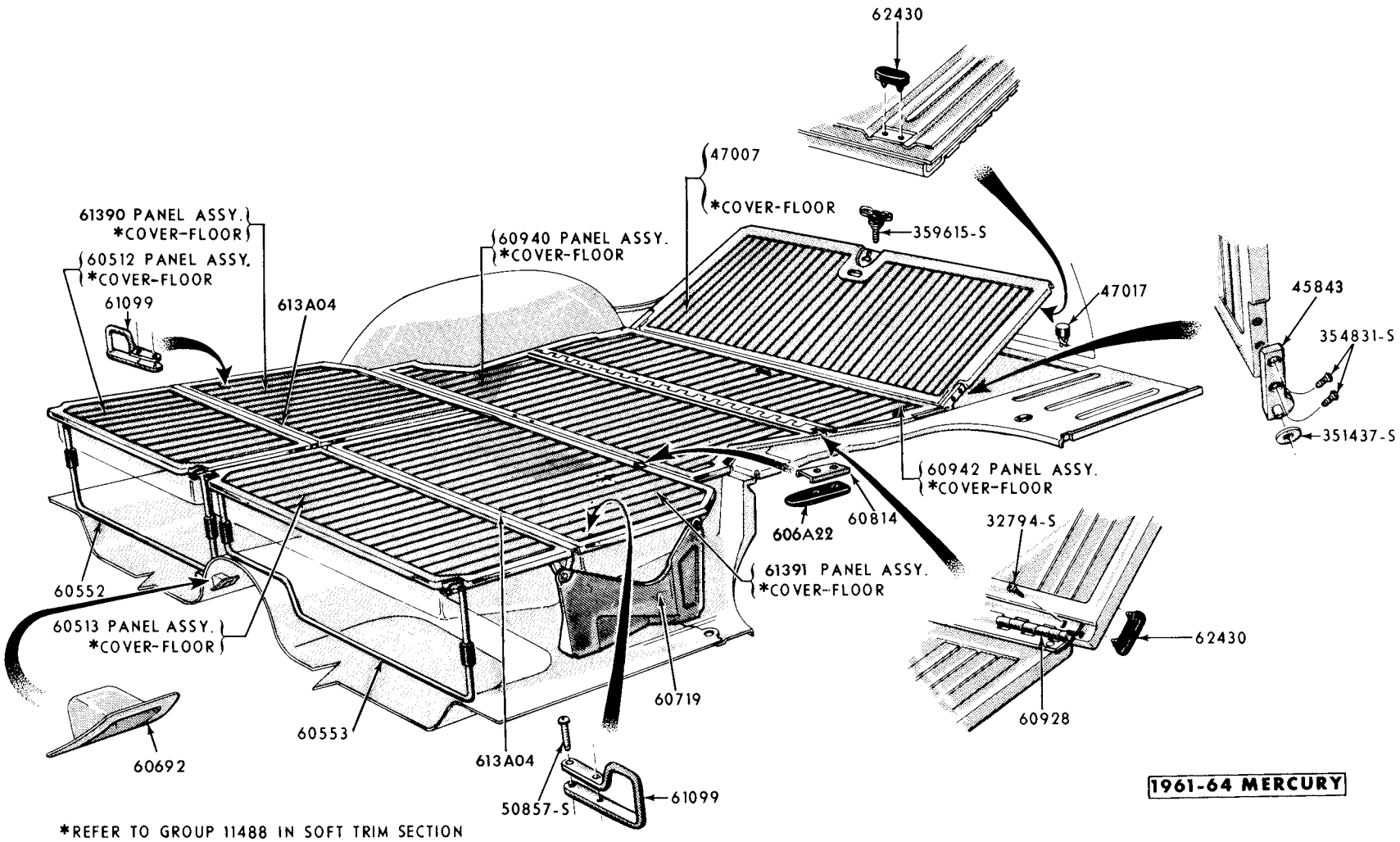

*REFER TO GROUP 11488 IN SOFT TRIM SECTION

STATION WAGON SEATS FOLDED - 8 PASSENGER

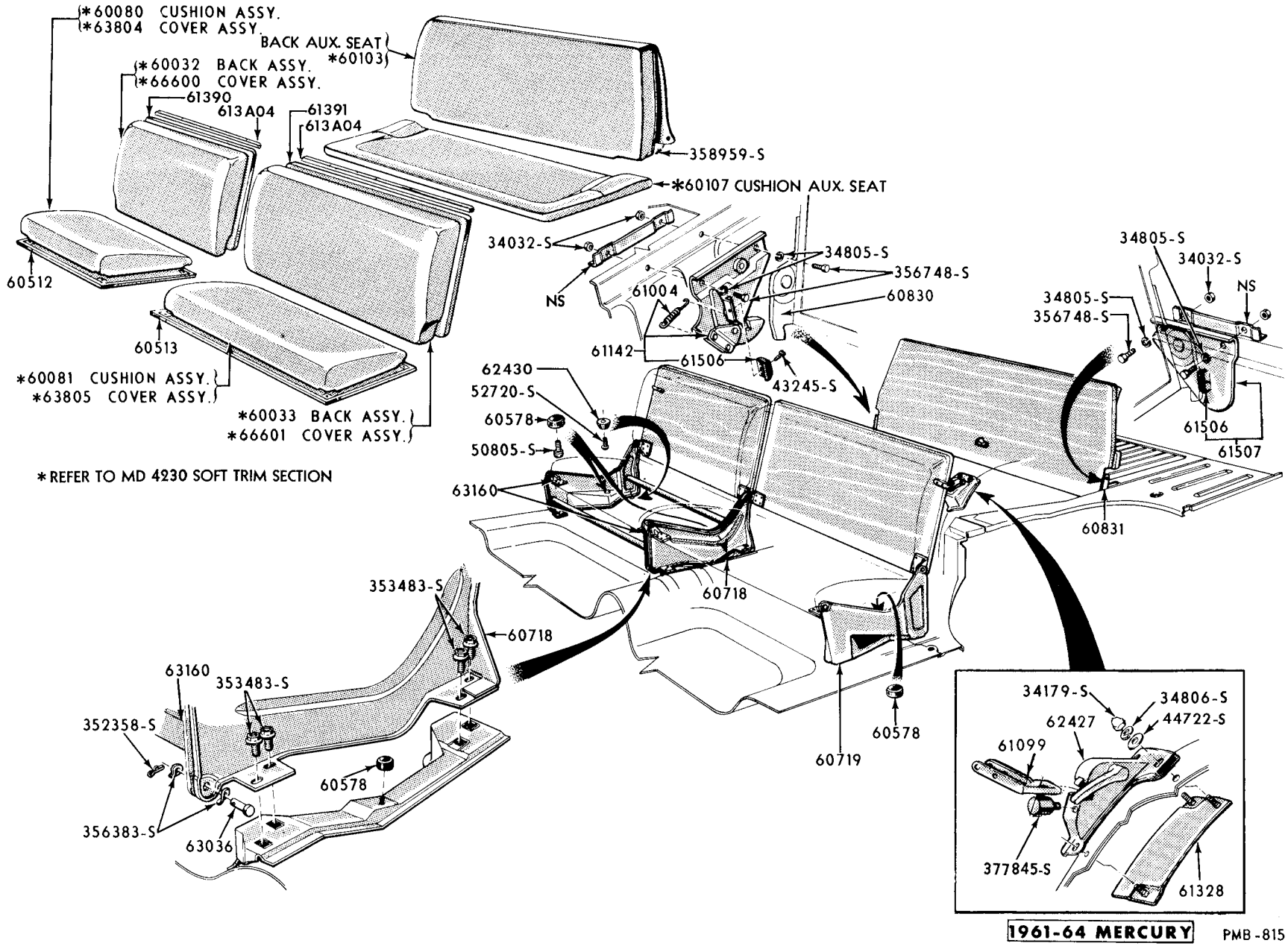

STATION WAGON SEATS - 8 PASSENGER

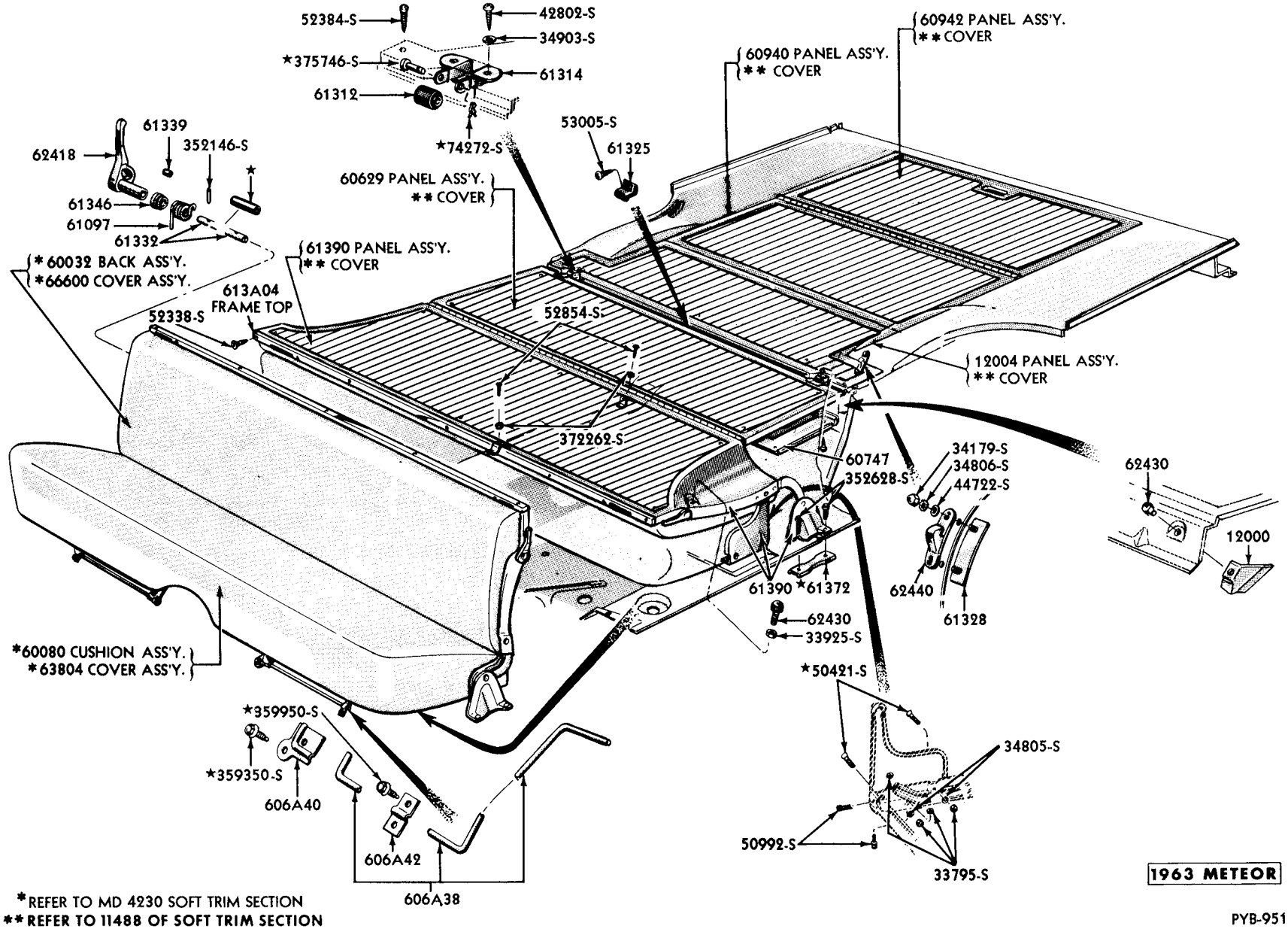

*REFER TO MD 4230 SOFT TRIM SECTION
**REFER TO 11488 OF SOFT TRIM SECTION

STATION WAGON SEATS FOLDED

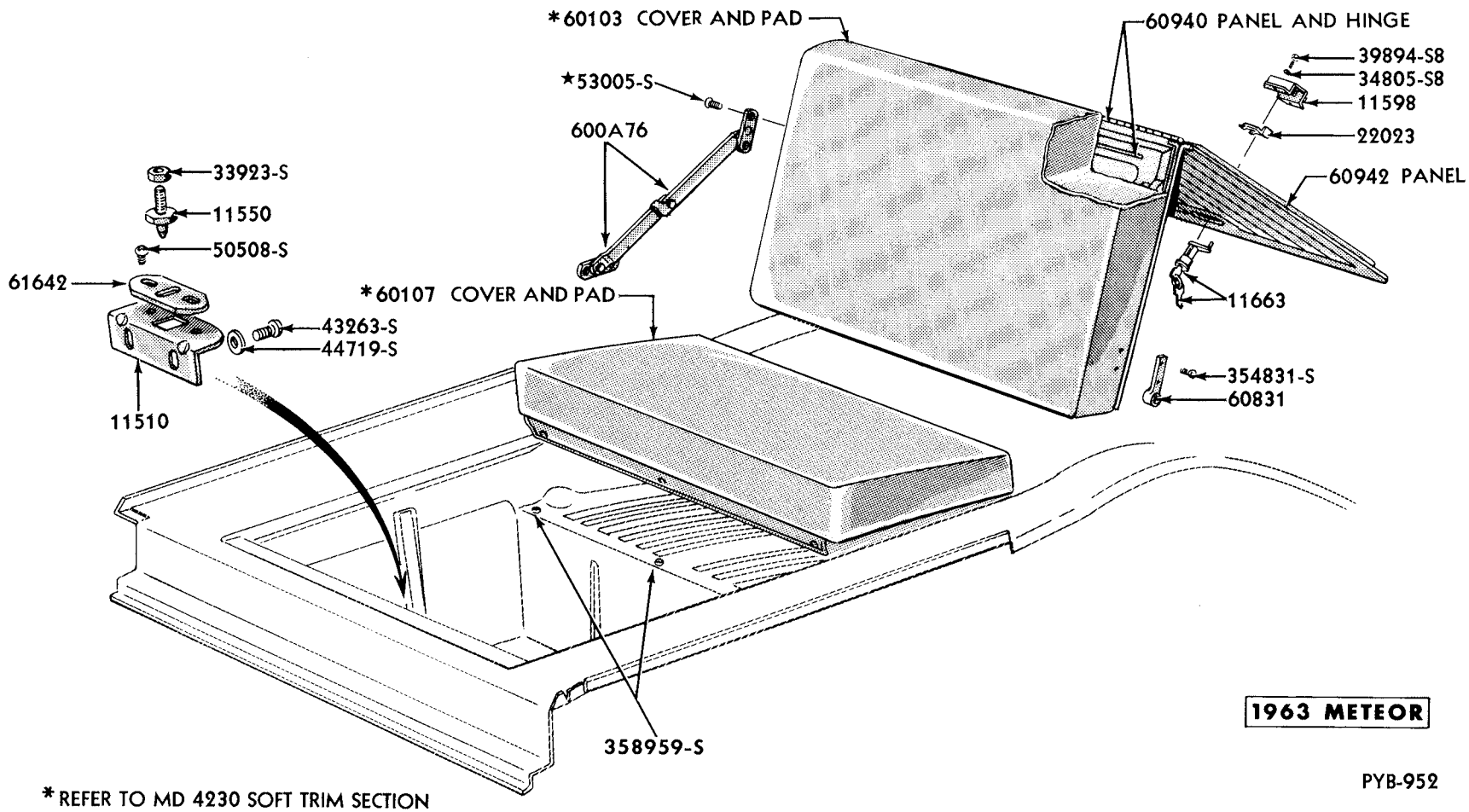

*REFER TO MD 4230 SOFT TRIM SECTION

AUXILIARY SEAT and FLOOR PANELS

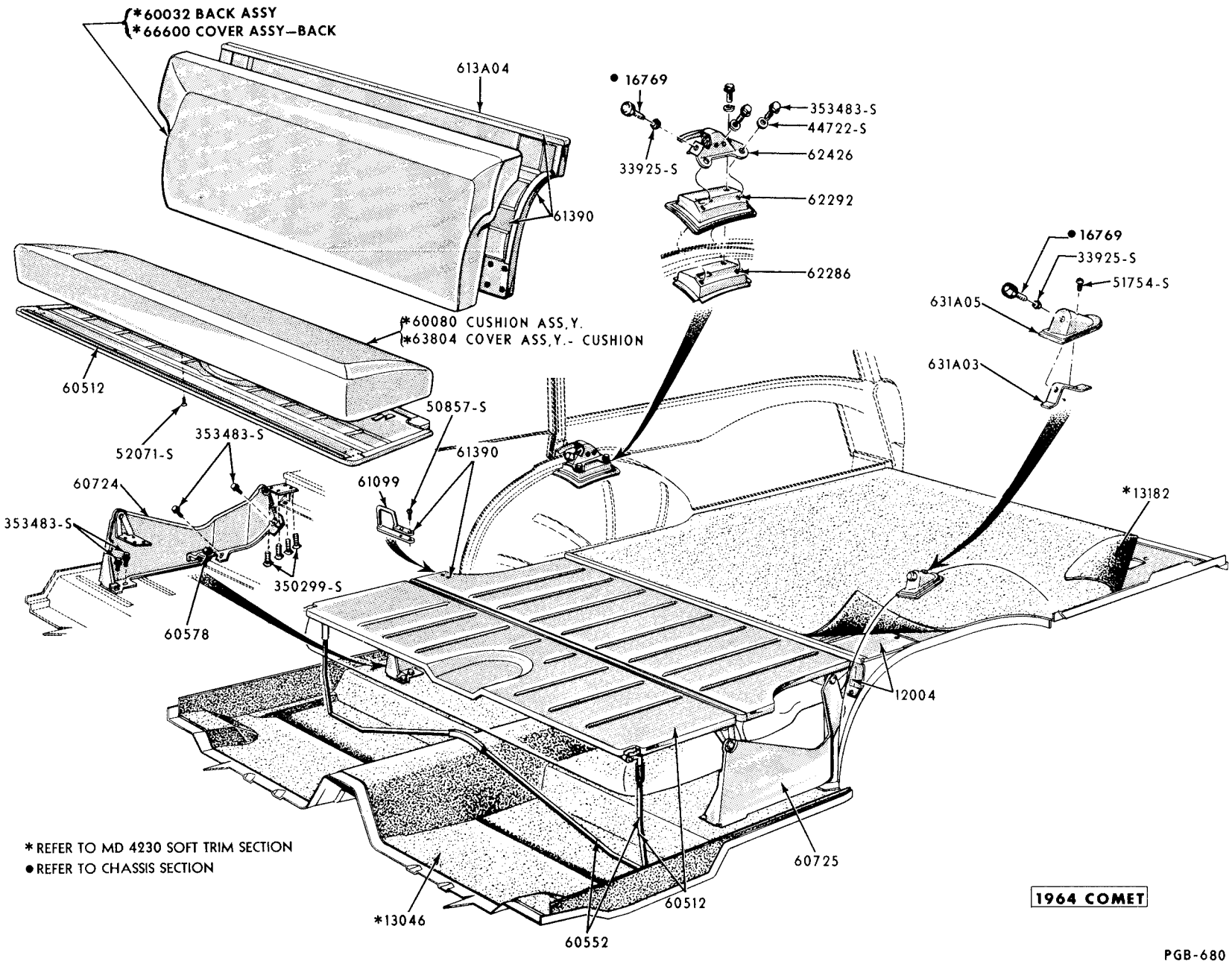

STATION WAGON SEATS FOLDED

GROUP AND PART NUMBER	DESCRIPTION, SIZE, ETC.	NO. REQ'D	MODEL OR ENGINE CUBIC INCH DISPLACEMENT	VEHICLE CODE	YEAR 19____
60040	SUPPORT (REAR SEAT) REAR CENTER				
	NS-improvise	2	71	A	62/63
	NS-improvise	2	71A, B	A	64
	NS-improvise from steel .975" thick	2	71	B	63
60044	SUPPORT (REAR SEAT) FRONT CENTER				
	NS-improvise	2	71	A	62/63
	NS-improvise	2	71A, B	A	64
60060	REFER TO GROUP 61642-3				
600A76-7	SUPPORT (AUXILIARY SEAT BACK)				
C3OZ 71600A76-A	R.H.	1	71	B	63
C3OZ 71600A77-A	L.H.	1	71	B	63
601A54-5	MOULDING (REAR SEAT BACK)				
C4AZ 57601A54-A	R.H. (Δ)	1	57C	A	64
C4AZ 57601A55-A	L.H. (Δ)	1	57C	A	64
Δ Package also includes - (2) 53038-S8 screw-oval hd. self-tap.-No. 8-15 x 3/4"					
C4AZ 63601A54-A	R.H. (§)	1	63C	A	64
C4AZ 63601A55-A	L.H. (§)	1	63C	A	64
§ Package also includes - (1) 53038-S screw					
60184-5	RETAINER (REAR SEAT BACK RADIO SPEAKER GRILLE MOUNTING)				
C4AZ 5760184-A	R.H.	1	57F	A	64
C4AZ 5760185-A	L.H.	1	57F	A	64
C4AZ 6360184-A	R.H.	1	63C	A	64
C4AZ 6360185-A	L.H.	1	63C	A	64
C4AZ 7660184-A	R.H.	1	76C	A	64
C4AZ 7660185-A	L.H.	1	76C	A	64
60392	BOLT (FRONT SEAT BACK PIVOT ARM)				
C3DZ 6260392-A		2	62C, 63C, 65B	B C	63
	Bucket seats	4	54C, 62C, 63C, E	C	64
60394	SPACER (FRONT SEAT BACK PIVOT ARM)				
	NS-improvise - rubber 1" diameter x 7/16" thick x 1/2" I.D.	2	62C, 63C, 65B	B C	63
60403	REFER TO GROUP 617A30				
60408	COUPLING (FRONT SEAT REGULATOR DRIVE SHAFT & ADJUSTING SCREW)				
BAK 5760408-C	Use for front seat regulator drive - rubber - this coupling allows the use of "keyed" or "D" shaft motors Note - necessary to use BAK-5761891-A spacers for long shaft applications	1	All	A	60
B7A 7060408-A	Use for front seat adjusting screw - steel - 39/64" O.D. x 1-31/32" long	1	All	A	60
60419	REFER TO GROUP 617A15				
60428	REFER TO GROUP 617A02				

GROUP AND PART NUMBER	DESCRIPTION, SIZE, ETC.	NO. REQ'D	MODEL OR ENGINE CUBIC INCH DISPLACEMENT	VEHICLE CODE	YEAR 19____
60432	NUT (FRONT SEAT ADJUSTER REGULATOR) LESS SOLENOID				
BAK 5760432-A	(2) use with 4-way and (3) use with 6-way (a)	AR	All	D	60
370763-S100	Screw and washer-5/16"-18 x 29/64"-use with 4-way and 6-way seats	2	a		
370764-S100	Screw and washer-5/16"-18 x 59/64"-use with 6-way seat	1	a		
60449	SCREW (FRONT SEAT ADJUSTING REGULATOR) VERTICAL				
B7A 7060449-A	4-Way seat	1	All	A	60
	Assembly consists of the following -				
(1) B7A-7060416-A	screw	(1) B7A-7060486-B	nut, regulator ball	(2) 353925-S	pin-1/8" dia. x 3/4" long
(1) B7A-7060448-A	ret., regulator ball	(1) B7A-7060540-A	clutch, adjuster regulator	(12) 357186-S	ball-1/8"
60467	GASKET (FRONT SEAT ADJUSTER REGULATOR COVER)				
B5A 7060467-A	4-Way seat	1	All	A	60
60473	REGULATOR (FRONT SEAT ADJUSTING)				
BAK 5760473-G	6-Way seat - assembly includes screw shaft, housing, nuts and solenoids	1	All	D	60
B9LB 5760473-A	4-Way seat - assembly includes screw shaft, housing, nuts and solenoids	1	53, 57, 63	D	60
60481	COVER (FRONT SEAT ADJUSTER REGULATOR HOUSING)				
BAE 6460481-A	4-Way seat	1	All	A	60
60487	COUPLING (FRONT SEAT ADJUSTER MOTOR TO SHAFT)				
B7A 7060487-A	4-Way seat - rubber and nylon 5/16" I.D. x 7/8" O.D. x 1-1/4" long	1	All	A	60
60490	KEY (FRONT SEAT ADJUSTER REGULATOR)				
B5A 7060490-A	4-Way seat - steel - 1/8" x 9/32"	1	All	A	60
60493	REFER TO GROUP 617A20				
605A00	PANEL (AUXILIARY SEAT BACK FLOOR FRONT FINISH)				
B9MB77605A00-AP	8-passenger - steel - 17-3/4" x 37-13/16"	1	77	A	60
60508-9	REFER TO GROUP 61390-1				
60510	YOKE (FRONT SEAT ADJUSTER REGULATOR CLUTCH)				
B7A 7060510-A	4-Way seat - assembly includes - (2) rollers	2	All	A	60
60512-3	PANEL (REAR SEAT CUSHION FLOOR) LESS COVER				
PB9M 5660512-AP	6-passenger	1	77	A	60
PB9M 7760512-AP	RIGHT - 8-passenger	1	77	A	60
PB9M 7760513-AP	LEFT - 8-passenger	1	77	A	60
COAB 7160512-AP	RIGHT - 8-passenger	1	71	A	61/62
		1	71C, D	A	63/64
COAB 7160513-AP	LEFT - 8-passenger	1	71	A	61/62
		1	71C, D	A	63/64
CODB 5960512-BP		1	59, 71	C	60/64
605A14	REFER TO GROUP 60940				

GROUP AND PART NUMBER	DESCRIPTION, SIZE, ETC.	NO. REQ'D	MODEL OR ENGINE CUBIC INCH DISPLACEMENT	VEHICLE CODE	YEAR 19____
605A18	BUMPER (AUXILIARY SEAT BACK FLOOR PANEL)				
B9MB 77605A18-A	Rubber - 1/4" x 7/8" (a)	2	77	A	60
C3OZ 71605A18-A		2	71	B	63
52715-S8	Screw-pan hd.-No. 8-15 x 1/4"	2	a		
60520-1	BRACKET (REAR SEAT CUSHION PIVOT)				
C2AZ 7160520-A	R.H. - 8-passenger	1	71	A	62
	6-passenger	1	71A,B	A	63/64
C2AZ 7160521-A	L.H. - 8-passenger	1	71	A	62
	6-passenger	1	71A,B	A	63/64
605A48	LOOP (REAR SEAT BACK FLOOR EXTENSION STOP)				
COAB 59605A48-A	6-passenger	1	71	A	61/64
605A50-1	SUPPORT (REAR SEAT BACK FLOOR)				
COAB59605A50-AP	R.H. - 6-passenger	1	71	A	61
COAB59605A51-AP	L.H. - 6-passenger	1	71	A	61
60552-3	SUPPORT (REAR SEAT CUSHION FLOOR)				
PB9M 5660552-AP	6-passenger				
PB9M 7760552-AP	RIGHT - 8-passenger	1	77	A	60
PB9M 7760553-AP	LEFT - 8-passenger	1	77	A	60
COAB 7160552-AP	RIGHT - 8-passenger	1	77	A	60
		1	71	A	61/62
COAB 7160553-AP	LEFT - 8-passenger	1	71C,D	A	63/64
		1	71	A	61/62
C4AZ 7160553-AP	LEFT - 8-passenger	1	71D	A	63
CODB 5960552-BP		1	71C,D	A	64
		1	59,71	C	60/64
605A52	BAR (REAR SEAT BACK FLOOR SUPPORT TIE)				
COAB 59605A52-A	Steel - 57-1/2" long - 6-passenger	1	71	A	61
605A54	SPRING (REAR SEAT BACK FLOOR SUPPORT)				
COAB 59605A54-A	6-passenger	1	71	A	61/62
605A66	RETAINER (AUXILIARY SEAT BACK FLOOR PANEL LATCH)				
COAB 71605A66-A	8-passenger	1	71A, B	A	61/62
605A73	BUMPER (REAR SEAT BACK FLOOR SUPPORT R.H.)				
COAB 59605A73-A	6-passenger	1	71	A	61/62
605A76	SPRING (REAR SEAT BACK FLOOR PANEL COUNTERBALANCE)				
COAB 59605A76-A	6-passenger	2	71	A	61/62
60578	BUMPER ASSEMBLY (REAR SEAT CUSHION PANEL)				
B7A 5960578-A	Rubber - assembly includes (1) 350877-S sleeve nut - (2) required without auxiliary seat (5) with auxiliary seat	AR	77	A	60
		AR	71	A	61/62
		AR	71C,D	A	63/64
		AR	59,71	C	60/64
60582	BEARING (FRONT SEAT ADJUSTER HORIZONTAL REGULATOR SCREW)				
B7A 7060582-A	4-Way seat	1	All	A	60
605A90-1	BRACKET (REAR SEAT BACK SPRING SUPPORT PANEL TO WHEELHOUSE) FRONT				
C1VY 74605A90-A	R.H.	1	74	D	61/64
C1VY 74605A91-A	L.H.	1	74	D	61/64

GROUP AND PART NUMBER	DESCRIPTION, SIZE, ETC.	NO. REQ'D	MODEL OR ENGINE CUBIC INCH DISPLACEMENT	VEHICLE CODE	YEAR 19____
605A92-3	BRACKET (REAR SEAT BACK SPRING SUPPORT PANEL TO WHEELHOUSE) REAR				
C1VY 74605A92-A	R.H.	1	74	D	61/64
C1VY 74605A93-A	L.H.	1	74	D	61/64
60601	PANEL (REAR SEAT BACK FLOOR EXTENSION SUPPORT)				
COAB 5960601-BP	6-passenger	1	71	A	61
606A22	STOP (AUXILIARY SEAT BACK FLOOR)				
C1AB 71606A22-A	Rubber	2	71	A	61/62
		2	71C,D	A	63/64
606A24	ESCUTCHEON (REAR SEAT BACK FLOOR PANEL STOP)				
C1AB 71606A24-A		1	71	A	61
60629	PANEL (REAR SEAT BACK FLOOR EXTENSION) LESS COVER				
COAB 5960629-BP	6-passenger	1	71	A	61
C2AZ 7160629-A	6-passenger	1	71	A	62
		1	71A,B	A	63/64
C3OZ 7160629-A		1	71	B	63
606A38-9	BAR (REAR SEAT CUSHION TORQUE)				
C2AZ 71606A38-A	R.H. - 6-passenger	1	71	A	62
		1	71B	A	63
		1	71B,D	A	64
C2AZ 71606A39-A	L.H. - 6-passenger	1	71	A	62
		1	71B	A	63
		1	71B,D	A	64
C3OZ 71606A38-A	R.H.	1	71	B	63
C3OZ 71606A39-A	L.H.	1	71	B	63
606A40	BRACKET (REAR SEAT CUSHION TORQUE BAR INNER TO FLOOR)				
C2AB 71606A40-A	6-passenger	2	71	A	62
		2	71A,B	A	63/64
		2	71	B	63
606A42	BRACKET (REAR SEAT CUSHION TORQUE BAR OUTER TO FLOOR)				
C2AB 71606A42-A	6-passenger (a)	2	71	A	62
		2	71A,B	A	63/64
		2	71	B	63
352628-S2	Bolt-hex. washer hd. -5/16"-24 x 7/8"	2	a		
606A44	PLATE (REAR SEAT CUSHION TORQUE BAR INNER BRACKET ANCHOR)				
C2AZ 71606A44-A	6-passenger	4	71	A	62
		4	71A,B	A	63/64
		4	71	B	63
60650-1	RISER (REAR SEAT FRONT)				
PB9M 7660650-A	Steel - 55-1/2" long	1	76	A	60
COAB 7660650-A	R.H.	1	76	A	61/63
COAB 7660651-A	L.H.	1	76	A	61/63
COAB 6360650-A		1	63	A	63
	NS-improvise locally	1	76	B	63
60652	PLATE (AUXILIARY SEAT CUSHION SCUFF)				
B9MB 7760652-A	Nylon - 1-1/2" x 2" - located on seat cushion (a)	2	77	A	60
52727-S8	Screw-pan hd. cr. rec. tap.-No. 10-12 x 1/2"	4	a		

GROUP AND PART NUMBER	DESCRIPTION, SIZE, ETC.	NO. REQ'D	MODEL OR ENGINE CUBIC INCH DISPLACEMENT	VEHICLE CODE	YEAR 19____
60669	RISER (LEFT REAR SEAT CUSHION SUPPORT)				
PB9M 7760669-A	8-passenger - steel - 15" long (a)	1	77	A	60
COAB 7160669-A	8-passenger (a)	1	71	A	61/62
	(a)	1	71D	A	63
C4AZ 7160669-A	8-passenger	1	71C, D	A	64
B7A 5960578-A	Bumper-rubber	1	a		
60692	RISER (RIGHT REAR SEAT CUSHION FLOOR PANEL SUPPORT)				
COAB 7160692-A	8-passenger	1	71	A	61/62
	6-passenger	1	71B	A	63
C4AZ 7160692-A	8-passenger	1	71C, D	A	64
60700	PANEL (REAR SEAT BACK SPRING SUPPORT)				
C1VB 7460700-A		1	74	D	61
C1VY 7460700-A		1	74	D	62/63
C4VY 7460700-A		1	74	D	64
60718-9	PANEL ASSEMBLY (LEFT REAR SEAT SUPPORT)				
PB9M 7760718-AP	R.H. - 8-passenger (a)	1	77	A	60
PB9M 7760719-AP	L.H. - 8-passenger (a)	1	77	A	60
COAB 7160718-AP	R. H. - 8-passenger	1	71	A	61/62
		1	71C, D	A	63/64
COAB 7160719-AP	L. H. - 8-passenger	1	71	A	61/62
		1	71C, D	A	63/64
BA 7963036-A	Pin	1	a		
352158-S2	Screw-hex. washer hd. -5/16"-24 x 11/16"	2	a		
352358-S	Pin-self-locking	1	a		
356383-S7	Spring washer-three wave-29/64" I.D. x 3/4" O.D.	4	a		
60724-5	PANEL (REAR SEAT SUPPORT)				
PB9M 5660724-AP	R.H. - 6-passenger (a)	1	77	A	60
PB9M 5660725-AP	L.H. - 6-passenger (a)	1	77	A	60
COAB 5960724-AP	R. H. - 6-passenger	1	71	A	61
COAB 5960725-AP	L. H. - 6-passenger	1	71	A	61
CODB 5960724-AP	R. H. - use on vehicles built prior to 6-1-60 (b)	1	59, 71	C	60
CODB 5960725-AP	L. H. - use on vehicles built prior to 6-1-60 (b)	1	59, 71	C	60
CODB 5960724-BP	R. H. - use on vehicles built after 5-31-60	1	59, 71	C	60/64
CODB 5960725-BP	L.H. - use on vehicles built after 5-31-60	1	59, 71	C	60/64
350299-S7	Screw and washer-flat hd. -1/4"-20	AR	b		
352158-S2	Screw-hex. washer hd. -5/16"-24 x 11/16"	2	a		
353483-S2	Screw-hex. washer hd. -5/16"-24 x 5/8"	8	b		
359025-S8	Bolt-hex. pilot hd. -3/8"-16	2	a		
359276-S7	Lockwasher-steel-3/8"	2	a		
359953-S2	Nut-retainer-5/16"-24	2	a		
60747	PANEL (REAR SEAT BACK FLOOR EXTENSION FINISH)				
COAB 5960747-BP	6-passenger	1	71	A	61
C2AZ 7160747-A	6-passenger	1	71A, B	A	62/64
C3OZ 7160747-A		1	71	B	63
60762	SHIELD (FRONT SEAT BACK)				
C4SZ 6360762-A	In prime - (1) for driver seat - (1) for passenger seat	2	57C, 63C, 65C, 76C	A	64

GROUP AND PART NUMBER	DESCRIPTION, SIZE, ETC.	NO. REQ'D	MODEL OR ENGINE CUBIC INCH DISPLACEMENT	VEHICLE CODE	YEAR 19____
60788	MOULDING (FRONT SEAT BACK)				
BAE 5860788-A	Steel	1	57,58,77	A	60
COMB 6465204-A	R.H. - rustless steel (a)	1	63,64,76	A	60
COMB 6465205-A	L.H. - rustless steel (a)	1	63,64,76	A	60
BAK 6860788-A	Rustless steel - 3/4" x 21-29/32" - use on vehicles built prior to 12-2-59	2	63,65,68	D	60
BAK 7560788-A	Rustless steel - 3/4" x 45-13/16" - use on vehicles built prior to 12-2-59	1	53,54,57,75	D	60
COMB 6460804-A	Clip	AR	a		
60796	SEAL (REAR SEAT BACK FINISH PANEL TO PACKAGE TRAY)				
C1VB 7460796-A	Sponge rubber 52" long	1	74	D	61/63
C4VY 7460796-A	Sponge rubber 52" long	1	74	D	64
608A02	SHIM (AUXILIARY SEAT CUSHION WELL FLOOR PIVOT ARM)				
COMB77608A02-A	Steel - 2-7/8" long - to be installed between pivot arm mounting plate and rear floor pan	AR	77	A	60
60804	CLIP (FRONT SEAT BACK MOULDING RETAINING)				
COMB 6460804-A	Steel wire - use with mouldings 65204-5 and 60788	AR	All	A	60
B9LB 5760804-A	Spring steel - (5) use with moulding BAK-6860788-A and (6) use with moulding BAK-7560788-A on vehicles built prior to 12-2-59 and retained for model 23B only for balance of 1960	AR	All	D	60
60814	PLATE (AUXILIARY SEAT BACK FLOOR STOP ANCHOR)				
C1AB 7160814-AP	8-passenger - steel - 1" x 1-7/8" with (2) 1/4" diameter holes	2 2	71 71D	A A	61/62&64 63
60830-1	ARM (AUXILIARY SEAT BACK FLOOR PIVOT)				
B9MB 7760830-AP	R.H. - 8-passenger (a)	1	77	A	60
PB9M 7760831-AP	L.H. - 8-passenger (a)	1	77	A	60
C1AB 7160830-AP	R.H. - 8-passenger	1 1	71 71C,D	A A	61/62 63/64
C1AB 7160831-AP	L.H. - 8-passenger	1 1	71 71C,D	A A	61/62 63/64
C3OZ 7160830-A	R.H. (b)	1	71	B	63
C3OZ 7160831-A	L.H. (b)	1	71	B	63
354831-S7	Screw and washer-flat hd. -1/4"-20	2	a		
356376-S	Washer-flat-11/32" x 5/8"	2	b		
60834	ARM (AUXILIARY SEAT CUSHION WELL FLOOR PIVOT)				
PB9M 5660834-AP	8-passenger	2	77	A	60
60864	BUSHING (FRONT SEAT REGULATOR TO REGULATOR SUPPORT)				
B7A 7060864-A	4-Way seat	2	All	A	60
60872	PLATE (AUXILIARY SEAT CUSHION WELL FLOOR PIVOT ARM MOUNTING)				
PB9M 5660872-AP	8-passenger - steel 9/16" x 7-7/16" with (3) 1/4" diameter holes (a)	2	77	A	60
354522-S8	Screw-flat hd. cr. rec. -1/4"-20 x 1-1/16"	1	a		
60873	PLATE (AUXILIARY SEAT BACK FLOOR PIVOT ANCHOR)				
PB9M 5660873-A	8-passenger - steel 9/16" x 7-7/16" with (3) 1/4" diameter holes	2	56,77	A	60

GROUP AND PART NUMBER	DESCRIPTION, SIZE, ETC.	NO. REQ'D	MODEL OR ENGINE CUBIC INCH DISPLACEMENT	VEHICLE CODE	YEAR 19____
60928	HINGE (AUXILIARY SEAT BACK FLOOR)				
PB9M 7760928-AP	8-passenger (a)	1	77	A	60
COAB 7160928-A	8-passenger	1	71	A	61/62
		1	71C,D	A	63/64
354522-S8	Screw-flat hd. cr. rec. -1/4"-20 x 1-1/16"	3	a		
60940	PANEL (AUXILIARY SEAT BACK FLOOR FRONT) LESS COVER				
B9MB77605A14-AP	8-passenger	1	77	A	60
C2AZ 7160940-AP	8-passenger	1	71	A	61/62
		1	71C,D	A	63/64
C3OZ 7160940-A		1	71	B	63
60942	PANEL (AUXILIARY SEAT BACK FLOOR REAR) LESS COVER				
COMB 7760942-AP	8-passenger	1	77	A	60
COAB 7160942-CP	8-passenger	1	71	A	61/62
		1	71C,D	A	63/64
C3OZ 7160942-A	Use on vehicles built prior to 4-22-63	1	71	B	63
C3OZ 7160942-B	Use on vehicles built after 4-21-63	1	71	B	63
60963	PLATE (AUXILIARY SEAT BACK FLOOR SPRING COVER)				
PB9M 7760963-AP	R.H. - 8-passenger - steel - 12-9/16" long (a)	1	77	A	60
PB9M 5660963-A	L.H. - 8-passenger - steel - 12-9/16" long (a)	1	77	A	60
52727-S8	Screw-pan hd. cr. rec. tap-No. 10-12 x 1/2"	4	a		
60997	PANEL (AUXILIARY SEAT BACK FLOOR - UPPER)				
COMB 7760997-AP	8-passenger - steel - 3-9/16" x 37-7/8" (a)	1	77	A	60
52721-S8	Screw-pan hd. cr. rec. tap. -No. 10-12 x 3/8"	8	a		
61004	SPRING (AUXILIARY SEAT BACK FLOOR LATCH)				
COAB 7161004-A	8-passenger	1	71,77	A	60/62
		1	71C,D	A	63/64
61022-3	REFER TO GROUP 613A04				
61040-1	MOULDING (REAR SEAT BACK) UPPER				
C4AZ 6361040-A	R.H. (Δ)	1	57C,63C	A	64
C4AZ 6361041-A	L.H. (Δ)	1	57C,63C	A	64
Δ Package also includes -					
	(3) 34655-S8 nut & wshr.-No.10-24				
61064	STOP (FRONT SEAT BACK)				
20467-S7	Drivers seat-bolt-hex. hd. -5/16"-24 x 1-1/2" (a)	1	57C, 63C, 65C, 75, 76C	A	64
C2SZ 6361064-A	Passenger seat - dart type (a)	2	65C, 71D	A	62
		2	57C,63C,65C,75C,F,76B,C	A	63/64
		2	62C, 65B	B	62/63
		2	62C, 63C, 71D, 76B	C	62/63
		1	76B	C	64
C1SZ 6361064-A	Drivers seat - rubber tip (a)	2	62C	C	62
B5A 7061064-A	Nylon - 1-1/8" diameter	2	63, 65, 68	D	60
33923-S7	Nut-hex.hd. -5/16"-24	4	a		
44722-S8	Washer-flat-5/16"	4	a		
610A88-9	SEAT BELT KIT				
	For application refer to Form MD-1936-A - Weekly Stock Order Pad			A C D	64

GROUP AND PART NUMBER	DESCRIPTION, SIZE, ETC.	NO. REQ'D	MODEL OR ENGINE CUBIC INCH DISPLACEMENT	VEHICLE CODE	YEAR 19____
61097-8	SPRING (REAR SEAT BACK LATCH HANDLE)				
C2AZ 7161097-A	R. H. - 6-passenger	1	71	A B	62/63
		1	71A,B	A	64
C2AZ 7161098-A	L. H. - 6-passenger	1	71	A B	62/63
		1	71A,B	A	64
610A98	SPRING (SEAT BELT RETRACTOR)				
C4SZ 63610A98-A	Rustless steel	1	All	D	64
61099-100	LOOP (REAR SEAT BACK STOP)				
B9MB 7761099-A	R.H. - chrome finish - 8-passenger (a)	1	77	A	60
B9MB 7761100-A	L.H. - chrome finish - 8-passenger (a)	1	77	A	60
B7A 5961099-A	Chrome finish - 6-passenger (a)	2	77	A	60
	8-passenger	2	71	A	61/62
	(a)	2	71C,D	A	63/64
COAB 5961099-A	Chrome finish - 6-passenger (a)	1	71	A	61/62
CODB 5961099-A	Chrome finish - use on vehicles built prior to 7-1-60 (b)	1	59,71	C	60
CODB 5961099-B	Chrome finish - use on vehicles built after 6-30-60 (b)	1	59,71	C	60/64
50677-S13	Screw and washer assembly-rd.hd.cr.rec.-No.10-32 x 1-1/8"	4	a		
50857-S8	Screw & washer-pan hd.cr.rec.-No.10-32x1-1/8"	2	b		
611A06	KIT (SEAT BELT RETRACTOR)				
C4AZ 62611A06-A	Use on rear belts with tongue end only	1	All	A C D	64
	Use on front outboard belts with tongue end	1	All	A C	64
61118-9	SUPPORT (REAR SEAT TO FLOOR)				
BAK 6361118-A	R. H. - steel - 28-5/8" long	1	63,65	D	60
BAK 6361119-A	L. H. - steel - 28-5/8" long	1	63,65	D	60
611A32	KIT (FRONT SEAT BELT BOOT & RETAINER)				
C4AZ 25611A32-A	Front - full seat	AR	All	A C D	64
61138-9	MOULDING (REAR SEAT BACK TOP)				
C2AZ 7661138-A	R. H. (Δ)	1	76B	A	62/63
C2AZ 7661139-A	L. H. (Δ)	1	76B	A	62/63
Δ Package also includes -					
(1) 357903-S13	screw (2) 358421-S13 screw				
C4AZ 7661138-A	R. H. (§)	1	76C	A	64
C4AZ 7661139-A	L. H. (§)	1	76C	A	64
§ Package also includes -					
(1) 357903-S13	screw (2) 358432-S100 screw				
61140	BOOT (FRONT SEAT BELT)				
C4DZ 6261140-AAB	DARK BLUE - use with 2-piece hook - outboard side with Rotunda belts only - 13" long - cut to fit	AR	All	A D	64
		AR	All except 62C	C	64
C4DZ 6261140-AAC	DARK TURQUOISE - use with 2-piece hook - outboard side with Rotunda belts only - 13" long - cut to fit	AR	54A,B,F,57D,62A, 63D,65A,B,F,76F	A	64
		AR	54B,C,D,62B,63C,D	C	64
		AR	All	D	64
C4DZ 6261140-AAD	DARK BEIGE - use with 2-piece hook - outboard side with Rotunda belts only - 13" long - cut to fit	AR	54B,F,57C,D,63C,D, 65B,C,F,71A,B,C,D,76C,F	A	64
		AR	54C, D, 62C, 63C, D, 71B, C,	C	64
		AR	All	D	64

CONTINUED ON NEXT PAGE

GROUP AND PART NUMBER	DESCRIPTION, SIZE, ETC.	NO. REQ'D	MODEL OR ENGINE CUBIC INCH DISPLACEMENT	VEHICLE CODE	YEAR 19__
61140	BOOT (FRONT SEAT BELT) CONTINUED				
C4DZ 6261140-AAE	RED - use with 2-piece hook - outboard side with Rotunda belts only - 13" long - cut to fit	AR	All except 54A, 62A, 65A, 76A	A	64
		AR	54B, C, D, 63C, D, E, 71B, C	C	64
		AR	All	D	64
C4DZ 6261140-AAF	MEDIUM GOLD - use with 2-piece hook - outboard side with Rotunda belts only - 13" long - cut to fit	AR	All except 57C, 63C, 65C, 71A, C, 76C, F	A	64
		AR	All except 54C, 62C, 63C, 76B, C	C	64
		AR	All	D	64
C4DZ 6261140-AAG	BLACK - use with 2-piece hook - outboard side with Rotunda belts only - 13" long - cut to fit	AR	All	A D	64
		AR	All except 62C, 76B, D	C	64
C3AZ 6261140-A	BLACK Use with 1-piece hook	2	All	A B C D	63
		2	All	A C D	64
C3AZ 6261140-B	MEDIUM BLUE Use with 1-piece hook	2	All	A B C D	63
		2	All	A C D	64
C3AZ 6261140-C	MEDIUM TURQUOISE Use with 1-piece hook	2	All	A B C D	63
		2	All	A C D	64
C3AZ 6261140-D	MEDIUM BEIGE Use with 1-piece hook	2	All	A B C D	63
		2	All	A C D	64
C3AZ 6261140-E	RED Use with 1-piece hook	2	All	A B C D	63
		2	All	A C D	64
C3AZ 6261140-F	MEDIUM GOLD Use with 1-piece hook	2	All	A B C D	63
		2	All	A C D	64
C4SZ 6361140-AAG	Long belt - BLACK	2	All	D	64
61142	LATCH ASSEMBLY (AUXILIARY SEAT BACK FLOOR) R.H.				
B9MB 7761142-AP	In prime - 8-passenger	1	77	A	60
C2AZ 7161142-A	8-passenger	1	71	A	61/62
		1	71C, D	A	63/64
61156	KIT - ADAPTOR (REAR SEAT BELT MOUNTING)				
C3RZ 6261156-A		AR	All	A C D	64
61182	SCUFF PLATE (FRONT SEAT BACK FRAME) INNER				
8A 7061182	Fiber - 13/32" I.D. x 1-7/8" O.D. x 1/16"	2	63, 64, 76	A	60
		2	62, 64, 65, 71	A	61
		2	62, 65A, B, 76A	A	62/63
		2	62A, 63, 65A, B, F, 76A, F	A	64
		1	63, 65, 68	D	60
61200-1	KIT - SEAT BELT				
	For application refer to Form MD-1936-A - Weekly Stock Order Pad				
61212	BOLT (SEAT BELT ANCHOR FRONT SEAT INSTALLATION)				
C4AZ 6261212-B		AR	All	A C	64
C2AZ 6261212-A		AR	All	A B C D	62/63
61216	REINFORCEMENT (FRONT SEAT BELT ANCHOR OR SEAT TRACK TO FLOOR PAN)				
C2AZ 6261216-A	Seat belt to floor pan	4	All	A B C D	62/63
		4	All	A D	64
		2	All except 76	C	64
C2OZ 6261216-B	Seat track to floor pan	4	76	C	64
C4SZ 6261216-A	Anchor to side member	2	62C, 65B	B	62/63
		1	All except 76	C	64

GROUP AND PART NUMBER	DESCRIPTION, SIZE, ETC.	NO. REQ'D	MODEL OR ENGINE CUBIC INCH DISPLACEMENT	VEHICLE CODE	YEAR 19____
61280	HOOK ASSEMBLY (SEAT BELT TO FLOOR - ATTACHING)				
C3AZ 6261280-A	Front and rear seat - use on all cars with Rotunda seat belts Note - Not used on Comet model 76 rear seat	AR	All	A B C D	63/64
613A04	FRAME (REAR SEAT BACK) UPPER				
PB9M 5661022-AP	6-passenger - in prime - steel - 52" long	1	77	A	60
PB9M 7761022-AP	8-passenger - right seat - in prime - steel - 21-3/8" long	1	77	A	60
PB9M 7761023-AP	8-passenger - left seat - in prime - steel - 30-1/8" long	1	77	A	60
COAB 7161022-AP	8-passenger - right seat - in prime - 23-1/8" long	1	71	A	61/62
	Right seat back	1	71C,D	A	63/64
COAB 7161023-AP	8-passenger - left seat - in prime - 29-1/8" long	1	71	A	61/62
	Left seat back	1	71C,D	A	63/64
C2AB 71613A04-AP	6-passenger	1	71	A	62
		1	71A,B	A	63/64
C3OZ 71613A04-A	6-passenger	1	71	B	63
CODB 59613A04-AP	6-passenger	1	59,71	C	60/64
61307	ESCUTCHEON (REAR SEAT BACK STOP LOOP)				
B9MB 5661307-A	Rustless steel - 1-9/32" x 2-11/16" with (2) slot type holes	2	77	A	60
61312	ROLLER (REAR SEAT BACK FLOOR EXTENSION FINISH PANEL)				
C2AZ 7161312-A	Nylon - 6-passenger	2	71A,B	A	62/64
		2	71B	B	63
61314	BRACKET (REAR SEAT BACK FLOOR EXTENSION PANEL ROLLER)				
C2AZ 7161314-A	6-passenger	2	71	A	62
		2	71A,B	A	63/64
		2	71B	B	63
61325	ANTI-RATTLER (REAR SEAT BACK FLOOR EXTENSION PANEL)				
C2AZ 7161325-A	(a)	3	71	A B	62/63
		3	71A,B	A	64
53005-S8	Screw-oval hd. cr. rec. -No. 6-18 x 3/8"	3	a		
61328-9	PLATE (REAR SEAT BACK STOP ANCHOR)				
COAB 5961328-A	6-passenger	1	71	A	61
C1AB 7161328-A	R.H. - 8-passenger	1	71	A	61/63
		1	71C,D	A	64
C1AB 7161329-A	L.H. - 8-passenger	1	71	A	61/63
		1	71C,D	A	64
C2AZ 7161328-A	6-passenger	1	71	A	62
		2	71A,B	A	63/64
C3OZ 7161328-A	R.H.	1	71	B	63
C3OZ 7161329-A	L.H.	1	71	B	63
61332	ROD (REAR SEAT BACK LATCH HANDLE)				
C2AZ 7161332-A	6-passenger	1	71	A	62/63
		1	71A,B	A	64
	When servicing Meteor cut to size	1	71	B	63
61333	REFER TO GROUP 62430				
61336	ANTI-RATTLER (REAR SEAT BACK LATCH HANDLE)				
	NS-6-passenger - cut from windshield hose	2	71	A	62

GROUP AND PART NUMBER	DESCRIPTION, SIZE, ETC.	NO. REQ'D	MODEL OR ENGINE CUBIC INCH DISPLACEMENT	VEHICLE CODE	YEAR 19____
61339	BUMPER (REAR SEAT BACK LATCH HANDLE STOP PIN)				
C2AZ 7161339-A	Rubber	2	71	A B	62/63
		2	71A,B	A	64
61346	BEARING (REAR SEAT BACK LATCH HANDLE)				
C2AB 7161346-A	Nylon - 6 passenger	1	71	A	62
		2	71A,B	A	63/64
		2	71	B	63
61352-3	SHIELD (REAR SEAT BACK END)				
COAB 5961352-BP	R.H. - steel - 6" x 11-23/32" - 6-passenger (a)	1	71	A	61/62
COAB 5961353-BP	L.H. - steel - 6" x 11-23/32" - 6-passenger (a)	1	71	A	61/62
53038-S13	Screw-oval hd. self-tap. -No. 8-15 x 3/4"	4	a		
61371	PLATE (REAR SEAT BACK SUPPORT ANCHOR) FRONT				
PB9M 7761371-A	Steel - 1-1/4" x 3" - use with split seat	2	77	A	60
61372	PLATE (REAR SEAT BACK SUPPORT ANCHOR)				
PB9M 5661372-A	Steel -1-21/32" x 2-1/2" - (1) req'd. for 6-passenger - (2) req'd. for 8-passenger (a)	AR	77	A	60
	NS-improvise locally				
352158-S8	Screw-hex. washer hd. -5/16"-24 x 11/16"	4	71	B	63
		4	a		
61373	PLATE (LEFT REAR SEAT SUPPORT PANEL)				
COAB 7161373-A	8-passenger	1	71	A	61/62
		1	71C,D	A	63/64
61378	SPRING (RIGHT REAR SEAT LATCH)				
B9MB 7761378-A	8-passenger	1	77	A	60
61381	PLATE (RIGHT REAR SEAT LATCH STRIKER)				
B9MB 7761381-A	Steel - 8-passenger (a)	1	77	A	60
50804-S7	Screw and washer assembly-pan hd. cr. rec.- No. 10-32 x 3/8"	3	a		
61382	LATCH (RIGHT REAR SEAT)				
B9MB 7761382-B	Assembly includes knob, bracket, spring, pin and stop - 8-passenger (a)	1	77	A	60
50804-S7	Screw and washer assembly-pan hd. cr. rec.- No. 10-32 x 3/8"	3	a		
61386-7	RETAINER (REAR SEAT BACK FLOOR SUPPORT TO FLOOR)				
COAB 5961386-B	R.H. - 6-passenger	1	71	A	61
COAB 5961387-BP	L.H. - 6-passenger	1	71	A	61
61390-1	PANEL (REAR SEAT BACK FLOOR) LESS COVER				
B9MB 5661390-AP	6-passenger	1	77	A	60
B9MB 7761390-AP	R.H. - 8-passenger	1	77	A	60
B9MB 7761391-AP	L.H. - 8-passenger	1	77	A	60
COAB 5960508-CP	In prime - 6-passenger	1	71	A	61
COAB 7160508-CP	R.H. - in prime - 8-passenger	1	71	A	61/62
		1	71C,D	A	63/64
COAB 7160509-CP	L.H. - in prime - 8-passenger	1	71	A	61/62
		1	71C,D	A	63/64
C2AZ 7160508-B	In prime - 6-passenger	1	71	A	62
		1	71A,B	A	63/64
C3OZ 7160508-A		1	71	B	63
CODB 5961390-BP	Use on vehicles built prior to 7-1-60	1	59,71	C	60
CODB 5961390-CP	Use on vehicles built after 6-30-60	1	59,71	C	60/64

GROUP AND PART NUMBER	DESCRIPTION, SIZE, ETC.	NO. REQ'D	MODEL OR ENGINE CUBIC INCH DISPLACEMENT	VEHICLE CODE	YEAR 19____
61400-1	MOULDING (FRONT SEAT CUSHION SIDE SHIELD)				
C2AY 6261410-A	R.H.	1	54B, 65B, 71B, 75A, 76A	A	62
C2AY 6261411-A	L.H.	1	54B, 65B, 71B, 75A, 76A	A	62
C2AZ 7661410-A	R.H. - aluminum (Δ)	1	63C, 65C, 75C, 76B	A	62/63
C2AZ 7661411-A	L.H. - aluminum (Δ)	1	63C, 65C, 75C, 76B	A	62/63
Δ Package also includes -					
(3) C2AB-7661420-A retainer	(3) 45242-S8 nut				
C4SZ 6361410-A	R.H. - aluminum (Δ)	1	57C, 63C, 65C, 76C	A	64
C4SZ 6361411-A	L.H. - aluminum (Δ)	1	57C, 63C, 65C, 76C	A	64
Δ Package also includes -					
(3) 358372-S3 clip	(3) 374362-S8 screw				
C1VB 5761400-E	R.H. - chrome finish	1	All	D	61/62
C1VB 5761401-E	L.H. - chrome finish	1	All	D	61/62
C3VY 5761400-A	R.H. - rustless steel (a)	1	All	D	63/64
C3VY 5761401-A	L.H. - rustless steel (a)	1	All	D	63/64
51751-S8	Screw-pan hd. cr. rec. tap. -No. 8-32 x 1/4"	6	a		
61402-3	MOULDING (FRONT SEAT BACK SIDE SHIELD)				
C1VB 5761402-C	R.H. - full seat - chrome finish (a)	1	All	D	61/64
C1VB 5761403-C	L.H. - full seat - chrome finish (a)	1	All	D	61/64
C4VY 5361402-A	R.H. - for bucket seats only - passenger - 61-1/2" (a)	1	All	D	64
C4VY 5361403-A	L.H. - for bucket seats only - driver - 61-1/2" (a)	1	All	D	64
51751-S8	Screw-pan hd. cr. rec. tap. -No. 8-32 x 1/4"	6	a		
61410-1	REFER TO GROUP 61400-1				
61420	RETAINER (FRONT SEAT CUSHION SHIELD MOULDING)				
C2AZ 7661420-A		6	63C, 65C, 75C, 76B	A	62/63
61506	BUMPER (AUXILIARY SEAT BACK FLOOR PIVOT)				
COAZ 7161506-B	Rubber - 8-passenger	2	77	A	60
		2	71	A	61/62
		2	71D	A	63
COAZ 7161506-C	Fibre - 8-passenger	2	71C, D	A	64
61507	BUMPER ASSEMBLY (AUXILIARY SEAT BACK FLOOR PIVOT ARM)				
COMB 7761507-AP	8-passenger	1	77	A	60
C1AZ 7161507-A	8-passenger	1	71	A	61/62
		1	71D	A	63
C1AZ 7161507-B	8-passenger	1	71C, D	A	64
61542-3	EXTENSION (ROOF SIDE INNER MOULDING) FRONT				
BAK 5761542-J	R.H. - rustless steel (a)	1	All except 68	D	60
BAK 5761543-J	L.H. - rustless steel (a)	1	All except 68	D	60
52360-S13	Screw-oval hd. cr. rec. tap. -No. 8-15 x 3/4"	AR	a		
61610	SPACER (FRONT SEAT BACK PIVOT QUARTER COVER)				
C2AZ 7661610-A	Plastic	2	63C, 65C, 75C, 76B	A	62/63
61616-7	SHIELD (FRONT SEAT BACK) SIDE				
C2AZ 7661616-A	R.H. - (1) for driver seat (1) for passenger seat (a)	2	65C, 76B	A	62
C2AZ 7661617-A	L.H. - (1) for driver seat (1) for passenger seat (a)	2	65C, 76B	A	62

CONTINUED ON NEXT PAGE

GROUP AND PART NUMBER	DESCRIPTION, SIZE, ETC.	NO. REQ'D	MODEL OR ENGINE CUBIC INCH DISPLACEMENT	VEHICLE CODE	YEAR 19__
61616-7	SHIELD (FRONT SEAT BACK) SIDE (CONTINUED)				
C3AZ 6261616-A	R. H.	1	54B, 65B, 71B, 75B, 76A	A	63
		1	54F, 57C, D, 63C, D, 65B, 71B, C, 75F, 76F	A	64
C3AZ 6261617-A	L. H.	1	54B, 65B, 71B, 75B, 76A	A	63
		1	54F, 57C, D, 63C, D, 65B 71B, C, 75F, 76F	A	64
C3AZ 6561616-A	R. H. - (1) for driver seat (1) for passenger seat	2	63C, 65C, 75C, 76B	A	63
C3AZ 6561617-A	L. H. - (1) for driver seat (1) for passenger seat	2	63C, 65C, 75C, 76B	A	63
COLB 5761616-A	R.H. - chrome finish - 4-way and 6-way seat (b)	1	All	D	60
COLB 5761617-A	L.H. - chrome finish - 4-way and 6-way seat (b)	1	All	D	60
BV 7920774-B	Spacer	AR	a		
52361-S13	Screw-oval hd. cr. rec. tap. -No. 10-12 x 3/4"	AR	a		
52726-S8	Screw-pan hd. cr. rec. tap. -No. 8-15 x 1/2"	4	b		
61622	INSERT (FRONT SEAT BACK) CENTER				
C4SZ 6361622-A	Aluminum - bucket seats	2	57C, 63C, 65C, 76C	A	64
61638-9	RETAINER (FRONT SEAT BACK PIVOT SIDE OUTER COVER)				
C4SZ 6361638-A	R.H. (a)	2	57C, 63C, 65C, 76C	A	64
C4SZ 6361639-A	L.H. (a)	2	57C, 63C, 65C, 76C	A	64
34079-S7	Nut-hex. -No. 10-32	4	a		
61642-3	PLATE (FRONT SEAT BACK SCUFF)				
C3UZ 8960060-A	Use with bucket seats - has relief slot on each side of tension slot	2	57C, 63C, 65C, 76C	A	64
PB9M 5661642-A	Plastic - 1-1/8" x 3" with (2) 7/32" diameter (a)	4	62, 63, 64, 65, 76	A	60/62
		4	62, 65A, B, 76A	A	63
		4	57C, 62A, 63C, D, 65A, B, F, 76A, F	A	64
		4	62, 65A	B	63
		4	59, 62A, B	C	60/64
C2SZ 6361642-B	Passenger seat (a)	2	57C, 63C, 65C, 75C, 76B, C	A	62/64
	Use at stowage lock striker	2	62C, 65B	B	62/63
		1	71	B	63
		2	62C, 63C, 71D, 76B	C	62/63
		2	76B	C	64
C2SZ 6361643-A	Driver seat (a)	2	57C, 63C, 65C, 75C, 76B, C	A	62/64
		2	62C, 65B	B	62/63
		2	62C, 63C, 71D, 76B	C	62/63
		2	76B	C	64
52735-S13	Screw-pan hd. cr. rec. tap. -No. 10-12 x 5/8"	2	a		
61670	MOULDING (FRONT SEAT BACK REAR TRIM PANEL)				
C2MY 7661670-B		2	63C, 65C, 75C, 76B	A	62/63
61692-3	COVER (FRONT SEAT BACK PIVOT SIDE) INNER				
C4SZ 6361692-A	R.H. - in prime - (1) for driver - (1) for passenger seats	2	57C, 63C, 65C, 76C	A	64
C4SZ 6361693-A	L.H. - in prime - (1) for driver - (1) for passenger seat	2	57C, 63C, 65C, 76C	A	64
61692-3	COVER (FRONT SEAT BACK PIVOT SIDE) INNER - VINYL				
	Refer to MD-4230 Soft Trim Section				

GROUP AND PART NUMBER	DESCRIPTION, SIZE, ETC.	NO. REQ'D	MODEL OR ENGINE CUBIC INCH DISPLACEMENT	VEHICLE CODE	YEAR 19____
61694-5	COVER (FRONT SEAT BACK PIVOT SIDE) OUTER				
C2AZ 7661694-A	R. H. - at right hand pivot on passenger seat back (a)	1	65C, 76B	A	62
C3AZ 6561694-A	R. H. - at right hand pivot on passenger seat back (a)	1	65C, 76B	A	63
C3AZ 6561695-A	L. H. - at left hand pivot on driver seat back (a)	1	65C, 76B	A	62/63
C4SZ 6361694-A	R. H. - aluminum - not used with reclining seat	2	57C, 63C, 65C, 76C	A	64
C4SZ 6361695-A	L. H. - aluminum - not used with reclining seat	2	57C, 63C, 65C, 76C	A	64
C3DZ 6361694-A	R. H. - chrome finish	1	63C	C	63
		1	54C, 62C, 63C, E	C	64
C3DZ 6361695-A	L. H. - chrome finish	1	63C	C	63
		1	54C, 62C, 63C, E	C	64
C2AZ 7661610-A	Spacer	1	a		
52721-S8	Screw-pan hd. cr. rec. tap. -No. 10-16 x 3/8"	2	a		
52938-S	NS-screw-oval hd. cr. rec. tap. -No. 10-24 x 3/4"	1	a		
351467-S	Washer-spring steel-3/8" x 25/32"	1	a		
61694-5	COVER (FRONT SEAT BACK PIVOT SIDE) OUTER - VINYL				
	Refer to MD-4230 Soft Trim Section				
61696	SLEEVE (FRONT SEAT BACK HINGE PIVOT) INNER				
C1SZ 6361696-D	(a)	4	63C, 65C, 75C, 76B	A	62/63
		2	62C, 65B	B	62/63
		2	62A(S-22), 62C, 63C, 71D, 76B	C	61/63
C1SB 6361696-D	(a)	2	76B, C	C	64
352358-S7	Pin-self-locking	2	a		
61697	SLEEVE (FRONT SEAT BACK HINGE PIVOT) OUTER				
C1SB 6361697-B	(a)	2	62C, 65B	B	62/63
		2	62A(S-22), 62C, 71D	C	61/63
		2	76B, C	C	64
352358-S7	Pin-self-locking	2	a		
617B00	REINFORCEMENT (FRONT SEAT TO FLOOR PAN)				
C2AZ 76617B00-A	(a)	2	63C, 65C, 75C, 76B	A	62/63
20388-S8	Bolt-hex. hd. -3/8"-16 x 1"	AR	a		
34807-S8	Lockwasher-steel-3/8"	AR	a		
617A01	REGULATOR (FRONT SEAT ADJUSTER)				
C1SB 63617A01-B	4-Way bucket seat - driver seat (a)	1	63C, 65C, 75C, 76B	A	62/63
C4SZ 63617A01-A	4-Way electric bucket seat - driver seat	1	57C, 63C, 65C, 76C	A	64
	Attach regulator with the following - At front (2) 378565-S8 screw and washer assy. - fill. hd. -5/16"-18 x 5/8" At center (2) 378567-S8 screw and washer assy. - 5/16"-18 x 5/8" At rear (2) 378566-S8 screw and washer assy. - 5/16"-18 x 3/4"				
374567-S7	Screw and washer-5/16" -18 x 5/8"	AR	a		
617A02	SCREW ASSEMBLY (FRONT SEAT ADJUSTER REGULATOR) HORIZONTAL				
B7A 7060428-A	4-Way seat - screw length between holes 5-31/64"	1	All	A	60
	Assembly consists of the following -				
(1) B7A-7060429-A	screw	(1) B7A-7060486-A	nut, regulator ball	(12) 357186-S	ball-1/8"
(1) B7A-7060438-A	ret., regulator nut ball	(1) B7A-7060527-A	clutch		
		(2) 353925-S	pin-1/8" x 3/4" long		
COAB 64617A02-A	4-Way seat	1	All except 65C, 76B	A	61/62

GROUP AND PART NUMBER	DESCRIPTION, SIZE, ETC.	NO. REQ'D	MODEL OR ENGINE CUBIC INCH DISPLACEMENT	VEHICLE CODE	YEAR 19__
61704-5	TRACK (FRONT SEAT)				
B9MB 6461704-B	Manual - R.H.	1	All	A	60
B9MB 6461705-B	Manual - L.H.	1	All	A	60
COMB 6461704-A	R.H - 4-way	1	All	A	60
COMB 6461705-A	L.H. - 4-way	1	All	A	60
COAB 6461704-H	R.H. - 4-way	1	All except 65C, 76B	A	61/62
COAB 6461705-H	L.H. - 4-way	1	All except 65C, 76B	A	61/62
COAB 6461704-J	R.H. - manual	1	All	A	61/62
	With fixed steering column - without four speed transmission floor shift	1	All except 63C, 65C, 75C, 76B	A	63
COAB 6461705-J	L.H. - manual	1	All	A	61/62
	With fixed steering column - without four speed transmission floor shift	1	All except 63C; 65C, 75C, 76B	A	63
C3AZ 6561704-A	R.H. - manual - (1) for driver seat - (1) for passenger seat (c)	2	63C, 65C, 75C, 76B	A	62/63
C2AZ 7661705-A	L.H. - manual - (1) for driver seat - (1) for passenger seat (c)	2	65C, 76B	A	62
C3AZ 6561705-A	L.H. - manual - (1) for driver seat - (1) for passenger seat (c)	2	63C, 65C, 75C, 76B	A	63
C2AZ 7661704-B	R.H. - electric - (1) for driver seat (c)	1	63C, 65C, 75C, 76B	A	62/63
C2AZ 7661705-B	L.H. - electric - (1) for driver seat (c)	1	63C, 65C, 75C, 76B	A	62/63
COAB 6361704-F	R.H. - manual - with movable steering column - and/or four speed transmission floor shift	1	All except 63C, 65C, 75C, 76B	A	63
COAB 6361705-F	L.H. - manual - with movable steering column - and/or four speed transmission floor shift	1	All except 63C, 65C, 75C, 76B	A	63
C4AZ 6261704-A	R.H. - manual - full seat (g)	1	All	A	64
C4AZ 6261705-A	L.H. - manual - full seat (g)	1	All	A	64
C4AZ 6361704-A	R.H. - 4-way bucket seat - drivers side	1	All	A	64
C4AZ 6361705-A	L.H. - 4-way bucket seat - drivers side	1	All	A	64
C4AZ 6361704-B	R.H. - manual - bucket seat - drivers side	1	All	A	64
C4AZ 6361705-B	L.H. - manual - bucket seat - drivers side	1	All	A	64
C4AZ 6361704-C	R.H. - manual - bucket seat - passenger side	1	All	A	64
C4AZ 6361705-C	L.H. - manual - bucket seat - passenger side	1	All	A	64
C2OZ 6261704-B	R.H. - (1) for driver seat - (1) for passenger seat	2	63C	B	62
C2OZ 6261705-B	L.H. - (1) for driver seat - (1) for passenger seat	2	63C	B	62
C3OZ 6261704-B	R.H. - manual - full seat - 5" travel - use for early model replacement - must be used in set with L.H. C3OZ-6261705-A	1	54A, B, 62A, B, 65A, 71B, E	B	63
C3OZ 6261705-A	L.H. - manual - full seat - 5" travel - use for early model replacement - must be used in set with R.H. C3OZ-6261704-B	1	54A, B, 62A, B, 65A, 71B, E	B	63
C3OZ 6561704-A	R.H. - (1) for right front seat - (1) for left front seat	2	65B	B	63
C3OZ 6561705-A	L.H. - (1) for right front seat - (1) for left front seat	2	65B	B	63
C2OZ 6261704-A	R.H. - manual - 4" travel (d)	1	All except 62C, 63C, 65B 71D, 76	B C	62/63
C2OZ 6261705-A	L.H. - manual - 4" travel (d)	1	All except 62A(S-22), 62C, 63C, 65B, 71D, 76	B C	60/63
CODB 6461704-J	R.H. (a)	1	All except 62A(S-22)	C	60/61
C2DZ 6461704-A	R.H. - (1) for driver seat - (1) for passenger seat (b)	2	62A(S-22), 62C, 71D	C	61/63
C1DZ 6461705-B	L.H. - (1) for driver seat - (1) for passenger seat (b)	2	62A(S-22), 62C, 71D	C	61/63
C3DZ 6261704-A	R.H. - (1) for right front seat - (1) for left front seat	2	62C	C	63
C3DZ 6261705-A	L.H. - (1) for right front seat - (1) for left front seat	2	62C	C	63

CONTINUED ON NEXT PAGE

GROUP AND PART NUMBER	DESCRIPTION, SIZE, ETC.	NO. REQ'D	MODEL OR ENGINE CUBIC INCH DISPLACEMENT	VEHICLE CODE	YEAR 19____
61704-5	TRACK (FRONT SEAT) CONTINUED				
C3DZ 7661704-A	R. H. - manual	1	76A	C	63
C3DZ 7661705-A	L. H. - manual	1	76A	C	63
C3DZ 7661704-B	R. H. - (1) for right front seat - (1) for left front seat	2	76B	C	63
C3DZ 7661705-B	L. H. - (1) for right front seat - (1) for left front seat	2	76B	C	63
C3DZ 6261704-B	R. H. - (1) for right front seat - (1) for left front seat	2	63C	C	63
	Bucket seat	2	All except 76B	C	64
C3DZ 6261705-B	L. H. - (1) for right front seat - (1) for left front seat	2	63C	C	63
	Bucket seat	2	All except 76B	C	64
C4DZ 6261704-A	R. H. - manual - full seat - 5" travel with Delrin slide - use on vehicles built prior to 12-16-63 and after 6-15-64	1	All except 54C, 63C, 76	C	64
C4DZ 6261705-A	L. H. - manual - full seat - 5" travel with Delrin slide - use on vehicles built prior to 12-16-63 and after 6-15-64	1	All except 54C, 63C, 76	C	64
C4DZ 6261704-B	R. H. - manual - full seat - 4" travel with ball slide - use on vehicles built between 12-15-63 and 6-16-64	1	All except 54C, 63C, 76	C	64
C4DZ 6261705-B	L. H. - manual - full seat - 4" travel with ball slide - use on vehicles built between 12-15-63 and 6-16-64	1	All except 54C, 63C, 76	C	64
C4DZ 7661704-A	R. H. - manual - full seat - 5" travel with Delrin slide - use on vehicles built prior to 12-16-63 and after 6-15-64	1	76D	C	64
C4DZ 7661705-A	L. H. - manual - full seat - 5" travel with Delrin slide - use on vehicles built prior to 12-16-63 and after 6-15-64	1	76D	C	64
C4DZ 7661704-C	R. H. - manual - 4" travel with ball slide - use on vehicles built between 12-15-63 and 6-16-64	1	76D	C	64
C4DZ 7661705-C	L. H. - manual - 4" travel with ball slide - use on vehicles built between 12-15-63 and 6-16-64	1	76D	C	64
C4DZ 7661704-B	R. H. - bucket seat - (1) for right front seat - (1) for left front seat	2	76B	C	64
C4DZ 7661705-B	L. H. - bucket seat - (1) for right front seat - (1) for left front seat	2	76B	C	64
BAK 5761704-F	R. H. - manual (e)	1	53A, 57A, 63A	D	60
BAK 5761705-J	L. H. - manual (e)	1	53A, 57A, 63A	D	60
E9LB 5761704-B	R. H. - 4-way and 6-way seat (e)	1	All	D	60
E9LB 5761705-A	L. H. - 6-way seat (e)	1	All	D	60
E9LB 5761705-B	L. H. - 4-way seat (e)	1	All	D	60
C1VB 5761704-D	R. H. - manual - use when seat adjusting handle is located on side of seat (f)	1	All	D	61
C1VB 5761705-D	L. H. - manual - use when seat adjusting handle is located on side of seat (f)	1	All	D	61
C1VY 5761704-A	R. H. - manual - use when seat adjusting handle is located in the front of seat	1	All	D	61/63
C1VY 5761705-A	L. H. - manual - use when seat adjusting handle is located in the front of seat	1	All	D	61/63

CONTINUED ON NEXT PAGE

GROUP AND PART NUMBER	DESCRIPTION, SIZE, ETC.	NO. REQ'D	MODEL OR ENGINE CUBIC INCH DISPLACEMENT	VEHICLE CODE	YEAR 19____
61704-5	TRACK (FRONT SEAT) CONTINUED				
20387-S8	Bolt-hex. hd. -5/16"-24 x 1"	AR	c, d		
33799-S7	Nut-hex. -3/8"-16	4	g		
33924-S8	Nut-hex. jam-3/8"	AR	c, d		
34444-S8	Nut-lock-3/16"-16	4	e		
34806-S7	Lockwasher-5/16"	AR	c, d		
43513-S8	Screw and washer-hex. hd. -5/16"-24 x 1"	4	e		
44722-S8	Washer-flat-5/16"	AR	c, d, e		
44726-S8	Washer-flat-3/8"	4	e		
44727-S8	Washer-flat-3/8"	AR	c, d, g		
352736-S8	Stud-3/8"-16 x 1-3/4"	AR	c, e, g		
352981-S8	Washer-steel-flat-3/8"	4	a		
358826-S8	NS-stud-use on model 76 only	4	g		
359662-S8	Screw-hex. washer hd. -5/16"-18 x 3/4"	4	b		
359780-S7	Screw and washer-fill. hd. -5/16"-24 x 1-3/4"	4	a		
370657-S8	Screw-hex. hd. -5/16"-18	4	b		
372459-S8	Nut-hex. lock-5/16"-24	4	a		
372623-S8	Stud-3/8"-16 x 2-1/16"	AR	c		
376063-S8	NS-stud-5/16"-18-24 x 1-3/4"	AR	d		
376834-S8	NS-stud-5/16"-18-24 x 3-1/2"	AR	d		
	Attach seat cushion to track with the following -				
44722-S8	Washer-flat-steel-5/16"	AR	f		
50951-S7	Screw and washer-fill. hd. cr. rec. -5/16"	AR	f		
359780-S7	Screw and washer-5/16"-24	AR	f		
	Attach seat track to floor pan with the following -				
34444-S8	Nut-hex. lock-3/8"-16	AR	f		
43265-S7	Screw and washer-3/8"-16 x 3/4"	AR	f		
351402-S8	Washer-special-13/32" I.D. x 1-1/2" O.D.	AR	f		
352981-S8	Washer-flat-steel-3/8"	AR	f		
372637-S8	Stud	AR	f		
373350-S7	Screw and washer	AR	f		
617A06	SCREW ASSEMBLY (FRONT SEAT ADJUSTING REGULATOR) VERTICAL				
COAB 64617A06-A	4-Way seat	1	All except 65C, 76B	A	61/62
617B10-1	CABLE (FRONT SEAT ADJUSTER) FRONT VERTICAL ACTUATOR				
C3MY 62617B10-A	R.H. - 6-way seat - 30-1/2" long	1	All	A	63/64
C3MY 62617B11-A	L.H. - 6-way seat - 15-3/4" long	1	All	A	63/64
C1VB 57617B10-A	R.H. - 6-way seat	1	All	D	61/64
C1VB 57617B11-A	L.H. - 6-way seat	1	All	D	61/64
C4VY 53617B10-A	Bucket seat 6-way - 6-1/2" long - (2) for right and (2) for left seat	4	All	D	64
C4VY 53617B11-A	Bucket seat 6-way - 8-23/32" long - (2) for right and (2) for left seat	4	All	D	64
617B12-3	CABLE (FRONT SEAT ADJUSTER) REAR VERTICAL ACTUATOR				
C3MY 62617B12-A	R.H. - 6-way seat - 35-11/32" long	1	All except 63C, 65C, 75C, 76B	A	63
C3MY 62617B13-A	L.H. - 6-way seat - 22" long	1	All	A	64
C1VB 57617B12-A	R.H. - 6-way seat	1	All except 63C, 65C, 75C, 76B	A	63
C1VB 57617B13-A	L.H. - 6-way seat	1	All	A	64
C4VY 53617B12-A	Bucket seat 6-way - 28-37/64" long - (1) for right and (1) for left seat	1	All	D	61/64
C4VY 53617B13-A	Bucket seat 6-way - 27-3/4" long - (1) for right and (1) for left seat	2	All	D	61/64
		2	All	D	64
				D	64

GROUP AND PART NUMBER	DESCRIPTION, SIZE, ETC.	NO. REQ'D	MODEL OR ENGINE CUBIC INCH DISPLACEMENT	VEHICLE CODE	YEAR 19____
617B14-5	CABLE (FRONT SEAT ADJUSTER) HORIZONTAL ACTUATOR				
C3MY 62617B14-A	R.H. - 6-way seat - 29-7/8" long	1	All except 63C, 65C, 75C, 76B	A	63
		1	All	A	64
C3MY 62617B15-A	L.H. - 6-way seat - 16-13/32" long	1	All except 63C, 65C, 75C, 76B	A	63
		1	All	A	64
C1VB 57617B14-A	R.H. - 6-way full seat	1	All	D	61/64
C1VB 57617B15-A	L.H. - 6-way full seat	1	All	D	61/64
617A15	GEAR (FRONT SEAT ADJUSTER REGULATOR)				
B5A 7060419-A	R.H. - with 41 teeth - use with 4-way seat	AR	All	A	60
COAB 64617A15-A	4-Way seat	2	All except 65C, 76B	A	61/62
617A16	COVER (FRONT SEAT ADJUSTER REGULATOR HOUSING)				
COAB 64617A16-A	4-Way seat	1	All except 65C, 76B	A	61/62
617A17	SHAFT (FRONT SEAT ADJUSTER REGULATOR WORM GEAR)				
COAB 64617A17-A	4-Way seat	1	All except 65C, 76B	A	61/62
617A18	BEARING (FRONT SEAT ADJUSTER REGULATOR HOUSING)				
COAB 64617A18-A	4-Way seat	2	All except 65C, 76B	A	61/62
617A20	BEARING (FRONT SEAT ADJUSTER REGULATOR SCREW)				
B7A 7060493-A	4-Way seat	1	All	A	60
COAB 64617A20-A	4-Way seat	2	All except 65C, 76B	A	61/62
617A22	RACE (FRONT SEAT ADJUSTER REGULATOR NEEDLE THRUST BEARING)				
COAB 64617A22-A	4-Way seat - steel - .030" thick	2	All except 65C, 76B	A	61/62
COAB 64617A22-B	4-Way seat - steel - .060" thick	10	All except 65C, 76B	A	61/62
61726	ROD (FRONT SEAT TRACK LATCH TIE)				
B9MB 6461726-A	Manual seat	1	All	A	60
COAB 6461726-D	Manual seat	1	All except 63C, 65C, 75C, 76B	A	61/63
C4AZ 6261726-A	Manual - full seat	1	All	A	64
C2SZ 6361726-A	Manual seat - assembly includes screw, nut and rod	2	63C, 65C, 75C, 76B	A	62/63
		2	62C	B	62
		2	62C, 63C, 71D	C	62/63
C1DB 6461802-A	Manual seat - assembly includes screw, nut and rod (a)	1	All except 62C	B	62
		1	All except 65B	B	63
		1	All except 62A(S-22), 62C 63C, 71D, 76	C	61/63
		1	All except 76D	C	64
C3DZ 7661726-B	Manual - split seat	2	65B	B	63
		2	62C, 76B	C	63
	Manual - bucket seat	2	All	C	64
C1DZ 6461726-A	Manual seat - assembly includes screw, nut and rod	2	62A(S-22)	C	61
C3DZ 7661726-A	Manual - full seat	1	76A	C	63
C4DZ 7661726-A	Manual - full seat	1	76D	C	64
BAK 5761726-B	Manual seat (b)	1	53A, 57A, 63A	D	60
C1VB 5761726-B	Manual seat	1	All	D	61/63
44722-S	Washer-flat-steel 5/16"	2	a		
55672-S8	Nut-lock-5/16"-24	2	a		
372036-S7	Nut-wing-No. 8-32	1	b		
617A26	BEARING (FRONT SEAT ADJUSTER REGULATOR NEEDLE THRUST)				
COAB 64617A26-A	4-Way seat	4	All except 65C, 76B	A	61/62

GROUP AND PART NUMBER	DESCRIPTION, SIZE, ETC.	NO. REQ'D	MODEL OR ENGINE CUBIC INCH DISPLACEMENT	VEHICLE CODE	YEAR 19__
61730	EYE BOLT (FRONT SEAT TRACK TIE ROD)				
BA 7061730-A	Manual seat (a)	1	All except 63C, 65C, 75C, 76B	A	60/63
	Manual full seat	1	All	A	64
		1	All	C	60/61
372036-S7	Nut-wing-No. 8-32	1	53A, 57A, 63A, 74	D	60/64
		1	a		
617A30	HOUSING (FRONT SEAT ADJUSTER REGULATOR)				
B7A 7060403-A	Use with 4-way seat	1	All	A	60
COAB 64617A30-A	4-Way seat	1	All except 65C, 76B	A	61/62
61731	PIN (FRONT SEAT TRACK HORIZONTAL BAR LINK PIVOT)				
B7A 7061731-A	4-Way seat - steel 47/64" long	2	All	A	60
617A36	CLUTCH (FRONT SEAT ADJUSTER REGULATOR)				
COAB 64617A36-A	4-Way seat	1	All except 65C, 76B	A	61/62
61753-5	HANDLE (FRONT SEAT TRACK ADJUSTING)				
B9MB 6461753-A	Chrome finish (a)	1	All	A	60
COAB 6461753-A	(1) used for manual single seat - (2) used for manual bucket seats	AR	All except 62A(S-22)	A B C	61/62
	(1) used for single seat - (2) used for bucket seats - when drivers seat is power (1) used for passenger seat	AR	All	A B C	63
C1SB 6361755-A	Manual seat	AR	All except 71, 75	A C	64
BAE 6461753-A	Manual seat - chrome finish	2	62A(S-22)	C	61
C1VB 5761753-B	Manual seat	1	53A, 57A, 63A	D	60
355097-S8	Screw-headless set-8-32 x 3/16"	1	All	D	61/63
		1	a		
617A76	YOKE & ROLLER (FRONT SEAT ADJUSTER REGULATOR)				
COAZ 64617A76-A	4-Way seat	1	All	A	61
617B80-1	GEAR (FRONT SEAT ADJUSTER TRANSMISSION)				
C1VB 57617B80-A	R. H. - color RED - 6-way - full seat	1	All	A D	61/64
	6-Way - bucket seat - (1) for R. H. and (1) for L. H. seats	2	All	D	64
C1VB 57617B81-A	L. H. - color NATURAL - 6-way - full seat	1	All	A D	61/64
	6-Way - bucket seat - (2) for R. H. and (2) for L. H. seats	4	All	D	64
61782	SPACER (FRONT SEAT UPPER TO CUSHION FRAME SUPPORT)				
C3MY 7561782-A	6-Way seat	2	71, 75	A	63
		4	76A	A	63
	6-Way full seat	2	57C, 71A, B, 75F, 76A, F	A	64
617B82	COVER (FRONT SEAT TRACK ADJUSTER TRANSMISSION)				
C1VB 57617B82-A	6-Way - full seat	1	All	A D	61/64
	6-Way - bucket seat	2	All	D	64
617B84	HOUSING (FRONT SEAT ADJUSTER TRANSMISSION)				
C1VB 57617B84-A	6-Way seat				
C4VY 53617B84-B	6-Way - full seat	1	All	A D	61/63
C4VY 53617B84-A	6-Way - bucket seats - (1) for driver and (1) for passenger	1	All	A D	64
		2	All	D	64
617A86	CABLE (FRONT SEAT ADJUSTER MOTOR DRIVE)				
C4VY 53617A86-A	6-Way bucket seat - 11-1/8" long - (1) for right - (1) for left seat	2	All	D	64

GROUP AND PART NUMBER	DESCRIPTION, SIZE, ETC.	NO. REQ'D	MODEL OR ENGINE CUBIC INCH DISPLACEMENT	VEHICLE CODE	YEAR 19____
61802	REFER TO GROUP 61726				
61804	BRACKET (FRONT SEAT TRACK ASSIST SPRING)				
CODB 6461804-B		2	All except 62C, 65B, 71D, 76	B C	60/63
	Full seat	2	All	C	64
618B10-1	REFER TO GROUP 618A12-3				
618A12-3	ACTUATOR (FRONT SEAT ADJUSTER) VERTICAL				
C3MY 62618B10-A	R.H. - rear - 6-way full seat	1	All	A	63/64
C3MY 62618B11-A	L.H. - rear - 6-way full seat	1	All	A	63/64
C3MY 62618A12-A	R.H. - front - 6-way full seat	1	All	A	63/64
C3MY 62618A13-A	L.H. - front - 6-way full seat	1	All	A	63/64
C3VY 57618A12-A	R.H. - 6-way seat - (2) for full seat - (4) for bucket seat (a)	AR	All	D	61/64
C3VY 57618A13-A	L.H. - 6-way seat - (2) for full seat - (4) for bucket seat (a)	AR	All	D	61/64
359475-S8	Pin-spring-1/4" dia. x 1-3/4" long	1	a		
618B14	SUPPORT (FRONT SEAT ADJUSTER MOTOR & TRANSMISSION)				
C3MY 62618B14-A	6-Way seat	1	All except 63C, 65C, 75C, 76B	A	63
	6-Way full seat	1	All	A	64
618A24-5	SUPPORT (FRONT SEAT ADJUSTER) LOWER				
C3MY 62618A24-A	R.H. - full seat - 6-way - use on vehicles built prior to 5-1-63	1	All	A	63
C3MY 62618A25-A	L.H. - full seat - 6-way - use on vehicles built prior to 5-1-63	1	All	A	63
C4MY 62618A24-A	R.H. - 6-way full seat - use on vehicles built after 4-30-63	1	All	A	63/64
C4MY 62618A25-A	L.H. - 6-way full seat - use on vehicles built after 4-30-63	1	All	A	63/64
C1VY 57618A24-A	R.H. - 6-way seat	1	All	D	61/63
	6-Way bucket seat (a)	2	All	D	64
C1VY 57618A25-A	L.H. - 6-way seat	1	All	D	61/63
C4VY 53618A25-A	L.H. - 6-way bucket seat (a)	2	All	D	64
C4VY 53618A24-B	R.H. - 6-way - full seat	1	All	D	64
C4VY 53618A25-B	L.H. - 6-way - full seat - use on vehicles built prior to 5-6-64	1	All	D	64
C4VY 53618A25-C	L.H. - 6-way - full seat - use on vehicles built after 5-5-64	1	All	D	64
	Attach support to floor with the following -				
352981-S8	Washer-flat-3/8"	4	a		
372637-S8	Stud-3/8"-16 x 3/8"-16	2	a		
373295-S8	Screw and washer-hex. hd. -3/8"-16 x 2"	2	a		
374380-S8	Nut-hex. washer lock-3/8"	2	a		
61828	SPRING (FRONT SEAT TRACK ASSIST)				
COAB 6461828-B	4-Way seat	2	All except 65C, 76B	A	61/62
C4DZ 6361828-B	Manual - bucket seats	2	All	A	64
CODB 6461828-A	Manual seat	2	All except 62A(S-22), 62C, 71D	C	60/63
	Manual - full seat	2	All	A	64
B7A 7061828-A	Manual seat - spring steel - 58 coils - free length 9"	2	All	A	60/62
		2	All except 65C, 76B	A D	63
		2	53A, 57A, 63A	D	60
		2	All	D	61/62

CONTINUED ON NEXT PAGE

GROUP AND PART NUMBER	DESCRIPTION, SIZE, ETC.	NO. REQ'D	MODEL OR ENGINE CUBIC INCH DISPLACEMENT	VEHICLE CODE	YEAR 19__
61828	SPRING (FRONT SEAT TRACK ASSIST) CONTINUED				
C1SB 6361828-A	Manual seat	2	65C, 76B	A	62/63
	Manual - full seat and bucket seat	2	62C, 65B, 71D	B C	62/63
C3DZ 7661828-A	Manual - bucket seats - to be used on vehicles built after 12-26-62	2	All except 76B, 76D	C	64
C4DZ 7661828-A	Manual - full seat	2	76B	C	63/64
BAK 5761828-B	4-Way and 6-way seat - 58 coils - free length - 11-1/4"	2	76D	C	64
		2	All	D	60
618A28-9	SUPPORT (FRONT SEAT ADJUSTER) UPPER				
C3MY 62618A28-A	6-Way full seat - (1) for R.H. and (1) for L.H.	2	All	A	63/64
C1VB 57618A28-A	R.H. - 6-way seat	1	All	D	61/63
	(1) for full seat - (2) for bucket seat	AR	All	D	64
C1VB 57618A29-A	L.H. - 6-way seat	1	All	D	61/63
	(1) for full seat - (2) for bucket seat	AR	All	D	64
61832	BAR (FRONT SEAT TRACK EQUALIZER) VERTICAL				
PB9M 5661832-B	4-Way seat	1	All	A	60
COAB 6461832-A	4-Way seat	1	All except 65C, 76B	A	61/62
BAK 5761832-D	4-Way seat	1	53, 57, 63	D	60
618A36-7	ACTUATOR (FRONT SEAT ADJUSTER) HORIZONTAL				
C3MY 62618A36-A	R.H. - 6-way full seat	1	All	A	63/64
C3MY 62618A37-A	L.H. - 6-way full seat	1	All	A	63/64
C3VY 57618A36-A	R.H. - 6-way seat (a)	1	All	D	61/63
	(1) for full seat - (2) for bucket seat	1	All	D	64
C3VY 57618A37-A	L.H. - 6-way seat (a)	1	All	D	61/63
	(1) for full seat - (2) for bucket seat	1	All	D	64
305112-S2	Pin-spring-1/4" dia. x 1-1/2" long	3	a		
61842	BAR (FRONT SEAT TRACK EQUALIZER) HORIZONTAL				
COMB 6461842-A	4-Way seat	1	All	A	60
COAB 6461842-C	4-Way seat	1	All except 65C, 76B	A	61/62
BAK 5761842-C	4-Way and 6-way seat	1	All	D	60
61844	REINFORCEMENT (SEAT TRACK STABILIZER)				
C1DB 6461844-A	Manual seat (a)	2	63C, 65C, 75C, 76B	A	62/63
		2	62A(S-22), 62C, 71D	B C	61/63
33923-S	Nut-hex. lock-5/16"-24	4	a		
44722-S8	Washer-flat-steel-1/4"	4	a		
618A46	PLATE (FRONT SEAT ADJUSTER RETAINER)				
C1VB 57618A46-A	NS-used with bucket seats-improvise	7	All	D	64
61853	SHAFT (FRONT SEAT TRACK PIVOT) REAR				
BAD 7061853-A	4-Way seat	1	All	A	60
61854	LINK (FRONT SEAT TRACK VERTICAL ADJUSTER BAR)				
COAB 6461854-A	4-Way seat	1	All except 65C, 76B	A	61/62
61857	SHAFT (FRONT SEAT TRACK PIVOT) FRONT				
B7A 7061857-A	4-Way seat	2	All	A	60

GROUP AND PART NUMBER	DESCRIPTION, SIZE, ETC.	NO. REQ'D	MODEL OR ENGINE CUBIC INCH DISPLACEMENT	VEHICLE CODE	YEAR 19____
618A59	COUPLING (FRONT SEAT ADJUSTER TRANSMISSION DRIVE)				
C2VY 57618A59-A	Steel - 6-way seat	3	All	A D	61/63
	6-Way bucket seat	6	All	D	64
C4VY 53618A59-A	6-Way full seat	3	All	A D	64
618A60	SHAFT (FRONT SEAT ADJUSTER TRANSMISSION)				
C1VB 57618A60-A	6-Way full seat	3	All	A D	61/64
	6-Way bucket seat	6	All	D	64
618B60	SPACER (FRONT SEAT ADJUSTER MOTOR BRACKET)				
C4MB 62618B60-A	NS-6-way full seat - 1-1/2" x 1-1/2" x 5/32" - with 1/2" diameter hole - improvise from fiber board or shim board	1	All	A	64
618B62	TUBE (FRONT SEAT ADJUSTER MOTOR DRIVE)				
C4VY 53618B62-A	6-Way bucket seat - (1) for R. H. - (1) for L. H. - tube length 8-13/16"	2	All	D	64
618A66	STUD (FRONT SEAT ADJUSTER PIVOT)				
C1VB 57618A66-A	6-Way full seat (a)	6	All	A D	61/64
	6-Way bucket seat - (6) for right - (6) for left seat	12	All	D	64
45222-S7	Nut-stamped-5/8"-18	6	a		
618A67	BUSHING (FRONT SEAT ADJUSTER)				
C1VB 57618A67-A	6-Way full seat	8	All	A D	61/64
	6-Way bucket seat - (8) for right - (8) for left seat	16	All	D	64
618B68	SHAFT (FRONT SEAT ADJUSTER MOTOR)				
C4VY 53618B68-A	6-Way bucket seat - (1) for right - (1) for left seat	2	All	D	64
618B76	COVER (FRONT SEAT TRACK MOTOR)				
C4AZ 63618B76-A	Use with 4-way bucket seat	1	57C, 63C, 65C, 76C	A	64
61883	SPRING (FRONT SEAT TRACK LATCH)				
B9A 7061883-B	Manual seat - R.H. - 21 coils - free length 1-11/16"	1	All	A	60
B9A 7061883-A	Manual seat - L.H. - 33 coils - free length 3-31/64"	1	All	A	60
COAB 6461883-A	Manual seat	2	All except 63C, 65C, 75C, 76B	A	61/63
	Manual - full seat	2	All except 76	A	64
		2	All	D	61/63
C1SB 6361883-A	Manual - full seat	4	63C, 65C, 75C, 76B	A	62/63
	Manual - full seat	1	76A, F	A	64
	Manual - bucket seat	1	76C	A	64
	Manual - full seat	4	62C	B	62
	Manual - full seat	4	62A(S-22), 62C, 71D	C	61/63
CODB 6461883-C	Manual seat	2	All except 62C	B	62
	Bucket seat	4	57C, 63C, 65C	A	64
	Bucket seat	6	76C	A	64
		2	All except 62A(S-22), 62C, 71D	C	60/62
		2	All except 71D	C	63
		2	76B	C	63
	Bucket seat	2	54C, 62C, 63C, 76	C	64
	Also use as assist spring for deck lid hinge	2	76	C	64
C4OZ 6261883-A	Manual - full seat	2	54A, B, D, 62A, B, 63D, 71, 76D	C	64
B6A 7061883-A	Manual - 14 coils - free length 1-7/16"	2	53A, 57A, 63A	D	60

GROUP AND PART NUMBER	DESCRIPTION, SIZE, ETC.	NO. REQ'D	MODEL OR ENGINE CUBIC INCH DISPLACEMENT	VEHICLE CODE	YEAR 19____
61887	BUMPER (FRONT SEAT TRACK ADJUSTING REGULATOR)				
B9LB 5761887-A	Rubber - 7/16" O.D. - use with 4-way and 6-way seat - located at front of track - group 61705	1	All	D	60
618A88-9	BRACKET (FRONT SEAT ADJUSTER TUBE)				
C1VB 57618A88-A	R.H. - 6-way full seat (a)	1	All	A D	61/64
	6-Way bucket seat - (1) for right - (1) for left	2	All	D	64
C1VB 57618A89-A	L.H. - 6-way seat (a)	3	All	A D	61/64
	6-Way bucket seat - (3) for right - (3) for left	6	All	D	64
C4VY 53618A88-A	6-Way bucket seat - (1) for right - (1) for left - 5/8" at bottom x 3/4" high	2	All	D	64
370348-S7	Screw and washer-pan hd. -No. 8-32 x 1/2"	2	a		
618A90-1	TUBE (FRONT SEAT ADJUSTER) FRONT VERTICAL ACTUATOR				
C3MY 62618A90-A	R.H. - 6-way full seat - 28-3/4" long	1	All	A	63/64
C3MY 62618A91-A	L.H. - 6-way full seat - 14" long	1	All	A	63/64
C1VB 57618A90-A	R.H. - 6-way full seat (a)	1	All	D	61/64
C1VB 57618A91-A	L.H. - 6-way full seat (a)	1	All	D	61/64
C4VY 53618A90-A	6-Way bucket seat - (1) for right - (1) for left seat - 4.02" long	2	All	D	64
C4VY 53618A91-A	6-Way bucket seat -(1) for right - (1) for left seat - 6.86" long	2	All	D	64
C4VY 53618A90-B	6-Way bucket seat - (1) for right - (1) for left seat - 4.07" long	2	All	D	64
C4VY 53618A91-B	6-Way bucket seat - (1) for right - (1) for left seat - 6.89" long	2	All	D	64
370348-S7	Screw and washer-pan hd. -No. 8-32 x 1/2"	2	a		
618A92-3	TUBE (FRONT SEAT ADJUSTER) HORIZONTAL ACTUATOR				
C3MY 62618A92-A	R.H. - 6-way full seat - 28" long	1	All	A	63/64
C3MY 62618A93-A	L.H. - 6-way full seat - 14-2/3" long	1	All	A	63/64
C1VB 57618A92-A	R.H. - 6-way full seat (a)	1	All	D	61/64
C1VB 57618A93-A	L.H. - 6-way full seat (a)	1	All	D	61/64
370348-S7	Screw and washer-pan hd. -No. 8-32 x 1/2"	2	a		
618A98-9	TUBE (FRONT SEAT ADJUSTER) REAR VERTICAL ACTUATOR				
C3MY 62618A98-A	R.H. - 6-way full seat - 33-1/2" long	1	All	A	63/64
C3MY 62618A99-A	L.H. - 6-way full seat - 20-1/4" long	1	All	A	63/64
C1VB 57618A98-A	R.H. - 6-way full seat (a)	1	All	D	61/64
C1VB 57618A99-A	L.H. - 6-way full seat (a)	1	All	D	61/64
C4VY 53618A98-A	R.H. - 6-way bucket seat - (1) for right - (1) for left seat	2	All	D	64
C4VY 53618A99-A	L.H. - 6-way bucket seat - (1) for right - (1) for left seat	2	All	D	64
370348-S7	Screw and washer-pan hd. -No. 8-32 x 1/2"	2	a		
619A02	HOOK (FRONT SEAT TRACK RELEASE CABLE)				
C2OB 62619A02-A		1	All	B	62
		1	All except 65B	B	63
C1DB 64619A02-A		1	All except 62C, 71D, 76B	C	62/63
C4DZ 62619A02-A		1	All except 62A(S-22)	C	60/61
		1	All except 54C, 62C, 63C, 76B, D	C	64
		2	76D	C	64
61924	SPACER (FRONT SEAT REGULATOR MOTOR TO REGULATOR HOUSING)				
B7A 7061924-A	4-Way seat - 1-1/8" long with 1/2" threaded No. 10-32	2	All	A	60

GROUP AND PART NUMBER	DESCRIPTION, SIZE, ETC.	NO. REQ'D	MODEL OR ENGINE CUBIC INCH DISPLACEMENT	VEHICLE CODE	YEAR 19____
61925	KIT SOLENOID & PLUNGER REPAIR (FRONT SEAT ADJUSTING)				
C1SB 6361925-A	4-Way bucket seat	AR	65C, 76B	A	62/63
		1	All	A	64
	4-Way and 6-way seats	1	All	D	60

Consists of the following -

(1) FEL-14610-A	solenoid	(1) C1SB-63619A42-A	cover	(1) C1SB-63619A56-A	spring
(1) BAJ-5860850-A	ball	(1) C1SB-63619A44-A	spring	(1) C1SB-63619A62-A	plunger
(1) C1SB-63619A38-A	clip	(1) C1SB-63619A54-A	guide	(1) BY-7360850-A	ball

619A32	COUPLING (FRONT SEAT TRACK REGULATOR DRIVE)				
C1SB 63619A32-A	4-Way seat - rubber and nylon	1	63C,65C,75C,76B	A	62/63
	4-Way bucket seat - drivers side - 3/4" O.D. x 1-1/4" long	1	All	A	64
C4VY 53619A32-B	6-Way full seat	1	All	A D	64
C4VY 53619A32-A	6-Way bucket seats - (1) for R.H. - (1) for L.H.	2	All	D	64
61938	STOP (FRONT SEAT TRACK)				
C4MY 6261938-A	Use with a/cond. only	1	All	A	64
61946	TUBE & LINK (FRONT SEAT TRACK EQUALIZING)				
BAK 5761946-B	6-Way seat	1	All	D	60
62003	LINK (FRONT SEAT TRACK REGULATOR TO HORIZONTAL EQUALIZING BAR)				
COMB 6462003-A	4-Way seat	1	All	A	60
COAB 6462003-C	4-Way seat	1	All except 65C, 76B	A	61/62
62004	RETAINER (FRONT SEAT TRACK REGULATOR TO HORIZONTAL EQUALIZING BAR LINK)				
COMB 6462004-A	4-Way seat	1	All except 65C, 76B	A	60/62
62030-1	GUSSET (FRONT SEAT TRACK SUPPORT TO SIDE MEMBER)				
C2VY 7462030-A	R.H.	1	74	D	62
C2VY 7462031-A	L.H.	1	74	D	62
62102	SHIELD (FRONT SEAT CUSHION) CENTER				
C4SZ 6362102-A	In prime - paint to match	2	57C, 63C, 65C, 76C	A	64
62116-7	SHIELD (FRONT SEAT ADJUSTER) VINYL				
	Refer to MD-4230 Soft Trim Section				
62162-3	SHIELD (FRONT SEAT TRACK) BUCKET SEATS - VINYL				
	Refer to MD-4230 Soft Trim Section				
62168-9	SUPPORT (FRONT SEAT CUSHION SIDE SHIELD) FRONT				
B9MB 6462168-A	R.H. (a)	1	All	A	60
B9MB 6462169-A	L.H. (a)	1	All	A	60
COAB 6462168-E	R.H.	1	All	A	61/62
		1	54A,62A,65A,75A	A	63
		1	54A,62A,63A,65A,71A,C, 76A	A	64
COAB 6462169-E	L.H.	1	All	A	61/62
		1	54A,62A,65A,75A	A	63
		1	54A,62A,63A,65A,71A,C 76A	A	64

CONTINUED ON NEXT PAGE

GROUP AND PART NUMBER	DESCRIPTION, SIZE, ETC.	NO. REQ'D	MODEL OR ENGINE CUBIC INCH DISPLACEMENT	VEHICLE CODE	YEAR 19__
62168-9	SUPPORT (FRONT SEAT CUSHION SIDE SHIELD) FRONT (CONTINUED)				
C3AZ 6262168-A	R.H.	1	54B, 65B, 71B, 75B, 76A	A	63
		1	54B,F,57C,63C,D,65B,F, 71B,C,75F,76F	A	64
C3AZ 6262169-A	L.H.	1	54B, 65B, 71B, 75B, 76A	A	63
		1	54B,F,57C,63C,D,65B,F, 71B,C,75F,76F	A	64
C1SB 6362168-A	R.H. - (1) for driver seat - (1) for passenger seat (b)	2	63C,65C,75C,76B	A	62/63
		2	62C	B	62
	R.H. - bucket seat - (1) for drivers seat -	2	62A(S-22), 62C, 71D, 76B	C	61/63
	(1) for passenger seat	2	76B	C	64
C1SB 6362169-A	L.H. - (1) for driver seat - (1) for passenger seat (b)	2	63C,65C,75C,76B	A	62/63
		2	62C	B	62
	L.H. - bucket seat - (1) for drivers seat -	2	62A(S-22),62C,71D,76B	C	61/63
	(1) for passenger seat	2	76B	C	64
C1VB 5762168-A	R.H. - full seat	1	All	D	61/64
C1VB 5762169-A	L.H. - full seat	1	All	D	61/64
20347-S8	Bolt-hex. hd.-5/16"-24 x 3/4"	4	a		
34845-S2	Washer-flat-special-steel	2	a		
52727-S8	Screw-pan hd. cr. rec. tap. -No. 10-12 x 1/2"	2	b		
52727-S13	Screw-pan hd. cr. rec. tap. -No. 10-12 x 1/2"	2	a		
62180-1	REFER TO GROUP 62186-7				
62182	RETAINER (FRONT SEAT BACK SIDE SHIELD) LOWER				
BAK 5762182-A	Steel - length 1-7/8" with (1) 1/8" diameter hole and (2) 11/64" diameter holes (a)	2	All	D	60
52726-S8	Screw-pan hd. cr. rec. tap. -No. 8-15 x 1/2"	4	a		
62186-7	SHIELD (FRONT SEAT CUSHION) SIDE				
PB9M 5762186-B	R.H. - manual or 4-way - chrome finish (a)	1	57F,63F,76D	A	60
PB9M 5762187-B	L.H. - manual or 4-way - chrome finish (a)	1	57F,63F,76D	A	60
B7A 7062186-AP	R.H. - manual or 4-way - in prime (a)	1	All except 57F,63F,76D	A	60
B7A 7062187-AP	L.H. - manual or 4-way - in prime (a)	1	All except 57F,63F,76D	A	60
	Note - when used with 4-way seat add B9MB-6462221-A plate to adjuster slot				
C3AZ 6262186-A	R.H. - manual or electric full seat - ALUMINUM	1	54B,63B,65B,71B,75B,76A	A	63
		1	54B,F,57C,D,63C,D,65B,F 71B,D,75F,76F	A	64
C3AZ 6262187-A	L.H. - manual or electric - full seat - ALUMINUM - for electric cut opening for switch	1	54B,63B,65B,71B,75B,76A	A	63
		1	54B,F,57C,D,63C,D,65B,F 71B,D,75F,76F	A	64
C4SZ 6362186-A	R.H. - in prime - outer - bucket seat - manual or electric - passenger	1	57C,63C,65C,76C	A	64
C4SZ 6362187-A	L.H. - in prime - outer - bucket seat - manual or electric - driver	1	57C,63C,65C,76C	A	64
C4SZ 6362186-B	R.H. - in prime - inner - bucket seat - manual or electric - passenger	1	57C,63C,65C,76C	A	64
C4SZ 6362187-B	L.H. - in prime - inner - bucket seat - manual or electric - driver	1	57C,63C,65C,76C	A	64
COLB 5762186-A	R.H. - manual - 4-way, 6-way - chrome finish	1	53,54,57,75	D	60
COLB 5762187-A	L.H. - manual - chrome finish	1	53A,57A	D	60

CONTINUED ON NEXT PAGE

GROUP AND PART NUMBER	DESCRIPTION, SIZE, ETC.	NO. REQ'D	MODEL OR ENGINE CUBIC INCH DISPLACEMENT	VEHICLE CODE	YEAR 19____
62186-7	SHIELD (FRONT SEAT CUSHION) SIDE (CONTINUED)				
COLB 5762187-B	L.H. - 4-way - chrome finish	1	53,57	D	60
COLB 7562187-A	L.H. - 6-way - chrome finish	1	53,54,57,75	D	60
COLB 6362186-A	R.H. - manual, 4-way, 6-way - chrome finish	1	63,65,68	D	60
COLB 6362187-A	L.H. - manual - chrome finish	1	63	D	60
COLB 6362187-B	L.H. - 4-way - chrome finish	1	63	D	60
COLB 6562187-A	L.H. - 6-way - chrome finish	1	63,65,68	D	60
C1VB 5762180-J	R.H. - manual and 6-way seat - shipped knocked down	1	All	D	61/62
C1VB 5762181-J	L.H. - manual seat - shipped knocked down	1	All	D	61/62
C1VB 5762181-K	L.H. - 6-way seat - shipped knocked down	1	All	D	61/62
C3VY 5762180-A	R.H. - 6-way seat	1	All	D	63
C3VY 5762181-B	L.H. - 6-way seat	1	All	D	63
C4VY 5362180-A	R.H. - 6-way bucket seat (b)	1	All	D	64
C4VY 5362181-A	L.H. - 6-way bucket seat (b)	1	All	D	64
C3VY 5762180-B	R.H. - 6-way - full seat (b)	1	All	D	64
C3VY 5762181-C	L.H. - 6-way full seat (b)	1	All	D	64
51766-S13	Screw-pan hd. cr. rec. tap. -No. 10-32 x 1/2"	4	a		
52023-S8	Screw-flat hd. cr. rec. tap. -No. 10-12 x 3/4"	6	b		
52727-S13	Screw-pan hd. cr. rec. tap. -No. 10-12 x 1/2"	4	a		
62186-7	SHIELD (FRONT SEAT CUSHION SIDE) VINYL				
	Refer to MD-4230 Soft Trim Section				
62190	SUPPORT (FRONT SEAT CUSHION SIDE SHIELD) CENTER				
C3AZ 6262190-A		2	54B, 65B, 71B, 75B, 76A	A	63
		2	54B,F,57C,D,63C,D,65B,F, 71B,D,75F	A	64
62194-5	SUPPORT (FRONT SEAT CUSHION SIDE SHIELD) REAR				
COAB 6462194-C	(a)	2	All	A	61/62
C2AZ 7662194-A	R.H. - (1) for driver seat - (1) for passenger seat	2	63C,65C,75C,76B	A C	62/63
	R.H. - bucket seat - (1) for drivers seat and (1) for passenger seat	2	76B,C	A C	64
C2AZ 7662195-A	L.H. - (1) for driver seat - (1) for passenger seat	2	63C,65C,75C,76B	A C	62/63
	L.H. - bucket seat - (1) for drivers seat and (1) for passenger seat	2	76B,C	A C	64
C2DZ 6462194-A	R.H. - (1) for driver seat - (1) for passenger seat (b)	2	62C,65B	B	62/63
		2	62A(S-22),62C,63C,71D	C	61/63
C2DZ 6462195-A	L.H. - (1) for driver seat - (1) for passenger seat (b)	2	62C,65B	B	62/63
		2	62A(S-22),62C,63C,71D	C	61/63
52727-S13	Screw-pan hd. cr. rec. tap. -No. 10-12 x 1/2"	4	a		
52735-S8	Screw-pan hd. cr. rec. tap. -No. 10-12 x 5/8"	3	b		
62198-9	EXTENSION (FRONT SEAT CUSHION SIDE SHIELD) VINYL				
	Refer to MD-4230 Soft Trim Section				
62221	PLATE (FRONT SEAT CUSHION SIDE SHIELD) NAME				
B9MB 6462221-A	Chrome finish - lettering "POWER SEAT" (a)	1	All	A	60
356208-S2	Washer-flat-special-steel	1	a		
370792-S7	Nut-self-threading-3/16"	1	a		
62256	BRACKET (FRONT SEAT CUSHION SIDE SHIELD) FRONT				
BAK 5762256-A	4-Way and 6-way seat (a)	2	All	D	60
52847-S8	Screw-pan hd. cr. rec. tap. -No. 10-16 x 1/2"	4	a		

GROUP AND PART NUMBER	DESCRIPTION, SIZE, ETC.	NO. REQ'D	MODEL OR ENGINE CUBIC INCH DISPLACEMENT	VEHICLE CODE	YEAR 19___
62262	BRACKET (FRONT SEAT CUSHION SIDE SHIELD) REAR				
BAK 5762262-A	(a)	2	All	D	60
44713-S8	Washer-flat-No. 10	2	a		
52795-S8	Screw-pan hd. cr. rec. tap. -No. 10-16 x 5/8"	4	a		
62286-7	SUPPORT (REAR SEAT BACK STOP)				
B9MB 5662286-A	R.H. - 6-passenger	1	77	A	60
B9MB 5662287-A	L.H. - 6-passenger	1	77	A	60
B9MB 7762287-A	L.H. - 8-passenger	1	77	A	60
CODB 5962286-A		1	59,71	C	60/64
62292	COVER (REAR SEAT BACK STOP SUPPORT)				
CODB 5962292-AP	In prime	1	59,71	C	60/64
62296-7	SUPPORT (FRONT SEAT BACK SIDE SHIELD) LOWER				
C3AZ 6262296-A	R. H.	1	54B, 65B, 71B, 75B, 76A	A	63
		1	54B,F,57C,D,63C,D, 65B,F,71B	A	64
C3AZ 6262297-A	L. H.	1	54B, 65B, 71B, 75B, 76A	A	63
		1	54B,F,57C,D,63C,D, 65B, F,71B	A	64
62332	SUPPORT (REAR SEAT BACK)				
PB9M 7662332-A		1	76	A	60
C2AZ 7662332-A		1	76	A	61/64
C3MY 6262332-A		1	All except 57, 71, 76	A	63/64
C3DZ 7662332-B		1	76	C	63/64
C3GY 7662332-A	Seat back to floor	1	76	C	63/64
62418-9	HANDLE (REAR SEAT BACK LATCH)				
C2AZ 7162418-B	R. H.	1	71	A B	62/63
		1	71A,B	A	64
C2AZ 7162419-B	L. H.	1	71	A B	62/63
		1	71A,B	A	64
62426-7	STOP ASSEMBLY (REAR SEAT BACK)				
B9MB 7762426-AP	R.H. - 6 and 8-passenger - in prime (a)	1	77	A	60
PB9M 5662427-AP	L.H. - 6-passenger - in prime (a)	1	77	A	60
B9MB 7762427-AP	L.H. - 8-passenger - in prime (a)	1	77	A	60
COAB 5962426-CP	R.H. - 6-passenger (b)	1	71	A	61
COAB 7162426-EP	R.H. - 8-passenger (b)	1	71	A	61/62
COAB 7162427-EP	L.H. - 8-passenger (b)	1	71	A	61/62
C3AZ 7162426-A	R.H. - 8-passenger - split seat (d)	1	71	A	63
		1	71C,D	A	64
C3AZ 7162427-A	L.H. - 8-passenger - split seat (d)	1	71	A	63
		1	71C,D	A	64
CODB 5962426-BP	Use on vehicles built prior to 7-1-60 (c)	1	59,71	C	60
C1DZ 5962426-B	Use on vehicles built after 6-30-60 (c)	1	59,71	C	60/64
BD 16754-A	Bumper	1	c		
33925-S7	Nut-hex. jam-3/8"-24	1	c		
34179-S13	Nut-crown-5/16"	1	b		
34781-S7	Lockwasher-spring-5/16"	1	b		
44722-S8	Washer-flat-5/16"	6	a,c		
353483-S2	Screw-hex. washer hd. -5/16"-24 x 5/8"	3	c		
353520-S8B	Screw-hex. washer hd.	6	a		
353597-S8	Washer-flat-steel-5/16"	1	b		
370374-S	Bumper-rubber	1	b		
377845-S	Bumper-rubber	1	d		

GROUP AND PART NUMBER	DESCRIPTION, SIZE, ETC.	NO. REQ'D	MODEL OR ENGINE CUBIC INCH DISPLACEMENT	VEHICLE CODE	YEAR 19____
62430	BUMPER (REAR SEAT BACK)				
OA 7961333	Rubber - 8 passenger - located at seat support - group 63160	2	77	A	60
		2	71	A	61/62
BAC 7962430-A	Rubber - 8 passenger - located at under side of panel - group 47007 at front and rear	AR	71	A	61/64
C2AZ 7162430-A	Rubber and steel - 6 passenger - located at front of rear floor pan - one at each side (a)	2	71A, B	A	62
C3AZ 7162430-B	Rubber and steel - 6 passenger - located at seat back panel - group 60508 (a)	2	71A, B	A	62
	Located at riser rear floor front	2	71	A B	63
		2	71A, B	A	64
C3OZ 7162430-A	Use on vehicles built prior to 2-22-63	2	71	B	63
C3OZ 7162430-B	Use on vehicles built after 2-21-63	2	71	B	63
33925-S8	Nut-hex. jam-3/8"-24	2	a		
62440-1	STRIKER (REAR SEAT BACK LATCH)				
C2AZ 7162440-A	Chrome finish (a)	2	71	A	62
		2	71A, B	A	63/64
C3OZ 7162440-A	R. H.	1	71	B	63
C3OZ 7162441-A	L. H.	1	71	B	63
34179-S13	Nut-crown-5/16"-24	4	a		
34806-S7	Lockwasher-5/16"	4	a		
44722-S8	Washer-flat-5/16"	4	a		
62454-5	SUPPORT (REAR SEAT BACK SIDE MOULDING)				
C4AZ 5762454-A	R. H. - steel	1	57C	A	64
C4AZ 5762455-A	L. H. - steel	1	57C	A	64
C4AZ 6362454-A	R. H. - steel	1	63C	A	64
C4AZ 6362455-A	L. H. - steel	1	63C	A	64
62482-3	STRAINER (REAR SEAT BACK SUPPORT TO FLOOR)				
C1VB 7462482-A	R. H. - use on vehicles built prior to 9-18-61	1	74	D	61/62
C1VB 7462483-A	L. H. - use on vehicles built prior to 9-18-61	1	74	D	61/62
C2VY 7462482-A	R. H. - use on vehicles built after 9-17-61	1	74	D	62/64
C2VY 7462483-A	L. H. - use on vehicles built after 9-17-61	1	74	D	62/64
62516	CLIP (FRONT SEAT ADJUSTER REGULATOR NUT SOLENOID COVER)				
BAK 5762516-A	4-Way and 6-way seat	2	All	D	60
62578-9	HANDLE (FRONT SEAT BACK ASSIST)				
BAK 5762578-A	R. H. - chrome finish (a)	1	53, 54, 57, 75	D	60
BAK 5762579-A	L. H. - chrome finish (a)	1	53, 54, 57, 75	D	60
52507-S13	Screw-oval hd. cr. rec. tap. -No. 10-16 x 1"	6	a		
62588	SLIDE (FRONT SEAT TRACK)				
BAK 5762588-A	4-Way and 6-way seat - plastic - 9/32" x 1-1/2" with (1) 1/4" hole	8	All	D	60
62866	RETAINER & RECEPTACLE (FRONT SEAT BACK ASH) LESS LIGHTER				
PB9M 5762866-A		1	57F	A	60

GROUP AND PART NUMBER	DESCRIPTION, SIZE, ETC.	NO. REQ'D	MODEL OR ENGINE CUBIC INCH DISPLACEMENT	VEHICLE CODE	YEAR 19—
62868	RETAINER (FRONT SEAT BACK ASH RECEPTACLE)				
COAB 5862868-A	Use with C1MB-5462876-A and COAB-5862876-BP retainers (a)	1	57A, B, 58, 77	A	60
		1	54, 57, 58, 71, 75	A	61/64
		1	54, 71	B	62/63
		1	54, 71	C	60/62
		1	54, 71A, B, C	C	63
52382-S13	Screw-oval hd. cr. rec. tap. -No. 8-15 x 1-1/4"	1	54B, D, 71B, C	C	64
		2	a		
62876	RECEPTACLE (FRONT SEAT BACK ASH)				
PB9M 5762876-A	Chrome finish	1	57F	A	60
C1MB 5462876-A	Chrome finish	1	54B, 71B, 75B	A	61/63
COAB 5862876-BP	In prime	1	54B, F, 57C, D, 71B, D, 75F	A	64
		1	57A, B, 58, 77	A	60
		1	54A, 75A	A	63
		1	54A, 58A, 71A, 75A	A	61/62
		1	54, 71D, 75	A	64
		1	54, 71	B	62/63
		1	54, 71	C	60/62
		1	54, 71A, B, C	C	63
62893	BUMPER (FRONT SEAT BACK ASH RECEPTACLE RETAINER COVER)				
PB9M 5762893-A	Vinyl 1/4" diameter	2	57F	A	60
62895	BUTTON (FRONT SEAT BACK & DASH PANEL ASH RECEPTACLE)				
COAB 5862895-A	Nylon - solid type - alternate with BN-7362895-A Also use for ash tray at instrument panel	AR	All	A	60/62
		1	All	A	62
		2	54, 57, 71, 75	A	63/64
		1	54A	B	62
		1	54A, 71A	C	62
		1	54B, D, 71B, C, D	C	63/64
63036	PIN (RIGHT REAR SEAT BACK PIVOT)				
BA 7963036-A	Flat head - 7/16" diameter x 1" with 3/32" diameter hole - use on 8-passenger	1	77	A	60
		1	71	A	61/62
		1	71D	A	63
		1	71B, D	A	64
631A03	BRACKET (REAR SEAT BACK STOP TO WHEELHOUSE)				
COAB 59631A03-B	L. H. - 6-passenger	1	71	A	61
CODB 59631A03-A		1	59, 71	C	60/64
631A05	COVER (REAR SEAT BACK STOP TO WHEELHOUSE)				
COAB59631A05-BP	L. H. - 6-passenger (a)	1	71	A	61/62
CODB 59631A05-AP	In prime (a)	1	59, 71	C	60/62
C1KB 71631A05-AP		1	59, 71	C	63/64
BD 16754-A	Bumper-rubber	1	a		
51754-S8	Screw-pan hd. cr. rec. tap. -No. 6-32 x 3/8"	1	a		
355964-S8	Nut-special hex. -3/8"-24	1	a		
63160	SUPPORT (RIGHT REAR SEAT)				
B9MB 7763160-AP	8-passenger	1	77	A	60
C1AB 7163160-AP	8-passenger	1	71	A	61/62
		1	71C, D	A	63/64

GROUP AND PART NUMBER	DESCRIPTION, SIZE, ETC.	NO. REQ'D	MODEL OR ENGINE CUBIC INCH DISPLACEMENT	VEHICLE CODE	YEAR 19__
63174	COVER (FRONT SEAT BACK OUTER HINGE PIN)				
CODB 6463174-A	Steel	2	All	B	62
		2	All	C	60/61
63186	KIT (SEAT CUSHION SPRING HELPER)				
C4GY 6263186-A	Bench seats - used to repair seat cushion sag	1	All	C	64
	Consists of the following -				
(5) C2OB-6263186-A	spring (12) 372465-S8 clips				
63409	CLIP (REAR SEAT RISER CARPET - RETAINING)				
BAK 5763409-A	Steel - (4) req'd. - for models 53,54,57,75 (8) req'd. - for models 63,65	AR	All except 68	D	60
63476	PANEL (REAR SEAT RISER)				
PB9M 6363476-A		1	63	A	60
BAK 5763476-A	Front - steel	1	All	D	60
63478	PANEL (REAR SEAT RISER) UPPER				
BAK 5763478-A	Steel	1	53, 57, 63	D	60
63482	GUSSET (REAR SEAT RISER FRONT PANEL TO CENTER FLOOR EXTENSION)				
BAK 5763482-A		1	53, 57, 63	D	60
63500	BUTTON & STRAP (SEAT TRIM)				
C4MY 6363500-B	Chrome - 1/2" cap x 1-1/4" long base	AR	57C, 63C, 65C, 76C	A	64
C4MY 6363500-C	Nail type - 1/2" chrome cap x .29" long base (Δ)	AR	57C, 63C, 65C, 76F	A	64
C4MY 6363500-D	Nail type - 11/16" chrome cap x .29" long base (Δ)	AR	54B, 57C, D, 63C, D, 65B, C, 75B, 76C	A	64
	Δ Package also includes - (1) C4MB-5462916-C retainer with each button				
63626	RETAINER (AUXILIARY SEAT CUSHION STOWAGE FRONT)				
B9BM 7763626-A	Steel 3" x 3-1/16" with 4 holes 7/32" diameter (a)	2	77	A	60
34939-S7	Washer-external tooth lock-No. 10	4	a		
52721-S8	Screw-pan hd. cr. rec. tap. -No. 10-12 x 3/8"	4	a		
63636	ROD (AUXILIARY SEAT CUSHION)				
B9BM 7763636-A	Steel - 30-27/32" (a)	2	77	A	60
52727-S8	Screw-pan hd. cr. rec. tap. -No. 10-12 x 1/2"	8	a		
64824	ORNAMENT (SEAT BACK)				
C1DB 6464824-A	(2) for front and (2) for rear seats (a)	4	62A(S-22), 62C, 63C, 71D, 76B	C	61/63
		AR	54B, 65B, C, 71B, C, 75B, 76A, B	A	62
	Front or rear	AR	All	A	63
		AR	65B	B	63
	Front or rear seat	AR	54B, 62B, C, 63E, 71B, C	C	64
C4GY 5464824-A	Front or rear seat	AR	54C, D, 63C, D, 76B	C	64
45032-S2	Nut-spring-3/32"	AR	a		
371001-S2	Nut-spring-3/32"	6	a		
65204-5	REFER TO GROUP 60788				
65206	MOULDING (FRONT SEAT BACK)				
C4SZ 6365206-A	Bucket seats - top and sides - one piece design (a)	2	57C, 63C, 65C, 76C	A	64
358372-S	Clip-trim-(9) each seat	AR	a		

GROUP AND PART NUMBER	DESCRIPTION, SIZE, ETC.	NO. REQ'D	MODEL OR ENGINE CUBIC INCH DISPLACEMENT	VEHICLE CODE	YEAR 19__
666A24	PLATE (REAR SEAT BACK)				
C3MB 65666A24-A		1	65C	A	63
66633	MEDALLION (REAR SEAT BACK ORNAMENT)				
C2MY 6566633-A		1	63C, 65C	A	62/63
66649	GRILLE (REAR SEAT BACK RADIO SPEAKER)				
C2MY 7666649-A	Includes ornament	1	76B	A	62/63
C4MY 6366649-A	Includes ornament	1	63C, 65A	A	64
C4MY 7666649-A	Includes ornament	1	76C	A	64
67210	LINK & VERTICAL STRAINER (REAR SEAT BACK CENTER ARM REST)				
BAK 5767210-A		1	57F, 63F	A	60
		1	All except 68A	D	60
C3VY 5767210-A		1	All	D	63/64
		1	54F, 75F	A	64
C1VB 5767210-A		1	All	D	61/62
67346	REGISTER (FRONT DOOR ARM REST VENT AIR OUTLET)				
BAK 5767346-B	Chrome finish (1) req'd. - for R.H. and (1) for L.H.	2	All	D	60

MEMO

GROUP AND PART NUMBER	DESCRIPTION, SIZE, ETC.	NO. REQ'D	MODEL OR ENGINE CUBIC INCH DISPLACEMENT	VEHICLE CODE	YEAR 19__
666A24	PLATE (REAR SEAT BACK)				
C3MB 65666A24-A		1	65C	A	63
66633	MEDALLION (REAR SEAT BACK ORNAMENT)				
C2MY 6566633-A		1	63C, 65C	A	62/63
66649	GRILLE (REAR SEAT BACK RADIO SPEAKER)				
C2MY 7666649-A	Includes ornament	1	76B	A	62/63
C4MY 6366649-A	Includes ornament	1	63C, 65A	A	64
C4MY 7666649-A	Includes ornament	1	76C	A	64
67210	LINK & VERTICAL STRAINER (REAR SEAT BACK CENTER ARM REST)				
BAK 5767210-A		1	57F, 63F	A	60
		1	All except 68A	D	60
C3VY 5767210-A		1	All	D	63/64
		1	54F, 75F	A	64
C1VB 5767210-A		1	All	D	61/62
67346	REGISTER (FRONT DOOR ARM REST VENT AIR OUTLET)				
BAK 5767346-B	Chrome finish (1) req'd. - for R.H. and (1) for L.H.	2	All	D	60

MEMO

GROUP AND PART NUMBER	DESCRIPTION, SIZE, ETC.	NO. REQ'D	MODEL OR ENGINE CUBIC INCH DISPLACEMENT	VEHICLE CODE	YEAR 19__
63174	COVER (FRONT SEAT BACK OUTER HINGE PIN)				
CODB 6463174-A	Steel	2	All	B	62
		2	All	C	60/61
63186	KIT (SEAT CUSHION SPRING HELPER)				
C4GY 6263186-A	Bench seats - used to repair seat cushion sag	1	All	C	64
	Consists of the following -				
	(5) C2OB-6263186-A spring (12) 372465-S8 clips				
63409	CLIP (REAR SEAT RISER CARPET - RETAINING)				
BAK 5763409-A	Steel -	AR	All except 68	D	60
	(4) req'd. - for models 53,54,57,75				
	(8) req'd. - for models 63,65				
63476	PANEL (REAR SEAT RISER)				
PB9M 6363476-A					
BAK 5763476-A	Front - steel	1	63	A	60
		1	All	D	60
63478	PANEL (REAR SEAT RISER) UPPER				
BAK 5763478-A	Steel	1	53, 57, 63	D	60
63482	GUSSET (REAR SEAT RISER FRONT PANEL TO CENTER FLOOR EXTENSION)				
BAK 5763482-A		1	53, 57, 63	D	60
63500	BUTTON & STRAP (SEAT TRIM)				
C4MY 6363500-B	Chrome - 1/2" cap x 1-1/4" long base	AR	57C, 63C, 65C, 76C	A	64
C4MY 6363500-C	Nail type - 1/2" chrome cap x .29" long base (Δ)	AR	57C, 63C, 65C, 76F	A	64
C4MY 6363500-D	Nail type - 11/16" chrome cap x .29" long base (Δ)	AR	54B, 57C, D, 63C, D, 65B, C, 75B, 76C	A	64
	Δ Package also includes -				
	(1) C4MB-5462916-C retainer with each button				
63626	RETAINER (AUXILIARY SEAT CUSHION STOWAGE FRONT)				
B9BM 7763626-A	Steel 3" x 3-1/16" with 4 holes 7/32" diameter (a)	2	77	A	60
34939-S7	Washer-external tooth lock-No. 10	4	a		
52721-S8	Screw-pan hd. cr. rec. tap. -No. 10-12 x 3/8"	4	a		
63636	ROD (AUXILIARY SEAT CUSHION)				
B9BM 7763636-A	Steel - 30-27/32" (a)	2	77	A	60
52727-S8	Screw-pan hd. cr. rec. tap. -No. 10-12 x 1/2"	8	a		
64824	ORNAMENT (SEAT BACK)				
C1DB 6464824-A	(2) for front and (2) for rear seats (a)	4	62A(S-22), 62C, 63C, 71D, 76B	C	61/63
	Front or rear	AR	54B, 65B, C, 71B, C, 75B, 76A, B	A	62
		AR	All	A	63
	Front or rear seat	AR	65B	B	63
C4GY 5464824-A	Front or rear seat	AR	54B, 62B, C, 63E, 71B, C	C	64
45032-S2	Nut-spring-3/32"	AR	54C, D, 63C, D, 76B	C	64
371001-S2	Nut-spring-3/32"	AR	a		
		6	a		
65204-5	REFER TO GROUP 60788				
65206	MOULDING (FRONT SEAT BACK)				
C4SZ 6365206-A	Bucket seats - top and sides - one piece design (a)	2	57C, 63C, 65C, 76C	A	64
358372-S	Clip-trim-(9) each seat	AR	a		

GROUP AND PART NUMBER	DESCRIPTION, SIZE, ETC.	NO. REQ'D	MODEL OR ENGINE CUBIC INCH DISPLACEMENT	VEHICLE CODE	YEAR 19.____
62430	BUMPER (REAR SEAT BACK)				
OA 7961333	Rubber - 8 passenger - located at seat support - group 63160	2	77	A	60
		2	71	A	61/62
BAC 7962430-A	Rubber - 8 passenger - located at under side of panel - group 47007 at front and rear	AR	71	A	61/64
C2AZ 7162430-A	Rubber and steel - 6 passenger - located at front of rear floor pan - one at each side (a)	2	71A, B	A	62
C3AZ 7162430-B	Rubber and steel - 6 passenger - located at seat back panel - group 60508 (a)	2	71A, B	A	62
	Located at riser rear floor front	2	71	A B	63
		2	71A, B	A	64
C3OZ 7162430-A	Use on vehicles built prior to 2-22-63	2	71	B	63
C3OZ 7162430-B	Use on vehicles built after 2-21-63	2	71	B	63
33925-S8	Nut-hex. jam-3/8"-24	2	a		
62440-1	STRIKER (REAR SEAT BACK LATCH)				
C2AZ 7162440-A	Chrome finish (a)	2	71	A	62
		2	71A, B	A	63/64
C3OZ 7162440-A	R. H.	1	71	B	63
C3OZ 7162441-A	L. H.	1	71	B	63
34179-S13	Nut-crown-5/16"-24	4	a		
34806-S7	Lockwasher-5/16"	4	a		
44722-S8	Washer-flat-5/16"	4	a		
62454-5	SUPPORT (REAR SEAT BACK SIDE MOULDING)				
C4AZ 5762454-A	R. H. - steel	1	57C	A	64
C4AZ 5762455-A	L. H. - steel	1	57C	A	64
C4AZ 6362454-A	R. H. - steel	1	63C	A	64
C4AZ 6362455-A	L. H. - steel	1	63C	A	64
62482-3	STRAINER (REAR SEAT BACK SUPPORT TO FLOOR)				
C1VB 7462482-A	R. H. - use on vehicles built prior to 9-18-61	1	74	D	61/62
C1VB 7462483-A	L. H. - use on vehicles built prior to 9-18-61	1	74	D	61/62
C2VY 7462482-A	R. H. - use on vehicles built after 9-17-61	1	74	D	62/64
C2VY 7462483-A	L. H. - use on vehicles built after 9-17-61	1	74	D	62/64
62516	CLIP (FRONT SEAT ADJUSTER REGULATOR NUT SOLENOID COVER)				
BAK 5762516-A	4-Way and 6-way seat	2	All	D	60
62578-9	HANDLE (FRONT SEAT BACK ASSIST)				
BAK 5762578-A	R. H. - chrome finish (a)	1	53, 54, 57, 75	D	60
BAK 5762579-A	L. H. - chrome finish (a)	1	53, 54, 57, 75	D	60
52507-S13	Screw-oval hd. cr. rec. tap. -No. 10-16 x 1"	6	a		
62588	SLIDE (FRONT SEAT TRACK)				
BAK 5762588-A	4-Way and 6-way seat - plastic - 9/32" x 1-1/2" with (1) 1/4" hole	8	All	D	60
62866	RETAINER & RECEPTACLE (FRONT SEAT BACK ASH) LESS LIGHTER				
PB9M 5762866-A		1	57F	A	60

GROUP AND PART NUMBER	DESCRIPTION, SIZE, ETC.	NO. REQ'D	MODEL OR ENGINE CUBIC INCH DISPLACEMENT	VEHICLE CODE	YEAR 19____
62868	RETAINER (FRONT SEAT BACK ASH RECEPTACLE)				
COAB 5862868-A	Use with C1MB-5462876-A and COAB-5862876-BP retainers (a)	1	57A, B, 58, 77	A	60
		1	54, 57, 58, 71, 75	A	61/64
		1	54, 71	B	62/63
		1	54, 71	C	60/62
		1	54, 71A, B, C	C	63
		1	54B, D, 71B, C	C	64
52382-S13	Screw-oval hd. cr. rec. tap. -No. 8-15 x 1-1/4"	2	a		
62876	RECEPTACLE (FRONT SEAT BACK ASH)				
PB9M 5762876-A	Chrome finish	1	57F	A	60
C1MB 5462876-A	Chrome finish	1	54B, 71B, 75B	A	61/63
		1	54B, F, 57C, D, 71B, D, 75F	A	64
COAB 5862876-BP	In prime	1	57A, B, 58, 77	A	60
		1	54A, 75A	A	63
		1	54A, 58A, 71A, 75A	A	61/62
		1	54, 71D, 75	A	64
		1	54, 71	B	62/63
		1	54, 71	C	60/62
		1	54, 71A, B, C	C	63
62893	BUMPER (FRONT SEAT BACK ASH RECEPTACLE RETAINER COVER)				
PB9M 5762893-A	Vinyl 1/4" diameter	2	57F	A	60
62895	BUTTON (FRONT SEAT BACK & DASH PANEL ASH RECEPTACLE)				
COAB 5862895-A	Nylon - solid type - alternate with BN-7362895-A Also use for ash tray at instrument panel	AR	All	A	60/62
		1	All	A	62
		2	54, 57, 71, 75	A	63/64
		1	54A	B	62
		1	54A, 71A	C	62
		1	54B, D, 71B, C, D	C	63/64
63036	PIN (RIGHT REAR SEAT BACK PIVOT)				
BA 7963036-A	Flat head - 7/16" diameter x 1" with 3/32" diameter hole - use on 8-passenger	1	77	A	60
		1	71	A	61/62
		1	71D	A	63
		1	71B, D	A	64
631A03	BRACKET (REAR SEAT BACK STOP TO WHEELHOUSE)				
COAB 59631A03-B	L. H. - 6-passenger	1	71	A	61
CODB 59631A03-A		1	59, 71	C	60/64
631A05	COVER (REAR SEAT BACK STOP TO WHEELHOUSE)				
COAB59631A05-BP	L. H. - 6-passenger (a)	1	71	A	61/62
CODB 59631A05-AP	In prime (a)	1	59, 71	C	60/62
C1KB 71631A05-AP		1	59, 71	C	63/64
BD 16754-A	Bumper-rubber	1	a		
51754-S8	Screw-pan hd. cr. rec. tap. -No. 6-32 x 3/8"	1	a		
355964-S8	Nut-special hex. -3/8"-24	1	a		
63160	SUPPORT (RIGHT REAR SEAT)				
B9MB 7763160-AP	8-passenger	1	77	A	60
C1AB 7163160-AP	8-passenger	1	71	A	61/62
		1	71C, D	A	63/64

GROUP AND PART NUMBER	DESCRIPTION, SIZE, ETC.	NO. REQ'D	MODEL OR ENGINE CUBIC INCH DISPLACEMENT	VEHICLE CODE	YEAR 19____
63174	COVER (FRONT SEAT BACK OUTER HINGE PIN)				
CODB 6463174-A	Steel	2	All	B	62
		2	All	C	60/61
63186	KIT (SEAT CUSHION SPRING HELPER)				
C4GY 6263186-A	Bench seats - used to repair seat cushion sag	1	All	C	64
	Consists of the following -				
(5) C2OB-6263186-A	spring (12) 372465-S8 clips				
63409	CLIP (REAR SEAT RISER CARPET - RETAINING)				
BAK 5763409-A	Steel -	AR	All except 68	D	60
	(4) req'd. - for models 53,54,57,75				
	(8) req'd. - for models 63,65				
63476	PANEL (REAR SEAT RISER)				
PB9M 6363476-A		1	63	A	60
BAK 5763476-A	Front - steel	1	All	D	60
63478	PANEL (REAR SEAT RISER) UPPER				
BAK 5763478-A	Steel	1	53,57,63	D	60
63482	GUSSET (REAR SEAT RISER FRONT PANEL TO CENTER FLOOR EXTENSION)				
BAK 5763482-A		1	53,57,63	D	60
63500	BUTTON & STRAP (SEAT TRIM)				
C4MY 6363500-B	Chrome - 1/2" cap x 1-1/4" long base	AR	57C,63C,65C,76C	A	64
C4MY 6363500-C	Nail type - 1/2" chrome cap x .29" long base (Δ)	AR	57C,63C,65C,76F	A	64
C4MY 6363500-D	Nail type - 11/16" chrome cap x .29" long base (Δ)	AR	54B,57C,D,63C,D,65B,C, 75B,76C	A	64
	Δ Package also includes - (1) C4MB-5462916-C retainer with each button				
63626	RETAINER (AUXILIARY SEAT CUSHION STOWAGE FRONT)				
B9BM 7763626-A	Steel 3" x 3-1/16" with 4 holes 7/32" diameter (a)	2	77	A	60
34939-S7	Washer-external tooth lock-No. 10	4	a		
52721-S8	Screw-pan hd. cr. rec. tap. -No. 10-12 x 3/8"	4	a		
63636	ROD (AUXILIARY SEAT CUSHION)				
B9BM 7763636-A	Steel - 30-27/32" (a)	2	77	A	60
52727-S8	Screw-pan hd. cr. rec. tap. -No. 10-12 x 1/2"	8	a		
64824	ORNAMENT (SEAT BACK)				
C1DB 6464824-A	(2) for front and (2) for rear seats (a)	4	62A(S-22),62C,63C,71D,76B	C	61/63
		AR	54B,65B,C,71B,C,75B, 76A,B	A	62
	Front or rear	AR	All	A	63
		AR	65B	B	63
	Front or rear seat	AR	54B,62B,C,63E,71B,C	C	64
C4GY 5464824-A	Front or rear seat	AR	54C,D,63C,D,76B	C	64
45032-S2	Nut-spring-3/32"	AR	a		
371001-S2	Nut-spring-3/32"	6	a		
65204-5	REFER TO GROUP 60788				
65206	MOULDING (FRONT SEAT BACK)				
C4SZ 6365206-A	Bucket seats - top and sides - one piece design (a)	2	57C,63C,65C,76C	A	64
358372-S	Clip-trim-(9) each seat	AR	a		

GROUP AND PART NUMBER	DESCRIPTION, SIZE, ETC.	NO. REQ'D	MODEL OR ENGINE CUBIC INCH DISPLACEMENT	VEHICLE CODE	YEAR 19__
666A24	PLATE (REAR SEAT BACK)				
C3MB 65666A24-A		1	65C	A	63
66633	MEDALLION (REAR SEAT BACK ORNAMENT)				
C2MY 6566633-A		1	63C, 65C	A	62/63
66649	GRILLE (REAR SEAT BACK RADIO SPEAKER)				
C2MY 7666649-A	Includes ornament	1	76B	A	62/63
C4MY 6366649-A	Includes ornament	1	63C, 65A	A	64
C4MY 7666649-A	Includes ornament	1	76C	A	64
67210	LINK & VERTICAL STRAINER (REAR SEAT BACK CENTER ARM REST)				
BAK 5767210-A		1	57F, 63F	A	60
		1	All except 68A	D	60
C3VY 5767210-A		1	All	D	63/64
		1	54F, 75F	A	64
C1VB 5767210-A		1	All	D	61/62
67346	REGISTER (FRONT DOOR ARM REST VENT AIR OUTLET)				
BAK 5767346-B	Chrome finish (1) req'd. - for R.H. and (1) for L.H.	2	All	D	60

MEMO

MEMO

MEMO

MEMO

MEMO