MASTER PARTS AND ACCESSORIES CATALOG

FORM FPS 8095-A
(Text Only)
FORD PARTS and SERVICE DIVISION

INDEX

Abbreviations 22,23
Accessory Weight Chart . . . . . 13 thru 19
Attaching Parts (Nuts, Bolts, etc.) 11
Body Type Codes 11
Build Date . . . . . See Owner Card
D.S.O 12
Engine Assembly Plant Codes. 37
Exhaust Systems Certification 4
F.S.O 12
Formats 4
General Instructions. 2
How to Order Parts 12
How to Use This Catalog 2
Identification. 3
Liquid measure 11
L.P.O 12
Locator Codes. 11
Metric to Inches Conversion Chart 20,21
Model Year Application 11
Owner Card 27
Right Hand and Left Hand Parts. 3
Soft Trim 11
Symbols Used Regularly in Catalog. 2
Vehicle Catalog Codes 2

FORD PART NUMBERING SYSTEM

Body Parts Group Numbering System 4
Explanation of the Ford Part Numbering System. 4
Group Numbers and Related Catalog Sections 8,9,10
Motorcraft Sales Numbers 3
Part Name Index (Body Parts) 7
Part Name Index (Chassis Parts). 5,6
Part Name Index (Soft Trim Parts). 7

CERTIFICATION LABEL

Air Conditioning. 33
Assembly Plant Codes. 28
Body Type Codes 31,32
Build Date Stamp Location. 36
Color Codes (Exterior Paint) 33
Diagrams and Instructions 24,25,26
District Codes. 37
Engine Assembly Plant Codes. 37
Engine Codes 30
Front-Rear Spring Codes. 36
Month Codes. 36
Production Effective Dates 28
Radio Type Codes. 34
Rear Axle Ratio Codes 35
Series Codes. 29,30
Sun Roof/Moon Roof Codes. 34
Transmission Codes. 35
Trim Codes 33
Vehicle Identification Number. 24,25,26
Vinyl Bodyside Moulding Codes. 32
Vinyl Roof Type and Color Identification. 32
Year Codes 28

CAPRI WARRANTY PLATE

Diagrams and Instructions 38
Locations of Vehicle Number. 41
Warranty Plate Codes. 39,40

COPYRIGHT © 1986 — FORD MOTOR COMPANY — DEARBORN, MICHIGAN

1973/79 LINCOLN-MERCURY CARS

SYMBOLS USED REGULARLY IN CATALOG

The following symbols appearing on revised pages are to be interpreted as follows -

- * Indicates Motorcraft Sales Part Number
- # Indicates some form of identification such as part number, stamping, paint stripes and tags.
- ★ Symbol indicates part is not supplied for service for the following reasons -

  a. Part is superseded and replaced as indicated in the description column of text.
  b. Part can be improvised as indicated in the description column of text.
  c. Due to its function there would be little or no demand.

NOTE - ALWAYS REFER TO THE DESCRIPTION COLUMN OF THE TEXT FOR POSSIBLE SUBSTITUTION, OR FOR MATERIAL SPECIFICATIONS AND DIMENSIONS WHICH MAY BE HELPFUL IN OBTAINING THE NON-SERVICED PART LOCALLY.

VEHICLES and RELATED CATALOG CODES

Bobcat	L
Capri	J
Comet (1973/77)	P
Cougar	F
Lincoln-Continental	D
Mark IV (1973/76)	K
Mark V (1977/)	K
Mercury	A
Meteor (1973/76)	Y
Monarch	G
Montego (1973/76)	C
Versailles	V
Zephyr (1978/)	P

CATALOG CODES and RELATED VEHICLES

A	Mercury
C	Montego (1973/76)
D	Lincoln-Continental
F	Cougar
G	Monarch
J	Capri
K	Mark IV (1973/76, Mark V (1977/)
L	Bobcat
P	Comet (1973/77)
P	Zephyr (1978/)
V	Versailles
Y	Meteor (1973/76)

GENERAL INSTRUCTIONS

This Lincoln-Mercury Car Master Parts Catalog contains replacement parts and accessories information for Bobcat, Capri, Comet, Cougar, Lincoln, Mark IV, Mark V, Mercury, Meteor, Monarch, Montego, Versailles, and Zephyr for model year 1973/ for U.S. and Canadian built vehicles. Unique Canadian part numbers and application have been identified by symbol (♠) and footnoted. Unique U.S. part numbers and application have been identified by symbol (☆) and footnoted. Use this "text" catalog in conjunction with the "illustration" catalog, form FPS 8095-B.

Refer to the Index on page 1 for a listing of the items appearing in the General Information Section.

HOW TO USE THIS CATALOG

There are three ways of finding part numbers

1. By Part Name
2. By Illustration
3. By Identification

Should an inquiry be received for a fuel pump for a 1973 Lincoln-Continental -

BY PART NAME

A. Refer to the Chassis Parts Alphabetical Index.

B. Refer to the alphabetical nomenclature and find the part name "Pump assy. (fuel)". The group number listed is 9350.

C. Refer to group number 9350 and locate the year 1973 in the "YEAR" column. Find the vehicle catalog code "D" (for Lincoln-Continental) in the "MODEL/RESTRICTIONS" column.

D. The part number shown is D0VY 9350-A.

BY ILLUSTRATION

A. Refer to the Illustration Catalog (form FPS 8095-B) to the divider marked "FUEL".

B. Refer to the index immediately behind the divider and find the illustration titles for 1973 D (Lincoln-Continental).

C. Under the heading "D (LINCOLN)" find the "Fuel pump and filter" illustration for the 1973 Lincoln-Continental.

D. Refer to the illustration designated (on page 1 of Illustration Section 93) and find the group number for the fuel pump assy. to be 9350.

E. Refer to group number 9350 in this Text Catalog and locate 1973 in the "YEAR" column. Find the vehicle catalog code "D" (for Lincoln-Continental) in the "MODEL/RESTRICTIONS" column.

F. The part number shown is D0VY 9350-A.

BY IDENTIFICATION

Certain parts and most major assemblies are identified with a part number shown on an attached tag or plate or on the part itself. Reference to identification numbers is made throughout the catalog and cross reference charts are included in some sections to provide immediate knowledge of the service part number when the identification number is known. All identification information other than charts will be preceded by the symbol (#).

IMPORTANT - Identification tags and plates must be retained with the part or assembly with which they are originally supplied.

R.H. and L.H. PARTS

The driver's side is the left hand side of the vehicle and determines whether such parts as fenders, lamps, etc. are right or left hand.

Most Right Hand and Left Hand parts are listed in adjacent columns as shown in the following examples.

YEAR	MODEL/RESTRICTIONS	PART NUMBER		DESCRIPTION		QTY.
73	A(53,57,71),Y(53,71)	(RH) D3MY 5320124-A	(LH) D3MY 5320125-A			1
73/74	D(65)	(RH) D3VY 6520124-B	(LH) D3VY 6520125-B			1

MOTORCRAFT SALES PART NUMBERS

To facilitate the stocking and handling of those service parts which are assigned both service part numbers and Motorcraft Sales Part Numbers, the Motorcraft Sales Part Numbers are preceded by an asterisk (*) and are usually located at the beginning of the description column.

For example, refer to Section 96, group 9601. The service part number for a carburetor air cleaner element used on a 1973 Cougar with an 8 cyl. 351-2/B engine is D3ZZ 9601-A and the Motorcraft Sales Part Number is *FA-574. In the catalog this item will be shown as D3ZZ 9601-A *FA-574.

YEAR	MODEL/RESTRICTIONS	ENGINE CYL.	ENGINE C.I.D.	PART NUMBER	DESCRIPTION	QTY.
73	F	8	351-2/B	D3ZZ 9601-A	*FA-574	

COPYRIGHT © 1986 — FORD MOTOR COMPANY — DEARBORN, MICHIGAN

FORMATS

Various formats are used throughout this catalog to coincide with the normal procedure for selecting the affected part numbers. Most areas of the catalog use a format arranged in the order shown below.

Column -

1. Model year
2. Type of vehicle or equipment within a specific model year
3. Quantity required per vehicle
4. Description, size, etc.
5. Complete part number

Formats peculiar to a particular area of the catalog are generally self explanatory. When necessary, instructions are shown at the beginning of the affected group. For instance, the various charts and parts list method of cataloging in the Carburetor Section are explained on Page 1 of Section 95.

EXHAUST SYSTEMS CERTIFICATION

"For their intended application as specified in this catalog, the exhaust system parts and systems listed for sale have been certified to be in compliance with the requirements of the rules of the Florida Department of Environmental Regulation (Chapter 17-18, Part III of the Florida Administrative Code), and the regulations of the California Highway Patrol (Chapter 2, Part 1052) for exhaust system certification."

EXPLANATION OF THE FORD PART NUMBERING SYSTEM

For greater convenience this catalog is divided into specific sections, such as brakes, front suspension, engine, transmission, etc. For example, FRONT SUSPENSION appears in Section 30, STEERING WHEELS in Section 36, REAR AXLE in Section 40, etc. The applicable exploded illustrations are contained in separate sections which are related to the Text Section numbers. For example, STEERING WHEEL Illustrations appear in Illustration Section 36 of the "Illustrations" Catalog, form FPS 8095-B

The part number groups, part names and the section numbers under which each is listed are shown on pages 8 thru 10 of the General Information Section.

In numerical listings, expanded group numbers will be considered to follow the same sequence as the regular group numbers from which they are expanded and are arranged in Catalogs as follows.

3538	3634
3C538	3A634

Illustrations contain group numbers only, therefore, it is necessary to refer to the group within this "text" catalog for complete applicable part numbers.

BODY PARTS GROUP NUMBERING SYSTEM

FOLLOWING IS A DIAGRAM OF THE BODY PARTS GROUP NUMBERING SYSTEM

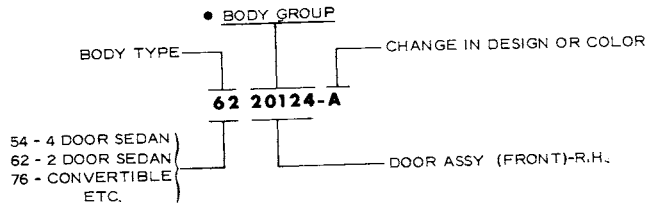

• These five digits comprise the Body Group Numbers used throughout each body parts section.

PART NAME INDEX

Below are various major groups appearing in the Chassis and Body Sections of this Catalog. An Alphabetical Index for all chassis parts follows the General Information Section. A complete index of body parts is included at the beginning of the Body Section and a complete index of soft trim parts is included at the beginning of the Soft Trim Sections.

CHASSIS PARTS INDEX

MAJOR GROUP	• TABBED DIVIDER TITLE	SECTION
Accelerator Linkage	Fuel-Carburetor-Accelerator	97
Accessories	Listed in their appropriate groups as identified in this index	
Adhesives	Paint-Wheel-Brake	Paint
Air Cleaner	Fuel-Carburetor-Accelerator	96
Air Conditioner	Speedometer-Bumper	190,197
Alternator	Generator-Alternator-Starter-Distributor	103
Automatic Transmission	Automatic Transmission	A70
Axle (Rear)	Front Suspension-Steering-Rear Axle	40
Battery	Generator-Alternator-Starter-Distributor	103
Belt (Drive)	Cooling-Grille	86
Brake System	Paint-Wheel-Brake	20
Bulbs	Lamps-Wiring	130
Bumpers	Speedometer-Bumper	176
Carburetor	Fuel-Carburetor-Accelerator	95
Chemicals	Paint-Wheel-Brake	Paint
Clutch	Manual Transmission-Clutch	71
Clutch (Fan)	Cooling-Grille	86
Cooling System	Cooling-Grille	80
Distributor	Generator-Alternator-Starter-Distributor	120
Driveshaft	Front Suspension-Steering-Rear Axle	46
Engine	Engine	60
Exhaust System	Frame-Muffler-Spring	50
Fan	Cooling-Grille	86
Fenders	Fender-Hood	160
Frame	Frame-Muffler-Spring	50
Front Springs	Frame-Muffler-Spring	53
Front Suspension	Front Suspension-Steering-Rear Axle	30
Fuel Pump	Fuel-Carburetor-Accelerator	93
Fuel Tank	Fuel-Carburetor-Accelerator	90
Gearshift Lever	Manual Transmission-Clutch	71
Grille	Cooling-Grille	80
Heater	Speedometer-Bumper	180
Hood	Fender-Hood	160
Horns	Lamps-Wiring	130
Hose (Radiator)	Cooling-Grille	80
Ignition Switch	Generator-Alternator-Starter-Distributor	110
Instrument Cluster	Generator-Alternator-Starter-Distributor	103
Jack	Speedometer-Bumper	170

COPYRIGHT © 1986 — FORD MOTOR COMPANY — DEARBORN, MICHIGAN

PART NAME INDEX

CHASSIS PARTS INDEX - cont'd.

MAJOR GROUP	• TABBED DIVIDER TITLE	SECTION
Lamps	Lamps-wiring	130
Lever (Gearshift)	Manual Transmission-Clutch	71
Linkage (Accelerator)	Fuel-Carburetor-Accelerator	97
Linkage (Steering)	Front Suspension-Steering-Rear Axle	30
Main Wiring	Lamps-Wiring	140
Manifold	Fuel-Carburetor-Accelerator	93
Mirrors	Speedometer-Bumper	176
Paint	Paint-Wheel-Brake	Paint
Pump (Fuel)	Fuel-Carburetor-Accelerator	93
Pump (Water)	Cooling-Grille	80
Pulley (Water Pump)	Cooling-Grille	80
Radiator	Cooling-Grille	80
Radio	Speedometer-Bumper	184
Radio Chassis	Speedometer-Bumper	180
Rear Axle	Front Suspension-Steering-Rear Axle	40
Regulator (Voltage)	Generator-Alternator-Starter-Distributor	103
Shock Absorber	Speedometer-Bumper	180
Speed Control	Fuel-Carburetor-Accelerator	97
Speedometer	Speedometer-Bumper	170,172
Speedometer Drive and Driven Gears	Speedometer-Bumper	170,172
Springs (Front)	Frame-Muffler-Spring	53
Springs (Rear)	Frame-Muffler-Spring	53
Stabilizer	Frame-Muffler-Spring	53
Steering Gear	Front Suspension-Steering-Rear Axle	30
Steering Linkage	Front Suspension-Steering-Rear Axle	30
Switch (Ignition)	Generator-Alternator-Starter-Distributor	110
Switch (Turn Indicator)	Lamps-Wiring	130
Tachometer	Speedometer-Bumper	173
Tank (Fuel)	Fuel-Carburetor-Accelerator	90
Thermactor	Fuel-Carburetor-Accelerator	93
Transmission (Automatic)	Automatic Transmission	A70
Transmission (Manual)	Manual Transmission-Clutch	70
Turn Indicator Switch	Lamps-Wiring	130
Voltage Regulator	Generator-Alternator-Starter-Distributor	103
Water Pump	Cooling-Grille	80
Wheels	Paint-Wheel-Brake	10
Windshield Washer	Speedometer-Bumper	173,176
Windshield Wiper	Speedometer-Bumper	173
Wiring (Main)	Lamps-Wiring	140

• Applicable to Loose Leaf Catalogs only

PART NAME INDEX

BODY and SOFT TRIM PARTS INDEX

MAJOR GROUP	● TABBED DIVIDER TITLE	SECTION
Air Foil	Body Front-Floor	000
Auxiliary Seat	Seat	600
Center Body Pillar	Side-Door-Pillar-Quarter	200
Console	Body Front-Floor	040
Cowl	Body Front-Floor	000
Door (Front)	Side-Door-Pillar-Quarter	200
Door (Rear)	Side-Door-Pillar-Quarter	200
Floor	Body Front-Floor	040
Folding Top	Soft Trim	Soft Trim
Folding Top Mechanism	Back-Luggage Compartment	500
Front Door	Side-Door-Pillar-Quarter	200
Front Seat Track	Seat	600
Glove Compartment	Body Front-Floor	040
Instrument Panel	Body Front-Floor	040
Liftgate	Back-Luggage Compartment	400
Luggage Compartment	Back-Luggage Compartment	400
Package Tray	Back-Luggage Compartment	400 and Soft Trim
Pillar (Center Body)	Side-Door-Pillar-Quarter	200
Quarter	Side-Door-Pillar-Quarter	270
Rear Door	Side-Door-Pillar-Quarter	200
Rear Seat	Seat	600
Roof	Back-Luggage Compartment	500
Seat (Auxiliary)	Seat	600
Seat (Front)	Seat	600
Seat (Rear)	Seat	600
Stripe Kits	Exterior Mouldings	Exterior Mouldings
Tailgate	Back-Luggage Compartment	400
Top (Folding)	Soft Trim	Soft Trim
Top Mechanism (Folding)	Back-Luggage Compartment	500
Track (Front Seat)	Seat	600
Windshield	Body Front-Floor	000

COPYRIGHT © 1986 — FORD MOTOR COMPANY — DEARBORN, MICHIGAN

GROUP NUMBERS and RELATED PART NAMES and CATALOG SECTIONS

Following is an index of the group number ranges, part name and their related catalog section numbers.

CHASSIS PARTS

GROUP NUMBER RANGE	PART NAME	CATALOG SECTION NUMBER
Miscellaneous	Paints and chemicals	Paint
1000 - 1999	Wheels, hubs and drums	10
2000 - 2099	Brakes	20
2001 and 2200	Brake shoe and lining details	20
2100 - 2199	Brakes	20
2200 - 2299	Brakes	20
2300 - 2399	Brake booster	23
2400 - 2999	Brake pedals and linkage	23
3000 - 3499	Front axle and front suspension	30
3500 - 3599	Steering gear	30
3600 - 3999	Steering wheel and column	36
3A635	P/S kit details	36.1
4000 - 4599	Rear axle	40
4600 - 4999	Driveshaft	46
5000 - 5199	Frame	50
5200 - 5299	Muffler	52.73,52.74 etc.
5300 - 5399	Front springs	53
5310	Spring charts	53.73,53.74 etc.
5400 - 5999	Stabilizers	53
6000 - 6899	Engine identification chart	60
	Engine parts list - 4 cyl. 122 (2000 cc), 140 (2300 cc)	60.1
	Engine parts list - 6 cyl. 159 (2600 cc), 171 (2800 cc)	60.1A
	Engine parts list - 6 cyl. 200, 250	60.2
	Engine parts list - 8 cyl. 302	60.3
	Engine parts list - 8 cyl. 351	60.4
	Engine parts list - 8 cyl. 400	60.5
	Engine parts list - 8 cyl. 429, 460	60.6
6900 - 7999	Manual transmission - exc. linkage	70
	Identification chart	70
	Application chart	70
	Manual transmission parts list - 4 speed Capri type	70.7
	Manual transmission parts list - 3 speed	70.3
	Manual transmission parts list - 4 speed German type	70.4
	Manual transmission parts list - 4 speed Ford type	70.5
7000 - 7299	Manual transmission linkage, etc.	71
7300 - 7499	Manual transmission linkage, etc.	71
7500 - 7999	Clutch	71
7000 - 7999	Automatic transmission - exc. linkage	A70
	Identification chart	A70
	Application chart	A70
	Automatic transmission parts list - Cruise-o-matic FMX type	A70.1
	Automatic transmission parts list - C4	A70.2
	Automatic transmission parts list - C6	A70.3
	Automatic transmission parts list - Borg Warner Capri	A70.4
	Automatic transmission parts list - C3	A70.5
	Automatic transmission parts list - Borg-Warner	A70.6
	Automatic transmission parts list - Jatco (PLA)	A70.7

GROUP NUMBERS and RELATED PART NAMES and CATALOG SECTIONS

CHASSIS PARTS - cont'd.

GROUP NUMBER RANGE	PART NAME	CATALOG SECTION NUMBER
7000 - 7199	Automatic transmission linkage, cooling, etc.	A71
7200 - 7399	Automatic transmission linkage, etc.	A71
7400 - 7999	Automatic transmission linkage, etc.	A71
8000 - 8499	Radiator, grille and cooling	80
8500 - 8599	Water pump	80
8600 - 8999	Fan	86
8620	Drive belt identification chart	86
8620	Drive belt application	86
9000 - 9299	Fuel tank and lines	90
9300 - 9399	Fuel pump and gauge	93
9400 - 9499	Manifolds, thermostats and emission parts	93
9510	Carburetor application chart	95
9510	Carburetor identification chart	95
9500 - 9599	Carburetor	95
9500 - 9599	Carburetor parts lists	95.23 thru .34
9600	Air cleaner application chart	96
9600	Air cleaner identification chart	96
9600 - 9699	Air cleaner parts and related parts	96
9700 - 9999	Choke, accelerator and speed control	97
10346	Alternator application chart	103
10300 - 10599	Alternator, pulleys and mounting parts	103
10300	Alternator identification chart	103
10300 - 10599	Alternator parts lists	103.1 thru 103.4
10600 - 10999	Battery and instrument cluster parts	103
11000 - 11999	Starter and ignition and headlamp switches	110
11001	Starter identification chart	110
11001 - 11999	Starter parts lists	110.1 thru 110.4
12000 - 12999	Coil, distributor and spark plugs	120
12127	Distributor identification chart	120
12000 - 12999	Distributor parts lists	120.1 thru 120.2
13466	Miniature bulbs	130
13000 - 13399	Headlamps, parking lamps and turn indicators	130
13400 - 13699	License, tail and stop lamps	130
13700 - 13999	Courtesy and instrument panel lamps and switches and horns	130
14000 - 14399	Wiring - main and window regulator	140
14400 - 14499	Wiring - tail lamp and battery	140
14500 - 14999	Wiring, fuses and circuit breakers	145
15000 - 15999	Clock, cigar lighters, marker lamps and backup lamps	145
16000 - 16099	Front fenders and aprons	160
16000 - 16551	Fender ornamentation	Exterior Moulding
16000 - 16999	Fender, hood ornamentation retainers	Exterior Moulding Section "R"
16100 - 16599	Splash shields and radiator supports	160
16600 - 16999	Hood, hinges and latches	160
17000 - 17299	Jacks, speedometer and speedometer cables	170
17271 and 17285	Speedometer gear identification chart	170
17271 and 17285	Speedometer gear application chart	172.73, 172.74 etc.
17300 - 17399	Speedometer, tachometer and license plate frame	173
17400 - 17599	Windshield wipers and washers	173
17600 - 17999	Windshield wipers and washers, bumpers and mirrors	173
18000 - 18399	Shock absorbers and heaters	180
18400 - 18999	Heaters, radios, antennas and speakers	180
19000 - 19999	Air conditioner parts	190
19C705-9	Refrigerant lines	197

COPYRIGHT © 1986 — FORD MOTOR COMPANY — DEARBORN, MICHIGAN

GROUP NUMBERS and RELATED PART NAMES and CATALOG SECTIONS

CHASSIS PARTS - cont'd.

GROUP NUMBER RANGE	PART NAME	CATALOG SECTION NUMBER
00000 - 01999	Body assemblies, air foils, air vents and dash panel	000
02000 - 02999	Cowl panel and front body pillar	000
03000 - 03999	Windshield	000
04200 - 04699	Instrument panel, console panel and visor arms	040
04700 - 09999	Ash receptacle and glove compartment	040
10000 - 19999	Floor, rocker panels and underbody parts	040
20000 - 20999	Front door, weatherstrips and interior mouldings	200
21000 - 21999	Front door windows, latches and mechanisms	200
22000 - 22999	Front door hinges, latches and handles	220
22050	Lock sets	220
20000 - 20999	Stripe kits and exterior mouldings	Exterior Moulding
20000 - 20999	Exterior moulding retainers	Exterior Moulding Section "R"
23000 - 23999	Front door window handles and regulators	230
24000 - 25999	Center body pillar, rear door, rear door windows, interior mouldings and weatherstrips	230
26000 - 26999	Rear door window mechanism and latches	230
24000 - 25999	Exterior mouldings	Exterior Moulding
24000 - 25999	Exterior moulding retainers	Exterior Moulding Section "R"
27000 - 27999	Rear door window regulators and quarter panels	270
28000 - 28999	Quarter latch pillar	270
29000 - 29999	Quarter window, interior mouldings and weatherstrips	270
29000 - 29999	Exterior mouldings	Exterior Moulding
29000 - 29999	Exterior moulding retainers	Exterior Moulding Section "R"
30000 - 39999	Quarter windows, weatherstrips and handles	270
40000 - 41999	Liftgate, tailgate and luggage compartment	400
42000 - 42999	Back window	400
43000 - 43999	Tailgate, latches, hinges and mechanism	400
44000 - 49999	Tailgate window and regulator and package tray	400
40000 - 49999	Transfers and exterior mouldings	Exterior Moulding
40000 - 49999	Exterior moulding retainers	Exterior Moulding Section "R"
50000 - 50999	Roof panel and folding top mechanism	500
51000 - 51999	Roof rails, weatherstrips and console	500
52000 - 52999	Roof bows and supports	500
53000 - 59999	Folding top mechanism and luggage carrier parts	500
50000 - 59999	Exterior mouldings	Exterior Moulding
50000 - 59999	Exterior moulding retainer	Exterior Moulding Section "R"
60000 - 60999	Seats, hinges and supports	600
61000 - 61499	Seats, head rest parts and seat belts	600
61500 - 61699	Seat side shields	600
61700 - 61999	Seat tracks and mechanism	600
62000 - 69999	Seat side shields and ash receptacles	600
00000 - 69999 (as applicable)	Soft trim	Soft trim - by model year

MODEL YEAR APPLICATION

Model year application is indicated by showing the first year followed by a diagonal line to indicate continued usage in all subsequent years until the insertion of the last year of usage, which will then be shown after the diagonal line. If no diagonal line is shown, the part is applicable only to the year shown.

Example -

73	Indicates part used 1973 model year only.
73/	Indicates part used 1973 through subsequent model years.
73/74	Indicates part used 1973 through 1974 model years.

Note that Bobcat unit built from June 27, 1977 and identified on the Certification Label as "8" will be merchandised in Canada as 1978 models. As of this printing this car line will be merchandised in the United States as 1977 models until announced otherwise. Catalog entries for this unit will be listed as shown in the following example:

77	L	"Before 6/27/77"
77/78	L	"From 6/27/77 to 8/1/77"
77/	L	"From 8/1/77"

BODY TYPE CODES

Most body parts and some chassis parts are cataloged by Body Type Codes. A complete listing of body type codes is shown on pages 30 and 31 of this section. Similar body types are identified by the same code number. The body type suffix is used to identify a particular body type. For example, (Mercury) body type 53 is used as shown below -

A (53B)	Monterey 4 Door Pillared Hardtop
A (53F)	Monterey Custom 4 Door Pillared Hardtop
A (53H)	Marquis 4 Door Pillared Hardtop
A (53K)	Marquis Brougham 4 Door Pillared Hardtop
A (53X)	Marquis 4 Door Pillared Hardtop

Body type codes (less suffix) are shown in the model column of the catalog text or with illustration titles when all body types of a related group are affected. For example, when Body Type Code 53 is shown it includes 53B, 53F, 53H, 53K and 53X.

SOFT TRIM

Soft Trim parts are arranged in separate sections by car line catalog code within each model year i.e. 1973 Soft Trim Section A (Mercury), 1973 Soft Trim Section C (Comet), 1973 Soft Trim Section D (Lincoln-Continental), etc. To determine the complete part number of a trim part, it is necessary to know the "Trim Code" which is shown on the Certification Label of the vehicle (refer to pages 24 thru 34. Instructions for selecting soft trim parts are contained at the beginning of the Soft Trim area of this catalog.

ATTACHING PARTS (NUTS, BOLTS, ETC.) and LOCATOR CODES

Standard and utility hardware, such as bolts, screws, fittings, etc. are listed below the part with which they are used. To facilitate the stocking and handling of standard and utility parts by Ford Dealers, locator codes are preassigned by Ford Motor Company. The locator codes are shown in parentheses immediately following or below the standard and utility part numbers. For example, refer to Body Section 200 group 22800-1. The part number for a 5/18-18 x 1 1/2" screw-hex. head is 382623-S2 with the locator code (UU-52-AL) appearing at the beginning of the description column. In some charts, such as the Carburetor Parts List Charts in Section 95.1, 95.2, etc. the locator code will be shown next to or below the part number in the part number column.

LIQUID MEASURE

Most liquid measures listed in this catalog are in U.S. sizes and certain other liquid measures (unique to Canada) listed in this catalog are in Canadian sizes. The following chart provides an understanding and a translation of U.S. to Canadian and Canadian to U.S. sizes.

	1/2 Pint	Pint	Quart	Gallon
	(CAPACITY IN OUNCES)		(CAPACITY IN OUNCES)	
Canada	10	20	40	160
U.S.	8	16	32	128

Example - 5 U.S. quarts (160 ounces) equal 4 Canadian quarts (160 ounces) or 1 Canadian gallon.

COPYRIGHT © 1986 — FORD MOTOR COMPANY — DEARBORN, MICHIGAN

D.S.O., F.S.O. or L.P.O. (SPECIAL ORDERS)

The District Code Number will appear in the D.S.O. space on the Certification Label for all units including regular production. Always furnish appropriate Certification Label information and D.S.O. Number if applicable when ordering parts not listed in the catalog. If the unit is D.S.O. F.S.O. or L.P.O. (Special Order), the complete Order Number will appear in the D.S.O. space in addition to the District Code Number.

HOW TO IDENTIFY 351 C.I.D. ENGINES

The following methods will help to identify the subject engines that are in use:

- Decal on Air Cleaner Cover
- Emission Control Systems Decal on Valve Cover
- 351C was last produced in 1974
- 351M introduced in 1975
- 351W introduced in 1969 in use through 1980

ITEM	351W	351C & M
Number of bolts attaching valve cover on exhaust manifold side	3	4
Type of Front Cover	Bolted to Cylinder Block	Cast as part of Cylinder Block
Thermostat Housing	Bolts horizontal and mounts to intake manifold	Bolts vertical and mounts to front cover
Fuel Pump	Attaching Bolts side by side (horizontal plane)	Attaching Bolts one above the other (vertical plane)

HOW TO ORDER PARTS

When ordering parts, always give the complete part number.

In the event the part number is not known, the following information should be included.

A. Complete description of part.

B. Model, year and body type.

C. Dimension, number of teeth, size, etc., if possible, rough sketch of part.

D. If applicable to engine, transmission, axle, steering, etc., specify type, such as 400 C.I.D. Automatic Transmission, Power Steering, etc.

E. Advise how shipment is to be made - Freight, Express, Air, Parcel Post.

ACCESSORY WEIGHT CHART for 1975 VEHICLES

When adding accessories, equipment, passengers and luggage to your vehicle, the total weight capacity of the vehicle or of the front or rear axle (GVWR, GAWR as shown on the vehicle Certification Label) must not be exceeded. See the listing below for the weight effect of the various accessories shown.

ACCESSORY	WEIGHT EFFECT (lbs.) TOTAL	FRONT AXLE	REAR AXLE
Air Conditioning			
2.0 L Engine	66	69	-3
2.3 L Engine	70	75	-5
2.8 L Engine	68	72	-4
200/250 Engine	61	64	-3
302/351W Engine	67	73	-6
400/351M Engine	66	70	-4
460 Engine	78	83	-5
Air Deflector	5	0	5
Air Horn	10	9	1 (3)
Air Springs	6	0	6
AM Radio & AM & AM/FM - Mono	7	5	2 (6)
AM/FM Radio - Stereo	8	6	2 (6)
Body Side Moulding - Vinyl	3	1 1/2	1 1/2
Coolant Recovery	5	5	0
Control - Air Spring	5	2 1/2	2 1/2
Deck Lid Lock	2	0	2
Electric Clock	1	1	0
Fire Extinguisher - 10BC	10	7 1/2	2 1/2 (4)
Fire Extinguisher - 5BC	4	3	1 (4)
Floor Mat - Full Front	9	6	3
Floor Mat - Full Rear	6	2	4
Floor Mat - Twin Front	8	5	3
Floor Mat - Twin Rear	5	2	3
Highway Kit	11	1	10 (5)
Hood Ornament	1	1	0
License Plate Frame	1	1/2	1/2
Luggage Rack - Deck	8	-1	9
Luggage Rack - Roof	24	-2	26
Outside Mirror - L.H.	2	2	0
Outside Mirror - R.H.	1	1	0
Outside Mirror - Racing	1	1	0
Rear Window Defogger	3	0	3
Shock Absorbers (Super Flex)	2	0	2
Speed Control	8	8	0
Splash Guard	4	2	2
Tonneau Cover	11	1	10 (7)
Trailer Hitch - III - Platform	50	-18	68 (1)
Trailer Hitch - III - Platform	65	-24	89 (2)
Trailer Hitch - I	20	-10	30
Transmission Oil Cooler	7	8	-1
Undercoating	10	5	5
Utility Table	12	-3	15
Wheel Covers	20	10	10
Vacuum Gage	1	1	0
Anti-Theft Alarm System	1	1	0

(1) All Except Ford/Mercury Wagons
(2) Ford and Mercury Wagon
(3) Underhood Location
(4) Located in Passenger Compartment - Front
(5) Located in Luggage Storage Area
(6) Capri Only
(7) Ranchero Only

COPYRIGHT © 1986 — FORD MOTOR COMPANY — DEARBORN, MICHIGAN

1973/79 LINCOLN-MERCURY CARS

ACCESSORY WEIGHT CHART for 1976 VEHICLES

When adding accessories to your vehicle, the total weight capacity of the vehicle or of the front or rear axle (GVWR, GAWR as shown on the vehicle Certification Label) must not be exceeded. See the listing below for the weight effect of the various accessories shown.

ACCESSORY	WEIGHT EFFECT (lbs.) TOTAL	FRONT AXLE	REAR AXLE
Air Conditioning	70	76	-6
2.3 L Engine	66	72	-6
2.8 L Engine	66	68	-2
200/250 Engine	67	70	-3
302/351W Engine	66	70	-4
400/351M Engine	75	81	-6
460 Engine	5	0	5
Antenna - Rear Electric	5	0	5
Air Deflector	10	9	1
Air Horn (3)	6	0	6
Air Springs #	1	1	0
Anti-Theft Alarm	3	1 1/2	1 1/2
Body Side Moulding - Vinyl	5	5	0
Coolant Recovery	5	2 1/2	2 1/2
Control - Air Spring	3	0	3
Defogger - Rear Window	2	0	2
Deck Lid Lock	1	1	0
Electric Clock	10	7	3
Fire Extinguisher - 10BC (4)	4	3	1
Fire Extinguisher - 10BC Purple "K" (4)	4	3	1
Fire Extinguisher - 5BC (4)	9	6	3
Floor Mat - Full Front	6	2	4
Floor Mat - Full Rear	8	5	3
Floor Mat - Twin Front	5	2	3
Floor Mat - Twin Rear	10	0	10
Highway Kit (5)	1	1	0
Hood Ornament	1	1/2	1/2
License Plate Frame	8	-1	9
Luggage Rack - Deck	24	-2	26
Luggage Rack - Roof Sedan and Station Wagon	25	-2	27
Luggage Rack - Cover (5)	1	1	0
Outside Mirror - L.H. (7)	1	1	0
Outside Mirror - R.H. (7)	3	3	0
Outside Mirror - Racing (7)	3	0	3
Rear Window Defogger	2	0	2
Shock Absorbers (Super Flex)	8	8	0
Speed Control	4	2	2
Splash Guard	11	1	10
Tonneau Cover (6)	50	-18	68
Trailer Hitch - III - Platform (1)	65	-24	89
Trailer Hitch - III - Platform (2)	20	-10	30
Trailer Hitch - I	7	8	-1
Transmission Oil Cooler	10	5	5
Undercoating	12	-3	15
Utility Table	20	10	10
Wheel Covers #	1	1	0
Vacuum Gage	4	2	2
Wheel Trim Rings #			

(1) All Except Ford/Mercury Wagons
(2) Ford and Mercury Wagon
(3) Underhood Location
(4) Located in Passenger Compartment - Front
(5) Located in Luggage Storage Area
(6) Ranchero only
(7) Weight per Mirror
Bumper Height Not Affected

ACCESSORY WEIGHT CHART for 1977 VEHICLES

When adding accessories to your vehicle, the total weight capacity of the vehicle or of the front or rear axle (GVWR, GAWR as shown on the vehicle Certification Label) must not be exceeded. See the listing below for the weight effect of the various accessories shown.

ACCESSORY	WEIGHT EFFECT (lbs.) TOTAL	FRONT AXLE	REAR AXLE
Air Conditioning			
2.3 L Engine	70	77	-7
2.8 L Engine	66	72	-6
200/250 Engine	66	68	-2
302/351W Engine	67	70	-3
400/351M Engine	66	69	-3
460 Engine	75	81	-6
Antenna - Rear Electric	4	0	4
Air Deflector	5	0	5
Air Horn (1)	10	9	1
Air Springs #	6	0	6
Body Side Moulding - Vinyl	3	1 1/2	1 1/2
Coolant Recovery	5	5	0
Control - Air Spring	5	2 1/2	2 1/2
Defogger - Rear Window	3	0	3
Deck Lid Lock	2	0	2
Electric Clock	1	1	0
Fire Extinguisher - 10BC (2)	4	3	1
Floor Mat - Universal -- (Twin Vinyl)	10	6	4
-- (Rubber Economy)			
Floor Mat - Full - Rubber	14 1/2	9	5 1/2
Floor Mat - Full - Vinyl - Universal	11 1/2	6 1/2	5
Floor Mat - Twin - Corporate	8	4 1/2	3 1/2
Floor Mat - Twin - Rubber	13	8	5
Heater - Engine Block	1/2	1/2	0
Highway Kit (3)	10	0	10
Hood Ornament	1	1	0
License Plate Frame	1	1/2	1/2
Luggage Rack - Deck	8	-1	9
Luggage Rack - Roof Sedan and Station Wagon	24	-2	26
Luggage Rack - Cover (3)	25	-2	27
Outside Mirror - R.H. Convex (5)	1	1	0
Outside Mirror - L.H. (5)	1	1	0
Outside Mirror - R.H. (5)	1	1	0
Outside Mirror - Racing (5)	3	3	0
Radio - CB	8	4	4
Rear Window Defogger	3	0	3
Rear Speaker	3	0	3
Reflector Flare	14	0	14
Shock Absorbers (Super Flex)	2	0	2
Speed Control	8	8	0
Splash Guard	4	2	2
Tonneau Cover (4)	11	1	10
Transmission Oil Cooler - Economy	4	5	-1
Transmission Oil Cooler - High Capacity	7	8	-1
Transmission Oil Cooler - Extra High Capacity	5	6	-1
Rustproofing	12	6	6
Undercoating	10	5	5
Undercoating and Rustproofing	19	9 1/2	9 1/2
Utility Table	12	-3	15
Wheel Covers #	20	10	10
Vacuum Gage	1 1/2	1 1/2	0
Wheel Trim Rings #	4	2	2

(1) Underhood Location
(2) Located in Passenger Compartment - Front
(3) Located in Luggage Storage Area
(4) Ranchero Only
(5) Weight Per Mirror
Bumper Height Not Affected

COPYRIGHT © 1986 — FORD MOTOR COMPANY — DEARBORN, MICHIGAN

1973/79 LINCOLN-MERCURY CARS

ACCESSORY WEIGHT CHART for 1978 VEHICLES

When adding accessories to your vehicle, the total weight capacity of the vehicle or of the front or rear axle (GVWR, GAWR as shown on the vehicle Certification Label) must not be exceeded. See the listing below for the weight effect of the various accessories shown.

ACCESSORY	WEIGHT EFFECT (lbs.) TOTAL	FRONT AXLE	REAR AXLE
Air Conditioning	65	69	-4
1.6 L Engine - (Fiesta)	70	77	-7
2.3 L Engine	66	72	-6
2.8 L Engine	66	68	-2
200/250 Engine	67	70	-3
302/351W Engine	66	70	-3
400/351M Engine	75	81	-6
460 Engine	4	0	4
Antenna - Rear Electric	5	0	5
Air Deflector	10	9	1
Air Horn (1)	6	0	6
Air Springs *	3	1 1/2	1 1/2
Body Side Moulding - Vinyl (exc. Fiesta)	2	1	1
Body Side Moulding - Vinyl (Fiesta)	5	5	0
Coolant Recovery	5	2 1/2	2 1/2
Control - Air Spring	3	0	3
Defogger - Rear Window	2	0	2
Deck Lid Lock	2	1 1/2	1/2
Door Storage Bins - (Fiesta)	1	1	0
Electric Clock	4	3	1
Fire Extinguisher - 10BC (2)	10	6	4
Floor Mat - Universal (Twin Vinyl or Rubber Economy)	14 1/2	9	5 1/2
Floor Mat - Full - Rubber	11 1/2	6 1/2	5
Floor Mat - Full - Vinyl - Universal	8	4 1/2	3 1/2
Floor Mat - Twin - Corporate	13	8	5
Floor Mat - Twin - Rubber	16	12	4
Floor Mat - Front Twin - Rubber - (Fiesta)	9	7	2
Floor Mat - Front Vinyl Insert - (Fiesta)	2 1/2	2	1/2
Glove Box - (Fiesta)	1/2	1/2	0
Heater - Engine Block	1	1	0
Hood Ornament	1	1/2	1/2
License Plate Frame	7	0	7
Lockable Storage Compartment - (Fiesta)	8	-1	9
Luggage Rack - Deck	24	-2	26
Luggage Rack - Roof Sedan and Station Wagon	20	0	20
Luggage Rack - Cover	15	3	12
Luggage Rack - (Fiesta)	1	1	0
Outside Mirror - R.H. Convex (3)	1	1	0
Outside Mirror - L.H. (3)	1	1	0
Outside Mirror - R.H. (3)	3	3	0
Outside Mirror - Racing (3)			

(1) Underhood Location
(2) Located in Passenger Compartment - Front
(3) Weight Per Mirror
* Bumper Height Not Affected

ACCESSORY WEIGHT CHART for 1978 VEHICLES-cont'd.

ACCESSORY	WEIGHT EFFECT (lbs.) TOTAL	FRONT AXLE	REAR AXLE
Radio - AM (Fiesta)	5	4	1
Radio - CB	9	5	4
Rear Package Tray (Fiesta)	10	0	10
Rear Speaker	3	0	3
Reflector Flare	14	0	14
Rustproofing (Super Seal)	12	6	6
Shock Absorbers (Super Flex)	2	0	2
Speed Control	8	8	0
Splash Guard	4	2	2
Tonneau Cover - Ranchero	11	1	10
Tool Kits - Large - (Fiesta)	5	0	5
Tool Kits - Small - (Fiesta)	1 1/2	0	1 1/2
Transmission Oil Cooler - Economy	4	5	-1
Transmission Oil Cooler - High Capacity	7	8	-1
Transmission Oil Cooler - Extra High Capacity	5	6	-1
Undercoating	10	5	5
Undercoating and Rustproofing (Super Seal)	19	9 1/2	9 1/2
Utility Table	12	-3	15
Vacuum Gage	1 1/2	1 1/2	0
Wheel Covers *	20	10	10
Wheel Trim Rings * (exc. Fiesta)	4	2	2
Wheel Trim Rings * (Fiesta)	3	1 1/2	1 1/2

* Bumper Height Not Affected

COPYRIGHT © 1986 — FORD MOTOR COMPANY — DEARBORN, MICHIGAN

1973/79 LINCOLN-MERCURY CARS

ACCESSORY WEIGHT CHART for 1979 VEHICLES

When adding accessories to your vehicle, the total weight capacity of the vehicle or of the front or rear axle (GVWR, GAWR as shown on the vehicle Certification Label) must not be exceeded. See the listing below for the weight effect of the various accessories shown.

ACCESSORY	WEIGHT EFFECT (lbs.) TOTAL	FRONT AXLE	REAR AXLE
Air Conditioning			
1.6 L Engine (Fiesta)	65	69	-4
2.3 L Engine	73	79	-6
2.8 L Engine	67	72	-5
3.3 L (200 C.I.D.) Engine	64	67	-3
4.1 L (250 C.I.D.) Engine	68	70	-2
5.0/5.8 L (302/351 C.I.D.) Engine (Ford/Mercury)	66	71	-5
5.0/5.8 L (302/351 C.I.D.) Engine (All exc. Ford/Mercury)	74	77	-3
Air Deflector	5	0	5
Air Springs #	6	0	6
Antenna - Rear Electric	4	0	4
Body Side Moulding - Vinyl (exc. Fiesta)	3	1 1/2	1 1/2
Body Side Moulding - Vinyl (Fiesta)	2	1	1
Control - Air Spring	5	2 1/2	2 1/2
Deck Lid Release Control	2	0	2
Defogger - Rear Window	3	0	3
Door Storage Bins (Fiesta)	2	1 1/2	1/2
Electric Clock	1	1	0
Fire Extinguisher - 10BC (1)	4	3	1
Floor Mat - Universal (Twin Vinyl or Rubber Economy)	10	6	4
Floor Mat - Full - Vinyl - Universal	11 1/2	6 1/2	5
Floor Mat - Twin - Corporate	8	4 1/2	3 1/2
Floor Mat - Twin - Rubber	13	8	5
Floor Mat - FrontTwin - Rubber (Fiesta)	16	12	4
Floor Mat - Front Vinyl Insert (Fiesta)	9	7	2
Glove Box (Fiesta)	2 1/2	2	1/2
Heater - Engine Block	1/2	1/2	0
Hood Ornament	1	1	0
License Plate Frames	1	1/2	1/2
Lockable Storage Compartment (Fiesta)	7	0	7
Luggage Rack (Fiesta)	15	3	12
Luggage Rack with Cover (Fiesta)	25	10	15
Luggage Rack - Cover	20	0	20
Luggage Rack - Deck	8	-1	9
Luggage Rack - Roof (Sedan & Station Wagon)	24	-2	26
Outside Mirror - R.H. Convex (2)	1	1	0
Outside Mirror - L.H. (2)	1	1	0
Outside Mirror - R.H. (2)	1	1	0
Outside Mirror - Racing	3	3	0

(1) Located in Passenger Compartment - Front
(2) Weight Per Mirror
Bumper Height Not Affected

ACCESSORY WEIGHT CHART for 1979 VEHICLES - cont'd.

ACCESSORY	WEIGHT EFFECT (lbs.) TOTAL	FRONT AXLE	REAR AXLE
Radio - AM (Fiesta)	7	6	1
Radio - AM and AM/FM Monaural (Fiesta)	5	4	1
Radio - AM/FM Stereo (Fiesta)	8	6	2
Radio - CB	9	5	4
Rear Package Tray (Fiesta)	10	0	10
Rear Speaker	3	0	3
Reflector Flare	14	0	14
Rustproofing (Super Seal)	12	6	6
Shock Absorbers (Super Flex)	2	0	2
Speed Control	8	8	0
Splash Guard - Wheel	3	1 1/2	1 1/2
Tonneau Cover (Ranchero)	11	1	10
Tool Kit - Large (Fiesta)	5	0	5
Tool Kit - Small (Fiesta)	1 1/2	0	1 1/2
Transmission Oil Cooler (Economy)	4	5	-1
Transmission Oil Cooler (High Capacity)	7	8	-1
Transmission Oil Cooler (Extra High Capacity)	5	6	-1
Undercoating	10	5	5
Undercoating and Rustproofing (Super Seal)	19	9 1/2	9 1/2
Wheel Covers #	20	10	10
Wheel Splash Guards (Fiesta)	1	1/2	1/2
Wheel Trim Rings # (exc. Fiesta)	4	2	2
Wheel Trim Rings # (Fiesta)	3	1 1/2	1 1/2

Bumper Height Not Affected

COPYRIGHT © 1986 — FORD MOTOR COMPANY — DEARBORN, MICHIGAN

INCHES and MILLIMETERS CONVERSION CHART

MILLIMETERS TO DECIMAL (inches) EQUIVALENT

MM	= DECIMAL (Inches)	MM	= DECIMAL (Inches)	MM	= DECIMAL (Inches)	MM	= DECIMAL (Inches)	MM	= DECIMAL (Inches)	MM	= DECIMAL (Inches)
1	.039	21	.827	41	1.614	61	2.402	81	3.189	125	4.921
2	.079	22	.866	42	1.654	62	2.441	82	3.228	150	5.906
3	.118	23	.906	43	1.693	63	2.480	83	3.268	175	6.890
4	.157	24	.945	44	1.732	64	2.520	84	3.307		
5	.197	25	.984	45	1.772	65	2.559	85	3.346		
6	.236	26	1.024	46	1.811	66	2.598	86	3.386	200	7.874
7	.276	27	1.063	47	1.850	67	2.638	87	3.425	225	8.858
8	.315	28	1.102	48	1.890	68	2.677	88	3.465	250	9.843
9	.354	29	1.142	49	1.929	69	2.717	89	3.504	275	10.827
10	.394	30	1.181	50	1.969	70	2.756	90	3.543		
11	.433	31	1.220	51	2.008	71	2.795	91	3.583	300	11.811
12	.472	32	1.260	52	2.047	72	2.835	92	3.622	325	12.795
13	.512	33	1.299	53	2.087	73	2.874	93	3.661	350	13.780
14	.551	34	1.339	54	2.126	74	2.913	94	3.701	375	14.764
15	.591	35	1.378	55	2.165	75	2.953	95	3.740		
16	.630	36	1.417	56	2.205	76	2.992	96	3.780	400	15.748
17	.669	37	1.457	57	2.244	77	3.031	97	3.819		
18	.709	38	1.496	58	2.283	78	3.071	98	3.858		
19	.748	39	1.535	59	2.323	79	3.110	99	3.898		
20	.787	40	1.575	60	2.362	80	3.150	100	3.937		

DECIMAL (inches) TO METRIC EQUIVALENT

DECIMAL (Inches)	= MM	DECIMAL (Inches)	= MM	DECIMAL (Inches)	= MM	DECIMAL (Inches)	= MM	DECIMAL (Inches)	= MM	DECIMAL (Inches)	= MM
.001	.025	.120	3.048	.320	8.128	.520	13.208	.720	18.288	.920	23.368
.002	.051	.130	3.302	.330	8.382	.530	13.462	.730	18.542	.930	23.622
.003	.076	.140	3.556	.340	8.636	.540	13.716	.740	18.796	.940	23.876
.004	.102	.150	3.810	.350	8.890	.550	13.970	.750	19.050	.950	24.130
.005	.127	.160	4.064	.360	9.144	.560	14.224	.760	19.304	.960	24.384
.006	.152	.170	4.318	.370	9.398	.570	14.478	.770	19.558	.970	24.638
.007	.178	.180	4.572	.380	9.652	.580	14.732	.780	19.812	.980	24.892
.008	.203	.190	4.826	.390	9.906	.590	14.986	.790	20.066	.990	25.146
.009	.229	.200	5.080	.400	10.160	.600	15.240	.800	20.320		
.010	.254	.210	5.334	.410	10.414	.610	15.494	.810	20.574	1.000	25.400
.020	.508	.220	5.558	.420	10.668	.620	15.748	.820	20.828	2.000	50.800
.030	.762	.230	5.842	.430	10.922	.630	16.002	.830	21.082	3.000	76.200
.040	1.016	.240	6.096	.440	11.176	.640	16.256	.840	21.336	4.000	101.600
.050	1.270	.250	6.350	.450	11.430	.650	16.510	.850	21.590	5.000	127.000
.060	1.524	.260	6.604	.460	11.684	.660	16.764	.860	21.844	10.000	254.000
.070	1.778	.270	6.858	.470	11.938	.670	17.018	.870	22.098	15.000	381.000
.080	2.032	.280	7.112	.480	12.192	.680	17.272	.880	22.352	20,000	508.000
.090	2.286	.290	7.366	.490	12.446	.690	17.526	.890	22.606	25.000	635.000
.100	2.540	.300	7.620	.500	12.700	.700	17.780	.900	22.860	50,000	1270.000
.110	2.794	.310	7.874	.510	12.954	.710	18.034	.910	23.114	100.000	2540.000

INCHES and MILLIMETERS CONVERSION CHART · continued

FRACTIONS (inches) TO DECIMALS (inches) and METRIC EQUIVALENTS

FRACTION (Inches)				= DECIMAL (Inches) =	MM
			1/64	.016	.397
		1/32		.031	.794
			3/64	.047	1.191
	1/16			.063	1.588
			5/64	.078	1.984
		3/32		.094	2.381
			7/64	.109	2.778
1/8				.125	3.175
			9/64	.141	3.572
		5/32		.156	3.969
			11/64	.172	4.366
	3/16			.188	4.763
			13/64	.203	5.159
		7/32		.219	5.556
			15/64	.234	5.953
1/4				.250	6.350
			17/64	.266	6.747
		9/32		.281	7.144
			19/64	.297	7.541
	5/16			.313	7.938
			21/64	.328	8.334
		11/32		.344	8.731
			23/64	.359	9.128
3/8				.375	9.525
			25/64	.391	9.922
		13/32		.406	10.319
			27/64	.422	10.716
	7/16			.438	11.113
			29/64	.453	11.509
		15/32		.469	11.906
			31/64	.484	12.303
1/2				.500	12.700
			33/64	.516	13.097
		17/32		.531	13.494
			35/64	.547	13.891
	9/16			.563	14.288
			37/64	.578	14.684
		19/32		.594	15.081
			39/64	.609	15.478

FRACTION (Inches)				= DECIMAL (Inches) =	MM
5/8				.625	15.875
			41/64	.641	16.272
		21/32		.656	16.669
			43/64	.672	17.066
	11/16			.687	17.463
			45/64	.703	17.859
		23/32		.719	18.256
			47/64	.734	18.653
3/4				.750	19.050
			49/64	.766	19.447
		25/32		.781	19.844
			51/64	.797	20.241
	13/16			.813	20.638
			53/64	.828	21.034
		27/32		.844	21.431
			55/64	.859	21.828
7/8				.875	22.225
			57/64	.891	22.622
		29/32		.906	23.019
			59/64	.922	23.416
	15/16			.938	23.813
			61/64	.953	24.209
		31/32		.969	24.606
			63/64	.984	25.003
1				1.000	25.400
2				2.000	50.800
3				3.000	76.200
4				4.000	101.600
5				5.000	127.000
10				10.000	254.000
15				15.000	381.000
20				20.000	508.000
25				25.000	635.000
50				50.000	1270.000
100				100.000	2540.000

COPYRIGHT © 1986 — FORD MOTOR COMPANY — DEARBORN, MICHIGAN

ABBREVIATIONS

A/C	air conditioner (ing)
accel.	accelerator
adj.	adjuster (ing)
alum.	aluminum
amp.	ampere
approx.	approximate (ly)
AR	as required
assy.	assembly
A/T	automatic transmission
A.T.C.	automatic temperature control
attach.	attaches (ing) (ed)
auto.	automatic
aux.	auxiliary
BBC	bumper to back of cab
B/W	Borg-Warner
C1	Carter 1 barrel
C4	automatic transmission - (XP type)
C6	automatic transmission - (XPL type)
Calif.	California
cap.	capacity
carb.	carburetor
Cat.	Caterpillar
cc	cubic centimeter
c/cw	counter clockwise
Chg./L	change level
C.I.D.	cubic inch displacement
CJ	Cobra Jet
cm	centimeter
C/M	automatic transmission - (MX type)
c/member	cross member
col.	column
compt.	compartment
conn.	connection or connector
cont'd.	continued
C.P.	candle power
C/P/S	center point steering
Cum.	Cummins
cw	clockwise
cyl.	cylinder
D/4/S	Dagenham 4 speed transmission
D.C.	double contact
D/D	direct drive
D/E	dual exhaust
defl.	deflector
dia.	diameter
diff.	differential
disp.	displacement
dist.	distributor
D/R	dual range transmission
D.S.O.	domestic special order
E.E.C.	engine electronic computor
ea.	each
E/H/D	extra heavy duty
emer.	emergency
em/re	emission reduction
eng.	engine
equip.	equipment
ev/em	evaporative emission
exc.	except
exh.	exhaust
E.G.R.	exhaust gas recirculation
F2	Ford 2 barrel
F4	Ford 4 barrel
F/4/S	Ford 4 speed transmission
fill.	fillister
flex.	flexible
F.S.O.	foreign special order
gal.	gallon
g/compt.	glove compartment
gen.	generator
G.V.W.	gross vehicle weight
hd.	head
H/D	heavy duty
hel.	helical
hex.	hexagon (al)
Hi-Perf.	High Performance
H/O	High Output
HP	horse power
hsg.	housing
htr.	heater
H/V	hydraulic vacuum
hyd.	hydraulic
I.D.	inside diameter
ident.	identification
ign.	ignition
IMCO	improved combustion emission control system
incl.	includes
I.S.	Instruction Sheet
I.W.	inertia weight
K.D.	shipped in disassembled form
KM.P.H.	kilometers per hour
lb.	pound
l/compt.	luggage compartment
L	litre
L/D	light duty
L.H.	left hand
lic.	license
L/N	Leece Neville
L.P.O.	Limited Production Option

ABBREVIATIONS - cont'd.

M	1000 (pounds)
max.	maximum
M/D	medium duty
med.	medium
mldg.	moulding
mm	millimeter
m.p.h.	miles per hour
M/S	manual steering
M/T	manual transmission
mtd.	mounted
mtg.	mounting
mtr.	motor
Nags. No.	National Automotive Glass Society number
No.	number
N.P.G.	New Process Gear
N.P.T.F.	national pipe thread fine
N.R.	not replaced
N.S.	not serviced
O.D.	outside diameter
O/D	overdrive
O/S	oversize
oz.	ounce
pass.	passenger
P/B	power brake
P/C	Police Car
pcs.	pieces
P.F.	premium fuel
P & P/susp.	Page & Page suspension
pri.	primary
P/S	power steering
P.T.O.	power-take-off
qt.	quart
qty.	quantity
rad.	radiator
r/b	replaced by
R/D	regular duty
rd.	round
recirc.	recirculating
reinf.	reinforcement
Repl.	replaced
req'd.	required
resvr.	reservoir
R.F.	regular fuel
R/G	ring gear
R.H.	right hand
R.P.M.	revolutions per minute
rr.	rear
R/R	Road Ranger
r/wheels	rear wheels
S/C	standard cooling
S.C.	single contact
S/CJ	Super Cobra Jet
s/compt.	storage compartment
S/E	single exhaust or special economy
sec.	secondary
Ser.	serial
s/member	side member
spec.	special
speedo.	speedometer
spg.	spring
sq.	square
sq. hd.	square head
S/R	side rail
std.	standard
strg.	steering
suppt.	support
susp.	suspension
S/X/C	super extra cooling
tach.	tachometer
T/C	Turbo Charger
T/E	thermactor emission control system
temp.	temperature
t/gate	tailgate
thd.	thread
T/M	transmatic
trans.	transmission
Trans/ign.	transistorized ignition
Trans/reg.	transistorized regulator
T.S.L.	Truck Specification List
T/T	tractor-trailer
UBS	uniform bearing stress
u/joint	universal joint
univ.	universal
U/S	undersize
vac.	vacuum
V V	variable venturi
w/	with
W/4/S	Warner 4 speed transmission
W/B	wheelbase
w/o	without
W/S	windshield
w/strip	weatherstrip
X/C	extra cooling
2/B	2 barrel
2/W/D	2 wheel drive
3/M/T	3 speed manual transmission
4/B	4 barrel
4/M/T	4 speed manual transmission
4/W/D	4 wheel drive
351C	351 cubic inch engine built at Cleveland engine plant
351CJ	351 cubic inch Cobra Jet engine
351HO	351 cubic inch high output engine
351M	351 cubic inch engine built at Cleveland engine plant
351W	351 cubic inch engine built at Windsor engine plant

COPYRIGHT © 1986 — FORD MOTOR COMPANY — DEARBORN, MICHIGAN

SAFETY STANDARDS CERTIFICATION LABEL - 1973/77

Located on the latch face of the left Front Door

The Certification Label includes -

1. Built date (e.g. 9/72) in upper left hand corner which indicates the month and year in which the unit was built.
2. Vehicle Identification Number (left half of first line) consisting of Codes which identify Model Year, Assembly Plant, Series, Engine and Numerical Sequence of Assembly (also shown in upper right hand corner).
3. Miscellaneous Vehicle Data (right half of first line plus second line) consisting of Codes which identify Body Type, Color of Exterior Paint, Trim, Transmission, Rear Axle Ratio and District (and D.S.O. number where applicable).

The codes shown below are listed on pages 28 thru 37

FIRST LINE (3Z44H500001) VEHICLE IDENTIFICATION NUMBER

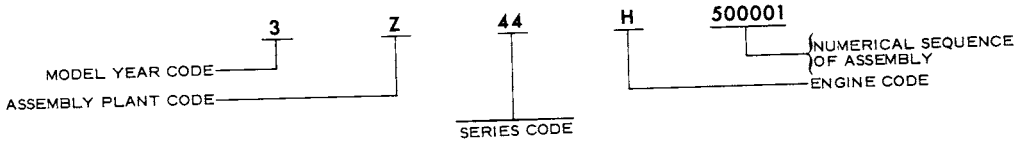

"3"	---	1973 Model Year
"Z"	---	Built at St. Louis Assembly Plant
"44"	---	4 Door Pillared Hardtop
"H"	---	8 cyl. 351-2/B engine
"500001"	---	First Mercury Series Vehicle built at St. Louis Assembly Plant during Model Year.

MFD. BY FORD MOTOR CO. IN U.S.A.
DATE: 09/72 GVWR 5892
GAWR: FRONT 2964 REAR 2928
THIS VEHICLE CONFORMS TO ALL APPLICABLE FEDERAL MOTOR VEHICLE SAFETY STANDARDS IN EFFECT ON THE DATE OF MANUFACTURE SHOWN ABOVE
3Z44H500001 PASSENGER

VEH. IDENT. NO.			TYPE		
BODY	COLOR	TRIM	TRANS.	AXLE	DSO
53B	4P	CR	X	6	42

P-10236

SECOND LINE (53B 4P CR X 6 42) MISCELLANEOUS VEHICLE DATA

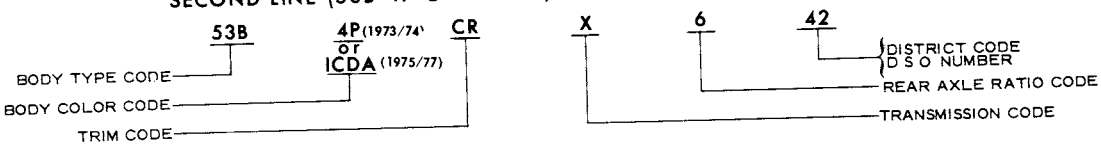

"53B"	---	Monterey 4 Door Pillared Hardtop
"4P"	---	Medium Green Metallic
"CR"	---	Medium Green Vinyl and Medium Green Cloth Refer to appropriate Soft Trim Section
"X"	---	Cruise-o-matic (FMX type) Automatic Transmission
"6"	---	Rear Axle Ratio of 3.00 to 1 (non-locking)
"42"	---	St. Louis District (and D.S.O. number when applicable)

Refer to Page 12 for complete D.S.O. explanation

SAFETY STANDARDS CERTIFICATION LABEL - 1978

Located on the latch face of the left Front Door

The Certification Label includes -

1. Built date (e.g. 10/77) in upper left hand corner which indicates the month and year in which the unit was built.
2. Vehicle Identification Number (left half of first line) consisting of Codes which identify Model Year, Assembly Plant, Series, Engine and Numerical Sequence of Assembly (also shown in upper right hand corner).
3. Miscellaneous Vehicle Data (right half of first line plus second line) consisting of Codes which identify Color of Exterior Paint, D.S.O. Number where applicable, Body Type, Trim, Schedule Date, Rear Axle Ratio, Tramsmission and Air Conditioning Code.

The codes shown below are listed on pages 28 thru 37.

FIRST LINE (8Z62H400001) VEHICLE IDENTIFICATION NUMBER

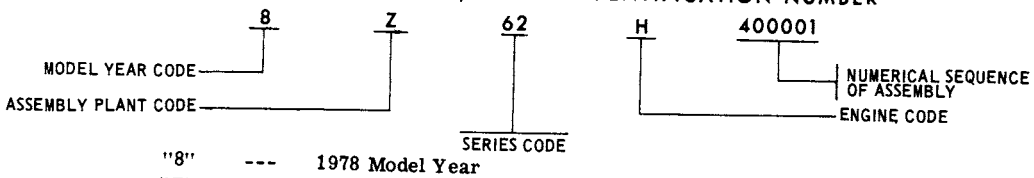

"8"	---	1978 Model Year
"Z"	---	Built at St. Louis Assembly Plant
"62"	---	4 Door Pillared Hardtop
"H"	---	8 cyl. 351-2/B engine
"400001"	---	First Mercury Series Vehicle built at St. Louis Assembly Plant during Model Year.

MFD. BY FORD MOTOR CO. IN U.S.A.

DATE: 06/77 GVWR 4132
GAWR: FRONT 2177 REAR 1971

THIS VEHICLE CONFORMS TO ALL APPLICABLE FEDERAL MOTOR VEHICLE SAFETY STANDARDS IN EFFECT ON THE DATE OF MANUFACTURE SHOWN ABOVE

F0135/R0060

8S03F400001 PASS 1978 MODEL

VEH. IDENT. NO.			TYPE				
COLOR	DSO	BODY	TRIM	SCH.DATE	AXLE	TRANS.	A/C
1CDA	42	53H	CR	24F	6	W	A

P-14505

SECOND LINE (1CDA 42 53H CR 24F 6 W A) MISCELLANEOUS VEHICLE DATA

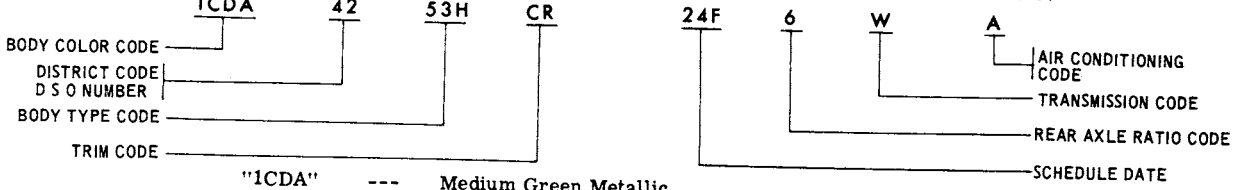

"1CDA"	---	Medium Green Metallic
"42"	---	St. Louis District (and D.S.O. number when applicable)
"53H"	---	Marquis 4 Door Pillared Hardtop
"CR"	---	Medium Green Vinyl/and Medium Green Cloth (Refer to appropriate Soft Trim Section)
"24F"	---	Schedule Date
"6"	---	Rear Axle Ratio of 3.00 to 1 (non-locking)
"W"	---	Transmission Code
"A"	---	Air Conditioning - Ford factory installed

Refer to Page 12 for complete D.S.O. explanation

COPYRIGHT © 1986 — FORD MOTOR COMPANY — DEARBORN, MICHIGAN

SAFETY STANDARDS CERTIFICATION LABEL - 1979

Located on the latch face of the left Front Door

The Certification Label includes -

1. Built date (e.g. 10/78) in upper left hand corner which indicates the month and year in which the unit was built.
2. Vehicle Identification Number (left half of first line) consisting of Codes which identify Model Year, Assembly Plant, Series, Engine and Numerical Sequence of Assembly (also shown in upper right hand corner).
3. Miscellaneous Vehicle Data (right half of first line plus second line) consisting of Codes which identify Color of Exterior Paint, D.S.O. Number where applicable, Body Type, Trim, Schedule Date, Rear Axle Ratio, Transmission and Air Conditioning Code.

The codes shown below are listed on pages 28 thru 37

FIRST LINE (9Z62H100001) VEHICLE IDENTIFICATION NUMBER

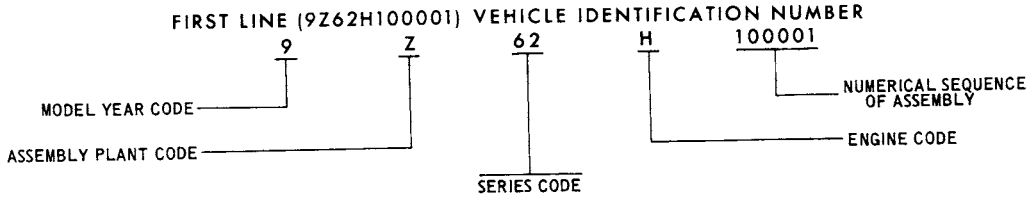

"9"	---	1979 Model Year
"Z"	---	Built at St. Louis Assembly Plant
"62"	---	Marquis 4 Door Sedan
"H"	---	8 cyl. 351-2/B engine
"100001"	---	First Mercury Series Vehicle Assembled During Model Year

MFD. BY FORD MOTOR CO. IN U.S.A.
DATE: 10-78 GVWR: 5347 LB-2425KG
FRONT GAWR: 2714 LB 1231-KG REAR GAWR: 2683 LB 1216-KG

THIS VEHICLE CONFORMS TO ALL APPLICABLE FEDERAL MOTOR VEHICLE SAFETY AND BUMPER STANDARDS IN EFFECT ON THE DATE OF MANUFACTURE SHOWN ABOVE.

VEH. IDENT NO. 9Z62H100001
TYPE PASSENGER

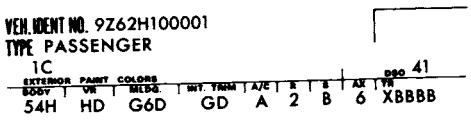

SECOND LINE (54H HD G6D GD A 2 B 6 X BBBB) MISCELLANEOUS VEHICLE DATA

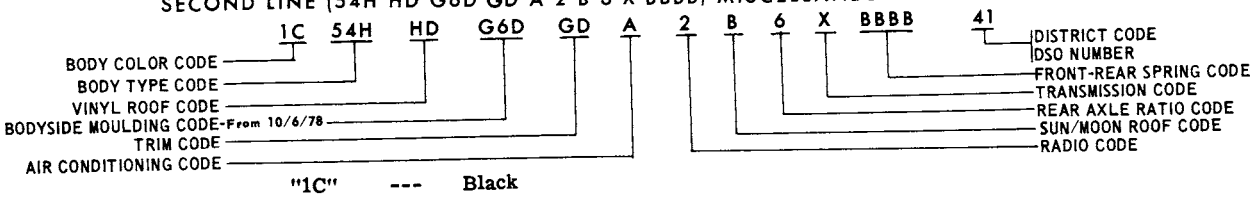

"1C"	---	Black
"54H"	---	Marquis 4 Door Sedan
"HD"	---	Grande Full - Red
"G6D"	---	Medium Red Metallic
"GD"	---	Mercury - B/cloth and Vinyl - L/B Flight Bench - Dark Red
"A"	---	A/C Installed
"2"	---	AM Radio
"B"	---	Sun Roof Glass
"6"	---	Rear Axle Ratio of 3:00 To 1 (Non-Locking)
"X"	---	Cruise-O-Matic (FMX)
"BBBB"	---	Springs - left front, right front, left rear, right rear
"41"	---	Chicago District

OWNER CARD - TYPICAL

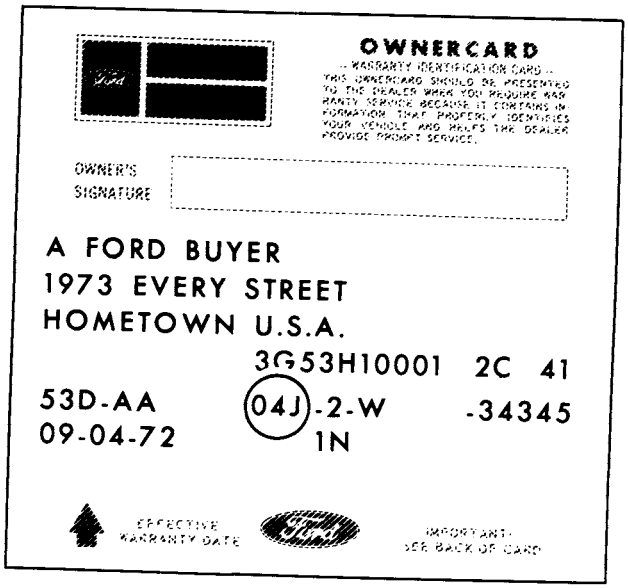

P-10234

Effective dates shown in the catalog, e.g. "Before 9/4/72" and "From 9/4/72" may be determined through interpretation of the build date shown on the owner card.

The numerical position of the build date represents the day of the month.

The alphabetical portion of the build date represents the month in which the unit was built.

For example - 04J Indicates

4th day of month

J - September

Refer to page 36 for a complete list of month codes and the corresponding month.

COPYRIGHT © 1986 — FORD MOTOR COMPANY — DEARBORN, MICHIGAN

WARRANTY PLATE OR CERTIFICATION LABEL

(Refer to Pages 38 thru 41 for Capri Warranty Plate Information)

YEAR CODES

CERTIFICATION LABEL SHOWN

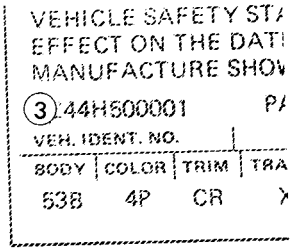

THE FIRST DIGIT OF THE WARRANTY OR VEHICLE IDENTIFICATION NUMBER IDENTIFIES THE MODEL YEAR OF THE VEHICLE.
THE FOLLOWING CHART LISTS THESE CODES AND THE CORRESPONDING MODEL YEAR.

Code - 3	Year - 1973
Code - 4	Year - 1974
Code - 5	Year - 1975
Code - 6	Year - 1976
Code - 7	Year - 1977
Code - 8	Year - 1978
Code - 9	Year - 1979

Note that Bobcat unit built from June 27, 1977 and identified on the Certification Label as "8" will be merchandised in Canada as 1978 models. As of this printing this car line will be merchandised in the United States as 1977 models until announced otherwise. Catalog entries for this unit will be listed as shown in the following example:

77	L	"Before 6/27/77"
77/78	L	"From 6/27/77 to 8/1/77"
77/	L	"From 8/1/77"

ASSEMBLY PLANT CODES

CERTIFICATION LABEL SHOWN

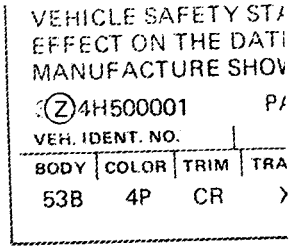

THE SECOND DIGIT OF THE WARRANTY OR VEHICLE IDENTIFICATION NUMBER IDENTIFIES THE PLANT AT WHICH THE VEHICLE WAS ASSEMBLED.
THE FOLLOWING CHART LISTS THESE CODES AND THE CORRESPONDING ASSEMBLY PLANT.

CODE	ASSEMBLY PLANT	CODE	ASSEMBLY PLANT	CODE	ASSEMBLY PLANT	CODE	ASSEMBLY PLANT
A	Atlanta	G	Chicago	P	Twin Cities	U	Louisville
B	Oakville	H	Lorain	R	San Jose	W	Wayne
E	Mahwah	J	Los Angeles	S	Pilot Plant (Allen Park)	X	St. Thomas
F	Dearborn	K	Kansas City	T	Metuchen	Y	Wixom
						Z	St. Louis

PRODUCTION EFFECTIVE DATES

The preferred method for identifying replacement parts for identical applications is to utilize physical differences between the parts, which are oftentimes denoted in the catalog under the description column. Occasionally it is necessary to reference the vehicle build date to determine which replacement part to order. The dates are shown in the text as "BEFORE" and "FROM" a specific date. The date shown in the catalog is the earliest tentative production incorporation date and therefore is subject to change. It is also possible that a production change which is effective at more than one assembly plant may be incorporated on different dates. For these reasons the productions effective date shown in the catalog should be considered as an approximate date.

WARRANTY PLATE or CERTIFICATION LABEL

(Refer to Pages 38 thru 41 for Capri Warranty Plate Information)

SERIES CODES

CERTIFICATION LABEL SHOWN

VEHICLE SAFETY ST
EFFECT ON THE DAT
MANUFACTURE SHO
3X44H500001 P
VEH. IDENT. NO.

BODY	COLOR	TRIM	TRA
53B	4P	CR	

THE THIRD AND FOURTH DIGITS OF THE WARRANTY OR VEHICLE IDENTIFICATION NUMBER IDENTIFY THE BODY SERIES.
THE FOLLOWING CHART LISTS THESE CODES (IN CONJUNCTION WITH THE BODY TYPE CODES - EXCEPT 1965 CANADIAN BUILT VEHICLES) AND THE SERIES OR MODEL WHICH THEY REPRESENT.

CODE SERIES	CODE TYPE	YEAR	DESCRIPTION
(A) MERCURY			
40	53X	73/74	Marquis 4 Door Pillared Hardtop
41	65X	73/74	Marquis 2 Door Hardtop
42	57X	73/74	Marquis 4 Door Hardtop
44	53B	73/74	Monterey 4 Door Pillared Hardtop
46	65B	73/74	Monterey 2 Door Hardtop
50	53H	77/78	Marquis 4 Door Pillared Hardtop - (Canada only)
52	65H	77/78	Marquis 2 Door Hardtop (Canada only)
54	53F	73/74	Monterey Custom 4 Door Pillared Hardtop
56	65F	73/74	Monterey Custom 2 Door Hardtop
60	53L	75/77	Gran Marquis 4 Door Pillared Hardtop
61	65L	75/77	Gran Marquis 2 Door Hardtop
	65H	78	Gran Marquis 2 Door Hardtop
	66H	79	Marquis 2 Door Sedan
62	53K	73/77	Marquis Brougham 4 Door Pillared Hardtop
	53H	78	Marquis 4 Door Pillared Hardtop
	54H	79	Marquis 4 Door Sedan
63	53H	73/77	Marquis 4 Door Pillared Hardtop
	65K	78	Marquis Brougham 2 Door Hardtop
	66K	79	Marquis Brougham 2 Door Sedan
64	65K	73/77	Marquis Brougham 2 Door Hardtop
	53K	78	Marquis Brougham 4 Door Pillared Hardtop
	54K	79	Marquis Brougham 4 Door Sedan
65	65L	78	Gran Marquis 2 Door Hardtop
	66L	79	Gran Marquis 2 Door Sedan
66	65H	73/77	Marquis 2 Door Hardtop
	53L	78	Gran Marquis 4 Door Pillared Hardtop
	54L	79	Gran Marquis 4 Door Sedan
67	57K	73/74	Marquis Brougham 4 Door Hardtop
68	57H	73/74	Marquis 4 Door Hardtop
72	71B	73/74	Monterey Station Wagon
74	71H	73/76	Marquis Station Wagon
	71K	77/78	Marquis Station Wagon
	74H	79	Marquis Station Wagon
76	71K	73/77	Marquis Brougham Station Wagon
	74K	79	Colony Park Station Wagon
(C) MONTEGO (1973/76)			
02	53B	73/76	4 Door Pillared Hardtop
03	65B	73/76	2 Door Hardtop (Formal Roof)
04	53D	73/76	MX 4 Door Pillared Hardtop
07	65D	73/76	MX 2 Door Hardtop (Formal Roof)
08	71D	73/76	MX Station Wagon
10	53K	73/76	Brougham 4 Door Pillared Hardtop
11	65K	73/76	Brougham 2 Door Hardtop (Formal Roof)
16	63R	73	GT 2 Door Hardtop (Fastback Roof)
18	71K	73/76	Villager Station Wagon
(D) LINCOLN			
81	65A	73/74	2 Door Hardtop
	60B	75/	2 Door Pillared Hardtop
82	53A	73/74	4 Door Pillared Hardtop
	53B	75/	4 Door Pillared Hardtop
(F) COUGAR			
90	53D	77	4 Door Pillared Hardtop
91	65D	73	2 Door Hardtop
	65D	77/	2 Door Hardtop
92	76D	73	Convertible
	71D	77	Station Wagon
	53D	78/	4 Door Pillared Hardtop
93	65F	73/76	XR7 2 Door Hardtop
	65L	77/	XR7 2 Door Hardtop
94	76F	73	XR7 Convertible
	53K	77	Brougham 4 Door Pillared Hardtop
95	65K	77	Brougham 2 Door Hardtop
96	71K	77	Villager Station Wagon
(G) MONARCH			
33	66H	78/	2 Door Sedan
34	54H	75/	4 Door Sedan
35	66H	75/77	2 Door Sedan
37	54K	75/77	Ghia 4 Door Sedan
38	66K	75/77	Ghia 2 Door Sedan
(J) CAPRI (1979)			
14	61D	79	3 Door Fastback
16	61H	79	Ghia 3 Door Fastback
(K) MARK IV, MARK V			
89	65D	73/	2 Door Sedan

COPYRIGHT © 1986 — FORD MOTOR COMPANY — DEARBORN, MICHIGAN

WARRANTY PLATE or CERTIFICATION LABEL

(Refer to Pages 38 thru 41 for Capri Warranty Plate Information)

SERIES CODES - cont'd.

CODE SERIES	CODE TYPE	YEAR	DESCRIPTION	CODE SERIES	CODE TYPE	YEAR	DESCRIPTION
			(L) BOBCAT				
13	62B	74	2 Door Sedan	22	73H	75/	2 Door Station Wagon
14	64B	74	3 Door Sedan (Runabout)	23	62B	75/	2 Door Sedan (Canada only)
15	73B	74	2 Door Station Wagon	24	64B	75/	3 Door Sedan - Runabout (Canada only)
20	64H	75/	3 Door Sedan (Runabout)	25	73B	75/	2 Door Station Wagon (Canada only)
			(P) COMET (1973/77)				
30	54B	73/77	4 Door Sedan	31	62B	73/77	2 Door Sedan - Fast Back
			(P) ZEPHYR				
31	66D	78/	2 Door Sedan	35	36R	78/	Sporty Coupe 2 Door Sedan
32	54D	78/	4 Door Sedan	36	74D	78/	Station Wagon
			(V) VERSAILLES				
84	54M	77/	4 Door Sedan				
			(Y) METEOR (1973/76)				
49	53B	73/76	Rideau 500 4 Door Pillared Hardtop	52	65B	73/76	Montcalm 2 Door Hardtop
50	53B	73/76	Montcalm 4 Door Pillared Hardtop	70	71B	73/76	Rideau 500 Station Wagon
51	65B	73/76	Rideau 500 2 Door Hardtop	71	71B	73/76	Montcalm Station Wagon

ENGINE CODES

CERTIFICATION LABEL SHOWN

VEHICLE SAFETY STA
EFFECT ON THE DATI
MANUFACTURE SHOV
3Z4 (H) 00001 P/
VEH. IDENT. NO.

BODY	COLOR	TRIM	TRA
53B	4P	CR	>

THE FIFTH DIGIT OF THE WARRANTY OR VEHICLE IDENTIFICATION NUMBER INDICATES BASIC ENGINE IDENTIFICATION.
THE FOLLOWING CHART LISTS THESE CODES AS WELL AS NUMBER OF CYLINDERS. CUBIC INCH DISPLACEMENT AND NUMBER OF CARBURETOR VENTURI.
FOR FURTHER ENGINE IDENTIFICATION REFER TO SECTION 60 IN THIS CATALOG.

CODE	YEAR	ENGINE CYL	ENGINE C.I.D.	CARB.	REMARKS	CODE	YEAR	ENGINE CYL	ENGINE C.I.D.	CARB.	REMARKS
A	73/78	8	460	4/B	Exc. P/C-7500 cc or 7.5 litres	R	73	8	351	4/B	HO
C	73/78	8	460	4/B	P/C-7500 cc or 7.5 litres	S	73/	8	400	2/B	6600 cc or 6.6 litres
F	73/	8	302	2/B	P/C-5000 cc or 5.0 litres	T	73/	6	200	1/B	3300 cc or 3.3 litres
H	73/	8	351	2/B	5800 cc or 5.8 litres	W	79	4	139	2/B	2300 cc or 2.3 litres-T/C
L	73/	6	250	1/B	4100 cc or 4.1 litres	X	74	4	122	2/B	2000 cc or 2 litres
N	73	8	429	4/B		Y	74/	4	140	2/B	2300 cc or 2.3 litres
Q	73/74	8	351	4/B	CJ	Z	75/	6	171	2/B	2800 cc or 2.8 litres

WARRANTY PLATE OR CERTIFICATION LABEL

(Refer to Pages 38 thru 41 for Capri Warranty Plate Information)

BODY TYPE CODES

CERTIFICATION LABEL SHOWN

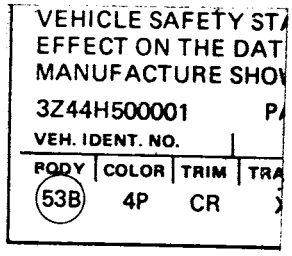

THIS CODE APPEARS ABOVE OR BELOW "BODY" AND IDENTIFIES THE BODY TYPE OF THE UNIT. THE FOLLOWING CHART LISTS THESE CODES (IN CONJUNCTION WITH THE SERIES CODES) AND THE BODY TYPE WHICH THEY REPRESENT.

CODE TYPE	CODE SERIES	YEAR	DESCRIPTION
			(A) MERCURY
53B	44	73/74	Monterey 4 Door Pillared Hardtop
53F	54	73/74	Monterey Custom 4 Door Pillared Hardtop
53H	63	73/77	Marquis 4 Door Pillared Hardtop
	50	77/78	Marquis 4 Door Pillared Hardtop - (Canada only)
	62	78	Marquis 4 Door Pillared Hardtop
53K	62	73/77	Marquis Brougham 4 Door Pillared Hardtop
	64	78	Marquis Brougham 4 Door Pillared Hardtop
53L	60	75/77	Gran Marquis 4 Door Pillared Hardtop
	66	78	Gran Marquis 4 Door Pillared Hardtop
53X	40	73/74	Marquis 4 Door Pillared Hardtop
54H	62	79	Marquis 4 Door Sedan
54K	64	79	Marquis Brougham 4 Door Sedan
54L	66	79	Gran Marquis 4 Door Sedan
57H	68	73/74	Marquis 4 Door Hardtop
57K	67	73/74	Marquis Brougham 4 Door Hardtop
57X	42	73/74	Marquis 4 Door Hardtop
65B	46	73/74	Monterey 2 Door Hardtop
65F	56	73/74	Monterey Custom 2 Door Hardtop
65H	66	73/77	Marquis 2 Door Hardtop
	52	77/78	Marquis 2 Door Hardtop (Canada only)
	61	78	Marquis 2 Door Hardtop
65K	64	73/77	Marquis Brougham 2 Door Hardtop
	63	78	Marquis Brougham 2 Door Hardtop
65L	61	75/77	Gran Marquis 2 Door Hardtop
	65	78	Gran Marquis 2 Door Hardtop
65X	41	73/74	Marquis 2 Door Hardtop
66H	61	79	Marquis 2 Door Sedan
66K	63	79	Marquis Brougham 2 Door Sedan
66L	65	79	Gran Marquis 2 Door Sedan
71B	72	73/74	Monterey Station Wagon
71H	74	73/76	Marquis Station Wagon
71K	76	73/77	Marquis Brogham Station Wagon
	74	78	Marquis Station Wagon
74H	74	79	Marquis Station Wagon
74K	76	79	Colony Park Station Wagon
			(C) MONTEGO (1973/76)
53B	02	73/76	4 Door Pillared Hardtop
53D	04	73/76	MX 4 Door Pillared Hardtop
53K	10	73/76	Brougham 4 Door Pillared Hardtop
63R	16	73	GT 2 Door Hardtop (Fastback Roof)
65B	03	73/76	2 Door Hardtop (Formal Roof)
65D	07	73/76	MX 2 Door Hardtop (Formal Roof)
65K	11	73/76	Brougham 2 Door Hardtop (Formal Roof)
71D	08	73/76	MX Station Wagon
71K	18	73/76	Villager Station Wagon
			(D) LINCOLN
53A	82	73/74	4 Door Pillared Hardtop
53B	82	75/	4 Door Pillared Hardtop
60B	81	75/	2 Door Pillared Hardtop
65A	81	73/74	2 Door Hardtop
			(F) COUGAR
53D	90	77	4 Door Pillared Hardtop
	92	78/	4 Door Pillared Hardtop
53K	94	77	Brougham 4 Door Pillared Hardtop
65D	91	73	2 Door Hardtop
	91	77/	2 Door Hardtop
65F	93	73/76	XR7 2 Door Hardtop
65K	95	77	Brougham 2 Door Hardtop
65L	93	77/	XR7 2 Door Hardtop
71D	92	77	Station Wagon
71K	96	77	Villager Station Wagon
76D	92	73	Convertible
76F	94	73	XR7 Convertible
			(J) CAPRI (1979)
61D	14	79	3 Door Fast back
61H	16	79	Ghia 3 Door Fastback
			(G) MONARCH
54H	34	75/	4 Door Sedan
54K	37	75/77	Ghia 4 Door Sedan
66H	35	75/77	2 Door Sedan
	33	78/	2 Door Sedan
66K	38	75/77	Ghia 2 Door Sedan
			(K) MARK IV, MARK V
65D	89	73/	2 Door Hardtop

COPYRIGHT © 1986 — FORD MOTOR COMPANY — DEARBORN, MICHIGAN

WARRANTY PLATE or CERTIFICATION LABEL

(Refer to Pages 38 thru 41 for Capri Warranty Plate Information)

BODY TYPE CODES - cont'd.

CODE TYPE	CODE SERIES	YEAR	DESCRIPTION
			(L) BOBCAT
62B	13	74	2 Door Sedan
	23	75/	2 Door Sedan (Canada only)
64B	14	74	3 Door Sedan (Runabout)
	24	75/	3 Door Sedan-Runabout (Canada only)
64H	20	75/	3 Door Sedan (Runabout)
73B	15	74	2 Door Station Wagon
	25	75/	2 Door Station Wagon (Canada only)
73H	22	75/	2 Door Station Wagon
			(P) COMET (1973/77)
54B	30	73/77	4 Door Sedan
62B	31	73/77	2 Door Sedan - Fast Back
			(P) ZEPHYR
36R	35	78/	Sporty Coupe 2 Door Sedan
54D	32	78/	4 Door Sedan
66D	31	78/	2 Door Sedan
74D	36	78/	Station Wagon
			(V) VERSAILLES
54M	84	77/	4 Door Sedan
			(Y) METEOR (1973/76)
53B	49	73/76	Rideau 500 4 Door Pillared Hardtop
	50	73/76	Montcalm 4 Door Pillared Hardtop
65B	51	73/76	Rideau 500 2 Door Hardtop
	52	73/76	Montcalm 2 Door Hardtop
71B	70	73/76	Rideau 500 Station Wagon
	71	73/76	Montcalm Station Wagon

VINYL ROOF TYPE and COLOR IDENTIFICATION

VEHICLE CONFORMS TO
WIPER STANDARDS IN E

1975/78 -REFER TO COLOR CODES-EXTERIOR PAINT ON PAGE 33

CERTIFICATION LABEL SHOWN

DENT NO.

1979 A CODE (TWO DIGITS) IDENTIFYING THE ROOF STYLE AND TYPE OF GRAIN (FIRST POSITION) AND THE COLOR (SECOND POSITION). REFER TO THE APPROPRIATE SOFT TRIM SECTION FOR A LISTING AND DESCRIPTION OF THE VINYL ROOF COVER CODES.

1979 VINYL BODYSIDE MOULDING CODES

CONFORMS TO ALL AP
ANDARDS IN EFFECT O

CERTIFICATION LABEL SHOWN

A CODE (THREE DIGITS) WHICH IDENTIFIES THE VINYL BODYSIDE MOULDING COLOR. REFER TO THE 1979 EXTERIOR MOULDING SECTION WHERE THE APPROPRIATE CODE IS LISTED WITH THE PART NUMBER OF THE BODYSIDE MOULDING IT REPRESENTS.

WARRANTY PLATE or CERTIFICATION LABEL

(Refer to Pages 38 thru 41 for Capri Warranty Plate Information)

COLOR CODES - EXTERIOR PAINT

CERTIFICATION LABEL SHOWN

VEHICLE SAFETY STA
EFFECT ON THE DATI
MANUFACTURE SHOV
3Z44H500001 PA
VEH. IDENT. NO.

BODY	COLOR	TRIM	TRA
53B	4P	CR	X

1973/74

THE CODE ABOVE OR BELOW "COLOR" INDICATES THE EXTERIOR PAINT COLOR OF THE VEHICLE.

REFER TO THE PAINT SECTION FOR A LISTING OF THESE CODES AND THE PART NUMBER OF THE REQUIRED PAINT.

1975/78

CERTIFICATION LABEL SHOWN

A CODE (TWO DIGITS) REPRESENTING THE EXTERIOR BODY PAINT COLOR-SOLID COLOR. FOUR CODES IF TWO-TONED, OR VINYL ROOF INSTALLED.

NOTE: SPECIAL ORDER PAINTS WILL NOT REFLECT A PAINT CODE IN THE "COLOR" SPACE ON THE CERTIFICATION LABEL- FOR IDENTIFICATION REFER TO THE SPECIAL ORDER NUMBER SHOWN UNDER THE "DSO" SPACE AFTER THE TWO DIGIT DISTRICT CODE.

THE CODE ABOVE OR BELOW "COLOR" INDICATES THE EXTERIOR PAINT COLOR OF THE VEHICLE. REFER TO THE PAINT SECTION FOR A LISTING OF THESE CODES AND THE PART NUMBER OF THE REQUIRED PAINT.

VEHICLE SAFETY STAND
EFFECT ON THE DATE
MANUFACTURE SHOWN
3Z44H500001 PART
VEH. IDENT. NO.

BODY	COLOR	TRIM	TRANS
53B	ICDA	CR	X

1979

CERTIFICATION LABEL SHOWN

DUMPER STANDARDS IN E

VEH. IDENT NO.
TYPE
1C

EXTERIOR	PAINT	COLORS
BODY	VR	MLDG

THE CODE ABOVE OR BELOW "COLOR" INDICATES THE EXTERIOR PAINT COLOR OF THE VEHICLE. REFER TO THE PAINT SECTION FOR A LISTING OF THESE CODES AND THE PART NUMBER OF THE REQUIRED PAINT.

TRIM CODES

1973/74

CERTIFICATION LABEL SHOWN

THE CODE SHOWN ABOVE OR BELOW "TRIM" INDICATES THE COLOR AND TYPE OF MATERIALS USED IN THE INTERIOR UPHOLSTERY AS WELL AS THE COLOR OF THE INTERIOR PAINT.

VEHICLE SAFETY STA
EFFECT ON THE DATI
MANUFACTURE SHOV
3Z44H500001 PA
VEH. IDENT. NO.

BODY	COLOR	TRIM	TRA
53B	4P	CR	X

1975/

TWO CODE COMBINATION REPRESENTING THE SEAT TYPE AND COLOR OF INTERIOR TRIM SCHEME.

REFER TO THE APPROPRIATE SOFT TRIM SECTION FOR A LISTING OF THESE CODES AND THE COLOR AND TYPE OF MATERIALS USED IN THE INTERIOR UPHOLSTERY. REFER TO THE PAINT SECTION FOR A LISTING OF THESE CODES AND THE PART NUMBER FOR THE REQUIRED PAINT.

COPYRIGHT © 1986 — FORD MOTOR COMPANY — DEARBORN, MICHIGAN

WARRANTY PLATE or CERTIFICATION LABEL

(Refer to Pages 38 thru 41 for Capri Warranty Plate Information)

AIR CONDITIONER CODE

FLIABLE FEDERAL MOT
THE DATE OF MANUF

A - FORD FACTORY INSTALLED (INTEGRAL) AIR CONDITIONING (1978/)
AR8- AIR CONDITIONING (NON-FACTORY INSTALLED) (1978 only)
AR9- AIR CONDITIONING (NON-FACTORY INSTALLED MANUAL A/C) (1978 only)
BLANK-UNIT BUILT AND DELIVERED LESS FACTORY INSTALLED (INTEGRAL) AIR CONDITIONING(1978/)

CERTIFICATION LABEL SHOWN

1979 RADIO TYPE CODES

ABLE FEDERAL MOTOR
E DATE OF MANUFACTU

THE CODE SHOWN BELOW IDENTIFIES THE TYPE OF RADIO AND WHETHER OR NOT THE VEHICLE IS ALSO EQUIPPED WITH C.B. RADIO OPTION.

CERTIFICATION LABEL SHOWN

CODE	DESCRIPTION
G	AM/FM MPX, Cassette - w/CB Radio
H	AM Digital Clock and Dual Rear Speakers-w/o CB Radio
J	AM/FM MPX Quadrasonic Tape - w/CB Radio
K	AM - w/CB Radio
L	AM/FM Monaural - w/CB Radio
M	AM/FM Multiplex - w/CB Radio
N	AM/FM Multiplex Stereo Tape - w/CB Radio
O	AM/FM Multiplex Search - w/CB Radio
P	AM and Dual Rear Speakers - w/CB Radio
Q	AM/FM Mono & Dual Rear Speakers - w/CB Radio
R	AM Stereo Tape - w/CB Radio
S	AM and Dual Rear Speakers - w/o CB Radio

CODE	DESCRIPTION
T	AM/FM Mono & Dual Rear Speakers - w/o CB Radio
U	AM/FM MPX Quad 8 Electronic - w/CB Radio
V	Flexibility Option - w/o CB Radio
W	AM/FM MPX Quad 8 Electronic - w/o CB Radio
1	AM/FM MPX Quadrasonic Tape - w/o CB Radio
2	AM - w/o CB Radio
3	AM/FM Monaural - w/o CB Radio
4	AM/FM Multiplex - w/o CB Radio
5	AM/FM Multiplex Stereo Tape - w/o CB Radio
6	AM/FM Multiplex Search - w/o CB Radio
7	AM/FM MPX, Cassette - w/o CB Radio
8	AM Digital Clock - w/o CB Radio
9	AM Stereo Tape - w/o CB Radio

1979 SUN ROOF/MOON ROOF CODES

DERAL MOTOR VEHICL
OF MANUFACTURE SH

A - SUNROOF REMOVABLE SIDE PANEL-"T" ROOF
B - SUNROOF GLASS-SLIDING ROOF
C - SUNROOF REMOVABLE GLASS
E - SUNROOF GLASS FIXED

CERTIFICATION LABEL SHOWN

WARRANTY PLATE or CERTIFICATION LABEL

(Refer to Pages 38 thru 41 for Capri Warranty Plate Information)

TRANSMISSION CODES

CERTIFICATION LABEL SHOWN

TY STANDARDS IN
E DATE OF
E SHOWN ABOVE
PASSENGER

IM	TYPE TRANS	AXLE	DSO
R	X	6	42

THE CODE SHOWN ABOVE OR BELOW "TRANS" IDENTIFIES THE TYPE OF TRANSMISSION.
THE FOLLOWING CHART LISTS THESE CODES AND THE TRANSMISSION WHICH THEY REPRESENT.

CODE	YEAR	TYPE
1	73/78	3 Speed Manual Shift
5	73/76	4 Speed Manual Shift-U.S. or German
	78/	4 Speed Manual - Overdrive (Ford)
6	79	4 Speed Manual - Borg Warner
7	77/	4 Speed manual shift - Hummer (German)
S	77/	Jatco Automatic
U	73/	C6 Automatic
V	75/	C3 Automatic
W	73/	C4 Automatic
X	73/	Cruise-O-Matic (FMX)
Y	79	Cruise-O-Matic - Borg Warner
Z	73/76	C6 Automatic Special - (Police and Trailer Towing)

REAR AXLE RATIO CODES

CERTIFICATION LABEL SHOWN

TY STANDARDS IN
E DATE OF
E SHOWN ABOVE
PASSENGER

IM	TYPE TRANS	AXLE	DSO
R	X	6	42

THE CODE SHOWN ABOVE OR BELOW "AXLE" IDENTIFIES THE RATIO OF THE REAR AXLE.
THE FOLLOWING CHART LISTS THESE CODES AND THE CORRESPONDING RATIO.
FOR FURTHER IDENTIFICATION REFER TO SECTION 40 IN THIS CATALOG.

CODE	YEAR	REMARKS	RATIO LOCKING	RATIO NON-LKG.
1	77/			2.50
2	73/			2.75
3	73/			2.79
4	76/78			3.18
5	74/76			3.07
6	73/			3.00
7	73/78			3.40
8	77/			2.73
9	73/76			3.25
A	73/74			3.50
B	77/			2.47
C	79		2.47	
E	74/76		3.07	
F	79			3.45
G	73/76			3.55
	79			2.26
H	79		2.73	
J	77/		2.50	
K	73/76, 79		2.75	
L	73/76, 79		2.79	
M	76		3.18	
O	73/		3.00	
P	73/76		3.40	
R	73/76		3.25	
S	73/74		3.50	
W	79		3.45	
X	74/76		3.55	
Y	78/			3.08

COPYRIGHT © 1986 — FORD MOTOR COMPANY — DEARBORN, MICHIGAN

WARRANTY PLATE or CERTIFICATION LABEL

(Refer to Pages 38 thru 41 for Capri Warranty Plate Information)

1979 FRONT-REAR SPRING CODES

THE CODE SHOWN BELOW (TR) IDENTIFIES THE PART NUMBERS OF THE FRONT AND REAR COIL SPRINGS (GROUP 5310 AND 5560).

FOR CROSS REFERENCE FROM CODE TO SERVICE PART NUMBER REFER TO SECTION 53.74/ IN THIS CATALOG.

CERTIFICATION LABEL SHOWN

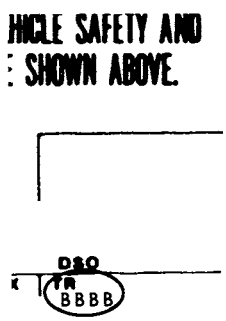

MONTH CODES

THE MONTH CODE IS SHOWN ON THE CERTIFICATION LABEL IN THE UPPER LEFT HAND CORNER (e.g. 9/72 INDICATES SEPTEMBER 1972).

THE MONTH AND DAY OF MANUFACTURE IS SHOWN ON THE OWNER CARD.

THE NUMERICAL PORTION IDENTIFIES THE DAY AND THE ALPHABETICAL PORTION IDENTIFIES THE MONTH.

THE MONTH CODES ARE LISTED IN THE FOLLOWING CHART TOGETHER WITH THE MONTH WHICH THEY REPRESENT.

CERTIFICATION LABEL

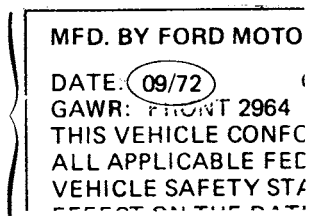

OWNER CARD

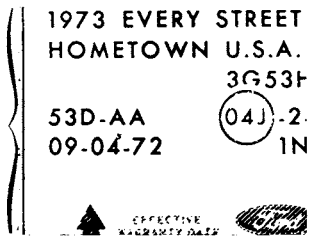

CODE	MONTH - FIRST YEAR	CODE	MONTH - FIRST YEAR	CODE	MONTH - SECOND YEAR	CODE	MONTH - SECOND YEAR
A	January	G	July	N	January	U	July
B	February	H	August	P	February	V	August
C	March	J	September	Q	March	W	September
D	April	K	October	R	April	X	October
E	May	L	November	S	May	Y	November
F	June	M	December	T	June	Z	December

1979 BUILD DATE STAMP LOCATIONS

LOCATION OF VEHICLE BUILD DATE STAMP

TOP OF RADIATOR SUPPORT

EXAMPLE

ASSEMBLY PLANTS ARE USING A 4 DIGIT NUMBER THAT INDICATES THE MONTH AND DAY OF BUILD.

Actual Calender Date of Build	Date Stamp On Unit
January 24	0124
October 21	1021

WARRANTY PLATE or CERTIFICATION LABEL

(Refer to Pages 38 thru 41 for Capri Warranty Plate Information)

DISTRICT CODES

CERTIFICATION LABEL SHOWN

TY STANDARDS IN
E DATE OF
E SHOWN ABOVE
PASSENGER

TYPE			
IM	TRANS.	AXLE	DSO
R	X	6	42

THE CODE SHOWN ABOVE OR BELOW "D.S.O." IDENTIFIES THE DISTRICT WHICH ORDERED THE UNIT. THE FOLLOWING CHART LISTS THESE CODES AND THE DISTRICT WHICH THEY REPRESENT. FOR AN EXPLANATION OF THE DSO PORTION OF THE NUMBER REFER TO PAGE

CODE	DISTRICT	CODE	DISTRICT	CODE	DISTRICT	CODE	DISTRICT
A1	Central (Ford of Canada)	12	Export (Ford of Canada)	23	Jacksonville	42	St. Louis
A2	Eastern (Ford of Canada)	11	Boston	26	Memphis	46	Twin Cities
A3	Atlantic (Ford of Canada)	15	New York	31	Buffalo	51	Denver
A4	Midwestern (Ford of Canada)	16	Philadelphia	32	Cincinnati	52	Los Angeles
		17	Washington	33	Cleveland	53	Oakland
A6	Western (Ford of Canada)	21	Atlanta	34	Detroit	54	Seattle
A7	Pacific (Ford of Canada)	22	Dallas	41	Chicago	84	Home Office Reserve
A8	Great Lakes (Ford of Canada)					90/99	Export

ENGINE ASSEMBLY PLANT CODES

THE CODE SHOWN BELOW IS SHOWN ONLY ON THE ENGINE IDENTIFICATION TAG - REFER TO SECTION 60 FOR COMPLETE INFORMATION.

ENGINE CODE	ENGINE PLANT	ENGINE CODE	ENGINE PLANT
C	Cleveland	W	Windsor - Canada

COPYRIGHT © 1986 — FORD MOTOR COMPANY — DEARBORN, MICHIGAN

CAPRI WARRANTY PLATE - TYPICAL
1973/77 (U.S.) 1973/78 (CANADA)

1979 CAPRI (Refer to pages 28 thru 37 for Warranty Plate Information)

Located on the right hand fender apron in the engine compartment

The Warranty Plate includes -

1. Type and Vehicle Number (first line) consists of codes which identify Body Type, Year of Model Introduction, Country of Origin, Assembly Plant, Body Type, Calendar Year, Month and Numerical Sequence of Assembly.
2. Miscellaneous Vehicle Date (second line) consists of codes which identify Drive, Engine, Transmission, Rear Axle Ratio, Color of Exterior Paint and Trim.

Refer to Pages 36 and 37 for complete listing of Codes.

	TYPE	VERSION	VEHICLE NO.
FIRST LINE 1973/74	EC J	D	G A EC N D 78175
FIRST LINE 1976	G EC P	D	G A EC P A 78175

PRODUCT SOURCE COMPANY
BODY TYPE CODE
YEAR OF MODEL INTRODUCTION
VERSION
NUMERICAL SEQUENCE OF ASSEMBLY
MONTH CODE
CALENDAR YEAR CODE
BODY TYPE CODE
ASSEMBLY PLANT CODE
COUNTRY OF ORIGIN CODE

EC	---	Two Door Sedan
J-P	---	J-1969 P-1974
G	---	Germany
A	---	Assembled at Cologne
EC	---	Two Door Sedan
N-P	---	N-1973 (Calendar Year) P-1974 (Calendar Year)
D-A	---	November
78195	---	78195th vehicle assembled at Cologne during Calendar year

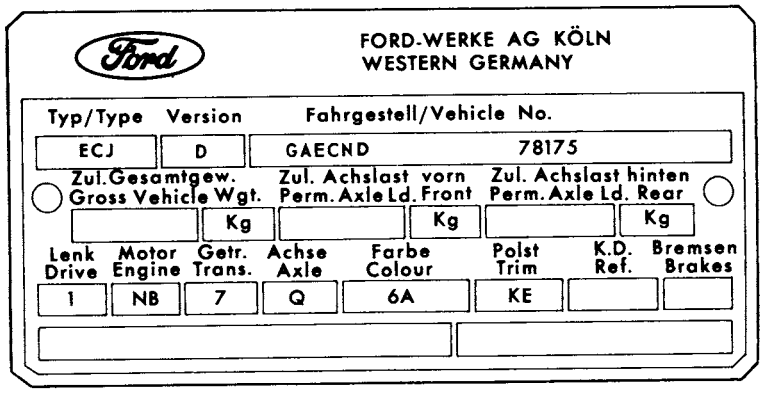

P-8231

SECOND LINE (1 NB 7 Q 6A KE) MISCELLANEOUS VEHICLE DATA

1 NB 7 Q 6A KE

DRIVE CODE
ENGINE CODE
TRANSMISSION CODE
TRIM CODE
COLOR CODE (EXTERIOR PAINT)
REAR AXLE RATIO CODE

1	---	Left Hand Drive
NB	---	2000 cc (122 C.I.D.)
7	---	Automatic Transmission (Floor Shift)
Q	---	Rear Axle Ratio of 3.44 to 1
6A	---	Evergreen Metallic (6) with Black vinyl roof (A)
KE	---	Ermine White Vinyl

CAPRI WARRANTY PLATE - TYPICAL - continued

1973/77 (U.S.) 1973/78 (CANADA)

1979 CAPRI (Refer to pages 28 thru 37 for Warranty Plate Information)

DRIVE CODES

1 - Left Hand Drive

2 - Right Hand Drive

YEAR of MODEL INTRODUCTION

J - 1969: For Model Years 1973/74
P - 1974: For Model Year 1976/

CATALOG MODEL YEAR CODES

The vehicle model year as shown in this catalog is to be determined from the Build Date indicated below:

MODEL YEAR	* BUILD DATE FROM	TO
1973	9/72	7/73
1974	8/73	10/74
1976	11/74	12/76
1977	1/77	

* Build Date is identified on Warranty Plate as Calendar Year Code and Month Code. These codes are explained on the next page.

ENGINE CODES

NB - 122 C.I.D. (2000 cc or 2.0 Litre)
PX - 171 C.I.D. (2800 cc or 2.8 Litre)
UX - 159 C.I.D. (2600 cc or 2.6 Litre)
Y8 - 140 C.I.D. (2300 cc or 2.3 Litre)-8.7:/ compression ratio)
Y9 - 140 C.I.D. (2300 cc or 2.3 Litre)-9.1:/ compressor ratio)

TRANSMISSION CODES

B - Manual transmission (floor shift)
C - Automatic transmission (C4)
D - Automatic transmission (C3)

REAR AXLE RATIO CODES

B - 3.75 to 1
C - 3.89 to 1
L - 3.09 to 1
R - 3.22 to 1
S - 3.44 to 1

COLOR CODES (EXTERIOR PAINT)

Single digit code indicates solid color. Two digit code indicates solid color with vinyl roof cover. For a listing of these codes and the part number of the required paint refer to Paint Section

TRIM CODES

First digit indicates color. . . . . Second digit indicates type of fabric
Refer to the appropriate Soft Trim Section for a listing of these codes and the color and type of materials used in the Interior Upholstery.

COUNTRY of ORIGIN CODES

G - Germany

COPYRIGHT © 1986 — FORD MOTOR COMPANY — DEARBORN, MICHIGAN

1973/79 LINCOLN-MERCURY CARS

CAPRI WARRANTY PLATE - TYPICAL - continued

1973/77 (U.S.) 1973/78 (CANADA)

1979 CAPRI (Refer to pages 28 thru 37 for Warranty Plate Information)

ASSEMBLY PLANT CODES

A - Cologne B - Genk

VERSION

D - All Capri 1973/74
D - 64D (Base model) 1976/ (Full Fold Down Rear Seat)
P - 64P (Decor model) 1976 (Split Fold Down Rear Seat)
P - 64P (Decor model-Ghia badged) 1977/ (Split Fold Down Rear Seat)
T - 64T (Ghia model) 1976
S - 64S ("S" model) 1976

BODY TYPE CODES

EC - Two Door Sedan
61D - Three Door Fastback
61H - Three Door Fastback - Ghia

CALENDAR YEAR CODES

(First Digit of Date Code)

N - 1973
P - 1974
R - 1975
S - 1976
T - 1977

MONTH CODES

(Second Digit of Date Code)

MONTH CODE	1973 CALENDAR YEAR CODE N	1974 CALENDAR YEAR CODE P	1975 CALENDAR YEAR CODE R
A	July	November	
B	May	September	
C	September		January
D	November		March
E	December		April
G	August	December	
J	January	May	September
K	October		February
L		January	May
M	March	July	November
P	April	August	December
R	June	October	
S		March	July
T		April	August
U	February	June	October
Y		February	June

MONTH CODE	1976 CALENDAR YEAR CODE S	1977 CALENDAR YEAR CODE T	CALENDAR YEAR
A	March	July	
B	January	May	
C	May	September	
D	July	November	
E	August	December	
G	April	August	
J		January	
K	June	October	
L	September		
M		March	
P		April	
R	February	June	
S	November		
T	December		
U		February	
W	October		

CAPRI WARRANTY PLATE - TYPICAL - continued

1973/77 (U.S.) 1973/78 (CANADA)

1979 CAPRI (Refer to pages 28 thru 37 for Warranty Plate Information)

LOCATIONS OF VEHICLE NUMBER

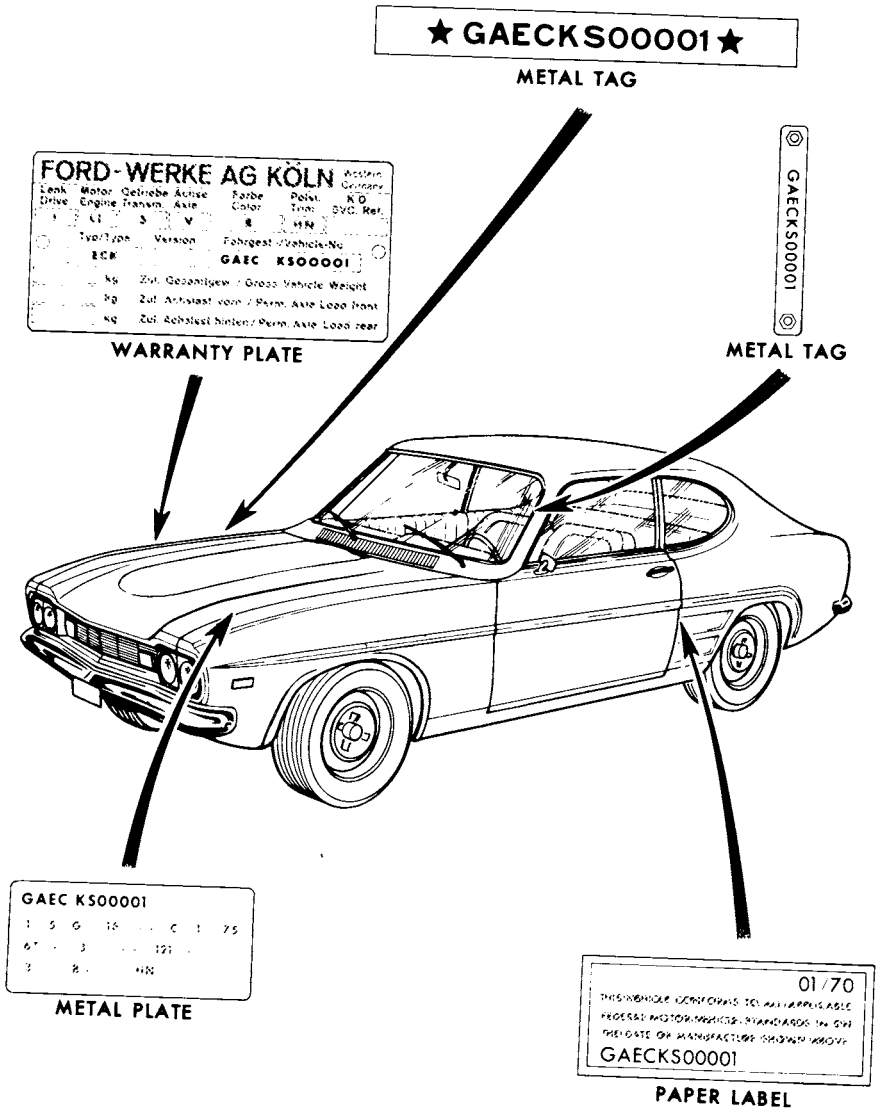

P-7691

COPYRIGHT © 1986 — FORD MOTOR COMPANY — DEARBORN, MICHIGAN

PART NAME	GROUP NUMBER
Air conditioner kits	19B968
Antenna kit (radio)	18813
Ball kit (trailer hitch)	19F503
Bezel kit (A/C)	19C872
Carrier kit (luggage)	♦55100
Chassis assy. (radio receiver)	18806
Cigar lighter kit	15A044
Clock kit	15A000
Compressor kit (A/C)	19703
Condenser kit (A/C)	19708
Coolant recovery kit	8522
Cover kit (luggage carrier)	19B507
Cover kit (steering wheel)	3L600
Decal kit (safety standard certification)	♦20472
Decal kit-tire instructions (Dealer Recertification)	1532
Defogger kit (back window)	18397
Drive kit (A/C)	19B969
Fire extinguisher kit	19B540
Frame kit (license plate)	17A387
Game and table kit	♦279B76
Gauge (engine vacuum kit)	10B944
Guard kit (rear bumper)	17984
Guard kit (splash shield)	16A550
Heater assy. (block)	6A051
Hitch kit (trailer)	19D520
Horn kit	13800
KIT - refer to appropriate noun name For example	
Guard kit (splash shield)	16A550
Leveler kit (air)	5A589
Lock kit (rear door safety)	♦21850
Lock release kit (luggage compartment door remote control)	♦432A00
Mat (front floor)	♦13056, ♦13086
Mat (rear floor)	♦13106
Mat kit (front and rear floor)	♦13088
Mirror (vanity)	17A679
Mirror kit (inside rear view)	17700
Mirror kit (outside)	17696
Moulding kit (body side)	♦21048
Moulding kit (door outside rear edge)	♦20910
Oil cooler kit (transmission aux.)	7K177
Radio kit	18805
Reflector flare kit	19E500
Seat (child's safety)	19E535
Speaker and hardware kit (radio)	18819
Speaker kit (rear seat)	18875
Speaker kit (stereo)	18808
Speed control kit	9A818
Speedometer cable kit (speed control)	9A820
Tachometer kit	17A326
Tool and safety kit (highway)	19F515

♦ This is a Body group. Body group numbers are listed numerically following group 19B969.

COPYRIGHT © 1986 — FORD MOTOR COMPANY — DEARBORN, MICHIGAN

INDEX

△ Refer to Page 1 of Paint Section

A

PART NAME	GROUP NUMBER
Absorber (body bolt upper)	5B098
Absorber (front fender to cowl side sound)	16071–2
Accelerator assy.	9725
Accumulator hose assy. (A/C refrigerant line)	19C836
Actuator (backup lamp switch)	15540
Actuator (carb. feedback control)	9C908
Actuator (courtesy lamp switch)	13A786
Actuator kit (turbocharger)	9G488
Actuator (luggage compt. door open warning switch)	10C873
Actuator (P/S gear valve)	3812
Actuator (seat belt & ignition warning)	14A554
Actuator (steering column lock lever)	3E715
Actuator (trans. shift selector indicator)	7E123
Actuator assy. (brake skid control)	2B002
Actuator assy. (horn warning)	13A927
Actuator Assy. (illuminated entry)	13C718
Actuator assy. (P/brake release switch)	2B624
Actuator assy. (speed control)	9AB25
Actuator assy. (steering column lock)	3E723
Actuator kit (P/S control valve)	3783
Adapter (A/C evaporator air)	19C800
Adapter (A/C refrigerant line)	19D695
Adapter (A.T.C. evaporator air)	19C800
Adapter (air by–pass valve)	9H314
Adapter (brake master cylinder mounting)	2B286
Adapter (carb. A/cleaner inlet hose)	9E606
Adapter (carb. A/cleaner to intake tube)	9D608
Adapter (carb. choke control tube)	9C786
Adapter (connection vacuum hose brake booster)	2B276
Adapter (distributor base)	12A217
Adapter (eng. crankshaft to converter)	6381
Adapter (exhaust gas recirculating valve)	9P753
Adapter (exhaust air supply pump)	9G470
Adapter (front suspension lower arm)	3375–6
Adapter (fuel vapor purge tube to air cleaner)	9D692
Adapter (heater temperature control valve)	18K306
Adapter (heater windshield defroster outlet)	18A527
Adapter (intake manifold to deceleration valve)	9K495
Adapter (manifold inlet vacuum pipe to distributor)	9K442
Adapter (oil pressure gauge to cylinder block)	9D295
Adapter (power brake booster mounting)	2L248
Adapter (P/S pump outlet)	3E598
Adapter (rear axle shaft)	4A404–5
Adapter (speed control vac. valve actuator)	9C962
Adapter (seat belt interlock)	14K690
Adapter (thermostatic choke control inlet tube)	9C786
Adapter (tire inflation)	1705
Adapter (trans. rear pump)	7K220
Adapter (windshield washer hose)	17A612
Adapter assy. (A/C evaporator to plenum chamber)	19D740
Adapter assy. (alternator regulator)	10N300
Adapter assy. (eng. crankcase vent)	6A665
Adapter assy. (eng. oil filter)	6881
Adapter assy. (heater outlet duct)	18C387

A — Cont'd

PART NAME	GROUP NUMBER
Adapter assy. (power steering tube)	3N668
Adapter kit (brake tube conn. booster)	2L187
Adapter kit (speed control)	9A819
Adhesives	△
Adjuster (headlamp cover)	13C023
Adjuster (parking brake cable rear)	2K390
Adjuster (P/S control valve spool)	3B700
Adjuster (rear axle differential bearing)	4067
Adjuster (speed control connector)	9C876
Adjuster (steering gear worm thrust bearing)	3A670
Adjuster assy. (parking brake cable rear)	2B599
Air conditioner kits	19B968
Air conditioner refrigerant	△
Alternator (mounting brackets)	10A313
Alternator (regulator mounting kit)	10A596
Alternator assy.	10346
Ambient switch (A/C cut–off)	19618
Ammeter (instrument cluster)	10850
Amplifier assy. (A.T.C. control box)	19D612
Amplifier assy. (EGR vacuum)	9E451
Amplifier assy. (light sensor)	13A018
Amplifier assy. (speed control)	9D843
Anchor (wheel ornament screw)	1A100
Antenna kit (radio)	18813
Anti–squeak (rear spring)	5586
Anti–theft kit (car alarm)	19L514
Applique (wheel cover)	1137
Apron (front fender)	16054–5
Armature (starter motor)	11005
Armature (windshield wiper motor)	17A485
Arm (eng. valve rocker)	6564
Arm (exhaust air supply pump belt adjustment)	9B452
Arm (front bumper inner)	17766–7
Arm (front bumper isolator)	17754–5
Arm (front spindle)	3130–1
Arm (rear bumper inner)	17787–8
Arm (rear bumper outer)	17795–6
Arm (steering gear sector shaft)	3590
Arm (trans. control selector)	7346
Arm (windshield wiper motor output)	17A436
Arm (windshield wiper mounting)	17540
Arm (windshield wiper pivot)	17526–7
Arm assy. (carb. metering rod)	9D819
Arm assy. (front suspension lower)	3078–9
Arm assy. (front suspension upper)	3082
Arm assy. (fuel pump rocker)	9376
Arm assy. (rear suspension lower)	5A649
Arm assy. (trans. gearshift selector)	7302–3
Arm & bracket assy. (steering idler)	3355
Arm & bushing assy. (rear suspension upper)	5500
Arm & pivot shaft (windshield wiper mounting)	17566–7
Arm & support (trans. selector lever)	7302
Arm kit (rear suspension)	5A826
Automatic headlamp dimmer kit	13A016

COPYRIGHT © 1986 — FORD MOTOR COMPANY — DEARBORN, MICHIGAN

INDEX

PART NAME	GROUP NUMBER
△ Refer to Page 1 of Paint Section	
A — Cont'd	
Axle assy. (rear)	4001, 4005–6
B	
Baffle (A/C)	19A999
Baffle (A/C drain pan)	19A636
Baffle (A/C evaporator drain pan)	19A636
Baffle (brake master cylinder reservoir)	2L075
Baffle (carb. air valve)	9S570
Baffle (carb. automatic choke plate)	9A539
Baffle (eng. cylinder block vent)	6A630
Baffle (eng. intake manifold oil)	6A630
Baffle (eng. valve push rod valley)	6524
Baffle (eng. valve rocker arm oil)	6524, 6A630
Baffle (front brake grease)	2240
Baffle (heater plenum chamber air)	18C343
Baffle (high beam lamp)	10B892
Baffle (instrument cluster indicator)	10C874
Baffle (instrument cluster lamp)	10A990
Baffle (intake manifold air)	9E463
Baffle (intake manifold fuel distributor)	9E442
Baffle (rear axle bearing grooved cover)	4805
Ball (carb. pump discharge check)	9576
Ball (clutch release equalizer shaft)	7543
Ball (trailer hitch kit)	19F503
Ball (trans. coasting booster valve shuttle)	7E195
Ball kit (steering gear worm)	3647
Ball ramp kit (rear wheel disc brake)	2A870–1
Ball stud kit (steering drag link)	3A533
Band (starter cover)	11126
Band (trans. front servo)	7A162
Band (trans. rear)	7A176
Band assy. (trans. intermediate servo)	7D034
Band assy. (trans. reverse clutch)	7D095
Bar (headlamp cover)	13B029
Bar (heater control lever guide)	18C648
Bar (trailer hitch)	19D522
Bar assy. (clutch release equalizer)	7528
Bar assy. (front stabilizer)	5482
Bar assy. (rear stabilizer)	5A772
Bar & bushing assy. (rear track)	5A639
Bar kit (rear track mounting)	5B640
Base (body side lamp)	15A210
Base (clock)	15A004
Base (jack)	17088
Base assy. (auxiliary fuel tank cover)	9B162
Battery chart	10653–5
Bearing (A/C compressor pulley)	2990
Bearing (alternator front)	10A303
Bearing (alternator rear)	10A304
Bearing (clutch pilot)	7600
Bearing (clutch release)	7580
B — Cont'd	
Bearing (coupling shaft)	4840
Bearing (driveshaft roller spline)	4789
Bearing (eng. auxiliary drive shaft front)	6A753
Bearing (eng. auxiliary drive shaft rear)	6A738
Bearing (eng. camshaft)	6261–3, 6267, 6270
Bearing (eng. connecting rod)	6211
Bearing (eng. crankshaft main)	6333–7
Bearing (headlamp adjusting ring)	13B160
Bearing (P/S gear input shaft)	3D525
Bearing (P/S gear valve cover)	3K771
Bearing (rear axle driving pinion pilot)	4625
Bearing (rear wheel)	1225
Bearing (starter brush end plate)	11052
Bearing (starter motor drive end housing)	11135
Bearing (steering column tube)	7347
Bearing (steering gear rack adjustment)	3F515
Bearing (steering gear worm thrust)	3571
Bearing (trans. control selector tube)	7347
Bearing (trans. gearshift tube)	7347
Bearing (trans. input & output shaft)	7025, 7065
Bearing (trans. main drive)	7025
Bearing (trans. main shaft pilot)	7120
Bearing (trans. rear clutch sun gear front)	7D480
Bearing (trans. rear servo lever needle)	7–7406
Bearing (trans. shift bellcrank)	7C327
Bearing (trans. sun gear thrust)	7D234
Bearing (windshield wiper arm)	17573
Bearing assy. (belt idler pulley)	10094
Bearing assy. (P/S gear pinion)	3K769
Bearing assy. (steering column tube)	3517
Bearing assy. (trans. rear clutch brake drum & sun gear front)	7D480
Bearing & retainer kit (rear disc brake)	2B598
Bearing kit (eng. camshaft)	6A251
Bearing kit (P/S gear thrust)	3D729–30
Bellcrank (trans. accelerator)	7A185
Bellcrank (trans. column shift selector)	7A185
Belt (drive)	8620
Belt (eng. timing)	6268
Bender (heater hose 90°)	18573
Bezel (cigar lighter illumination)	15K040
Bezel (clock)	15010
Bezel (front or rear side lamp)	15A440
Bezel (headlamp)	13048
Bezel (heater switch)	18598
Bezel (ignition switch)	11584
Bezel (instrument cluster)	10876
Bezel (instrument cluster control)	10852
Bezel (parking brake release)	2A832
Bezel (parking lamp)	13210

INDEX

△ Refer to Page 1 of Paint Section

B — Cont'd

PART NAME	GROUP NUMBER
Bezel (radio control)	18842
Bezel (radio speaker fader control)	18A842
Bezel (rear reflector)	13A570
Bezel (rear view outside mirror control)	17530
Bezel (rear window regulator control switch)	14A122
Bezel (seat regulator control switch)	14B690, 14A706
Bezel (selector switch)	9A389
Bezel (trans. console selector dial)	7D443
Bezel (trans. gearshift lever boot)	7E391
Bezel assy. (exterior pillar lamp)	15B438
Bezel assy. (reading lamp)	13C733
Bezel & lens (warning indicator panel lamp)	10C876
Bezel & lens assy. (trans. column shift selector)	7E055
Bezel kit (A/C)	19C872
Blade assy. (windshield wiper)	17528
Block (A/C refrigerant line)	19D695
Block (headlamp switch junction)	11A647
Block (junction)	14448
Block assy. (eng. cylinder)	6010
Board assy. (alternator circuit)	10B301
Board kit (alternator printed circuit)	10B301
Body (A/C charging valve)	19D878
Body (rear lamp)	13440
Body (trans. front band servo)	7A094
Body (trans. governor)	7C063
Body (trans. governor oil collector)	7D220
Body (trans. rear band servo)	7B172
Body assy. (front fender side lamp)	15A426
Body assy. (trans. governor)	7C063
Body & socket assy. (interior lamp)	13786
Bolt (A/C compressor idler pulley mounting)	2A934
Bolt (alternator thru)	10A396
Bolt (battery cable)	10B659
Bolt (differential carrier to rear axle housing)	4347
Bolt (driveshaft universal joint)	4529
Bolt (eng. connecting rod)	6214
Bolt (eng. crankshaft main bearing cap)	6345
Bolt (eng. crankshaft pulley)	6A340
Bolt (eng. cylinder head)	6065
Bolt (eng. flywheel to crankshaft)	6379
Bolt (eng. front support insulator)	6047
Bolt (eng. oil filter adapter mounting)	6894
Bolt (eng. timing belt tensioner)	6K282
Bolt (eng. valve rocker arm shaft support)	6A527
Bolt (eng. valve rocker arm support)	6A527
Bolt (exhaust air supply tube)	9C481
Bolt (front coil spring top mounting plate)	3B197
Bolt (front suspension lower arm strut)	3B267
Bolt (fuel tank shield)	9A010
Bolt (fuel tank strap)	9A010
Bolt (fuse panel junction)	14A187
Bolt (P/S control valve spool)	3–3698

B — Cont'd

PART NAME	GROUP NUMBER
Bolt (rear axle differential case)	4216
Bolt (rear axle differential cover to housing)	4347
Bolt (rear brake backing plate)	2248
Bolt (spare wheel mounting)	1448
Bolt (starter thru)	11091
Bolt (steering column tube flange)	3641
Bolt (trans. kickdown shaft retaining)	7C310
Bolt (trans. overrunning clutch to case)	7D167
Bolt (trans. planetary gears support to case)	7A291
Bolt (trans. rear servo body to case)	7D477
Bolt (wheel hub)	1107
Bolt assy. (eng. tensioner)	6E008
Bolt assy. (radiator coolant recovery reservoir)	8C102
Bolt & washer (eng. oil pump attaching)	6638
Bolt kit (alternator thru)	10A396
Booster adapter kit (hydro booster)	2L187
Booster assy. (power brake)	2005
Booster installation kit (power brake)	2A091
Boot (brake cylinder)	2206–7
Boot (brake master cylinder)	2180
Boot (brake pressure metering valve push rod)	2B445
Boot (courtesy lamp switch)	13A759
Boot (parking brake lever)	2A713
Boot (P/S cylinder)	3C528
Boot (steering column tube)	3C611
Boot (trans. floor mounted gearshift control linkage lower)	7E138
Boot (trans. gearshift lever)	7277
Boot (wiring connector sleeve)	14490
Boot & insulator kit (P/S cylinder)	3C651
Boss rad. drain cock	8120
Bowl (fuel pump filter)	9355
Bowl & plug (carb. float)	9A507
Box assy. (A.T.C.)	19C730
Brace (A/C compressor)	2888–9
Brace (front bumper stop)	17D854–5
Brace (front end stabilizer)	16B066–7
Brace (front fender apron to dash)	16A052–3
Brace (front fender to apron & radiator support)	16A023–4
Brace (front fender to frame)	16B134–5
Brace (front fender to radiator support)	16B132–3
Brace (headlamp housing)	13B123
Brace (hood latch support)	16747
Brace (radiator grille opening panel)	8B057
Brace (rear bumper end)	17789
Brace (rear spring seat)	5A860
Brace (trans. case to eng. block)	7E234–5
Brace Assy. (radiator support)	8B247
Bracket (accelerator shaft)	9728
Bracket (accelerator shaft to dash)	9A762
Bracket (A/C air damper door motor mounting)	18C607
Bracket (A/C blower housing)	18C336
Bracket (A/C compressor adjusting)	2883

COPYRIGHT © 1986 — FORD MOTOR COMPANY — DEARBORN, MICHIGAN

INDEX

△ Refer to Page 1 of Paint Section

B — Cont'd

PART NAME	GROUP NUMBER
Bracket (A/C compressor mounting)	2882
Bracket (A/C control motor mounting)	18A699
Bracket (A/C evaporator case mounting)	18A456
Bracket (A/C evaporator case support)	19A639
Bracket (A/C evaporator tube support)	19B589
Bracket (A/C hose support)	19812
Bracket (A/C instrument panel)	19C820
Bracket (A/C outlet tube)	19D721
Bracket (A/C register temp. switch mounting)	19A949
Bracket (air by–pass valve–thermactor)	9B290
Bracket (air cleaner intake tube)	9C685
Bracket (air temperature control mounting)	18B542
Bracket (antenna mounting)	18939
Bracket (anti–backfire valve)	9B290
Bracket (A.T.C. sensor)	19D668
Bracket (A.T.C. vacuum solenoid valve)	19D732
Bracket (automatic air leveler reservoir)	5A848
Bracket (automatic air leveler valve mounting)	5A688
Bracket (belt idler pulley)	8680
Bracket (brake pressure differential valve)	2B260
Bracket (brake skid control actuator mounting)	2B371
Bracket (brake skid control module)	2B389
Bracket (brake tube support)	2K206
Bracket (brake tube support–frt.)	2A275
Bracket (C.B. radio mike retaining)	18B813
Bracket (C.B. radio antenna network)	18B817
Bracket (carb. air by–pass valve)	9B290
Bracket (carb. air cleaner support)	9A627
Bracket (carb. altitude lever assy.)	9595
Bracket (carb. cooling mtr. mounting)	9F617
Bracket (carb. dashpot mounting)	9B550
Bracket (carb. float bowl vent)	9E520
Bracket (carb. throttle emission control solenoid)	9J586
Bracket (carb throttle positioner)	9S555
Bracket (central mounting)	18B652
Bracket (clock mounting)	15017
Bracket (clutch pedal lever assist spring)	7535
Bracket (clutch release lever)	7522
Bracket (coupling shaft support)	4831
Bracket (courtesy lamp)	13763
Bracket (courtesy lamp switch)	13B756
Bracket (distributor vacuum valve)	12A196
Bracket (driveshaft u/joint shield)	4A410
Bracket (EGR vacuum amplifier)	9E452
Bracket (EGR recirculating cooler mounting)	9F465
Bracket (eng. crankcase vent valve hose clip)	6788
Bracket (eng. cylinder block to converter housing)	6K040
Bracket (eng. electronic processor assy.)	12A659
Bracket (eng. front support)	6028–31
Bracket (eng. oil cooler water hose)	6B633, 6B871
Bracket (eng. oil level indicator tube)	6853
Bracket (eng. rear support)	6096
Bracket (eng. timing pointer mounting)	6M026

B — Cont'd

PART NAME	GROUP NUMBER
Bracket (exh. air supply control valve)	9G426
Bracket (exhaust air supply pump)	9B450
Bracket (exhaust air supply tube)	9B481
Bracket (frame stabilizer rod)	5C027
Bracket (front brake hose support)	2082
Bracket (front bumper end)	17A820–1
Bracket (front bumper isolator)	17C886–7
Bracket (front bumper stone deflector mounting)	17A986
Bracket (front bumper stop)	17K754–5
Bracket (front bumper towing)	17C903
Bracket (front fender apron rear mounting)	16B204
Bracket (front fender apron to dash)	16296–7
Bracket (front fender apron to frame)	16A200
Bracket (front fender extension to radiator support)	16C048
Bracket (front fender mounting rear)	16C078
Bracket (front fender to cowl top)	16094–5
Bracket (front fender to pillar)	16A005–6
Bracket (front suspension bumper)	3382–3
Bracket (fuel line support)	9A317, 9D319, 9B303
Bracket (full tank shield support)	9B224
Bracket (fuel tank vent tube shield lower)	9B027
Bracket (fuel tank vent tube shield upper)	9B026
Bracket (fuel tank support)	9A004
Bracket (fuel vapor return tube)	9H309
Bracket (headlamp dimmer control)	13655, 13732
Bracket (headlamp housing mounting outer)	13A091–2, 13A114
Bracket (headlamp switch)	11A668
Bracket (heater core support)	18K264
Bracket (C.B. heater def. door control)	18A343
Bracket (heater mounting)	18A457
Bracket (heater air damper door control)	18A272
Bracket (heater control mounting)	18531
Bracket (heater hose connector support)	18D253
Bracket (heater hose support)	18481
Bracket (heater water control valve mounting)	18A635
Bracket (horn mounting)	13828
Bracket (horn warning actuator)	13A928
Bracket (illuminated entry actuator)	13C721
Bracket (instrument cluster mounting)	10845
Bracket (instrument panel control)	10C935
Bracket (instrument panel wiring)	14536
Bracket (jack hold down)	17A056–9
Bracket (jack storage)	17A040
Bracket (license plate mounting)	17A385
Bracket (light sensor amplifier mounting)	13C016
Bracket (light sensor mounting)	13A021
Bracket (low fuel level warning switch)	9H302
Bracket (oil level indicator tube)	6786
Bracket (parking brake cable)	2530
Bracket (parking brake cable guide)	2B622

INDEX

△ Refer to Page 1 of Paint Section

B — Cont'd

PART NAME	GROUP NUMBER
Bracket (parking brake cable guide)	2A664
Bracket (parking brake cable pulley mounting)	2K744
Bracket (parking brake cable support)	2649
Bracket (parking brake control mounting)	2795
Bracket (parking brake equalizer)	2631
Bracket (parking brake lever)	2A686
Bracket (parking lamp)	13A364
Bracket (parking lamp mounting)	13256
Bracket (power brake booster mounting)	2031, 2L070
Bracket (P/S cylinder mounting)	3A652
Bracket (P/S hose)	3C510
Bracket (P/S hose filter support)	3F619
Bracket (P/S hose insulator)	3A611
Bracket (P/S pump adjusting)	3A732
Bracket (P/S pump pressure and return tube)	3E596
Bracket (P/S pump support)	3562
Bracket (radiator coolant recovery reservoir)	8A082
Bracket (radiator grille mounting center)	8174
Bracket (radiator grille opening panel)	8B455
Bracket (radiator grille outer)	8A153–4
Bracket (radiator support lower)	8052
Bracket (radiator support upper)	8A193
Bracket (radio antenna C.B.)	18946
Bracket (rear axle bumper)	4731
Bracket (rear axle drive pinion bearing retainer)	4298
Bracket (rear bumper adjustment)	17C776
Bracket (rear bumper center reinforcement)	17C853
Bracket (rear bumper inner arm mounting)	17A750–1
Bracket (rear bumper jacking)	17236
Bracket (rear bumper stop)	17B965
Bracket (rear lamp mounting)	13A418, 13471
Bracket (rear license plate)	13406
Bracket (rear license lamp)	13423
Bracket (rear shock absorber upper)	18192
Bracket (rear stabilizer link to cross member)	5661
Bracket (rear view inside mirror)	17698
Bracket (rear view outside mirror)	17B715
Bracket (rear window defogger switch mounting)	18C497
Bracket (seat belt warning system actuator)	14A575
Bracket (seat regulator control mounting)	14B691, 14A705
Bracket (sliding roof panel switch)	15B692
Bracket (spark control switch housing)	9E747
Bracket (speed control amplifier mounting)	9D845
Bracket (speed control servo)	9C736
Bracket (speed control vac valve mtg.)	9C961
Bracket (speed sensor mounting)	9E719
Bracket (stabilizer bar)	5486
Bracket (stabilizer link lower arm)	3077
Bracket (starter motor drive return stop)	11K167
Bracket (starter motor housing)	11140

B — Cont'd

PART NAME	GROUP NUMBER
Bracket (starting motor relay mounting)	11509
Bracket (steering column support)	3B139
Bracket (steering column to instrument panel)	3676–8
Bracket (steering gear rack & pinion mounting)	5486
Bracket (thermactor pump to adjustment arm)	9B452
Bracket (throttle control mounting)	9677
Bracket (throttle modulator mounting)	9E730
Bracket (top control switch mounting)	15676
Bracket (trans. backup lamp switch)	7L028
Bracket (trans. column shift selector bellcrank mounting)	7C431
Bracket (trans. control cable)	7B229
Bracket (trans. gearshift tube)	7317
Bracket (trans. oil cooler)	7B142,
Hinge assy. (rad. grille)	8C039 7F144
Bracket (trans. retracting spring)	7E112
Bracket (trans. selector cable)	7B229
Bracket (turbocharger heat shield)	9G479
Bracket (turn indicator flasher mounting)	13351
Bracket (vanity mirror mounting)	17A692
Bracket (windshield defroster nozzle mounting)	18A348
Bracket (windshield washer reservoir mounting)	17651
Bracket (windshield wiper control mounting)	17C443
Bracket (windshield wiper motor mounting)	17496
Bracket (wiring shield)	14A217
Bracket assy. (A/C clamp)	19D738
Bracket assy. (A/C evaporator case support)	19A804
Bracket assy. (automatic air leveler compressor)	5A694
Bracket assy. (baro. & manifold press. sensor)	12A698
Bracket assy. (brake pressure red valve)	2L416
Bracket assy. (C.B. radio speaker relay mounting)	18B824
Bracket assy. (C.B. microphone cable mounting)	18B819
Bracket assy. (carb. air control)	9B971
Bracket assy. (distributor vacuum control valve)	12A195
Bracket assy. (front bumper jacking)	17B839
Bracket assy. (front shock)	18A017
Bracket assy. (fuel indicator)	9H302
Bracket assy. (fuel tank rear support)	9046
Bracket assy. (fuel vapor separator)	9G294
Bracket assy. (headlamp adjusting nut)	13021
Bracket assy. (headlamp cover solenoid)	13C022
Bracket assy. (heater core mounting upper)	18D285
Bracket assy. (heater vent control mounting)	18C587
Bracket assy. (light switch)	11A678
Bracket assy. (radiator support extension to apron)	16B028–9
Bracket assy. (relay mounting)	14A301
Bracket assy. (speed control)	9C787
Bracket assy. (speed control actuator mounting)	9D805
Bracket assy. (starter motor)	11K008
Bracket assy. (throttle control)	9764
Bracket assy. (trailer hitch crossmember)	19A300–1
Bracket assy. (wiring)	14A004
Bracket & cable (trans. control selector)	7E363

COPYRIGHT © 1986 — FORD MOTOR COMPANY — DEARBORN, MICHIGAN

INDEX

△ Refer to Page 1 of Paint Section

B — Cont'd

PART NAME	GROUP NUMBER
Bracket & clamp kit (EGR cooler)	9F465
Bracket & insulator kit (muffler outlet pipe)	5260
Bracket kit (EGR tube)	9L456
Bracket (radio foot control switch)	18B857
Bracket & strap assy. (fuel vapor storage canister)	9D664
Bracket repair kit (front stabilizer bar)	5486
Breaker assy. (circuit)	14526
Brake shield ext. kit (front)	2C126
Brush assy. (speed control)	9C899
Brush assy. (starter motor)	11056
Brush & holder (A/C compressor clutch)	2979
Brush & terminal assy. (windshield wiper motor)	17B566
Brush & terminal set (alternator)	10347
Brush kit (starter motor)	11057
Brush set (alternator)	10347
Bulb (headlamp)	13007
Bulbs (miniature)	13466
Bumper (brake pedal)	7583
Bumper (clutch pedal)	7583
Bumper (front)	17756–7
Bumper (front suspension)	3019–20
Bumper (headlamp cover hanger)	13B067
Bumper (hood)	16758, 16763
Bumper (license plate)	17A396
Bumper (rear)	17906–7
Bumper (rear axle)	4730, 5783
Bumper (steering column tube upper flange)	3D656
Bus bar (accessory feed)	14A033
Bushing (accelerator pedal hinge)	9873
Bushing (accelerator pedal lever pivot)	9C805
Bushing (alternator adjustment)	10K350
Bushing (brake master cylinder push rod)	2474
Bushing (brake pedal)	2471
Bushing (carb. choke housing)	9851
Bushing (carb. choke shaft spring)	9851
Bushing (carb. fast idle adjustment lever)	9L588
Bushing (carb. throttle shaft)	9B508
Bushing (carb. venturi valve)	9B914
Bushing (carb. venturi valve limiter	9B913
Bushing (clutch housing cable guide)	7K647
Bushing (clutch pedal)	2471
Bushing (clutch pedal clevis)	7B605
Bushing (clutch release idler lever)	7526
Bushing (cylinder block repair) distributor	12120
Bushing (eng. aux. driveshaft)	6A875
Bushing (eng. oil filter)	6890
Bushing (eng. valve guide)	6510
Bushing (front spring lower seat)	5A305
Bushing (front suspension lower arm mounting bolt)	3069
Bushing (front suspension upper arm inner shaft)	3068
Bushing (headlamp cover hinge)	13A164

B — Cont'd

PART NAME	GROUP NUMBER
Bushing (headlamp cover shaft)	13B104
Bushing (P/S control valve spool)	3A519
Bushing (rear spring)	5781
Bushing (rear stabilizer bar mounting)	5B486
Bushing (rear suspension arm–upper)	1A402
Bushing (reclining seat pivot shaft)	3D581
Bushing (spare wheel carrier)	1A402
Bushing (speedo. cable to driven gear)	17269
Bushing (starter motor brush end plate)	11052
Bushing (starter motor drive end housing)	11135
Bushing (starter motor drive housing)	11395
Bushing (steering gear housing sector shaft)	3576
Bushing (steering idler arm)	3356–8
Bushing (trans. case)	7025
Bushing (trans. console shift selector shaft)	7A133
Bushing (trans. control selector arm)	7343
Bushing (trans. converter stator support)	7B261
Bushing (trans. extension housing)	7A034
Bushing (trans. forward clutch hub)	7E059
Bushing (trans. front oil pump)	7B258
Bushing (trans. front oil pump drive gear)	7B259
Bushing (trans. front pump support)	7D018, 7B261
Bushing (trans. gearshift cable adjusting)	7A438
Bushing (trans. gearshift lever)	7K022
Bushing (trans. gearshift lever socket)	7335
Bushing (trans. inner brake drum)	7D046
Bushing (trans. input shaft)	7120
Bushing (trans. kickdown lever & control rod)	7C484
Bushing (trans. planetary gear drum support) flange inner)	7B257
Bushing (trans. planetary gear drum support flange outer)	7B256
Bushing (trans. planetary gear support)	7A132
Bushing (trans. rear oil pump body)	7B260
Bushing (trans. reverse brake drum)	7D001
Bushing (trans. sun gear)	7D065
Bushing (turn indicator control)	13B301
Bushing (windshield wiper arm or link retain)	17A543
Bushing kit (P/S cylinder mounting rod end)	3C590
Bushing & link assy. (front suspension lower arm)	3B349
Bushing & mounting kit (front suspension lower arm)	3048
Bushing & washer kit (front suspension lower arm strut)	3A187
Bushing repair kit (front shock absorber)	18198
Bushing repair kit (rear shock absorber)	18198
Button (front bumper guard impact)	17D681
Button (instrument cluster clock stem opening plug)	10C864
Button assy. (trans. console shift selector lever release)	7C488
Button assy. (window regulator control switch)	14530
Buzzer assy. (exterior lamp warning)	13150

INDEX

△ Refer to Page 1 of Paint Section

C

PART NAME	GROUP NUMBER
Cable (battery)	14300–1
Cable (brake shoe adjusting lever)	2A178, 2B567
Cable (clutch release)	7K553
Cable (dash panel to ground)	14303
Cable (hood latch control)	16916
Cable (parking brake intermediate)	2A815
Cable (radio antenna lead–in)	18812
Cable kit (speedometer speed control)	9A820
Cable (trans. console shift selector linkage)	7D246
Cable (trans. control valve)	7A187
Cable (trans. kickdown control)	7A187
Cable (trans. selector linkage control)	7A477
Cable (trans. shift)	7E395
Cable assy. (accelerator pedal to carb. throttle)	9A758
Cable assy. (battery universal type)	14300
Cable assy. (heater temperature)	18518
Cable assy. (relay to starter)	14431
Cable assy. (speedo)	17260
Cable & conduit (parking brake front)	2853
Cable & conduit (parking brake rear)	2A635
Cable & modulator assy. (speed control)	9A820
Calibrator assy. (eng. electronic cont.)	12A649
Caliper assy. (front disc brake)	2B120–1
Caliper assy. (rear disc brake)	2552–3
Cam (rear suspension arm adjusting)	5A637, 5K751
Cam (trans. control valve)	7D261
Cam (turn indicator turn–off)	13318
Cam assy. (carb. fast idle)	9597
Cam kit (carb. fast idle)	9597
Cam kit (rear suspension lower arm)	5K751
Camshaft (eng.)	6250
Canister assy. (fuel vapor storage)	9D653
Cap (battery)	10720
Cap (carb. accelerator pump plunger)	9635
Cap (eng. valve stem exhaust)	6550
Cap (front hub grease)	1131
Cap (fuel tank sender outlet tube)	9G270
Cap (fuel vapor storage canister)	9E602
Cap (headlamp dimmer foot switch)	13533
Cap (heater inlet hose connector blanking)	8K174
Cap (P/S control valve spool centering spring)	3C705
Cap (P/S cylinder piston)	3D530
Cap (P/S gear cylinder)	3A745
Cap (radiator)	8100
Cap (radiator overflow container)	8K103
Cap (rear bumper end)	17810
Cap (rear window wiper blade end)	17A402
Cap (steering column position lock spring)	3E518
Cap (steering gear boot clip)	3K722
Cap (trans. selector handle)	7220
Cap (universal joint knuckle dust)	4710
Cap (vacuum outlet manifold)	9C492

C — Cont'd

PART NAME	GROUP NUMBER
Cap (wheel hub)	1130
Cap (wheel nut)	1011
Cap assy. (brake master cylinder filler)	2162
Cap assy. (eng. oil filler & breather)	6766
Cap assy. (fuel tank filler)	9030
Cap assy. (P/S pump oil reservoir filler)	3A006
Cap kit (P/S control valve spool centering spring)	3C705
Capacitor (radio)	18827
Capacitor (radio voltage regulator)	18832
Carburetor assy.	9510
Carrier (spare wheel)	1A432
Carrier assy. (rear axle differential)	4141
Cartridge kit (stereo tape)	18816
Case (A/C evaporator lower)	19C831
Case (trans.)	7005
Case assy. (A/C evaporator upper)	19C974
Case assy. (heater core)	18508, 18A542–3
Case assy. (plenum chamber)	18A484
Case assy. (rear axle differential)	4204
Case assy. (trans.)	7005
Chain (eng. timing)	6268
Chamber (headlamp dimmer sensor)	13B182
Chamber assy. (heater air plenum)	18471
Chamber & bracket assy. (carb. air cleaner resonance)	9E805
Chassis (radio receiver)	18806
Chime assy. (seat belt warning)	10D840
Circuit assy. (instrument cluster printed)	10K843
Clamp (A/C hose)	19B679
Clamp (A/C refrigerant line)	19B679
Clamp (alternator cable connector)	10K343
Clamp (body side lamp)	15A210
Clamp (carb. altitude cable)	9792
Clamp (carb. thermostatic choke housing)	9842
Clamp (carb. thermostatic choke housing locking)	9842
Clamp (exhaust air supply tube)	9D436
Clamp (EGR cooler tube–inlet)	9F488
Clamp (EGR cooler tube–outlet)	9F481
Clamp (front wheel spindle connecting rod)	3287
Clamp (heater door lever)	18K254
Clamp (hose)	8287, 9171
Clamp (hot water heater hose)	18572
Clamp (jack hold down)	17091
Clamp (P/S control valve dust cover)	3A728
Clamp (P/S control valve ball stud sleeve)	3–3739
Clamp (P/S cylinder piston rod boot)	3C755
Clamp (P/S hose)	3C746
Clamp (P/S return line)	2344
Clamp (radio frequency interference suppression band)	18954
Clamp (rear spring)	5724

COPYRIGHT © 1986 — FORD MOTOR COMPANY — DEARBORN, MICHIGAN

INDEX

△ Refer to Page 1 of Paint Section

C — Cont'd

PART NAME	GROUP NUMBER
Clamp (spare wheel)	1446
Clamp (speed control engagement switch)	9C892
Clamp (stabilizer bar)	5C489
Clamp (steering column)	3506
Clamp (steering column to instrument panel)	3668
Clamp (steering gear ball return guide)	3544
Clamp (steering gear boot)	3C650
Clamp (trans. seat belt warning sensor switch)	7E460
Clamp assy. (A/C valve)	19D737
Clamp assy. (blower housing)	19D815
Clamp assy. (muffler inlet & outlet pipe yoke type)	5A231
Clamp assy. (steering column)	3507
Clamp & insulator (frame no. 3 cross member)	5C021
Clamp kit (rear spring)	5724
Cleaner assy. (carb. air)	9600
Cleaners	△
Clear vision aids	△
Clevis & cable (parking brake front)	2857
Clip (air leveler hose)	5A668
Clip (brake hose)	2814
Clip (brake line)	2244
Clip (brake line to rear axle)	2251
Clip (brake shoe locating–inner)	2C098
Clip (cable hood latch control)	16907
Clip (carb. accelerator pump link rod)	9825
Clip (clutch pedal to clutch release cable)	7L529
Clip (clutch release pin retaining)	7K593
Clip (distributor spring retaining)	12A187
Clip (eng. follower arm spring retaining)	6K532
Clip (exhaust gas recirculation tube)	9D459
Clip (front bumper stone deflector)	17D817
Clip (front disc brake shoe anti–rattle)	2B164
Clip (front disc brake shoe hold down spring)	2066
Clip (fuel pipe to eng. cover)	9A317
Clip (front disc brake shoe anti–rattle)	2B164
Clip (headlamp bezel retaining)	13067
Clip (hood latch control cable)	16877
Clip (hood latch spring)	16926
Clip (hood support rod retaining)	16828
Clip (map lamp)	13767
Clip (oil pipe)	9792
Clip (parking brake cable)	2814, 2860
Clip (P/S hose retaining)	3E506
Clip (P/S pressure & return tube)	3E506
Clip (rear lamp door retainer)	13A424
Clip (rod end clevis)	9825–6
Clip (seat belt warning system wire)	14A169
Clip (seat regulator switch retaining)	14559
Clip (speed control vacuum valve)	9C966
Clip (speedo. cable)	17264
Clip (speed control cable retaining)	9D726
Clip (speedo. drive gear retaining)	17B336
Clip (starter cable)	14550
Clip (steering column shaft)	3E629

C — Cont'd

PART NAME	GROUP NUMBER
Clip (steering column shroud)	3K712
Clip (trans. control selector indicator lamp)	15A807
Clip (trans. dual area diaphragm retainer)	7F006
Clip (trans. gearshift rod retainer)	7354
Clip (trans. oil screen retaining)	7A097
Clip (trans. oil screen support)	7A097
Clip (trans. oil tube)	7C008
Clip (trans. vacuum diaphragm)	7F006
Clip (trans. vacuum tube)	7C072
Clip (trans. vacuum tube retaining)	7B085
Clip (tube retention back pressure transducer)	9G477
Clip (turn indicator cover)	13377
Clip (vent air valve damper door stop)	18B409
Clip (window regulator housing retainer)	14570
Clip (window regulator switch retaining)	14559
Clip (windshield defroster nozzle)	18C594
Clip (windshield wiper adapter & connector arm)	17531
Clip (wiring)	14197, 15B424
Clock assy. (electric)	15000
Clock kit (electric)	15A000
Clutch assy. (trans. planetary gears)	7A089
Clutch & pulley (A/C compressor)	2884
Clutch kit (trans. overrunning)	7A089
Clutch plate kit (trans. front)	7B164
Clutch plate kit (trans. rear)	7C224
Coil (starter motor field)	11082–5
Collar (starter motor drive ring)	11223
Collar (trans. parking pawl lever)	7C168
Compensator assy. (carb. hot idle)	9B532, 9E890
Compensator assy. (carb. altitude)	9A950
Compressor (air horn vacuum)	13801
Compressor housing kit (turbocharger)	9G485
Compressor & bracket assy. (automatic air leveler)	5A713
Compressor kit (A/C)	19703
Compressor kit (automatic air leveler)	5A713
Compressor repair kit (automatic air leveler)	5A773
Condenser (radio suppression)	18827
Condenser kit (A/C)	19708
Cone, roller & cup (rear axle differential bearing)	4221–2
Cone & roller (front wheel bearing inner)	1201
Cone & roller (front wheel bearing outer)	1216
Connection (defroster air hose)	18A449
Connection (eng. water inlet to block)	6178
Connection hose (carb.)	9522
Connector (accelerator shaft to speed control shaft)	9B705
Connector (automatic air leveler tube)	5A689
Connector (brake tube)	2074
Connector (carb. air cleaner to thermostatic choke control inlet tube)	9C704
Connector (carb. secondary diaphragm control)	9S569
Connector (choke control inlet)	9C708

INDEX

△ Refer to Page 1 of Paint Section

C — Cont'd

PART NAME	GROUP NUMBER
Connector (distributor vacuum)	12224
Connector (eng. to trans. vacuum tube)	7B087
Connector (exhaust gas recirculation valve)	9P784
Connector (exh. manifold tube)	9D439
Connector (fuel return to tank)	9N035
Connector (headlamp cover control hose)	13A169–70
Connector (heater inlet hose)	18A568
Connector (parking brake cable)	2A790
Connector (radiator filler neck)	8B016
Connector (trans. oil cooler tube)	7D273, 7C410
Connector (windshield defroster nozzle)	18A435
Connector (windshield washer hose)	17598
Connector (wire)	14488
Connector assy. (EGR vacuum control)	9E455
Connector assy. (emission main vacuum control)	9E498
Connector assy. (engine to trans. vacuum rear)	7L212
Connector assy. (fuel pump outlet)	9B376
Connector assy. (fuel valve tube)	9A220
Connector assy. (vacuum A/T/C control box)	19D616
Connector assy. (vacuum tube)	9D430
Connector assy. (wiring)	14487
Connector kit (trailer lamp wiring)	14A347
Control (parking brake)	2780–1
Control (radio rear seat speaker volume)	18572
Control (trans. floor mounted gearshift)	7400
Control assy. (carb. air)	9B960
Control assy. (carb. fuel)	9B950
Control assy. (carb. vacuum brake)	9S514
Control assy (eng. air fuel ratio)	12A651
Control assy. (heater)	18549
Control Assy. (radio power boost and equalizer amplifier)	18B853
Control assy. (trans. main valve body)	7A100
Control kit (heater)	18A593
Converter assy. (trans.)	7902
Coolant recovery kit	8522
Coolant recovery (reservoir)	8A080
Cooler assy. (eng. crankcase oil)	6A642
Cooler assy. (EGR)	9F464
Cooler assy. (P/S oil)	3D746
Cooler assy. (trans. oil)	7A095
Cooling system aids	△
Core (speedo. cable)	17262
Core assy. (heater)	18476
Countershaft (trans.)	7111
Coupling (A/C refrigerant line)	19B596
Coupling (A/C self–sealing)	19B595–6
Coupling (steering gear input shaft to steering column shaft)	3A525
Coupling assy. (speed control sensor)	9E720
Cover (accelerator pedal pad)	9735
Cover (alternator rear end)	10325
Cover (battery terminal insulator)	14277
Cover (brake adjusting hole)	2092

C — Cont'd

PART NAME	GROUP NUMBER
Cover (brake pedal pad)	2A231, 2A487
Cover (brake pressure differential valve)	2K751
Cover (carb. choke control diaphragm)	9J554
Cover (carb. compensator hot idle valve)	9F594
Cover (carb. diaphragm)	9B580
Cover (carb. economizer valve)	9930
Cover (carb. fuel enrichment valve)	9F594
Cover (carb. venturi valve)	9A932
Cover (clutch pedal pad)	7B544
Cover (coach lamp retainer)	15B462
Cover (distributor breaker)	12276
Cover (distributor module)	12A236
Cover (eng. fuel pump opening)	6095
Cover (fender apron opening)	19D744
Cover (front disc brake caliper bleed screw dust)	2L126
Cover (fuse panel)	14A003, 14A076
Cover (headlamp)	13A136–8
Cover (headlamp dimmer sensor)	13B195
Cover (heater motor dash panel opening)	18A475
Cover (heater core case)	18B300
Cover (horn blow switch)	13A915
Cover (intake manifold)	9E434
Cover (interior mirror bracket)	17676
Cover (light switch)	11655
Cover (map lamp)	13B718
Cover (parking brake pedal pad)	2A798
Cover (P/S control valve ball stud dust)	3A729
Cover (P/S pump)	3B681
Cover (radio foot control switch)	18A608
Cover (rear brake bleed screw dust)	2092
Cover (rear bumper mounting bracket)	17C824
Cover (rear side marker)	15457
Cover (rear track bar stud)	5A705
Cover (remote control mirror knob)	17B733
Cover (roof luggage carrier)	19B507
Cover (starter motor solenoid switch)	11401
Cover (steering column lock actuator)	3E745
Cover (starter plunger)	11060
Cover (steering column position control)	3D505
Cover (steering gear housing end)	3568
Cover (steering gear sector shaft housing)	3580
Cover (trans. case access)	7222
Cover (trans. control selector indicator opening)	7B100
Cover (trans. converter)	7986
Cover (trans. gearshift housing lower)	7K444
Cover (trans. gearshift sleeve)	7E405
Cover (trans. intermediate band)	7D027
Cover (trans. oil pressure regulator body)	7A141
Cover (trans. reverse band servo piston)	7D036
Cover (water pump)	8508
Cover (wheel hub)	1130
Cover (windshield washer reservoir)	17632
Cover (windshield wiper motor)	17A511
Cover (windshield wiper linkage)	17C569

COPYRIGHT © 1986 — FORD MOTOR COMPANY — DEARBORN, MICHIGAN

INDEX

PART NAME	GROUP NUMBER
△ Refer to Page 1 of Paint Section	
C — Cont'd	
Cover (windshield wiper output arm)	17C526
Cover (wiring shield)	14A390
Cover assy. (auxiliary fuel tank)	9B161
Cover assy. (carb. accelerator pump)	9528
Cover assy. (distributor suppressor)	12K000
Cover assy. (eng. cylinder front)	6019
Cover assy. (eng. valve rocker arm)	6582
Cover assy. (heater outlet duct)	18C301
Cover assy. (instrument cluster trim)	10B883
Cover assy. (P/S gear control valve)	3C544
Cover assy. (P/S pump reservoir)	3A582
Cover assy. (rear axle housing)	4033
Cover assy. (rear bumper)	17K838
Cover assy. (turn indicator switch wiring)	13376
Cover assy. (vanity mirror)	17D681
Cover assy. (windshield wiper motor)	17C541
Cover assy. (wiring connector)	14A593
Cover & screen (eng. oil pump)	6K621
Cover repair kit (eng. cylinder front)	6019
Crankshaft assy. (eng.)	6303
Cross member (frame rear)	5035
Cross member assy. (frame front)	5019
Cross member assy. (frame no. 2 or 3)	5025–6
Cross member & receptacle assy. (trailer hitch)	19A288
Cup (brake master cylinder)	2173
Cup (brake shoe hold down spring)	2066
Cup (carb. pump piston)	9572
Cup (front shock absorber)	18A168
Cup (front disc brake shoe hold down spring)	2066
Cup (front wheel bearing inner)	1202
Cup (front wheel bearing outer)	1217
Cup (steering gear worm bearing)	3552
Cup & magnet assy. (windshield wiper motor)	17B584
Cylinder (air leveler)	5A666
Cylinder (trans. front clutch)	7A360
Cylinder assy. (brake master)	2140
Cylinder assy. (eng.)	6009
Cylinder assy. (front brake)	2061–2
Cylinder assy. (P/S)	3A540
Cylinder assy. (rear brake)	2261–2
Cylinder & keys (ignition switch lock)	11582
Cylinder & keys (steering & ignition lock)	3675
Cylinder repair kit (brake master)	2004
Cylinder repair kit (front brake)	2221
Cylinder repair kit (rear brake)	2128
D	
Damper (driveshaft drive line vibration)	4A263
Damper (rear spring)	5A669
Damper assy. (eng. crankshaft)	6316
Damper assy. (eng. timing chain vibration)	6284
Damper & arm assy. (steering column)	3K016
Dashpot assy. (carb.)	9B549
Dashpot kicker assy. (carb.)	9B549
Dashpot & solenoid assy. (carb.)	9S520
Decalcomania (fan warning)	8653

PART NAME	GROUP NUMBER
D — Cont'd	
Decalcomania (tire instructions)	1532
Deflector (A/C evaporator case air)	19C811 19B898
Deflector (front bumper stone)	17779
Deflector (front bumper stone lower)	17B679
Deflector (parking brake cable)	2A791
Deflector (radiator air)	8326–7
Deflector (rear axle driving pinion oil seal)	4859
Deflector (rear bumper stone)	17808
Deflector (rear bumper stone end)	17C837–8
Deflector assy. (radiator air side)	8310–1
Defogger kit (rear window)	18397
Detent (trans. gearshift lever)	7E218
Dial (instrument cluster indicator)	10B966
Dial (instrument cluster main)	10887
Dial (trans. column shift selector)	7A213
Dial (trans. console shift selector)	7A213
Dial (trans. floor shift selector)	7A213
Diaphragm assy. (carb. accelerator pump)	9B559
Diaphragm assy. (carb. choke pull down)	9J549
Diaphragm assy. (carb. venturi actuator)	9A900
Diaphragm assy. (deceleration valve)	9K799
Diaphragm assy. (fuel pump)	9398
Diaphragm assy. (trans. vacuum throttle valve control)	7A377
Diaphragm & retainer assy. (carb. choke control)	9J549
Diaphragm & shaft assy. (carb. economy)	9L543
Differential assy. (rear axle)	4200
Differential assy. (rear axle locking)	4026
Diode (alternator negative)	10378
Diode (alternator positive)	10374
Diode assy. (lamp fail indicator)	10C912
Disc (radio tone control)	18830
Disc & pressure plate (clutch)	7550
Discharge line (A/C compressor to condenser)	19C700, 19972
Dome/map lamp (kit)	13776
Door (A/C air damper)	18A316
Door (A/C blower)	18B254
Door (backup lamp)	15513
Door (headlamp)	13064
Door (heater air damper)	18A361
Door (interior lamps)	13788
Door (parking lamp)	13210
Door (rear lamp lens)	13489
Door (rear license plate lamp)	13566
Door assy. (A/C air damper inlet)	19C802
Door assy. (A/C air inlet)	19A813
Door assy. (A/C evaporator case damper)	19D812
Door assy. (A/C evaporator case outlet)	19B749
Door assy. (A/C air temp. control)	19D842
Door assy. (A/C plenum chamber defrost)	19A908
Door assy. (heater air temperature control)	18B545
Door assy. (heater air outlet damper)	19A555
Door & hinge assy. (heater air ventilation)	18A646
Door & Seal Assy. (heater air temp control)	18C661

INDEX

PART NAME	GROUP NUMBER
△ Refer to Page 1 of Paint Section	

D — Cont'd

Door & seal assy. (A/C air damper)	18A574
Dowel (clutch to flywheel)	7033
Dowel (eng. crankshaft main bearing cap)	6A346
Dowel (eng. cylinder block)	6397
Dowel (eng. cylinder block flywheel housing)	6397
Dowel (eng. cylinder head to cylinder block)	6A008
Drain cock (cylinder block)	8115
Drain cock (radiator)	8115
Drive assy. (starter motor)	11350
Drive kit (A/C)	19B969
Driveshaft assy.	4602
Drum (rear wheel brake)	1126
Drum assy. (trans. intermediate brake)	7D044
Drum assy. (trans. reverse brake)	7C498
Drum & bearing kit (trans. front)	7K040
Drum & planetary gear (trans. rear brake)	7A398
Drum & secondary sun gear (trans. rear clutch brake)	7A626
Duct (A/C evaporator instrument panel register)	19926
Duct (A/C evaporator outlet)	19C633
Duct (heater air inlet)	18B259
Duct (heater air outlet)	18633
Duct assy. (A/C air inlet)	19A618
Duct assy. (heater outlet to floor)	18C433
Duct assy. (heater air inlet)	18457
Duct assy. (ventilation & heater air inlet)	18651
Duct & Connector Assy. (A/C junction)	19C932
Duct & valve assy. (carb. air cleaner)	9A626
Dust tube (shock absorber kit)	18047
Dusting cloth	△

E

Eccentric (eng. camshaft fuel pump drive)	6287
Economizer kit (carb.)	9A565
Elbow (A/C hose)	18599
Elbow (distributor vacuum)	12A204
Elbow (eng. crankcase vent hose)	6767
Elbow (exhaust air supply pump outlet)	9C475
Elbow (heater hose)	18599
Elbow (speed control servo discharge tube)	9C957
Electrolyte (battery)	10656
Element assy. (carb. air cleaner)	9601
Element assy. (cigar lighter)	15054
Element assy. (eng. oil filter)	6731
Element assy. (fuel filter)	9365
Emblem (radiator grille)	8A223
End assy. (front wheel spindle connecting rod)	3A130–1
End repair kit (stabilizer bar)	5A486
Engine assy.	6007
Engine reconditioning paint	△
Engine starting fluid	△
Equalizer (parking brake cable)	2A602
Escutcheon (radio)	18846
Escutcheon (rear view outside remote control)	17B685
Extension (front bumper)	17A900–1
Extension (front fender apron to dash)	16A248–9
Extension (front fender front lower)	16A162–3
Extension (headlamp housing)	13B116

E — Cont'd

Extension (muffler outlet pipe)	5255
Extension (radiator grille opening panel)	8B002
Extension (radiator side support)	8B220–1
Extension (rear bumper mounting bracket)	17C859
Extension (steering column shroud)	3R564
Extension (steering column tube flange)	3790
Extension (tire valve)	1705
Extension (trans. gearshift arm)	7E409
Extension (windshield defroster nozzle)	18C371–2
Extension assy. (front fender front)	16018–9
Extension assy. (front bumper)	17A900
Extension assy. (trailer hitch receptacle)	19A324
Exterior paint	△

F

Fan (alternator)	10A310
Fan assy. (exhaust air supply pump)	9C472
Fan assy. (carb. cooling motor)	9F614
Fan kit (carb. cooling)	9F613
Fan blade assy.	8600
Fender (front)	16005–6
Field (A/C compressor clutch)	2987
Filler (front fender)	16570–1
Filler (carb. accelerator pump cavity)	9F565
Filler (rear license plate)	17226
Filter (brake skid control actuator air)	2B368
Filter (crankcase emission)	9D697
Filter (distributor vacuum control valve)	12A120
Filter (fuel tank sender)	9A011
Filter (instrument cluster light)	10B870
Filter (transmission control selector indicator lamp)	15811
Filter assy. (carb. fuel)	9155
Filter assy. (crankcase air cleaner)	9D695
Filter assy. (EGR air valve)	9F474
Filter assy. (fuel vapor separator)	9G293
Filter assy. (P/S pump housing oil)	3C602
Filter assy. (windshield washer fluid)	17K608
Finger (trans. shift control)	7C124
Fire extinguisher kit	19B540
Fitting (A/C refrigerant lines)	19D695
Fitting (carb. fuel inlet)	9A520
Fitting (eng. oil cooler)	6748
Fitting (oil pressure sender)	9B339
Fitting (P/S pump valve outlet)	3D654
Fitting assy. (intake manifold vacuum outlet)	9A474, 9A476
Flange (exhaust recirculating valve outlet tube)	9D464
Flange (fuel tank filler inner)	9109
Flange (starter motor coil retaining)	11106
Flange (steering column tube lower)	3D651
Flange (steering shaft insulator)	3A528
Flange assy. (rear axle universal joint)	4841
Flange assy. (steering column tube)	3511
Flasher assy. (oil temperature indicator)	9E296
Flasher assy. (turn indicator)	13350
Float assy. (carb.)	9550

COPYRIGHT © 1986 — FORD MOTOR COMPANY — DEARBORN, MICHIGAN

INDEX

△ Refer to Page 1 of Paint Section

F — Cont'd

PART NAME	GROUP NUMBER
Float assy. (fuel tank sender)	9202
Flywheel assy. (eng.)	6375
Fork (trans. gear shifter)	7230–1
Fork (trans. intermediate & high shifter)	7230
Fork (trans. low & reverse gear shifter)	7231
Frame (A/C air damper door)	19A596
Frame (A/C heater core)	18A441
Frame (license plate)	17A387
Frame assy.	5005
Frame kit (license plate)	17A385
Fuel stop valve kit	9189
Fuel tank shield kit	9B007

G

PART NAME	GROUP NUMBER
Gasket (A/C blower housing)	18B488
Gasket (A/C blower inlet plate)	19B663
Gasket (A/C plenum chamber to evap. case)	19D849
Gasket (A/C plenum chamber front)	19A915
Gasket (A/C plenum chamber outlet)	19C901
Gasket (A/C blower motor mounting)	19B730
Gasket (A/C compressor valve plate)	19B994
Gasket (A/C evaporator drain tube)	19A700
Gasket (A/C register to evaporator case center)	19A893
Gasket (antenna)	18898
Gasket (backup lamp lens)	15510
Gasket (air pump elbow)	9F429
Gasket (body side lamp)	15A209
Gasket (brake line connector)	2149
Gasket (brake master cylinder)	2L223
Gasket (brake master cylinder filler cap)	2167
Gasket (brake master cylinder mounting adapter)	2B355
Gasket (brake master cylinder reservoir)	2A140
Gasket (brake pressure differential valve)	2B262
Gasket (carb. air cleaner bottom)	9654
Gasket (carb. air cleaner internal)	9673
Gasket (carb. air horn throttle body)	9564
Gasket (carb. booster venturi support)	9A536
Gasket (carb. economizer cover)	9563
Gasket (carb. economizer valve)	9A588
Gasket (carb. float bowl)	9561
Gasket (carb. fuel inlet)	9229
Gasket (carb. fuel inlet needle seat)	9569
Gasket (carb. heat shield spacer)	9E795
Gasket (carb. hot idle compensator)	9B567
Gasket (carb. power valve)	9A588
Gasket (carb. pump discharge nozzle)	9926
Gasket (carb. pump relief)	9580
Gasket (carb. thermostatic choke control)	9853
Gasket (carb. thermostatic choke housing)	9871
Gasket (carb. throttle body to main body)	9516
Gasket (carb. to intake manifold)	9447
Gasket (carb. to intake manifold spacer)	9C477
Gasket (carb. vent cover)	9592
Gasket (carb. water chamber thermostat assy.)	9871
Gasket (eng. cylinder front cover)	6020
Gasket (air pump elbow)	9F429
Gasket (eng. cylinder head)	6051

G — Cont'd

PART NAME	GROUP NUMBER
Gasket (eng. oil filler cap)	6789
Gasket (eng. oil filter adapter)	6A636
Gasket (eng. oil filter center bolt cover)	6749
Gasket (eng. oil pan drain plug)	6734
Gasket (eng. oil pump inlet tube)	6626
Gasket (eng. oil pump to block)	6659
Gasket (eng. valve rocker arm cover)	6584
Gasket (exhaust air supply tube upper)	9C435
Gasket (EGR cooler tube–inlet)	9F470
Gasket (EGR cooler tube–outlet)	9F478
Gasket (EGR valve)	9D476
Gasket (EGR valve adapter)	9E464, 9E476
Gasket (EGR valve body)	9E476
Gasket (exhaust manifold to cylinder head)	9448
Gasket (front brake backing plate to spindle)	2044
Gasket (front brake grease baffle)	2026
Gasket (front brake splash shield)	2B160
Gasket (fuel filter mounting)	9229
Gasket (fuel gauge tank unit)	9276
Gasket (fuel pump filter bowl)	9364
Gasket (fuel pump mounting)	9417
Gasket (fuel tank cap)	9035
Gasket (fuel tank filler to quarter panel)	9076
Gasket (heater core tube)	18596
Gasket (heater inlet)	18A569
Gasket (heater mounting plate)	18695
Gasket (heater to dash)	18570
Gasket (Htr. plenum chamber to dash)	10B623
Gasket (instrument cluster control)	10A985
Gasket (instrument cluster warning lamp)	10A995
Gasket (intake manifold cover)	9E436
Gasket (intake manifold to cylinder head)	9441
Gasket (light switch)	11A670
Gasket (oil filler cap)	6789
Gasket (parking lamp lens)	13211
Gasket (power brake booster mounting bracket)	2B022
Gasket (P/S control valve body)	3A740
Gasket (P/S pump cover)	3A760
Gasket (P/S pump oil reservoir cover)	3A642
Gasket (rear axle differential carrier)	4035
Gasket (rear axle housing to cover)	4036
Gasket (rear lamp lens)	13461
Gasket (rear lamp reflector lens)	13623
Gasket (rear license plate lamp lens)	13568
Gasket (rear view outside mirror)	17724
Gasket (rear wheel)	1001
Gasket (separator assy. fuel vapor)	9276
Gasket (side lamp lens)	15A209
Gasket (speedo. case)	17303
Gasket (starter motor drive housing)	11003
Gasket (starter motor housing end plate)	11003
Gasket (starter motor plunger cover)	11065
Gasket (steering gear housing cover)	3581
Gasket (thermostat)	8590
Gasket (thermostatic choke heat supply cover)	9903
Gasket (trans. case access cover)	7223

INDEX

△ Refer to Page 1 of Paint Section

G — Cont'd

PART NAME	GROUP NUMBER
Gasket (trans. case to cover)	7223
Gasket (trans. extension housing)	7086
Gasket (trans. extension housing to case)	7086
Gasket (trans. front oil pump to case)	7A136
Gasket (trans. gearshift to floor pan)	7C370
Gasket (trans. input shaft bearing retainer)	7051
Gasket (trans. intermediate band servo cover)	7D026
Gasket (trans. oil drain plug)	7L101
Gasket (trans. oil pan)	7A191
Gasket (trans. oil pan screen)	7E062
Gasket (trans. oil pan to case)	7A191
Gasket (trans. rear oil pump to case)	7A222
Gasket (trans. throttle valve diaphragm)	7B426
Gasket (trans. valve body separator plate)	7D100
Gasket (valve assy. to spacer)	9B567
Gasket (water outlet connection)	8255
Gasket (water pump cover)	8513
Gasket (water pump housing)	8507
Gasket (windshield wiper motor cover)	17471
Gasket (windshield wiper motor seal)	17C430
Gasket (wiring connector)	14A297
Gasket & oil seal kit	7153
Gasket & oil seal repair kit (trans.)	7153
Gasket assortment (water outlet connection)	8255
Gasket kit (trans.)	7153
Gasket set (carb.)	9502
Gasket set (eng. complete overhaul)	6008
Gasket set (eng. lower)	6E078
Gasket set (eng. oil pan)	6781
Gasket set (eng. valve grind)	6079
Gasket set (manifold)	9433
Gasket & shim kit (steering gear sector shaft housing cover)	3F518
Gas line anti–freeze	△
Gauge (engine vacuum)	10B944
Gauge (instrument cluster temperature)	10883
Gauge assy. (fuel instrument panel unit)	9305
Gauge assy. (fuel level)	9280
Gauge assy. (fuel tank unit)	9275
Gauge assy. (oil pressure)	9280
Gauge assy. (oil pressure eng. unit)	9278
Gauge assy. (oil pressure instrument panel unit)	9273, 9B308
Gauge assy. (temperature)	9280
Gauge & valve assy. (automatic air leveler)	5A687
Gear (eng. camshaft)	6526
Gear (eng. crankshaft)	6306
Gear (eng. flywheel ring)	6384
Gear (rear axle differential side)	4236
Gear (speedo. drive)	17285
Gear (speedo. driven)	17271
Gear (steering column lock)	3E717
Gear (trans. countershaft cluster)	7113
Gear (trans. first speed)	7A029

G — Cont'd

PART NAME	GROUP NUMBER
Gear (trans. forward ring)	7D392
Gear (trans. low & reverse sliding)	7100
Gear (trans. low constant mesh)	7A029
Gear (trans. output shaft parking)	7A233
Gear (trans. output shaft ring)	7A153
Gear (trans. reverse idler sliding)	7D223
Gear (trans. second speed)	7102–3
Gear (trans. third speed)	7B340
Gear assy. (speedo. drive)	17285
Gear assy. (speedo. driven)	17271
Gear assy. (steering)	3504
Gear assy. (trans. primary sun)	7A399
Gear assy. (trans. sun)	7D063
Gear & bushing (trans. intermediate)	7102
Gear & bushing (trans. reverse idler)	7141
Gear & pinion (windshield wiper motor)	17A479
Gear & pinion kit (rear axle differential)	4209
Gear & shaft assy. (windshield wiper motor output)	17A434
Gear set (eng. cylinder timing)	6306
Glass (radiator coolant level sight)	8B404
Glass (rear view outside mirror)	17723
Governor (windshield wipers)	17C476
Governor assy. (trans.)	7C053
Governor assy. (trans.)—Incl. counterweight	7C053
Governor assy. (trans. less counterweight)	7C063
Grille (hood air scoop)	16A624
Grille (radiator)	8200
Grille (radio speaker)	18978
Grille (vent air inlet)	18A449
Grille assy. (rear window defogger)	18C490
Grommet (A/C tube fender apron)	19D743
Grommet (brake tube)	2K409
Grommet (carb. air cleaner)	9697
Grommet (carb. vent to air cleaner)	9P555
Grommet (eng. cyl. front cover)	6C019
Grommet (eng. rocker arm cover seal)	6570
Grommet (fuel line to side apron)	9K288
Grommet (fuel tank filler pipe)	9080
Grommet (fuel tank vent expansion fuel vapor tube)	9D698
Grommet (hood support to hood)	16827
Grommet (speedo. case)	17304
Grommet (starter motor)	11A120
Grommet (starter motor terminal insulator)	11A120
Grommet (windshield wiper motor mounting)	17C431
Grommet (windshield wiper pivot shaft)	17C582
Grommet (wiring)	14603–5
Guard (A/C accumulator hose)	19D745
Guard (fan)	8A611
Guard (front bumper)	17996–7
Guard (fuel tank)	9099
Guard (rear bumper)	17984
Guard kit (front bumper)	17996

COPYRIGHT © 1986 — FORD MOTOR COMPANY — DEARBORN, MICHIGAN

INDEX

△ Refer to Page 1 of Paint Section

G — Cont'd

PART NAME	GROUP NUMBER
Guard kit (rear bumper)	17984
Guard kit (wheel splash)	16A550
Guard (lower radiator hose)	8C045
Guide (brake shoe adjusting lever cable)	2A179
Guide (carb. venturi valve diaphragm spring)	9A906
Guide (eng. disc)	6K297
Guide (eng. timing belt camshaft)	6B260
Guide (eng. valve push rod)	6A564
Guide (hood latch spring)	16927
Guide (parking brake cable)	2A700
Guide (parking brake cable front)	2A697
Guide (rear axle differential clutch plate)	4A323
Guide (rear bumper)	17C776
Guide (rear bumper isolator)	17C900
Guide (speed control connector)	9E856
Guide (rear view outside mirror cable)	17D678
Guide (steering gear ball return)	3523
Guide (throttle return spring)	9K828
Guide (trans. front band servo piston)	7A269
Guide (trans. front band servo release piston)	7A269
Guide (valve rocker arm fulcrum)	6A588
Guide kit (P/S gear ball return)	3D727
Gusset assy. (front fender apron to radiator support)	16B198–9

H

PART NAME	GROUP NUMBER
Handle (hood catch control cable)	16914
Handle assy. (parking brake release)	2760
Handle & shock assy. (tilt wheel)	3F609
Hanger (rear spring)	5775
Hardware kit (brake shoe and lining)	2C077
Hardware kit (starter motor armature)	11K126
Harness assy. (A/C control motor)	18C560
Harness assy. (A/T/C control box)	19D615
Head (A/C compressor cylinder)	2995
Head (eng. cylinder)	6049
Head (rear view outside mirror)	17723
Headlamp kit (less wiring & bulb)	13008
Hinge (carb. fuel bowl vent)	9H584
Hinge (headlamp cover)	13A154–5
Hinge (hood less spring)	16796–7
Hinge assy. (rad. grille)	8C039
Hitch kit (trailer)	19D520
Heater kit (cylinder block)	6D008
Hoist (spare wheel)	1A432
Holder (alternator brush)	10351
Holder (carb. idling jet)	9575
Holder (fuse)	14417
Holder (starter motor brush)	11061
Holder assy. (alternator brush)	10320
Hood (less hinges)	16612
Hook (hood aux. catch)	16892
Hook (hood latch)	16900
Hook (jack)	17A003
Horn assy.	13832–3
Horn kit (high pitch)	13800

H — Cont'd

PART NAME	GROUP NUMBER
Horn kit (vacuum air)	13800
Housing (fuel tank vent valve)	9A231
Hose (anti backfire valve vacuum)	9C433
Hose (air by–pass inlet)	9H298
Hose (auxiliary fuel tank drain)	9B172–3
Hose (brake skid control actuator air)	2B369
Hose (brake skid control actuator vacuum)	2B370
Hose (bulk)	17543
Hose (eng. crankcase vent)	6A664, 6N664V, 6853
Hose (eng. to trans. vacuum tube)	7B086
Hose (exh. air supply control valve)	9G424
Hose (exhaust air supply check valve inlet moulded)	9B466
Hose (exhaust air supply control valve to check	9G459
Hose (exhaust air supply by–pass valve)	9K466
Hose (exhaust air supply pump–muffler)	9F451
Hose (exhaust air supply pump to by–pass valve)	9K451
Hose (exhaust gas recirculation vac. control to carb.)	9B762
Hose (front brake)	2078
Hose (fuel tank emission tube)	9A227
Hose (fuel tank overflow)	9A129
Hose (fuel tank to filler pipe)	9047
Hose (fuel tube)	9324
Hose (fuel tube intermediate)	9C275
Hose (fuel tube rear)	9327
Hose (fuel return)	9C327
Hose (fuel vapor return)	9G297
Hose (fuel vapor separator to fuel filter)	9G295
Hose (fuel vapor separator to fuel pump)	9G296
Hose (fuel vapor separator to fuel tank rear)	9C287
Hose (heater water)	18472
Hose (parking brake)	2A596
Hose (parking brake release)	2A804
Hose (power brake booster reservoir to manifold)	2A047
Hose (P/S return line)	3A005
Hose (radiator)	8260
Hose (radiator bulk)	8333
Hose (radiator overflow)	8075
Hose (rear axle)	4090
Hose (rear axle housing vent)	4A001
Hose (rear window washer)	17652
Hose (speed control metering valve to valve supply)	9C748
Hose (speed control regulator to servo)	9C746
Hose (speed control regulator to valve supply)	9D770
Hose (thermactor air by–pass valve inlet)	9F287
Hose (vacuum gauge)	2B175
Hose (vent nozzle air)	18556
Hose (water by–pass)	8597
Hose (windshield defroster)	18556
Hose (windshield washer)	17A605
Hose assy. (air leveler)	5A667
Hose assy. (automatic air leveler compressor to valve)	5A714

INDEX

△ Refer to Page 1 of Paint Section

H — Cont'd

PART NAME	GROUP NUMBER
Hose assy. (automatic air leveler reservoir to compressor)	5A849
Hose assy. (automatic air leveler reservoir to valve)	5A850
Hose assy. (eng. oil cooler)	6A715
Hose assy. (P/S pressure line)	3A719
Hose assy. (rear wheel brake)	2A442
Hose assy. (rear window washer)	17408
Hose assy. (speed control regulator to vacuum supply)	9E723
Hose assy. (windshield washer)	17K605
Hose & elbow assy. (A.T.C. control sensor)	19D888
Hose guard kit (A/C refrigerant line)	19B970
Housing (A/C and heater blower)	18A544
Housing (A/C blower motor)	18592–3
Housing (A/C blower outer)	18755
Housing (A/C instrument panel register)	19623
Housing (alternator front)	10333
Housing (carb. air cleaner temperature sensor override valve)	9E863
Housing (carb. thermostatic choke)	9848
Housing (clock)	15A003
Housing (headlamp cover solenoid)	13C021
Housing (heater)	18592–3
Housing (hood hinge)	16C674
Housing (instrument cluster)	10838
Housing (parking lamp)	13A272–3
Housing (rear axle)	4010
Housing assy. (roof sliding panel switch)	15873
Housing (seat belt warning lamp)	10C876
Housing (starter motor drive end)	11130
Housing (starter motor rear end)	11130
Housing (trans. clutch)	7505
Housing (trans. console shift selector)	7A306
Housing (trans. converter)	7975–6
Housing (trans. extension)	7A039
Housing (water pump)	8505
Housing (window regulator switch)	14527–8
Housing (windshield wiper motor)	17A431
Housing assy. (alternator front)	10333
Housing assy. (alternator rear)	10334
Housing assy. (carb. choke)	9A575
Housing assy. (eng. flywheel)	6392
Housing assy. (P/S gear actuator)	3E564
Housing assy. (P/S pump)	3A643
Housing assy. (reading lamp switch)	13C708
Housing assy. (steering gear)	3548
Housing assy. (trans. console shift)	7D394
Housing assy. (trans. gearshift)	7222
Housing assy. (warning indicator)	10C876
Housing & plugs assy. (carb. thermostatic choke)	9849
Housing kit (carb. thermostatic choke)	9848
Hub (carb. fast idle cam)	9D558
Hub (front wheel)	1104

H — Cont'd

PART NAME	GROUP NUMBER
Hub (rear axle differential gear clutch)	4946
Hub (trans. converter turbine)	7926
Hub (trans. front clutch)	7B067
Hub (trans. output shaft)	7D164
Hub (water pump pulley)	8553
Hub assy. (instrument cluster dial)	10C942
Hub assy. (instrument cluster lens)	10C867
Hub & bearing (clutch release)	7548
Hub & brake drum (front wheel)	1102
Hub & rotor (front wheel disc brake)	1102

I

PART NAME	GROUP NUMBER
Idler (parking brake rear cable)	2A808
Impeller (water pump)	8512
Impeller repair kit (P/S pump)	3A711
Indicator (eng. oil level)	6750
Indicator (trans. control selector)	7A110
Indicator (trans. oil level)	7A020
Indicator assy. (distance to empty)	9G327
Insert (carb. to intake manifold spacer)	9E690
Insert (eng. oil filter mounting bolt)	6890
Insert (P/S pump cam)	3B585
Insert (rear spring)	5624
Insert (steering column lock)	3E716
Insert (steering wheel pad)	3C680
Insert (thermostatic choke control)	9A714
Insert (trans. column shift selector position)	7A216
Insert (trans. control selector housing)	7E362
Insert (trans. synchronizer hub)	7A044
Installation kit (P/S)	3A634–5
Insulator (accelerator shaft to dash bracket)	9B862
Insulator (A/C compressor bolt)	19D893
Insulator (A/C blower motor mounting)	19D642
Insulator (alternator diode plate)	10A383
Insulator (alternator stator end)	10A361
Insulator (alternator terminal)	10329
Insulator (ammeter)	10C914
Insulator (automatic air leveler compressor mounting)	2A965
Insulator (driveshaft universal joint center bearing)	4826
Insulator (EGR cooler mtg. brkt.)	9F487
Insulator (EGR valve to exhaust manifold tube)	9E481
Insulator (eng. front support)	6038
Insulator (eng. rear support rebound)	6A061
Insulator (frame to body bracket)	5A103
Insulator (front bumper)	17C760
Insulator (front bumper arm)	17B947
Insulator (front disc brake caliper locating pin)	2B299
Insulator (front spring)	5415
Insulator (front stabilizer bar to lower suspension arm link bolt)	5–5490
Insulator kit (front susp. upper arm brkt.)	2078
Insulator (fuel tank to floor pan)	9A068
Insulator (heated backlite)	14A199

COPYRIGHT © 1986 — FORD MOTOR COMPANY — DEARBORN, MICHIGAN

INDEX

PART NAME	GROUP NUMBER
△ Refer to Page 1 of Paint Section	
I — Cont'd	
Insulator (hood)	16738
Insulator (horn blowing ring inner contact plate)	13A891
Insulator (instrument cluster)	10C914
Insulator (P/S control valve spool stop)	3C562
Insulator (P/S cylinder rod)	3A344
Insulator (P/S hose mounting)	3A609
Insulator (radiator grille lower)	8C158
Insulator (rear bumper reinforcement center)	17B857
Insulator (rear spring)	5536
Insulator (rear spring center mounting)	5741
Insulator (rear stabilizer bar link)	5C492
Insulator (stabilizer bar)	5493
Insulator (stabilizer to frame)	5484
Insulator (starter motor brush holder)	11062
Insulator (starter motor switch)	11068
Insulator (starter motor switch spring)	11181
Insulator (starter motor terminal field)	11107
Insulator (steering column bracket)	3682
Insulator (steering column lower flange)	3B564
Insulator (steering column shaft)	3E629
Insulator (steering gear)	3C716
Insulator (steering gear rack & pinion mounting)	5484
Insulator (steering wheel spoke)	3D759
Insulator (thermostatic choke control outlet tube)	9865
Insulator (trans. column shift selector lever)	7246
Insulator (trans. control cable bracket)	7F030
Insulator (trans. control selector shaft arm)	7341
Insulator (trans. gearshift lever)	7246,
Insulator (trans. gearshift selector arm)	7341
Insulator (trans. reverse gearshift lever)	7349
Insulator (wiring)	14A240
Insulator (wiring terminal)	14A336
Insulator assy. (eng. rear support)	6068
Insulator assy. (P/S hose)	3E601
Insulator kit (alternator terminal)	10A383
Interior paint	△
Interlock (trans. gearshift control lever)	7C318
Isolator assy. (frame to body)	5C036
Isolator assy. (front bumper)	17C882–3
Isolator assy. (rear bumper)	17C884–5
J	
Jack assy.	17080
Jet (carb. idle)	9542
Jet (carb. main metering)	9533
Jet (windshield washer nozzle)	17A602
Jet & bracket assy. (windshield washer nozzle)	17603
Jewel (high beam indicator lamp)	13586
Joint assy. (front suspension upper arm ball)	3049
K	
Key (blank)	3685
K — Cont'd	
Key (eng. camshaft gear to camshaft)	6B316–7
Key (eng. crankshaft gear or sprocket to crankshaft)	6B316
Key (eng. valve spring retainer)	6518
Key (front disc brake caliper support)	2B487
Knob (clock front reset)	15032
Knob (fuse holder cover)	14N016
Knob (radio rear seat speaker fader control)	17513
Knob (steering column lock actuator lever)	3F531
Knob (trans. selector lever)	7213
Knob (trans. shift lever)	7213
Knob assy. (A/C blower switch control)	18519
Knob assy. (defroster control)	18519
Knob assy. (heated backlite control)	15674
Knob assy. (heater blower switch control)	18519
Knob assy. (instrument panel lamp switch)	13K713
Knob assy. (power top control)	18519
Knob assy. (radio control)	18817
Knob assy. (radio fader control)	17513
Knob assy. (rear seat speaker fader control)	17513, 18958
Knob assy. (rear window defogger control)	18519
Knob assy. (speed control)	18519
Knob assy. (tailgate window control)	15674
Knob assy. (trans. console shift selector lever)	7213
Knob assy. (wiper switch control)	17513
Knob & element assy. (cigar lighter)	15052
Knob & shaft assy. (headlamp switch)	11661
L	
Label (fuel unleaded)	9A095
Label (eng. code & information)	6E072
Lamp assy. (back window heat control warning)	18C622
Lamp assy. (backup)	15000–1
Lamp assy. (cigar lighter)	15072
Lamp assy. (emergency warning flasher)	10K844
Lamp assy. (eng. compt.)	15702
Lamp assy. (exterior pillar)	15B437
Lamp assy. (interior)	13776
Lamp assy. (luggage compt.)	13A756
Lamp assy. (map)	15650
Lamp assy. (marker light)	15A201
Lamp assy. (parking)	13200–1
Lamp assy. (rear)	13404–5
Lamp assy. (rear license)	13550
Lamp assy. (seat belt warning)	10B925
Lamp assy. (trans. control selector)	15A801
Lamp assy. (warning indicator)	10C915
Lamp & wire assy. (glove compt.)	14412
Latch (hood)	16929, 16700–1
Latch assy. (carb. electric choke cam)	9A754
Leaf (rear spring)	5564–5
Lens (backup lamp)	15514

INDEX

△ Refer to Page 1 of Paint Section

L — Cont'd

PART NAME	GROUP NUMBER
Lens (back window heat control warning lamp)	18C672
Lens (instrument cluster main)	10887
Lens (instrument cluster warning lamp)	10A936
Lens (instrument panel turn indicator lamp)	13340
Lens (interior lamp)	13734
Lens (odometer)	17B251
Lens (parking lamp)	13208–9
Lens (pillar, dome or roof side lamp)	13783
Lens (rear lamps)	13450–1
Lens (rear license plate lamp)	13564
Lens (seat belt warning lamp)	10B927
Lens (side lamp)	15A215
Lens (trans. column shift selector dial)	7B037
Lens (vanity mirror lamp)	17C706
Lens assy. (courtesy lamp)	13547
Lens assy. (rear lamp optic)	13463
Lens assy. (windshield wiper control)	17D440
Letter (hood front)	16606
Leveler kit (air)	5A589
Lever (accelerator pedal)	9A709
Lever (A/C temperature regulator control)	18A367
Lever (automatic air leveler valve actuating)	5B689
Lever (brake shoe adjusting)	2A176–7
Lever (carb. accelerator pump)	9D591
Lever (carb. air valve dampener)	9B582
Lever (carb. bowl vent operating)	9D591
Lever (carb. choke control diaphragm)	9J553
Lever (carb. choke shaft)	9551
Lever (carb. dechoke override)	9J598
Lever (carb. dump valve)	9538
Lever (carb. fast idle adjusting)	9538
Lever (carb. fast idle cam)	9F577
Lever (carb. fast idle pickup)	9B562
Lever (carb. fuel inlet needle control)	9B904
Lever (carb. metering rod)	9J538
Lever (carb. secondary throttle stop)	9583
Lever (carb. throttle)	9C504, 9583
Lever (carb. throttle shaft aux.)	9A537
Lever (carb. venturi valve limiter)	9A926
Lever (fuel pump rocker arm return spring)	9B354
Lever (heater air outlet control)	18K253
Lever (heat air damper)	18K417
Lever (heater temperature regulator control)	18544
Lever (parking brake cable to secondary brake shoe)	2A637–8
Lever (parking brake equalizer)	2A605–6
Lever (rear wheel parking brake shaft actuating)	2B596–7
Lever (starter motor drive)	11067
Lever (steering column locking)	3B661
Lever (steering column release)	3D544
Lever (throttle control shaft trans. K/D)	9P721
Lever (trans. column mounted gearshift)	7210
Lever (trans. downshift control cover)	7A394

L — Cont'd

PART NAME	GROUP NUMBER
Lever (trans. first & second speed gearshift)	7290
Lever (trans. floor mounted gearshift)	7210
Lever (trans. front band servo actuating)	7330
Lever (trans. gearshift control)	7C312
Lever (trans. intermediate & high gear shifter fork)	7285
Lever (trans. low & reverse gear shifter fork)	7290
Lever (trans. manual control valve detent)	7A115
Lever (trans. parking pawl toggle)	7A117, 7A121
Lever (trans. parking pawl torsion spring)	7B470
Lever (trans. rear bank servo actuating)	7A169
Lever (trans. reverse gearshift)	7290
Lever (trans. third & fourth speed gearshift)	7285
Lever (trans. throttle control inner)	7–7283
Lever (w/shield def. control)	18C254
Lever (windshield wiper motor park switch)	17B549
Lever kit (brake shoe adjusting)	2A176
Lever assy. (carb. thermostatic choke)	9K737
Lever assy. (carb. fast idle adjusting intermediate)	9B912
Lever assy. (clutch release)	7515
Lever assy. (hood latch release)	16B708
Lever assy. (starter motor)	11077
Lever assy. (steering column lock)	3F527
Lever assy. (trans. column shift selector)	7210
Lever assy. (trans. console shift selector)	7210
Lever assy. (trans. downshift control)	7A394
Lever assy. (trans. downshift detent)	7D261
Lever assy. (trans. manual control)	7A256
Lever assy. (trans. parking pawl)	7A117
Lever assy. (turn indicator)	13305
Lever & shaft assy. (carb. secondary throttle plate)	9A592
Lever & shaft assy. (carb. throttle)	9581
Lever & shaft assy. kit (carb. throttle)	9581
Lever & strut assy. (parking brake)	2L643–4
Lever & swivel assy. (carb. altitude control)	9B509
Lighter kit (cigar)	15A044
Limiter (carb. idle adjusting)	9J500
Limiter (carb. idle adjusting needle)	9J500
Liner (rear spring clamp)	5334
Lining (brake shoe primary)	2021, 2284
Lining (brake shoe secondary)	2022, 2285
Lining kit (brake shoe)	2007
Link (automatic air leveler valve actuating)	5A690
Link (brake cylinder to shoe)	2042
Link (carb. accelerator pump)	9529
Link (carb. air valve dampener)	9H583
Link (carb. choke thermostat)	9834
Link (hood latch release)	16B708
Link (parking brake lever to primary brake shoe)	2A642
Link (throttle control)	9746
Link (trans. parking pawl toggle)	7C495

COPYRIGHT © 1986 — FORD MOTOR COMPANY — DEARBORN, MICHIGAN

INDEX

△ Refer to Page 1 of Paint Section

L — Cont'd

PART NAME	GROUP NUMBER
Link (trans. parking pawl toggle operating lever)	7C495
Link assy. (automatic air leveler valve actuating)	5A690
Link assy. (stabilizer bar)	5K484
Liquid line (A/C dryer to evaporator)	19D567, 19835–7
Liquid tire chain	△
Lock (rear axle differential bearing adjuster)	4143
Lock & keys (spare wheel)	1386
Lock lubricant	△
Lock set (hood latch release handle)	16978
Lock set (spare wheel)	1386
Lockwasher	17K495
Louver (front fender side)	16C252
Lubricants	△
Lubricator assy. (distributor cam)	12A206

M

PART NAME	GROUP NUMBER
Magnet (trans. oil pan)	7K195
Main control assy. (trans.)	7A100
Manifold (EGR cooler)	9G443
Manifold (exhaust)	9430–1
Manifold (intake)	9424
Manifold assy. (exhaust air supply)	9B445
Manifold assy. (vacuum outlet)	9C490
Manifold & check valve (power brake booster)	2A411
Manifold & tube assy. (A/C)	19D734
Mask (instrument cluster)	10890
Mask (radio receiver opening)	19A172
Mask (trans. console shift selector indicator dial)	7B052
Mask assy. (console panel lamp)	13C726
Mast (radio antenna replacement)	18A886
Medallion (radiator grille)	8A223
Microphone assy. (C.B.)	18B804
Mirror (vanity)	17A679
Mirror assy. (rear view inside)	17700
Mirror assy. (rear view outside)	17682
Mirror kit (rear view inside)	17700
Mirror kit (rear view outside)	17696
Modulator assy. (breakerless ignition)	12A199
Module (brake skid control)	2B373
Motor assy. (A/C blower)	18527
Motor assy. (A/C vacuum control)	18A318
Motor assy. (carb. feedback control)	9C908
Motor assy. (headlamp cover control)	13A167
Motor assy. (heater blower)	18527
Motor assy. (parking brake release control)	2A843
Motor assy. (seat regulator)	14547
Motor assy. (sliding roof panel)	15790
Motor assy. (windshield wiper)	17508
Motor oils	△
Motor & tube assy. (electric radio antenna)	18850
Motor & tube assy. (electric antenna–C.B.)	18B850

M — Cont'd

PART NAME	GROUP NUMBER
Moulding (front bumper)	17B970
Moulding (front bumper stone deflector)	17B814
Moulding (front fender extension)	16B124–5
Moulding (front fender front)	16160–1, 16164–5
Moulding (front fender front extension upper)	16074–5
Moulding (front fender side)	16003–4, 16036–7
Moulding (front fender side rear)	16A038–9
Moulding (front fender upper rear)	16C132–3
Moulding (front fender wheel opening)	16038–9
Moulding (headlamp cover)	13B088
Moulding (headlamp door)	13A112
Moulding (headlamp housing)	13B166
Moulding (hood)	16856–7
Moulding (hood rear)	16B918
Moulding (quarter panel)	16003–4
Moulding (radiator grille)	8419
Moulding (radiator grille opening panel)	8A156–7
Moulding (radiator grille sight shield)	8C099
Moulding (rear bumper)	17B970
Moulding (rear bumper end)	17C794–5
Moulding (rear bumper lower center)	17C777
Moulding (rear bumper upper)	17C772
Moulding (rear reflector)	13B417
Moulding assy. (front fender side lower front)	16550–1
Mounting (trans. clutch release equalizer bar)	7507
Mounting kit (alternator rectifier)	10K346
Mounting parts kit (alternator pulley)	10B304
Muffler	5230
Muffler assy. (exhaust air supply pump)	9F449

N

PART NAME	GROUP NUMBER
Needle (carb. idle adjusting)	9541
Network assy. (C.B. radio antenna)	18B812
Nipple (eng. crankcase ventilation hose)	6767
Nozzle (windshield defroster hose)	18490–1
Nut (adapter heater temperature control valve)	18K307
Nut (brake shoe adjusting screw)	2047
Nut (brake tube)	2133
Nut (carb. adjusting–nylon)	9D564
Nut (carb. air cleaner mounting)	9A659
Nut (carb. throttle lever retaining)	9618
Nut (clock reset knob)	15A012
Nut (courtesy lamp switch)	13753
Nut (eng. valve rocker arm stud)	6A529
Nut (front suspension upper arm mounting bolt)	3B023
Nut (headlamp adjusting screw)	13181
Nut (headlamp switch)	11650
Nut (heater regulator control)	18A508
Nut (parking brake equalizer)	2091
Nut (P/S gear race)	3D627
Nut (radio antenna)	18865

INDEX

PART NAME	GROUP NUMBER
△ Refer to Page 1 of Paint Section	
N — Cont'd	
Nut (radio control shaft)	18818
Nut (rear view outside mirror remote control)	17B732
Nut (spare wheel mounting bolt)	1462
Nut (steering gear rack & spindle rod lock)	3F514
Nut (steering gear worm thrust bearing lock)	3707
Nut (top control switch)	15A670
Nut (top control switch mounting)	15B663
Nut (trans. gearshift lever ball lock)	7C404
Nut (wheel hub bolt)	1012
Nut (windshield wiper control)	17512
Nut (windshield wiper pivot shaft to cowl)	17481
Nut & ferrule assy. (exhaust air supply)	9B471
O	
Orifice kit (power steering gear control valve housing)	3A700
Orfice repair kit (P/S control valve)	3P637
"O" ring (A/C refrigerant line)	19D695
"O" ring (A/C seal kit)	19B596
"O" ring (EGR valve)	9E457
"O" ring kit (turbocharger)	9G487
"O" ring (P/S control valve spool centering spring)	3C706
"O" ring (P/S gear control valve to housing)	3756
"O" ring (trans. clutch post outer)	7E244
"O" ring kit (A/C refrigerant line)	19B596
Oil cooler kit (trans. aux.)	7K177
Oils	△
Ornament (front fender)	16228–9
Ornament (headlamp cover)	13A186
Ornament (hood front)	16637
Ornament (hood top)	16850–1
Ornament (rear reflector)	13623
Outlet (heater duct center)	18K543
Outlet (heater duct L.H.)	18K438
P	
Packing (eng. crankshaft rear)	6701
Pad (A/C register louver)	19C896
Pad (brake pedal)	2454
Pad (clutch pedal plate)	7A624
Pad (front bumper)	17C881
Pad (front bumper horizontal)	17C829
Pad (front fender rear moulding)	16A268–9
Pad (front fender upper moulding)	16D214
Pad (front fender upper rear moulding)	16A272
Pad (fuel tank)	9075
Pad (fuse box)	14A079
Pad (hood)	16740
Pad (outside mirror)	17724
Pad (rear bumper guard)	17A807
Pad (rear bumper horizontal)	17C830
Pad (rear bumper jack bracket)	17C874
Pad (rear lamp mounting)	13420
P — Cont'd	
Pad (rear reflector mounting)	13A493
Pad (rear view inside mirror to windshield)	17A720
Pad assy. (front bumper guard)	17A812
Paint	△
Pan assy. (eng. oil)	6675
Pan assy. (trans. oil)	7A194
Panel (front valance)	17626
Panel (fuse junction)	14A067–8
Panel (radiator grille opening)	8190
Panel (radiator grille opening lower)	8188–9
Panel (relay)	14A481
Panel assy. (A/C register trim)	19C866
Panel assy. (heater control)	18A651
Panel assy. (warning indicator)	10B987
Pawl (steering column lock)	3E691
Pawl (trans. gearshift crossover)	7E341
Pawl (trans. parking)	7A441
Pedal (clutch)	7519
Pedal assy. (accelerator)	9735
Pedal assy. (brake)	2455
Pin (brake master cylinder push rod clevis)	2462
Pin (brake shoe hold down spring)	2069
Pin (carb. choke pull down)	9B527
Pin (carb. metering rod pivot)	9A515
Pin (carb. venturi valve)	9A918
Pin (carb. switch vent solenoid lever)	9H584
Pin (eng. crankshaft rear oil seal)	6A302
Pin (eng. piston)	6135
Pin (front brake shoe adjusting lever pivot)	2B240
Pin (front disc brake caliper locating)	2B296
Pin (ignition switch actuating)	11A601
Pin (parking brake cable guide–rear)	2B267
Pin (parking brake equalizer lever pivot)	2K579
Pin (parking brake handle locking)	2819
Pin (parking brake lever)	2107
Pin (rear axle differential & pinion shaft lock)	4241
Pin (seat belt switch actuator)	7E454
Pin (speed control servo clevis)	9D841
Pin (spindle connecting rod nut locking)	3K659
Pin (steering column pivot)	3D739
Pin (temperature regulator control lever pivot)	18621
Pin (trans. front band servo guide)	7A163
Pin (trans. gearshift interlock rod)	7C316
Pin (trans. gearshift lever)	7A111
Pin (trans. gearshift lever pilot)	7D439
Pin (trans. gearshifter interlock)	7235
Pin (trans. parking pawl)	7–7312
Pin (trans. parking pawl toggle)	7A119, 7A244
Pin (trans. parking pawl toggle lever)	7A244, 7A295
Pin (trans. parking pawl toggle link to pawl)	7E415
Pin (trans. rear band actuating lever shaft)	7–7356

COPYRIGHT © 1986 — FORD MOTOR COMPANY — DEARBORN, MICHIGAN

INDEX

△ Refer to Page 1 of Paint Section

P — Cont'd

PART NAME	GROUP NUMBER
Pin (trans. throttle control valve)	7A380
Pin (trans. throttle pressure booster retainer)	7D375
Pin (vanity mirror cover)	17D682
Pin (windshield wiper motor)	17B563
Pinion (rear axle differential)	4215
Pipe (auxiliary tank filler)	9B168
Pipe (auxiliary to fuel tank)	9B166–7
Pipe (muffler inlet)	5246
Pipe (muffler inlet extension)	5A212
Pipe (muffler outlet)	5255
Pipe (exhaust manifold outlet)	9G437
Pipe assy. (fuel tank)	9K079
Pipe assy. (fuel tank filler)	9034
Pipe assy. (fuel tank filler lower)	9038
Piston (brake cylinder)	2196
Piston (brake master cylinder)	2169
Piston (carb. accelerator pump)	9B544
Piston (trans. forward clutch)	7A262
Piston (trans. front band servo)	7A164, 7A260
Piston (trans. intermediate servo)	7D022
Piston (trans. rear band servo)	7A266
Piston (trans. rear clutch)	7D157
Piston assy. (carb. choke)	9840
Piston assy. (carb. feedback)	9A565
Piston assy. (carb. power valve)	9G553
Piston assy. & connecting rod (eng.)	6100
Piston assy. (eng.)	6108
Piston assy. (trans. intermediate band servo)	7D021
Piston assy. (trans. rear clutch)	7D157
Piston guide release piston & seals (front band servo)	7A260
Piston & adjuster assy. (rear disc brake)	2B588
Piston & pin assy. (trans. front band servo)	7A164
Piston & rod (carb. air valve dampener)	9H578
Piston & seal assy. (trans. reverse band servo)	7D189
Pivot (carb. venturi valve)	9A928
Pivot (headlamp cover hinge)	13B019
Planet (trans. forward)	7A398
Planet assy. (trans. reverse)	7D006
Plate (A/C blower motor mounting)	19833
Plate (A/C evaporator core)	19D736
Plate (battery hold down anchor)	10B678
Plate & bolt assy. (A/C evap. case mtg.)	19A586
Plate (brake shoe anchor pin guide)	2028
Plate (carb. air by–pass)	9A972
Plate (C.B. radio mike brake retaining)	18B825
Plate (carb. air distribution)	9F553
Plate (carb. choke)	9545
Plate (carb. piston accelerator pump)	9528
Plate (carb. throttle)	9585
Plate (clutch release equalizer bracket mounting)	7B588
Plate (driveshaft flange lock)	4693
Plate (EGR valve hole)	9G496

P — Cont'd

PART NAME	GROUP NUMBER
Plate (eng. aux. shaft retaining)	6613
Plate (eng. camshaft thrust)	6269
Plate (eng. cylinder front cover)	6B070
Plate (eng. flywheel reinforcing)	6A366
Plate (eng. oil inlet tube bolt locking)	6A736
Plate (eng. oil pump body)	6616
Plate (exterior lamp opening cover)	15B445
Plate (front brake backing)	2012–3
Plate (front brake hub mounting bolt locking)	2K314
Plate (front brake mounting bolt locking)	2K007
Plate (front bumper)	17859
Plate (front bumper anchor)	17612
Plate (front coil spring top mounting)	3A197
Plate (front disc brake caliper anchor)	2B292–3
Plate (front fender apron access hole cover)	16D200–1
Plate (front fender name)	16098
Plate (front name)	16604
Plate (front suspension camper adjusting)	3B391
Plate (headlamp mounting)	13A004
Plate (heater deflector)	18C296
Plate (heater inlet duct retaining)	18A452
Plate (heater hose inlet & outlet cover)	18469
Plate (heater housing blower & plenum)	18A845
Plate (heater housing core)	18A488
Plate (heater motor mounting)	18581
Plate (heater mounting)	18679
Plate (hood aux. catch striker)	16918
Plate (hood hinge)	16795
Plate (hood latch cable retainer)	16B968
Plate (hood latch cover)	16N782
Plate (horn blow switch cover trim)	13A932
Plate (horn switch brush)	13A823
Plate (indicator mounting instrument cluster)	10B978
Plate (instrument cluster back)	10848
Plate (instrument cluster control mounting)	10A860
Plate (instrument cluster switch opening cover)	10A862
Plate (instrument cluster trim)	10A861
Plate (instrument cluster warning lights)	10A944
Plate (P/S control valve cap adapter)	3–3712
Plate (P/S pump pressure)	3D590
Plate (P/S pump retainer end)	3D589
Plate (radio speaker mounting front)	18963
Plate (rear axle bumper mounting)	5K842
Plate (rear axle differential clutch)	4214, 4A325, 4945
Plate (rear axle differential clutch spring preload)	4A326
Plate (rear axle differential gear clutch)	4947
Plate (rear brake backing)	2211–2
Plate (rear brake shoe support)	2028
Plate (rear bumper arm anchor)	17B772
Plate (rear disc brake caliper anchor)	2B582–3
Plate (rear frame side)	5A007

INDEX

△ Refer to Page 1 of Paint Section

PART NAME	GROUP NUMBER
P — Cont'd	
Plate (rear spring)	5796–8
Plate (rear stabilizer bar link mounting bracket)	5B486
Plate (rear stabilizer bar stud mounting)	5A775
Plate (rear suspension bumper striker)	5K845
Plate (rear view outside mirror remote control)	17B733
Plate (speedo. mounting)	17289
Plate (starter motor brush end)	11049
Plate (steering column shroud clip retainer)	3L525
Plate (trans. clutch internal & external spline)	7B164
Plate (trans. clutch pressure)	7B066
Plate (trans. column shift selector bellcrank mounting)	7E046
Plate (trans. control valve lower body end)	7–7014
Plate (trans. engine rear)	7007
Plate (trans. floor pan gearshift lever opening cover)	7B233
Plate (trans. gearshift stop)	7C206
Plate (trans. gearshift tube bracket)	7E417
Plate (trans. main control cover & lower valve body separating)	7734
Plate (trans. main control lower valve body)	7729
Plate (trans. main control upper valve body front)	7A396
Plate (trans. main control upper valve body rear)	7A393
Plate (trans. main control valve body separating)	7A008
Plate (trans. oil pressure regulator body separating)	7A142
Plate (trans. output shaft thrust washer)	7B256
Plate (trans. parking rod guide)	7D419
Plate (trans. parking rod support)	7D414
Plate (trans. selector lever opening)	7B233
Plate (trans. shift control mounting)	7E046
Plate (trans. throttle pressure booster stop)	7E336
Plate (water by–pass orifice)	8K517
Plate (window regulator switch)	14523–4
Plate (window regulator switch cover)	14A020
Plate assy. (A/C register)	19C876
Plate assy. (clutch release)	7B517
Plate assy. (eng. insulator support front)	6A068
Plate assy. (heater air mixing)	18A545
Plate assy. (heater housing air inlet)	18A493
Plate assy. (rear lamp reflector)	13A569
Plate assy. (speed control bracket)	9C809
Plate assy. (trans. engine rear)	7007
Plate & bushing (P/S pump)	3D643
Plate & bushing (starter motor brush end)	11049
Plate & switch assy. (windshield wiper motor)	17B583
Plug (carb. flange)	9522
Plug (carb. fuel filter–retainer)	9A540
Plug (carb. jet channel)	9E515
Plug (carb. venturi valve pivot)	9A929
Plug (deceleration valve sealing)	9P706
Plug (EGR cooler manifold)	9H453
Plug (eng.)	6026
Plug (eng. camshaft rear bearing)	6266
P — Cont'd	
Plug (eng. cylinder head exhaust air supply)	6052
Plug (eng. oil pan drain)	6730
Plug (eng. oil pump relief valve)	6666, 6A616
Plug (eng. valve rocker arm shaft)	6572
Plug (exhaust air supply pump relief valve)	9C429
Plug (exhaust manifold)	9G458
Plug (fuel pump rocker arm pin hole)	9A360
Plug (heater case to core)	18C636
Plug (P/S control valve reaction control spring)	3A512–3
Plug (starter motor lever)	11K168
Plug (steering gear housing oil filler)	3538
Plug (trans. oil pan drain)	7A010
Plug (trans. shift control adjusting hole)	7C147
Plunger (eng. oil pump relief valve)	6674
Plunger (trans. column shift selector lever)	7361
Plunger (trans. manual control valve detent)	7–7607
Plunger (windshield wiper switch)	17A522
Plunger assy. (starter motor)	11393
Pointer (eng. timing)	6023
Points kit (starter motor contact)	11134
Positioner assy. (carb. throttle)	9S553
Potentiometer assy. (carb. throttle)	9B989
Post (starter motor contact)	11176
Potentiometer (light switch)	11691
Power steering installation kit)	3A634–5
Processor assy. (eng. electronic control)	12A650
Pulley (alternator)	10344
Pulley (belt idler)	8679
Pulley (parking brake cable)	2804
Pulley (parking brake equalizer lever)	2K758
Pulley (P/S pump)	3A733
Pulley (water pump)	8509
Pulley assy. (belt idler)	6B209, 8678
Pulley assy. (eng. crankshaft)	6312
Pulley assy. (eng. crankshaft outer)	6A312
Pulley assy. (eng. tensioner)	6K254
Pulley assy. (exhaust air supply pump)	9B447
Pump (carb. discharge nozzle)	9A574
Pump (trans. front oil)	7A103
Pump (windshield washer)	17664
Pump assy. (eng. oil)	6600
Pump assy. (exhaust air supply thermactor)	9A486
Pump assy. (fuel)	9350
Pump assy. (P/S)	3A674
Pump assy. (water)	8501, 8505
Pump repair kit (water)	8591
Push rod (fuel pump)	9400
Q	
Quadrant assy. (heater control)	18K309

COPYRIGHT © 1986 — FORD MOTOR COMPANY — DEARBORN, MICHIGAN

INDEX

△ Refer to Page 1 of Paint Section

R

PART NAME	GROUP NUMBER
Race (trans. converter stator clutch inner & outer)	7947
Race (trans. front clutch sun gear thrust bearing)	7–7549
Race (trans. output shaft thrust bearing)	7A387
Race (trans. overrunning clutch inner)	7D171
Race (trans. overrunning clutch outer)	7B456
Race (trans. primary sun gear thrust)	7D336
Race (trans. sun gear thrust bearing)	7D235
Radiator	8005
Radio receiver kit	18805
Radiator relocation kit	8A468
Rail (front fender outside finish)	16250–1
Rail (trans. gear shifter)	7240
Rail (trans. third & fourth speed shifter)	7241
Ratchet (rear brake adjusting screw)	2K415–6
Rectifier assy. (alternator)	10304
Reducers	△
Refinishing materials	△
Reflector (rear)	13A568
Reflector flare kit	19E500
Reflector assy. (rear panel)	13A565
Refrigerant compressor oil	△
Refrigerant line replacement & repair parts	19C705–8
Register (heater air)	18C366
Register assy. (heater air distribution)	18C306
Regulator (alternator)	10316
Regulator (emission vacuum control)	9F490
Regulator (instrument cluster voltage)	10804
Regulator (trans. oil pressure)	7A139
Regulator assy. (speed control)	9D757
Reinforcement (auxiliary fuel tank cover)	9B187
Reinforcement (eng. rear support)	6A042
Reinforcement (front bumper center)	17A792
Reinforcement (front bumper guard)	17A928
Reinforcement (front bumper stone deflector)	17A956
Reinforcement (front fender apron & radiator support upper)	16B048
Reinforcement (front fender battery mounting)	16B168
Reinforcement (front fender apron lower)	16060
Reinforcement (front fender apron to radiator support center)	16142
Reinforcement (front fender top front lower)	16D186–7
Reinforcement (fuel tank filler pipe flange)	9B211
Reinforcement (hood latch on hood)	16A603
Reinforcement (parking lamp body)	13A206
Reinforcement (radiator grille—lower)	8A078
Reinforcement (radiator grille opening panel)	8A284
Reinforcement (radio antenna grounding)	18A954
Reinforcement (rear bumper center)	17A914
Reinforcement (rear bumper guard)	17B876
Reinforcement (rear bumper mounting bracket)	17B862–3
Reinforcement (rear bumper isolator mounting)	17C901
Reinforcement (speed control cowl mounting)	9E824
Reinforcement (trans. shift shaft)	7E403

R — Cont'd

PART NAME	GROUP NUMBER
Reinforcement (trans. shifter shaft dash panel opening)	7E404
Reinforcement assy. (front fender top rear)	16B010–1
Reinforcement assy. (headlamp cover hinge)	13C050
Relay (automatic headlamp dimmer)	13A025
Relay (back window defroster)	13A253
Relay assy. (C.B. radio speaker)	18B821
Relay (warning lamp indicator)	10C838, 10B926
Relay assy. (A.T.C. box)	19D613
Relay assy. (back window heat control)	18C641
Relay assy. (eng. electronic control)	12A646
Relay assy. (fuel pump)	9345
Relay assy. (horn)	11450
Relay assy. (horn selector)	13A942
Relay assy. (carb. choke control)	9C972
Relay assy. (parking lamp)	13A253
Relay assy. (carb. choke control)	9C972
Relay assy. (trailer light)	13A435
Relay assy. (turn indicator)	13A366
Relay assy. (turning lamp)	15A217
Relay assy. (window regulator safety)	14677
Relay assy. (window regulator seat & top neutral control)	14512
Relay & bracket assy. (speed control)	9C792
Repair kit (governor & control)	7D217
Reservoir (automatic air leveler)	5K756
Reservoir (brake master cylinder)	2K478
Reservoir (radiator coolant recover)	8A080
Reservoir (windshield washer)	17618
Reservoir assy. (air horn vacuum supply)	13A888
Reservoir assy. (E.G.R. vacuum)	9E453
Reservoir assy. (headlamp cover control)	13A185
Reservoir assy. (P/S pump oil)	3A697
Reservoir assy. (radiator coolant recovery)	8A080
Reservoir & bracket assy. (automatic air leveler)	5A847
Reservoir & bracket assy. (speed control vacuum)	9E799
Resistor (radio receiver supression choke)	18A952
Resistor assy. (A/C switch to blower motor)	18591
Resistor assy. (alternator voltage ballast)	10632
Resistor assy. (alternator warning lamp shunt)	10C346
Resistor assy. (heater switch to blower motor)	18591
Resistor assy. (light switch rheostat)	11691
Resistor wire (charge indicator)	10A665
Resonator (muffler outlet pipe)	5A289
Restrictor (carb. jet)	9A521
Restrictor (exhaust manifold)	5F208
Restrictor (vacuum gauge tube)	9G323
Restrictor assy. (distributor vacuum)	12A225
Retainer (A/C register)	19B635
Retainer (accelerator cable)	9E728
Retainer (alternator front bearing)	10A355
Retainer (auxiliary fuel tank filler pipe)	9A108
Retainer (auxiliary tank filler pipe)	9B171
Retainer (backup lamp switch)	15A541

INDEX

△ Refer to Page 1 of Paint Section

R — Cont'd

PART NAME	GROUP NUMBER
Retainer (brake master cylinder check)	2K505
Retainer (brake master cylinder filler cap)	2B245
Retainer (brake master cylinder piston)	2L081
Retainer (brake master cylinder piston spring)	2174
Retainer (brake master cylinder push rod)	2B224
Retainer (brake master cylinder secondary) piston spring return)	2185
Retainer (brake pedal shaft)	2B277
Retainer (brake shoe spring)	2066
Retainer (brake tube support)	2A407
Retainer (carb. accelerator pump check valve)	9575
Retainer (carb. accelerator pump check valve disc)	9575
Retainer (carb. accelerator pump spring)	9599
Retainer (carb. air cleaner to carb.)	9B672
Retainer (carb. choke shaft assy.)	9J548
Retainer (carb. choke rod)	9B527
Retainer (carb. choke lever)	9B527
Retainer (carb. fast idle cam rod)	9599
Retainer (carb. fast idle seal)	9B501
Retainer (carb. float bowl vent)	9B527
Retainer (carb. float lever shaft)	9599
Retainer (carb. idle jet)	9575
Retainer (carb. pump lifter seal)	9599
Retainer (carb. pump operating lever)	9568
Retainer (clutch release equalizer bar)	7B545
Retainer (clutch release equalizer shaft bearing)	7A629
Retainer (crankcase emission filter)	9E628
Retainer (defroster damper door)	18A482
Retainer (eng. crankcase vent grommet)	6A892
Retainer (eng. front support insulator)	6048
Retainer (eng. rear support)	6054
Retainer (eng. valve spring)	6514
Retainer (exterior lamp bezel)	15B444
Retainer (exterior lamp warning buzzer)	13C046
Retainer (front bumper anchor plate)	17B988
Retainer (front bumper stone end deflector)	17D816
Retainer (front fender apron to bumper shield)	16B174
Retainer (front shock absorber bumper)	18A086
Retainer (front suspension lower arm bolt joint seal)	3A027
Retainer (front suspension spring)	3B025
Retainer (front suspension spring guide)	3A198
Retainer (front wheel hub grease)	1190
Retainer (fuel tank filler pipe)	9008
Retainer (headlamp cover guide rod)	13B109
Retainer (headlamp cover hinge)	13A166
Retainer (headlamp switch)	11A669
Retainer (heater core)	18A573, 18C583, 18B689
Retainer (hood assist)	16C748
Retainer (hood bumper)	16B844
Retainer (hood hinge housing)	16C766
Retainer (hood insulator)	16776
Retainer (hood pad on cowl)	16A669

R — Cont'd

PART NAME	GROUP NUMBER
Retainer (hood release cable)	16930
Retainer (hood weatherstrip front)	16K774
Retainer (instrument cluster jewel)	10D838
Retainer (jack handle)	17A038
Retainer (outside moulding)	16A027–9, 16A076, 16232, 16234, 16249
Retainer (parking brake cable rear)	2A709
Retainer (parking brake equalizer lever return spring)	2A616
Retainer (parking brake front)	2K865
Retainer (parking brake lever boot)	2A714
Retainer (parking brake lever pin)	2106
Retainer (parking brake ratchet bar locking spring)	2786
Retainer (parking brake spring)	2A787
Retainer (parking lamp)	13220–1
Retainer (P/S hose insulator mounting)	3A610
Retainer (rear axle driving pinion bearing)	4669
Retainer (rear axle driving pinion pilot bearing)	4627
Retainer (rear axle wheel bearing outer)	4020
Retainer (rear brake adjusting hole cover)	2A092
Retainer (rear bumper anchor plate)	17B774
Retainer (rear bumper stone deflector)	17879
Retainer (rear lamp lens)	13539
Retainer (rear lamp wiring)	13A506
Retainer (rear spring center mounting insulator)	5736
Retainer (rear spring insulator)	5A545
Retainer (rear view outside mirror adjusting cable)	17B721
Retainer (rear view outside mirror plate)	17A476
Retainer (rear wheel bearing inner)	1180
Retainer (rear window regulator control switch)	14A125
Retainer (side marker lamp)	15A210
Retainer (speedo. case grommet)	17305
Retainer (speedo. driven gear)	17292
Retainer (starter motor drive stop)	11222
Retainer (starter motor drive stop ring)	11223
Retainer (steering column clamp)	3D672
Retainer (steering column collar)	3E739
Retainer (steering column release lever)	3E543
Retainer (steering column shroud)	3D695
Retainer (steering column tube)	3499
Retainer (steering column upper bearing)	3B610
Retainer (steering wheel emblem)	3F652–3
Retainer (steering wheel hub emblem)	3650
Retainer (steering wheel hub trim)	3656
Retainer (trans. clutch piston spring)	7A527
Retainer (trans. column shift selector lever plunger)	7A347
Retainer (trans. control selector dial)	7D462
Retainer (trans. direct drive clutch piston spring)	7A527
Retainer (trans. gearshift lever boot)	7262

INDEX

△ Refer to Page 1 of Paint Section

R — Cont'd

PART NAME	GROUP NUMBER
Retainer (trans. gearshift lever spring)	7A111
Retainer (trans. governor primary spring)	7A190
Retainer (trans. governor secondary valve spring)	7D218
Retainer (trans. input shaft bearing)	7050
Retainer (trans. intermediate band servo lever)	7E206
Retainer (trans. kickdown lever spring)	7C176
Retainer (trans. overrunning clutch spring)	7D191
Retainer (trans. parking pawl toggle lever pin)	7–7326
Retainer (trans. parking pawl toggle return spring)	7–7323
Retainer (trans. rear band servo spring)	7B264
Retainer (trans. reverse clutch piston ball check)	7E080
Retainer (trans. reverse clutch spring)	7D406
Retainer (trans. selector indicator cable)	7E299, 7E300
Retainer (trans. servo spring screw adjustment)	7L103
Retainer (trans. shift selector lever guide plate)	7C448
Retainer (trans. throttle pressure booster)	7E396
Retainer (trans. throttle pressure booster stop plate & screw)	7E396
Retainer (warning indicator panel lamp)	10918
Retainer (water pump bearing)	8K537
Retainer (wheel cover ornament)	1141
Retainer (wheel nut wrench)	17A038
Retainer (windshield washer pump)	17B609
Retainer (windshield wiper arm)	17A504
Retainer (windshield wiper motor bushing)	17C436
Retainer (windshield wiper switch)	17C491
Retainer (wiring grommet)	14613
Retainer assy. (exterior lamp)	15B447
Retainer assy. (jack front)	17A116
Retainer assy. (radio revr.–C.B.)	18K862
Retainer assy. (rear axle drive pinion)	4614–21
Retainer assy. (starter override reset switch)	11A140
Retainer assy. (steering column lower bearing)	3D681
Retainer assy. (steering column support)	3B741
Retainer assy. (trans. control cable bracket)	7F136
Retainer assy. (turning lamp)	15A210
Retainer assy. (wiring harness)	14A163, 14A282
Retainer repair kit (brake shoe hold down)	2A094
Ring (alternator rotor slip)	10328
Ring (alternator rotor stop)	10370
Ring (baffle cover)	13A378
Ring (brake master cylinder cup)	2A174
Ring (eng. crankshaft thrust)	6334
Ring (eng. oil pump intermediate shaft retainer)	6629
Ring (fuel tank sender retainer locking)	9A307
Ring (headlamp bulb retaining)	13015
Ring (P/S gear cylinder cap retaining)	3A746
Ring (separator assy. fuel vapor)	9A307
Ring (starter motor)	11K093
Ring (starter motor collar retaining)	11222
Ring (starter motor drive stop)	11222

R — Cont'd

PART NAME	GROUP NUMBER
Ring (steering column shroud)	3D694
Ring (steering shaft lower bearing retainer)	3F543
Ring (trans. converter inertia)	7L142
Ring (trans. forward clutch piston spring)	7D256
Ring (trans. front clutch piston disc spring)	7–7563
Ring (trans. governor housing seal)	7D011
Ring (trans. rear clutch drum oil seal)	7D5011
Ring (trans. synchronizer blocking)	7107
Ring (wheel trim)	1210
Ring assy. (alternator rotor slip)	10328
Ring assy. (headlamp adjusting)	13118–9
Ring kit (P/S gear valve spool retaining)	3757
Ring set (eng. piston complete)	6149
Ring set (eng. piston partial)	6148
Rivet (starter motor lever)	11139
Rod (carb. accelerator pump link to overtravel lever)	9B542
Rod (carb. air by–pass plate)	9A973
Rod (carb. choke control)	9A599
Rod (carb. choke diaphragm control)	9S567
Rod (carb. choke pulldown)	9E524
Rod (carb. choke shaft)	9A766
Rod (carb. enrichment metering)	9A993
Rod (carb. fast idle)	9598
Rod (carb. fast idle cam)	9D530
Rod (carb. float bowl vent)	9A515
Rod (carb. metering)	9A526
Rod (carb. metering vacuum)	9B915
Rod (carb. secondary throttle control)	9C504
Rod (clutch pedal to equalizer bar)	7521
Rod (eng. valve push)	6565
Rod (frame stabilizer)	5C024
Rod (hood support)	16826
Rod (ignition switch actuating)	11A599
Rod (parking brake equalizer)	2628
Rod (parking brake release handle)	2A760
Rod (speed control pivot arm to carb.)	9C740
Rod (trans. column shift bellcrank lever to trans.)	7A024
Rod (trans. floor shift selector lock control)	7E330
Rod (trans. gear selector valve)	7C389
Rod (trans. gearshift)	7326
Rod (trans. gearshift connecting)	7B112, 7326, 7328,
Rod (trans. intermediate band servo piston)	7D023
Rod (trans. kickdown control)	7A187
Rod (trans. lock control)	7E330
Rod (trans. manual control selector connecting)	7326
Rod (trans. parking lever actuating)	7A232
Rod (trans. parking pawl)	7A122
Rod (trans. parking pawl actuating)	7D411
Rod (trans. parking pawl toggle)	7A232
Rod (trans. throttle control valve)	7A380

INDEX

PART NAME	GROUP NUMBER
△ Refer to Page 1 of Paint Section	
R — Cont'd	
Rod or end (front wheel spindle connecting)	3A130–1
Rod assy. (eng. connecting)	6200
Rod assy. (front wheel spindle connecting)	3280
Rod assy. (steering sector shaft arm to idler arm)	3304
Rod & spring assy. (accelerator control return)	9772
Roller (trans. converter stator clutch)	7190
Roller (trans. countershaft gear pilot bearing)	7121
Roller (trans. input shaft pilot bearing)	7118
Roller (trans. overrunning clutch)	7190
Roller (trans. rear clutch drum brake & sun gear front bearing)	7C458
Roller (trans. reverse idler gear bearing)	7D271
Roller assy. (trans. console shift selector lever lock)	7D328
Rotor (alternator)	10335
Rotor (brake skid control)	2B384
Rotor (front wheel disc brake)	1125
Rotor (rear wheel disc brake)	2C026–7
Rotor assy. (P/S pump)	3D607
Rotor & shaft assy. (eng. oil pump drive)	6608
Rubber lubricants	△
Rubbing compounds	△
Rust penetrant and inhibitor	△
S	
Scoop assy. (front brake)	2C092
Scoop (hood air)	16C630
Screen (A/C compressor suction)	19D729
Screen (carb. fuel filter)	9F525
Screen (carb. main well tube)	9S546
Screen (rear seat speaker)	18821
Screen (trans. air converter housing)	7986
Screen (trans. air outlet converter housing)	7986
Screen (trans. converter cover housing)	7986
Screen (trans. main control pump inlet)	7E387
Screen (trans. oil pan)	7A098
Screen assy. (trans. governor oil)	7E242
Screen, tube & cover assy. (eng. oil pump)	6622
Screw (brake cyl. bleeder)	2208
Screw (brake master cylinder)	2B140
Screw (brake shoe adjusting)	2041
Screw (carb. accelerator pump arm retainer)	9C631
Screw (carb. vent valve hinge retainer)	9D558
Screw (carb. air cleaner retainer to carb.)	9C631
Screw (carb. choke plate)	9586
Screw (carb. diaphragm & retainer adjusting)	9S544
Screw (carb. fast idle adjusting)	9B538, 9578
Screw (carb. float shaft)	12230
Screw (carb. pump discharge)	9577
Screw (carb. pump discharge nozzle)	9577
Screw (carb. solenoid bracket)	9C631
Screw (carb. throttle body)	9F529
Screw (carb. throttle plate)	9586
S — Cont'd	
Screw (carb. throttle stop)	9P651
Screw (carb. water cover retainer)	9B874
Screw (eng. valve rocker arm adjusting)	6549
Screw (fuel pump filter bowl)	9K353
Screw (headlamp adjusting)	13032
Screw (starter motor pole piece)	11415
Screw (starter motor pole shoes to yoke)	11K140
Screw (steering gear adjusting)	3577
Screw (trans. front band adjusting)	7A178
Screw (trans. rear band adjusting)	7A178
Screw (trans. reverse band adjusting)	7A178
Screw kit (brake shoe adjuster)	2041
Screw & washer assy. (carb. air horn)	9F529
Screw & washer assy. (carb. diaphragm cover)	9S510
Seal (accelerator pedal rod)	9793
Seal (A/C air inlet door inner)	19B762
Seal (A/C blower motor outlet)	19C978
Seal (A/C damper door)	18A492
Seal (A/C evaporator core lower)	19A672
Seal (A/C evaporator case cover)	19B738
Seal (A/C evaporator to connector duct)	19B847
Seal (A/C evaporator drain tube)	19B739
Seal (air conditioner air inlet)	19A812
Seal (auxiliary fuel tank cover to base)	9B163
Seal (auxiliary fuel tank filler pipe)	9B170
Seal (back–up lamp)	15533
Seal (body side lamp)	15A447
Seal (brake master cylinder to brake booster)	2D140
Seal (carb. accelerator pump lifter link)	9B501
Seal (carb. air cleaner air duct)	9B501
Seal (carb. air horn)	9C527
Seal (carb. fast idle rod)	9B501
Seal (carb. vent arm)	9557
Seal (clutch equalizer bar)	7K530
Seal (clutch pedal rod)	7A533
Seal (driveshaft stud yoke centering ball)	4790
Seal (eng. crankshaft rear main bearing cap)	6336
Seal (eng. cylinder front cover oil)	6700
Seal (eng. electronic control)	12A696
Seal (eng. flywheel housing cover plate)	6411
Seal (eng. front cover to block)	6C075
Seal (eng. rear cover plate)	6411, 6424
Seal (eng. valve stem)	6571
Seal (exterior pillar lamp)	15B446
Seal (front fender apron to frame)	16240
Seal (front fender extension)	16D130
Seal (front suspension arm ball joint dust)	3A105
Seal (front suspension ball stud dust)	3332
Seal (fuel tank filler pipe)	9072
Seal (headlamp housing)	13044
Seal (headlamp dimmer sensor)	13C077
Seal (heater)	18529
Seal (heater blower motor mounting)	18N260
Seal (heater core top)	18C676

COPYRIGHT © 1986 — FORD MOTOR COMPANY — DEARBORN, MICHIGAN

INDEX

PART NAME	GROUP NUMBER
△ Refer to Page 1 of Paint Section	
S — Cont'd	
Seal (heater core to case–bottom)	18B536
Seal (heater core to case R.H.)	18658
Seal (heater damper door)	18A492
Seal (heater core and cover)	18N267
Seal (heater core tubes to evap. case)	18A597
Seal (heater core to case)	18658
Seal (heater core to housing front)	18B551
Seal (heater defroster nozzle)	18C367
Seal (intake manifold to cylinder block front)	9A425
Seal (intake manifold to cylinder block rear)	9A424
Seal (power brake booster check valve)	2B073
Seal (power brake booster mounting bracket)	2L109
Seal (P/S gear input shaft)	3D526
Seal (P/S gear input shaft dust)	3D527
Seal (P/S gear piston)	3805
Seal (P/S pump rotor shaft oil)	3B592
Seal (radiator air deflector)	8349
Seal (radiator grille)	8B105
Seal (radiator support to hood)	16A238
Seal (rear axle driving pinion oil)	4676
Seal (rear lamp)	13A495, 13520
Seal (rear lamp lens)	13W520
Seal (rear wheel bearing oil inner)	1177
Seal (separator fuel vapor)	9B076
Seal (speedo. drive gear)	17298
Seal (starter motor gear)	11A101
Seal (starter motor rear housing bearing)	11K013
Seal (starter motor relay mounting)	11440
Seal (steering column opening weather)	3513
Seal (steering gear sector shaft housing oil)	3591
Seal (steering gear sector shaft oil)	3738
Seal (tailgate window regulator switch)	14A353
Seat (throttle control cable adjustment)	9P701
Seal (trans. clutch cylinder oil)	7E212
Seal (trans. clutch piston inner)	7A294
Seal (trans. clutch piston oil inner)	7C099
Seal (trans. clutch piston oil outer)	7A548
Seal (trans. control selector dial)	7D351
Seal (trans. control selector housing)	7C370
Seal (trans. control selector indicator)	15837
Seal (trans. control selector tube)	7C102
Seal (trans. downshift control lever oil)	7–7265
Seal (trans. extension housing oil)	7052
Seal (trans. forward clutch cylinder)	7D019
Seal (trans. front band servo piston guide oil)	7C050
Seal (trans. front band servo piston oil)	7A294
Seal (trans. front clutch piston inner)	7C099
Seal (trans. front clutch piston oil)	7A548
Seal (trans. front clutch sun gear oil)	7C169
Seal (trans. front drum)	7D025
Seal (trans. front pump oil)	7A248
Seal (trans. input shaft oil)	7A011, 7A283
Seal (trans. intermediate band servo piston)	7D024
Seal (trans. intermediate band servo piston oil)	7D025

PART NAME	GROUP NUMBER
S — Cont'd	
Seal (trans. manual control lever oil)	7B498
Seal (trans. oil level indicator)	7E050
Seal (trans. primary sun gear oil)	7C169
Seal (trans. pump inlet tube oil)	7C379
Seal (trans. rear band servo piston oil)	7A294
Seal (trans. rear clutch piston oil outer)	7C051
Seal (trans. rear servo intermediate band)	7D025
Seal (trans. reverse band servo piston cover)	7D040
Seal (trans. reverse clutch cylinder)	7D020
Seal (trans. seal intermediate band servo piston cover oil)	7D024
Seal (trans. selector tube)	7C102
Seal (trans. sensor switch)	7–7868
Seal (trans. shift rod)	7E397
Seal (trans. shifter fork cam & shaft oil)	7288
Seal (trans. throttle control lever oil)	7–7265
Seal (water pump)	8564
Seal (windshield washer pump)	17B610
Seal (windshield wiper pivot shaft to cowl top)	17A475
Seal assy. (A/C evaporator case)	19D637
Seal assy. (carb. float bowl vent)	9C527
Seal assy. (fuel tank filler pipe)	9008
Seal & gasket kit (P/S gear)	3C538
Seal & gasket kit (P/S pump)	3B584
Seal & gasket kit (P/S pump to reservoir)	3D684
Seal & gasket kit (trans.)	7149
Seal kit (brake caliper)	2120
Seal kit (P/S cylinder)	3A764
Seal kit (P/S gear adjusting plug)	3D733
Seal kit (P/S gear backup valve)	3D731
Seal kit (P/S gear input shaft)	3E502
Seal kit (P/S gear "O" ring)	3D734
Seal kit (P/S gear rack shaft)	3E501
Seal kit (P/S gear sector shaft arm)	3D732
Seal kit (rear axle yoke)	4A031
Seal kit (rear disc brake)	2B595
Sealers	△
Seat (childs safety tot guard)	19E535
Seat (eng. valve rocker arm fulcrum)	6A528
Seat (eng. valve spring)	6A536
Seat (front wheel spindle connecting rod ball)	3326
Seat (rear axle differential pinion shaft)	4420
Seat (throttle control cable adjustment)	9P701
Seat (trans. oil pressure regulator valve spring)	7C062
Seat (trans. rear clutch piston spring)	7–7516, 7A527
Seat assy. (water pump impeller)	8517
Seat & bushing assy. (front suspension upper arm spring)	3388
Sender (water temperature indicator eng. unit)	10884
Sensor (EGR valve)	9G428
Sensor (windshield washer fluid level)	17B649
Sensor assy. (barometric & manifold absolute press.)	12A680
Sensor assy. (brake skid control)	2B372
Sensor assy. (engine EEC)	6C315

INDEX

△ Refer to Page 1 of Paint Section

S — Cont'd

PART NAME	GROUP NUMBER
Sensor assy. (carb air cleaner air temperature control)	9E607
Sensor assy. (E.G.R. solenoid valve)	9F446
Sensor assy. (eng. electronic cont. air temp)	12A647
Sensor assy. (eng. electronic cont. baro press)	12A644
Sensor assy. (eng. electronic cont. coolant temp)	12A648
Sensor assy. (exh. gas oxygen)	9F472
Sensor assy. (manifold absolute pressure)	9F479
Sensor assy. (speed)	9E731
Sensor assy. (speed control)	9D842
Sensor assy. (headlamp dimmer)	13A019
Separator assy. (eng. crankcase vent oil)	6A785
Separator assy. (fuel vapor)	9B328
Separator assy. (fuel vacuum)	9C369
Separator kit (fuel pump—electric)	9C341
Servo (trans. front)	7K262
Servo (trans. rear)	7B193
Servo assy. (A/T/C electronic programmer)	19D672
Servo assy. (speed control)	9C735
Servo & bracket assy. (speed control)	9C734
Shackle assy. (rear spring rear)	5776
Shackle kit (rear spring)	5630
Shaft (A/C air outlet door)	18A497
Shaft (A/C compressor belt idler pulley)	2876
Shaft (alternator rotor)	10330
Shaft (brake pedal)	2478
Shaft (carb. air valve)	9581
Shaft (carb. choke plate)	9547
Shaft (carb. float lever)	9558
Shaft (carb altitude valve)	9581
Shaft (eng. valve rocker arm)	6563
Shaft (heater air damper door)	18C466
Shaft (P/S pump rotor)	3B559
Shaft (rear axle differential pinion)	4211
Shaft (steering column)	3524
Shaft (steering gear sector)	3575
Shaft (trans. front band actuating lever)	7A165
Shaft (trans. front band servo actuating lever	7A165
Shaft (trans. gearshift)	7K423
Shaft (trans. gearshift lever support)	7378
Shaft (trans. gearshift low and reverse)	7240
Shaft (trans. input)	7015, 7017
Shaft (trans. intermediate band actuating lever)	7D433
Shaft (trans. manual control)	7A256
Shaft (trans. output)	7060–1
Shaft (trans. parking pawl)	7D071
Shaft (trans. parking plate)	7D418
Shaft (trans. rear band servo actuating lever)	7A171
Shaft (trans. reverse idler gear)	7140
Shaft assy. (carb. altitude valve oper.)	9581
Shaft assy. (eng. oil pump intermediate)	6A618
Shaft assy. (fuel pump, oil pump and distributor drive)	6A739
Shaft assy. (headlamp cover)	13B013–4
Shaft assy. (heater air vent door)	18C638

S — Cont'd

PART NAME	GROUP NUMBER
Shaft assy. (odometer reset)	17A381
Shaft assy. (rear axle)	4234–5
Shaft assy. (steering column)	3524
Shaft assy. (throttle operating)	9919
Shaft assy. (trans. output)	7060
Shaft & lever (carb. choke)	9546
Shaft & control assy. (P/S gear input)	3D517
Shaft & bearing assy. (water pump)	8530
Shaft & lever assy. (carb. air by—pass)	9A945
Shaft & lever assy. (carb. choke)	9L554
Shaft & lever assy. (carb. choke housing)	9A753
Shaft & lever assy. (speed control)	9B711
Shaft kit (front suspension upper arm)	3047
Shell (trans. input)	7D064
Shell (wire connector)	14A309
Shield (alternator regulator splash)	10A506
Shield (alternator splash)	10317
Shield (battery)	10A682
Shield (brake booster)	2B485
Shield (brake skid control speed sensor wire)	2B429
Shield (carb. fuel inlet seat)	9E845
Shield (carb. heat)	9A462
Shield (carb. thermostatic choke)	9861
Shield (carb. thermostatic choke heat tube inlet)	9A745
Shield (clutch release lever dust)	7513
Shield (cornering lamp splash)	15A240
Shield (eng. motor mount heat)	6C038
Shield (eng. splash)	6775
Shield (exhaust air supply check valve)	9F462
Shield (front bumper opening)	17D808
Shield (front disc brake)	2B116
Shield (front disc brake rotor)	2K004–5
Shield (front fender splash)	16102–3
Shield (fuel line)	9269
Shield (fuel pump)	9A397
Shield (fuel tank)	9B007, 9B212
Shield (fuel tank filler pipe)	9A097
Shield (fuel tube)	9C291
Shield (headlamp splash)	13B159
Shield (hood front opening)	16B656
Shield (indicator lamp)	10892
Shield (instrument panel light)	13771
Shield (instrument panel rheostat)	10N858
Shield (intake manifold)	9471
Shield (license plate lamp)	13508
Shield (open door warning switch)	10B985
Shield (P/S splash upper)	3E595
Shield (radiator grille sight)	8C030, 8C055–6, 8C071
Shield (radio frequency suppression)	19A145
Shield (rear bumper isolator heat)	17D834–5
Shield (rear bumper opening)	17C857
Shield (rear lamp)	13A415
Shield (rear license plate lamp)	13508

COPYRIGHT © 1986 — FORD MOTOR COMPANY — DEARBORN, MICHIGAN

INDEX

△ Refer to Page 1 of Paint Section

S — Cont'd

PART NAME	GROUP NUMBER
Shield (rear wheel disc brake)	2C028–9
Shield (spark plug ignition wiring)	12299
Shield (splash guard)	16A550
Shield (starter motor relay)	11006
Shield (trans. console shift selector housing)	7E271
Shield (trans. shift selector indicator)	7E130
Shield (turbocharger heat)	9G478
Shield (water outlet connection)	8A565
Shield (wiring)	14A099
Shield & pipe kit (fuel tank modification)	9B007
Shield assy. (front wheel splash inner)	16A324–5
Shield assy. (front wheel splash outer)	16A266–7
Shield assy. (headlamp opening lower)	13B041
Shield assy. (spark plug heat)	12A406
Shield assy. (speedometer cable)	17B365
Shim (eng. rocker arm stud or bolt)	6A525
Shim (front bumper)	17A799
Shim (front spring)	5355
Shim (front suspension lower arm strut)	3B400
Shim (front suspension upper arm mounting)	3043
Shim (P/S gear valve centering)	3D688
Shim (P/S gear side cover)	3N597
Shim (rear axle pinion bearing adjusting)	4109
Shim (rear bumper arm)	17C977
Shim (steering gear housing cover plate gasket)	3593
Shim kit (differential clutch)	4A324
Shim kit (rear axle pinion bearing)	4663
Shim kit (steering gear sector shaft adjusting)	3A657
Shock absorber (front)	18124
Shock absorber (rear)	18125
Shoe & lining (rear brake shoe primary)	2218
Shoe & lining (rear brake shoe secondary)	2219
Shoe & lining kit (brake)	2001
Shoe & lining kit (rear brake)	2200
Shroud (fan)	8146
Shroud (steering column)	3530
Shroud assy. (trans. control selector indicator lamp)	15A811
Shroud & tube assy. (carb. air cleaner air duct)	9A603
Silencer (reed valve–pulse air)	9F449
Sleeve (automatic air leveler valve)	5A739
Sleeve (bumper arm bolt)	17841
Sleeve (eng. valve spring retainer)	6517
Sleeve (front spring insulator)	5L302
Sleeve (front wheel spindle connecting rod adjusting)	3310
Sleeve (fuel tank drain opening)	9011
Sleeve (fuel tank filler pipe)	9A159
Sleeve (fuel tank vent tube)	9A034
Sleeve (fuel vapor canister purge inlet)	9E629
Sleeve (main oil pressure booster)	7D002
Sleeve (radiator hose)	8C147
Sleeve (rear axle shaft seal)	4A300
Sleeve (starter coil retaining)	11105
Sleeve (steering column tube bearing)	3518

S — Cont'd

PART NAME	GROUP NUMBER
Sleeve (trans. control selector arm)	7D383
Sleeve (trans. control selector lever impact)	7335
Sleeve (trans. gearshift connecting rod adjustment)	7353
Sleeve (trans. gearshift lever impact)	7335
Sleeve (trans. main oil pressure booster)	7D002
Sleeve (trans. oil distributor)	7C232
Sleeve (trans. selector shift rod adjustment)	7353
Sleeve (turn signal turnoff cam)	
Sleeve (wire connector)	14489
Slinger (driveshaft stud yoke)	4791
Slinger (eng. crankshaft oil)	6310
Slinger (water pump shaft)	8550
Slip yoke (universal joint)	4841
Small parts repair kit (trans.)	7B331
Snap ring (brake & clutch pedal retaining)	2487
Snap ring (power brake booster body piston seal)	2K589
Snap ring (trans.)	7064
Snap ring (trans. bearing)	7030
Snap ring (trans. converter stator retaining)	7945
Snap ring (trans. first & second speed)	7064
Snap ring (trans. front band servo piston guide)	7–7366
Snap ring (trans. front clutch disc spring retaining)	7–7567
Snap ring (trans. front servo guide seal)	7B264
Snap ring (trans. governor retaining)	7E253
Snap ring (trans. governor to shaft)	7D011
Snap ring (trans. input shaft bearing)	7026, 7064
Snap ring (trans. intermediate & high clutch hub insert)	7109
Snap ring (trans. low & reverse clutch)	7D176
Snap ring (trans. low & reverse clutch hub insert)	7D176
Snap ring (trans. output shaft bearing)	7064
Snap ring (trans. output shaft gear ring)	7C122
Snap ring (trans. output shaft ring gear retaining)	7C122
Snap ring (trans. planetary clutch)	7A577
Snap ring (trans. rear band servo piston)	7–7417
Snap ring (trans. rear clutch piston spring retaining)	7–7517
Snap ring (trans. rear clutch pressure plate retainer)	7D483
Snap ring (trans. rear clutch seal to sun gear)	7D011
Snap ring (trans. synchronizer hub insert retaining)	7109
Snap ring (trans. synchronizer–third speed)	7059
Snap ring (universal joint bearing)	4891
Snap ring & spring kit (trans. front clutch)	7L560
Socket (brake shoe adjusting screw)	2048
Socket (clutch shaft ball)	7543
Socket (front wheel spindle connecting rod ball)	3A745
Socket (instrument panel lamp)	13711
Socket (P/S control valve ball stud)	3A754
Socket (rear lamp)	13411
Socket (trans. column shift selector lever)	7228
Socket (trans. gearshift lever)	7228
Socket assy. (interior lamp)	13793
Socket & retainer assy. (cigar lighter)	15055

INDEX

△ Refer to Page 1 of Paint Section

S — Cont'd

PART NAME	GROUP NUMBER
Socket & wire (body side lamp)	15A442
Socket & wire (front fender side lamp)	15A434
Socket & wire (parking brake indicator lamp)	15883
Socket & wire assy. (heater & A/C control lamp)	18541
Socket & wire assy. (heater control lamp)	18541
Socket & wire assy. (warning lamp)	14522
Socket & wiring (clock)	15026
Socket & wiring (instrument panel seat belt warning indicator lamp)	10B925
Socket & wiring (interior lamp)	13A719
Socket & wiring assy. (parking lamp)	13234–5
Socket & wiring assy. (rear lamps)	13410
Solenoid (A.T.C. floor)	19D670
Solenoid (A.T.C. panel)	19D670
Solenoid (A.T.C. water valve)	19D670
Solenoid & manifold assy. (A/T/C control box)	19D611
Solenoid & valve (headlamp cover)	13A161
Solenoid assy. (carb. float bowl vent)	9B982
Solenoid assy. (carb. cranking control)	9A951
Solenoid assy. (carb. throttle emission control)	9D856
Solenoid assy. (starter motor)	11390
Solenoid assy. (carb float bowl vent)	9A567
Spacer (A/C mounting bracket)	2890
Spacer (air leveler hose)	5A680
Spacer (alternator fan)	10A344
Spacer (alternator pulley)	10A344
Spacer (battery to fender apron)	10A723
Spacer (brake booster push rod)	2L316
Spacer (brake master cylinder push rod)	2B129
Spacer (brake pedal)	2A188
Spacer (brake pedal support mounting)	2B180
Spacer (bullet type terminal)	14A434
Spacer (bumper arm)	17A924
Spacer (carb. diaphragm)	9B581
Spacer (carb. thermostatic choke shaft)	9714
Spacer (carb. to intake manifold)	9A589
Spacer (clutch pedal)	7A595
Spacer (compressor mounting bracket)	2887
Spacer (cornering lamp bezel)	15A230
Spacer (cyl. head to block)	6A017
Spacer (diffuser)	9K437
Spacer (eng. camshaft gear)	6278
Spacer (eng. camshaft sprocket)	6265
Spacer (eng. converter drive plate)	6K372
Spacer (eng. crankshaft damper)	6359
Spacer (eng. rear mounting bolt)	6A027
Spacer (eng. timing belt cover)	6K291
Spacer (exhaust air supply pump mounting bracket)	9B461
Spacer (exhaust air supply pump)	9B488
Spacer (exhaust control valve)	9A470
Spacer (front bumper arm)	17765
Spacer (front fender mounting)	16C220
Spacer (front fender upper rear moulding)	16A276

S — Cont'd

PART NAME	GROUP NUMBER
Spacer (headlamp housing)	13A109
Spacer (horn mounting)	13830
Spacer (idler pulley bracket)	8A652
Spacer (parking brake cable to equalizer lever)	2118
Spacer (P/S control valve spool)	3A658
Spacer (P/S gear sector shaft seal)	3D529
Spacer (P/S pump adjusting bracket)	3D600
Spacer (pulley to fan)	8546
Spacer (pump assy. exhaust air supply)	9B488
Spacer (radiator)	8A360
Spacer (radiator grille opening panel ornament)	8C086
Spacer (rear axle driving pinion bearing)	4662
Spacer (rear bumper lower)	17C816
Spacer (rear lamp mounting bolt)	13A547
Spacer (rear shock absorber)	18A040
Spacer (seat regulator control mounting)	14767
Spacer (speedo. driving gear)	17288
Spacer (starter motor solenoid)	11A122
Spacer (steering column bracket insulator)	3E742
Spacer (steering gear pinion bearing)	3K599
Spacer (trans. countershaft)	7125
Spacer (trans. countershaft gear)	7149
Spacer (trans. gearshift lever hub)	7336
Spacer (trans. gearshift lever support)	7C383
Spacer (trans. oil pressure regulator valve)	7470
Spacer (trans. throttle pressure valve secondary)	7D227
Spacer (trans. tube)	7115
Spacer (universal joint housing)	4819
Spacer (windshield wiper motor output shaft)	17A558
Spacer (windshield wiper pivot shaft inner)	17B588
Spacer (windshield wiper pivot shaft mounting)	17514
Spacer (wire connector)	14A468
Speaker assy. (radio receiver)	18808
Speaker kit (doors and quarter)	18819
Speaker kit (instrument panel)	18819
Speaker kit (stereo)	18808
Speedometer assy.	17255
Speedometer cable kit (speed control)	9A820
Speed control kit	9A818
Spindle assy. (front wheel)	3105–6
Splicer (A/C refrigerant line)	19D695
Spring (accelerator pedal pivot)	9C804
Spring (accelerator retracting)	9737
Spring (alternator brush)	10349
Spring (brake cylinder piston return)	2204–5
Spring (brake pedal retracting)	2472
Spring (brake shoe adjusting lever)	2049
Spring (brake shoe adjusting screw)	2049, 2297
Spring (brake shoe hold down)	2068
Spring (brake shoe retracting)	2035–6
Spring (carb. accelerator pump)	9636
Spring (carb. accelerator pump lever return)	9636

COPYRIGHT © 1986 — FORD MOTOR COMPANY — DEARBORN, MICHIGAN

INDEX

△ Refer to Page 1 of Paint Section

S — Cont'd

PART NAME	GROUP NUMBER
Spring (carb. accel. pump piston return)	9J564
Spring (carb. accelerator pump overtravel)	9A538
Spring (carb. accelerator pump rod)	9D598
Spring (carb. altitude valve outer)	9G526
Spring (carb. altitude)	9G526
Spring (carb. choke control)	9587
Spring (carb. choke control modulator)	9J547
Spring (carb. economizer)	9P652
Spring (carb. fast idle adjusting screw)	9578
Spring (carb. fast idle cam)	9G526
Spring (carb. float bowl vent)	9560
Spring (carb. fuel bowl vent)	9H556
Spring (carb. fuel enrichment valve)	9E533
Spring (carb. fuel filter retaining)	9342
Spring (carb. fuel enrichment valve)	9E533
Spring (carb. fuel filter retaining)	9342
Spring (carb. idle adjusting needle)	9578
Spring (carb. metering rod torsion)	9A914
Spring (carb. piston & diaphragm feed back)	9B504
Spring (carb. power value)	9E525
Spring (carb. secondary throttle diaphragm return)	9B504
Spring (carb. throttle)	9A538
Spring (carb. throttle control return)	9A538
Spring (radiator grille)	8C161
Spring (carb. throttle return)	9A538
Spring (carb. trans. kickdown control lever retracting)	7B146
Spring (carb. venturi valve diaphragm)	9K503
Spring (carb. venturi valve limiter lever return)	9A905
Spring (clutch pedal lever retracting)	7534
Spring (clutch release lever retracting)	7591
Spring (clutch release lever rod retracting)	7523
Spring (driveshaft centering socket race ball)	4A073
Spring (eng. follower arm)	6K524
Spring (eng. oil pump relief valve)	6670
Spring (eng. tensioner)	6L273
Spring (eng. valve)	6513
Spring (eng. valve rocker arm to shaft locating)	6587
Spring (exhaust control valve stop)	9A458
Spring (exhaust control valve tension)	9A469
Spring (exhaust thermostat control valve)	9449
Spring (float bowl vent rod)	9560
Spring (front brake pad tension)	2K236
Spring (front coil)	5310
Spring (front disc brake caliper support)	2B486
Spring (front wheel spindle connecting rod ball)	3327
Spring (fuel pump rocker arm return)	9380
Spring (headlamp ball ring)	13031
Spring (headlamp cover hinge)	13A163
Spring (headlamp dimmer control adjusting screw)	13654
Spring (hood assist)	16C644
Spring (hood aux. catch)	16897
Spring (hood dowel retaining)	16K637

S — Cont'd

PART NAME	GROUP NUMBER
Spring (hood hinge)	16789
Spring (hood latch)	16925
Spring (hood latch release extension)	16772
Spring (hood support prop)	16754
Spring (hood support rod)	16832
Spring (ignition switch return)	3E746
Spring (jack hold down)	17119
Spring (parking brake equalizer lever)	2B603
Spring (parking brake lever retracting)	2L611
Spring (parking brake lever return)	2A651
Spring (parking brake link)	2A601
Spring (parking brake ratchet bar locking)	2788
Spring (parking brake release)	2634
Spring (parking brake return)	2L642
Spring (parking brake strut)	2L645–6
Spring (P/S control valve reaction limiting)	3C563
Spring (P/S gear control valve)	3C707
Spring (P/S gear control valve spool)	3A594
Spring (P/S gear rack adjustment)	3K654
Spring (P/S pump flow control valve)	3A586
Spring (P/S pump pressure plate)	3D596
Spring (P/S pump slipper)	3B601
Spring (rear brake adjusting hole cover)	2B092
Spring (rear license plate support)	13455
Spring (starter motor brush)	11059
Spring (starter motor plunger)	11103
Spring (starter motor plunger return)	11103
Spring (steering column lock)	3E696
Spring (steering column lock actuator lever)	3F532
Spring (steering column lock cylinder)	3E701
Spring (steering column locking lever)	3B664
Spring (steering column position)	3D655
Spring (steering column position lock)	3B768
Spring (steering column upper bearing)	3520
Spring (steering gear rack adjustment bearing)	3K576
Spring (trans. clutch piston disc)	7B070
Spring (trans. console shift selector lever button return)	7C491
Spring (trans. control selector lever plunger)	7B071
Spring (trans. control selector pivot)	7E196
Spring (trans. converter stator clutch)	7A814
Spring (trans. direct drive clutch piston)	7B488
Spring (trans. front band servo piston retracting)	7A003
Spring (trans. front clutch piston disc)	7B070
Spring (trans. gearshift)	7C228
Spring (trans. gearshift lever support shaft)	7227
Spring (trans. gearshift tube)	7C101
Spring (trans. gearshift tube retracting)	7227
Spring (trans. intermediate band servo piston)	7D028
Spring (trans. kickdown control shaft retracting)	7B146, 7B192
Spring (trans. manual control valve detent lever)	7A261
Spring (trans. manual shift)	7K393

INDEX

△ Refer to Page 1 of Paint Section

S — Cont'd

PART NAME	GROUP NUMBER
Spring (trans. manual valve detent)	7E332
Spring (trans. oil pressure regulator valve)	7D160
Spring (trans. parking pawl detent lever)	7A180
Spring (trans. parking pawl return)	7D070
Spring (trans. parking pawl toggle return)	7E416
Spring (trans. parking pawl torsion)	7A180
Spring (trans. parking plate torsion)	7D417
Spring (trans. rear band servo accumulator)	7–7369
Spring (trans. rear band servo piston)	7D028, 7D474
Spring (trans. rear clutch band servo piston)	7D474
Spring (trans. rear clutch piston)	7A480
Spring (trans. rear clutch pressure)	7E085
Spring (trans. rear pump check valve)	7A128
Spring (trans. retracting)	7D049
Spring (trans. reverse band servo)	7D031
Spring (trans. reverse clutch piston)	7D405
Spring (trans. selector lever reverse lockout return)	7C300
Spring (trans. servo screw adjustment)	7L102
Spring (trans. shifter fork cam & shaft lock plunger)	7234
Spring (trans. synchronizer)	7109, 7D176
Spring (turn indicator switch hub)	13355
Spring (vanity mirror cover)	17D683
Spring (windshield wiper motor brush)	17B599
Spring assy. (brake cylinder piston cup)	2204
Spring assy. (clutch pedal assist)	7534
Spring assy. (ignition switch return)	3E746
Spring assy. (rear)	5560
Spring & insert kit (trans. low & reverse synchronizer)	7109
Spring & retainer (brake master cylinder piston return)	2145
Spring & retainer kit (trans. reverse clutch)	7A480
Spring centering kit (P/S control valve)	3A675
Spring Kit (radiator grille)	8C161
Spring repair kit (drum brake)	2A225
Sprocket (eng. camshaft)	6256
Sprocket (eng. crankshaft)	6306
Stabilizer (front disc brake caliper housing)	2B295
Stabilizer (front end)	16A056–7
Stanchion (radio antenna)	18919
Starter motor assy.	11001–2
Stator (alternator)	10336
Stator assy. (trans. converter)	7932
Stator & coil assy. (alternator)	10336
Step (rear bumper)	17B807
Stiffener (front fender reinforcement rear)	16466
Stiffener (radiator support upper reinforcement)	8C114
Stiffener (trans. converter housing to case)	7L069
Stone shield (fuel tank)	9K015
Stone shield & anti–squeek (fuel tank)	9K015

S — Cont'd

PART NAME	GROUP NUMBER
Stop (accelerator pedal)	9816
Stop (alternator rotor)	10A360
Stop (front bumper reinforcement)	17C817
Stop (parking brake operating lever)	2A795
Stop (P/S control valve spool travel regulator)	3C560
Stop (rear bumper)	17B990
Stop (trans. band adjusting intermediate & reverse)	7C492
Stop (trans. rear band adjustment inner)	7E284
Stop (windshield wiper arm)	17C549
Stop assy. (windshield wiper arm)	17C583
Stop assy. (windshield wiper motor)	17C479
Stop kit (fuel valve)	9189
Strap (parking brake release switch)	2B624
Strap (power steering gear ground)	3K666
Strap (radio receiver hood bonding)	18870
Strap (windshield wiper motor ground)	17A497
Strap assy. (eng. oil cooler support)	6B868–9
Strap assy. (fuel tank)	9054
Strap assy. (fuel tank support)	9092
Strip (heater control indicator)	18K391
Strut (front suspension lower arm)	3468
Strut (trailer hitch cross member)	19A306–7
Strut (trans. front band actuating)	7A158
Strut (trans. intermediate band anchor)	7D430
Strut (trans. intermediate brake band)	7D029
Strut (trans. rear band actuating)	7A172
Strut (trans. rear band anchor)	7A175
Strut (trans. reverse band)	7D029
Stud (carb. air cleaner retaining)	9A659
Stud (clutch release level)	7B602
Stud (eng. valve rocker arm support)	6A527
Stud (trans. column shift selector to bellcrank mounting)	7A026
Stud (trans. control selector connecting rod adjustment)	7B415
Stud (trans. gearshift connecting rod adjustment)	7B415
Suction line (A/C evaporator to compressor)	19867
Support (A/C compressor)	2978
Support (A/C compressor bracket)	2906
Support (automatic air leveler valve & bracket)	5A700
Support (eng. front bracket)	6030–1
Support (eng. oil cooler front)	6B743
Support (exhaust air supply hose)	9C487
Support (exhaust air supply pump bracket)	9B451
Support (front bumper stone deflector)	17747
Support (front bumper stone deflector center)	17C954
Support (front fender apron & radiator side)	16A174–5
Support (fuel tank)	9061
Support (fuse junction panel)	14A148
Support (headlamp cover)	13B033
Support (headlamp housing)	13B065
Support (hood latch)	16707
Support (hood latch cable mounting)	16C786

COPYRIGHT ©1984 — FORD MOTOR COMPANY — DEARBORN, MICHIGAN

INDEX

△ Refer to Page 1 of Paint Section

S — Cont'd

PART NAME	GROUP NUMBER
Support (idler pulley bracket)	8A653
Support (P/S pump)	3C511
Support (radiator)	16138
Support (radiator grille)	8182–3
Support (radiator grille opening panel)	8261
Support (radio receiver)	18888–90
Support (rear bumper stone deflector)	17D777, 17A896
Support (rear bumper stone deflector end)	17D836–7
Support (trans.)	7L070
Support (trans. converter stator)	7A108
Support (trans. extension to cross member)	6068
Support (trans. front pump)	7A108
Support (trans. gearshift lever)	7416
Support (trans. planetary gear)	7A130
Support (trans. rear)	7A383
Support (turbo charger)	9G439
Support assy. (carb. booster venturi)	9A523
Support assy. (eng. rear)	6A023
Support assy. (front fender)	16A214–5
Support assy. (fuel pump shield)	9C383
Support assy. (rear license plate)	13422
Support (fan guard)	8B659
Support kit (eng. valve rocker arm)	6531
Suppressor (ignition coil)	12A019
Suppressor plug (distributor)	12A012
Switch (backup lamp)	15520
Switch (brake pressure differential valve warning lamp)	2B264
Switch (coolant temperature control vacuum)	8A564
Switch (electric radio antenna)	18863
Switch (headlamp on instrument panel)	11654
Switch (map lamp)	13764
Switch (ported vacuum)	8A564, 9D473, 12A091
Switch (seat belt warning indicator)	10B924
Switch (seat regulator control)	14A701
Switch (speed control deceleration)	9C893
Switch (starter motor relay)	11450
Switch (stop lamp)	13480
Switch (trans. seat belt warning sensor)	7E449, 10B924
Switch (trans. spark control)	7E440
Switch assy.	18578
Switch assy. (accessory)	13713
Switch assy. (ambient cut–off)	19618
Switch assy. (A/T/C)	19C733
Switch assy. (brake fluid low level warning indicator)	2L414
Switch assy. (courtesy lamp)	13713
Switch assy. (distributor modulator valve)	12A182
Switch assy. (door open warning lamp)	14018
Switch assy. (exhaust gas recirculation control)	9E447
Switch assy. (front door lock)	14028
Switch assy. (fuel low level warning)	9F326

S — Cont'd

PART NAME	GROUP NUMBER
Switch assy. (fuel pump oil pressure)	9344
Switch assy. (headlamp dimmer)	13A024
Switch assy. (heater servo control)	18C311
Switch assy. (horn blowing)	13A875
Switch assy. (horn speed sensor)	13A943
Switch assy. (ignition)	11572
Switch assy. (ignition barametric press.)	12A243
Switch assy. (ignition key warning)	11A127
Switch assy. (ignition timing pressure)	12A268
Switch assy. (ignition timing vacuum)	12A265
Switch assy. (instrument panel lamp)	13740
Switch assy. (interior lamp)	13752
Switch assy. (low vacuum warning indicator)	10A922
Switch assy. (luggage compartment opening warning)	10C872
Switch assy. (manifold pressure warning indicator)	10D883
Switch assy. (oil temperature warning)	10B921
Switch assy. (parking brake release)	2B623
Switch assy. (radio foot control)	18608
Switch assy. (rear window defogger)	18578
Switch assy. (rear window washer time delay)	17A412
Switch assy. (seat belt retractor)	14A052–3
Switch assy. (servo A/T/C control box)	19D617
Switch assy. (sliding roof panel)	15B691
Switch assy. (spark control or oil pressure)	7E440, 9E740
Switch assy. (speed control release)	9A837
Switch assy. (starter override reset)	11A138
Switch assy. (top control)	15668
Switch assy. (trans. control selector neutral)	7A247
Switch assy. (window regulator control)	14529
Switch assy. (windshield wiper & washer)	17A553
Switch & bracket (parking brake signal)	15A851
Switch & bracket (warning indicator)	13A350
Switch & bracket assy. (horn control)	13A936
Switch & bracket assy. (tailgate window limit)	14A011
Switch & button assy. (speed control actuator)	9C888–9
Switch & mounting plate assy. (turn indicator)	13341
Switch & wire assy. (glove compt. lamp)	14413
Switch & wire assy. (seat belt retractor sensor)	14A501
Switch & wiring (courtesy lamp)	13713
Switch & wiring assy. (luggage compartment remote control)	19C542
Switch kit (starter motor hardware)	11K119
Switch (carb. adjustment–nylon)	9D563
Swivel (carb. choke diaphragm adjusting)	9F558
Swivel (clutch release idler lever adjustment)	7A528
Synchronizer assy. (trans.)	7124
Synchronizer assy. (trans. third & fourth speed)	7124

T

PART NAME	GROUP NUMBER
Tachometer assy.	17360
Tachometer kit	17A326

INDEX

△ Refer to Page 1 of Paint Section

T — Cont'd

PART NAME	GROUP NUMBER
Tank assy. (fuel)	9002
Tank assy. (fuel—auxiliary)	9104
Tank assy. (radiator overflow supply)	8A080
Tape (electrical insulating)	△
Tape (masking)	△
Tappet assy. (eng. valve)	6500
Tee (fuel vapor storage canister)	9E645
Tee (windshield washer hose)	17A601
Tension assy. (eng. drive belt)	6B209
Terminal (alternator stator)	10383
Terminal (electric wiring solderless crimp)	14294
Terminal (high tension wire)	14466
Terminal (spark plug)	14453
Terminal (starter motor field)	11102
Terminal (wire)	14421, 14461, 14474
Terminal & wire assy. (ignition key warning switch)	11A128
Terminal kit (alternator)	10A383
Thermostat (carb. air cleaner)	9B650
Thermostat (outside mirror)	15002
Thermostat (water)	8575
Thinners	△
Tip replacement kit (speedometer cable)	17A254
Tool (electrical terminal crimping)	17018
Tool kit	17003
Tool & safety kit (highway)	19F515
Transducer	9F452
Transducer assy. (A/T/C box)	19D613
Transfer (front fender front extension)	16D128
Transfer (front fender stripe)	16D116
Transfer (radiator grille opening panel color stripe)	8C077
Trunnion (trans. gearshift lever)	7B125
Tube (air by—pass valve inlet)	9H308
Tube (automatic air leveler compressor to valve)	5A718
Tube (back pressure to EGR valve	9F459
Tube (battery ventilation	10A818
Tube (brake skid control actuator vacuum)	2B476
Tube (carb. emulsion)	9P653
Tube (carb. high—speed air bleeder)	9G540
Tube (carb. main well)	9991
Tube (carb. thermostatic choke control inlet)	9820
Tube (carb. thermostatic choke control outlet)	9819
Tube (carb. to deceleration valve)	9P512
Tube (carb. vacuum transfer)	9996
Tube (EGR cooler—inlet)	9F468
Tube (EGR cooler—outlet)	9F469
Tube (eng. crankcase vent)	6758
Tube (eng. relief valve oil return)	6K656
Tube (eng. to trans. vacuum)	7B084—5, 7B094—5
Tube (exhaust air supply lower)	9A484
Tube (exhaust recirculation valve to exhaust manifold)	9D477

T — Cont'd

PART NAME	GROUP NUMBER
Tube (exhaust vacuum control valve)	9E488
Tube (fuel)	9291
Tube (fuel front)	9A318
Tube (fuel pump to carb.)	9369
Tube (fuel tank air relief)	9023
Tube (fuel tank to pump)	9282
Tube (fuel tank to pump rear)	9A084
Tube (fuel tank vent to storage canister)	9A228
Tube (fuel valve)	9159
Tube (fuel vapor return)	9B337
Tube (fuel vapor separator to fuel filter)	9G298
Tube (fuel vapor separator to fuel tank front)	9C288
Tube (fuel vapor separator to fuel tank rear)	9C289
Tube (heater hot water)	18B402, 18663
Tube (heater water inlet)	18696
Tube (heater water outlet)	18674
Tube (manifold vacuum control)	9G469
Tube (power brake booster connecting)	2B052
Tube (P/S gear rack)	3K762
Tube (trans. breather)	7034, 7A246
Tube (trans. clutch & governor oil distributor)	7A170
Tube (trans. column mounted gearshift)	7212
Tube (trans. compensator pressure oil)	7A206
Tube (trans. front pump pressure outlet)	7A204
Tube (trans. front pump suction inlet)	7A160
Tube (trans. front servo)	7D469
Tube (trans. front servo band)	7D469
Tube (trans. main oil pressure)	7—7469
Tube (trans. oil cooler inlet & outlet)	7A030—1
Tube (trans. oil distributor)	7D000
Tube (trans. oil distributor rear)	7A174
Tube (trans. oil filler)	7A228
Tube (trans. oil pressure regulator)	7A208
Tube (trans. rear band servo piston guide)	7A208
Tube (trans. rear pump oil outlet)	7A204
Tube (turbocharger oil supply)	9G440
Tube (turbocharger oil return)	9G441
Tube (water by—pass)	8555
Tube assy. (air supply pump outlet)	9B457
Tube assy. (antibackfire valve)	9B291
Tube assy. (brake booster to differential valve)	2K487—8
Tube assy. (brake differential valve to actuator)	2B386
Tube assy. (brake differential valve to front brake)	2K470
Tube assy. (brake differential valve to rear brake)	2K475
Tube assy. (brake line)	2265
Tube assy. (brake master cylinder outlet rear)	2B253
Tube assy. (brake master cylinder to connector)	2A040
Tube assy. (brake master cylinder to rear brake hose)	2265
Tube assy. (brake pressure control valve inlet)	2B112
Tube assy. (brake pressure control valve outlet)	2B113

COPYRIGHT © 1986 — FORD MOTOR COMPANY — DEARBORN, MICHIGAN

INDEX

PART NAME	GROUP NUMBER
△ Refer to Page 1 of Paint Section	
T — Cont'd	
Tube assy. (brake pressure metering valve inlet)	2B162
Tube assy. (brake skid control actuator to rear brake)	2B385
Tube assy. (carb. air cleaner hot air)	9652
Tube assy. (carb. air cleaner intake)	9A624, 9C675
Tube assy. (eng. lubrication valve drive)	6578
Tube assy. (eng. oil level indicator)	6754
Tube assy. (eng. oil pump inlet)	6K621
Tube assy. (exhaust air supply)	9D480
Tube assy. (exh. air supply check valve–pulse air)	9B480
Tube assy. (exhaust air supply manifold)	9B448–9
Tube assy. (exhaust air supply pump upper)	9B448
Tube assy. (front brake)	2263–4, 2A361–2
Tube assy. (front brake hose)	2K018–9
Tube assy. (front brake tube to differential valve)	2B269
Tube assy. (front disc brake caliper inlet R.H.)	2B166–8
Tube assy. (fuel filter to carb.)	9A274
Tube assy. (fuel filter to fuel pump)	9B273
Tube assy. (fuel line)	2265
Tube assy. (fuel pump to fuel vapor separator)	9C372
Tube assy. (fuel tank filler)	9N276
Tube assy. (fuel tank vent upper)	9049
Tube assy. (fuel vapor return)	9G271
Tube (vacuum–high temperature)	9A428
Tube assy. (fuel vapor storage)	9D667
Tube assy. (fuel vapor storage canister purge outlet)	9D668
Tube assy. (oil pressure indicator)	9K271, 9B278
Tube assy. (power brake booster)	2420
Tube assy. (P/S pressure line outlet)	3E576
Tube assy. (rear brake)	2267–8
Tube assy. (rear brake cylinder connection)	2286
Tube assy. (rear brake to rear brake hose)	2L172
Tube assy. (steering column)	3514
Tube assy. (steering column inner)	7212
Tube assy. (thermostatic choke control inlet)	9B700
Tube assy. (thermostatic choke heater)	9C869
Tube assy. (trans. column shift selector)	7212
Tube assy. (trans. console shift steering column inner)	7212
Tube assy. (vacuum manifold to eng.)	9D434
Tube & bolt assy. (exhaust air supply thermactor)	9A484
Tube & clip assy. (fuel pump to fuel filter)	9G281
Tube & shield assy. (vapor storage canister)	9E879
Tubing (brake line)	2269
Tubing (fuel line)	2269
Tune–up kit (carb.)	9A586
Turbine housing bolt kit (turbocharger)	9G486
Turbine housing & elbow kit (turbocharger)	9G484
Turbocharger (actuator kit)	9G488
Turbocharger (compressor housing kit)	9G485
Turbocharger ("O" ring kit)	9G487
Turbocharger (turbine housing kit)	9G486
T — Cont'd.	
Turbocharger (wastegate actuator protection circuit kit)	9G400
Turbocharger assy.	9G438
U	
"U" bolt (bumper striker plate)	5C489
"U" bolt (rear spring)	5705
Umbrella	19A344
Undercoating	△
Union (flange carb.)	9242
Universal joint kit (driveshaft)	4635
Upholstery color reconditioners	△
Upper ball joint assy. (frt. susp.)	3049
Used car reconditioning materials	△
U–washer (front & rear axle shaft retaining)	4N237
V	
Vacuum motor assy. (carb. air cleaner)	9D612
Valve (A/C refrigerant line compressor)	19752, 19A990
Valve (air distribution)	18B669
Valve (brake pressure differential)	2B257
Valve (carb. accelerator pump check)	9576
Valve (carb. accelerator pump discharge needle)	9A516
Valve (carb. air)	9H555
Valve (carb. vent)	9D583
Valve (carb. venturi)	9A938
Valve (carb. venturi air by–pass)	9A936
Valve (eng. exhaust)	6505
Valve (eng. intake)	6507
Valve (eng. positive crankcase vent)–P.C.V.	6A666
Valve (headlamp cover vacuum check)	13B064
Valve (heater temperature regulator)	18502
Valve (heater water control)	18495
Valve (power brake booster check)	2365
Valve (spare tire inflator)	1702
Valve (trans. intermediate servo accumulator check)	7D376
Valve (trans. lube)	7D174
Valve (trans. main valve body manual control)	7C389
Valve (trans. rear band servo check)	7–7658
Valve (trans. rear band servo piston accumulator)	7A266
Valve (trans. rear pump check)	7A127
Valve (windshield washer control)	17A614
Valve assy. (A/C compressor)	19A990
Valve assy. (air cleaner vacuum control)	9E897
Valve assy. (anti–backfire)	9B289
Valve assy. (automatic air leveler)	5A855
Valve assy. (brake pressure differential)	2B257
Valve assy. (brake pressure red)	2L410
Valve assy. (carb. accelerator pump discharge)	9902
Valve assy. (carb. air cleaner temperature sensor override)	9E862
Valve assy. (carb. air cleaner vacuum control)	9A995
Valve assy. (carb. dump)	9S553
Valve assy. (carb. fuel bowl vent)	9557
Valve assy. (carb. fuel enrichment)	9A565

INDEX

PART NAME	GROUP NUMBER
△ Refer to Page 1 of Paint Section	

V — Cont'd

PART NAME	GROUP NUMBER
Valve assy. (carb. float bowl vent)	9E589
Valve assy. (carb. power)	9G551, 9594
Valve assy. (deceleration)	9K793
Valve assy. (distributor retard control)	12A208
Valve assy. (distributor vacuum control check)	12A197
Valve assy. (dist. vac and vent control)	12A226
Valve assy. (speed control dump)	9C727
Valve assy. (EGR)	9D475
Valve assy. (EGR back pressure)	9F452
Valve assy. (EGR pressure)	9F489
Valve assy. (EGR pressure internal)	9F482
Valve assy. (solenoid pressure)	9B981
Valve assy. (fuel vapor storage canister)	9B963
Valve assy. (EGR solenoid vacuum)	9D474
Valve assy. (EGR vacuum control)	9D473
Valve assy. (EGR vacuum load control)	9F424
Valve assy. (exhaust air supply check)	9A487
Valve assy. (exhaust air supply control)	9F491
Valve assy. (exhaust control)	9A427
Valve assy. (fuel tank vent)	9A153
Valve assy. (fuel vapor)	9B593
Valve assy. (integral E.G.R. and back pressure– transducer)	9D448
Valve assy. (P/S hydraulic control)	3A730
Valve assy. (P/S pump)	3A561
Valve assy. (speed control metering)	9C727
Valve assy. (speed control vacuum)	9C793
Valve assy. (thermactor idle vacuum)	9G328
Valve assy. (thermactor vacuum vent control)	9H301
Valve & adaptor assy. (E.G.R.)	9E444
Valve & bracket assy. (vacuum differential)	9E441
Valve & cap assy. (tire)	1702
Valve & lever assy. (automatic air leveler)	5A712
Valve & seat assy. (carb. fuel inlet)	9564
Valve & sensor assy. (EGR pressure external)	9F483
Valve & switch assy. (brake pressure regulator)	2B257
Valve kit (carb. fuel inlet)	9564
Valve kit (P/S control valve return port relief)	3E710
Valve kit (P/S steering gear rear check)	3D728
Valve kit (reed)	9A487
Valve repair kit (P/S hydraulic control)	3A650
Vent (rear axle housing)	4022
Vent (trans. extension housing)	7034
Vent assy. (forced air)	19K502
Venturi (A/T/C)	19C747

W

PART NAME	GROUP NUMBER
Washer (brake master cylinder)	2C140
Washer (brake master cylinder piston)	2188
Washer (brake pedal to shaft spring)	7512
Washer (carb. throttle lever nut lock)	9568
Washer (clutch & brake pedal to shaft spring)	7512
Washer (eng. camshaft gear)	6278
Washer (eng. camshaft sprocket)	6278

W — Cont'd

PART NAME	GROUP NUMBER
Washer (eng. crankshaft pulley retaining)	6378
Washer (eng. valve rocker arm shaft)	6598
Washer (front wheel outer bearing retainer)	1195
Washer (P/S cylinder rod insulator)	3A345
Washer (P/S pump reservoir cover bolt)	3L517
Washer (rear axle differential pinion thrust)	4230
Washer (rear axle differential side gear thrust)	4228
Washer (shock absorber insulator)	18041
Washer (starter motor armature thrust)	11036
Washer (starter motor field terminal)	11093
Washer (steering column socket thrust)	3C708
Washer (steering gear worm thrust)	3579
Washer (steering shaft column shaft coupling bolt)	3C660
Washer (thermostat gasket)	8593
Washer (trans. constant mesh low gear thrust)	7071
Washer (trans. control cable sealing)	7K313
Washer (trans. converter stator front & rear thrust)	7937
Washer (trans. countershaft gear thrust)	7119
Washer (trans. forward clutch hub thrust)	7D090
Washer (trans. front clutch cylinder thrust)	7A533
Washer (trans. front clutch hub to input shaft thrust)	7–7577
Washer (trans. front clutch sun gear thrust)	7D484
Washer (trans. front pump support thrust)	7D014
Washer (trans. gearshift shaft)	7E132
Washer (trans. input shaft thrust)	7019
Washer (trans. input shell thrust)	7D066
Washer (trans. intermediate brake drum thrust)	7C096
Washer (trans. low gear thrust)	7071
Washer (trans. needle thrust bearing)	7A242
Washer (trans. output shaft hub thrust)	7D422
Washer (trans. output shaft thrust front)	7A385
Washer (trans. output shaft thrust rear)	7B368
Washer (trans. planet carrier thrust)	7A166
Washer (trans. planet pinion thrust)	7A242
Washer (trans. primary sun gear thrust)	7C086
Washer (trans. primary sun gear thrust bearing)	7C096
Washer (trans. rear clutch sun gear thrust)	7A166, 7–7524
Washer (trans. reverse brake drum thrust)	7D072
Washer (trans. reverse drum thrust)	7C096
Washer (trans. reverse idler gear thrust)	7029, 7149
Washer (trans. thrust)	7119
Washer kit (trans. reverse clutch hub thrust)	7D091
Wastegate actuator protection circuit kit (turbocharger)	9G400
Water chamber (carb. thermostatic choke)	9A705
Waxes	△
Wedge (rear axle adjusting)	5A313
Weight (carb. pump discharge ball)	9B511
Weight (wheel balance)	1040
Wheel (heater blower)	18504
Wheel assy.	1007

COPYRIGHT © 1986 — FORD MOTOR COMPANY — DEARBORN, MICHIGAN

INDEX

△ Refer to Page 1 of Paint Section

W — Cont'd

PART NAME	GROUP NUMBER
Wheel assy. (steering)	3600
Wheel kit (collapsible spare tire)	1538
Wheel kit (mini spare)	1K007
Wire (headlamp dimmer sensor to amplifier)	13A106
Wire (horn ground)	13A847
Wire (P/S gear ground strap)	3K666
Wire (seat control feed jumper)	14A699
Wire (top control circuit breaker to top control switch)	15A669
Wire assy. (accessory feed)	14A318
Wire assy. (alternator)	10C307
Wire assy. (auto/headlamp. switch	14A320
Wire assy. (backup lamp socket)	15536
Wire assy. (backup lamp switch to rear lamp feed)	15525
Wire assy. (back window heater ground)	18C620
Wire assy. (back window regulator feed)	14A207
Wire assy. (body side lamp)	15B411
Wire assy. (carb. choke)	9E692
Wire assy. (carb. emission control solenoid)	9D866
Wire assy. (cigar lighter jumper)	15A056
Wire assy. (clock feed)	15A006
Wire assy. (courtesy lamp)	13B711
Wire assy. (courtesy lamp feed)	13B712
Wire assy. (courtesy lamp jumper)	13B767
Wire assy. (courtesy lamp switch)	13A769
Wire assy. (dash panel to eng. gauge feed)	14289
Wire assy. (dash panel to headlamp junction)	14290
Wire assy. (door lock lead)	14A412
Wire assy. (door open warning switch ground)	10C865
Wire assy. (door lock switch jumper)	14A631
Wire assy. (door warning switch)	14A587
Wire assy. (emergency warning flasher jumper)	15A599
Wire assy. (eng. compt. lamp feed)	15A702
Wire assy. (eng. to frame)	14324
Wire assy. (front door lock feed)	14240
Wire assy. (fuel pump feed)	9A400
Wire assy. (glove compt. lamp feed)	13A721
Wire assy. (horn relay)	14457
Wire assy. (instrument cluster lamp)	10B898
Wire assy. (main) jumper	14A411
Wire assy. (parking brake warning indicator)	15A856
Wire assy. (parking lamp) ground	13A455
Wire assy. (radio rear seat speaker extension)	14574
Wire assy. (rear interior lamp)	13A718
Wire assy. (rear lamp extension)	14408
Wire assy. (resistance)	10A665, 12250
Wire assy. (roof sliding panel)	15B672, 15B673
Wire assy. (roof sliding panel extension)	15C670
Wire assy. (seat back latch)	14C692
Wire assy. (seat back latch extension)	14C691
Wire assy. (seat back latch feed)	14C694

W — Cont'd

PART NAME	GROUP NUMBER
Wire assy. (seat belt retract)	14A380
Wire assy. (seat belt retractor switch)	14A504
Wire assy. (seat belt switch)	14A546
Wire assy. (seat regulator feed)	14716
Wire assy. (seat regulator motor)—jumper	14A696
Wire assy. (seat sensor switch)	14A576
Wire assy. (seat sensor switch feed)	14A577
Wire assy. (speaker system)	15629
Wire assy. (speed control)	9A840
Wire assy. (speed control feed)	9A839
Wire assy. (starter motor relay to solenoid)	11A004
Wire assy. (starter relay jumper)	11A001
Wire assy. (stop lamp switch)	13A411
Wire assy. (tachometer)	17A299
Wire assy. (thermal sensor)	14370
Wire assy. (tailgate warning switch)	14A583
Wire assy. (temperature sensor to main wiring)	13A106
Wire assy. (top control feed jumper)	15A690
Wire assy. (trailer battery feed)	14A346
Wire assy. (trailer brake control switch)	14A348
Wire assy. (trans. control selector indicator lamp)	15A808
Wire assy. (vanity mirror lamp feed)	17C710
Wire assy. (warning indicator extension)	14A382
Wire assy. (window regulator jumper)	14A630
Wire & connector assy. (distributor and electronic ignition switch)	14A614
Wire & plug assy. (trailer lamp)	15436
Wiring (bulk)	14296
Wiring (front window regulator)	14630–1
Wiring (heater motor)	18B518
Wiring (instrument cluster)	10B942
Wiring (radio receiver to rear seat speaker)	18A900
Wiring (rear door window regulator)	14632–3
Wiring (rear quarter window regulator)	14644
Wiring (rear window washer feed)	17A409
Wiring (starter motor circuit jumper extension)	11A103
Wiring (trailer wiring feed)	13A576
Wiring (trans. control switch)	7D307
Wiring (trans. seat belt warning sensor switch)	7E464
Wiring (warning lamp indicator panel)	10B923
Wiring (windshield wiper switch to windshield wiper motor)	17B586–7
Wiring assy. (A/C blower motor switch feed)	19945
Wiring assy. (alternator)	10C307
Wiring assy. (alternator to voltage regulator)	14305
Wiring assy. (back window heat control)	18C617
Wiring assy. (back window heat feed)	18C619
Wiring assy. (back window heat guard)	18C620
Wiring assy. (back window regulator)	14687
Wiring assy. (back window regulator feed)	14683
Wiring assy. (back window regulator rear switch feed extension)	14A027
Wiring assy. (body main)	14A005
Wiring assy. (brake pressure differential valve warning lamp)	2B325

INDEX

PART NAME	GROUP NUMBER
△ Refer to Page 1 of Paint Section	
W — Cont'd	
Wiring assy. (brake skid control actuator)	2B516
Wiring assy. (brake skid control sensor)	2B572
Wiring assy. (brake skid control speed sensor)	2B392
Wiring assy. (carb. emission control solenoid ground)	9P664
Wiring assy. (carb. throttle acuator)	9E724
Wiring assy. (carb. throttle emission control solenoid)	9D857
Wiring assy. (coach lamps)	15B465
Wiring assy. (compressor clutch)	2A975
Wiring assy. (courtesy or interior lamp switch)	13A709
Wiring assy. (courtesy lamp switch ext.)	13A724
Wiring assy. (dash panel to eng.)	14398
Wiring assy. (dash panel to engine & alternator rectifier–jumper)	14A676
Wiring assy. (door lock jumper)	14A584
Wiring assy. (door open warning lamp)	14790, 14792
Wiring assy. (door lock cylinder light)	13C724
Wiring assy. (door warning switch)	14A586
Wiring assy. (eng. compt. temperature switch)	14K064
Wiring assy. (eng. control sensor extension)	12A690
Wiring assy. (eng. electronic cont. sensor)	12A581
Wiring assy. (exhaust air supply pump)	9F432
Wiring assy. (exhaust emission control)	9K499
Wiring assy. (fuel pump)	9A350
Wiring assy. (fuel tank sender)	14406
Wiring assy. (headlamp leads)	13076
Wiring assy. (heater control)	18B604
Wiring assy. (heater B/lite control jumper)	18C673
Wiring assy. (horn jumper)	13A840
Wiring assy. (horn warning)	13A929
Wiring assy. (ignition coil jumper)	12060
Wiring assy. (ignition module)	12A200
Wiring assy. (ignition module) jumper	12A209
Wiring assy. (indicator lamp)	13A705
Wiring assy. (instrument cluster feed)	10817
Wiring assy. (instrument panel to dash panel)	14401
Wiring assy. (low vacuum warning indicator)	10B847, 10A920
Wiring assy. (luggage compt.)	14A558
Wiring assy. (luggage compt. lamp jumper)	14A227
Wiring assy. (luggage compt. remote control lock extension)	14276
Wiring assy. (radio foot control switch)	18B608
W — Cont'd	
Wiring assy. (radio power boost and equalizer amplifier)	18B864
Wiring assy. (radio ground)	18K827
Wiring assy. (radio rear seat speaker connector)	18A901
Wiring assy. (radio speaker extension)	19A123
Wiring assy. (rear lamp)	14405
Wiring assy. (rear lamp jumper)	13A412
Wiring assy. (rear license lamp feed)	13B440
Wiring assy. (rear license plate lamp)	13560
Wiring assy. (rear window defogger)	18C394
Wiring assy. (rear window defogger switch feed)	18C495
Wiring assy. (seat back control)	14B719
Wiring assy. (seat belt warning indicator lamp)	14A313
Wiring assy. (seat regulator relay feed)	14A698
Wiring assy. (speed control extension)	9C887
Wiring assy. (starter switch to transmission lock switch)	14693
Wiring assy. (stop lamp switch jumper)	13A427
Wiring assy. (tachometer)	17A299
Wiring assy. (throttle jumper)	14A595
Wiring assy. (throttle modulator control)	9E724
Wiring assy. (throttle modulator valve ground)	9E717
Wiring assy. (vacuum gauge)	2A204
Wiring assy. (warning indicator panel extension)	10C877
Wiring assy. (water temp. indicator sender)	10B886
Wiring assy. (window regulator rear switch feed)	14A027
Wiring assy. (window regulator safety relay to window regulator switch)	14A200
Wiring & bracket assy. (brake skid control speed sensor)	2B430
Wiring & brush (windshield wiper motor)	17A476
Wiring & shield assy. (door warning switch)	14A556
Wiring & socket assy. (ash receptacle lamp)	13A726
Wiring & socket assy. (rear license lamp)	13412
Wiring kit (horn)	13A945
Wiring kit (trailer lamp plug)	15A416, 13A576
Worm gear & rack assy. (steering gear input)	3524
Wrench (jack handle)	17032
Wrench (wheel nut)	17032
Y	
Yoke (driveshaft center)	4784
Yoke (driveshaft centering socket)	4782

COPYRIGHT © 1986 — FORD MOTOR COMPANY — DEARBORN, MICHIGAN

INDEX

Included in the Paint Section are the following:

	Page No. U.S.	Page No. Canada
Certification Label Information		
Exterior Paint Color Codes	2	2
Interior Paint Trim Codes	2	2
Paints,Thinners, etc.,		
Black and White Finishes		3
Thinners and Reducers		3
Sealers and Undercoats	3	4
Rubbing Compounds		4
Specialties	3	4
Lacquers and Synthetic Enamels		
Interior Paints	5 thru 19	5 thru 19
Exterior Paints		
Tu-Tone Combinations	20 thru 26	20 thru 26
Listed by Certification Label Code	26 thru 29	29 thru 34
Elastomeric	34	34
Appearance and Maintenence Materials		
Paints and Refinishing Materials	35	39
Cleaners, Waxes, and Polishes	35	39
Clear Vision Aids	36	40
Cooling System Aids	36	40
Motor Oils and Lubricants	36,37	40,41
Sealers and Adhesives	37,38	41,42
Special Products	38	42,43
Used Car Reconditioning Materials	43	44

LIQUID MEASURE

Most liquid measures listed in this catalog are in U.S. sizes; however, those measures which are specified for unique Canadian parts are in Imperial or Metric sizes.

The capacity in ounces and litres for both U.S. and Imperial measures are specified below:

	1/2 PT.	PINT	QUART	GALLON
Imperial	10 oz. (284.1 ml)	20 oz. (568.2 ml)	40 oz. (1.136 l)	160 oz. (4.55 l)
U.S.	8 oz. (236.6ml)	16 oz. (478.1 ml)	32 oz. (.946 l)	128 oz. (3.78 l)

COPYRIGHT © 1986— FORD MOTOR COMPANY —DEARBORN, MICHIGAN

CERTIFICATION LABEL INFORMATION

COLOR CODES - EXTERIOR PAINT

1973/74

CERTIFICATION LABEL SHOWN

THE CODE ABOVE OR BELOW "COLOR" INDICATES THE EXTERIOR PAINT COLOR OF THE VEHICLE.

VEHICLE SAFETY STA
EFFECT ON THE DATI
MANUFACTURE SHOV
3G53H100001 PA
VEH. IDENT. NO.

BODY	COLOR	TRIM	TRA
53D	2C	AA	W

1975/

CERTIFICATION LABEL SHOWN

THE CODE SHOWN ABOVE OR BELOW "COLOR" INDICATES THE EXTERIOR PAINT COLOR AND/OR VINYL ROOF COLOR OF THE VEHICLE. THE FIRST TWO DIGITS REPRESENT THE EXTERIOR PAINT COLOR. THE THIRD AND FOURTH DIGITS (TWO ALPHA CHARACTERS) IDENTIFY THE MATERIAL AND COLOR OF THE VINYL ROOF. IF THE VEHICLE IS NOT EQUIPPED WITH A VINYL ROOF, THE THIRD AND FOURTH DIGITS, IF PRESENT, REPRESENT THE ACCENT COLOR OF A TU-TONE PAINT OPTION.

NOTE: SPECIAL ORDER PAINTS WILL NOT REFLECT A PAINT CODE IN THE "COLOR" SPACE ON THE CERTIFICATION LABEL FOR IDENTIFICATION REFER TO THE SPECIAL ORDER NUMBER SHOWN UNDER THE "DSO" SPACE AFTER THE TWO DIGIT DISTRICT CODE.

VEHICLE SAFETY STAND
EFFECT ON THE DATE O
MANUFACTURE SHOWN
3Z44H500001 PART
VEH. IDENT. NO.

BODY	COLOR	TRIM	TRANS
53B	ICDA	CR	X

TRIM CODES

CERTIFICATION LABEL SHOWN

THE CODE SHOWN ABOVE OR BELOW "TRIM" INDICATES THE COLOR AND TYPE OF MATERIALS USED IN THE INTERIOR UPHOLSTERY AS WELL AS THE COLOR OF THE INTERIOR PAINT.

VEHICLE SAFETY STA
EFFECT ON THE DATE
MANUFACTURE SHOV
3G53H100001 PA
VEH. IDENT. NO.

BODY	COLOR	TRIM	TRAI
53D	2C	AA	W

PAINTS, THINNERS,ETC.
U.S. USAGE

Note: The aerosol products listed below do not utilize a chlorofluorocarbon propellant system.

DESCRIPTION	PART NUMBER	DESCRIPTION	PART NUMBER
SEALERS and UNDERCOATS			
Lacquer primer-surfacer - - medium gray - 13 oz. spray can	M6J 12-H	Interior primer-interior parts of electron cure coated ABS plastic - - 13 oz. spray can -this adhesion improving sealer does not contain polycholorinated biphenyl (PCB)	D7AZ 19000-C
		Plastic primer - for polypropylene interior parts - 13 oz. aerosol can	D7AZ 19000-B
SPECIALTIES			
Paint Precleaner-multi-purpose - - 1 qt. child resistant container	VC 542-A	Elastomeric Additive (for industrial use only- to be used with service air dry enamel or lacquer exterior paints to refinish flexible automotive parts) - - 16 oz. can-N.R. (11/85)	★ E8P 652-A
		Bonding coat (transfer film)-1 pt. can	M 4584

PAINTS, THINNERS,ETC.
CANADIAN USAGE

DESCRIPTION	PART NUMBER	DESCRIPTION	PART NUMBER
BLACK and WHITE FINISHES			
Chassis black enamel (dull)-16 oz.- spray bomb	CD2AZ 19500-AJ		
THINNERS and REDUCERS			
Paint Precleaner-multi-purpose - - 1 qt. (U.S.) child resistant container	VC 542-A	Alkyd enamel reducers-	
Acrylic thinner (for AR60 acrylic lacquers)- extra high gloss - - 1 gal. (U.S.)	AR60 644-A	Hot and humid weather-above 80° F. - - 1 gal.	CC0AZ 19566-A
		- - 1 gal.	CE3AZ 19566-R
Enamel reducer (for AE60 acrylic enamels)- 1 gal. can (U.S.)	DL60 647-A	Cold weather-below 70° F. - - 1 gal.	CBJ 19566-A
		- - 5 gal.	CBJ 19566-B
		- - 1 gal. (U.S.)	CE3AZ 19566-U
Acrylic thinner (for AR60 acrylic lacquers) - - 1 gal. (U.S.) can	AR60 647-A	Normal drying 70°-80° F. - - 1 gal.	CC5AZ 19566-E
		- - 5 gal.	CC5AZ 19566-F
The Leveler (fish eye eliminator) - - 1 pt. (U.S.)	CE4AZ 649-A	- - 1 gal. (U.S.)	CE3AZ 19566-T
Leveller (over spray) - - 12 oz. spray can	CB7A 19500-Y	For Fast Dry additive CD6AZ-19503-A - - 1 gal.	CD6AZ 19566-A
Acrylic lacquer thinner-		Lacquer thinner (exc. acrylic lacquers)	
Fast dry-panel refinishing - - 1 gal.	CC5AZ 19566-B	fast dry - - 1 gal.	CBM 19567-C
Normal dry-complete car refinishing - - 1 gal.	CC5AZ 19566-D	- - 1 gal. (U.S.)	CE4AZ 19567-C
- - 1 gal. (U.S.)	CE3AZ 19566-M	normal dry - - 5 gal.	CD6AZ 19567-A
- - 5 gal. (U.S.)	CE3AZ 19566-N	- - 15 gal.	CD6AZ 19567-B
Acrylic enamel reducers-for CAE60 paints-		Final car wash-thinner used to wash vehicle prior to painting-1 gal.	CD2AZ 19566-A
Retarder reducer - - 1 gal.	CD4AZ 19566-A		
- - 1 gal. can	CE3AZ 19566-P	Final car wash-thinner used to wash vehicle prior to painting - - 4 litres	CE0AZ 19566-D
Hot weather reducer - - 1 gal.	CD4AZ 19566-E		
Standard reducer - - 1 gal.	CD4AZ 19566-C		
- - 1 gal. (U.S.)	CE3AZ 19566-AA		

COPYRIGHT © 1986— FORD MOTOR COMPANY —DEARBORN, MICHIGAN

PAINTS, THINNERS,ETC.

CANADIAN USAGE

DESCRIPTION	PART NUMBER	DESCRIPTION	PART NUMBER
SEALERS and UNDERCOATS			
Lacquer primer-surfacer		Primer surfacer (for enamel or lacquer) - - 1 gal. (U.S.)	CE3AZ 19568-F
- - dark gray-1 gal. (U.S.)	M6J 12-D	Primer Sealers (Jet-Seal)	
- - red-1 gal. (U.S.)	M6J 13-D	Red - - 1 qt. (U.S.)	CD4AZ 19574-B
Interior primer-interior parts of electron cure coated ABS plastic-13 oz. spray can	D7AZ 19000-C	Gray - - 1 qt. (U.S.)	CD4AZ 19574-D
		Gray - - 1 gal. (U.S.)	CD4AZ 19574-E
Plastic primer-for polypropylene interior parts-13 oz. can	D7AZ 19000-B	Primer Sealer (Tie-Coat) - - 1 qt. (U.S.)	CE4AZ 19574-A
		Primer Sealer (Tie-Coat) - - 1 gal. (U.S.)	CE4AZ 19574-B
Primer surfacers		Plastic Primer Sealer - - 1 pt. (U.S.)	CE4AZ 19568-C
- - red-1 qt. (U.S.)	CE3AZ 19574-E		
- - gray-1 gal. (U.S.)	CE3AZ 19568-E		
RUBBING COMPOUNDS			
Acrylic enamel rubbing compound-3 lb. tin	CD2AZ 3789-A	Rubbing compound (lacquer fast cut) - - 3 lb. tin	CE1AZ 3789-A
Rubbing compound (lacquer fast cut) - - (4) 3 1/2 lb. tin	CD7AZ 3789-A	Rubbing compound - - 16 oz. tin	CD7AZ 3789-B
		Rubbing compound-white lighting - - 1 qt. (U.S.) can	CE4AZ 3789-A
SPECIALTIES			
Acrylic lacquer (clear)-1 qt. (U.S.)	AR60 50-C	Metal Cleaner (Dual-Etch)- used to clean aluminum parts prior to painting - - 1 gal. (U.S.)	CE1AZ 3721-B
Acrylic lacquer final blend coat (clear)- 1gal. (U.S.)	AR60 650-A		
Elastomeric Additive (for industrial use only- to be used with service air dry enamel or lacquer exterior paints to refinish flexible automotive parts) - - 16 oz. can-N.R. (11/85)	★ EBP 652-A	Metal Cleaner (Metal-L-Mate)- used to clean steel parts prior to painting - - 1 gal. (U.S.)	CE1AZ 3721-C
		Urethane clear coat (acrylic lacquer) - - 1 qt. (U.S.)	CE4AZ 19503-A
Silicone and wax remover - - 1 gal. (U.S.)	DL60 3721-A		
Paint remover E-Z-E strip - - 1 gal. (U.S.) can	CE4AZ 3721-A	Urethane clear coat (acrylic lacquer) - - 1 gal. (U.S.)	CE4AZ 19503-B
Paint remover-E-Z-E strip - - 4 litre can	CE0AZ 3721-A		
Paint remover OKRins-off - - 1 gal. can	CD7AZ 3721-B	Urethane clear coat hardener (acrylic lacquer) - - 1 pt. (U.S.)	CE4AZ 19503-C
Paint remover OKRins-off - - 4 litre can	CE0AZ 3721-B		
Metal Cleaner (Dual-Etch)- used to clean aluminum parts prior to painting - - 1 qt. (U.S.)	CE1AZ 3721-A	Spot repair hardener (acrylic enamel) - - 1 pt. (U.S.)	CE4AZ 19503-D
		Acrylic lacquer (clear) - - 1 gal. (U.S.)	CE4AZ 19503-E
		Sher-Will Clean (silicone & wax remover) - - 1 gal.	CD4AZ 19561-A
		Sher-Will Clean (silicone & wax remover) - - 1 gal. (U.S.) can	CE3AZ 19561-A

1973/79 LINCOLN-MERCURY CARS

LACQUERS and SYNTHETIC ENAMELS
INTERIOR PAINTS

INTERIOR LOCATION: -I/P=Instrument panel; -U/P=Upper instrument panel; -S/C=Steering column and console; -P/T=Package tray; -I/C=Other interior components

PASSENGER AREA-LACQUER - SPRAY CAN

U.S. and CANADIAN USAGE

Note 1: The interior spray paints listed below do not utilize a chlorofluorocarbon propellant system.

Note 2: ● 2nd digit of Trim Code, % Roof side rear trim panel (52018-9) # Exc. roof side rear trim panel (52018-9). ▲ Steering column, △ Console, ⊕ Roof sliding panel cover (518A66) ⊕ Exc. roof sliding panel cover (518A66) ■ LWR. B/L moulding (42456-7) □ Exc. LWR B/L moulding (42456-7)

* Black components may be included in any trim scheme - use ★ 2083 for metallic or M4J 1724 H for non-metallic

1973

CODE ●	INTERIOR TRIM COLOR	MODEL/RESTRICTIONS	I/P	U/P	S/C	P/T	I/C	INTERIOR PAINT COLOR	PART NUMBER		SUFFIX 15 OZ.	SUFFIX 13 OZ.
A	Black	A,C,D,F,K,P,Y	*	*	*	*	*	Black	M4J	1724		H
		A,C,D,F,K,P,Y	*	*	*	*	*	Black Metallic	★	2083		
B	Blue	A,F,P,Y	I/P	U/P	S/C	P/T	I/C	Blue Metallic	★	4021		
		C	I/P		S/C	P/T	#	Blue Metallic	★	4021		
		C		U/P			%	Blue	★	4036		
		D,K	I/P	U/P	S/C	P/T	I/C	Blue Metallic - NR (2/76)	★	1847		
C	Orange	P	I/P		S/C	P/T	I/C	Orange Metallic-NR	★	4041		
				U/P				Black Metallic	★	2083		
D	Red	D,K	I/P	U/P	S/C	P/T	I/C	Red Metallic	M4J	4020		H
F	Ginger	A,D,K	I/P	U/P	S/C	P/T		Tobacco Metallic-NR	★	4018		
		A,C,D,F,K,P					I/C	Ginger (medium)-NR	★	3605		
		C	I/P		S/C	P/T		Tobacco Metallic-NR	★	4018		
		C		U/P				Tobacco	★	4019		
		F,P	I/P	U/P	S/C	P/T		Ginger (dark)-NR	★	3606		
G	Avocado	F,P	I/P	U/P	S/C	P/T		Avocado-NR (2/77)	★	4034		
		F,P					I/C	Avocado (light)-NR	★	4029		
H	Cranberry	K	I/P	U/P	S/C	P/T	I/C	Cranberry-NR (3/79)	★	4022		
L	Silver Gray	K	I/P	U/P	S/C	P/T		Silver Metallic (med.)	★	4051		
		K					I/C	Silver Metallic-NR	★	4052		
P	Silver	D,K	I/P	U/P	S/C	P/T		Gray Metallic-NR	★	4040		
		D,K					I/C	Gray Metallic-NR	★	4039		
Q	White/Blue	A,F	I/P	U/P	S/C	P/T		Blue Metallic	★	4021		
		C	I/P		S/C	P/T		Blue Metallic	★	4021		
		C		U/P				Blue	★	4036		
		D,K	I/P	U/P	S/C	P/T		Blue Metallic-NR(2/76)	★	1847		
		A,C,D,F,K					I/C	White	M4J	3290		H
R	Green	A,Y	I/P	U/P	S/C	P/T	I/C	Green Metallic-NR(11/76)	★	4004		
		C	I/P		S/C	P/T	#	Green Metallic-NR(11/76)	★	4004		
		C		U/P			%	Green -NR (2/77)	★	4032		
		D,K	I/P	U/P	S/C	P/T	I/C	Green Metallic-NR (1/77)	★	4006		
T	Beige	A,C,D,K,P,Y	I/P	U/P	S/C	P/T		Beige (dark)-NR (2/77)	★	4037		
		A,C,D,K,P,Y					I/C	Beige(light)-NR (2/77)	★	4028		

COPYRIGHT © 1986— FORD MOTOR COMPANY —DEARBORN, MICHIGAN

1973/79 LINCOLN-MERCURY CARS

LACQUERS and SYNTHETIC ENAMELS
INTERIOR PAINTS

INTERIOR TRIM			INTERIOR LOCATION					INTERIOR PAINT				
CODE ●	COLOR	MODEL/RESTRICTIONS	-I/P=Instrument panel -U/P=Upper instrument panel -S/C=Steering column and console -P/T=Package tray -I/C=Other interior components	I/P	U/P	S/C	P/T	I/C	COLOR	PART NUMBER	SUFFIX 15 OZ.	SUFFIX 13 OZ.

PASSENGER AREA-LACQUER - SPRAY CAN
U.S. and CANADIAN USAGE

Note 1: The interior spray paints listed below do not utilize a chlorofluorocarbon propellant system.

Note 2: ● 2nd digit of Trim Code, % Roof side rear trim panel (52018-9) #Exc. roof side rear trim panel (52018-9). ▲ Steering column, △ Console, ⊕ Roof sliding panel cover (518A66) ⊕ Exc. roof sliding panel cover (518A66) ■ LWR. B/L moulding (42456-7) □ Exc. LWR B/L moulding (42456-7)

* Black components may be included in any trim scheme - use ★ 2083 for metallic or M4J 1724 H for non-metallic

1973 — Cont'd

U	Tan	C	I/P		S/C	P/T		Tobacco Metallic-NR	★	4018		
		C		U/P				Tobacco (Dark)	★	4019		
		C,F,P					I/C	Tan (Light)	★	4042		
		F	I/P	U/P	S/C	P/T		Tan (Medium)	★	4043		
		P	I/P	U/P	S/C			Tan (Medium)	★	4043		
		P (Luxury Decor)				P/T		Tan(Light)	★	4042		
		P (Exc. Luxury Decor)				P/T		Tan (Medium)	★	4043		
W	White/Black	A,C,D,F,K	*	*	*	*		Black Metallic	★	2083		
		A,C,D,F,K	*	*	*	*		Black	M4J	1724		H
		A,C,D,F,K					I/C	White	M4J	3290		H
Y	Gold	C,D,K	I/P	U/P	S/C	P/T		Gold (Medium)-NR (7/76)	★	4027		
		C,D,K					I/C	Gold (Light)-NR (7/76)	★	4026		
Z	Tobacco	A,D,K,Y	I/P	U/P	S/C	P/T	I/C	Tobacco Metallic-NR	★	4018		
		C	I/P		S/C	P/T	#	Tobacco Metallic-NR	★	4018		
		C		U/P			%	Tobacco	★	4019		
3	White/Ginger	F	I/P	U/P	S/C	P/T		Ginger-NR	★	3606		
		F					I/C	White	M4J	3290		H
5	White/Green	A	I/P	U/P	S/C	P/T		Green Metallic-NR(11/76)	★	4004		
		C	I/P		S/C	P/T		Green Metallic-NR(11/76)	★	4004		
		C		U/P				Green-NR (2/77)	★	4032		
		D,K	I/P/	U/P	S/C	P/T		Green Metallic-NR (1/77)	★	4006		
		A,C,D,K					I/C	White	M4J	3290		H
6	White/Avocado	F	I/P	U/P	S/C	P/T		Avocado-NR (2/77)	★	4034		
		F					I/C	White	M4J	3290		H
9	White/Tobacco	A,D,K	I/P	U/P	S/C	P/T		Tobacco Metallic-NR	★	4018		
		C	I/P		S/C	P/T		Tobacco Metallic-NR	★	4018		
		C		U/P				Tobacco	★	4019		
		A,C,D,K					I/C	White	M4J	3290		H

1974

A	Black	A,C,D,F,K,L,P,Y	*	*	*	*	*	Black	M4J	1724		H
		A,C,D,F,K,L,P,Y	*	*	*	*	*	Black Metallic	★	2083		
B	Blue	A,C,D,K,L,P,Y	I/P	U/P	S/C	P/T	I/C	Blue Metallic	★	4021		
		F	I/P		S/C	P/T	I/C	Blue Metallic	★	4021		
		F		U/P				Blue	★	4036		
C	Copper	F	I/P		S/C	P/T	I/C	Copper Metallic-NR	★	4055		
		F		U/P				Copper-NR(7/76)	★	4059		
C	Orange	L,P	I/P		S/C	P/T	I/C	Orange Metallic-NR	★	4041		
		L,P		U/P				Black Metallic	★	2083		

LACQUERS and SYNTHETIC ENAMELS
INTERIOR PAINTS

INTERIOR TRIM			INTERIOR LOCATION					INTERIOR PAINT			
CODE ●	COLOR	MODEL/RESTRICTIONS	-I/P=Instrument panel -U/P=Upper instrument panel -S/C=Steering column and console -P/T=Package tray -I/C=Other interior components					COLOR	PART NUMBER	SUFFIX 15 OZ.	SUFFIX 13 OZ.
			I/P	U/P	S/C	P/T	I/C				

PASSENGER AREA-LACQUER - SPRAY CAN
U.S. and CANADIAN USAGE

Note 1: The interior spray paints listed below do not utilize a chlorofluorocarbon propellant system.
Note 2: ● 2nd digit of Trim Code, % Roof side rear trim panel (52018-9) #Exc. roof side rear trim panel (52018-9).
▲ Steering column, △ Console, ⊕ Roof sliding panel cover (518A66) ⊕ Exc. roof sliding panel cover (518A66)
■ LWR. B/L moulding (42456-7) □ Exc. LWR B/L moulding (42456-7)
* Black components may be included in any trim scheme - use ★ 2083 for metallic or M4J 1724 H for non-metallic

1974 — Cont'd

D	Red	D,K	I/P	U/P	S/C	P/T	I/C	Red Metallic	M4J	4020		H
		F	I/P		S/C	P/T	I/C	Red Metallic	M4J	4020		H
		F		U/P				Red	★	4056		
E	Silver Blue	D,K,P	I/P	U/P	S/C	P/T		Silver Blue Metallic -NR	★	4040		
		D,K,P					I/C	Silver Blue Metallic -NR	★	4039		
G	Avocado	L,P	I/P	U/P	S/C	P/T		Avocado -NR (2/77)	★	4034		
		L,P					I/C	Avocado (Light)-NR	★	4029		
H	Cranberry	K	I/P	U/P	S/C	P/T	I/C	Cranberry-NR (3/79)	★	4022		
L	Aqua	K	I/P	U/P	S/C	P/T	I/C	Aqua-NR(11/80)	★	4069		
M	White/Tan	C	I/P	U/P	S/C	P/T		Saddle Metallic	★	4050		
		F	I/P	U/P	S/C	P/T		Tan	★	4043		
		C,F					I/C	White	M4J	3290		H
N	White/Red	D,K	I/P	U/P	S/C	P/T		Red Metallic	M4J	4020		H
		D,K					I/C	White	M4J	3290		H
P	Silver	K	I/P	U/P	S/C	P/T		Silver Metallic (Medium)	★	4051		
		K					I/C	Silver Metallic -NR	★	4052		
Q	White/Blue	A,C,D,K,Y	I/P	U/P	S/C	P/T		Blue Metallic	★	4021		
		F	I/P		S/C	P/T		Blue Metallic	★	4021		
		F		U/P				Blue	★	4036		
		A,C,D,F,K,Y					I/C	White	M4J	3290		H
R	Green	A,D,K,Y	I/P	U/P	S/C	P/T	I/C	Green Metallic-NR(11/76)	★	4004		
		C,F	I/P		S/C	P/T	I/C	Green Metallic-NR(11/76)	★	4004		
		C,F		U/P				Green-NR (2/77)	★	4032		
T	Beige	A,D,Y	I/P	U/P	S/C	P/T		Beige (Dark)-NR (2/77)	★	4037		
		A,D,Y					I/C	Beige (light)-NR (2/77)	★	4028		
U	Tan	A,C,F,K,L,P,Y	I/P	U/P	S/C	P/T		Tan (Medium)	★	4043		
		A,C,F,K,L,P,Y					I/C	Tan (Light)	★	4042		
W	White/Black	A,C,D,F,K	*	*	*	*		Black Metallic	★	2083		
		A,C,D,F,K	*	*	*	*		Black	M4J	1724		H
		A,C,D,F,K					I/C	White	M4J	3290		H
Y	Gold	A,C,D,K,Y	I/P	U/P	S/C	P/T		Gold (Medium)-NR (7/76)	★	4027		
		A,C,D,K,Y					I/C	Gold (Light)-NR (7/76)	★	4026		
Y	Yellow	L	I/P	U/P	S/C	P/T	I/C	Yellow-NR(7/76)	★	4046		
Z	Saddle	A,D,F,K,L,P,Y	I/P	U/P	S/C	P/T	I/C	Saddle Metallic	★	4050		
		C	I/P		S/C	P/T	I/C	Saddle Metallic	★	4050		
		C		U/P				Saddle-NR(5/80)	★	4053		
5	White/Green	A,D,K	I/P	U/P	S/C	P/T		Green Metallic-NR(11/76)	★	4004		
		C,F	I/P		S/C	P/T		Green Metallic-NR(11/76)	★	4004		
		C,F		U/P				Green-NR (2/77)	★	4032		
		A,C,D,F,K					I/C	White	M4J	3290		H

COPYRIGHT © 1986— FORD MOTOR COMPANY —DEARBORN, MICHIGAN

1973/79 LINCOLN-MERCURY CARS

LACQUERS and SYNTHETIC ENAMELS
INTERIOR PAINTS

INTERIOR TRIM			INTERIOR LOCATION					INTERIOR PAINT				
CODE ●	COLOR	MODEL/RESTRICTIONS	-I/P=Instrument panel -U/P=Upper instrument panel -S/C=Steering column and console -P/T=Package tray -I/C=Other interior components					COLOR	PART NUMBER		SUFFIX 15 OZ.	SUFFIX 13 OZ.
			I/P	U/P	S/C	P/T	I/C					

PASSENGER AREA-LACQUER - SPRAY CAN
U.S. and CANADIAN USAGE

Note 1: The interior spray paints listed below do not utilize a chlorofluorocarbon propellant system.
Note 2: ● 2nd digit of Trim Code, % Roof side rear trim panel (52018-9) # Exc. roof side rear trim panel (52018-9).
▲ Steering column, △ Console, ⊕ Roof sliding panel cover (518A66) ⊕ Exc. roof sliding panel cover (518A66)
■ LWR. B/L moulding (42456-7) □ Exc. LWR B/L moulding (42456-7)
*Black components may be included in any trim scheme - use ★ 2083 for metallic or M4J 1724 H for non-metallic

1974 — Cont'd

8	White/Gold	A,C,D,K	I/P	U/P	S/C	P/T		Gold-NR(7/76)	★	4027		
		A,C,D,K					I/C	White	M4J	3290		H
9	White/Saddle	A,D,F,K	I/P	U/P	S/C	P/T		Saddle Metallic	★	4050		
		C	I/P		S/C	P/T		Saddle Metallic	★	4050		
		C		U/P				Saddle-NR(5/80)	★	4053		
		A,C,D,F,K					I/C	White	M4J	3290		H

1975

A	Black	A,C,D,F,G,K,L,P,Y	*	*	*	*	*	Black	M4J	1724		H
		A,C,D,F,G,K,L,P,Y	*	*	*	*	*	Black Metallic	★	2083		
B	Blue	A,Y	I/P	U/P	S/C	P/T	#	Blue Metallic	★	4021		
		A,Y					%	Blue	★	4036		
		C,F	I/P		S/C	P/T	I/C	Blue Metallic	★	4021		
		C,F		U/P				Blue	★	4036		
		D,K,P	I/P	U/P	S/C	P/T	I/C	Blue Metallic	★	4021		
		L	I/P	U/P	S/C		I/C	Blue Metallic	★	4021		
		L				P/T		Blue	★	4036		
D	Red	A,Y	I/P	U/P	S/C	P/T	#	Red Metallic	M4J	4020		H
		A,Y					%	Red	★	4056		
		D,G,K	I/P	U/P	S/C	P/T	I/C	Red Metallic	M4J	4020		H
		F	I/P		S/C	P/T	I/C	Red Metallic	M4J	4020		H
		F		U/P				Red	★	4056		
E	Silver Blue	G	I/P	U/P	S/C	P/T		Silver Blue Metallic -NR	★	4040		
		G					I/C	Silver Blue Metallic-NR	★	4039		
G	Green	A,Y	I/P	U/P	S/C	P/T	#	Green Metallic-NR	★	4061		
		A,Y					%	Green-NR(3/78)	★	4065		
		C,F	I/P		S/C	P/T	I/C	Green Metallic-NR	★	4061		
		C,F		U/P				Green-NR(3/78)	★	4065		
		D,G,K	I/P	U/P	S/C	P/T	I/C	Green Metallic-NR	★	4061		
		L	I/P	U/P	S/C			Green Metallic-NR	★	4061		
		L				P/T		Green (Light)-NR(3/78)	★	4063		
		L					I/C	Green Metallic-NR	★	4060		
		P	I/P	U/P	S/C	P/T		Green Metallic-NR	★	4061		
		P					I/C	Green Metallic-NR	★	4060		
J	Taupe	D	I/P	U/P	S/C	P/T	I/C	Taupe Metallic-NR(5/78)	★	4062		
K	Aqua	K	I/P	U/P	S/C	P/T		Aqua Metallic (Medium)	★	4069		
		K					I/C	Aqua Metallic (Light)	★	4068		

LACQUERS and SYNTHETIC ENAMELS
INTERIOR PAINTS

INTERIOR TRIM			INTERIOR LOCATION					INTERIOR PAINT			
CODE ●	COLOR	MODEL/RESTRICTIONS	-I/P=Instrument panel -U/P=Upper instrument panel -S/C=Steering column and console -P/T=Package tray -I/C=Other interior components					COLOR	PART NUMBER	SUFFIX	
			I/P	U/P	S/C	P/T	I/C			15 OZ.	13 OZ.

PASSENGER AREA-LACQUER - SPRAY CAN
U.S. and CANADIAN USAGE

Note 1: The interior spray paints listed below do not utilize a chlorofluorocarbon propellant system.
Note 2: ● 2nd digit of Trim Code, % Roof side rear trim panel (52018-9) #Exc. roof side rear trim panel (52018-9). ▲ Steering column, △ Console, ⊕ Roof sliding panel cover (518A66) ⊕ Exc. roof sliding panel cover (518A66) ■ LWR, B/L moulding (42456-7) □ Exc. LWR B/L moulding (42456-7)
*Black components may be included in any trim scheme - use ★ 2083 for metallic or M4J 1724 H for non-metallic

1975 — Cont'd

N	White/Red	A,D	I/P	U/P	S/C	P/T		Red Metallic	M4J	4020		H
		F	I/P		S/C	P/T		Red Metallic (Medium)	M4J	4020		H
		F		U/P				Red (Dark)	★	4056		
		K	I/P	U/P	S/C	P/T		Red	★	4056		
		A,D,F,K					I/C	White	M4J	3290		H
P	Silver	K	I/P	U/P	S/C	P/T		Silver Metallic (Medium)	★	4051		
		K					I/C	Silver Metallic-NR	★	4052		
Q	White/Blue	A,D,K	I/P	U/P	S/C	P/T		Blue Metallic	★	4021		
		C,F	I/P		S/C	P/T		Blue Metallic	★	4021		
		C,F		U/P				Blue	★	4036		
R	Jade	D	I/P	U/P	S/C	P/T	I/C	Jade Metallic	★	4074		
S	Silver Blue/Blue	F	I/P		S/C	P/T	I/C	Blue Metallic	★	4021		
		F		U/P				Blue	★	4036		
U	Tan	A,Y	I/P	U/P	S/C	P/T		Saddle Metallic	★	4050		
		A,C,D,F,G,K,L,Y					I/C	Tan (Light)	★	4042		
		C	I/P		S/C	P/T		Saddle Metallic	★	4050		
		C,F		U/P				Saddle-NR(5/80)	★	4053		
		D,G,K,L	I/P	U/P	S/C	P/T		Tan (Medium)	★	4043		
		F(Lower I/P)	I/P					Tan (Medium)	★	4043		
		F(Exc. Lower I/P)	I/P		S/C	P/T		Saddle Metallic	★	4050		
		P	I/P	U/P	S/C			Tan (Medium)	★	4043		
		P(Luxury Decor)				P/T		Tan (Light)	M4J	4042		H
		P(Exc. Luxury Decor)				P/T		Tan (Medium)	★	4043		
		P					I/C	Tan (Light)	M4J	4042		H
W	White/Black	A,C,D,F,K	*	*	*	*		Black Metallic	★	2083		
		A,C,D,F,K	*	*	*	*		Black	M4J	1724		H
		A,C,D,F,K					I/C	White	M4J	3290		H
Y	Gold	D	I/P	U/P	S/C	P/T		Gold (Medium)	★	4071		
		D					I/C	Gold (Light)	★	4064		
Z	Saddle	A,Y	I/P	U/P	S/C	P/T	#	Saddle Metallic	★	4050		
		A,Y					%	Saddle-NR(5/80)	★	4053		
		C,F	I/P		S/C	P/T	I/C	Saddle Metallic	★	4050		
		C,F		U/P				Saddle-NR(5/80)	★	4053		
		K	I/P	U/P	S/C	P/T	I/C	Saddle Metallic	★	4050		
3	White/Taupe	D	I/P	U/P	S/C	P/T		Taupe Metallic-NR(5/78)	★	4062		
		D					I/C	White	M4J	3290		H
5	White/Green	A,D,K	I/P	U/P	S/C	P/T		Green Metallic-NR	★	4061		
		C,F	I/P		S/C	P/T		Green Metallic-NR	★	4061		
		C,F		U/P				Green-NR(3/78)	★	4065		
		A,C,D,F,K					I/C	White	M4J	3290		H

COPYRIGHT © 1986— FORD MOTOR COMPANY —DEARBORN, MICHIGAN

1973/79 LINCOLN-MERCURY CARS

LACQUERS and SYNTHETIC ENAMELS
INTERIOR PAINTS

INTERIOR TRIM			INTERIOR LOCATION					INTERIOR PAINT			
CODE ●	COLOR	MODEL/RESTRICTIONS	-I/P=Instrument panel -U/P=Upper instrument panel -S/C=Steering column and console -P/T=Package tray -I/C=Other interior components					COLOR	PART NUMBER		SUFFIX 15 OZ.	SUFFIX 13 OZ.
			I/P	U/P	S/C	P/T	I/C					

PASSENGER AREA-LACQUER - SPRAY CAN
U.S. and CANADIAN USAGE

Note 1: The interior spray paints listed below do not utilize a chlorofluorocarbon propellant system.
Note 2: ● 2nd digit of Trim Code, % Roof side rear trim panel (52018-9) #Exc. roof side rear trim panel (52018-9).
▲ Steering column, △ Console, ⊕ Roof sliding panel cover (518A66) ⊕ Exc. roof sliding panel cover (518A66)
■ LWR. B/L moulding (42456-7) □ Exc. LWR B/L moulding (42456-7)
*Black components may be included in any trim scheme - use ★ 2083 for metallic or M4J 1724 H for non-metallic

1975 — Cont'd

4	White/Tan	D	I/P	U/P	S/C	P/T		Tan	★	4043		
		D					I/C	White	M4J	3290		H
8	White/Gold	D	I/P	U/P	S/C	P/T		Gold	★	4071		
		D					I/C	White	M4J	3290		H
9	White/Saddle	A,K	I/P	U/P	S/C	P/T		Saddle Metallic	★	4050		
		C,F	I/P		S/C	P/T		Saddle Metallic	★	4050		
		C,F		U/P				Saddle-NR(5/80)	★	4050		
		A,C,F,K					I/C	White	M4J	3290		H
9	White/Tobacco	G	I/P	U/P	S/C	P/T		Tobacco Metallic-NR	★	4018		
		G					I/C	White	M4J	3290		H

1976

A	Black	A,C,D,F,G,K,L,P,Y	*	*	*	*	*	Black	M4J	1724		H
		A,C,D,F,G,K,L,P,Y	*	*	*	*	*	Black metallic	★	2083		
B	Blue	A,Y					%	Blue	★	4036		
		A,Y	I/P	U/P	S/C	P/T	#	Blue metallic	★	4021		
		C,F		U/P				Blue	★	4036		
		C,F	I/P		S/C	P/T	I/C	Blue metallic	★	4021		
		D,K,L,P	I/P	U/P	S/C	P/T	I/C	Blue metallic	★	4021		
D	Red	A,Y					%	Red	★	4056		
		A,Y	I/P	U/P	S/C	P/T	#	Red metallic	M4J	4020		H
		C,F		U/P				Red	★	4056		
		C,F	I/P		S/C	P/T	I/C	Red metallic	M4J	4020		H
		D,G,K	I/P	U/P	S/C	P/T	I/C	Red metallic	M4J	4020		H
E	Silver blue	G	I/P	U/P	S/C	P/T		Silver blue metallic -NR	★	4040		
		G					I/C	Silver blue metallic-NR	★	4039		
G	Green	A,Y	I/P	U/P	S/C	P/T	#	Green metallic-NR	★	4061		
		A,Y					%	Green-NR(3/78)	★	4065		
		C,F	I/P		S/C	P/T	I/C	Green metallic-NR	★	4061		
		C,F		U/P				Green-NR(3/78)	★	4065		
		L,P	I/P	U/P	S/C	P/T		Green metallic-NR	★	4061		
		L,P					I/C	Green metallic-NR	★	4060		
H	Rose/Cranberry	K	I/P	U/P	S/C	P/T	I/C	Red metallic	M4J	4020		H
J	Taupe	D	I/P	U/P	S/C	P/T	I/C	Taupe metallic-NR(5/78)	★	4062		
K	Aqua	F,K	I/P	U/P	S/C	P/T		Aqua metallic (medium)	★	4069		
		F,K					I/C	Aqua metallic (light)	★	4068		

LACQUERS and SYNTHETIC ENAMELS
INTERIOR PAINTS

INTERIOR TRIM			INTERIOR LOCATION					INTERIOR PAINT			
CODE ●	COLOR	MODEL/RESTRICTIONS	-I/P=Instrument panel -U/P=Upper instrument panel -S/C=Steering column and console -P/T=Package tray -I/C=Other interior components					COLOR	PART NUMBER		SUFFIX
			I/P	U/P	S/C	P/T	I/C			15 OZ.	13 OZ.
PASSENGER AREA-LACQUER - SPRAY CAN											
U.S. and CANADIAN USAGE											
Note 1:	The interior spray paints listed below do not utilize a chlorofluorocarbon propellant system.										
Note 2:	● 2nd digit of Trim Code, % Roof side rear trim panel (52018-9) #Exc. roof side rear trim panel (52018-9). ▲ Steering column, △ Console, ⊕ Roof sliding panel cover (518A66) ⊕ Exc. roof sliding panel cover (518A66) ■ LWR. B/L moulding (42456-7) □ Exc. LWR B/L moulding (42456-7) *Black components may be included in any trim scheme - use ★ 2083 for metallic or M4J 1724 H for non-metallic.										

1976 — Cont'd

N	White/Red	A,D,G,Y	I/P	U/P	S/C	P/T		Red metallic	M4J	4020		H
		C,F	I/P		S/C	P/T		Red metallic	M4J	4020		H
		C,F		U/P				Red	★	4056		
		K	I/P	U/P	S/C	P/T		Red	★	4072		
		A,C,D,F,G,K,Y					I/C	White	★	4076		
Q	White/Blue	A,D,K,Y	I/P	U/P	S/C	P/T		Blue metallic	★	4021		
		C,F	I/P		S/C	P/T		Blue metallic	★	4021		
		C,F		U/P				Blue	★	4036		
		A,C,D,F,K,Y					I/C	White	★	4076		
R	Jade	D,G,K	I/P	U/P	S/C	P/T	I/C	Jade metallic	★	4074		
S	Gray	D,G,K	I/P	U/P	S/C	P/T		Gray metallic	★	4051		
		D,G,K					I/C	Dove gray	M4J	4082		H
U	Tan or Tan/Saddle	A,Y	I/P	U/P	S/C	P/T	#	Saddle metallic	★	4050		
		A,Y					%	Saddle-NR(5/80)	★	4053		
		C	I/P		S/C			Saddle metallic	★	4050		
		F	I/P		S/C	P/T	I/C	Saddle metallic	★	4050		
		C,F		U/P				Saddle-NR(5/80)	★	4053		
		C,D,G,K,L,P					I/C	Tan (light)	★	4042		
		D,G,L,P	I/P	U/P	S/C	P/T		Tan (medium)	★	4043		
		K	I/P	U/P	S/C	P/T		Saddle metallic	★	4050		
V	Gold/Cream	A,K	I/P	U/P	S/C	P/T		Gold (medium)	★	4071		
		A,K					I/C	Gold (light)	★	4064		
		F	I/P	U/P	▲	P/T		Gold (medium)	★	4071		
		F			△		I/C	Gold (light)	★	4064		
W	White/Black	A,C,D,F,G,K,Y	*	*	*	*		Black metallic	★	2083		
		A,C,D,F,G,K,Y	*	*	*	*		Black	M4J	1724		H
		A,C,D,F,G,K,Y					I/C	White	★	4076		
Y	Gold	A,D,K,Y	I/P	U/P	S/C	P/T		Gold (medium)	★	4071		
		A,D,K,Y					I/C	Gold (light)	★	4064		
		F	I/P	U/P	▲	P/T		Gold (medium)	★	4071		
		F			△		I/C	Gold (light)	★	4064		
Z	Saddle	A,Y	I/P	U/P	S/C	P/T	#	Saddle metallic	★	4050		
		A,Y					%	Saddle-NR(5/80)	★	4053		
		C	I/P		S/C	P/T	I/C	Saddle metallic	★	4050		
		C		U/P				Saddle-NR(5/80)	★	4053		
		K	I/P	U/P	S/C	P/T	I/C	Saddle metallic	★	4050		
2	White/Jade	F	I/P		S/C	P/T		Jade metallic	★	4074		
		F		U/P				Jade	★	4084		
		F					I/C	White	★	4076		

COPYRIGHT © 1986— FORD MOTOR COMPANY —DEARBORN, MICHIGAN

1973/79 LINCOLN-MERCURY CARS

LACQUERS and SYNTHETIC ENAMELS
INTERIOR PAINTS

INTERIOR TRIM			INTERIOR LOCATION					INTERIOR PAINT			
CODE ●	COLOR	MODEL/RESTRICTIONS	-I/P=Instrument panel -U/P=Upper instrument panel -S/C=Steering column and console -P/T=Package tray -I/C=Other interior components					COLOR	PART NUMBER		SUFFIX
			I/P	U/P	S/C	P/T	I/C			15 OZ.	13 OZ.

PASSENGER AREA-LACQUER - SPRAY CAN
U.S. and CANADIAN USAGE

Note 1: The interior spray paints listed below do not utilize a chlorofluorocarbon propellant system.
Note 2: ● 2nd digit of Trim Code, % Roof side rear trim panel (52018-9) #Exc. roof side rear trim panel (52018-9).
▲ Steering column, △ Console, ⊕ Roof sliding panel cover (518A66) ⊕ Exc. roof sliding panel cover (518A66)
■ LWR. B/L moulding (42456-7) □ Exc. LWR B/L moulding (42456-7)
* Black components may be included in any trim scheme - use ★ 2083 for metallic or M4J 1724 H for non-metallic.

1976 — Cont'd

3	White/Taupe	D	I/P	U/P	S/C	P/T		Taupe metallic-NR(5/78)	★	4062		
		D					I/C	White	★	4076		
4	White/Tan	D,G	I/P	U/P	S/C	P/T		Tan (medium)	★	4043		
		D,G					I/C	White	★	4076		
5	White/Green	A,Y	I/P	U/P	S/C	P/T		Green metallic-NR	★	4061		
		C,F	I/P		S/C	P/T		Green metallic-NR	★	4061		
		C,F		U/P				Green-NR(3/78)	★	4065		
		A,C,F,Y					I/C	White	★	4076		
5	White/Jade	D,K	I/P	U/P	S/C	P/T		Jade metallic	★	4074		
		D,K					I/C	White	★	4076		
7	White/Aqua	F	I/P	U/P	S/C	P/T		Aqua metallic (medium)	★	4069		
		F					I/C	White	★	4076		
7	White/Silver blue	G	I/P	U/P	S/C	P/T		Silver blue metallic -NR	★	4040		
		G					I/C	White	★	4076		
8	White/Gold	A,C,D,K,Y	I/P	U/P	S/C	P/T		Gold (medium)	★	4071		
		F	I/P	U/P	▲	P/T		Gold (medium)	★	4071		
		F			△			Gold (light)	★	4064		
		A,C,D,F,K,Y					I/C	White	★	4076		
9	White/Saddle	A,K,Y	I/P	U/P	S/C	P/T		Saddle metallic	★	4050		
		C,F	I/P		S/C	P/T		Saddle metallic	★	4050		
		C,F		U/P				Saddle-NR(5/80)	★	4053		
		A,C,F,K,Y					I/C	White	★	4076		
9	White/Tobacco	G	I/P	U/P	S/C	P/T		Tobacco metallic-NR	★	4018		
		G					I/C	White	★	4076		

1977

Note: 1977 Bobcat (L) before 6/27/77. For units built from 6/27/77 refer to 1978.

		A,F,G	*	*	*	*	*	Black	M4J	1724		H
		A,F,G	*	*	*	*	*	Black metallic	★	2083		
A	Black	D,K,L,P	*	*	*	*	*	Black	M4J	1724		H
		D,K,L,P	*	*	*	*	*	Black metallic	★	2083		
B	Blue	A	I/P	U/P	S/C	P/T	#	Blue metallic	★	4021		
		A					%	Blue	★	4036		
		D,K	I/P	U/P	S/C	P/T	⊕	Blue metallic	★	4021		
		D,K					⊕	Blue	★	4036		
		F,G,L,P	I/P	U/P	S/C	P/T	I/C	Blue metallic	★	4021		
		V	I/P	U/P	S/C			Blue metallic	★	4021		
		V					I/C	Blue (light)	★	4093		

LACQUERS and SYNTHETIC ENAMELS
INTERIOR PAINTS

INTERIOR TRIM			INTERIOR LOCATION					INTERIOR PAINT			
CODE ●	COLOR	MODEL/RESTRICTIONS	-I/P=Instrument panel -U/P=Upper instrument panel -S/C=Steering column and console -P/T=Package tray -I/C=Other interior components					COLOR	PART NUMBER	SUFFIX 15 OZ.	SUFFIX 13 OZ.
			I/P	U/P	S/C	P/T	I/C				

PASSENGER AREA-LACQUER - SPRAY CAN
U.S. and CANADIAN USAGE

Note 1: The interior spray paints listed below do not utilize a chlorofluorocarbon propellant system.
Note 2: ● 2nd digit of Trim Code, % Roof side rear trim panel (52018-9) #Exc. roof side rear trim panel (52018-9).
▲ Steering column, △ Console, ⊕ Roof sliding panel cover (518A66) ⊕ Exc. roof sliding panel cover (518A66)
■ LWR. B/L moulding (42456-7) □ Exc. LWR B/L moulding (42456-7)
* Black components may be included in any trim scheme - use ★ 2083 for metallic or M4J 1724 H for non-metallic.

1977 — Cont'd

Note: 1977 Bobcat (L) before 6/27/77. For units built from 6/27/77 refer to 1978.

D	Red	A	I/P	U/P	S/C	P/T	#	Red metallic	M4J	4020		H
		A					%	Red	★	4056		
		D,K	I/P	U/P	S/C	P/T	⊕	Red metallic	M4J	4020		H
		D,K					⊕	Red	★	4056		
		F,G	I/P	U/P	S/C	P/T	I/C	Red metallic	M4J	4020		H
		L,P	I/P	U/P	S/C	P/T		Red (medium)	★	4072		
		L,P					I/C	Red (light)	★	4075		
F	Cordovan	D,K,V	I/P	U/P	S/C	P/T	I/C	Cordovan	★	4079		
G	Green	L,P	I/P	U/P	S/C	P/T		Green metallic-NR	★	4061		
		L,P					I/C	Green metallic-NR	★	4060		
H	Red/Rose	K	I/P	U/P	S/C	P/T	⊕	Red metallic	M4J	4020		H
		K					⊕	Red	★	4056		
L	White/Lipstick Red	F	I/P	U/P	S/C	P/T	■	Red	★	4072		
		F					□	White	★	4076		
N	White/Red	D,F,K	I/P	U/P	S/C	P/T		Red metallic	M4J	4020		H
		D,F,K					I/C	White	★	4076		
Q	White/Blue	D,F,K,V	I/P	U/P	S/C	P/T		Blue metallic	★	4021		
		D,F,K					I/C	White	★	4076		
		V					■	Blue (light)	★	4093		
		V					□	White	★	4076		
R	Jade	A	I/P	U/P	S/C	P/T	#	Jade metallic	★	4074		
		A					%	Jade	★	4084		
		D,K	I/P	U/P	S/C	P/T	⊕	Jade metallic	★	4074		
		D,K					⊕	Jade	★	4084		
		F,G	I/P	U/P	S/C	P/T	I/C	Jade metallic	★	4074		
S	Gray	A,D,F,G,K,V	I/P	U/P	S/C	P/T		Gray metallic	★	4051		
		A,D,G,K,V					I/C	Dove Gray	★	4082		
		F					■	Gray metallic	★	4051		
		F					□	Dove Gray	★	4082		
T	Chamois	D,F,K,L,V	I/P	U/P	S/C	P/T		Chamois metallic	★	4080		
		D,K,L,V					I/C	Chamois	★	4086		
		F					■	Chamois metallic	★	4080		
		F					□	Chamois	★	4086		
U	Tan	G,P	I/P	U/P	S/C	P/T		Tan (medium)	★	4043		
		G,P					I/C	Tan (light)	★	4042		
V	Cream or Gold/Cream	A,G,K	I/P	U/P	S/C	P/T		Gold (medium)	★	4071		
		A,K					I/C	Gold (light)	★	4064		
		G					I/C	Cream	★	4077		

COPYRIGHT © 1986— FORD MOTOR COMPANY —DEARBORN, MICHIGAN

1973/79 LINCOLN-MERCURY CARS

LACQUERS and SYNTHETIC ENAMELS
INTERIOR PAINTS

INTERIOR TRIM			INTERIOR LOCATION					INTERIOR PAINT			
CODE ●	COLOR	MODEL/RESTRICTIONS	-I/P=Instrument panel -U/P=Upper instrument panel -S/C=Steering column and console -P/T=Package tray -I/C=Other interior components					COLOR	PART NUMBER		SUFFIX
			I/P	U/P	S/C	P/T	I/C			15 OZ.	13 OZ.

PASSENGER AREA-LACQUER - SPRAY CAN
U.S. and CANADIAN USAGE

Note 1: The interior spray paints listed below do not utilize a chlorofluorocarbon propellant system.
Note 2: ● 2nd digit of Trim Code, % Roof side rear trim panel (52018-9) #Exc. roof side rear trim panel (52018-9).
▲ Steering column, △ Console, ⊕ Roof sliding panel cover (518A66) ⊕ Exc. roof sliding panel cover (518A66)
■ LWR. B/L moulding (42456-7) □ Exc. LWR B/L moulding (42456-7)
* Black components may be included in any trim scheme - use ★ 2083 for metallic or M4J 1724 H for non-metallic.

1977 — Cont'd

Note: 1977 Bobcat (L) before 6/27/77. For units built from 6/27/77 refer to 1978.

V	Cream/Cordovan	D	I/P	U/P	S/C	P/T		Cordovan	★	4079		
		D					I/C	Cream	★	4077		
W	White/Black	D,K	*	*	*	*		Black	M4J	1724		H
		D,K	*	*	*	*		Black metallic	★	2083		
		D,K					I/C	White	★	4076		
Y	Gold	A,D,K,	I/P	U/P	S/C	P/T		Gold (medium)	★	4071		
		A,D,K					I/C	Gold (light)	★	4064		
Z	Saddle	A	I/P	U/P	S/C	P/T	#	Saddle metallic	★	4050		
		A					%	Saddle-NR(5/80)	★	4053		
		F	I/P	U/P	S/C	P/T	I/C	Saddle metallic	★	4050		
2	White/Chamois	D,F,K,V	I/P	U/P	S/C	P/T		Chamois metallic	★	4080		
		D,K					I/C	White	★	4076		
		F					■	Chamois metallic	★	4080		
		F,V					□	White	★	4076		
		V					■	Chamois	★	4086		
3	Saddle/White	A	I/P	U/P	S/C	P/T	#	Saddle metallic	★	4050		
		A					%	Saddle-NR(5/80)	★	4053		
		F	I/P	U/P	S/C	P/T	I/C	Saddle metallic	★	4050		
5	White/Jade	D,F,K	I/P	U/P	S/C	P/T		Jade metallic	★	4074		
		D,F,K					I/C	White	★	4076		
6	White/Cordovan	D,K,V	I/P	U/P	S/C	P/T		Cordovan	★	4079		
		D,K					I/C	White	★	4076		
		V					■	Cordovan	★	4079		
		V					□	White	★	4076		
8	White/Gold	D,K	I/P	U/P	S/C	P/T		Gold (medium)	★	4071		
		D,K					I/C	White	★	4076		
9	White/Saddle	F	I/P	U/P	S/C	P/T		Saddle metallic	★	4050		
		F					I/C	White	★	4076		

1978

		A,F,G,V	*	*	*	*	*	Black	M4J	1724		H
		A,F,G,V	*	*	*	*	*	Black Metallic	★	2083		
A	Black	D,K,L,P	*	*	*	*	*	Black	M4J	1724		H
		D,K,L,P	*	*	*	*	*	Black Metallic	★	2083		

LACQUERS and SYNTHETIC ENAMELS
INTERIOR PAINTS

INTERIOR TRIM			INTERIOR LOCATION					INTERIOR PAINT			
CODE ●	COLOR	MODEL/RESTRICTIONS	-I/P=Instrument panel -U/P=Upper instrument panel -S/C=Steering column and console -P/T=Package tray -I/C=Other interior components					COLOR	PART NUMBER	SUFFIX 15 OZ.	SUFFIX 13 OZ.
			I/P	U/P	S/C	P/T	I/C				

PASSENGER AREA-LACQUER - SPRAY CAN
U.S. and CANADIAN USAGE

Note 1: The interior spray paints listed below do not utilize a chlorofluorocarbon propellant system.
Note 2: ● 2nd digit of Trim Code, % Roof side rear trim panel (52018-9) #Exc. roof side rear trim panel (52018-9). ▲ Steering column, △ Console, ⊕ Roof sliding panel cover (518A66) ⊕ Exc. roof sliding panel cover (518A66) ■ LWR. B/L moulding (42456-7) □ Exc. LWR B/L moulding (42456-7)
* Black components may be included in any trim scheme - use ★ 2083 for metallic or M4J 1724 H for non-metallic.

1978 — Cont'd

B	Blue	A(60,71)G	I/P	U/P	S/C	P/T	I/C	Blue Metallic	★	4021		
		A(53)	I/P	U/P	S/C	P/T	#	Blue Metallic	★	4021		
		A(53)					%	Blue (medium)	★	4036		
		D,L,P,V	I/P	U/P	S/C	P/T		Blue Metallic	★	4021		
		D,L,P,V					I/C	Blue (light)	★	4093		
		F	I/P	U/P	S/C	P/T	⊕	Blue Metallic	★	4021		
		F					⊕	Blue (medium)	★	4036		
		K	I/P	U/P	▲	P/T		Blue Metallic	★	4021		
		K			△		I/C	Blue (light)	M4J	4093		H
D	Red or Red/Gray	A(60,71)G,V	I/P	U/P	S/C	P/T	I/C	Red Metallic	M4J	4020		H
		A(53)	I/P	U/P	S/C	P/T	#	Red Metallic	M4J	4020		H
		A(53)					%	Red	★	4056		
		D,K	I/P	U/P	S/C	P/T	⊕	Red Metallic	M4J	4020		H
		D,K					⊕	Red	★	4056		
		L	I/P	U/P	S/C	P/T		Red (medium)	★	4072		
		L					I/C	Red (light)	★	4075		
E	Russet	F,P	I/P	U/P	S/C	P/T	I/C	Russet Metallic	★	4098		
F	Cordovan	D,G,K,V	I/P	U/P	S/C	P/T	I/C	Cordovan	★	4079		
H	Red/Rose	K	I/P	U/P	S/C	P/T	⊕	Red Metallic	M4J	4020		H
		K					⊕	Red	★	4056		
J	Tangerine	L	I/P	U/P	S/C	P/T		Black Metallic	★	2083		
		L					I/C	Tangerine	★	4094		
L	White/Lipstick Red	F	I/P	U/P	S/C	P/T	■	Red (Medium)	★	4072		
		F					□	White	★	4076		
M	Jade/Light Jade	K	I/P	U/P	S/C	P/T	⊕	Jade Metallic	★	4074		
		K					⊕	Jade	★	4084		
N	White/Red	D,K	I/P	U/P	S/C	P/T		Red Metallic	M4J	4020		H
		D,K					I/C	White	★	4076		
		V	I/P	U/P	S/C	P/T	I/C	Red Metallic	M4J	4020		H
P	Cream/Gold	K	I/P	U/P	S/C	P/T		Gold (medium)	M4J	4108		H
		K					I/C	Cream	★	4077		
Q	White/Blue	D,F,K,P,V	I/P	U/P	S/C	P/T		Blue Metallic	★	4021		
		D,F,K,P					I/C	White	★	4076		
		V					I/C	Blue (light)	★	4093		
R	Jade	A(60,71)G	I/P	U/P	S/C	P/T	I/C	Jade Metallic (dark)	★	4074		
		A(53)	I/P	U/P	S/C	P/T	#	Jade Metallic (dark)	★	4074		
		A(53)					%	Jade (dark)	★	4084		
		D,F,K	I/P	U/P	S/C	P/T	⊕	Jade Metallic (dark)	★	4074		
		D,F,K					⊕	Jade (dark)	★	4084		
		L	I/P	U/P	S/C	P/T	I/C	Jade Metallic (med.)	★	4103		

COPYRIGHT © 1986— FORD MOTOR COMPANY —DEARBORN, MICHIGAN

1973/79 LINCOLN-MERCURY CARS

LACQUERS and SYNTHETIC ENAMELS
INTERIOR PAINTS

INTERIOR TRIM			INTERIOR LOCATION					INTERIOR PAINT			
CODE ●	COLOR	MODEL/RESTRICTIONS	-I/P=Instrument panel -U/P=Upper instrument panel -S/C=Steering column and console -P/T=Package tray -I/C=Other interior components					COLOR	PART NUMBER	SUFFIX 15 OZ.	SUFFIX 13 OZ.
			I/P	U/P	S/C	P/T	I/C				

PASSENGER AREA-LACQUER - SPRAY CAN
U.S. and CANADIAN USAGE

Note 1: The interior spray paints listed below do not utilize a chlorofluorocarbon propellant system.
Note 2: ● 2nd digit of Trim Code, % Roof side rear trim panel (52018-9) # Exc. roof side rear trim panel (52018-9). ▲ Steering column, △ Console, ⊕ Roof sliding panel cover (518A66) ⊕ Exc. roof sliding panel cover (518A66) ■ LWR. B/L moulding (42456-7) □ Exc. LWR B/L moulding (42456-7)
* Black components may be included in any trim scheme - use ★ 2083 for metallic or M4J 1724 H for non-metallic.

1978 — Cont'd

S	Gray	A,D,G,K,V	I/P	U/P	S/C	P/T		Gray Metallic	★	4051		
		A,D,G,K,V					I/C	Dove Gray	★	4082		
		F	I/P	U/P	S/C	P/T	■	Gray Metallic	★	4051		
		F					□	Dove Gray	★	4082		
T	Chamois or Chamois/Blue	D,K,L,P,V	I/P	U/P	S/C	P/T		Chamois Metallic	★	4080		
		D,K,L,P,V					I/C	Chamois	★	4086		
		F	I/P	U/P	S/C	P/T	■	Chamois Metallic	★	4080		
		F					□	Chamois	★	4086		
U	Chamois/Black	P	I/P	U/P	S/C	P/T		Black Metallic	★	2083		
V	Champagne or Champagne/Red	D,K,V	I/P	U/P	S/C	P/T		Champagne (med.)	★	4091		
		D,K,V					I/C	Champagne (light)	★	4092		
V	Cream	P	I/P	U/P	S/C	P/T		Gold	★	4071		
		P					I/C	Cream	★	4077		
W	White/Black	D,K,P	*	*	*	*		Black	M4J	1724		H
		D,K,P	*	*	*	*		Black Metallic	★	2083		
		D,K,P					I/C	White	★	4076		
Y	Camel	A,G	I/P	U/P	S/C	P/T		Camel (medium)	★	4097		
		A,G					I/C	Camel (light)	★	4095		
Y	Gold	D	I/P	U/P	S/C	P/T		Gold (medium)	★	4108		
		D					I/C	Gold (light)	★	4106		
		K	I/P	U/P	▲			Gold (medium)	★	4108		
		K			△		⊕	Gold (light)	★	4106		
Z	Saddle	A(60,71)	I/P	U/P	S/C	P/T	I/C	Saddle Metallic	★	4050		
		A(53)	I/P	U/P	S/C	P/T	#	Saddle Metallic	★	4050		
		A(53)					%	Saddle-NR(5/80)	★	4053		
		F	I/P	U/P	S/C	P/T	⊕	Saddle Metallic	★	4050		
		F					⊕	Saddle-NR(5/80)	★	4053		
2	White/Chamois	D,K,P,V	I/P	U/P	S/C	P/T		Chamois Metallic	★	4080		
		D,K,P					I/C	White	★	4076		
		V					I/C	Chamois	★	4086		
		F	I/P	U/P	S/C	P/T	■	Chamois Metallic	★	4080		
		F					□	White	★	4076		
3	Cordovan/White	K	I/P	U/P	S/C	P/T	I/C	Cordovan	★	4079		
4	White/Champagne	D,K,V	I/P	U/P	S/C	P/T		Champagne (med.)	★	4091		
		D,K					I/C	White	★	4076		
		V					I/C	Champagne (light)	★	4092		
5	White/Jade	D,F,K	I/P	U/P	S/C	P/T		Jade Metallic (dark)	★	4074		
		D,F,K					I/C	White	★	4076		

LACQUERS and SYNTHETIC ENAMELS
INTERIOR PAINTS

INTERIOR TRIM			INTERIOR LOCATION					INTERIOR PAINT			
CODE ●	COLOR	MODEL/RESTRICTIONS	-I/P=Instrument panel -U/P=Upper instrument panel -S/C=Steering column and console -P/T=Package tray -I/C=Other interior components					COLOR	PART NUMBER		SUFFIX
			I/P	U/P	S/C	P/T	I/C			15 OZ.	13 OZ.

PASSENGER AREA-LACQUER - SPRAY CAN
U.S. and CANADIAN USAGE

Note 1: The interior spray paints listed below do not utilize a chlorofluorocarbon propellant system.
Note 2: ● 2nd digit of Trim Code, % Roof side rear trim panel (52018-9) #Exc. roof side rear trim panel (52018-9).
▲ Steering column, △ Console, ⊕ Roof sliding panel cover (518A66) ⊕ Exc. roof sliding panel cover (518A66)
■ LWR. B/L moulding (42456-7) □ Exc. LWR B/L moulding (42456-7)
* Black components may be included in any trim scheme - use ★ 2083 for metallic or M4J 1724 H for non-metallic.

1978 — Cont'd

6	White/Cordovan	D,K	I/P	U/P	S/C	P/T		Cordovan	★	4079		
		D,K					I/C	White	★	4076		
		V	I/P	U/P	S/C	P/T	I/C	Cordovan	★	4079		
7	White/Russet	F,P	I/P	U/P	S/C	P/T		Russet Metallic	★	4098		
		F,P					I/C	White	★	4076		
8	White/Gold	D	I/P	U/P	S/C	P/T		Gold (medium)	★	4108		
		D,K					I/C	White	★	4076		
		K	I/P	U/P	▲			Gold (medium)	★	4108		
		K			△			Gold (light)	★	4106		
9	White/Saddle	F	I/P	U/P	S/C	P/T		Saddle Metallic	★	4050		
		F					I/C	White	★	4076		

1979

		A,F,G,V	*	*	*	*	*	Black	M4J	1724		H
		A,F,G,V	*	*	*	*	*	Black Metallic	★	2083		
A	Black	D,J,K,L,P	*	*	*	*	*	Black	M4J	1724		H
		D,J,K,L,P	*	*	*	*	*	Black Metallic	★	2083		
B	Blue	D,K,L,P,V	I/P	U/P	S/C	P/T		Blue Metallic	★	4021		
		D,K,L,P,V					I/C	Blue (light)	★	4093		
		F	I/P	U/P	S/C	P/T	⊕	Blue Metallic	★	4021		
		F					⊕	Blue (medium)	★	4036		
		G	I/P	U/P	S/C	P/T	I/C	Blue Metallic	★	4021		
B	Wedgewood Blue	A,J	I/P	U/P	S/C	P/T	I/C	Wedgewood Blue	M4J	4117		H
B	Midnight Blue (Trim Codes LB,MB)	D,K	I/P	U/P	S/C	P/T	I/C	Charcoal Blue Metallic	★	4121		
D	Red	A,G,V	I/P	U/P	S/C	P/T	I/C	Red Metallic	M4J	4020		H
		D,F,K	I/P	U/P	S/C	P/T	⊕	Red Metallic	M4J	4020		H
		D,F,K					⊕	Red	★	4056		
		J,L,P	I/P	U/P	S/C	P/T	I/C	Red	★	4072		
F	Cordovan	A,D,F,G,K,V	I/P	U/P	S/C	P/T	I/C	Cordovan	★	4079		
G	White/Beryl	D,K	I/P	U/P	S/C	P/T		Beryl Metallic	★	4118		
		D,K					I/C	White	★	4076		
H	Red/Rose	K	I/P	U/P	S/C	P/T	⊕	Red Metallic	M4J	4020		H
		K					⊕	Red	★	4056		
J	Tangerine	L	I/P	U/P	S/C	P/T	*	Black Metallic	★	2083		
		L					I/P	Tangerine	★	4094		
K	Beryl	D,K,V	I/P	U/P	S/C	P/T		Beryl Metallic (med.)	★	4118		
		D,K,V					I/C	Beryl Metallic (light)	★	4110		
L	Amethyst	K	I/P	U/P	S/C	P/T	I/C	Amethyst Metallic	★	4119		
N	White/Red	D,F,K	I/P	U/P	S/C	P/T		Red Metallic	M4J	4020		H
		D,F,J,K,P					I/C	White	★	4076		
		J,P	I/P	U/P	S/C	P/T		Red	★	4072		

COPYRIGHT © 1986— FORD MOTOR COMPANY —DEARBORN, MICHIGAN

1973/79 LINCOLN-MERCURY CARS

LACQUERS and SYNTHETIC ENAMELS
INTERIOR PAINTS

INTERIOR TRIM			INTERIOR LOCATION					INTERIOR PAINT			
CODE ●	COLOR	MODEL/RESTRICTIONS	-I/P=Instrument panel -U/P=Upper instrument panel -S/C=Steering column and console -P/T=Package tray -I/C=Other interior components					COLOR	PART NUMBER	SUFFIX 15 OZ.	SUFFIX 13 OZ.
			I/P	U/P	S/C	P/T	I/C				

PASSENGER AREA-LACQUER - SPRAY CAN
U.S. and CANADIAN USAGE

Note 1: The interior spray paints listed below do not utilize a chlorofluorocarbon propellant system.
Note 2: ● 2nd digit of Trim Code, % Roof side rear trim panel (52018-9) #Exc. roof side rear trim panel (52018-9).
▲ Steering column, △ Console, ⊕ Roof sliding panel cover (518A66) ⊕ Exc. roof sliding panel cover (518A66)
■ LWR. B/L moulding (42456-7) □ Exc. LWR B/L moulding (42456-7)
* Black components may be included in any trim scheme - use ★ 2083 for metallic or M4J 1724 H for non-metallic.

1979 — Cont'd

P	Cream/Gold	K	I/P	U/P	S/C	P/T		Gold	★	4108		
		K,P					I/C	Cream	★	4077		
		P	I/P	U/P	S/C	P/T		Gold	★	4071		
Q	White/Blue	D,F,K,P	I/P	U/P	S/C	P/T		Blue Metallic	★	4021		
		D,F,J,K,P					I/C	White	★	4076		
		J	I/P	U/P	S/C	P/T		Wedgewood Blue	M4J	4117		H
R	Pine Green	A	I/P	U/P	S/C	P/T	I/C	Pine	★	4116		
R	Jade	F	I/P	U/P	S/C	P/T	⊕	Jade Metallic	★	4074		
		F					⊕	Jade	★	4084		
		G	I/P	U/P	S/C	P/T	I/C	Jade Metallic	★	4074		
S	Dove Gray	A,F	I/P	U/P	S/C	P/T	■	Gray Metallic	★	4051		
		A,F					□	Dove Gray	★	4082		
		D,G,K,V	I/P	U/P	S/C	P/T		Gray Metallic	★	4051		
		D,G,K,V					I/C	Dove Gray	★	4082		
T	Chamois	J,L,P	I/P	U/P	S/C	P/T		Chamois Metallic	★	4080		
		J,L,P					I/C	Chamois	★	4086		
T	Chamois or Chamois/Blue Chamois/Saddle	F	I/P	U/P	▲	P/T	■	Chamois Metallic	★	4080		
		F			△		□	Chamois	★	4086		
U	Chamois/Black	P	I/P	U/P	S/C	P/T		Black Metallic	★	2083		
		P					I/C	Chamois	★	4086		
U	Champagne	D,K,V	I/P	U/P	S/C	P/T		Champagne (med.)	★	4091		
		D,K,V					I/C	Champagne (light)	★	4092		
V	Cream/Gold	P	I/P	U/P	S/C	P/T		Gold	★	4071		
		P					I/C	Cream	★	4077		
W	White/Black	D,J,K,P	*	*	*	*		Black	M4J	1724		H
		D,J,K,P	*	*	*	*		Black Metallic	★	2083		
		D,J,K,P					I/C	White	★	4076		
Y	Camel	A	I/P	U/P	S/C	P/T	■	Camel (medium)	★	4097		
		A					□	Camel (light)	★	4095		
		G	I/P	U/P	S/C	P/T		Camel (medium)	★	4097		
		G					I/C	Camel (light)	★	4095		
Y	Gold	D	I/P	U/P	S/C	P/T		Gold (medium)	★	4108		
		D					I/C	Gold (light)	★	4106		
Z	Vaquero	J	I/P	U/P	S/C	P/T	I/C	Vaquero	★	4113		
2	White/Chamois	F	I/P	U/P	▲	P/T	■	Chamois Mettalic	★	4080		
		F			△			Chamois	★	4086		
		F					□	White	★	4076		
		J,P	I/P	U/P	S/C	P/T		Chamois Metallic	★	4080		
		J,P					I/C	White	★	4076		
3	White/Amethyst	K	I/P	U/P	S/C	P/T		Amethyst Metallic	★	4119		
		K					I/C	White	★	4076		

LACQUERS and SYNTHETIC ENAMELS
INTERIOR PAINTS

INTERIOR TRIM			INTERIOR LOCATION					INTERIOR PAINT			
CODE ●	COLOR	MODEL/RESTRICTIONS	-I/P=Instrument panel -U/P=Upper instrument panel -S/C=Steering column and console -P/T=Package tray -I/C=Other interior components					COLOR	PART NUMBER	SUFFIX 15 OZ.	SUFFIX 13 OZ.
			I/P	U/P	S/C	P/T	I/C				

PASSENGER AREA-LACQUER - SPRAY CAN
U.S. and CANADIAN USAGE

Note 1: The interior spray paints listed below do not utilize a chlorofluorocarbon propellant system.
Note 2: ● 2nd digit of Trim Code, % Roof side rear trim panel (52018-9) # Exc. roof side rear trim panel (52018-9).
▲ Steering column, △ Console, ⊕ Roof sliding panel cover (518A66) ⊕ Exc. roof sliding panel cover (518A66)
■ LWR. B/L moulding (42456-7) □ Exc. LWR B/L moulding (42456-7)
* Black components may be included in any trim scheme - use ★ 2083 for metallic or M4J 1724 H for non-metallic.

1979 — Cont'd

4	White/Champagne	D,K	I/P	U/P	S/C	P/T		Champagne (med.)	★	4091		
		D,K					I/C	White	★	4076		
5	White/Jade	F	I/P	U/P	S/C	P/T		Jade Metallic	★	4074		
		F					I/C	White	★	4076		
6	White/Cordovan	D,F,K	I/P	U/P	S/C	P/T		Cordovan	★	4079		
		D,F,K					I/C	White	★	4076		
8	White/Gold	D,K	I/P	U/P	S/C	P/T		Gold (Medium)	★	4108		
		D,K					I/C	White	★	4076		
9	White/Vaquero	J	I/P	U/P	S/C	P/T		Vaquero	★	4113		
		J					I/C	White	★	4076		

COPYRIGHT © 1986— FORD MOTOR COMPANY —DEARBORN, MICHIGAN

LACQUERS AND SYNTHETIC ENAMELS

EXTERIOR PAINTS

TU-TONE EXTERIOR PAINT COMBINATIONS

BODY COLOR IDENTIFIED ON CERTIFICATION LABEL			ACCENT COLOR NOT IDENTIFIED ON CERTIFICATION LABEL		
CODE ●	COLOR NAME	%GROUP NUMBER	CODE ●	COLOR NAME	%GROUP NUMBER

Note: ● Certification label. % Refer to Exterior Acrylic Enamel or Lacquer paint charts for complete part number.

1976

		MERCURY (A)			
3M	Silver Blue Metallic	5213	3S	Light Blue	5443
4T	Medium Ivy Bronze Metallic	5211	47	Light Green	5404
5Q	Dark Brown Metallic	5477	5U	Tan Metallic	5298
6V	Medium Gold Metallic	5460	6P	Cream	5406
		COMET (P)			
1G	Silver Metallic	5299	3E	Bright Blue Metallic	5097
2R	Bright Red	5440	9D	White	5418
3M	Silver Blue Metallic	5213	3E	Bright Blue Metallic	5097
3S	Light Blue	5443	3E	Bright Blue Metallic	5097
47	Light Green	5404	4T	Medium Ivy Bronze Metallic	5211
5U	Tan Metallic	5298	5Q	Dark Brown Metallic	5477
6E	Bright Yellow	5080	5Q	Dark Brown Metallic	5477
6U	Tan	5441	5Q	Dark Brown Metallic	5477
9D	White	5418	3E	Bright Blue Metallic	5097
9D	White	5418	4T	Medium Ivy Bronze Metallic	5211
9D	White	5418	5Q	Dark Brown Metallic	5477

1977

		MERCURY (A)			
1N	Dove Gray	5476	1P	Medium Gray Metallic	5523
6P	Cream	5406	6V	Medium Gold Metallic	5460
7L	Light Jade Metallic	5483	46	Dark Jade Metallic	5328
		LINCOLN (D)			
1J	Silver Metallic	5411	1P	Medium Gray Metallic	5523
8N	Dark Cordovan Metallic	5496	84	Dark Cordovan	5525
		COUGAR (F)			
1G	Silver Metallic	5299	1C	Black	1724
1G	Silver Metallic	5299	1P	Medium Gray Metallic	5523
1G	Silver Metallic	5299	2M	Dark Red	3413
1G	Silver Metallic	5299	3G	Bright Dark Blue Metallic	5094
1N	Dove Gray (XR7)	5476	1C	Black	1724
1N	Dove Gray (XR7)	5476	2M	Dark Red	3413
2M	Dark Red	3413	1C	Black	1724
2U	Lipstick Red (XR7)	5455	2M	Dark Red	3413
3U	Light Blue (exc.XR7)	5467	3G	Bright Dark Blue Metallic	5094
3V	Bright Blue Metallic (XR7)	5480	3G	Bright Dark Blue Metallic	5094
6P	Cream	5406	5Q	Dark Brown Metallic	5477
7L	Light Jade Metallic	5483	46	Dark Jade Metallic	5328
8W	Chamois Metallic	5491	5Q	Dark Brown Metallic	5477
8W	Chamois Metallic	5491	8K	Bright Saddle Metallic	5486
8Y	Champagne Metallic	5494	5Q	Dark Brown Metallic	5477
9D	White	5418	2M	Dark Red	3413
9D	White (XR7)	5418	2U	Lipstick Red	5455
9D	White	5418	3G	Bright Dark Blue Metallic	5094
9D	White (XR7)	5418	3V	Bright Blue Metallic	5480
9D	White	5418	46	Dark Jade Metallic	5328

LACQUERS AND SYNTHETIC ENAMELS

EXTERIOR PAINTS

TU-TONE EXTERIOR PAINT COMBINATIONS

BODY COLOR IDENTIFIED ON CERTIFICATION LABEL			ACCENT COLOR NOT IDENTIFIED ON CERTIFICATION LABEL		
CODE ●	COLOR NAME	%GROUP NUMBER	CODE ●	COLOR NAME	%GROUP NUMBER

Note: ● Certification label. % Refer to Exterior Acrylic Enamel or Lacquer paint charts for complete part number.

1977 — Cont'd

		COUGAR (F)			
9D	White	5418	5Q	Dark Brown Metallic	5477
9D	White (XR7)	5418	8K	Bright Saddle Metallic	5486
9D	White	5418	8W	Chamois Metallic	5491
		MONARCH (G)			
1G	Silver Metallic	5299	1C	Black	1724
6P	Cream	5406	6V	Medium Gold Metallic	5460
9D	White	5418	2M	Dark Red	3413
9D	White	5418	5Q	Dark Brown Metallic	5477
		BOBCAT (L-before 6/27/77)			
Note:	For units built from 6/27/77 refer to 1978.				
1G	Silver Metallic	5299	2R	Bright Red	5440
1G	Silver Metallic	5299	3G	Bright Dark Blue Metallic	5094
2R	Bright Red	5440	9D	White	5418
3U	Light Blue	5467	3G	Bright Dark Blue Metallic	5094
3V	Bright Blue Metallic	5480	3G	Bright Dark Blue Metallic	5094
47	Light Green	5404	4V	Dark Yellow Green Metallic	5233
4V	Dark Yellow Green Metallic	5233	9D	White	5418
5Q	Dark Brown Metallic	5477	9D	White	5418
6E	Bright Yellow	5080	9D	White	5418
8G	Vista Orange	5466	9D	White	5418
8K	Bright Saddle Metallic	5486	5Q	Dark Brown Metallic	5477
9D	White	5418	2R	Bright Red	5440
9D	White	5418	3G	Bright Dark Blue Metallic	5094
9D	White	5418	4V	Dark Yellow Green Metallic	5233
9D	White	5418	5Q	Dark Brown Metallic	5477
		COMET (P)			
1C	Black	1724	9D	White	5418
1C	Black	1724	2R	Bright Red	5440
1G	Silver Metallic	5299	3G	Bright Dark Blue Metallic	5094
2R	Bright Red	5440	9D	White	5418
3U	Light Blue	5467	3G	Bright Dark Blue Metallic	5094
3V	Bright Blue Metallic	5480	3G	Bright Dark Blue Metallic	5094
47	Light Green	5404	4V	Dark Yellow Green Metallic	5233
5Q	Dark Brown Metallic	5477	8H	Tan	5470
6E	Bright Yellow	5080	5Q	Dark Brown Metallic	5477
8G	Vista Orange	5466	5Q	Dark Brown Metallic	5477
8H	Tan	5470	5Q	Dark Brown Metallic	5477
8K	Bright Saddle Metallic	5486	5Q	Dark Brown Metallic	5477
9D	White	5418	2R	Bright Red	5440
9D	White	5418	3G	Bright Dark Blue Metallic	5094
9D	White	5418	4V	Dark Yellow Green Metallic	5233
9D	White	5418	5Q	Dark Brown Metallic	5477
		VERSAILLES (V)			
1Y	Silver Metallic	5586	1S	Medium Gray Metallic	5537
36	Wedgewood Blue	5540	35	Midnight Blue	5539
5G	Light Chamois	5541	5K	Chamois Metallic	5536
5R	Dark Cordovan Metallic	5534	5L	Dark Cordovan	5542

COPYRIGHT © 1986 — FORD MOTOR COMPANY — DEARBORN, MICHIGAN

1973/79 LINCOLN-MERCURY CARS

LACQUERS AND SYNTHETIC ENAMELS

EXTERIOR PAINTS

TU-TONE EXTERIOR PAINT COMBINATIONS

BODY COLOR IDENTIFIED ON CERTIFICATION LABEL			ACCENT COLOR NOT IDENTIFIED ON CERTIFICATION LABEL		
CODE ●	COLOR NAME	%GROUP NUMBER	CODE ●	COLOR NAME	%GROUP NUMBER

Note: ● Certification label. % Refer to Exterior Acrylic Enamel or Lacquer paint charts for complete part number.

1978

		MERCURY (A)			
1G	Silver Metallic	5299	1P	Medium Gray Metallic	5523
62	Antique Cream	5531	8J	Medium Tan Metallic	5484
7L	Medium Jade Metallic	5483	46	Dark Jade Metallic	5328
		LINCOLN (D)			
5C	Champagne Metallic	5570	52	Light Champagne	5535
5C	Champagne Metallic	5570	5D	Light Champagne	5569
5L	Midnight Cordovan	5542	5R	Dark Cordovan Metallic	5534
		COUGAR (F)			
1G	Silver Metallic	5299	1P	Medium Gray Metallic	5523
1G	Silver Metallic	5299	81	Russet Metallic	5544
3U	Light Blue	5467	3V	Bright Blue Metallic	5480
5Q	Dark Brown Metallic	5477	1C	Black	1724
6P	Cream	5406	5Q	Dark Brown Metallic	5477
7L	Light Jade Metallic	5483	46	Dark Jade Metallic	5328
83	Light Chamois	5524	5Q	Dark Brown Metallic	5477
83	Light Chamois	5524	8W	Chamois Metallic	5491
8W	Chamois Metallic	5491	5Q	Dark Brown Metallic	5477
8Y	Champagne Metallic	5494	5Q	Dark Brown Metallic	5477
9D	White	5418	1N	Dove Gray	5476
9D	White	5418	3V	Bright Blue Metallic	5480
9D	White	5418	46	Dark Jade Metallic	5328
9D	White	5418	5Q	Dark Brown Metallic	5477
9D	White	5418	81	Russet Metallic	5544
9D	White	5418	8W	Chamois Metallic	5491
		BOBCAT (L)			
1G	Silver Metallic	5299	2R	Bright Red	5440
1G	Silver Metallic	5299	3G	Bright Dark Blue Metallic	5094
2R	Bright Red	5440	9D	White	5418
34	Medium Blue	5041	3G	Bright Dark Blue Metallic	5094
3U	Light Blue	5467	3G	Bright Dark Blue Metallic	5094
46	Dark Jade Metallic	5328	2R	Bright Red	5440
6E	Bright Yellow	5080	9D	White	5418
7W	Medium Jade	5532	46	Dark Jade Metallic	5328
83	Light Chamois	5524	5Q	Dark Brown Metallic	5477
85	Tangerine	5533	9D	White	5418
8W	Chamois	5491	5Q	Dark Brown Metallic	5477
9D	White	5418	2R	Bright Red	5440
9D	White	5418	3G	Bright Dark Blue Metallic	5094
9D	White	5418	46	Dark Jade Metallic	5328
9D	White	5418	5Q	Dark Brown Metallic	5477

LACQUERS AND SYNTHETIC ENAMELS

EXTERIOR PAINTS

TU-TONE EXTERIOR PAINT COMBINATIONS

BODY COLOR IDENTIFIED ON CERTIFICATION LABEL			ACCENT COLOR NOT IDENTIFIED ON CERTIFICATION LABEL		
CODE ●	COLOR NAME	%GROUP NUMBER	CODE ●	COLOR NAME	%GROUP NUMBER

Note: ● Certification label. % Refer to Exterior Acrylic Enamel or Lacquer paint charts for complete part number.

1978 — Cont'd

		ZEPHYR (P)			
1G	Silver Metallic	5299	1C	Black	1724
1G	Silver Metallic	5299	1P	Medium Gray Metallic	5523
21	Bright Russet Red	5528	1C	Black	1724
21	Bright Russet Red	5528	81	Russet Metallic	5544
34	Medium Blue	5041	3G	Bright Dark Blue Metallic	5094
6P	Cream	5406	6W	Light Gold	5439
7L	Medium Jade Metallic	5483	46	Dark Jade Metallic	5328
83	Light Chamois	5524	1C	Black	1724
9D	White	5418	1C	Black	1724
9D	White	5418	5M	Medium Chestnut Metallic	5144
		VERSAILLES (V)			
1Y	Silver Metallic	5586	1S	Medium Gray Metallic	5537
36	Wedgewood Blue	5540	35	Midnight Blue	5539
5G	Light Chamois	5541	5K	Chamois Metallic	5536

1979

		MERCURY (A)			
1G	Silver Metallic	5299	1C	Black	1724
1G	Silver Metallic	5299	1P	Medium Gray Metallic	5523
2H	Medium Red Metallic	5636	2J	Maroon	3059
3H	Medium Blue Met.	5613	3L	Dark Blue Metallic	5616
62	Antique Cream	5531	8J	Medium Tan Metallic	5484
75	Medium Pine Metallic	5609	4D	Dark Pine Metallic	5635
		LINCOLN (D)			
1Y	Silver Metallic	5586	1S	Medium Gray Metallic	5537
4C	Medium Beryl Metallic	5602	4B	Dark Beryl Metallic	5603
52	Light Champagne	5535	5A	Dark Champagne Metallic	5571
5R	Dark Cordovan Metallic	5534	88	Crystal Apricot Metallic	5572
66	Jubilee Gold Metallic	5565	6P	Cream	5406
6P	Cream	5406	66	Jubilee Gold Metallic	5565
88	Crystal Apricot Metallic	5572	5R	Dark Cordovan Metallic	5534
		COUGAR (F)			
1C	Black	1724	1G	Silver Metallic	5299
1C	Black	1724	1N	Dove Gray	5476
1C	Black	1724	2M	Dark Red	3413
1C	Black	1724	5N	Medium Orange Metallic	5684
1C	Black	1724	5P	Pastel Chamois	5607
1C	Black	1724	7L	Light Jade Metallic	5483
1C	Black	1724	83	Light Chamois	5524
1C	Black	1724	8N	Dark Cordovan	5496
1C	Black	1724	9D	White	5418
1G	Silver Metallic	5299	1C	Black	1724
1G	Silver Metallic	5299	2H	Medium Red Metallic	5636
1G	Silver Metallic	5299	2M	Dark Red	3413
1G	Silver Metallic	5299	3H	Medium Blue Metallic	5613
1G	Silver Metallic	5299	3L	Dark Blue Metallic	5616

COPYRIGHT © 1986 — FORD MOTOR COMPANY — DEARBORN, MICHIGAN

LACQUERS AND SYNTHETIC ENAMELS

EXTERIOR PAINTS

TU-TONE EXTERIOR PAINT COMBINATIONS

BODY COLOR IDENTIFIED ON CERTIFICATION LABEL			ACCENT COLOR NOT IDENTIFIED ON CERTIFICATION LABEL		
CODE ●	COLOR NAME	%GROUP NUMBER	CODE ●	COLOR NAME	%GROUP NUMBER

Note: ● Certification label. % Refer to Exterior Acrylic Enamel or Lacquer paint charts for complete part number.

1979 — Cont'd

COUGAR (F)

1G	Silver Metallic	5299	46	Dark Jade Metallic	5328
1G	Silver Metallic	5299	8N	Dark Cordovan	5496
1G	Silver Metallic	5299	9D	White	5418
1N	Dove Gray	5476	1C	Black	1724
1N	Dove Gray	5476	2M	Dark Red	3413
1N	Dove Gray	5476	3L	Dark Blue Metallic	5616
1N	Dove Gray	5476	9D	White	5418
2M	Dark Red	3413	1C	Black	1724
2M	Dark Red	3413	1G	Silver Metallic	5299
2M	Dark Red	3413	9D	White	5418
3F	Light Medium Blue	5608	3H	Medium Blue Metallic	5613
3F	Light Medium Blue	5608	3L	Dark Blue Metallic	5616
3F	Light Medium Blue	5608	9D	White	5418
3H	Medium Blue Metallic	5613	1G	Silver Metallic	5299
3H	Medium Blue Metallic	5613	3F	Light Medium Blue	5608
3H	Medium Blue Metallic	5613	3L	Dark Blue Metallic	5616
3H	Medium Blue Metallic	5613	9D	White	5418
3L	Dark Blue Metallic	5616	1G	Silver Metallic	5299
3L	Dark Blue Metallic	5616	1N	Dove Gray	5476
3L	Dark Blue Metallic	5616	3F	Light Medium Blue	5608
3L	Dark Blue Metallic	5616	3H	Medium Blue Metallic	5613
3L	Dark Blue Metallic	5616	83	Light Chamois	5524
3L	Dark Blue Metallic	5616	9D	White	5418
46	Dark Jade Metallic	5328	1G	Silver Metallic	5299
46	Dark Jade Metallic	5328	7L	Light Jade Metallic	5483
46	Dark Jade Metallic	5328	9D	White	5418
5N	Medium Orange Metallic	5684	1C	Black	1724
5N	Medium Orange Metallic	5684	83	Light Chamois	5524
5N	Medium Orange Metallic	5684	9D	White	5418
5P	Pastel Chamois	5607	2H	Medium Red Metallic	5636
5P	Pastel Chamois	5607	2M	Dark Red	3413
5P	Pastel Chamois	5607	83	Light Chamois	5524
5P	Pastel Chamois	5607	8N	Dark Cordovan	5496
7L	Light Jade Metallic	5483	1C	Black	1724
7L	Light Jade Metallic	5483	46	Dark Jade Metallic	5328
7L	Light Jade Metallic	5483	9D	White	5418
83	Light Chamois	5524	1C	Black	1724
83	Light Chamois	5524	3L	Dark Blue Metallic	5616
83	Light Chamois	5524	5N	Medium Orange Metallic	5684
83	Light Chamois	5524	8W	Chamois Metallic	5491
83	Light Chamois	5524	9D	White	5418
8N	Dark Cordovan	5496	1C	Black	1724
8N	Dark Cordovan	5496	5P	Pastel Chamois	5607
8N	Dark Cordovan	5496	9D	White	5418
9D	White	5418	*	Avail. w/All other 1979 colors	

LACQUERS AND SYNTHETIC ENAMELS

EXTERIOR PAINTS

TU-TONE EXTERIOR PAINT COMBINATIONS

Note: ● Certification label. % Refer to Exterior Acrylic Enamel or Lacquer paint charts for complete part number.

1979 — Cont'd

BODY COLOR IDENTIFIED ON CERTIFICATION LABEL			ACCENT COLOR NOT IDENTIFIED ON CERTIFICATION LABEL		
CODE ●	COLOR NAME	%GROUP NUMBER	CODE ●	COLOR NAME	%GROUP NUMBER
MONARCH (G)					
1G	Silver Metallic	5299	1C	Black	1724
3H	Medium Blue Metallic	5613	3L	Dark Blue Metallic	5616
5P	Pastel Chamois	5607	8N	Dark Cordovan	5496
62	Antique Cream	5531	8J	Medium Tan Metallic	5484
7L	Light Jade Metallic	5483	46	Dark Jade Metallic	5328
9D	White	5418	1N	Dove Gray	5476
CAPRI (J)					
All	All		1C	Black	1724
1G	Silver Metallic	5299	1P	Medium Gray Metallic	5523
3F	Light Medium Blue	5608	3J	Bright Blue	5593
MARK V (K)					
9D	White	5418	3Q	Dark Blue Metallic	5588
BOBCAT (L)					
1G	Silver Metallic	5299	2P	Bright Red	5647
1G	Silver Metallic	5299	3J	Bright Blue	5593
2P	Bright Red	5647	9D	White	5418
3F	Light Medium Blue	5608	3J	Bright Blue	5593
3H	Medium Blue Metallic	5613	3J	Bright Blue	5593
5M	Medium Chestnut Metallic	5144	9D	White	5418
83	Light Chamois	5524	5M	Medium Chestnut Metallic	5144
85	Tangerine	5533	9D	White	5418
9D	White	5418	2P	Bright Red	5647
9D	White	5418	3J	Bright Blue	5593
9D	White	5418	5M	Medium Chestnut Metallic	5144
9D	White	5418	83	Light Chamois	5524
ZEPHYR (P)					
1G	Silver Metallic	5299	1C	Black	1724
1G	Silver Metallic	5299	1P	Medium Gray Metallic	5523
1P	Medium Gray Metallic	5523	1C	Black	1724
1P	Medium Gray Metallic	5523	1G	Silver Metallic	5299
2H	Medium Red Metallic	5636	1C	Black	1724
2H	Medium Red Metallic	5636	2P	Bright Red	5647
2P	Bright Red	5647	1C	Black	1724
2P	Bright Red	5647	2H	Medium Red Metallic	5636
3F	Light Medium Blue	5608	3H	Medium Blue Metallic	5613
3H	Medium Blue Metallic	5613	3F	Light Medium Blue	5608
3H	Medium Blue Metallic	5613	3L	Dark Blue Metallic	5616
5N	Medium Orange Metallic	5684	1C	Black	1724
5P	Pastel Chamois	5607	83	Light Chamois	5524
6P	Cream	5406	1C	Black	1724
6P	Cream	5406	6W	Light Gold	5439
83	Light Chamois	5524	1C	Black	1724
83	Light Chamois	5524	5N	Medium Orange Metallic	5684
83	Light Chamois	5524	5P	Pastel Chamois	5607
9D	White	5418	1C	Black	1724
9D	White	5418	3H	Medium Blue Met.	5613

COPYRIGHT © 1986 — FORD MOTOR COMPANY — DEARBORN, MICHIGAN

LACQUERS AND SYNTHETIC ENAMELS
EXTERIOR PAINTS

TU-TONE EXTERIOR PAINT COMBINATIONS

BODY COLOR IDENTIFIED ON CERTIFICATION LABEL			ACCENT COLOR NOT IDENTIFIED ON CERTIFICATION LABEL		
CODE ●	COLOR NAME	%GROUP NUMBER	CODE ●	COLOR NAME	%GROUP NUMBER

Note: ● Certification label. % Refer to Exterior Acrylic Enamel or Lacquer paint charts for complete part number.

1979 — Cont'd

		ZEPHYR (P)			
9D	White	5418	6P	Cream	5406
9D	White	5418	83	Light Chamois	5524
		VERSAILLES (V)			
1C	Black	1724	1Y	Silver Metallic	5586
1Y	Silver Metallic	5586	1C	Black	1724
1Y	Silver Metallic	5586	1S	Medium Gray Metallic	5537
4C	Medium Beryl Metallic	5602	4B	Dark Beryl Metallic	5603
52	Light Champagne	5535	5A	Dark Champagne Metallic	5571
5A	Dark Champagne Metallic	5571	52	Light Champagne	5535

LAQUERS AND SYNTHETIC ENAMELS
EXTERIOR PAINTS - U.S. USAGE

CODE ●	YEAR	NAME	ACRYLIC ENAMEL PART NUMBER					ACRYLIC LACQUER PART NUMBER				
			PREFIX	BASE	SUFFIX 1/2 OZ.	SUFFIX QT.	SUFFIX 5 OZ. SPRAY	PREFIX	BASE	SUFFIX 1/2 OZ.	SUFFIX QT.	SUFFIX 5 OZ. SPRAY

Note: The exterior spray paints listed below do not utilize a chlorofluorocarbon propellant system.
Note 2: ● Certification label, ♦ Station Wagons ϕ Clear coat colors

	73/	Argent	★	935								
♦	76/	Station Wagon Wood Grain Brown						AL81	1230	B		
	73/	Flat Black						AL81	1724	GB		GH
1C	73/	Black	AE60	1724	B		H	AL81	1724	B		H
1G	74/	Silver Metallic						AL81	5299	B		H
1H	74/76	Medium Slate Blue Metallic	★	5363								
1J	74/77	Silver Metallic	★	5411								
1L	76/77	Diamond Black	★	5472								
1N	76/	Dove Gray						AL81	5476	B		
1P	77/	Medium Gray Metallic						AL81	5523	B		H
1S	77/	Medium Gray Metallic	★	5537								
1T	77	Silver Metallic	★	5538								
1U	78	Dove Gray	★	5553								
1W	78	Black	★	5554								
1Y	77/	Silver Metallic	★	5586								
21	78	Bright Russet Red	★	5528								
23	78/	Dark Red Metallic	★	5552								
28	79	Dark Red						AL81	3413	B		
2A	76	Coral	★	1730								
2B	73/76	Bright Red	★	3560								
2D	79	Light Amethyst Metallic	★	5614				ϕ AR60	5614		C	
2E	74/75	Red	AE60	2008			H	AR60	2008		C	
								AL81	5681	B		H
2G	73/77	Medium Red Metallic	★	5070								

LAQUERS AND SYNTHETIC ENAMELS
EXTERIOR PAINTS - U.S. USAGE

CODE ●	YEAR	NAME	ACRYLIC ENAMEL PART NUMBER					ACRYLIC LACQUER PART NUMBER				
			PREFIX	BASE	SUFFIX 1/2 OZ.	SUFFIX QT.	SUFFIX 5 OZ. SPRAY	PREFIX	BASE	SUFFIX 1/2 OZ.	SUFFIX QT.	SUFFIX 5 OZ. SPRAY
	Note:	The exterior spray paints listed below do not utilize a chlorofluorocarbon propellant system.										
	Note 2:	● Certification label, ♦ Station Wagons ϕ Clear coat colors										
2H	78/	Medium Red Metallic	★	5636								
2J	73	Maroon	AE60	3059		C		AR60	3059		C	
								AL81	5682	B		H
2J	79	Maroon	AE60	3059		C		AR60	3059		C	
								AL81	5682	B		H
2K	79	Candy Apple Red						AL81	5681	B		H
2M	74/	Dark Red	★	3413								
2P	79	Bright Red	★	5647								
2Q	75	Maroon Metallic	★	5433								
2R	76/78	Bright Red						AL81	5440			H
2T	76/77	Rose Metallic	★	5462								
2U	76/78	Lipstick Red	★	5455								
2W	79	Light Red Metallic	★	5646								
31	77	Midnight Blue	★	5499								
32	77	Medium Blue Metallic	★	5511								
34	77/	Medium Blue						AL81	5041			H
35	77/78	Midnight Blue	★	5539								
36	77/78	Wedgewood Blue	★	5540								
37	77/78	Medium Blue Metallic	★	5560								
38	78/	Diamond Blue Metallic	★	5563								
3A	78	Midnite Blue	★	5585								
3B	73/74	Light Blue	★	3429								
3D	73/74	Medium Blue Metallic	★	5087								
3E	74/76	Bright Blue Metallic	★	5097								
3F	79	Light Medium Blue						AL81	5608	B		H
3G	73/78	Bright Dark Blue Metallic						AL81	5094			H
3H	79	Medium Blue Metallic						AL81	5613	B		
3J	79	Bright Blue	★	5593								
3L	79	Dark Blue Metallic						AL81	5616	B		H
3M	73/76	Silver Blue Metallic	★	5213								
3P	74/76	Medium Blue Metallic	★	5401								
3Q	74/75	Pastel Blue	AE60	5364	B							
3Q	79	Dark Blue Metallic	★	5588								
3R	75/76	Silver Blue Metallic	★	5303								
3S	76	Light Blue	★	5443								
3U	77/78	Light Blue	★	5467								
3V	77/78	Bright Blue Metallic	★	5480								
46	75/	Dark Jade Metallic						AL81	5328	B		H
47	75/77	Light Green	★	5404								
4B	73/74	Bright Green Gold Metallic	AE60	5025	B							
4B	79	Dark Beryl Metallic	★	5603				ϕ AR60	5603		C	
4C	79	Medium Beryl Metallic	★	5602								
4D	79	Dark Pine Metallic	★	5635								
4P	73	Medium Green Metallic	★	3462								
4Q	73/74	Dark Green Metallic	★	3542								
4S	73	Light Yellow Green	AE60	5060		C		AR60	5060		C	

COPYRIGHT © 1986— FORD MOTOR COMPANY —DEARBORN, MICHIGAN

LAQUERS AND SYNTHETIC ENAMELS
EXTERIOR PAINTS – U.S. USAGE

CODE ●	YEAR	NAME	ACRYLIC ENAMEL PART NUMBER					ACRYLIC LACQUER PART NUMBER				
			PREFIX	BASE	SUFFIX 1/2 OZ.	SUFFIX QT.	SUFFIX 5 OZ. SPRAY	PREFIX	BASE	SUFFIX 1/2 OZ.	SUFFIX QT.	SUFFIX 5 OZ. SPRAY
	Note:	The exterior spray paints listed below do not utilize a chlorofluorocarbon propellant system.										
	Note 2:	● Certification label, ♦ Station Wagons ϕ Clear coat colors										
4T	74/76	Medium Ivy Bronze Metallic	★	5211								
4V	74/77	Dark Yellow Green Metallic	★	5233								
4Y	74	Dark Ivy Bronze Metallic	AE60	5393	B							
51	74/76	Ginger Bronze Metallic	★	5395								
52	78/	Light Champagne	★	5535								
54	74/76	Unique Gold Metallic	★	5409								
5A	78/	Dark Champagne Metallic	★	5571								
5C	78/	Champagne Metallic	★	5570								
5D	73	Ginger Bronze Metallic	AE60	5102		C						
5D	78	Light Champagne	★	5569								
5G	77/78	Light Chamois	★	5541								
5H	73/74	Medium Ginger Metallic	★	3564								
5J	73/75	Medium Ginger Bronze Metallic	★	5071								
5K	77/78	Chamois Metallic	★	5536								
5L	77/78	Dark Cordovan	★	5542								
5M	73/	Medium Chestnut Metallic	★	5144								
5N	79	Medium Orange Metallic	★	5684								
5P	79	Pastel Chamois	★	5607								
5Q	74/76	Dark Brown Metallic	★	5247								
5Q	76/	Dark Brown Metallic						AL81	5477	B		H
5R	77/	Dark Cordovan Metallic	★	5534								
5T	73/76	Saddle Brown Metallic	★	5145								
5U	74/76	Tan Metallic	★	5298								
5V	74	Buff	★	5297								
5W	74/75	Orange	★	5296								
5W	79	Medium Vaquero	★	5599								
61	76	Medium Orange Yellow	★	5148								
62	78/	Antique Cream						AL81	5531	B		
64	78/	Bright Yellow	★	5574								
66	78/	Jubilee Gold Metallic	★	5565								
67	78	Gold Metallic	★	5580								
68	78	Cream	★	5581								
6C	73/74	Medium Goldenrod	★	3492								
6D	73/75	Yellow	★	3341								
6E	73/78	Medium Bright Yellow	★	5080								
6F	73/74	Bright Yellow Gold Metallic	★	5079								
6L	73/74	Medium Gold Metallic	AE60	5136		C						
6N	74/75	Maize Yellow	★	5029								
6P	76/	Cream						AL81	5406	B		
6R	79	Pastel Cream	★	5722								
6U	76/77	Tan	★	5441								
6V	76/77	Medium Gold Metallic	★	5460								
6W	76/	Light Gold	★	5439								
6Y	76/77	Bright Yellow Gold Metallic	★	5461								
72	78	Midnite Jade	★	5530								
75	79	Medium Pine Metallic	★	5609								
76	79	Light Medium Pine	★	5610								
7A	76	Light Jade	★	5445								
7B	76/77	Light Jade Metallic	★	5463								

LAQUERS AND SYNTHETIC ENAMELS
EXTERIOR PAINTS - U.S. USAGE

CODE ●	YEAR	NAME	ACRYLIC ENAMEL PART NUMBER PREFIX BASE	SUFFIX 1/2 OZ.	SUFFIX QT.	SUFFIX 5 OZ. SPRAY	ACRYLIC LACQUER PART NUMBER PREFIX BASE	SUFFIX 1/2 OZ.	SUFFIX QT.	SUFFIX 5 OZ. SPRAY
	Note:	The exterior spray paints listed below do not utilize a chlorofluorocarbon propellant system.								
	Note 2:	● Certification label, ♦ Station Wagons ϕ Clear coat colors								
7L	77/	Light Jade Metallic	★ 5483							
7M	79	Dark Pine Metallic					AL81 5612			H
7Q	76	Light Aqua Metallic	★ 5479							
7V	78	Midnite Jade	★ 5567							
7W	77/78	Medium Jade	★ 5532							
7Y	77/78	Light Jade Metallic	★ 5566							
81	78	Russet Metallic	★ 5544							
83	77/	Light Chamois	★ 5524							
84	77/78	Dark Cordovan	★ 5525							
85	77/	Tangerine	★ 5533							
88	78/	Crystal Apricot Metallic	★ 5572							
89	77	Medium Nectarine Metallic	★ 5575							
8G	77	Vista Orange	★ 5466							
8H	77	Tan	★ 5470							
8J	77/	Medium Tan Metallic	★ 5484							
8K	77	Bright Saddle Metallic	★ 5486							
8N	77/	Dark Cordovan Metallic					AL81 5496	B		
8P	77	Light Cordovan	★ 5471							
8V	77	Medium Ember Metallic	★ 5495							
8W	77/78	Chamois Metallic	★ 5491							
8Y	77/78	Champagne Metallic	★ 5494							
8Z	77	Medium Nectarine Metallic	★ 5510							
9	76/77	Bright Yellow (Capri)	★ 1034							
9A	73/74	White					AL81 1619	B		H
9C	73/74	Cream White	★ 5289							
9D	74/	White					AL81 5418	B		H
9F	77/78	White	★ 5543							
A	76/77	Black (Capri)	AE60 1724	B		H	AL81 1724	B		H
B	76/77	White (Capri)	★ 691							
H	76/77	Bright Orange (Capri)	★ 1064							
N	74	Red (Capri)	AE60 840		C					
R	76/77	Venetian Red (Capri)	★ 1136							
T	74/76	Yellow (Capri)	★ 112							
V	76/77	Silver Metallic (Capri)	★ 1056							

LACQUERS AND SYNTHETIC ENAMELS
EXTERIOR PAINTS - CANADIAN USAGE

CODE ●	YEAR	NAME	ACRYLIC ENAMEL PART NUMBER PREFIX BASE	SUFFIX 1/2 OZ.	SUFFIX QT.	ACRYLIC LACQUER PART NUMBER PREFIX BASE	SUFFIX 1/2 OZ.	SUFFIX QT.	SPRAY BOMB 6 OZ.
		● Certification label							
		♦ Station Wagons, ϕ Clear coat colors							
	73/	Clear Coat				AR60 50		C	
	73/	Argent	★ 935						
♦	76/	Station Wagon Wood Gr Brown				AL81 1230	B		
	73/	Flat Black				AL81 1724	GB		

COPYRIGHT © 1986— FORD MOTOR COMPANY —DEARBORN, MICHIGAN

LACQUERS AND SYNTHETIC ENAMELS
EXTERIOR PAINTS - CANADIAN USAGE

CODE ●	YEAR	NAME	ACRYLIC ENAMEL PART NUMBER				ACRYLIC LACQUER PART NUMBER				SPRAY BOMB 6 OZ.	
			PREFIX	BASE	SUFFIX 1/2 OZ.	SUFFIX QT.	PREFIX	BASE	SUFFIX 1/2 OZ.	SUFFIX QT.		
		● Certification label										
		♦ Station Wagons, ϕ Clear coat colors										
1A	73	Light Gray Metallic	★	5100							CD2AZ	19500-J
1C	73/	Black	AE60	1724		C	AR60	1724		C	CC6AZ	19500-A
							AL81	1724	B			
1D	73/74	Silver Metallic	★	5106								
1E	74	Light Silver Cloud Metallic	★	5222								
1G	73	Silver Metallic (anniversary)					AR60	5299		C	CD3AZ	19500-H
1G	74/	Silver Metallic					AR60	5299		C	CD3AZ	19500-H
							AL81	5299	B			
1H	74/76	Medium Slate Blue Metallic	★	5363								
1J	74/77	Silver Metallic	★	5411								
1L	76/77	Diamond Black	★	5472								
1N	76/	Dove Gray	AE60	5476		C	AL81	5476	B			
1P	77/	Medium Gray Metallic					AL81	5523	B			
1S	77/	Medium Gray Metallic	★	5537								
1T	77	Silver Metallic	★	5538								
1U	78	Dove Gray	★	5553								
1W	78	Black	★	5554								
1Y	77/	Silver Metallic	★	5586								
21	78	Bright Russet Red	★	5528								
23	78/	Dark Red Metallic	★	5552								
28	79	Dark Red					AR60	3413		C		
							AL81	3413	B			
2A	76	Coral	★	1730								
2B	73/76	Bright Red	AE60	3560		C					CD1AZ	19500-A
2C	73	Red Metallic	★	5011							CD3AZ	19500-A
2D	79	Light Amethyst Metallic	★	5614			ϕ AR60	5614		C		
2E	74/75	Red					AR60	2008		C	CC6AZ	19500-C
			AL81	5681		C	AL81	5681	B			
2G	73/77	Medium Red Metallic	★	5070								
2H	78/	Medium Red Metallic	AE60	5636		C						
2J	73	Maroon	AE60	3059		C	AR60	3059		C	CC8AZ	19500-F
							AL81	5682	B			
2J	79	Maroon	AE60	3059		C	AR60	3059		C	CC8AZ	19500-F
							AL81	5682	B			
2K	79	Candy Apple Red	AE60	5681	B	C	AR60	5681		C	CE0AZ	19500-M
2M	74/	Dark Red	★	3413								
2P	79	Bright Red	AE60	5647		C						
2Q	75	Maroon Metallic	★	5433							CD5AZ	19500-A
2R	76/78	Bright Red	★	5440								
2T	76/77	Rose Metallic	★	5462								
2U	76/78	Lipstick Red	★	5455								
2W	79	Light Red Metallic	★	5646								

LACQUERS AND SYNTHETIC ENAMELS
EXTERIOR PAINTS – CANADIAN USAGE

CODE ●	YEAR	NAME	ACRYLIC ENAMEL PART NUMBER PREFIX BASE	SUFFIX 1/2 OZ.	SUFFIX QT.	ACRYLIC LACQUER PART NUMBER PREFIX BASE	SUFFIX 1/2 OZ.	SUFFIX QT.	SPRAY BOMB 6 OZ.
		● Certification label							
		♦ Station Wagons, ϕ Clear coat colors							
31	77	Midnight Blue	★ 5499						
32	77	Medium Blue Metallic	★ 5511						
34	77/	Medium Blue	AE60 5041		C				
35	77/78	Midnight Blue	★ 5539						
36	77/78	Wedgewood Blue	★ 5540						
37	77/78	Medium Blue Metallic	★ 5560						
38	78/	Diamond Blue Metallic				ϕ AR60 5563		C	
3A	73/74	Platinum	★ 921						CC8AZ 19500-A
3A	78	Midnite Blue	AE60 5585		C				
3B	73/74	Light Blue	★ 3429						CD2AZ 19500-A
3D	73/74	Medium Blue Metallic	★ 5087						CD2AZ 19500-F
3E	74/76	Bright Blue Metallic	★ 5097						CD4AZ 19500-A
3F	79	Light Medium Blue	AE60 5608		C	AR60 5608		C	
						AL81 5608	B		
3G	73/78	Bright Dark Blue Metallic	AE60 5094		C				CD3AZ 19500-L
3H	79	Medium Blue Met.	AE60 5613		C	AR60 5613		C	
						AL81 5613	B		
3J	79	Bright Blue	★ 5593						
3K	73/75	Bright Blue Metallic	★ 5210						CD3AZ 19500-E
3L	73/74	Silver Blue Metallic	★ 5209						
3L	79	Dark Blue Metallic	AE60 5616		C	AR60 5616		C	
						AL81 5616	B		
3M	73/76	Silver Blue Metallic	★ 5213						CD3AZ 19500-F
3N	74	Light Grabber Blue	★ 5226						CD4AZ 19500-B
3P	74/76	Medium Blue Metallic	★ 5401						
3Q	74/75	Pastel Blue	AE60 5364	B					CD4AZ 19500-C
3Q	79	Dark Blue Metallic				ϕ AR60 5588		C	
3R	75/76	Silver Blue Metallic	★ 5303						
3S	76	Light Blue	★ 5443						
3U	77/78	Light Blue	AE60 5467		C				
3V	77/78	Bright Blue Metallic	★ 5880						
46	75/	Dark Jade Metallic				AR60 5328		C	
						AL81 5328	B		
47	75/77	Light Green	★ 5404						CD5AZ 19500-C
4A	74	Pastel Lime	★ 5023						
4B	73/74	Bright Green Gold Metallic	★ 5025						CD2AZ 19500-D
4B	79	Dark Beryl Metallic	★ 5603			ϕ AR60 5603		C	
4C	73	Ivy Bronze Metallic	★ 5072						CD2AZ 19500-M
4C	79	Med. Beryl Metallic	★ 5602						
4D	73	Medium Ivy Bronze Metallic	★ 5069						
4D	79	Dark Pine Metallic	AE60 5635		C				
4N	73	Medium Aqua	★ 5173						CD3AZ 19500-B
4P	73	Medium Green Metallic	★ 3462						CD1AZ 19500-E

COPYRIGHT © 1986— FORD MOTOR COMPANY —DEARBORN, MICHIGAN

LACQUERS AND SYNTHETIC ENAMELS
EXTERIOR PAINTS - CANADIAN USAGE

CODE ●	YEAR	NAME	ACRYLIC ENAMEL PART NUMBER				ACRYLIC LACQUER PART NUMBER				SPRAY BOMB 6 OZ.	
			PREFIX	BASE	SUFFIX 1/2 OZ.	SUFFIX QT.	PREFIX	BASE	SUFFIX 1/2 OZ.	SUFFIX QT.		
4Q	73/74	Dark Green Metallic	★	3542							CD1AZ	19500-F
4S	73	Light Yellow Green	AE60	5060		C	AR60	5060		C		
4T	74/76	Medium Ivy Bronze Metallic	★	5211							CD4AZ	19500-J
4U	73/74	Bright Lime Gold Metallic	★	5212								
4V	74/77	Dark Yellow Green Metallic	★	5233								
4W	74	Medium Lime Yellow	★	5177							CD4AZ	19500-E
4Y	74	Dark Ivy Bronze Metallic	AE60	5393	B							
4Z	75	Light Green Gold Metallic	★	5125							CD5AZ	19500-B
51	74/76	Ginger Bronze Metallic	★	5395								
52	78/	Light Champagne	AE60	5535		C						
54	74/76	Unique Gold Metallic	★	5409								
5A	73	Light Pewter Metallic	★	3314							CD1AZ	19500-P
5A	78/	Dark Champagne Metallic	★	5571			ϕ AR60	5571		C		
5C	78/	Champagne Metallic	★	5570								
5D	73	Ginger Bronze Metallic	AE60	5102		C						
5D	78	Light Champagne	★	5569								
5F	73	Dark Brown Metallic	★	5099							CD2AZ	19500-H
5G	77/78	Light Chamois	★	5541								
5H	73/74	Medium Ginger Metallic	★	3564							CD2AZ	19500-N
5J	73/75	Medium Ginger Bronze Metallic	★	5071							CD2AZ	19500-K
5K	73	Dark Gold Metallic	★	5076								
5K	77/78	Chamois Metallic	★	5536								
5L	73	Medium Tan	★	5003							CD1AZ	19500-N
5L	77/78	Dark Cordovan	★	5542								
5M	73/	Medium Chestnut Metallic	★	5144								
5N	79	Med. Orange Metallic	★	5684								
5P	73	Copper Metallic	★	5206								
5P	79	Pastel Chamois	AE60	5607		C						
5Q	74/76	Dark Brown Metallic	★	5247								
5Q	76/	Dark Brown Metallic	★	5477								
5R	77/	Dark Cordovan Met.					ϕ AR60	5534		C		
5S	73/74	Medium Beige	★	5251								
5T	73/76	Saddle Brown Metallic	★	5145							CD3AZ	19500-J
5U	74/76	Tan Metallic	★	5298								
5V	74	Buff	★	5297								
5W	74/75	Orange	★	5296							CD3AZ	19500-K
5W	79	Medium Vaquero	★	5599							CE2AZ	19500-A
5Y	74/75	Dark Copper Metallic	★	5365							CD4AZ	19500-F
61	76	Medium Orange Yellow	★	5148								
62	78/	Antique Cream	AE60	5531		C	AL81	5531	B			
64	78/	Bright Yellow	★	5574								
66	78/	Jubilee Gold Metallic	★	5565								
67	78	Gold Metallic	★	5580								
68	78	Cream	AE60	5581	B							

● Certification label
♦ Station Wagons, ϕ Clear coat colors

LACQUERS AND SYNTHETIC ENAMELS
EXTERIOR PAINTS – CANADIAN USAGE

CODE ●	YEAR	NAME	ACRYLIC ENAMEL PART NUMBER PREFIX	BASE	SUFFIX 1/2 OZ.	SUFFIX QT.	ACRYLIC LACQUER PART NUMBER PREFIX	BASE	SUFFIX 1/2 OZ.	SUFFIX QT.	SPRAY BOMB 6 OZ.	
		● Certification label										
		♦ Station Wagons, ϕ Clear coat colors										
6B	73	Light Goldenrod	★	3564							CD1AZ	19500-L
6C	73/74	Medium Goldenrod	★	3492							CD1AZ	19500-M
6D	73/75	Yellow	★	3341							CD0AZ	19500-K
6E	73/78	Medium Bright Yellow	★	5080							CD2AZ	19500-E
6F	73/74	Bright Yellow Gold Metallic	★	5079							CD2AZ	19500-L
6G	73/75	Bright Yellow Gold Metallic	★	5086								
6L	73/74	Medium Gold Metallic	AE60	5136		C					CD3AZ	19500-D
6M	74	Medium Dark Gold Metallic	★	5237							CD4AZ	19500-G
6N	74/75	Maize Yellow	★	5029							CD4AZ	19500-H
6P	76/	Cream					AL81	5406	B			
6Q	75	Dark Gold Metallic	★	5133								
6R	79	Pastel Cream	★	5722								
6U	76/77	Tan	AE60	5441		C						
6V	76/77	Medium Gold Metallic	★	5460								
6W	76/	Light Gold	★	5439								
6Y	76/77	Bright Yellow Gold Metallic	★	5461								
6T	76	Medium Dark Gold Metallic	★	5456								
72	78	Midnite Jade	★	5530								
75	79	Medium Pine Metallic	★	5609								
76	79	Light Medium Pine	★	5610							CE0AZ	19500-A
7A	76	Light Jade	★	5445								
7B	76/77	Light Jade Metallic	★	5463								
7L	77/	Light Jade Metallic	★	5483								
7M	79	Dark Pine Metallic	AE60	5612		C	AR60	5612		C	CE0AZ	19500-B
7Q	76	Light Aqua Metallic	★	5479								
7V	78	Midnite Jade	★	5567								
7W	77/78	Medium Jade	★	5532								
7Y	77/78	Light Jade Metallic	★	5566								
81	78	Russet Metallic	★	5544								
83	77/	Light Chamois	AE60	5524		C						
84	77/78	Dark Cordovan	★	5525								
85	77/	Tangerine	★	5533								
88	78/	Crystal Apricot Met.	★	5572								
89	77	Medium Nectarine Metallic	★	5575								
8C	75	Medium Gold Metallic	★	5457								
8G	77	Vista Orange	★	5466								
8H	77	Tan	★	5470								
8J	77/	Medium Tan Metallic	AE60	5484		C						

COPYRIGHT © 1986— FORD MOTOR COMPANY —DEARBORN, MICHIGAN

LACQUERS AND SYNTHETIC ENAMELS
EXTERIOR PAINTS - CANADIAN USAGE

CODE ●	YEAR	NAME	ACRYLIC ENAMEL PART NUMBER PREFIX BASE		SUFFIX 1/2 OZ.	SUFFIX QT.	ACRYLIC LACQUER PART NUMBER PREFIX BASE		SUFFIX 1/2 OZ.	SUFFIX QT.	SPRAY BOMB 6 OZ.	
		● Certification label ♦ Station Wagons, ϕ Clear coat colors										
8K	77	Bright Saddle Metallic	★	5486								
8N	77/	Dark Cordovan Metallic	AE60	5496		C	AR60	5496		C		
							AL81	5496	B			
8P	77	Light Cordovan	★	5471								
8V	77	Medium Ember Metallic	★	5495								
8W	77/78	Chamois Metallic	AE60	5491		C						
8Y	77/78	Champagne Metallic	CAE60	5494		C						
8Z	77	Medium Nectarine Metallic	★	5510								
9	76/78	Bright Yellow (Capri)	★	1034								
9A	73/74	White	AE60	1619		C	AL81	1619	B		CC6AZ	19500-B
9C	73/74	Cream White	★	5289							CD3AZ	19500-M
9D	74/	White	AE60	5418		C	AL81	5418	B		CD5AZ	19500-D
9F	77/78	White	★	5543								
A	76/78	Black (Capri)	AE60	1724		C	AR60	1724		C	CC6AZ	19500-A
			CAE60	1724		C	AL81	1724	B			
B	76/78	White (Capri)	★	691								
E	74	Olympic Blue (Capri)	★	886								
H	76/78	Bright Orange (Capri)	★	1064								
M	74	Bitter Green (Capri)	★	885								
N	74	Red (Capri)	AE60	840		C						
R	76/78	Venetian Red (Capri)	★	1136								
T	74/76	Yellow	★	112								
V	76/78	Silver Metallic (Capri)	★	1056								

LACQUERS AND SYNTHETIC ENAMELS

CODE ●	YEAR	COLOR ● Certification label	PART NUMBER	CODE ●	YEAR	COLOR ● Certification label	PART NUMBER

ELASTOMERIC PAINT

(8 oz. can-unless otherwise listed)

U.S. and CANADIAN USAGE

FOR THE REPAIR OF BUMPERS, SIGHT SHIELDS and OTHER URETHANE PARTS

For elastomeric paints not listed-use elastomeric additive EBP-652-A with comparable exterior lacquer or enamel paint

	73/	Primer (air dry) - - 16 oz.-N.R.	★ EBP M18P5-A		73/	Thinner - - 32 oz.-N.R. (11/85)	★ EBP 1618-B
	73/	Elastomeric Additive - - 16 oz. can -N.R. (11/85)	★ EBP 652-A				

APPEARANCE and MAINTENANCE MATERIALS

U.S. USAGE

PART NUMBER	DESCRIPTION	PART NUMBER	DESCRIPTION
Note:	The aerosol products listed below do not utilize a chlorofluorocarbon propellant system.		
	PAINTS and REFINISHING MATERIALS		
D7AZ 19000-A	Paint (argent lacquer) - 13 oz. aerosol spray can	★C9AZ 19627-A	Tape (automotive masking)-3/4" wide - - (48) 60 yd. rolls-N.R. (2/85)
D2AZ 19B542-A	Cream hardener for polyfiller-use w/ D2AZ 19A547-A kit-polyfiller body repair-1 oz. supplemental supply - - (12) 1 oz. tubes	★C9AZ 19627-C	Tape (automotive masking)-2" wide - - (24) 60 yd. rolls-N.R. (2/85)
	CLEANERS, WAXES and POLISHES		
B7A 19520-A	Tar and road oil remover - - (12) 1 pt. cans	D6AZ 19523-A	Wash and wax concentrate - - (12) 16 oz. plastic containers
B7A 19521-A	Spot remover (chlorothene cleaner) - - (12) 1 pt. cans	E0AZ 19526-A	Triple clean-for leather and vinyl trim -white sidewall tires -vinyl and convertible tops not for use on cloth fabrics - - (12) 16 oz. bottles
E0AZ 19521-A	Leather and vinyl cleaner - - (6) 16 oz. plastic bottles with brush	E2AZ 19526-A	Automotive fabric spot lifter-for use on most automotive cloth fabrics and carpets - - (12) 6.5 oz. aerosol cans w/brush cap
8A 19522	Bright metal cleaner - - (12) 1 pt. cans	E0AZ 19526-B	Cleaner-white wall tire - - (12) 16 oz. plastic spray bottles
B8A 19523-A	Cleaner (multi-purpose) concentrate for -vinyl and leather trim -white sidewall tires -vinyl and convertible tops -automobile rugs and upholstery -automobile exteriors - - (6) 1 qt. plastic bottles	E0AZ 19526-C	Cleaner-white wall tire - - (4) 1 gal. bottles
B8A 19523-B	Cleaner (multi-purpose) concentrate for -vinyl and leather trim -white sidewall tires -vinyl and convertible tops -automobile rugs and upholstery -automobile exteriors - - (6) 1 gal. plastic bottles	★B7A 19530-A	Silicone body polish - - (12) 16 oz. cans -r/b B7AZ 19530-A (5/85)
		B7AZ 19530-A	Custom Silicone Glass Polish - - (12) 16 fl. oz. containers
		B7A 19530-B	Custom silicone gloss (new car prep.) - - (2) 1 gal. cans
B8A 19523-C	Cleaner (all purpose) concentrate for -vinyl and leather trim -white sidewall tires -vinyl and convertible tops -automobile rugs and upholstery -automobile exteriors - - 55 gal. drum	B4A 19534-A	Custom auto wax - - (12) 8 oz. cans
		★D8AZ 19534-A	Cream wax-less applicator - - (12) 12oz. cans-r/b E4AZ 19534-A (5/85)
		E4AZ 19534-A	Cream Auto Wax-with applicator - - (12) 8 oz. containers
		E3AZ 19F535-A	Vinyl Top Cleaner and Reconditioner - - (12) 16 oz. containers
C9AZ 19523-A	Wash and wax concentrate - - (4) 1 gal. plastic containers	E3AZ 19F535-B	Vinyl Top Cleaner and Reconditioner - - 1 gal. container

COPYRIGHT © 1986— FORD MOTOR COMPANY —DEARBORN, MICHIGAN

APPEARANCE and MAINTENANCE MATERIALS

U.S. USAGE

Note: The aerosol products listed below do not utilize a chlorofluorocarbon propellant system.

CLEAR VISION AIDS

PART NUMBER	DESCRIPTION
E4AZ 19C507-A	Glass cleaner - - (12) 18 oz. aerosol cans
C9AZ 19550-A	Ford ultra clear windshield washer solution - - (12) 16 oz. cans
C9AZ 19550-B	Ford ultra clear windshield washer solution - - (12) 32 oz. cans

COOLING SYSTEM AIDS

PART NUMBER	DESCRIPTION
D6AZ 19A503-A	Cooling system fast flush (non acid) - - (12) 12oz. cans
E2FZ 19549-A	Ford Cooling System Fluid (permanent anti-freeze) - - (6) 1 gal. cans
E2FZ 19549-B	Ford Cooling System Fluid (permanent anti-freeze) - - 55 gal. drum
D9AZ 19558-A *RA-1	Protector pellets (cooling system) - - (2) Pellets percard - (24) cards per carton
E6AZ 19558-A *RA-2	Protector Powder (cooling system) - - (20) 3/4 oz. tubular plastic containers on a display carton
★D9AZ 19558-PAK *RA-1000	Protector pellets (cooling system) - - (2) cartons of (48) cards- (2) pellets per card, (1) fender cover-N.R. (7/85)

MOTOR OILS and LUBRICANTS

◇Premium motor oil grade ♦Super premium motor oil grade

PART NUMBER	DESCRIPTION
C4AZ 19D530-A	Lubricant (distributor cam) - - 1 1/2 oz. tube
C6AZ 19542-A	Brake and hydraulic clutch fluid (extra heavy duty)-for vehicles w/disc or drum brakes - - (24) 16 oz. cans
C6AZ 19542-B	Brake and hydraulic clutch fluid (extra heavy duty)-for vehicles w/disc or drum brakes - - (12) 1 qt. cans
C8AZ 19B546-A	Additive friction modifier (hypoid gear)-for locking rear axles - - (12) 4 oz. plastic bottles
D8DZ 19C547-A	Lubricant (for std. 3 and 4 speed trans. and manual transaxle) - - 5 gal. pail
C0AZ 19553-A	Silicone lubricant (jell type) - - 8 oz. tube
D7AZ 19553-A	Silicone lubricant - - 15 oz. aerosol spray can
D3AZ 19553-A	Lubricant (mini-vent window) - - 4 oz. plastic bottle
E2SZ 19553-A	Dry Film Lubricant-reduces friction resulting from metal to metal contact and helps provide corrosion resistance - - 4 oz. can
C3AZ 19578-A	Steering gear lubricant (life time) - - (4) 14 1/2 oz. cartridges
D8AZ 19578-A	Steering gear grease-for manual rack and pinion - - 1 lb. can
B7A 19579-C	Crankcase conditioner and rust inhibitor - - (12) 16 oz. cans
D9AZ 19579-C	Oil conditioner - - (12) 16 fl. oz. cans
* X0 5W30-DSP	Motor Oil (Super Premium)-5W30 - - 55 gal. (208.2l) drum -gas engines only
* X0 5W30-QSP	Motor Oil (Super Premium)-5W30 - - (12) 1 qt. (0.946l) cans -gas engines only
* X0 10W30-QP	Motor Oil (Premium)-10W30 - - (12) 1 qt. (0.946l) cans -for all gas engines & diesel engines exc. turbo
* X0 10W40-DSP	Motor Oil (Super Premium)-10W40 - - 55 gal. (208.2l) drum -gas engines only
* X0 10W40-QSP	Motor Oil (Super Premium)-10W40 - - (12) 1 qt. (0.946l) cans -gas engines only
* X0 15W40-DSD	Motor Oil (Super Duty)-15W40 - - 55 gal. (208.2l) drum -for gas and diesel engines
* X0 15W40-QSD	Motor Oil (Super Duty)-15W40 - - (12) 1 qt. (0.946l) cans -for gas and diesel engines
* X0 20W40-DP	Motor Oil (Premium)-20W40 - - 55 gal. (208.2l) drum -for all gas engines & diesel engines exc. turbo
* X0 20W40-QP	Motor Oil (Premium)-20W40 - - (12) 1 qt. (0.946l) cans -for all gas engines & diesel engines exc. turbo
* X0 30-DSD	Motor Oil (Super Duty)-30W - - 55 gal. (208.2l) drum -for gas and diesel engines
* X0 30-QSD	Motor Oil (Super Duty)-30W - - (12) 1 qt. (0.946l) cans -for gas and diesel engines
E0AZ 19580-A	Hypoid gear lubricant-for Ford design rear axles-with Traction-Lok use with C8AZ-19B546-A additive - - (12) 1 qt. (.946 litre) plastic containers with spouts
E0AZ 19580-B	Hypoid gear lubricant-for Ford design rear axles-with Traction-Lok use with C8AZ-19B546-A additive - - (6) 1 gal. (3.785 litres) plastic containers
E0AZ 19580-C	Hypoid gear lubricant-for Ford design rear axles-with Traction-Lok use with C8AZ-19B546-A additive - - 120 lb. (54.4 kg.) keg
D2AZ 19581-A	Speedometer cable lubricant - - 1 lb. can
★	Automatic Trans. Fluid - type "CJ"-use "DEXRON® II" for service
* XT 1-DF	Automatic Trans. Fluid - Type "F" -for Borg Warner, FMX, C3 and 1973/76 C6 A/T -for Ford CII P/S pump only -for Convertible Top Reservoir Fluid - - 55 gal. (208.2l) drum

APPEARANCE and MAINTENANCE MATERIALS

U.S. USAGE

Note: The aerosol products listed below do not utilize a chlorofluorocarbon propellant system.

MOTOR OILS and LUBRICANTS — Cont'd

◇Premium motor oil grade ♦Super premium motor oil grade

PART NUMBER	DESCRIPTION
* XT 1-QF	Automatic Trans. Fluid – Type "F" – for Borg Warner, FMX, C3 and 1973/76 C6 A/T –for Ford CII P/S pump only –for Convertible Top Reservoir Fluid – – (12) 1 qt. (0.946l) cans
* XT 2-DDX	Automatic Trans. Fluid–"DEXRON ® II" –for 1977/Ford C6,C4 and Jatco A/T only – – 55 gal. (208.2 litres) drum
* XT 2-QDX	Automatic Trans. Fluid–"DEXRON ® II" –for 1977/Ford C6,C4 and Jatco A/T only – – (12) 1 qt. (0.946 litres) cans
★ E4AZ 19582-A	Power Steering Fluid–for all P/S exc. Ford CII – – (48) 1 qt. long neck plastic containers–N.R.
E6AZ 19582-A	Power Steering Fluid and A/T type "F" fluid–use in P/S pumps requiring ESW M2C33-F type "F" A/T fluid can also be used to top-off A/T requiring type "F" fluid. Consult owners guide for proper application – – (12) 12 fl. oz. long neck plastic bottles
D9AZ 19583-A	Rubber lubricant (triple purpose) – – (4) 1 gal. containers–use to mount and demount tires, remove rubber squeaks, and clean rubber parts.
D7AZ 19584-A	Grease (polyethylene) – – 15 oz. spray can
D0AZ 19584-A	Grease (polyethylene) – – 4 oz. aluminum tube w/plastic cut off spout
C1AZ 19590-B	Lubricant (multi-purpose long life) – – (4) 14 1/2 oz. cartridges
C1AZ 19590-C	Lubricant (multi-purpose long life) – – 120 lb. keg
C1AZ 19590-D	Lubricant (multi-purpose long life) – – 25 lb. pail
C1AZ 19590-E	Lubricant (multi-purpose long life) – – (4) 5 lb. pails
D4AZ 19590-A	Lubricant (steering linkage) – – (4) 14 1/2 oz. cartridges
D7AZ 19590-A	Lubricant (disc brake caliper slide grease) – – (4) 4 oz. tube
E1AZ 19590-A	Speed control slip ring grease (str. whl. mounted) – – 8 oz. (.226 kg.) tube
D1RY 19592-A	Grease (disc brake lubricant)–for Capri disc brake squeal – – 125 gram tube

SEALERS and ADHESIVES

PART NUMBER	DESCRIPTION
D7AZ 19B508-A	Contact adhesive (gasket and seal) – – 16 oz. can w/brush
D9AZ 19C525-A	Adhesive (vinyl roof installation or replacement) – – 1 qt. can
E4AZ 19C548-A	Automatic Transmission Sealer – – (6) 11 fl. oz. (0.325l) containers
C0AZ 19552-A	Weatherstrip adhesive (light colored) – – (12) 5 fl. oz. tubes
8A 19552-B	Rubber cement (black) – – (12) 5 oz. tubes
B5A 19554-A	Perfect seal sealing compound – – 4 oz. can
C6AZ 19554-A	Metallic plastic (to repair cyl. front cover and cyl. block intake manifold) – – (1) can–metallic resin, (1) jar–hardening agent
D7AZ 19554-B	Perfect seal sealing compound – – (12) 13.2 oz. aerosol cans
C9AZ 19554-B	Sealer (liquid butyl)–black–for sealing butyl installed windshield and backlite – – 1 pt. can
D0AZ 19554-C	Sealer tape (tetrafluoroethylene)–used on bolt and studthreads to provide a positive liquid seal – – 1/2" x 288"
D7AZ 19554-C	Adhesive 414 Kit – used for repair of loose vinyl inserts to body side mouldings – consists of (5) .33 fl. oz. bottles of 414 adhesive and (1) 4 oz. aerosol can of accelerator
D9AZ 19554-B	Locktite minute bond adhesive kit 312–reqd. to attach rear view mirror brkt. – – consists of (20) one shot pkgs. of .01 fl. oz. (2.957 ml.) adhesive–.02 fl. oz. (5.914 ml.) accelerator
D9AZ 19554-C	Locktite Minute Bond Adhesive Kit 312 –req'd to attach rear view mirror brkt. – – consists of (10) one shot pkgs. of .01 fl. oz. (2.957 ml.) adhesive– .02 fl. oz. (5.914 ml.) accelerator
E0AZ 19554-A	Sealant (Locktite)–thread locker – – (10) .20 fl. oz. (6 ml.)
E0AZ 19554-B	Sealant–stud and bearing mount –stops loosening and leakage – – heavy duty thread locker – – (10) .20 fl. oz. (6 ml.) tubes
D8AZ 19554-A	Sealant–pipe (with teflon) – – 1.69 fl. oz. tube.
D9AZ 19554-A	Adhesive (A/C plenum chamber) – – 6 oz. can
E2FZ 19554-B	Ford thread lock 262–used to prevent vibration loosening of nuts, bolts or screws – – 0.34 fl. oz. (10 ml)
D6AZ 19560-A	Caulking cord – – (8) 80 ft. rolls-3/16"dia.
D9AZ 19560-A	Caulking cord (A/C plenum chamber)–rope sealer – – (8) 10 ft. rolls – – 3/16" dia.
C3AZ 19562-A	Sealer and filler (silicone rubber) – – 5 oz. tube–for vinyl top sealing, also for sealing engine cyl. head & block–white
D6AZ 19562-A	Sealer and filler (silicone rubber)–clear– 3 fl. oz. tube
D6AZ 19562-B	Sealer and filler (silicone rubber)–black– 3 fl. oz. tube
E3AZ 19562-A	Silicone gasket and sealant (RTV) – – 10.3 fl. oz. caulking cartridge
E2AZ 19562-A	Ford Gasket Maker–for use when specified in the replacement of gaskets and the sealing of flanges–not for use on oil pans, rocker covers and MTX trans. – – .85 fl. oz. (25 ml) syringe container

COPYRIGHT © 1986— FORD MOTOR COMPANY —DEARBORN, MICHIGAN

APPEARANCE and MAINTENANCE MATERIALS

U.S. USAGE

Note: The aerosol products listed below do not utilize a chlorofluorocarbon propellant system.

SEALERS and ADHESIVES — Cont'd

PART NUMBER	DESCRIPTION
E2AZ 19562-B	Ford Gasket Maker-for use when specified in the replacement of gaskets and the sealing of flanges-not for use on oil pans, rocker covers and MTX trans. - - 1.7 fl. oz. (50 ml.) tube
E6AZ 19562-A	Silicon Gasket Adhesive-used to seal silicone gaskets - - 8 fl. oz. (0.236L) can with brush
D2FZ 19562-A	Seal windshield and backlite glass-foam tape - - 1/4" x 5/8" x 13'
D2FZ 19562-B	Seal quarter window-foam tape - - 1/4" x 3/8" x 5'
D8RZ 19562-A	Windshield sealant kit-for windshield replacement on Capri vehicles
D9AZ 19562-A	Butyl tape kit - - "I" beam section (233")-for windshield replacement on 1979 vehicles (exc. Bobcat) prior to being licensed by dealer
D9AZ 19562-B	Windshield glass seal kit - - (5/16") round (233") incl. glass primer-For 1979 vehicles (exc. Bobcat)
E0AZ 19562-A	Windshield seal kit-urethane-for w/shields with urethane seal - - must be used with D9AZ 19562-A or B. For industrial use only

SPECIAL PRODUCTS

PART NUMBER	DESCRIPTION
* BB 14	Electrolyte (acid)-battery fluid - - 5 gal. container with hose
* BB 16	Electrolyte (acid)-battery fluid - - 1.5 gal. container
D7AZ 19A331-A *WA-10	Silicone Dielectric Compound - for distributor rotor tip and Duraspark ignition cable - - 3 oz. tube
D7AZ 19A501-A	Rust penetrant and inhibitor - - (6) 12 oz. aerosol can
D8AZ 19A501-A	Automatic choke cleaner-used to clean-free auto. choke, carb. linkage and manifold heat controls - - (12) 14 oz. aerosol cans w/snorkel
D7AZ 19515-A	Super Seal Anti-Corrosion Compound - (Sprayable) - - 16 gal.
E4AZ 19515-A	Super Seal Anti-Corrosion Compound - - 55 gal. drum
D8AZ 19515-B	Super Seal Anti-Corrosion Compound - - (12) 16 oz. aerosol spray cans
D9AZ 19515-A	Vinyl coat-abrasion resistant - - (6) 1 qt. cans
B7A 19517-B	Dusting cloth (wax treated) - - carton of (100)
D3AZ 19517-A	Dusting cloth (wax treated) - - plastic bag container
D3AZ 19517-B	Pad-buffing and polishing - - carton of (12)
E0AZ 19517-A	Dusting cloth (wax treated)-bulkroll - - 23" (584.20 mm.) wide-19 1/2 yards (17.83 meters) long -r/b E0AZ 19517-B (7/85)
E0AZ 19517-B	Dusting cloth (wax treated)-bulk roll - - 15" wide x 90 ft. long
D4AZ 19B519-A *YN-1-A	Refrigerant (air conditioner) - - (12) 14 oz. cans
D2AZ 19523-A	Hand cleaner-waterless - - (12) 14 oz. cans
D2AZ 19523-B	Hand cleaner-waterless - - (2) 5 lb. cans
D5AZ 19523-PBK	Hand cleaner-waterless - - (8) 5 lb. cans-includes dispenser
C8AZ 19C544-B	Gas line anti-freeze - - (24) 12 oz. containers
C9AZ 19C544-A	Engine starting fluid - - (12) 8.3 oz. aerosol cans
D8AZ 19562-A	Compound-heated backlite grid repair - - .12 oz. bottle
C9AZ 19577-B *YN-2	Refrigerant compressor oil-used w/York or Tecumseh compressor - - 1 qt. can
D1VY 19577-B *YN-4	Refrigerant compressor oil-use w/ Frigidaire compressors - - 1 qt. can
D9AZ 19579-A	Carburetor and combustion chamber cleaner-for gasoline engines only - - (12) 18 oz. aerosol cans
D9AZ 19579-B	Carburetor and combustion chamber cleaner-for gasoline engines only - - (12) 16 oz. cans
E6AZ 19579-B	Cleaner-metal brake parts-for use only for off-vehicle cleaning of metal brake parts. Do not use on rubber parts or brake pads or linings or painted surfaces - - 16 oz. (454g) aerosol can w/5" extension nozzle
D8AZ 19587-A	Lock lubricant - - (12) 3.5 oz. aerosol cans w/snorkel
C6AZ 19627-A	Tape (vinyl foam)-1/8" x 7/8" - - 50 ft. roll-used to shim weatherstrip roof rails, doors and convertible side rails
D4AZ 19627-A *YZ-1	Tape (A/C insulation)-1/8" x 2" - - 15 ft.
D6AZ 19627-A	Tape (pressure sensitive)-black water proof-3" wide - - 60 yd. roll
D8AZ 19627-A	Tape-clear urethene film (pressure sensitive) - - 12" wide-60 1/2" long
D8AZ 19627-B	Tape-clear urethene film (pressure sensitive) - - 12" wide-144" long
E4AZ 19627-A	Tape-PVC foam (low density)-used to eliminate water leaks, wind noise, squeaks and rattles - - 1/8" thick x 3/4" wide x 100 ft. roll
E4AZ 19627-B	Tape-PVC foam (low density)-used to eliminate water leaks, wind noise, squeaks and rattles - - 1/4" thick x 3/4" wide x 50 ft. roll
C8AZ 19628-D *WA-4	Tape (elec. insulating)-black (display pkg.)-(12)-3/4" x 20 ft. rolls
C8AZ 19628-F *WA-6	Tape (elec. insulating)-black (individual metal can)-(12)-3/4" x 66 ft. rolls
C8AZ 19628-G *WA-7	Tape (elec. insulating)-black (individual skin pkg.)-(12)-3/4" x 20 ft. rolls
C8AZ 19628-H *WA-8	Tape (elec. insulating)-black (individual skin pkg.)-(12)-3/4" x 66 ft. rolls
E0AZ 19628-A *WA-15	Tape (electrical repair)-flame retardant-automotive use only - - 3/4" (19.50 mm.) wide-100 ft. (30.48 meters) long-10 roll skin pkg.

APPEARANCE and MAINTENANCE MATERIALS

CANADIAN USAGE

PART NUMBER	DESCRIPTION	PART NUMBER	DESCRIPTION
	PAINTS and REFINISHING MATERIALS		
D7AZ 19000-A	Paint (argent lacquer) - 13 oz. aerosol spray can	CD5AZ 19500-B	Alkyd enamel-light green gold metallic - - 6 oz. spray can
CD2AZ 19500-AB	Engine enamel-corporate blue - - 16 oz. spray bomb	CD5AZ 19500-C	Alkyd enamel-light green - - 6 oz. spray can
CD2AZ 19500-AH	Engine enamel-black gloss - - 16 oz. spray bomb	CD5AZ 19500-D	Alkyd enamel-white - - 6 oz. spray can
CD2AZ 19500-AJ	Engine enamel-chassis black (dull) - - 16 oz. spray bomb	C5AZ 19E548-A	Tiniting assort. - - (12) 1 pt. cans of acrylic enamel repair tinting colors
CD5AZ 19500-A	Alkyd enamel-maroon metallic - - 6 oz. spray can	★C9AZ 19627-A	Tape (automotive masking) - - 3/4" wide-(48) 60 yd. rolls-N.R. (2/85)
		★C9AZ 19627-C	Tape (automotive masking) - - 2" wide - - (24) 60 yd. rolls-N.R. (2/85)
	CLEANERS, WAXES and POLISHES		
*CXC 12	Tar and road oil remover - - (12) 500 ml. cans	E0AZ 19526-A	Triple clean-for vinyl and leather trim -white sidewall tires -vinyl and convertible tops not for use on cloth fabrics - - (12) 16 oz. bottles w/brush
*CXC 68-A	Fabric cleaner-spotless - - (4) 4 litre cans		
8A 19522	Bright metal cleaner - - (12) 1 pt. cans		
CD4AZ 19522-A	Chrome cleaner - - 1 gal.	E0AZ 19526-B	Cleaner-white wall tire - - (12) 16 oz. plastic spray bottles
B8A 19523-A	Cleaner (multi-purpose) concentrate for -vinyl and leather trim -white sidewall tires -vinyl and convertible tops -automobile rugs and upholstery -automobile exteriors - - (6) 32 oz. bottles	E2AZ 19526-A	Automotive fabric spot lifter-for use on most automotive cloth fabrics and carpets - - (12) 6.5 oz. aerosol cans w/brush cap
		B7AZ 19530-A	Custom Silicone Gloss Polish - - (12) 16 fl. oz. containers
		B7A 19530-B	Custom silicone gloss (new car prep.) - - (2) 1 gal. cans (U.S.)
C9AZ 19523-A	Wash and wax concentrate - - (4) 1 gal. plastic containers (U.S.)	CBAC 19530-A	Lincoln body polish - - 16 oz.
CC9AZ 19523-A	Upholstery cleaner (concentrate) - - 5 gal.	CBAC 19530-AM	Body polish - - (12) 500 ml. containers
CC9AZ 19523-A20L	Upholstery cleaner - - 20 litre container	CC5AZ 19530-A	Polish-buffer (reconditioning polish) - - 1 gal. can
D6AZ 19523-A	Wash and wax concentrate - - (12) 16 oz. plastic containers	CC9AZ 19530-B	Cleaner and polisher - - 1 gal.
*CXC 20	Car wash - - 20 litre pail	CC9AZ 19530-B4L	Cleaner and polish - - 4 litre container
*CXC 21	Car wash - - 4 litre jug	★D8AZ 19534-A	Cream wax-less applicator - - (12) 12 oz. (U.S.) cans-r/b E4AZ 19534-A (5/85)
*CXC 83	Car wash - - (12) 500 ml containers		
*CXC 84	Car wash - - 204 litre plastic drum	E4AZ 19534-A	Cream Auto Wax-with applicator - - (12) 8 oz. containers
CB9CZ 19525-A	Upholstery cleaner (spray on) - - 1 gal. can		
CC0AZ 19525-B	Upholstery cleaner (spray on) - - 5 gal. can	E3AZ 19F535-A	Vinyl Top Cleaner and Reconditioner - - (12) 16 oz. containers
		E3AZ 19F535-B	Vinyl Top Cleaner and Reconditioner - - 1 gal. container

COPYRIGHT © 1986— FORD MOTOR COMPANY —DEARBORN, MICHIGAN

APPEARANCE and MAINTENANCE MATERIALS

CANADIAN USAGE

PART NUMBER	DESCRIPTION	PART NUMBER	DESCRIPTION
CLEAR VISION AIDS			
*CXC 100	Glass cleaner – – (12) 500 g. aerosol cans	CC5AZ 19550–B	Windshield washer anti–freeze – – 5 gal. pail
CB9CZ 19550–A	Windshield washer anti–freeze – – 16 oz. bottle	*CXC 36	Windshield washer anti–freeze – – 20 litre pail
*CXC 69	Windshield washer anti–freeze – – (12) 500 ml. plastic containers	* CXC 37	Windshield washer anti–freeze (pre–mixed) – – (4) 4 litre jugs
COOLING SYSTEM AIDS			
*CXC 8–B	Cooling system fluid (permanent anti–freeze) – – (4) 4 litre containers	*CXC 43	Bar's Leak (cooling system protector) – – (12) 150 g. cans
*CXC 9–B	Cooling system fluid (permanent anti–freeze) – – (1) 205 litre container	C000 19558–B	Bar's Leaks (cooling system protector) – – 15 oz. bottle
*CXC 85	Cooling system cleaner and conditioner kit–consists of (1) CXC–86 Fast Flush (1) CXC–87 Rust Inhibitor (1) CXC–88 Stop Leak	*CXC 44	Bar's Leak (cooling system protector) – – (12) 400 g. bottles
		D9AZ 19558–A *RA 1	Protector pellets (cooling system) – – (2) pellets per card–(24) cards per carton
*CXC 86	Radiator Fast flush – – (12) 350 ml. cans	E6AZ 19558–A *RA–2	Protector Powder (cooling system) – – (20) 3/4 oz. tubular plastic containers on a display carton
*CXC 87	Radiator Rust Inhibitor – – (12) 350 ml. cans	★ D9AZ 19558–PAK *RA 1000	Protector pellets cooling systems – – (2) cartons of (48) cards–(2) pellets per card (1) fender cover–N.R. (7/85)
*CXC 88	Radiator Stop Leak – – (12) 350 ml. cans		
C000 19558–A	Bar's Leaks (cooling system protector) – – 6 oz. jar		
MOTOR OILS and LUBRICANTS			
C4AZ 19D530–A	Lubricant (distributor cam) – – 1 1/2 oz. tube	CC4AZ 19579–A	Engine oil conditioner – – 40 oz. can
		* CX0 9–L	Motor oil–10W30–Super Premium – – per litre bulk
*CXC 31	Brake and hydraulic clutch fluid (extra heavy duty)–for vehicles w/disc or drum brakes – – (24) 500 ml. cans	* CX0 10–L	Motor oil–10W40–Super Premium – – per litre bulk
		* CX0 12–L	Motor oil–SAE10–Single grade – – per litre bulk
		* CX0 5W30–LP	Motor oil–5W30–Premium – – (24) 1 litre cans
*CXC 32	Brake and hydraulic clutch fluid (extra heavy duty)–for vehicles w/disc or drum brakes – – (12) 1 litre cans	* CX0 5W30–LSP16	Motor oil–5W30 Super Premium –for gas engines only – – (16) 1 litre containers
C8AZ 19B546–A	Additive friction modifier (hypoid gear)–for locking rear axles – – (12) 4 oz. plastic bottles	* CX0 5W30–4LSP	Motor oil–5W30 Super Premium –for gas engines only – – (4) 1 litre containers
CE0DZ 19C547–A	Lubricant (for std. 3 and 4 speed trans.) – – 20 litre pail	* CX0 10W30–LP	Motor oil–10W30–Premium – – (24) 1 litre cans
*CXC 90	Silicone lubricant – – (12) 424 gram aerosol spray cans	* CX0 10W30–LP16	Motor oil–10W30 Premium –for all gas engines & all diesel engines exc. turbo – – (16) 1 litre containers
CC0CZ 19553–B	Silicone lubricant spray – – 6 oz. can	* CX0 10W30–4LP	Motor oil – – 10W30 Premium –for all gas engines & all diesel engines exc. turbo – – (4) 1 litre containers
D3AZ 19553–A	Lubricant (mini–vent window) – – 4 oz. plastic bottle		
E2SZ 19553–A	Dry Film Lubricant–reduces friction resulting from metal to metal contact and helps provide corrosion resistance – – 4 oz. can	* CX0 10W30–DP	Motor oil–10W30–Premium – – 205 litre drum
		* CX0 10W40–DSP	Motor oil–10W40–Super Premium – – 205 litre drum
C3AZ 19578–A	Steering gear lubricant (lifetime) – – (4) 14 1/2 oz. cartridges	* CX0 10W40–LSP16	Motor oil–10W40 Super Premium –for gas engines only – – (16) 1 litre containers
D8AZ 19578–A	Steering gear grease–for manual rack and pinion – – 1 lb. can	* CX0 10W40–4LSP	Motor oil–10W40 Super Premium –for gas engines only – – (4) 1 litre containers
CB8A 19579–C	Heat rust solvent–10.8 oz. aerosol can		
*CXC 51	Heat rust solvent – – (12) 300 g. aerosal cans		
CB9AZ 19579–C	Engine purge – – 40 oz. can	* CX0 10W40–LSP	Motor oil–10W40–Super Premium – – (24) 1 litre cans
*CXC 55	Engine purge – – (12) 1 litre cans		
CB9CZ 19579–A	Break–in lubricant – – 16 oz. can	*CX0 15W40–LSD	Motor oil–15W40–Super Duty – – (24) 1 litre cans
*CXC 56	Break–in lubricant – – (12) 500 ml. cans		

APPEARANCE and MAINTENANCE MATERIALS

CANADIAN USAGE

PART NUMBER	DESCRIPTION
MOTOR OILS and LUBRICANTS — Cont'd	
* CXO 15W40-LSD16	Motor oil-15W40 Super Duty -for all gas & all diesel engines - - (16) 1 litre containers
* CXO 15W40-4LSD	Motor oil-15W40 Super Duty -for all gas & all diesel engines - - (4) 1 litre containers
* CXO 20W40-LP	Motor oil-20W40-Premium - - (24) 1 litre cans
*CXO 20W50-LP	Motor oil-20W50-Premium - - (24) 1 litre cans
* CXO 20W50-LP16	Motor oil-20W50 Premium -for all gas eng. & all diesel exc. turbo - - (16) 1 litre containers
* CXO 30-L	Motor oil-30W - Single Grade - - (24) 1 litre cans
* CXO 30-D	Motor oil-30W - Single Grade - - 205 litre drum
* CXO 30-LSD16	Motor oil-30W Super Duty -for all gas & all diesel engines - - (16) 1 litre containers
MGCA 19579-B	Fuel system cleaner - - 6 oz. can
*CXC 54	Fuel system cleaner - - (12) 500 ml. cans
CD6AZ 19579-A	Motor oil-10W-40-Super Premium - - 45 gal. drum
CE0AZ 19580-A	Hypoid gear lubricant-for Ford design rear axles-with Traction-Lok use with C8AZ-19B546-A additive - - (12) 1 litre plastic containers with spouts
CE0AZ 19580-B	Hypoid gear lubricant-for Ford design rear axles-with Traction-Lok use with C8AZ-19B546-A additive - - (6) 4 litre plastic containers
CE0AZ 19580-C	Hypoid gear lubricant-for Ford design rear axles-with Traction-Lok use with C8AZ-19B546-A additive - - 50 kg. keg
D2AZ 19581-A	Speedometer cable lubricant - - 1 lb. can
★	Automatic Trans. Fluid - type "CJ" -use "DEXRON® II" for service
* CXT 1-LF	Automatic Trans. Fluid - Type "F"- for Borg Warner, FMX, C3 and 1973/76 C6 A/T only-also used as -power steering fluid for Ford CII P/S pump only - - (24) 1 litre cans
* CXT 1-LF16	Automatic Trans. Fluid-Type "F"-for Borg Warner, FMX, C3 & 1973/76 C6 A/T only - -P/steering fluid for Ford CII P/S pump only - - (16) 1 litre containers
* CXT 1-DF	Automatic Trans. Fluid - Type "F"- for Borg Warner, FMX, C3 and 1973/76 C6 A/T only-also used as -power steering fluid for Ford CII P/S pump only - - 205 litre drum
* CXT 2-LDX	Automatic Trans. Fluid - "DEXRON® II"- for Jatco, C4 and 1977/ C6 A/T only (24) 1 litre cans
* CXT 2-LDX16	Automatic Trans. Fluid-Dexron ® II-for Jatco, C4 and 1977/ C6 A/T - - (16) 1 litre containers
* CXT 2-DDX	Automatic Trans. Fluid-"Dexron ® II"- for Jatco, C4 and 1977/ C6 A/T only 205 litre drum
★CD8AZ 19582-A	Power Steering Fluid-for all P/S exc. Ford CII - - (24) 1 litre cans-N.R.
D9AZ 19583-A	Rubber lubricant (triple purpose)-(4) 1 gal. containers-use to mount and demount tires, remove rubber squeaks and clean rubber parts
D7AZ 19584-A	Grease (polyethylene) - - 15 oz. spray Can
D0AZ 19584-A	Grease (polyethylene) - - 4 oz. aluminum tube w/plastic cut off spout
C1VY 19586-A	Lubricant- "U" joint - - 1 lb.
C1AZ 19590-B	Lubricant (multi-purpose long life) - - (4) 14 1/2 oz. cartridges
C1AZ 19590-C	Lubricant (multi-purpose long life) - - 120 lb. keg
C1AZ 19590-D	Lubricant (multi-purpose long life) - - 25 lb. pail
D4AZ 19590-A	Lubricant (steering linkage) - - (4) 14 1/2 oz. cartridges
D7AZ 19590-A	Lubricant (disc brake caliper slide grease) - - (4) 4 oz. tubes
E1AZ 19590-A	Speed control slip ring grease (str. whl. mounted) - - 8 oz. (.226 kg.) tube
D1RY 19592-A	Grease (disc brake lubricant)-for Capri disc brake squeal - - 125 gram tube
SEALERS and ADHESIVES	
* CXC 74	Adhesive-Superbonder (instant)- used for bonding vinyl trim, w/strip rubber bumper guards - - (10) 3 ml. tubes
* CXC 75	Adhesive (loctite)-used to attach rear view mirror brkt. to w/s - - (10) display packages-each pkg. contains 5 ml. adhesive and 6 ml. accelerator
D7AZ 19B508-A	Contact adhesive (gasket and seal) - - 16 oz. can w/brush
*CXC 39	Weatherstrip adhesive - - (12) 150 ml. tubes
* CXC 49	Auto. trans. seal conditioner - - (12) 350 ml cans
CC3AZ 19552-B	Windshield and backlite sealer - - 12 3/4 oz. tube
*CXC 38	Rubber cement - - (12) 500 ml. tubes (black)
CBM 19553-A	Sealer-caulking cord
* CXC 81	Gasket Seal - (12) 113 gram cans
C6AZ 19554-A	Metallic plastic (to repair cyl. front cover and cyl. block intake manifold) - - (1) can-metallic resin, (1) jar-hardening agent
*CXC 41	Perfect seal sealing compound - - (12) 283 gram aerosol cans
C9AZ 19554-B	Sealer (liquid butyl)-black-for sealing butyl installed windshield and backlite - - 16 oz. can
* CXC 2	Sealant-(locktite) - - thread locker- 50 ml. bottle.
* CXC 5	Sealant-pipe-(with tefelon) - - 50 ml. tube

COPYRIGHT © 1986— FORD MOTOR COMPANY —DEARBORN, MICHIGAN

APPEARANCE and MAINTENANCE MATERIALS

CANADIAN USAGE

PART NUMBER	DESCRIPTION
SEALERS and ADHESIVES — Cont'd	
* CXC 70	Sealant–thread locker (loctite 242)–used for alternator, starter and ring gear mounts – – (10) 6 ml. containers
* CXC 72	Sealant–pipe w/teflon–use to secure fittings & plugs – – (10) 50 cc containers
* CXC 73	Sealer–thread w/teflon – – (10) 6 ml. containers
* CXC 76	Sealant–Hi Strength adhesive–stud and brg. mount – – (10) 6 ml. tubes
* CXC 78	Sealant–gasket eliminator (Loctite 515) – – (10) 6 ml. tubes
* CXC 79	Sealant–gasket eliminator (Loctite 515) – – (10) 50 ml. tubes
CD7AZ 19554–A	Loctite adhesive – w/dispenser – used to attach rr. view mirror bracket to w/s – – 20 one shots per dispenser
* CXC 4	Loctite adhesive–with dispenser–used to attach rear view mirror brkt. to w/s – – gravity feed dispenser – 20 one shots per dispenser
D0AZ 19554–C	Sealer tape (tetrafluoroethylene) – – 1/2" x 288"–used on bolt and studthreads to provide a positive liquid seal
* CXC 3	Adhesive 414 Kit–used for repair of loose vinyl inserts to body side moulding–consists of (5) 9.76 cc bottles of 414 adhesive and (1) 113.4 cc aerosol can of accelerator
D9AZ 19554–A	Adhesive (A/C plenum chamber) – – 6 oz.
E2FZ 19554–B	Ford thread lock 262–used to prevent vibration loosening of nuts, bolts or screws – – 0.34 fl. oz. (10 ml)
AB 19560–A	Caulking cord – – (6) 80 ft. rolls–3/16" dia.
★ D9AZ 19560–A	Caulking cord (A/C plenum chamber)–rope sealer – – (8) 10 ft. rolls–3/16" dia.–N/R
D6AZ 19562–A	Sealer and filler (silicone rubber)–clear–3 fl. oz. tube
D6AZ 19562–B	Sealer and filler (silicone rubber)–black–3 fl. oz. tube
SPECIAL PRODUCTS	
* CBB 14–L	Electrolyte (acid)–battery fluid – – 1.5 gal. container
D7AZ 19A331–A *WA–10	Silicone Dielectric Compound – for distributor rotor tip and Duraspark ignition cable – – 3 oz. tube
D7AZ 19A501–A	Rust penetrant and inhibitor – – (6) 12 oz. aerosol cans
* CXC 89	Automatic choke cleaner–used to clean–free auto. choke, carb. linkage and manifold heat controls – – (12) 425 gram aerosol cans
CB8A 19512–A	Wash mitt
CC3AZ 19514–A	Starting fluid – – 11 oz. spray can
* CXC 11	Starting Fluid – – (12) 235 g. aerosol cans
D9AZ 19515–A	Vinyl coat–abrasion resistant – – (6) 1 qt. cans
* CXC 1	Super Seal Anti–Corrosion Compound – – (12) 16 oz. aerosol cans
CBJ 19517–A	Polishing cloth–lintless – – 5 yds.
CC3AZ 19517–A	Chamois–super sheen – – approx. 20" x 22"

PART NUMBER	DESCRIPTION
E3AZ 19562–A	Silicone gasket and sealant (RTV) – – 10.3 fl. oz. caulking cartridge
E2AZ 19562–A	Ford Gasket Maker–for use when specified in the replacement of gaskets and the sealing of flanges–not for use on oil pans, rocker covers and MTX trans. – – .85 fl. oz. (25 ml) syringe container
E2AZ 19562–B	Ford Gasket Maker–for use when specified in the replacement of gaskets and the sealing of flanges–not for use on oil pans, rocker covers and MTX trans. – – 1.7 fl. oz. (50 ml.) tube
CC5AZ 19562–B	Windshield and backlite tape sealer kit–consists of – – 168" x 3/8" special tape for use on vehicles using butyl tape type installation on windshield and backlite glass
D9AZ 19562–A	Butyl tape kit – – "I" beam section (233") –for windshield replacement on 1979 vehicles (exc. Bobcat) prior to being licensed by dealer
D9AZ 19562–B	Windshield glass seal kit – – (5/16") round (233")–incl. glass primer–for 1979 vehicles (exc. Bobcat)
D2FZ 19562–A	Seal windshield and backlite glass–foam tape – – 1/4" x 5/8" x 13'–used on Comet and Montego exc. station wagon models (backlite only), Mark IV (opera window only
D2FZ 19562–B	Seal quarter window–foam tape – – 1/4" x 3/8" x 5'.
D8RZ 19562–A	Windshield sealant kit–for windshield replacement on Capri vehicles
E0AZ 19562–A	Windshield seal kit–urethane–for w/shields with urethane seal – – must be used with D9AZ 19562–A or B. For industrial use only
CC2CZ 19573–A	Automatic transmission sealer – – 8 oz. can
SPECIAL PRODUCTS	
B7A 19517–B	Dusting cloth (wax treated) – – carton of (100)
D3AZ 19517–A	Dusting cloth (wax treated) – – plastic bag container
E0AZ 19517–A	Dusting cloth–(wax treated)–bulk roll – – 23" (584.20 mm.) wide–19 1/2 yards (17.83 meters) long –r/b E0AZ 19517–B (7/85)
E0AZ 19517–B	Dusting Cloth (wax treated)–bulk roll – – 15" wide x 90 ft. long
D3AZ 19517–B	Pad–buffing and polishing–carton of (12)
D4AZ 19B519–A *YN–1–A	Refrigerant (air conditioner) – – (12) 14 oz. cans
* CXC 16	Hand cleaner–waterless – – (12) 1 lb. cans
* CXC 17	Hand cleaner–waterless–(6) 4.5 lb. cans
* CXC 45	Hand cleaner lotion (with grit) – – (12) 16 fl. oz. (.47l) squeeze bottles
* CXC 46	Hand cleaner lotion (with grit) – – (4) 12.8 fl. oz. (3.78l) bottles

APPEARANCE and MAINTENANCE MATERIALS

CANADIAN USAGE

PART NUMBER	DESCRIPTION	PART NUMBER	DESCRIPTION
	SPECIAL PRODUCTS — Cont'd		
CECG 19524-A	Engine shampoo - - 5 gal. can	C1A 19584	Penetrating fluid - - 8 oz. can
* CXC 22	Engine shampoo - - 20 litre pail	CB8A 19584-A	Penetrating fluid - - 1 gal. can
CECG 19524-B	Engine shampoo - - 45 gal. can	* CXC 60	Penetrating fluid - - (4) 1 litre cans
* CXC 23	Engine shampoo - - 205 litre drum	CB9CZ 19586-A	Door ease-stick lubricant-shop size - - (6 to carton)
* CXC 66	Engine shampoo - - (12) 450 g. aerosol cans		
CC6AZ 19528-A	Concrete floor cleaner and degreaser - - 40 lb. pack	* CXC 77	Klean and Prime-use w/loctite gasket eliminator on aluminum parts, zinc and cadium plated parts and non-metals - - (10) 6 oz. aerosol cans
* CXC 26	Concrete floor cleaner and degreaser - - 20 k. pail		
* CXC 28-A	Gas line anti-freeze - - (40) 150 ml. plastic bottles	D8AZ 19587-A	Lock lubricant - - (12) 3.5 oz. aerosol cans w/snorkel
* CXC 29-A	Gas line anti-freeze - - (12) 500 ml. long neck plastic bottles	C6AZ 19627-A	Tape (vinyl foam) - - 1/8" x 7/8"-50 ft. roll-used to shim weatherstrip roof rails, doors and convertible side rails
C000 19535-A	Carburetor cleaner - - 5 gal. pail		
* CXC 6	Carburetor cleaner-20 litre pail-consists of a 15 litre fill in a 20 litre pail	D4AZ 19627-A *YZ-1	Tape (A/C insulation)-1/8" x 2" - - 15 ft.
C000 19535-B	Carburetor cleaner - - 4 gal. pail (w/basket)	D6AZ 19627-A	Tape (pressure sensitive)-black water proof-3" wide - - 60 yd. roll
CE3AZ 19554-A	Kit-heated backlite wiring repair -used to repair bus bar terminal-to-wdo. bond separation (TSB #82-25-10)	CD7AZ 19627-A	Tape-Urethene film (pressure sensitive) - - 11 1/2" wide-144" long
D8AZ 19562-A	Compound-heated backlite grid repair - - .12 oz. bottle	D8AZ 19627-A	Tape-clear urethene film (pressure sensitive) - - 12" wide-60 1/2" long
C9AZ 19577-B *YN-2	Refrigerant compressor oil (used w/York or Tecumseh compressor) - - 1 qt. can (U.S.)	E4AZ 19627-A	Tape-PVC foam (low density)-used to eliminate water leaks, wind noise, squeaks and rattles - - 1/8" thick x 3/4" wide x 100 ft. roll
D1VY 19577-B *YN-4	Refrigerant compressor oil-use w/ Frigidaire compressors - - 1 qt. can (U.S.)	E4AZ 19627-B	Tape-PVC foam (low density)-used to eliminate water leaks, wind noise, squeaks and rattles - - 1/4" thick x 3/4" wide x 50 ft. roll
MGCA 19579-A	Combustion chamber conditioner - - 16 oz. can		
* CXC 52	Carburetor and combustion chamber cleaner - - (12) 500 g. aerosol cans	E0AZ 19628-A *WA-15	Tape-(electrical repair)-flame retardant-automotive use only - - 3/4" (19.50 mm.) wide-100 ft. (30.48 meters) long-10 roll skin pkg.
C6AZ 19579-B	Carburetor and combustion chamber cleaner - - (12) 19 oz. aerosol cans		
* CXC 53	Combustion chamber conditioner - - (12) 500 ml. cans		

USED CAR RECONDITIONING MATERIALS

U.S. USAGE

PART NUMBER	DESCRIPTION	PART NUMBER	DESCRIPTION
Note:	The aerosol products listed below do not utilize a chlorofluorocarbon propellant system.		
D4AZ 19530-A	Polish - (used for reconditioning exterior automotive finishes)	C0AZ 19A536-F	Engine shampoo (cleaner and degreaser) - - 55 gal. drum
C0AZ 19A536-D	Engine shampoo (cleaner and degreaser) - - 5 gal. drum	D8AZ 19A536-A	Automotive engine shampoo and degreaser-(for exterior use only) - - (12) 19 oz. aerosol spray cans

COPYRIGHT © 1986— FORD MOTOR COMPANY —DEARBORN, MICHIGAN

USED CAR RECONDITIONING MATERIALS

CANADIAN USAGE

PART NUMBER	DESCRIPTION	PART NUMBER	DESCRIPTION
CC9AZ 19000-A4L	Clear sheen – – (4) 4 litre containers	*CXC 157	Body filler–white – – (12) 1 litre cans–includes hardener
CC9AZ 19000-A	Clear sheen – – 1 gal. container	*CXC 164	Body filler–white – – (2) 7.26 kg cans–includes hardener
CC0AZ 19525-A	D-5 convertible top cleaner – – 1 qt. jug	CD6AZ 19A547-A	Body filler–white – – 1 qt.–includes hardener
D4AZ 19530-A	Polish – (used for reconditioning exterior automotive finishes)	CD6AZ 19A547-B	Body filler–white – – 1 gal.–includes hardener
CB9AA 19A537-A	Floor mat patches–8" x 12" tapered edges – – pkg. of 6	CE3AZ 19562-A	Super spot putty–red – – 3 lb. tin
CD5AZ 19A547-D	Body filler – red – – (4) 1 gal.	CB9CZ 7003105-A	Glass scratch remover kit–consists of – – (1) hydro grinding pad and scratch remover compound
*CXC 351	Cream hardener–114 gram tube		
*CXC 156	Body filler–white – – (4) 4 litre cans–includes hardener		

1973/79
LINCOLN-MERCURY CARS

YEAR	MODEL/RESTRICTIONS	PART NUMBER	DESCRIPTION	QTY.
1001	GASKET (REAR WHEEL)			
73/76	A,Y	D0AZ 1001-A	3 3/16" I.D.	2
73	D			2
75/	G - - w/rear disc brakes, 9" ring gear			2
78	A,D - - 9" ring gear "From 9/1/77"	D8AZ 1001-A	3 11/64" I.D. #2 white stripes	2
73/74	C	D30Z 1001-A	#White stripe-3 3/16" I.D.	2
74/	F			2
73	K			2
73	F	★ D00Z 1001-A	2 7/8" I.D.	2
73/74	P			2
75/	G - - w/o rear disc brakes, 8" ring gear			2
74/	L	E3TZ 1001-A	2 7/8" I.D.	2

YEAR	MODEL/RESTRICTIONS	TYPE NOTE 1	PART NUMBER	REMARKS	TIRES	WHEEL SIZE	NO. HOLES and BOLT CIRCLE	QTY.

1007 WHEEL ASSY.
P-Plain wheel, SS-Styled steel wheel, SA-Styled aluminum wheel, TSA-Turbine styled aluminum wheel
SW-"Road wheel"-"Barcelona"
Note 1 Shown at end of 1007 text

A (Mercury)

YEAR	MODEL/RESTRICTIONS	TYPE NOTE 1	PART NUMBER	REMARKS	TIRES	WHEEL SIZE	NO. HOLES and BOLT CIRCLE	QTY.
73	A(53,57,65-exc. P/C) - - w/o trailer towing pkg.	P 1-A	★ D3AZ 1007-D(3/81)	#W1	G78	15 x 5.00	5-5	5
75/75	A(53,65-exc. P/C)	P 1-A	★ D5AZ 1007-C(10/84)	#XA	H78	15 x 5.50	5-5	5
73/76	A(53,65)	P 1-A	D6AZ 1007-A	#YA,Y4,Y5	H,HR70, HR78,J78, JR78,230	15 x 6.00	5-5	5
	A(71-w/o auxiliary fuel tank and trailer towing pkg.)	P 1-A	D5AZ 1007-B	#ZM,ZN	J78,JR78, LR78,230	15 x 6.50	5-5	5
	A(P/C)				HR70,JR70, H78,HR78, J78,JR78, LR78			5
	A - - w/class III trailer towing pkg.				J78,JR78 LR78,225			5
75/76	A(71-w/auxiliary fuel tank and trailer towing pkg.)	P 1-A	★ D5AZ 1007-D(8/85)	#AK	LR78	15 x 6.50	5-5	5
76	A(53,65)	SA 6	D6SZ 1007-A	#AT	HR78,J78, JR78,LR78	15 x 6.00	5-5	4
77/78	A(53,60)	P 1-A	D6AZ 1007-A	#Y5	J78,HR78,	15 x 6.00 JR78	5-5	5
77	A(71)	P 1-A	D5AZ 1007-B	#ZM,ZN	J78,JR78, LR78	15 x 6.50	5-5	5
	A - - w/class III trailer towing pkg.							5
	A(P/C)	P 1-A	★ D5AZ 1007-D(8/85)	#AK	Police	15 x 6.50	5-5	5
	A(53,60)	SA 6	D6SZ 1007-A	#AT	HR78,JR78, LR78,230	15 x 6.00	5-5	4
78	A	P 1-A	D5AZ 1007-B	#ZM,ZN	J78,JR78	15 x 6.50	5-5	5
	A - - w/class III trailer towing pkg				J78,HR78, JR78,LR78			5
	A	P 1-A	★ D5AZ 1007-D(8/85)	#AK	Police	15 x 6.50	5-5	5
	A	P 1-A	★ D5AZ 1007-A /b D6AZ 1007-A(1/84)	YA,Y4,Y5	H78,J78,HR78, JR78,GR78	15 x 6.00	5-5	4
	A	SA 6	D6SZ 1007-A	#AT	J78,HR78, JR78,LR78	15 x 6.00	5-5	4

COPYRIGHT © 1986 — FORD MOTOR COMPANY — DEARBORN, MICHIGAN

1973/79 LINCOLN-MERCURY CARS

YEAR	MODEL/RESTRICTIONS	TYPE NOTE 1	PART NUMBER	REMARKS	TIRES	WHEEL SIZE	NO. HOLES and BOLT CIRCLE	QTY.
1007	WHEEL ASSY. — Cont'd P-Plain wheel, SS-Styled steel wheel, SA-Styled aluminum wheel, TSA-Turbine styled aluminum wheel SW-"Road wheel"-"Barcelona"							
Note 1	Shown at end of 1007 text							
	A (Mercury)							
79	A(53,65)	P 1-A	D9AZ 1007-A	#RL	FR78	14 x 5.50	5-4 1/2	5
	A	P 1-A	D80Z 1007-C	#GK	FR78,G78, GR78,HR78	14 x 6.00	5-4 1/2	5
	A(All)	P 1-A	D9AZ 1007-B	#JS	G78,GR78, HR78	14 x 6.50	5-4 1/2	5
	A(P/C)	P 1-A	D9AZ 1007-C	#JG	Police	15 x 6.50	5-4 1/2	5
	C (Montego)							
73	C(53,63,65-exc. P/C)	P 1-A	D50Z 1007-B	#P,PB	C78,E78, F78,G78	14 x 5.00	5-4 1/2	5
	C(71-exc. P/C)	P 1-A	D30Z 1007-A	#R,RD	H78,HR78	14 x 5.50	5-4 1/2	5
	C(53,63,65-exc. P/C)	P 1-A	★D60Z 1007-A r/bD80Z 1007-C (1/79)	#S,SB	F70,G70, H70	14 x 6.00	5-4 1/2	5
	C(exc. P/C)	SS 11	★D40Z 1007-A(10/84)	#HD-chrome plated rim	F70,G70, E78,F78, G78	14 x 7.00	5-4 1/2	5
	C(P/C)	P 1-A	★D5AZ 1007-A r/bD6AZ 1007-A(1/84)	#Y	G78	15 x 6.00	5-5	5
	C(P/C)	P 1-A	D5AZ 1007-B	#ZA	G78,H78	15 x 6.50	5-5	5
	C - - w/Magnum 500 wheels	11	★1007 Use S/S wheels					
74	C	P 1-A	D50Z 1007-B	#PB,ZB	F78,G78	14 x 5.00	5-4 1/2	5
	C	P 1-A	D30Z 1007-A	#RD	H78,HR78	14 x 5.50	5-4 1/2	5
	C	P 1-A	★D60Z 1007-A r/bD80Z 1007-C (1/79)	#SB	G70,H70	14 x 6.00	5-4 1/2	5
	C	SS 11	D40Z 1007-A	#HD-chrome plated rim	F70,G70, F78,G78	14 x 7.00	5-4 1/2	5
	C(P/C)	P 1-A	D5AZ 1007-B	#ZA	G78,H78	15 x 6.50	5-5	5
75/76	C(All)	P 1-A	D30Z 1007-A	#RD	G78,H78 HR78	14 x 5.50	5-4 1/2	5
	C(All)	P 1-A	★D60Z 1007-A r/bD80Z 1007-C (1/79)	#SC	G70,H70, HR70,G78, HR78,JR78	14 x 6.00	5-4 1/2	5
	C(53,65)	SS 11	★D4WY 1007-A r/bD70Z 1007-D(7/77)	#HE,HG	G70,H70, HR70,G78, H78,HR78	14 x 7.00	5-4 1/2	5
	C(P/C) (1975)	P 1-A	D5AZ 1007-B	#ZM,ZN	HR70,JR70, H78,HR78, J78,JR78, LR78	15 x 6.50	5-5	5
76	C(All)	P 1-A	★D60Z 1007-A r/bD80Z 1007-C (1/79)	#CZ	JR78,HR78, "C" Load Range	14 x 6.0	5-4 1/2	5
	C(P/C)	P 1-A	★D5AZ 1007-D(8/85)	#AK		15 x 6.50	5-5	5

YEAR	MODEL/RESTRICTIONS	TYPE NOTE 1	PART NUMBER	REMARKS	TIRES	WHEEL SIZE	NO. HOLES and BOLT CIRCLE	QTY.
1007	WHEEL ASSY. — Cont'd P–Plain wheel, SS–Styled steel wheel, SA–Styled aluminum wheel, TSA–Turbine styled aluminum wheel SW–"Road wheel"–"Barcelona"							
Note 1	Shown at end of 1007 text							

D (Lincoln)

73/76	D	P 1–A	★D5AZ 1007–A r/bD6AZ 1007–A(1/84)	#YA,Y4	KR78,LR78, 230,235R	15 x 6.00	5–5	5
	D	SA 12	D6LY 1007–A	#AC	LR78,KR78, 230–13	15 x 6.00	5–5	5
77	D	P 1–A	★D5AZ 1007–A r/bD6AZ 1007(1/84)	#YA,Y4	JR78,LR78 225,230	15 x 6.00	5–5	5
	D	SA 12	D6LY 1007–A	#AC	JR78,LR78 225,230	15 x 6.00	5–5	5
	D	TSA 9	D7LY 1007–A	–Argent #D7LC 1007–AWB	JR78,LR78, 225,230	15 x 6.00	5–5	5
78	D	P 1–A	★D5AZ 1007–A r/bD6AZ 1007–A(1/84)	#YA,Y4,Y5	JR78,LR78, 225,230	15 x 6.00	5–5	5
78	D	P 1–A	★D8LY 1007–H(9/83)	#XA	Spare	15 x 5.50	5–5	
	D	TSA 9	D7LY 1007–A	Argent #D7LC 1007–AWB	JR78,LR78, 225,230	15 x 6.00	5–5	5
	D "From 10/1/77"	TSA 9	D8LY 1007–F	#EW–Blue	JR78,LR78, 225,230	15 x 6.00	5–5	5
	D "From 10/1/77"	TSA 9	D8LY 1007–E	#EW–Gold	JR78,LR78, 225,230	15 x 6.00	5–5	5
	D	SA 12	★D8LY 1007–D r/bD9LY 1007–D(6/82)	#AC	JR78,LR78, 225,230	15 x 6.00	5–5	5
79	D	P 1–A	D5AZ 1007–A	#YA	JR78,LR78, 225,230	15 x 6.00	5–5	5
	D	TSA 9	D7LY 1007–A	Argent #D7LC 1007–AWB	JR78,LR78, 225,230	15 x 6.00	5–5	5
	D	TSA 9	D8LY 1007–E	#EW–(Gold)	JR78,LR78, 225,230	15 x 6.00	5–5	5
	D	TSA 9	D8LY 1007–F	#EW–(Blue)	JR78,LR78, 225,230	15 x 6.00	5–5	5
	D "Before 10/2/78"	SA 12	★D8LY 1007–D r/bD9LY 1007–D(6/82)	#AC	JR78,LR78, 225,230	15 x 6.00	5–5	5
	D "From 10/2/78"	SA 12	D9LY 1007–D	#AD	JR78,LR78, 225	15 x 6.00	5–5	4
	D	TSA 9	D9LY 1007–A	#EW–(Champagne)	JR78,LR78, 225,230	15 x 6.00	5–5	5
	D	TSA 9	D9LY 1007–B	#EW–(Dk. Blue)	JR78,LR78, 225,230	15 x 6.00	5–5	5
	D	TSA 9	★D9LY 1007–C (10/84)	#EW–(Amethyst)	JR78,LR78 225,230	15 x 6.00	5–5	5
	D	P 1–A	★D8LY 1007–H(9/83)	#XA	Spare	15 x 5.50	5–5	1

F (Cougar)

73	F	P 1–A	★D3ZZ 1007–A r/bD30Z 1007–A(10/78)	#F	F70,E78, F78	14 x 5.50	5–4 1/2	4
	F	P 1–A	D5DZ 1007–C	#N,NA,NC,SC	E78,F70, F78	14 x 6.00	5–4 1/2	5
	F	SS 2	★D0ZZ 1007–C(10/84)	#G,GA– painted Argent	E78,F70, F78	14 x 7.00	5–4 1/2	5
	F – – w/Magnum 500 wheels	11	★1007 Use SS wheels					

COPYRIGHT © 1986 — FORD MOTOR COMPANY — DEARBORN, MICHIGAN

1973/79 LINCOLN-MERCURY CARS

YEAR	MODEL/RESTRICTIONS	TYPE NOTE 1	PART NUMBER	REMARKS	TIRES	WHEEL SIZE	NO. HOLES and BOLT CIRCLE	QTY.
1007	WHEEL ASSY. — Cont'd P-Plain wheel, SS-Styled steel wheel, SA-Styled aluminum wheel, TSA-Turbine styled aluminum wheel SW-"Road wheel"-"Barcelona"							
Note 1	Shown at end of 1007 text							

F (Cougar)

74	F	P 1-A	D30Z 1007-A	#RD	G78,GR78, H78,HR78	14 x 5.50	5-4 1/2	5
	F.	SS 11	D70Z 1007-D	#HG-painted rim-use with 1210 trim ring	G78,H70, H78,HR78	14 x 7.00	5-4 1/2	5
75/76	F	P 1-A	★D60Z 1007-A r/bD80Z 1007-C (1/79)	#SC HR70,G78	G70,H70, HR7878,JR78	14 x 6.00	5-4 1/2	5
	F	SS 11	★D4WY 1007-A r/bD70Z 1007-D(7/77)	#HE,HG-painted rim-use with 1210 trim ring	G70,H70, HR70,G78, H78,HR78	14 x 7.00	5-4 1/2	5
76	F	TSA 10	★D6CZ 1007-A(9/83)	#AL	HR78,HR70	15 x 6.50	5-4 1/2	4
	F	P 1-A	DOLY 1007-A	#E1	Spare	15 x 6.00	5-4 1/2	1
77	F(53,65)	P 1-A	★D50Z 1007-B r/bD30Z 1007-A(6/77)	#ZB	H78,HR78	14-5.50	5-4 1/2	5
	F	P 1-A	D30Z 1007-A	#RD,JL	H7B,HR78	14 x 5.50	5-4 1/2	5
	F(53,65)	P 1-A	★D60Z 1007-A r/bD80Z 1007-C(1/79)	#CZ	JR78	14-6.00	5-4 1/2	5
	F(53,65)	SS 11	★D70Z 1007-D r/bD80Z 1007-D(11/77)	#HG	H78,HR78	14-7.00	5-4 1/2	5
	F(65L)	SW 16	D70Z 1007-L	#GG	HR70,HR78	15 x 6.00	5-4 1/2	4
	F(53,65)	P 1-A	DOLY 1007-A	#E1	HR,70,HR78	15 x 6.00	5-4 1/2	5
	F(53,65)	P 1-A	D40Z 1007-C	#FA	HR70	15 x 6.50	5-4 1/2	5
	F(53,65)	TSA 9	★D70Z 1007-F r/bD70Z 1007-K(5/78)	#D70A 1007-BA	HR78	15 x 6.50	5-4 1/2	4
	F(53,65)	TSA 10	D70Z 1007-G	#D70C 1007-FA	HR78-15	15 x 6.50	5-4 1/2	4
	F(53,65)	TSA 9	D70Z 1007-H	#D70C 1007-FWA(Gold) D80C 1007-EWB	HR70,HR78	15 x 6.50	5-4 1/2	4
	F(53,65)	TSA 9	D70Z 1007-J	#D70C 1007-FWA(Red) D80C 1007-EWB	HR70,HR78	15 x 6.50	5-4 1/2	4
	F(53,65)	TSA 9	D70Z 1007-K	#D70C 1007-FWA (Dark Argent) D80C 1007-EWB	HR70,HR78	15 x 6.50	5-4 1/2	4

YEAR	MODEL/RESTRICTIONS	TYPE NOTE 1	PART NUMBER	REMARKS	TIRES	WHEEL SIZE	NO. HOLES and BOLT CIRCLE	QTY.

1007 WHEEL ASSY. — Cont'd
P–Plain wheel, SS–Styled steel wheel, SA–Styled aluminum wheel, TSA–Turbine styled aluminum wheel
SW–"Road wheel"–"Barcelona"
Note 1 Shown at end of 1007 text

F (Cougar)

YEAR	MODEL/RESTRICTIONS	TYPE NOTE 1	PART NUMBER	REMARKS	TIRES	WHEEL SIZE	NO. HOLES and BOLT CIRCLE	QTY.
78	F(65L)	SW 16	D70Z 1007-L	#GG	HR70,HR78	15 x 6.00	5–4 1/2	4
	F(53,65)	P 1-A	D0LY 1007-A	#E1	HR70,HR78	15 x 6.00	5–4 1/2	5
	F(53,65)	P 1-A	D40Z 1007-C	#FA	HR70	15 x 6.50	5–4 1/2	5
	F	P 1-A	★D5AZ 1007-D(8/85)	#AK	Police	15 x 6.50	5–5	5
	F(53,65)	TSA 9	D70Z 1007-H	#D70C 1007-FWA (Gold) D80C 1007-EWB	HR70,HR78	15 x 6.50	5–4 1/2	4
	F(53,65)	TSA 9	D70Z 1007-J	#D70C 1007-FWA (Red) D80C 1007-EWB	HR73,HR78	15 x 6.50	5–4 1/2	4
	F(53,65)	TSA 9	D70Z 1007-K	#D70C 1007-FWA (DK Argent) D80C 1007-EWB	HR70,HR78	15 x 6.50	5–4 1/2	4
	F "From 3/1/78"	TSA 9	D80Z 1007-T	#D80C 1007-FWB (Dark argent)	HR70,HR78	15 x 6.50	5–4 1/2	4
	F	P 1-A	D30Z 1007-A	#RD,ZB,JL	G78,H78, HR78	14 x 5.50	5–4 1/2	5
	F(65)	SW 16	D8WY 1007-A	#GG Chamois	HR78	15 x 6.00	5–4 1/2	4
	F(53,65)	SS 11	D80Z 1007-D	#HG	H78,HR78	14 x 7.00	5–4 1/2	4
79	F(53,65)	P 1-A	D30Z 1007-A	#RD,ZB,JL	HR78	14 x 5.50	5–4 1/2	5
	F(53,65)	SS 11	D80Z 1007-D	#HG	HR78	14 x 7.00	5–4 1/2	5
	F(53,65)	P 1-A	D0LY 1007-A	#E1	HR78	15 x 6.00	5–4 1/2	5
	F(53,65)	P 1-A	D40Z 1007-C	#FA	HR70	15 x 6.50	5–4 1/2	5
	F(53,65)	P 1-A	★D5AZ 1007-D(8/85)	#AK	Police	15 x 6.50	5–5	5
	F(65L)	SW 16	D70Z 1007-L	#GG-(Argent)	GR78,HR78	15 x 6.00	5–4 1/2	4
	F(65L)	SW 16	D8WY 1007-A	#GG-(Chamois)	GR78,HR78	15 x 6.00	5–4 1/2	4
	F(53,65)	TSA 9	D70Z 1007-H	#D80C 1007-EWB-(Gold)	GR78,HR78	15 x 6.50	5–4 1/2	4
	F(53,65)	TSA 9	D70Z 1007-J	#D80C 1007-EWB-(Red)	GR78,HR78	15 x 6.50	5–4 1/2	4
	F(53,65)	TSA 9	D70Z 1007-K	#D80C 1007-EWB-(Dk. Argent)	GR78,HR78	15 x 6.50	5–4 1/2	4

COPYRIGHT © 1986 — FORD MOTOR COMPANY — DEARBORN, MICHIGAN

1973/79 LINCOLN-MERCURY CARS

YEAR	MODEL/RESTRICTIONS	TYPE NOTE 1	PART NUMBER	REMARKS	TIRES	WHEEL SIZE	NO. HOLES and BOLT CIRCLE	QTY.
1007	WHEEL ASSY. — Cont'd P-Plain wheel, SS-Styled steel wheel, SA-Styled aluminum wheel, TSA-Turbine styled aluminum wheel SW-"Road wheel"-"Barcelona"							
Note 1	Shown at end of 1007 text							

G (Monarch)

75/76	G	P 1-A	D4DZ 1007-C	#MB,WM	BR78,C78, CR78	14 x 4.50	5-4 1/2	5
	G	P 1-A	★D5DZ 1007-C r/bD7BZ 1007-A(5/78)	#NC,SC	DR70,C78, CR78,DR78, ER78,FR78	14 x 6.00	5-4 1/2	5
	G	SA 13	★D4DZ 1007-B(9/82)	#KA	DR70,CR78, DR78,E78, ER78,FR78	14 x 6.00	5-4 1/2	4
	G	SA 14	★D6DZ 1007-B r/bD8DZ 1007-A(6/81)	#Cast-laced design	BR78,DR78, E78,FR78	14 x 6.00	5-4 1/2	4
76	G	SA 14	★D6DZ 1007-B r/bD8DZ 1007-A(6/81)	#BZ-lace design	DR78,E78, ER78,FR78	14 x 6.00	5-4 1/2	4
	G	SS 11	D6DZ 1007-C	#MK,JY	BR-DR-E-FR78	14 x 6.00	5-4 1/2	4
	G	SS 11	★D6DZ 1007-D(8/85)	#SS- "Gold"	BR-DR-E FR78	14 x 6.00	5-4 1/2	4
77	G "Before 5/23/77"	P 1-A	★D5DZ 1007-C r/bD7BZ 1007-A(5/78)	#NC,SC	DR78, FR78,ER78	14 x 6.00	5-4 1/2	5
	G "Before 5/23/77"	P 1-A	★D5DZ 1007-C r/bD7BZ 1007-A(5/78)	#MC,SC	Spare	14 x 6.00	5-4 1/2	1
	G "From 5/23/77"	P 1-A	D7BZ 1007-A	#NR	C78,CR78 DR78,DR70	14 x 6.0	5-4 1/2	5
	G	SS 11	★D6DZ 1007-D(8/85)	#SX,GW	DR78,FR78,ER78	14 x 6.00	5-4 1/2	5
	G	SA 14	D7DZ 1007-A	#WP Cast	DR,ER,FR 78 white lacy	14 x 6.00	5-4 1/2	4
77/	G	SS 11	D6DZ 1007-C	#MK,JY	BR78,DR78, E78,FR78	14 x 6.00	5-4 1/2	4
	G	SA 14	D8DZ 1007-C	#WP Cast-white lacy	DR78,ER78, FR78	14 x 6.00	5-4 1/2	4
78/	G	P 1-A	D7BZ 1007-A	#NR	DR78,ER78, FR78	14 x 6.00	5-4 1/2	5
79	G	SS 11	D6DZ 1007-C	#MK,JY	DR78,ER78, FR78	14 x 6.00	5-4 1/2	4
	G	SA 14	D8DZ 1007-A	#BZ-lace design	DR78,ER78, FR78	14 x 6.00	5-4 1/2	5
	G	SA 14	D8DZ 1007-C	#WP-lace design(white)	DR78,ER78, FR78	14 x 6.00	5-4 1/2	5

J (Capri)

73/78	J	SS 22	D0RY 1007-C	Slot rect.-3/4" x 2"		13 x 5.00	4-4 1/4	5
74	J	SS 23	★D4RY 1007-A(6/83)	Slot sq.-1 11/32" x 1 27/32"		13 x 5.00	4-4 1/4	5
76/78	J(exc. 64S)	SA 24	★D5RY 1007-D(8/85)			13 x 5.50	4-4 1/4	4
	J(exc. 64S)	P 25	★D5RY 1007-E(3/84)			13 x 5.50	4-4 1/4	5
	J(64S)	SA 24	★D6RY 1007-A(10/84)	Gold and black		13 x 5.50	4-4 1/4	4
	J(64S)	SS 23	★D6RY 1007-B(10/84)	13 x SJ-Gold & black-slot sq.-1 11/32" x 1 27/32"		13 x 5.00	4-4 1/4	4

YEAR	MODEL/RESTRICTIONS	TYPE NOTE 1	PART NUMBER	REMARKS	TIRES	WHEEL SIZE	NO. HOLES and BOLT CIRCLE	QTY.
1007	WHEEL ASSY. — Cont'd P-Plain wheel, SS-Styled steel wheel, SA-Styled aluminum wheel, TSA-Turbine styled aluminum wheel SW-"Road wheel"-"Barcelona"							
Note 1	Shown at end of 1007 text							
	J (Capri)							
79	J	SS 4	D9ZZ 1007-A	#TS-Black	B78,C78	13 x 5.00	4-4 1/4	5
	J	SS 4	D9ZZ 1007-B	#TS-Argent	B78,C78	13 x 5.00	4-4 1/4	5
	J	SS 5	D9BZ 1007-B	#RV-Argent	B78,C78 CR78,CR70	14 x 5.50	4-4 1/4	5
	J	P 1	★D8BZ 1007-B r/bE2DZ 1007-A(12/81)	#MF	B78,CR78 CR70	14 x 5.00	4-4 1/4	5
	J	SA 15	D8BZ 1007-A	#D8BC 1007-CB	B78,CR78, CR70	14 x 5.50	4-4 1/4	5
	J - - Metric wheel	SA 3	★D9ZZ 1007-E r/bE0ZZ 1007-A(6/80)		195/65R 390 TRX	15 1/3 x 6.00	4-4 1/4	5
	K (Mark IV/V)							
73	K	P 1-A	★D5AZ 1007-A r/bD6AZ 1007-A(1/84)	#Y	LR78,225, 230	15 x 6.00	5-5	5
74	K	P 1-A	★D5AZ 1007-A r/bD6AZ 1007-A(1/84)	#Y	L78,LR78, 235R	15 x 6.00	5-5	5
75	K	P 1-A	★D5AZ 1007-A r/bD6AZ 1007-A(1/84)	#YA,Y4	LR78,230	15 x 6.00	5-5	5
	K	SA 12	★D5LY 1007-A(8/85)	#AM	LR78,230	15 x 6.00	5-5	4
76	K	P 1-A	★D5AZ 1007-A r/bD6AZ 1007-A(1/84)	#YA,Y4	KR78,LR78, 230	15 x 6.00	5-5	5
	K	SA 12	D6LY 1007-A	#AC	LR78,KR78, 230-15	15 x 6.00	5-5	4
	K	P 1-A	★D5AZ 1007-A r/bD6AZ 1007-A(1/84)	#YA,Y4	LR78,KR78, 230	15 x 6.00	5-5	5
77	K	P 1-A	★D5AZ 1007-A r/bD6AZ 1007-A(1/84)	#Y5	JR78,LR78, 225,230	15 x 6.00	5-5	5
	K	SA 12	D6LY 1007-A	#AC	JR78,LR78, 225,230	15 x 6.00	5-5	4
	K	TSA 9	D7LY 1007-A	Argent #D7LC 1007-AWB	JR78,LR78, 225,230	15 x 6.00	5-5	4
78	K	P 1-A	★D5AZ 1007-A r/bD6AZ 1007-A(1/84)	#YA,Y4,Y5	JR78,LR78, 225,230	15 x 6.00	5-5	5
	K	P 1-A	★D8LY 1007-H(9/83)	#XA	Spare	15 x. 5.50	5-5	1
	K	TSA 9	D7LY 1007-A	Argent #D7LC 1007-AWB	JR78,LR78, 225,230	15 x 6.00	5-5	4
	K "From 10/1/77"	TSA 9	D8LY 1007-F	#EW-Blue	JR78,LR78, 225,230	15 x 6.00	5-5	4
	K "From 10/1/77"	TSA 9	D8LY 1007-E	#EW-Gold	JR78,LR78, 225,230	15 x 6.00	5-5	4
	K	SA 12	★D8LY 1007-D ★D9LY 1007-D(8/85)	#AC	JR78,LR78, 225,230	15 x 6.00	5-5	4

COPYRIGHT © 1986 — FORD MOTOR COMPANY — DEARBORN, MICHIGAN

1973/79 LINCOLN-MERCURY CARS

YEAR	MODEL/RESTRICTIONS	TYPE NOTE 1	PART NUMBER	REMARKS	TIRES	WHEEL SIZE	NO. HOLES and BOLT CIRCLE	QTY.
1007	WHEEL ASSY. — Cont'd P–Plain wheel, SS–Styled steel wheel, SA–Styled aluminum wheel, TSA–Turbine styled aluminum wheel SW–"Road wheel"–"Barcelona"							
Note 1	Shown at end of 1007 text							
	K (Mark IV/V)							
79	K	P 1–A	★D5AZ 1007–A(1/84)	#YA	JR78,LR78, 225,230	15 x 6.00	5–5	5
	K	TSA 9	D7LY 1007–A	(Argent) #D7LC 1007–AWB	JR78,LR78, 225,230	15 x 6.00	5–5	5
	K	TSA 9	D8LY 1007–E	#EW–(Gold)	JR78,LR78, 225,230	15 x 6.00	5–5	5
	K	TSA 9	D8LY 1007–F	#EW–(Blue)	JR78,LR78, 225,230	15 x 6.00	5–5	5
	K "Before 10/2/78"	SA 12	★D8LY 1007–D r/bD9LY 1007–D(6/82)	#AC	JR78,LR78, 225,230	15 x 6.00	5–5	5
	K "From 10/2/78"	SA 12	★D9LY 1007–D(3/85)	#AD	JR78,LR78, 225	15 x 6.00	5–5	4
	K	TSA 9	D9LY 1007–A	#EW(Champagne)	JR78,LR78, 225,230	15 x 6.00	5–5	5
	K	TSA 9	D9LY 1007–B	#EW(Dk. Blue)	JR78,LR78, 225,230	15 x 6.00	5–5	5
	K	TSA 9	★D9LY 1007–C(10/84)	#EW(Amethyst)	JR78,LR78, 225,230	15 x 6.00	5–5	5
	K	P 1–A	★D8LY 1007–H(9/83)	#XA	Spare	15 x 5.50	5–5	1
	L (Bobcat)							
74	L(62,64)	P 1	D4FZ 1007–B	#AB	A78,6.00	13 x 4.00	4–4 1/4	4
	L	SA 13	★D4FZ 1007–A(9/83)	Black paint stripe	A70,A78, BR78	13 x 5.50	4–4 1/4	4
74/76	L	P 1	D5FZ 1007–A	#CB,DA,FC CM,RC	A70,BR70, A78,B78, BR78	13 x 5.00	4–4 1/4	5
	L	SS 8	D4ZZ 1007–A	#D,FC,PS (Silver)	A70,BR70, A78,B78, BR78	13 x 5.00	4–4 1/4	4
	L	SA 13	★D4FZ 1007–A(9/83)	#Forged–slotted design	BR70,CR70, DR70,BR78	13 x 5.50	4–4 1/4	4
76	L	P 1	★D6FZ 1007–C(3/84)	#AD	A78–13	13 x 4.00	4–4 1/4	5
	L	SA 13	★D6FZ 1007–A	#BB	B–BR78 BR–CR70, A78,195R	13 x 5.50	4–4 1/4	4
	L	SS 8	★D6YY 1007–A(6/82)	#PS,FC–(Gold)	A–BR70, A–B–BR78	13 x 5.00	4–4 1/4	4
77	L "Before 6/27/77"	P 1	D5FZ 1007–A	#CB,CM,DA,RC,	B78,BR78, BR70,A78	13 x 5.00	4–4 1/4	5
	L "Before 6/27/77"	SS 8	D4ZZ 1007–A	#D,FC,PS (Silver)	B78,BR78, BR70,A78	13 x 5.00	4–4 1/4	4
	L "Before 6/27/77"	SS 8	★D6YY 1007–A(6/82)	#PS,FC (Gold)	B78,BR78, BR70,A70, A78	13 x 5.00	4–4 1/4	4
	L "Before 6/27/77"	SA 13	★D6FZ 1007–A	#BB	B78,BR78, BR70,A78	13 x 5.50	4–4 1/4	4
	L "Before 6/27/77"	SS 8	D7YY 1007–A	#MH(White)	A70,B70,BR78	13 x 5.00	4–4 1/4	4

YEAR	MODEL/RESTRICTIONS	TYPE NOTE 1	PART NUMBER	REMARKS	TIRES	WHEEL SIZE	NO. HOLES and BOLT CIRCLE	QTY.
1007	WHEEL ASSY. — Cont'd P–Plain wheel, SS–Styled steel wheel, SA–Styled aluminum wheel, TSA–Turbine styled aluminum wheel SW–"Road wheel"–"Barcelona"							
Note 1	Shown at end of 1007 text							
	L (Bobcat)							
77/78	L "From 6/27/77"	P 1	D5FZ 1007–A	#GM	A78,B78, BR78,BR70	13 x 5.00	4–4 1/4	5
	L "From 6/27/77"	SS 8	D4ZZ 1007–A	#MH–Silver	A78,B78, BR78,BR70	13 x 5.00	4–4 1/4	4
	L "From 6/27/77"	SS 8	D7YY 1007–A	#MH–White	A78,B78, BR78,BR70	13 x 5.00	4–4 1/4	4
	L "From 6/27/77 & Before 8/1/77"	SA 13	D6FZ 1007–A	#BB	A78,B78,	13 x 5.50 BR78,BR70	4–4 1/4	4
	L "From 8/1/77"	SA 13	D8FZ 1007–C	#SH Black stripe	B78,BR78,BR70, CR70,195/70R	13 x 5.50	4–4 1/4	4
	L "From 6/27/77"	SA 13	D8FZ 1007–B	#RW–white w/red stripe	A78,B78, BR78,BR70	13 x 5.50	4–4 1/4	4
79	L(All)	P 1	D5FZ 1007–A	#GM	A78,B78, BR78,BR70	13 x 5.00	4–4 1/4	5
	L(All)	SS 8	D4ZZ 1007–A	#MH(Argent)	A78,B78 BR78,BR70	13 x 5.00	4–4 1/4	5
	L(All)	SS 8	D7YY 1007–A	#MH(White)	A78,B78, BR78,BR70	13 x 5.00	4–4 1/4	5
	L(All) "Before 10/2/78"	SA 13	D8FZ 1007–C	#SH	A78,A70,B78 Black stripe	13 x 5.50 BR78,B70	4–4 1/4	5
	L(All) "From 10/2/78"	SA 13	★ D9FZ 1007–B	#SH Black stripe	A78,A70,B78, BR78,B70	13 x 5.50	4–4 1/4	5
	L(All)	SA 7	★ D9FZ 1007–A	#CS–Lace design	BR70,CR70, BR78,B78, 195/70R	13 x 5.50	4–4 1/4	4
	L(All)	SA 13	D8FZ 1007–B	#RW(White) Red stripe	A78,A70,B78 BR78,B70	13 x 5.50	4–4 1/4	5
	P (Comet)							
73	P	P 1–A	★ D0DZ 1007–D(6/82)	#M,MA	C78,6.45, 185	14 x 4.50	5–4 1/2	5
	P(6 cyl. 250 and 8 cyl.) – exc. Calif.	P 1–A	★ D3ZZ 1007–A r/b D30Z 1007–A(10/78)	#F	ER70	14 x 5.50	5–4 1/2	4
	P	P 1–A	★ D0DZ 1007–B r/b D5DZ 1007–C(10/77)	#N,NA	D70,D78, 185	14 x 6.00	5–4 1/2	5
	P	SA 13	★ D3ZZ 1007–B(6/82)	#K	D70,DR78, 185	14 x 6.00	5–4 1/2	4
74	P	P 1–A	D4DZ 1007–C	#MB,MW	C78,D78, 6.45	14 x 4.50	5–4 1/2	5
	P	P 1–A	★ D4DZ 1007–A r/b D7BZ 1007–A(5/78)	#NB	ER70,DR78, ER78,185	14 x 6.00	5–4 1/2	5
	P	SA 13	★ D4DZ 1007–B(9/82)	#KA	ER70,C78, DR78,ER78, 185	14 x 6.00	5–4 1/2	4
75/76	P	P 1–A	D4DZ 1007–C	#MB,MW	BR78,C78, CR78	14 x 4.50	5–4 1/2	5
	P	P 1–A	★ D5DZ 1007–A r/b D7BZ 1007–A(5/78)	#NC	DR70,CR78, DR78,ER78, FR78	14 x 6.00	5–4 1/2	4
	P	SA 13	★ D4DZ 1007–B(9/82)	#KA	DR70,CR78, DR78,E78, ER78,FR78	14 x 6.00	5–4 1/2	4
	P "Before 11/17/75"	SS 11	★ D54Y 1007–A r/b D6DZ 1007–C(12/77)	#MI	CR78,DR78, DR70	14 x 6.00	5–4 1/2	4

COPYRIGHT © 1986 — FORD MOTOR COMPANY — DEARBORN, MICHIGAN

1973/79 LINCOLN-MERCURY CARS

YEAR	MODEL/RESTRICTIONS	TYPE NOTE 1	PART NUMBER	REMARKS	TIRES	WHEEL SIZE	NO. HOLES and BOLT CIRCLE	QTY.
1007	WHEEL ASSY. — Cont'd P–Plain wheel, SS–Styled steel wheel, SA–Styled aluminum wheel, TSA–Turbine styled aluminum wheel SW–"Road wheel"–"Barcelona"							
Note 1	Shown at end of 1007 text							
	P (Comet)							
76	P	SA 13	★D6BZ 1007-A(2/80)	#KA	C78,CR78, DR78	14 x 6.00	5-4 1/2	4
	P	P 1-A	★D5DZ 1007-C /bD7BZ 1007-A(5/78)	#NC,SC	DR70,C78, CR78,DR78	14 x 6.00	5-4 1/2	5
	P "From 11/17/75"	SS 11	D6DZ 1007-C	#MK,JY	DR70,C78, CR78,DR78	14 x 6.00	5-4 1/2	5
77	P "Before 5/23/77"	P 1-A	★D5DZ 1007-C /bD7BZ 1007-A(5/78)	NC,SC,NB	Spare	14 x 6.00	5-4 1/2	1
	P "Before 5/23/77"	P 1-A	★D5DZ 1007-C /bD7BZ 1007-A(5/78)	#NC,SC	CR78,DR78, DR70	14 x 6.00	5-4 1/2	5
	P "From 5/23/77"	P 1-A	D7BZ 1007-A	#NR	C78,CR78 DR78,DR70	14 x 6.00	5-4 1/2	5
	P "From 5/23/77"	P 1-A	D7BZ 1007-A	#NR	SPARE	14 x 6.00	5-4 1/2	1
	P	P 1-A	D4DZ 1007-C	#MB,MW	C78	14 x 4.50	5-4 1/2	5
	P	SS 11	D6DZ 1007-C	#MK,JY	DR70,C, CR,DR78	14 x 6.00	5-4 1/2	4
	P (Zephyr)							
78	P	P 1	★D8BZ 1007-B /bE2DZ 1007-A(12/81)	#MF	B78,BR78,C78, CR78,DR78	14 x 5.00	4-4 1/4	5
	P - - 4 cyl. 2.3 litre w/handling pkg.	P 1	★D8BZ 1007-D /bD8BZ 1007-E(10/78)	#WN	CR78,DR78	14 x 5.50	4-4 1/4	5
	P - - P/C & Taxi	P 1	D8BZ 1007-E	#WN	CR78,DR78	14 x 5.50	4-4 1/4	5
	P	SA 15	D8BZ 1007-A	D8BC 1007-CB	B78,BR78,C78, CR78,DR78	14 x 5.50	4-4 1/4	4
79	P	P 1	★D8BZ 1007-E /bD9BZ 1007-A(7/79)	#WN	B78,BR78, CR78,DR78	14 x 5.50	4-4 1/4	5
	P(P/C, Taxi)	P 1	★D9BZ 1007-A /bE0BZ 1007-B(9/79)	#OH	CR78,DR78	14 x 5.50	4-4 1/4	5
	P	P 1	★D8BZ 1007-B /bE2DZ 1007-A(12/81)	#MF	CR78,DR78	14 x 5.00	4-4 1/4	5
	P	SS 5	D9BZ 1007-B	#RV(Argent)	B78,BR78, C78,CR78	14 x 5.50	4-4 1/4	5
	P	SA 15	D8BZ 1007-A	#D8BC 1007-CB	CR78,DR78	14 x 5.50	4-4 1/4	5
	V (Versailles)							
77	V	SA 6	D74Y 1007-A	#MM	FR78	14 x 6.00	5-4 1/2	4
	V "Before 5/23/77"	P 1-A	D5DZ 1007-C	#NC,SC	Spare	14 x 6.00	5-4 1/2	1
	V "From 5/23/77"	P 1-A	D7BZ 1007-A	#NR	Spare	14 x 6.0	5-4 1/2	1
78	V	P 1-A	D7BZ 1007-A	#NR	Spare	14 x 6.00	5-4 1/2	1
	V "Before 11/1/77"	SA 6	★D84Y 1007-B(9/83)	#MM	FR78	14 x 6.00	5-4 1/2	4
	V "From 11/1/77"	SA 6	D84Y 1007-A	#MM	FR78	14 x 6.00	5-4 1/2	4

YEAR	MODEL/RESTRICTIONS	TYPE NOTE 1	PART NUMBER	REMARKS	TIRES	WHEEL SIZE	NO. HOLES and BOLT CIRCLE	QTY.
1007	WHEEL ASSY. — Cont'd P–Plain wheel, SS–Styled steel wheel, SA–Styled aluminum wheel, TSA–Turbine styled aluminum wheel SW–"Road wheel"–"Barcelona"							
Note 1	Shown at end of 1007 text							

V (Versailles)

79	V	P 1–A	D7BZ 1007–A	#NR	Spare	14 x 6.00	5–4 1/2	1
	V	SA 6	★ D84Y 1007–A r/bE04Y 1007–A(10/79)	#MM	FR78	14 x 6.00	5–4 1/2	5

Y (Meteor)

73	Y(53,57,65–exc. P/C) – – w/o trailer towing pkg.	P 1–A	D3AZ 1007–D	#W1	G78	15 x 5.00	5–5	5
	Y(53,57,65–exc. P/C) – – w/o trailer towing pkg.	P 1–A	★ D5AZ 1007–C(10/84)	#X1	H78,J78	15 x 5.50	5–5	5
	Y	P 1–A	★ D5AZ 1007–A r/bD6AZ 1007–A(1/84)	#Y	HR78,J78, JR78,225	15 x 6.00	5–5	5
	Y(P/C) Y(71) Y – – w/trailer towing pkg.	P 1–A	D5AZ 1007–B	#ZA	J78 J78,JR78, 225 L78	15 x 6.50	5–5	5 5 5
74	Y(53,57,65–exc. P/C)	P 1–A	★ D5AZ 1007–C(10/84)	#X	H78,J78	15 x 5.50	5–5	5
	Y	P 1–A	★ D5AZ 1007–A r/bD6AZ 1007–A(1/84)	#Y	HR78,JR78, 225	15 x 6.00	5–5	5
	Y(71) Y(P/C) Y – – w/class III trailer towing pkg.	P 1–A	D5AZ 1007–B	#ZA	J78,JR78, L78,LR78, 225 J78 J78,JR78, L78,LR78, 225	15 x 6.50	5–5	5 5 5
75/76	Y(53,65–exc. P/C)	P 1–A	★ D5AZ 1007–C(10/84)	#XA	H78	15 x 5.50	5–5	5
	Y(53,65) "Before 12/1/75"	P 1–A	★ D5AZ 1007–A r/bD6AZ 1007–A(1/84)	#YA,Y4	HR70,HR78, J78,JR78, 230	15 x 6.00	5–5	5
	Y(71–w/o auxiliary fuel tank and trailer towing pkg.) Y(P/C)	P 1–A	D5AZ 1007–B	#ZM,ZN	J78,JR78, LR78,230 HR70,JR70, H78,HR78, J78,JR78, LR78	15 x 6.50	5–5	5
	Y(71–w/auxiliary fuel tank and trailer towing pkg.)	P 1–A	★ D5AZ 1007–D(8/85)	#AK	LR78	15 x 6.50	5–5	5
76	Y(53,65)	SA 12	D6SZ 1007–A	#AT	HR78,J78, JR78,LR78	15 x 6.00	5–5	4
	Y(53,65) "From 12/1/75"	P 1–A	D6AZ 1007–A	#Y5	H15,HR15, J15,JR15	15 x 6.00	5–5	5

COPYRIGHT © 1986 — FORD MOTOR COMPANY — DEARBORN, MICHIGAN

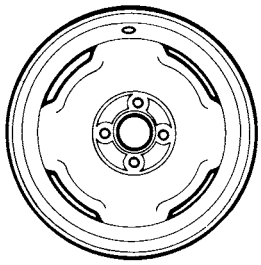
TYPE 1

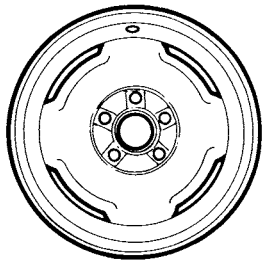
TYPE 1A

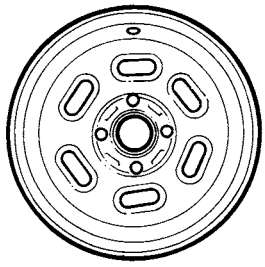
TYPE 2

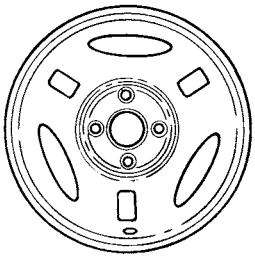
TYPE 3

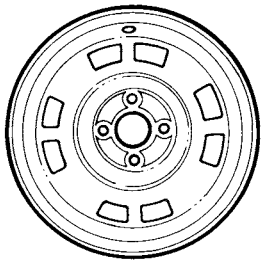
TYPE 4

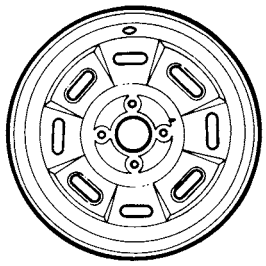
TYPE 5

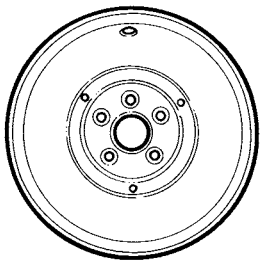
TYPE 6

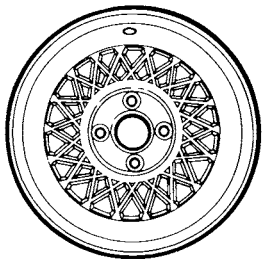
TYPE 7

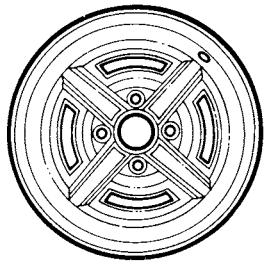
TYPE 8

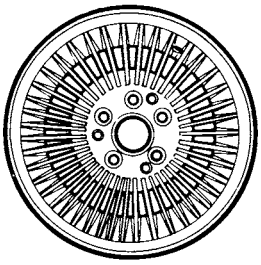
TYPE 9

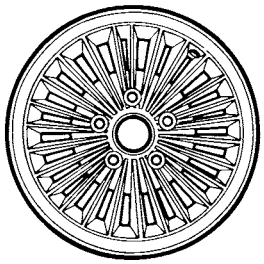
TYPE 10

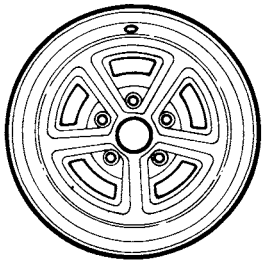
TYPE 11

P-15167

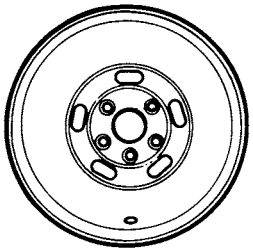
TYPE 12

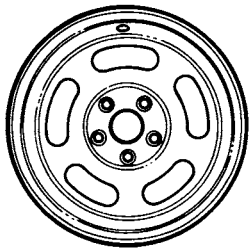
TYPE 13

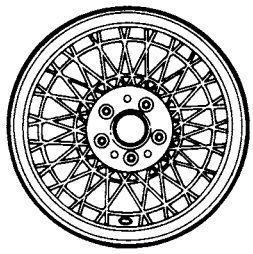
TYPE 14

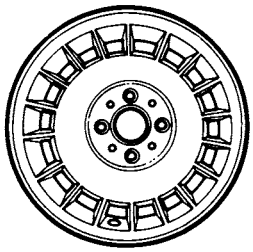
TYPE 15

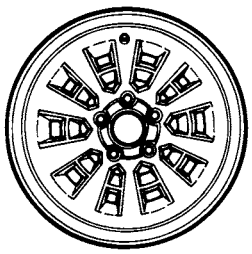
TYPE 16

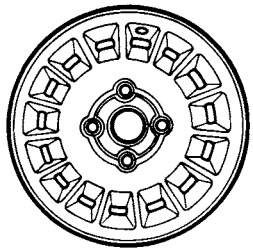
TYPE 17

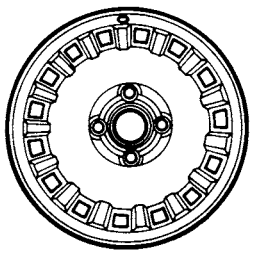
TYPE 18

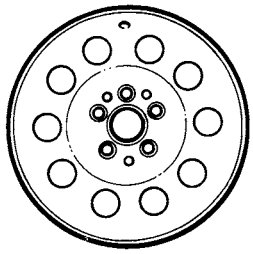
TYPE 19

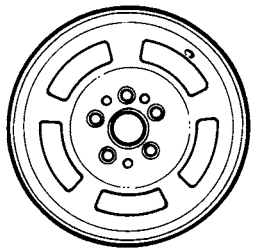
TYPE 20

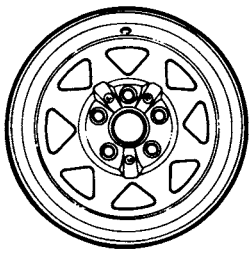
TYPE 21

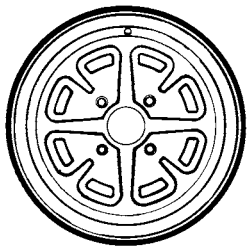
TYPE 22

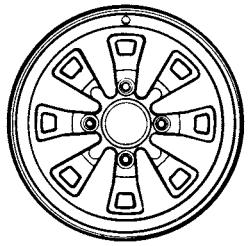
TYPE 23

P-15168

COPYRIGHT © 1986 — FORD MOTOR COMPANY — DEARBORN, MICHIGAN

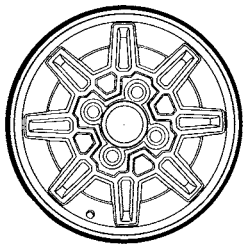

TYPE 24

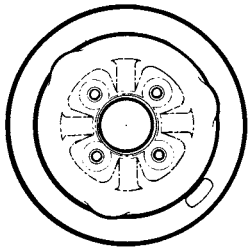

TYPE 25

P-15208

YEAR	MODEL/RESTRICTIONS	PART NUMBER	DESCRIPTION	QTY.
1K007	WHEEL KIT (MINI-SPARE)			
79	A - - exc. traction lockaxle	D9AZ 1K007-B		1
	Consists of			
	1-E0AC 1A479-BA Decal	1-E0AC 1007-CA	Wheel assy. 1-E0AC 1A479-AA Decal	
		1-D5AA 1700-AA	Valve & cap assy.	
1011	CAP (WHEEL NUT)			
76/78	J(64S) - - w/styled steel wheels	★ D6RY 1011-B(8/85)	Black-use w/D6RY 1012-A nut	16
79	J	D9ZZ 1011-B		16
1012	NUT (WHEEL HUB BOLT)			
73/76	A,C,D,F,G,K,L,P,Y - - w/plain wheels	C0AZ 1012-A	1/2"-20-open-zinc plate	20
77/	A,D,F,G,K,L,P,V - - w/plain wheels			20
76	A,Y - - w/aluminum wheels	D4FZ 1012-A	1/2"-20 x 1 1/2"-blind chrome	20
77/	A - - w/aluminum wheels			20
73	C - - w/styled steel wheels	D4FZ 1012-A	1/2"-20 x 1 1/2"-blind chrome	20
75	C - - w/aluminum wheels	D4FZ 1012-A	1/2"-20 x 1 1/2"-blind chrome	20
75/76	C - - w/styled steel wheels	D60Z 1012-A	1/2"-20 x 1 11/32"-blind steel capped	AR
75/	D - - w/aluminum wheels	D5LY 1012-A	1/2"-20 x 1"-open zinc plate	20
73	F - - w/styled steel wheels	D00Z 1012-A	1/2"-20 x 2 1/4"-blind chrome	20
74/75	F - - w/styled steel wheels	D4FZ 1012-A	1/2"-20 x 1 1/2"-blind chrome	20
74/	F - - w/aluminum wheels	D4FZ 1012-A	1/2"-20 x 1 1/2"-blind chrome	20
75/	F - - w/styled steel wheels	D60Z 1012-A	1/2"-20 x 1 11/32"-blind steel capped	AR
77/	F - - w/styled road or Barcelona wheel	D70Z 1012-A	1/2" - 20 x 2" - blind chrome	AR
75/	G - - w/aluminum wheels	D00Z 1012-A	1/2"-20 x 2 1/4"-blind chrome	20
75/	G - - w/aluminum wheels	D4FZ 1012-A	1/2"-20 x 1 1/2"-blind chrome	20
76/	G - - w/styled steel wheels	D60Z 1012-A	1/2"-20 x 1 11/32"-blind steel capped	AR
73/74	J - - w/styled steel wheels	D0RY 1012-A	7/16"-20 x 1 5/16"-blind chrome	16
73/78	J - - w/plain wheels	D3RY 1012-A	7/16"-20 x 9/16"	16
76/78	J - - w/aluminum wheels	D5RY 1012-A	M12 x 1.5 x 6H -w/mounting washer	16
76	J(exc. 64S) - - w/styled steel wheels "Before 7/1/76"	D5RY 1012-B	M12 x 1.5 x 6H	AR
76/78	J(64S) - - w/styled steel wheels	D6RY 1012-A	M12 x 1.5 x 6H-use with D6RY 1011-B cap	16
	J(exc. 64S) - - w/styled steel wheels "From 7/1/76"	D6RY 1012-C	M12 x 1.5 x 6H	16
79	J - - w/TRX wheel	D70Z 1012-A	1/2"-20 x 2" blind chrome	16
79	J,P - - w/styled steel wheels	D9ZZ 1012-A	1/2"-20 x 1 1/16"open-zinc plate-grooved	16
79	J - - w/plain wheels	C0AZ 1012-A	1/2"-20-open-zinc plate	16
75/	K - - w/aluminum wheels	D5LY 1012-A	1/2"-20 x 1"-open-zinc plate	20
	L - - w/aluminum wheels	D4FZ 1012-A	1/2"-20 x 1 1/2"-blind chrome	16
75/	L - - w/styled steel wheels	D60Z 1012-A	1/2"-20 x 1 11/32"-blind steel capped	AR
73/76	P - - w/aluminum wheels	D00Z 1012-A	1/2"-20 x 2 1/4"-blind-chrome	20
75/	P - - w/styled steel wheels	D60Z 1012-A	1/2"-20 x 1 11/32"-blind steel capped	AR
78/79	P - - w/aluminum wheels "Before 3/12/79"	D70Z 1012-A	1/2"-20 x 2" -blind chrome	16
79	P - - w/aluminum wheels "From 3/12/79"	D4FZ 1012-A	1/2"-20 x 1 1/2"-blind chrome	AR
78/	P - - w/plain wheels & turbine style wheel covers	D4FZ 1012-A	1/2"-20 x 1 1/2"-blind chrome	AR
77/	V	D5LY 1012-A	1/2" - 20 x 1 1/2" - blind chrome	AR
1040	WEIGHT (WHEEL BALANCE)-Available from Rotunda equipment			

1A043	WHEEL NUT KIT (ANTI-THEFT)			
79/	ALL-w/aluminum wheel exc. TRX wheel	E2AZ 1A043-A		AR
	Consists of			
	4-E1ZC 1012-AA Wheel nuts		1- Registration card	
	1-E2AJ 1K024-AA Nut adapter		1- Installation sketch	
79/	J - - w/TRX wheels	E2ZZ 1A043-A		
	Consists of			
	4-E1ZC 1012-BA Wheel nuts		1- Registration card	
	1-E2AJ 1K024-AA Nut adapter		1- Installation sketch	

COPYRIGHT © 1986 — FORD MOTOR COMPANY — DEARBORN, MICHIGAN

1973/79 LINCOLN-MERCURY CARS

YEAR	MODEL/RESTRICTIONS	PART NUMBER	DESCRIPTION	QTY.
1A100	ANCHOR (WHEEL ORNAMENT SCREW)			
76	A,G,L,P,Y - - w/aluminum wheels	D6FZ 1A100-A		AR
77/	A,G,L,P - - w/aluminum wheel			AR
78	D,K - - w/aluminum wheels			AR
76/	D - - w/aluminum wheels	D7TZ 1A100-A		12
75/	K - - w/aluminum wheels	D7TZ 1A100-A		12
77/	V - - w/aluminum wheel	D74Y 1A100-A		AR
1102	HUB and BRAKE DRUM (FRONT WHEEL)-Also refer to 1102 Hub and Rotor NOTE 1-Includes D0AZ 1202-A and D0AZ 1217-A cups, NOTE 2-Includes D4AZ 1202-A and D0AZ 1217-A cups			
73	P - - 10" x 2 1/2" brakes- "Before 12/4/72"	D00Z 1102-A	Flared-80 ribs-2 7/16" drum center hole- 12 7/16" O.D.-NOTE 1	2
73	P - - 10" x 2 1/2" brakes- "From 12/4/72"	D3ZZ 1102-A	Non-flared-80 ribs-2 7/16" drum center hole- 11 11/16" O.D.-NOTE 1	2
74/75	P - - 10" x 2 1/2" brakes	★ D4DZ 1102-B(1/83)	Non-flared-80 ribs-2 3/4" drum center hole- 11 11/16" O.D.-NOTE 1	2
73/75	P	★ 383842-S100	Pin-cotter-1/8" x 1 3/16"-improvise	2
73/75	P	383840-S100	(MM-38-G)-nut (spindle)-hex.-13/16"-20	2
73/75	P	383841-S	(MM-304-B)-retainer (locknut)-13/16" I.D.	2
	J	374502-GS		
1102	HUB and ROTOR (FRONT WHEEL DISC BRAKE)-Also refer to 1102 Hub and Brake Drum NOTE 1-Includes D0AZ 1202-A and D0AZ 1217-A cups, NOTE 2-Includes D4AZ 1202-A and D0AZ 1217-A cups NOTE 3-Includes D8BZ 1202-A and D0AZ 1217-A cups			
73	A	★ D3AZ 1102-A(8/85)	11 13/16" dia. rotor-NOTE 1	2
74/76	A,Y	D6MY 1102-A	#D6AA 1106-AA or KH-98561-11 13/16" dia. rotor-NOTE 2	2
77/78	A			2
79	A	D9AZ 1102-A	◊#D9AC 1K002-AA - 11" dia. rotor	2
73	C - - w/14" wheels	★ D20Z 1102-A(10/84)	10 3/4" dia. rotor-NOTE 1	2
73	C - - w/15" wheels	★ D3AZ 1102-A(8/85)	11 13/16" dia. rotor-NOTE 1	2
74/76	C - - 4 1/2" bolt circle	D60Z 1102-A	#D60A 1106-AA-10 3/4" dia. rotor-NOTE 2	2
74/76	C - - 5" bolt circle	D6MY 1102-A	#D6AA 1106-AA or KH-98561-11 13/16" dia. rotor-NOTE 2	2
73	D	D3AZ 1102-A	11 13/16" dia. rotor-NOTE 1	2
74/	D	★ D6SZ 1102-A r/bD6MY 1102-A(12/82)	#D6AA 1106-AA or KH-98561-11 13/16" dia. rotor-NOTE 2	2
73	F	★ D00Z 1102-B r/bD00Z 1102-C	11 5/16" dia. rotor-NOTE 1	2
74/	F - - 4 1/2" bolt circle	D60Z 1102-A	#D60A 1106-AA-10 3/4" dia. rotor-NOTE 2	2
76/	F - - 5" bolt circle	D6MY 1102-A	#D6AA 1106-AA or KA-98561-11 13/16" dia. rotor-NOTE 2	2
75/78	G "Before 1/3/78"	D8DZ 1102-A	#D6DA 1106-AB-11" dia. rotor-NOTE 1	
78/	G "From 1/3/78"	D8DZ 1102-A	11" dia. rotor -Note 1	2
79	J - - 2.3L, 2.8L & 3.3L	D9ZZ 1102-A	●9.3" dia. rotor	2
	J - - 5.0L engine	D8BZ 1102-A	●#D8BC 1K002-AA or D9BC 1K002-AB- 10" dia. rotor	2
73	K	★ D3AZ 1102-A(8/85)	11 13/16" dia. rotor-NOTE 1	2
74/	K	★ D6SZ 1102-A r/bD6MY 1102-A(12/82)	#D6AA 1106-AA or KA-98561-11 13/16" dia. rotor-NOTE 2	2
74/	L	D4FZ 1102-A	#D6EA 1106-AA-9 5/16" dia. rotor-NOTE 1	2
74/77	P	D8DZ 1102-A	#D6DA 1106-AB-11" dia. rotor-NOTE 1	2
78/	P	D8BZ 1102-A	#D8BC 1K002-AA or D9BC 1K002-AB- 10" dia. rotor - NOTE 3	2
77/	V	★ D4DZ 1102-A r/bD8DZ 1102-A	#D6DA 1106-AB-11" dia rotor - NOTE 1	2
73	Y	★ D3AZ 1102-A(8/85)	11 13/16" dia. rotor-NOTE 1	2
73	A,C,D,F,K,L,Y	★ 383842-S100	Pin-cotter-1/8" x 1 3/16"-improvise	2
74	A,C,D,F,K,L,P,Y	72054-S	(N-61)-pin-cotter-5/32" x 1 1/4"	2
73/	A,C,D,F,G,K,L,V,Y	383840-S100	(MM-38-G)-nut (spindle)-hex.-13/16" -20	2
78/	P			2
73	A,C,D,F,K,L,Y	383841-S	(MM-304-B)-retainer (locknut)-13/16" I.D.	2
74/	A,C,D,F,K,L,P,Y	385630-S5	(MM-304-AH)-retainer (locknut)-3/4" I.D. #copper color	2
73/	J	374502-GS		
1A103	PIN (HUB CAP RETENTION)			
77/	D,K - - w/aluminum wheels	D7LY 1A103-B	Approx. 1 11/32" long	AR

YEAR	MODEL/RESTRICTIONS	PART NUMBER	DESCRIPTION	QTY.
1104	HUB (FRONT WHEEL)			
73/74	J	★ D3RY 1104-A(6/82)		2
76/78	J	★ D5RY 1104-A ★ D5RY 1104-B (8/85)		2

YEAR	MODEL/RESTRICTIONS	LOCATION	PART NUMBER	DESCRIPTION	QTY.
1107	BOLT (WHEEL HUB) When more than one hub bolt replacement is necessary on vehicles equipped with two piece design rotor, the complete hub and rotor assy. must be replaced. Hub bolts may be replaced as necessary on vehicles equipped with unicast design rotor. ⊕ F-Front, R-Rear				
73/76 73	A,D,K,Y - - disc brakes C - - disc brakes- "Before 3/1/76"	F	D3AZ 1107-A	1/2"-20 x 2 3/16"	AR AR
76/	A,C,D,F,K,Y - - disc brakes "From 3/1/76"	F	D6AZ 1107-C	1/2"-20 x 2"	AR
76 77	A,D,G,K,Y - - disc brakes A,D,G,K,V - - disc brakes	R	D6AZ 1107-B	1/2"-20 x 1 13/16"	AR AR
73/75	A,C,D,F,K,Y - - w/5" dia. bolt circle wheel	R	D3AZ 1107-C	1/2"-20 x 1 1/2"	AR
76 77/	A,C,D,F,G,K,L,P,Y - - drum brakes A,D,F,G,K,L,P,Y - - drum brakes	R	D6AZ 1107-A	1/2"-20 x 1 9/16"	AR AR
75/76 77	A,Y - - w/four wheel disc brakes A - - w/four wheel disc brakes	R	D6AZ 1107-B	1/2"-20 x 1 13/16"-#lavendar	AR AR
73/74 73/74	C - - w/4 1/2" dia. bolt circle wheel F	R	A9AZ 1107-B	1/2"-20 x 1 5/8"	AR AR
74/76	C,F - - disc brakes- "Before 3/1/76"	F	D4FZ 1107-A	1/2"-20 x 2"	AR
75/	D - - four wheel disc brakes	R	D6AZ 1107-B	1/2"-20 x 1 13/16"-#lavender	AR
73	F - - disc brakes	F	★▲C9AZ 1107-A	1/2"-20 x 1 13/16" r/b D3TZ 1107-A(5/78)	1
75/76	G - - disc brakes "Before 6/1/76"	F	D4FZ 1107-A	1/2"-20 x 2"	AR
76/	G,V - - disc brakes "From 6/1/76"	F	★ D6DZ 1107-A	1/2"-20 x 1 7/8"-r/b E3TZ 1107-A (6/83)	AR
75	G - - rear drum brakes	R	D3AZ 1107-C	1/2"-20 x 1 1/2"	AR
75/	G,V - - rear disc brakes	R	D6AZ 1107-B	1/2"-20 x 1 13/16"-#lavender	AR
73/74	J	F	D3RY 1107-A	7/16"-20 x 1 3/16"	AR
73/74 76/78	J J - - 8" brakes	R R	D0RY 1107-C	7/16"-20 x 1 7/16" 7/16"-20 x 1 7/16"	AR AR
76/78	J	F	D5RY 1107-C		8
76/78	J	R	★ D5RY 1107-B	R/b D6RY 1107-A(5/79)	8
79	J	F	D6DZ 1107-A	1/2"-20 x 1 7/8"	AR
79	J	R	D6AZ 1107-A	1/2"-20 x 1 9/16"	AR
75/	K	R	D6AZ 1107-B	1/2"-20 x 1 13/16"-#lavender	AR
74/76	L - - disc brakes "Before 6/1/76"	F	D4FZ 1107-A	1/2"-20 x 2"	AR
76/	L - - disc brakes "From 6/1/76"	F	★ D6DZ 1107-A	1/2"-20 x 1 7/8"-r/b E3TZ 1107-A (6/83)	AR
74/75	L	R	D3AZ 1107-C	1/2"-20 x 1 1/2"	AR
73	P - - drum brakes	F	C30Z 1107-A	1/2"-20 x 1 9/16"	AR
73	P	R	A9AZ 1107-B	1/2"-20 x 1 5/8"	AR
74/75	P - - drum brakes	F	★ D4DZ 1107-A(3/81)	#B-1/2"-20 x 1 3/4"	AR
74/76	P - - disc brakes "Before 6/1/76"	F	D4FZ 1107-A	1/2"-20 x 2"	AR
76/	P - - disc brakes "From 6/1/76"	F	★ D6DZ 1107-A	1/2"-20 x 1 7/8"-r/b E3TZ 1107-A (6/83)	AR
74/75	P	R	D3AZ 1107-C	1/2"-20 x 1 1/2"	AR
78/	P - - drum brake	R	D6AZ 1107-A	1/2"-20 x 1 9/16"	AR
77/	V - - disc brakes	F	★ D6DZ 1107-A	1/2"-20 x 1 7/8"-r/b E3TZ 1107-A (6/83)	AR

YEAR	MODEL/RESTRICTIONS	PART NUMBER	DESCRIPTION	QTY.
1125	ROTOR (FRONT WHEEL DISC BRAKE) ♦ D4RY 1125-B may be used as alternate when replaced in pairs only ◊ D4RY 1125-A may be used as alternate when replaced in pairs only			
73	J	D1RY 1125-B		2
74	J	◊ D4RY 1125-B	#73EB 1125-FA	2
76/78	J	◊ D4RY 1125-B	#73EB 1125-FA	2
73	J	120707-ES8	Bolt-hex.hd.-3/8"-16 x 1"	2

COPYRIGHT © 1986 — FORD MOTOR COMPANY — DEARBORN, MICHIGAN

1973/79 LINCOLN-MERCURY CARS

YEAR	MODEL/RESTRICTIONS	PART NUMBER	DESCRIPTION	QTY.
1126	DRUM (REAR WHEEL DRUM BRAKE)-Also refer to 2C026-7 rotor			
	A (Mercury)			
73	A(53,57,65-exc. P/C) - - 8 cyl. 429 and 11" x 2 1/2" brakes	D3SZ 1126-A	Flared-2 rows of 90 ribs-5 1/8" wide-14" O.D.	2
	A(53,57,65-P/C) - - 8 cyl. 351, 400, 429 and 11" x 2 1/2" brakes			2
	A(P/C) - - 8 cyl. 460 and 11" x 2 1/2" brakes			2
	A(71) - - 11" x 2 1/2" brakes			2
73/74	A(53,57,65-exc. P/C) - - 11" x 2 1/4" brakes "From 1/15/74"	★D4AZ 1126-A(10/84)	Non-flared-61 fins-3 11/16" wide-12 3/4" O.D.	2
	A - - 11" x 2 1/2" brakes	D3SZ 1126-A	Flared-2 rows of 90 ribs-5 1/8"-14" O.D.	2
75/77	A(53,65-exc. P/C) - - 11" x 2 1/4" brakes	★D4AZ 1126-A(10/84)	Non-flared-61 fins-3 11/16" wide-12 3/4" O.D.	2
	A - - 11" x 2 1/2" brakes	D3SZ 1126-A	Flared-2 rows of 90 ribs-5 1/8"-14" O.D.	2
78	A - - 11" x 2 1/2" brakes	D3SZ 1126-A	Flared-2 rows of 90 ribs-5 1/8"-14" O.D.	2
79	A - - 10" x 2 1/2"	D9AZ 1126-A	Flared-53 ribs-3 5/8" wide-12" O.D.	2
	A - - 11" x 2 1/4"	D9AZ 1126-B	Flared-61 ribs-3 3/4" wide -13" O.D.	2
	C (Montego)			
73	C(exc. P/C) - - 10" x 2 1/2" brakes	★D40Z 1126-A(8/85)	Flared-80 ribs-4 1/4" wide-12 5/16" O.D.	2
	C(53,65-P/C) - - 8 cyl. 351,400, 429, 460 and 11" x 2 1/4" brakes	D3SZ 1126-A	Flared-2 rows of 90 ribs-5 1/8" wide-14" O.D.	2
	C(71) - - 8 cyl. 351,400,429 and 11" x 2 1/4" brakes	★D30Z 1126-A(8/85)	Flared-2 rows of 71 ribs-4 5/8" wide-13 13/16" O.D.	2
74	C(53,65-exc. P/C) - - 10" x 2 1/2" brakes	★D40Z 1126-A(8/85)	Flared-80 ribs-4 1/4" wide-12 5/16" O.D.	2
	C(71) - - 8 cyl. 351,400,460 and 11" x 2 1/4" brakes	★D30Z 1126-A(8/85)	Flared-2 rows of 71 ribs-4 5/8" wide-13 13/16" O.D.	2
	C - - 11" x 2 1/4" brakes	D3SZ 1126-A	Flared-2 rows of 90 ribs-5 1/8" wide-14" O.D.	2
75/76	C(53,65-exc. P/C) - - 10" x 2 1/2" brakes	★D40Z 1126-A(8/85)	Flared-80 ribs-4 1/4" wide-12 5/16" O.D.	2
75	C - - 11" x 2 1/4" brakes	D3SZ 1126-A	Flared-2 rows of 90 ribs-5 1/8" wide-14" O.D.	2
75	C(71) - - 11" x 2 1/4" brakes	★D30Z 1126-A(8/85)	Flared-2 rows of 71 ribs-4 5/8" wide-13 13/16" O.D.	2
76	C(53,65) - - 11" x 2 1/4" brakes	D60Z 1126-B	Flared-2 rows of 71 ribs-4 15/32" wide-13 3/4" O.D.	2
76	C(71,97) - - 11" x 2 1/2" brakes	★D60Z 1126-A(8/85)	Flared-2 rows of 71 ribs-4 15/32" wide-13 3/4" O.D.	2
	D (Lincoln)			
73/	D	D3SZ 1126-A	Flared-2 rows of 90 ribs-5 1/8" wide-14" O.D.	2
	F (Cougar)			
73	F - - 10" x 2" brakes	★C20Z 1126-B(10/84)	Non-flared and non-ribbed-3 1/2" wide-11 11/16" O.D.	2
	F - - 10" x 2" brakes	C80Z 1126-A	Flared-80 ribs-4 7/16" wide-12 5/16" O.D.	2
74/75	F	★D40Z 1126-A(8/85)	Flared-80 ribs-4 1/4"-12 5/16" O.D.	2
76/	F - - 11" x 2 1/4" brakes	D60Z 1126-B	Flared-2 rows of 71 ribs-4 15/32" wide-13 3/4" O.D.	2
	F(P/C) 11" x 2 1/2" brakes	D3SZ 1126-A	Flared-2 rows of 90 ribs - 5 1/8" wide - 14" O.D.	2
77/78	F(71) 11" x 2 1/2" brakes	★D60Z 1126-A(8/85)	Flared-2 rows of 71 ribs-4 15/32" wide-13 3/4" O.D.	2
	G (Monarch)			
75/	G - - 10" x 2" brakes	D5DZ 1126-A	Non-flared-53 ribs-3 1/2" wide-11 11/16" O.D.	2

1973/79 LINCOLN-MERCURY CARS

YEAR	MODEL/RESTRICTIONS	PART NUMBER	DESCRIPTION	QTY.
1126	DRUM (REAR WHEEL DRUM BRAKE)-Also refer to 2C026-7 rotor — Cont'd			
	J (Capri)			
73/74	J - - 4 cyl. and 9" x 1 3/4" brakes	★D4RY 1126-A(6/82)	Non-flared and non-ribbed-2 3/4" wide-10 1/2" O.D.	2
	J - - 6 cyl. and 9" x 2 1/4" brakes	★D2RY 1126-B(6/82)	Non-flared and non-ribbed-3" wide-10 1/2" O.D.	2
	J - - 6 cyl. and 9" x 2 1/4" brakes	★D2RY 1126-B(6/82)	Non-flared and non-ribbed-3" wide-10 1/2" O.D.	2
76/78	J - - 4 cyl. and 9" x 1 3/4" brakes	★D5RY 1126-B(10/84)		2
	J - - 6 cyl. and 9" x 2 1/4" brakes	D5RY 1126-A		2
79	J - - 9" x 1 3/4" exc. 2.3L turbo	D9ZZ 1126-A	Flared-37 fins-1 61/64" brake surface-2 1/2" center hole-10 3/4" O.D.	2
	J - - 9" x 1 3/4" 2.3L turbo	D9ZZ 1126-B	Aluminum-flared- 37 fins-2 5/32" brake surface-2 1/2" center hole-10 7/8" O.D.	2
	K (Mark IV)			
73/76	K - - 11" x 2 1/2" brakes	D3SZ 1126-A	Flared-2 rows of 90 ribs-5 1/8" wide-14" O.D.	2
77/	K - - For rotor, rear disc brake-Ref. 2C026/7			
	L (Bobcat)			
74/77	L(62,64) - - 9" x 1 3/4" brakes- "Before 6/27/77"	★D4FZ 1126-B	Non-flared-37 fins-1 7/8" brake surface-2 17/32" center hole-10 5/8" O.D.	2
	L(73) - - 9" x 1 3/4" brakes- "Before 6/27/77"	D4FZ 1126-A	Flared-37 fins-1 7/8" brake surface-2 17/32" center hole-10 5/8" O.D.	2
77/78	L - - 9" x 1 3/4" brakes "From 6/27/77"	★D4FZ 1126-B	Non-flared-37 ribs-1 7/8" brakes surface-2 17/32 center hole-10 5/8" O.D.	2
79	L - - 9" x 1 3/4"	D9ZZ 1126-A	Flared-37 fins-1 61/64" brake surface 2 1/2" center hole-10 3/4" O.D.	2
	P (Comet)			
73	P - - 10" x 1 3/4" brakes	C30Z 1126-B	Non-flared and non-ribbed-2 7/16" center hole-11 11/16" O.D.	2
74/	P - - 10" x 1 3/4" brakes	★D4DZ 1126-A(8/85)	Non-flared and non-ribbed-2 25/32" center hole-11 11/16" O.D.	2
	P (Zephyr)			
78	P - - 9" x 1 3/4" brakes	D8BZ 1126-A	Flared-37 ribs-2" wide-10 5/8" O.D.	2
	P - - 10" x 1 3/4" brakes	★D8BZ 1126-B(8/85)	Flared-non ribbed-3 1/4" wide-11 11/16" O.D.	2
79	P - - 9" x 1 3/4" exc. 2.3L turbo	D9ZZ 1126-A	Flared-37 fins -1 61/64" brake surface-2 1/2" center hole-10 3/4" O.D.	2
	P - - 9" x 1 3/4"-2.3L turbo	D9ZZ 1126-B	Aluminum-flared-37 fins -2 5/32" brake surface-2 1/2" center hole-10 7/8" O.D.	2
	P - - 10" x 1 3/4"	D9BZ 1126-A	Non-flared and non-ribbed- 1 59/64" brake surface-2 1/2" center hole-11 5/8" O.D.	2
	Y (Meteor)			
73	Y(53,57,65-exc. P/C) - - 8 cyl. 429 and 11" x 2 1/2" brakes	D3SZ 1126-A	Flared-2 rows of 90 ribs-5 1/8" wide-14" O.D.	2
73/74	Y(53,57,65-exc. P/C) - - 11" x 2 1/4" brakes-	★D4AZ 1126-A(10/84)	Non-flared-61 fins-3 11/16" wide-12 3/4" O.D.	2
	Y - - 11" x 2 1/2" brakes	D3SZ 1126-A	Flared-2 rows of 90 ribs-5 1/8" wide-14" O.D.	2
75/76	Y(53,65-exc. P/C) - - 11" x 2 1/4" brakes	★D4AZ 1126-A(10/84)	Non-flared-61 fins-3 11/16" wide-12 3/4" O.D.	2
	Y - - 11" x 2 1/2" brakes	D3SZ 1126-A	Flared-2 rows of 90 ribs-5 1/8" wide-14" O.D.	2
73/	F	356080-S32	(MM-270)-nut-31/32" x 3/4"	AR
73/74	J	25249-S7-8	(U-107-M)-screw-flat head slotted-1/4"-28 x 5/8"	2

COPYRIGHT © 1986 — FORD MOTOR COMPANY — DEARBORN, MICHIGAN

1973/ IDENTIFICATION CHART

IDENTIFICATION	PART NUMBER	IDENTIFICATION	PART NUMBER
1130 CAP or COVER (WHEEL HUB)			
D34A 1A040-AA	D3GY 1130-A	★ D2DA 1130-A19FA	★ D4DZ 1130-A
D42A 1A096-CA	D4FZ 1130-Y	D2DA 1130-A19GA	D4DZ 1130-B
D5DA 1A096-AA	D5DZ 1130-J	★ D2DA 1130-A20YA	★ D3DZ 1130-K
★ D5LA 1A096-AA	★ D5LY 1130-A	D2DA 1130-A24VA	D2DZ 1130-M
D52A 1A096-BA	D5FZ 1130-M	★ D2DA 1130-A25VA	★ D2DZ 1130-F
D6CA 1A096-AD	D60Z 1130-C	D2DA 1130-A26BA	D4DZ 1130-K
D6DA 1A096-AA	D5DZ 1130-J	★ D2DA 1130-A28CA	★ D4DZ 1130-C
D6DA 1A096-BA	D6DZ 1130-A	★ D2DA 1130-A32CA	★ D3DZ 1130-H
D6EA 1A096-AA	D6FZ 1130-A	★ D2DA 1130-A36GA	★ D4DZ 1130-D
D6EA 1A096-BA	D6FZ 1130-B	★ D2DA 1130-A37TA	★ D2DZ 1130-L
D6EA 1A096-CA	D6FZ 1130-C	★ D2DA 1130-A37WA	★ D5DZ 1130-H
★ D6KA 1A096-AA	★ D3GY 1130-A	D2DA 1130-A41BA	D2DZ 1130-H
D6MA 1A096-AA	D6MY 1130-A	★ D2DA 1130-A41UA	★ D4DZ 1130-E
D60A 1A096-AA	D60Z 1130-B	D2DA 1130-A43WA	D4DZ 1130-L
D6ZA 1A096-AA	D6ZZ 1130-A	★ D2DA 1130-A61BA	★ D5DZ 1130-E (8/85)
★ D7LA 1A096-AA	★ D7LY 1130-A	★ D2DA 1130-A72BA	★ D4DZ 1130-F
D7WC 1A096-AA	D70Z 1130-C	D2DA 1130-A73GA	D5DZ 1130-F
D7WC 1A096-AB	D70Z 1130-C	★ D2DA 1130-A80FA	★ D2DZ 1130-G
D8BC 1A096-AA	D8BZ 1130-D	★ D2DA 1130-A80TA	★ D5DZ 1130-G
D8BC 1A096-AB	D8BZ 1130-D	★ D2DA 1130-A96DA	★ D4DZ 1130-G
D8LC 1A096-AA	D8LY 1130-C	★ D2DA 1130-A98RA	★ D2DZ 1130-K
D8WC 1A096-AA	D8WY 1130-A	★ D2DA 1130-A99RA	★ D2DZ 1130-J
D84C 1A096-AA	D84Y 1130-B	★ D20A 1130-AB	★ D20Z 1130-D (8/85)
D84C 1A096-AC	D84Y 1130-B	★ D20A 1130-BB	★ D20Z 1130-E (8/85)
D9CC 1A096-BC	D9ZZ 1130-A	D20A 1130-CB	D20Z 1130-F
D9ZC 1A096-CB	D9ZZ 1130-C	D20A 1130-DB	D20Z 1130-F
D9ZC 1A096-CC	D9ZZ 1130-C	D3AA 1130-EA	D3AZ 1130-C
D9ZC 1A096-EB	D9ZZ 1130-H	D3AA 1130-FA	D3AZ 1130-C
D9ZC 1A096-EC	D9ZZ 1130-H	D3DA 1130-AA	D3DZ 1130-A
D9ZC 1A096-ED	D9ZZ 1130-H	D3LA 1130-AA	D3LY 1130-A
D9ZC 1A096-EE	D9ZZ 1130-H	D3LA 1130-AB	D3LY 1130-A
D94C 1A096-AA	D94Y 1130-B	D3LA 1130-AC	D3LY 1130-A
E3VC 1A096-BA	D8LY 1130-C	★ ED-D3MA 1130-AA	★ D3MY 1130-A
D4ZA 1A097-AA	D5FZ 1130-M	ED-D3MA 1130-BA	D3MY 1130-B
D42A 1A097-BB	D4FZ 1130-Y	ED-D3MA 1130-CA	D3MY 1130-A
D5LA 1A097-AA	D5LY 1130-A	D3MA 1130-GA	D3MY 1130-C
D6BA 1A097-AA	D3DZ 1130-G	★ D3MA 1130-HA	★ D3MY 1130-J (8/85)
D6CA 1A097-AA	D6CZ 1130-A	★ D3MA 1130-HB	★ D3MY 1130-J (8/85)
D6KA 1A097-AA	D3GY 1130-A	★ ED-D3MA 1130-HB	★ D3MY 1130-J (8/85)
C80A 1130-J	C80Z 1130-G	★ D3MA 1130-JA	★ D3MY 1130-J (8/85)
★ D0GA 1130-B	★ D0GY 1130-B	D3MA 1130-KA	D3MY 1130-K
★ D0VA 1130-B	★ D0VY 1130-A (8/85)	D3MA 1130-KB	D3MY 1130-K
★ D0VA 1130-C	★ D0VY 1130-B (8/85)	ED-D3MA 1130-KB	D3MY 1130-K
★ D0WA 1130-D	★ D0WY 1130-D(10/84)	D3MA 1130-LA	D3MY 1130-K
★ D1MA 1130-CA	★ D1MY 1130-G	D3MA 1130-MF3GA	D3MY 1130-V
D10A 1130-AA	D10Z 1130-A	D3MA 1130-MF3GB	D3MY 1130-U
★ D1WA 1130-B2A	★ D1WY 1130-A(10/84)	ED-D3MA 1130-MF3GB	D3MY 1130-U
★ D1WA 1130-EB	★ D1WY 1130-E	D3MA 1130-M17BA	D3MY 1130-L
D12A 1130-BA	D1FZ 1130-B	★ ED-D3MA 1130-M17BA	★ D3MY 1130-D
D14A 1130-AA	D14Y 1130-B	★ D1-D3MA 1130-M17BA	★ D3MY 1130-D
D2DA 1130-AE6GA	D3DZ 1130-B	D3MA 1130-M17BB	D3MY 1130-L
D2DA 1130-AF3GA	D2DZ 1130-D	ED-D3MA 1130-M17BB	D3MY 1130-L
D2DA 1130-AH1BA	D2DZ 1130-H	D3MA 1130-M19FA	D3MY 1130-M
D2DA 1130-A14WA	D2DZ 1130-A	D1-D3MA 1130-M19FA	D3MY 1130-E
★ D2DA 1130-A15VA	★ D2DZ 1130-E	D3MA 1130-M19FB	D3MY 1130-M
★ D2DA 1130-A17BA	★ D3DZ 1130-C	ED-D3MA 1130-M19FB	D3MY 1130-M
★ D2DA 1130-A18VA	★ D3DZ 1130-D		

1973/ IDENTIFICATION CHART

IDENTIFICATION	PART NUMBER	IDENTIFICATION	PART NUMBER
1130 CAP or COVER (WHEEL HUB) — Cont'd			
★ D3MA 1130-M19GA	★ D3MY 1130-N(10/84)	D4GA 1130-B19FC	D4GY 1130-F
★D1-D3MA 1130-M19GA	★ D3MY 1130-F	D4GA 1130-B19VA	D4GY 1130-G
★ D3MA 1130-M19GB	★ D3MY 1130-N(10/84)	D4GA 1130-B19VC	D4GY 1130-G
D3MA 1130-M25VA	D3MY 1130-R	D4GA 1130-B25VA	D4GY 1130-H
D1-D3MA 1130-M25VA	D3MY 1130-G	D4GA 1130-B25VC	D4GY 1130-H
D3MA 1130-M25VB	D3MY 1130-R	D4GA 1130-B32CA	D4GY 1130-J
ED-D3MA 1130-M25VB	D3MY 1130-R	D4GA 1130-B32CC	D4GY 1130-J
D3MA 1130-M26BA	D3MY 1130-S	D4GA 1130-B41UA	D4GY 1130-K
D1-D3MA 1130-M26BA	D3MY 1130-H	D4GA 1130-B41UC	D4GY 1130-K
D3MA 1130-M26BB	D3MY 1130-S	D4GA 1130-B46YA	D4GY 1130-L
ED-D3MA 1130-M26BB	D3MY 1130-S	D4GA 1130-B46YC	D4GY 1130-L
★ D3MA 1130-M41UB	★ D4MY 1130-A	D4GA 1130-B76BA	D4GY 1130-M
D3MA 1130-NF3GA	D3MY 1130-U	D4GA 1130-B76BC	D4GY 1130-M
D3MA 1130-N17BA	D3MY 1130-L	D4GA 1130-B96DA	D4GY 1130-N
★ D3MA 1130-M19FA	★ D3MY 1130-M	D4GA 1130-B96DC	D4GY 1130-N
★ D3MA 1130-N19GA	★ D3MY 1130-N(10/84)	D4GA 1130-B98RA	D4GY 1130-R
D3MA 1130-N25VA	D3MY 1130-R	D4GA 1130-B98RC	D4GY 1130-R
D3MA 1130-N26BA	D3MY 1130-S	★ D4GA 1130-DB	★ D4GY 1130-S (8/85)
★ D3MA 1130-RA	★ D3MY 1130-T	★ D4GA 1130-EB	★ D4GY 1130-S (8/85)
★ D3MA 1130-RB	★ D3MY 1130-T	D40A 1130-B1A	D40Z 1130-A
★ D3VA 1130-EA	★ D3VY 1130-D	★ D40A 1130-B2A	D40Z 1130-A
★ D3VA 1130-EB	★ D3VY 1130-D	★ D40A 1130-EB	★ D40Z 1130-D (8/85)
★ D3VA 1130-FA	★ D3VY 1130-C	D40A 1130-EC	★ D40Z 1130-D (8/85)
★ D3VA 1130-FB	★ D3VY 1130-C	★ D4VA 1130-A09TA	★ D4VY 1130-A
D4GA 1130-AC1AC	D4GY 1130-T	D4VA 1130-A37WA	D4VY 1130-B
D4GA 1130-AE6GC	D4GY 1130-Y	D4VA 1130-A45BA	D5VY 1130-D
D4GA 1130-AE7GC	D4GY 1130-A	D4VA 1130-A51YA	D4VY 1130-C
D4GA 1130-AG4BC	D4GY 1130-B	D4VA 1130-A58BA	D4VY 1130-D
★ D4GA 1130-AH9BC	★ D4GY 1130-C	D4VA 1130-A58BB	D4VY 1130-D
D4GA 1130-A09CC	D4GY 1130-D	D4VA 1130-A61BA	D4VY 1130-E
D4GA 1130-A09TC	D5GY 1130-A	D4VA 1130-A66RA	D4VY 1130-F
D4GA 1130-A14WC	D4GY 1130-E	★ D4VA 1130-A73GA	★ D5VY 1130-E
D4GA 1130-A19FC	D4GY 1130-F	D4VA 1130-A73UA	D5VY 1130-F
D4GA 1130-A19GC	D4GY 1130-U	D4VA 1130-A81AA	D4VY 1130-G
★ D4GA 1130-A19VC	★ D4GY 1130-G	★ D4VA 1130-A90ZA	★ D5VY 1130-H
D4GA 1130-A25VC	D4GY 1130-H	D4VA 1130-B09TA	D4VY 1130-A
★ D4GA 1130-A25WC	★ D5GY 1130-B	D4VA 1130-B37WA	D4VY 1130-B
★ D4GA 1130-A26WC	★ D4GY 1130-V	D4VA 1130-B45DA	D5VY 1130-D
D4GA 1130-A32CC	D4GY 1130-J	D4VA 1130-B51YA	D4VY 1130-C
D4GA 1130-A41UC	D4GY 1130-K	D4VA 1130-B58BA	D4VY 1130-D
★ D4GA 1130-A46YC	★ D4GY 1130-L	D4VA 1130-B61BA	D4VY 1130-E
D4GA 1130-A61BC	D5GY 1130-C	D4VA 1130-B66RA	D4VY 1130-F
D4GA 1130-A73GC	D5GY 1130-E	D4VA 1130-B73GA	D5VY 1130-E
★ D4GA 1130-A73UC	★ D5GY 1130-F	D4VA 1130-B73UA	D5VY 1130-F
★ D4GA 1130-A76BC	★ D4GY 1130-M	D4VA 1130-B81AA	D4VY 1130-G
D4GA 1130-A96DC	D4GY 1130-N	D4VA 1130-B90ZA	D5VY 1130-H
D4GA 1130-A98RC	D4GY 1130-R	D4VA 1130-B98PA	D4VY 1130-H
D4GA 1130-BE7GB	D4GY 1130-A	D4WA 1130-AA	D4WY 1130-A
D4GA 1130-BE7GC	D4GY 1130-A	D4WA 1130-AB	D4WY 1130-A
D4GA 1130-BG4BC	D4GY 1130-B	D4WA 1130-BB	D4WY 1130-A
D4GA 1130-BH9BA	D4GY 1130-C	D4WA 1130-DB	D4WY 1130-B
D4GA 1130-BH9BC	D4GY 1130-C	ED-D4WA 1130-DB	D4WY 1130-B
D4GA 1130-B09CC	D4GY 1130-D	D4WA 1130-DC	D4WY 1130-B
D4GA 1130-B14WA	D4GY 1130-E	★ D4WA 1130-DD	★ D4WY 1130-C(10/84)
D4GA 1130-B14WC	D4GY 1130-E	D42A 1130-BA	D4FZ 1130-A
D4GA 1130-B19FA	D4GY 1130-F	D5AA 1130-CB	D5AZ 1130-K

COPYRIGHT © 1986 — FORD MOTOR COMPANY — DEARBORN, MICHIGAN

1973/ IDENTIFICATION CHART

IDENTIFICATION	PART NUMBER	IDENTIFICATION	PART NUMBER
1130 CAP or COVER (WHEEL HUB) — Cont'd			
D5BA 1130-BA	D5DZ 1130-B	D8BC 1130-FA	D8BZ 1130-E
D5DA 1130-AB	D5DZ 1130-D	★ D8BC 1130-ED3RD	★ D8BZ 1130-G
D5DA 1130-AC	D5DZ 1130-D	★ D8BC 1130-EL2BB	★ D8BZ 1130-H
D5DA 1130-BB	D5DZ 1130-D	★ D8BC 1130-E03CB	★ D8BZ 1130-J
D5DA 1130-CB	D5DZ 1130-A	★ D8BC 1130-E23PB	★ D8BZ 1130-K
D5DA 1130-DB	D5DZ 1130-A	★ D8BC 1130-E32TB	★ D8BZ 1130-L
D5LA 1130-AA	D5LY 1130-B	★ D8BC 1130-E51WB	★ D8BZ 1130-M
★ D5MA 1130-AA	★ D5MY 1130-A	★ D8BC 1130-E95YB	★ D8BZ 1130-N
★ D5MA 1130-AB	★ D5MY 1130-A	★ D8BC 1130-DG	★ D8BZ 1130-P
D5MA 1130-B09TA	D5MY 1130-B	★ D8BC 1130-EF7BF	★ D8BZ 1130-R
D5MA 1130-B37WA	D5MY 1130-C	D8BC 1130-E10DF	D8BZ 1130-T
D5MA 1130-B61BA	D5MY 1130-D	★ D8BC 1130-E32TF	★ D8BZ 1130-U
D5MA 1130-B63DA	D5MY 1130-E	D8BC 1130-E39AF	D8BZ 1130-V
D5MA 1130-B68UA	D5MY 1130-H	D8BC 1130-E43VF	D8BZ 1130-W
D5MA 1130-B73GA	D5MY 1130-F	D8BC 1130-E51WF	D8BZ 1130-Y
D5MA 1130-B73UA	D5MY 1130-J	★ D8BC 1130-EL23F	★ D8BZ 1130-AA
D5MA 1130-B81AA	D5MY 1130-G	D8BC 1130-E39CF	D8BZ 1130-AB
D5MA 1130-B80TA	D5MY 1130-K	D8BC 1130-E95YF	D8BZ 1130-AC
74EB 1137-AA	D5RY 1130-A	D8DC 1130-AD3RA	D8DZ 1130-A
74EB 1137-AB	D7RY 1130-A	D8DC 1130-AF5BA	D8DZ 1130-B
D5VA 1130-A1A	D5VY 1130-A	D8DC 1130-A02VA	D8DZ 1130-C
D5VA 1130-A10JA	D5VY 1130-B	D8DC 1130-A23PA	D8DZ 1130-D
D5VA 1130-A2A	D5VY 1130-A	D8DC 1130-A25DA	D8DZ 1130-E
D5VA 1130-A95YA	D5VY 1130-G	D8DC 1130-A39AA	D8DZ 1130-F
D5VA 1130-B1A	D5VY 1130-K	D8DC 1130-A51WA	D8DZ 1130-G
D5VA 1130-B2A	D5VY 1130-K	D8DC 1130-A54FA	D8DZ 1130-H
D5VA 1130-B10JA	D5VY 1130-B	D8DC 1130-A55BA	D8DZ 1130-J
D5VA 1130-B95YA	D5VY 1130-G	D8DC 1130-A92PA	D8DZ 1130-K
D52A 1130-AA	D5FZ 1130-A	D8DC 1130-BA	D5DZ 1130-D
D6CA 1130-CA	D60Z 1130-A	D8KC 1130-AA	D8KY 1130-A
D6DA 1130-CB	D5DZ 1130-D	D8LC 1130-AB	D8LY 1130-A
D60A 1130-AA	D60Z 1130-D	D8LC 1130-BA	D8LY 1130-B
D7DA 1130-AD3RA	★ D7DZ 1130-A (9/85)	D8LC 1130-BB	D8LY 1130-B
★ D7DA 1130-A23PA	★ D7DZ 1130-B	D8LC 1130-BC	D8LY 1130-B
D7DA 1130-A25DA	D7DZ 1130-C	D8LC 1130-BE	D8LY 1130-B
★ D7DA 1130-A39AA	★ D7DZ 1130-D (10/84)	★ D8MC 1130-CB	★ D8MY 1130-A
★ D7DA 1130-A43VA	★ D7DZ 1130-E(10/84)	D8MC 1130-DA	D8MY 1130-B
D7DA 1130-A51WA	D7DZ 1130-F	D80C 1130-AA	D60Z 1130-D
D7DA 1130-A68TA	D7DZ 1130-G	D84C 1130-AB	D84Y 1130-A
D7DA 1130-A90BA	D7DZ 1130-H	D9AC 1130-EB	D9AZ 1130-A
D7DA 1130-A96FA	D7DZ 1130-J	D9AC 1130-EC	D9AZ 1130-E
D7EA 1130-AB	D7FZ 1130-A	D9AC 1130-HA	D9AZ 1130-D
D7GA 1130-AA	D7WY 1130-B	D9BC 1130-DG	D8BZ 1130-P
★ D70A 1130-CB	★ D70Z 1130-B	D9BC 1130-C39AA	D8BZ 1130-V
D7WA 1130-AA	D7WY 1130-A	D9BC 1130-C51WA	D8BZ 1130-Y
D8AC 1130-BA	D5AZ 1130-K	D9CC 1130-AA	D9CY 1130-A
D8AC 1130-CA	D8AZ 1130-F	D9DC 1130-AB	D9DZ 1130-A
D8BC 1130-AB	D8BZ 1130-C	D9DC 1130-BD3RA	D8DZ 1130-A
D8BC 1130-AC	D8BZ 1130-C	D9DC 1130-BF5BA	D8DZ 1130-B
D8BC 1130-BB	D8BZ 1130-B	D9DC 1130-B02VA	D8DZ 1130-C
D8BC 1130-BC	D8BZ 1130-B	★ D9DC 1130-B23PA	★ D8DZ 1130-D
D8BC 1130-BD	D8BZ 1130-B	D9DC 1130-B25DA	D8DZ 1130-E
D8BC 1130-BE	D8BZ 1130-B	D9DC 1130-B39AA	D8DZ 1130-F
D8BC 1130-CA	D8BZ 1130-F	D9DC 1130-B51WA	D8DZ 1130-G
D8BC 1130-DA	D8BZ 1130-A	D9DC 1130-B54FA	D8DZ 1130-H
D8BC 1130-DB	D8BZ 1130-A	D9DC 1130-B55BA	D8DZ 1130-J
D8BC 1130-DC	D8BZ 1130-A	D9DC 1130-B92PA	D8DZ 1130-K
D8BC 1130-DD	D8BZ 1130-A		

1973/ IDENTIFICATION CHART

IDENTIFICATION	PART NUMBER	IDENTIFICATION	PART NUMBER
1130 CAP or COVER (WHEEL HUB) — Cont'd.			
D9DC 1130-BF7BA	D9DZ 1130-B	D9MC 1130-EA	D9MY 1130-A
D9DC 1130-B10DA	D9DZ 1130-C	D9MC 1130-BA	D9MY 1130-B
D9EC 1130-CB	D9FZ 1130-A	D9MC 1130-DB	D9MY 1130-C
D9EC 1130-CC	D9FZ 1130-A	D9ZC 1130-FB	D9ZZ 1130-D
D9LC 1130-AA	D9LY 1130-A	D94C 1130-AA	D94Y 1130-A

COPYRIGHT © 1986 — FORD MOTOR COMPANY — DEARBORN, MICHIGAN

1973 APPLICATION CHART

MODEL	DIAMETER Inches	DESCRIPTION	SHOWN IN SEC 10.1 PAGE LOC.		PART NUMBER
1130		CAP or COVER (WHEEL HUB) — Cont'd ▲ Certification Label Color Code			
		A (Mercury) and Y (Meteor)			
A,Y	10 7/8	Bright chrome finish–w/crest	1	M	D3AZ 1130–C
A,Y	15 1/8	Circular brushed finish–72 ribs–w/crest	2	B	★ D3MY 1130–J(8/85)
A(53,57,65,71K),Y(53,57, 65,71K)	15 1/8	Circular brushed finish–72 ribs–w/emblem	2	C	D3MY 1130–K
A,Y	15 1/8	72 ribs w/crest–bright blue metallic cover–▲3K	2	C	★ D3MY 1130–L(6/82)
A,Y	15 1/8	72 ribs w/crest–silver blue metallic cover–▲3M	2	C	★ D3MY 1130–S(6/82)
A,Y	15 1/8	72 ribs w/crest–w/slots–ivy bronze metallic cover–▲4C	2	C	★ D3MY 1130–U(6/82)
A,Y	15 1/8	72 ribs w/crest–medium ivy bronze metallic cover–▲4T	2	C	★ D3MY 1130–N(10/84)
A,Y	15 1/8	72 ribs w/crest–medium ginger metallic cover–▲5J	2	C	★ D3MY 1130–M(3/84)
A,Y	15 1/8	72 ribs w/crest–bright yellow gold metallic cover–▲6F	2	C	★ D3MY 1130–R(6/82)
A,Y – – w/o 15" x 5" wheels– "Before 9/15/72"	16 1/4	72 bars–black background–w/crest	2	D	★ D3MY 1130–C r/b D3MY 1130–T(1/79)
A,Y – – w/o 15" x 5" wheels– "From 9/15/72"	16 1/4	72 bars–black background–w/crest	2	D	★ D3MY 1130–T(3/82)
		C (Montego)			
C – – w/styled steel wheels	2 3/4	Ford crest–chrome background	2	K	D60Z 1130–B
C(exc. P/C)	10 1/4	Bright chrome finish–black center–w/crest	1	L	★ D20Z 1130–D(8/85)
C(exc. P/C)	10 1/4	Black finish–black center–w/crest	1	L	★ D20Z 1130–E(8/85)
C(P/C)	10 7/8	Bright chrome finish–w/crest	1	M	D3AZ 1130–C
C – – w/14" wheels	14 1/8	Bright chrome finish–80 depressions–w/crest black center	2	H	D20Z 1130–F
C	14 1/8	80 depressions–w/crest–circular medium gold metallic stripe–▲6L	2	H	D3DZ 1130–K
C – – w/14" wheels	15 3/8	18 ribs–w/crest–black center	2	J	★ D0GY 1130–B(9/83)
		D (Lincoln)			
D "Before 9/15/72"	16 1/4	Standard–black center–Lincoln emblem–plain background	1	C	★ D0VY 1130–A(8/85)
D	16 1/4	Std.–circular brushed finish–45 ribs–Lincoln emblem	2	F	★ D3VY 1130–D(8/85)
D	16 1/4	Deluxe–72 bars–black center–Lincoln emblem–chrome background	1	D	D0VY 1130–B
		F (Cougar)			
F – – w/styled steel wheels	7 1/2	Yarborough special–plain center	1	A	C80Z 1130–G
F	14 1/8	53 depressions–blue center–Cougar emblem	1	G	★ D1WY 1130–A(3/84)
F	15 1/4	8 ribs–8 openings–red center– "XR7" emblem	1	H	★ D1WY 1130–E(9/83)
F	15 3/8	Simulated wire–black center–w/Mercury crest	1	E	★ D0WY 1130–D(9/84)

1973 APPLICATION CHART

MODEL	DIAMETER Inches	DESCRIPTION	SHOWN IN SEC 10.1 PAGE	LOC.	PART NUMBER
1130	CAP or COVER (WHEEL HUB) — Cont'd ▲ Certification Label Color Code				
		J (Capri)			
J	2 5/8	Plain center	1	B	D0RY 1130-B
		K (Mark IV)			
K	16 1/4	Stainless steel-circular brushed finish-90 fins-Mark IV emblem	2	A	D5LY 1130-B
K	9 3/16	30 fins-w/Mark IV emblem	2	L	D5LY 1130-A
		P (Comet)			
P - - w/aluminum wheel	4 3/8	Black center-w/crest	2	G	★ D3GY 1130-A(6/83)
P - - w/o aluminum wheel	10 1/2	Circular brushed finish-plain center	1	F	D1MY 1130-G
P	14 1/8	53 openings-black center-w/crest	1	J	D14Y 1130-B
P	14 1/8	80 depressions-w/crest-circular light blue metallic stripe-▲3B	1	K	★ D2DZ 1130-H(6/82)
P	14 1/8	80 depressions-w/crest-circular bright blue metallic stripe-▲3K	1	K	★ D3DZ 1130-C(3/81)
P	14 1/8	80 depressions-w/crest-circular bright green gold metallic stripe-▲4B	1	K	★ D3DZ 1130-B(3/81)
P	14 1/8	80 depressions-w/crest-circular ivy bronze metallic stripe-▲4C	1	K	★ D2DZ 1130-D(3/81)
P	14 1/8	80 depressions-w/crest-circular medium green metallic stripe-▲4P	1	K	★ D2DZ 1130-J(3/81)
P	14 1/8	80 depressions-w/crest-circular dark green metallic stripe-▲4Q	1	K	★ D2DZ 1130-K(3/81)
P	14 1/8	80 depressions-w/crest-circular ginger metallic stripe-▲5H	1	K	★ D2DZ 1130-G(3/83)
P	14 1/8	80 depressions-w/crest-circular tan stripe-▲5L	1	K	★ D2DZ 1130-L(3/81)
P	14 1/8	80 depressions-w/crest-circular bright saddle bronze stripe-▲5T	1	K	★ D3DZ 1130-H(3/83)
P	14 1/8	80 depressions-w/crest-circular light golden rod stripe-▲6B	1	K	★ D3DZ 1130-D(3/81)
P	14 1/8	80 depressions-w/crest-circular medium golden rod stripe-▲6C	1	K	★ D2DZ 1130-E(3/81)
P	14 1/8	80 depressions-w/crest-circular medium bright yellow stripe-▲6E	1	K	D2DZ 1130-M
P	14 1/8	80 depressions-w/crest-circular bright yellow gold metallic stripe-▲6F	1	K	★ D2DZ 1130-F(3/81)
P	14 1/8	80 depressions-w/crest-circular pastel white stripe-▲9C	1	K	D2DZ 1130-A

Y (Meteor)-refer to A (Mercury)

YEAR	MODEL/RESTRICTIONS	PART NUMBER	DESCRIPTION	QTY.
73	P	52937-S47	(UU-322-AF)-screw attaching wheel cover to (aluminum wheel)-No. 8-32 x 3/4"	5

COPYRIGHT © 1986 — FORD MOTOR COMPANY — DEARBORN, MICHIGAN

1974 APPLICATION CHART

MODEL	DIAMETER Inches	DESCRIPTION	SHOWN IN SEC 10.1 PAGE	LOC.	PART NUMBER
1130		CAP or COVER (WHEEL HUB) — Cont'd ▲ Certification label color code			
A (Mercury) and Y (Meteor)					
A,Y	10 7/8	Bright chrome finish–w/crest	4	A	D3AZ 1130–C
A,Y	15 1/8	Circular brushed finish–72 ribs–w/crest	4	E	★D3MY 1130–J(8/85)
A,Y	15 1/8	Circular brushed finish–72 ribs–w/emblem	4	F	D3MY 1130–K
A,Y	15 1/8	72 ribs–w/crest–bright blue metallic cover–▲3K	4	F	★D3MY 1130–L(6/82)
A,Y	15 1/8	72 ribs–w/crest–silver blue metallic cover–▲3M	4	F	★D3MY 1130–S(6/82)
A,Y	15 1/8	72 ribs–w/crest–w/slots–ivy bronze metallic cover–▲4C	4	F	★D3MY 1130–U(6/82)
A,Y	15 1/8	72 ribs–w/crest–medium ivy bronze metallic cover–▲4T	4	F	★D3MY 1130–N(10/84)
A,Y	15 1/8	72 ribs–w/crest–medium ginger metallic cover–▲5J	4	F	★D3MY 1130–M(3/84)
A,Y	15 1/8	72 ribs–w/crest–tan metallic cover–▲5U	4	F	★D4MY 1130–A(3/81)
A,Y	15 1/8	72 ribs–w/crest–bright yellow gold metallic cover–▲6F	4	F	★D3MY 1130–R(6/82)
A,Y	16 1/4	72 bars–black background–w/crest	4	D	★D3MY 1130–T(3/82)
C (Montego)					
C – – w/styled steel wheels	2 3/4	Ford crest–chrome background	3	B	D60Z 1130–B
C	10 1/4	Bright chrome finish–black center–w/crest	3	D	★D20Z 1130–D(8/85)
C	10 7/8	Bright chrome finish–w/crest	4	A	D3AZ 1130–C
C – – w/14" wheel	14 1/8	Bright chrome finish–80 depressions–black center–w/crest	3	E	D20Z 1130–F
C	15 1/4	Turbine design–32 slots–w/crest–argent cover metallic cover	3	G	★D4GY 1130–S(8/85)
C	15 1/4	Turbine design–32 slots–w/crest–black cover–▲1C	3	G	★D4GY 1130–T Not replaced(3/79)
C	15 1/4	Turbine design–32 slots–w/crest–bright red cover–▲2B	3	G	★D4GY 1130–N Not replaced(5/79)
C	15 1/4	Turbine design–32 slots–w/crest–medium blue–▲3D	3	G	★D4GY 1130–B Not replaced(3/79)
C	15 1/4	Turbine design–32 slots–w/crest–dark blue cover–▲3G	3	G	★D4GY 1130–C(3/81)
C	15 1/4	Turbine design–32 slots–w/crest–pastel blue cover–▲3Q	3	G	★D4GY 1130–M(3/81)
C	15 1/4	Turbine design–32 slots–w/crest–pastel lime cover–▲4A	3	G	★D4GY 1130–A Not replaced(5/79)
C	15 1/4	Turbine design–32 slots–w/crest–bright green gold metallic cover–▲4B	3	G	D4GY 1130–Y
C	15 1/4	Turbine design–32 slots–w/crest–dark green metallic cover–▲4Q	3	G	★D4GY 1130–R Not replaced(5/79)
C	15 1/4	Turbine design–32 slots–w/crest–medium ivy bronze metallic cover–▲4T	3	G	★D4GY 1130–U Not replaced(5/79)
C	15 1/4	Turbine design–32 slots–w/crest–medium ginger metallic cover–▲5J	3	G	★D4GY 1130–F Not replaced(3/79)
C	15 1/4	Turbine design–32 slots–w/crest–medium chestnut metallic cover–▲5M	3	G	★D4GY 1130–D Not replaced(3/79)
C	15 1/4	Turbine design–32 slots–w/crest–saddle bronze metallic cover–▲5T	3	G	★D4GY 1130–J Not replaced(5/79)
C	15 1/4	Turbine design–32 slots–w/crest–tan metallic cover–▲5U	3	G	★D4GY 1130–K Not replaced(5/79)
C	15 1/4	Turbine design–32 slots–w/crest–bright yellow gold metallic cover–▲6F	3	G	★D4GY 1130–H Not replaced(5/79)
C	15 1/4	Turbine design–32 slots–w/crest–dark gold metallic cover–▲6M	3	G	★D4GY 1130–L(3/81)
C	15 1/4	Turbine design–32 slots–w/crest–maize yellow cover–▲6N	3	G	★D4GY 1130–G(3/81)
C	15 1/4	Turbine design–32 slots–w/crest–white cover–▲9A	3	G	★D4GY 1130–V r/bD5GY 1130–B(3/79)

1974 APPLICATION CHART

MODEL	DIAMETER Inches	DESCRIPTION	SHOWN IN SEC 10.1 PAGE LOC.		PART NUMBER
1130	CAP or COVER (WHEEL HUB) — Cont'd ▲ Certification label color code				
		C (Montego)			
C	15 1/4	Turbine design–32 slots–w/crest–white cover–▲9C	3	G	D4GY 1130–E
C	15 3/8	Turbine design	4	K	★ D40Z 1130–D(8/85)
		D (Lincoln)			
D	16 1/4	Circular brushed finish–45 ribs–Lincoln emblem	4	G	★ D3VY 1130–D(8/85)
D	16 1/4	88 fins–Lincoln emblem–black cover–▲1C,1E or 2G	3	H	★ D4VY 1130–G(6/82)
D	16 1/4	88 fins–Lincoln emblem–silver metallic cover–▲1D	3	H	★ D4VY 1130–H(3/81)
D	16 1/4	88 fins–Lincoln emblem–blue cover–▲3A,3C,3D or 3G	3	H	★ D4VY 1130–E(6/82)
D	16 1/4	88 fins–Lincoln emblem–silver blue metallic cover–▲3L	3	H	★ D4VY 1130–D(3/81)
D	16 1/4	88 fins–Lincoln emblem–green cover–▲4A,4D,4P or 4Q	3	H	★ D4VY 1130–F(3/81)
D	16 1/4	88 fins–Lincoln emblem–brown cover–▲5D,5P,5Q, 5R,5S,5V,51 or 52	3	H	★ D4VY 1130–A(3/83)
D	16 1/4	88 fins–Lincoln emblem–gold cover–▲6G,6L,6M or 6N	3	H	★ D4VY 1130–C(3/81)
D	16 1/4	88 fins–Lincoln–emblem–white cover–▲9C,9D	3	H	★ D4VY 1130–B(6/82)
		F (Cougar)			
F – – w/styled steel wheels	2 3/4	Ford crest–chrome background	3	B	D60Z 1130–B
F	15 1/4	32 diamonds–w/crest	3	K	★ D4WY 1130–C(10/84)
F	15 1/4	Circular brushed finish–44 holes–w/Cougar emblem	3	J	D4WY 1130–A
		J (Capri)			
J	2 5/8	Plain center	3	L	D0RY 1130–B
J	3 3/16	Black center	3	L	★ D4RY 1130–A(6/83)
		K (Mark IV)			
K – – w/styled aluminum wheels	9 5/8"	30 ribs – w/"Mark IV" emblem in center –black center			D5LY 1130–A
K	16 1/4	90 fins–circular brushed finish–w/ornament	4	C	D5LY 1130–B
		L (Bobcat)			
L – – w/styled aluminum wheel	6 1/8	Bright finish–4 holes–w/wreath and crest in center	3	F	★ D4FZ 1130–Y(6/82)
L	9 1/4	77 bars–chrome	4	H	D5FZ 1130–A
L(62,64)	13 1/8	Circular brushed finish–8 openings	4	J	D1FZ 1130–B
		P (Comet)			
P – – w/aluminum wheel	4 3/8	Black center–w/crest	4	B	★ D3GY 1130–A(6/83)
P – – w/o aluminum wheel	10 1/2	Circular brushed finish–plain center	3	A	★ D1MY 1130–G(3/83)
P	14 1/8	53 openings–black center–w/crest	3	M	D14Y 1130–B
P	14 1/8	80 depressions–w/crest–circular bright red stripe–▲2B	3	C	★ D4DZ 1130–G(3/81)
P	14 1/8	80 depressions–w/crest–circular light blue metallic stripe–▲3B	3	C	★ D2DZ 1130–H(6/82)
P	14 1/8	80 depressions–w/crest–circular bright blue metallic stripe–▲3E	3	C	★ D4DZ 1130–F(3/81)
P	14 1/8	80 depressions–w/crest–circular bright blue metallic stripe–▲3K	3	C	★ D3DZ 1130–C(3/81)
P	14 1/8	80 depressions–w/crest–circular silver blue metallic stripe–▲3M	3	C	★ D4DZ 1130–K(6/82)

COPYRIGHT © 1986 — FORD MOTOR COMPANY — DEARBORN, MICHIGAN

1974 APPLICATION CHART

MODEL	DIAMETER Inches	DESCRIPTION	SHOWN IN SEC 10.1 PAGE LOC.	PART NUMBER
1130		CAP or COVER (WHEEL HUB) — Cont'd ▲ Certification label color code		
		P (Comet)		
P	14 1/8	80 depressions–w/crest–circular bright green gold gold metallic stripe–▲4B	3 C	★ D3DZ 1130–B(3/81)
P	14 1/8	80 depressions–w/crest–circular dark yellow green metallic stripe–▲4V	3 C	★ D4DZ 1130–D(3/81)
P	14 1/8	80 depressions–w/crest–circular ginger metallic stripe–▲5H	3 C	★ D2DZ 1130–G(3/83)
P	14 1/8	80 depressions–w/crest–circular dark ginger metallic stripe–▲5J	3 C	★ D4DZ 1130–A(3/83)
P	14 1/8	80 depressions–w/crest–circular bright saddle bronze stripe–▲5T	3 C	★ D3DZ 1130–H(3/83)
P	14 1/8	80 depressions–w/crest–circular tan metallic stripe–▲5U	3 C	★ D4DZ 1130–E(3/83)
P	14 1/8	80 depressions–w/crest–circular light golden rod stripe–▲6B	3 C	★ D3DZ 1130–D(3/81)
P	14 1/8	80 depressions–w/crest–circular medium golden rod stripe–▲6C	3 C	★ D2DZ 1130–E(3/81)
P	14 1/8	80 depressions–w/crest–circular pastel white stripe–▲9C	3 C	D2DZ 1130–A
P	14 1/8	80 depressions–w/crest–circular white stripe–▲9D	3 C	D4DZ 1130–L

Y (Meteor)–refer to A (Mercury)

YEAR	MODEL/RESTRICTIONS	PART NUMBER	DESCRIPTION	QTY.
74	L,P	52937-S47	(UU-322-AF)–screw (attaching wheel cover to aluminum wheel)–No. 8–32 x 3/4"	5

1975 APPLICATION CHART

MODEL	DIAMETER Inches	DESCRIPTION	SHOWN IN SEC 10.1 PAGE	LOC.	PART NUMBER
1130	CAP or COVER (WHEEL HUB) — Cont'd ▲ Certification label color code				
A (Mercury) and Y (Meteor)					
A(53H,65H,71H),Y(53B, 65B,71B)	15 1/8	72 ribs–circular brushed finish–w/emblem	5	G	D3MY 1130–K
A,Y – – exc. 15" x 5" wheels	16 1/4	72 bars–black background–w/crest	5	H	★ D3MY 1130–T(3/82)
A(53K,65K,71K,53L,65L)	16 1/4	12 openings–circular brushed finish–w/ornament	7	M	★ D5MY 1130–A r/bE0MY 1130–C(5/80)
C (Montego)					
C – – w/styled steel wheels	2 3/4	Ford crest–chrome finish	5	B	D60Z 1130–B
C(53B,53D,65B,65D)–14" wheels w/1210 trim ring	10 1/4	Black finish–w/crest	5	D	★ D20Z 1130–E(8/85)
C – – 14" wheels w/o 1210 trim ring	10 1/4	Bright finish–w/crest	5	D	★ D20Z 1130–D(8/85)
C – – w/15" wheels	10 7/8	Bright finish–w/crest	5	E	D3AZ 1130–C
C	15 1/4	32 slots–turbine design–w/crest–argent cover	5	L	★ D4GY 1130–S(8/85)
C(53K,65K)	15 1/4	32 slots–turbine design–w/white crest in center–▲1C, 2B,2M,3G,3M,3Q,4T,4V,4Z,47,5J,5T,5U,5Y,69,9D	7	J	★ D5GY 1130–B(3/81)
C(53K,65K)	15 1/4	32 slots–turbine design–w/blue crest in center–▲3G, 3M,3Q,9D	7	J	★ D5GY 1130–C Not replaced(3/79)
C(53K,65K)	15 1/4	32 slots–turbine design–w/green crest in center–▲4T,4V,4Z,47,9D	7	J	★ D5GY 1130–E Not replaced(5/79)
C(53K,65K)	15 1/4	32 slots–turbine design–w/brown crest in center–▲5J,5T,5U,5Y,6D,9D	7	J	★ D5GY 1130–A(6/82)
C	15 3/8	Turbine design	5	M	D40Z 1130–D
C(53K,65K)	15 9/32	32 slots–turbine design–w/tan crest in center–▲5J,5T,5U,9D	5	L	★ D5GY 1130–F(3/81)
D (Lincoln)					
D	16 1/4	82 ribs–circular brushed finish–w/Lincoln emblem	6	A	D5VY 1130–A
D	16 1/4	88 fins–circular brushed finish–w/Lincoln emblem	7	A	D5VY 1130–K
D	16 1/4	88 fins–red painted cover–w/Lincoln emblem–▲1C,1J,2M,2N,9C	7	A	★ D5VY 1130–D(3/81)
D	16 1/4	88 fins–black, painted cover–w/Lincoln emblem–▲1C, 1J,2N,2P,3R,4V,4Z,41,42,46,47,5V,52,54,6N,6Q,9C	7	A	★ D4VY 1130–G(6/82)
D	16 1/4	88 fins–gold painted cover–w/Lincoln emblem–▲1C,42, 5Q,6G,6N,6Q,9C	7	A	★ D5VY 1130–G(3/81)
D	16 1/4	88 fins–tan painted cover–w/Lincoln emblem–▲1C, 5Q,51,52,54,9C	7	A	★ D5VY 1130–F(3/81)
D	16 1/4	88 fins–silver metallic painted cover–w/Lincoln emblem–▲1J	7	A	★ D4VY 1130–H(3/81)
D	16 1/4	88 fins–blue painted cover–w/Lincoln emblem–▲1J,3G, 3P,3Q,3R,9C	7	A	★ D4VY 1130–E(6/82)
D	16 1/4	88 fins–taupe painted cover–w/Lincoln emblem–▲2P,9C	7	A	★ D5VY 1130–B(3/83)
D	16 1/4	88 fins–silver blue metallic painted cover–w/Lincoln emblem–▲3L	7	A	D4VY 1130–D
D	16 1/4	88 fins–white painted cover–w/Lincoln emblem–▲3P, 3Q,3R,4V,4Z,41,42,47,50,51,52,54,6N,6Q,9C	7	A	★ D4VY 1130–B(6/82)
D	16 1/4	88 fins–green painted cover–w/Lincoln emblem–▲4V, 4Z,41,42,47,6G,9C	7	A	★ D5VY 1130–E Not replaced(6/79)
D	16 1/4	88 fins–dark saddle painted cover–w/Lincoln emblem–▲5Q,51,52,54,9C	7	A	★ D5VY 1130–H Not replaced(6/79)

COPYRIGHT © 1986 — FORD MOTOR COMPANY — DEARBORN, MICHIGAN

1975 APPLICATION CHART

MODEL	DIAMETER Inches	DESCRIPTION	SHOWN IN SEC 10.1 PAGE	LOC.	PART NUMBER
1130		CAP or COVER (WHEEL HUB) — Cont'd ▲ Certification label color code			
		F (Cougar)			
F - - w/styled steel wheels	2 3/4	Ford crest–chrome finish	5	B	D60Z 1130–B
F - - w/1210 trim ring	10 1/4	Black finish–w/crest	5	D	★ D20Z 1130–E(8/85)
F	15 1/4	32 diamonds–w/crest	7	C	★ D4WY 1130–C(10/84)
F	15 1/4	44 holes–circular brushed finish–w/Cougar "XR7" emblem	7	B	D4WY 1130–A
		G (Monarch)			
G	2 3/4	Ford crest–chrome finish	5	B	D60Z 1130–B
G - - use w/D5DZ 1007–B wheel	6 1/8	Bright finish–w/crest	6	B	D5DZ 1130–J
G	10 1/4	Black finish–w/crest	5	D	★ D20Z 1130–E(8/85)
G(54K,66K) - - w/o styled steel wheels	15 1/4	8 openings–diamond design–circular brushed finish–red w/3 silver rings in center	7	E	D5DZ 1130–D
G	15 1/4	45 ribs–w/emblem	7	D	D5DZ 1130–A
		K (Mark IV)			
K - - w/styled aluminum wheels	9 5/8	30 ribs–w/ "Mark IV" emblem in center–black center	7	K	★ D5LY 1130–A r/b D94Y 1130–B(12/83)
K	16 1/4	90 fins–circular brushed finish–w/ornament	7	L	D5LY 1130–B
		L (Bobcat)			
L - - w/styled steel wheels		Chrome finish–w/crest	7	H	★ D5FZ 1130–M(9/85)
L - - w/hub cap			7	G	D5FZ 1130–A
L - - w/styled aluminum wheels	6 1/8	Bright finish–4 holes–w/wreath and crest in center	5	K	★ D4FZ 1130–Y(6/82)
L	9 1/4	Chrome finish–77 bars	5	J	D5FZ 1130–A
L	13 1/8	Circular brushed finish–8 openings	5	A	D1FZ 1130–B
		P (Comet)			
P - - w/styled steel wheels	2 3/4	Ford crest–chrome finish	5	B	D60Z 1130–B
P - - w/styled aluminum wheels	4 3/8	Black center–w/crest	5	F	★ D3GY 1130–A(6/83)
P(62) - - w/1210 trim ring	10 1/4	Black finish–w/crest	5	D	★ D20Z 1130–E(8/85)
P - - w/o 1210 trim ring	10 1/4	Bright finish–w/crest	5	D	★ D20Z 1130–D(8/85)
P	14 1/8	53 openings–black center–w/crest	5	C	D14Y 1130–B
P	14 1/8	80 depressions–circular white stripe–w/crest–▲2M, 3G,3M,3Q,4V,5M,5Q,5U,9D	7	F	★ D5DZ 1130–H(3/83)
P	14 1/8	80 depressions–circular blue stripe–w/crest–▲3G,3M,3Q,9D	7	F	★ D5DZ 1130–E(3/83)
P	14 1/8	80 depressions–circular green stripe–w/crest–▲4V	7	F	★ D5DZ 1130–F(6/82)
P	14 1/8	80 depressions–circular brown stripe–w/crest–▲5M,5Q,5U,9D	7	F	★ D5DZ 1130–G(3/83)

Y (Meteor) – refer to A (Mercury)

YEAR	MODEL/RESTRICTIONS	PART NUMBER	DESCRIPTION	QTY.
75/	L,P	52937–S47	(UU–322–AF)–screw (attaches wheel cover to aluminum wheel)–No. 8–32 x 3/4	5
75/	K	386211–S45B	Screw (attaches wheel cover to aluminum wheel)–1/4"–20 x 9/16"	AR
75/	G	381571–S47	(BB–601–G) Screw (attaches wheel cover to aluminum wheel)–No. 8–32 x 5/8"	AR

1976 APPLICATION CHART

MODEL	DIAMETER Inches	DESCRIPTION	SHOWN IN SEC 10.1 PAGE	LOC.	PART NUMBER
1130	CAP or COVER (WHEEL HUB) — Cont'd ▲ Certification label color code				
A (Mercury) and Y (Meteor)					
A,Y - - w/styled aluminum wheels	9 1/16	33 slots-w/red center-w/3 silver rings	10	E	D6MY 1130-A
A(53H,65H,71H),Y(53B, 65B,71B)	15 1/8	72 ribs-circular brushed finish-w/emblem	8	H	D3MY 1130-K
A,Y - - exc. 15" x 5" wheels	16 1/4	72 bars-black background-w/crest	8	J	★D3MY 1130-T(3/82)
A(53K,53L,65K,65L,71K)	16 1/4	12 openings-circular brushed finish-w/ornament	10	A	★D5MY 1130-A †/bE0MY 1130-C(5/80)
C (Montego)					
C - - w/styled steel wheels-	2 3/4	Ford crest-red center w/chrome finish	8	C	D60Z 1130-B
C(53B,53D,65B,65D)-14" wheels w/1210 trim ring	10 1/4	Black finish-w/crest	8	E	★D20Z 1130-E(8/85)
C - - 14" wheels w/o 1210 trim ring	10 1/4	Bright finish-w/crest	32	E	★D20Z 1130-D(8/85)
C - - 14" wheels w/o 1210 trim ring	10 1/4	Circular brushed finish	10	F	D5DZ 1130-B
C - - w/15" wheels	10 7/8	Bright finish-w/crest	8	F	D3AZ 1130-C
C	15 3/8	Turbine design	9	A	D60Z 1130-D
C	15 1/4	32 slots-turbine design-w/crest-argent cover	8	M	★D4GY 1130-S(8/85)
C(53K,65K)	15 1/4	32 slots-turbine design-w/white crest in center-▲1C, 2B,2M,3G,3M,3Q,4T,4V,4Z,47,5J,5T,5U,5Y,69,9D	9	K	D5GY 1130-B
C(53K,65K)	15 1/4	32 slots-turbine design-w/blue crest in center-▲3G, 3M,3Q,9D	9	K	D5GY 1130-C
C(53K,65K)	15 1/4	32 slots-turbine design-w/green crest in center-▲4T,4V,4Z,47,9D	9	K	D5GY 1130-E
C(53K,65K)	15 1/4	32 slots-turbine design-w/brown crest in center-▲5J,5T,5U,5Y,6D,9D	9	K	★D5GY 1130-A(6/82)
C(53K,65K)	15 1/4	Turbine design-w/tan crest in center-▲5J,5T,5U,9D	8	M	D5GY 1130-F
C(53D,65D)	15 1/4	10 spokes-5 simulated nuts-w/ornament	10	H	D40Z 1130-A
D (Lincoln)					
D - - w/styled aluminum wheels	9 5/8	30 ribs-w/ "Mark IV" emblem in center-black center	9	L	★D5LY 1130-A †/bD94Y 1130-B(12/83)
D	16 1/4	82 ribs-circular brushed finish-w/Lincoln emblem	10	B	D5VY 1130-A
D	16 1/4	88 fins-circular brushed finish-w/Lincoln emblem	9	B	D5VY 1130-K
D	16 1/4	88 fins-red painted cover-w/Lincoln emblem-▲1C,1J,2M,2N,9C	9	B	★D5VY 1130-D(3/81)
D	16 1/4	88 fins-black, painted cover-w/Lincoln emblem-▲1C, 1J,2N,2P,3R,4V,4Z,41,42,46,47,5V,52,54,6N,6Q,9C	9	B	★D4VY 1130-G(6/82)
D	16 1/4	88 fins-gold painted cover-w/Lincoln emblem-▲1C,42, 5Q,6G,6N,6Q,9C	9	B	★D5VY 1130-G(3/81)
D	16 1/4	88 fins-tan painted cover-w/Lincoln emblem-▲1C, 5Q,51,52,54,9C	9	B	★D5VY 1130-F(3/81)
D	16 1/4	88 fins-silver metallic painted cover-w/Lincoln emblem-▲1J	9	B	D4VY 1130-H
D	16 1/4	88 fins-blue painted cover-w/Lincoln emblem-▲1J,3G, 3P,3Q,3R,9C	9	B	★D4VY 1130-E(6/82)

COPYRIGHT © 1986 — FORD MOTOR COMPANY — DEARBORN, MICHIGAN

1976 APPLICATION CHART

MODEL	DIAMETER Inches	DESCRIPTION	SHOWN IN SEC 10.1 PAGE	LOC.	PART NUMBER
1130	CAP or COVER (WHEEL HUB) — Cont'd ▲ Certification label color code				
		D (Lincoln)			
D	16 1/4	88 fins–taupe painted cover–w/Lincoln emblem–▲2P,9C	9	B	D5VY 1130–B
D	16 1/4	88 fins–silver blue metallic painted cover–w/Lincoln emblem–▲3L	9	B	D4VY 1130–D
D	16 1/4	88 fins–white painted cover–w/Lincoln emblem–▲3P, 3Q,3R,4V,4Z,41,42,47,50,51,52,54,6N,6Q,9C	9	B	★ D4VY 1130–B(6/82)
D	16 1/4	88 fins–green painted cover–w/Lincoln emblem–▲4V, 4Z,41,42,47,6G,9C	9	B	D5VY 1130–E
D	16 1/4	88 fins–dark saddle painted cover–w/Lincoln emblem–▲5Q,51,52,54,9C	9	B	D5VY 1130–H
		F (Cougar)			
F – – w/turbin styled aluminum wheels	2 15/16	Red center–w/3 silver rings	10	G	D70Z 1130–D
F – – w/styled steel wheels	2 3/4	Ford crest–red center w/chrome finish	8	C	D60Z 1130–B
F – – w/1210 trim ring	10 1/4	Black finish–w/crest	8	E	★ D20Z 1130–E(8/85)
F	15 1/4	32 diamonds–w/crest	9	D	★ D4WY 1130–C(10/84)
F	15 1/4	44 holes–circular brushed finish–w/Cougar "XR7" emblem	9	C	D4WY 1130–A
		G (Monarch)			
G – – w/styled steel wheels	2 5/8	Chrome finish–w/red center–w/3 silver rings	10	M	D6DZ 1130–A
G	2 3/4	Ford crest–w/red center–w/chrome finish	8	C	D60Z 1130–B
G – – w/style aluminum wheels	6 1/8	Bright finish–w/crest	10	C	D5DZ 1130–J
G	10 1/4	Black finish–w/crest	8	E	★ D20Z 1130–E(8/85)
G(54K,66K) – – w/o styled steel wheels	15 1/4	8 openings–diamond design–circular brushed finish–red w/3 silver rings in center	9	F	D5DZ 1130–D
G	15 1/4	45 ribs–w/emblem	9	E	D5DZ 1130–A
		J (Capri)			
J(64S) – – w/styled aluminum wheels	2 7/16	Black center	10	L	D6RY 1130–B
J(64S)	2 5/8	Plain center	8	A	D0RY 1130–B
J(64S) – – w/styled steel wheels	3 3/16	Black center–w/1 gold ring	10	J	★ D6RY 1130–A(9/85)
J(64S) – – w/style aluminum wheels	2 7/16	black center – w/1 bright ring – 1 black ring	9	G	D5RY 1130–A
		K (Mark IV)			
K – – w/styled aluminum wheels	9 5/8	30 ribs–w/ "Mark IV" emblem in center–black center	9	L	★ D5LY 1130–A r/b D94Y 1130–B(12/83)
K	16 1/4	90 fins–circular brushed finish–w/ornament	9	M	D5LY 1130–B
		L (Bobcat)			
L – – w/styled steel wheels	2 11/16	Chrome finish–w/red center–w/3 silver rings–w/8 mounting clips	10	K	D6ZZ 1130–A
L – – w/styled steel wheels	3 1/8	Chrome finish–w/crest	9	J	D5FZ 1130–M
L – – w/styled steel wheels	3 1/8	Chrome finish–w/red center–w/3 silver rings–w/4 mounting clips	10	D	D6FZ 1130–C
L – – w/styled aluminum wheels	6 1/8	Chrome finish–w/red center–w/3 silver rings–w/4 mounting clips	10	C	D6FZ 1130–B
L – – w/styled aluminum wheels	6 1/8	Bright finish–4 holes–w/wreath and crest in center	8	L	★ D4FZ 1130–Y(6/82)

1976 APPLICATION CHART

MODEL	DIAMETER Inches	DESCRIPTION	SHOWN IN SEC 10.1 PAGE LOC.	PART NUMBER
1130	CAP or COVER (WHEEL HUB) — Cont'd			
L (Bobcat)				
L	9 1/4	Chrome finish–77 bars	9 H	D5FZ 1130–A
L	13 1/8	Circular brushed finish–8 openings	8 B	D1FZ 1130–B
P (Comet)				
P – – w/styled steel wheels	2 3/4	Ford crest–w/red center–w/chrome finish	8 C	D60Z 1130–B
P – – w/styled aluminum wheels	4 3/8	Black center–w/crest	8 G	★D3GY 1130–A(6/83)
P – – 14" wheels w/o 1210 trim ring	10 1/4	Circular brushed finish	10 F	D5DZ 1130–B
P – – w/1210 trim ring	10 1/4	Black finish–w/crest	8 E	★D20Z 1130–E(8/85)
P – – w/o 1210 trim ring	10 1/4	Bright finish–w/crest	8 E	★D20Z 1130–D(8/85)
P	14 1/8	53 openings–black center–w/crest	8 D	D14Y 1130–B
P	15 1/4	45 rib–w/emblem	9 E	D5DZ 1130–A

Y (Meteor)–refer to A (Mercury)

COPYRIGHT © 1986 — FORD MOTOR COMPANY — DEARBORN, MICHIGAN

1977 APPLICATION CHART

MODEL	DIAMETER Inches	DESCRIPTION	SHOWN IN SEC 10.1 PAGE	LOC.	PART NUMBER
1130		CAP or COVER (WHEEL HUB) — Cont'd			
A (Mercury)					
A - - w/styled aluminum wheels	9 1/16	33 slots - w/red center - w/3 silver rings	12	J	D6MY 1130-A
A - - w/15" wheels	10 7/8	Bright finish w/crest	11	C	D3AZ 1130-C
A	15 1/8	circular brushed finish-72 ribs w/emblem	13	F	D3MY 1130-F
A	15 1/8	72 ribs-circular brushed finish w/emblem	11	D	D3MY 1130-K
A	16 1/4	12 openings-circular brushed finish w/ornament	12	D	★ D5MY 1130-A r/b E0MY 1130-C(5/80)
A	16 1/4	Wire wheel design w/crest and lion in center black background	13	G	★ D7AZ 1130-J r/b D8AZ 1130-F(3/79)
A - - exc. 15" x 5" wheels	16 1/4	72 bars-black background w/crest	11	E	★ D3MY 1130-T(3/82)
D (Lincoln)					
D - - w/styled aluminum wheels	6 1/2	Bright finish w/"Mark IV" emblem in center	13	C	★ D7LY 1130-A r/b D8LY 1130-C(9/79)
D - - w/styled aluminum wheels	9 5/8	30 ribs - w/"Mark IV" emblem in center-black center	12	B	★ D5LY 1130-A r/b D94Y 1130-B(12/83)
D	16 1/4	82 ribs-circular brushed finish - w/Lincoln emblem	12	E	D5VY 1130-A
D	16 1/4	88 fins-circular brushed finish - w/Lincoln emblem	12	F	D5VY 1130-K
F (Cougar)					
F - - w/turbine styled aluminum wheels	2 15/16	Red sunburst center	13	L	D70Z 1130-D
F - - w/styled steel wheels	2 3/4	Ford crest-red center w/chrome finish	12	L	D60Z 1130-B
F - - w/BARCELONA or Road wheel	4 3/4	Argent finish-w/5 opening for lug nuts	13	D	D70Z 1130-C
F - - 14" wheels w/o 1210 trim ring	10 1/4	Circular brushed finish	11	K	D5DZ 1130-B
F	10 7/8	Bright chrome finish - w/crest	11	C	D3AZ 1130-C
F	15 1/4	44 holes-circular brushed finish - w/Cougar "XR7" emblem	11	G	D4WY 1130-A
F	15 1/4	2 rows of 24 slots-circular brushed finish w/black center	13	E	D70Z 1130-A
F	15 1/4	Wire wheel design - w/crest and lion in center	13	B	★ D70Z 1130-B r/b D8BZ 1130-F(9/79)
F - - (P/C, Taxi, Fleet)	15 1/8	72 ribs-circular brushed finsih w/emblem	11	D	D3MY 1130-K
F	15 3/8	Turbin design - w/crest	11	F	D60Z 1130-D
F	16 1/4	Lace design-circular brushed finish-black applique with 3 black rings	11	H	D5AZ 1130-K
F w/15" wheels	16 1/4	Wirewheel design w/crest and lion in center black background	13	J	★ D7AZ 1130-J r/b D8AZ 1130-F(3/79)
F w/15" wheels	16 1/4	Cougar emblem in center - 12 openings - circular brushed finish	13	M	D7WY 1130-A
F w/14" wheels	13 3/4	Black center w/red crest - 44 openings	13	N	D7WY 1130-B
G (Monarch)					
G - - w/styled steel wheels	2 5/8	Chrome finish - w/red center - w/3 silver rings	12	G	D6DZ 1130-A
G - - w/style aluminum wheels	6 1/8	Bright finish - w/crest	11	M	D5DZ 1130-J
G	15 1/4	45 ribs - w/red center-w/3 silver rings	11	J	D5DZ 1130-A
G(54k,66k) - w/o styled steel wheels	15 1/4	8 openings-diamond design- circular brushed finish red w/3 silver rings in center	11	L	D5DZ 1130-D
G - - w/14" wheels	10 1/4	Circular brushed finish	13	H	D5DZ 1130-B
G	15 1/4	12 slots - w/3 silver & black crests D. jade cover ▲ 46,7L,9D	13	A	★ D7DZ 1130-A(9/85)

1977 APPLICATION CHART

MODEL	DIAMETER Inches	DESCRIPTION	SHOWN IN SEC 10.1 PAGE	LOC.	PART NUMBER
1130		CAP or COVER (WHEEL HUB) — Cont'd			
		G (Monarch)			
G	15 1/4	12 slots – w/3 silver & black crests silver cover ▲ 1C,1G,2M	13	A	★D7DZ 1130–B r/bD7DZ 1130–K(9/83)
G	15 1/4	12 slots – w/3 silver & black crests red cover ▲ 1C,1G,2M,9D	13	A	★D7DZ 1130–C(9/85)
G	15 1/4	12 slots – w/3 silver & black crests black cover ▲ 1C,1G,2M,9D	13	A	★D7DZ 1130–D(3/84)
G	15 1/4	12 slots – w/3 silver & black crests cream cover ▲ 6P,6V,9D	13	A	★D7DZ 1130–E(3/84)
G	15 1/4	12 slots – w/3 silver & black crests white cover ▲ 2M,2G,3V,3U,46,5Q,6P,6V,6U,7L, 8J,8M,9D	13	A	★D7DZ 1130–F(9/85)
G	15 1/4	12 slots – w/3 silver & black crests brown cover ▲ 5Q,6U,8J,8K,9D	13	A	★D7DZ 1130–G(9/85)
G	15 1/4	12 slots – w/3 silver & black crests D. blue cover ▲ 1G,3G,3U,3V,9D	13	A	★D7DZ 1130–H(9/85)
G	15 1/4	12 slots – w/3 silver & black crests gold flair cover ▲ 1C,5Q,8J,9D	13	A	★D7DZ 1130–J(6/82)
G	15 1/4	12 slots–circular brushed finish– w/3 silver and black crest–dove grey ▲IN	13	A	★D7DZ 1130–K(6/84)
G	15 1/4	Wire wheel design crest & 3 lions in center	13	B	★D70Z 1130–B r/bD8BZ 1130–F(9/79)
		J (Capri)			
J(64S) – – w/styled aluminum	2 7/16	Black center	10	L	D6RY 1130–B
J(64S)	2 5/8	Plain center	7	C	D0RY 1130–B
J(64S) – – w/styled steel	3 3/16	Black center – w/1 gold ring	10	J	★D6RY 1130–A(9/85)
J(64S) – – w/ styled aluminum wheels "Before 9/1/76"	2 7/16	Black center – w/1 bright ring – 1 black ring	13	K	D5RY 1130–A
J – – (64S)w/styled aluminum wheels "From 9/1/76"	2 7/16	Bright finish			★D7RY 1130–A(9/85)
		K (Mark V)			
K – – w/aluminum wheels	6 1/2	W/"Mark V" emblem in center	13	C	★D7LY 1130–A r/bD8LY 1130–C(9/79)
K – – w/styled aluminum wheels	9 5/8	30 ribs – w/"Mark V" emblem in center–black center	12	B	★D5LY 1130–A r/bD94Y 1130–B(12/83)
K	16 1/4	90 fins–circular brushed finish – w/ornament	12	C	D5LY 1130–B
		L (Bobcat) "Before 6/27/77", For units built "From 6/27/77" refer to 1978			
L – – w/styled steel wheels	3 1/8	Chrome finish – w/red center – w/3 silver rings w/4 mounting clips			D6FZ 1130–C
L – – w/styled aluminum wheels	6 1/8	Chrome finish – w/red center – w/3 silver rings w/4 mounting clips	12	H	D6FZ 1130–B
L	9 1/4	Chrome finish–77 bars	12	A	D5FZ 1130–A
L	13 1/8	Circular brushed finish–8 openings	11	A	D1FZ 1130–B
L	14 1/8	Wire wheel des crest & 3 lions in center	13	B	D7FZ 1130–A

COPYRIGHT © 1986 — FORD MOTOR COMPANY — DEARBORN, MICHIGAN

1977 APPLICATION CHART

MODEL	DIAMETER Inches	DESCRIPTION	SHOWN IN SEC 10.1 PAGE LOC.	PART NUMBER
1130		CAP or COVER (WHEEL HUB) — Cont'd		
		P (Comet)		
P - - w/styled steel wheels	2 3/4	Ford crest - w/red center - w/chrome finish	12 L	D60Z 1130-B
P - - 14" wheels w/o 1210 trim ring	10 1/4	Circular brushed finish	11 K	D5DZ 1130-B
P	14 1/8	53 openings-black center - w/crest	11 B	D14Y 1130-B
P	15 1/4	45 rib - w/emblem	11 J	D5DZ 1130-A
P	15 1/4	Wire wheel des crest & 3 lions in center	13 B	D70Z 1130-B
P - - w/14" wheel	14 1/8	Bright chrome finish-80 depressions black center w/crest	13 G	D20Z 1130-F
		P (Comet)		
P - - Canada Feature Car	15 1/4	12 slots-w/3 silver & black crests D. jade cover ▲ 46,7L,9D	13 A	★ D7DZ 1130-A(9/85)
P - - Canada Feature Car	15 1/4	12 slots-w/3 silver & black crests sliver-cover ▲ 1C,1G,2M	13 A	★ D7DZ 1130-B r/b D7DZ 1130-K(9/83)
P - - Canada Feature Car	15 1/4	12 slots-w/3 silver & black crests red cover ▲ 1C,1G,2M,9D	13 A	★ D7DZ 1130-C(9/85)
P - - Canada Feature Car	15 1/4	12 slots-w/3 silver & black crests black cover ▲ 1C,1G,2M,9D	13 A	★ D7DZ 1130-D(10/84)
P - - Canada Feature Car	15 1/4	12 slots-w/3 silver & black crests cream cover ▲ 6P,6V,9D	13 A	★ D7DZ 1130-E(3/84)
P - - Canada & U.S. Feature Car	15 1/4	12 slots- w/3 silver & black crests white cover ▲ 2M,2G,3V,3U,46, 5Q,6P,6V,6U,7L,8J,8M,9D	13 A	★ D7DZ 1130-F(9/85)
P - - Canada & U.S. Feature Car	15 1/4	12 slots- w/3 silver & black crests brown cover ▲ 5Q,6U,8J,8K,9D	13 A	★ D7DZ 1130-G(9/85)
P - - Canada & U.S. Feature Car	15 1/4	12 slots- w/3 silver & black crests D. blue cover ▲ 1G,3G,3U,3V,9D	13 A	★ D7DZ 1130-H(9/85)
P - - Canada Feature Car	15 1/4	12 slots-w/3 silver & black crests gold flair cover ▲ 1C,5Q,8J,9D	13 A	★ D7DZ 1130-J(6/82)
		V (Versailles)		
V-w/styled aluminum wheels	9 5/8	30 ribs-w/mark V emblem in center - black center	12 B	★ D5LY 1130-A r/b D94Y 1130-B(12/83)

1978 APPLICATION CHART

MODEL	DIAMETER Inches	DESCRIPTION	SHOWN IN SEC 10.1 PAGE LOC.	PART NUMBER
1130 CAP OR COVER (WHEEL HUB)				
A (Mercury)				
A - - w/styled aluminum wheels	9 1/16	33 slots-w/red center-w/3 silver rings	15 D	D6MY 1130-A
A	15 1/8	72 ribs-circular brushed finish-w/emblem	14 C	D3MY 1130-K
A "Before 11/1/77"	16 1/4	Wire wheel design-w/crest and lion in center-black background	15 F	★ D7AZ 1130-J r/b D8AZ 1130-F(3/79)
A "From 11/1/77"	16 1/4	Wire wheel design-w/ crest and lion in center-black background	15 F	D8AZ 1130-F
A	16 1/4	Wire wheel design-w/crest and black background	16 K	★ D8MY 1130-A r/b E0MY 1130-B(12/80)
A	16 1/4	88 fins equally spaced w/Mercury ornament	17 A	D8MY 1130-B
D (Lincoln)				
D - - w/styled aluminum wheels	6 1/2	Bright finish w/ "Mark V" emblem in center	16 F	D8LY 1130-C
D - - w/styled aluminum wheels "Before 1/2/78"	9 5/8	30 ribs-w/"Mark V" emblem in black center	14 M	★ D5LY 1130-A r/b D94Y 1130-B(12/83)
D - - w/styled aluminum wheels "From 1/2/78"	9 5/8	Argent finish w/ "Mark V" emblem in center	16 M	★ D84Y 1130-B r/b D94Y 1130-B(9/82)
D	16 1/4	82 ribs-circular brushed finish-w/Lincoln emblem	6 A	D5VY 1130-A
D	16 1/4	88 fins-circular brushed finish-w/ Lincoln emblem	15 A	D5VY 1130-K
D	16 1/4	Wire wheel design w/"Mark V" emblem in center	16 H	★ D8LY 1130-A r/b D9LY 1130-A(8/79)
D	16 1/4	Circular brushed finish-72 ribs "Mark V" emblem in center	16 J	D8LY 1130-B
F (Cougar)				
F - - w/turbine styled aluminum wheels	2 15/16	Red center w/3 silver rings	15 K	D70Z 1130-D
F - - w/styled steel wheels	2 3/4	Ford crest-red center w/chrome finish	15 E	D60Z 1130-B
F - - w/14" wheels	15 1/4	Black center w/red crest- 44 openings	13 N	D7WY 1130-B
F - - w/Barcelona or Road Wheel	4 3/4	Argent finish-5 openings for lug nuts	15 J	D70Z 1130-C
F - - w/Barcelona or Road Wheel	4 3/4	Chamois finish-5 openings for lug nuts	15 J	D8WY 1130-A
F - - 14" wheels w/o 1210 trim ring	10 1/4	Circular brushed finish	14 H	D5DZ 1130-B
F	10 7/8	Bright chrome finish-w/crest	14 B	D3AZ 1130-C
F	15 1/4	Wire wheel design-w/crest and lion in center	15 H	★ D70Z 1130-B r/b D8BZ 1130-F(9/79)
F - - (P/C,Taxi,Fleet)	15 1/8	72 ribs-circular brushed finish w/ emblem	14 C	D3MY 1130-K
F	15 3/8	Turbine design-w/crest	14 E	D60Z 1130-D
F	16 1/4	Lace design-circular brushed finish-black center with 3 black rings	14 F	D5AZ 1130-K
F w/15" wheels "Before 11/1/77"	16 1/4	Wire wheel design w/crest and lion in center-black background	15 F	★ D7AZ 1130-J r/b D8AZ 1130-F(3/79)
F "From 11/1/77"	16 1/4	Wire wheel design-w/ crest and lion in center-black background	15 F	D8AZ 1130-F
F w/15" wheels	16 1/4	Circular brushed finish-12 openings -Cougar emblem in center	15 L	D7WY 1130-A

COPYRIGHT © 1986 — FORD MOTOR COMPANY — DEARBORN, MICHIGAN

1978 APPLICATION CHART

MODEL	DIAMETER Inches	DESCRIPTION	SHOWN IN SEC 10.1 PAGE LOC.	PART NUMBER
1130		CAP OR COVER (WHEEL HUB) — Cont'd		
		G (Monarch)		
G - - w/styled steel wheels	2 5/8	Chrome finish–w/red center–w/3 silver rings	15 B	D6DZ 1130–A
G - - w/styled aluminum wheels	6 1/8	Bright finish – w/crest	14 K	D5DZ 1130–J
G "Before 12/1/77"	15 1/4	45 ribs–w/emblem	14 G	D5DZ 1130–A
G "From 12/1/77"	15 1/4	45 ribs–w/emblem	14 G	★ D8DZ 1130–L(9/85)
G(54K,66K) w/o styled steel wheels	15 1/4	8 openings–diamond design–circular brushed finish–red w/3 silver rings in center	14 J	D5DZ 1130–D
G - - w/14" wheels	10 1/4	Circular brushed finish	14 H	D5DZ 1130–B
G	15 1/4	12 slots–w/brushed aluminum applique–dark jade	15 G	D8DZ 1130–A
G	15 1/4	12 slots–w/brushed aluminum applique–midnight blue	15 G	D8DZ 1130–B
G	15 1/4	12 slots–w/brushed aluminum applique–camel	15 G	★ D8DZ 1130–C r/b E0DZ 1130–C(9/83)
G	15 1/4	12 slots–w/brushed aluminum applique–silver	15 G	★ D8DZ 1130–D r/b D8DZ 1130–K(9/83)
G	15 1/4	12 slots–w/brushed aluminum applique–med. red	15 G	D8DZ 1130–E
G	15 1/4	12 slots–w/brushed aluminum applique–black	15 G	D8DZ 1130–F
G	15 1/4	12 slots–w/brushed aluminum applique–white	15 G	D8DZ 1130–G
G	15 1/4	12 slots–w/brushed aluminum applique–cordovan	15 G	D8DZ 1130–H
G	15 1/4	12 slots–w/brushed aluminum applique–med. blue	15 G	D8DZ 1130–J
G	15 1/4	12 slots–w/brushed aluminum applique–dove gray	15 G	D8DZ 1130–K
G	15 1/4	Wire wheel design w/crest & 3 lions in center	15 H	★ D70Z 1130–B r/b D8BZ 1130–F(9/79)
		J (Capri II)		
J(64S) - - w/styled aluminum wheels	2 7/16	Black center	10 L	D6RY 1130–B
J(64S)	2 5/8	Plain center	6 C	D0RY 1130–B
J(64S) - - w/styled steel wheels	3 3/16	Black center–w/ 1 gold ring	10 J	D6RY 1130–A
J(64S) - - w/styled aluminum wheels	2 7/16	Bright finish	15 C	★ D7RY 1130–A(9/85)
		K (Mark V)		
K - - w/aluminum wheels	6 1/2	W/"Mark V" emblem in center	16 F	D8LY 1130–C
K - - w/styled aluminum wheels "Before 1/2/78"	9 5/8	30 ribs–w/"Mark V" emblem in black center	14 M	★ D5LY 1130–A r/b D94Y 1130–B(12/83)
K - - w/styled aluminum wheels "From 1/2/78"	9 5/8	Argent finish w/"Mark V" emblem in center	16 M	★ D84Y 1130–B r/b D94Y 1130–B(9/82)
K	16 1/4	90 fins–circular brushed finish–w/ornament	7 L	D5LY 1130–B
K	16 1/4	Wire wheel design w/"Mark V" emblem in center	16 H	★ D8LY 1130–A r/b D9LY 1130–A(8/79)
K	16 1/4	Circular brushed finish–72 ribs–"Mark V" emblem in center	16 J	D8LY 1130–B

1978 APPLICATION CHART

MODEL	DIAMETER Inches	DESCRIPTION	SHOWN IN SEC 10.1 PAGE	LOC.	PART NUMBER
1130 CAP OR COVER (WHEEL HUB) — Cont'd					
L (Bobcat)					
L - - w/styled steel wheels	3 1/8	Chrome finish-w/red center-w/3 silver rings	15	C	D6FZ 1130-C
L - - w/styled aluminum wheels	6 1/8	Chrome finish-w/red center w/3 silver rings	14	K	D6FZ 1130-B
L - - w/hub cap & 1210 trim ring	9 1/4	77 bars equally spaced	16	D	D8BZ 1130-E
L	13 1/8	Circular brushed finish-8 openings	8	B	D1FZ 1130-B
L	14 1/8	Wire wheel design-circular brushed finish-w/emblem	15	H	D7FZ 1130-A
P (Zephyr)					
P - - w/styled steel wheels	2 3/4	Ford crest-w/red center- w/chrome finish	15	E	D60Z 1130-B
P - - 14" wheels w/o 1210 trim rings	10 1/4	Circular brushed finish	14	H	D5DZ 1130-B
P	14 1/8	53 openings-black center-w/crest	14	A	D14Y 1130-B
P - - w/styled aluminum wheels	6 1/8	Chrome finish-w/red center-w/3 silver rings	14	K	D5DZ 1130-J
P	15 1/4	45 ribs-w/emblem	14	G	D5DZ 1130-A
P	15 1/4	Circular brushed finish-64 holes argent	16	B	D8BZ 1130-C
P - - w/styled aluminum wheels	5 13/16	Argent finish-4 holes	16	C	★ D8BZ 1130-D r/b E1ZZ 1130-A(8/81)
P - - w/hub cap & 1210 trim ring	9 1/4	77 bars equally spaced	16	D	D8BZ 1130-E
P	15 1/4	Circular brushed finish-36 slots-w/black stripe around center	16	G	D8KY 1130-A
P	15 1/4	Wire wheel design-w/crest and 3 lions in center	16	E	D8BZ 1130-F
P "From 2/15/78"	15 1/4	Turbine design-4 holes-Light argent	16	A	E0BZ 1130-G
P(36R) "From 4/15/78"	15 1/4	Turbine design w/ black & silver applique-m. blue	16	A	D8BZ 1130-AD
P(36R) "From 4/15/78"	15 1/4	Turbine design w/ black & silver applique-red	16	A	★ D8BZ 1130-AE r/b E0BZ 1130-H(3/83)
P(36R) "From 4/15/78"	15 1/4	Turbine design w/ black & silver applique-chamois	16	A	D8BZ 1130-AF
P(36R) "From 4/15/78"	15 1/4	Turbine design w/ black & silver applique-black	16	A	D8BZ 1130-AG
P(36R) "From 4/15/78"	15 1/4"	Turbine design w/ black & silver applique-cream	16	A	★ D8BZ 1130-AH r/b E0BZ 1130-J(12/82)
P(36R) "From 4/15/78"	15 1/4	Turbine design w/ black & silver applique-white	16	A	★ D8BZ 1130-AJ r/b E1ZZ 1130-D(12/82)
P(36R) "From 4/15/78"	15 1/4	Turbine design w/black & silver applique-jade	16	A	★ D8BZ 1130-Z(7/80) r/b ★ D8BZ 1130-AK(6/82)
P(36R) "From 4/15/78"	15 1/4	Turbine design w/black & silver applique-blue	16	A	★ D8BZ 1130-AL(3/84)
P(36R) "From 4/15/78"	15 1/4	Turbine design w/black & silver applique-russett	16	A	★ D8BZ 1130-AM(6/83)
P(36R) "From 4/15/78"	15 1/4	Turbine design w/black & silver applique-gold	16	A	★ D8BZ 1130-AN(3/84)
V (Versailles)					
V-w/styled aluminum wheels "Before 10/1/77"	9 5/8	30 ribs-w "MARK V" emblem in center-black background	14	M	★ D5LY 1130-A r/b D94Y 1130-B(12/83)

COPYRIGHT © 1986 — FORD MOTOR COMPANY — DEARBORN, MICHIGAN

1978 APPLICATION CHART

MODEL	DIAMETER Inches	DESCRIPTION	SHOWN IN SEC 10.1 PAGE LOC.	PART NUMBER
1130		**CAP OR COVER (WHEEL HUB) — Cont'd**		
		V (Versailles)		
V - - w/styled aluminum wheels "From 10/1/77"	9 5/8	Argent finish–w/ "Mark V" emblem in center	16 M	★ D84Y 1130–B r/b D94Y 1130–B(12/81)
V	15 1/4	Wire wheel design–bright finish spoke–w/"Mark V" emblem	16 L	★ D84Y 1130–A r/b D94Y 1130–A(11/78)

1979 APPLICATION CHART

MODEL	DIAMETER Inches	DESCRIPTION	SHOWN IN SEC 10.1 PAGE	LOC.	PART NUMBER
1130 CAP OR COVER (WHEEL HUB)					
A (MERCURY)					
A "Before 1/15/79"	15 1/4	Wire wheel design–w/silver & red crest	19	C	D9AZ 1130–A
A "From 1/15/79"	15 1/4	Wire wheel design–w/silver & red crest	19	C	D9AZ 1130–E
A	10 3/4	Circular brushed finish w/2 black rings & "FORD" imprinted around center	19	D	D9AZ 1130–D
A	15 1/4	Circular brushed finish w/black ctr. & bright crest	19	H	D9MY 1130–A
A	15 1/4	Circular brushed finish–44 holes w/Mercury crest	19	J	D9MY 1130–B
A	15 1/4	28 ribs around center w/black & bright finish applique	19	K	D9MY 1130–C
D (LINCOLN)					
D	16 1/4	82 ribs–circular brushed finish–w/Lincoln emblem	19	B	D5VY 1130–A
D – – w/styled aluminum wheels	6 1/2	Bright finish w/Mark V emblem in center	18	K	D8LY 1130–C
D	16 1/4	Wire wheel design–w/gold & black "Continental" applique	19	G	D9LY 1130–A
F (COUGAR)					
F	10 7/8	Bright finish–w/crest	17	A	D3AZ 1130–C
F – – (P/C,Taxi,Fleet)	15 1/8	72 ribs–circular brushed finish w/emblem	17	B	D3MY 1130–K
F – – 14" wheels–w/o 1210 trim rings	10 1/4	Circular brushed finish	17	D	D5DZ 1130–B
F – – w/styled steel wheels	2 5/8	Chrome finish–w/Ford crest	17	K	D60Z 1130–B
F	15 3/8	Turbine design–w/crest	17	C	D60Z 1130–D
F – – w/14" wheels	15 1/4	Wire wheel design–w/crest and lion in center	18	A	★ D70Z 1130–B r/b D8BZ 1130–F(9/79)
F – – w/styled road wheel	4 3/4	Argent finish–w/red center–5 openings for lug nuts	18	B	D70Z 1130–C
F – – w/turbine styled aluminum wheels	2 15/16	Red center w/3 silver rings	18	C	D70Z 1130–D
F – – w/14" wheels	15 1/4	Black center w/red crest–44 openings	20	B	D7WY 1130–B
F – – w/15" wheels	16 1/4	Circular brushed finish–12 openings–Cougar emblem in center	18	D	D7WY 1130–A
F – – w/15" wheels	16 1/4	Wire wheel design–w/crest and lion in center	17	L	D8AZ 1130–F
F – – w/styled road wheel	4 3/4	Chamois finish–w/red center–5 openings for lug nuts	18	B	D8WY 1130–A
G (MONARCH)					
G	10 1/4	Circular brushed finish	17	D	D5DZ 1130–B
G	15 1/4	Diamond design–8 openings–circular brushed finish–w/emblem	17	E	D5DZ 1130–D
G	6 1/8	Chrome finish–w/red center–w/3 silver rings	17	F	D5DZ 1130–J
G – – w/styled steel wheels	2 5/8	Chrome finish–w/red center–w/3 silver rings	17	H	D6DZ 1130–A
G	15 1/4	Wire wheel design–w/crest and lion in center	18	A	★ D70Z 1130–B r/b D8BZ 1130–F(9/79)
G – – w/styled aluminum wheels	5 13/16	Argent finish–4 holes	18	G	★ D8BZ 1130–D r/b D8DZ 1130–K(9/83)

COPYRIGHT © 1986 — FORD MOTOR COMPANY — DEARBORN, MICHIGAN

1979 APPLICATION CHART

MODEL	DIAMETER Inches	DESCRIPTION	SHOWN IN SEC 10.1 PAGE LOC.	PART NUMBER
1130	CAP OR COVER (WHEEL HUB) — Cont'd			
		G (MONARCH)		
G	15 1/4	12 slots–w/brushed aluminum applique dark jade	17 M	D8DZ 1130–A
G	15 1/4	12 slots–w/brushed aluminum applique–midnight blue	17 M	D8DZ 1130–B
G	15 1/4	12 slots–w/brushed aluminum applique–camel	17 M	★ D8DZ 1130–C /bE0DZ 1130–C(9/83)
G	15 1/4	12 slots–w/brushed aluminum applique–silver	17 M	D8DZ 1130–D
G	15 1/4	12 slots–w/brushed aluminum applique–black	17 M	D8DZ 1130–F
G	15 1/4	12 slots–w/brushed aluminum applique–white	17 M	D8DZ 1130–G
G	15 1/4	12 slots–w/brushed aluminum applique–cordovan	17 M	D8DZ 1130–H
G	15 1/4	12 slots–w/brushed aluminum applique–med. blue	17 M	D8DZ 1130–J
G	15 1/4	12 slots–w/brushed aluminum applique–dove grey	17 M	D8DZ 1130–K
G	15 1/4	12 slots–w/brushed aluminum applique–bright finish	20 C	D9DZ 1130–A
G	15 1/4	12 slots–w/brushed aluminum applique–dk. blue	19 J	D9DZ 1130–B
G	15 1/4	12 slots–w/brushed aluminum applique–dk. red	19 J	D9DZ 1130–C
		J (CAPRI)		
J – – w/styled aluminum wheels	5 13/16	Argent finish–4 holes	18 G	★ D8BZ 1130–D /bE1ZZ 1130–A(8/81)
J	9 1/4	77 bars equally spaced	18 H	D8BZ 1130–E
J	15 1/4	Wire wheel design–circular brushed finish–w/emblem	18 J	D8BZ 1130–F
J "Before 5/14/79"	15 1/4	Labyrinth design–brushed chrome & dark argent finish	19 E	★ D9CY 1130–A /bD9CY 1130–C(3/82)
J – – "From 5/14/79"	15 1/4	Labyrinth design–brushed chrome & dark argent finish	19 E	D9CY 1130–C
J – – w/13" styled steel wheels	8 1/2	Black finish–w/black center w/2 red rings	20 C	D9ZZ 1130–A
J – – w/14" styled steel wheels	7 1/2	Black finish–w/red ring–w/4 wheel nut caps	19 L	D9ZZ 1130–C
J w/wide spoke aluminum wheels	6 5/8	Circular brushed finish	20 A	D9ZZ 1130–H
		K (MARK V)		
K	16 1/4	90 fins–circular brushed finish–w/ornament	17 G	D5LY 1130–B
K	6 1/2	Bright finish w/Mark V emblem in center	18 K	D8LY 1130–C
K	16 1/4	Wire wheel design–w/gold & black "Continental" applique	19 G	D9LY 1130–A
		L (BOBCAT)		
L – – w/styled aluminum wheels	6 1/8	Chrome finish–w/red center – w/3 silver rings	17 F	D6FZ 1130–B
L – – w/styled steel wheels	3 1/8	Chrome finish–w/red center – w/3 silver rings	17 J	D6FZ 1130–C
L	14 1/8	Wire wheel design–circular brushed finish–w/emblem	18 A	D7FZ 1130–A

1979 APPLICATION CHART

MODEL	DIAMETER Inches	DESCRIPTION	SHOWN IN SEC 10.1 PAGE LOC.	PART NUMBER
1130	CAP OR COVER (WHEEL HUB) — Cont'd			
L (BOBCAT)				
L	14 1/4	19 holes–circular brushed finish w/black center & black ring around center	19 F	D9FZ 1130–A
L	14 1/4	Circular brushed finish–w/8 slots around outside & center	19 M	D9ZZ 1130–D
P (ZEPHYR)				
P	15 1/4	Circular brushed finish–64 holes–black & argent paint	18 F	D8BZ 1130–C
P – – w/styled aluminum wheels	5 13/16	Argent finish–4 holes	18 G	★ D8BZ 1130–D †/bE1ZZ 1130–A(8/81)
P – – w/hub cap & 1210 trim ring	9 1/4	77 bars equally spaced	18 H	D8BZ 1130–E
P	15 1/4	Wire wheel design–circular brushed finish–w/emblem	18 J	D8BZ 1130–F
P	15 1/4	Turbine design–4 holes–light argent	18 E	★ D8BZ 1130–P †/bE0BZ 1130–G(2/80)
P	15 1/4	Turbine design w/black & silver applique–drk. blue	18 E	★ D8BZ 1130–R †/bD8BZ 1130–AD(3/80)
P	15 1/4	Turbine design w/black & silver applique–red	18 E	★ D8BZ 1130–AE †/bE0BZ 1130–H(3/83)
P	15 1/4	Turbine design w/black & silver applique–chamois	18 E	★ D8BZ 1130–U †/bD8BZ 1130–AF(3/80)
P	15 1/4	Turbine design w/black & silver applique–black	18 E	★ D8BZ 1130–V †/bD8BZ 1130–AG(7/80)
P	15 1/4	Turbine design w/black & silver applique–cream	18 E	D8BZ 1130–AH †/bE0BZ 1130–J(12/82)
P	15 1/4	Turbine design w/black & silver applique–white	18 E	D8BZ 1130–AJ †/bE1ZZ 1130–D(12/82)
P	15 1/4	Circular brushed finish–36 slots–w/black stripe around center	18 L	D8KY 1130–A
P	7 1/2	Black finish–w/red ring–w/4 wheel nut caps	19 L	D9ZZ 1130–C
V (Versailles)				
V	15 1/4	Wire wheel design–bright finish spoke–w/Mark V emblem	18 M	D94Y 1130–A
V – – w/styled aluminum wheel	9 5/8	Argent finish–w/Mark V emblem in center	19 A	D84Y 1130–B
V – – w/styled aluminum wheel	9 5/8	Argent finish–w/Mark V emblem in center	19 A	D94Y 1130–B

COPYRIGHT © 1986 — FORD MOTOR COMPANY — DEARBORN, MICHIGAN

1973/79 LINCOLN-MERCURY CARS

YEAR	MODEL/RESTRICTIONS	PART NUMBER	DESCRIPTION	QTY.
75	L,P	52937-S47	(UU-322-AF)-screw (attaches wheel cover to aluminum wheel)-No. 8-32 x 3/4"	5
75/	K	386211-S45B	Screw (attaches wheel cover to aluminum wheel)-1/4"-20 x 9/16"	AR
75/	G	381571-S47	(BB-601-G)-screw (attaches wheel cover to aluminum wheel)-No. 8-32 x 5/8"	AR
76/	A,Y,G			AR
77	A,G,L	387523-S47	(UU-58-Q)-screw(attaches wheel cover to aluminum wheels)-No.8-16 x 5/8"	AR
78	P	388206-S47	(UU-76-A)-screw (attaches wheel cover to aluminum wheels)-No. 8-16 x 5/8"	AR
78	A,G,L	388207-S47	(UU-53-AH)-screw (attaches wheel covers to aluminum wheels)-No. 6-19 x 5/8"	AR
79	V	388761-S47B	(UU-58-JJ)-screw (attaches wheel cover to aluminum wheel)-1/4"-20 x 11/16"	AR
1131	CAP (FRONT HUB GREASE)			
73/76	A,C,D,F,K,L,P,Y	B5A 1131-A	1 25/32" O.D.	2
77/	A,D,F,K,L,P			2
75/	G,V			2
79	J			2
73/78	J	D2RY 1131-A		2
1137	APPLIQUE (WHEEL COVER)			
73/76	A,Y	★ D3MY 1137-A(3/84)	Also serviced in D3MY 1130-B wheel cover	4
73/74	P	★ D3MY 1137-A(3/84)	Also serviced in D3MY 1130-K wheel cover	4
73/76	A,Y			4
77	A			4
73	A,Y	★ D3MY 1137-B(12/81)	Also serviced in D3MY 1130-C wheel cover	4
73/	A,Y		Also serviced in D3MY 1130-T wheel cover	4
78	A	D8MY 1137-A	Also serviced in D8MY 1130-A wheel cover	4
79	A	D9AZ 1137-A	Also serviced in D9AZ 1130-A wheel cover	4
	A	D9MY 1137-A	Also serviced in D9MY 1130-C wheel cover	4
	A	D9AZ 1137-D	Also serviced in D9AZ 1130-E wheel cover	4
74/76	C	D40Z 1137-A	Also serviced in D40Z 1130-D wheel cover	4
73	D	★ D3VY 1137-C Not replaced (3/79)	Also serviced in D3VY 1130-D wheel cover	4
73/74	D	★ D3VY 1137-B Not replaced (3/79)	Also serviced in D3VY 1130-B wheel cover	4
74/	D	★ D4VY 1137-A(6/82)	Also serviced in painted wheel cover	4
75/	D	D5VY 1137-A	Also serviced in D5VY 1130-A wheel cover	4
78/	D	D8LY 1137-A	Also serviced in D8LY 1130-A wheel cover	4
78/	D	D84Y 1137-B	Also serviced in D8LY 1130-C wheel cover	4
73	F	★ D1WY 1137-A(6/81)	Also serviced in D1WY 1130-E wheel cover	4
74/	F	★ D4WY 1137-A(2/80)	Also serviced in D4WY 1130-A(2/80) wheel cover	4
76/	F	D60Z 1137-A	Also serviced in D60Z 1130-C wheel cover	4
78/	F		Also serviced in D8WY 1130-A wheel cover	4
77/	F	D70Z 1137-A	Also serviced in D70Z 1130-B wheel cover	4
	F	D7WY 1137-A	Also serviced in D7WY 1130-A wheelcover	4
78/	F	D40Z 1137-A	Also serviced in D60Z 1130-D wheel cover	4
75/	G	D5DZ 1137-A	Also serviced in D5DZ 1130-A wheel cover	4
		D5DZ 1137-B	Also serviced in D5DZ 1130-D wheel cover	4
		★ D5DZ 1137-C(3/84)	Also serviced in D5DZ 1130-J wheel cover	4
77/	G	D60Z 1137-A	Also serviced in D60Z 1130-C	4
78/	G	D8DZ 1137-A	Also serviced in D8DZ 1130-A/K wheel cover	4
79	J	D8BZ 1137-B	Also serviced in D8BZ 1130-D wheel cover	4
	J	D9CY 1137-A	Also serviced in D9CY 1130-A wheel cover	4
73/	K	D0LY 1137-A	Also serviced in D3LY 1130-A wheel cover	4
75/	K		Also serviced in D5LY 1130-B wheel cover	4
78/	K	D8LY 1137-A	Also serviced in D8LY 1130-A wheel cover	4
74/	L	D4FZ 1137-B	Also serviced in D4FZ 1130-Y wheel cover	4
76/	L	★ D5DZ 1137-C(3/84)	Also serviced in D6FZ 1130-A wheel cover	4
77/	L	D60Z 1137-A	Also serviced in D6FZ 1130-C wheel cover	4
77/	L	D70Z 1137-A	Also serviced in D7FZ 1130-A wheel cover	4
73/	P - - w/aluminum wheel	★ D3GY 1137-A Not replaced (3/79)	Also serviced in D3GY 1130-A wheel cover	4

YEAR	MODEL/RESTRICTIONS	PART NUMBER	DESCRIPTION	QTY.
1137	APPLIQUE (WHEEL COVER) — Cont'd			
77	P	D60Z 1137-A	Also serviced D60Z 1130-A wheel cover	4
78/	P	D8BZ 1137-A	Also serviced in D8BZ 1130-A/B wheel covers & D8BZ 1130-G/N wheel covers	4
	P	D8BZ 1137-B	Also serviced in D8BZ 1130-D wheel cover	4
	P	D70Z 1137-A	Also serviced in D8BZ 1130-F wheel cover	4
78/	V	D84Y 1137-A	Also serviced in D84Y 1130-A wheel cover	4
		D84Y 1137-B	Also serviced in D84Y 1130-B/C wheel cover	4
1141	ORNAMENT (WHEEL COVER)			
78	A	★ D8MY 1141-A(6/82)	Also serviced in D8MY 1130-B wheel cover	4
79	A	D9MY 1141-A	Also serviced in D9MY 1130-C wheel cover	4
73	D	★ D0LY 1141-A Not replaced (3/79)	Use with D3VY 1130-D wheel cover	4
75/	D	D5VY 1141-A	Also serviced in D5VY 1130-A wheel cover	4
73/74	K	★ D2LY 1141-A	Use with D3LY 1130-A wheel cover	4
75/	K	r/b E0LY 1141-A(8/81)	Also serviced in D5LY 1130-A wheel cover	4
1177	SEAL (REAR WHEEL BEARING OIL INNER) NOTE 1-Vehicles with ball bearing (1225), NOTE 2-Vehicles with tapered roller bearing (1225) NOTE 3-Also serviced in assy.-group 1225			
73/78	A,Y - - exc. WER axle NOTE 1	★ C9AZ 1177-A	#Red-1 1/2" I.D. x 2 1/2" O.D.-r/b E0TZ 1177-C(4/80)	2
74/78	A,Y - - rear drum brakes (exc. WER axle) NOTE 2,3	★ D4AZ 1177-A r/b E0TZ 1177-B(8/81)	1 7/8" I.D. x 3 5/32" O.D.-15/16" thick	2
73/78	A,Y - - rear drum brakes and WER axle	★ D5AZ 1177-A ★r/b E1AZ 1177-A (12/30)	1 25/64" I.D. x 2 19/64" O.D. - 15/32" thick R/b E1AZ 1177-B	2
75/76	A,Y - - rear disc brakes	D5MY 1177-A	1 7/8" I.D. x 3 9/64" O.D.-15/16" thick	2
77/78	A			2
79	A - - w/7.5" & 8.5" dia. ring gear	★ D8BZ 1177-A ★r/b E1AZ 1177-A(12/30)	1 3/8" I.D. x 2 1/4" O.D. x 7/16" thick R/b E1AZ 1177-B	2
73/	C NOTE 1	★ C9AZ 1177-A	#Red-1 1/2" I.D. x 2 1/2" O.D.-r/b E0TZ 1177-C(4/80)	2
74/76	C NOTE 2,3	★ D4AZ 1177-A r/b E0TZ 1177-B(8/81)	1 7/8" I.D. x 3 5/32" O.D.-15/16" thick	2
73	D	★ C9AZ 1177-A	#Red-1 1/2" I.D. x 2 1/2" O.D.	2
78/	D NOTE 1	r/b E0TZ 1177-C(4/80)		2
74/	D - - rear drum brakes NOTE 2,3	★ D4AZ 1177-A r/b E0TZ 1177-B(8/81)	1 7/8" I.D. x 3 5/32" O.D.-15/16" thick	2
75/	D - - rear disc brakes	D5MY 1177-A	1 7/8" I.D. x 3 9/64" O.D.-15/16" thick	2
74/	F NOTE 1	★ C9AZ 1177-A	#Red-1 1/2" I.D. x 2 1/2" O.D.-r/b E0TZ 1177-C(4/80)	2
74/	F NOTE 2,3	★ D4AZ 1177-A r/b E0TZ 1177-B(8/81)	1 7/8" I.D. x 3 5/32" O.D.-15/16" thick	2
73	F	★ C70Z 1177-B	#Red-1 3/8" I.D. x 2 1/4" O.D. x 7/16" thick-	2
75/	G - - rear drum brakes (exc. WER axle)	r/b E0DZ 1177-B(1/84)	to seal 1 3/8" shaft	2
75/	G - - rear drum brakes and WER axle	★ D5AZ 1177-A ★r/b E1AZ 1177-A (12/30)	1 25/64" I.D. x 2 19/64" O.D. - 15/32" thick R/b E1AZ 1177-B	2
75/	G,V - - rear disc brakes-outer	D5DZ 1177-A	2" I.D. x 2 21/32" O.D.-3/8" thick	2
75/	G,V - - rear disc brakes-inner	★ C9AZ 1177-A	#Red-1 1/2" I.D. x 2 1/2" O.D.-r/b E0TZ 1177-C(4/80)	2
73/74	J	★1177	Serviced only in kit-group 1225	
79	J - - w/6 3/4" dia. ring gear	D9BZ 1177-B	1 15/32" I.D. x 1 31/32" O.D. x 29/64" thick	2
79	J - - w/7 1/2" dia. ring gear	★ D8BZ 1177-A ★r/b E1AZ 1177-A(12/30)	1 3/8" I.D. x 2 1/4" O.D.-7/16" thick R/b E1AZ 1177-B	2
73	K	★ C9AZ 1177-A	#Red-1 1/2" I.D. x 2 1/2" O.D.-r/b E0TZ 1177-C(4/80)	2
74	K NOTE 3	★ D4AZ 1177-A r/b E0TZ 1177-B(8/81)	1 7/8" I.D. x 3 5/32" O.D.-15/16" thick	2
75/	K	D5MY 1177-A	1 7/8" I.D. x 3 9/64" O.D.-15/16" thick	2
74/75	L	D4FZ 1177-B	#Orange-1 3/8" I.D. x 1 31/32" O.D.-7/16" thick	2
76/77	L	★ D4FZ 1177-A r/b D9BZ 1177-B	#Green-1 1/2" I.D. x 1 31/32" O.D.-7/16" thick	2
78	L - - w/6 3/4" dia. ring gear	D4FZ 1177-B	#Orange- 1 3/8" I.D. x 1 31/32" O.D.-7/16" thick	2

COPYRIGHT © 1986 — FORD MOTOR COMPANY — DEARBORN, MICHIGAN

1973/79 LINCOLN-MERCURY CARS

YEAR	MODEL/RESTRICTIONS	PART NUMBER	DESCRIPTION	QTY.
1177	SEAL (REAR WHEEL BEARING OIL INNER) NOTE 1-Vehicles with ball bearing (1225), NOTE 2-Vehicles with tapered roller bearing (1225) NOTE 3-Also serviced in assy.-group 1225			
79	L - - w/6 3/4" dia. ring gear	D9BZ 1177-B	1 15/32" I.D. x 1 31/32" O.D. x 29/64" thick	1
78/	P - - w/7 1/2" dia. ring gear	★ D8BZ 1177-A ★r/bE1AZ 1177-A(12/30)	1 3/8" I.D. x 2 1/4" O.D. x 7/16" thick R/b E1AZ 1177-B	2
78	L - - w/8" dia. ring gear	★ D4FZ 1177-A r/bD9BZ 1177-B	#Green-1 1/2" I.D. x 1 31/32" O.D.-7/16" thick	2
73/77	P	★ C7OZ 1177-B r/bE0DZ 1177-B(1/84)	#Red-1 3/8" I.D. x 2 1/4" O.D. x 7/16" thick-to seal 1 3/8" shaft	2
79	P - - w/6 3/4" dia. ring gear	D9BZ 1177-B	1 15/32" I.D. x 1 31/32" O.D. x 29/64" thick	1
1180	RETAINER (REAR WHEEL BEARING INNER)			
73	A,Y	C9AZ 1180-A	1 1/2" I.D. x 2 7/16" O.D.	2
74/76	A,Y	D4AZ 1180-A	1 9/16" I.D. x 2 9/32" O.D.	2
77/78	A			2
77	A	C9AZ 1180-A	1 1/2" I.D. x 2 7/16" O.D.	2
73	C	D3TZ 1180-A	1 1/2" I.D. x 2 3/8" O.D.	2
74/76	C	D4AZ 1180-A	1 9/16" I.D.-2 9/32" O.D.	2
73	D	C9AZ 1180-A	1 1/2" I.D. x 2 7/16" O.D.	2
78	D			2
74/	D	D4AZ 1180-A	1 9/16" I.D. x 2 9/32" O.D.	2
73	F	★ C90Z 1180-A	1 3/8" I.D. x 2 1/4" O.D.-r/b D5ZZ 1180-A(10/79)	2
74/	F	D4AZ 1180-A	1 9/16" I.D. x 2 9/32" O.D.	2
77	F	C9AZ 1180-A	1 1/2" I.D. x 2 7/16" O.D.	2
78/	F	D3TZ 1180-A	1 1/2" I.D. x 2 3/8" O.D.	2
75/	G	D5ZZ 1180-A	1 3/8" I.D. x 2 1/16" O.D.	2
77/	G	C9AZ 1180-A	1 1/2" I.D. x 2 7/16" O.D.	2
73/78	J	D0RY 1180-A	Also serviced in 1225 kit	2
79	J	D5ZZ 1180-A	1 3/8" I.D. x 2 1/6" O.D.	2
73	K	D3TZ 1180-A	1 1/2" I.D. x 2 3/8" O.D.	2
74/	K	D4AZ 1180-A	1 9/16" I.D. x 2 9/32" O.D.	2
74	L	D3FZ 1180-A	1 3/16" I.D. x 1 7/8" O.D.	2
75/	L - - with 6 3/4" dia. ring gear	★ C90Z 1180-A	1 3/8" I.D. x 2 1/4" O.D.-r/b D5ZZ 1180-A(10/79)	2
79	L	D5ZZ 1180-A	1 3/8" I.D. x 2 1/6" O.D.	2
73/	P	★ C90Z 1180-A	1 3/8" I.D. x 2 1/4" O.D.-r/b D5ZZ 1180-A(10/79)	2
75/	P	D5ZZ 1180-A	1 3/8" I.D. x 2 1/16" O.D.	2
77/	V	C9AZ 1180-A	1 1/2" I.D. x 2 7/16" O.D.	2
1190	RETAINER (FRONT WHEEL HUB GREASE)			
73/76	A,C,D,F,G,K,L,P,Y	C8AZ 1190-A	2 3/4" O.D. x 9/32" thick-to seal 1 15/16" shaft	2
77/	A,D,F,G,K,L,P,V			2
79	J			2
73/78	J	D0RY 1190-A	2 3/8" O.D. x 3/8" thick-to seal 1 5/8" shaft	2
73/78	J	374502-S	(MM-38-A)-nut-hex.-5/8"-18	2
73/78	J	374536-S	(MM-304-A)-retainer	2
73/78	J	★ 72036-S7-8	(N-60)-pin-cotter-5/32" x 1"	2
1195	WASHER (FRONT WHEEL OUTER BEARING RETAINER)			
73/76	A,C,D,F,G,K,L,P,Y	D0AZ 1195-B	1 11/16" O.D. x 3/32" thick	2
77/	A,D,F,G,K,L,P,V			2
73/77	J "Before 6/30/77"	D0RY 1195-A		2
77	J "From 6/30/77"	E832067-S		2
1201	CONE and ROLLER (FRONT WHEEL BEARING INNER)			
73	A,C,D,F,K,Y	D0AZ 1201-A	#LM-68149-1 3/8" I.D.	2
73/	L,P			2
75/	G			2
79	J			2
77/	V			2
74/76	A,C,D,F,K,Y	D4AZ 1201-A	#JL-69349-2 1/2" O.D.	2
77/	A,D,F,K			2
73/78	J	D0RY 1201-A	#1988-incl. bearing cup #1922	2
75/	L - - with 6 3/4" dia. ring gear	B7C 1201-A	#LM-48548-1 5/8" I.D. x 2 9/16" O.D.	2

1973/79 LINCOLN-MERCURY CARS

YEAR	MODEL/RESTRICTIONS	PART NUMBER	DESCRIPTION	QTY.
1202	**CUP (FRONT WHEEL BEARING INNER)**			
73	A,C,D,F,K,Y	★ D0AZ 1202-A	#L-68110-use with 1 3/8" I.D. inner bearing	2
73/	L	r/bD0AZ 1202-B		2
73/77	P			2
75/	G,V			2
77/	V			2
74/76	A,C,D,F,K,Y	D4AZ 1202-A	#JL-69310-1 1/2" I.D.	2
77/	A,D,F,K			2
79	J	D8BZ 1202-A	#L68111-use with 1 3/8" I.D. inner bearing	2
75/	L - - with 6 3/4" dia. ring gear	B7C 1202-A	#LM-48510	2
78/	P	D8BZ 1202-A	#L-6811-use with 1 3/8" I.D. inner bearing	2
1210	**RING (WHEEL TRIM)**			
75/76	C - - w/14" x 5 1/2" wheels	★ D0ZZ 1210-A r/bD80Z 1210-A (1/79)	#D0ZA 1210-C or F-brushed chrome-15 1/4" O.D. x 1 11/16" wide	4
73/76	C,F - - w/14" x 6" wheels	D0DZ 1210-A	#D0DA 1210-A or B-brushed chrome-11 3/16" I.D. x 15 1/4" O.D. x 2 1/4" wide	4
73/74	P - - w/14" x 6" wheels			4
75/76	C - - w/styled steel wheels	D4WY 1210-A	#D4WA 1210-AA-brushed chrome-15 1/4" O.D.	4
73	F - - w/14" x 7" wheels	D0ZZ 1210-B	#D0ZA 1210-B or E-brushed chrome-11" I.D. x 15 1/4" O.D. x 2 3/4" wide	4
75/	G - - w/styled steel wheels			4
75/	P - - w/styled steel wheels			4
74/	F - - w/styled steel wheels	D4WY 1210-A	#D4WA 1210-AA-brushed chrome 15 1/4" O.D.	4
74	F - - w/o styled steel wheels	★ D0ZZ 1210-A	#D0ZA 1210-C or F-brushed chrome-15 1/4" O.D. x 1 11/16" wide	4
75/76	G - - w/o styled steel wheels	r/bD80Z 1210-A (1/79)		4
77/	F - - w/15" x 6 wheels and styled road wheel	D70Z 1210-B	#D70A 1210-BA chrome 14 3/4" I.D. x 16 1/2" O.D.	4
73	J	★ D1RY 1210-A(3/81)	12 1/2" I.D.-13 1/8" O.D.-43 slots	4
74	J	D1FZ 1210-A	#D12A 1210-AA-chrome-11 1/4" I.D. x 14 1/4" O.D. x 1 9/16" wide	4
74/	L			4
79	J - - w/13" wheels	★ D9ZZ 1210-A r/bE1FZ 1210-A(9/81)	#D9ZC 1210-AA-brushed aluminum 11 7/8" I.D. x 14 1/4" O.D. x 1 3/4" wide	4
	J,P w/14" wheels	D9ZZ 1210-B	#D9ZC 1210-BA- brushed aluminum 12 7/8" I.D. x 15 1/4" O.D. x 1 21/32" wide	4
73/75	P - - w/14" x 4 1/2" wheels	★ D0ZZ 1210-A r/bD80Z 1210-A (1/79)	#D0ZA 1210-C or F-brushed chrome-15 1/4" O.D. x 1 11/16" wide	4
78	P - - w/14" x 5 1/2" wheels	D80Z 1210-A	#D80C 1210-AA-chrome-15 1/4" O.D. x 1 9/16" wide	4
1216	**CONE and ROLLER (FRONT WHEEL BEARING OUTER)**			
73/76	A,C,D,F,K,L,P,Y	D0AZ 1216-A	#LM-12749-7/8" I.D.	2
77/	A,D,F,G,K,L,P,V			2
75/	G			2
79	J			2
73/78	J	★ D0RY 1216-A r/bB5A 1216-A & B5A 1217-A(2/77)	#LM-11949-incl. bearing cup #LM-11910	2
1217	**CUP (FRONT WHEEL BEARING OUTER)**			
73/76	A,C,D,F,K,L,P,Y	★ D0AZ 1217-A	#LM-12700 or LM-12710-use with 7/8" I.D. outer bearing	2
77/	A,D,F,G,K,L,P,V	r/bD0AZ 1217-B		2
75/	G			2
79	J			2
1225	**BEARING (REAR WHEEL)**			
73/74	A,Y - - exc. WER axle	D8AZ 1225-C	#F-208-HL-1.53" I.D. x 3.14" O.D.-incl. C9AZ 1180-A retainer and C9AZ 1177-A seal	2
77	A			2
73/74	C			2
73	D,K			2
74	F			2
77/	F - - ball bearing			2
77	G,V			2

COPYRIGHT © 1986 — FORD MOTOR COMPANY — DEARBORN, MICHIGAN

1973/79 LINCOLN-MERCURY CARS

YEAR	MODEL/RESTRICTIONS	PART NUMBER	DESCRIPTION	QTY.
1225	BEARING (REAR WHEEL) — Cont'd			
74/76	A,Y - - exc. WER axle	D4AZ 1225-A	#U-399-A-1 9/16" I.D. x 3 9/64" O.D. (tapered roller)-incl. 1177 seal and D4AZ 1180-A retainer	2
77	A - - exc. WER axle			2
74/76	C,F			2
77/	F			2
74	D			2
75/76	D - - rear drum brakes			2
74	K			2
73/76	A,Y - - WER axle	C7AZ 1225-A	#R-1563TAV ,R1563TKV-(straight roller)-1 3/8" I.D. x 2 1/4" O.D.-retainer (1180) not req'd	2
77/78	A - - WER axle			2
79	A - - 7.5", 8.5" R.G.			2
75/	G - - rear drum brakes and WER axle			2
79	J - - 7.5" ring gear			2
78	P - - WGX axle			2
79	P - - 7.5" R.G.			2
75/76	A,D,Y	★ D5AZ 1225-A	#U-399-A-1 9/16" I.D. x 3 9/64" O.D. (tapered roller)-incl. D4AZ 1180-A retainer	2
77	A,D "Before 5/1/77"	r/bD5AZ 1225-B(5/78)		2
75/77	K "Before 5/1/77"			2
77/	A,K (exc. WER axle) "From 5/1/77"	D5AZ 1225-B	#U-399-A-1 9/16" I.D. x 3 9/64" O.D. (tapered roller) incl. D4AZ 1180-A retainer & D5MY 1177-A seal	2
	D "From 5/1/77 & Before 2/1/78"			
78/	A,D - - w/9" R.G. and ball bearing only	D8AZ 1225-C	#F-208-HL-1.53" I.D. x 3.14" O.D.-incl.-C9AZ 1177-A seal and C9AZ 1180-A retainer	2
78	D-rear drum brakes "From 2/1/78"	D8AZ 1225-A	#F-208-HL-1 9/16" I.D. x 3 9/64 O.D.-incl. C9AZ 1177-A seal and C9AZ 1180-A retainer	2
78	D,F,G,V - - ball bearing only and disc brakes	D8AZ 1225-C	#F-208-HL-1 9/16" I.D. x 3 9/64" O.D.	2
73	F	★ D3AZ 1225-A	#FPP,F207A-KK, USA-blue-1 3/8" I.D. x 2 13/16" O.D.-(ball)-incl. C90Z 1180-A retainer	2
74/77	L "Before 6/27/77"	r/bD8DZ 1225-B(12/78)		2
73/74	P			2
78/	F,G,V - - w/9" R.G. and ball bearing only	D8AZ 1225-B	#F-208-HL-1.53" I.D. x 3.14" O.D.-incl.-C9AZ 1177-A seal and D3TZ 1180 A retainer	2
75/	G - - rear drum brakes (exc. WER axle)	★ D5DZ 1225-A r/bD8DZ 1225-B(12/78)	#FPP,F207A-KK, USA-blue-1 3/8" I.D. x 2 13/16" O.D.-(ball)-incl. D5ZZ 1180-A retainer	2
75/	P			2
75/	G - - rear disc brakes	D5DZ 1225-B	#FPP,F208A-KK,HL USA-1 17/32" I.D. x 3 5/32" O.D.-(ball)-incl. D3TZ 1180-A retainer	2
76	C,F			2
78	G,V - - ball bearing only	★ D8DZ 1225-A	#F-207-HL- 1 3/8" I.D. X 2 13/16" O.D.	2
77/	L - - ball bearing only "From 6/27/77"	r/bD8DZ 1225-B(10/78)		
79	J,P - - w/6 3/4" axle - ball bearing only	D8DZ 1225-B	#F-207-HL-1.37" I.D. x 2.83" O.D.-incl. D5ZZ 1180-A retainer	2
78/	G,L,V - - ball bearing only			
73/74	J	D0RY 1225-A	#SKF-361207-incl. , D0RY 1180-A and D0RY 4020-A retainers	2
76/78	J	D5RY 1225-A	Incl. D0RY 1180-A retainer and D5RY 4020-A retainer	2
1386	LOCK SET (SPARE WHEEL)			
73/76	A,C,D,F,K,L,P,Y	D3FZ 1386-A	1/2"-13 thread	1
73/78	A			1
77/78	L "Before 5/1/78"			1
77/	D,F,K			1
77	P			1
75/	G,V			1
79	A	E0AZ 1386-A	M8 x 1.25 thread	1
79	J,L,P	E0BZ 1386-A	3/8"-16 thread	1
1A402	BUSHING (SPARE WHEEL CARRIER)			
75/78	J - - w/aluminum wheels	★ D5RY 1A402-A(3/81)		1

YEAR	MODEL/RESTRICTIONS	PART NUMBER	DESCRIPTION	QTY.
1424	PLATE (SPARE WHEEL MOUNTING)-Also refer to groups 17032 and 17091			
73/74	J	★ D4RY 1424-A(2/80)		1
73	L	★ D3FZ 1424-A(3/81)	2 15/16" dia.	1
74/76	L(73)			1
74/	L(62,64)	D8FZ 1424-B	2 15/16" dia.	1
78	P	D8FZ 1424-B	2 15/16" dia.	1
1A432	HOIST (SPARE WHEEL)			
73/	A(71)	D3AZ 1A432-A		1
74/76	C(71)			1
77/	F(71)			1
74/76	Y(71)			1
1446	CLAMP ASSY. (SPARE WHEEL)			
73/74	J	★ D0RY 1446-A	Serviced in detail below	1
	Consists of			
	1-D4RY 1424-A Clamp	1-112749-ES32	Clip 1-120552-ES8 or	Bolt
	1-44735-S8 Washer		1-E601266-S71	
1448	BOLT (SPARE WHEEL MOUNTING)			
73/78	A(71),Y(71)	D3AZ 1448-A	1/2"-13 x 9 11/16"	1
73/78	A(exc. 71),Y(exc. 71)	★ D3AZ 1448-C(9/85)	1/2"-13 x 5 5/16"-3" thread length	1
79	A(71)	D9AZ 1448-B	M8 x 1.25 x 10 1/4" hook	1
79	A(exc.71)	E00Z 1448-A	M8 x 1.25 x 8 11/32" hook	1
73	C(53,63,65)	★ D20Z 1448-A(3/84)	1/2"-13 x 12 7/16"-4 1/2" thread length	1
75/76	C(53,65)	★ D3AZ 1448-C(9/85)	1/2"-13 x 5 5/16"-3" thread length	1
75/76	C(53,65)	★ D4SZ 1448-A(3/84)	1/2"-13 x 14 3/16"-6 1/4" thread length	1
73	C(71)	382947-S2	(BB-198-MA)-3/8"-16 x 7 1/2"-6" thread length	1
74/76	C(71)	D3AZ 1448-A	1/2"-13 x 10 1/2"	1
73	D - - w/o spare wheel lock	★ D0VY 1448-A Not replaced (3/79)	3/8"-16 x 9 3/8"-2 1/2" thread length	1
73	D - - w/spare wheel lock	D3VY 1448-B	1/2"-13 x 10 5/8"	1
74	D		Cut 2" from threaded end	1
75/76	D	D5VY 1448-A	1/2"-13 x 6"	1
77/	D with space saver tire	D7VY 1448-A	1/2"-13 x 6 1/14"-3 1/2" thread length	
77/	D except space saver tire	D4DZ 1448-A	1/2"-13 x 10"-4" thread length	1
73	F(65)	★ D40Z 1448-A(3/84)	1/2"-13 x 9"-3 1/2" thread length	1
73	F(76)	★ D1ZZ 1448-A Not replaced (3/79)	1/2"-13 x 9 1/2"-5" thread length	1
74/76	F	★ D4SZ 1448-A(3/84)	1/2"-13 x 14 3/16"-6 1/4" thread length	1
77/	F	D4DZ 1448-A	1/2"-13 x 10"-4" thread length	1
75/	G - - w/o collapsible spare tire	D5DZ 1448-A	1/2"-13 x 14 3/4"-4 1/2" thread length	1
75/	G,V - - w/space saver tire	D5DZ 1448-C	1/2"-13 x 8/32" long-6 3/32" thread length	1
73	J	120552-ES	1/2"-13 x 2 1/2"	1
74	J	E601266-S71	1/2"-13 x 2 1/2"	1
76/78	J	E600420-S72	(AB-170)-M12 x 75 x 30	1
79	J	D8BZ 1448-A	3/8"-16 x 6 1/4" thread length	1
73/76	K	★ D4SZ 1448-A(3/84)	1/2"-13 x 14 3/16"-6 1/4" thread length	1
77/	K	D4DZ 1448-A	1/2"-13 x 10"-4" thread length	1
74/78	L "Before 5/1/78"	D7VY 1448-A	1/2"-13 x 6 1/4"-3 1/2" thread length	1
78/	L "From 5/1/78"	D8BZ 1448-A	3/8"-16 x 6 1/4" thread length	1
73/77	P	D4DZ 1448-A	1/2"-13 x 10"-4" thread length	1
75/77	P - - w/space saver tire	D5DZ 1448-C	1/2"-13 x 8/32" long-6 3/32" thread length	1
78/	P	D8BZ 1448-A	3/8"-16 x 6 1/4" thread length	1
1462	NUT (SPARE WHEEL MOUNTING BOLT)			
73/78	A	C8AZ 1462-A	Wing-1/2"-13	1
73/	C,F,K			1
75/	G,V			1
73/77	P			1
79	A	★ E00Z 1462-A r/bE4AZ 1462-A	Wing-M8 x 1.25	1
76/	D	D6VY 1462-A	Wing-1/2"-13	1
79	J	B9AZ 1462-A	Wing-3/8"-16	1
74/78	L(62,64) "Before 5/1/78"	C8AZ 1462-B	Wing-1/2"-13	1

COPYRIGHT © 1986 — FORD MOTOR COMPANY — DEARBORN, MICHIGAN

1973/79 LINCOLN-MERCURY CARS

YEAR	MODEL/RESTRICTIONS	PART NUMBER	DESCRIPTION	QTY.
1462	NUT (SPARE WHEEL MOUNTING BOLT) — Cont'd			
74/78	L(73) "Before 5/1/78"	★ D3FZ 1462-A(3/81)	Wing-1/2"-13-use on top of spare wheel cover	1
78/	L "From 5/1/78"	B9AZ 1462-A	Wing-3/8"-16	1
78/	P	B9AZ 1462-A	Wing-3/8"-16	1
1538	WHEEL KIT (COLLAPSIBLE SPARE TIRE)			
75/	G,V - - w/F78-14 tires	D5DZ 1538-A		1
	Consists of			
	1-D5DA 1K003-BB Wheel and tire		1-D5DZ 19C543-A Inflator	
	1-D5DB 17A007-AB Retainer-jack		1-33905-S2 Nut	
	1-D5DB 17A116-AB Retainer-jack		1- Instruction Sheet	
75/	G - - w/D78-14 tires	★ D5DZ 1538-B(3/81)		1
	Consists of			
	1-D5DA 1K003-AB Wheel and tire		1-D5DZ 19C543-A Inflator	
	1-D5DB 17A007-AB Retainer-jack		1- Instruction Sheet	
	1-D5DB 17A116-AB Retainer-jack			
1702	VALVE and CAP ASSY. (TIRE)			
75	K - - w/aluminum wheel	★ D5SZ 1702-A(6/83)		AR
1705	EXTENSION (TIRE VALVE)			
73/76	A,C,F,G,L,P,Y	C0DZ 1705-A	1/2" long	4
77	A,F,G,L,P			4
76/	D			4
73/76	A,C,D,F,G,K,P,Y	B7AZ 1705-B	1 1/4" long	4
77	A,D,F,G,K,P			4
78	F,G,P	D8BZ 1705-A	1" long	4
1705	ADAPTOR (TIRE INFLATION)			
73/74	D,K	C7VY 1705-A	Req'd. to inflate inner chamber of life guard safety tires	1

1130 CAP or COVER (WHEEL HUB)

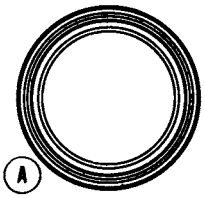

(A) C80Z-1130-G (7 1/2")
HUB CAP (PLAIN CENTER)
COUGAR

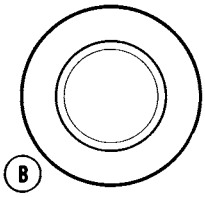

(B) DORY-1130-B (2 5/8")
HUB CAP (PLAIN CENTER)
CAPRI

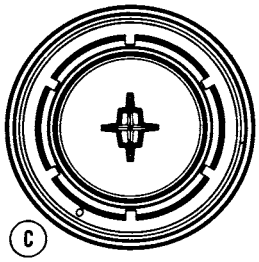

(C) DOVY-1130-A (16 1/4")
(BLACK CENTER)
LINCOLN

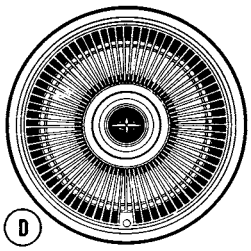

(D) DOVY-1130-B (16 1/4")
(BLACK CENTER)
LINCOLN

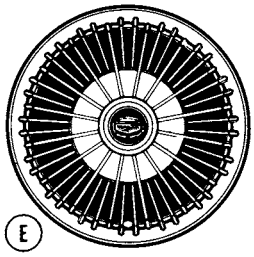

(E) ▲DOWY-1130-D (15 3/8")
(BLACK CENTER)
COUGAR

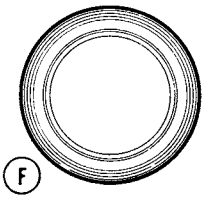

(F) DIMY-1130-G (10 1/2")
HUB CAP (PLAIN CENTER)
COMET

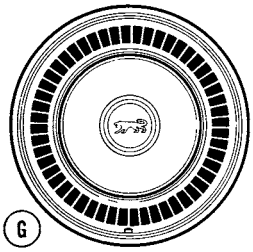

(G) DIWY-1130-A (14 1/8")
(BLUE CENTER)
COUGAR

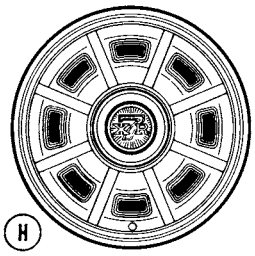

(H) DIWY-1130-E (15 1/4")
(RED CENTER)
COUGAR "XR7"

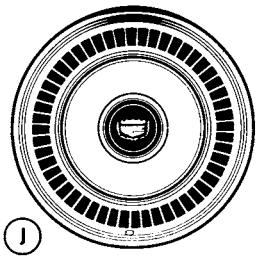

(J) D14Y-1130-B (14 1/8")
BLACK CENTER WITH RED CREST
COMET

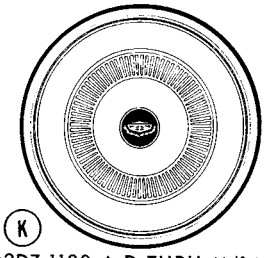

(K) • D2DZ-1130-A, D THRU M (14
• D3DZ-1130-B, C, D, & H (14 1/8")
COMET

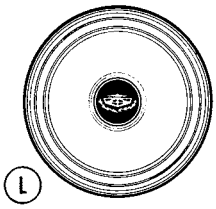

(L) ■ D2OZ-1130-D (10 1/4")
♦ D20Z-1130-E (10 1/4")
HUB CAP (BLACK CENTER)
MONTEGO

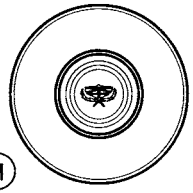

(M) D3AZ-1130-C (10 7/8")
HUB CAP (PLAIN CENTER)
MERCURY, METEOR, MONTEGO

■ BRIGHT FINISH OUTER
♦ BLACK FINISH OUTER
• REFER TO TEXT SECTION FOR COLOR DESIRED
▲ SIMULATED WIRE WHEEL COVER WITHOUT SPINNER

P-10345

1973 HUB CAPS and WHEEL COVERS
(Page 1 of 2)

COPYRIGHT © 1986 — FORD MOTOR COMPANY — DEARBORN, MICHIGAN

1130 CAP or COVER (WHEEL HUB)— Cont'd

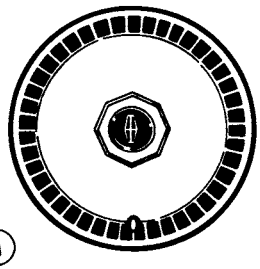

(A)

★ D3LY-1130-A (16 1/4")
D5LY-1130-B (16 1/4")
(BLACK CENTER)
MARK IV

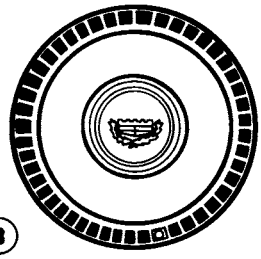

(B)

▲D3MY-1130-A (15 1/8")
●D3MY-1130-D THRU H (15 1/8")
♦#D3MY-1130-J (15 1/8")
(PLAIN CENTER)
MERCURY, METEOR

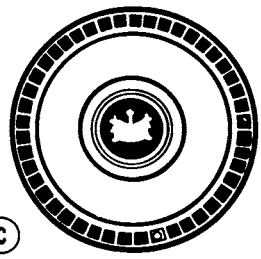

(C)

▲D3MY-1130-B&V (15 1/8")
#D3MY-1130-K (15 1/8")
#●D3MY-1130-L THRU S &U (15 1/8")
(BLACK CENTER)
MERCURY, METEOR

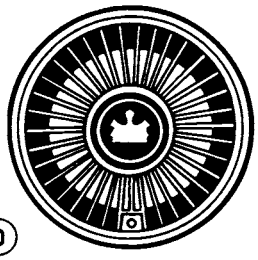

(D)

♦ D3MY-1130-C (16 1/4")
♦ D3MY-1130-T (16 1/4")
(RED CENTER)
MERCURY, METEOR

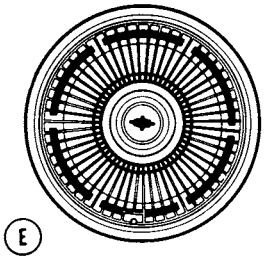

(E)

★D3VY-1130-C (16 1/4")
(BLACK CENTER)
LINCOLN

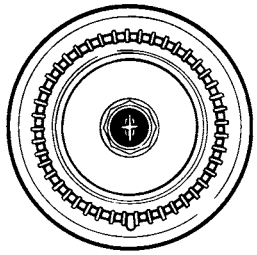

(F)

D3VY-1130-D (16 1/4")
(BLACK CENTER)
LINCOLN

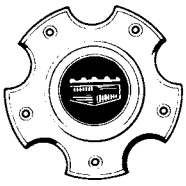

(G)

D3GY-1130-A (4 3/8")
(HUBCAP) (BLACK CENTER)
COMET

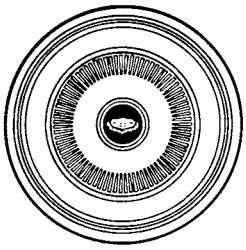

(H)

♦ D20Z-1130-F (14 1/8")
♦ D3DZ-1130-K (14 1/8")
(BLACK CENTER)
MONTEGO

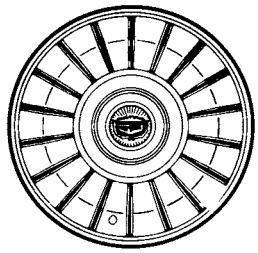

(J)

D0GY-1130-B (15 3/8")
(BLACK CENTER)
MONTEGO

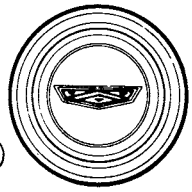

(K)

D1OZ-1130-A (2 3/4")
(RED CENTER)
MONTEGO

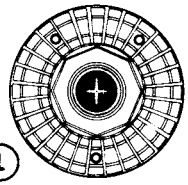

(L)

D5LY-1130-A (9 5/8")
HUB CAP (BLACK CENTER)
MARK IV

WITH OUTER SLOTS
▲ WITHOUT OUTER SLOTS
● REFER TO TEXT SECTION FOR COLOR DESIRED
♦ REFER TO TEXT SECTION TO CLARIFY MODEL APPLICATION

P-10346

1973 HUB CAPS and WHEEL COVERS
(Page 2 of 2)

1130 CAP or COVER (WHEEL HUB)— Cont'd

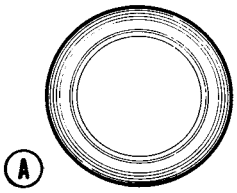

(A)
D1MY-1130-G (10¼")
HUB CAP (PLAIN CENTER)
COMET

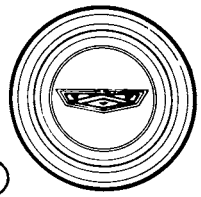

(B)
D1OZ-1130-A (2¾")
RED CENTER
COUGAR, MONTEGO

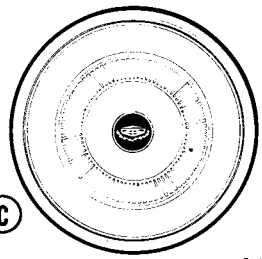

(C)
● D2DZ-1130-A,E,G,H (14 1/8")
● D3DZ-1130-B,C,D,H (14 1/8")
● D4DZ-1130-A THRU L (14 1/8")
COMET

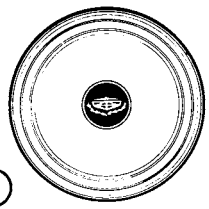

(D)
D2OZ-1130-D (10¼")
HUB CAP (BLACK CENTER)
MONTEGO

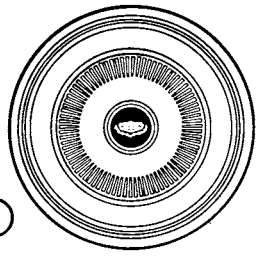

(E)
D2OZ-1130-F (14 1/8")
BLACK CENTER
MONTEGO

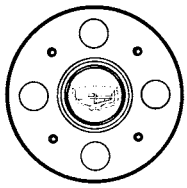

(F)
D4FZ-1130-Y(6 1/8")
HUBCAP (BLACK CENTER)
BOBCAT

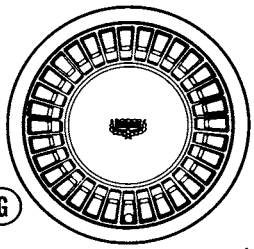

(G)
% ●D4GY-1130-A THRU Y (15¼")
† D4GY-1130-S (15¼")
MONTEGO

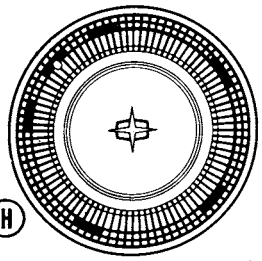

(H)
●D4VY-1130-A THRU H (16¼")
LINCOLN

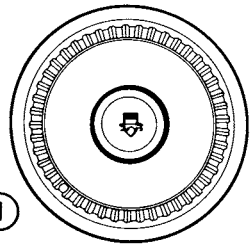

(J)
D4WY-1130-A (15¼")
(RED CENTER)
COUGAR

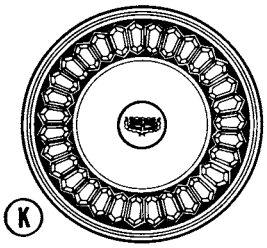

(K)
★ D4WY-1130-B (15¼")
D4WY-1130-C (15 ¼")
(BRUSHED FINISH CENTER)
COUGAR

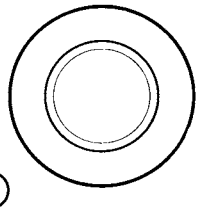

(L)
D0RY-1130-B (2 5/8")
HUB CAP (PLAIN CENTER)
CAPRI

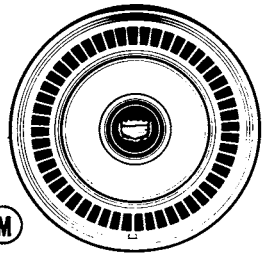

(M)
D14Y-1130-B (14 1/8")
(BLACK CENTER WITH RED CREST)
COMET

●REFER TO TEXT SECTION FOR DESIRED COLOR
%BRUSHED FINISH CENTER ON PAINTED BACKGROUND
†BRUSHED FINISH CENTER ON ARGENT BACKGROUND

P-10927

1974 HUB CAPS and WHEEL COVERS
(Page 1 of 2)

COPYRIGHT © 1986 — FORD MOTOR COMPANY — DEARBORN, MICHIGAN

1130 CAP or COVER (WHEEL HUB)— Cont'd

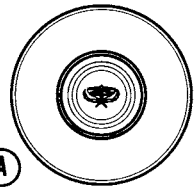

(A)
D3AZ-1130-C (10 7/8")
HUB CAP (PLAIN CENTER)
MERCURY, METEOR, MONTEGO

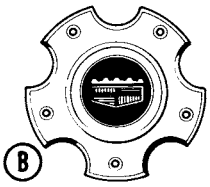

(B)
D3GY-1130-A (4 3/8")
HUB CAP (BLACK CENTER)
COMET

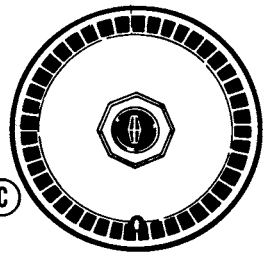

(C)
★D3LY-1130-A (16¼")
D5LY-1130-B (16 1/4")
(BLACK CENTER)
MARK IV

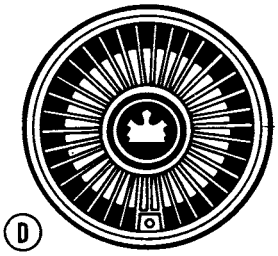

(D)
D3MY-1130-T (16¼")
(RED CENTER)
MERCURY, METEOR

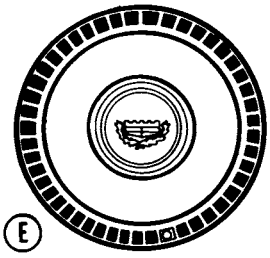

(E)
D3MY-1130-J (15 1/8")
(PLAIN CENTER)
MERCURY, METEOR

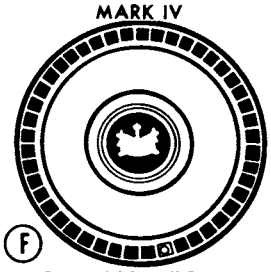

(F)
D3MY-1130-K (15 1/8")
●D3MY-1130-L,M,N,R,S,U (15 1/8")
D4MY-1130-A (15 1/8")
(BLACK CENTER)
MERCURY, METEOR

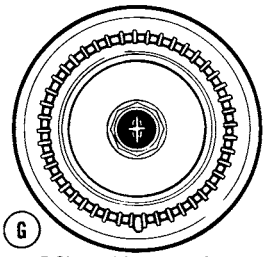

(G)
D3VY-1130-D (16¼")
(BLACK CENTER)
LINCOLN

(H)
★D4FZ-1130-A (9 1/4")
D5FZ-1130-A (9 1/4")
HUB CAP (PLAIN CENTER)
BOBCAT

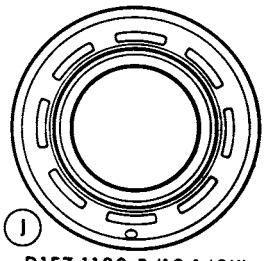

(J)
D1FZ 1130-B (13 1/8")
(PLAIN CENTER)
BOBCAT

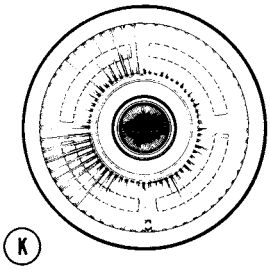

(K)
D40Z-1130-D(15 3/8")
(RED CENTER)
MONTEGO

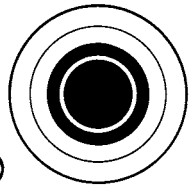

(L)
D4RY-1130-A (3 3/16")
HUB CAP (BLACK CENTE
CAPRI

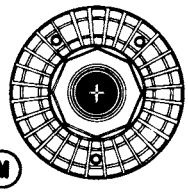

(M)
D5LY-1130-A (9 5/8")
HUB CAP (BLACK CENTER)
MARK IV

●REFER TO TEXT SECTION FOR DESIRED COLOR

P-10953

1130 CAP or COVER (WHEEL HUB)— Cont'd

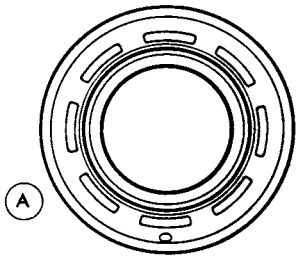

A

DIFZ-1130-B (13 1/8")
(PLAIN CENTER)
BOBCAT

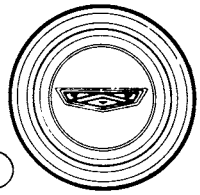

B

DIOZ-1130-A (2 3/4")
(RED CENTER)
COUGAR, MONTEGO
MONARCH, COMET

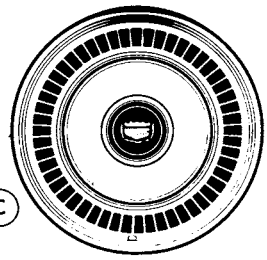

C

DI4Y-1130-B (14 1/8")
(BLACK CENTER
WITH RED CREST)
COMET

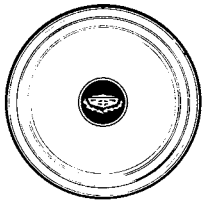

D

■ D2OZ-1130-D (10 1/4")
■ D2OZ-1130-E (10 1/4")
HUB CAP (BLACK CENTER)
COMET, COUGAR,
MONARCH, MONTEGO

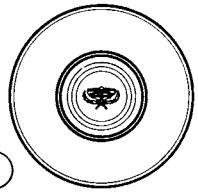

E

D3AZ-1130-C (10 7/8")
HUB CAP (PLAIN CENTER)
MONTEGO

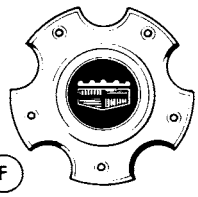

F

D3GY-1130-A (4 3/8")
HUB CAP (BLACK CENTER)
COMET

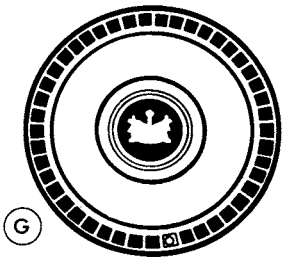

G

D3MY-1130-K (15 1/8")
(BLACK CENTER)
MERCURY, METEOR

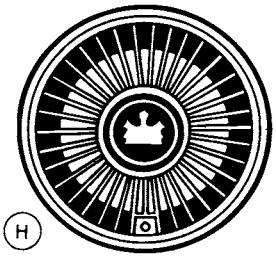

H

D3MY-1130-T (16 1/4")
(RED CENTER)
MERCURY, METEOR

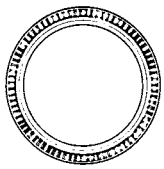

J

D4FZ-1130-A (9 1/4")
HUB CAP (PLAIN CENTER)
BOBCAT

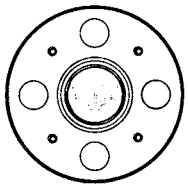

K

D4FZ-1130-Y (6 1/8")
HUB CAP (BLACK CENTER)
BOBCAT

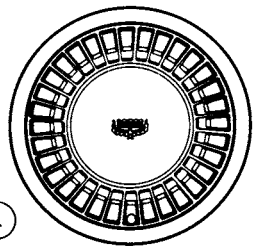

L

D4GY-1130-S (15 1/4")
D5GY-1130-F (15 ¼")
(ARGENT CENTER)
MONTEGO

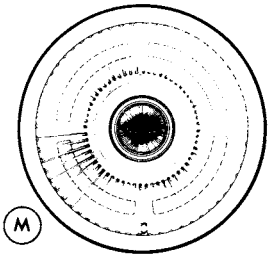

M

D4OZ-1130-D (15 3/8")
(RED CENTER)
MONTEGO

■ REFER TO TEXT SECTION TO CLARIFY MODEL APPLICATION

P-12190

1975 HUB CAPS and WHEEL COVERS
(Page 1 of 3)

COPYRIGHT © 1986 — FORD MOTOR COMPANY — DEARBORN, MICHIGAN

1130 CAP or COVER (WHEEL HUB)— Cont'd

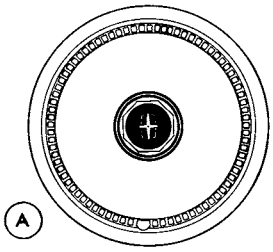

D5VY-1130-A (16 1/4")
(BLACK CENTER)
LINCOLN

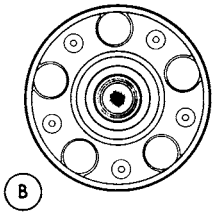

D5DZ-1130-J (5 7/8")
(RED CENTER)
MONARCH

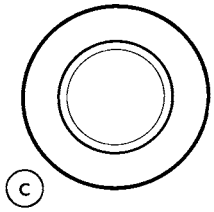

D0RY-1130-B (2 5/8")
HUB CAP (PLAIN CENTER)
CAPRI

1130 CAP or COVER (WHEEL HUB)— Cont'd

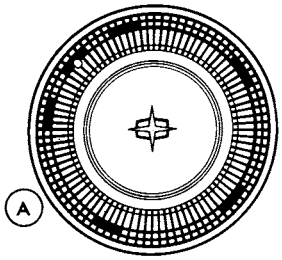

A

●D4VY-1130-B, D, E, G, H (16 1/4")
●D5VY-1130-B,D,E,F,G,H,K (16 1/4")
LINCOLN

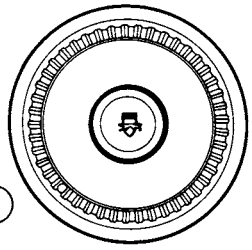

B

D4WY-1130-A (15 1/4")
(RED CENTER)
COUGAR

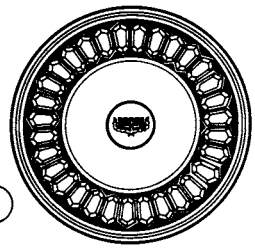

C

D4WY-1130-C (15 1/4")
(BRUSHED FINISH CENTER)
COUGAR

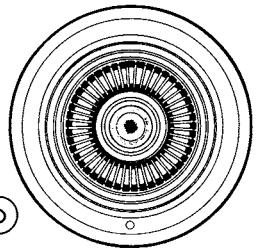

D

D5DZ-1130-A (15 1/4")
(RED CENTER)
MONARCH

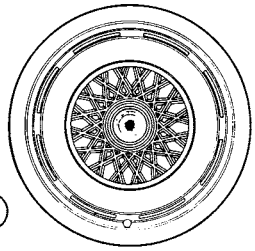

E

D5DZ-1130-D (15 1/4")
(RED CENTER)
MONARCH

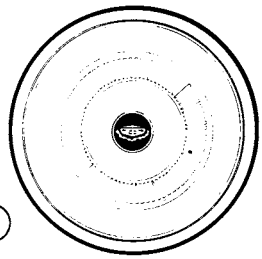

F

■D5DZ-1130-E, F, G, H (14 1/8")
(BLACK CENTER)
COMET

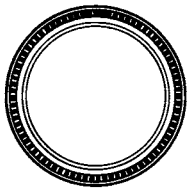

G

D5FZ-1130-A (9 5/8")
HUB CAP (PLAIN CENTER)
BOBCAT

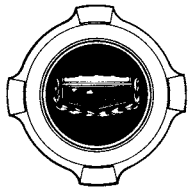

H

D5FZ-1130-M (3 1/8")
(BLACK CENTER)
BOBCAT

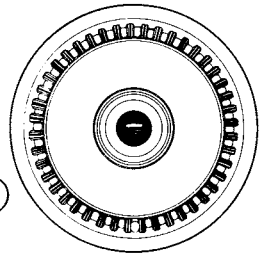

J

■D5GY-1130-A, B, C, E, (15 1/4")
(BLACK CENTER)
MONTEGO

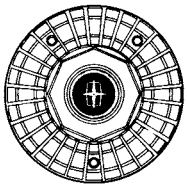

K

D5LY-1130-A (9 5/8")
HUB CAP (GOLD CENTER)
MARK IV

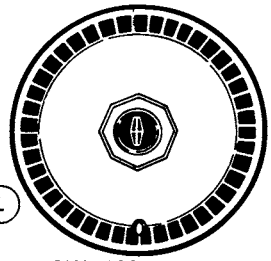

L

■★D3LY-1130-A(16 1/4")
■D5LY-1130-B(16 1/4")
(BLACK CENTER)
MARK IV

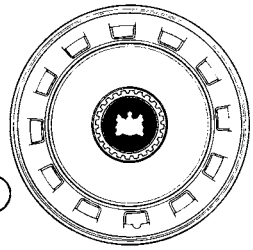

M

D5MY-1130-A
(BLACK CENTER)
MERCURY, METEOR

■REFER TO TEXT SECTION TO CLARIFY MODEL APPLICATION
●REFER TO TEXT SECTION FOR DESIRED COLOR

P 12191

1975 HUB CAPS and WHEEL COVERS
(Page 3 of 3)

COPYRIGHT © 1986 — FORD MOTOR COMPANY — DEARBORN, MICHIGAN

1130 CAP or COVER (WHEEL HUB)— Cont'd

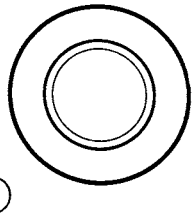

(A)
DORY-1130-B (2 5/8")
D6RY-1130-B (2 5/8")
HUB CAP (PLAIN CENTER)
CAPRI

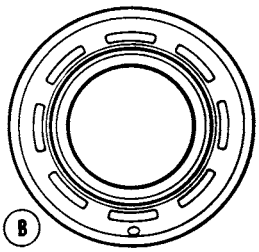

(B)
DIFZ-1130-B (13 1/8")
(PLAIN CENTER)
BOBCAT

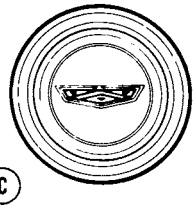

(C)
DIOZ-1130-A (2 3/4")
D6OZ-1130-B (2 3/4")
(RED CENTER)
COUGAR, MONTEGO,
MONARCH, COMET

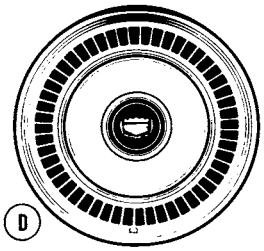

(D)
DI4Y-1130-B (14 1/8")
(BLACK CENTER
WITH RED CREST)
COMET

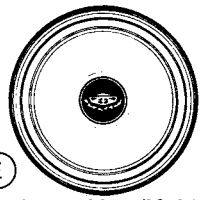

(E)
■ D2OZ-1130-D (10 1/4")
■ D2OZ-1130-E (10 1/4")
HUB CAP (BLACK CENTER)
COMET, COUGAR,
MONARCH, MONTEGO

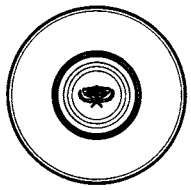

(F)
D3AZ-1130-C (10 7/8")
HUB CAP (PLAIN CENTER)
MONTEGO

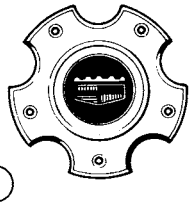

(G)
D3GY-1130-A (4 3/8")
HUB CAP (BLACK CENTER)
COMET

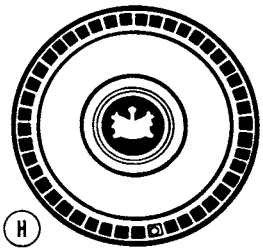

(H)
D3MY-1130-K (15 1/8")
(BLACK CENTER)
MERCURY, METEOR

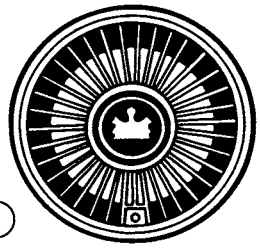

(J)
D3MY-1130-T (16 1/4")
(RED CENTER)
MERCURY, METEOR

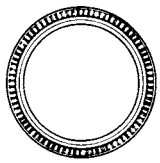

(K)
D4FZ-1130-A (9 1/4")
HUB CAP (PLAIN CENTER)
BOBCAT

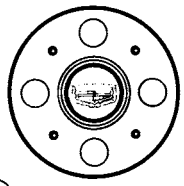

(L)
D4FZ-1130-Y (6 1/8")
HUB CAP (BLACK CENTER)
BOBCAT

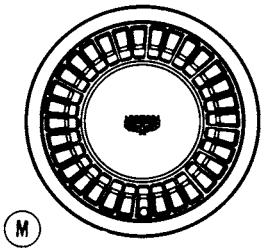

(M)
D4GY-1130-S (15 1/4")
(ARGENT CENTER)
D5GY-1130-F (15 1/4")
(TAN CENTER)
MONTEGO

■ REFER TO TEXT SECTION TO CLARIFY MODEL APPLICATION

P-12880

1976 HUB CAPS and WHEEL COVERS
(Page 1 of 3)

1130 CAP or COVER (WHEEL HUB)— Cont'd

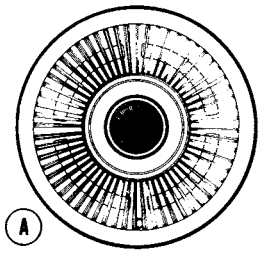

(A) D40Z-1130-D (15 3/8")
(RED CENTER)
MONTEGO

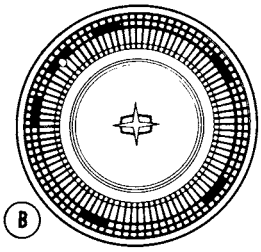

(B) D4VY-1130-B, D, E, G, H (16 1/4")
D5VY-1130-B, D, E, F, G, H, K (16 1/4")
LINCOLN

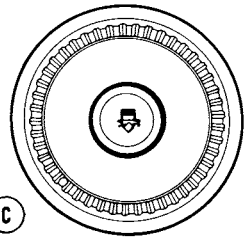

(C) D4WY-1130-A (15 1/4")
(RED CENTER)
COUGAR

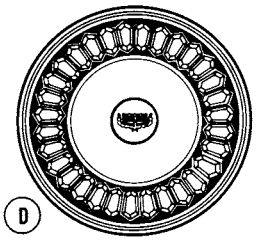

(D) D4WY-1130-C (15 1/4")
(BRUSHED FINISH CENTER)
COUGAR

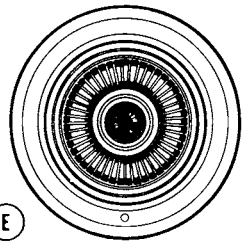

(E) D5DZ-1130-A (15 1/4")
(RED CENTER)
MONARCH

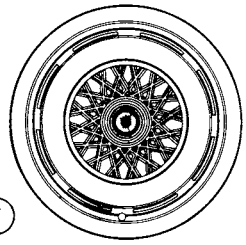

(F) D5DZ-1130-D (15 1/4")
(RED CENTER)
MONARCH

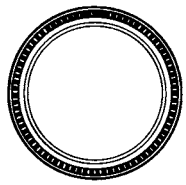

(H) D5FZ-1130-A (9 5/8") HUB CAP
(PLAIN CENTER)
BOBCAT

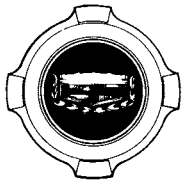

(J) D5FZ-1130-M (3 1/8")
(BLACK CENTER)
BOBCAT

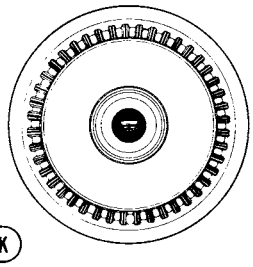

(K) ■ D5GY-1130-A, B, C, E (15 1/4")
(BLACK CENTER)
MONTEGO

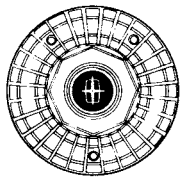

(L) D5LY-1130-A (9 5/8")
HUB CAP (GOLD CENTER)
MARK IV

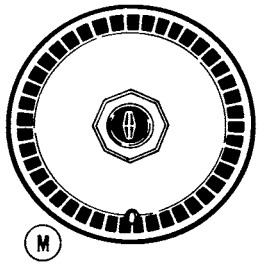

(M) ■ D5LY-1130-B(16¼")
(BLACK CENTER)
MARK IV

■ REFER TO TEXT SECTION TO CLARIFY MODEL APPLICATION
● REFER TO TEXT SECTION FOR DESIRED COLOR

P-12881

1976 HUB CAPS or WHEEL COVERS
(Page 2 of 3)

COPYRIGHT © 1986 — FORD MOTOR COMPANY — DEARBORN, MICHIGAN

1130 CAP or COVER (WHEEL HUB)— Cont'd

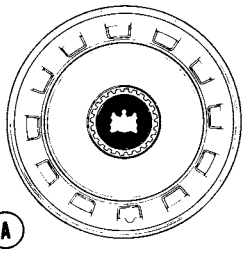

A

D5MY-1130-A (16 1/4")
(BLACK CENTER)
MERCURY, METEOR

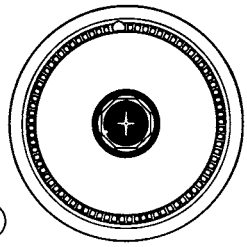

B

D5VY-1130-A (16 1/4")
(BLACK CENTER)
LINCOLN

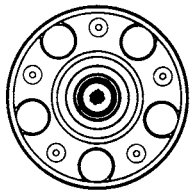

C

D5DZ-1130-J (5 7/8")
D6FZ-1130-B (6 1/8"
(RED CENTER)
MONARCH, BOBCAT

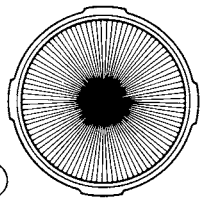

D

D6FZ-1130-A(2 5/8")
HUB CAP (RED CENTER)
BOBCAT

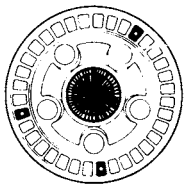

E

D6MY-1130-A (9 1/16")
HUB CAP (RED CENTER)
MERCURY, METEOR

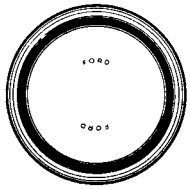

F

D5DZ-1130-B (10 1/4")
(HUB CAP)
BRUSHED FINISH CENTER
MONTEGO

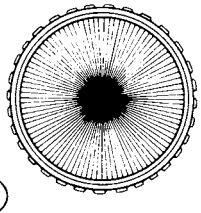

G

D6CZ-1130-A (2 5/16")
D6OZ-1130-C (2 5/16")
HUB CAP (RED CENTER)
COUGAR

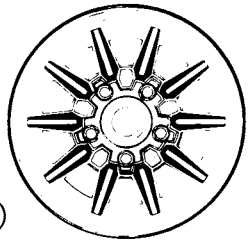

H

D4OZ-1130-A (15 1/4")
(PLAIN CENTER)
MONTEGO

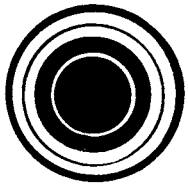

J

D6RY-1130-A (3 3/16")
(BLACK CENTER)
CAPRI

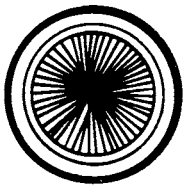

K

D6ZZ-1130-A (2 11/16")
HUB CAP (RED CENTER)
BOBCAT

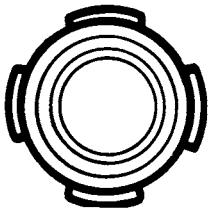

L

D6RY-1130-B (2 7/16")
HUB CAP (BLACK CENTER)
CAPRI

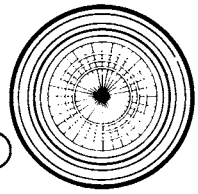

M

D6DZ-1130-A (2-3/4")
HUB CAP (RED CENTER)
MONARCH

P-12882

1976 HUB CAPS and WHEEL COVERS
(Page 3 of 3)

1130 CAP or COVER (WHEEL HUB)— Cont'd

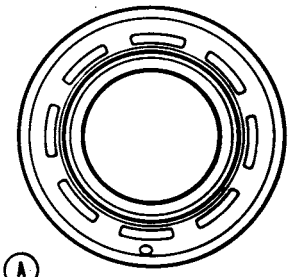

(A) D1FZ-1130-B (13-1/8")
(PLAIN CENTER)
BOBCAT

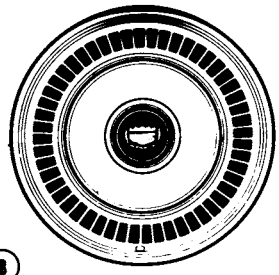

(B) D14Y-1130-B (14-1/8")
(BLACK CENTER W/RED CREST)
COMET

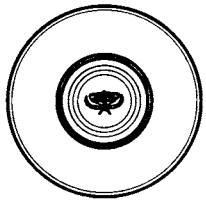

(C) D3AZ-1130-C (10-7/8")
HUB CAP (PLAIN CENTER)
COUGAR, MERCURY

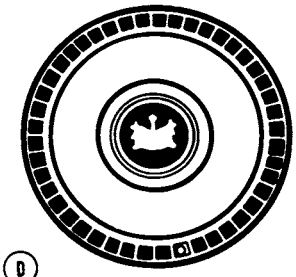

(D) D3MY-1130-K (15-1/8")
(BLACK CENTER)
MERCURY

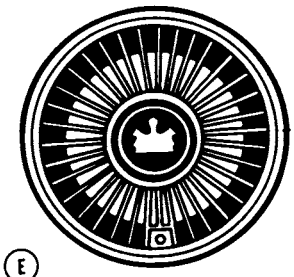

(E) D3MY-1130-T (16-1/4")
(RED CENTER)
MERCURY

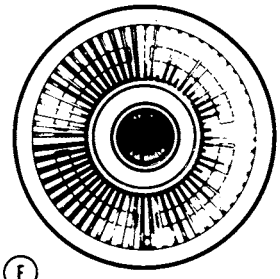

(F) D40Z-1130-D (15-3/8")
(RED CENTER)
COUGAR

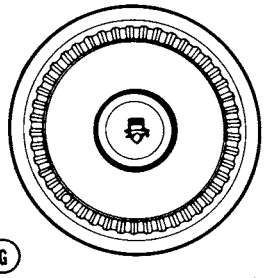

(G) D4WY-1130-A (15-1/4")
(RED CENTER)
COUGAR

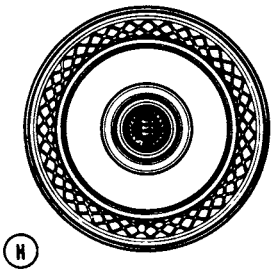

(H) D5AZ-1130-K (16-1/4")
(BLACK CENTER)
COUGAR

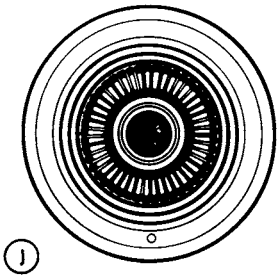

(J) D5DZ-1130-A (15-1/4")
(RED CENTER)
COUGAR, MONARCH

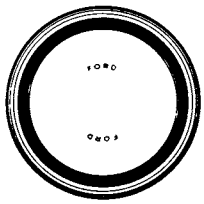

(K) D5DZ-1130-B (10-1/4)
HUB CAP
(BRUSHED FINISH CENTER)
COUGAR

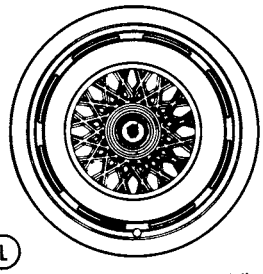

(L) D5DZ-1130-D (15-1/4")
(RED CENTER)
MONARCH

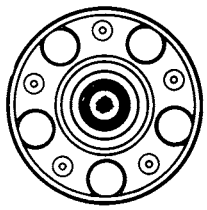

(M) D5DZ-1130-J (5-7/8")
D6FZ-1130-B (6-1/8")
(RED CENTER)
BOBCAT, COMET, MONARCH

P-13246

1977 HUB CAPS and WHEEL COVERS
(Page 1 of 3)

COPYRIGHT © 1986 — FORD MOTOR COMPANY — DEARBORN, MICHIGAN

1130 CAP or COVER (WHEEL HUB)— Cont'd

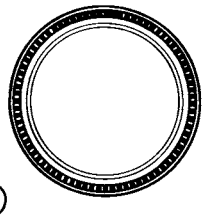

A

D5FZ-1130-A (9-5/8")
HUB CAP (PLAIN CENTER)
BOBCAT

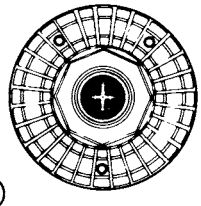

B

D5LY-1130-A (9-5/8")
HUB CAP (GOLD CENTER)
LINCOLN, MARK V

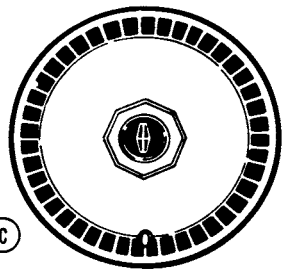

C

D5LY-1130-B (16-1/4")
(BLACK CENTER)
MARK V

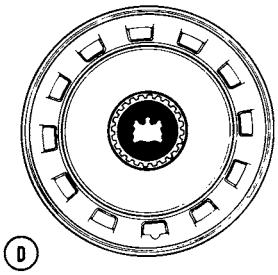

D

D5MY-1130-A (16-1/4")
(BLACK CENTER)
MERCURY

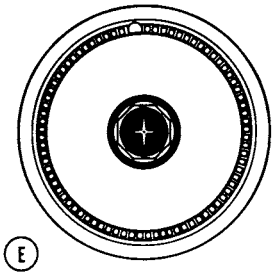

E

D5VY-1130-A (16-1/4")
(BLACK CENTER)
LINCOLN

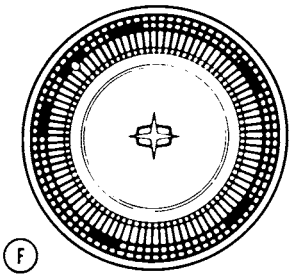

F

D5VY-1130-K (16-1/4")
(PLAIN CENTER)
LINCOLN

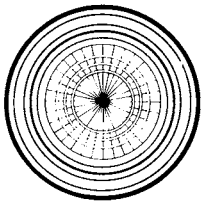

G

D6DZ-1130-A (2-3/4")
HUB CAP (RED CENTER)
MONARCH

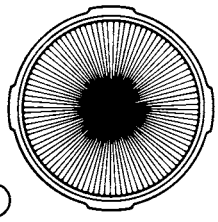

H

D6FZ-1130-C (2-5/8")
HUB CAP (RED CENTER)
BOBCAT

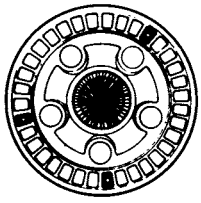

J

D6MY-1130-A (9-1/16")
HUB CAP (RED CENTER)
MERCURY

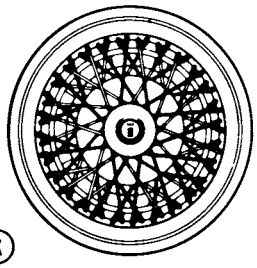

K

D6OZ-1130-A (16-1/4")
(RED CENTER)
MERCURY

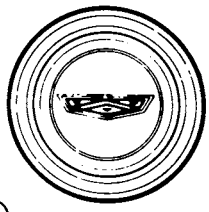

L

D6OZ-1130-B (2-3/4")
HUB CAP (RED CENTER)
COMET, COUGAR

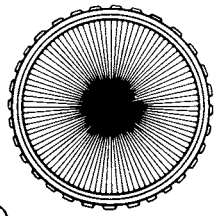

M

D6OZ-1130-C (2-15/16")
HUB CAP (RED CENTER)
COUGAR

P-13247

1977 HUB CAPS and WHEEL COVERS
(Page 2 of 3)

1130 CAP ro COVER (WHEEL HUB)— Cont'd

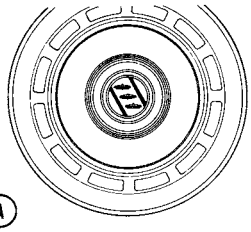

(A)

● D7DZ-1130-A THRU J (15-1/4")
(SILVER AND BLACK CREST)
COUGAR, MONARCH

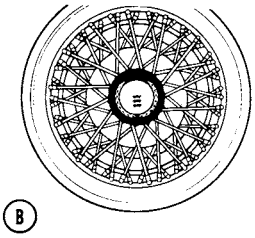

(B)

D7FZ-1130-A (14-1/8")
D7OZ-1130-B (15-1/4")
(RED CENTER)
COMET, COUGAR, MONARCH, BOBCAT

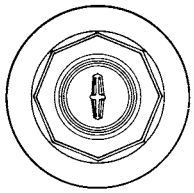

(C)

D7LY-1130-A (6-1/2")
HUB CAP (BLACK CENTER)
LINCOLN, MARK V

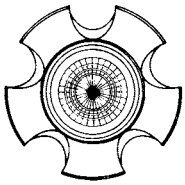

(D)

D70Z-1130-C (4 3/4")
HUB CAP (RED CENTER)
COUGAR

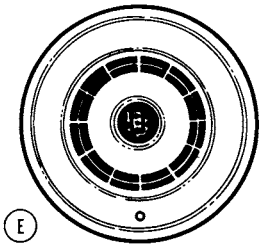

(E)

D7OZ-1130-A (15¼")
(BLACK CENTER)
COUGAR

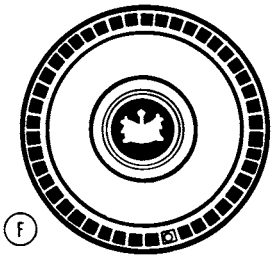

(F)

D3MY-1130-F (15 1/8")
(BLACK CENTER)
MERCURY

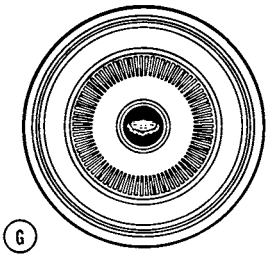

(G)

D20Z-1130-F(14¼)
(BLACK CENTER)
COMET

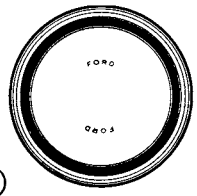

(H)

D5DZ-1130-B (10 1/4")
(HUB CAP)
BRUSHED FINISH CENTER
MONARCH

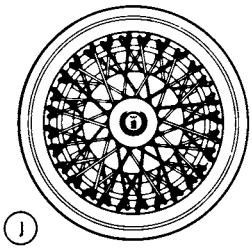

(J)

D7AZ-1130-J(16¼")
(RED CENTER)
MERCURY,COUGAR

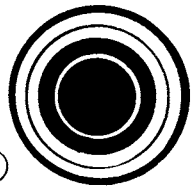

(K)

D5RY-1130-A (2 7/16")
HUB CAP (BLACK CENTER)
CAPRI

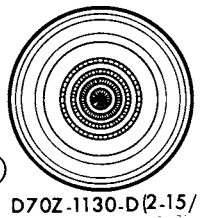

(L)

D70Z-1130-D(2-15/16")
RED SUNBURST CENTER
COUGAR

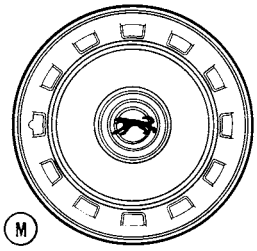

(M)

D7WY-1130-A (16 ¼")
(BLACK CENTER
w/COUGAR EMBLEM)
COUGAR

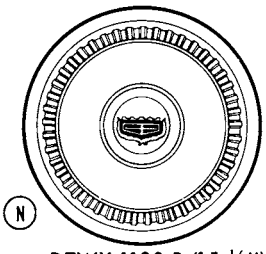

(N)

D7WY-1130-B (15 ¼")
(BLACK CENTER) COUGAR

● REFER TO TEXT SECTION FOR DESIRED COLOR

P-13248

1977 HUB CAPS and WHEEL COVERS
(Page 3 of 3)

COPYRIGHT © 1986 — FORD MOTOR COMPANY — DEARBORN, MICHIGAN

1130 CAP or COVER (WHEEL HUB)— Cont'd

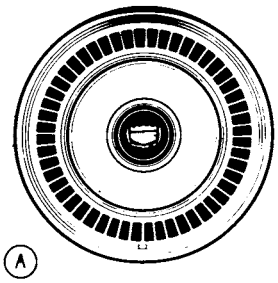

(A)
D14Y-1130-B (14-1/8")
(BLACK CENTER WITH RED CREST)
ZEPHYR

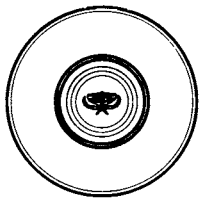

(B)
D3AZ-1130-C (10-7/8")
HUB CAP (PLAIN CENTER)
COUGAR, MERCURY

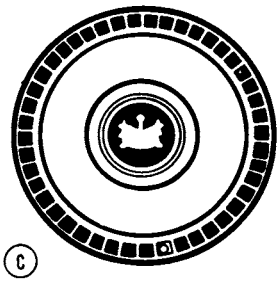

(C)
D3MY-1130-K (15-1/8")
(BLACK CENTER)
MERCURY

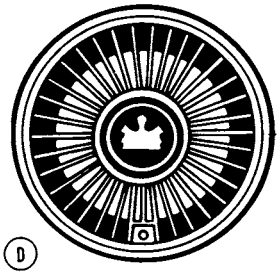

(D)
D3MY-1130-T (16-1/4")
(RED CENTER)
MERCURY

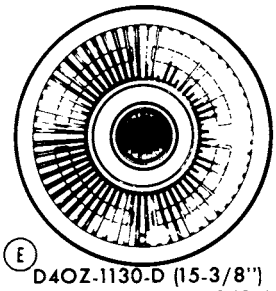

(E)
D4OZ-1130-D (15-3/8")
D6OZ-1130-D (15 3/8")
(RED CENTER)
COUGAR

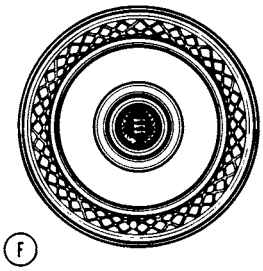

(F)
D5AZ-1130-K (16-1/4")
(BLACK CENTER)
COUGAR

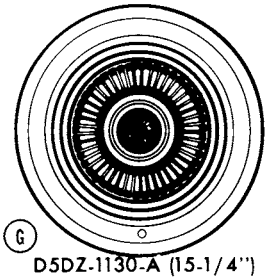

(G)
D5DZ-1130-A (15-1/4")
D8DZ-1130-L (15 1/4")
(RED CENTER)
COUGAR, MONARCH, ZEPHYR

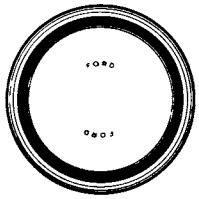

(H)
D5DZ-1130-B (10-1/4")
HUB CAP (BRUSHED FINISH CENTER)
COUGAR, ZEPHYR

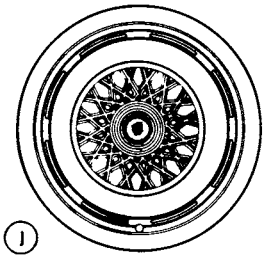

(J)
D5DZ-1130-D (15-1/4")
(RED CENTER)
MONARCH

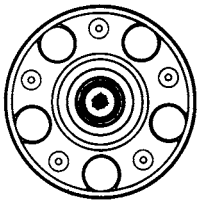

(K)
D5DZ-1130-J (5-7/8")
D6FZ-1130-B (6-1/8")
(RED CENTER)
BOBCAT, MONARCH, ZEPHYR

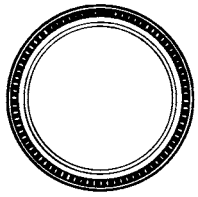

(L)
D5FZ-1130-A (9-5/8")
HUB CAP (PLAIN CENTER)
BOBCAT

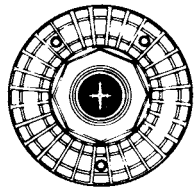

(M)
D5LY-1130-A (9-5/8")
HUB CAP (GOLD CENTER)
LINCOLN, MARK V, VERSAILLES

P-14168

1978/ HUB CAPS or WHEEL COVERS
(Page 1 of 3)

1130 CAP or COVER (WHEEL HUB)— Cont'd

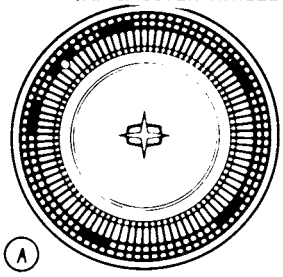

(A)
D5VY-1130-K (16-1/4")
(PLAIN CENTER)
LINCOLN

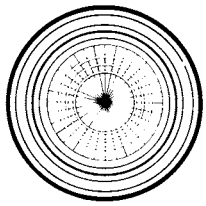

(B)
D6DZ-1130-A (2-3/4")
HUB CAP (RED CENTER)
MONARCH

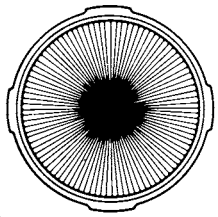

(C)
D6FZ-1130-C (3-1/8")
HUB CAP (RED CENTER)
BOBCAT

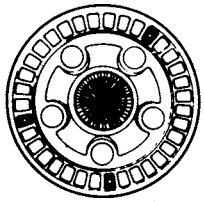

(D)
D6MY-1130-A (9-1/16")
HUB CAP (RED CENTER)
MERCURY

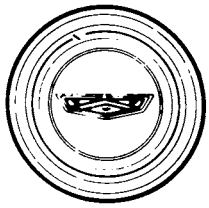

(E)
D6OZ-1130-B (2-3/4")
HUB CAP (RED CENTER)
COUGAR, ZEPHYR

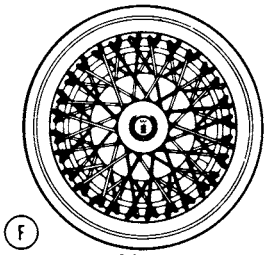

(F)
D7AZ-1130-J (16-1/4")
D8AZ-1130-F (16 1/4")
(RED CENTER)
COUGAR, MERCURY

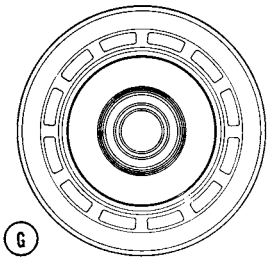

(G)
• D8DZ-1130-A THRU K (15-1/4")
SILVER BRUSHED APPLIQUE
MONARCH

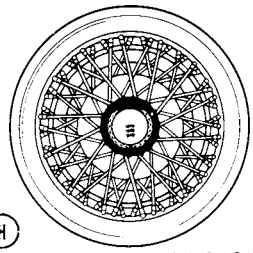

(H)
D7FZ-1130-A (14-1/8")
D7OZ-1130-B (15-1/4")
(RED CENTER)
BOBCAT, COUGAR,
MONARCH, ZEPHYR

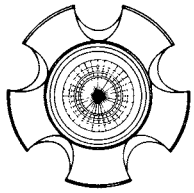

(J)
D7OZ-1130-C (4-1/4")
D8WY-1130-A (4-1/4")
HUB CAP (RED CENTER)
COUGAR

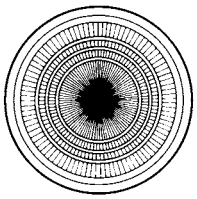

(K)
D7OZ-1130-D (3-1/16")
(RED CENTER)
COUGAR

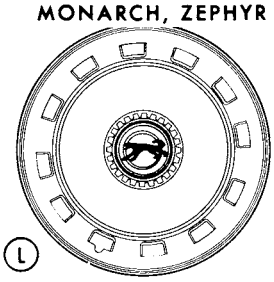

(L)
D7WY-1130-A (16-1/4")
(COUGAR EMBLEM)
COUGAR

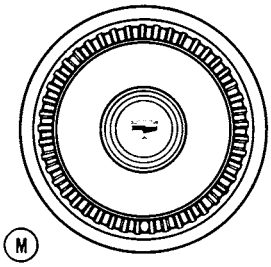

(M)
D7WY-1130-B (15-1/4")
(BLACK CENTER)
(WITH RED CREST)
COUGAR

• REFER TO TEXT SECTION FOR DESIRED COLOR

P-14169

1978/ HUB CAPS and WHEEL COVERS
(Page 2 of 3)

COPYRIGHT © 1986 — FORD MOTOR COMPANY — DEARBORN, MICHIGAN

1130 CAP or COVER (WHEEL HUB)— Cont'd

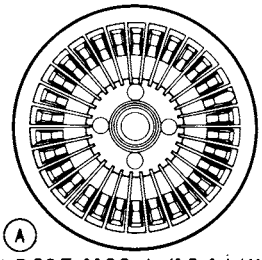

(A)
▲D8BZ-1130-A (15-1/4")
(LIGHT ARGENT)
▲D8BZ-1130-B (15-1/4")
(DARK ARGENT)
▲•D8BZ-1130-G THRU N (15-1/4")
ZEPHYR

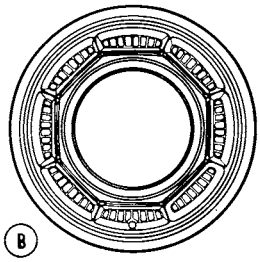

(B)
D8BZ-1130-C (15-1/4")
(PLAIN CENTER)
ZEPHYR

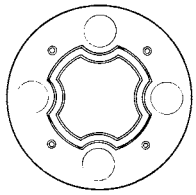

(C)
D8BZ-1130-D (5-13/16")
(BRUSH FINISH CENTER)
ZEPHYR

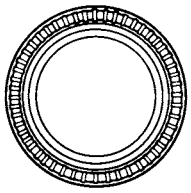

(D)
D8BZ-1130-E (9-1/4")
HUB CAP (PLAIN CENTER)
ZEPHYR

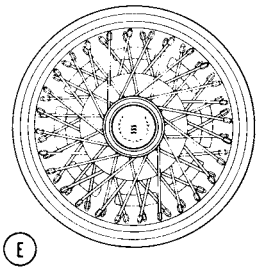

(E)
D8BZ-1130-F (15-1/4")
(BLACK CENTER)
ZEPHYR

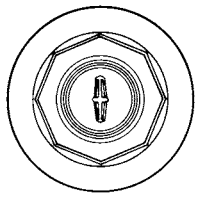

(F)
D8LY-1130-C (6-1/2")
HUB CAP (BLACK CENTER)
LINCOLN, MARK V

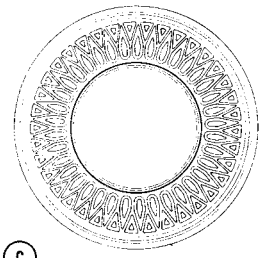

(G)
D8KY-1130-A (15-1/4")
(PLAIN CENTER)
ZEPHYR

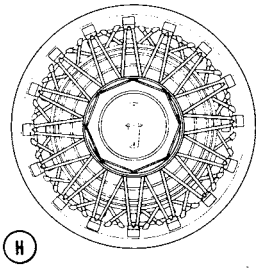

(H)
D8LY-1130-A (16-1/4")
(BLACK CENTER)
LINCOLN

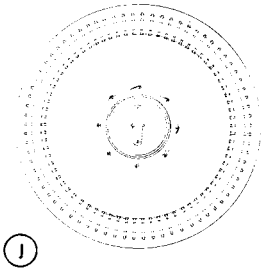

(J)
D8LY-1130-B (16-1/4")
(BLACK CENTER)
LINCOLN

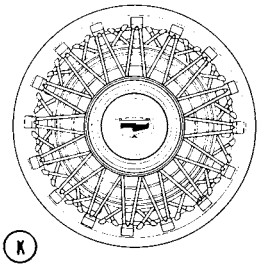

(K)
D8MY-1130-A (16-1/4")
(BLACK CENTER)
MERCURY

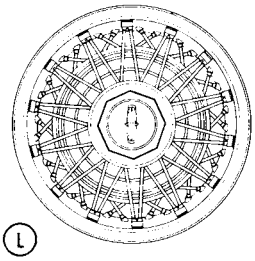

(L)
D84Y-1130-A (15-1/4")
(BLACK CENTER)
VERSAILLES

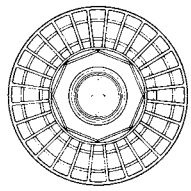

(M)
D84Y-1130-B (9-5/8")
(BLACK CENTER)
LINCOLN, MARK V,
VERSAILLES

▲SILVER AND BLACK CENTER
•REFER TO TEXT SECTION FOR DESIRED COLOR

P-14170

1130 CAP or COVER (WHEEL HUB) — Cont'd

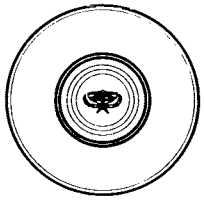

(A)
D3AZ-1130-C (10-7/8")
HUB CAP (PLAIN CENTER)
COUGAR, MERCURY

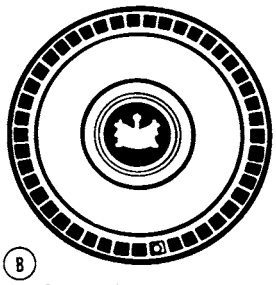

(B)
D3MY-1130-K (15-1/8")
(BLACK CENTER)
MERCURY

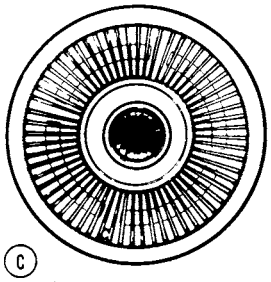

(C)
D4OZ-1130-D (15-3/8")
D6OZ-1130-D (15 3/8")
(RED CENTER)
COUGAR

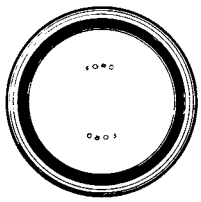

(D)
D5DZ-1130-B (10-1/4")
HUB CAP (BRUSHED FINISH CENTER)
COUGAR, ZEPHYR

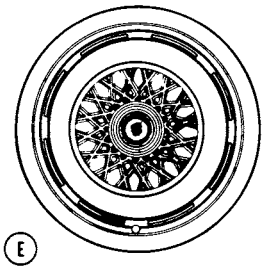

(E)
D5DZ-1130-D (15-1/4")
(RED CENTER)
MONARCH

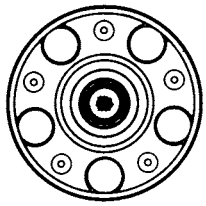

(F)
D5DZ-1130-J (5-7/8")
D6FZ-1130-B (6-1/8")
(RED CENTER)
BOBCAT, MONARCH, ZEPHYR

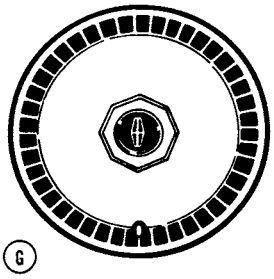

(G)
D5LY-1130-B (16 1/4")
(BLACK CENTER)
MARK IV

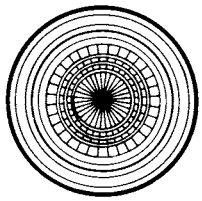

(H)
D6DZ-1130-A (2-3/4")
HUB CAP (RED CENTER)
MONARCH

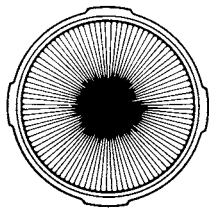

(J)
D6FZ-1130-C (3-1/8")
HUB CAP (RED CENTER)
BOBCAT

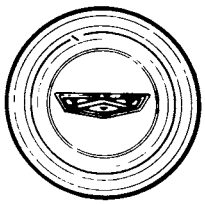

(K)
D6OZ-1130-B (2-3/4")
HUB CAP (RED CENTER)
COUGAR, ZEPHYR

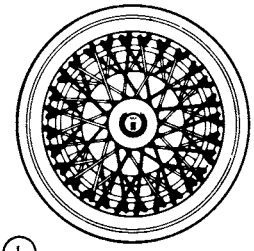

(L)
D7AZ-1130-J (16-1/4")
D8AZ-1130-F (16 1/4")
(RED CENTER)
COUGAR, MERCURY

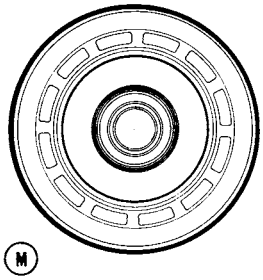

(M)
• D8DZ-1130-A THRU K (15-1/4")
SILVER BRUSHED APPLIQUE
MONARCH

• REFER TO TEXT SECTION FOR DESIRED COLOR

P-14894

1979/ HUB CAPS and WHEEL COVERS
(Page 1 of 4)

COPYRIGHT © 1986 — FORD MOTOR COMPANY — DEARBORN, MICHIGAN

1130 CAP or COVER (WHEEL HUB) — Cont'd

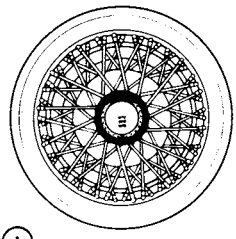

(A)
D7FZ-1130-A (14-1/8")
D7OZ-1130-B (15-1/4")
(RED CENTER)
BOBCAT, COUGAR,
MONARCH, ZEPHYR

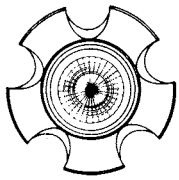

(B)
D7OZ-1130-C (4-1/4")
D8WY-1130-A (4-1/4")
HUB CAP (RED CENTER)
COUGAR

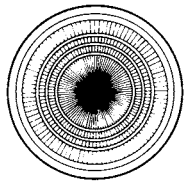

(C)
D7OZ-1130-D (3-1/16")
(RED CENTER)
COUGAR

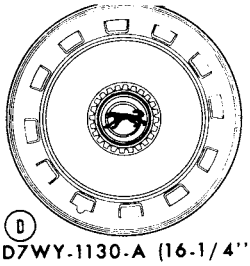

(D)
D7WY-1130-A (16-1/4")
(COUGAR EMBLEM)
COUGAR

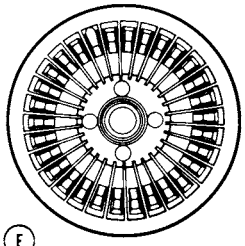

(E)
▲D8BZ-1130-A (15¼")
(LIGHT ARGENT)
▲●D8BZ-1130-P THRU AC (15¼")
ZEPHYR

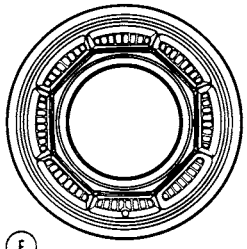

(F)
D8BZ-1130-C (15¼")
(PLAIN CENTER)
ZEPHYR

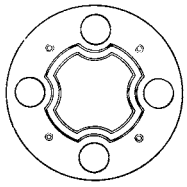

(G)
D8BZ-1130-D (5-13/16")
(BRUSH FINISH CENTER)
ZEPHYR

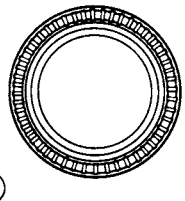

(H)
D8BZ-1130-E (9¼")
HUB CAP (PLAIN CENTER)
ZEPHYR

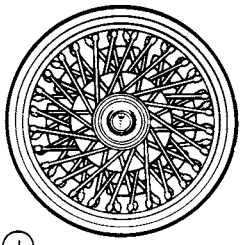

(J)
D8BZ-1130-F (15¼")
(BLACK CENTER)
ZEPHYR

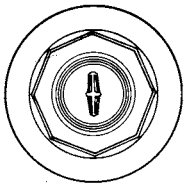

(K)
D8LY-1130-C (6½")
HUB CAP (BLACK CENTER)
LINCOLN, MARK V

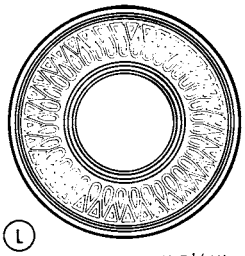

(L)
D8KY-1130-A (15¼")
(PLAIN CENTER)
ZEPHYR

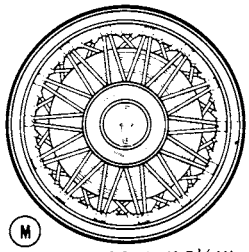

(M)
D84Y-1130-A (15¼")
D94Y-1130-A (15¼")
(BLACK CENTER)
VERSAILLES

▲SILVER AND BLACK CENTER
●REFER TO TEXT SECTION FOR DESIRED COLOR

P-14895

1130 CAP or COVER (WHEEL HUB) — Cont'd

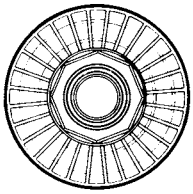

(A) D84Y-1130-B(9-5/8")
D94Y-1130-B (9 5/8")
(BLACK CENTER)
LINCOLN, MARK V,
VERSAILLES

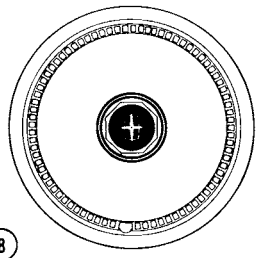

(B) D5VY-1130-A (16 1/4")
(BLACK CENTER)
LINCOLN

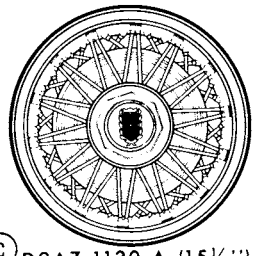

(C) D9AZ-1130-A (15¼")
D9AZ-1130-E (15 1/4")
(RED CENTER)
MERCURY

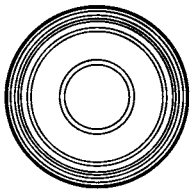

(D) D9A2-1130-D (10¾")
HUB CAP (PLAIN CENTER)
MERCURY

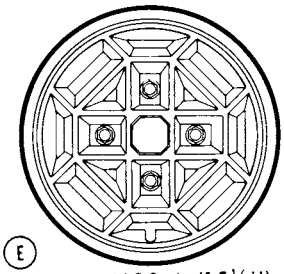

(E) D9CY-1130-A (15¼")
(PLAIN CENTER)
CAPRI

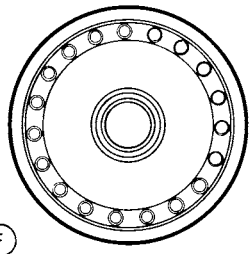

(F) D9FZ-1130-A (14¼")
(BLACK CENTER)
BOBCAT

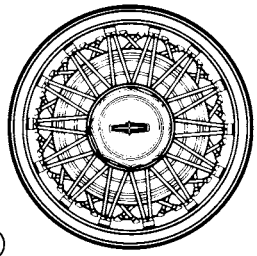

(G) D9LY-1130-A (16¼")
(BLACK CENTER)
LINCOLN, MARK V

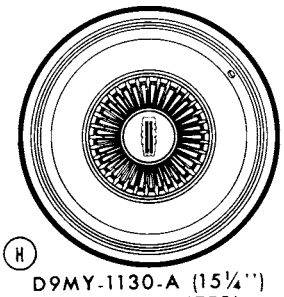

(H) D9MY-1130-A (15¼")
(BLACK CENTER)
MERCURY

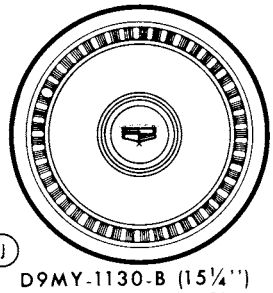

(J) D9MY-1130-B (15¼")
(BLACK CENTER)
MERCURY

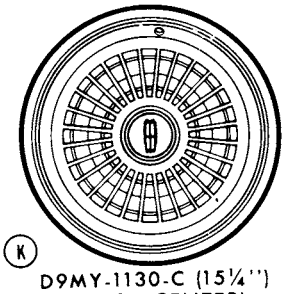

(K) D9MY-1130-C (15¼")
(BLACK CENTER)
MERCURY

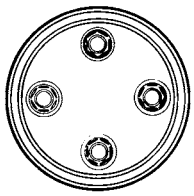

(L) D9ZZ-1130-C (7½")
HUB CAP (PLAIN CENTER)
CAPRI, ZEPHYR

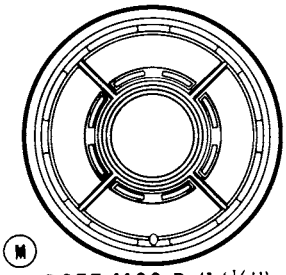

(M) D9ZZ-1130-D (14¼")
D9ZZ-1130-E (15¼")
(PLAIN CENTER)
BOBCAT

P-14896

1979/ HUB CAPS and WHEEL COVERS
(Page 3 of 4)

COPYRIGHT © 1986 — FORD MOTOR COMPANY — DEARBORN, MICHIGAN

1130 CAP or COVER (WHEEL HUB) — Cont'd

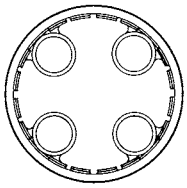

(A)
D9ZZ-1130-H (6-5/8")
HUB CAP (PLAIN CENTER)
CAPRI

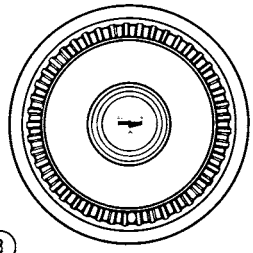

(B)
D7WY-1130-B (15¼")
(BLACK CENTER)
(WITH RED CREST)
COUGAR

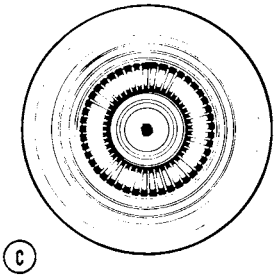

(C)
D9DZ-1130-A (15¼")
(RED CENTER)
MONARCH

1973/79
LINCOLN-MERCURY CARS

YEAR	MODEL/RESTRICTIONS	PART NUMBER FRONT	PART NUMBER REAR	BRAKE SIZE (INCHES)	QTY.
2001	SHOE and LINING KIT (BRAKE)-For contents of kit refer to Section 20.1				
NOTE 1-	Police pursuit shoe and lining kit may be used when severe high speed conditions exist. however a shorter service lining life can be expected.				

A (Mercury)

YEAR	MODEL/RESTRICTIONS	PART NUMBER FRONT	PART NUMBER REAR	BRAKE SIZE (INCHES)	QTY.
73/74	A (exc. P/C) - - disc brakes	D5MZ 2001-B			1
	A(P/C-non pursuit vehicles) - - 8 cyl. 429,460 and disc brakes	D5MZ 2001-B			1
	A(P/C-pursuit vehicles) - - 8 cyl. 400,429,460 and disc brakes	★ D6AZ 2001-B(9/85)			1
	A		★ D3AZ 2200-A(10/84)	11 x 2 1/4	1
	A		★ D3AZ 2200-C (6/83)	11 x 2 1/2	1
75	A (exc. P/C)	D5MZ 2001-B			1
	A(P/C-non-pursuit vehicles) - - 8 cyl. 400,460 (exc. 460 P/C eng.)- NOTE 1	D5MZ 2001-B			1
	A(P/C-pursuit vehicles) - - 8 cyl. 460 P/C	★ D6AZ 2001-B(9/85)			1
	A - - rear drum brakes		★ D50Z 2200-B(10/84)	11 x 2 1/4	1
	A - - rear drum brakes		★ D5SZ 2200-A(6/82)	11 x 2 1/2	1
	A(exc. P/C with 460 eng.) - - rear disc brakes		D5MZ 2200-C		1
	A (P/C with 460 eng.) - - rear disc brakes		★ D5MZ 2200-D (6/83)		1
76/78	A(exc. P/C)	★ D60Z 2001-A r/b D5MZ 2001-B			1
	A(P/C-non-pursuit vehicles)	★ D60Z 2001-A r/b D5MZ 2001-B			1
	A(P/C-pursuit vehicles)	★ D6AZ 2001-B(9/85)			1
	A - - rear drum brakes		D6AZ 2200-A	11 x 2 1/2	1
	A - - rear disc brakes (exc. P/C)		★ D6AZ 2200-B(9/85)		1
	A - - rear disc brakes (P/C non-pursuit vehicles)		★ D6AZ 2200-B(9/85)		1
	A - - rear disc brakes (P/C pursuit vehicles)		★ D5MZ 2200-D (6/83)		1
79	A(exc. P/C)	D9AZ 2001-E			1
	A(P/C)	E2AZ 2001-B			1
	A		D9AZ 2200-A	10 x 2 1/2	1
	A		D9AZ 2200-B	11 x 2 1/4	1

COPYRIGHT © 1986 — FORD MOTOR COMPANY — DEARBORN, MICHIGAN

1973/79 LINCOLN-MERCURY CARS

YEAR	MODEL/RESTRICTIONS	PART NUMBER FRONT	PART NUMBER REAR	BRAKE SIZE (INCHES)	QTY.
2001	SHOE and LINING KIT (BRAKE)-For contents of kit refer to Section 20.1 — Cont'd				
NOTE 1-	Police pursuit shoe and lining kit may be used when severe high speed conditions exist. however a shorter service lining life can be expected.				

C (Montego)

73/74	C(exc. P/C) - - disc brakes	D5MZ 2001-B			1
	C(P/C) - - 6 cyl., 8 cyl. 302, 351-2/B and disc brakes	D5MZ 2001-B			1
	C(P/C) - - 8 cyl. 351-4/B,429,460 and disc brakes	★ D6AZ 2001-B(9/85)			1
	C(53,63,65) - - 6 cyl., 8 cyl. 302		C60Z 2001-A	10 x 2 1/2	1
	C(53,63,65-exc. P/C) - - 8 cyl. 351,400,429,460		C60Z 2001-A	10 x 2 1/2	1
	C(53,65) - - P/C		★ D3AZ 2200-A(10/84)	11 x 2 1/4	1
	C(71) - - 8 cyl. 302		C60Z 2001-A	10 x 2 1/2	1
	C(71) - - 8 cyl. 351,400,429		★ D3AZ 2200-A(10/84)	11 x 2 1/4	1
75	C(exc. P/C)	D5MZ 2001-B			1
	C(P/C-non-pursuit vehicles)	D5MZ 2001-B			1
	C(P/C-pursuit vehicles)	★ D6AZ 2001-B(9/85)			1
	C(53,65-exc. P/C)		★ D50Z 2200-A(6/82)	10 x 2 1/2	1
	C(53,65-P/C) C(71)		★ D50Z 2200-B (10/84)	11 x 2 1/4	1 1
76	C(exc. P/C, Taxi)	★ D60Z 2001-A r/b D5MZ 2001-B			1
	C(P/C-non-pursuit vehicles)	★ D60Z 2001-A r/b D5MZ 2001-B			1
	C(P/C-pursuit vehicles)	★ D6AZ 2001-B(9/85)			1
	C(Taxi)	★ D60Z 2001-A			1
	C(exc. 71)	r/b D5MZ 2001-B	D60Z 2200-A	11 x 2 1/4	1
	C(71)		D6AZ 2200-A	11 x 2 1/2	1

D (Lincoln)

73	D - - disc brakes	D5MZ 2001-B			1
	D		★ D3AZ 2200-C (6/83)	11 x 2 1/2	1
74	D - - disc brakes	D5MZ 2001-B			1
	D		D4VY 2200-A	11 x 2 1/2	1
75	D	D5MZ 2001-B			1
	D - - rear drum brakes		★ D5SZ 2200-A(6/82)	11 x 2 1/2	1
	D - - rear disc brakes		D5MZ 2200-C		1
76/	D	D5MZ 2001-B			1
	D - - rear drum brakes		D6AZ 2200-A	11 x 2 1/2	1
	D - - rear disc brakes		D5MZ 2200-C		1

F (Cougar)

73	F - - disc brakes	★ D00Z 2001-C(9/85)			1
	F		★ D6DZ 2200-B(10/21)	10 x 2 F.R.	1
74	F - - disc brakes	D5MZ 2001-B			1
	F		C60Z 2001-A	10 x 2 1/2	1
75	F	D5MZ 2001-B			1
	F		★ D50Z 2200-A(6/82)	10 x 2 1/2	1

1973/79
LINCOLN-MERCURY CARS

YEAR	MODEL/RESTRICTIONS	PART NUMBER FRONT	PART NUMBER REAR	BRAKE SIZE (INCHES)	QTY.
2001	SHOE and LINING KIT (BRAKE)-For contents of kit refer to Section 20.1 — Cont'd				
NOTE 1-	Special front brake pad repair service kit with abrasive pads				
NOTE 2-	Normal front brake pad repair service kit without abrasive pads				
NOTE 3-	If vehicle is equipped with a Proportioning Valve ("G" Valve) part #D7RY 2L410-A, use D7RY 2001-A or B disc brake pad kit.				

F (Cougar)

76	F	★ D60Z 2001-A /b D5MZ 2001-B			1
	F		D60Z 2200-A	11 x 2 1/4	1
77/	F(exc.P/C,Taxi)	★ D60Z 2001-A /b D5MZ 2001-B			1
	F(P/C-non-pursuit vehicles)	★ D60Z 2001-A /b D5MZ 2001-B			1
	F(P/C-pursuit vehicles)	★ D6AZ 2001-B(9/85)			1
	F(Taxi)	★ D60Z 2001-A /b D5MZ 2001-B			1
	F(exc.71 & P/C)		D60Z 2200-A	11 x 2 1/4	1
	F(71)		D6AZ 2200-A	11 x 2 1/2	1
	F(P/C)		D90Z 2200-A	11 x 2 1/4	1

G (Monarch)

75	G	D6DZ 2001-A			1
	G - - rear drum brakes		★ D5DZ 2200-A(6/82)	10 x 2	1
	G - - rear disc brakes		D5DZ 2200-C		1
76/	G	D6DZ 2001-A			1
	G - - rear drum brakes		★ D6DZ 2200-B(10/21)	10 x 2	1
	G - - rear disc brakes		D5MZ 2200-C		1

J (Capri)

73/74	J - - disc brakes NOTE 1	D6RY 2001-A			1
	J - - disc brakes NOTE 2	D6RY 2001-B			1
	J - - 4 cyl.		C8RZ 2200-A	9 x 1 3/4	1
	J - - 6 cyl.		D2RY 2200-B	9 x 2 1/4	1
76/77	J - - disc brakes "Before 4/1/77" NOTE 1 NOTE 3	D6RY 2001-A			1
	J - - disc brakes "Before 4/1/77" NOTE 2 NOTE 3	D6RY 2001-B			1
	J - - 4 cyl.		★ D6RY 2200-C	9 x 1 3/4	1
	J - - 6 cyl. "Before 8/1/75"		★ D5RY 2200-A	9 x 2 1/4	1
	J - - 6 cyl. "From 8/1/75"		★ D6RY 2200-A	9 x 2 1/4	1
77/78	J - - disc brakes "From 4/1/77" NOTE 2 NOTE 3	D7RY 2001-A			1
	J - - disc brakes "From 4/1/77" NOTE 1 NOTE 3	D7RY 2001-B			1
	J		★ D6RY 2200-A	9 x 2 1/4	1
79	J (2.3L,2.8L, exc. 2.3L turbo)	D9ZZ 2001-F			1
	J (2.3L turbo, 3.3L)	D9ZZ 2001-E			1
	J (5.0L)	D9BZ 2001-F			1
	J		D9ZZ 2200-A	9 x 1 3/4	1

K (Mark IV)

73/74	K	D5MZ 2001-B			1
	K		★ D3AZ 2200-C (6/83)	11 x 2 1/2	1
75/	K	D5MZ 2001-B			1
	K		D5MZ 2200-C		1

COPYRIGHT © 1986 — FORD MOTOR COMPANY — DEARBORN, MICHIGAN

1973/79 LINCOLN-MERCURY CARS

YEAR	MODEL/RESTRICTIONS	PART NUMBER FRONT	PART NUMBER REAR	BRAKE SIZE (INCHES)	QTY.
2001	SHOE and LINING KIT (BRAKE)-For contents of kit refer to Section 20.1 — Cont'd				
NOTE 1-	Police pursuit shoe and lining kit may be used when severe high speed conditions exist. however a shorter service lining life can be expected.				
	L (Bobcat)				
74	L - - disc brakes	D6FZ 2001-A			1
	L		D2FZ 2200-A	9 x 1 3/4	1
	L (Bobcat)				
75/	L	D6FZ 2001-A			1
	L		D7FZ 2200-A	9 x 1 3/4	1
	P (Comet)				
73/74	P - - disc brakes	D6DZ 2001-A			1
	P	★C60Z 2001-A (6/83)		10 x 2 1/2	1
	P		★D5DZ 2200-B (9/83)	10 x 1 3/4	1
75	P - - disc brakes	D6DZ 2001-A			1
	P - - drum brakes	D5DZ 2001-A		10 x 2 1/2	1
	P		★D5DZ 2200-B (9/83)	10 x 1 3/4	1
76/77	P	D6DZ 2001-A			1
	P		D6DZ 2200-A	10 x 1 3/4	1
	P (Zephyr)				
78	P	D9BZ 2001-F			1
	P(71, P/C, Taxi)		D6DZ 2200-A	10 x 1 3/4	1
	P(exc. 71, P/C, Taxi)		D9ZZ 2200-A	9 x 1 3/4	1
79	P(exc. P/C)	D9BZ 2001-F			1
	P(P/C) "Before 12/8/78"	D9BZ 2001-C			1
	P(P/C) "From 12/8/78	D9BZ 2001-G			1
	P(exc. 71, P/C, Taxi)		D9ZZ 2200-A	9 x 1 3/4	1
	P(71, P/C, Taxi)		D6DZ 2200-A	10 x 1 3/4	1
	V (Versailles)				
77/	V	D6DZ 2001-A			1
			D5MZ 2200-C		1
	Y (Meteor)				
73	Y(exc. P/C) - - disc brakes	D5MZ 2001-B			1
	Y(P/C-non pursuit vehicles) - - 8 cyl. 429,460 and disc brakes	D5MZ 2001-B			1
	Y(P/C-pursuit vehicles) - - 8 cyl. 429, 460 and disc brakes	★D6AZ 2001-B(9/85)			1
	Y		★D3AZ 2200-A(10/84)	11 x 2 1/4	1
	Y		★D3AZ 2200-C (6/83)	11 x 2 1/2	1
74	Y(exc. P/C) - - disc brakes	D5MZ 2001-B			1
	Y(P/C-non-pursuit vehicles) - - 8 cyl. 351,400 and disc brakes	D5MZ 2001-B			1
	Y(P/C-pursuit vehicles) - - 8 cyl. 351,400,460 and disc brakes	★D6AZ 2001-B(9/85)			1
	Y		★D3AZ 2200-A(10/84)	11 x 2 1/4	1
	Y		★D3AZ 2200-C (6/83)	11 x 2 1/2	1
75	Y (exc. P/C)	D5MZ 2001-B			1
	Y(P/C-non-pursuit vehicles) - - 8 cyl. 400,460 (exc. 460 P/C eng.)	D5MZ 2001-B			1
	Y(P/C-pursuit vehicles) - - 8 cyl. 460	★D6AZ 2001-B(9/85)			1
	Y - - rear drum brakes		★D50Z 2200-B(10/84)	11 x 2 1/4	1
	Y - - rear drum brakes		★D5SZ 2200-A(6/82)	11 x 2 1/2	1

YEAR	MODEL/RESTRICTIONS	PART NUMBER FRONT	PART NUMBER REAR	BRAKE SIZE (INCHES)	QTY.
2001	SHOE and LINING KIT (BRAKE)-For contents of kit refer to Section 20.1 — Cont'd				
NOTE 1-	Police pursuit shoe and lining kit may be used when severe high speed conditions exist. however a shorter service lining life can be expected.				

Y (Meteor)

75	Y(exc. P/C with 460 eng.) - - rear disc brakes		D5MZ 2200-C		1
	Y(P/C with 460 eng.) - - rear disc brakes		D5MZ 2200-B		1
76	Y(exc. P/C)	★ D60Z 2001-A r/b D5MZ 2001-B			1
	Y(P/C-non-pursuit vehicles)	★ D60Z 2001-A r/b D5MZ 2001-B			1
	Y(P/C-pursuit vehicles)	★ D6AZ 2001-B(9/85)			1
	Y - - rear drum brakes		D6AZ 2200-A	11 x 2 1/2	1
	Y - - rear disc brakes (exc. P/C)		★ D6AZ 2200-B(9/85)		1
	Y - - rear disc brakes (P/C-non-pursuit vehicles)		★ D6AZ 2200-B(9/85)		1
	Y - - rear disc brakes (P/C-pursuit vehicles)		★ D5MZ 2200-D (6/83)		1

YEAR	MODEL/RESTRICTIONS	PART NUMBER	DESCRIPTION	QTY.
73/74	J	E440000-S100	Pin (to retain pad)-3/16"	4

2B002 ACTUATOR ASSY. (BRAKE SKID CONTROL)

73/74	A,D,K,Y "Before 10/1/73"	★ D2LY 2B002-A(9/81)	#D2LA 2B002-AB or AC	1
74	A,D,K,Y "From 10/1/73"	★ D4LY 2B002-A(2/80)	#D4LA 2B002-AA	1
75	A,D,G,K,Y	★ D5LY 28002-A	#D5LA 2B002-AA,AB or AC r/b D6LZ 2B002-A (2/78)	1
76	A,D,G,K,Y	★ D6LZ 2B002-A (9/83)		1
77/	D,K	★ D6LZ 2B002-A (9/83)		1
75/76	G	387023-S36	(WW-154-G)-stud 3/8"- 16 x 3 15/32"	3

2004 CYLINDER REPAIR KIT (BRAKE MASTER)-Refer to group 2140 for Model Application

★ **D1RY 2004-A** r/b D7RY 2004-A (11/79)

Consists of

QTY.	PART NUMBER		DESCRIPTION
2	69GG	2173-AA	Cup
2	11	546455	Cup
2	11	634221	Washer
2	11	634222	Cup
1	67025-GS		Retainer
1	E830012-S		Washer

★ **D2DZ 2004-A(3/82)**

Consists of

QTY.	PART NUMBER		DESCRIPTION
1	C90A	2143-B	Rod
1	D2AA	2169-AA	Piston
1	0A	2180	Boot
2	C0DD	2A122-A	or
	D4DA	2B220-AA	Seat
1	C7AZ	2B224-A	Retainer
1	D2AA	2A502-AA	Piston
1	D2AA	2A511-AA	Stop
1	87002-S93		"O" ring
1	97615-S		Ring

★ **D20Z 2004-A** r/b D40Z 2004-A

Consists of

QTY.	PART NUMBER		DESCRIPTION
1	C0DD	2A122-A	Seat
1	D20Z	2143-AA	Rod
1	D3AA	2169-AA	Piston
1	0A	2180	Boot
1	C7AZ	2B224-A	Retainer
1	D20A	2A502-AD	Piston
1	D20Z	2A511-AD	Stop
1	97615-S		Ring

D2RY 2004-A

Consists of

QTY.	DESCRIPTION
1	Cap gasket
1	Circlip
6	Cups
2	Cup washers
2	Protectors
3	Retainers
2	Screws
1	Spacer
2	Springs
3	Washers

★ **D3AZ 2004-A (6/83)**

Consists of

QTY.	PART NUMBER		DESCRIPTION
1	D3AZ	2169-A	Piston
2	D3AZ	2B220-A	Seat
1	D3AZ	2A502-A	Piston
1	D2AZ	2A511-A	Stop
1	97615-S		Ring
1	381752-S200		Screw

★ **D30Z 2004-A(6/82)**

Consists of

QTY.	PART NUMBER		DESCRIPTION
2	C0DD	2A122-A	or
	D4DA	2B220-AA	Seat
1	D30A	2169-AA	Piston
1	D30A	2A502-AA	Piston
1	D20A	2A511-AD	Stop
1	97615-S		Ring

COPYRIGHT © 1986 — FORD MOTOR COMPANY — DEARBORN, MICHIGAN

QTY.	PART NUMBER		DESCRIPTION
2004	CYLINDER REPAIR KIT (BRAKE MASTER)-Refer to group 2140 for Model Application — Cont'd		
★ D3ZZ	2004-A (9/82)		
Consists of			
1	D3ZZ	2169-A	Piston
2	D3AZ	2B220-A	Seat
1	C80Z	2A502-B	Piston
1	C9AZ	2A511-A	Stop
1	C8AZ	2A512-A	Seal
1	97614-S		Ring
1	381752-S200		Screw
★ D4DZ	2004-A (6/83)		
Consists of			
2	C0DD	2A122-A	or
	D4DA	2B220-AA	Seat
1	D20A	2143-AA	Push rod
1	D4DA	2169-AB	Piston
1	D0UZ	2180-A	Boot
1	C7AZ	2B224-A	Retainer
1	D22A	2A502-AA	Piston
1	D2AA	2A511-AA	Stop
1	87002-S93		"O" ring
1	97614-S		Ring
D4FZ	2004-A		
Consists of			
2	C0DD	2A122-A	or
	D4DA	2B220-AA	Seat
	D4DA	2B220-AA	Seat
1	C9AA	2143-C	Push rod
1	D4DA	2169-AB	Piston
1	D3AA	2169-AA	Piston
1	D0UZ	2180-A	Boot
1	C7AZ	2B224-A	Retainer
1	D22A	2A502-AA	Piston
1	D22A	2A511-AA	Stop
1	87002-S93		"O" ring
1	97614-S		Ring
★ D40Z	2004-A(6/82)		
Consists of			
2	C0DD	2A122-A	or
	D4DA	2B220-AA	Seat
1	D20A	2143-AA	Push rod
1	D0UZ	2180-A	Boot
1	C7AZ	2B224-A	Retainer
1	D20A	2A502-AD	Piston
1	D20A	2A511-AD	Stop
1	97615-S		Ring
★ D5DZ	2004-A(3/84)		
Consists of			
2	C0DD	2A122-A	or
	D4DA	2B220-AA	Seat
1	D20A	2143-AA	Rod
1	D5DA	2169-AA	Piston
1	D5DZ	2180-A	Boot
1	C7AZ	2B224-A	Retainer
1	D22A	2A502-AA	Piston
1	D2AA	2A511-AA	Stop
1	87002-S93		"O" ring
1	97614-S		Retainer
D5DZ	2004-B		
Consists of			
1	D5BA	2169-AA	Piston
2	D4DA	2B220-AA	Seat
1	D5BA	2A502-AA	Piston
1	87002-S93		"O" ring
1	97614-S100		Retainer
★ D5DZ	2004-C(3/84)		
Consists of			
1	D5BA	2169-AA	Piston
2	D4DA	2B220-AA	Seat
1	D7BC	2A502-AA	Piston
1	D2AA	2A511-AA	Stop
D5DZ	2004-E		
Consists of			
	Vendor Supply		
★ D50Z	2004-A		(3/81)
Consists of			
1	D20A	2143-AA	Push rod
1	D3AA	2169-AA	Piston
1	D5DZ	2180-A	Boot
2	C0DD	2A122-A	or
	D4DA	2B220-AA	Seat
1	C7AZ	2B224-A	Retainer
1	D20A	2A502-AD	Piston
1	97615-S		Ring
D5VZ	2004-A		
Consists of			
	Vendor Supply		
D6AZ	2004-A		
Consists of			
	Vendor Supply		
D6DZ	2004-A		
Consists of			
1	D7BC	2169-AA	Piston
2	D4DA	2B220-AA	Seat
1	D7BC	2A502-AA	Piston
1	97614-S100		Retainer
★ D6FZ	2004-A		
Consists of			
1	D20A	2143-AA	Rod
1	D7EC	2169-AA	Piston
1	D5DZ	2180-A	Boot
2	D4DA	2B220-AA	Seat
1	C7AZ	2B224-A	Retainer
1	D7EC	2A502-AA	Piston
1	97614-S100		Retainer
★ D6FZ	2004-B		R/b D6DZ 2004-C (3/83)
Consists of			
	Vendor Supply		

QTY.	PART NUMBER		DESCRIPTION
2004	CYLINDER REPAIR KIT (BRAKE MASTER)-Refer to group 2140 for Model Application — Cont'd		
	D60Z	2004-A	
Consists of			
1	D70C	2169-AA	Piston
2	D4DA	2B220-AA	Seat
1	D70C	2A502-AA	Piston
1	97615-S		Retainer
	D7RY	2004-A	
Consists of			
			Vendor Supply
	D8BZ	2004-A	
Consists of			
1	D8BC	2169-BA	Piston
2	C0DD	2A122-A	Seat
1	D8BC	2A502-AA	Piston
1	97613-S2		Retainer
	D8BZ	2004-B	
Consists of			
1	D8BC	2169-AB	Piston
2	C0DD	2A122-A	Seat
1	D8BC	2A502-AA	Piston
1	D8BC	2143-AB	Rod
1	D8BC	2B224-AA	Retainer
1	97613-S2		Retainer
	D9AZ	2004-A	
Consists of			
			Vendor Supply

YEAR	MODEL/RESTRICTIONS	PART NUMBER	DESCRIPTION		QTY.
2K004-5	SHIELD (FRONT DISC BRAKE ROTOR)				
73	A	(RH) ★ D3AZ 2K004-A r/b D4AZ 2K004-A(1/79)	(LH) ★ D3AZ 2K005-A r/b D4AZ 2K005-A(2/80)		1
74/77	A	(RH) D4AZ 2K004-A	(LH) D4AZ 2K005-A		1
78	A(71,P/C)	(RH) ★ D8AZ 2K004-A(6/82)	(LH) ★ D8AZ 2K005-A(6/82)		1
78	A - - sedan	(RH) D4AZ 2K004-A	(LH) D4AZ 2K005-A		1
79	A(exc. w/6.5" wheels exc. P/C)	(RH) D9AZ 2K004-A	(LH) D9AZ 2K005-A		1
79	A(w/6.5" wheels exc. P/C)	(RH) D9AZ 2K004-B	(LH) D9AZ 2K005-B	Includes extension	1
79	A(P/C)	(RH) D9AZ 2K004-C	(LH) D9AZ 2K005-C		1
73	C	(RH) ★ D3AZ 2K004-A r/b D4AZ 2K004-A(1/79)	(LH) D3AZ 2K005-A		1
74/76	C	(RH) D4AZ 2K004-A	(LH) D4AZ 2K005-A		1
73	D	(RH) ★ D3AZ 2K004-A r/b D4AZ 2K004-A(1/79)	(LH) D3AZ 2K005-A		1
74/	D	(RH) D4AZ 2K004-A	(LH) D4AZ 2K005-A		1
73	F	(RH) ★ C9OZ 2K004-A(2/80)	(LH) ★ C9OZ 2K005-A (6/83)		1
74/	F	(RH) D4AZ 2K004-A	(LH) D4AZ 2K005-A		1
75/77	G	(RH) ★ D5DZ 2K004-A(3/84)	(LH) ★ D5DZ 2K005-A(3/84)		1
79	G	(RH) ★ D8DZ 2K004-A(3/84)	(LH) ★ D8DZ 2K005-A(3/84)		1
77	V	(RH) ★ D5DZ 2K004-A(3/84)	(LH) ★ D5DZ 2K005-A(3/84)		1
78/	V	(RH) ★ D8DZ 2K004-A(3/84)	(LH) ★ D8DZ 2K005-A(3/84)		1
73	J - - 4 cyl. 122 (2000 cc)	(RH) ★ D0RY 2K004-A(6/82)	(LH) D0RY 2K005-A(6/82)		1
	J - - 6 cyl. 159 (2600 cc)	(RH) ★ D2RY 2K004-B(2/80)	(LH) ★ D2RY 2K005-B(2/80)		1
74/78	J - - 4 cyl. 122 (2000 cc)	(RH) ★ D0RY 2K004-A(6/82)	(LH) D0RY 2K005-A(6/82)		1
	J - - 4 cyl. 140 (2300 cc)	(RH) ★ D0RY 2K004-A(6/82)	(LH) D0RY 2K005-A(6/82)		1
	J - - 6 cyl. 171 (2800 cc) "Before 5/1/75"	(RH) ★ D2RY 2K004-B(2/80)	(LH) D2RY 2K005-B(2/80)		1
	J - - 6 cyl. 171 (2800 cc) "From 5/1/75"	(RH) ★ D0RY 2K004-A(6/82)	(LH) D0RY 2K005-A(6/82)		1
79	J - - 4 cyl. & 6 cyl.	(RH) D9ZZ 2K004-A	(LH) D9ZZ 2K005-A		1
79	J - - 8 cyl. 302	(RH) ★ D9ZZ 2K004-B(3/84)	(LH) ★ D9ZZ 2K005-B(3/84)		1
73	K	(RH) ★ D3AZ 2K004-A r/b D4AZ 2K004-A(1/79)	(LH) D3AZ 2K005-A		1
74/	K	(RH) D4AZ 2K004-A	(LH) D4AZ 2K005-A		1
74/	L	(RH) D5FZ 2K004-A	(LH) D5FZ 2K005-A		1
74	P	(RH) ★ D4DZ 2K004-A Not replaced (6/78)	(LH) ★ D4DZ 2K005-A Not replaced (6/78)		1
75/77	P	(RH) ★ D5DZ 2K004-A(3/84)	(LH) ★ D5DZ 2K005-A(3/84)		1
78/	P	(RH) D8BZ 2K004-A	(LH) D8BZ 2K005-A		1
73	Y	(RH) ★ D3AZ 2K004-A r/b D4AZ 2K004-A(1/79)	(LH) D3AZ 2K005-A		1
74/76	Y	(RH) D4AZ 2K004-A	(LH) D4AZ 2K005-A		1
73/	A,C,D,F,K,Y	383755-S2	(BB-574-CD)-screw & washer (to spindle)-5/16"-18 x 1/2"		AR

COPYRIGHT © 1986 — FORD MOTOR COMPANY — DEARBORN, MICHIGAN

1973/79 LINCOLN-MERCURY CARS

YEAR	MODEL/RESTRICTIONS	PART NUMBER	DESCRIPTION	QTY.
2005	BOOSTER ASSY. (POWER BRAKE)			
	A (Mercury)			
73/74	A(53,57,65 - - exc. P/C)	★D3AZ 2005-A(3/84)		1
	A(71 - - exc. P/C)	D3AZ 2005-C		1
	A(P/C)	★D3AZ 2005-B(6/82)		1
75	A(53,65 - - exc. P/C) - - w/vacuum booster	★D3AZ 2005-A(3/84)		1
	A(71 - - exc. P/C) - - w/vacuum booster	D3AZ 2005-C		1
	A(P/C) - - w/vacuum booster	★D3AZ 2005-B(6/82)		1
	A - - w/hydro-booster	D5VZ 2005-A		1
76	A(exc.71,P/C) - - rear drum brake "Before 1/1/76"	D6AZ 2005-B		1
	A(exc.71,P/C) - - rear drum brake "From 1/1/76"	D3AZ 2005-C		1
	A(P/C)	D6AZ 2005-A		1
	A(71) - - rear drum brake "Before 1/1/76"	D3AZ 2005-C		1
	A(71) - - rear drum brake "From 1/1/76"	★D5VZ 2005-A	R/b D7VZ 2005-A, D7AZ 2L187-D (2/78) Hydro-Boost	1
	A - - rear disc brake	★D5VZ 2005-A	R/b D7VZ 2005-A, D7AZ 2L187-D (2/78)	1
77	A(exc. 71) - - rear drum brake	D3AZ 2005-C		1
	A(71) - - rear drum brake "Before 5/2/77"	D7VZ 2005-A	Hydro-Boost	1
77/78	A(71 exc. P/C) - - rear drum brake "From 5/2/77"	D3AZ 2005-C		1
	A(P/C) - - rear drum brake	D6AZ 2005-A		1
	A - - rear disc brake	D7VZ 2005-A	Hydro-Boost	1
78	A (exc. 71,P/C)	D6AZ 2005-B		1
79	A (exc. P/C, Taxi)	D9AZ 2005-A		1
	A (P/C, Taxi)	D9AZ 2005-B		1
	C (Montego)			
73/74	C(exc. P/C)	★D30Z 2005-B (12/83)		1
	C(P/C)	D30Z 2005-A		1
75	C(exc. P/C)	D50Z 2005-B		1
	C(P/C)	D50Z 2005-A		1
76	C(exc. P/C, Taxi, 71)	D50Z 2005-B		1
	C(P/C, Taxi)	D50Z 2005-A		1
	C(71) "Before 12/10/75"	D50Z 2005-B		1
	C(71) "From 12/10/75"	D60Z 2005-A		1
	D (Lincoln)			
73	D	★D3VY 2005-A (9/83)		1
74	D "Before 4/8/74"	★D4VY 2005-A(9/82)		1
74	D "From 4/8/74"	★D5VZ 2005-A	Hydro-Boost r/b D7VZ 2005-A, D7AZ 2L187-D (2/78)	1
75/76	D	★D5VZ 2005-A	Hydro-Boost r/b D7VZ 2005-A, D7AZ 2L187-D (2/78)	1
77/	D	D7VZ 2005-A	Hydro-Boost	1
	F (Cougar)			
73	F	★D3ZZ 2005-A(8/81)		1
74	F	★D30Z 2005-B (12/83)		1
75/76	F	D50Z 2005-B		1
77/	F(exc.P/C,Taxi,71)	D50Z 2005-B		1
	F(P/C,Taxi)	D50Z 2005-A		1
	F(71)	D60Z 2005-A		1
	G (Monarch)			
75/76	G - - rear disc brake	★D5DZ 2005-C	Hydro-Boost r/b 1 pc. D7DZ 2005-A & 1 pc. D7AZ 2L187-E(5/79)	1
75/77	G - - rear drum brake	★D5DZ 2005-A(3/84)		1
77	G - - rear disc brake "Before 7/4/77"	D7DZ 2005-A	Hydro-Boost	1
77/78	G - - rear disc brake "From 7/4/77"	D8DZ 2005-B	Hydro-Boost	1

YEAR	MODEL/RESTRICTIONS	PART NUMBER	DESCRIPTION	QTY.
2005	BOOSTER ASSY. (POWER BRAKE) — Cont'd			
	G (Monarch)			
78	G - - rear drum brake	★D8DZ 2005-A	r/b D9DZ 2005-A (10/79)	1
79	G	D9DZ 2005-A		1
	J (Capri)			
73	J - - 4 cyl. 122 (2000 cc) and M/T	★D4RY 2005-A(11/85)		1
	J - - 4 cyl. 122 (2000 cc) and A/T	★D4RY 2005-B(10/84)		1
	J - - 6 cyl. 159 (2600 cc)	★D3RY 2005-A		1
74/76	J - - A/T "Before 8/1/75"	D4RY 2005-B		1
	J - - M/T "Before 8/1/75"	★D4RY 2005-A(11/85)		1
76/78	J - - A/T "From 8/1/75"	D6RY 2005-A		1
	J - - M/T "From 8/1/75"	★D4RY 2005-A(11/85)		1
79	J(exc. 2.3L turbo)	★D9ZZ 2005-A	R/b E1BZ 2005-E (3/82)	1
	J(2.3L turbo)	★D9ZZ 2005-B	r/b E0BZ 2005-A & 1 pc. E0BZ 2B485-A(3/80)	1
	K (Mark IV)			
73/74	K	★D3SZ 2005-A		1
75/76	K	★D5LZ 2005-A	r/b (1) each of D7LY 2005-A, D7AZ 2L187-D (6/77)	1
77/	K	D7LY 2005-A	Hydro-Boost	1
	L (Bobcat)			
75/	L	E0FZ 2005-A		1
	P (Comet)			
75/77	P - - A/T	D5DZ 2005-B		1
	P (Zephyr)			
78	P(exc. P/C, Taxi)	★D8BZ 2005-A r/bE1BZ 2005-E(12/81	#D8BC 2B195-AA-Painted Gold	1
	P(exc. P/C, Taxi)	D8BZ 2005-B	#D8BC 28195-BA-Painted Black	1
	P(P/C, Taxi)	★D8BZ 2005-C r/bD9BZ 2005-B(2/80)	#D8BC 2B195-CA-Painted Gold	1
	P(P/C, Taxi)	★D8BZ 2005-D(6/82)	#D8BC 2B195-D(6/82)A-Painted Black	1
79	P(exc. P/C, Taxi)	★D9ZZ 2005-A	R/b E1BZ 2005-E (3/82)	1
	P(P/C, Taxi)	★D9BZ 2005-A	R/b E1BZ 2005-E (6/83)	1
	V (Versailles)			
77	V "Before 7/4/77"	D7DZ 2005-A	Hydro-Boost	1
77/	V ""From 7/4/77"	D8DZ 2005-B	Hydro-Boost	1
	Y (Meteor)			
73/74	Y(53,57,65 - - exc. P/C)	★D3AZ 2005-A(3/84)		1
	Y(71)	D3AZ 2005-C		1
	Y(P/C)	★D3AZ 2005-B(6/82)		1
75	Y(53,65 - - exc. P/C) - - w/vacuum booster	★D3AZ 2005-A(3/84)		1
	Y(71 - - exc. P/C) - - w/vacuum booster	D3AZ 2005-C		1
	Y(P/C) - - w/vacuum booster	★D3AZ 2005-B(6/82)		1
	Y - - w/hydro-booster	D5VZ 2005-A		1
76	Y(exc.71,P/C) - - rear drum brake "Before 1/1/76"	D6AZ 2005-B		1
	Y(exc.71,P/C) - - rear drum brake "From 1/1/76"	D3AZ 2005-C		1
	Y(P/C)	D6AZ 2005-A		1
	Y(71) - - rear drum brake "Before 1/1/76"	D3AZ 2005-C		1
	Y(71) - - rear drum brake "From 1/1/76"	★D5VZ 2005-A	Hydro-Boost r/b D7VZ 2005-A, D7AZ 2L187-D (2/78)	1
	Y - - rear disc brake	★D5VZ 2005-A	Hydro-Boost r/b D7VZ 2005-A, D7AZ 2L187-D (2/78)	1

COPYRIGHT © 1986 — FORD MOTOR COMPANY — DEARBORN, MICHIGAN

1973/79 LINCOLN-MERCURY CARS

YEAR	MODEL/RESTRICTIONS	PART NUMBER	DESCRIPTION	QTY.
	Y (Meteor)			
73/74	J	34806-S7	(X-64)-lockwasher-split ring-5/16"	4
	J	33798-S7-8	(M-62)-nut-hex.-5/16"-24	4
2K005	Refer to group 2K004-5			

YEAR	MODEL/RESTRICTIONS	PART NUMBER FRONT	PART NUMBER REAR	BRAKE SIZE (INCHES)	QTY.
2007	LINING KIT (BRAKE SHOE)-For contents of kit refer to Section 20.1				
	A (Mercury)				
73/74	A		★ D3AZ 2007-A(6/82)	11 x 2 1/4	1
	A		★ D3AZ 2007-E (6/83)	11 x 2 1/2	1
75	A		★ D50Z 2007-B (6/83)	11 x 2 1/4	1
	A		★ D5SZ 2007-A(6/82)	11 x 2 1/2	1
76/78	A		D4VY 2007-A	11 x 2 1/2	1
79	A		D9AZ 2007-A	10 x 2 1/2	1
	A		D9AZ 2007-B	11 x 2 1/4	1
	C (Montego)				
73/74	C		★ D3AZ 2007-A(6/82)	11 x 2 1/4	1
	C		★ D10Z 2007-A(3/84)	10 x 2 1/2	1
75	C		★ D50Z 2007-A (6/83)	10 x 2 1/2	1
	C		★ D50Z 2007-B (6/83)	11 x 2 1/4	1
76	C(exc. 71)		D60Z 2007-A	11 x 2 1/4	1
	C(71)		D4VY 2007-A	11 x 2 1/2	1
	D (Lincoln)				
73	D		★ D3AZ 2007-E (6/83)	11 x 2 1/2	1
74	D		D4VY 2007-A	11 x 2 1/2	1
75	D		★ D5SZ 2007-A(6/82)	11 x 2 1/2	1
76/	D		D4VY 2007-A	11 x 2 1/2	1
	F (Cougar)				
73	F		★ C60Z 2007-A (6/83)	10 x 2	1
	F		★ D10Z 2007-A(3/84)	10 x 2 1/2	1
74	F		★ D10Z 2007-A(3/84)	10 x 2 1/2	1
75	F		★ D50Z 2007-A (6/83)	10 x 2 1/2	1
76	F		D60Z 2007-A	11 x 2 1/4	1
77/	F(exc.71)		D60Z 2007-A	11 x 2 1/4	1
	F(71)		D4VY 2007-A	11 x 2 1/2	1
	G (Monarch)				
75	G		★ D5DZ 2007-A(3/84)	10 x 2	1
76/	G		D6DZ 2007-B	10 x 2	1
	J (Capri)				
73	J - - 4 cyl. 122 (2000 cc)		D0RY 2007-A	9 x 1 3/4	1
	J - - 6 cyl. 159 (2600 cc)		D2RY 2007-A	9 x 2 1/4	1
74/78	J - - 4 cyl. 122 (2000 cc)		D0RY 2007-A	9 x 1 3/4	1
	J - - 6 cyl. 171 (2800 cc)		D2RY 2007-A	9 x 2 1/4	1
79	J		D9ZZ 2007-A	9 x 1 3/4	1
	K (Mark IV)				
73/74	K		★ D3AZ 2007-E (6/83)	11 x 2 1/2	1
	L (Bobcat)				
74	L		★ D2FZ 2007-A(10/84)	9 x 1 3/4	1
75/	L		D5FZ 2007-A	9 x 1 3/4	1

YEAR	MODEL/RESTRICTIONS	PART NUMBER FRONT	PART NUMBER REAR	BRAKE SIZE (INCHES)	QTY.
2007	LINING KIT (BRAKE SHOE)-For contents of kit refer to Section 20.1 — Cont'd				
	P (Comet)				
73/74	P	D10Z 2007-A		10 x 2 1/2	1
73	P		C7ZZ 2007-A	10 x 1 3/4	1
74	P		★ D5DZ 2007-B(9/85)	10 x 1 3/4	1
75	P	★ D5DZ 2007-C(8/81)		10 x 2 1/2	1
	P		★ D5DZ 2007-B(9/85)	10 x 1 3/4	1
76/77	P		D6DZ 2007-A	10 x 1 3/4	1
	P (Zephyr)				
78	P		D8BZ 2007-A	9 x 1 3/4	1
	P		D6DZ 2007-A	10 x 1 3/4	1
79	P		D9ZZ 2007-A	9 x 1 3/4	1
	P		D6DZ 2007-A	10 x 1 3/4	1
	Y (Meteor)				
73/74	Y		★ D3AZ 2007-A(6/82)	11 x 2 1/4	1
	Y		★ D3AZ 2007-E (6/83)	11 x 2 1/2	1
75	Y		★ D50Z 2007-B (6/83)	11 x 2 1/4	1
	Y		★ D5SZ 2007-A(6/82)	11 x 2 1/2	1
76	Y		D4VY 2007-A	11 x 2 1/2	1

YEAR	MODEL/RESTRICTIONS	PART NUMBER	DESCRIPTION	QTY.
2K007	PLATE (FRONT BRAKE MOUNTING BOLT LOCKING)			
73/	J	D1RY 2K007-A		2
2C011	WIRING ASSY. (BRAKE SKID CONTROL EXTENSION)			
75/	A	D5LZ 2C011-A	#Orange-D5LB 2C011-AA,AB,AC or AD-17" long	1
75/	D		Used from 2B002	1
75/	K			1
75/76	Y			
75	D	★ D5VY 2C011-A Not replaced (3/79)	#Yellow-D5VB 2C011-AA or AB-96" long-used from 2B373	1
76	D	D6VY 2C011-A		1
77	D	★ D7VY 2C011-A(6/82)		1
78/	D	D8VY 2C011-A		1
2012-3	PLATE (FRONT BRAKE BACKING)			
73/75	P - - 10" x 2 1/2" brakes	(RH) ★ C90Z 2012-A(2/80)	(LH) ★ C90Z 2013-B Not replaced (3/79)	1
73/75	P	★ 382630-S100	(BB-390-DF)-bolt (to spindle)-3/8"-16 x 1 1/8"	2
73/75	P	★ 382631-S100	(BB-390-DK)-bolt (to spindle)-3/8"-16 x 1 13/16"	2
73/75	P	382834-S100	(MM-170-B)-locknut (to spindle)-3/8"-16	4
2018-9	Serviced only in kit-group 2001			
2K018-9	TUBE ASSY. (FRONT BRAKE HOSE)			
73/74	J	★	R.H.-9" long-improvise from bulk tubing-refer to group 2269 and add fittings-(1-D0RY 2133-B and 1-E855038-S71)	1
		★	L.H.-9 1/4" long-improvise from bulk tubing-refer to group 2269 and add fittings-(1-D0RY 2133-B and 1-E855038-S71)	1

COPYRIGHT © 1986 — FORD MOTOR COMPANY — DEARBORN, MICHIGAN

1973/79 LINCOLN-MERCURY CARS

YEAR	MODEL/RESTRICTIONS	PART NUMBER	DESCRIPTION	QTY.
2021-2	Serviced only in kit-group 2007			
2B022	GASKET (POWER BRAKE BOOSTER MOUNTING BRACKET)			
73/78	J - - 4 cyl.	★ D1RY 2B022-A(6/82)		1
2026	GASKET (FRONT BRAKE GREASE BAFFLE)			
73/74	P	★ C6DZ 2026-A(5/79)		1
2C026-7	ROTOR (REAR WHEEL DISC BRAKE)			
75/	D,K	(RH) D5SZ 2C026-A	(LH) D5SZ 2C027-A	1
75/78	A,Y			1
75/78	G	(RH) D5DZ 2C026-A	(LH) D5DZ 2C027-A	1
75/	V			
75/76	G	383609-S	(MM-317-D)-nut	6
2028	PLATE (BRAKE SHOE ANCHOR PIN GUIDE)			
73/78	A - - 11" brakes	COMM 2028-A	Rear	2
73/76	C - - 11" brakes		Rear	2
73/77	D		Rear	2
76	F - - 11" brakes		Rear	2
73/74	K		Rear	2
73/76	Y - - 11" brakes		Rear	2
79	A	D7TZ 2028-A	Rear	2
74/75	C - - 10" brakes		Rear	2
78/	D		Rear	2
73/75	F - - 10" brakes		Rear	2
77/	F		Rear	2
75/	G		Rear	2
79	J		Rear	2
75/	L		Rear	2
74/75	P		Front	2
74/	P		Rear	2
2028	PLATE (REAR BRAKE SHOE SUPPORT)			
73/74	J	D0RY 2028-A		2
2C028-9	SHIELD (REAR WHEEL DISC BRAKE)			
75/78	A	★ D5MY 2C028-A (4/82)		2
75/	D	★ D5MY 2C028-A (4/82)		2
75/78	G	D5DZ 2C028-A		2
75/	V	D5DZ 2C028-A		2
75/	K	(RH) ★ D5SZ 2C028-A(3/84)	(LH) D5SZ 2C029-A	1
75/76	Y	★ D5MY 2C028-A (4/82)		2
2031	BRACKET (POWER BRAKE BOOSTER MOUNTING)			
75/77	P	★ D5DZ 2031-A(3/81)		1
2035-6	SPRING (BRAKE SHOE RETRACTING)			
73/78	A - - 11" brakes	COMM 2036-A	# Red-rear-primary-2 15/16" long	2
73/78	A - - 11" brakes	COMM 2035-A	# Black-rear-secondary-4 19/32" long	2
79	A - - 10" brakes	C20Z 2035-A	# Yellow-rear-secondary (18 1/2) coils	2
	A - - 10" brakes	D20Z 2035-A	# Brown-rear-primary (13 3/4) coils	2
73/76	C - - 11" brakes	COMM 2036-A	# Red-rear-primary-2 15/16" long	2
73/76	C - - 11" brakes	COMM 2036-A	# Black-rear-secondary-4 19/32" long	2
73/75	C - - 10" brakes	D20Z 2035-A	# Brown-rear-primary (13 3/4) coils	2
73/75	C - - 10" brakes	C20Z 2035-A	# Yellow-rear-secondary (18 1/2) coils	2
73/	D	COMM 2036-A	# Red-rear-primary-2 15/16" long	2
73/	D	COMM 2035-A	# Black-rear-secondary-4 19/32" long	2
73/75	F	D20Z 2035-A	# Brown-rear-primary (13 3/4) coils	2
73/75	F	C20Z 2035-A	# Yellow-rear-secondary (18 1/2) coils	2
76/	F - - 11" brakes	COMM 2036-A	# Red-rear-primary-2 15/16" long	2
76/	F - - 11" brakes	COMM 2035-A	# Black-rear-secondary-4 19/32" long	2
75/	G	D20Z 2035-A	# Brown-rear-primary (13 3/4) coils	2
75/	G	C20Z 2035-A	# Yellow-rear-secondary (18 1/2) coils	2
73/74	J	D0RY 2035-A	Rear-upper-5 1/8" long	2
73/74	J	★ D0RY 2035-B	Rear-lower-2" long-r/b D9RZ 2A225-A (11/79)	2
76	J	D5RY 2035-A	Rear-upper	1

YEAR	MODEL/RESTRICTIONS	PART NUMBER	DESCRIPTION	QTY.
2035-6	SPRING (BRAKE SHOE RETRACTING) — Cont'd			
76	J	D5RY 2035-B	Rear-lower	1
79	J – – 9" brakes	D1FZ 2296-A	# White-rear-secondary-4 3/16" long-12 1/2 coils	2
	J – – 9" brakes	D1FZ 2296-B	# Green-rear-primary-4 3/16" long-11 1/2 coils	2
73/74	K	COMM 2036-A	# Red-rear-primary-2 15/16" long	2
73/74	K	COMM 2035-A	# Black-rear-secondary-4 19/32" long	2
74/	L – – 9" brakes	D1FZ 2296-A	# White-rear-secondary-4 3/16" long-(12 1/2) coils	2
74/	L – – 9" brakes	D1FZ 2296-B	# Green-rear-primary-4 3/16" long-(11 1/2) coils	2
73/75	P	D20Z 2035-A	# Brown-front-primary (13 3/4) coils	2
73/75	P	C20Z 2035-A	# Yellow-front-secondary (18 1/2) coils	2
73/	P – – 10" brakes	D20Z 2035-A	Rear-primary (13 3/4) coils	2
73/	P – – 10" brakes	C20Z 2035-A	Rear-secondary (18 1/2) coils	2
78/	P – – 9" brakes	D1FZ 2296-A	# Green-rear primary-4 3/16" long – 11 1/2 coils	2
78/	P – – 9" brakes	D1FZ 2296-B	# White-rear secondary-4 3/16" long – 11 1/2 coils	2
73/76	Y	COMM 2036-A	# Red-rear-primary-2 15/16" long	2
73/76	Y	COMM 2035-A	# Black-rear-secondary-4 19/32" long	2
2A040	TUBE ASSY. (BRAKE MASTER CYLINDER TO CONNECTOR) Improvise from bulk tubing (2269) and improvise insulators from rubber hose, friction tape etc.			
73/74	J	★	17 3/8" long-improvise from bulk tubing-2269 and add fittings-(1) D0RY 2074-B and (1) E855016-S72	1
		351736-S36	(MM-105-H)-nut-3/16" tube-9/16"-18	AR
		375096-S36	(MM-105-F)-nut-3/16" tube-1/2"-20	AR
		358609-S8	(MM-103)-nut-3/16" tube-7/16"-24	AR
		382404-S100	(II-63-D)-nut-3/16" tube-7/16"-24	AR
		382967-S100	(MM-102)-nut-3/16" tube-3/8"-24	AR
		383060-S36	(II-63-E)-nut-3/16" tube-3/8"-24	AR
76/78	J	★	Refer to group 2A361-2 and add fittings-(1) D0RY 2074-B and (1) E855016-S72	AR
2041	SCREW KIT (BRAKE ADJUSTER)			
73/76 73 75/76 76 74	A,C,Y – – 11" rear drum brakes D – – 11" rear drum brakes D – – 11" rear drum brakes F – – 11" rear drum brakes K – – 11" rear drum brakes	C1AZ 2041-C	R.H.	AR
	Consists of 1-C4TZ 2041-A Screw	1-C2AZ 2047-A 1-C1AA 2048-A	Nut Socket	1-373496-S43M Washer
73/76 73 75/76 76 74	A,C,Y – – 11" rear drum brakes D – – 11" rear drum brakes D – – 11" rear drum brakes F – – 11" rear drum brakes K – – 11" rear drum brakes	C1AZ 2041-D	L.H.	AR
	Consists of 1-C1AZ 2041-A Screw	1-C1AZ 2047-A 1-C1AA 2048-A	Nut Socket	1-373496-S43M Washer
77/78 77/	A – – 11" rear drum brakes D,F – – 11" rear drum brakes	D7AZ 2041-A	R.H. R.H.	AR AR
	Consists of 1-C4TZ 2041-A Screw	1-C2AZ 2047-A 1-D7AZ 2048-A	Nut Socket	1-373496-S43M Washer
77/78 77/	A, – – 11" rear drum brakes D,F – – 11" rear drum brakes	D7AZ 2041-B	L.H. L.H.	AR AR
	Consists of 1-C1AZ 2041-A Screw	1-C1AZ 2047-A 1-D7AZ 2048-A	Nut Socket	1373496-S43M Washer

COPYRIGHT © 1986 — FORD MOTOR COMPANY — DEARBORN, MICHIGAN

1973/79 LINCOLN–MERCURY CARS

YEAR	MODEL/RESTRICTIONS	PART NUMBER	DESCRIPTION	QTY.
2041	SCREW KIT (BRAKE ADJUSTER) — Cont'd			
79	A – – 10" rear drum brakes	D9AZ 2041–A	R.H.	AR
	Consists of 1–D9AC 2041–AA Screw 1–384373–S Washer	1–D9AC 2047–A1B or alternate D9AC 2047–A2B Nut	1–D9AC 2B564–A1B or alternate D9AC 2B564–A2B Socket	
79	A – – 10" rear drum brakes	D9AZ 2041–B	L.H.	AR
	Consists of 1–D9AC 2A103–AA Screw 1–384373–S Washer	1–D9AC 2A104–A1B or alternate D9AC 2A104–A2B Nut	1–D9AC 2B564–A1B or alternate D9AC 2B564–A2B Socket	
79	A – – 11" rear drum brakes	D9AZ 2041–C	R.H.	AR
	Consists of 1–D9AC 2041–BA Screw	1–D9AC 2047–BA Nut 1–D9AC 2B564–BA Socket	1–373496–S43M Washer	
	A – – 11" rear drum brakes	D9AZ 2041–D	L.H.	AR
	Consists of 1–D9AC 2A103–BA Screw	1–D9AC 2A104–BA Nut 1–D9AC 2B564–BA Socket	1–373496–S43M Washer	
73/75 75/ 73/75 76/	C,F – – 10" rear drum brakes G – – 10" rear drum brakes P – – 10" front & rear drum brakes P – – 10" rear drum brakes	C20Z 2041–C	R.H.	AR
	Consists of 1–C20Z 2041–A Screw	1–C20Z 2047–A Nut 1–C30Z 2048–A Socket	1–373496–S43M Washer	
73/75 75/ 73/75 76/	C,F, – – 10" rear drum brakes G – – 10" rear drum brakes P – – 10" front & rear drum brakes P – – 10" rear drum brakes	C20Z 2041–D	L.H.	AR
	Consists of 1–C20Z 2041–B Screw	1–C20Z 2047–B Nut 1–C30Z 2048–A Socket	1–373496–S43M Washer	
74	D – – 11" rear drum brakes	★ D4VY 2041–A(5/79)	R.H.	AR
	Consists of 1–D4AZ 2041–A Screw	1–D4AZ 2047–A Nut 1–D4VY 2048–A Socket	1–385544–S Washer	
74	D – – 11" rear drum brakes	★ D4VY 2041–B(5/79)	L.H.	AR
	Consists of 1–D4AZ 2041–B Screw	1–D4AZ 2047–B Nut 1–D4VY 2048–A Socket	1–385544–S Washer	
74/78 78	L – – rear drum brakes P – – 9" rear drum brakes	D1FZ 2041–C	R.H.	AR
	Consists of 1–D1FZ 2041–A Screw	1–D1FZ 2047–A Nut 1–D1FZ 2048–A Socket	1–373496–S43M Washer	
74/78 78	L – – rear drum brakes P – – 9" rear drum brakes	D1FZ 2041–D	L.H.	AR
	Consists of 1–D1FZ 2041–B Screw	1–D1FZ 2047–B Nut 1–D1FZ 2048–A Socket	1–373496–S43M Washer	
79	J,L,P – – 9" rear drum brakes	D9BZ 2041–A	R.H	AR
	Consists of 1–D9BC 2041–AA Screw 1–384373–S Washer	1–D12A 2047–AB or alternate D12A 2047–BA Nut	1–D12A 2048–AB or alternate D12A 2048–BA Socket	
79	J,L,P – – 9" rear drum brakes	D9BZ 2041–B	L.H.	AR
	Consists of 1–D9BC 2A103–AA Screw 1–384373–S Washer	1–D12A 2A104–AB or alternate D12A 2A104–BA Nut	1–D12A 2048–AB or alternate D12A 2048–BA Socket	

YEAR	MODEL/RESTRICTIONS	PART NUMBER	DESCRIPTION	QTY.
2041	SCREW (BRAKE SHOE ADJUSTING) R.H. screws are identified with "R" and L.H. screws are identified with "L" ▲ Select appropriate 2041 kit			
77	G – – rear drum brake	(RH) C20Z 2041–C	(LH) C20Z 2041–D Rear	1
77	L	(RH) D1FZ 2041–C	(LH) D1FZ 2041–D Rear	1
77	P	(RH) C20Z 2041–C	(LH) C20Z 2041–D Rear	1
2042	LINK (BRAKE CYLINDER TO SHOE)			
73/74	A	B7A 2042–A	Rear	4
75	A – – rear drum brake	D4VY 2042–A	Rear	4
76/78	A – – rear drum brake	C6TZ 2042–A	Rear	4
79	A – – 10" brakes	B7A 2042–A	Rear	4
79	A – – 11" brakes	D9AZ 2042–A	Rear	4
73/75	C – – 10" brakes	B7A 2042–A	Rear	4
75	C – – 11" brakes	D4VY 2042–A	Rear	4
76	C	C6TZ 2042–A	Rear	4
73	D	B7A 2042–A	Rear	4
74/75	D – – rear drum brake	D4VY 2042–A	Rear	4
76/	D – – rear drum brake	C6TZ 2042–A	Rear	4
73/75	F	B7A 2042–A	Rear	4
76/	F	C6TZ 2042–A	Rear	4
75/	G – – rear drum brake	B7A 2042–A	Rear	4
73/74	K	B7A 2042–A	Rear	4
73/75	P	B7A 2042–A	Front	4
73/	P	B7A 2042–A	Rear	4
73/74	Y	B7A 2042–A	Rear	4
75	Y – – rear drum brake	D4VY 2042–A	Rear	4
76	Y – – rear drum brake	C6TZ 2042–A	Rear	4
2044	GASKET (FRONT BRAKE BACKING PLATE TO SPINDLE)			
73/75	P	★ C6DZ 2044–A(5/79)	2" I.D.	2
2047	NUT (BRAKE SHOE ADJUSTING SCREW) ▲ Select appropriate 2041 kit			
2A047	HOSE (POWER BRAKE BOOSTER RESERVOIR TO MANIFOLD)– Improvise from bulk hose–refer to group 4090			
2048	SOCKET (BRAKE SHOE ADJUSTING SCREW) ▲ Select appropriate 2041 kit			
73/76	C,F	372583–S	(XX–168)–washer–flat–7/16"	AR
2049	SPRING (BRAKE SHOE ADJUSTING LEVER)			
74	D	(RH) D4VY 2049–A	(LH) ★ D4VY 2049–B(5/79) Rear	1
2049	SPRING (BRAKE SHOE ADJUSTING SCREW)			
73/	A	C1SS 2049–A	# Blue paint–rear 3/4" dia. x 3 1/8" long	2
73/76	C		Rear	2
73	D		Rear	2
75/	D		Rear	2
73/	F		Rear	2
75/	G		Rear	2
73/74	K		Rear	2
73/75	P		Front	2
73/77	P		Rear	2
73/76	Y		Rear	2
74/75	D	★ D4VY 2297–A(2/80)	Rear–lower	2
76/78	J	★ D5RY 2049–A(2/81)	Rear	AR
79	J	D1FZ 2049–A	# White paint–rear–5/8" dia. x 4 5/16" long–	2
74/	L		(19 1/2) coils	2
78	P			2

COPYRIGHT © 1986 — FORD MOTOR COMPANY — DEARBORN, MICHIGAN

1973/79 LINCOLN-MERCURY CARS

YEAR	MODEL/RESTRICTIONS	PART NUMBER	DESCRIPTION	QTY.
2A051	BRACKET (BRAKE LINE SUPPORT)			
74/	L	★ D1FZ 2A051-B(3/84)		1
2L051	Refer to group 04460 in body section			

2B052 TUBE (POWER BRAKE BOOSTER CONNECTING)-Improvise from bulk tubing-refer to group 2269

YEAR	MODEL/RESTRICTIONS	PART NUMBER		DESCRIPTION	QTY.
		CYLINDER ASSY.	▲ REPAIR KIT		
2061-2	CYLINDER ASSY. (FRONT BRAKE) ▲ Refer to group 2221 for contents of kit				
73/75	P - - 10" x 2 1/2" brakes	D2ZZ 2061-A	D2AZ 2221-B	R.H.-1 Black and 1 Orange-1 1/8" dia.	1
		D2ZZ 2062-A	D2AZ 2221-B	L.H.	1

YEAR	MODEL/RESTRICTIONS	PART NUMBER	DESCRIPTION	QTY.
2066	CUP (BRAKE SHOE HOLD DOWN SPRING)			
73	A,C,D,F,K,Y - - disc brakes	C8AZ 2066-A	Clip-also serviced in kit-group 2001	4
73/78	A,F	B7A 2066-A	Cup-rear-also serviced in kit-group 2A094	8
73/76	C		Rear	8
73	D		Rear	8
75/78	G		Rear	8
79	J			8
73/74	K		Rear	8
74/78	L		Rear	8
73/75	P		Front and rear	16
76/78	P		Rear	8
73/76	Y		Rear	8
73/78	J	★ D0RY 2066-A	Retainer-service only in 2A094 kit	8
73	A,C,D,F,K,Y - - disc brakes	382563-S100	(BB-429-UA)-bolt hex head (to anchor)-1/2"-13 x 1 1/2"	2

YEAR	MODEL/RESTRICTIONS	PART NUMBER	DESCRIPTION	LENGTH (INCHES)	COILS	IDENT.	QTY.
2068	SPRING (BRAKE SHOE HOLD DOWN)-Also serviced in kit-group 2A094						
73/78	A - - w/self adjusters	D3TZ 2068-A	Rear	1	5 1/4	Purple	4
79	A	D9AZ 2068-A	Rear	13/16	6	Red	4
73	C - - 10" x 2 1/2" brakes	TDAA 2068-A	Rear			Black	4
73	C - - 11" x 2 1/4" brakes	D3TZ 2068-A	Rear	1	5 1/4	Purple	4
74/76	C		Rear				4
73	D		Rear				4
74/79	D	D9AZ 2068-A	Rear	13/16	6	Red	4
73	F	TDAA 2068-A	Rear			Black	4
79	F	D9AZ 2068-A	Rear	13/16	6	Red	4
75/78	G	D3TZ 2068-A	Rear	1	5 1/4	Purple	4
79	G	D9AZ 2068-A	Rear	13/16	6	Red	4
73/78	J	★ D0RY 2068-A(5/79)	Rear-service only in 2A094 kit				4
79	J	D9ZZ 2068-A	Rear	1	4 1/2	Blue	4
73/74	K	D3TZ 2068-A	Rear	1	5 1/4	Purple	4
74/78	L	★ C5DZ 2068-A r/bD9ZZ 2068-A(12/80)	Rear-primary	13/16	5 1/2	Gray	2
74/78	L	★ C5DZ 2068-B r/bD9ZZ 2068-A(12/80)	Rear-secondary	7/8	5 1/2	Bronze	2
79	L	D9ZZ 2068-A	Rear	1	4 1/2	Blue	4
73	P	TDAA 2068-A	Front and rear			Black	8
74/75	P	D3TZ 2068-A	Front and rear	1	5 1/4	Purple	8
76/78	P - - 10" brakes	D3TZ 2068-A	Rear	1	5 1/4	Purple	4
79	P - - 10" brakes	D9AZ 2068-A	Rear	13/16	6	Red	4
78	P - - 9" brakes	★ C5DZ 2068-A r/bD9ZZ 2068-A(12/80)	Rear primary	13/16	5 1/2	Gray	2
78	P - - 9" brakes	★ C5DZ 2068-B r/bD9ZZ 2068-A(12/80)	Rear secondary	7/8	5 1/2	Bronze	2
79	P - - 9" brakes	D9ZZ 2068-A	Rear	1	4 1/2	Blue	4
73/76	Y	D3TZ 2068-A	Rear	1	5 1/4	Purple	4

YEAR	MODEL/RESTRICTIONS	PART NUMBER	DESCRIPTION	QTY.
2069	PIN (BRAKE SHOE HOLD DOWN SPRING)-Also serviced in kits-groups 2001 and 2A094			
73	A,F,K - - disc brakes	★ C8AZ 2069-A(9/85)	Front-1 5/16" long	4
73/78	A	★ B7A 2069-A(9/85)	#I-rear-2 5/16" long	4
79	A - - 10" brakes	B7T 2069-A	#6-rear-2 7/16" long	4
79	A - - 11" brakes	D4AZ 2069-A	#H-rear-2 3/16" long	4
73/75	C - - 10" brakes	B7T 2069-A	#6-rear-2 7/16" long	4
73/76	C - - 11" brakes	★ B7A 2069-A(9/85)	#I-rear-2 5/16" long	4
73	D	★ B7A 2069-A(9/85)	#I-rear-2 5/16" long	4
74/	D	D4AZ 2069-A	#H-rear-2 3/16" long	4
73	F	★ B7A 2069-A(9/85)	#I-front and rear-2 5/16" long	8
74/75	F - - 10" brakes	B7T 2069-A	#6-rear-2 7/16" long	4
76/	F - - 11" brakes	★ B7A 2069-A(9/85)	#I-rear-2 5/16" long	4
75/	G	★ B7A 2069-A(9/85)	#I-rear-2 5/16" long	4
73/78	J	★ D0RY 2069-A(5/79)	Rear-service only in 2A094 kit	4
79	J	8L 2069	Rear	4
73/74	K	★ B7A 2069-A(9/85)	#I-rear-2 5/16" long	4
74/	L	8L 2069	Rear	4
73/75	P - - 10" brakes	★ B7A 2069-A(9/85)	#I-front-2 5/16" long	4
73/	P - - 10" brakes	8A 2069-A	#8-rear-2 1/8" long	4
78	P - - 9" brakes	8L 2069-A	Rear	4
73	Y - - disc brakes	★ C8AZ 2069-A(9/85)	Front - 1 5/16" long	4
73/76	Y	★ B7A 2069-A(9/85)	#I-rear-2 5/16" long	4
2L070	BRACKET (POWER BRAKE BOOSTER MOUNTING)			
73/74	J "Before 11/1/74"	★ D1RY 2L070-B(2/80)		1
74	J "From 11/1/74"	★ D1RY 2L070-C	Not replaced (2/79)	1
76	J	★ D4RY 2L070-A(2/80)		1
73/74	J	34806-S7	(X-64)-lockwasher-split ring-5/16"	4
		33798-S7-8	(M-62)-nut-hex.-5/16"-24	4
2073	Refer to group 2082			
2B073	SEAL (POWER BRAKE BOOSTER CHECK VALVE)			
73/74	J	★ D0RY 2B073-A(6/82)		1
2074	CONNECTOR (BRAKE TUBE)			
75/78	A - - rear disc brake	D5MY 2074-A		1
75/	D - - rear disc brake	D5MY 2074-A		1
73/74	J	D0RY 2074-B	1 way-external threads	AR
73/78	J	★ D3RY 2074-A(2/80)	M10X1-2 way-internal threads	1
75/	K	D5MY 2074-A		1
75/76	Y - - rear disc brake	D5MY 2074-A		1
2L075	BAFFLE (BRAKE MASTER CYLINDER RESERVOIR)			
76/	J	★ D6RY 2L075-A(2/80)		1
2C077	HARDWARE KIT (BRAKE SHOE and LINING)-For contents of kit refer to Section 20.1			
73	F	D00Z 2C077-A	Front disc brake	1
73/	A,D,K	D2AZ 2C077-A	Front disc brake	1
73/76	C			1
74/	F			1
73/76	Y			1
74/	G,L,P	D4DZ 2C077-A	Front disc brake	1
75/	A,D,G,K,V	D5MZ 2C077-A	Rear disc brake	1
75/76	Y			1
2078	HOSE (FRONT BRAKE)-Also refer to group 2A442 for rear disc brake application			
73/78	A "Before 10/1/75"	D6AZ 2078-A	R.H. and L.H.-front	2
79	A	D9AZ 2078-A	R.H. and L.H.-front	2
73/78	A - - WER axle	D6AZ 2282-A	Rear-drum brakes	1
73/78	A - - exc. WER axle	D6AZ 2282-B	Rear-drum brakes	1
79	A	D9AZ 2282-B	Rear	1
73/76	C "Before 10/1/75"	D6AZ 2078-A	R.H. and L.H.-front	2
76	C "From 10/1/75"	D6AZ 2078-A	R.H. and L.H.-front	2
73	C - - 6 cyl., 8 cyl. 302	★ D20Z 2282-A(3/81)	Rear-11 5/8" long	1
74	C - - 6 cyl., 8 cyl. 302(exc. P/C, taxi)			1

COPYRIGHT © 1986 — FORD MOTOR COMPANY — DEARBORN, MICHIGAN

1973/79 LINCOLN-MERCURY CARS

YEAR	MODEL/RESTRICTIONS	PART NUMBER	DESCRIPTION	QTY.
2078	HOSE (FRONT BRAKE)-Also refer to group 2A442 for rear disc brake application — Cont'd			
73	C - - 8 cyl. 351,400,429,460	★ D20Z 2282-B	Rear	1
74	C - - 8 cyl. 302 (P/C)	r/bD60Z 2282-A(2/78)	Rear	1
74/76	C - - 8 cyl. 351,400,460- "Before 1/5/76"		Rear	1
76	C "From 1/5/76"	D60Z 2282-A	Rear	1
73/76	D "Before 10/1/75"	D6AZ 2078-A	R.H. and L.H.-front and rear disc brakes	2
76/	D "From 10/1/75"	D6AZ 2078-A	R.H. and L.H.-front and rear disc brakes	2
73/	D	D6AZ 2282-B	Rear-drum brakes	1
73	F	(RH) ★ D1ZZ 2078-A (6/83)	(LH) D1ZZ 2078-B Front	1
74/76	F "Before 10/1/75"	D6AZ 2078-A	R.H. and L.H.-front	2
76/	F "From 10/1/75"	D6AZ 2078-A	R.H. and L.H.-front	2
73	F	★ D0WY 2282-A(6/82)	Rear-11 3/4" long	1
74/	F	D60Z 2282-A	Rear	1
75/76	G "Before 10/1/75"	D6AZ 2078-A	R.H. and L.H.-front	2
76/	G,V "From 10/1/75"	D6AZ 2078-A	R.H. and L.H.-front	2
75	G "Before 2/3/75"	★ D5DZ 2282-A(6/82)	Rear-13 1/4" long	1
75/	G,V "From 2/3/75"	D6DZ 2282-A	Rear	1
73/74	J	D5RY 2078-A	R.H. and L.H.-front	2
73/74	J		Center	1
76/77	J	D5RY 2078-A	R.H. and L.H.-front	2
73/78	J	D3RY 2282-A	#Yellow-black	1
79	J - - 8 cyl.	D9BZ 2078-A	R.H. and L.H.-front	2
79	J - - 4 cyl. & 6 cyl.	★ D9ZZ 2078-A	R.H. and L.H.-front-r/b E3ZZ 2078-A (2/84)	2
79	J	★ D9ZZ 2282-A(10/84)	Rear-r/b E3SZ 2282-A	1
73/	K	D6AZ 2078-A	R.H. and L.H.-front	2
73/74	K	D60Z 2282-A	Rear	1
74/76	L "Before 10/1/75"	D6FZ 2078-A	R.H. and L.H.-front	2
76/	L "From 10/1/75"	D6FZ 2078-A	R.H. and L.H.-front	2
74/75	L "Before 2/3/75"	D4FZ 2282-A	#Green-rear-12 1/4" long	1
75/76	L "From 2/3/75 to 7/12/75/76"	★ D6FZ 2282-A (6/83)	Rear	1
76/	L "From 7/12/76"	D7FZ 2282-A	Rear	1
73	P	C70Z 2078-A	R.H. and L.H.-front-12 5/8" long	2
74/77	P - - disc brakes	D6AZ 2078-A	R.H. and L.H.-front	2
78	P(exc. P/C, Taxi)	D8BZ 2078-A	R.H. and L.H.-front	2
	P(P/C, Taxi)	★ D8BZ 2078-B(6/82)	R.H. and L.H.-front	2
79	P	D9BZ 2078-A	R.H. and L.H.-front	2
79	P	★ D9ZZ 2282-A(10/84)	Rear-r/b E3SZ 2282-A	1
74/75	P - - drum brakes	★ D4DZ 2078-A(3/84)	R.H. and L.H. front-12 5/8" long	2
73/74	P	★ D0DZ 2282-B(2/80)	Rear-13 1/4" long	1
75	P "Before 2/3/75"	★ D5DZ 2282-A(6/82)	Rear-13 1/4" long	1
75/77	P "From 2/3/75"	D6DZ 2282-A	Rear	1
78/	P	D8BZ 2282-A	Rear-14 1/8" long	1
73/76	Y	D6AZ 2078-A	R.H. and L.H.- front	2
73/76	Y - - exc. WER axle	D6AZ 2282-B	Rear drum brake	1
73/76	Y - - WER axle	D6AZ 2282-A	Rear drum brake	1
73/74	J	E820012-S72	Nut-hex.-M10 x 1 (Metric fine)	6
2078	INSULATOR KIT (FRONT SUSPENSION UPPER ARM BRKT.)			
79	A	D9AZ 2078-B		1
	Consists of 2-D9AC 3B432-AA Insulator		2-D9AC 3B432-BA Insulator	
2L081	RETAINER (BRAKE MASTER CYLINDER PISTON)			
73/74	J	D0RY 2L081-A		1
76/78	J	E855037-S71	(AM-70-G)-nut-hex.-M10 x 1	1
2082	BRACKET (FRONT BRAKE HOSE SUPPORT)			
73/78	A	D3AZ 2082-A	R.H. and L.H.-front	2
79	A	(RH) ★ D9AZ 2082-A(3/84)	(LH) ★ D9AZ 2082-B(3/84) Front	1
73/78	A - - rear drum brake	D0AZ 2073-A	Rear	1
75/78	A - - rear disc brake	(RH) ★ D5MY 2073-A(6/82)	(LH) ★ D5MY 2073-B(6/82) Rear	1
79	A	D9AZ 2073-A	Rear	1
73/76	C	(RH) D20Z 2082-A	(LH) D20Z 2082-B Front	1

YEAR	MODEL/RESTRICTIONS	PART NUMBER	DESCRIPTION	QTY.
2082	BRACKET (FRONT BRAKE HOSE SUPPORT) — Cont'd			
73/	D	(RH) D20Z 2082-A	(LH) D20Z 2082-B Front	1
73/	D - - rear drum brake	D0AZ 2073-A	Rear	1
75/	D - - rear disc brake	(RH) D5VY 2073-A	(LH) D5VY 2073-B Rear	1
74/	F	(RH) D20Z 2082-A	(LH) D20Z 2082-B Front	1
75/	G,V	D3AZ 2082-A	Rear	2
73/74	J	★ D0RY 2073-A(6/82)	Rear	1
79	J	(RH) D8BZ 2082-B	(LH) D8BZ 2082-A Front	1
79	J	D9ZZ 2073-A	Rear	1
73/	K	(RH) D20Z 2082-A	(LH) D20Z 2082-B Front	1
75/	K	D5LZ 2073-C	Rear	2
74/	L	D4FZ 2082-A	R.H. and L.H.-front	2
73/75	P - - drum brakes	(RH) ★ D0DZ 2082-C(5/79)	(LH) D0DZ 2082-D Front	1
74/77	P - - disc brakes	D3AZ 2082-A	R.H. and L.H.-front	2
78	P	★ D8BZ 2073-A(6/82)	Rear	1
78/	P - - disc brakes	D8BZ 2082-A	L.H.-front	1
79	P	D9ZZ 2073-A	Rear	1
73/76	Y	D3AZ 2082-A	R.H. and L.H.-front	2
73/76	Y - - rear drum brake	D0AZ 2073-A	Rear	1
75/76	Y - - rear disc brake	(RH) ★ D5MY 2073-A(6/82)	(LH) ★ D5MY 2073-B(6/82) Rear	1
73/	A,D	381877-S2	(UU-52-AF)-screw (rear bracket to No. 4 c/member)-hex. hd.-5/16"-18 x 3/4"	1
73/	K,L,P	381877-S2	(UU-52-AF)-screw (front bracket to frame or s/member)	2
2B085	SHIELD (BRAKE TUBE)			
75/	G,V	★ D5DZ 2B085-A(3/84)	Front	1
76/	L	D6FZ 2B085-A	Att. 2265 to No. 1 crossmember	1
78/	P	D6FZ 2B085-A	Att. 2265 to S/M at No. 3 crossmember	1
	P	D8BZ 2B085-A	Att. 2265 to p/brk equalizer lever	1
2091	NUT (PARKING BRAKE EQUALIZER)			
73/75	A	C8AZ 2091-A	5/16"-18	1
73/74	D			1
75/	G			1
75/	P			1
77	V			1
73/75	Y			1
2A091	BOOSTER INSTALLATION KIT (POWER BRAKE)			
73/74	C - - disc brakes	★ D30Z 2A091-A(12/80)		1
74	F			1

Consists of

1-D30A 2A040-AA	Tube	1-D3ZA 2420-AB	Tube	2-379059-S2 or	
1-C1AA 2A047-F	Hose	1-D70Z 2455-A	Pedal	382984-S32	Clamp
1-D30A 2B195-BG	Booster and	1-D1ZZ 13480-B	Switch	1-380699-S100	Pin
	Master cylinder	1-55914-S36M	Screw	5-382802-S100	Nut
1-D20A 2B253-BE	Tube	2-356403-S2	Washer	1-385241-S2	Cup
1-D3AA 2A407-AA	Retainer	1-378771-S100	Clip	1-Installation sketch	

76/77	G	★ D6DZ 2A091-A(4/80)	1

Consists of

1-D5DA 2A040-BD	Tube	1-D6UB 13480-AA	Switch	2-382984-S32	Clamp-hose
1-D8DC 2B195-AA	Booster and	1-55981-S36M	Screw	1-Installation sketch	
	Master cylinder	1-374494-S100	Clip		
1-D6DA 2B253-AA	Tube	1-380699-S100	Pin		
1-D5BA 2420-AE	Tube	1-381298-SX07A	Hose		
1-D8DZ 2455-B	Pedal	4-382802-S100	Nut		

COPYRIGHT © 1986 — FORD MOTOR COMPANY — DEARBORN, MICHIGAN

1973/79 LINCOLN-MERCURY CARS

YEAR	MODEL/RESTRICTIONS	PART NUMBER	DESCRIPTION	QTY.
2A091	BOOSTER INSTALLATION KIT (POWER BRAKE) — Cont'd			
78/	G	★ D9DZ 2A091-A	R/b E0DZ 2A091-B(2/80)	1
	Consists of			
	1-D9DC 2B195-AB Bstr-m/c	1-D6UB 13480-AA Switch	2-382984-S32 Clamp	
	1-D5DA 2A040-BD Tube-frt.	1-D8DZ 2455-A Pedal	4-382802-S100 Nut	
	1-D6DA 2B253-AA Tube-rear	1-380699-S100 Pin	1-374494-S100 Clip	
	1-D9BC 2420-BA Tube-6 cyl. only	1-381298-SX10A Hose	1-55981-S36M Screw	
			1-Installation sketch	
79	J	D9ZZ 2A091-A		1
	Consists of			
	1-D9ZC 2B195-AA Bstr. & m/c	1-D9BZ 2455-B Pedal	4-385759-S2 Nut & wshr.	
	1-D2AB 13480-BA Switch	1-380699-S100 Pin	1-Installation sketch	
	1-D9BC 2A040-AA Tube-frt.	1-381298-SX12A Hose		
	1-D9ZC 2B253-AA Tube-rear	2-382984-S32 Clamp		
79	L	★ D9FZ 2A091-A(3/84)		1
	Consists of			
	1-E0EC 2B195-AA Bstr-m/c	1-D5FZ 2455-A Pedal	2-382984-S32 or	
	1-D52A 2A040-DC Tube-frt.-Sdn. only	1-D1ZB 13480-B Switch	2-376428-S8 or	
	1-D52A 2A040-EC Tube-frt.-Wgn. only	1-381298-SX12A Hose	2-379059-S2 Clamp	
	1-D52A 2B253-AE Tube-rear-Sdn. only	1-95873-S Strap	1-380699-S100 Pin	
	1-D6EA 2B253-BA Tube-rear-Wgn. only	4-382802-S100 Nut	1-Installation sketch	
78/	P(exc. 3.3L sta/wgn.)	D9BZ 2A091-B		1
	Consists of			
	1-D9ZC 2B195-AA Bstr-m/c	1-D2AB 13480-BA Switch	2-382984-S32 Clamp	
	1-D9BC 2A040-AA Tube-frt.	1-D9BZ 2455-B Pedal	1-374494-S100 Clip	
	1-D9BC 2B253-AA Tube-rear	1-380699-S100 Pin	1-55981-S36M Screw	
	1-D9BC 2420-BA Tube-6 cyl. only	1-381298-SX11A Hose	1-Installation sketch	
2092	COVER (BRAKE ADJUSTING HOLE)			
73/	A,C,D,F,G,K,L,P,V,Y	8A 2092	Rear-drum brakes-rubber	2
73/76	C		Rear	2
73/75	P		Front-drum brakes	2
73/76	Y		Rear-drum brakes-rubber	2
73/78	J	D0RY 2092-A	Rear	2
2092	COVER (REAR BRAKE BLEED SCREW DUST)			
73/74	J	★ D0RY 2092-B	R/b D1RY 2L126-A (6/77)	2
76/78	J	★ D5RY 2092-A(2/80)		2
2A092	RETAINER (REAR BRAKE ADJUSTING HOLE COVER)			
73/74	J	D0RY 2A092-A		2
2B092	SPRING (REAR BRAKE ADJUSTING HOLE COVER)			
73/74	J	★ D3RY 2B092-A		2

YEAR	MODEL/RESTRICTIONS	PART NUMBER	DESCRIPTION	QTY.
2C092	SCOOP ASSY. (FRONT BRAKE)			
77/	L (64H)	(RH) D7FZ 2C092-A	(LH) D7FZ 2C092-B	1
78	A (71,P/C)	(RH) D8AZ 2C092-A	(LH) D8AZ 2C092-A	1
78/	V	(RH) ★ D8DZ 2C092-A(3/84)	(LH) ★ D8DZ 2C092-B(3/84)	1
78/79	G			1
2A094	RETAINER REPAIR KIT (BRAKE SHOE HOLD DOWN)			
73/78	A - - 11" brakes	★ C5AZ 2A094-A	Rear	2
73/76	C - - 10" and 11" brakes	r/b D9AZ 2A094-A(3/82)	Rear	2
73	D - - 11" brakes		Rear	2
74/	F - - 10" and 11" brakes		Rear	2
75/	G - - 10" brakes		Rear	2
73/74	K - - 11" brakes		Rear	2
74/75	P - - 10" brakes		Front	2
74/75	P		Rear	2
73/76	Y - - 11" brakes		Rear	2
	Consists of			
	4-B7A 2066-A Cup	2-D3TZ 2068-A	Spring 2-B7A 2069-A Pin	
79	A - - 10" rear drum brake	D9AZ 2A094-A		2
	Consists of			
	2-D9AZ 2068-A Spring & retainer		2-B7T 2069-A Pin	
79	A - - 11" rear drum brake	D9AZ 2A094-B		2
	Consists of			
	2-D9AZ 2068-A Spring & retainer		2-D4AZ 2069-A Pin	
73	C - - 10" x 2 1/2" brakes	★ C30Z 2A094-A(2/80)	Rear	2
	Consists of			
	4-B7A 2066-A Cup	1-TDAA 2068-A	Spring-secondary 2-B7T 2069-A Pin	
	1-H 2068 Spring-primary			
73	F - - 10" x 2" brakes	B5AZ 2A094-A	Rear	2
	Consists of			
	4-B7A 2066-A Cup	2-H 2068	Spring 2-B7A 2069-A Pin	
73/74	J - - 4 cyl.	D1RY 2A094-A	Rear	1
	Consists of			
	4-204E 2068-B Spring	4-113E 2069	Pin 8-204E 2071 Cup	
76	J - - 4 cyl.	★ D5RY 2A094-A	Rear	1
	Consists of			
	4-75AB 2068-AA Spring	4-204E 2069	Pin	
76	J - - 6 cyl.	D1RY 2A094-A	Rear	1
77/78	J			1
	Consists of			
	4-204E 2068-B Spring	4-113E 2069	Pin 8-204E 2071 Cup	
74/	L	★ D4FZ 2A094-A	Rear	2
78/	P - - 9" x 1 3/4" brakes	r/b E0SZ 2A094-A(12/80)		2
79	J			2
	Consists of			
	2-D9ZZ 2068-A Spring & retainer		2-8L 2069 Pin	
73	P	C20Z 2A094-D	Front and rear	4
	Consists of			
	4-B7A 2066-A Cup	1-TDAA 2068-A	Spring-secondary 2-8A 2069-A Pin	
	1-H 2068 Spring-primary			

COPYRIGHT © 1986 — FORD MOTOR COMPANY — DEARBORN, MICHIGAN

1973/79 LINCOLN-MERCURY CARS

YEAR	MODEL/RESTRICTIONS	PART NUMBER	DESCRIPTION	QTY.
2A094	RETAINER REPAIR KIT (BRAKE SHOE HOLD DOWN) — Cont'd			
74/	P - - 10" x 1 3/4" brakes	D4DZ 2A094-A	Rear	2
	Consists of			
	2-D9AZ 2068-A	Spring & retainer	2-8A 2069-A	Pin
2C098	CLIP (BRAKE SHOE LOCATING-INNER)			
79	A	D9AZ 2C098-A	Front disc	2
79	J - - exc. 5.0L	D9ZZ 2C098-A	Front disc	2
	J - - 5.0L	D9BZ 2C098-A	Front disc	2
79	P	D9BZ 2C098-A	Front disc	2
2106	RETAINER (PARKING BRAKE LEVER PIN)			
73/	A,D,F,G,K,P	91A 2106	Rear drum brake	2
73/76	C		Rear	2
73/76	Y		Rear drum brake	
2107	PIN (PARKING BRAKE LEVER)			
73/	A,D,Y - - 11" brakes	★ C1SZ 2107-A(12/80)		1
73/	C - - 11" brakes			1
74	K			1
2L109	SEAL (POWER BRAKE BOOSTER MOUNTING BRACKET)			
73/74	J - - 4 cyl. 122 (2000 cc)	★ D1RY 2L109-B(2/80)		1
73	J - - 6 cyl. 159 (2600 cc)	★ D0RY 2L109-A(2/80)		1
74	J - - 6 cyl. 171 (2800 cc)			1
2B112	TUBE ASSY. (BRAKE PRESSURE CONTROL VALVE INLET)			
	Improvise from bulk tubing (2269) and improvise insulators from rubber hose, friction tape etc.			
2B113	TUBE ASSY. (BRAKE PRESSURE CONTROL VALVE OUTLET)			
	Improvise from bulk tubing (2269) and improvise insulators from rubber hose, friction tape etc.			
2B115	Serviced only in kit-group 2221			
2B116	SHIELD (FRONT DISC BRAKE)			
75/	G,V	★ D4DZ 2B116-A(3/84)		2
74/77	P	★ D4DZ 2B116-A(3/84)		2
2118	SPACER (PARKING BRAKE CABLE TO EQUALIZER LEVER)			
73/74	J	D0RY 2118-A		1
2120	SEAL KIT (BRAKE CALIPER)			
73/74	J	★ D0RY 2120-A(6/82)		1

YEAR	MODEL/RESTRICTIONS	PART NUMBER: CALIPER ASSY.	PART NUMBER: △ REPAIR KIT	DESCRIPTION	QTY.
2B120-1	CALIPER ASSY. (FRONT DISC BRAKE)				
	△ Refer to group 2221 for contents of kit. NOTE 1-(1) kit required per vehicle (to be used for R.H. and L.H. caliper)				
73/74	A "Before 7/8/73"	★ D5AZ 2B120-A(10/84)	D20Z 2221-A	R.H.	1
		★ D5AZ 2B121-A(3/84)	NOTE 1	L.H.	1
74/78	A "From 7/8/74"	D4VY 2B120-A	D20Z 2221-A	R.H.	1
		D4VY 2B121-A	NOTE 1	L.H.	1
79	A	D9AZ 2B120-A	D9AZ 2221-A	R.H.	1
		D9AZ 2B121-A	NOTE 1	L.H.	1
73/	C(exc. P/C, Taxi)	★ D5AZ 2B120-A(10/84)	D20Z 2221-A	R.H.	1
		★ D5AZ 2B121-A(3/84)	NOTE 1	L.H.	1
74/	C(P/C, Taxi)	D4VY 2B120-A	D20Z 2221-A	R.H.	1
		D4VY 2B121-A	NOTE 1	L.H.	1
76	C	D4VY 2B120-A	D20Z 2221-A	R.H.	1
		D4VY 2B121-A	NOTE 1	L.H.	1
73	D	★ D5AZ 2B120-A(10/84)	D20Z 2221-A	R.H.	1
		★ D5AZ 2B121-A(3/84)	NOTE 1	L.H.	1
74/	D	D4VY 2B120-A	D20Z 2221-A	R.H.	1
		D4VY 2B121-A	NOTE 1	L.H.	1
73	F	★ C80Z 2B120-A(3/84)	C80Z 2221-A	R.H.	1
		★ C80Z 2B121-A (9/83)	NOTE 1	L.H.	1
74/75	F	★ D5AZ 2B120-A(10/84)	D20Z 2221-A	R.H.	1
		★ D5AZ 2B121-A(3/84)	NOTE 1	L.H.	1
76/	F	D4VY 2B120-A	D20Z 2221-A	R.H.	1
		D4VY 2B121-A	NOTE 1	L.H.	1

YEAR	MODEL/RESTRICTIONS	PART NUMBER CALIPER ASSY.	PART NUMBER △ REPAIR KIT	DESCRIPTION	QTY.
2B120-1	CALIPER ASSY. (FRONT DISC BRAKE) — Cont'd				
	△ Refer to group 2221 for contents of kit. NOTE 1-(1) kit required per vehicle (to be used for R.H. and L.H. caliper)				
75	G "Before 10/1/74"	★ D4FZ 2B120-A(6/82)	D4FZ 2221-A(3/81)	R.H.	1
		★ D4FZ 2B121-A(3/81)	NOTE 1	L.H.	1
	G "From 10/1/74 to 2/3/75"	★ D5FZ 2B120-A(6/82)	D4FZ 2221-A(6/82)	R.H.	1
		★ D5FZ 2B121-A(6/82)	NOTE 1	L.H.	1
75/	G "From 2/3/75"	D5DZ 2B120-A	D4FZ 2221-A	R.H.	1
		D5DZ 2B121-A	NOTE 1	L.H.	1
73/78	J	D5RY 2B120-A	D1RY 2221-B	R.H.	1
		D5RY 2B121-B		L.H.	1
	J - - (w/o pads)	★ D5RY 2B120-B(10/84)	D1RY 2221-B	R.H.	1
		★ D5RY 2B121-B		L.H.	1
79	J (exc. 5.0L) "Before 12/1/78"	★ D9ZZ 2B120-A (6/83)	D8BZ 2221-A	R.H.	1
		D9ZZ 2B121-A	NOTE 1	L.H.	1
	J (exc. 5.0L) "From 12/1/78"	D9ZZ 2B120-B	D9BZ 2221-A	R.H.	1
		D9ZZ 2B121-B	NOTE 1	L.H.	1
	J (5.0L)	E0BZ 2B120-A	D8BZ 2221-A	R.H.	1
		E0BZ 2B121-A	NOTE 1	L.H.	1
73/74	K "Before 5/23/74"	★ D5AZ 2B120-A(10/84)	D20Z 2221-A	R.H.	1
		★ D5AZ 2B121-A(3/84)	NOTE 1	L.H.	1
74/	K "From 5/23/74"	D4VY 2B120-A	D20Z 2221-A	R.H.	1
		D4VY 2B121-A	NOTE 1	L.H.	1
74	L	★ D4FZ 2B120-A(6/82)	D4FZ 2221-A	R.H.	1
		★ D4FZ 2B121-A(3/81)	D4FZ 2221-A	L.H.	1
75	L	★ D5FZ 2B120-A(6/82)	D4FZ 2221-A	R.H.	1
		★ D5FZ 2B121-A(6/82)	NOTE 1	L.H.	1
76	L - - w/o fuel economy option 9J6	★ D5FZ 2B120-A(6/82)	D4FZ 2221-A	R.H.	1
		D5FZ 2B121-A(6/82)	NOTE 1	L.H.	1
76/	L - - w/fuel economy option 9J6	D5DZ 2B120-A	D4FZ 2221-A	R.H.	1
		D5DZ 2B121-A	NOTE 1	L.H.	1
74/75	P "Before 10/1/74"	★ D4FZ 2B120-A(6/82)	D4FZ 2221-A	R.H.	1
		★ D4FZ 2B121-A(3/81)	D4FZ 2221-A	L.H.	1
75	P "From 10/1/74"	★ D5FZ 2B120-A(6/82)	D4FZ 2221-A	R.H.	1
		★ D5FZ 2B121-A(6/82)	NOTE 1	L.H.	1
76/77	P	D5DZ 2B120-A	D4FZ 2221-A	R.H.	1
		D5DZ 2B121-A	NOTE 1	L.H.	1
78/	P	E0BZ 2B120-A	D8BZ 2221-A	R.H.	1
		E0BZ 2B121-A	NOTE 1	L.H.	1
77/	V	D5DZ 2B120-A	D4FZ 2221-A	R.H.	1
		D5DZ 2B121-A	NOTE 1	L.H.	1
73/74	Y "Before 7/8/74"	★ D5AZ 2B120-A(10/84)	D20Z 2221-A	R.H.	1
		★ D5AZ 2B121-A(3/84)	Note 1	L.H.	1
74/76	Y "From 7/8/74"	D4VY 2B120-A	D20Z 2221-A	R.H.	1
		D4VY 2B121-A	Note 1	L.H.	1

YEAR	MODEL/RESTRICTIONS	PART NUMBER	DESCRIPTION	QTY.
73/	A,C,D,K,Y	383600-S100	(BB-429-WM)-bolt (to spindle)-hex. hd.-lower-1/2"-13 x 1 1/4"	2
73/	A,C,D,K,Y	383601-S100	(BB-429-WP)-bolt (to spindle)-upper-hex. hd.-1/2"-13 x 2 1/4"	2
73/	F	34793-S	(X-67)-lockwasher (to spindle)-lower-7/16"	2
73/	F	372520-S2	(XX-305-A)-lockwasher (to spindle)-upper-9/16"	2

COPYRIGHT © 1986 — FORD MOTOR COMPANY —DEARBORN, MICHIGAN

1973/79 LINCOLN–MERCURY CARS

YEAR	MODEL/RESTRICTIONS	PART NUMBER	DESCRIPTION	QTY.
73/	F	★ 382713–S101	(BB–429–T)–bolt (to spindle)–upper–hex. hd.–drilled–9/16"–12 x 2 5/8"	2
73/	F	384114–S100	(BB–429–WF)–bolt (to spindle)–lower–hex. hd.–drilled–7/16"–14 x 1 1/2"	2
73/74	J	E400003–S72	Bolt–hex. hd.–7/16"–20 x 1 1/4"	4
73/74	J	E440000–S	Pin–clevis–3/16"	4
73/74	J	E840024–S100	Pin–self–locking	4
76/78	J	E834019–S	(AX–13–G)–washer (rubber)–(used between caliper halves)–12.3mm O.D. x 1.9mm thick x 8.5mm I.D.	2
73/	L	34809–S8	(X–68)–lockwasher (to spindle)–lower 1/2"	2
73/	L	34793–S2	(X–67–A)–lockwasher (to spindle)–lower–7/16"	2
73/	L	383412–S	(BB–429–WC)–bolt (to spindle)–upper–1/2"–13 x 2"–hex. hd.	2
73/	L	383411–S	(BB–429–WX)–bolt (to spindle)–lower–7/16"–14 x 1 1/4"–hex. hd.	2
74/	P	385572–S100	(BB–429–WU)–bolt (to spindle)–upper–1/2"–13 x 2 5/16"–hex washer hd.–lock	2
74/	P	385571–S100	(BB–429–WT)–bolt (to spindle)–lower–7/16"–14 x 1 5/8" hex. washer hd.–lock	2

2C126 BRAKE SHIELD EXTENSION KIT (FRONT)

79	A	D9AZ 2C126–A	Campaign #349	1

Consists of

2–D9AC 2C126–AB	Extension	2–385974–S	or alterate	2–95874–S	Strap
		380098–S8	Pop rivet		

2L126 COVER (FRONT DISC BRAKE CALIPER BLEED SCREW DUST)

73/	J	D1RY 2L126–A		2

2128 CYLINDER REPAIR KIT (REAR BRAKE)–

Also refer to group 2261–2 for Model Application listed in numerical order.

QTY.	PART NUMBER		DESCRIPTION
	D0RY	**2128–A**	
Consists of			
2			Boot
2			Seal
1			1/2 oz. tube of grease
	D2DZ	**2128–A**	27/32" dia. cylinder
Consists of			
2	D2DA	2201–AA	Cup
1	D2ZZ	2204–B	Expander
2	96H	2206	Boot
	D2FZ	**2128–C**	7/8" dia. cylinder
Consists of			
2	D2ZA	2201–BA	Cup
1	D2ZZ	2204–B	Expander
2	D22A	2206–AA	Boot
	D20Z	**2128–A**	15/16" dia. cylinder
Consists of			
2	D20A	2201–AA	Cup
1	D2ZZ	2204–A	Expander
2	D2AA	2206–AA	Boot
	D20Z	**2128–B**	15/16" dia. cylinder
Consists of			
2	C30Z	2201–B	Cup
1	D1AZ	2204–A	Expander
2	96H	2206	Boot
	D2SZ	**2128–A**	1" dia. cylinder
Consists of			
2	D2SA	2201–AA	Cup
1	D2SA	2204–AA	Spring
1	D3AA	2204–AA	Spring
2	96H	2206	Boot
2	D2SA	2B508–AB	Expander
2	D3AA	2B508–AA	Expander
	D2ZZ	**2128–B**	15/16" dia. cylinder
Consists of			
2	D2ZA	2201–AA	Cup
1	D2SA	2204–AA	or
	D3AA	2204–AA	Spring
2	96H	2206	Boot
2	D2ZA	2B508–AA	or
	D30A	2B508–AA	Expander
	D30Z	**2128–A**	15/16" dia. cylinder
Consists of			
2	D20A	2201–AA	Cup
1	D2ZZ	2204–A	Expander
2	96H	2206	Boot
	D3SZ	**2128–A**	1" dia. cylinder
Consists of			
2	D2SA	2201–AA	Cup
1	D2SA	2204–AA	Spring
1	D3AA	2204–AA	Spring
2	D2AA	2206–AA	Boot
2	D2SA	2B508–AB	Expander
2	D3AA	2B508–AA	Expander
	D5RY	**2128–A**	
Consists of			
1			Cap
4			Cup
4			Boot
	D6RY	**2128–A**	
Consists of			
1			Cap
4			Cup
4			Boot

2128 CYLINDER REPAIR KIT (REAR BRAKE)- — Cont'd

Also refer to group 2261-2 for Model Application listed in numerical order.

QTY.	PART NUMBER		DESCRIPTION
	D8BZ 2128-A		
Consists of			
2	D8BC	2201-AA	Cup
1	D8BC	2B509-AA	Expander Assy.
2	D22A	2206-AA	Boot
	D8BZ 2128-B		
Consists of			
2	D8BC	2201-AA	Cup
1	D8BC	2B509-AA	Expander Assy.
2	96H	2206	Boot

QTY.	PART NUMBER		DESCRIPTION
	D9AZ 2128-A		
Consists of			
2	D2ZA	2201-BA	Cup
1	D2ZZ	2204-B	Expander
2	D9AC	2206-AA	Boot
	D9AZ 2128-B		
Consists of			
2	D2OA	2201-AA	Cup
1	D2ZZ	2204-A	Expander
2	D9AC	2206-BA	Boot

2B129 SPACER (BRAKE MASTER CYLINDER PUSH ROD)

YEAR	MODEL/RESTRICTIONS	PART NUMBER	DESCRIPTION	QTY.
73/	A,C,D,F,K,L,P,Y	C5DZ 2B129-A	9/16" I.D. x 13/16" O.D. x 1/8" thick	2
73/76	C			2
75/	G,V			2
73/76	Y			2

2133 NUT (BRAKE TUBE)

YEAR	MODEL/RESTRICTIONS	PART NUMBER	DESCRIPTION	QTY.
73/74	J	★ D0RY 2133-A(6/82)	Internal thread	AR
		D0RY 2133-B	External thread	AR
		★ D0RY 2133-C(6/82)	External thread	AR
76/	A,C,D,F,G,K,L,P,V,Y	D6AZ 2133-A	3/16" tube-3/8"- 24 (Weatherhead)	AR
76/	A,C,D,F,G,K,L,P,V,Y	D6AZ 2133-B	1/4" tube-7/16"-24 (Weatherhead)	AR

2140 CYLINDER ASSY. (BRAKE MASTER)

Δ Refer to group 2004 for contents of kit

NOTE 1- A new master cylinder with slightly different port locations and a plated reservoir was incorporated in production 4/1/74, at Wayne Assembly Plant only. If it should become necessary to install a service part master cylinder in a late-built vehicle, the outlet tubes must be reshaped to line up with the cylinder outlet ports. (Ref. TSB67, 5/3/74).

NOTE 2- Kit repairs Bendix cylinder identified with "Bendix" on housing bottom

NOTE 3- Kit repairs GPD cylinder identified with "D" stamped on side without spot-face.

NOTE 4- Gasket repair kit only.

NOTE 5- Master cylinder repair kit.

YEAR	MODEL/RESTRICTIONS	PART NUMBER: CYLINDER ASSY.	PART NUMBER: Δ REPAIR KIT	DESCRIPTION	QTY.
73/75	A - - rear drum brake	D6AZ 2140-A	D6AZ 2004-A	#Green-less push rod-1" dia.	1
75	A - - rear disc brake	D6VZ 2140-A	D5VZ 2004-A	Less push rod- 1 1/8" dia.	1
76/78	A(exc. 71) - - rear drum brake	D6AZ 2140-A	D6AZ 2004-A	Less push rod- 1" dia.	1
	A(71) - - rear drum brake "Before 1/1/76"	D6AZ 2140-A	D6AZ 2004-A	Less push rod- 1" dia.	1
	A(71) - - rear drum brake "From 1/1/76 to 5/2/77"	D6VZ 2140-A	D5VZ 2004-A	Less push rod- 1 1/8" dia.	1
76/78	A (71) rear drum brakes "From 5/2/77"	D6AZ 2140-A	D6AZ 2004-A	Less push rod- 1" dia.	
	A - - rear disc brake	D6VZ 2140-A	D5VZ 2004-A	Less push rod- 1 1/8" dia.	1
79	A	D9AZ 2140-A	D9AZ 2004-A	Less push rod-1" dia.	1
73/74	C - - manual disc brakes	★ D20Z 2140-A(3/84)	★ D40Z 2004-A(6/82)	Incl. push rod-1" dia.	1
73/76	C	D6AZ 2140-A	D6AZ 2004-A	Less push rod-1" dia.	1
73/74	D "Before 4/8/74"	D6AZ 2140-A	D6AZ 2004-A	Less push rod-1" dia.	1

COPYRIGHT © 1986 — FORD MOTOR COMPANY — DEARBORN, MICHIGAN

1973/79 LINCOLN-MERCURY CARS

YEAR	MODEL/RESTRICTIONS	PART NUMBER		DESCRIPTION	QTY.
		CYLINDER ASSY.	Δ REPAIR KIT		

2140 CYLINDER ASSY. (BRAKE MASTER) — Cont'd

Δ Refer to group 2004 for contents of kit

NOTE 1- A new master cylinder with slightly different port locations and a plated reservoir was incorporated in production 4/1/74, at Wayne Assembly Plant only. If it should become necessary to install a service part master cylinder in a late-built vehicle, the outlet tubes must be reshaped to line up with the cylinder outlet ports. (Ref. TSB67, 5/3/74).

NOTE 2- Kit repairs Bendix cylinder identified with "Bendix" on housing bottom

NOTE 3- Kit repairs GPD cylinder identified with "D" stamped on side without spot-face.

NOTE 4- Gasket repair kit only.

NOTE 5- Master cylinder repair kit

NOTE 6- For vehicles built "Before 1/1/77", cap assy. D6RY 2162-A must be used. For vehicles built "From 1/1/77" cap assy. D6RY 2L414-A (fluid low level warning indicator) must be used.

YEAR	MODEL/RESTRICTIONS	CYLINDER ASSY.	Δ REPAIR KIT	DESCRIPTION	QTY.
74	D "From 4/8/74"	★ D5VY 2140-A(6/82)	★ D5VY 2004-A(6/82)	# Red-less push rod-1 1/8" dia.	1
75	D - - rear drum brake	★ D5VY 2140-A(6/82)	★ D5VY 2004-A(6/82)	Less push rod-1 1/8" dia.	1
75	D - - rear disc brake	D6VZ 2140-A	D5VZ 2004-A	Less push rod-1 1/8" dia.	1
76/	D	D6VZ 2140-A	D5VZ 2004-A	Less push rod-1 1/8" dia.	1
73	F - - power disc brakes	D3ZZ 2140-A	★ D3ZZ 2004-A(9/82)	# Gray-less push rod-15/16" dia.	1
74/	F	D6AZ 2140-A	D6AZ 2004-A	Less push rod-1" dia.	1
75	G - - manual disc brake	★ D6FZ 2140-B	★ D6FZ 2004-A NOTE 5	Incl. push rod-15/16" dia.	1
			D6FZ 2004-C NOTE 4		1
75	G - - power disc brakes-(rear drum brake)	★ D6FZ 2140-A r/b D6FZ 2140-C(9/84)	★ D6FZ 2004-B r/b D6DZ 2004-C (3/83) NOTE 2	Less push rod-15/16" dia.	1
			★ D5DZ 2004-C(3/84) NOTE 3	Less push rod-1" dia.	1
	G - - power disc brakes-(rear disc brake)	D6DZ 2140-B	D5DZ 2004-E	Less push rod-15/16" dia.	1
76/78	G - - manual disc brakes	D6FZ 2140-B	★ D6FZ 2004-A NOTE 5	Incl. push rod-15/16" dia.	1
			D6FZ 2004-C NOTE 5		1
	G - - power disc brakes (rear drum brake)	★ D6FZ 2140-A r/b D6FZ 2140-C(9/84)	★ D6FZ 2004-B r/b D6DZ 2004-C (3/83) NOTE 2	Less push rod-15/16" dia.	1
	G - - power disc brakes (rear drum brake)	★ D6DZ 2140-A r/b D6FZ 2140-C(3/83)	D6DZ 2004-A NOTE 3 D6DZ 2004-C NOTE 2	Less push rod-15/16" dia.	1
	G - - power disc brakes (rear disc brake)	D6DZ 2140-B	D5DZ 2004-E	Less push rod-1" dia.	1
79	G - - power disc brake	★ D6DZ 2140-A r/b D6FZ 2140-C(3/83)	D6DZ 2004-A	Less push rod-15/16" dia.	1
	G - - manual disc brake	★ D6FZ 2140-B	★ D6FZ 2004-A NOTE 5	Incl. push rod-15/16" dia.	1
			D6FZ 2004-C NOTE 4		1

YEAR	MODEL/RESTRICTIONS	PART NUMBER CYLINDER ASSY.	PART NUMBER Δ REPAIR KIT	DESCRIPTION	QTY.
2140	CYLINDER ASSY. (BRAKE MASTER) — Cont'd				
Δ	Refer to group 2004 for contents of kit				
NOTE 1-	A new master cylinder with slightly different port locations and a plated reservoir was incorporated in production 4/1/74, at Wayne Assembly Plant only. If it should become necessary to install a service part master cylinder in a late-built vehicle, the outlet tubes must be reshaped to line up with the cylinder outlet ports. (Ref. TSB67, 5/3/74).				
NOTE 2-	Kit repairs Bendix cylinder identified with "Bendix" on housing bottom				
NOTE 3-	Kit repairs GPD cylinder identified with "D" stamped on side without spot-face.				
NOTE 4-	Gasket repair kit only.				
73/78	J	D6RY 2140-B NOTE 6	★ D1RY 2004-A r/b D7RY 2004-A(11/79) NOTE 4		1
			D2RY 2004-A NOTE 5		1
79	J - - manual disc brake	D8BZ 2140-B	D8BZ 2004-B	Incl. push rod-7/8" dia.	1
	J - - power disc brake	D8BZ 2140-A	D8BZ 2004-A	Less push rod-7/8" dia.	1
73/74	K	D6AZ 2140-A	D6AZ 2004-A	Less push rod-1" dia.	1
75/	K	D6VZ 2140-A	D5VZ 2004-A	Less push rod- 1 1/8" dia.	1
74	L	D4FZ 2140-A	D4FZ 2004-A NOTE3 ★ D4FZ 2004-B(6/82) NOTE 2	Incl. push rod- 15/16" dia.	1
75	L - - manual disc brake	D6FZ 2140-B	★ D6FZ 2004-A NOTE 5	Incl. push rod-15/16" dia.	1
			D6FZ 2004-C NOTE 4		1
75	L - - power disc brakes	★ D6FZ 2140-A r/b D6FZ 2140-C (9/84)	★ D6FZ 2004-B r/b D6DZ 2004-C (3/83) NOTE 2	Less push rod- 15/16" dia.	1
			★ D5DZ 2004-C (3/84) NOTE 3	Less push rod- 15/16" dia.	1
76/	L - - manual disc brake	D6FZ 2140-B	★ D6FZ 2004-A NOTE 5	Incl. push rod-15/16" dia.	1
			D6FZ 2004-C NOTE 4		1
	L - - power disc brakes	★ D6DZ 2140-A r/b D6FZ 2140-C (3/83)	D6DZ 2004-A NOTE 3 D6DZ 2004-C NOTE 2	Less push rod- 15/16" dia.	1
	L - - power disc brakes	★ D6FZ 2140-A r/b D6FZ 2140-C (9/84)	★ D6FZ 2004-B r/b D6DZ 2004-C (3/83) NOTE 2	Less push rod- 15/16" dia.	1
73	P	D3DZ 2140-A	★ D2DZ 2004-A(3/82)	Incl. push rod-1" dia.	1
74	P NOTE 1	★ D4DZ 2140-A ★ D4DZ 2140-B	★ D4DZ 2004-A (6/83) NOTE 3 ★ D4DZ 2004-B(6/82) NOTE 2	Incl. push rod- 15/16" dia.	1
75/77	P - - power disc brakes	★ D6DZ 2140-A r/b D6FZ 2140-C (3/83)	D6DZ 2004-A	Less push rod- 15/16" dia.	1
75/77	P - - manual disc brakes	D6FZ 2140-B	★ D6FZ 2004-A NOTE 5	Incl. push rod-15/16" dia.	1
			D6FZ 2004-C NOTE 5		1
78	P - - power disc brakes	D8BZ 2140-A	D8BZ 2004-A	Less push rod-7/8" dia.	1
78/	P - - manual disc brakes	D8BZ 2140-B	D8BZ 2004-B	Incl. push rod-7/8" dia.	1
79	P - - power disc brake	D8BZ 2140-A	D8BZ 2004-A	Less push rod-7/8" dia.	1
77/	V	D6DZ 2140-B	D5DZ 2004-E	Less pushrod-15/16" dia.	1
73/75	Y - - rear drum brake	D6AZ 2140-A	D6AZ 2004-A	Less push rod-1" dia.	1

COPYRIGHT © 1986 — FORD MOTOR COMPANY — DEARBORN, MICHIGAN

YEAR	MODEL/RESTRICTIONS	PART NUMBER CYLINDER ASSY.	PART NUMBER △ REPAIR KIT	DESCRIPTION	QTY.
2140	CYLINDER ASSY. (BRAKE MASTER) — Cont'd				
△	Refer to group 2004 for contents of kit				
NOTE 1-	A new master cylinder with slightly different port locations and a plated reservoir was incorporated in production 4/1/74, at Wayne Assembly Plant only. If it should become necessary to install a service part master cylinder in a late-built vehicle, the outlet tubes must be reshaped to line up with the cylinder outlet ports. (Ref. TSB67, 5/3/74).				
NOTE 2-	Kit repairs Bendix cylinder identified with "Bendix" on housing bottom				
NOTE 3-	Kit repairs GPD cylinder identified with "D" stamped on side without spot-face.				
NOTE 4-	Gasket repair kit only.				
75	Y - - rear disc brake	D6VZ 2140-A	D5VZ 2004-A	Less push rod-1 1/8" dia.	1
76	Y (exc.71) - - rear drum brake	D6AZ 2140-A	D6AZ 2004-A	Less push rod-1" dia.	1
	Y(71) - - rear drum brake "Before 1/1/76"	D6AZ 2140-A	D6AZ 2004-A	Less push rod-1" dia.	1
	Y(71) - - rear drum brake "From 1/1/76"	D6VZ 2140-A	D5VZ 2004-A	Less push rod-1 1/8" dia.	1
	Y - - rear disc brake	D6VZ 2140-A	D5VZ 2004-A	Less push rod-1 1/8" dia.	1
79	A,D,F,G,J,K,L,P	380699-S100		(NN-128-FF)-pin-self locking (M/C pushrod to pedal)-Campaign #351	A/R
	L,P	385976-S100		(BB-902)-screw-No. 8-32 x 1 1/4"	AR

YEAR	MODEL/RESTRICTIONS	PART NUMBER	DESCRIPTION	QTY.
2A140	GASKET (BRAKE MASTER CYLINDER RESERVOIR)			
73/78	J	D1RY 2A140-A		2
2B140	SCREW (BRAKE MASTER CYLINDER)			
73/78	J	★ D1RY 2B140-A(9/82)		1
2C140	WASHER (BRAKE MASTER CYLINDER)			
73/78	J	★ D1RY 2C140-A(6/82)		2
2D140	SEAL (BRAKE MASTER CYLINDER TO BRAKE BOOSTER)			
73/78	J	D1RY 2D140-A		1
2145	SPRING and RETAINER (BRAKE MASTER CYLINDER PISTON RETURN)			
73/74	J	★ D1RY 2145-B(6/82)	Spring-primary	1
		★ D1RY 2145-A(6/82)	Spring-secondary	1
2149	GASKET (BRAKE LINE CONNECTOR)			
73/74	A,D,K,L	C7OZ 2149-A	7/16" I.D. x 5/8" O.D.	2
74	F,P - - disc brakes			2
75/	A,D,F,G,K,L,P,V - - front disc brakes	D5AZ 2149-B		2
75/76	C - - front disc brakes			2
75/76	Y - - front disc brakes			2
75/	A,D,G,K,V - - rear disc brakes			2
75/76	Y - - rear disc brakes			2
73	F	8M 2149	3/8" I.D. x 5/8" O.D.-also serviced in kit-group 2001	AR
73/75	P - - drum brakes			AR
2B160	GASKET (FRONT BRAKE SPLASH SHIELD)			
73/	A,D	C7AZ 2B160-A	1 15/16" I.D. x 3 3/4" O.D.	2
74/76	C			2
74/	F,K,L			2
75/	G,V			2
75/77	P - - disc brakes			2
73/76	Y			2
73	F	★ C80Z 2B160-A(6/82)	2" I.D. x 3 13/16" O.D.	2
74	P			2
78/	P	D8BZ 2B160-A	2" I.D. x 3 1/2" O.D.	2

YEAR	MODEL/RESTRICTIONS	PART NUMBER	DESCRIPTION	QTY.
2162	CAP ASSY. (BRAKE MASTER CYLINDER FILLER)			
73/75	A,Y - - rear drum brake	D4AZ 2162-A		1
75	A,Y - - rear disc brake	D6AZ 2162-A		1
76/78	A(exc. 71) - - rear drum brake	D6TZ 2162-A		1
76	A(71) - - rear drum brake "Before 1/1/76"	D6TZ 2162-A		1
76/78	A(71) - - rear drum brake "From 1/1/76"	D6AZ 2162-A		1
76/78	A - - rear disc brake	D6AZ 2162-A		1
79	A	D9AZ 2162-A		1
73/76	C	D60Z 2162-A		1
73	D	★ D2AZ 2162-A(3/81)		1
74/75	D - - rear drum brake	D4AZ 2162-A		1
75	D - - rear disc brake	D6AZ 2162-A		1
76/	D	D6AZ 2162-A		1
73	F	D3ZZ 2162-A		1
74/	F	D60Z 2162-A		1
75	G - - rear drum brake	D3ZZ 2162-A		1
75	G - - rear disc brake	★ D5DZ 2162-A(5/79)		1
76/	G - - rear drum brake	D3ZZ 2162-A		1
76/	G - - rear disc brake	★ D6DZ 2162-A(3/81)		1
73/78	J	D6RY 2162-A		1
79	J	D3ZZ 2162-A		1
73/74	K	D4AZ 2162-A		1
75/	K	D6AZ 2162-A		1
74/75	L	D3ZZ 2162-A		1
76/	L	D3ZZ 2162-A		1
73	P	D5TZ 2162-A		1
74/75	P	D3ZZ 2162-A		1
76/	P	D3ZZ 2162-A		1
77/	V	★ D6DZ 2162-A(3/81)		1
73/75	Y - - rear drum brake	D4AZ 2162-A		1
75	Y - - rear disc brake	D6AZ 2162-A		1
76	Y(exc.71) - - rear drum brake	D6TZ 2162-A		1
	Y(71) - - rear drum brake "Before 1/1/76"	D6TZ 2162-A		1
	Y(71) - - rear drum brake "From 1/1/76"	D6AZ 2162-A		1
	Y - - rear disc brake	D6AZ 2162-A		1
2B162	TUBE ASSY. (BRAKE PRESSURE METERING VALVE INLET) Improvise from bulk tubing (2269) and improvise insulators from rubber hose, friction tape etc.			
		382967-S100	(MM-102)-nut-3/16" tube-3/8"-24	AR
2B164	CLIP (DISC BRAKE SHOE ANTI-RATTLE)			
73	A,C,D,K,Y	D20Z 2B164-A	#Plain-use when inner brake shoe to anchor	2
73	A,C,D,K,Y	★ D3AZ 2B164-A r/b D4FZ 2B164-B(6-74)	#Blue-use when inner brake shoe to anchor plate clearance is .032" or greater	2
74/77	A,C,L,P,Y	D4FZ 2B164-B	Front	2
74/	D,F,G,K			2
75/	A,D,G,K,Y,V - - w/rear disc brakes	D5MZ 2B164-A	Rear	1
73	F	★ C8AZ 2B164-B	Also serviced in kit-group 2001	4
2B166-8	TUBE ASSY. (FRONT DISC BRAKE CALIPER INLET R.H.) Improvise from bulk tubing (2269) and improvise insulators from rubber hose, friction tape etc.			
2167	GASKET (BRAKE MASTER CYLINDER FILLER CAP)			
73/78	A(exc 71) - - rear drum brake	D2AZ 2167-A		1
73/76	A(71) - - rear drum brake "Before 1/1/76"	D2AZ 2167-A		1
76/78	A(71) - - rear drum brake "From 1/1/76"	D5VZ 2167-A		1

COPYRIGHT © 1986 — FORD MOTOR COMPANY — DEARBORN, MICHIGAN

1973/79 LINCOLN-MERCURY CARS

YEAR	MODEL/RESTRICTIONS	PART NUMBER	DESCRIPTION	QTY.
2167	GASKET (BRAKE MASTER CYCLINDER FILLER CAP) — Cont'd			
75/78	A - - rear disc brake	D5VZ 2167-A		1
79	A	D9AZ 2167-A		1
73/76	C	★ D20Z 2167-A	R/b D2AZ 2167-A (9/83)	1
73/75	D - - rear drum brake	D2AZ 2167-A		1
75	D - - rear disc brake	D5VZ 2167-A		1
76/	D	D5VZ 2167-A		1
73	F "Before 1/15/73"	C7AZ 2167-A		1
73	F "From 1/15/73"	D3TZ 2167-A		1
74/	F	★ D20Z 2167-A	R/b D2AZ 2167-A (9/83)	1
75/	G - - rear drum brake	★ D1FZ 2167-A	R/b D1FZ 2167-B	1
75/	G,V - - rear disc brake	D5DZ 2167-A		1
73/74	J	★ D0RY 2167-A(6/82)		1
76/78	J	D2RY 2167-A		AR
79	J	★ D1FZ 2167-A		1
73/74	K	D2AZ 2167-A		1
75/	K	D5VZ 2167-A		1
74/	L	★ D1FZ 2167-A	R/b D1FZ 2167-B	1
73	P "Before 1/15/73"	C7AZ 2167-A		1
73	P "From 1/15/73"	D3TZ 2167-A		1
74/	P	★ D1FZ 2167-A	R/b D1FZ 2167-B	1
73/76	Y (exc.71) - - rear drum brake	D2AZ 2167-A		1
73/76	Y(71) - - rear drum brake "Before 1/1/76"	D2AZ 2167-A		1
76	Y(71) - - rear drum brake "From 1/1/76"	D5VZ 2167-A		1
75/76	Y - - rear disc brake	D5VZ 2167-A		1
2169	PISTON (BRAKE MASTER CYLINDER)			
73/74	J	D0RY 2169-A		1
		E830076-S	Washer	2
2L172	TUBE ASSY. (REAR BRAKE TO REAR BRAKE HOSE)			
73/74	J	★	16 1/8" long-improvise from bulk tubing-refer to group 2269 and add fittings (1-D0RY 2133-B and 1-E855038-S71)	1
2173	CUP (BRAKE MASTER CYLINDER)			
73/78	J	★ D1RY 2173-A(6/82)		1
2174	RETAINER (BRAKE MASTER CYLINDER PISTON SPRING)			
73/78	J	D1RY 2174-A		2
2A174	RING (BRAKE MASTER CYLINDER CUP)			
73/78	J	★ D1RY 2A174-A(6/82)		2
2B175	HOSE (VACUUM GAUGE)			
75	C	★ D5GZ 2B175-A(5/79)		1
2A176	LEVER KIT (BRAKE SHOE ADJUSTING)			
73/78 73/76 73 75/ 76/ 73/74	A - - 11" rear drum brakes C,Y - - 11" rear drum brakes D - - 11" rear drum brakes D - - 11" rear drum brakes F - - 11" rear drum brakes K - - 11" rear drum brakes	C0AZ 2A176-A		AR
	Consists of 1-D8AC 2A176-AA Lever R.H. 1-D8AC 2A177-AA Lever L.H.		1-D7AZ 2A178-A Cable 1-C1SS 2A179-A Guide	
79	A - - 10" rear drum brake	D9AZ 2A176-A		AR
	Consists of 1-D9AC 2A176-AA Lever R.H. 1-D9AC 2A177-AA Lever L.H.		1-C20Z 2A178-A Cable 1-C1SS 2A179-A Guide	
79	A - - 11" rear drum brake	D9AZ 2A176-B		AR
	Consists of 1-D9AC 2A176-AA Lever R.H. 1-D9AC 2A177-AA Lever L.H.		1-D7AZ 2A178-A Cable 1-C1SS 2A179-A Guide	

YEAR	MODEL/RESTRICTIONS	PART NUMBER	DESCRIPTION	QTY.
2A176	LEVER KIT (BRAKE SHOE ADJUSTING) — Cont'd			
73/75	C,F - - 10" rear drum brakes	C20Z 2A176-A		AR
75/	G - - 10" rear drum brakes			
73/75	P - - 10" front and rear drum brakes			
76/	P - - 10" rear drum brakes			
	Consists of			
	1-D8AC 2A176-AA Lever R.H.		1-C20Z 2A178-A Cable	
	1-D8AC 2A177-AA Lever L.H.		1-C1SS 2A179-A Guide	
74	D - - rear drum brakes	★ D4VY 2A176-A(6/82)		AR
	Consists of			
	1-D4VY 2A177-A Lever R.H./L.H.		1-D4VY 2B567-A Cable	
			1-C1SS 2A179-A Guide	
74/	L - - 9" x 1 3/4" rear drum brakes	D1FZ 2A176-B		AR
78/	P - - 9" x 1 3/4" rear drum brakes			AR
79	J			AR
	Consists of			
	1-D8EC 2A176-AA Lever R.H.		1-D8BC 2A178-AA Cable	
	1-D8EC 2A177-AA Lever L.H.		1-C1SS 2A179-A Guide	
2A176-7	LEVER (BRAKE SHOE ADJUSTING)			
	▲ Select appropriate 2A176 kit			
74	D	(RH) D4VY 2A177-A	(LH) D4VY 2A177-A Rear	1
2B176	GROMMET (POWER BRAKE BOOSTER CHECK VALVE)			
73/	A,Y - - rear drum brakes	C9AZ 2B176-B		1
73/76	C			1
74/	F			1
75/	G			1
75/	P			1
73/76	Y - - rear drum brake			1
75/	L	C9AZ 2B176-C		1
2A178	CABLE (BRAKE SHOE ADJUSTING LEVER)			
	▲ Select appropriate 2A176 kit			
74	D	D4VY 2B567-A	Rear-12 5/16" long	2
2A179	GUIDE (BRAKE SHOE ADJUSTING LEVER CABLE)			
NOTE:	▲ SELECT APPROPRIATE 2A176 KIT			
2180	BOOT (BRAKE MASTER CYLINDER)-Also serviced in kit-group 2004			
74	C,L,P	D0UZ 2180-A		1
73	F,P - - drum brakes	0A 2180		1
75/	G,L,P - - manual brake and rear drum brakes	D5DZ 2180-A		1
2B180	SPACER (BRAKE PEDAL SUPPORT MOUNTING)			
79	A	D9AZ 2B180-A		1
73/74	C - - power disc brakes	D30Z 2B180-A		1
75/76	C - - power disc brake	D50Z 2B180-A		1
74	F	D30Z 2B180-A		1
75/	F	D50Z 2B180-A		1
79	J	D8BZ 2B180-A		1
75/	K	D5SZ 2B180-A		1
75/	L - - manual disc brake	★ D5FZ 2B180-A(3/84)		1
75/	L - - power disc brake	★ D5FZ 2B180-B(3/84)		1
73	P	C60Z 2B180-A		1
75/77	P - - manual brake	★ D5DZ 2B180-B(3/81)		1
75/77	P - - power brake	★ D5DZ 2B180-A(3/81)		1
78/	P	D8BZ 2B180-A		1
2185	RETAINER (BRAKE MASTER CYLINDER SECONDARY PISTON SPRING RETURN)			
73/78	J	★ D0RY 2185-B(6/82)		1

COPYRIGHT © 1986— FORD MOTOR COMPANY —DEARBORN, MICHIGAN

1973/79 LINCOLN-MERCURY CARS

YEAR	MODEL/RESTRICTIONS	PART NUMBER	DESCRIPTION	QTY.
2L187	ADAPTER KIT (BRAKE TUBE CONNECTOR-BOOSTER)			
75/76	A,K,Y - - Hydro Boost	D7AZ 2L187-D	Used with D7VZ 2005-A & D7LY 2005-A	1
74/76	D - - Hydro Boost			
	Consists of			
	1-D7AZ 2L187-B Adapter	1-D7AZ 2L187-C	Adapter 2-87006-S94 "O" Ring	
		1-IS 4625-A	Instruction sheet	
75/76	G - - Hydro Boost	★ D7AZ 2L187-E(9/83)	Used with D7DZ 2005-A	1
	Consists of			
	1-D7AZ 2L187-A Adapter	1-D7AZ 2L187-B	Adapter 2-87006-S94 "O" Ring	
		1-IS 4624-A	Instruction sheet	
2188	WASHER (BRAKE MASTER CYLINDER PISTON)			
73/74	J	★ D0RY 2188-A(6/82)		1
2A188	SPACER (BRAKE PEDAL)			
77/	F	386112-S		1
73/78	J	★ D0RY 2A188-A(6/82)		1
75/	L	★ D4ZZ 2A188-A(3/81)	3 1/4" long	1
75	P	386228-S		1
2196-7	PISTON (BRAKE CYLINDER)			
73	A	C30Z 2196-D	Rear-15/16" O.D.	4
74	A,D,K	★ C9AZ 2196-A(3/81)	Rear-1" O.D.	4
75/78	A - - w/rear drum brakes		Rear	4
73/78	A,D,K - - disc brakes	D20Z 2196-A	Front caliper	2
79	A - - 10" x 2 1/2" brakes	8A 2197-A	Rear-7/8" O.D.	4
79	A - - 11" x 2 1/4" brakes	C30Z 2196-D	Rear-15/16" O.D.	4
79	A - - disc brakes	D9AZ 2196-A	Front caliper	2
73	C(53,63,65) - - 10" x 2 1/2" and 11" x 2 1/4" brakes	C30Z 2196-D	Rear-15/16" O.D.	4
	C(71) - - 10" x 2 1/2" and 11" x 2 1/4" brakes	★ C9AZ 2196-A(3/81)	Rear-1" O.D.	4
	C - - disc brakes	D20Z 2196-A	Front caliper	1
74	C - - 11" x 2 1/4" brakes	C30Z 2196-D	Rear-15/16" O.D.	4
74/76	C - - 10" x 2 1/2" and 11" x 2 1/4" brakes	★ C9AZ 2196-A(3/81)	Rear-1" O.D.	4
	C - - disc brakes	D20Z 2196-A	Front caliper	1
75/	D - - w/rear drum brakes	★ C9AZ 2196-A(3/81)	Rear-1" O.D.	4
73/	D,K - - disc brakes	D20Z 2196-A	Front caliper	2
73	F - - 10" brakes	C30Z 2196-A	Front-1 1/8" O.D.	4
	F - - disc brakes	C80Z 2196-A	Front caliper-1 59/64" I.D. x 2 3/8" O.D.	2
74/76	F	★ C9AZ 2196-A(3/81)	Rear-1" O.D.	4
74/79	F - - disc brakes	D20Z 2196-A	Front caliper	2
77/79	F(exc P/C,Taxi) 11" x 2 1/4" brakes	C30Z 2196-D	Rear - 15/16" O.D	4
	F(P/C,Taxi)-11" x 2 1/4" brakes	★ C9AZ 2196-A(3/81)	Rear - 1" O.D	4
	F(71) 11" x 2 1/2" brakes	★ C9AZ 2196-A(3/81)	Rear - 1" O.D.	4
75/	G	D4FZ 2196-A	Front caliper	2
77	G	C30Z 2196-D	Rear - 15/16" O.D.	4
73/78	J - - disc brakes	D1RY 2196-A	Front caliper	4
79	J - - 9" x 1 3/4" brakes	D8BZ 2196-B	Rear-13/16" O.D.	4
79	J - - disc brakes	D8BZ 2196-A	Front caliper	2
74/	L - - disc brakes	D4FZ 2196-A	Front caliper	2
	L - - 9" x 1 3/4" brakes	★ D2FZ 2196-C(3/84)	Rear-7/8" O.D.	2
73	P - - 6 cyl. 200	D1DZ 2196-A	Front	2
		C5DZ 2196-B	Rear	4
	P - - 6 cyl. 250, 8 cyl.	C30Z 2196-A	Front-1 1/8" O.D.	4
74/	P - - disc brakes	D4FZ 2196-A	Front caliper	2
74/75	P - - 10" x 2 1/2" brakes	C30Z 2196-A	Front-1 1/8" O.D.	4
74/75	P - - 10" x 1 3/4" brakes	8A 2197-A	Rear-7/8" O.D.	4

YEAR	MODEL/RESTRICTIONS	PART NUMBER	DESCRIPTION	QTY.
2196-7	PISTON (BRAKE CYLINDER) — Cont'd			
76/77	P - - 10" x 1 3/4" brakes	C30Z 2196-D	Rear-15/16" O.D.	4
78/	P - - disc brakes	D8BZ 2196-A	Front caliper	2
	P - - 9" x 1 3/4" brakes	D8BZ 2196-B	Rear-13/16" O.D.	4
	P - - 10" x 1 3/4" brakes	C7ZZ 2196-A	Rear	4
77/	V	D4FZ 2196-A	Front caliper	2
73	Y	C30Z 2196-D	Rear - 15/16" O.D.	4
74/75	Y - - rear drum brake	★C9AZ 2196-A(3/81)	Rear- 1" O.D.	4
73/76	Y	D20Z 2196-A	Front	2
2200	For Model Application-Refer to group 2001 For Kit Details-Refer to Section 20.1			
2204	SPRING ASSY. (BRAKE CYLINDER PISTON CUP)-Includes expander-Also serviced in kits-groups 2128 and 2221 ● Also serviced in kits-groups 2128 and/or 2221			
73/78	A - - rear drum brake	★●D2SZ 2204-A(3/81)	#1"-rear	2
79	A - - 10" x 2 1/2" brakes	● D2ZZ 2204-B	#7/8"-rear	2
79	A - - 11" x 2 1/4" brakes	● D2ZZ 2204-A	#15/16"-rear	2
73/75	C - - (P/C)	● D2ZZ 2204-A	#15/16"-rear-w/3/8" I.D. expander	2
73/75	C - - (exc. P/C)	★●D2SZ 2204-A(3/81)	#1"-rear	2
76	C	● D2ZZ 2204-A	#15/16"-rear	2
74/	D - - rear drum brake	★●D2SZ 2204-A(3/81)	#1"-Rear	2
73/74	F	● D2ZZ 2204-A	#15/16"-rear-w/3/8" I.D. expander	2
75	F	★●D2SZ 2204-A(3/81)	#1-rear	2
76	F	● D2ZZ 2204-A	#15/16"-rear	2
77/	F(exc. P/C,Taxi) 11" x 2 1/4" brakes	● D2ZZ 2204-A	#15/16" - rear	2
	F(P/C,Taxi)-11" x 2 1/4" brakes	★●D2SZ 2204-A(3/81)	#1" - rear	2
	F(71) 11" x 2 1/2" brakes	★●D2SZ 2204-A(3/81)	#1" - rear	2
75/	G - - rear drum brake	● D2ZZ 2204-A	#15/16"-rear-w/3/8" I.D. expander	2
73/74	J	★2204	Spring only-serviced in 2261 assy.	2
76/78	J	★ D5RY 2204-A(2/80)	Spring only	AR
73/74	K	★●D2SZ 2204-A(3/81)	#1"-rear	2
74/	L - - 9" x 1 3/4" brakes	● D2ZZ 2204-B	#7/8"-rear	2
73/75	P - - 10" x 2 1/2" brakes	● D2AZ 2204-A	#1 1/8"-front	2
73/75	P - - 10" x 1 3/4" brakes	● D2ZZ 2204-B	#7/8"-rear	2
76/77	P - - 10" x 1 3/4" brakes	● D2ZZ 2204-A	#15/16"-rear	2
73/76	Y - - rear drum brake	★●D2SZ 2204-A(3/81)	#1" -rear	2
2A204	WIRING ASSY. (VACUUM GAUGE)			
75/76	C	★ D40Z 2A204-A(3/81)		1
77/	F			1
2206	BOOT (BRAKE CYLINDER)-Also serviced in kit-group 2128			
73/74	A,Y	★ 96H 2206	Rear-serviced in 2128 kits (1/76)	8
75	A,Y - - w/rear drum brakes		Rear	8
73/	C,F		Rear	8
73	D,K		Rear	8
75	G		Rear	8
73/	P		Rear	4
73/74	J	★ D0RY 2206-A(6/82)	Rear	2
2K206	BRACKET (BRAKE TUBE SUPPORT)			
73	F	D1ZZ 2K206-A		1
2208	SCREW (BRAKE CYLINDER BLEEDER)			
73	A - - front disc brakes	C8AZ 2208-A	Front brake caliper	2
74/	A - - front disc brakes	8M 2208-A	Front brake calpier	2
73/	A - - rear drum brakes	8M 2208-A	Rear brake cylinder	2
75/77	A - - rear disc brakes	8M 2208-A	Rear brake caliper	2
73/76	C - - front disc brakes	8M 2208-A	Front brake caliper	2
73	C - - rear drum brakes	D3ZZ 2208-A	Rear brake cylinder	2
74	C - - rear drum brakes	8M 2208-A	Rear brake cylinder	2
75	C(exc.P/C) - - rear drum brakes	8M 2208-A	Rear brake cylinder	2
	C(P/C) - - rear drum brakes	D3ZZ 2208-A	Rear brake cylinder	2

COPYRIGHT © 1986 — FORD MOTOR COMPANY — DEARBORN, MICHIGAN

1973/79 LINCOLN-MERCURY CARS

YEAR	MODEL/RESTRICTIONS	PART NUMBER	DESCRIPTION	QTY.
2208	SCREW (BRAKE TUBE SUPPORT) — Cont'd			
76	C - - rear drum brake	8M 2208-A	Rear brake cylinder	2
73	D - - front disc brakes	C8AZ 2208-A	Front brake caliper	2
74/	D - - front disc brakes	8M 2208-A	Front brake caliper	2
73/	D - - rear drum brakes	8M 2208-A	Rear brake cylinder	2
75/	D - - rear disc brakes	8M 2208-A	Rear brake caliper	2
73	F - - disc brakes	C8AZ 2208-A	Front brake caliper	2
	F - - drum brakes	C0DZ 2208-A	Rear brake cylinder	2
74/	F - - disc brakes	8M 2208-A	Front brake caliper	2
	F - - drum brakes	8M 2208-A	Rear brake cylinder	2
75/	G - - front disc brakes	8M 2208-A	Front brake caliper	2
75	G - - rear drum brakes	C0DZ 2208-A	Rear brake cylinder	2
75/	G - - rear disc brakes	8M 2208-A	Rear brake caliper	2
76/	G - - rear drum brakes	D3ZZ 2208-A	Rear brake cylinder	2
73/74	J - - disc brakes	D1RY 2208-A	Front brake caliper	2
	J - - drum brakes	D0RY 2208-B	Rear brake cylinder	2
76/78	J - - disc brakes	D1RY 2208-A	Front brake caliper and rear brake cylinder	4
79	J - - front disc brakes	8M 2208-A	Front brake caliper	1
	J - - rear drum brakes	C0DZ 2208-A	Rear brake cylinder	2
73/74	K - - disc brakes	8M 2208-A	Front brake caliper	2
	K - - drum brakes	8M 2208-A	Rear brake cylinder	2
75/	K - - disc brakes	8M 2208-A	Front and rear caliper	4
74/	L - - disc brakes	8M 2208-A	Front brake caliper	2
74/	L - - drum brakes	C0DZ 2208-A	Rear brake cylinder	2
73	P - - drum brakes	D3ZZ 2208-A	Front and rear brake cylinder	4
74/	P - - front disc brakes	8M 2208-A	Front brake caliper	2
74/75	P - - front drum brakes	D3ZZ 2208-A	Front brake cylinder	2
74/77	P - - rear drum brakes	D3ZZ 2208-A	Rear brake cylinder	2
78/	P - - 9" x 1 3/4" rear drum brakes	C0DZ 2208-A	Rear brake cylinder	2
	P - - 10" x 1 3/4" rear drum brakes	8M 2208-A	Rear brake cylinder	2
77/	V - - disc brakes	8M 2208-A	Front and rear brake caliper	4
73	Y - - front disc brakes	C8AZ 2208-A	Front brake caliper	2
74/76	Y - - front disc brakes-	8M 2208-A	Front brake caliper	2
73/76	Y - - rear drum brakes	8M 2208-A	Rear brake cylinder	2
75/76	Y - - rear disc brakes	8M 2208-A	Rear brake caliper	2
2211-2	PLATE (REAR BRAKE BACKING)			

A (Mercury)

73	A(53,57,65) - - 8 cyl. 351,400 and 11" x 2 1/4" brakes w/o locking axle "From 11/1/72"	(RH) ★ D3AZ 2211-E(3/81)	(LH) ★ D3AZ 2212-E(3/81)		1
	A - - 11" x 2 1/4" brakes and locking axle "Before 11/1/72"	(RH) C7AZ 2211-E	(LH) ★ C7AZ 2212-E(3/81)		1
	A - - 8 cyl. 429,460 and 11" x 2 1/4" brakes w/o locking axle "Before 11/1/72"				1
	A - - 8 cyl. 400,429,460 and 3.25 axle ratio "Before 11/1/72"				1
	A(53,57,65-exc. P/C) - - 11" x 2 1/4" brakes and locking axle "From 11/1/72"	(RH) ★ D3AZ 2211-D(2/80)	(LH) ★ D3AZ 2212-D(3/81)		1
	A - - 8 cyl. 400,429,460 and 3.25 axle ratio "From 11/1/72"				1
73	A(71-exc. fleet) - - 8 cyl. and 11" x 2 1/2" brakes w/o locking axle	(RH) ★ D3AZ 2211-C(10/84)	(LH) ★ D3AZ 2212-C (9/83)		1
	A(53,57,65) - - 8 cyl. 429,460 and 11" x 2 1/2" brakes w/o locking axle	(RH) ★ D3VY 2211-A(9/82)	(LH) D3VY 2212-A		1

YEAR	MODEL/RESTRICTIONS	PART NUMBER	DESCRIPTION		QTY.
2211-2	PLATE (REAR BRAKE BACKING) — Cont'd				
	A (Mercury)				
74	A(53,57,65–exc. P/C) – – 8 cyl. 400 and 11" x 2 1/4" brakes w/o locking axle	(RH) ★ D3AZ 2211-E(3/81)	(LH) ★ D3AZ 2212-E(3/81)		1
	A(53,57,65–exc. P/C) – – 8 cyl. 400, 11" x 2 1/4" brakes and locking axle	(RH) ★ D3AZ 2211-D(2/80)	(LH) ★ D3AZ 2212-D(3/81)		1
	A – – 8 cyl. 400 and 11" x 2 1/2" brakes w/trailer towing package III	(RH) D4AZ 2211-B	(LH) D4AZ 2212-B		1
	A(53,57,65–exc. fleet) – – 8 cyl. 460 and 11" x 2 1/2" brakes–w/o trailer towing pkg. III	(RH) ★ D3VY 2211-A(9/82)	(LH) D3VY 2212-A		1
	A(53,57,65–fleet) – – 8 cyl. 460 and 11" x 2 1/2" brakes	(RH) ★ D4AZ 2211-B(3/84)	(LH) ★ D4AZ 2212-B(3/84)		1
	A(P/C) – – 11" x 2 1/2" brakes	(RH) ★ D4AZ 2211-B(3/84)	(LH) ★ D4AZ 2212-B(3/84)		1
	A(71–exc. fleet) – – 8 cyl. 400 and 11" x 2 1/2" brakes w/o locking axle	(RH) ★ D3AZ 2211-C(10/84)	(LH) ★ D3AZ 2212-C (9/83)		1
	A(71–fleet) – – 8 cyl. 400 and 11" x 2 1/2" brakes	(RH) ★ D4AZ 2211-B(3/84)	(LH) ★ D4AZ 2212-B(3/84)		1
	A(71) – – 8 cyl. 460 and 11" x 2 1/2" brakes	(RH) ★ D4AZ 2211-B(3/84)	(LH) ★ D4AZ 2212-B(3/84)		1
75	A(53,65–exc. P/C, fleet) – – 8 cyl. 400 and 11" x 2 1/4" brakes w/o locking axle	(RH) ★ D3AZ 2211-E(3/81)	(LH) ★ D3AZ 2212-E(3/81)		1
	A(53,65–exc. P/C, fleet) – – 8 cyl. 400, 11" x 2 1/4" brakes and locking axle	(RH) ★ D3AZ 2211-D(2/80)	(LH) ★ D3AZ 2212-D(3/81)		1
	A – – 8 cyl. 400 and 11" x 2 1/2" brakes w/Class III trailer towing pkg.	(RH) ★ D4AZ 2211-B(3/84)	(LH) ★ D4AZ 2212-B(3/84)		1
	A(53,65–fleet)–8 cyl. 460 and 11" x 2 1/2" brakes				1
	A(71 fleet) – – 8 cyl. 351, 400 and 11" x 2 1/2" brakes				1
	A(71) – – 8 cyl. 460 and 11" x 2 1/2" brakes				
	A(P/C) – – 11" x 2 1/2" brakes				1
	A(53,65–exc. P/C, fleet) – – 8 cyl. 460 and 11" x 2 1/2" brakes–w/o Class III trailer towing pkg.	(RH) ★ D3VY 2211-A(9/82)	(LH) D3VY 2212-A		1
	A(71–exc. P/C, fleet) – – 8 cyl. 400–w/o 3.25 axle, locking axle or Class III trailer towing pkg.	(RH) ★ D3AZ 2211-C(10/84)	(LH) ★ D3AZ 2212-C (9/83)		1
76/78	A – – 11" x 2 1/2" brakes	(RH) ★ D4AZ 2211-B(3/84) #3203172-R	(LH) ★ D4AZ 2212-B(3/84) #3203171-L	Tapered bearing	1
	A – – 11" x 2 1/2" brakes	(RH) ★ D3VY 2211-A(9/82) #3201715-R	(LH) D3VY 2212-A #3201714-L	Large bearing	1
	A – – 11" x 2 1/2" brakes	(RH) ★ D3AZ 2211-C(10/84) #3202355-R	(LH) D3AZ 2212-C #3202354-L	Small bearing	1
79	A – – 10" x 2 1/2" brakes	(RH) D9AZ 2211-A	(LH) E5AZ 2212-A		1
	A – – 11" x 2 1/4" brakes	(RH) E5AZ 2211-B	(LH) E5AZ 2212-B		1

COPYRIGHT © 1986 — FORD MOTOR COMPANY — DEARBORN, MICHIGAN

1973/79 LINCOLN-MERCURY CARS

YEAR	MODEL/RESTRICTIONS	PART NUMBER	DESCRIPTION	QTY.
2211-2	PLATE (REAR BRAKE BACKING) — Cont'd			
	C (Montego)			
73	C - - 10" x 2 1/2" brakes	(RH) D30Z 2211-B	(LH) D30Z 2212-B	1
	C - - 11" x 2 1/4" brakes- "Before 11/1/72"	(RH) ★ D2SZ 2211-A(2/80)	(LH) ★ D2SZ 2212-A(5/79)	1
	C - - 11" x 2 1/4" brakes- "From 11/1/72"	(RH) D30Z 2211-A	(LH) D30Z 2212-A	1
74	C(53,65) - - 10" x 2 1/2" brakes w/o trailer towing package	(RH) D30Z 2211-B	(LH) D30Z 2212-B	1
	C(P/C, 71) - - 11" x 2 1/4" brakes	(RH) D50Z 2211-C	(LH) D50Z 2212-C	1
75	C(53,65) - - 10" x 2 1/2" brakes w/o trailer towing pkg.	(RH) ★ D50Z 2211-B(6/82)	(LH) ★ D50Z 2212-B(3/81)	1
	C(53,65) - - 10" x 2 1/2" brakes w/trailer towing pkg.	(RH) ★ D50Z 2211-A Not replaced (1/79)	(LH) ★ D50Z 2212-A	1
	C(P/C, 71) - - 11" x 2 1/4" brakes	(RH) D50Z 2211-C	(LH) D50Z 2212-C	1
76	C(53,65) - - 11" x 2 1/4" brakes w/o trailer towing pkg.	(RH) D30Z 2211-A #3202333-R	(LH) D30Z 2212-A #3202332-L	1 1
	C(53,65) - - 11" x 2 1/4" brakes w/trailer towing pkg.	(RH) D50Z 2211-C #3203148-R	(LH) D50Z 2212-C #3203147-L	1
	C(P/C,Taxi) - - 11 x 2 1/4" brakes	(RH) D50Z 2211-C #3203148-R	(LH) D50Z 2212-C #3203147-L	1
	C(71) - - 11 x 2 1/2" brakes	(RH) ★ D60Z 2211-C (6/83) #3204631-R	(LH) ★ D60Z 2212-C(3/84) #3204630-L	1
	D (Lincoln)			
73	D - - 11" x 2 1/2" brakes	(RH) ★ D3VY 2211-A(9/82)	(LH) D3VY 2212-A	1
74	D - - 11" x 2 1/2" brakes	(RH) ★ D4VY 2211-A(5/79)	(LH) ★ D4VY 2212-A(5/79)	1
75	D - - 11" x 2 1/2" brakes	(RH) ★ D4AZ 2211-B(3/84)	(LH) ★ D4AZ 2212-B(3/84)	1
76/	D - - 11" x 2 1/2" brakes	(RH) ★ D4AZ 2211-B(3/84) #3203172-R	(LH) ★ D4AZ 2212-B(3/84) #3203171-L	1
79	D - - 11" x 2 1/2" brakes	(RH) ★ D8AZ 2211-B (6/83)	(LH) D8AZ 2212-B Ball bearing	1
	F (Cougar)			
73	F - - 10" x 2" brakes	(RH) ★ C90Z 2211-B(2/80)	(LH) ★ C90Z 2212-B(11/79)	1
74	F - - 10" x 2 1/2" brakes w/o trailer towing package	(RH) D30Z 2211-B	(LH) D30Z 2212-B	1
75	F - - 10" x 2 1/2" brakes w/o trailer towing pkg.	(RH) ★ D50Z 2211-B(6/82)	(LH) D50Z 2212-A	1
	F - - 10" x 2 1/2" brakes w/ trailer towing pkg.	(RH) ★ D50Z 2211-A Not replaced (1/79)	(LH) ★ D50Z 2212-A	1
76	F - - 11 x 2 1/4" brakes w/o trailer towing pkg.	(RH) D30Z 2211-A #3202333-R	(LH) D30Z 2212-A #3202332-L	1
	F - - 11 x 2 1/4" brakes w/trailer towing pkg.	(RH) D50Z 2211-C #3203148-R	(LH) D50Z 2212-C #3203147-L	1
77	F(53,65) - - 11" x 2 1/4" brakes w/o trailer towing pkg.	(RH) D30Z 2211-A #3202333-R	(LH) D30Z 2212-A #3202332-L	1
	F(53,65) - - 11" x 2 1/4" brakes w/trailer towing pkg.	(RH) D50Z 2211-C #3203148-R	(LH) D50Z 2212-C #3203147-L	1
	F(P/C,Taxi) - - 11" x 2 1/4" brakes	(RH) D50Z 2211-C #3203148-R	(LH) D50Z 2212-C #3203147-L	1
	F(71) - - 11" x 2 1/2" brakes	(RH) ★ D60Z 2211-C (6/83) #3204631-R	(LH) ★ D60Z 2212-C(3/84) #3204630-L	1
78	F	(RH) D50Z 2211-C #3203148-R	(LH) D50Z 2212-C #3203147-L	1
79	F(53,65 w/o trailer towing package)	(RH) D30Z 2211-A #3202333-R	(LH) D30Z 2212-A #3202332-L	1
	F(P/C,53,65 w/trailer towing package)	(RH) D50Z 2211-C #3203158	(LH) D50Z 2212-C #3203159	1

1973/79
LINCOLN-MERCURY CARS

YEAR	MODEL/RESTRICTIONS	PART NUMBER	DESCRIPTION		QTY.
2211-2	PLATE (REAR BRAKE BACKING) — Cont'd				
	G (Monarch)				
75	G - - 10" x 2" brakes	(RH) D5DZ 2211-A	(LH) D5DZ 2212-A		1
76/	G - - 10" x 2" brakes	(RH) D5DZ 2211-A #3204170-R	(LH) D5DZ 2212-A #3204169-L		1
	J (Capri)				
73	J - - 4 cyl.	(RH) ★ D0RY 2211-A(6/82)	(LH) ★ D0RY 2212-A(6/82)		1
	J - - 6 cyl.	(RH) ★ D2RY 2211-B(2/80)	(LH) ★ D2RY 2212-B(6/82)		1
74	J - - 4 cyl.	(RH) ★ D0RY 2211-A(6/82)	(LH) ★ D0RY 2212-A(6/82)		1
	J - - 6 cyl.	(RH) ★ D2RY 2211-B(6/82)	(LH) ★ D2RY 2212-B(6/82)		1
76	J - - 4 cyl.	(RH) ★ D5RY 2211-A r/b D5RY 2211-C(2/80)	(LH) D5RY 2212-A		1
	J - - 6 cyl.	(RH) D5RY 2211-B	(LH) ★ D5RY 2212-B		1
77/78	J	(RH) D5RY 2211-B	(LH) ★ D5RY 2212-B		1
79	J	(RH) ★ D9ZZ 2211-A r/b E3SZ 2211-A(10/84)	(LH) ★ D9ZZ 2212-A r/b E3SZ 2212-A(6/84)		1
	K (Mark IV)				
73	K - - 11" x 2 1/2" brakes	(RH) ★ D3SZ 2211-A(5/79)	(LH) ★ D3SZ 2211-A(5/79)		1
74	K - - 11" x 2 1/2" brakes	(RH) ★ D4SZ 2211-A(5/79)	(LH) ★ D4SZ 2212-A(5/79)		1
	L (Bobcat)				
74/77	L - - 9" x 1 3/4" brakes "Before 5/1/77"	(RH) D4FZ 2211-A	(LH) ★ D4FZ 2212-A r/b D7DZ 2212-A(2/80)		1
77/78	L - - 9" x 1 3/4" brakes "From 5/1/77"	(RH) D7DZ 2211-A	(LH) D7DZ 2212-A		1
79	L	(RH) ★ D9ZZ 2211-A r/b E3SZ 2211-A(10/84)	(LH) ★ D9ZZ 2212-A r/b E3SZ 2212-A(6/84)		1
	P (Comet)				
73/77	P - - 10" x 1 3/4" brakes	(RH) ★ C9OZ 2211-C(12/82)	(LH) C9OZ 2212-C		1
	P (Zephyr)				
78	P - - 9" x 1 3/4" brakes	(RH) D7DZ 2211-A	(LH) D7DZ 2212-A		1
	P - - 10" x 1 3/4" brakes	(RH) ★ D8BZ 2211-A(6/82)	(LH) ★ D8BZ 2212-A(6/82)		1
79	P - - 9" x 1 3/4" rear drum brakes	(RH) ★ D9ZZ 2211-A	(LH) ★ D9ZZ 2212-A r/b E3SZ 2212-A(6/84)		1
	P - - 10" x 1 3/4" rear drum brakes	(RH) E3DZ 2211-A	(LH) E3DZ 2212-A		1

COPYRIGHT © 1986 — FORD MOTOR COMPANY — DEARBORN, MICHIGAN

YEAR	MODEL/RESTRICTIONS	PART NUMBER	DESCRIPTION		QTY.
2211-2	PLATE (REAR BRAKE BACKING) — Cont'd				
	Y (Meteor)				
73	Y(53,57,65) - - 8 cyl. 351,400 and 11" x 2 1/4" brakes w/o locking axle "From 11/1/72"	(RH) ★ D3AZ 2211-E(3/81)	(LH) ★ D3AZ 2212-E(3/81)		1
	Y - - 11" x 2 1/4" brakes and locking axle "Before 11/1/72"	(RH) C7AZ 2211-E	(LH) ★ C7AZ 2212-E(3/81)		1
	Y - - 8 cyl. 429, 460 and 11" x 2 1/4" brakes w/o locking axle "Before 11/1/72"				1
	Y - - 8 cyl. 400, 429, 460 and 3.25 axle ratio "Before 11/1/72"				1
	Y(53,57,65-exc. P/C) - - 11" x 2 1/4" brakes and locking axle "From 11/1/72"	(RH) ★ D3AZ 2211-D(2/80)	(LH) ★ D3AZ 2212-D(3/81)		1
	Y - - 8 cyl. 400, 429, 460 and 3.25 axle ratio "From 11/1/72"				1
	Y(71) - - 8 cyl. 400 and 11" x 2 1/2" brakes w/o locking axle	(RH) ★ D3AZ 2211-C(10/84)	(LH) D3AZ 2212-C		1
	Y - - 8 cyl. 429, 460 and 11" x 2 1/2" brakes	(RH) ★ D3VY 2211-A(9/82)	(LH) D3VY 2212-A		1
	Y(71,P/C) - - 8 cyl. 351, 400, 11" x 2 1/2" brakes and locking axle				1
74	Y(53,57,65-exc. P/C) - - 8 cyl. 351, 400 and 11" x 2 1/4" brakes w/o locking axle	(RH) ★ D3AZ 2211-E(3/81)	(LH) ★ D3AZ 2212-E(3/81)		1
	Y(53,57,65-exc. P/C) - - 8 cyl. 351, 400, 11" x 2 1/4" brakes and locking axle	(RH) ★ D3AZ 2211-D(2/80)	(LH) ★ D3AZ 2212-D(3/81)		1
	Y - - 8 cyl. 400 and 11" x 2 1/2" brakes w/trailer towing package III	(RH) ★ D4AZ 2211-B(3/84)	(LH) ★ D4AZ 2212-B(3/84)		1
	Y(53,57,65-exc. P/C, fleet) - - 8 cyl. 460 and 11" x 2 1/2" brakes	(RH) ★ D3VY 2211-A(9/82)	(LH) D3VY 2212-A		1
	Y(P/C) - - 11" x 2 1/2" brakes	(RH) ★ D4AZ 2211-B(3/84)	(LH) ★ D4AZ 2212-B(3/84)		1
	Y(53,57,65-fleet) - - 8 cyl. 460 and 11" x 2 1/2" brakes	(RH) ★ D4AZ 2211-B(3/84)	(LH) ★ D4AZ 2212-B(3/84)		1
	Y(71 - - exc. fleet) - - 8 cyl. 400 and 11" x 2 1/2" brakes w/o locking axle	(RH) ★ D3AZ 2211-C(10/84)	(LH) D3AZ 2212-C		1
	Y(71-exc. fleet) - - 8 cyl. 400, 11" x 2 1/2" brakes and locking axle	(RH) ★ D3VY 2211-A(9/82)	(LH) D3VY 2212-A		1
	Y(71-fleet) - - 8 cyl. 400 and 11" x 2 1/2" brakes	(RH) ★ D4AZ 2211-B(3/84)	(LH) ★ D4AZ 2212-B(3/84)		1
	Y(71) - - 8 cyl. 460 and 11" x 2 1/2" brakes	(RH) ★ D4AZ 2211-B(3/84)	(LH) ★ D4AZ 2212-B(3/84)		1

YEAR	MODEL/RESTRICTIONS	PART NUMBER	DESCRIPTION		QTY.
2211-2	PLATE (REAR BRAKE BACKING) — Cont'd				
	Y (Meteor)				
75	Y(53,65-exc. P/C, fleet) - - 8 cyl. 351,400 and 11" x 2 1/4" brakes w/o locking axle	(RH) ★ D3AZ 2211-E(3/81)	(LH) ★ D3AZ 2212-E(3/81)		1
	Y(53,65-exc. P/C, fleet) - - 8 cyl. 351,400,11" x 2 1/4" brakes and locking axle	(RH) D3AZ 2211-D	(LH) ★ D3AZ 2212-D(3/81)		1
	Y - - 8 cyl. 400 and 11" x 2 1/2" brakes w/Class III trailer towing pkg.	(RH) ★ D4AZ 2211-B(3/84)	(LH) ★ D4AZ 2212-B(3/84)		1
	Y(71 fleet) - - 8 cyl. 351,400 and 11" x 2 1/2" brakes	(RH) ★ D4AZ 2211-A(3/84)	(LH) ★ D4AZ 2212-B(3/84)		1
	Y(71) - - 8 cyl. 460 and 11" x 2 1/2" brakes				1
	Y(P/C) - - 11" x 2 1/2" brakes				1
	Y(53,65-fleet) - - 8 cyl. 460 and 11" x 2 1/2" brakes				1
	Y(53,65-exc. P/C, fleet) - - 8 cyl. 460 and 11" x 2 1/2" brakes-w/o Class III trailer towing pkg.	(RH) ★ D3VY 2211-A(9/82)	(LH) D3VY 2212-A		1
	Y(71-exc. P/C, fleet) - - 8 cyl. 400-w/o 3.25 axle, locking axle or Class III trailer towing pkg.	(RH) ★ D3AZ 2211-C(10/84)	(LH) D3AZ 2212-C		1
76	Y - - 11" x 2 1/2" brakes	(RH) ★ D4AZ 2211-B(3/84) #3203172-R	(LH) ★ D4AZ 2212-B(3/84) #3203171-L	Tapered bearing	1
	Y - - 11" x 2 1/2" brakes	(RH) ★ D3VY 2211-A(9/82) #3201715-R	(LH) D3VY 2212-A #3201714-L	Large bearing	1
	Y - - 11" x 2 1/2" brakes	(RH) ★ D3AZ 2211-C(10/84) #3202355-R	(LH) D3AZ 2212-C #3202354-L	Small bearing	1
2218-9	Serviced only in kit-group 2200				

QTY.	PART NUMBER		DESCRIPTION
2221	CYLINDER REPAIR KIT (FRONT BRAKE)- For Model Application refer to group 2061-2 (Drum Brakes),2B120-1 (Front Disc Brakes), and 2552-3 (Rear Disc Brakes) Listed in numerical order.		
	C80Z	2221-A	Disc
Consists of			
2	C80Z	2B115-A	Seal
2	C80Z	2207-A	Boot
	D1RY	2221-B	Disc
Consists of			
2	D1RY	2K007-A	Plate
2	D1RY	2L126-A	Cover
4	71EB	2201-AA	Seal
4	71EB	2207-AA	Boot
	D2AZ	2221-B	Drum-1 1/8" dia. cyl.
Consists of			
2	D2AA	2201-BA	Cup
1	D2AA	2205-AA	Spring
2	OM	2207-A	Boot
2	D2AA	2B508-AA	Expander
	D20Z	2221-A	Disc
Consists of			
2	D20A	2B115-A	Seal
2	D30A	2207-AA	Boot
	D4FZ	2221-A	Disc
Consists of			
2	D42A	2B115-AA	Seal
2	D42A	2207-AA	Boot
	D5DZ	2221-A	
Consists of			
2	D5DA	2207-AA	Boot
2	D5DA	2B115-AA	Seal
	D8BZ	2221-A	Disc
Consists of			
2	D8BC	2B115-AB	Seal
2	D8BC	2207-AA	Boot
	D9AZ	2221-A	Disc
Consists of			
2	D9AC	2B115-AB	or alternate
	D9AC	2B115-AC	Seal
2	D9AC	2207-AB	or alternate
	D9AC	2207-AC	Boot
	D9BZ	2221-A	Disc
Consists of			
2	D8BC	2B115-AA	Seal
2	D8BC	2207-AA	Boot

COPYRIGHT © 1986 — FORD MOTOR COMPANY — DEARBORN, MICHIGAN

1973/79 LINCOLN-MERCURY CARS

YEAR	MODEL/RESTRICTIONS	PART NUMBER	DESCRIPTION	QTY.
2L223	GASKET (BRAKE MASTER CYLINDER)			
73/74	J	★ D1RY 2L223-A(6/82)		1
2B224	RETAINER (BRAKE MASTER CYLINDER PUSH ROD)-Also serviced in kit-group 2004			
73/74	C - - manual brakes	C7AZ 2B224-A		1
73	F - - manual brakes			1
75/	G - - manual brakes			1
73/	L - - manual brakes			1
73/77	P - - manual brakes			1
78/	P - - manual brakes	D8BZ 2B224-A		1
79	J - - manual brakes			1
2A225	SPRING REPAIR KIT (DRUM BRAKE)			
73/79	A - - 11" rear drum	D9AZ 2A225-B		1
73/76	C - - 11" rear drum			
73	D - - rear drum			
75/78	D - - rear drum			
73/74	K - - rear drum			
76/79	F - - 11" rear drum			
73/76	Y - - rear drum			
	Consists of			
	2-COMM 2035-A- Spring-return		2-COMM 2036-A- Spring-return	
	2-C3AZ 2035-A- Spring-return		2-C1SS 2049-A Spring-adjuster	
	1-IS 4785 Instruction sheet			
79	A - - 10" rear drum	D9AZ 2A225-A		1
73/75	C - - 10" rear drum			1
75/79	G - - 10" rear drum			
	Consists of			
	2-C2OZ 2035-A Spring-return	2-D2OZ 2035-A Spring-return	2-C1SS 2049-A Spring-adjuster	
79	J - - 9" rear drum	D9BZ 2A225-A		1
74/79	L - - 9" rear drum			1
	Consists of			
	2-D1FZ 2296-A Spring-return	2-D1FZ 2296-B Spring-return	2-D1FZ 2049-A Spring-adjuster	
73/74	J - - rear drum	★ D9RZ 2A225-A(3/84)		1
	Consists of			
	2-DORY 2035-A Spring-return		2-DORY 2035-B Spring-return	
2A231	Refer to group 2A487			
2K236	SPRING (FRONT BRAKE PAD TENSION)			
73	J "Before 12/1/72"	D2RY 2K236-A		4
73/75	J "From 12/1/72"	D3RY 2K236-A		4
76/78	J	D6RY 2K236-A		4
2240	BAFFLE (FRONT BRAKE GREASE)			
73/75	P - - drum brakes	★ C2OZ 2240-A(5/79)		2
		★ 357629-S	(XX-303)-washer-lock-3/8"	AR
		357381-S	(BB-807-D)-bolt-T-hd.-3/8"-24 x 2 3/16"	AR
		★ 372116-S	(MM-140-E)-nut-hex. lock-3/8"-24	AR
		★ 375748-S100	(BB-807-EA)-bolt-T-hd.-3/8"-24 x 1 3/16"	AR
2B240	PIN (FRONT BRAKE SHOE ADJUSTING LEVER PIVOT)			
74	D	★ D4AZ 2B240-A(5/79)	5/16" O.D. x 13/16" long	2
2244	CLIP (BRAKE LINE)			
73/74	J	★ DORY 2244-A(6/82)		1
2B245	RETAINER (BRAKE MASTER CYLINDER FILLER CAP)			
Note 1	Bendix master cylinder identified with "W" stamped on floor with spot-face.			
Note 2	GPD master cylinder identified with "D" stamped on side without spot-face.			
73/	A(exc.71) - - rear drum brake	D2AZ 2B245-A		1
73/76	A(71) - - rear drum brake "Before 1/1/76"	D2AZ 2B245-A		1
76/78	A(71) - - rear drum brake "From 1/1/76"	D5VZ 2B245-A		1
75/78	A - - rear disc brake	D5VZ 2B245-A		1
73/76	C	D2OZ 2B245-A		1
73/75	D - - rear drum brake	D2AZ 2B245-A		1
75	D - - rear disc brake	D5VZ 2B245-A		1

YEAR	MODEL/RESTRICTIONS	PART NUMBER	DESCRIPTION	QTY.
2B245	RETAINER (BRAKE MASTER CYLINDER FILLER CAP)			
Note 1	Bendix master cylinder identified with "W" stamped on floor with spot-face.			
Note 2	GPD master cylinder identified with "D" stamped on side without spot-face.			
76/	D	D5VZ 2B245-A		1
73	F - - disc brakes	C80Z 2B245-A	5 1/2" opening	1
74/	F	D20Z 2B245-A		1
75/	G - - rear drum brakes	D4DZ 2B245-A	Note 2	1
75/	G - - rear disc brakes	D2AZ 2B245-A		1
76/	G - - rear drum brake	★ D6FZ 2B245-A(6/82)	Note 1	1
79	J	D8BZ 2B245-A		1
73	K	D20Z 2B245-A	6" opening	1
74	K	D2AZ 2B245-A		1
75/	K	D5VZ 2B245-A		1
74/	L	D4DZ 2B245-A	Note 2	1
76/	L	★ D6FZ 2B245-A(6/82)	Note 1	1
73	P - - drum brakes	C7AZ 2B245-C	5" opening	1
74/77	P	D4DZ 2B245-A		1
78/	P	D8BZ 2B245-A		1
77/	V	D2AZ 2B245-A		1
73/76	Y(exc.71) - - rear drum brake	D2AZ 2B245-A		1
73/76	Y(71) - - rear drum brake "Before 1/1/76"	D2AZ 2B245-A		1
76	Y(71) - - rear drum brake "From 1/1/76"	D5VZ 2B245-A		1
75/76	Y - - rear disc brake	D5VZ 2B245-A		1
2248	BOLT (REAR BRAKE BACKING PLATE)			
76/	A - - rear drum brakes-8.7" drum	E5TZ 2248-A	3/8"-24 x 1" long-hex. head	AR
73/	A - - rear drum brakes-9" drum	C2AZ 2248-A	1/2" -20 x 1 1/8" long-tee head	8
75/	A - - rear disc brakes-9" disc	★ D5SZ 2248-A(3/84)	1/2"-20 x 1 3/8" long-tee head	AR
76	C - - rear drum brakes-9" drum	D60Z 2248-A	3/8"-24 x 1 1/8" long-tee head	AR
73/	D - - rear drum brakes-9" drum	C2AZ 2248-A	1/2"-20 x 1 1/8" long-tee head	8
75/	D - - rear disc brakes-9" disc	★ D5SZ 2248-A(3/84)	1/2"-20 x 1 3/8" long-tee head	AR
76/77	F - - rear drum brakes-9" drum	D60Z 2248-A	3/8"-24 x 1 1/8" long-tee head	AR
78/	F - - rear drum brake	D8AZ 2248-A	3/8-24 x 1 23/64" long-tee head	AR
76/77	G - - rear drum brakes-8.7" drum	E5TZ 2248-A	3/8"-24 x 1" long-hex. head	AR
75/78	G - - rear disc brakes-9" disc	★ D5SZ 2248-A(3/84)	1/2"-20 x 1 3/8" long-tee head	AR
76/77	G - - rear drum brakes-8" drum	D6DZ 2248-A	3/8"-24 x 1 1/8" long-tee head	AR
78/	G - - rear drum brake	D8AZ 2248-A	3/8-24 x 1 23/64" long-tee head	AR
78/	J - - rear drum brake	D8AZ 2248-A	3/8-24 x 1 23/64" long-tee head	AR
75/	K - - rear disc brakes-9" disc	★ D5SZ 2248-A(3/84)	1/2"-20 x 1 3/8" long-tee head	AR
73/74	K - - rear drum brakes-9" drum	C2AZ 2248-A	1/2"-20 x 1 1/8" long-tee head	AR
73/	L - - rear drum brakes-9" drum	D60Z 2248-A	3/8"-24 x 1 1/8" long-tee head	AR
76/	P - - rear drum brakes-8" drum	D6DZ 2248-A	3/8"-24 x 1 1/8" long-tee head	AR
77	V - - rear disc. brakes-9" disc	★ D5SZ 2248-A(3/84)	1/2" - 20 x 1 3/8" long-tee head	AR
76	Y - - rear drum brakes-8.7" drum	E5TZ 2248-A	3/8" - 24 x 1" long-hex head	AR
73/76	Y - - rear drum brakes-9" drum	C2AZ 2248-A	1/2"-20 x 1 1/8" long-tee head	8
75/76	Y - - rear disc brakes-9" disc	★ D5SZ 2248-A(3/84)	1/2"-20 x 1 3/8" long-tee head	AR
2L248	ADAPTER (POWER BRAKE BOOSTER MOUNTING)			
73/74	J - - 4 cyl.	★ D1RY 2L248-B(12/80)		1
76/77	J			1
73/74	J - - 6 cyl.	★ D1RY 2L248-A(2/80)		1
2251	CLIP (BRAKE LINE TO REAR AXLE)			
79	J,L,P - w/6 3/4" axle	★ D9BZ 2251-A(1/85)		1
79	J,L,P - w/7 1/2" axle	E3SZ 2251-A		1
2B253	TUBE ASSY. (BRAKE MASTER CYLINDER OUTLET REAR)			
	Improvise from bulk tubing (2269) and improvise insulators from rubber hose, friction tape etc.			
		358609-S8	(MM-103)-nut-3/16" tube-7/16"-24	AR
2B257	VALVE ASSY. (BRAKE PRESSURE DIFFERENTIAL)			
73/74	A(53,57,65-exc. P/C)	★ D2AZ 2B257-A	3-way control valve-iron-r/b D5AZ 2B257-B(6/76)	1
73/74	A(71, P/C)	★ D20Z 2B257-A	R/b D5AZ 2B257-A (7/75)	1
75	A(53,65) - - rear drum brake	★ D5AZ 2B257-B r/bD60Z 2B257-A(3/77)	#D5AA 2B382-BA	1

COPYRIGHT © 1986 — FORD MOTOR COMPANY — DEARBORN, MICHIGAN

1973/79 LINCOLN-MERCURY CARS

YEAR	MODEL/RESTRICTIONS	PART NUMBER	DESCRIPTION	QTY.
2B257	VALVE ASSY. (BRAKE PRESSURE DIFFERENTIAL) — Cont'd			
75	A(71) - - rear drum brake- "From 10/1/74"	D5AZ 2B257-A	#D5AA 2B382-AA	1
75	A(53,65) - - rear disc brake	★ D5MY 2B257-A	#D5MA 2B328-AA or AB-r/b D6AZ 2B257-E(2/80)	1
75	A(71) - - rear disc brake	★ D5VY 2B257-A (9/83)	#D5VA 2B328-AA	1
76	A(exc. 71) - - rear drum brake	D6SZ 2B257-B		1
76/78	A(71) - - rear drum brake	D6AZ 2B257-F		1
76	A(exc. 71 & P/C) - - rear disc brake	★ D6AZ 2B257-E (9/83)		1
76/78	A(71) - - rear disc brake	D6AZ 2B257-G		1
76/78	A(P/C) - - rear disc brake	★ D6AZ 2B257-H(3/81)		1
77/78	A(exc.71) - - rear disc brake	D6DZ 2B257-B		1
77/78	A(exc.71) - - rear drum brake	D7AZ 2B257-A		1
79	A(53,65, exc. P/C, T/T)	D9AZ 2B257-C	#D9AC 2B382-DA	1
79	A(71, exc. P/C, T/T)	D9AZ 2B257-D	#D9AC 2B382-EA	1
79	A(P/C, T/T)	D9AZ 2B257-E	#D9AC 2B382-CA	1
73/75	C	D5AZ 2B257-A	#D5AA 2B382-AA	1
76	C(exc. 71)	D60Z 2B257-A		1
76	C(71)	D6AZ 2B257-F		1
73/75	D - - rear drum brake	D5AZ 2B257-A	#D5AA 2B382-AA	1
75/76	D - - rear disc brake	D6AZ 2B257-E		1
76/78	D - - rear drum brake	D6AZ 2B257-F		1
77/	D - - rear disc brake	D6DZ 2B257-B		1
79	D - - rear drum brake	D60Z 2B257-A		1
73	F - - disc brake	★ D00Z 2B257-C	R/b D9BZ 2B257-B (2/79)	1
74/75	F	D5AZ 2B257-A	#D5AA 2B382-AA	1
76	F	D60Z 2B257-A		1
77	F(exc.71)	D70Z 2B257-A		1
	F(71)	D6AZ 2B257-F		1
78/	F	D60Z 2B257-A		1
75	G - - rear drum brake	D5ZZ 2B257-A		1
75/76	G - - rear disc brake	D6DZ 2B257-B		1
76	G - - rear drum brake- "Before 1/1/76"	★ D6DZ 2B257-A r/bD6DZ 2B257-C(1/78)		1
76	G - - rear drum brake- "From 1/1/76"	D6DZ 2B257-C		1
77/78	G	★ D7DZ 2B257-A	R/b D9DZ 2B257-A(8/79)	1
79	G	D9DZ 2B257-A		1
73/76	J	D4RY 2B257-A	Valve and switch assy.- 4 way valve	1
76/78	J	★ D6RY 2B257-A(2/80)	Valve and switch assy.- 5 way valve valid for Capri I	1
79	J	D9ZZ 2B257-A		1
73/74	K	D5AZ 2B257-A	3-way control valve-iron	1
75/76	K "Before 1/1/76"	★ D5LZ 2B257-A	#D5LA 2B328-AA or AB-r/b D6SZ 2B257-C(12/81)	1
76	K "From 1/1/76"	D6SZ 2B257-C		1
77/	K	D6DZ 2B257-B		1
74	L(62,64)	★ D00Z 2B257-C	R/b D9BZ 2B257-B (2/79)	1
74	L(73)	★ D4FZ 2B257-A(2/80)		1
75	L(62,64)	D5ZZ 2B257-A		1
75	L(73)	D4DZ 2B257-A		1

1973/79
LINCOLN-MERCURY CARS

YEAR	MODEL/RESTRICTIONS	PART NUMBER	DESCRIPTION	QTY.
2B257	VALVE ASSY. (BRAKE PRESSURE DIFFERENTIAL) — Cont'd			
76	L(62,64) "Before 1/1/76"	★ D6FZ 2B257-A	R/b D9FZ 2B257-A (2/80)	1
76/78	L(62,64) "From 1/1/76"	D9FZ 2B257-A		1
76/78	L(73) "From 1/1/76"	D9BZ 2B257-B		1
79	L(62,64)	D9FZ 2B257-A		1
	L(73)	D9BZ 2B257-B		1
73	P	D0DZ 2B257-C		1
74	P - - drum brake "Before 12/3/73"	★ D5DZ 2B257-A (9/83)		1
74	P - - drum brake "From 12/3/73"	★ D00Z 2B257-C	R/b D9BZ 2B257-B (2/79)	1
74	P - - disc brake	D4DZ 2B257-A		1
75	P - - drum brake	★ D5DZ 2B257-A (9/83)	#D5DA 2B257-A (9/83)A	1
75	P - - disc brake	D4DZ 2B257-A		1
76/77	P	D9BZ 2B257-B		1
78	P(exc. 71)	D9BZ 2B257-B		1
78/	P(71)	D9BZ 2B257-A		1
79	P(exc. 71)	D9BZ 2B257-B		1
77/	V	D7DZ 2B257-A		1
73/75	Y(exc.71) - - rear drum brake	D60Z 2B257-A		1
	Y(71) - - rear drum brake	D5AZ 2B257-A		1
	Y - - rear disc brake	★ D5VY 2B257-A (9/83)		1
76	Y(exc.71) - - rear drum brake	D6SZ 2B257-B		1
	Y(71) - - rear drum brake	D6AZ 2B257-F		1
	Y(exc. 71,P/C) - - rear disc brake	D6AZ 2B257-E		1
	Y(71) - - rear disc brake	D6AZ 2B257-G		1
76	Y(P/C) - - rear disc brake	★ D6AZ 2B257-H(3/81)		1
73/	C	383420-S100	(BB-429-WK)-bolt (to bracket)-hex hd.-5/16"-18 x 1 5/8"	1
73/78	J	E600112-S72	Bolt-hex. hd.-M6 x 35 (Metric coarse)	1
		E630025-S71	Washer-flat-M6 (Metric)	1
		34806-S7	(X-64)-Lockwasher-split ring-M8 (Metric)	1
		E620012-S72	Nut-hex.-M6 (Metric coarse)	1
2B260	BRACKET (BRAKE PRESSURE DIFFERENTIAL VALVE)			
73/	A	D2AZ 2B260-A		1
73/75	C	D20Z 2B260-A		1
76	C	D60Z 2B260-A		1
73/	D	D2AZ 2B260-A		1
74/75	F	D20Z 2B260-A		1
76/	F	D60Z 2B260-A		1
75/	G,V - - rear disc brake	★ D5DZ 2B260-A(3/81)		1
	G - - rear drum brake	★2B260	Serviced only in 2B257 assy.	1
73/	K	D20Z 2B260-A		1
73/76	Y	D2AZ 2B260-A		1

YEAR	MODEL/RESTRICTIONS	PART NUMBER: CYLINDER ASSY.	PART NUMBER: REPAIR KIT	DESCRIPTION	QTY.
2261-2	CYLINDER ASSY. (REAR BRAKE)				
	A (Mercury)				
73/75	A,Y - - 11" x 2 1/4" brakes	D3AZ 2261-C	D2SZ 2128-A	R.H.-1" dia.	1
	A,Y - - 11" x 2 1/2" brakes	D3AZ 2261-C	D2SZ 2128-A	L.H.	1
76/78	A,Y - - 11" x 2 1/2" brakes	D3AZ 2261-C	D2SZ 2128-A	R.H.-1" dia.	1
		D3AZ 2261-C	D2SZ 2128-A	L.H.	1
79	A - - 10" x 2 1/2" brakes	D9AZ 2261-A	D9AZ 2128-A	R.H.-L.H.-7/8" dia.	2
	A - - 11" x 2 1/4" brakes	D9AZ 2261-B	D9AZ 2128-B	R.H.-L.H.-15/16" dia.	2

COPYRIGHT © 1986 — FORD MOTOR COMPANY — DEARBORN, MICHIGAN

1973/79 LINCOLN-MERCURY CARS

2261-2 CYLINDER ASSY. (REAR BRAKE) — Cont'd

C (Montego)

YEAR	MODEL/RESTRICTIONS	PART NUMBER CYLINDER ASSY.	PART NUMBER REPAIR KIT	DESCRIPTION	QTY.
73	C(53,63,65) – – 6 cyl., 8 cyl. 302 and 10" x 2 1/2" brakes C(53,63,65–exc. P/C) – – 8 cyl. 351,400,429 and 10" x 2 1/2" brakes	★ D30Z 2261-A(6/82)	D30Z 2128-A	L.H.–#1 green and 1 yellow–15/16" dia.	1 1
		D30Z 2262-A	D30Z 2128-A	R.H.	1
	C(53,65–P/C) – – 8 cyl. 351,400, 429,460, and 11" x 2 1/4" brakes	D1AZ 2261-A	D2ZZ 2128-B	R.H.–#1 green and 1 orange–15/16" dia.	1
		D1AZ 2262-A	D2ZZ 2128-B	L.H.	1
	C(71) – – 6 cyl., 8 cyl. 302 and 10" x 2 1/2" brakes	D30Z 2261-B	D2SZ 2128-A	L.H.–#1 red and 1 green–1" dia.	1
		★ D30Z 2262-B(9/85)	D2SZ 2128-A	R.H.	1
	C(71) – – 8 cyl. 351,400,429 and 11" x 2 1/4" brakes	D30Z 2261-D	D2SZ 2128-A	L.H.–#1 red and 1 orange–1" dia.	1
		D30Z 2262-D	D2SZ 2128-A	R.H.	1
74	C(53,65) – – 10" x 2 1/2" brakes	★ D30Z 2262-B(9/85)	D2SZ 2262-A	R.H.–#1 red and 1 green–1" dia.	1 1
		★ D30Z 2261-B(12/85)	D2SZ 2128-A	L.H.	1
74	C(P/C) – – 11" x 2 1/4" brakes	D1AZ 2261-A	D30Z 2128-A	R.H.–#1 green and 1 orange–15/16" dia.	1
		D1AZ 2262-A	D30Z 2128-A	L.H.	1
74/	C(71) – – 11" x 2 1/4" brakes	D30Z 2261-D	D2SZ 2128-A	R.H.–#1 red and 1 orange–1" dia.	1
		D30Z 2262-D	D2SZ 2128-A	L.H.	1
75	C – – 10" x 2 1/2" brakes	★ D30Z 2262-B(9/85)	D2SZ 2128-A	L.H.–#1 red and 1 green–1" dia.	1
		★ D30Z 2261-B(12/85)	D2SZ 2128-A		1
75	C(P/C, Taxi) – – 11" x 2 1/4" brakes	D5DZ 2261-A	D30Z 2128-A	R.H.–#1 gray and 1 orange–15/16" dia.	1
		D5DZ 2262-A	D30Z 2128-A	L.H.	1
76	C(exc. 71) – – 11" x 2 1/4" brakes	D30Z 2262-A	D30Z 2128-A	R.H.–#1 gray and 1 orange–15/16" dia.	1
		★ D30Z 2261-A(12/85)	D30Z 2128-A	L.H.	1
	C(71) – – 11" x 2 1/2" brakes	D30Z 2262-D	D2SZ 2128-A	R.H.–#1 red and 1 orange–1" dia.	1
		D3SZ 2261-A	D3SZ 2128-A	L.H.	1

D (Lincoln)

YEAR	MODEL/RESTRICTIONS	PART NUMBER CYLINDER ASSY.	PART NUMBER REPAIR KIT	DESCRIPTION	QTY.
73/	D	D3AZ 2261-C	D2SZ 2128-A	R.H.–1" dia.	1
		D3AZ 2261-C	D2SZ 2128-A	L.H.	1

F (Cougar)

YEAR	MODEL/RESTRICTIONS	PART NUMBER CYLINDER ASSY.	PART NUMBER REPAIR KIT	DESCRIPTION	QTY.
73	F – – 10" x 2" brakes–6 cyl. 250 and 8 cyl. 302 engines	D3ZZ 2261-A	D3TZ 2128-A	R.H.–#1 brown and 1 orange–7/8" dia.	1
		★ D3ZZ 2262-A(9/85)	D3TZ 2128-A	L.H.	1
	F – – 10" x 2" brakes–8 cyl. 351 eng.	★ D3ZZ 2262-A(9/85)	D3TZ 2128-A	R.H.–#1 brown and 1 orange–7/8" dia.	1
		★ D3ZZ 2262-A(9/85)	D3TZ 2128-A	L.H.	1
74/75	F – – 10" x 2 1/2" brakes	★ D30Z 2262-B(9/85)	D2SZ 2128-A	R.H.–#1 red and 1 green–1" dia.	1
		★ D30Z 2261-B(12/85)	D2SZ 2128-A	L.H.	1
76	F – – 11" x 2 1/4" brakes	D30Z 2262-A	D30Z 2128-A	R.H.–#1 gray and 1 orange–15/16" dia.	1
		D30Z 2261-A	D30Z 2128-A	L.H.	1

YEAR	MODEL/RESTRICTIONS	PART NUMBER CYLINDER ASSY.	PART NUMBER REPAIR KIT	DESCRIPTION	QTY.
2261-2	CYLINDER ASSY. (REAR BRAKE) — Cont'd				
	F (Cougar)				
77/	F(exc.P/C,Taxi,71) - - 11" x 2 1/4" brakes	D1AZ 2262-A	D30Z 2128-A	R.H.-#1 green and 1 orange-15/16" dia.	1
		D1AZ 2261-A	D30Z 2128-A	L.H.	1
	F(P/C,Taxi) - - 11" x 2 1/4" brakes	D30Z 2262-D	D2SZ 2128-A	R.H.-#1 red and 1 orange - 1" dia.	1
		D30Z 2261-D	D2SZ 2128-A	L.H.	1
	F(71) - - 11" x 2 1/2" brakes	D30Z 2261-D	D2SZ 2128-A	R.H.-#1 red and 1 orange - 1" dia.	
		D30Z 2262-D	D2SZ 2128-A	L.H.	1
	G (Monarch)				
75/77	G - - 10" x 2" brakes	D5DZ 2261-A	D30Z 2128-A	R.H.-#1 gray and 1 orange-15/16" dia.	1
		D5DZ 2262-A	D30Z 2128-A	L.H.	1
78/	G	D1AZ 2262-A	D30Z 2128-A	R.H.-#1 green and 1 orange-15/16" dia.	1
		D1AZ 2261-A	D30Z 2128-A	L.H.	1
	J (Capri)				
73/74	J	D0RY 2261-A	D0RY 2128-A	R.H. and L.H.	2
76	J "Before 8/1/75"	D5RY 2261-A	D5RY 2128-A	R.H. and L.H.	2
76/78	J "From 8/1/75"	D6RY 2261-A	D6RY 2128-A	R.H. and L.H.	2
79	J - - 9" x 1 3/4" brakes	D8BZ 2261-A	D8BZ 2128-A	R.H.-13/16" dia.	1
		D8BZ 2261-A	D8BZ 2128-A	L.H.	1
	K (Mark IV)				
73/74	K - - 11" x 2 1/2" brakes	D30Z 2261-D	D2SZ 2128-A	R.H.-#1 red and 1 orange-1" dia.	1
		D30Z 2262-D	D2SZ 2128-A	L.H.	1
	L (Bobcat)				
74/	L - - 9" x 1 3/4" brakes	D2FZ 2261-C	D2FZ 2128-C	R.H.-7/8" dia.	1
		D2FZ 2261-C	D2FZ 2128-C	L.H.	1
	P (Comet)				
73	P - - 10" x 1 3/4" brakes	★D3DZ 2261-A(3/81)	D2DZ 2128-A	R.H.-#1 blue and 1 orange-27/32" dia.	1
		★D3DZ 2262-A(3/81)	D2DZ 2128-A	L.H.	1
74/75	P - - 10" x 1 3/4" brakes	D3ZZ 2261-A	D3TZ 2128-A	R.H.-#1 brown and 1 orange-7/8" dia.	1
		★D3ZZ 2262-A(9/85)	D3TZ 2128-A	L.H	1
76/77	P - - 10" x 1 3/4" brakes	D5DZ 2261-A	D30Z 2128-A	R.H.-15/16" dia.	1
		D5DZ 2262-A	D30Z 2128-A	L.H.	1
	P (Zephyr)				
78/	P - - 9" x 1 3/4" brakes	D8BZ 2261-A	D8BZ 2128-A	R.H. - 13/16" dia.	1
		D8BZ 2261-A	D8BZ 2128-A	L.H.	1
	P - - 10" x 1 3/4" brakes	D8BZ 2261-B	D8BZ 2128-B	R.H. - 13/16" dia	1
		D8BZ 2262-A	D8BZ 2128-B	L.H.	1

COPYRIGHT © 1986 — FORD MOTOR COMPANY — DEARBORN, MICHIGAN

YEAR	MODEL/RESTRICTIONS	PART NUMBER CYLINDER ASSY.	PART NUMBER REPAIR KIT	DESCRIPTION	QTY.
2261-2	CYLINDER ASSY. (REAR BRAKE) — Cont'd				
	Y (Meteor)				
73/75	Y - - 11" x 2 1/4" brakes	D3AZ 2261-C	D2SZ 2128-A	R.H. - 1" dia.	1
		D3AZ 2261-C	D2SZ 2128-A	L.H.	1
73/76	Y - - 11" x 2 1/2" brakes	D3AZ 2261-C	D2SZ 2128-A	R.H. - 1" dia.	1
		D3AZ 2261-C	D2SZ 2128-A	L.H.	1

YEAR	MODEL/RESTRICTIONS	PART NUMBER	DESCRIPTION	QTY.
73/	A,D,Y	383755-S2	(BB-574-CD)-screw & washer-to backing plate-5/16"-18 x 1/2"	4
2B262	GASKET (BRAKE PRESSURE DIFFERENTIAL VALVE)			
73/74	J	D0RY 2B262-A	Rubber-also serviced in assy.-refer to group 2B257	1
2263-4	TUBE ASSY. (FRONT BRAKE) Improvise from bulk tubing (2269) and improvise insulators from rubber hose, friction tape etc. Also refer to group 2A361-2			
		358609-S8	(MM-103)-nut-3/16" tube-7/16"-24	AR
		382967-S100	(MM-102)-nut-3/16" tube-3/8"-24	AR
74	F,L	385733-S2	(GG-163-HG)-cup (brake tube to sidemember)-9/32"	1
2B264	SWITCH (BRAKE PRESSURE DIFFERENTIAL VALVE WARNING LAMP)			
73/74	A,C,D,F,K,L,P,Y	★ D0AZ 2B264-A	r/b D5AZ 2B264-A (2/77)	1
75/78	A,C,F,G,L,P,V,Y	D5AZ 2B264-A		1
75/	D,K,V			1
77/	J			1
79	A,G,J,L,P	D9BZ 2B264-A		1
73/74	J "Before 4/1/74"	★ D0AZ 2B264-A	r/b D5AZ 2B264-A (2/77)	1
74/76	J "From 4/1/74"	★ D4RY 2B264-A(10/84)		1
2265	TUBE ASSY. (BRAKE MASTER CYLINDER TO REAR BRAKE HOSE) Improvise from bulk tubing (2269) and improvise insulators from rubber hose, friction tape etc.			
		★ 383368-S2	(UU-163-YM)-clip (tube to floor pan)-3/4" x 1 5/16"	AR
		★ 352605-S2	(GG-149)-clip (tube to underbody)-3/4" x 1 5/8"	AR
		384766-S	(GG-260-A)-clip (tube to frame side rail)-5/8" x 1 1/2"	AR
		382967-S100	(MM-102)-nut-3/16" tube-3/8"-24	AR
		358609-S8	(MM-103)-nut-3/16" tube-7/16"-24	AR
		375096-S35	(MM-105-F)-nut-3/16" tube-1/2"-20	AR
		351736-S36	(MM-105-H)-nut-3/16" tube-9/16"-24	AR
73/	A,C,D,Y	381877-S2	(UU-52-AF)-screw (tube to frame)-hex hd.-1/4"-14 x 1/2"	AR
73/	L,P	55981-S2	(UU-254-E)-screw (retain clip to underbody)-hex hd.-1/4"-14 x 1/2"	AR
2265	TUBE ASSY. (BRAKE and FUEL LINE)			
73/	A,C,D,F,G,K,L,P,V,Y	D6AZ 2265-B	Steel-3/16" x 12"-incl. flared end and fittings	AR
		D6AZ 2265-C	Steel-3/16" x 20"-incl. flared end and fittings	AR
		D6AZ 2265-D	Steel-3/16" x 30"-incl. flared end and fittings	AR
		D6AZ 2265-E	Steel-3/16" x 40"-incl. flared end and fittings	AR
		D6AZ 2265-F	Steel-3/16" x 51"-incl. flared end and fittings	AR
		D6AZ 2265-G	Steel-3/16" x 60"-incl. flared end and fittings	AR
		D6AZ 2265-H	Steel-1/4" x 12"-incl. flared end and fittings	AR
		D6AZ 2265-J	Steel-1/4" x 20"-incl. flared end and fittings	AR
		D6AZ 2265-K	Steel-1/4" x 30"-incl. flared end and fittings	AR
		D6AZ 2265-L	Steel-1/4" x 40"-incl. flared end and fittings	AR
		D6AZ 2265-M	Steel-1/4" x 51"-incl. flared end and fittings	AR
76/	A,B,F,G,L,P,S,V	D6AZ 2265-N	Steel-1/4" x 60" - incl. flared end and fittings	AR
74	F,L	385733-S2	(GG-163-HG)-clip (tube to sidemember)-9/32"	1
		87942-S8	(I-20)-nut-3/16" tube-3/8"-24	AR

YEAR	MODEL/RESTRICTIONS	PART NUMBER	DESCRIPTION	QTY.
2265	TUBE ASSY. (BRAKE and FUEL LINE) — Cont'd			
		87943-S8	(I-21)-nut-1/4" tube-7/16"-24	AR
76/	A,B,F,G,L,P,S,V	D6AZ 2133-A	Nut-3/16" tube-3/8"-24 (Weatherhead))	AR
76/	A,B,F,G,L,P,S,V	D6AZ 2133-B	Nut- 1/4" tube- 7/16" 7-24 (Weatherhead)	AR
2267-8	TUBE ASSY. (REAR BRAKE) Improvise from bulk tubing (2269) and improvise insulators from rubber hose, friction tape etc.			
		358609-S8	(MM-103)-nut-3/16" tube-7/16"-24	AR
		382967-S100	(MM-102)-nut-3/16" tube-3/8"-24	AR
73/	A,C,D,K,Y	381877-S2	(UU-52-AF)-screw (tube to rear axle)-hex hd.-5/16"-18 x 3/4"	AR
2269	TUBING (BRAKE and FUEL LINE)			
73/	A,C,D,F,G,J,K,L,P,V,Y	8C 2269-A	5/16" O.D. x 25 ft. roll-steel	AR
		8C 2269-B	3/16" O.D. x 25 ft. roll-steel	AR
		B7Q 2269-A	3/8" O.D. x 25 ft. roll-steel	AR
		8QH 2269-A	3/8" O.D. x 25 ft. roll-copper	AR
		8QH 2269-B	1/2" O.D. x 25 ft. roll-copper	AR
		8QH 2269-C	5/8" O.D. x 15 ft. roll-copper	AR
		8QH 2269-D	1/4" O.D. x 25 ft. roll-copper	AR
		91A 2269	1/4" O.D. x 25 ft. roll-steel	AR
73/	A,C,D,F,K	★ 382071-S	(MM-276-D)-nut (right rear brake tube to axle)-spring-1/4"-14	1
73/78	J	E855016-S72	Male pipe connector-M12 (Metric coarse)-used on brake lines	AR
		E855038-S71	Nut-M10 (Metric coarse)-used on brake lines	AR
2B269	TUBE ASSY. (FRONT BRAKE TUBE TO DIFFERENTIAL VALVE) Improvise from bulk tubing (2269) and improvise insulators from rubber hose, friction tape etc.			
		358609-S8	(MM-103)-nut-3/16" tube-7/16"-24	AR
		382967-S100	(MM-102)-nut-3/16" tube-3/8"-24	AR
73/	P	55981-S2	(UU-254-E)-screw (tube to dash panel and fender apron)-hex hd.-1/4"-14" x 1/2"	AR
73/	P	383057-S	(II-61-X)-union-3/16" tube	1
73/	L,P	377774-S	(GG-270)-clip (tube to dash panel)-1/2" x 1 1/8"	1
73/	L,P	★ 383368-S2	(GG-163-YM)-clip (tube to dash panel)-3/4" x 1 5/16"	2
2A275	BRACKET (BRAKE TUBE SUPPORT)			
78	P	D8BZ 2A275-A	Front	1
2B276	Refer to group 2A411			
2B277	RETAINER (BRAKE PEDAL SHAFT)			
73	A,Y	C8AZ 2B277-A		1
73/74	C,D,L,P			1
75/	P - - M/T			1
73	F	★ D1ZZ 2B277-A(2/80)		1
2282	Refer to group 2078			
2284-5	Serviced only in kit-group 2007			
2286	TUBE ASSY. (REAR BRAKE CYLINDER CONNECTION) Improvise from bulk tubing (2269) and improvise insulators from rubber hose, friction tape etc.			
2B286	ADAPTER (BRAKE MASTER CYLINDER MOUNTING)			
75/	G - - w/6 cyl.	★ D5DZ 2B286-A(10/85)		1
78/	P - - manual disc brakes	D8BZ 2B286-A		1
79	J - - manual disc brakes			1
2B292-3	PLATE (FRONT DISC BRAKE CALIPER ANCHOR)			
73/78	A	(RH) D2SZ 2B292-A	(LH) D2SZ 2B293-A	1
73/76	C(exc. P/C)	(RH) ★ D20Z 2B292-A (6/83)	(LH) ★ D20Z 2B293-A(3/84)	1
73/76	C(53,65-P/C)	(RH) D2SZ 2B292-A	(LH) D2SZ 2B293-A	1

COPYRIGHT © 1986 — FORD MOTOR COMPANY — DEARBORN, MICHIGAN

1973/79 LINCOLN-MERCURY CARS

YEAR	MODEL/RESTRICTIONS	PART NUMBER	DESCRIPTION	QTY.
2B292-3	PLATE (FRONT DISC BRAKE CALIPER ANCHOR) — Cont'd			
73/	D	(RH) D2SZ 2B292-A	(LH) D2SZ 2B293-A	1
73	F	(RH) ★ C80Z 2B292-A Not replaced (6/78)	(LH) C80Z 2B293-A	1
74/76	F	(RH) ★ D20Z 2B292-A (6/83)	(LH) ★ D20Z 2B293-A(3/84)	1
77/	F(P/C)	(RH) D2SZ 2B292-A	(LH) D2SZ 2B293-A	1
	F(exc. P/C)	(RH) ★ D20Z 2B292-A (6/83)	(LH) ★ D20Z 2B293-A(3/84)	1
75/	G	(RH) D4DZ 2B292-A	(LH) D4DZ 2B293-A	1
73/	K	(RH) D2SZ 2B292-A	(LH) D2SZ 2B293-A	1
74/76	L - - w/fuel economy option 9J6	(RH) ★ D4FZ 2B292-A r/b D6FZ 2B292-A(5/78)	(LH) ★ D4FZ 2B293-A r/b D6FZ 2B293-A(7/80)	1
76/	L - - w/o fuel economy option 9J6	(RH) D6FZ 2B292-A	(LH) D6FZ 2B293-A	1
74/77	P	(RH) D4DZ 2B292-A	(LH) D4DZ 2B293-A	1
77	V	(RH) D4DZ 2B292-A	(LH) D4DZ 2B293-A	1
73/76	Y	(RH) D2SZ 2B292-A	(LH) D2SZ 2B293-A	1
73/	F	382201-S2	(BB-429-Q)-screw & washer (to spindle hd.) drilled-7/16"-14 x 1 21/64"	4
73/	F	★ 382713-S101	(BB-429-T)-screw (to spindle hd.)-hex. hd.-drilled-9/16"-12 x 2 5/8"	4
2B295	STABILIZER (FRONT DISC BRAKE CALIPER HOUSING)-Also serviced in kit-group 2001			
73	A,D,Y	C8AZ 2B295-A		4
73	F	C80Z 2B295-A		2
73	A,D,F,Y	381985-S2	(BB-555-A)-screw and lockwasher (to anchor plate)-5/16"-18 x 1/2"	4
2296	Refer to group 2035-6			
2B296	PIN (FRONT DISC BRAKE CALIPER LOCATING)			
73	A,D,F,Y	★ C8AZ 2B296-A(9/85)	2 5/64" long	4
79	A	D9AZ 2B296-A		4
78/	P "Before 12/8/78"	D8BZ 2B296-A	3" long	4
79	J "Before 12/1/78"			4
79	J "From 12/1/78"	D9BZ 2B296-A		4
	P "From 12/8/78"			4
2297	Refer to group 2049			
2B299	INSULATOR (FRONT DISC BRAKE CALIPER LOCATING PIN)-Also serviced in kit-group 2001			
73	A,D,F,Y	C8AZ 2B299-A	#C8AA 2B298-C-1 3/8" long	4

INCLUDED IN THIS SECTION ARE THE CONTENTS FOR KITS 2001, 2007 and 2200

QTY.	PART NUMBER		DESCRIPTION
2001	SHOE and LINING KIT (BRAKE SHOE-FRONT)-Refer to group 2001 in Section 20 for Model Application		
★	C60Z	2001-A (6/83)	
Consists of			
2	C60A	2218-B	Shoe and lining-primary
2	C60A	2219-L	Shoe and lining-secondary
	D0AZ	2001-D	
Consists of			
2	D2AA	2018-AA or	Alternate
	D2AA	2018-BA	Shoe and lining-outer
2	D2AA	2019-AA or	Alternate
	D2AA	2019-BA	Shoe and lining-inner
4	C8AZ	2066-A	Clip
4	C8AZ	2069-A	Pin
4	C8AZ	2B164-A	Clip
4	C8AZ	2B295-A	Stabilizer
4	C8AZ	2B299-A	Insulator
★	D00Z	2001-C(9/85)	
Consists of			
2	D2ZA	2018-AA	Shoe and lining-outer
2	D2ZA	2019-AA	Shoe and lining-inner
4	C8AZ	2066-A	Clip
4	C8AZ	2069-A	Pin
4	8M	2149	Gasket
4	C8AZ	2B164-A	Clip
2	C80Z	2B295-A	Stabilizer
4	C8AZ	2B299-A	Insulator
	D10Z	2001-B	
Consists of			
2	D10A	2018-EA	Shoe and lining-primary
2	D10A	2019-EA	Shoe and lining-secondary
1			Instruction sheet
	D1RY	2001-E	
Consists of			
4	71EB	2K023-GA	or
	71EB	2K023-HA	Shoe and lining
4	71BB	2K236-CA	Shim
4	71BB	2K289-BA	Spring
	D20Z	2001-C	
Consists of			
2	D20A	2018-DA	Shoe and lining-outer
2	D30A	2019-BA	Shoe and lining-inner
2	D4FZ	2B164-A	Clip
2	D20Z	2B486-A	Spring
2	D20Z	2B487-A	Key
	D20Z	2001-D	
Consists of			
2	D20A	2018-EA	Shoe and lining-outer
2	D3AA	2019-DA	Shoe and lining-inner
2	D4FZ	2B164-A	Clip
2	D20Z	2B486-A	Spring
2	D20Z	2B487-A	Key
	D3AZ	2001-A	
Consists of			
2	D3AA	2018-BA	Shoe and lining-outer
2	D3AA	2019-AB	Shoe and lining-inner
2	D4FZ	2B164-A	Clip
2	D20Z	2B486-A	Spring
2	D20Z	2B487-A	Key
	D3AZ	2001-B	
Consists of			
2	D3AA	2018-BA	Shoe and lining-outer
2	D3AA	2019-AB	Shoe and lining-inner
	D3RY	2001-A	
Consists of			
4	73EB	2K023-CA	Shoe and lining
4	73EB	2K236-AA	Shim
4	71BB	2L289-BA	Spring
	D3SZ	2001-A	
Consists of			
2	D3SA	2018-BB	Shoe and lining-outer
2	D3AA	2019-CA	Shoe and lining-inner
2	D4FZ	2B164-A	Clip
2	D20Z	2B486-A	Spring
2	D20Z	2B487-A	Key
★	D4DZ	2001-B	r/b D6DZ 2001-A (2/77)
Consists of			
2	D4DA	2018-BA	Shoe and lining-outer
	D4DA	2019-AA	Shoe and lining-inner
	D4FZ	2001-A	
Consists of			
2	D42A	2018-BA	Shoe and lining-outer
2	D42A	2019-AA	Shoe and lining-inner
2	D4FZ	2B154-A	Clip
2	D4FZ	2B486-A	Spring
2	D4FZ	2B487-A	Key
	D5DZ	2001-A	
Consists of			
2	D5BA	2018-BA	Shoe and lining-primary
2	D5BA	2019-BA	Shoe and lining-secondary
2			Instruction sheets
	D5MZ	2001-A	
Consists of			
2	D5MA	2018-BA	Shoe and lining-outer
2	D5MA	2019-AA	Shoe and lining-inner
2	D4FZ	2B164-A	Clip
2	D20Z	2B486-A	Spring
2	D20Z	2B487-A	Key
	D5MZ	2001-B	
Consists of			
2	D7LC	2018-BA	Shoe and lining-outer
2	D7LC	2019-BA	Shoe and lining-inner
	D6AZ	2001-B	
Consists of			
2	D7AC	2018-DA	Shoe and lining-outer
2	D7AC	2019-BA	Shoe and lining-inner

COPYRIGHT © 1986 — FORD MOTOR COMPANY — DEARBORN, MICHIGAN

1973/79 LINCOLN-MERCURY CARS

2001 SHOE and LINING KIT (BRAKE SHOE-FRONT)-Refer to group 2001 in Section 20 for Model Application — Cont'd

QTY.	PART NUMBER		DESCRIPTION
	D6DZ	**2001-A**	
Consists of			
2	D7DC	2018-BA	Shoe and lining-outer
2	D7DC	2019-AA	Shoe and lining-inner
	D6DZ	**2001-B**	
Consists of			
2	D7DC	2018-BA	Shoe and lining-outer
2	D7DC	2019-AA	Shoe and lining-inner
	D6FZ	**2001-A**	
Consists of			
2	D7EC	2018-CA	Shoe and lining-outer
2	D7EC	2019-AA	Shoe and lining-inner
	D60Z	**2001-A**	
2	D7AC	2018-CA	Shoe and lining-outer
2	D7AC	2019-AA	Shoe and lining-inner
	D7RY	**2001-A**	
Consists of			
4	77EB	2K023-NA	Shoe and lining
4	76EB	2K236-AA	Shim
2	77EB	2L289-AA	Spring
	D7RY	**2001-B**	
Consists of			
4	77EB	2K023-RA	Shoe and lining
4	76EB	2K236-AA	Shim
2	77ER	2L289-AA	Spring
★	**D8BZ**	**2001-A**	R/b D9BZ 2001-B (9/79)
Consists of			
1	D8AC	2018-AC	Shoe and lining - outer - R.H.
1	D8AC	2C088-AC	Shoe and lining - outer - L.H.
1	D8AD	2019-AD	Shoe and lining - inner - R.H.
1	D8AD	2C046-AD	Shoe and lining - inner - L.H.
4	D8BC	2B299-BA	Insulator
4	D8BC	2B393-BA	Sleeve
	D9AZ	**2001-A**	
Consists of			
1	E0AC	2C088-AA	Shoe and lining-outer-L.H.
1	E0AC	2018-AA	Shoe and lining-outer-R.H.
2	D9AC	2019-AD	Shoe and lining-inner
4	D9AC	2B299-AA	Insulator
2	D9AC	2B525-AB	Insulator
2	D9AC	2C098-AA	Clip
4	D9AC	2B393-AB	Sleeve
	D9AZ	**2001-B**	
Consists of			
1	E0AC	2C088-BA	Shoe and lining-outer-L.H.
1	E0AC	2018-BA	Shoe and lining-outer-R.H.
2	D9AC	2019-CC	Shoe and lining-inner
4	D9AC	2B299-AA	Insulator
2	D9AC	2B525-AB	Insulator
2	D9AC	2C098-AA	Clip
4	D9AC	2B393-AB	Sleeve
	D9AZ	**2001-E**	
Consists of			
1	E1AC	2C088-AA	Shoe and lining-outer-L.H.
1	E1AC	2018-AA	Shoe and lining-outer-R.H.
2	D9AC	2019-AD	Shoe and lining-inner
2	D9AZ	2C098-A	Clip
4	D9AC	2B299-AA	Insulator
4	D9AC	2B393-AB	Sleeve
2	D9AC	2B525-AB	Insulator
	D9BZ	**2001-C**	
Consists of			
1	D8BC	2C088-CA	Shoe and lining-outer-L.H.
1	D8BC	2018-CA	Shoe and lining-outer-R.H.
1	D9BC	2C046-CA	Shoe and lining-inner-L.H.
1	D9BC	2019-CA	Shoe and lining-inner-R.H.
2	D9BC	2B525-AA	Insulator
2	D9BC	2C098-AA	Clip
4	D8BC	2B299-BA	Insulator
4	D8BC	2B393-BA	Sleeve
★	**D9BZ**	**2001-D**	R/b D9BZ 2001-F (10/79)
Consists of			
1	D9BC	2C088-AA	Shoe and lining-outer-L.H.
1	D9BC	2018-AA	Shoe and lining-outer-R.H.
1	D9BC	2C046-BA	Shoe and lining-inner-L.H.
1	D9BC	2019-BA	Shoe and lining-inner-R.H.
2	D9BC	2B525-AA	Insulator
2	D9BC	2C098-AA	Clip
4	D9BC	2B299-AA	Insulator
4	D9BC	2B393-A1A	or alternate
	D9BC	2B393-A2A	or alternate
	D9BC	2B393-A3A	Sleeve
★	**D9BZ**	**2001-E**	R/b D9BZ 2001-G (10/79)
Consists of			
1	D9BC	2C088-BA	Shoe and lining-outer-L.H.
1	D9BC	2018-BA	Shoe and lining-outer-R.H.
1	D9BC	2C046-CA	Shoe and lining-inner-L.H.
1	D9BC	2019-CA	Shoe and lining-inner-R.H.
2	D9BC	2B525-AA	Insulator
2	D9BC	2C098-AA	Clip
4	D9BC	2B299-AA	Insulator
4	D9BC	2B393-A1A	or alternate
	D9BC	2B393-A2A	or alternate
	D9BC	2B393-A3A	Sleeve
	D9BZ	**2001-F**	
Consists of			
1	D9BC	2018-AA	Shoe and lining-outer-R.H.
1	D9BC	2C088-AA	Shoe and lining-outer-L.H.
1	D9BC	2019-BA	Shoe and lining-inner-R.H.
1	D9BC	2C046-BA	Shoe and lining-inner-L.H.
2	D9BC	2B525-AA	Insulator
2	D9BC	2C098-AB	Clip
4	D8BC	2B299-BA	Insulator
4	D8BC	2B393-BA	Sleeve
4	D9BC	2B299-AA	Insulator
4	D9BC	2B393-A1A	or alternate
	D9BC	2B393-A2A	or alternate
	D9BC	2B393-A3A	Sleeve
1	IS	4798	Instruction sheet

2001 SHOE and LINING KIT (BRAKE SHOE-FRONT)-Refer to group 2001 in Section 20 for Model Application — Cont'd

QTY.	PART NUMBER		DESCRIPTION
	D9BZ	**2001-G**	
Consists of			
1	D9BC	2018-BA	Shoe and lining-outer-R.H.
1	D9BC	2C088-BA	Shoe and lining-outer-L.H.
1	D9BC	2019-CA	Shoe and lining-inner-R.H.
1	D9BC	2C046-CA	Shoe and lining-inner-L.H.
2	D9BC	2B525-AA	Insulator
2	D9BC	2C098-AB	Clip
4	D8BC	2B299-BA	Insulator
4	D8BC	2B393-AA	Sleeve
4	D9BC	2B299-AA	Insulator
4	D9BC	2B393-A1A	or alternate
	D9BC	2B393-A2A	or alternate
	D9BC	2B393-A3A	Sleeve
1	IS	4798	Instruction sheet
★	**D9ZZ**	**2001-A**	R/b D9ZZ 2001-F (10/79)
Consists of			
1	D9ZC	2C088-DA	Shoe and lining-outer-L.H.
1	D9ZC	2018-DA	Shoe and lining-outer-R.H.
2	D9ZC	2019-DA	Shoe and lining-inner
4	D8BC	2B299-BA	Insulator
2	D9ZC	2C098-AA	Clip
4	D8BC	2B393-BA	Sleeve
★	**D9ZZ**	**2001-B**	R/b D9ZZ 2001-E (10/79)
Consists of			
1	D9ZC	2C088-CA	Shoe and lining-outer-L.H.
1	D9ZC	2018-CA	Shoe and lining-outer-R.H.
2	D9ZC	2019-CA	Shoe and lining-inner
4	D8BC	2B299-BA	Insulator
2	D9ZC	2C098-AA	Clip
4	D8BC	2B393-BA	Sleeve
★	**D9ZZ**	**2001-C**	R/b D9ZZ 2001-F (10/79)
Consists of			
1	D9ZC	2C088-DB	Shoe and lining-outer-L.H.
1	D9ZC	2018-DB	Shoe and lining-outer-R.H.
2	D9ZC	2019-DA	Shoe and lining-inner
2	D9ZC	2C098-AA	Clip
4	D9BC	2B299-AA	Insulator
4	D9BC	2B393-A1A	or alternate
	D9BC	2B393-A2A	or alternate
	D9BC	2B393-A3A	Sleeve
	D9ZZ	**2001-D**	
Consists of			
1	D9ZC	2C088-CB	Shoe and lining-outer-L.H.
1	D9ZC	2018-CB	Shoe and lining-outer-R.H.
2	D9ZC	2019-CA	Shoe and lining-inner
2	D9ZC	2C098-AA	Clip
4	D9BC	2B299-AA	Insulator
4	D9BC	2B393-A1A	or alternate
	D9BC	2B393-A2A	or alternate
	D9BC	2B393-A3A	Sleeve
	D9ZZ	**2001-E**	
Consists of			
1	D9ZC	2018-CB	Shoe and lining-outer-R.H.
1	D9ZC	2C088-CB	Shoe and lining-outer-L.H.
2	D9ZC	2019-CA	Shoe and lining-inner
2	D9ZC	2C098-AA	Clip
4	D8BC	2B299-AA	Insulator
4	D8BC	2B393-BA	Sleeve
4	D9BC	2B299-AA	Insulator
4	D9BC	2B393-A1A	or alternate
	D9BC	2B393-A2A	or alternate
	D9BC	2B393-A3A	Sleeve
1	IS	4798	Instruction sheet
	D9ZZ	**2001-F**	
Consists of			
1	D9ZC	2018-DB	Shoe and lining-outer-R.H.
1	D9ZC	2C088-DB	Shoe and lining-outer-L.H.
2	D9ZC	2019-DA	Shoe and lining-inner
2	D9ZC	2C098-AA	Clip
4	D8BC	2B299-BA	Insulator
4	D8BC	2B393-BA	Sleeve
4	D9BC	2B299-AA	Insulator
4	D9BC	2B393-A1A	or alternate
	D9BC	2B393-A2A	or alternate
	D9BC	2B393-A3A	Sleeve
1	IS	4798	Instruction sheet

2007 LINING KIT (BRAKE SHOE)-Refer to group 2007 in Section 20 for Model Application

QTY.	PART NUMBER		DESCRIPTION
	C7ZZ	**2007-A**	
Consists of			
2	C7ZZ	2284-A	Lining-primary
2	C7ZZ	2285-A	Lining-secondary
45	351939-S		Rivets
1			Instruction sheet
	D0RY	**2007-A**	
			Contents to follow in subsequent change.
★	**D10Z**	2007-A(3/84)	
Consists of			
2	D10A	2021-FA	Lining-primary
2	D10A	2022-FA	Lining-secondary
45	351939-S		Rivets
1			Instruction sheet
	D2FZ	**2007-A**	
Consists of			
2	D42A	2284-CA	Lining-primary
2	D22A	2285-BC	Lining-secondary
50	351939-S		Rivets
1			Instruction sheet
	D2RY	**2007-A**	
			Contents to follow in subsequent change.
	D3AZ	**2007-A**	
Consists of			
2	D3AA	2284-MA	Lining-primary
2	D3AA	2285-LA	Lining-secondary
50	351939-S		Rivets
1			Instruction sheet
★	**D3AZ**	2007-E (6/83)	
Consists of			
2	D3AA	2284-HB	Lining-primary
2	D3AA	2285-HA	Lining-secondary
40	351939-S		Rivets
1			Instruction sheet
	D4DZ	**2007-A**	
Consists of			
2	D4DA	2284-CA	Lining-primary
2	C7ZA	2285-B	Lining-secondary
50	351939-S		Rivets
2			Instruction sheet
	D4VY	**2007-A**	
Consists of			
2	D5SA	2284-BA	Lining-primary
2	D4VA	2285-BB	Lining-secondary
50	386254-S		Rivets
2			Instruction sheets

COPYRIGHT © 1986 — FORD MOTOR COMPANY — DEARBORN, MICHIGAN

1973/79 LINCOLN-MERCURY CARS

2007 LINING KIT (BRAKE SHOE)–Refer to group 2007 in Section 20 for Model Application — Cont'd

QTY.	PART NUMBER		DESCRIPTION
	★ **D5DZ**	2007-A(3/84)	
Consists of			
2	D5DA	2284-BA	Lining-primary
2	D5DA	2285-BA	Lining-secondary
50	386254-S		Rivets
2			Instruction sheets
	★ **D5DZ**	2007-B(9/85)	
Consists of			
2	D5BA	2284-BA	Lining-primary
2	D5BA	2285-BA	Lining-secondary
50	386254-S		Rivets
2			Instruction sheets
	★ **D5DZ**	2007-C(8/81)	
Consists of			
2	D5BA	2021-BA	Lining-primary
2	D5BA	2022-BA	Lining-secondary
50	386254-S		Rivets
2			Instruction sheets
	D5FZ	2007-A	
Consists of			
2	D52A	2284-BA	Lining-primary
2	D52A	2285-BA	Lining-secondary
50	386254-S		Rivets
2			Instruction sheets
	★ **D50Z**	2007-A (6/83)	
Consists of			
2	D50A	2284-EB	Lining-primary
2	D50A	2285-EA	Lining-secondary
50	386254-S		Rivets
2			Instruction sheets
	★ **D50Z**	2007-B (6/83)	
Consists of			
2	D50A	2284-BA	Lining-primary
2	D50A	2285-BA	Lining-secondary
50	386254-S		Rivets
2			Instruction sheets
	D5SZ	2007-A	
Consists of			
2	D5SA	2284-BA	Lining-primary
2	D5SA	2285-BA	Lining-secondary
50	386254-S		Rivets
2			Instruction sheets
	D6DZ	2007-A	
Consists of			
2	D6BA	2284-BA	Lining-primary
2	D5BA	2285-BA	Lining-secondary
50	387237-S100		Rivets
2			Instruction sheets
	D6DZ	2007-B	
Consists of			
2	D6DA	2284-BA	Lining-primary
2	D5DA	2285-BA	Lining-secondary
50	387237-S100		Rivets
2			Instruction sheets
	D8BZ	2007-A	
Consists of			
2	D8BC	2284-BA	Lining-primary
2	D8BC	2285-BA	Lining-secondary
50	387237-S100		Rivets
2			Instruction sheets
	D9AZ	2007-A	
Consists of			
2	D9AC	2284-EA	Lining-primary
2	D9AC	2285-EA	Lining-secondary
50	387237-S100		or alternate
	386254-S		Rivets
2			Instruction sheets
	D9AZ	2007-B	
Consists of			
2	D9AC	2284-HA	Lining-primary
2	D9AC	2285-HA	Lining-secondary
50	387237-S100		or alternate
	386254-S		Rivets
2			Instruction sheets
	D9ZZ	2007-A	
Consists of			
2	D9AC	2284-BA	Lining-primary
2	D9AC	2285-BA	Lining-secondary
50	387237-S100		or alternate
	386254-S		Rivets
2			Instruction sheets

2C077 HARDWARE KIT (BRAKE SHOE and LINING)–Also refer to group 2C077 in Section 20 for Model Application

QTY.	PART NUMBER		DESCRIPTION
	D2AZ	2C077-A	
2	D4FZ	2B164-A	Clip
2	D20Z	2B486-A	Spring
2	D20Z	2B487-A	Key
	D4DZ	2C077-A	
Consists of			
2	D4FZ	2B164-A	Clip
2	D4FZ	2B486-A	Spring
2	D4FZ	2B487-A	Key
	D5MZ	2C077-A	
Consists of			
2	D5MZ	2B164-A	Clip
2	D20Z	2B486-A	Spring
2	D20Z	2B487-A	Key
1			Instruction sheet

QTY.	PART NUMBER		DESCRIPTION
2200	SHOE and LINING KIT (REAR BRAKE SHOE)-Refer to group 2001 in Section 20 for Model Application		
	C60Z	**2200-A**	
Consists of			
2	C60A	2218-D	Shoe and lining-primary
2	C20A	2219-H	Shoe and lining-secondary
1			Instruction sheet
	C7ZZ	**2200-A**	
Consists of			
2	D4DA	2218-BA	Shoe and lining-primary
2	C7ZA	2219-B	Shoe and lining-secondary
1			Instruction sheet
	C8RZ	**2200-A**	
2	2920E	2218-D	Shoe and lining-primary
2	2920E	2219-C	Shoe and lining-secondary
	D2FZ	**2200-A**	
Consists of			
2	D42A	2218-BA	Shoe and lining-primary
2	D22A	2219-BC	Shoe and lining-secondary
1			Instruction Sheet
	D2RY	**2200-B**	
Consists of			
2	70EB	2218-AA	Shoe and lining-primary
2	70EB	2219-AA	Shoe and lining-secondary
	D3AZ	**2200-A**	
Consists of			
2	D3AA	2218-EB	Shoe and lining-primary
2	D3AA	2219-EB	Shoe and lining-secondary
1			Instruction sheet
★	**D3AZ**	2200-C (6/83)	
2	D3AA	2218-FC	Shoe and lining-primary
2	D3AA	2219-FB	Shoe and lining-secondary
1			Instruction sheet
	D4VY	**2200-A**	
Consists of			
2	D4VA	2218-BA	Shoe and lining-primary
1	D4VA	2219-BA	Shoe and lining-R.H.-secondary
1	D4VA	2B534-BA	Shoe and lining-L.H.-secondary
2			Instruction sheet
★	**D5DZ**	2200-A(6/82)	
Consists of			
2	D5DA	2218-BA	Shoe and lining-primary
2	D5DA	2219-BA	Shoe and lining-secondary
2			Instruction sheets
	D5DZ	**2200-B**	
Consists of			
2	D5BA	2218-BA	Shoe and lining-primary
2	D5BA	2219-BA	Shoe and lining-secondary
2			Instruction sheets
	D5DZ	**2200-C**	
Consists of			
2	D5DA	2218-DA	Shoe and lining-outer
2	D5DA	2219-CA	Shoe and lining-inner
2	D5MA	2B164-AA	Clip
2	D20A	2B486-AB	Spring
2	D20A	2B487-AB	Key
	D5FZ	**2200-A**	
Consists of			
2	D52A	2218-BB	Shoe and lining-primary
2	D52A	2219-BB	Shoe and lining-secondary
2			Instruction sheets
	D5MZ	**2200-A**	
Consists of			
2	D5MA	2218-BB	Shoe and lining-outer
2	D5MA	2219-AB	Shoe and lining-inner
2	D5MA	2B164-AA	Clip
2	D20A	2B486-AB	Spring
2	D20A	2B487-AB	Key
	D5MZ	**2200-B**	
Consists of			
2	D5MA	2218-DA	Shoe and lining-outer
2	D5MA	2219-BA	Shoe and lining-inner
2	D5MZ	2B164-A	Clip
2	D20Z	2B486-A	Spring
2	D20Z	2B487-A	Key
	D5MZ	**2200-C**	
Consists of			
2	D5MA	2218-BB	Shoe and lining-outer
2	D5MA	2219-AB	Shoe and lining-inner
1			Instruction sheet
★	**D5MZ**	2200-D (6/83)	
Consists of			
2	D5MA	2218-DA	Shoe and lining-primary
2	D5MA	2219-BA	Shoe and lining-secondary
1			Instruction sheet
★	**D50Z**	2200-A(6/82)	
Consists of			
2	D50A	2218-DB	Shoe and lining-primary
2	D50A	2219-DA	Shoe and lining-secondary
2			Instructions
	D50Z	**2200-B**	
Consists of			
2	D50A	2218-BA	Shoe and lining-primary
2	D50A	2219-BA	Shoe and lining-secondary
2			Instruction sheets
	D5RY	**2200-A**	
Consists of			
2	74EB	2218-AA	Shoe and lining-primary
2	74EB	2219-AA	Shoe and lining-secondary
	D5RY	**2200-B**	
Consists of			
2	75AB	2218-BA	Shoe and lining-primary
2	75AB	2219-BA	Shoe and lining-secondary
★	**D5SZ**	2200-A(6/82)	
Consists of			
2	D5SA	2218-BA	Shoe and lining-primary
2	D5SA	2219-BA	Shoe and lining-secondary
2			Instruction sheets
★	**D6AZ**	2200-A(3/85)	
Consists of			
2	D6AA	2218-BA	Shoe and lining-primary
2	D6AA	2219-BA	Shoe and lining-secondary
2			Instruction sheets
★	**D6AZ**	2200-B(9/85)	
Consists of			
2	D6MA	2218-BA	Shoe and lining-primary
2	D6MA	2219-AA	Shoe and lining-secondary
1			Instruction sheet

COPYRIGHT © 1986 — FORD MOTOR COMPANY — DEARBORN, MICHIGAN

1973/79 LINCOLN-MERCURY CARS

2200 SHOE and LINING KIT (REAR BRAKE SHOE)–Refer to group 2001 in Section 20 for Model Application — Cont'd

QTY.	PART NUMBER		DESCRIPTION
	D6DZ	**2200–A**	
Consists of			
2	D6BA	2218–BA	Shoe and lining–primary
2	D5BA	2219–BA	Shoe and lining–secondary
2			Instruction sheets
	D6DZ	**2200–B**	
Consists of			
2	D6DA	2218–BA	Shoe and lining–primary
2	D5DA	2219–BA	Shoe and lining–secondary
2			Instruction sheets
	D60Z	**2200–A**	
Consists of			
2	D60A	2218–BA	Shoe and lining–primary
2	D60A	2219–BA	Shoe and lining–secondary
2			Instruction sheets
	D6RY	**2200–A**	
Consists of			
2	75EB	2218–AA	Shoe and lining–primary
2	75EB	2219–AA	Shoe and lining–secondary
	D7FZ	**2200–A**	
Consists of			
2	D7EC	2218–BA	Shoe and lining–primary
2	D7EC	2219–BA	Shoe and lining–secondary
2			Instruction sheets
	★ **D8BZ**	**2200–A**	R/b D9ZZ 2200–A
Consists of			
2	D8BC	2218–DA	Shoe & lining primary
2	D8BC	2219–DA	Shoe & lining secondary
2			Instruction sheets
	D9AZ	**2200–A**	
Consists of			
2	D9AC	2218–CB	Shoe and lining–primary
2	D9AC	2219–CB	Shoe and lining–secondary
2			Instruction sheets
	D9AZ	**2200–B**	
Consists of			
2	D9AC	2218–DB	Shoe and lining–primary
2	D9AC	2219–DB	Shoe and lining–secondary
2			Instruction sheets
	D90Z	**2200–A**	
Consists of			
2	D90C	2218–BA	Shoe and lining–primary
2	D90C	2219–BA	Shoe and lining–secondary
2			Instruction sheets
	D9ZZ	**2200–A**	
Consists of			
2	D9ZC	2218–BA	Shoe and lining–primary
2	D9ZC	2219–BA	Shoe and lining–secondary
2			Instruction sheets

1973/79
LINCOLN-MERCURY CARS

YEAR	MODEL/RESTRICTIONS	PART NUMBER	DESCRIPTION	QTY.
2K314	PLATE (FRONT BRAKE HUB MOUNTING BOLT LOCKING)			
73/78	J	D0RY 2K314-A		4
2L316	SPACER (BRAKE BOOSTER PUSH ROD)			
73/74	J - - 122 (2000 cc)	★ D1RY 2L316-A(6/82)		1
2B321	INSULATOR KIT (FRONT WHEEL DISC BRAKE SHOE)			
79	A	D9AZ 2B321-A		AR
	Consists of 10-E0AC 2B321-AA Insulator-outer		10-D9AC 2B525-AB Insulator-inner	
79	J	D9ZZ 2B321-A		AR
	Consists of 5-E0AC 2C138-AA Insulator-outer-R.H.	5-E0AC 2B321-AA Insulator outer-L.H.	10-E0ZC 2B525-AA Insulator-inner	
79	G,L	D9FZ 2B321-A		AR
	Consists of 20-E0EC 2B321-AA Insulator-outer	10-E0EC 2B525-AA Insulator-inner	10-E0DC 2B525-AA Insulator-inner	
79	P	D9BZ 2B321-A		AR
	Consists of 10-E0BC 2B321-AA Insulator-outer		10-D9BC 2B525-AA Insulator-inner	
2B325	WIRING ASSY. (BRAKE PRESSURE DIFFERENTIAL VALVE WARNING LAMP)			
73/78	J	★ D1RY 2B325-A(6/82)		1
2344	CLAMP (POWER STEERING RETURN LINE)			
73/74	J	B5A 2344-A	To fuel tank sending unit hose	2
73/	A,D,F,G,K,P,V	B5A 2344-A		AR
73/76	C,Y			AR
2B355	GASKET (BRAKE MASTER CYLINDER MOUNTING ADAPTER)			
73	C,P - - manual brakes	C9AZ 2B355-B		1
74	C,L,P - - manual disc brakes			1
75/	G,L - - manual disc brakes			1
75/77	P - - manual disc brakes			1
78/	P - - manual disc brakes	D8BZ 2B355-A		1
79	J - - manual disc brakes			1
2A361-2	TUBE ASSY. (FRONT BRAKE)			
73	J	(RH) D4RY 2A361-B	(LH) D4RY 2A362-B	1
74	J	(RH) ★ D4RY 2A361-A(5/79)	(LH) ★ D4RY 2A361-A(5/79)	1
76/78	J	(RH) D4RY 2A361-B	(LH) D4RY 2A361-B	1
74	J	11 52080	Nut-M10X (used with D4RY 2A631-A)	AR
2365	VALVE (POWER BRAKE BOOSTER CHECK)			
73/	A - - rear drum brake	D0AZ 2365-A		1
73/76	C	D0AZ 2365-A		1
73/	D - - rear drum brake	D0AZ 2365-A		1
73/	F	D0AZ 2365-A		1
75/	G - - rear drum brake	D0AZ 2365-A		1
73/78	J	D0RY 2365-A		1
73/74	K	C9SZ 2365-A		1
75/	L	D0AZ 2365-A		1
75/	P	D0AZ 2365-A		1
73/76	Y - - rear drum brake	D0AZ 2365-A		1
2B368	FILTER (BRAKE SKID CONTROL ACTUATOR AIR)			
73/74	A,D,K,Y	★ C9SZ 2B368-A(6/83)		1
73/74	A,D,K,Y	★ 56303-S2	Bolt-hex hd. to fender apron-1/4"-20 x 3/4"-improvise	2
73/74	K	33769-S2	(M-89-J)-nut-1/4"-20	2
2B369	HOSE (BRAKE SKID CONTROL ACTUATOR AIR)			
73/74	A,K,Y	★ D0VY 2B369-A(5/79)	30 1/4" long-from actuator to manifold	1
73/74	D			2
2B370	HOSE (BRAKE SKID CONTROL ACTUATOR VACUUM)			
73/74	A,Y	★ D3MY 2B370-A(5/79)		1
73	K	C9SZ 2B370-A	28 1/4" long	2
2B371	BRACKET (BRAKE SKID CONTROL ACTUATOR MOUNTING)			
73/74	A,D,K,Y	★ D2SZ 2B371-A(5/79)		1
75	G	★ D5DZ 2B371-A(5/79)		1
76	G	★ D6DZ 2B371-A(2/80)		1

COPYRIGHT © 1986 — FORD MOTOR COMPANY — DEARBORN, MICHIGAN

1973/79 LINCOLN-MERCURY CARS

YEAR	MODEL/RESTRICTIONS	PART NUMBER	DESCRIPTION	QTY.
2B372	SENSOR ASSY. (BRAKE SKID CONTROL)			
73/76	A	★ D3MY 2B372-A(9/83)	#D3MA 2B372-A(9/83)A	1
73/	D			1
75/	G			1
73/	K			1
73/76	Y			1
2B373	MODULE (BRAKE SKID CONTROL)			
73/74	A	★ D2MY 2B373-A(2/80)		1
75/76	A	★ D5LZ 2B373-A(3/84)		1
73/74	D	★ D0SZ 2B373-B(3/81)		1
75/	D	★ D5LZ 2B373-A(3/84)		1
75/76	G	★ D5DZ 2B373-A(3/81)		1
73/74	K	D0SZ 2B373-B		1
75/	K	★ D5LZ 2B373-A(3/84)		1
73/74	Y	★ D2MY 2B373-A(12/80)		1
75/76	Y	★ D5LZ 2B373-A(3/84)		1
73/74	D,K	384275-S	(UU-52-AP)-screw & washer (to module bracket)-hex hd.-No. 8-18 x 3/4"	4
2B384	ROTOR (BRAKE SKID CONTROL)			
73/76	A	★ D0SZ 2B384-A(6/82)		1
73/	D			1
75/76	G			1
73/	K			1
73/76	Y			1
2B385	TUBE ASSY. (BRAKE SKID CONTROL ACTUATOR TO REAR BRAKE) Improvise from bulk tubing (2269) and improvise insulators from rubber hose, friction tape etc.			
		382967-S100	(MM-102)-nut-3/16" tube-3/8"-24	1
		358609-S36	(MM-103)-nut-3/16" tube-7/16"-24	1
		384790-S2	(GG-163-ZC)-clip (to frame side rail)	6
		384766-S2	(GG-260-A)-clip (to frame side rail)	6
2B386	TUBE ASSY. (BRAKE DIFFERENTIAL VALVE TO ACTUATOR) Improvise from bulk tubing (2269) and improvise insulators from rubber hose, friction tape etc.			
		★ 352605-S8	(GG-149)-clip (tube to frame side rail front)-3/4" x 1 11/16"	1
		382967-S100	(MM-102)-nut-3/16" tube-3/8"-24	AR
		358609-S36	(MM-103)-nut-3/16" tube-7/16"-24	AR
		375096-S36	(MM-105-F)-nut-3/16" tube-1/2"-20	AR
		351736-S36	(MM-105-H)-nut-3/16" tube-9/16"-18	AR
		381877-S2	(UU-52-AF)-screw (tube to frame side rail front)-hex hd.-5/16"-18 x 3/4"	1
2B389	BRACKET (BRAKE SKID CONTROL MODULE)			
73/74	D	★ D2VY 2B389-A(5/79)		1
75/	D	★ D5VY 2B389-A(6/82)		1
75/76	G	★ D5DZ 2B389-A(2/80)		1
73/74	K	★ D2SZ 2B389-A(5/79)		1
2K390	ADJUSTER (PARKING BRAKE CABLE-REAR)-Also refer to group 2B599			
75/76	C	D50Z 2K390-A		1
75/	F			1
77/	G,V			1
79	A	D9AZ 2K390-A		1
2B392	WIRING ASSY. (BRAKE SKID CONTROL SPEED SENSOR)			
73	A	★ D3MY 2B392-A	Not replaced (6/78)	1
74	A	★ D4MY 2B392-A(5/79)		1
75	A	★ D5MY 2B392-A(5/79)		1
76/	A	★ D6MY 2B392-A(3/81)		1
73/74	D	★ D4VY 2B392-A(5/79)		1
75/	D	★ D5VY 2B392-A(6/82)		1
73	Y	★ D3MY 2B392-A	Not replaced (6/78)	1
74	Y	D4MY 2B392-A		1
75	Y	★ D5MY 2B392-A(5/79)		1
76	Y	★ D6MY 2B392-A(3/81)		1

YEAR	MODEL/RESTRICTIONS	PART NUMBER	DESCRIPTION	QTY.
2A407	RETAINER (BRAKE TUBE SUPPORT)			
73/	A,C,D,K,Y	★ D2AZ 2A407-A(2/80)		1
74/	F			1
74/	P - - M/T	★ D4DZ 2A407-A(2/80)		1
2K409	GROMMET (BRAKE TUBE)			
78	P	★ D8BZ 2K409-A(6/82)		2
2L410	VALVE ASSY. (BRAKE PRESSURE REDUCING)			
77/78	J	★ D7RY 2L410-A		1
2A411	MANIFOLD and CHECK VALVE (POWER BRAKE BOOSTER)			
73/78	J	★ D0RY 2A411-A(6/82)	To brake booster	1
73/74	J - - 4 cyl. with C/4 A/T	D2RY 2A411-A	To intake manifold	1
73/74	J - - 4 cyl. with M/T or Borg Warner A/T	2A411	To intake manifold-serviced in 2005 assy. only	1
73/74	J - - 6 cyl.	★ D2RY 2B276-A	To intake manifold	1
2L414	SWITCH ASSY. (FLUID LOW LEVEL WARNING INDICATOR)			
76	J "Before 8/1/75"	D5RY 2L214-A		1
76/78	J "From 8/1/75"	★ D6RY 2L414-A(2/80)		1
2K415-6	RATCHET (REAR BRAKE ADJUSTING SCREW)			
73/78	J	(RH) ★ D0RY 2K415-A(6/82)	(LH) ★ D0RY 2K416-A(6/82)	1
2L416	BRACKET ASSY (BRAKE PRESSURE REDUCING VALVE)			
77/	J	★ D7RY 2L416-A(3/81)		1
2420	TUBE ASSY. (POWER BRAKE BOOSTER) Unless listed improvise from bulk tubing (2269) and improvise insulators from rubber hose, friction tape, etc.			
73/74	J	★	Improvise from bulk hose (C9PZ 4090-G)	1
		379751-GS	Clamp	2
2B429	SHIELD (BRAKE SKID CONTROL SPEED SENSOR WIRE)			
73/76	A	★ D3MY 2B429-A(3/81)		1
73/	D			1
75/76	G			1
73/	K			1
73/76	Y			1
2B430	WIRING and BRACKET ASSEMBLY (BRAKE SKID CONTROL SPEED SENSOR)			
73	A	D2MY 2B430-A		1
74	A	★ D2VY 2B430-A(5/79)		1
75/77	A	★ D5MY 2B430-A(3/84)		1
73/74	D	★ D2VY 2B430-A(5/79)		1
75/79	D "Before 3/1/79"	★ D5MY 2B430-A93/84)		1
79	D "From 3/1/79"	D9VY 2B430-A	# D9VB 2B430-AA	1
75/76	G	★ D5DZ 2B430-A(2/80)		1
73	K "Before 10/2/72"	★ D2LY 2B430-A(5/79)		1
73	K "From 10/2/72"	★ D3LY 2B430-A(5/79)	# D3LB 2B430-AA	1
74/76	K	★ D5LZ 2B430-A(2/80)	# D5LB 2B430-AA,AB	1
77/79	K "Before 3/1/79"	D7LY 2B430-A		1
79	K "From 3/1/79"	D9LY 2B430-A	# D9LB 2B430-AA	1
73	Y	D2MY 2B430-A		1
74	Y	★ D2VY 2B430-A(5/79)		1
75/76	Y	★ D5MY 2B430-A(3/84)		1
73/74	D	381877-S2	(UU-52-AF)-screw-5/16"-18 x 3/4"-to No. 4 crossmember	AR
2A442	HOSE ASSY. (REAR WHEEL BRAKE)			
75/	A - - rear disc brake	D6AZ 2A442-A		2
75/77	G - - rear disc brakes	(RH) D6DZ 2A442-A	(LH) D6DZ 2A442-B	1
77/	V			1
75/	K - - rear disc brakes	(RH) D6SZ 2A442-A	(LH) D6SZ 2A442-B	1
75/76	Y - - rear disc brake	D6AZ 2A442-A		1
75/	G	40980-S2	(U-266)-screw(hose assy to spg. seat) 3/8"-16 x 1"	2
77/	V			
2B445	BOOT (BRAKE PRESSURE METERING VALVE PUSH ROD)			
73	A,D,K,Y	D0AZ 2B445-A		1

COPYRIGHT © 1986 — FORD MOTOR COMPANY — DEARBORN, MICHIGAN

1973/79 LINCOLN-MERCURY CARS

YEAR	MODEL/RESTRICTIONS	PART NUMBER	DESCRIPTION	QTY.
2454	PAD (BRAKE PEDAL)-Also refer to group 7A624			
73/78	A - - vacuum release	★ C8SZ 2454-A	Parking brake-r/b C8SZ 2454-B	
73/75	A	C9AZ 2457-D	Brake	1
76/78	A	D2SZ 2457-A	Brake	1
78	A - - manual release	D6AZ 2454-A	Parking brake	1
79	A	C60Z 2457-A	Brake	1
79	A	★ C8SZ 2454-A	Parking brake-r/b C8SZ 2454-B	1
73/75	C	★ C8SZ 2454-A	Parking brake-r/b C8SZ 2454-B	1
76	C	★ C8SZ 2454-A	Parking brake-auto release-r/b C8SZ 2454-B	1
76	C	D6AZ 2454-A	Parking brake-manual release	1
73	C - - M/T	C5ZZ 2457-G	Brake	1
73/76	C - - A/T	D2SZ 2457-A	Brake	1
73/	D	★ C8SZ 2454-A	Parking brake-r/b C8SZ 2454-B	1
73/74	D "Before 4/8/74"	C8SZ 2457-A	Brake	1
74/75	D "From 4/8/74"	C9AZ 2457-D	Brake	1
76/	D	D2SZ 2457-A	Brake	1
73	F - - M/T	C5ZZ 2454-D	Brake	1
73	F - - A/T	D3ZZ 2454-A	Brake	1
73	F	C9ZZ 2454-A	Parking brake	1
74/75	F	★ C8SZ 2454-A	Parking brake-r/b C8SZ 2454-B	1
76/77	F	★ C8SZ 2454-A	Parking brake-auto release-r/b C8SZ 2454-B	1
76/77	F	D6AZ 2454-A	Parking brake-manual release	1
78/79	F	★ C8SZ 2454-A	Parking brake-r/b C8SZ 2454-B	1
74/	F	D2SZ 2457-A	Brake	1
75	G	★ C8SZ 2454-A	Parking brake-r/b C8SZ 2454-B	1
76/77	G - - rear disc brake	★ C8SZ 2454-A	Parking brake-auto release	1
76/77	G - - rear drum brake	D6AZ 2454-A	Parking brake-manual release	1
78/	G	★ C8SZ 2454-A	Parking brake-r/b C8SZ 2454-B	1
75/	G - - M/T	C5ZZ 2457-G	Brake	1
75	G - - A/T "Before 12/16/74"	D3ZZ 2454-A	Brake	1
75/	G - - A/T "From 12/16/74"	C60Z 2457-A	Brake	1
73/78	J - - M/T	D3RY 2457-A	Brake and clutch	2
73/78	J - - A/T	★ D0RY 2457-B	Brake	1
79	J - - M/T	D1FZ 2457-B	Brake and clutch	2
	J - - A/T	D8BZ 2457-B	Brake	1
73/	K	D2SZ 2457-A	Brake	1
73/	K	★ C8SZ 2454-A	R/b C8SZ 2454-B	1
74/	L - - M/T	D1FZ 2457-B	Brake and clutch	1
74	L - - A/T "Before 4/1/74"	D3ZZ 2454-A	Brake	1
74/	L - - A/T "From 4/1/74"	C60Z 2457-A	Brake	1
73/75	P - - M/T and drum brakes	C5ZZ 2457-G	Brake	1
73/75	P - - A/T and drum brakes	C60Z 2457-A	Brake	1
75	P	★ C8SZ 2454-A	R/b C8SZ 2454-B and C8AA 2A647-A parking brake	1
76/77	P	D6AZ 2454-A	Parking brake	1
74/75	P - - M/T and disc brakes "Before 12/16/74"	C5ZZ 2454-D	Brake	1
75	P - - M/T and disc brakes "From 12/16/74"	C5ZZ 2457-G	Brake	1
74/75	P - - A/T and disc brakes "Before 12/16/74"	D3ZZ 2454-A	Brake	1
75	P - - A/T and disc brakes "From 12/16/74"	C60Z 2457-A	Brake	1
76/77	P - - M/T	C5ZZ 2457-G	Brake	1
76/77	P - - A/T	C60Z 2457-A	Brake	1
78/	P	★ C8SZ 2454-A	C8SZ 2454-B	1
78/	P - - M/T	D1FZ 2457-B	Brake	1
78/	P - - M/T	D1FZ 2457-B	Clutch	1
78/	P - - A/T	D8BZ 2457-B	Brake	1
77/	V - - rear disc brake	★ C8SZ 2454-A	Parking brake - auto release-r/b C8SZ 2454-B	1
	V	D74Y 2457-A	Brake	1
73/76	Y	★ C8SZ 2454-A	Parking brake-r/b C8SZ 2454-B	1
73/75	Y	C9AZ 2457-D	Brake	1
76	Y	D2SZ 2457-A	Brake	1

1973/79 LINCOLN-MERCURY CARS

YEAR	MODEL/RESTRICTIONS	PART NUMBER	DESCRIPTION	QTY.
2455	PEDAL ASSY. (BRAKE)			
73/74	A - - A/T and power disc brakes-	★ D3AZ 2455-C(5/79)		1
75	A - - rear drum brake	★ D3AZ 2455-C(5/79)		1
75	A - - rear disc brake	★ D5MY 2455-A(6/82)	#White daub	1
76/78	A - - rear disc brakes	★ D5MY 2455-A(6/82)		1
76/78	A - - rear drum brake			
	- - (exc. 71)	★ D6AZ 2455-A(6/82)		1
	- - (71) "Before 1/1/76"	★ D6AZ 2455-A(6/82)		1
	- - (71) "From 1/1/76 to 5/2/77"	★ D5MY 2455-A(6/82)		1
77/78	A (71) - - rear drum brake "From 5/2/77"	★ D6AZ 2455-A(6/82)		1
79	A	D9AZ 2455-A		1
73/74	C - - M/T and power disc brakes	★ D20Z 2455-C(3/84)		1
73/74	C - - A/T and manual disc brakes	★ D30Z 2455-C(5/79)		1
73/76	C - - A/T and power disc brakes	D70Z 2455-A		1
73	D	★ D3VY 2455-A(5/79)		1
74	D "Before 4/8/74"	★ D4VY 2455-A(5/79)		1
74/	D "From 4/8/74"	D4VY 2455-B		1
73	F - - M/T	★ D1ZZ 2455-A(1/80)		1
73	F - - A/T	★ D1ZZ 2455-B(5/79)		1
74	F - - M/T	★ D20Z 2455-C(3/84)		1
74/	F	D70Z 2455-A		1
75/77	G - - rear drum brake			
	- - A/T and power brakes	★ D5DZ 2455-H(6/82)		1
	- - A/T and manual brakes	★ D5DZ 2455-K(3/84)		1
	- - M/T and power brakes	★ D5DZ 2455-J(3/81)		1
	- - M/T and manual brakes	★ D5DZ 2455-L(3/84)		1
75/77	G - - rear disc brakes			
	- - A/T "Before 7/4/77"	★ D5DZ 2455-N(3/81)		1
	- - M/T "Before 7/4/77"	★ D5DZ 2455-M(3/81)		1
77/	G - - rear disc brake			
	- - M/T "From 7/4/77"	★ D8DZ 2455-A(3/84)		1
	- - A/T "From 7/4/77"	★ D8DZ 2455-B(3/84)		1
78	G - - rear drum brake			
	- - Manual brakes and A/T	★ D5DZ 2455-K(3/84)		1
	- - Manual brakes and M/T	★ D5DZ 2455-L(3/84)		1
	- - Power brakes and A/T	★ D8DZ 2455-B(3/84)		1
	- - Power brakes and M/T	★ D8DZ 2455-A(3/84)		1
73/78	J - - 4 cyl. 122 (2000 cc) and A/T	★ D2RY 2455-E(6/82)		1
74/78	J - - 6 cyl. 171 (2800 cc)			1
76/78	J - - M/T	★ D5RY 2455-A(2/80)		1
79	J - - M/T and manual disc brakes	D8BZ 2455-A		1
	J - - A/T and manual disc brakes	D8BZ 2455-D		1
	J - - M/T and power brakes	D9BZ 2455-A		1
	J - - A/T and power brakes	D9BZ 2455-B		1
73	K "Before 11/6/72"	★ D3SZ 2455-A(5/79)		1
73/74	K "From 11/6/72"	★ D3SZ 2455-B(2/80)		1
75/	K	D5SZ 2455-A		1
74	L - - A/T	★ D4FZ 2455-A(2/80)		1
74	L - - M/T	★ D4FZ 2455-B(5/79)		1
75/	L - - A/T and manual brakes	★ D5FZ 2455-D(3/84)		1
75/	L - - A/T and power disc brakes	★ D5FZ 2455-A(3/84)		1
75/	L - - M/T and manual brakes	D5FZ 2455-B		1
75/	L - - M/T and power disc brakes	★ D5FZ 2455-C(6/83)		1

COPYRIGHT © 1986 — FORD MOTOR COMPANY — DEARBORN, MICHIGAN

1973/79 LINCOLN-MERCURY CARS

YEAR	MODEL/RESTRICTIONS	PART NUMBER	DESCRIPTION	QTY.
2455	PEDAL ASSY. (BRAKE) — Cont'd			
75/77	P - - w/power disc brakes	★ D5DZ 2455-A(3/81)		1
75/77	P - - A/T and manual brakes	D5DZ 2455-B		1
75/77	P - - M/T and manual brakes	D5DZ 2455-C		1
78/	P - - M/T and manual brakes	D8BZ 2455-A		1
78/	P - - A/T and manual brakes	D8BZ 2455-D		1
78	P - - M/T and power brakes	★ D8BZ 2455-C(6/82)		1
78	P - - A/T and power brakes	★ D8BZ 2455-B(6/82)		1
79	P - - M/T and power brakes	D9BZ 2455-A		1
	P - - A/T and power brakes	D9BZ 2455-B		1
77	V	D5DZ 2455-N		1
73/74	Y - - A/T and power disc brakes-	★ D3AZ 2455-C(5/79)		1
75	Y - - w/rear drum brakes	★ D3AZ 2455-C(5/79)		1
75	Y - - w/rear disc brakes	D5MY 2455-A	#White daub	1
76	Y - - rear drum brakes	★ D6AZ 2455-A(6/82)		1
76	Y - - rear disc brakes	★ D5MY 2455-A(6/82)		1
73/78	J	120714-E88	Bolt-square head-5/16"-18 x 1 1/2"	1
73/78	J	120828-ES8	Washer-special-5/16"	1
73/78	J	34806-S7	(X-64)-lockwasher-split ring-5/16"	1
73/78	J	33797-S7	(M-50)-nuthex.-5/16"-18	1
76/78	J - - manual trans.	E840019-S76	Pin-self locking (used clevis pin to pedal) 10mm (Metric)	1
73/	K	★ 56350-S4	(B-317)-bolt-hex. head-to support 3/8"-16 x 3 1/2"	1
2456	Refer to group 2A651			
2457	Refer to group 2454			
2461	Refer to group 2471			
2462	PIN (BRAKE MASTER CYLINDER PUSH ROD CLEVIS)			
73/74	J - - 4 cyl. 122 (2000 cc) and M/T	★ D1RY 2462-B(6/82)		1
73/74	J - - 4 cyl. 122 (2000 cc) and A/T	★ D1RY 2462-C(6/82)		1
76/78	J			1
2K470	TUBE ASSY. (BRAKE DIFFERENTIAL VALVE TO FRONT BRAKE)			
73/78	J	★	54 3/4" long-improvise from bulk tubing (2269) and add fittings (1-E855006-S72 and 1-E855016-S72)	1
2471	BUSHING (BRAKE and CLUTCH PEDAL)			
73/	A,F,G,L,P,V - - A/T	B7AZ 2471-B	5/8" long-brake	2
73/76	C		Brake	2
73/	D,K		Brake	4
73/76	Y		Brake	2
79	A,J	D9AZ 2471-A	13MM I.D. x 12.5MM-brake	2
73/74	C	C9OZ 2471-A	Clutch	2
73	F		Clutch	2
73/	P - - M/T		Brake	2
73/74	J	D0RY 2461-A	Brake	2
76/78	J - - A/T			2
76/78	J - - M/T	D5RY 2461-A	Brake and clutch	2
73/74	J	★ D4RY 2461-A r/b D4RY 2461-B(3/85)	Clutch	2
73/	A,C,D,P,Y	74279-S	(R-5)-pin-dowel-3/8" x 3/4"	1
73	F			1
73/	A,C,D,P,Y	358981-S	(XX-364)-washer-spring-41/64"	1
73	F			1

YEAR	MODEL/RESTRICTIONS	PART NUMBER	DESCRIPTION	QTY.
2472	SPRING (BRAKE PEDAL RETRACTING)			
73/	J	★ D0RY 2472-A(6/82)		1
2474	BUSHING (BRAKE MASTER CYLINDER PUSH ROD)			
73/	A,D,F,G,K,L,P,V	C9AZ 2474-A	9/16" I.D. x 13/16" O.D. x 5/16"-nylon	1
73/76	C,Y			1
79	J			1
73/74	J - - 4 cyl. 122 (2000 cc) and M/T	D1RY 2474-D	1/2" long	1
76/78	J - - M/T			1
73/74	J - - 4 cyl. 122 (2000 cc) and M/T	★ D1RY 2474-C(12/80)	1 9/32" long	1
76	J - - M/T			1
73/74	J - - 4 cyl. 122 (2000 cc) and A/T	★ D1RY 2474-E(12/80)		2
76/78	J - - A/T			1
73	J - - 6 cyl. 159 (2600 cc) and M/T	★ D1RY 2474-A(6/82)		2
73	J - - 6 cyl. 159 (2600 cc) and A/T	★ D0RY 2474-A(6/82)		2
73/78	J	130819-ES8	Pin-clevis-3/8" x 2 3/32"	1
73/78	J	116427-ES8	Pin-self-locking-3/32" x 7/8"	2
73/78	J	120818-ES8	Pin-clevis-3/4" x 1 1/8"	1
2K475	TUBE ASSY. (BRAKE DIFFERENTIAL VALVE TO REAR BRAKE)			
73/74	J	★	118 5/8" long-improvise from bulk tubing (2269) and add fittings (1-D0RY 2074-B and 1-E855006-S72)	1
2B476	TUBE (BRAKE SKID CONTROL ACTUATOR VACUUM)			
73/74	D,K	★	Improvise from bulk tubing (2269) and add 87947-S	
2478	SHAFT (BRAKE PEDAL)			
73	A,C,F,P,Y	★ C8AZ 2478-A(2/80)	5/8" diameter x 3 5/8"	1
73/74	D,L			1
73/74	J	★ D1RY 2478-C(6/82)	Brake and clutch	1
76/78	J - - A/T			1
76/78	J - - M/T	D0RY 2478-A		1
73/78	J	111148-ES2	Washer-flat	1
2K478	RESERVOIR (BRAKE MASTER CYLINDER)			
73/74	J	★ D0RY 2K478-B		1
76	J	★ D5RY 2K478-A(2/80)		1
2B486	SPRING (DISC BRAKE CALIPER SUPPORT)-Also serviced in kit-group 2001			
73/	A	D20Z 2B486-A	Front	2
73/76	C		Front	2
73/	D		Front	2
73/	K		Front	2
73/76	Y		Front	2
75/	A - - rear disc brake		Rear	2
75/	D - - rear disc brake		Rear	2
75/	G - - rear disc brake		Rear	2
75/	K		Rear	2
77	V - - Rear disc brake		Rear	2
75/76	Y - - rear disc brake		Rear	2
75/	G	D4FZ 2B486-A	Front	2
74/	L		Front	2
74/	P		Front	2
2487	SNAP RING (BRAKE and CLUTCH PEDAL RETAINING)			
73/78	J	D9RZ 2487-A		1
2A487	COVER (BRAKE PEDAL PAD)			
73/76	A,Y - - w/o skid control	★ C9AZ 2A487-A(6/83)		1
73/76	A,Y - - w/skid control	★ D2MY 2A487-A(5/79)		1
73/74	C - - M/T	D1ZZ 2A487-B		1
73/76	C - - A/T	★ D20Z 2A487-A(11/85)		1
73/74	D - - w/o skid control "Before 4/8/74"	★ C8SZ 2A487-A(3/81)	8 7/16" long	1
74/75	D - - w/o skid control "From 4/8/74 to 2/3/75"	★ C9AZ 2A487-A(6/83)		1

COPYRIGHT © 1986 — FORD MOTOR COMPANY — DEARBORN, MICHIGAN

1973/79 LINCOLN-MERCURY CARS

YEAR	MODEL/RESTRICTIONS	PART NUMBER	DESCRIPTION	QTY.
2A487	COVER (BRAKE PEDAL PAD) — Cont'd			
75/76	D - - w/o skid control "From 2/3/75"	D20Z 2A487-A		1
73/74	D - - w/skid control- "Before 4/8/74"	★ C9SZ 2A487-A(5/79)		1
74/75	D - - w/skid control- "From 4/8/74 to 2/3/75"	★ D2MY 2A487-A(5/79)		1
75/76	D - - w/skid control "From 2/3/75"	D2SZ 2A487-B		1
73	F - - M/T	D1ZZ 2A487-B		1
73	F - - A/T	★ D1ZZ 2A487-A(5/79)		1
74/76	F - - A/T	D20Z 2A487-A		1
73	J - - M/T	★ D0RY 2A231-A(6/82)	Brake and clutch	2
73/74	J - - A/T	D1RY 2A231-A		1
73	K - - w/o skid control	C8SZ 2A487-A		1
73/76	K - - w/skid control	D2SZ 2A487-B		1
75/76	K - - w/o skid control	D20Z 2A487-A		1
78/	K	D2SZ 2A487-A	w/Diamond Jubilee/Luxury Decor. opt.	1
77/	V	★ D74Y 2A487-A(3/84)		1
2B487	KEY (DISC BRAKE CALIPER SUPPORT)-Also serviced in kit-group 2001			
73/	A	D20Z 2B487-A	Front	2
73/76	C		Front	2
73/	D		Front	2
73/	K		Front	2
73/76	Y		Front	2
75/	A - - rear disc brake		Rear	2
75/	D - - rear disc brake		Rear	2
75/	G - - rear disc brake		Rear	2
75/	K		Rear	2
77/	V - - Rear disc brake		Rear	2
75/76	Y - - rear disc brake		Rear	2
75/	G,V	D4FZ 2B487-A	Front	2
74/	L		Front	2
74/	P		Front	2
73/	A,C,D,K,Y	385217-S100	(BB-839-J)-screw-5/16"-18 x 5/8"-to another plate	2
2K487-8	TUBE ASSY. (BRAKE BOOSTER TO DIFFERENTIAL VALVE)			
73/74	J	★	Front-19" long-improvise from bulk tubing (2269) and add fittings (1-E855006-S72 and 1-E855016-S72)	1
		★	Rear-16 1/4" long-improvise from bulk tubing (2269) and add fittings (2-D0RY 2074-B)	1
2K505	RETAINER (BRAKE MASTER CYLINDER CHECK)			
73/74	J	★ D0RY 2K505-A(6/82)		1
2B516	WIRING ASSY. (BRAKE SKID CONTROL ACTUATOR)			
73	A	★ D2LY 2B516-A(5/79)		1
75	A "Before 1/2/75"	★ D5MY 2B516-A(5/79)		1
75	A "From 1/2/75"	★ D5MY 2B516-B(5/79)		1
76/	A	★ D6MY 2B516-A(3/81)		1
73/74	D	★ D2LY 2B516-A(5/79)		1
75	D	★ D5VY 2B516-A(5/79)		1
76/77	D	★ D6VY 2B516-A(6/82)		1
78/	D	D8VY 2B516-A		1
75/	G	★ D5DZ 2B516-A(2/80)		1
73/74	K	★ D2LY 2B516-A(5/79)		1
73	Y	★ D2LY 2B516-A(5/79)		1
75	Y "Before 1/2/75"	★ D5MY 2B516-A(5/79)		1
75	Y "From 1/2/75"	★ D5MY 2B516-B(5/79)		1
76	Y	★ D6MY 2B516-A(3/81)		1

YEAR	MODEL/RESTRICTIONS	PART NUMBER	DESCRIPTION	QTY.
2530	BRACKET (PARKING BRAKE CABLE)			
75/79	C,F,K	D50Z 2530-A	Rear	1
75/76	G	★ D5DZ 2530-B(6/82)	Front	1
75/78	G - - w/four wheel disc brakes	(RH) ★ D5DZ 2530-C(3/84)	(LH) ★ D5DZ 2530-D(3/84) Rear	1
75/	G - - w/o four wheel disc brakes	★2530	Rear-not used on rear drum brakes	1
77/	G	★ D7DZ 2530-A(10/85)	Front	1
79	J	(RH) D9ZZ 2530-A	(LH) D9ZZ 2530-B Rear	1
75/	L	(RH) ★ D1FZ 2530-D(3/84)	(LH) ★ D1FZ 2530-E(3/84) Front	1
74	L	★ D1FZ 2530-D(3/84)	R.H.-front	1
74/	L	★ D4FZ 2530-A(3/84)	Rear	2
75/77	P	★ D5DZ 2530-B(6/82)	Front	1
78/	P	D8BZ 2530-A	Front	1
78/	P	D8BZ 2530-B	Rear	1
77/	V	(RH) D5DZ 2530-C	(LH) D5DZ 2530-D Rear	1

YEAR	MODEL/RESTRICTIONS	PART NUMBER: CALIPER ASSY.	PART NUMBER: △ REPAIR KIT	DESCRIPTION	QTY.
2552-3	CALIPER ASSY. (REAR DISC BRAKE)				
	△ Refer to group 2221 for contents of kit.				
NOTE 1-	1 kit req'd. per vehicle (to be used for R.H. and L.H. calipers). Repairs piston seals only.				
NOTE 2-	Refer to group 2B595 for complete seal kit.				
75	A "Before 4/28/75"	D5MY 2552-A	D4FZ 2221-A	R.H.	1
		D5MY 2553-A	Note 1, 2	L.H.	1
75/78	A "From 4/28/75"	★ D6AZ 2552-A(10/84)	D4FZ 2221-A	R.H.	1
		★ D6AZ 2553-A	Note 1, 2	L.H.	1
75	D "Before 4/28/75"	D5MY 2552-A	D4FZ 2221-A	R.H.	1
		D5MY 2553-A	Note 1, 2	L.H.	1
75/79	D "From 4/28/75"	★ D6AZ 2552-A(10/84)	D4FZ 2221-A	R.H.	1
		D6AZ 2553-A	Note 1, 2	L.H.	1
75	G "Before 6/9/75"	★ D5DZ 2552-A(5/79)	D5DZ 2221-A	R.H.	1
		D6DZ 2553-A	Note 1, 2	L.H.	1
	G "From 6/9/75"	★ D5DZ 2552-B(5/79)	D5DZ 2221-A	R.H.	1
		★ D5DZ 2553-B(5/79)	Note 1, 2	L.H.	1
76/	G,V	D6DZ 2552-A	D5DZ 2221-A	R.H.	1
		D6DZ 2553-A	Note 1, 2	L.H.	1
75	K "Before 4/28/75"	D5SZ 2552-A	D4FZ 2221-A	R.H.	1
		D5SZ 2553-A	Note 1, 2	L.H.	1
75/	K "From 4/28/75"	D6SZ 2552-A	D4FZ 2221-A	R.H.	1
		D6SZ 2553-A	Note 1, 2	L.H.	1
75	Y "Before 4/28/75"	D5MY 2552-A	D4FZ 2221-A	R.H.	1
		D5MY 2553-A	Note 1, 2	L.H.	1
75/78	Y "From 4/28/75"	★ D6AZ 2552-A(10/84)	D4FZ 2221-A	R.H.	1
		★ D6AZ 2553-A(10/84)	Note 1, 2	L.H.	1

YEAR	MODEL/RESTRICTIONS	PART NUMBER	DESCRIPTION	QTY.
2B567	Refer to group 2A178			
2K571	COVER (BRAKE PRESSURE DIFFERENTIAL VALVE)			
73/74	J	★ D0RY 2K571-A(6/82)	Also serviced in assy.-group 2B257	1
2K579	PIN (PARKING BRAKE EQUALIZER LEVER PIVOT)			
73/74	J	D0RY 2K579-A		1
2B582-3	PLATE (REAR DISC BRAKE CALIPER ANCHOR)			
75	A	(RH) ★ D5MZ 2B582-A(5/79)	(LH) ★ D5MZ 2B583-A(5/79)	1
76/	A	(RH) ★ D5DZ 2B582-A(10/85)	(LH) ★ D5DZ 2B583-A(10/85)	1
75	D	(RH) ★ D5MZ 2B582-A(5/79)	(LH) ★ D5MZ 2B583-A(5/79)	1
76/	D	(RH) ★ D5DZ 2B582-A(10/85)	(LH) ★ D5DZ 2B583-A(10/85)	1
75/	G,V	(RH) ★ D5DZ 2B582-A(10/85)	(LH) ★ D5DZ 2B583-A(10/85)	1
75	K	(RH) ★ D5MZ 2B582-A(5/79)	(LH) ★ D5MZ 2B583-A(5/79)	1
76/	K	(RH) ★ D5DZ 2B582-A(10/85)	(LH) ★ D5DZ 2B583-A(10/85)	1
75	Y	(RH) ★ D5MZ 2B582-A(5/79)	(LH) ★ D5MZ 2B583-A(5/79)	1
76	Y	(RH) ★ D5DZ 2B582-A(10/85)	(LH) ★ D5DZ 2B583-A(10/85)	1

COPYRIGHT © 1986 — FORD MOTOR COMPANY — DEARBORN, MICHIGAN

1973/79 LINCOLN-MERCURY CARS

YEAR	MODEL/RESTRICTIONS	PART NUMBER	DESCRIPTION	QTY.
2B588	PISTON and ADJUSTER ASSY. (REAR DISC BRAKE)			
75/	A	D5MZ 2B588-B		2
75/	D	D5MZ 2B588-B		2
75/	G,V	E25Y 2B588-A		2
75/	K	D5MZ 2B588-B		2
75/76	Y	D5MZ 2B588-B		2
2K589	SNAP RING (POWER BRAKE BOOSTER BODY PISTON SEAL)			
73/74	J	★ D0RY 2K589-A(6/82)		1
2B595	SEAL KIT (REAR DISC BRAKES)			
75/	A,D,K,Y	D5MZ 2B595-A		2
75/76	Y			2
	Consists of			
	1-D42A 2B115-AA Seal	1-D5MA 2B595-AA Seal	1-386073-S "O" ring	
	1-D42A 2207-AA Boot	1-386062-S "O" ring		
75/	G,V	D5DZ 2B595-A		2
	Consists of			
	1-D5DA 2B115-AA Seal	1-D5MA 2B595-AA Seal	1-386073-S "O" ring	
	1-D5DA 2207-AA Boot	1-386062-S "O" ring		
2A596	HOSE (PARKING BRAKE)			
73/78	A	★ D3MY 2A596-A(6/82)	Auto. parking brake control-28 3/4" long	1
79	A	D9AZ 2A596-A	Auto parking brake control-approx. 29" long	1
76	C	D60Z 2A596-A	Auto parking brake control-16 3/4" long	1
76	C	D2SZ 2A596-C	Release valve-13 1/4" long	1
73/74	D "Before 11/1/73"	★ D0VY 2A596-B(5/79)	Switch to tee-31" long	1
74/	D "From 11/1/73"	D4VY 2A596-C	Release valve-7 1/2" long	1
74/	D "From 11/1/73"	D4VY 2A596-A	Release valve-24" long	1
74/	D "From 11/1/73"	D4VY 2A596-B	Switch to tee-7 1/2" long	1
74	D "From 11/1/73"	D4VY 2A596-D	Switch to tee-24" long	1
76/	F	D60Z 2A596-A	Auto. parking brake control-16 3/4" long	1
76/	F	D2SZ 2A596-C	Release valve-13 1/4" long	1
76/	G - - 6 cyl., A/T	★ D6DZ 2A596-A(3/81)	50" long	1
76/	G - - 8 cyl., A/T	★ D6DZ 2A596-B(3/84)	21" long	1
73/	K	D2SZ 2A596-C	Release valve-13 1/4" long	1
73/	K	★2A596	Switch to tee-12 1/2" long-improvise from bulk hose (17543)	1
76/78	V "Before 2/1/78"	D6DZ 2A596-B	21" long	1
78/	V "From 2/1/78"	★ D84Y 2A596-A(3/84)	10 1/2" long	1
73/76	Y	★ D3MY 2A596-A(6/82)	Auto. parking brake control-28 3/4" long	1
2B596-7	LEVER (REAR WHEEL PARKING BRAKE SHAFT ACTUATING)			
75/	A,D,G,K,V - - rear disc brake	(RH) ★ D5MZ 2B596-A(3/81)	(LH) ★ D5MZ 2B597-A(9/83)	1
75/76	Y - - rear disc brake			1
2B598	BEARING and RETAINER KIT (REAR DISC BRAKE)			
75/	A,D,G,K,V	E25Y 2B598-A		1
75/76	Y			1
2B599	ADJUSTER ASSY. (PARKING BRAKE CABLE)-Also refer to group 2K390			
75/	A,D,K - - rear disc brake	★ D5LZ 2B599-A(3/84)	Rear	1
75/76	Y - - rear disc brake			1
78/	P	D8BZ 2B599-A		1
2A601	SPRING (PARKING BRAKE LINK)			
73/78	A - - rear drum brake	D1AZ 2A601-A		1
79	A	★ D9AZ 2A601-A	r/b 1 pc. D1AZ 2A601-A & 1 pc. C4UZ 2A787-A (9/78)	2
73/74	C - - all rear brakes "Before 9/1/73"	D1AZ 2A601-A		1
74/75	C - - 10" rear drum brake- "From 9/1/73"	D40Z 2A601-A		1
74/76	C - - 11" rear drum brake "From 9/1/73"	D1AZ 2A601-A		1
73/	D - - rear drum brake	D1AZ 2A601-A		1
73	F	D1AZ 2A601-A		1

1973/79 LINCOLN-MERCURY CARS

YEAR	MODEL/RESTRICTIONS	PART NUMBER	DESCRIPTION	QTY.
2A601	SPRING (PARKING BRAKE LINK) — Cont'd			
74/75	F	D40Z 2A601-A		1
76/	F	D1AZ 2A601-A		1
75/78	G - - rear drum brake	D1AZ 2A601-A		1
79	G,P - - 10" rear drum brake	★ D9BZ 2A601-A	#Japan green-r/b E0AZ 2A601-A (11/79)	2
79	J - - 9" rear drum brake	D1FZ 2A601-B		2
73/74	K	D1AZ 2A601-A		1
73/	L	D1FZ 2A601-B		2
73/78	P - - 10" rear drum brake	D1AZ 2A601-A		1
78/	P - - 9" rear drum brake	D1FZ 2A601-B		1
73/76	Y - - rear drum brake	D1AZ 2A601-A		1
2B601	CABLE and CONDUIT ASSY. (PARKING BRAKE TRANSVERSE)			
75/76	G	D6DZ 2B601-A	52 1/2" long	1
77/	G,V	D7DZ 2B601-A	38 1/2" long	1
75	P(62)	★ D5DZ 2B601-B r/bD6DZ 2B601-B(11/78)	#Blue-72 1/2" long	1
75/77	P(54)	D6DZ 2B601-C	79 1/8" long	1
76/77	P(62)	D6DZ 2B601-B	72 3/8" long	1
78/	P	D8BZ 2B601-A	57 1/2" long	1
75	G,P	383475-S	(RR-4-A)-clip	1
76/	G,P,V	387225-S2	(GG-178-E)-clip	1
2A602	EQUALIZER (PARKING BRAKE CABLE)			
73/74	A	★ C8AZ 2A602-A(3/84)		1
75/77	A - - rear drum brake "Before 7/1/77"	C6AZ 2A602-A		1
77/78	A "From 7/1/77"	D8AZ 2A602-A		1
73/74	C	C60Z 2A602-A		1
75/76	C	D50Z 2A602-A		1
73/74	D	★ C8AZ 2A602-A(3/84)		1
75/77	D - - rear drum brake "Before 7/28/77"	C6AZ 2A602-A		1
77/	D "From 7/28/77"	D8AZ 2A602-A		1
73/74	F	C60Z 2A602-A		1
75/	F	D50Z 2A602-A		1
79	J	D9ZZ 2A602-A		1
73/74	K	C60Z 2A602-A		1
78/	K	D8AZ 2A602-A		1
74/	L	D4FZ 2A602-B		1
73/74	P	C60Z 2A602-A		1
73/74	Y	★ C8AZ 2A602-A(3/84)		1
75/76	Y	C6AZ 2A602-A		1
73/	F	379930-S2	(MM-173-M)-locknut (to rod)-5/16"-18	1
2B602	RETAINER (PARKING BRAKE CABLE GROMMET)			
75/	G,V	★ D5DZ 2B602-A(10/85)	4 9/16" long	1
75/77	P			1
2B603	SPRING (PARKING BRAKE EQUALIZER LEVER)			
75/76	G,P "Before 6/1/76"	D5DZ 2B603-A		1
76/	G,P,V "From 6/1/76"	D7DZ 2B603-A		1
2A605-6	LEVER (PARKING BRAKE EQUALIZER)			
73/74	A	★ D3AZ 2A605-A(2/80)	8 5/8" long	1
75/	A - - rear drum brake	D5AZ 2A605-A		1
73	D	★ D3VY 2A606-A(9/85)	8 11/16" long	1
75/76	D - - rear drum brake	D5VY 2A606-A		1
77	D - - rear drum brake	★ D3VY 2A606-A(9/85)		1
78/	D - - rear drum brake	D5VY 2A606-A		1
75/76	G - - rear drum brake	D5DZ 2A605-B		1
75	G - - rear disc brake	★ D5DZ 2A605-C(5/79)		1
76	G - - rear disc brake	D6DZ 2A605-A		1
77/	G - - rear drum brake	D7DZ 2A605-A		1
77/78	G - - rear disc brake	D7DZ 2A605-B		1

COPYRIGHT © 1986 — FORD MOTOR COMPANY — DEARBORN, MICHIGAN

1973/79 LINCOLN-MERCURY CARS

YEAR	MODEL/RESTRICTIONS	PART NUMBER	DESCRIPTION	QTY.
2A605-6	LEVER (PARKING BRAKE EQUALIZER) — Cont'd			
73/74	J	★ D3RY 2A605-A(2/80)		1
73	K	C8SZ 2A605-B		1
73/74	P	★ D3DZ 2A605-A(6/83)		1
75/77	P	D5DZ 2A605-B		1
75	P	★ D5DZ 2A606-B(5/79)	Multiplier	1
78/	P	D8BZ 2A605-A		1
77/	V - - rear disc brake	D7DZ 2A605-B		1
73/74	Y	D3AZ 2A605-A		1
75/76	Y - - rear drum brake	D5AZ 2A605-A		1
2K606	GROMMET (PARKING BRAKE RELEASE ROD)			
73/	L	★ D1FZ 2K606-A(3/81)		1
75/	G,P - - rear drum brake	D5DZ 2K606-A		1
2L611	SPRING (PARKING BRAKE LEVER RETRACTING)			
73	K	D2SZ 2L611-A	2 1/8" long-29 1/4 coils	1
2A616	RETAINER (PARKING BRAKE EQUALIZER LEVER RETURN SPRING)			
73/	D	C7AZ 2A616-A		1
2B618	REINFORCEMENT ASSY. (PARKING BRAKE CABLE BRACKET)			
77/	G,V	★ D7DZ 2B618-A(3/84)		1
2B619	REINFORCEMENT ASSY. (PARKING BRAKE EQUALIZER BRACKET)			
77/	G,V	D7DZ 2B619-A		1
2B622	BRACKET (PARKING BRAKE CABLE GUIDE)			
79	J	(RH) D9ZZ 2B622-A	(LH) D9ZZ 2B622-B	1
2B623	SWITCH ASSY. (PARKING BRAKE RELEASE)-Also refer to basic group 15520			
79	A	D9AZ 2B623-A	Auto p/brk. release	1
2B624	ACTUATOR ASSY. (PARKING BRAKE RELEASE SWITCH)			
79	A "Before 5/1/79"	D9AZ 2B624-A		1
79	A "From 5/1/79"	E0AZ 2B624-A		1
2B625	STRAP (PARKING BRAKE RELEASE SWITCH)			
79	A	D9AZ 2B625-A		1
2B627	PIN (PARKING BRAKE REAR CABLE GUIDE)			
79	J	D9ZZ 2B627-A		1
2628	ROD (PARKING BRAKE EQUALIZER)			
73	A,C,F,K,Y	B7A 2628-B	Universal-12" long-cut thread end to required length	1
73	D	★ D0VY 2628-A(3/81)	5/16"-18 x 5 7/16"	1
74/	D - - rear drum brake	D4VY 2628-A		1
76/78	J	★ D5RY 2628-A(3/81)	#Yellow,75EB 2K596-AA	1
79	J	D9ZZ 2628-A		1
74/75	L	D4FZ 2628-A		1
76/	L	D6FZ 2628-A		1
73/74	P	D3DZ 2628-A	5/16"-18 x 5 7/16"-3 1/4" thread length	1
75	P	★ D5DZ 2628-A(9/85)		1
73	A,C,F,K,L,Y	33923-S	(M-32)-check-nut-5/16"-24	1
73	A,C,F,K,L,Y	34443-S	(M-79)-lock-nut-5/16"-24	1
2631	BRACKET (PARKING BRAKE EQUALIZER)			
75/76	G	★ D5DZ 2631-A(3/81)		1
77/	G,V	D7DZ 2631-A		1
73/74	J	★ D0RY 2631-A(6/82)		1
76/77	P	★ D6DZ 2631-A(3/81)		1
78/	P	★ D8BZ 2631-A	R/b E0SZ 2631-A (3/81)	1
73/78	J	116429-ES	Pin-self-locking-1/8" x 1 3/16"	1
73/78	J	23648-GS40	Bolt-hex. head-M8 x 15 (Metric coarse)	3
73/78	J	34806-S7	(X-64)-lockwasher-split ring-M8 (Metric)	3
2634	SPRING (PARKING BRAKE RELEASE)-Also refer to group 2A651			
73/77	A - - rear drum brake "Before 7/1/77"	★ C9AZ 2634-A(3/84)	Vacuum release	1
76/77	A - - rear disc brake "Before 7/1/77"	★ D6MZ 2634-A(3/81)	Vacuum release	1
77/78	A - - rear disc brake "From 7/1/77"	D8AZ 2634-A		1
77/78	A - - rear drum brake "From 7/1/77"	★ D8AZ 2634-B(3/84)		1
79	A	D9AZ 2634-A		1

1973/79
LINCOLN-MERCURY CARS

YEAR	MODEL/RESTRICTIONS	PART NUMBER	DESCRIPTION	QTY.
2634	SPRING (PARKING BRAKE RELEASE)-Also refer to group 2A651 — Cont'd			
79	A,D,F,K—w/auto release	D9AZ 2634-B	Used from motor (2A843) to release on control assy (2780)	1
73/76	C	D20Z 2634-A	Manual release-1 7/8" long-30 coils	1
74/	F			1
75/	G			1
76/	P			1
77/	V			1
76/77	D - - rear disc brake	★ D6VY 2634-A(3/81)		1
78/	D - - rear disc brake	D8AZ 2634-A		1
78/	G - - w/auto release	D8DZ 2634-A	Used from motor (2A843) to release on control assy (2780)	1
77/	V - - w/auto release			
76/77	K "Before 7/1/77"	★ D6SZ 2634-A(3/81)	Vacuum release	1
77/	K "From 7/1/77"	D8LZ 2634-A		1
73/76	Y - - rear drum brake	★ C9AZ 2634-A(3/84)	Vacuum release	1
76	Y - - rear disc brake	★ D6MZ 2634-A(3/81)	Vacuum release	1
2A635	CABLE and CONDUIT (PARKING BRAKE REAR)			
73/74	A	C9AZ 2A635-A	R.H.-88 3/4" long	1
		D0AZ 2A635-B	L.H.-36 3/16" long	1
75/78	A - - rear drum brake	D5AZ 2A635-A	R.H.-88 13/16" long	1
		D5AZ 2A635-B	L.H.-36 3/16" long	1
75	A - - rear disc brake	D6AZ 2A635-A	R.H.-88 7/8" long	1
		★ D5MY 2A635-B(5/79)	L.H.-50 3/8" long	1
76/77	A - - rear disc brake	D6AZ 2A635-A	R.H.-89" long	1
	"Before 7/1/77"	D6AZ 2A635-B	L.H.-50 3/8" long	1
77/78	A - - rear disc brake "From 7/1/77"	D8AZ 2A635-A	R.H. - 89 3/4" long	1
		D8AZ 2A635-B	L.H. - 37 7/8" long	1
79	A	D9AZ 2A635-A	R.H.-76 1/2" long	1
		D9AZ 2A635-B	L.H.-44 1/4" long	1
73	C(53,63,65 - - exc. P/C)	D20Z 2A635-A	R.H. and L.H.-37" long	2
73	C(71) - - 6 cyl. and 8 cyl. 302			2
73	C(71) - - 8 cyl. 351,400,429	D2AZ 2A635-A	R.H. and L.H.-36 3/4" long	2
73	C(P/C) - - 6 cyl. and 8 cyl. 302, 351-2/B			2
74	C(53,65 - - exc. P/C)	D20Z 2A635-A	R.H. and L.H.-37" long	2
74	C(71)	D2AZ 2A635-A	R.H. and L.H.-36 3/4" long	2
74	C(P/C) - - 8 cyl. 460 P/C			2
75	C - - 10" rear brake	D50Z 2A635-E	R.H.-84 1/2" long	1
		D50Z 2A635-F	L.H.-37 3/4" long	1
75	C - - 11" rear brake	★ D50Z 2A635-A	R.H.-85 1/16" long	1
		r/bD60Z 2A635-A(10/78)	←	
		★ D50Z 2A635-B	L.H.-38 5/16" long-r/b D60Z 2A635-B (11/79)	1
76	C	D60Z 2A635-A	R.H.-84 7/8" long	1
		D60Z 2A635-B	L.H.-33 1/8" long	1
73	D	★ D0VY 2A635-C(5/79)	R.H.-89 1/4" long	1
		★ D0VY 2A635-D(5/79)	L.H.-37 5/16" long	1
74	D	★ D4VY 2A635-B(5/79)	L.H.-37 5/16" long	1
75/	D - - rear drum brake	D5VY 2A635-A	R.H.-88 5/8" long	1
		D5VY 2A635-B	L.H.-37 1/4" long	1
75	D - - rear disc brake	★ D5VY 2A635-C(5/79)	R.H.-90 1/4" long	1
		D6VY 2A635-B	L.H.-47 1/4" long	1
76/77	D - - rear disc brake	★ D6VY 2A635-A(3/81)	R.H.-90 1/4" long	1
		D6VY 2A635-B	L.H.-47 1/4" long	1
78/	D - - rear disc brake	D8VY 2A635-A	R.H.-91 1/2" long	1
		D8VY 2A635-B	L.H. - 37 3/4" long	1
73	F	D0ZZ 2A635-A	R.H.-133 1/8" long	1
		D0ZZ 2A635-B	L.H.-31" long	1
74	F	D20Z 2A635-A	R.H. and L.H.-37" long	2
75	F	D50Z 2A635-E	R.H.-84 5/8" long	1
		D50Z 2A635-D	L.H.-37 7/8" long	1
76/	F	D60Z 2A635-A	R.H.-84 7/8" long	1
		D60Z 2A635-B	L.H.-33 1/8" long	1

COPYRIGHT © 1986 — FORD MOTOR COMPANY — DEARBORN, MICHIGAN

1973/79 LINCOLN-MERCURY CARS

YEAR	MODEL/RESTRICTIONS	PART NUMBER	DESCRIPTION	QTY.
2A635	CABLE and CONDUIT (PARKING BRAKE REAR) — Cont'd			
75/76	G - - rear drum brake	D5DZ 2A635-A	R.H.-59 5/8" long	1
		D5DZ 2A635-B	L.H.-57 7/8" long	1
75	G - - rear disc brake	★ D5DZ 2A635-E	R.H.-64 1/8" long-r/b D6DZ 2A635-A (12/80)	1
		★ D5DZ 2A635-F(5/79)	L.H.-62 1/8" long	1
76	G - - rear disc brake	D6DZ 2A635-A	R.H.-64 1/8" long	1
		D6DZ 2A635-B	L.H.-62 1/8" long	1
77/78	G - - rear disc brake	D7DZ 2A635-A	R.H. and L.H.-68 1/4" long	2
77/	G - - rear drum brake	D7DZ 2A635-B	R.H. and L.H.-63 1/4" long	2
73/74	J	D0RY 2A635-A		1
76/78	J	★2A635	Serviced only in 2853 assy.	1
79	J	D9ZZ 2A635-A	R.H. and L.H.-67" long	2
73/74	K	D2AZ 2A635-A	R.H. and L.H.-36 3/4" long	2
75/77	K "Before 7/1/77"	D7LY 2A635-A	R.H.-79 7/8" long	1
		D7LY 2A635-B	L.H.-47 1/8" long	1
77/	K "From 7/1/77"	D8LY 2A635-A	R.H.-84 3/8" long	1
		D8LY 2A635-B	L.H.-41 1/4" long	1
74	L "Before 10/1/73"	D4FZ 2A635-A	109 1/4" long	1
74/75	L "From 10/1/73"	D5FZ 2A635-A	109 3/4" long	1
76/	L	D6FZ 2A635-A	107" long	1
73/74	P	D1DZ 2A635-A	R.H.-62 1/8" long	1
		D3DZ 2A635-A	L.H.-75 1/16" long	1
75/76	P "Before 6/1/76"	D7DZ 2A635-C	R.H.-32 3/8" long	1
		★ D5DZ 2A635-D	L.H.-57 3/4" long-r/b D7DZ 2A635-D (9/82)	1
76/77	P "From 6/1/76"	D7DZ 2A635-C	R.H.-32 3/8" long	1
		D7DZ 2A635-D	L.H.-57 3/4" long	1
78/	P	★ D8BZ 2A635-A	R.H. and L.H.-33 1/2" long-r/b D8BZ 2A635-B (6/83)	1
77/	V	D7DZ 2A635-A	R.H. and L.H.-68 1/4" long	2
73/74	Y	C9AZ 2A635-A	R.H.-88 3/4" long	1
		D0AZ 2A635-B	L.H.-36 3/16" long	1
75/76	Y - - rear drum brake	D5AZ 2A635-A	R.H.-88 13/16" long	1
		D5AZ 2A635-B	L.H.-36 3/16" long	1
75	Y - - rear disc brake	D6AZ 2A635-A	R.H.-88 7/8" long	1
		★ D5MY 2A635-B(5/79)	L.H.-50 3/8" long	1
76	Y - - rear disc brake	D6AZ 2A635-A	R.H.-89" long	1
		D6AZ 2A635-B	L.H.-50 3/8" long	1
73/	A,C,D,K,Y	383475-S100	(RR-4-A)-retainer-spring-7/16"	2
73/	A,C,D,K,Y	379930-S2	(MM-173-M)-locknut-5/16"-18-to plate	4
73/	A,C,D,K,Y	382062-S2	(UU-52-AA)-screw (to No. 4 cross member)-washer head-3/8"-16 x 1/4"	2
79	A	N800369-S100	(AM-18-N) Nut (cable to adjuster)-M8 x 1.25-hex. hd.	1
2A637-8	LEVER (PARKING BRAKE CABLE TO SECONDARY BRAKE SHOE)			
73/	A - - rear drum brake	(RH) C5AZ 2A637-A	(LH) C5AZ 2A638-A	1
76	A,Y - - rear drum brake	(RH) ★ D6AZ 2A637-A(2/80)	(LH) ★ D6AZ 2A638-A(2/80)	1
77/78	A - - rear drum brake	(RH) ★ D7AZ 2A637-A(6/83)	(LH) D7AZ 2A638-A	1
79	A - - 10" brakes	(RH) D9AZ 2A637-A	(LH) D9AZ 2A638-A	1
	A - - 11" brakes	(RH) D9AZ 2A637-B	(LH) D9AZ 2A638-B	1
73	C - - 10" brakes	(RH) D30Z 2A637-A	(LH) ★ D30Z 2A638-A r/bD6DZ 2A638-A(6/82)	1
74/75	C - - 10" brakes	(RH) ★ D30Z 2A637-A r/bE0TZ 2A637-A(6/83)	(LH) ★ D30Z 2A638-A(6/82)	1
74/75	C - - 11" brakes	(RH) C5AZ 2A637-A	(LH) C5AZ 2A638-A	1
76	C	(RH) ★ D6AZ 2A637-A(2/80)	(LH) ★ D6AZ 2A638-A(2/80)	1
73	D	(RH) C5AZ 2A637-A	(LH) C5AZ 2A638-A	1
74	D	(RH) ★ D4VY 2A637-A(5/79)	(LH) ★ D4VY 2A638-A(5/79)	1
75	D - - rear drum brake	(RH) C5AZ 2A637-A	(LH) C5AZ 2A638-A	1
76	D - - rear drum brake	(RH) ★ D6AZ 2A637-A(2/80)	(LH) ★ D6AZ 2A638-A(2/80)	1
77/	D - - rear drum brake	(RH) ★ D7AZ 2A637-A(6/83)	(LH) D7AZ 2A638-A	1
73/75	F	(RH) D30Z 2A637-A r/bE0TZ 2A637-A(6/83)	(LH) ★ D30Z 2A638-A r/bD6DZ 2A638-A(6/82)	1

1973/79
LINCOLN-MERCURY CARS

YEAR	MODEL/RESTRICTIONS	PART NUMBER	DESCRIPTION	QTY.
2A637-8	LEVER (PARKING BRAKE CABLE TO SECONDARY BRAKE SHOE) — Cont'd			
76	F	(RH) ★ D6AZ 2A637-A(2/80)	(LH) ★ D6AZ 2A638-A(2/80)	1
77/	F	(RH) ★ D7AZ 2A637-A(6/83)	(LH) D7AZ 2A638-A	1
75	G	(RH) ★ D30Z 2A637-A r/b E0TZ 2A637-A(6/83)	(LH) ★ D30Z 2A638-A r/b D6DZ 2A638-A(6/82)	1
76/	G - - rear drum brake	(RH) D6DZ 2A637-A	(LH) ★ D6DZ 2A638-A r/b E0TZ 2A638-A(1/84)	1
73/74	J	(RH) ★ D0RY 2A637-A	(LH) D0RY 2A638-A	1
76/78	J	2A637-8	Refer to group 2L643-4	
79	J	(RH) D6FZ 2A637-A	(LH) D6FZ 2A638-A	1
73/74	K	(RH) C5AZ 2A637-A	(LH) C5AZ 2A638-A	1
73/75	L	(RH) ★ D5FZ 2A637-A r/b D6FZ 2A637-A & D6FZ 2A642-A(3/78)	(LH) ★ D5FZ 2A638-A r/b D6FZ 2A638-A & D6FZ 2A642-A(3/78)	1
76/	L	(RH) D6FZ 2A637-A	(LH) D6FZ 2A638-A	1
73	P	(RH) ★ C9ZZ 2A637-A r/b D30Z 2A637-A(2/80)	(LH) ★ C9ZZ 2A638-A(6/82)	1
74/75	P	(RH) ★ D30Z 2A637-A r/b E0TZ 2A637-A(6/83)	(LH) ★ D30Z 2A638-A r/b D6DZ 2A638-A(6/82)	1
76/	P - - 10" brake	(RH) D6DZ 2A637-A	(LH) ★ D6DZ 2A638-A r/b E0TZ 2A638-A(1/84)	1
78	P - - 9" brake	(RH) D6FZ 2A637-A	(LH) D6FZ 2A638-A	1
73/75	Y - - rear drum brake	(RH) C5AZ 2A637-A	(LH) C5AZ 2A637-A	1
76	Y - - rear drum brake	(RH) ★ D6AZ 2A637-A(2/80)	(LH) ★ D6AZ 2A638-A(2/80)	1
2A642	LINK (PARKING BRAKE LEVER TO PRIMARY BRAKE SHOE)			
73/75	A - - rear drum brake	★ D1AZ 2A642-A(3/84)		1
76/	A - - 11" rear drum brakes	(RH) D4VY 2A642-A	(LH) D4VY 2A642-B	1
79	A - - 10" rear drum brakes	(RH) D6DZ 2A642-A	(LH) D6DZ 2A642-B	1
73/74	C - - 10" brakes "Before 9/1/73"	D10Z 2A642-A		1
74/75	C - - 10" brakes "From 9/1/73"	(RH) ★ D40Z 2A642-A r/b D6DZ 2A642-A(9/84)	(LH) D40Z 2A642-B	1
74/75	C - - 11" brakes	★ D1AZ 2A642-A(3/84)		1
76	C	(RH) D4VY 2A642-A	(LH) D4VY 2A642-B	1
73	D	★ D1AZ 2A642-A(3/84)		1
74/	D - - rear drum brake	(RH) D4VY 2A642-A	(LH) D4VY 2A642-B	1
73/74	F "Before 9/1/73"	D10Z 2A642-A		1
74/75	F "From 9/1/73"	(RH) ★ D40Z 2A642-A r/b D6DZ 2A642-A(9/84)	(LH) D40Z 2A642-B	1
76/	F	(RH) D4VY 2A642-A	(LH) D4VY 2A642-B	1
75	G - - rear drum brake	D10Z 2A642-A		1
76/	G - - rear drum brake	(RH) D6DZ 2A642-A	(LH) D6DZ 2A642-B	1
79	J	D6FZ 2A642-B		1
74/	L	D6FZ 2A642-B		1
73/75	P	D10Z 2A642-A		1
76/	P - - 10" brake	(RH) D6DZ 2A642-A	(LH) D6DZ 2A642-B	1
78	P - - 9" brake	D6FZ 2A642-B		1
73/75	Y - - rear drum brake	D1AZ 2A642-A		1
76	Y - - rear drum brake	(RH) D4VY 2A642-A	(LH) D4VY 2A642-B	1
2L642	SPRING (PARKING BRAKE RETURN)			
75/76	G - - rear disc brake	★ D5DZ 2L642-A(3/81)		1
2L643-4	LEVER and STRUT ASSY. (PARKING BRAKE)			
76/78	J - - 4 cyl.	(RH) ★ D5RY 2L643-A(2/80)	(LH) ★ D5RY 2L644-A(2/80)	1
76/78	J - - 6 cyl.	(RH) ★ D5RY 2L643-B(2/80)	(LH) ★ D5RY 2L644-B(2/80)	1
2L645	SPRING (PARKING BRAKE STRUT)			
76/78	J	★ D5RY 2L645-A(3/84)		2
2649	BRACKET (PARKING BRAKE CABLE SUPPORT)			
73	A "Before 3/5/73"	★ C9AZ 2649-A(5/79)		1
73/78	A "From 3/5/73"	D3AZ 2649-B		1
75/76	C	D50Z 2649-A	Cable to crossmember	1
73	D "Before 3/5/73"	★ C9AZ 2649-A(5/79)		1
73/	D "From 3/5/73"	D3AZ 2649-B		1
75/	F	D50Z 2649-A	Cable to crossmember	1

COPYRIGHT © 1986 — FORD MOTOR COMPANY — DEARBORN, MICHIGAN

1973/79 LINCOLN-MERCURY CARS

YEAR	MODEL/RESTRICTIONS	PART NUMBER	DESCRIPTION	QTY.
2649	BRACKET (PARKING BRAKE CABLE SUPPORT) — Cont'd			
75	G	★ D5DZ 2649-B(5/79)	Cable to body extension member	2
75	G	D5DZ 2649-C	Cable to rear engine support	1
76	G	(RH) ★ D6DZ 2649-A(3/81)	(LH) ★ D6DZ 2649-B(3/81) Cable to body extension member	1
77/	G,V	(RH) ★ D7DZ 2649-A(3/84)	(LH) ★ D7DZ 2649-C(3/84)	1
79	J	E0ZZ 2649-A		1
75/	K	D50Z 2649-A	Cable to cross member	1
73/74	L	D1FZ 2649-B		1
75/	L	★ D5FZ 2649-A(3/84)		1
73/76	P	★ D0DZ 2649-A(6/82)		1
75/	P	(RH) ★ D6DZ 2649-A(3/81)	(LH) ★ D6DZ 2649-B(3/81) Cable to body extension member	1
73	Y "Before 3/5/73"	C9AZ 2649-A		1
73/	Y "From 3/5/73"	D3AZ 2648-B		1
2K650	BOOT (PARKING BRAKE CABLE)			
73/	L	D3FZ 2K650-A		1
79	J			1
2A651	SPRING (PARKING BRAKE LEVER RETURN)-Also refer to group 2634			
73	C,K	★ D2OZ 2A651-A(3/81)	6 11/16" long-40 coils	1
73/74	J	★ D0RY 2456-A(6/82)		1
2A664	BRACKET (PARKING BRAKE CABLE GUIDE)			
78/	P	D8BZ 2A664-A		1
2A686	BRACKET (PARKING BRAKE LEVER)			
75	P	★ D5DZ 2A686-A(5/79)		1
2A697	GUIDE (PARKING BRAKE CABLE-FRONT)			
75/	D - - rear disc brake	D5VY 2A697-A		1
79	J	D9ZZ 2A697-A		2
2A700	GUIDE (PARKING BRAKE CABLE)			
73/74	J	D0RY 2A700-A		1
2A709	RETAINER (PARKING BRAKE CABLE REAR)			
75/78	A - - rear disc brake	D5LZ 2A709-A		1
75/	D - - rear disc brake			1
79	A "Before 1/22/79"	D9AZ 2A709-A		3
	A "From 1/22/79"	D9AZ 2A709-A	Used arm & bushing-lower rear	2
	A "From 1/22/79"	D9AZ 2A709-B	Used arm & bushing-R.H. upper rear	1
75/76	G - - rear drum brake "Before 4/5/76"	D4FZ 2A709-A		1
75/	G,V - - rear disc brake	★ D5DZ 2A709-B(6/82)		1
76/	G - - rear drum brake "From 4/5/76"	D6DZ 2A709-A		1
75/	K	D5LZ 2A709-A		1
74/76	L	D4FZ 2A709-A		2
73/77	P	D4FZ 2A709-A		2
75/76	Y - - rear disc brake	★ D5LZ 2A709-A(3/81)		1
2A713	BOOT (PARKING BRAKE LEVER)			
73/78	J - - w/o console	D0RY 2A713-A		1
73/74	J - - w/console	★ D3RY 2A713-A(6/83)	Black	1
76/78	J - - w/console	★ D5RY 2A713-D(2/80)	Black	1
76/78	J - - w/o console	★ D5RY 2A713-A(2/80)	Black	1
76/78	J - - w/o console	★ D6RY 2A713-C(2/80)	Chocolate	1
76/78	J - - w/console	★ D5RY 2A713-E(3/83)	Cloud	1
76/78	J - - w/console "Before 11/1/75"	★ D5RY 2A713-F(2/80)	Tan (light)	1
74	J - - w/console	★ D4RY 2A713-B(2/80)	Tan (medium)	1
76/78	J - - w/o console "Before 9/1/75"	★ D5RY 2A713-C(2/80)	Tan (medium)	1
74	J - - w/console	★ D4RY 2A713-A(2/81)	Saddle Brown	1
76/78	J - - w/o console	★ D5RY 2A713-B(2/80)	Saddle Brown	1
76/78	J - - w/console "From 11/1/75"	★ D6RY 2A713-A	Tan (light)-r/b D5RY 2A713-D (12/80)	1
76/78	J - - w/o console "From 9/1/75 to 8/1/76"	★ D6RY 2A713-B(2/80)	Tan (light)	1
79	J	D9ZZ 2A713-A	Black-8" long-paint to match	1
73/74	L	D4FZ 2A713-E	Avocado-8" long	1
74/76	L	★ D4FZ 2A713-A	Black-8" long-r/b D7FZ 2A713-E (11/79)	1
74/76	L	★ D4FZ 2A713-B	Blue-8" long-r/b D7FZ 2A713-E (2/80)	1

YEAR	MODEL/RESTRICTIONS	PART NUMBER	DESCRIPTION	QTY.
2A713	BOOT (PARKING BRAKE LEVER) — Cont'd			
75	L	★ D5FZ 2A713-C	Cranberry-8" long-r/b D7FZ 2A713-E(5/79)	1
75/76	L	★ D5FZ 2A713-A	Green-8" long-r/b D7FZ 2A713-E (2/80)	1
74	L	D4FZ 2A713-C	Orange-8" long	1
74/75	L	D4FZ 2A713-G	Red-8" long	1
74	L	★ D4FZ 2A713-F	Saddle-8" long r/b D7FZ 2A713-E(2/78)	1
74/76	L	★ D4FZ 2A713-D	Tan-8" long-r/b D7FZ 2A713-E (5/80)	1
76/	L	D7FZ 2A713-E	Black 8" long - - Paint to match	1
2A714	RETAINER (PARKING BRAKE LEVER BOOT)			
73/78	J - - w/o console	D0RY 2A714-A		1
73/74	J - - w/console	★ D3RY 2A714-A(2/80)		1
76/78	J	★ D5RY 2A714-A(2/80)		1
73/74	J	E610226-S71	(AU-8E)-screw (to floor pan)-3.5MM x 13MM (Metric Coarse)	6
2K744	BRACKET (PARKING BRAKE CABLE PULLEY MOUNTING)			
73/74	J	★ D3RY 2K744-A(2/80)		1
		23648-GS40	Bolt-hex. head-M8 x 15 (Metric coarse)	2
		34806-S7	(X-64)-lockwasher-split ring-M8 (Metric)	2
2745	SPRING (PARKING BRAKE CABLE POSITIONING)			
73/76	L	D2FZ 2745-A		2
75/76	G "Before 4/5/76"			2
74/77	P			2
76/	G,V "From 4/5/76"	D6DZ 2745-A		2
77/	L	D7FZ 2745-A		2
78/	P	D8BZ 2745-A		1
2K758	PULLEY (PARKING BRAKE EQUALIZER LEVER)			
73/74	J	★ D0RY 2K758-A(6/82)		1
		130821-ES8	Pin-clevis-1/4" x 27/32"	1
		116425-ES8	Pin-self-locking	1
2760	HANDLE ASSY. (PARKING BRAKE RELEASE)-Also refer to group 2A760			
79	A	D9AZ 2760-A		1
73/74	C	D20Z 2760-A	Incl. 305018-S2	1
73	F	★ D1WY 2760-A(6/82)		1
74	F	D20Z 2760-A	Incl. 305018-S2	1
73/74	P	★ D0DZ 2760-A(2/81)	Incl. C0DZ 2819-A pin	1
2A760	ROD (PARKING BRAKE RELEASE HANDLE)-Also refer to group 2760			
73/76	C	D30Z 2A760-A		1
73	F	★ D1WY 2A760-A(3/84)		1
74/	F	D30Z 2A760-A		1
2780-1	CONTROL (PARKING BRAKE)			
73/75	A - - w/vacuum release	★ D5AZ 2780-A	W/bright metal trim-r/b D5AZ 2780-B & C8SZ 2A798-A (3/77)	1
75/76	A - - w/vacuum release- "Before 12/10/75"	D5AZ 2780-B	W/o bright metal trim	1
76/77	A - - w/vacuum release- "From 12/10/75 and Before 3/1/77"	D6AZ 2780-B		1
77/78	A - - w/manual release "From 3/1/77"	D8AZ 2780-A		1
	A - - w/vacuum release "From 3/1/77"	D8AZ 2780-B		1
79	A - - w/manual release	D9AZ 2780-A		1
	A - - w/auto. release	★ D9AZ 2780-B	R/b E0AZ 2780-B (12/80)	1
73/75	C	D30Z 2780-A		1
76	C - - w/manual release- "Before 12/10/75"	D30Z 2780-A		1
	C - - w/manual release- "From 12/10/75"	D60Z 2780-C		1
76	C - - w/vacuum release	D60Z 2780-B		1
73	D	★ D3VY 2780-A(3/81)		1

COPYRIGHT © 1986 — FORD MOTOR COMPANY — DEARBORN, MICHIGAN

1973/79 LINCOLN-MERCURY CARS

YEAR	MODEL/RESTRICTIONS	PART NUMBER	DESCRIPTION	QTY.
2780-1	CONTROL (PARKING BRAKE) — Cont'd			
74/76	D "Before 12/10/75"	★ D5VY 2780-A(10/84)	W/bright metal trim	1
76/77	D "From 12/10/75"	★ D6VY 2780-A(6/82)	W/o bright metal trim	1
78/	D	★ D8VY 2780-A(3/84)		1
73	F	★ D1WY 2780-A(3/81)		1
74/75	F	D30Z 2780-A		1
76	F - - w/manual release "Before 12/10/75"	D30Z 2780-A		1
76/77	F - - w/manual release "From 12/10/75 & Before 3/14/77"	D60Z 2780-C		1
76/77	F - - w/vacuum release "Before 3/14/77"	D60Z 2780-B		1
77/	F - - w/manual release "From 3/14/77"	D80Z 2780-A		1
	F - - w/vacuum release "From 3/14/77"	D80Z 2780-B		1
75/76	G "Before 12/10/75"	★ D5DZ 2780-A(9/83)		1
76/77	G - - w/manual release "From 12/10/75 & Before 2/14/77"	D6DZ 2780-D		1
	G - - w/vacuum release "From 12/10/75 & Before 2/14/77"	D60Z 2780-B		1
77	G - - w/vacuum release "From 2/14/77"	D80Z 2780-B		1
77/	G - - w/manual release "From 2/14/77"	D8DZ 2780-B		1
78	G - - w/vacuum release	D80Z 2780-B		1
73/74	J	★ D3RY 2781-A		1
76/78	J - - exc. Ghia "Before 7/1/78"	D5RY 2781-B		1
78	J - - exc. Ghia "From 7/1/78"	★ D7RY 2781-A(3/81)		1
76/78	J - - Ghia	★ D5RY 2781-C(2/80)	Black	1
76/78	J - - Ghia	★ D5RY 2781-D(2/80)	Cloud	1
76	J - - Ghia "Before 9/1/75"	★ D5RY 2781-E(2/80)	Tan (light)	1
76	J - - Ghia "From 9/1/75 to 8/1/76"	★ D6RY 2781-A(2/80)	Tan	1
76/78	J - - Ghia "From 8/1/76"	★ D6RY 2781-B(2/80)	Tan	1
79	J	★ D9ZZ 2780-A r/bE3ZZ 2780-A(12/82)	Plastic covered lever with black plastic grip	1
73/76	K "Before 12/10/75"	D5SZ 2780-A	W/bright metal trim	1
76	K "From 12/10/75"	D6SZ 2780-A	W/o bright metal trim	1
77/	K "Before 3/1/77"	D60Z 2780-B		1
	K "From 3/1/77"	D80Z 2780-B		1
74/76	L "Before 12/10/75"	D4FZ 2780-C	Bright finish lever with wood grain grip	1
76	L "From 12/10/75 to 5/3/76"	★ D6FZ 2780-B r/bD9FZ 2780-A(2/80)	Bright finish lever with wood grain grip	1
	L "From 12/10/75 to 5/3/76"	★ D6FZ 2780-A	Painted lever and grip-r/b D9ZZ 2780-A(6/81)	1
76/77	L "From 5/3/76 & Before 6/27/77"	★ D7ZZ 2780-A r/bD9ZZ 2780-A(12/80)	Painted lever and grip	1
76/78	L "From 5/3/76 & Before 11/21/77"	★ D6FZ 2780-D r/bD9FZ 2780-A(2/80)	Painted lever with wood grain grip	1
77/78	L "From 6/27/77 & Before 11/21/77"	D7ZZ 2780-A	Black lever with black grip	1
	L "From 11/21/77 & Before 7/1/78"	★ D8FZ 2780-A r/bD9FZ 2780-A(6/81)	Plastic covered lever w/dark walnut grip	1
	L "From 11/21/77 & Before 7/1/78"	★ D8FZ 2780-B r/bD9FZ 2780-B(2/80)	Plastic covered lever w/black plastic grip	1
78/	L "From 7/1/78"	D9FZ 2780-A	Plastic covered lever w/dark walnut grip	1
	L "From 7/1/78"	D9FZ 2780-B	Plastic covered lever w/black plastic grip	1
73/75	P	★ D3DZ 2780-A(9/85)		1
76/77	P	D6DZ 2780-D		1
78/	P	★ D8BZ 2780-A	R/b E3SZ 2780-A (9/83)	1
77/79	V	★ D74Y 2780-A(3/84)		1
77/	V	D74Y 2780-B	Auto release	1
73/75	Y - - w/vacuum release	★ D5AZ 2780-A	W/bright metal trim -r/b D5AZ 2780-B & C8SZ 2A798-A (3/77)	1

YEAR	MODEL/RESTRICTIONS	PART NUMBER	DESCRIPTION	QTY.
2780-1	CONTROL (PARKING BRAKE) — Cont'd			
75/76	Y - - w/vacuum release "Before 12/10/75"	D5AZ 2780-B	W/o bright metal trim	1
76	Y - - w/vacuum release "From 12/10/75"	D6AZ 2780-B		1
73/74	J	20346-S8	(B-50)-bolt-hex. head-5/16"-18 x 3/4"	AR
73/74	L	56720-S2	(B-318-GD)-bolt (to instrument panel)-hex. hd.-5/16"-18 x 3/4"	2
		34393-S7	(M-98)-locknut-5/16"-24	2
2786	RETAINER (PARKING BRAKE RATCHET BAR LOCKING SPRING)			
73/75	P	★ D0DZ 2786-B(6/82)		1
2A787	RETAINER (PARKING BRAKE SPRING)			
73/	A,D,P	C4UZ 2A787-A		1
73/74	C			1
75/76	C - - 11" brakes			1
73	F			1
76/	F			1
75/	G,V			1
73/74	K			AR
73/76	Y			1
2788	SPRING (PARKING BRAKE RATCHET BAR LOCKING)			
73/	P	★ D1DZ 2788-A(6/82)		1
2A790	CONNECTOR (PARKING BRAKE CABLE)			
75/78	A - - rear disc brake	D50Z 2A790-A		AR
79	A	D50Z 2A790-A		1
73/74	C	★ D2AZ 2A790-A	R/b D50Z 2A790-A (6/83)	2
75/76	C	D50Z 2A790-A		AR
75/	D	D50Z 2A790-A		1
73	F	★ C7WY 2A790-A(2/80)		1
74	F	★ D2AZ 2A790-A	R/b D50Z 2A790-A (6/83)	2
75/	F	D50Z 2A790-A		AR
75	G "Before 12/16/74"	★ D2AZ 2A790-A	R/b D50Z 2A790-A (6/83)	AR
75/	G "From 12/16/74"	D50Z 2A790-A		AR
73/74	K	★ D2AZ 2A790-A	R/b D50Z 2A790-A (6/83)	2
75/	K	D50Z 2A790-A		AR
75/	P	D50Z 2A790-A		AR
73/74	P	C60Z 2A790-A		2
77	V	D50Z 2A790-A		AR
75/76	Y - - rear disc brake	D50Z 2A790-A		AR
2791	BUTTON (PARKING BRAKE HANDLE)			
73/74	L	D1FZ 2791-A		1
2A791	DEFLECTOR (PARKING BRAKE CABLE)			
77/	F	D5SZ 2A791-A		1
78/	P	D8SZ 2A791-A	Field fix #CP-2094	2
2793	SPRING (PARKING BRAKE RELEASE CONTROL)			
74/	L	D1FZ 2793-A		1
2795	BRACKET (PARKING BRAKE CONTROL MOUNTING)			
73/	A	D3AZ 2795-B		1
76/	P	★ D6DZ 2795-A(3/81)		1
73/76	Y	D3AZ 2795-B		1
2A795	STOP (PARKING BRAKE OPERATING LEVER)			
76	J	★ D5RY 2A795-A(2/80)		1
2A798	COVER (PARKING BRAKE PEDAL PAD)			
74/75	A,F,Y	C8SZ 2A798-A	Stainless steel	1
73/75	C,D,K			1
78/	K - - w/Diamond jubilee opt.			1
78/	V			1
73	F	★ C9ZZ 2A798-A(5/79)		1
2804	PULLEY (PARKING BRAKE CABLE)			
73/74	J	D0RY 2804-A		1
73/	P	0M 2804		1
73/74	J	116427-ES8	Pin-self-locking-3/32" x 7/8"	1

COPYRIGHT © 1986 — FORD MOTOR COMPANY — DEARBORN, MICHIGAN

1973/79 LINCOLN-MERCURY CARS

YEAR	MODEL/RESTRICTIONS	PART NUMBER	DESCRIPTION	QTY.
2804	PULLEY (PARKING BRAKE CABLE) — Cont'd			
73/74	P	★ 73880-S8	Clevis pin (pulley to handle)-5/16" x 13/16"	1
73/74	P	352358-S100	(NN-127-B)-pin-self-locking-1/16" x 15/16"	1
2A804	HOSE (PARKING BRAKE RELEASE)			
73/74	A,K,Y	★	Improvise from bulk hose (17543)	1
2A808	IDLER (PARKING BRAKE REAR CABLE)			
73/74	C,K	★ C60Z 2A808-A(3/84)		1
74	F			1
73	F	C7ZZ 2A808-A		1
73/74	P			1
2814	CLIP (BRAKE HOSE)			
73/	A	C7AZ 2814-A	Brake hose	AR
73/78	A	C9AZ 2860-A	Parking brake cable to No. 4 crossmember	2
75/78	A	D5AZ 2860-A		1
79	A	D9AZ 2860-A		1
73/	D	C7AZ 2814-A	Bake hose	AR
73/	D	C9AZ 2860-A	Parking brake cable to No. 4 crossmember	2
75/	D	D5AZ 2860-A		1
73	C	C7AZ 2814-A	Brake hose	AR
74	C	D40Z 2814-A	Parking brake cable to brake pedal support	1
73/76	C	C7AZ 2814-A	Transmission shift cable	AR
75/76	C	C7AZ 2814-A	Brake hose	AR
75/76	C	D40Z 2814-A	Parking brake cable	AR
75/76	C	D5AZ 2860-A		1
73/	F	C7AZ 2814-A	Brake hose	AR
74/	F	D40Z 2814-A	Parking brake cable to brake pedal support	1
75/	F	D5AZ 2860-A		1
75/	G	C7AZ 2814-A	Brake hose	AR
76/	G	D40Z 2814-A	Parking brake cable	1
79	J	D9ZZ 2860-A		2
73/74	K	C7AZ 2814-A	Brake hose	AR
73/	K	C7AZ 2814-A	Transmission shift cable	AR
75/	K	D40Z 2814-A	Parking brake cable	AR
75/	K	D5AZ 2860-A		1
73/	L	C7AZ 2814-A	Brake hose	AR
73	P	A7AZ 2814-A	Brake hose	AR
74/	P	C7AZ 2814-A	Brake hose	AR
77	V	C7AZ 2814-A	Brake hose	AR
77	V	D40Z 2814-A	Parking brake cable	1
73/76	Y	C7AZ 2814-A	Brake hose	AR
73/76	Y	C9AZ 2860-A	Parking brake cable to No. 4 crossmember	2
75/76	Y	D5AZ 2860-A		1
73/	A,D,Y	381877-S2	(UU-52-AF)-screw (to parking brake cable)-hex. head-5/16"-18 x 3/4"	2
2A815	CABLE (PARKING BRAKE INTERMEDIATE)			
73/74	A(53,57,65)	★ D4MY 2A815-A(3/81)	67 11/16" long	1
75/78	A(53,65) - - rear drum brake	D5MY 2A815-A	69 5/8" long	1
75/77	A(53,65) - - rear disc brake "Before 7/1/77"	★ D5MY 2A815-B(3/81)	63 3/4"	1
77	A(53,65) - - rear disc brake "From 7/1/77"	★ D8MY 2A815-A	65 3/4" long-r/b D8MY 2A815-B (12/80)	1
78	A(53,65) rear disc brake	★ D8MY 2A815-B(6/82)	66 3/4" long	1
79	A	D9AZ 2A815-A	38" long	1
73/74	A(71)	★ D4AZ 2A815-A(6/84)	64 11/16" long	1
75/78	A(71) - - rear drum brake	D5AZ 2A815-A	66 5/8" long	1
75/77	A(71) - - rear disc brake "Before 7/1/77"	★ D5MY 2A815-C(3/81)	60 3/4" long	1
77/78	A(71) - - rear disc brake "From 7/1/77"	★ D8AZ 2A815-B(6/82)	63 3/4" long	1
73	C(53,71)	D20Z 2A815-B	108 5/16" long-#yellow	1
74	C(53,71)			1

YEAR	MODEL/RESTRICTIONS	PART NUMBER	DESCRIPTION	QTY.
2A815	CABLE (PARKING BRAKE INTERMEDIATE) — Cont'd			
75/76	C(53,71)	D70Z 2A815-B	39 1/4" long	1
73	C(63,65)	★ D20Z 2A815-A(3/84)	100 5/8" long-#purple	1
74	C(65)			1
75/76	C(65)	D70Z 2A815-A	35 1/4" long	1
74	F	★ D20Z 2A815-A(3/84)	100 5/8" long-#purple	1
77	F(53,71) "Before 11/15/76"	D70Z 2A815-B	39 1/4" long	1
75/77	F(65)	D70Z 2A815-A	35 1/4" long	1
77/	F(53,71) "From 11/15/76"	D70Z 2A815-B	39 1/4" long	1
75/76	G - - rear disc brake	★ D5DZ 2A815-D(3/84)	16 3/4" long	1
75/76	G - - rear drum brake	D5DZ 2A815-E	14 3/4" long	1
77/	G - - rear drum brake	D7DZ 2A815-A	33 7/16" long	1
77/78	G - - rear disc brake	D7DZ 2A815-B	29 7/8" long	1
73/74	K	D2SZ 2A815-A	104" long	1
75/77	K "Before 7/1/77"	D5LZ 2A815-A	39 1/4" long	1
77/	K "From 7/1/77"	D8LY 2A815-A	39" long	1
73/74	P(54)	D1DZ 2A815-A	11 3/4" long	1
75/77	P	D5DZ 2A815-E	14 3/4" long	1
78/	P	D8BZ 2A815-A	43 1/4" long	1
77/	V	D7DZ 2A815-B	29 7/8" long	1
73/74	Y(53,57,65)	★ D4MY 2A815-A(3/81)	67 11/16" long	1
75/76	Y(53,65) - - rear drum brake	D5MY 2A815-A	69 5/8" long	1
75/76	Y(53,65) - - rear disc brake	★ D5MY 2A815-B(3/81)	63 3/4" long	1
73	Y(71)	D3AZ 2A815-B	64 11/16" long	1
74/	Y(71)	★ D4AZ 2A815-A(6/84)	64 11/16" long	1
75/76	Y(71) - - rear drum brake	D5AZ 2A815-A	66 5/8 " long	1
75/76	Y(71) - - rear disc brake	★ D5MY 2A815-C(3/81)	60 3/4" long	1
2819	PIN (PARKING BRAKE HANDLE LOCKING)			
73/	P	C0DZ 2819-A	5/32" O.D. x 13/32" long	1
2A832	BEZEL (PARKING BRAKE RELEASE)			
73	F	★ D1WY 2A832-A(2/80)		1
2A843	MOTOR (PARKING BRAKE RELEASE CONTROL)			
75	A,K	D5AZ 2A843-A		1
76/	A,F,G,K,V	D5VY 2A843-A		1
76	C			1
75/	D			1
75	Y	D5AZ 2A843-A		1
76	Y	D5VY 2A843-A		1
2853	CABLE and CONDUIT (PARKING BRAKE FRONT)			
73	A	★ D3AZ 2853-A(9/85)	25 1/4" long	1
74	A "Before 4/8/74"	D4AZ 2853-A	25 5/8" long	1
74	A "From 4/8/74"	★ D3AZ 2853-A(9/85)	25 1/4" long	1
75/76	A "Before 12/10/75"	D4AZ 2853-A	25 5/8" long	1
76/77	A "From 12/10/75 & Before 3/1/77"	D6AZ 2853-A	30 1/2" long	1
77/78	A "From 3/1/77"	D8AZ 2853-A	26 1/4" long	1
79	A	D9AZ 2853-A	40 3/4" long	1
73/74	C	D20Z 2853-A	49 3/4" long	1
75/76	C "Before 12/10/75"	D50Z 2853-A	40 3/4" long	1
76	C "From 12/10/75"	D60Z 2853-A	44 1/4" long	1
73	D	D0VY 2853-A	89 3/8" long	1
74	D	★ D4VY 2853-A(6/82)	89 3/4" long	1
75/76	D - - rear drum brake "Before 12/10/75"			1
75/76	D - - rear disc brake "Before 12/10/75"	★ D5VY 2853-A(2/80)	92 3/4" long	1
76/77	D - - rear drum brake "From 12/10/75"	D6VY 2853-B	92 5/8" long	1

COPYRIGHT © 1986 — FORD MOTOR COMPANY — DEARBORN, MICHIGAN

1973/79 LINCOLN-MERCURY CARS

YEAR	MODEL/RESTRICTIONS	PART NUMBER	DESCRIPTION	QTY.
2853	CABLE and CONDUIT (PARKING BRAKE FRONT) — Cont'd			
76/77	D - - rear disc brake "From 12/10/75 & Before 7/18/77"	★ D6VY 2853-A(9/81)	95 5/8" long	1
77	D - - rear disc brake "From 7/18/77"	★ D7LY 2853-A(3/81)	98 1/3" long	1
78/	D - - rear drum brake	D8VY 2853-D	89 1/2" long	1
78	D - - rear disc brake "Before 10/26/77"	★ D8VY 2853-A	95" long-r/b D8VY 2853-C (12/80)	1
78/	D - - rear disc brake "From 10/26/77"	★ D8VY 2853-C(6/83)	95" long	1
73	F	D1ZZ 2853-A	43 1/8" long	1
74	F	D20Z 2853-A	49 3/4" long	1
75/76	F "Before 12/10/75"	D50Z 2853-A	40 3/4" long	1
76/77	F "From 12/10/75 & Before 3/14/77"	D60Z 2853-A	44 1/4" long	1
77/	F "From 3/14/77"	D80Z 2853-A	40 1/2" long	1
75/76	G "Before 12/10/75"	D5DZ 2853-B	#Red-48 7/8" long	1
76	G "From 12/10/75"	D6DZ 2853-A	52 3/8" long	1
77	G - - rear drum brake "Before 2/14/77"	D7DZ 2853-A	32" long	1
77	G - - rear disc brake "Before 2/14/77"	D7DZ 2853-B	31 1/4" long	1
77/	G - - rear drum brake "From 2/14/77"	D8DZ 2853-A	28 3/8" long	1
77/78	G - - rear disc brake "From 2/14/77"	D8DZ 2853-B	27 1/2" long	1
73/74	J	D3RY 2853-A		1
76/78	J - - 4 cyl.	D5RY 2853-D	#Green-(rear)	1
76/78	J - - 6 cyl.	★ D5RY 2853-E(3/84)	#Yellow-(rear)	1
73/74	K	D2SZ 2853-A	54 1/2" long	1
75/76	K "Before 12/10/75"	D5SZ 2853-A	48 15/16" long	1
76/77	K "From 12/10/75 & Before 3/1/77"	D6SZ 2853-A	52 3/8" long	1
77/	K "From 3/1/77"	D8LY 2853-A	48 3/4" long	1
73/74	P	D3DZ 2853-A	53" long	1
75	P	D5DZ 2853-A	46 15/16" long	1
76/77	P	D6DZ 2853-B	53 3/8" long	1
78/	P	D8BZ 2853-A	53 3/4" long	1
77	V "Before 2/14/77"	D7DZ 2853-B	31 1/4" long	1
77/	V "From 2/14/77"	D8DZ 2853-B	27 1/2" long	1
73	Y	D3AZ 2853-A	25 1/4" long	1
74	Y "Before 4/8/74"	D4AZ 2853-A	25 5/8" long	1
74	Y "From 4/8/74"	D3AZ 2853-A	25 1/4" long	1
75/76	Y "Before 12/10/75"	D4AZ 2853-A	25 5/8" long	1
76	Y "From 12/10/75"	D6AZ 2853-A	30 1/2" long	1
73/	C,D,K	383475-S100	(RR-4-A)-retainer-spring-7/16"	AR
2857	CLEVIS and CABLE (PARKING BRAKE FRONT)			
73/74	J	★ D0RY 2857-A(6/82)		2
		33923-S7-8	(M-32)-nut-hex.-5/16"-24	2
		130805-ES8	Pin-clevis-1/4" x 21/32"	2
		116425-ES8	Pin-self-locking	2
2860	Refer to group 2814			
2861	LINK (PARKING BRAKE CABLE CONNECTING)			
74	L - - M/T	D1FZ 2861-A		1
75/	L - - M/T	D5FZ 2861-A		1
2K865	RETAINER (PARKING BRAKE-FRONT)			
79	A	D9AZ 2K865-A		1
2A870-1	BALL RAMP KIT (REAR WHEEL DISC BRAKE)			
75	A,D,K,Y - - rear disc brake	E25Y 2A870-A	R.H.	1

Consists of

1-D5MA 2K329-AA	Pin	1-E25C 2A873-AA	Screw	3-380243-S	Ball
1-E25C 2A870-AA	Shaft				

YEAR	MODEL/RESTRICTIONS	PART NUMBER	DESCRIPTION	QTY.
2A870-1	BALL RAMP KIT (REAR WHEEL DISC BRAKE) — Cont'd			
75	A,D,K,Y - - rear disc brake	★ D5MZ 2A871-A	L.H.-r/b D6AZ 2A871-A	1
	Consists of			
	1-D5MA 2K329-AA Pin	1-D5MA 2A874-AA	Screw 3-380243-S Ball	
	1-D5MA 2A871-AA Shaft			
75	G - - rear disc brakes	E25Y 2A870-A	R.H.	1
	Consists of			
	1-D5MA 2K329-AA Pin	1-E25C 2A873-AA	Screw 3-380243-S Ball	
	1-E25C 2A870-AA Shaft			
76/78	A,D,G,K,V,Y - - rear disc brake	E25Y 2A871-A	L.H.	1
	Consists of			
	1-D5MA 2K329-AA Pin	1-E25C 2A874-AA	Screw 3-380243-S Ball	
	1-E25C 2A871-AA Shaft			
76/	A,D,G,K,V,Y	E25Y 2A870-A	R.H.	1
	Consists of			
	1-D5MA 2K329-AA Pin	1-E25C 2A873-AA	Screw 3-380243-S Ball	
	1-E25C 2A870-AA Shaft			
75/	G	D6AZ 2A871-A	L.H.	1
	Consists of			
	1-D5MA 2K329-AA Pin	1-D6AA 2A874-AA	Screw 3-380243-S Ball	
	1-D6AA 2A871-AA Shaft			
2876	SHAFT (AIR CONDITIONER COMPRESSOR BELT IDLER PULLEY)			
73	A - - 8 cyl. 429,460 and integral A/C	★ D3MY 2876-A(5/79)		1
74	A - - 8 cyl. 460 and integral A/C			1
2882	BRACKET (AIR CONDITIONER COMPRESSOR MOUNTING)-Also refer to group 10A313			
	A (Mercury)			
73	A - - 8 cyl. 400 and integral A/C	D1AZ 2882-A		1
74	A - - 8 cyl. 400 and integral A/C	D1AZ 2882-A		1
	A - - 8 cyl. 460 and integral A/C- "From 5/1/74"	★ D5MZ 2882-A(6/82)		1
	A - - 8 cyl. 460 and A/C-dealer installed	★ D4AZ 2882-C(9/85)		1
75	A - - 8 cyl. 351M,400 and integral A/C	★ D6AZ 2882-A(2/80)	Used w/D6AZ 2883-A	1
	A - - 8 cyl. 351,400 and A/C-dealer installed	D6AZ 2882-C		1
	A - - 8 cyl. 460 and integral A/C	★ D5MZ 2882-A(6/82)		1
	A - - 8 cyl. 460 and A/C-dealer installed	★ D4AZ 2882-C(9/85)		1
76	A - - 8 cyl. 351M,400 and integral A/C	★ D6AZ 2882-A(2/80)	Used w/D6AZ 2883-A	1
	A - - 8 cyl. 351,400 and A/C-dealer installed	D6AZ 2882-C		1
	A - - 8 cyl. 460,460 P/C and integral A/C	★ D5MZ 2882-A(6/82)		1
77	A - - 8 cyl. 351M. 400-2V and integral A/C	★ D7AZ 2882-A(6/82)		1

COPYRIGHT © 1986 — FORD MOTOR COMPANY — DEARBORN, MICHIGAN

1973/79 LINCOLN-MERCURY CARS

YEAR	MODEL/RESTRICTIONS	PART NUMBER	DESCRIPTION	QTY.
2882	BRACKET (AIR CONDITIONER COMPRESSOR MOUNTING)-Also refer to group 10A313 — Cont'd			
	A (Mercury)			
77/	A - - 8 cyl. 460,460 P/C and integral A/C	★ D5MZ 2882-A(6/82)		1
	A - - 8 cyl. 351-400 and A/C dealer installed	D6AZ 2882-B	W/O Saginaw Steering Gear pump	1
	A - - 8 cyl. 351-400 and A/C dealer installed	★ D6AZ 2882-C(10/85)	W/Saginaw Steering Gear pump	1
78	A - - 8 cyl. 351M,400-2V and integral A/C	★ D8VZ 2882-A(6/83)		1
	A - - 8 cyl. 351-400 and A/C-dealer installed	D6AZ 2882-B	Mount	1
	A - - 8 cyl. 351-400 and A/C-dealer installed	D8AZ 2882-B	Brace	1
	A - - 8 cyl. 460 and A/C-dealer installed	★ D4AZ 2882-C(9/85)		1
79	A - - w/integral A/C	D9AZ 2882-A		1
	A - - w/integral A/C	★ D9AZ 2882-B(3/84)	Rear	1
	A - - 8 cyl. 5.0L,5.8L(W) and A/C dealer installed	D9AZ 2882-C		1
	C (Montego)			
73	C - - 6 cyl. and A/C-dealer installed	★ D2DZ 2882-A(6/82)		1
	C - - 8 cyl. 302,351W and A/C-dealer installed	★ D4AZ 2882-C(9/85)		1
	C - - 8 cyl. 351 and integral A/C	★ D0ZZ 2882-B(2/80)		1
	C - - 8 cyl. 400 and integral A/C	D1AZ 2882-A		1
	C - - 8 cyl. 429 and A/C-dealer installed	★ D4AZ 2882-C(9/85)		1
	C - - 8 cyl. 429,460 and integral A/C	D0AZ 2882-A		1
74	C - - 8 cyl. 302 and integral A/C	★ D00Z 2882-A(3/81)		1
	C - - 8 cyl. 302 and A/C-dealer installed	★ D4AZ 2882-C(9/85)		1
	C - - 8 cyl. 351C,351-4/B and integral A/C	★ D0ZZ 2882-B(2/80)		1
	C - - 8 cyl. 351W and integral A/C	★ D1AZ 2882-B(6/83)		1
	C - - 8 cyl. 351W and A/C-dealer installed	★ D4AZ 2882-C(9/85)		1
	C - - 8 cyl. 400 and integral A/C	D1AZ 2882-A		1
	C - - 8 cyl. 460 and integral A/C	D0AZ 2882-A		1
	C - - 8 cyl. 460 and A/C-dealer installed	★ D4AZ 2882-C(9/85)		1

YEAR	MODEL/RESTRICTIONS	PART NUMBER	DESCRIPTION	QTY.
2882	BRACKET (AIR CONDITIONER COMPRESSOR MOUNTING)-Also refer to group 10A313 — Cont'd			
	C (Montego)			
75	C - - 8 cyl. 351W and integral A/C	★D1AZ 2882-B(6/83)		1
	C - - 8 cyl. 351M,400 and integral A/C	D1AZ 2882-A		1
	C - - 8 cyl. 460 (exc. 460 P/C) and integral A/C	D0AZ 2882-A		1
	C - - 8 cyl. 460 P/C and integral A/C	★D4AZ 2882-A(2/80)		1
	C - - 8 cyl. 460 and A/C-dealer installed	★D4AZ 2882-C(9/85)		1
76	C - - 8 cyl. 351W and integral A/C	★D1AZ 2882-B(6/83)		1
	C - - 8 cyl. 351M,400 and integral A/C	D1AZ 2882-A		1
	C - - 8 cyl. 460 (exc. 460 P/C) and integral A/C	D0AZ 2882-A		1
	C - - 8 cyl. 460 P/C and integral A/C	★D4AZ 2882-A(2/80)		1
	D (Lincoln)			
75/76	D	★D5MZ 2882-A(6/82)		1
77	D - - 8 cyl. 400-2V and integral A/C	★D7AZ 2882-A(6/82)		1
77/	D - - 8 cyl. 460 and integral A/C	★D5MZ 2882-A(6/82)		1
78/	D - - 8 cyl. 400-2V and integral A/C	★D8VZ 2882-A(6/83)		1
	F (Cougar)			
73	F - - 8 cyl. 351 and integral A/C	D0ZZ 2882-B		1
74	F - - 8 cyl. 351C,351-4/B and integral A/C	★D0ZZ 2882-B(2/80)		1
	F - - 8 cyl. 351w and integral A/C	★D1AZ 2882-B(6/83)		1
	F - - 8 cyl. 400 and integral A/C	D1AZ 2882-A		1
	F - - 8 cyl. 460 and integral A/C	D0AZ 2882-A		1
	F - - 8 cyl. 460 and A/C-dealer installed	★D4AZ 2882-C(9/85)		1
75	F - - 8 cyl. 351W and integral A/C	★D1AZ 2882-B(6/83)		1
	F - - 8 cyl. 351M,400 and integral A/C	D1AZ 2882-A		1
	F - - 8 cyl. 460 and integral A/C	D0AZ 2882-A		1
	F - - 8 cyl. 460 and A/C-dealer installed	★D4AZ 2882-C(9/85)		1
76	F - - 8 cyl. 351W and integral A/C	★D1AZ 2882-B(6/83)		1
	F - - 8 cyl. 351M,400 and integral A/C	D1AZ 2882-A		1
	F - - 8 cyl. 460 and integral A/C	D0AZ 2882-A		1

COPYRIGHT © 1986 — FORD MOTOR COMPANY — DEARBORN, MICHIGAN

1973/79 LINCOLN-MERCURY CARS

YEAR	MODEL/RESTRICTIONS	PART NUMBER	DESCRIPTION	QTY.
2882	BRACKET (AIR CONDITIONER COMPRESSOR MOUNTING)-Also refer to group 10A313 — Cont'd			
	F (Cougar)			
77	F - - 8 cyl. 302 and integral A/C	D5DZ 2882-A		1
	F - - 8 cyl. 351M, 400 and integral A/C	D1AZ 2882-A		1
	F - - 8 cyl. 351W and integral A/C	★D1AZ 2882-B(6/83)		1
77/	F - - 8 cyl. 351-400 and A/C dealer installed	D6AZ 2882-B	W/o Saginaw steering gear pump	1
	F - - 8 cyl. 351-400 and A/C dealer installed	★D6AZ 2882-C(10/85)	W/Saginaw steering gear pump	1
78/	F - - 8 cyl. 302 and integral A/C	D5DZ 2882-A		1
	F - - 8 cyl. 351W and integral A/C	★D80Z 2882-D(6/83)		1
	F - - 8 cyl. 351M, 400 and integral A/C	D80Z 2882-C		1
	F - - 8 cyl. 351-400 and A/C-dealer installed	D8AZ 2882-B		1
	F - - 8 cyl. 302-351W and A/C dealer installed	D80Z 2882-E		1
	G (Monarch)			
75	G - - 6 cyl. 200 and integral A/C	D5DZ 2882-C		1
	G - - 6 cyl. and A/C-dealer installed	★D2DZ 2882-A(6/82)		1
	G - - 6 cyl. 250 and integral A/C- "From 7/28/75"	★D6DZ 2882-C(3/84)		1
	G - - 8 cyl. 302 and integral A/C	D5DZ 2882-A		1
	G - - 8 cyl. 351W and integral A/C	★D1AZ 2882-B(6/83)		1
76	G - - 8 cyl. and integral A/C	★D7DZ 2882-A(3/84)		1
	G - - 6 cyl. and A/C-dealer installed	★D2DZ 2882-A(6/82)		1
76/	G - - 6 cyl. and integral A/C	D7DZ 2882-D		1
77	G - - 8 cyl. 302 and integral A/C	★D7DZ 2882-B r/bD8AZ 2882-A(2/80)	Lower rear	1
77/	G - - 8 cyl. and integral A/C	★D7DZ 2882-A(3/84)	Used to 2883 bracket	1
	G - - 8 cyl. 302 and integral A/C "From 7/11/77"	★D74Y 2882-A(3/84)	Upper rear	1
	G - - 8 cyl. 351 and integral A/C "From 7/11/77"	★D74Y 2882-B(6/82)	Upper rear	1
	G - - 8 cyl. 351 and integral A/C	★D7DZ 2882-C(6/82)	Lower rear	1
78/	G - - 8 cyl. 302 and integral A/C	★D8AZ 2882-A(3/84)	Lower rear	1
	G - - 6 cyl. 250 w/o thermactor pump and A/C dealer installed	★D8DZ 2882-C(6/82)	Outer-bolts to compressor-used with D8DZ 2882-B	1
	G - - 6 cyl. 250 with or w/o thermactor pump and A/C dealer installed	★D8DZ 2882-B(6/82)	Inner-bolts to engine used with D8DZ 2882-A or D8DZ 2882-C	1
	G - - 6 cyl. 250 w/thermactor pump and A/C dealer installed	★D8DZ 2882-C(6/82)	Outer-bolts to compressor-used with D8DZ 2882-B	1
	G - - 8 cyl. 302-351W and A/C dealer installed	D80Z 2882-E		1

YEAR	MODEL/RESTRICTIONS	PART NUMBER	DESCRIPTION	QTY.
2882	BRACKET (AIR CONDITIONER COMPRESSOR MOUNTING)-Also refer to group 10A313 — Cont'd			
	J (Capri)			
73	J - - 4 cyl. and A/C-dealer installed	★D3FZ 2882-A(2/80)		1
74	J - - 4 cyl. and A/C-dealer installed	★D3FZ 2882-A(2/80)		1
	J - - 6 cyl. and A/C-dealer installed	D4ZZ 2882-C		1
	J - - 6 cyl. and integral A/C	D4ZZ 2882-A		1
76/78	J - - 4 cyl. and integral A/C	★D4FZ 2882-B(2/80)		1
	J - - 4 cyl. and A/C-dealer installed	★D5RY 2882-A(2/80)		1
	J - - 6 cyl. and integral A/C	★D4ZZ 2882-A		1
	J - - 6 cyl. and A/C-dealer installed	★D5RY 2882-B(2/80)		1
79	J - - 4 cyl. 2.3L and integral A/C	D4FZ 2882-B		1
	J - - 8 cyl. 5.0 litre and integral A/C	D9ZZ 2882-A		1
	J - - 8 cyl. 5.0L w/ p/s-w/ thermactor pump and A/C dealer installed	D9ZZ 2882-B		1
	J - - 6 cyl. 171 (2800cc) and integral A/C	★D4ZZ 2882-A		1
	J - - 6 cyl. 200 (3.3L) and integral A/C "From 4/16/79"	D9BZ 2882-A		1
	J - - 6 cyl. 171 (2800cc) and A/C dealer installed	D8FZ 2882-A	w/C2 P/S pump & w/o P/S	1
	J - - 4 cyl. 2.3L w/ thermactor pump and A/C dealer installed	D9ZZ 2882-C		1
	K (Mark IV)			
73/74	K	D4SZ 2882-A		1
75/76	K	★D5MZ 2882-A(6/82)		1
77	K - - 8 cyl. 400-2V and integral A/C	★D7AZ 2882-A(6/82)		1
77/	K - - 8 cyl. 460 and integral A/C	★D5MZ 2882-A(6/82)		1
78/	K - - 8 cyl. 400-2V and integral A/C	★D8VZ 2882-A(6/83)		1
	L (Bobcat)			
74	L - - 4 cyl. 122 (2000 cc) and A/C-dealer installed	★D3FZ 2882-A(2/80)		1
	L - - 4 cyl. 140 (2300 cc) and integral A/C	★D4FZ 2882-B(2/80)		1
75	L - - 4 cyl. and integral A/C	★D4FZ 2882-B(2/80)		1
	L - - 6 cyl. and integral A/C	★D4ZZ 2882-A		1
	L - - 6 cyl. and A/C-dealer installed	★D6FZ 2882-A(2/80)		1
76	L - - 4 cyl. and integral A/C	D4ZZ 2882-B		1
	L - - 6 cyl. and integral A/C	★D4ZZ 2882-A		1
	L - - 4 cyl. and A/C-dealer installed	★D5RY 2882-A(2/80)		1
	L - - 6 cyl. and A/C-dealer installed	★D6FZ 2882-A(2/80)		1
77	L - - 6 cyl. 171(2800 cc) and A/C dealer installed	★D6FZ 2882-A(2/80)	w/Thompson P/S pump & w/o P/S	1
77/	L - - 4 cyl. 140(2300cc) and integral A/C	D4ZZ 2882-B		1
	L - - 4 cyl. 140(2300 cc) and A/C dealer installed	D5RY 2882-A		1
	L - - 6 cyl. 171 (2800 cc) and integral A/C	★D4ZZ 2882-A		1
	L - - 6 cyl. 171 (2800 cc) and A/C dealer installed	★D8FZ 2882-A(6/82)	w/C2 P/S pump & w/o P/S	1

COPYRIGHT © 1986 — FORD MOTOR COMPANY — DEARBORN, MICHIGAN

1973/79 LINCOLN-MERCURY CARS

YEAR	MODEL/RESTRICTIONS	PART NUMBER	DESCRIPTION	QTY.
2882	BRACKET (AIR CONDITIONER COMPRESSOR MOUNTING)-Also refer to group 10A313 — Cont'd			
	P (Comet)			
73	P - - 6 cyl. 200 and A/C-dealer installed	★ D2DZ 2882-A(6/82)		1
	P - - 6 cyl. 250 and A/C-dealer installed	★ D2DZ 2882-A(6/82)		1
	P - - 8 cyl. and A/C-dealer installed	★ D4AZ 2882-C(9/85)		1
74	P - - 6 cyl. 200 and integral A/C	C80Z 2882-B		1
	P - - 6 cyl. 200 and A/C-dealer installed	★ D2DZ 2882-A(6/82)		1
	P - - 6 cyl. 250 and integral A/C- "Before 8/5/74"	C90Z 2882-A		1
	P - - 6 cyl. 250 and A/C-dealer installed	★ D2DZ 2882-A(6/82)		1
	P - - 8 cyl. and A/C	★ D00Z 2882-A(3/81)		1
75	P - - 6 cyl. 200 and integral A/C	D5DZ 2882-C		1
	P - - 6 cyl. 250 and integral A/C "From 7/28/75"	★ D6DZ 2882-C(3/84)		1
	P - - 6 cyl. and A/C-dealer installed	★ D2DZ 2882-A(6/82)		1
	P - - 8 cyl. and integral A/C	D5DZ 2882-A		1
76	P - - 6 cyl. 200 and integral A/C	D5DZ 2882-C		1
	P - - 6 cyl. 250 and integral A/C	★ D6DZ 2882-C(3/84)		1
	P - - 8 cyl. 302 and integral A/C	D5DZ 2882-A		1
	P - - 6 cyl. and A/C-dealer installed	★ D2DZ 2882-A(6/82)		1
77	P - - 6 cyl. 200 and integral A/C	D5DZ 2882-C		1
	P - - 6 cyl. 250 and integral A/C	★ D6DZ 2882-C(3/84)		1
	P - - 8 cyl. 302 and integral A/C	D5DZ 2882-A		1
	P (Zephyr)			
78/	P - - 4 cyl. 140 (2300cc) and integral A/C	D4ZZ 2882-B		1
	P - - 6 cyl. 200 and integral A/C "Before 4/16/79"	★ D8BZ 2882-A r/b D9BZ 2882-A(10/81)		1
	P - - 8 cyl. 302 and integral A/C	E0SZ 2882-A		1
	P - - 6 cyl. 200 and A/C-dealer installed	D5DZ 2882-C		1
	P - - 6 cyl. 200 w/ 70 amp. alternator and A/C dealer installed	D8BZ 2882-B		1
	P - - 8 cyl. 302 and A/C dealer installed	D8ZZ 2882-A		1
79	P - - 6 cyl. 200 and integral A/C "From 4/16/79"	D9BZ 2882-A		1

YEAR	MODEL/RESTRICTIONS	PART NUMBER	DESCRIPTION	QTY.
2882	BRACKET (AIR CONDITIONER COMPRESSOR MOUNTING)-Also refer to group 10A313 — Cont'd			
	V (Versailles)			
77	V - - 8 cyl. 302 and integral A/C	★ D7DZ 2882-B	Lower rear-r/b D8AZ 2882-A (2/80)	1
77/	V - - 8 cyl. 302 and integral A/C	★ D7DZ 2882-A(3/84)	Used to 2883 bracket	1
	V - - 8 cyl. 351 and integral A/C	★ D7DZ 2882-C(6/82)	Lower rear	1
	V - - 8 cyl. 302 and integral A/C	★ D74Y 2882-A(3/84)	Upper rear	1
	V - - 8 cyl. 351 and integral A/C	★ D74Y 2882-B(6/82)	Upper rear	1
78	V - - 8 cyl. 302 and integral A/C	★ D8AZ 2882-A(3/84)	Lower rear	1
	Y (Meteor)			
73	Y - - 8 cyl. 400 and integral A/C	D1AZ 2882-A		1
74	Y - - 8 cyl. 400 and integral A/C	D1AZ 2882-A		1
	Y - - 8 cyl. 460 and integral A/C- "From 5/1/74"	★ D5MZ 2882-A(6/82)		1
75	Y - - 8 cyl. 351M,400 and integral A/C	D5AZ 2882-A		1
	Y - - 8 cyl. 351,400 and A/C-dealer installed	★ D6AZ 2882-C(10/85)		1
	Y - - 8 cyl. 460 and integral A/C	★ D5MZ 2882-A(6/82)		1
	Y - - 8 cyl. 460 and A/C-dealer installed	D4AZ 2882-C		1
76	Y - - 8 cyl. 351M,400 and integral A/C	★ D6AZ 2882-A(2/80)	Use w/D6AZ 2883-A	1
	Y - - 8 cyl. 351,400 and A/C-dealer installed	★ D6AZ 2882-C(10/85)		1
	Y - - 8 cyl. 460,460 P/C and integral A/C	★ D5MZ 2882-A(6/82)		1
77	A,D,K	93291-S2	(WW-6-PK)-stud(to cyl. head) 7/16"-14 X 2 3/4"	1
73/	D	34988-S4	(M-89-D)-nut-hex. head-7/16"-14	2
73/	D,K	34813-S7-8	(X-71-A)-nut-hex. head-3/8"-16	1
73/	D,K	377278-S7-8	(WW-6-E)-stud (to cyl. head)-3/8"-16 x 2"	3
77	F - - 8 cyl. 351M and 400	385243-S2	(BB-563-BL) screw and washer - hex head 7/16" - 14 x 1 7/8"	1
74	J - - 4 cyl., 6 cyl. Calif. only	E620014-S72	(AM-12)-nut-hex. head (bracket to engine)-M10	1
73/	K	381469-S	(BB-563-AN)-screw (to compressor assy.)-hex. head-3/8"-16 x 1"	1
73/	K	384094-S2	(BB-563-BJ)-screw and washer-hex. head-7/16"-14 x 1 1/4"	2
73/	K	377279-S7-8	(WW-6-F)-stud (to cyl. head)-7/16"-14 x 2 1/8"	2
73/	L	N800004-S	(AB-35-C)-stud (to engine)-M10 x 7/16"-14 x 1 5/8"	4
73/	L	N800017-S100	(AB-38)-bolt (to engine)-hex. hd.-M10 x 3/4"	4
2883	BRACKET (AIR CONDITIONER COMPRESSOR ADJUSTING)			
74/	A - - 8 cyl. 460 and integral A/C	★ D5MZ 2883-A(9/82)		1
76	A - - 8 cyl. 351M,400 and integral A/C	★ D6AZ 2883-A(2/80)	Used w/D6AZ 2882-A from 10/1/75	1
77/78	A - - 8 cyl. 351M, 400 and integral A/C "Before 10/1/77"	★ D7AZ 2883-A(6/82)	From 10/1/77 use D8VZ 2882-A	1
76	C - - 8 cyl. 460 and integral A/C	★ D5MZ 2883-A(9/82)		1
75/	D - - 8 cyl. 460 and integral A/C	★ D5VY 2883-A(6/82)		1
77/	D - - 8 cyl. 400 and integral A/C	★ D7AZ 2883-A(6/82)		1
76	F - - 8 cyl. 460 and integral A/C	★ D5MZ 2883-A(9/82)		1
76/78	G - - 8 cyl	★ D7DZ 2883-A(6/83)		1
79	G,V - - 8 cyl.	★ D7DZ 2883-A(6/83)	With FORD C2 P/S pump	1
79	G,V - - 8 cyl.	★ D8AZ 2883-A(3/84)	With Saginaw Steering Gear pump	1
75/	K - - 8 cyl. 460 and integral A/C	★ D5MZ 2883-A(9/82)		1
77/	K - - 8 cyl. 400 and integral A/C	★ D7AZ 2883-A(6/82)		1
77/78	V - - 8 cyl. and integral A/C	★ D7DZ 2883-A(6/83)		1
74/76	Y - - 8 cyl. 460 and integral A/C	★ D5MZ 2883-A(9/82)		1
76	Y - - 8 cyl. 351M,400 and integral A/C	★ D6AZ 2883-A(2/80)	Used w/D6AZ 2882-A from 10/1/75	1
73/	D,K	370608-S2	(BB-579)-screw-hex. head-3/8"-16 x 3/4"	3
73/	D,K	381469-S	(BB-563-AN)-screw-hex. head-3/8"-16 x 1"	2

COPYRIGHT © 1986 — FORD MOTOR COMPANY — DEARBORN, MICHIGAN

IDENTIFICATION CHART

Use the chart below to translate stamped number into service part number.
Also refer to the illustration and the model applicaton listing which follow.

CLUTCH IDENTIFICATION		PART NUMBER CLUTCH		PART NUMBER FIELD OR HOLDER	
2884	CLUTCH and PULLEY (AIR CONDITIONER COMPRESSOR)				
	▲ Clutch and pulley kit-refer to group 2884, page 27 for contents of kit				
C90A	2981-E	★ C90Z	2884-B	D4AZ	2987-A
C9RJ	2981-A	★▲C9AZ	2884-L		
D0VA	2981-A	▲ C9AZ	2884-K		
D10A	2981-AA	D10Z	2884-A	D4AZ	2987-A
D10A	2981-A1A	D10Z	2884-A	D4AZ	2987-A
D10A	2981-A1B	D10Z	2884-A	D4AZ	2987-A
D10A	2981-A2A	D10Z	2884-A	D4AZ	2987-A
D10A	2981-A2B	D10Z	2884-A	D4AZ	2987-A
D20A	2981-AA	D20Z	2884-A	D4AZ	2987-A
D20A	2981-AC	D20Z	2884-A	D4AZ	2987-A
D20A	2981-BA	D20Z	2884-B	D4AZ	2987-A
D20A	2981-A1A	★ D20Z	2884-A	D4AZ	2987-A
D20A	2981-A1B	★ D20Z	2884-A	D4AZ	2987-A
D20A	2981-A1C	★ D20Z	2884-A	D4AZ	2987-A
D20A	2981-A2A	★ D20Z	2884-A	D4AZ	2987-A
D20A	2981-A2B	★ D20Z	2884-A	D4AZ	2987-A
D20A	2981-A2C	★ D20Z	2884-A	D4AZ	2987-A
D2ZA	2981-A1A	D10Z	2884-A	D4AZ	2987-A
D2ZA	2981-A1B	D10Z	2884-A	D4AZ	2987-A
D2ZA	2981-A2A	D10Z	2884-A	D4AZ	2987-A
D2ZA	2981-A2B	D10Z	2884-A	D4AZ	2987-A
D3AH	2981-AB	D3AZ	2884-A	D4AZ	2987-A
D3AH	2981-A1B	D3AZ	2884-A	D4AZ	2987-A
D3AH	2981-A2B	D3AZ	2884-A	D4AZ	2987-A
D4AH	2981-AA	★ D4AZ	2884-A	D4AZ	2987-A
D4AH	2981-A1A	★ D4AZ	2884-A	D4AZ	2987-A
D4AH	2981-A2A	★ D4AZ	2884-A	D4AZ	2987-A
D42H	2981-BA	D4FZ	2884-A	D2FZ	2987-A
D42H	2981-C1A	D4FZ	2884-C	D2FZ	2987-A
D42H	2981-C2A	D4FZ	2884-C	D2FZ	2987-A
D42H	2981-D1B	★ D4FZ	2884-E	D2FZ	2887-A
D42H	2981-D2B	★ D4FZ	2884-E	D2FZ	2987-A
D5BH	2981-A1A	D5DZ	2884-A	D4AZ	2987-A
D5BH	2981-A2A	D5DZ	2884-A	D4AZ	2987-A
D5DH	2981-A1A	D5DZ	2884-B	D4AZ	2987-A
D5DH	2981-A2A	D5DZ	2884-B	D4AZ	2987-A
D52A	2981-A1A	D6FZ	2884-A	D4AZ	2987-A
D52A	2981-A2A	D6FZ	2884-A	D4AZ	2987-A

2884 CLUTCH and PULLEY (AIR CONDITIONER COMPRESSOR) — Cont'd

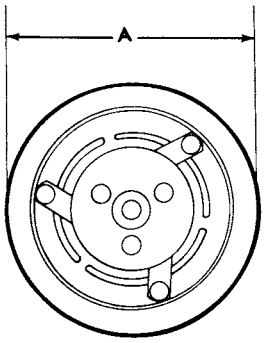

TYPES 2A, 2B, 2C AND 2D

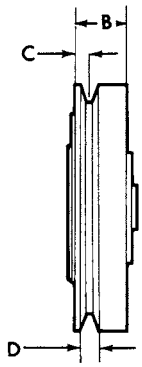

2A

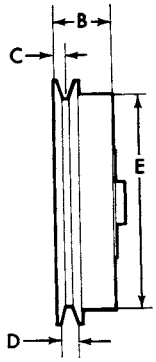

2B

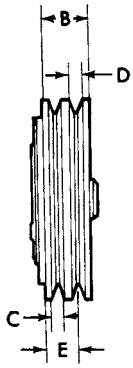

2C

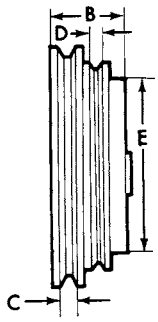

2D

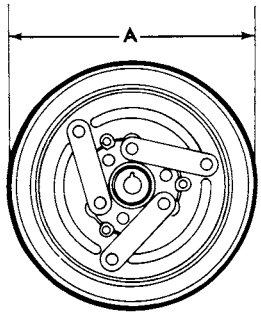

TYPE 3A

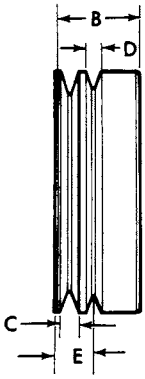

3A

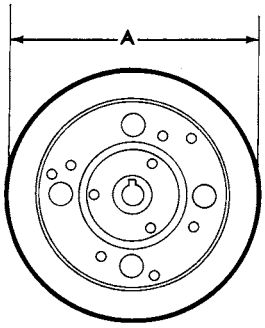

TYPE 4A

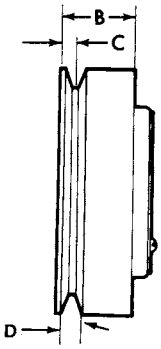

4A

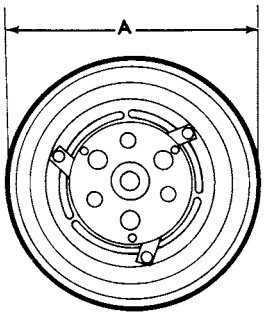

TYPE 5A

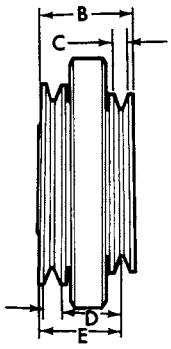

5A

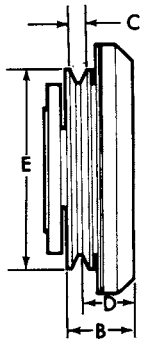

5B

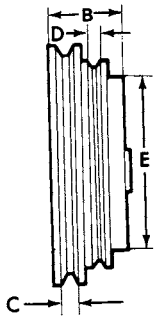

5C

AIR CONDITIONER CLUTCH PULLEYS

SIZE CHART

Model Application Chart follows this listing.

TYPE	DIMENSION (INCHES) A	B	C	D	E	S ☆	V ☆	IDENTIFICATION	REMARKS	PART NUMBER
2884	CLUTCH and PULLEY (AIR CONDITIONER COMPRESSOR) — Cont'd									
	▲ Clutch and Pulley Kit-Refer to group 2884 page 36 for contents of kit G-GPD P-Pitts F-Frigidaire									
2B	6 5/16	1 11/16	3/8	1/2	5 1/8	1	P	D20A 2981-AA,	*YB-38-less field-use w/D4AZ 2987-A	★ D20Z 2884-A
							P	D20A 2981-AC		r/bD3AZ 2884-A
							G	D20A 2981-A1A,		
							G	D20A 2981-A1B,		
							P	D20A 2981-A1C,		
							P	D20A 2981-A2A,		
							P	D20A 2981-A2B,		
							P	D20A 2981-A2C		

COPYRIGHT © 1986 — FORD MOTOR COMPANY — DEARBORN, MICHIGAN

SIZE CHART

Model Application Chart follows this listing.

TYPE	DIMENSION (INCHES) A	B	C	D	E	S ☆	V ☆	IDENTIFICATION	REMARKS	PART NUMBER
2884	CLUTCH and PULLEY (AIR CONDITIONER COMPRESSOR) — Cont'd ▲ Clutch and Pulley Kit-Refer to group 2884 page 36 for contents of kit G-GPD P-Pitts F-Frigidaire									
2B	6 5/16	1 11/16	3/8	1/2	5 1/8	1	P G G P P G P P P	D10A 2981-AA, D10A 2981-A1A, D10A 2981-A1B, D10A 2981-A2A, D10A 2981-A2B, D2ZA 2981-A1A, D2ZA 2981-A1B, D2ZA 2981-A2A, D2ZA 2981-A2B	*YB-19-less-field-use w/D4AZ 2987-A	D10Z 2884-A
2B	6 5/16	1 3/4	3/8	1/2	5 1/8	1	P G	D8BH 2981-A1A D8BH 2981-A2B	*YB-200-less field-use w/D4AZ 2987-A	★ D8BZ 2884-A r/b D5ZZ 2884-A(3/84)
2B	7 15/16	1 3/4	3/8	1/2	5 1/8	1		D3AH 2981-AB D3AH 2981-A1B, D3AH 2981-A2B	*YB-163-less field-use w/D4AZ 2987-A	D3AZ 2884-A
2B	6 1/16	1 1/2	3/8	1/2	5	1	P	D42H 2981-BA	*YB-151-less field-use w/D2FZ 2987-A	★ D4FZ 2884-A r/b D4RY 2884-A(5/79)
2C	6 1/4	1 7/16	3/8	3/8	1	2	P	C90A 2981-E	*YB-34-less field-use w/D4AZ 2987-A	C90Z 2884-B
2C	6 5/16	1 3/8	3/8	3/8	1 1/16	2	P	D20A 2981-BA	*YB-39-less field-use w/D4AZ 2987-A	C90Z 2884-B
2C	6 1/16	1 1/4	1/2	1/2	15/16				*YB-176	D4RY 2884-A
2D	6 5/8	1 3/4	1/2	1/4	5	1	G P	D42H 2981-C1A, D42H 2981-C2A	*YB-154-less field-use w/D2FZ 2987-A	D4FZ 2884-C
							P	D42H 2981-D1B, D42H 2981-D2H	*YB-166-less field-use w/D2FZ 2987-A	D4FZ 2884-F
								D5BH 2981-A1A, D5BH 2981-A2A	*YB-171-less field-use w/D4AZ 2987-A	D5DZ 2884-A
								D5DH 2981-A1A, D5DH 2981-A2A	*YB-172-less field-use w/D4AZ 2987-A	D5DZ 2884-B
3A	6 1/8	1 7/8	3/8	3/8	1 3/8	2		C9RJ 2981-A	Has integral field-use w/C8SZ 2979-A	★ C9RZ 2884-A ★ r/b ▲ C9AZ 2884-L r/b D2AZ 2884-A(8/80)
							F		*YB-36-less field-use w/D1VY 2987-A field and D1VY 19D653-A pulley	D1VY 2884-A
5B	7 15/16	1 7/8	1/2	1 9/16	5 5/16	1	 G P	D4AH 2981-A D4AH 2981-A1A, D4AH 2981-A2A	*YB-150-less field-use w/D4AZ 2987-A	★ D4AZ 2884-A
5C	6 13/16	1 3/4	7/16	7/32	5 15/16	2	P	D52H 2981-A1A, D52H 2981-A2A	*YB-192-less field-use w/D4AZ 2987-A	D6FZ 2884-A

APPLICATION CHART

For illustration of Air Conditioning Clutch Pulleys see Page 31

For Identification Chart Refer to Pages 30

YEAR	MODEL/RESTRICTIONS	REMARKS	PART NUMBER MOTOR CRAFT (CLUTCH)	FIELD OR HOLDER	CLUTCH
2884	CLUTCH and PULLEY (AIR CONDITIONER COMPRESSOR) — Cont'd ▲ Clutch and Pulley Kit-Refer to group 2884 on page 36 for contents of kit				
	A (Mercury)				
73	A - - 8 cyl. 351,400 and integral A/C	Incl. rubber dampener	*YB-163	D4AZ 2987-A	D3AZ 2884-A
	A - - 8 cyl. 429,460 and integral A/C		*YB-24		▲ C9AZ 2884-K
	A - - dealer installed A/C-Canada only		*YB-82		▲ C9AZ 2884-L
73/	A - - w/Ogura clutch and A/C dealer installed		*YB-213	D2AZ 2987-A	D2AZ 2884-A

APPLICATION CHART

For illustration of Air Conditioning Clutch Pulleys see Page 31
For Identification Chart Refer to Pages 30

YEAR	MODEL/RESTRICTIONS	REMARKS	PART NUMBER		
			MOTOR CRAFT (CLUTCH)	FIELD OR HOLDER	CLUTCH
2884	CLUTCH and PULLEY (AIR CONDITIONER COMPRESSOR) — Cont'd ▲ Clutch and Pulley Kit–Refer to group 2884 on page 36 for contents of kit				
	A (Mercury)				
74	A – – 8 cyl. 400 and integral A/C	Incl. rubber dampener	*YB-163	D4AZ 2987-A	D3AZ 2884-A
	A – – 8 cyl. 460(engine warranty code A) and integral A/C		*YB-24		▲ C9AZ 2884-K
	A – – 8 cyl. 460(engine warranty code C) and integral A/C		*YB-150	D4AZ 2987-A	D4AZ 2884-A
	A – – dealer installed A/C–Canada only		*YB-82	★	▲ C9AZ 2884-L r/b D2AZ 2884-A(8/80)
75/	A – – integral A/C		*YB-36	D1VY 2987-A, D1VY 19D653-A	D1VY 2884-A
	A – – dealer installed A/C–Canada only		*YB-82	★	▲ C9AZ 2884-L r/b D2AZ 2884-A(8/80)
	C (Montego)				
73	C(53,63,65) – – 6 cyl. and integral A/C		*YB-39	D4AZ 2987-A	D20Z 2884-B
	C(71) – – 6 cyl. and integral A/C		*YB-34	D4AZ 2987-A	★ C90Z 2884-B(6/82)
	C – – 8 cyl. 302,351,400 and integral A/C		*YB-38	D4AZ 2987-A	★ D20Z 2884-A r/b D3AZ 2884-A
	C – – 8 cyl. 429,460 and integral A/C		*YB-24		▲ C9AZ 2884-K
	C – – dealer installed A/C		*YB-82	★	▲ C9AZ 2884-L r/b D2AZ 2884-A(8/80)
73/76	C – – w/Ogura clutch and A/C dealer installed		*YB-213	D2AZ 2987-A	D2AZ 2884-A
74	C – – 8 cyl. 302,351,400 and integral A/C		*YB-38	D4AZ 2987-A	★ D20Z 2884-A r/b D3AZ 2884-A
	C – – 8 cyl. 460 and integral A/C		*YB-24		▲ C9AZ 2884-K
	C – – dealer installed A/C		*YB-82	★	▲ C9AZ 2884-L r/b D2AZ 2884-A(8/80)
75	C – – 8 cyl. 351,400 and integral A/C		*YB-38	D4AZ 2987-A	★ D20Z 2884-A r/b D3AZ 2884-A
	C – – 8 cyl. 460 (exc. 460 P/C) and integral A/C		*YB-24		▲ C9AZ 2884-K
	C – – 8 cyl. 460 P/C and integral A/C		*YB-150	D4AZ 2987-A	★ D4AZ 2884-A(9/83)
	C – – dealer installed A/C		*YB-82	★	▲ C9AZ 2884-L r/b D2AZ 2884-A(8/80)
76	C – – 8 cyl. 351,400 and integral A/C		*YB-38	D4AZ 2987-A	★ D20Z 2884-A r/b D3AZ 2884-A
	C – – 8 cyl. 460 P/C and integral A/C		*YB-150	D4AZ 2987-A	★ D4AZ 2884-A(9/83)
	C – – 8 cyl. 460 (exc. 460 P/C) and integral A/C		*YB-24		▲ C9AZ 2884-K
	D (Lincoln)				
73/	D – – w/swash plate A/C compressor		*YB-36	D1VY 2987-A, D1VY 19D653-A	D1VY 2884-A
	F (Cougar)				
73	F – – integral A/C		*YB-19	D4AZ 2987-A	D10Z 2884-A
	F – – dealer installed A/C		*YB-82	★	▲ C9AZ 2884-L r/b D2AZ 2884-A(8/80)
73/	F – – w/Ogura clutch and A/C dealer installed		*YB-213	D2AZ 2987-A	D2AZ 2884-A

COPYRIGHT © 1986 — FORD MOTOR COMPANY — DEARBORN, MICHIGAN

APPLICATION CHART

For illustration of Air Conditioning Clutch Pulleys see Page 31
For Identification Chart Refer to Pages 30

YEAR	MODEL/RESTRICTIONS	REMARKS	PART NUMBER MOTOR CRAFT (CLUTCH)	FIELD OR HOLDER	CLUTCH
2884	CLUTCH and PULLEY (AIR CONDITIONER COMPRESSOR) — Cont'd ▲ Clutch and Pulley Kit–Refer to group 2884 on page 36 for contents of kit				
	F (Cougar)				
74	F – – 8 cyl. 351,400 and integral A/C		*YB-38	D4AZ 2987-A	★ D20Z 2884-A r/b D2AZ 2884-A(8/80)
	F – – 8 cyl. 460 and integral A/C		*YB-24		▲ C9AZ 2884-K
	F – – dealer installed A/C		*YB-82	★	▲ C9AZ 2884-L r/b D2AZ 2884-A(8/80)
75/76	F – – 8 cyl. 351,400 and integral A/C		*YB-38	D4AZ 2987-A	★ D20Z 2884-A r/b D3AZ 2884-A
	F – – 8 cyl. 460 and integral A/C		*YB-24		▲ C9AZ 2884-K
	F – – dealer installed A/C		*YB-82	★	▲ C9AZ 2884-L r/b D2AZ 2884-A(8/80)
77/	F – – integral A/C		*YB-38	D4AZ 2987-A	★ D20Z 2884-A r/b D3AZ 2884-A
	F – – dealer installed A/C		*YB-82	★	▲ C9AZ 2884-L r/b D2AZ 2884-A(8/80)
	G (Monarch)				
75	G – – 6 cyl. and integral A/C		*YB-172	D4AZ 2987-A	D5DZ 2884-B
	G – – 8 cyl. and integral A/C		*YB-38	D4AZ 2987-A	★ D20Z 2884-A r/b D3AZ 2884-A
	G – – dealer installed A/C		*YB-82	★	▲ C9AZ 2884-L r/b D2AZ 2884-A(8/80)
75/	G – – w/Ogura clutch and A/C dealer installed		*YB-213	D2AZ 2987-A	D2AZ 2884-A
76/	G – – integral A/C		*YB-36	D1VY 2987-A D1VY 19D653-A	D1VY 2884-A
	G – – dealer installed A/C		*YB-82	★	▲ C9AZ 2884-L r/b D2AZ 2884-A(8/80)
	J (Capri)				
73	J – – dealer installed A/C		*YB-82	★	▲ C9AZ 2884-L r/b D2AZ 2884-A(8/80)
73/	J – – w/Ogura clutch and A/C dealer installed		*YB-213	D2AZ 2987-A	D2AZ 2884-A
74	J – – 4 cyl. and integral A/C J – – 6 cyl. and integral A/C			D2FZ 2987-A	★ D4RY 2884-A(9/83)
76/78	J – – 4 cyl.		*YB-166	D2FZ 2987-A	★ D4FZ 2884-E(10/84)
76/78	J – – cyl.		*YB-176/	D2FZ 2987-A	★ D4RY 2884-A(9/83)
79	J – – 2.8L 6 cyl. and integral A/C		*YB-153	D4AZ 2987-A	★ D4ZZ 2884-A
	J – – 3.3L 6 cyl. and integral A/C		*YB172	D4AZ 2987-A	D5DZ 2884-B
	J – – 4 cyl. and integral A/C		*YB-192	D4AZ 2987-A	D6FZ 2884-A
	J – – 8 cyl. and integral A/C		*YB-211	D9ZZ 2987-A	D9ZZ 2884-A
	J – – 8 cyl. w/serpentine drive and A/C dealer installed		*YB-234	D9ZZ 2987-B	D9ZZ 2884-B
	K (Mark IV)				
73/	K – – w/swash plate A/C compressor		*YB-36	D1VY 2987-A, D1VY 19D653-A	D1VY 2884-A

APPLICATION CHART

For illustration of Air Conditioning Clutch Pulleys see Page 31
For Identification Chart Refer to Pages 30

YEAR	MODEL/RESTRICTIONS	REMARKS	PART NUMBER MOTOR CRAFT (CLUTCH)	FIELD OR HOLDER	CLUTCH
2884	CLUTCH and PULLEY (AIR CONDITIONER COMPRESSOR) — Cont'd ▲ Clutch and Pulley Kit-Refer to group 2884 on page 36 for contents of kit				
	L (Bobcat)				
74	L - - 4 cyl. 122 (2000 cc) and integral A/C		*YB-151	D2FZ 2987-A	★ D4FZ 2884-A r/b D4RY 2884-A(5/79)
	L - - 4 cyl. 140 (2300 cc) and integral A/C		*YB-154	D2FZ 2987-A	D4FZ 2884-C
	L - - dealer installed A/C		*YB-82	★	▲ C9AZ 2884-L r/b D2AZ 2884-A(8/80)
74/	L - - w/Ogura clutch and A/C dealer installed		*YB-213	D2AZ 2987-A	D2AZ 2884-A
75	L - - 4 cyl. 140 (2300 cc) and integral A/C		*YB-166	D2FZ 2987-A	★ D4FZ 2884-E(10/84)
	L - - 6 cyl. 171 (2800 cc) and integral A/C		*YB-151	D2FZ 2987-A	★ D4FZ 2884-A r/b D4RY 2884-A(5/79)
	L - - dealer installed A/C		*YB-82	★	▲ C9AZ 2884-L r/b D2AZ 2884-A(8/80)
76/	L - - 4 cyl. and integral A/C		*YB-192	D4AZ 2987-A	D6FZ 2884-A
	L - - 6 cyl. and integral A/C		*YB-151	D2FZ 2987-A	★ D4FZ 2884-A r/b D4RY 2884-A(5/79)
	L - - dealer installed A/C		*YB-82	★	▲ C9AZ 2884-L r/b D2AZ 2884-A(8/80)
	P (Comet)				
73	P - - 6 cyl. and integral A/C		*YB-34	D4AZ 2987-A	C9OZ 2884-B
	P - - 8 cyl. and integral A/C		*YB-19	D4AZ 2987-A	D10Z 2884-A
	P - - dealer installed A/C		*YB-82	★	▲ C9AZ 2884-L r/b D2AZ 2884-A(8/80)
73/	P - - w/Ogura clutch and A/C dealer installed		*YB-213	D2AZ 2987-A	D2AZ 2884-A
74	P - - 6 cyl. and integral A/C- "Before 8/5/74"		*YB-34	D4AZ 2987-A	C9OZ 2884-B
	P - - 6 cyl. and integral A/C- "From 8/5/74"		*YB-171	D4AZ 2987-A	D5DZ 2884-A
	P - - 8 cyl. and integral A/C		*YB-19	D4AZ 2987-A	D10Z 2884-A
	P - - dealer installed A/C		*YB-82	★	▲ C9AZ 2884-L r/b D2AZ 2884-A(8/80)
75	P - - 6 cyl. and integral A/C		*YB-171	D4AZ 2987-A	D5DZ 2884-A
	P - - 8 cyl. and integral A/C		*YB-19	D4AZ 2987-A	D10Z 2994-A
	P - - dealer installed A/C		*YB-82	★	▲ C9AZ 2884-L r/b D2AZ 2884-A(8/80)
76/77	P - - 6 cyl. and integral A/C		*YB-171	D4AZ 2987-A	D5DZ 2884-A
	P - - 8 cyl. and integral A/C		*YB-19	D4AZ 2987-A	D10Z 2884-A
	P - - dealer installed A/C		*YB-82	★	▲ C9AZ 2884-L r/b D2AZ 2884-A(8/80)
	P (Zephyr)				
78/	P - - 4 cyl. and integral A/C		*YB-192	D4AZ 2987-A	D6FZ 2884-A
	P - - 6 cyl. 200 and integral A/C		*YB-171	D4AZ 2987-A	D5DZ 2884-A
	P - - 8 cyl. 302 and integral A/C		*YB-200	D4AZ 2987-A	★ D8BZ 2884-A r/b D5ZZ 2884-A(3/84)
	P - - dealer installed A/C		*YB-82	★	▲ C9AZ 2884-L r/b D2AZ 2884-A(8/80)

COPYRIGHT © 1986 — FORD MOTOR COMPANY — DEARBORN, MICHIGAN

APPLICATION CHART

For illustration of Air Conditioning Clutch Pulleys see Page 31
For Identification Chart Refer to Pages 30

YEAR	MODEL/RESTRICTIONS	REMARKS	PART NUMBER MOTOR CRAFT (CLUTCH)	PART NUMBER FIELD OR HOLDER	PART NUMBER CLUTCH
2884	CLUTCH and PULLEY (AIR CONDITIONER COMPRESSOR) — Cont'd ▲ Clutch and Pulley Kit-Refer to group 2884 on page 36 for contents of kit				
	V (Versailles)				
77/	V - - integral A/C		*YB-36	D1VY 2987-A D1VY 19D653-A	D1VY 2884-A
	Y (Meteor)				
73	Y - - 351,400 and integral A/C	Incl. rubber dampener	*YB-163	D4AZ 2987-A	D3AZ 2884-A
	Y - - 429,460 and integral A/C		*YB-24		▲C9AZ 2884-K
	Y - - dealer installed A/C-Canada only		*YB-82	★	▲C9AZ 2884-L r/bD2AZ 2884-A(8/80)
73/76	Y - - w/Ogura clutch and A/C dealer installed		*YB-213	D2AZ 2987-A	D2AZ 2884-A
74	Y - - 8 cyl. 351,400 and integral A/C	Incl. rubber dampener	*YB-163	D4AZ 2987-A	D3AZ 2884-A
	Y - - 8 cyl. 460(engine warranty code A) and integral A/C		*YB-24		▲C9AZ 2884-K
	Y - - 8 cyl. 460 (engine warranty code C) and integral A/C "Before 1/14/74"		*YB-24		▲C9AZ 2884-K
	Y - - 8 cyl. 460 (engine warranty code C) and integral A/C "From 1/14/74"		*YB-150	D4AZ 2987-A(9/83)	★D4AZ 2884-A(9/83)
	Y - - dealer installed A/C-Canada only		*YB-82	★	▲C9AZ 2884-L r/bD2AZ 2884-A(8/80)
75	Y - - integral A/C		*YB-36	D1VY 2987-A, D1VY 19D653-A	D1VY 2884-A
	Y - - dealer installed A/C-Canada only		*YB-82	★	▲C9AZ 2884-L r/bD2AZ 2884-A(8/80)
76	Y - - integral A/C		*YB-36	D1VY 2987-A D1VY 19D653-A	D1VY 2884-A

YEAR	MODEL/RESTRICTIONS	PART NUMBER	DESCRIPTION	QTY.
2884	CLUTCH and PULLEY (AIR CONDITIONER COMPRESSOR) — Cont'd			
73/	All - - integral A/C	358606-S	(BB-427) - bolt -hex hd. to compressor-5/16"-24 x 1" (Eaton)	1
		358605-S	(XX-115) - washer to compressor-5/16" flat (Eaton)	1
		373296-S	(BB-435) -bolt-hex hd. to compressor-5/16"-24 x 1 1/2" (Warner)	1

CONTENTS OF KITS

		C9AZ 2884-K	*YB-24			
Consists of						
1-C9AZ 2884-E	Clutch and pulley	1-358605-S8	Washer	4-378859-S8	Screw	
1-C9AZ 2987-A	Coil	1-378741-S2	Bolt			
		★C9AZ 2884-L	*YB-82-r/b D2AZ 2884-A (8/80)			
Consists of						
1-D1AZ 2884-B	Clutch	1-378605-S8	Washer	4-378859-S8	Screw	
1-C6TZ 2987-A	Coil	1-378740-S2	Bolt			

2887	SPACER (COMPRESSOR MOUNTING BRACKET)			
75/76	G,P - - 6 cyl. 250	★D6DZ 2887-A(2/80)	A/C bracket to block	1

YEAR	MODEL/RESTRICTIONS	PART NUMBER	DESCRIPTION	QTY.
2888-9	BRACE (AIR CONDITIONER COMPRESSOR)			
	A (Mercury)			
73	A - - 8 cyl. 351 and integral A/C	★D1AZ 2888-A	Lateral- r/b D70Z 2888-A(1/79)	
	A - - 8 cyl. 351 and integral A/C	D70Z 2888-B	Front	1
	A - - 8 cyl. 400 and integral A/C	D70Z 2888-B	Front	1
	A - - 8 cyl. 420,460 and integral A/C	D0AZ 2888-A	Lateral	1
74	A - - 8 cyl. 400 and integral A/C	★D1AZ 2888-A	Lateral- r/b D70Z 2888-A(1/79)	
	A - - 8 cyl. 400 and integral A/C	D70Z 2888-B	Front	1
	A - - 8 cyl. 400 and A/C-dealer installed	★D2AZ 2888-D r/bD8AZ 2882-B(12/78)	Lateral	1
	A - - 8 cyl. 400 and A/C-dealer installed	★D2AZ 2889-D r/bD8AZ 2882-B(12/78)	Strap-rear	1
	A - - 8 cyl. 460 and integral A/C	★D2VY 2888-A(6/82)	Front	1
	A - - 8 cyl. 460 (engine warranty code A)-and integral A/C	D0AZ 2888-A	Lateral	1
	A - - 8 cyl. 460 (engine warranty code C)-and integral A/C	D4AZ 2888-A	Lateral	1
	A - - 8 cyl. 460 and integral A/C	★D4SZ 2889-A(6/82)	Rear	1
	A - - 8 cyl. 460 and A/C-dealer installed	D4AZ 2888-C	Lateral	1
	A - - 8 cyl. 351,400 and integral A/C	★D5AZ 2889-C(3/81)	Rear	1
	A - - 8 cyl. 351,400 and A/C-dealer installed	D5AZ 2888-A	Rear vertical	1
	A - - 8 cyl. 351,400 and A/C-dealer installed	D5AZ 2889-B	Strap	1
	A - - 8 cyl. 460 and integral A/C	★D2VY 2888-A(6/82)	Front	1
	A - - 8 cyl. 460 and integral A/C	D4SZ 2889-A	Rear	1
	A - - 8 cyl. 460 and A/C-dealer installed	D4AZ 2888-C		1
76	A - - 8 cyl. 351,400 and integral A/C	★D5AZ 2889-C(3/81)	Rear	1
	A - - 8 cyl. 460 and integral A/C	★D2VY 2888-A(6/82)	Front	1
	A - - 8 cyl. 460 and integral A/C	★D4SZ 2889-A(6/82)	Rear	1
	A - - 8 cyl. 351,400 and A/C-dealer installed	D5AZ 2888-A	Rear vertical	1
	A - - 8 cyl. 351,400 and A/C-dealer installed	D5AZ 2889-B	Strap	1
77	A - - 8 cyl. 351 and integral A/C "Before 6/20/77"	★D7AZ 2889-A(6/82)	Rear-4" long- use w/ D7AZ 2889-B	1
	A - - 8 cyl. 351 and integral A/C "Before 6/20/77"	★D7AZ 2889-B(6/82)	Rear-5" long-use w/ D7AZ 2889-A	1
77/78	A - - 8 cyl. 351 M and integral A/C "From 6/20/77"	★D7VY 2889-C(11/85)	Rear	1
	A - - 8 cyl. 400 and integral A/C "Before 5/9/77"	★D7AZ 2889-A(6/82)	Rear-4" long - use w/D7AZ 2889-B	1
	A - - 8 cyl. 400 and integral A/C "Before 5/9/77"	★D7AZ 2889-B(6/82)	Rear-5" long - use w/D7AZ 2889-A	1
	A - - 8 cyl. 400 and integral A/C "From 5/9/77"	★D7VY 2889-C(11/85)	Rear	1
	A - - 8 cyl. 460 and integral A/C	★D2VY 2888-A(6/82)	Front	1
	A - - 8 cyl. 460 and integral A/C	D4SZ 2889-A	Rear	1
78	A - - 8 cyl. 351M, 400 and integral A/C	D8VZ 2888-A	Front	1
	A - - 8 cyl. 460 and A/C-dealer installed	D4AZ 2888-C	Lateral	1

COPYRIGHT © 1986 — FORD MOTOR COMPANY — DEARBORN, MICHIGAN

1973/79 LINCOLN-MERCURY CARS

YEAR	MODEL/RESTRICTIONS	PART NUMBER	DESCRIPTION	QTY.
2888-9	BRACE (AIR CONDITIONER COMPRESSOR) — Cont'd			
	A (Mercury)			
78/	A - - 8 cyl. 351 and A/C-dealer installed	D2AZ 2889-C	Rear Strap	1
	A - - 8 cyl. 400 and A/C dealer installed	D2AZ 2889-D	Rear strap	1
79	A - - 8 cyl. 5.0 litre and integral A/C	★ D9AZ 2888-A(3/84)	Front	1
	A - - 8 cyl. 5.8W litre and integral A/C	★ D9AZ 2888-B(3/84)		1
	A - - 8 cyl. 5.0 litre and integral A/C	★ D9AZ 2889-A(3/84)	Rear	1
	A - - 8 cyl. 5.8W litre and integral A/C	★ D9AZ 2889-B(3/84)	Rear	1
	A - - 8 cyl. 5.0 litre, 5.8W litre and A/C dealer installed	D9AZ 2888-C		1
	C (Montego)			
73	C - - 8 cyl. 302,400 and integral A/C	★ D1AZ 2888-A r/b D70Z 2888-A(1/79)	Lateral	1
	C - - 8 cyl. 302,351,400 and integral A/C	D70Z 2888-B	Front	1
	C - - 8 cyl. 302,351W and A/C-dealer installed	D2AZ 2888-A	Lateral	1
	C - - 8 cyl. 302,351W and A/C-dealer installed	D50Z 2888-A	Rear	1
	C - - 8 cyl. 302 and A/C-dealer installed	★ D2AZ 2889-A(10/85)	Strap	1
	C - - 8 cyl. 351C and A/C-dealer installed	★ D2AZ 2888-D r/b D8AZ 2882-B(12/78)	Lateral	1
	C - - 8 cyl. 351C and A/C-dealer installed	D2AZ 2889-C	Rear strap	1
	C - - 8 cyl. 351W and A/C-dealer installed	★ D2AZ 2889-B(6/82)	Strap	1
	C - - 8 cyl. 400 and A/C-dealer installed	★ D2AZ 2888-D r/b D8AZ 2882-B(12/78)	Lateral	1
	C - - 8 cyl. 400 and A/C-dealer installed	D2AZ 2889-D	Rear strap	1
	C - - 8 cyl. 429 and integral A/C	D0AZ 2888-A	Lateral	1
74	C - - 8 cyl. 302,351,400 and integral A/C	D70Z 2888-B	Front	1
	C - - 8 cyl. 302,351,400 and integral A/C	★ D1AZ 2888-A r/b D70Z 2888-A(1/79)	Lateral	1
	C - - 8 cyl. 351C,400 and A/C-dealer installed	★ D2AZ 2888-D r/b D8AZ 2882-B(12/78)	Lateral	1
	C - - 8 cyl. 351C and A/C-dealer installed	D2AZ 2889-C	Strap-rear	1
	C - - 8 cyl. 400 and A/C-dealer installed	D2AZ 2889-D	Strap-rear	1
	C - - 8 cyl. 460 and integral A/C	D0AZ 2888-A	Lateral	1
	C - - 8 cyl. 460 and A/C-dealer installed	D4AZ 2888-C	Lateral	1

YEAR	MODEL/RESTRICTIONS	PART NUMBER	DESCRIPTION	QTY.
2888-9	BRACE (AIR CONDITIONER COMPRESSOR) — Cont'd			
	C (Montego)			
75	C - - 8 cyl. 351,400 and integral A/C	D70Z 2888-B	Front	1
	C - - 8 cyl. 351,400 and integral A/C	★D1AZ 2888-A r/bD70Z 2888-A(1/79)	Lateral	1
	C - - 8 cyl. 351 and A/C-dealer installed	D50Z 2888-A	Rear vertical	1
	C - - 8 cyl. 351 and A/C-dealer installed	★D2AZ 2889-B(6/82)	Strap	1
	C - - 8 cyl. 460 (exc. 460 P/C) and integral A/C	D0AZ 2888-A	Lateral	1
	C - - 8 cyl. 460 P/C and integral A/C	★D4AZ 2888-B(2/80)	Front	1
	C - - 8 cyl. 460 P/C and integral A/C	★D4AZ 2888-A(2/80)	Lateral	1
	C - - 8 cyl. 460 and A/C-dealer installed	D4AZ 2888-C	Lateral	1
76	C - - 8 cyl. 351,400 and integral A/C "From 5/17/76"	D70Z 2888-B	Front	1
	C - - 8 cyl. 351,400 and integral A/C	★D1AZ 2888-A r/bD70Z 2888-A(1/79)	Lateral	1
	C - - 8 cyl. 460 (exc. 460 P/C) and integral A/C	D0AZ 2888-A	Lateral	1
	C - - 8 cyl. 460 P/C and integral A/C	★D4AZ 2888-B(2/80)	Front	1
	C - - 8 cyl. 460 P/C and integral A/C	★D4AZ 2888-A(2/80)	Lateral	1
	D (Lincoln)			
73/74	D	★D2VY 2888-A(6/82)	Front	1
74	D "From 11/19/73"	★D4VY 2889-A(6/82)	Rear	1
75/76	D	★D5VY 2888-A(6/82)	Front	1
75/76	D	D4VY 2889-A	Rear	1
77/	D - - 8 cyl. 400 and integral A/C	★D7VY 2889-C(11/85)	Rear	1
	D - - 8 cyl. 460 and integral A/C	★D5VY 2888-A(6/82)	Front	1
	D - - 8 cyl. 460 and integral A/C	D4VY 2889-A	Rear	1
78/	D - - 8 cyl. 400-2V and integral A/C	D8VZ 2888-A		1
	F (Cougar)			
73	F - - w/integral A/C	★D1AZ 2888-A r/bD70Z 2888-A(1/79)	Lateral	1
	F - - w/integral A/C	D70Z 2888-B	Front	1
	F - - A/C-dealer installed	★D2AZ 2888-D r/bD8AZ 2882-B(12/78)	Lateral	1
	F - - A/C-dealer installed	D2AZ 2889-C	Strap	1
74	F - - 8 cyl. 351,400 and integral A/C	★D1AZ 2888-A r/bD70Z 2888-A(1/79)	Lateral	1
	F - - 8 cyl. 351,400 and integral A/C	D70Z 2888-B	Front	1
	F - - 8 cyl. 351C and A/C-dealer installed	★D2AZ 2888-D r/bD8AZ 2882-B(12/78)	Lateral	1
	F - - 8 cyl. 351C and A/C-dealer installed	D2AZ 2889-C	Strap-rear	1
	F - - 8 cyl. 400 and A/C-dealer installed	D2AZ 2889-D	Strap-rear	1
	F - - 8 cyl. 460 and integral A/C	D0AZ 2888-A	Lateral	1
	F - - 8 cyl. 460 and A/C-dealer installed	D4AZ 2888-C	Lateral	1

COPYRIGHT © 1986 — FORD MOTOR COMPANY — DEARBORN, MICHIGAN

1973/79 LINCOLN-MERCURY CARS

YEAR	MODEL/RESTRICTIONS	PART NUMBER	DESCRIPTION	QTY.
2888-9	BRACE (AIR CONDITIONER COMPRESSOR) — Cont'd			
	F (Cougar)			
75	F - - 8 cyl. 351, 400 and integral A/C	D70Z 2888-B	Front	1
	F - - 8 cyl. 351,400 and integral A/C	★D1AZ 2888-A r/bD70Z 2888-A(1/79)	Lateral	1
	F - - 8 cyl. 351 and A/C-dealer installed	D50Z 2888-A	Rear vertical	1
	F - - 8 cyl. 351 and A/C-dealer installed	★D2AZ 2889-B(6/82)	Strap	1
	F - - 8 cyl. 460 and integral A/C	D0AZ 2888-A	Lateral	1
	F - - 8 cyl. 460 and A/C-dealer installed	D4AZ 2888-C	Lateral	1
76	F - - 8 cyl. 351,400 and integral A/C	D70Z 2888-B	Front	1
	F - - 8 cyl. 351, 400 and integral A/C	★D1AZ 2888-A r/bD70Z 2888-A(1/79)	Lateral	1
	F - - 8 cyl. 460 and integral A/C	D0AZ 2888-A	Lateral	1
77/	F - - integral A/C	D70Z 2888-A	Lateral	1
	F - - integral A/C	D70Z 2888-B	Front	1
78/	F - - 8 cyl. 351 and A/C-dealer installed	D2AZ 2889-C	Rear strap	1
	F - - 8 cyl. 400 and A/C-dealer installed	D2AZ 2889-D	Rear strap	1
	F - - 8 cyl. 302 and A/C dealer installed	D50Z 2888-A	Rear vertical	1
	F - - 8 cyl. 351W and A/C dealer installed	★D80Z 2888-A(6/82)	Rear vertical	1
	F - - 8 cyl. 302 and A/C dealer installed	★D2AZ 2889-A(10/85)	Strap	1
	F - - 8 cyl. 351W and A/C dealer installed	★D2AZ 2889-B(6/82)	Strap	1
	G (Monarch)			
75	G - - 6 cyl. 200 and integral A/C	★D5DZ 2888-B(3/81)	Front	1
	G - - 6 cyl. 200 and integral A/C	★D5DZ 2889-C(2/80)	Rear	1
	G - - 6 cyl. 200 and A/C-dealer installed	D2DZ 2888-A	Lateral	1
	G - - 6 cyl. 200 and A/C-dealer installed	D5DZ 2889-B	Strap	1
	G - - 6 cyl. 250 and integral A/C	D5DZ 2888-A	Front	1
	G - - 8 cyl. and integral A/C	D70Z 2888-B	Front	1
	G - - 8 cyl. and integral A/C	★D1AZ 2888-A r/bD70Z 2888-A(1/79)	Lateral	1
	G - - 8 cyl. 302,351 and A/C-dealer installed	D50Z 2888-A	Rear vertical	1
	G - - 8 cyl. 302 and A/C-dealer installed	★D2AZ 2889-A(10/85)	Strap	1
	G - - 8 cyl. 351 and A/C-dealer installed	★D2AZ 2889-B(6/82)	Strap	1
76	G - - 6 cyl. 200 and integral A/C "Before 1/5/76"	D5DZ 2888-C	Rear	1
	G - - 6 cyl. 200 and integral A/C "From 1/5/76"	D6DZ 2889-A	Rear	1
	G - - 6 cyl. 200 and A/C-dealer installed	D2DZ 2888-A	Lateral	1
	G - - 6 cyl. 200 and A/C-dealer installed	D5DZ 2889-B	Strap	1
	G - - 6 cyl. and integral A/C	★D6DZ 2888-A(3/84)	Front	1
	G - - 6 cyl. 250 and integral A/C	★D6DZ 2889-A(3/84)	Rear	1
	G - - 8 cyl. 302 and integral A/C	★D6DZ 2889-C(3/81)	Rear	1
	G - - 8 cyl. 351 W and integral A/C	★D6DZ 2889-B Not replaced (9/79)	Rear	1

YEAR	MODEL/RESTRICTIONS	PART NUMBER	DESCRIPTION	QTY.
2888-9	BRACE (AIR CONDITIONER COMPRESSOR) — Cont'd			
	G(Monarch)			
77/	G - - 6 cyl. and integral A/C	★D6DZ 2888-A(3/84)	Front	1
	G - - 6 cyl. and integral A/C	★D6DZ 2889-A(3/84)	Rear	1
	G - - 8 cyl. 302,351 and integral A/C	★D7DZ 2889-C(3/84)	Rear	1
	G - - 8 cyl. 302 and integral A/C	★D7DZ 2889-D(3/84)	Rear vertical	1
78/	G - - 6 cyl. 250 and A/C dealer installed	★D8DZ 2888-A(6/82)		1
	G - - 8 cyl. 302 and A/C dealer installed	D50Z 2888-A	Rear vertical	1
	G - - 8 cyl. 302 and A/C dealer installed	★D2AZ 2889-A(10/85)	Strap	1
	J (Capri)			
73	J - - 4 cyl. 122 (2000 cc) and A/C-dealer installed	★D3FZ 2889-B(3/81)	Brace-rear	1
	J - - 4 cyl. 122 (2000 cc) and A/C-dealer installed	★D3FZ 2889-A(3/81)	Brace-front	1
74	J - - 4 cyl. 122 (2000 cc) and A/C-dealer installed	D2FZ 2888-A	Lateral	1
	J - - 4 cyl. 122 (2000 cc) and A/C-dealer installed	★D3FZ 2889-B(3/81)	Brace-rear	1
	J - - 4 cyl. 122 (2000 cc) and A/C-dealer installed	★D3FZ 2889-A(3/81)	Brace-front	1
74	J - - 6 cyl. 171 (2800 cc) and integral A/C-exc. Calif.	D4ZZ 2888-B	Lateral	1
	J - - 6 cyl. 171 (2800 cc) and integral A/C-Calif.	★D4RY 2888-B(2/80)	Front	1
	J - - 6 cyl. 171 (2800 cc) and integral A/C	★D7FZ 2889-A(9/85)	Rear	1
76/78	J - - 4 cyl. and integral A/C	★D5FZ 2888-B(2/80)	Lateral	1
	J - - 4 cyl. and A/C-dealer installed	★D6FZ 2888-B(3/84)	Brace	1
	J - - 6 cyl. and integral A/C-Calif.	★D4RY 2888-B(2/80)	Front	1
	J - - 6 cyl. and A/C-dealer installed	★D5RY 2888-A(2/80)	Brace	1
	J - - 6 cyl. and integral A/C	★D5FZ 2888-A(9/85)	Lateral	1
	J - - 6 cyl. and integral A/C	★D7FZ 2889-A(9/85)	Rear	1
	J - - 6 cyl. and A/C-dealer installed	★D5RY 2889-A(2/80)	Strap	1
79	J - - 6 cyl. 2.8 litre and integral A/C	★D4ZZ 2888-A(9/85)	Lateral	1
	J - - 6 cyl. 3.3 litre and integral A/C	D8BZ 2888-A	Front	1
	J - - 6 cyl. 3.3 litre and integral A/C	D8BZ 2889-A	Rear	1
	J - - 4 cyl. 2.3 litre and integral A/C	D6FZ 2888-A	Lateral	1
	J - - 8 cyl. 5.0 litre and integral A/C	D9ZZ 2888-A		1
	J - - 6 cyl. 2.8 litre and integral A/C	★D7FZ 2889-A(9/85)		1
	J - - 8 cyl. 5.0 litre w/ p/s-w/ thermactor pump and A/C dealer installed	D9ZZ 2888-B		1
	J - - 4 cyl. 2.3 litre w/thermactor pump and A/C dealer installed	D9ZZ 2888-C		1
	K (Mark IV)			
73/76	K	★D2VY 2888-A(6/82)	Front	1
74/76	K "From 11/19/73"	★D4SZ 2889-A(6/82)	Rear	1

COPYRIGHT © 1986 — FORD MOTOR COMPANY — DEARBORN, MICHIGAN

1973/79 LINCOLN-MERCURY CARS

YEAR	MODEL/RESTRICTIONS	PART NUMBER	DESCRIPTION	QTY.
2888-9	BRACE (AIR CONDITIONER COMPRESSOR) — Cont'd			
	K(Mark IV)			
77/	K - - 8 cyl. 400-2V and integral A/C	★D7VY 2889-C(11/85)	Rear	1
	K - - 8 cyl. 460 and integral A/C	★D2VY 2888-A(6/82)	Front	1
	K - - 8 cyl. 460 and integral A/C	★D4SZ 2889-A(6/82)	Rear	1
78/	K - - 8 cyl. 400-2V and integral A/C	D8VZ 2888-A		1
	L (Bobcat)			
74	L - - 4 cyl. 140 (2300 cc) and integral A/C	★D4FZ 2888-A Not replaced (2/79)	Lateral	1
	L - - 4 cyl. 140 (2300 cc) and A/C-dealer installed	★D4ZZ 2888-F(2/80)	Brace	1
	L - - 4 cyl. 140 (2300 cc) and A/C-dealer installed	D3FZ 2889-B	Brace-front	1
75	L - - 4 cyl. and integral A/C	★D5FZ 2888-B(2/80)	Lateral	1
	L - - 4 cyl. 140 (2300 cc) and A/C-dealer installed	★D4ZZ 2888-F(2/80)	Brace	1
	L - - 6 cyl. and integral A/C-without power steering	D4ZZ 2888-B	Front	1
	L - - 6 cyl. and integral A/C	★D5FZ 2888-A(9/85)	Lateral	1
	L - - 6 cyl. and integral A/C	★D7FZ 2889-A(9/85)	Rear	1
76	L - - 4 cyl. and integral A/C	D6FZ 2888-A	Lateral	1
	L - - 4 cyl. and A/C-dealer installed	★D6FZ 2888-B(3/84)	Brace	1
	L - - 6 cyl. and integral A/C, w/o power steering	D4ZZ 2888-B	Front	1
	L - - 6 cyl. and integral A/C	★D5FZ 2888-A(9/85)	Lateral	1
	L - - 6 cyl. and integral A/C "Before 7/1/76"	★D7FZ 2889-A(9/85)	Rear	1
	L - - 6 cyl. and integral A/C "From 7/1/76"	★D7FZ 2889-A(9/85)	Rear	1
	L - - 6 cyl. and A/C-dealer installed	★D6FZ 2888-C(2/80)	Brace	1
	L - - 6 cyl. and A/C-dealer installed	★D6FZ 2889-A(2/80)	Strap	1
77	L - - 6 cyl. and A/C-dealer installed	★D6FZ 2888-C(2/80)	Brace-use w/Thompson P/S pump or w/o P/S	1
	L - - 6 cyl. and A/C-dealer installed	★D6FZ 2889-A(2/80)	Strap-use w/Thompson P/S pump or w/o P/S	1
77/	L - - 4 cyl. and integral A/C	D6FZ 2888-A	Lateral	1
	L - - 6 cyl. and integral A/C w/o power steering	D4ZZ 2888-B	Front	1
	L - - 6 cyl. and integral A/C	★D5FZ 2888-A(9/85)	Lateral	1
	L - - 6 cyl. and integral A/C	★D7FZ 2889-A(9/85)	Rear	1
	L - - 4 cyl. and A/C-dealer installed	★D6FZ 2888-B(3/84)	Brace	1
	L - - 6 cyl. and A/C-dealer installed "From 6/27/77"	★D8FZ 2888-B(6/82)	Brace- Use w/C2 P/S pump or w/o P/S	1
	L - - 6 cyl. and A/C dealer installed "From 6/27/77"	★D8FZ 2888-C(6/82)	Brace- Use w/C2 P/S pump or w/o P/S	1
	P (Comet)			
73	P - - 6 cyl. 200 and A/C-dealer installed	D2DZ 2888-A	Lateral	1
	P - - 8 cyl. and integral A/C	D70Z 2888-B	Front	1
	P - - 8 cyl. and integral A/C	★D1AZ 2888-A r/bD70Z 2888-A(1/79)	Lateral	1
	P - - 8 cyl. and A/C-dealer installed	D2AZ 2888-A	Lateral	1
	P - - 8 cyl. and A/C-dealer installed	D50Z 2888-A	Rear	1
	P - - 8 cyl. and A/C-dealer installed	★D2AZ 2889-A(10/85)	Strap	1

YEAR	MODEL/RESTRICTIONS	PART NUMBER	DESCRIPTION	QTY.
2888-9	BRACE (AIR CONDITIONER COMPRESSOR) — Cont'd			
	P (Comet)			
74	P - - 6 cyl. 200 and A/C-dealer installed	D2DZ 2888-A	Lateral	1
	P - - 6 cyl. 250 and integral A/C- "From 8/5/74"	D5DZ 2888-A	Front	1
	P - - 6 cyl. 250 and A/C-dealer installed	D20Z 2889-A	Lateral	1
	P - - 8 cyl. and integral A/C	★D1AZ 2888-A r/bD70Z 2888-A(1/79)	Lateral	1
	P - - 8 cyl. and integral A/C	D70Z 2888-B	Front	1
75	P - - 6 cyl. 200 and integral A/C	★D5DZ 2888-B(3/81)	Front	1
	P - - 6 cyl. 200 and integral A/C	★D5DZ 2889-C(2/80)	Rear	1
	P - - 6 cyl. 200 and A/C dealer installed	D2DZ 2888-A	Lateral	1
	P - - 6 cyl. 200 and A/C-dealer installed	D5DZ 2889-B	Strap	1
	P - - 6 cyl. 250 and integral A/C	D5DZ 2888-A	Front	1
	P - - 8 cyl. and integral A/C	D70Z 2888-B	Front	1
	P - - 8 cyl. and integral A/C	★D1AZ 2888-A r/bD70Z 2888-A(1/79)	Lateral	1
	P - - 8 cyl. 302 and A/C-dealer installed	D50Z 2888-A	Rear vertical	1
	P - - 8 cyl. 302 and A/C-dealer installed	★D2AZ 2889-A(10/85)	Strap	1
76	P - - 6 cyl. 200 and integral A/C	★D5DZ 2888-B(3/81)	Front	1
	P - - 6 cyl. 200 and integral A/C	★D5DZ 2889-C(2/80)	Rear	1
	P - - 6 cyl. 200 and A/C-dealer installed	D2DZ 2888-A	Lateral	1
	P - - 6 cyl. 200 and A/C-dealer installed	D5DZ 2889-B	Strap	1
	P - - 6 cyl. 250 and integral A/C	D5DZ 2888-A	Front	1
	P - - 8 cyl. and integral A/C	D70Z 2888-B	Front	1
	P - - 8 cyl. and integral A/C	★D1AZ 2888-A r/bD70Z 2888-A(1/79)	Lateral	1
77	P - - 6 cyl. 200 and integral A/C	★D5DZ 2888-B(3/81)	Front	1
	P - - 6 cyl. 250 and integral A/C	D5DZ 2888-A	Front	1
	P - - 8 cyl. and integral A/C	D70Z 2888-A	Lateral	1
	P - - 8 cyl. and integral A/C	D70Z 2888-B	Front	1

COPYRIGHT © 1986 — FORD MOTOR COMPANY — DEARBORN, MICHIGAN

1973/79 LINCOLN-MERCURY CARS

YEAR	MODEL/RESTRICTIONS	PART NUMBER	DESCRIPTION	QTY.
2888-9	BRACE (AIR CONDITIONER COMPRESSOR) — Cont'd			
	P (Zephyr)			
78/	P - - 4 cyl. and integral A/C	D6FZ 2888-A	Lateral	1
	P - - 6 cyl 200 and integral A/C	D8BZ 2888-A	Front	1
	P - - 6 cyl. 200 and integral A/C	D8BZ 2889-A	Rear	1
	P - - 8 cyl. 302 and integral A/C	D7ZZ 2888-A	Lateral	1
	P - - 6 cyl. 200 and A/C-dealer installed	D2DZ 2888-A	Lateral	1
	P - - 6 cyl. 200 and A/C-dealer installed	D5DZ 2889-B	Strap	1
	P - - 8 cyl. 302 and A/C-dealer installed	★D8ZZ 2888-A(6/82)	Brace	1
	P - - 8 cyl. 302 and A/C-dealer installed	D50Z 2888-A	Rear-vertical	1
	P - - 8 cyl. 302 and A/C-dealer installed	★D5ZZ 2889-A(6/82)	Rear	1
	V (Versailles)			
77/	V - - 8 cyl. 302,351 and integral A/C	★D7DZ 2889-C(3/84)	Rear	1
	V - - 8 cyl. 302 and integral A/C	★D7DZ 2889-D(3/84)	Rear vertical	1
	Y (Meteor)			
73	Y - - 8 cyl. 351 and integral A/C	★D1AZ 2888-A r/bD70Z 2888-A(1/79)	Lateral	1
	Y - - 8 cyl. 429,460 and integral A/C	D0AZ 2888-A	Lateral	1
	Y - - 8 cyl. 400 and integral A/C	D1ZZ 2888-A	Lateral	1
74	Y - - 8 cyl. 351,400 and integral A/C	★D1AZ 2888-A r/bD70Z 2888-A (1/79)	Lateral	1
	Y - - 8 cyl. 351,400 and integral A/C	D70Z 2888-B	Front	1
	Y - - 8 cyl. 460 and integral A/C	★D4SZ 2889-A(6/82)	Rear	1
	Y - - 8 cyl. 460 and integral A/C	★D2VY 2888-A(6/82)	Front	1
	Y - - 8 cyl. 460(engine warranty code A)-and integral A/C	D0AZ 2888-A	Lateral	1
	Y - - 8 cyl. 460(engine warranty code C)-and integral A/C	★D4AZ 2888-A(2/80)	Lateral	1
	Y - - 8 cyl. 460 and A/C-dealer installed	D4AZ 2888-C	Lateral	1
75	Y - - 8 cyl. 351M,400 and integral A/C "Before 6/1/75"	D5AZ 2889-A	Rear	1
	A - - 8 cyl. 351,400 and integral A/C "From 6/1/75"	★D5AZ 2889-C(3/81)	Rear	1
	A - - 8 cyl. 351,400 and A/C-dealer installed	D5AZ 2888-A	Rear vertical	1
	A - - 8 cyl. 351,400 and A/C-dealer installed	D5AZ 2889-B	Strap	1
	Y - - 8 cyl. 460 and integral A/C	★D2VY 2888-A(6/82)	Front	1
	Y - - 8 cyl. 460 and integral A/C	★D4SZ 2889-A(6/82)	Rear	1
	Y - - 8 cyl. 460 and A/C-dealer installed	D4AZ 2888-C	Lateral	1
76	Y - - 8 cyl. 351,400 and integral A/C	★D5AZ 2889-C(3/81)	Rear	1
	Y - - 8 cyl. 460 and integral A/C	★D2VY 2888-A(6/82)	Front	1
	Y - - 8 cyl. 460 and integral A/C	★D4SZ 2889-A(6/82)	Rear	1
	Y - - 8 cyl. 351,400 and A/C-dealer installed	D5AZ 2888-A	Rear vertical	1
	Y - - 8 cyl. 351,400 and A/C-dealer installed	D5AZ 2889-B	Strap	1

YEAR	MODEL/RESTRICTIONS	PART NUMBER	DESCRIPTION	QTY.
2888-9	BRACE (AIR CONDITIONER COMPRESSOR) — Cont'd			
73/	D,K	353483-S2	(BB-588)-screw (to compressor)-hex.head-5/16"-24 x 3/4"	3
73/	D,K	377379-S2	(BB-563-B)-screw (to mounting bracket)-hex. head-3/8"-16 x 1 1/4"	1
74	D,K	385991-S100	(BB-899)-bolt (brace to compressor bracket)-hex. head-3/8"-16 x 1 3/16"	1
77/	D,K	56782-S100	(B-321-X)-bolt (to manifold)-hex. head 1/2"-13 x 1 1/4"	1
74	J - - 4 cyl. 122 (2000 cc)	E804300-S72	(AW-49-EG)-stud (bracket to engine)-M8 x 1 3/16"	1
	J - - 6 cyl. 171 (2800 cc)	E804148-S72	(AW-56)-stud (bracket to engine)-M10 x 1 3/8"	1
73/	L	N800017-S100	(AB-38)-bolt (to engine)-hex.hd.-M10 x 3/4"	2
74	L	800107-S100	(AB-38-DG)-bolt (to engine)-M10 x 1 7/8"	1
73/	P	356685-S	(BB-153)-screw & washer-hex.head-3/8"-16 x 1 1/2"	3
73/	P	370608-S2	(BB-579)-screw & lockwasher (to compressor)-3/8"-16 x 3/4"	1
73/	P	372505-S	(XX-146-C)-washer-flat-3/8"	3
2890	SPACER (AIR CONDITIONER MOUNTING BRACKET)			
78	F,G-8 cyl. 302-351W and A/C dealer installed	D7ZZ 2890-A	23/32" long	1
	P - - 8 cyl. 302 and A/C dealer installed		Use w/C-2 P/S pump only	1
78	F - - 8 cyl. 351W and A/C dealer installed	D80Z 2890-A	15/32" long	1
2906	SUPPORT (AIR CONDITIONER COMPRESSOR BRACKET)			
74	J - - 4 cyl. 122 (2000 cc) and integral A/C	★ D4RY 2906-A(5/79)		1
2A934	BOLT (AIR CONDITIONER COMPRESSOR IDLER PULLEY MOUNTING)			
73	A,C,Y - - 8 cyl. 429	★ D0AZ 2A934-A(6/82)	*YS-27	1
73/	A,C,F,G,J,L,P,Y - - A/C-dealer installed	D1FZ 2A934-A	*YS-28	1
73/74	J	C9RZ 2990-A	*YP-27	1
2A965	INSULATOR (AUTOMATIC AIR LEVELER COMPRESSOR MOUNTING)			
73/	A,Y	★ D0VY 2A965-A(3/81)	Also serviced in kit-group 5A589	3
73	C,D,K			3
2A975	WIRING ASSY. (COMPRESSOR CLUTCH)			
74	A,Y - - 8 cyl. 460 (exc. 460 P/C) and integral A/C	★ D4MY 2A975-A(5/79)		1
2978	SUPPORT (AIR CONDITIONER COMPRESSOR)			
73/74	J - - 4 cyl. 122 (2000 cc) and A/C-dealer installed	D3FZ 2978-A	Front	1
		D3FZ 2978-B	Rear	1
2979	BRUSH and HOLDER (AIR CONDITIONER COMPRESSOR CLUTCH)-Refer to group 2884 in Section 23 for model application			
		C8SZ 2979-A	#C3SZ 2979-A,C7AA 2979-A and C7ZA 2987-A-Eaton	
		★ 20312-S	(B-75)-bolt-hex.head-3/8"-16 x 1/2"	1
		★ 373293-S	(BB-563)-screw & washer-hex.head-3/8"-16 x 1"	1
2987	FIELD (AIR CONDITIONER COMPRESSOR CLUTCH)-Refer to group 2884 in Section 23 for model application			
		★ C9AZ 2987-A r/bD4AZ 2987-A	*YB-20-#C9AA 2987-B-Pitts Industries	
		D1VY 2987-A	*YB-45	
		D2AZ 2987-A	*YB-214-Ogura	
		D2FZ 2987-A	*YB-46-#D22A 2987-AA-Pitts	
		D4AZ 2987-A	*YB-162-#D4AH 2987-A1A or A2A	
		D9ZZ 2987-A	*YB-212	
		D9ZZ 2987-B	*YB-235	1
		357144-S	(BB-123-C)-bolt (to compressor)-hex head 1/4"-20 x 1/2"	4

COPYRIGHT © 1986 — FORD MOTOR COMPANY — DEARBORN, MICHIGAN

1973/79 LINCOLN—MERCURY CARS

YEAR	MODEL/RESTRICTIONS	PART NUMBER	DESCRIPTION	QTY.
2990	BEARING (AIR CONDITIONER COMPRESSOR PULLEY)			
73/74	A,C,F,L,P,Y – – integral A/C	C9AZ 2990–A	*YB–20–for A/C compressor clutch– 1 3/16" I.D. x 2 5/32" O.D.	1
75/	A,Y	D1VY 2990–A	*YP–23–for A/C compressor clutch– 1 9/16" I.D. x 2 7/16" O.D.	1
73/	D,K			1
2995	HEAD (AIR CONDITIONER COMPRESSOR CYLINDER)			
73/	C,F,P – – A/C–dealer installed	D1FZ 2995–A	York–bolt down type service valves–consists of 1 head and 2 gaskets	1
73/	A,Y – – Canada only			1
73/74	J			1
74/	L			1
75	G			1
73	A,C,D,F,K,P,Y – – integral A/C	D0AZ 2995–A	Tecumseh compressor	1
73	A,C,D,F,K,P,Y – – integral A/C	D0AZ 2995–B	York compressor	1

1973/79 LINCOLN-MERCURY CARS

YEAR	MODEL/RESTRICTIONS	PART NUMBER	DESCRIPTION	QTY.
3A005	**HOSE (POWER STEERING RETURN LINE)-Also refer to group 3A719**			
73/	A,C,D,F,G,K,P	C7AZ 3A005-A	3/8" I.D. x 5/8" O.D.-25' bulk-cut as required	AR
79	J			AR
73/76	Y			AR
75/76	G - - w/hydro boost	★ D5DZ 3A005-A(6/82)	3/8" I.D. x 5/8" O.D. x 25"	1
3A006	**CAP ASSY. (POWER STEERING PUMP OIL RESERVOIR FILLER)**			
73/77	A,F	D6AZ 3A006-A	Use w/Ford pump	1
73/76	C,Y			1
75/77	L "Before 6/27/77"			1
73/78	A "Before 1/1/78"	★ D2VY 3A006-A	Use w/Saginaw pump -r/b D8AZ 3A006-B(3/79)	1
73/78	D,K "Before 1/1/78"			1
73/76	Y			1
78	A "From 1/1/78"	D8AZ 3A006-C	Use with Saginaw pump	1
78/	D,K "From 1/1/78"			1
79	G,P			1
78/	A,F,G,P,V	D8AZ 3A006-A	Use with all Ford #HBC pumps	1
79	J			1
77/	L "From 6/27/77"			1
75	G - - w/o hydro boost	D1VY 3A006-A	Use w/Ford pump	1
75	G - - w/hydro boost	★ D5DZ 3A006-A(3/84)	Use w/Ford pump	1
76/77	G,P	★ D2VY 3A006-A	Use w/HBA-DY,DZ,EA,EB,EC pump - r/b D8AZ 3A006-B(3/79)	1
77	V			1
76/78	J - - 4 cyl.	★ D5RY 3A006-B(3/84)		1
3K016	**DAMPER and ARM ASSY. (STEERING COLUMN)**			
75	G	★ D5DZ 3K016-A	Not replaced	1
3019-20	**BUMPER (FRONT SUSPENSION)**			
73/78	A	D3AZ 3020-B	Upper arm	2
73/76	Y	D3AZ 3020-A	Lower arm	2
79	A	D9AZ 3020-B	Upper arm	2
		D9AZ 3020-A	Lower arm	2
73	C	★ C9AZ 3020-B	Upper arm-r/b D3AZ 3020-B(3/79)	2
		D30Z 3020-A	Lower arm	2
74/76	C	D3AZ 3020-B	Upper arm	2
74/	F	D3AZ 3020-A	Lower arm	2
73	D	★ C9AZ 3020-B	Upper arm-r/b D3AZ 3020-B(3/79)	2
		D3AZ 3020-A	Lower arm	2
74/	D	D3AZ 3020-B	Upper arm	2
		D3AZ 3020-A	Lower arm	2
73	F	D5DZ 3020-B		2
73/74	P			2
75/77	G,P	D5DZ 3020-B		2
78/	G	D5DZ 3020-B		2
77/	V			2
73/78	J	D1RY 3020-B		2
73/74	K "Before 10/1/73"	★ C9AZ 3020-B	Upper arm -r/b D3AZ 3020-B (3/79)	2
		D3AZ 3020-A	Lower arm	2
74/	K "From 10/1/73"	D3AZ 3020-B	Upper arm	2
		D3AZ 3020-A	Lower arm	2
73/	A,C,D,K,Y	383406-S100	(MM-173-MY)-nut (upper bumper to arm)-3/8"-16	2
73	F,P	34976-S4	(M-89-CA)-nut (bumper to apron assy.)-5/16"-18	2
3B023	**NUT (FRONT SUSPENSION UPPER ARM MOUNTING BOLT)**			
73/78	A (exc. P/C)	C9AZ 3B023-A	9/16"-12 x 1 1/4" wide x 2 5/16" long	4
73/76	C (exc. P/C), Y (exc. P/C)			4
73/	D,K			4
74/	F			4
75/78	A (P/C & taxi)	★ D5AZ 3B023-A(6/82)	9/16"-12 x 15/16" square	4
75/76	C (P/C & Taxi), Y (P/C & Taxi)			4
77/	F (P/C & Taxi)			4

COPYRIGHT © 1986 — FORD MOTOR COMPANY — DEARBORN, MICHIGAN

1973/79 LINCOLN-MERCURY CARS

YEAR	MODEL/RESTRICTIONS	PART NUMBER	DESCRIPTION	QTY.
3B025	RETAINER (FRONT SUSPENSION SPRING)			
79	A – – P/C	D9BZ 3B025-A		2
3A027	RETAINER (FRONT SUSPENSION LOWER ARM BALL JOINT SEAL)			
73	F	C50Z 3A027-A		2
3043	SHIM (FRONT SUSPENSION UPPER ARM MOUNTING)			
73/76	A,C,D,F,K,L,P,Y	LA 3043-D	1/16" thick-used as front fender-to-apron shim	AR
3047	SHAFT KIT (FRONT SUSPENSION UPPER ARM)			
73/78	A (exc. P/C)	D3AZ 3047-A		2
73/76	C (exc. P/C), Y			2
73/	D,K			2
74/	F			2
	Consists of			
	1-D5AW 3056-AA	Shaft (11/16"-16 x 12 25/32")	2-C8AA 3A275-A	Washer
	2-D3AZ 3068-A	Bushings (1 15/16" long)	2-380013-S100	Nut
73/76	A(P/C),C(P/C)	C5AZ 3047-B	Use w/arm having all steel bushings w/internal	2
77/78	A(P/C)		and external thread-1 7/16" hex. head	2
	Consists of			
	1-D40W 3056-AA	Shaft (3/4"-8 x 10 7/8")	2-370367-S100	Seal
	2-C5AA 3068-D	Bushings (1 29/32" long)		
79	A (exc. P/C)	D9AZ 3047-A		2
	Consists of			
	1-D9AC 3056-AB	Shaft	2-D9AC 3A275-AA	Washer-outer
	1-D9AZ 3068-A	Bushing-front	1-D9AC 3A276-AA	Washer-inner
	1-D9AZ 3068-B	Bushing-rear	2-55722-S100	Nut
79	A (P/C)	D9AZ 3047-B		2
	Consists of			
	1-D9AC 3056-BA	Shaft	2-370367-S100	"O"-Ring
	1-D9AC 3068-BA	Bushing-front	2-381683-S8	Plug
	1-D9AC 3A086-BA	Bushing-rear		
73	F	C60Z 3047-A		2
73/77	P			2
	Consists of			
	1-D5BW 3056-AA	Shaft (3/4-8 x 9 1/2" long)	2-370367-S100	"O" ring
	2-C80A 3068-A or B	Bushing (1 7/8" long)	2-380952-S100	Nut
	2-34849-S2	Washer	2-381683-S8M	Plug
			2-384626-S100	Bolt
			2-385148-S8M	Fitting
75	G	★ D5DZ 3047-A	R/b D6DZ 3047-A(9/78)	2
	Consists of			
	1-D5DW 3056-AA	Shaft (11/16-16 x 12 1/16" long)	2-34849-S2	Washer
	2-D5DZ 3068-A	Bushing (1 7/8" long)	2-380013-S100	Nut
	2-D5DW 3A275-AA	Washer		
			2-380952-S100	Nut
			2-384626-S100	Bolt
76/77	G	"Before 3/7/77" ★ D6DZ 3047-A	R/b D7DZ 3047-A(9/78)	2
	Consists of			
	1-D5DZ 3056-AA	Shaft (11/16-16 x 12 1/16" long)	2-34849-S2	Washer
	2-D5DZ 3068-A	Bushing (1 7/8" long)	2-280013-S100	Nut
	2-D5DW 3A275-AA	Washer		
			2-380952-S100	Nut
			2-384626-S100	Bolt
77/	G,V	"From 3/7/77" D7DZ 3047-A		2
	Consists of			
	1-D5DW 3056-AA	Shaft (11/16-6 x 2 1/16" long)	2-380013- S100	Nut
	2-D5DZ 3068-A	Bushing (1 7/8" long)	2-383577-S101	Nut
	2-D7DC 3A275-AA	Washer	2-388225-S100	Bolt
74/	L	D6FZ 3047-A		2
	Consists of			
	1-D5ZW 3056-A	Shaft (9/16-18 x 11 27/32")	2-385425-S100	Nut
	2-D4FZ 3068-A	Bushing (2" long)		
	2-D4ZW 3A275-AA	Washer		
			2-385732-S100	Nut
			2-385713-S101	Bolt

YEAR	MODEL/RESTRICTIONS	PART NUMBER	DESCRIPTION	QTY.
3048	BUSHING and MOUNTING KIT (FRONT SUSPENSION LOWER ARM)			
73/78	A	D3AZ 3048-A		2
73/76	C,Y			2
73/	D,K			2
74/	F			2
	Consists of			
	1-D3AZ 3069-B Bushing	1-383407-S100 Nut	1-386310-S100 Bolt	
73	F	C60Z 3048-A		2
73/74	P			2
	Consists of			
	1-C60Z 3069-A Bushing	1-C80A 3B236-A Bolt	1-C60A 3B238-A Cam	
	1-33845-S8 Nut			
75/76	G,P	★ D5DZ 3048-A	R/b D5DZ 3048-B(9/78)	2
	Consists of			
	1-C60Z 3069-A Bushing	1-C80A 3B236-A Bolt	1-34809-S Washer	
	1-D5DZ 3069-A Bushing	1-C60A 3B238-A Cam	1-380952-S Nut	
77/	G	D5DZ 3048-B		2
77	P			2
	Consists of			
	1-D5DZ 3069-A Bushing	1-C60A 3B238-A Cam	1-380952-S Nut	
	1-C80A 3B236-A Bolt	1-34809-S Lockwasher		
74/	L	D4FZ 3048-A		2
	Consists of			
	1-D7FZ 3069-A Bushing	1-383577-S100 Nut	1-385925-S100 Bolt	
77/	V	D7DZ 3048-B		2
	Consists of			
	1-D7DZ 3069-B Bushing	1-34809-S Washer		
	1-C80A 3B236-A Bolt	1-380952-8 Nut		
	1-C60A 3B238-A Cam			
3049	JOINT ASSY. (FRONT SUSPENSION UPPER ARM BALL)- If not listed below, the joint assy. is serviced only in assy.-group 3082			
73	F,P	D00Z 3049-A	3 bolt pattern-incl. (1) stud nut, (3) bolts and nuts, (1) fitting and (1) ball joint	2
73	F,P	378268-S2	(BB-817-T)-bolt (joint to arm)-special socket pin hd.-5/16"-24 x 1"	3or4
		385696-S100	(MM-169-NH)-nut (joint to arm)-lock hex. hd.-5/16"-24	3or4
		382826-S100	(MM-59-W)-nut (joint to spindle)-castle hd. hex.-9/16"-18	1
		87907-S8	(I-3)-fitting (ball joint lube)-3/8"-24"	1
3049	UPPER BALL JOINT ASSY. (FRONT SUSPENSION)			
79	A	D9AZ 3049-A		1
73/78	A,D,F,K	E0AZ 3049-A	Inc. (3) bolts, (3) nuts, (1) cotter pin & (1) lub. fitting	2
73/76	C			
77/79	D,K			
74/79	L			
3050	Refer to group 3078-9			
73/78	A,D,F,K	D9AZ 3050-A	Inc. (1) cotter pin, (1) lub. fitting	2
79/	D,F,K			
3068	BUSHING (FRONT SUSPENSION UPPER ARM INNER SHAFT)-Also serviced in kit-group 3047			
73/78	A (exc. P/C)	D3AZ 3068-A		4
73/76	C (exc. P/C), Y			4
73/	D,K			4
74/	F			4
73/76	A(P/C),C(P/C),Y(P/C)	★ C5AA 3068-D	Serviced in 3047 kit, all steel-1 29/32" long, 16 pitch special thread on O.D.,3/4"-8 thread on I.D., 1 7/16" hex. hd.	4
77/78	A(P/C)			4
79	A (exc. P/C)	D9AZ 3068-A	Front	2
		D9AZ 3068-B	Rear	2
	A (P/C)	★ 3068	Serviced only in 3047 kit	2

COPYRIGHT © 1986 — FORD MOTOR COMPANY — DEARBORN, MICHIGAN

1973/79 LINCOLN-MERCURY CARS

YEAR	MODEL/RESTRICTIONS	PART NUMBER	DESCRIPTION	QTY.
3068	BUSHING (FRONT SUSPENSION UPPER ARM INNER SHAFT)-Also serviced in kit-group 3047 — Cont'd			
75/	G	D5DZ 3068-A	Rubber bushing w/steel backing-1 7/8" long	4
77/	V			4
74/	L	D4FZ 3068-A	Rubber bushing w/steel backing-2" long	4
3069	BUSHING (FRONT SUSPENSION LOWER ARM MOUNTING BOLT)-Also serviced in kit-group 3048			
73/76	A,C,D,K,Y "Before 5/17/76"	★ D3AZ 3069-B	1/2" I.D. x 1 5/16" O.D. x 3 3/8" long-r/b	2
74/76	F "Before 5/17/76"		D6AZ 3069-A(9/78)	2
76	A,C,D,F,K,Y "From 5/17/76"	D6AZ 3069-A	#Tan-1/2" I.D. x 1 5/16" O.D. x 3 3/8" long	2
77/78	A			2
77/	D,F,K			2
73	F	C60Z 3069-A	1/2" I.D. x 2" long	2
73/74	P			2
75/	G	D5DZ 3069-A	1/2" I.D. x 2" long	2
75/77	P			2
73/78	J	D2RY 3069-B		2
74/	L	D7FZ 3069-A		2
77/	V	★ D7DZ 3069-B(3/84)	#D7DZ 3069-AB-Green-1/2" I.D. x 2" long	2
73/78	A	381668-S	(BB-199-E)-bolt (lower arm bushing mounting)-	1
73/76	C,Y		hex. head-1/2"-13 x 4 3/4"	
73/	D,K	375032-S36	(MM-173-D)-locknut-hex. head-1/2"-13	1
74/	F			AR
3077	BRACKET (STABILIZER LINK LOWER ARM)			
74	L	D4FZ 3077-A	Incl. (1) 385793-S bolt	2
75/	L	D5FZ 3077-A		2
3078-9	ARM ASSY. (FRONT SUSPENSION LOWER)			
73/78	A	(RH) D7AZ 3078-A	(LH) D7AZ 3079-A	1
73/77	C			1
73/	D,K			1
74/	F			1
79	A	(RH) D9AZ 3078-A	(LH) D9AZ 3079-A Includes (2) lock nuts	1
73	F	D7DZ 3078-A	R.H. and L.H.	2
75/	G			2
73/77	P			2
73/78	J	(RH) D0RY 3078-A	(LH) D0RY 3079-A	1
79	J - - w/o heavy duty suspension	(RH) D8BZ 3078-A	(LH) D8BZ 3079-A	1
	J - - w/heavy duty suspension-w/rear stabilizer bar	(RH) D9BZ 3078-A	(LH) D9BZ 3079-A	1
74	L	D4FZ 3078-B	R.H. and L.H.	2
75/	L	D7FZ 3078-A		2
78/	P(exc. 74) - - w/o heavy duty suspension or w/o European Sport Option	(RH) D8BZ 3078-A	(LH) D8BZ 3079-A	1
	P(74) - - w/o heavy duty suspension "Before 12/1/77"			1
	P(74) - - 6 cyl. 200, 8 cyl. 302 w/o heavy duty suspension "From 12/1/77"			1
78/	P - - w/heavy duty suspension or European Sport Option	(RH) D9BZ 3078-A	(LH) D9BZ 3079-A	1
	P(74) - - 4 cyl. 140 w/o heavy duty suspension "From 12/1/77"			1
77/	V	D7DZ 3078-C	#Green	2
73/78	J	E400084-S82	(BB-224-C)- bolt (arm to frame)-3/8"-24 x 2.66"	2

YEAR	MODEL/RESTRICTIONS	PART NUMBER	DESCRIPTION	QTY.
3078–9	ARM ASSY. (FRONT SUSPENSION LOWER) — Cont'd			
73/	A,D,F,K	72054–S	(N–61)–pin–cotter (arm to spindle)–5/32" x 1 1/4"	2
73/76	C,Y			2
73/77	P	382599–S100	(MM–173–MZ)–nut (arm to frame)–1/2"–13	2
		381612–S36	(MM–61–A)–nut (arm to spindle)–5/8"–18	2
73/78	A,D,F,K "Before 2/1/78"	381668–S7–8	(BB–198–E)–bolt (arm to frame)–1/2"–13 x 4 3/4"	2
78	A "From 2/1/78"	388227–S100	(BB–199–EC)–bolt (arm to frame)–1/2"–13 x 4 3/4"	2
78/	D,F,K "From 2/1/78"			2
79	J	N800235–S100	(AB–165–E)–bolt (arm to frame)–M16–2 x 4 5/8"	4
78/	P	N800799–S100	(AB–165–F)–bolt (arm to frame)–M16–2 x 4 11/16"	4
79	A	N800490–S100	(AB–172–E)–bolt–arm to frame–M14 x 2 x 116 mm.	4
		N800526–S100	(AM–5–VR)–nut (hex. flange lock) M14 x 2.0–not reusable	4
73/	A,C,D,K,Y	385148–S8M	(II–206–K)–fitting (lubricator)–1/4"–28	2
73/	F,P	87924–S8	(I–9)–fitting (lubricator)–1/4"–28	2
75/	L	385925–S100	(BB–817–XB)–bolt (arm to frame) 1/2"–13 x 4 11/16"	2
75/	G,L,P	72035–S	(N–51) pin–cotter 1/8" x 1"	2
3082	ARM ASSY. (FRONT SUSPENSION UPPER)			
73	A(exc. P/C),C(exc. P/C),D,K, Y(exc. P/C) "Before 3/13/73"	D3AZ 3082–A	# D3AA 3392–AA,AB	2
				2
73/77	A(exc. P/C),C(exc. P/C),D,K, Y(exc. P/C) "From 3/13/73 to 3/1/77"	★ D3AZ 3082–C	# D3AA 3392–AC –r/b D7AZ 3082–A (6/78)	2
				2
77/78	A (exc. P/C) "From 3/1/77"	D7AZ 3082–A		2
77/	D,F,K "From 3/1/77"			2
73/76	A(P/C),C(P/C),Y(P/C)	★ D3AZ 3082–B	# D3AA 3392–BA –r/b D7AZ 3082–B(3/79)	2
77/78	A(P/C)	D7AZ 3082–B		2
77/	F(P/C)			2
79	A (exc. P/C) "Before 12/1/78"	(RH) D9AZ 3082–A	(LH) D9AZ 3083–A	1
79	A – – exc. P/C "From 12/1/78"	(RH) D9AZ 3082–C	(LH) D9AZ 3083–C	1
79	A (P/C)	(RH) D9AZ 3082–B	(LH) D9AZ 3083–B	1
73	F	D5DZ 3082–C	Incl. arm, shaft, bushings and joint	2
74/76	F	★ D3AZ 3082–C	# D3AA 3392–AC–r/b D7AZ 3082–A(6/78)	2
77/	F	D7AZ 3082–A		2
75	G	★ D5DZ 3082–B	R/b D7DZ 3082–B(3/79)	2
76	G(54H,66H)	★ D5DZ 3082–B	R/b D7DZ 3082–B(3/79)	2
76	G(54K,66K)	D7DZ 3082–B		2
77/	G			2
74/	L	D5FZ 3082–A	# Pink paint	2
73/77	P	★ D5DZ 3082–C	Incl. arm, shaft, bushings and joint	2
77/	V	D7DZ 3082–B		2
73/78	A	387016–S2	(BB–199–MB)–bolt (arm to frame)– 9/16"–13 x 2 3/16"	2
73/76	C,Y			2
73/	D,K			2
74/	F			2
75/78	A(P/C & taxi),C(P/C & taxi), Y(P/C & taxi)	387016–S2	(BB–199–MB)–bolt (arm to frame)– 9/16"–12 x 2.18" Grade #9	4
				4
79	A	N800434–S100	(AM–95–E)–Nut & retainer (Hex. Lock)–arm to frame–M14 x 2	4
	A	N800432–S100	(AB–172–B)–bolt (arm to frame)–M14 x 20 x 55.0	2
79	A	382826–S100	(MM–59–W)–hex. nut (slotted)–arm to spindle–9/16"–18	2
73	F	33845–S8	(M–57)–nut–1/2"–13	2
73/77	G,P			2
78	G "Before 2/1/78"			2
78/	G "From 2/1/78"	388225–S100	(BB–390–BE)–bolt (arm to body)–1/2"–13 x 2"	2
77/	G,V	383577–S100	(MM–295–AB) nut–lock (arm to frame 1/2"–13 X 3/4"	4

COPYRIGHT © 1986 — FORD MOTOR COMPANY — DEARBORN, MICHIGAN

1973/79 LINCOLN-MERCURY CARS

YEAR	MODEL/RESTRICTIONS	PART NUMBER	DESCRIPTION	QTY.
3082	ARM ASSY. (FRONT SUSPENSION UPPER) — Cont'd			
74/	L	385732-S100	(MM-173-FC)-nut (arm to cross member)-1/2"-13	4
3105-6	SPINDLE ASSY. (FRONT WHEEL) ▲ 2000 cc ♦ 2600 cc ⊕ 2800 cc			
73	A,C,K,Y	★ D20Z 3105-B	R.H.-#D20A 3107-BB	1
		★ D20Z 3106-B	L.H.-#D20A 3108-BB	1
74/78	A	D4AZ 3105-A	R.H.-#D4AW 3107-AA	1
74/76	C,Y	D4AZ 3106-A	L.H.-#D4AW 3108-AA	1
79	A	D9AZ 3105-A	R.H.	1
		D9AZ 3106-A	L.H.	1
73	D	★ D3VY 3105-A	R.H.-#D3VA 3107-AB-not replaced	1
		★ D3VY 3106-A	L.H.-#D3VA 3108-AB-not replaced (6/79)	1
74/	D	D4VY 3105-A	R.H.-#D4VW 3107-AA	1
		D4VY 3106-A	L.H.-#D4VW 3108-AA	1
73	F - - drum brakes	★ D10Z 3105-A(3/81)	R.H.-#D10A 3107-AA	1
		★ D10Z 3106-A(6/81)	L.H.-#D10A 3108-AA	1
	F - - disc brakes	★ D1ZZ 3105-A(9/83)	R.H.-#D1ZA 3107-AA	1
		★ D1ZZ 3106-A(9/83)	L.H.-#D1ZA 3108-AA	1
74/76	F	D4AZ 3105-A	R.H.-#D4AW 3107-AA	1
77/	F	D4AZ 3106-A	L.H.-#D4AW 3108-AA	1
75/	G - - disc brakes	D5DZ 3105-A	R.H.-#D5DW 3107-AA	1
75/77	P - - disc brakes	D5DZ 3106-A	L.H.-#D5DW 3108-AA	1
75	G,P - - drum brakes	★ D5DZ 3105-B(6/83)	R.H.-#D5DW 3107-BA	1
		★ D5DZ 3106-B(9/83)	L.H.-#D5DW 3108-BA	1
73	J "Before 12/1/72"	★ D3RY 3105-E(9/82)	R.H.-#73EB 3K033-G2D	1
		D3RY 3106-A	L.H.-#73EB 3K034-G2D	1
73/74	J - - 4 cyl. ▲122, 6 cyl. ♦159- "From 12/1/72 to 12/1/73"	★ D3RY 3105-F r/bD5RY 3105-C(5/80)	R.H.-#73EB 3K033-J2B	1
		★ D3RY 3106-F r/bD5RY 3106-B(5/80)	L.H.-#73EB 3K034-J2B	1
74	J - - 6 cyl. ⊕171- "Before 12/1/73"	★ D3RY 3105-E(9/82)	R.H.-#73EB 3K033-G2E,G2F	1
		★ D3RY 3106-E(9/82)	L.H.-#73EB 3K034-G2E	1
74	J - - 4 cyl. ▲122, 6 cyl. ⊕171- "From 12/1/73"	★ D3RY 3105-F r/bD5RY 3105-C(5/80)	R.H.-#73EB 3K033-J2C	1
		★ D3RY 3106-F r/bD5RY 3106-B(5/80)	L.H.-#73EB 3K034-J2C	1
76/78	J(exc. 64S)	D5RY 3105-C	R.H.-#74EB 3K033-E2A,76EB 3K033-CA	1
		D5RY 3106-B	L.H.-#74EB 3K034-E2A	1
76/78	J(64S)	★ D6RY 3105-A r/bD5RY 3105-C(6/79)	R.H.- #74EB 3K033-C2A,76EB 3A033-A2B	1
		★ D6RY 3106-A r/bD5RY 3106-C(8/79)	L.H.-#76EB 3K034-A2B, #74EB 3K033-C2A,76EB 3A034-A2B	1
74/	K	D4AZ 3105-A	R.H.	1
		D4AZ 3106-A	L.H.	1
79	J - - 4 cyl. 140, 6 cyl.	D9ZZ 3105-A	R.H.	1
		D9ZZ 3106-A	L.H.	1
	J - - 8 cyl. 302	D8BZ 3105-A	R.H.	1
		D8BZ 3106-A	L.H.	1
74	L	D5FZ 3105-A	R.H.-#D52W 3107-AA	1
		★ D4FZ 3106-A	L.H.-#D42W 3108-AA-r/b D5FZ 3106-A (6/78)	1
75/	L	D5FZ 3105-A	R.H.-#D52W 3107-AA	1
		D5FZ 3106-A	L.H.-#D52W 3108-AA	1
73/74	P - - drum brakes	D4DZ 3105-B	R.H.-#D4DW 3107-BB	1
		★ D4DZ 3106-B(9/83)	L.H.-#D4DW 3108-BB	1
	P - - disc brakes	D4DZ 3105-A	R.H.-#D4DW 3107-AB	1
		★ D4DZ 3106-A(6/83)	L.H.-#D4DW 3108-AB	1
78/	P - - exc. P/C, Taxi	D8BZ 3105-A	R.H. -#D8BC 3107-AA	1
		D8BZ 3106-A	L.H.-#D8BC 3108-AA	1
	P - - P/C, Taxi	★ D8BZ 3105-B(3/84)	R.H. #blue stripe	1
		★ D8BZ 3106-B(3/84)	L.H. #blue stripe	1
77/	V	D7DY 3105-A	R.H.#D7DC 3107-AA	1
		D7DY 3106-A	L.H.#D7DC 3108-AA	1

YEAR	MODEL/RESTRICTIONS	PART NUMBER	DESCRIPTION	QTY.
3105-6	SPINDLE ASSY. (FRONT WHEEL) — Cont'd ▲ 2000 cc ♦ 2600 cc ⊕ 2800 cc			
73/	A,C,D,F,G,J,K,P,Y		Nut and nut retainer-front wheel spindle bearing-refer to group 1102	AR
79	A	388493-S100	(BB-817-AU)-bolt (hex. crown head) steering arm stop on spindle-1/2"-13 x 43/64"	2
78	P	N800234-S100	(AB-122-E)-bolt (hex. head)-shock to spindle-M16-2.0 x 16.0	4
3A105	SEAL (FRONT SUSPENSION ARM BALL JOINT DUST)			
73/76	A,C,D,K,Y	C7AZ 3A105-B	Upper arm	2
77/78 77/	A D,K	D3AZ 3A105-A	Lower arm	2
79	A - - P/C	D9AZ 3A105-A	Upper arm	2
73	F	C70Z 3A105-A	Upper arm	2
		D00Z 3A105-A	Lower arm	2
74/79	F	C7AZ 3A105-B	Upper arm	2
		D3AZ 3A105-A	Lower arm	2
75/	G	C70Z 3A105-A	Lower arm	2
73/78	J	D0RY 3A105-B		2
79	J	D8BZ 3A105-A	Lower arm	2
74/	L	C7AZ 3A105-B	Upper arm	2
		C70Z 3A105-A	Lower arm	2
73/77	P	C70Z 3A105-A	Upper arm	2
		D0DZ 3A105-A	Lower arm	2
78	P	D8BZ 3A105-A	Lower arm	2
3130-1	ARM (FRONT SPINDLE)			
73/78	J	(RH) D0RY 3130-A	(LH) D0RY 3131-A	1
		E922000-S71	Nut-hex.-M10 x 1 (Metric fine)	2
		E840001-S71	Pin-cotter-M2 x 20 (Metric)	2
		120730-ES2	Bolt-hex. head-3/8"-24 x 2 3/16"	4
		114645-ES8	Nut-hex.-3/8"-24	4

YEAR	MODEL and DESCRIPTION	MANUAL STEERING				POWER STEERING				PART NUMBER
		RIGHT HAND		LEFT HAND		RIGHT HAND		LEFT HAND		
		OUTER	INNER	INNER	OUTER	OUTER	INNER	INNER	OUTER	
3A130-1	ROD or END (FRONT WHEEL SPINDLE CONNECTING)									
73	A,Y "Before 5/14/73"					1			1	D20Z 3A130-A
							1	1		D20Z 3A131-A
73/76 77/78	A,Y "From 5/14/73" A					1			1	D20Z 3A130-A
							1	1		D3AZ 3A131-A
79	A					1			1	D9AZ 3A130-A
							1	1		D9AZ 3A131-A
73	C	1			1	1			1	D20Z 3A130-A
			1	1			1	1		D20Z 3A131-A
74/76	C	1			1	1			1	D20Z 3A130-A
			1	1			1	1		D3AZ 3A131-A
73/74	D					1			1	D0VY 3A130-A
							1	1		★ D0VY 3A131-A(3/84)
75/	D					1			1	D5VY 3A130-A
							1	1		D3AZ 3A131-A
73	F	1			1	1			1	D00Z 3A130-B
			1	1			1	1		D1ZZ 3A131-A
74/	F					1			1	D20Z 3A130-A
							1	1		D3AZ 3A131-A
75/ 75/77	G P	1			1	1			1	D5DZ 3A130-A
77/	V		1	1			1	1		D5DZ 3A131-A
73/78	J	1			1	1			1	D0RY 3A130-A
79	J	1			1	1			1	E0SZ 3A130-A
73	K					1			1	D20Z 3A130-A
							1	1		D20Z 3A131-A

COPYRIGHT © 1986 — FORD MOTOR COMPANY — DEARBORN, MICHIGAN

1973/79 LINCOLN-MERCURY CARS

YEAR	MODEL and DESCRIPTION	MANUAL STEERING RIGHT HAND OUTER	MANUAL STEERING RIGHT HAND INNER	MANUAL STEERING LEFT HAND INNER	MANUAL STEERING LEFT HAND OUTER	POWER STEERING RIGHT HAND OUTER	POWER STEERING RIGHT HAND INNER	POWER STEERING LEFT HAND INNER	POWER STEERING LEFT HAND OUTER	PART NUMBER
3A130-1	ROD or END (FRONT WHEEL SPINDLE CONNECTING) — Cont'd									
74/	K					1			1	D20Z 3A130-A
							1	1		D3AZ 3A131-A
75/	L					1			1	E0FZ 3A130-A
74/	L	1			1					D5ZZ 3A130-A
73/74	P	1			1	1			1	D00Z 3A130-B
			1	1			1	1		D0ZZ 3A131-B
78/79	P	1			1	1			1	E0SZ 3A130-A

YEAR	MODEL/RESTRICTIONS	PART NUMBER	DESCRIPTION	QTY.
73/	A,D,F,G,K	72035-S	(N-51)-cotter pin	AR
73/76	C,Y	385002-S100	(MM-66-A)-nut (stud to spindle)-1/2"-20	AR
73/77	P			AR
74/	L	385032-S100	(MM-11-AG)-nut 9/16"-18 hex.	2
78/	P	387580-S2	(NN-109-R)-pin-1/8" x 5/16"	2
3B139	BRACKET (STEERING COLUMN SUPPORT)			
73/78	A	D3AZ 3B139-A		1
74/	D			1
73/76	Y			1
73/77	P	★ D0ZZ 3B139-A(3/81)		1
73	A,F,Y	385204-S2	(BB-688-B)-bolt (bracket to column)-sq. neck-3/8"-16 x 1 1/8"	4
		382802-S2	(MM-173-JB)-nut-3/8"-16	4
3B153	Refer to group 3590			

3A187 BUSHING and WASHER KIT (FRONT SUSPENSION LOWER ARM STRUT)

73/78	A - - exc. Police car		D2AZ 3A187-B				2
73/76	Y - - exc. Police car						2
	Consists of						
	1-C5AA 3A141-B	Washer	1-C7AA 3470-A	Bushing	1-72044-S	Cotter pin	
	1-D2AA 3A142-AA	Washer	1-34981-S100	Nut	1-381612-S100	Nut	
	1-D1AA 3B197-AA	Bushing					
73/78	A - - Police car		★ D7AZ 3A187-A(6/83)				2
73/76	Y - - Police car						2
	Consists of						
	1-C5AA 3A141-B	Washer	1-D1AA 3B197-AA	Bushing	1-72044-S	Cotter pin	
	1-D2AA 3A142-AA	Washer	1-D4AW 3470-AA	Bushing	1-381612-S100	Nut	
73/76	C		D30Z 3A187-A				2
	Consists of						
	1-D00A 3A142-A	Retainer-rear	2-D30A 3470-AA	Insulator	1-34981-S100	Nut	
	1-D20A 3A142-AA	Retainer-front					
73/	D		D2VY 3A187-A				2
	Consists of						
	1-D00A 3A142-A	Insulator rear	1-D1VA 3470-AA	Insulator front	1-72044-S	Cotter pin	
	1-D20A 3A142-AA	Insulator front	1-34981-S100	Nut	1-381612-S100	Nut	
	1-D0VA 3B197-D	Insulator rear					

NOTE: D0VA 3433-A Spacer is not included in this kit as it is not needed or recommended for service replacement.

73	F		D3ZZ 3A187-A				2
	Consists of						
	1-C80A 3A140-B	Bushing-front	1-D4DW 3A225-A	Bushing-rear	1-380460-S100	Nut-front	
	1-D2ZA 3A141-AA	Washer-rear	1-D2ZA 3B282-AA	Ferrule-outer	1-380517-S100	Nut-rear	
	1-D2ZA 3A142-AA	Washer-front	1-D2ZA 3B283-AA	Ferrule-inner	1-385454-S	Washer	
74/	F		D30Z 3A187-A				2
	Consists of						
	1-D00A 3A142-A	Retainer-rear	2-D30A 3470-AA	Insulator	1-34981-S100	Nut	
	1-D20A 3A142-AA	Retainer-front					
75	G		D3DZ 3A187-B				2
	Consists of						
	1-D00A 3A141-A	Washer-front	1-D40W 3B271-AB	Bushing-front	1-380460-S100	Nut	
	1-D5DW 3A142-AA	Washer-front	1-D2ZA 36282-AA	Ferrule-inner	1-380517-S100	Nut	
	1-D4DW 3A225-AA	Bushing-rear	1-D5DW 3B282-AA	Ferrule-outer			

YEAR	MODEL/RESTRICTIONS	PART NUMBER	DESCRIPTION	QTY.
3A187	BUSHING and WASHER KIT (FRONT SUSPENSION LOWER ARM STRUT) — Cont'd			
76/	G	D6DZ 3A187-A		2
	Consists of			
	1-D00A 3A141-A Washer	1-D6DW 3B271-AB	Bushing 1-380460-S100 Nut	
	1-D6DW 3A142-AC Washer	1-D6DW 3B282-AA	Spacer	
	1-D4DW 3A225-AA Bushing	1-D6DW 3B283-AA	Spacer	
73/	K	D3SZ 3A187-B		2
	Consists of			
	1-D3SA 3A141-AB Retainer-rear	2-D3SA 3470-AA	Insulator 1-34981-S100 Nut	
	1-D3SA 3A142-AC Retainer-front			
74/	L	D4FZ 3A187-A		2
	Consists of			
	1-D12A 3A141-AB Retainer	1-D42W 3B197-AB	Insulator 1-55720-S100 Nut	
	1-D52A 3A142-AA Retainer	1-D42W 3470-AB	Insulator	
73	P "Before 4/16/73"	★ D3DZ 3A187-A(9/83)		2
	Consists of			
	1-D00A 3A140-A Bushing	1-C80A 3B282-A	Ferrule 1-72035-S Cotter pin	
	1-D00A 3A141-A Washer-rear	1-D00A 3B283-A	Ferrule 1-380460-S100 Nut	
	1-D00A 3A142-A Washer-front	1-33985-S8	Nut 1-380517-S100 Nut	
	1-D4DW 3A225-A Bushing		1-385454-S Washer	
73/77	P "From 4/16/73"	D3DZ 3A187-B		2
	Consists of			
	1-D00A 3A141-A Washer-front	1-D4DW 3B271-AB	Bushing-front 1-380460-S100 Nut	
	1-D5DW 3A142-AA Washer-front	1-D2ZA 3B282-AA	Ferrule-inner 1-380517-S100 Nut	
	1-D4DW 3A225-AA Bushing-rear	1-D5DW 3B282-AA	Ferrule-outer	
77/	V	D7DZ 3A187-A		2
	Consists of			
	1-D00A 3A141-A Washer		1-D6DW 3B282-AA Spacer	
	1-D6DW 3A142-AC Washer		1-D6DW 3B283-AA Spacer	
	1-D4DW 3A225-AA Bushing		1-380460-S100 Nut	
	1-D7DC 3B271-AA Bushing			
3A197	PLATE (FRONT COIL SPRING TOP MOUNTING)			
73/74	J	D3RY 3A197-A		2
76/78	J	D3RY 3A197-B		2
		55696-ES	Nut (plate to shock stud)-7/16"-20 (Metric coarse)	3
3B197	BOLT (FRONT COIL SPRING TOP MOUNTING PLATE)			
73/78	J	★ D0RY 3B197-A(6/82)	Upper-without serration	6
		★ D5RY 3B197-A(6/82)	Lower-with serration	6
		34806-S7	(X-64)-washer-lock-5/16"	6
		E830256-S100	(AX-13-A)-washer-flat-5/16"	6
3A198	RETAINER (FRONT SUSPENSION SPRING GUIDE)			
73/78	J	D3RY 3A198-B		2
3B267	BOLT (FRONT SUSPENSION LOWER ARM STRUT)			
73/	A,D,K	D3AZ 3B267-A	1/2"-13 x 2 3/8" knurled	4
73/76	C,Y			4
74/	F			4
73	F	★ C90Z 3B267-A	1/2"-13-r/b D5DZ 3B267-A(6/78)	4
73/74	P			4
75/	G	D5DZ 3B267-A		4
75/77	P			4
77/	V			4
74	L - - w/o stabilizer bar	★ D4FZ 3B267-A(3/81)	Front and rear	4
	L - - w/stabilizer bar		Rear	2
			Front-serviced only in assy.-group 3077	2
75/	L - - w/o stabilizer bar	D5FZ 3B267-A		4
	L - - w/stabilizer bar		Rear	2
			Front-serviced only in assy.-group 3077	2
73/	A,C,D,F,K,P,Y	382599-S	(MM-173-MZ)-nut-1/2"-13	4

COPYRIGHT © 1986 — FORD MOTOR COMPANY — DEARBORN, MICHIGAN

1973/79 LINCOLN-MERCURY CARS

YEAR	MODEL/RESTRICTIONS	PART NUMBER	DESCRIPTION	QTY.
3280	ROD ASSY. (FRONT WHEEL SPINDLE CONNECTING)			
73/78	J - - M/S	D1RY 3280-B		2
76/78	J - - P/S	D5RY 3280-B	Kit	2
	Consists of 1-74EB 3K651-AB Rod 1-72GB 3K657-AC Hsg. 1-72GB 3K658-AB Seat			
79	J - - M/S	D8BZ 3280-B	Includes (1) pin	2
	J - - P/S "Before 4/2/79"	★ D8BZ 3280-A r/b D9BZ 3280-A(11/79)	Includes (1) pin-w/#SPR-M(TRW) gear	2
	J - - P/S "From 4/2/79"	D9BZ 3280-A	Includes (1) pin-w/#SPR-M,Y,Z,AH(TRW)gear	2
	J - - P/S	D9BZ 3280-A	Includes (1) pin-W/#SPR-R (Ford) gear	1
	J "From 6/4/79"	E0BZ 3280-A	With #SPR-AG,AH gear	2
74/	L - - M/S	D4FZ 3280-A	Kit	2
	Consists of 1-D42W 3F513-AA Seat 1-D42W 3F514-AA Nut 1-D42W 3K651-AA Rod 1-D42W 3K654-AA Spring 1-D42W 3K657-AA Socket 1-D42W 3K659-AA Pin			
75/77	L - - P/S "Before 7/6/77"	★ D4ZZ 3280-A	Kit-r/b D4ZZ 3280-B(6/80)	2
	Consists of 1-D42W 3F514-AA Nut 1-D4ZW 3L520-AA Bearing 1-D42W 3F607-AA Socket 1-D4ZW 3K651-AA Rod 1-D4ZW 3K657-AA Spring 1-71516-S Pin			
75/77	L - - P/S	D4ZZ 3280-B		2
77/78	L - - P/S "From 7/6/77 to 5/15/78"	★ D8FZ 3280-A	R/b D9FZ 3280-A(11/79)	2
78/	L - - P/S "From 5/15/78"	D9FZ 3280-A	Includes (1) pin	2
78/79	P - - P/S "Before 4/2/79"	★ D8BZ 3280-A	Includes (1) pin-r/b D9BZ 3280-A(11/79)	2
79	P - - P/S "From 4/2/79"	D9BZ 3280-A	Includes (1) pin	2
	P "From 6/4/79"	E0BZ 3280-A	With #SPR-AG gear	2
78/	P - - M/S	D8BZ 3280-B	Inc. (1) pin	2
79	J - - P/S	388014-S	(NN-110-M)-pin-spring coiled (rod to gear)-1/8" x 5/16" long	2
77/	L- - P/S "From 6/27/77"			2
3287	CLAMP (FRONT WHEEL SPINDLE CONNECTING ROD)			
73/78	A	D3AZ 3287-A		4
73/76	C,Y			4
73/	D,F,G,K,V			4
73/77	P			4
73/75	A,C,D,F,G,K,P,Y	384720-S100	(BB-545-AC)-bolt (clamp to sleeve)-5/16"-18 x 1 1/2"	4
76/	G,V	384720-S100	(BB-545-AD)-bolt (clamp to sleeve)-5 16"-18 x 1 1/2"	2
76/77	P			2
73/	A,C,D,F,G,K,P,Y	385203-S100	(MM-173-MA)-nut-5/16"-18	4
73/78	J - - M/S	D2RY 3287-A	R.H.-inner	1
		D2RY 3287-B	L.H.-inner	1
		385951-S2	(EE-20)-outer	2
3304	ROD ASSY. (STEERING PITMAN TO IDLER ARM)			
73/76	A(exc. 71),Y(exc. 71)	D3AZ 3304-C		1
77/78	A (exc.71)	D7AZ 3304-A		1
73	A(71),Y(71) "Before 5/14/73"	D3AZ 3304-B		1
73/76	A(71),Y(71) "From 5/14/73"	★ D3AZ 3304-D(3/84)		1
77/78	A(71)	★ D7AZ 3304-B(3/84)		1
79	A	D9AZ 3304-A		1
73	C	★ D30Z 3304-A	#D30A 3305-AB-27 5/16" long between stud and mounting hole centers	1
74	C,F,K	★ D40Z 3304-B(3/84)		1
75/76	C,F,K	★ D50Z 3304-A(6/83)		1
73	D	D0VY 3304-B		1
74	D	D4VY 3304-A		1
75/76	D	★ D5VY 3304-A(3/81)		1
77/	D	D7VY 3304-A		1
73	F	D3ZZ 3304-A		1
77/	F,K	D70Z 3304-A		1
75/	G - - M/S	D5DZ 3304-A		1
	G - - P/S	D5DZ 3304-B		1
73	K	★ D30Z 3304-A	#D30A 3305-AB-27 5/16" long between stud and mounting hole centers	1

YEAR	MODEL/RESTRICTIONS	PART NUMBER	DESCRIPTION	QTY.
3304	ROD ASSY. (STEERING PITMAN TO IDLER ARM) — Cont'd			
73/74	P - - M/S	D3DZ 3304-A		1
	P - - P/S	D3DZ 3304-B		1
75/77	P - - M/S	D5DZ 3304-C		1
	P - - P/S	★ D5DZ 3304-D(3/84)		1
77/	V	D5DZ 3304-B		1
73/	A,C,D,F,G,K,P,Y	34033-S18	(M-11)-nut (rod to idler arm)-9/16"-18	1
		385002-S100	(MM-66-A)-nut (rod to pitman arm)-1/2"-20 hex. slotted	1
3310	SLEEVE (FRONT WHEEL SPINDLE CONNECTING ROD ADJUSTING)			
73/78	A	D3AZ 3310-A		2
73/76	C,Y			2
73/	D,F,G,K,V			2
73/77	P			2
79	A	D9AZ 3310-A		2
3326	SEAT (FRONT WHEEL SPINDLE CONNECTING ROD BALL)			
73/78	J - - M/S	★ D2RY 3326-C	Seat-r/b D2RY 3L555-A(3/83)	2
		D5RY 3326-A	Plate	2
76/78	J - - P/S	3280	Seat	2
		D5RY 3326-A	Plate	2
3327	SPRING (FRONT WHEEL SPINDLE CONNECTING ROD BALL)			
73/78	J - - M/S	D2RY 3327-A		2
3332	SEAL (FRONT SUSPENSION OR STEERING BALL STUD DUST)			
73/	A,D,K,P	C9AZ 3332-A	R.H. and L.H.-attaches to 3A130	2
73/76	C,Y			2
74/	F			2
75/	G,V			2
79	J			2
76/77	A,D,F,K,P	★ D7DZ 3332-A(3/84)	At pitman arm	1
76/	G,V			1
73	F	D00Z 3332-C	R.H. and L.H.-1 3/16" high x 1 1/2" dia.	2
73/74	P			2
73/78	J - - M/S	(RH) D2RY 3332-B	(LH) D2RY 3332-C Connecting rod	1
76/78	J - - P/S	D5RY 3332-B	Connecting rod-incl. (1) 3042E 3K663-B, (1) 72GB 3K666-B1A clamps and (2) D2RY 3K722-A cap	2
73/78	J	D0RY 3332-C	R.H. and L.H.-spindle end	2
79	J - - M/S "Before 4/23/79"	★ D8BZ 3332-B r/bD9BZ 3332-B(7/80)	R.H. & L.H.-attaches to 3A130-incl. (2) Clamps	2
	J "From 4/23/79"	D9BZ 3332-B	R.H. & L.H.-incl. (2) clamps	2
	J - - P/S	D8FZ 3332-A	R.H. & L.H.-w/#SPR-M (TRW) gear	2
	J - - P/S	D9BZ 3332-A	With #SPR-R (Ford) gear	2
74/	L - - M/S	D3FZ 3332-C	5 13/32" long	2
		385951-S2	(EE-20)-clamp (seal boot to tie rod)-5/8"	2
75/77	L - - P/S "Before 7/6/77"	D4ZZ 3332-B	R.H.-incl. 385951-S2 and 385952-S2 clamps	1
		D4ZZ 3332-C	L.H.-incl. 385951-S2 and 385953-S2 clamps	1
77/	L - - P/S "From 7/6/77"	D4ZZ 3332-B	R.H. - also requires (1) 385953-S clamp	2
		D8FZ 3332-A	L.H.	1
78	P - - P/S	★ D8BZ 3332-A r/bD9BZ 3332-A(6/79)	R.H. and L.H.-attaches to 3A130 w/SPR-A,C,E (Ford) gear	2
	P - - P/S	D8FZ 3332-A	R.H. & L.H.-w/SPR-B,D (TRW) gear	2
	P - - M/S	★ D8BZ 3332-B r/bD9BZ 3332-B(7/80)	R.H. and L.H.-incl. (2) clamps	2
79	P - - P/S "Before 4/2/79"	★ D8BZ 3332-A r/bD9BZ 3332-A(6/79)	R.H. & L.H.-attaches to 3A130	2
	P - - P/S "From 4/2/79"	D9BZ 3332-A	R.H. & L.H.-attaches to 3A130	2
	P - - M/S "Before 4/23/79"	★ D8BZ 3332-B r/bD9BZ 3332-B(7/80)	R.H. & L.H.-attaches to 3A130-incl. (2) clamps	2
	P "From 4/23/79"	D9BZ 3332-B	R.H. & L.H.-incl. (2) clamps	2
3A332	CLIP (MANUAL STEERING GEAR BELLOWS)			
79	F,P "From 4/23/79"	D9BZ 3A332-A	R.H. & L.H.-outer	2

COPYRIGHT © 1986 — FORD MOTOR COMPANY — DEARBORN, MICHIGAN

1973/79 LINCOLN-MERCURY CARS

YEAR	MODEL/RESTRICTIONS	PART NUMBER	DESCRIPTION	QTY.
3A344-5	Serviced only in kit-group 3C590			
3B349	BUSHING and LINK ASSY. (FRONT SUSPENSION LOWER ARM)			
74/	L	D4FZ 3B349-A		2
3355	ARM and BRACKET ASSY. (STEERING IDLER) ● Includes arm, bracket, bushings, nuts and washers			
73/78	A	D5AZ 3355-A		1
75/	D			1
73/76	Y			1
79	A	● D9AZ 3355-A		1
73/76	C	D50Z 3355-A		1
74/	F			1
75/	K			1
73/74	D	★● D3VY 3355-A(6/82)		1
73	F	● D3ZZ 3355-A		1
74	F	● D50Z 3355-A		1
75/	G	D6DZ 3355-A		1
75/77	P			1
77/	V			1
73/74	K	● D50Z 3355-A		1
73/74	P	D3DZ 3355-A	Incl. arm w/stud, bushing, washer and nut	1
73/78	A	385763-S101	(BB-595-FB)-bolt (bracket to frame)- 3/8"-16 x 1 1/2"	2
73/76	C,Y			2
73/	D,F,K			2
73/77	A,C,D,F,K,Y	384586-S101	(MM-173-JC)-nut-3/8"-16	4
79	A	N800501-S100	(BB-93-H)-screw & washer assy.-arm to frame- M12 x 1.75 mm. x 45.0 mm.	2
73/77	G,P,V	383496-S100	(BB-168)-bolt (bracket to frame)-3/8"-16 x 3 5/8"	2
78	G,V "Before 2/1/78"			2
78/	G,V "From 2/1/78"	388223-S100	(BB-896-E)-bolt (bracket to frame)-hex locking-7/16"-14 x 3 3/4"	2
3356-8	BUSHING (STEERING IDLER ARM)-Also serviced in assy.-group 3355			
73/	A,C,D,F,G,K,P,Y	3356	Upper-serviced only in assy.-group 3355	
73/74	A,C,D,F,K,P,Y	C5AZ 3358-A	Lower-9/16" I.D.-1 3/8" O.D.	1
75/	A,D,F,G,K,V	D5DZ 3358-A	Lower	1
75/76	C,Y			1
75/77	P			1
3382-3	BRACKET (FRONT SUSPENSION BUMPER)			
73/74	F	(RH) ★ D1ZZ 3382-C(6/82)	(LH) ★ D1ZZ 3383-C(6/82)	1
75/	G	D6DZ 3382-A		2
73/75	P "Before 7/1/75"	(RH) ★ D5DZ 3382-B(6/82)	(LH) ★ D5DZ 3383-A(6/83)	1
75/77	P "From 7/1/75"	D5DZ 3382-C		2
77/	V	D6DZ 3382-A		2
3388	SEAT and BUSHING ASSY. (FRONT SUSPENSION UPPER ARM SPRING)			
73	F	★ D2DZ 3388-A	r/b D7DY 3388-A(3/79)	2
73/77	P			2
75/77	G	D5DZ 3388-A		2
78/	G	D7DY 3388-A		2
77/	V			2
75/	G	381792-S2	(BB-429-AA)-bolt (seat to arm)-3/8"-16 x 1"	4
77/	V	383406-S100	(MM-173-MY)-nut-3/8"-16	4

YEAR	MODEL/RESTRICTIONS	PART NUMBER	DESCRIPTION	QTY.
3B391	PLATE (FRONT SUSPENSION CAMBER ADJUSTING)			
78/	P	D8BZ 3B391-A		2
3B400	SHIM (FRONT SUSPENSION LOWER ARM STRUT)			
76/	G	D6DZ 3B400-A	TSB 144	2
3468	STRUT (FRONT SUSPENSION LOWER ARM)-Also refer to group 3A187 ▲ Includes stabilizer bar mounting bracket			
73/	A	D2AZ 3468-B	R.H. and L.H.-27" overall length	2
73/76	Y			2
73/76	C	D2AZ 3468-A	R.H. and L.H.-27 1/4" overall length	2
74/	F			2
73/	K			2
73/	D	D2VY 3468-A	R.H. and L.H.-27 3/8" overall length	2
73	F	(RH) C9ZZ 3468-C	(LH) C9ZZ 3468-D	1
73/77	P			1
75/	G	(RH) D7DZ 3468-A	(LH) D7DZ 3468-B	1
74	L	(RH) ▲ D4FZ 3468-B	(LH) ▲ D4FZ 3468-C	1
75/	L "From 2/1/76"	(RH) D5FZ 3468-C	(LH) D5FZ 3468-D	1
77/	V	(RH) D7DZ 3468-A	(LH) D7DZ 3468-B	1
73/78	A	380517-S2	(MM-40-D)-nut (strut adjustment)-11/16" -18	2
73/76	C,Y			2
73/	D,F,K			2
73/77	P			2
73/	F	380460-S7-8	(MM-179-J)-nut (strut to crossmember)-11/16"-18	2
73/77	P			2
3494	Refer to group 3A719			
3499	RETAINER (STEERING COLUMN TUBE)			
73/78	A - - w/tilt wheel	C8SZ 3499-A		3
73/76	C,Y - - w/tilt wheel			3
73/	D,F,G,K,V - - w/tilt wheel			3
74/76	C - - w/fixed wheel	D1FZ 3499-A		3
74/	F,G,L - - w/fixed wheel			3
77/	V			3
3A500	Refer to groups 3504 and 3A525			
3E501	SEAL KIT (POWER STEERING GEAR RACK SHAFT)			
75/77	A,D,F,K	D5AZ 3E501-A	With Ford gear	1
75/76	C,Y "Before 7/27/77"			1
	Consists of			
	2-D3AR 3D529-AA Spacer	1-D5AW 3D642-AA Seal	1-386266-S Seal	
	1-D5AW 3591-AA Seal	1-97628-S Snap ring		
77/	A,D,F,K "From 7/27/77"	D7AZ 3E501-A	With Ford gear	1
	Consists of			
	1-D7AC 3A196-AB Seal	1-D6AW 3586-AA Seal	1-384223-S Seal	
	1-D7DZ 3332-A Seal	1-D5AW 3591-AA Seal	1-386266-S Seal	
	1-D7AC 3D529-AA Spacer	1-97628-S7M Snap ring	1- Instruction sheet	
	1-D7AC 3576-AA Bushing	1-371782-S8 Nut		
78/	A,D,F,K	D7AZ 3E501-B	Ford gear	1
	Consists of			
	1-D6AW 3586-AA Seal-dust	1-97628-S7M Ring-retaining		
	1-D5AW 3591-AA Seal-upper	1-386266-S Seal		
76/78	J	D5RY 3E501-A		1
	Consists of			
	1-74GB 3B541-AA Seal	2-E434002-S Washer	2-E854025-S Seal	
	1-E400009-S Screw	1-E460001-S Clip	1-E854026-S "O" ring	
	1-E430002-S Washer	1-E460002-S Clip	3-E854028-S "O" ring	
	2-E430003-S Washer	1-E490003-S Ring	1-E854029-S "O" ring	
	1-E430013-S Washer	1-E854024-S Seal	1-E854033-S "O" ring	
	1-E430014-S Washer			

COPYRIGHT © 1986 — FORD MOTOR COMPANY — DEARBORN, MICHIGAN

1973/79 LINCOLN-MERCURY CARS

YEAR	MODEL/RESTRICTIONS		PART NUMBER	DESCRIPTION			QTY.
3E501	SEAL KIT (POWER STEERING GEAR RACK SHAFT) — Cont'd						
79	J	"Before 12/1/78"	★ D8FZ 3E501-B	With #SPR-M (TRW) gear-r/b D9FZ 3E501-A(11/79)			1
	Consists of						
	2-D9ZC 3F520-AA	Rack seal	1-D6ZW 3K664-AA	Rack seal	1-87059-S94	"O"-ring	
	1-D9ZC 3F521-AA	Piston seal	1-87029-S94	"O"-ring	2-388014-S2	Pin	
79	J	"From 12/1/78"	D9FZ 3E501-A	With #SPR-Y,Z (TRW) gear			1
	Consists of						
	1-D9ZC 3F520-AB	Seal	1-87029-S94	"O"-ring	2-388014-S2	Pin	
	1-D9ZC 3F521-AA	Seal	1-87059-S94	"O"-ring	1-Instruction sheet		
	2-D6ZW 3K664-AA	Seal					
79	J		★ D9BZ 3E501-A	With #SPR-R (Ford) gear-r/b E2SZ 3E501-A(6/82)			1
	Consists of						
	2-D8BC 3F520-AA	Rack seal	2-D8BZ 3C650-A	Inner clamp	1-388898-S	"O"-ring	
	1-D8BZ 3F521-A	Piston seal	2-D8BZ 3C650-B	Outer clamp	1-87029-S94	"O"-ring	
	1-D6AZ 3D526-A	Input seal	1-D8BC 3K664-AA	Pinion seal	1-97625-S	Snap ring	
	1-D5AZ 3D527-A	Dust seal	1-34988-S2	lock nut	1-97630-S	Ret. ring	
	4-D7AC 3F586-A1A	Valve seal	1-388897-S	"O"-ring	2-387580-S2	Pin	
					2-388565-S2	"O"-ring	
75/76	L		D5ZZ 3E501-A				1
	Consists of						
	2-D4ZW 3F514-AA	Nut	2-71516-S	Pin	1-87059-S94	"O" ring	
	2-D4ZW 3K664-BA	Seal	1-87029-S94	"O" ring	1-385955-S	Seal	
77	L	"Before 7/6/77"	D7ZZ 3E501-A				1
	Consists of						
	2-D4ZW 3F514-AA	Nut	2-71516-S	Pin	1-87047-S94	"O" ring	
	2-D6ZW 3K664-AA	Seal	1-87027-S94	"O" ring	1-87059-S94	"O" ring	
	1-D7EC 3K664-AA	Seal	1-87029-S94	"O" ring	1-385955-S	Seal	
77/78	L	"From 7/6/77 to 5/15/78"	★ D8FZ 3E501-A	R/b D9FZ 3E501-A(3/80)			1
78	P			#SPR-B,D (TRW) gear			1
	Consists of						
	2-D6ZW 3K664-AA	Seal	1-87029-S94	"O" ring	1-385955-S	"O" ring	
	1-D8EC 3K664-AA	Seal	1-87059-S	"O" ring	1-388014-S2	Pin	
78/79	L	"From 5/15/78 to 12/1/78"	D8FZ 3E501-B				1
	Consists of						
	2-D9ZC 3F520-AA	Rack seal	1-D6ZW 3K664-AA	Rack seal	1-87059-S94	"O"-ring	
	1-D9ZC 3F521-AA	Piston seal	1-87029-S94	"O"-ring	2-388014-S2	Pin	
79	L	"From 12/1/78"	D9FZ 3E501-A				
	Consists of						
	1-D9ZC 3F520-AB	Seal	1-87029-S94	"O"-ring	2-388014-S2	Pin	
	1-D9ZC 3F521-AA	Seal	1-87059-S94	"O"-ring	1-Instruction sheet		
	2-D6ZW 3K664-AA	Seal					
78/79	P(exc. P/C)	"Before 4/2/79"	★ D8BZ 3E501-A	#SPR-A,C,E (FORD) gear-r/b D9BZ 3E501-A(12/80)			1
	Consists of						
	2-D8BC 3F520-AA	Seal-rack	2-D8BZ 3C650-A	Clamp-inner	1-388898-S	"O" ring	
	1-D8BZ 3F521-A	Seal-piston	2-D8BZ 3C650-B	Clamp-outer	1-87029-S94	"O" ring	
	1-D5AZ 3D526-A	Seal-input	1-D8BC 3K664-AA	Seal-pinion	2-87029-S94	"O" ring	
	1-D5AZ 3D527-A	Seal-dust	1-34988-S	Nut-lock	1-97625-S	Snap-ring	
	4-D7AC 3F586-A1A	Seal-valve	1-388897-S	"O" ring	1-97630-S	Retaining ring	
					2-387580-S2	Spring pin	
79	P(exc. P/C)	"From 4/2/79"	★ D9BZ 3E501-A	#SPR-P,R(FORD) gear-r/b E2SZ 3E501-A(6/82)			1
	Consists of						
	2-D8BC 3F520-AA	Rack seal	2-D8BZ 3C650-A	Inner clamp	1-388898-S	"O" ring	
	1-D8BZ 3F521-A	Piston seal	2-D8BZ 3C650-B	Outer clamp	1-87029-S94	"O" ring	
	1-D6AZ 3D526-A	Input seal	1-D8BC 3K664-AA	Pinion seal	1-97625-S	Snap ring	
	1-D5AZ 3D527-A	Dust seal	1-34988-S2	Lock nut	1-97630-S	Ret. ring	
	4-D7AC 3F596-AA	Valve seal	1-388897-S	"O" ring	2-387580-S2	Pin	
					2-388565-S2	"O" ring	
78/	P(P/C)		E2SZ 3E501-A	with Ford gear			1
	Consists of						
	2-D8BC 3F520-AA	Rack seal	2-D8BZ 3C650-A	Inner clamp	1-87029-S94	"O"-ring	
	1-D8BZ 3F521-A	Piston seal	2-D8BZ 3C650-B	Outer clamp	1-97625-S	Snap ring	
	1-D6AZ 3D526-A	Input seal	1-D8BC 3K664-AA	Pinion seal	1-97630-S	Ret ring	
	1-D5AZ 3D527-A	Dust seal	1-34988-S2	Lock nut	2-387580-S2	Pin	
	4-D5AW 3F586-A1A	Seal Valve	1-388897-S	"O"-ring	2-388565-S	"O"-ring	
			1-388898-S	"O"-ring			

YEAR	MODEL/RESTRICTIONS	PART NUMBER	DESCRIPTION	QTY.
3E502	SEAL KIT (POWER STEERING GEAR INPUT SHAFT) — Cont'd			
75/	A,D,F,K	D7AZ 3E502-A	Ford Gear	1
75/76	C,Y			1
	Consists of			
	1-D6AZ 3D526-A Seal-Input	1-C5AZ 3805-A	Seal Piston	1-384223-S Seal
	1-D5AW 3D527-AA Seal-Dust	1-352109-S	Ring-Seal	1-386266-S Seal-Cover
	4-D5AW 3F586-AA Seal-Valve	1-386975-S	"0" Ring-Valve	1-372454-S "0" Ring
		1-382743-S	"0" Ring	
76/78	J - - P/S	D5RY 3E502-A		1
	Consists of			
	1-E453015-S Seal	1-E854027-S	"0"-ring	1-E854032-S "0"-ring
	1-E460016-S Retainer	1-E854030-S	"0"-ring	1-E854052-S "0"-ring
	1-854023-S "0"-ring			1-E854060-S Seal
75/76	L - - P/S	D4ZZ 3E502-A		1
	Consists of			
	1-D5ZW 3K664-AA Seal		1-87059-S94	"0" ring
	1-87027-S94 "0" ring		1-87155-S94	"0" ring
77	L - - P/S "Before 7/6/77"	★ D7ZZ 3E502-A		1
78	P	r/bD8FZ 3E502-A(11/79)	#SPR-B,D (TRW) gear	1
	Consists of			
	1-D7EC 3K664-AA Seal		1-87059-S94	0-ring
	1-87027-S94 0-ring		1-87155-S94	0-ring
77/	L "From 7/6/77"	D8FZ 3E502-A		1
	Consists of			
	1-D8EC 3K664-AA Seal	1-87059-S94	"0" ring	1-87155-S94 "0" ring
78/	P	★ D8BZ 3E502-A	#SPR-A,C,E,H (FORD) gear-r/b D8BZ 3D728-A(11/79)	
	Consists of			
	1-D6AZ 3D526-A Seal		1-D8BC 3K664-AA	Seal
	1-D5AZ 3D527-A Seal		1-97625-S	Snap ring

3504 GEAR ASSY. (STEERING)

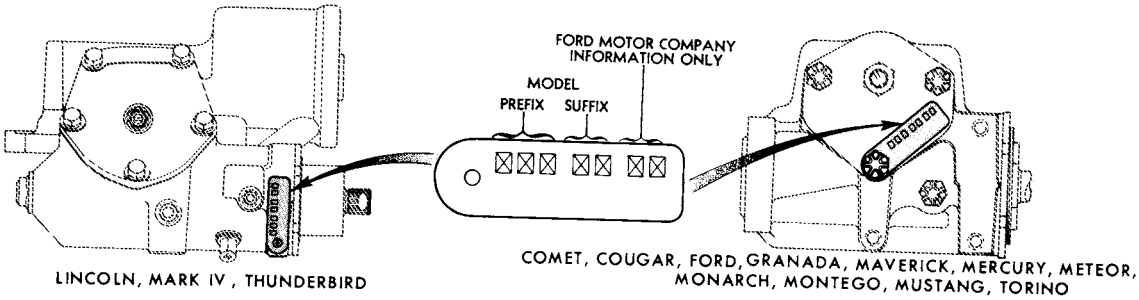

P-4253

IDENTIFICATION CHART

IDENTIFICATION	PART NUMBER	IDENTIFICATION	PART NUMBER
SMA-B	★ C50Z 3504-B	SMD-E	D5FZ 3504-A
SMA-B1	★ C50Z 3504-B	SMD-F	D5FZ 3504-A
SMA-F	C70Z 3504-A	SMD-J	D7FZ 3504-B
SMA-F1	C70Z 3504-A	SMD-L	D8FZ 3504-A
SMA-T	★ D1AZ 3504-A	SMD-M	D8FZ 3504-A
SMA-Y	D6DZ 3504-A	SMD-R	D8FZ 3504-A
SMC-G	D4FZ 3504-A	SMD-U	★ D9FZ 3504-A
SMC-H	★ D4FZ 3504-B	SMD-V	D8FZ 3504-A
SMC-J	D5FZ 3504-B	SMD-X	★ D9FZ 3504-C
SMC-M	★ D7FZ 3504-A	SMD-Y	★ D9FZ 3504-C
SMC-P	★ D8BZ 3504-A	SPA-S	D1ZZ 3504-B
SMC-R	★ D8BZ 3504-A	SPA-T	D1ZZ 3504-C
SMC-S	D9FZ 3504-B	SPA-U	D1ZZ 3504-B
SMC-T	★ D9BZ 3504-B	SPA-V	D1ZZ 3504-C
SMD-A	D4ZZ 3504-A	SPA-Z	D3TZ 3504-A
SMD-D	D5ZZ 3504-A	SPA-AA	D3AZ 3504-A

COPYRIGHT © 1986 — FORD MOTOR COMPANY — DEARBORN, MICHIGAN

IDENTIFICATION CHART

IDENTIFICATION	PART NUMBER	IDENTIFICATION	PART NUMBER
SPA-AA	D3AZ 3504-B	SPA-BW	D9AZ 3504-B
SPA-AC	★ D3ZZ 3504-A	SPA-BW	D9LY 3504-A
SPA-AD	★ D3ZZ 3504-B	SPA-CA	D50Z 3504-A
SPA-AE	★ D3ZZ 3504-A	SPA-CL	D9AZ 3504-A
SPA-AF	★ D3ZZ 3504-B	SPA-CM	D9AZ 3504-B
SPA-AH	D30Z 3504-A	SPA-CM	D9LY 3504-A
SPA-AM	D5AZ 3504-A	SPA-CS	D9LY 3504-A
SPA-AS	D5AZ 3504-A	SPR-A	★ D8BZ 3504-B
SPA-AS	★ D4VZ 3504-A	SPR-B	D8BZ 3504-C
SPA-AT	D50Z 3504-A	SPR-C	★ D8BZ 3504-B
SPA-AW	D5AZ 3504-B	SPR-D	D8BZ 3504-C
SPA-BH	★ D4VZ 3504-A	SPR-E	D8BZ 3504-B
SPA-BH	D5AZ 3504-A	SPR-M	★ D9ZZ 3504-A
SPA-BK	★ D4VZ 3504-A	SPR-P	★ D9BZ 3504-A
SPA-BK	D5AZ 3504-A	SPR-R	★ D9BZ 3504-A
SPA-BM	★ D4VZ 3504-A	SPR-Y	★ D9ZZ 3504-B
SPA-BM	D5AZ 3504-A	SPR-Z	★ D9ZZ 3504-B
SPA-BM	★ D7LY 3504-B	SPR-AG	★ D9BZ 3504-A
SPA-BM	D70Z 3504-A	SPR-AH	★ D9ZZ 3504-B
SPA-BU	D9AZ 3504-A	D52W-BA	D5FZ 3504-A

YEAR	MODEL/RESTRICTIONS	PART NUMBER	DESCRIPTION	QTY.
3504	GEAR ASSY. (STEERING) — Cont'd			

APPLICATION CHART

A (Mercury)

73/76 77	A,Y - - P/S A - - P/S	★ D5AZ 3504-A	#SPA-AA,AM,AS,BH,BK,BM (rotary valve type)- Vehicles built before 6/10/74 also require (1) D5AZ 3A525-D for fixed wheel or (1) D5AZ 3A525-E for tilt wheel-r/b D70Z 3504-A (12/78)	1 1
78	A "Before 5/30/78"	★ D70Z 3504-A	#SPA-BM Ford gear-r/b D9AZ 3504-B(3/79)	1
78	A "From 5/30/78"	D9AZ 3504-B	#SPA-BW	1
79	A(54,66)	D9AZ 3504-A	#SPA-BU,CL	1
	A(74)	D9AZ 3504-B	#SPA-BW,CM	1

C (Montego)

73/74	C - - M/S	★ D1AZ 3504-A(6/82)	#SMA-T	1
73/76	C - - P/S	★ D5AZ 3504-A	#SPA-AA,AM,AS,AW,BH,BK,BM (Ford gear) -r/b D70Z 3504-A (12/78)	1
75	C - - P/S	D50Z 3504-A	#SPA-AT (Saginaw gear)	1

D (Lincoln)

73/74	D "Before 6/10/74"	★ D5AZ 3504-A	#SPA-AA (Ford gear) (spool valve type)- also requires (1) D5AZ 3A525-E r/b D70Z 3504-A (12/78)	1
74/77	D "From 6/10/74"	★ D4VZ 3504-A	#SPA-AS,BH,BK,BM (rotary valve type)-r/b D9LY 3504-A(11/79)	1
78	D "Before 5/22/78"	★ D7LY 3504-B	#SPA-BM Ford gear-r/b D9LY 3504-A(10/79)	1
78/	D "From 5/22/78"	D9LY 3504-A	#SPA-BW,CM,CS	1

F (Cougar)

73	F - - M/S	★ D1AZ 3504-A(6/82)	#SMA-T	1
	F - - P/S	★ D3ZZ 3504-A(2/81) ★ D3ZZ 3504-B(6/79)	#SPA-S,U,AC or AE-constant ratio #SPA-T,V,AD or AF-variable ratio	1 1
74/77	F - - P/S	★ D5AZ 3504-A	#SPA-AA,AM,AS,AW,BH,BK,BM (Ford gear) -r/b D70Z 3504-A (12/78)	1
74/78	F - - P/S	D50Z 3504-A	#SPA-AT,CA (Saginaw gear)	1
78	F "Before 5/30/78"	★ D70Z 3504-A	#SPA-BM Ford gear-r/b D9AZ 3504-B(3/79)	
78/ 79	F "From 5/30/78"	D9AZ 3504-B	#SPA-BW,CM (Ford)	1
	F	D50Z 3504-A	#SPA-CA (Saginaw gear)	1
	F	D9AZ 3504-C	Campaign 325	1

YEAR	MODEL/RESTRICTIONS	PART NUMBER	DESCRIPTION	QTY.
3504	GEAR ASSY. (STEERING) — Cont'd			
	G (Monarch)			
75	G - - M/S	C70Z 3504-A	#SMA-F1	1
	G - - P/S	★C50Z 3504-B(9/83)	#SMA-B1	1
76/	G - - M/S	C70Z 3504-A	#SMA-F1	1
	G - - P/S	D6DZ 3504-A	#SMA-Y	1
	J (Capri)			
73/78	J - - M/S	D5RY 3504-B		1
76/78	J - - P/S	D6RY 3504-A		1
79	J - - P/S "Before 12/1/78"	★D9ZZ 3504-A	#SPR-M (TRW)-r/b D9ZZ 3504-B(10/79)	1
	J - - P/S "From 12/1/78"	★D9ZZ 3504-B	#SPR-Y,Z,AH(TRW)-r/b E0ZZ 3504-A(6/81)	1
	J - - M/S	★D9BZ 3504-B	#SMC-T-r/b E1DZ 3504-A(6/81)	1
	J- - P/S	★D9BZ 3504-A	#SPR-P,R,AG (Ford)-r/b 1 pc. E0SZ 3504-B & 2 pcs. E0SZ 3A130-A	1
	K (Mark IV)			
73/74	K "Before 6/10/74"	★D5AZ 3504-A	#SPA-AA (spool valve type)-also requires (1) D5AZ 3A525-E-r/b D70Z 3504-A (12/78)	1
74/77	K "From 6/10/74"	D4VZ 3504-A	#SPA-AS,BH,BK,BM (Ford gear)	1
78	K "Before 5/22/78"	★D7LY 3504-B	#SPA-BM Ford gear-r/b D9LY 3504-A(10/79)	1
78/	K "From 5/22/78"	D9LY 3504-A	#SPA-BW,CM,CS	1
	L (Bobcat)			
75	L - - M/S "Before 5/15/75"	★D4FZ 3504-B	#SMC-H-r/b 1 pc. D9FZ 3504-B & 1 pc. D9BZ 3A525-A(6/79)	1
75/76	L - - P/S	★D6FZ 3504-A	#SMD-E,F,H-r/b D9FZ 3504-A(3/79)	1
75/78	L - - M/S "From 5/15/75"	★D7FZ 3504-A	#SMC-G,H,J,L,M-r/b 1 pc. D9FZ 3504-B & 1 pc. D9BZ 3A525-A(11/79)	1
77/78	L - - P/S	★D8FZ 3504-A	#SMD-J,L,M,R,V-r/b D9FZ 3504-A(3/79)	1
79	L - - P/S "Before 12/1/78"	★D9FZ 3504-A	#SMD-U-r/b D9FZ 3504-C(10/79)	1
	L - - P/S "From 12/1/78"	★D9FZ 3504-C	#SMD-X,Y-r/b E0FZ 3504-A(12/81)	1
	L - - M/S	D9FZ 3504-B	#SMC-S	1
	P (Comet)			
73/77	P - - M/S	C70Z 3504-A	#SMA-F1	1
	P - - P/S	★C50Z 3504-B(9/83)	#SMA-B1	1
	P (Zephyr)			
78	P - - M/S	★D8BZ 3504-A	#SMC-P,R-r/b 1 pc. D9BZ 3504-B & 1 pc. D9BZ 3A525-A	1
	P - - P/S	★D8BZ 3504-B	#SPR-A,C,E (Ford gear)-r/b 1 pc. D9BZ 3504-A & 1 pc. E0SZ 3A130-A(5/80)	1
	P - - P/S	D8BZ 3504-C	#SPR-B,D (TRW gear)	1
79	P - - M/S	★D9BZ 3504-B	#SMC-T-r/b E1DZ 3504-A(6/81)	1
	P - - P/S "Before 4/2/79"	★D8BZ 3504-B	#SPR-E-r/b D9BZ 3504-A & 2 pc. E0SZ 3A130-A(5/80)	1
	P - - P/S "From 4/2/79"	★D9BZ 3504-A	#SPR-P,R,AG-r/b 1 pc. E0SZ 3504-B & 2 pcs. E0SZ 3A130-A(2/81)	1
	V (Versailles)			
77/	V - - P/S	E04Y 3504-A	#SMA-Y (Green)	1
	Y (Meteor) (Refer to Mercury)			
73/78	A,C,D,K,Y "Before 2/1/78"	383497-S100	(BB-137-E)-bolt (gear to frame)-7/16"-14 x 4 1/2"	3
74/78	F			3
78	A,D,F,K "From 2/1/78"	388224-S102	(BB-896-H)-bolt (gear to frame)-hex locking-7/16"-14 x 4 1/4"	3
79	A,D,F,K	388600-S100	(BB-928-H)-bolt (hex. head)-gear to frame-7/16"-14 x 4 1/2"	3
73	F	376355-S8	(BB-186)-bolt (gear to frame)-7/16"-14 x 3 5/8"	3
		382457-S	(XX-173-A)-washer-flat	3
75/	G	388223-S100	(BB-896-E)-bolt (gear to frame)-7/16"-14 x 3 3/4"	3

COPYRIGHT © 1986 — FORD MOTOR COMPANY — DEARBORN, MICHIGAN

1973/79 LINCOLN-MERCURY CARS

YEAR	MODEL/RESTRICTIONS	PART NUMBER	DESCRIPTION	QTY.
3504	GEAR ASSY. (STEERING) — Cont'd			
	Y (Meteor) (Refer to Mercury)			
73/78	J - - M/S	357235-S	(BB-136)-bolt (gear and 5486 bracket to cross member)-5/16"-18 x 7/8"	4
		E832036-S71	Lockwasher	4
		E453016-S	"O" ring	AR
76	J - - P/S	E800446-S72	(AB-183-G)-bolt (gear to crossmember)M-12 x 130	2
		★ E642364-S71	Pin-cotter-not replaced	2
		E620415-S72	Nut (gear to frame)M-12	AR
74/77	L "Before 6/27/77"	385505-S100	(MM-173-FF)-nut (gear to crossmember)-5/8"-11	AR
		385506-S100	(BB-551-AN)-bolt (gear to crossmember)-5/8"-11 x 7 3/4"	AR
		385935-S2	(XX-14-D)-washer-5/8"	AR
		387344-S	(PP-100-E) Plug-button,(gear to crossmember) 1/8" x 2"	1
77/	L "From 6/27/77"	N800383-S100	(AB-182-R)-bolt-M16 x 7 5/8-3504 to body	2
		N800237-S100	(AM-5-VS)-nut-M16 x 2.0-3504 to body	2
3D505	COVER (STEERING COLUMN POSITION CONTROL)			
73	A,D,F,K,Y - - w/tilt wheel	★ D6AZ 3D505-B r/bE0TZ 3D505-A(2/80)	Also requires (1) D6AZ 3E700-A, (1) D4AZ 3E717-A and (1) D6AZ 11582-A	1
74/75	A,C,F,Y - - w/tilt wheel	★ D4AZ 3D505-A	#D4AW 3D505-AWA-r/b (1) D6AZ 3D505-B, (1) D6AZ 3E700-A & (1) D6AZ 11582-A (3/78)	1
74/75	D,K - - w/tilt wheel	★ D4AZ 3D505-A	R/b (1) D6AZ 3D505-B, (1) D6AZ 3E700-A & (1) D6LY 11582-A (3/78)	1
76	A,C,F,G,Y - - w/tilt wheel "Before 2/2/76"	★ D6AZ 3D505-A(12/80)	#D6AW 3D505-AWA-r/b 1 pc. D6AZ 3D505-B, 1 pc. D6AZ 3E700-A & 1 pc. D6AZ 11582-A	1
76	D,K - - w/tilt wheel "Before 2/2/76"	★ D6AZ 3D505-A(12/80)	#D6AW 3D505-AWA-r/b 1 pc. D6AZ 3D505-B, 1 pc. D6AZ 3E700-A, & 1 pc. D6LY 11582-A	1
76	A,C,D,F,G,K,Y - - w/tilt wheel "From 2/2/76"	★ D6AZ 3D505-B r/bE0TZ 3D505-A(2/80)	#D6AW 3D505-BWA	1
77/78	A,F-w/tilt wheel			1
77/	D,F,G,K,V - - w/tilt column			1
79	A,J,P - - w/tilt column	D9AZ 3D505-A		1
3506	CLAMP (STEERING COLUMN)			
73/75	A,D,Y	C9AZ 3506-B	Opening cover-upper	1
76/	D			1
3E506	CLIP (POWER STEERING HOSE RETAINING)-Improvise			
3507	CLAMP ASSY. (STEERING COLUMN)			
76/78	A	★ D6AZ 3507-A(6/82)		1
76	Y			1
	Consists of 1-D6AW 3507-AB Clamp-upper		1-D6AW 3R548-AB Clamp-upper	
79	A	D9AZ 3507-A	Attach 3C611 to column	2
73/77	P	★ D0DZ 3507-A(3/81)	Lower	1
		★ D0DZ 3507-B(3/81)	Upper	1
3508	Refer to group 3511 (upper flange) or 3D651 (lower flange)			
3C510	BRACKET (POWER STEERING HOSE)			
73/76	A,C,Y - - 8 cyl.	★ D1AZ 3C510-A(3/81)		1
74/	F			1
78	A - - w/Ford pump	D8AZ 3C510-A		1
78	A - - w/front mounted oil cooler	★ D8AZ 3C510-C(6/82)		1
78/	F	D8AZ 3C510-A		1
78/	G - - 8 cyl. 302 without A/C	D8AZ 3C510-A		1
	G - - 8 cyl. 302 with A/C	D8AZ 3C510-B	W/Ford pump	1
75/76	G - - 6 cyl. 200	★ D5DZ 3C510-E(2/80)	P/S hose retaining bracket on frame	1
77	G,P - - 6 cyl. 200	D7DZ 3C510-A	P/S hose retaining bracket on frame	1
75/	G - - 8 cyl.	★ D5DZ 3C510-F(3/84)	P/S hose retaining bracket to frame	1
	G - - 8 cyl. 302,351 w/o hydroboost	★ D8DZ 3C510-A(3/84)		1
76	G,P - - 6 cyl. 250 "Before 5/3/76"	★ D6DZ 3C510-A(2/80)	P/S hose retaining bracket on frame (front)	1
76	G,P - - 6 cyl. 250 "From 5/3/76"	★ D6DZ 3C510-B(3/81)	P/S hose retaining bracket on frame (front)	1
77	P			1

1973/79
LINCOLN-MERCURY CARS

YEAR	MODEL/RESTRICTIONS	PART NUMBER	DESCRIPTION	QTY.
3C510	BRACKET (POWER STEERING HOSE) — Cont'd			
78	G - - 8 cyl. 302 w/hydroboost	★ D8DZ 3C510-B(3/84)		1
79	J	D8BZ 3C510-A	Hose to frame	1
75	L	★ D4ZZ 3C510-A(3/81)	P/S gear tube retaining	1
		★ D5ZZ 3C510-A	P/S-r/b D6FZ 3C510-A	1
		★ D5ZZ 3C510-B	P/S hose retaining bracket on frame-r/b D6FZ 3510-B	1
76/77	L	D4ZZ 3C510-A	P/S gear tube retaining	1
		★ D6FZ 3C510-A(2/80)	P/S hose index bracket on pump	1
76	L	★ D6FZ 3C510-B(2/80)	P/S hose retaining bracket on frame	1
77	L "Before 6/27/77"	★ D7FZ 3C510-A(3/81)	P/S hose retaining bracket on frame	1
77/78	L - - 4 cyl. 140 "From 6/27/77"	D8AZ 3C510-A		1
77/78	L "From 6/27/77 to 4/15/78"	D8AZ 3C510-B		1
78/	L - - 4 cyl. 140 "From 4/15/78"			1
73/77	P - - 8 cyl.	★ D0DZ 3C510-A(3/81)		1
78/	P	D8BZ 3C510-A	Hose to frame	1
	P - - 6 cyl. 200 "Before 11/6/78" P - - 8 cyl. 302 without A/C "Before 11/6/78"	D8AZ 3C510-A		1 1
	P - - 4 cyl. 140 "Before 11/6/78" P - - 8 cyl. 302 with A/C "Before 11/6/78"	D8AZ 3C510-B		1 1
77/	V	★ D5DZ 3C510-F(3/84)	P/S hose retaining bracket to frame	1
78/	V	D8AZ 3C510-B		1
		★ D8DZ 3C510-B(3/84)		1
		D8DZ 3C510-C	Use with D8DZ 3A719-H (hose) only	1
73/77	A,C,Y	378720-S2	(MM-123-B)-nut (bracket to pump)-5/8"-18	1
74/77	F			1
3511	FLANGE (STEERING COLUMN TUBE)			
73	A,D,K,Y - - w/fixed wheel	D5AZ 3511-A	Also requires (1) D4AZ 3E717-A & (1) D4AZ 11582-A	1
74/76	A,D,K,Y - - w/fixed wheel- "Before 2/2/76"	D5AZ 3511-A		1
76/78	A,Y "From 2/2/76"	D6AZ 3511-A	#D6AW 3511-BWA or CWA	1
76/	D,K			1
73/78	A - - w/tilt wheel-	D5AZ 3511-B	#D6AW 3511-AWA	1
73/	D,K - - w/tilt wheel			1
73/76	Y - - w/tilt wheel			1
79	A - - w/fixed column	★ D8BZ 3511-A	R/b E43Z 3511-A(6/83)	1
	A - - w/tilt column	★ D9AZ 3511-A	R/b 1 pc. E0AZ 3511-B, 1 pc. N801013-S pin, 1 pc. N801012-S(6/80)	1
73	C - - w/columm shift and A/T	★ D60Z 3511-A r/bE0TZ 3511-D(2/81)	Also requires (1) D4AZ 3E717-A & (1) D6AZ 11582-A	1
	C - - w/column shift and M/T "Before 11/1/72" C - - w/floor shift "Before 11/1/72"	D5AZ 3511-A	Also requires (1) D4AZ 3E717-A & (1) D4AZ 11582-A	1 1
73	C - - w/column shift and M/T "From 11/1/72" C - - w/floor shift "From 11/1/72"	D60Z 3511-B	Also requires (1) D6AZ 3E700-A & (1) D4AZ 3E717-A	1 1
74/76	C - - w/column shift, fixed wheel and A/T	★ D60Z 3511-A r/bE0TZ 3511-D(2/81)	Vehicles built before 2/2/76 also require (1) D6AZ 11582-A	1
	C - - w/column shift and M/T C - - w/floor shift	D60Z 3511-B	#D60W 3511-AWA or BWA- also requires (1) D6AZ 3E700-A	1
	C - - w/tilt wheel	D5AZ 3511-B		1
73	F - - w/fixed wheel	D5AZ 3511-A	Also requires (1) D4AZ 3E717-A & (1) D4AZ 11582-A	1
	F - - w/tilt wheel	D5AZ 3511-B		1
74/	F - - w/column shift and fixed wheel	★ D60Z 3511-A r/bE0TZ 3511-D(2/81)	Vehicles built before 2/2/76 also require (1) D6AZ 11582-A	1

COPYRIGHT © 1986 — FORD MOTOR COMPANY — DEARBORN, MICHIGAN

1973/79 LINCOLN-MERCURY CARS

YEAR	MODEL/RESTRICTIONS	PART NUMBER	DESCRIPTION	QTY.
3511	FLANGE (STEERING COLUMN TUBE) — Cont'd			
75/76	F - - w/floor shift "From 1/6/75 to 2/2/76"	D60Z 3511-B	#D60W 3511-AWA or BWA - also requires (1) D6AZ 3E700-A	
75/	F - - w/tilt wheel	D5AZ 3511-B		1
76/	F - - w/floor shift "From 2/2/76"	D60Z 3511-B	#D60W 3511-DWA or EWA	1
75/76	G - - w/column shift and A/T "Before 2/2/76"	D5AZ 3511-A		1
76/	G - - w/column shift and A/T "From 2/2/76"	★ D6AZ 3511-A r/bE4TZ 3511-B(12/84)		1
75/76	G - - w/column shift and M/T	D60Z 3511-B	#D60W 3511-AWA or BWA-also requires (1) D6AZ 3E700-A	1
	G - - w/floor shift			1
76/	G - - w/tilt wheel	D5AZ 3511-B		1
76/	G - - w/column shift and M/T- "From 2/2/76"	D60Z 3511-B	#D60W 3511-DWA or EWA	1
79	J - - w/fixed wheel	★ D8BZ 3511-A	R/b E43Z 3511-A(6/83)	1
	J - - w/tilt wheel	★ D9AZ 3511-A	R/b 1 pc. E0AZ 3511-B, 1 pc. N801013-S pin, 1 pc. N801012-S(6/80)	1
74/76	L "Before 2/2/76"	D60Z 3511-B	Also requires (1) D6AZ 3E700-A	1
76/	L "From 2/2/76"	D60Z 3511-B	#D60W 3511-DWA or EWA	1
73	P - - w/column shift and A/T			
	"Before 11/1/72"	D00Z 3511-B	#D00A 3511-CW	1
	"From 11/1/72"	★ D60Z 3511-A r/bE0TZ 3511-D(2/81)	Also requires (1) D4AZ 3E717-A & (1) D6AZ 11582-A	1
73	P - - w/column shift and M/T	D5AZ 3511-A	Also requires (1) D4AZ 3E717-A & (1) D4AZ 11582-A	1
	P - - w/floor shift			1
74/76	P - - w/floor shift "Before 2/2/76"	D5AZ 3511-A		1
76/77	P - - w/floor shift "From 2/2/76"	★ D6AZ 3511-A	#D6AW 3511-BWC or CWA-r/b E4TZ 3511-B	1
74/77	P - - w/column shift and A/T	★ D60Z 3511-A	R/b E0TZ 3511-D(2/81)	1
77	P - - w/column shift and M/T	D60Z 3511-B	#D60W 3511-DWA or EWA	1
78	P	★ D8BZ 3511-A	#D8BC 3F643-AD-r/b E43Z 3511-A(6/83)	1
79	P - - w/fixed wheel	★ D8BZ 3511-A	R/b E43Z 3511-A(6/83)	1
	P - - w/tilt wheel	★ D9AZ 3511-A	R/b 1 pc. E0AZ 3511-B, 1 pc. N801013-S pin, 1 pc. N801012-S(6/80)	1
77/	V - - w/tilt wheel	D5AZ 3511-B		1
	V - - w/fixed wheel, column shift	★ D6AZ 3511-A	R/b E4TZ 3511-B(12/84)	1
	V - - w/fixed wheel, floor shift	D60Z 3511-B		1

YEAR	MODEL/RESTRICTIONS	ENGINE CYL.	ENGINE C.I.D. (C.C.D.)	PART NUMBER	DESCRIPTION	QTY.
3C511	SUPPORT (POWER STEERING PUMP)-Also refer to group 3A732					
73/76	A,Y	8	351	D1AZ 3C511-A		1
73/75	A,Y - - w/Ford pump- "Before 11/1/74"	8	400	D1AZ 3C511-A		1
76	A,Y (exc. 71) - - w/Ford pump	8	400	D1AZ 3C511-A		1
77	A (exc.71) - - w/Ford pump					1
75/76	A,Y - - w/Saginaw pump- "From 11/1/74"	8	400	★ D7LZ 3C511-A(6/83)	Front	1
				★ D5AZ 3C511-B(9/82)	Rear-used without A/C	1
73	A,Y	8	429,460	★ D3MY 3C511-A(3/81)	Front	1
				★ D3MY 3C511-B(6/82)	Rear-used without A/C	1
74/76	A,Y - - without A/C	8	429,460	★ D3MY 3C511-A(3/81)	Front	1
77	A - - with A/C	8	All		Front	1
74	A,Y - - with A/C & York or Tecumseh compressor- "Before 5/1/74"				Front	1
74/78	A,Y - - with A/C & Frigidaire compressor- "From 5/1/74"	8	460	★3C511	Front-use 2883 bracket	

1973/79 LINCOLN-MERCURY CARS

YEAR	MODEL/RESTRICTIONS	ENGINE CYL.	ENGINE C.I.D. (C.C.D.)	PART NUMBER	DESCRIPTION	QTY.
3C511	SUPPORT (POWER STEERING PUMP)–Also refer to group 3A732 — Cont'd					
74/76	A,Y – – without A/C	8	460	★ D3MY 3C511-B(6/82)	Rear	1
77	A – – with A/C	8	351-400	★ D7LY 3C511-C(6/83)	Rear	1
77	A – – w/Saginaw pump	8	351,400	★ D7LZ 3C511-A(6/83)	Front	1
				D5AZ 3C511-B	Rear	1
77/78	A – – without A/C	8	460	★ D3MY 3C511-A(3/81)	Front	1
				★ D3MY 3C511-B(6/82)	Rear	1
78	A – – w/Ford pump "Before 1/3/78"	8	351M-400	★ D80Z 3C511-C(6/82)	#D80C 3C511-CA	1
	A – – w/Ford pump "From 1/3/78"	8	351M-400	D8AZ 3C511-B	#D8AC 3C511-BA	1
	A – – w/Ford pump	8	351M-400	★ D80Z 3C511-A	Front-#D80C 3C511-AA-r/b E2BZ 3C511-A(12/81)	1
	A – – w/o hydroboost "Before 10/1/77"	8	351M-400	★ D7AZ 3C511-C(6/82)	Rear	1
	A – – w/hydroboost "Before 10/1/77"	8	351M-400	★ D7LY 3C511-C(6/83)	Rear	1
	A – – w/hydroboost "Before 10/1/77"	8	351M-400	★ D7LZ 3C511-A(6/83)	Front	1
	A – – w/hydroboost "From 10/1/77"	8	351M-400	★ D8AZ 3C511-A(3/84)	Front	1
	A – – w/o hydroboost w/Saginaw pump	8	351M-400			1
79	A	8	All	D9AZ 3C511-A		1
73/76	C – – without A/C	8	302	★ D1ZZ 3C511-A(3/81)		1
	C – – A/C "Before 9/30/73"	8	302	D1AZ 3C511-A		1
	C – – A/C "From 9/30/73"	8	302	D1ZZ 3C511-A		1
	C	8	351C	★ D0ZZ 3C511-A(12/84)		1
		8	351W	D1AZ 3C511-A		1
		8	400	D1AZ 3C511-A		1
		8	429,460	D0AZ 3C511-F		1
77/78	D,K "Before 10/1/77"	8	400	★ D7LY 3C511-C(6/83)	Rear	1
77/78	D,K "Before 10/1/77"	8	400	★ D7LZ 3C511-A(6/83)	Front	1
78/	D "From 10/1/77"	8	400	★ D8AZ 3C511-A(3/84)		1
73/76	F	8	351	★ D0ZZ 3C511-A(12/84)		1
74/76	F	8	400	D1AZ 3C511-A		1
		8	460	D0AZ 3C511-F		1
77	F	8	302	★ D70Z 3C511-A(3/81)		1
77	F	8	351-400	D1AZ 3C511-A		1
78	F	8	302	★ D80Z 3C511-A	r/b E2BZ 3C511-A(12/81)	1
		8	351W	D80Z 3C511-B		1
	"Before 1/3/78"	8	351M,400	★ D80Z 3C511-C(6/82)		1
	"From 1/3/78"	8	351M,400	D8AZ 3C511-B	#D8AC 3C511-BA	1
79	F	8	302	★ D80Z 3C511-A	r/b E2BZ 3C511-A(12/81)	1
		8	351W	D80Z 3C511-B		1
		8	351M	D8AZ 3C511-B		1
75/76	G	6	200	★ C80Z 3C511-A(3/84)	Front support	1
	"Before 5/3/76"	6	200	D0DZ 3C511-B	Rear and hose index	1
	"From 5/3/76"	6	200	★ D6DZ 3C511-C(2/80)	Rear support and hose index	1
		6	200	D3DZ 3C511-A	Top support	1
	– – without A/C	8	302	★ D5DZ 3C511-A	Front-#D5DW 3C511-AA-r/b D70Z 3C511-A(12/80)	1
	– – without A/C	8	351	D1AZ 3C511-A		1
76/77	G – – with A/C	6	250	D6DZ 3C511-B	Rear	1
76/77	G – – with A/C	8	302,351	3C511	Front-use 2883 bracket	1
77	G	8	302-351	D7DZ 3C511-B	Rear	1
77	G	6	200	★ C80Z 3C511-A(3/84)	Front support	1
77	G	6	200	★ D7DZ 3C511-A(3/81)	Rear support and hose index	1
	G – – without A/C	8	302	★ D70Z 3C511-A(3/81)	Front # D70A 3C511-AA	1
	G – – without A/C	8	351	D1AZ 3C511-A		1

COPYRIGHT © 1986 — FORD MOTOR COMPANY — DEARBORN, MICHIGAN

1973/79 LINCOLN-MERCURY CARS

YEAR	MODEL/RESTRICTIONS	ENGINE CYL.	ENGINE C.I.D. (C.C.D.)	PART NUMBER	DESCRIPTION	QTY.
3C511	SUPPORT (POWER STEERING PUMP)-Also refer to group 3A732 — Cont'd					
78	G	6	250	★ D8DZ 3C511-A(3/84)	Front-adjusting-#D8DC 3C511-AB	1
	G	6	250	★ D8DZ 3C511-F(6/82)	Front-#D8DC 3C511-BA	1
	G	6	250	★ D8DZ 3C511-B(3/84)	Rear-primary-#D8DC 3E670-AA	1
	G	6	250	★ D8DZ 3C511-D(6/82)	Rear-secondary-#D8DC 3E670-CA	1
	G	6	250	★ D8DZ 3C511-G(6/82)	Rear-#D8DC 3E670-EA	1
	G - - without A/C	8	302	D80Z 3C511-A		1
	G - - with A/C	8	302	★ D8DZ 3C511-H(3/84)		1
79	G	6	250	D9DZ 3C511-A		1
	G - - with A/C	8	302	★ D8DZ 3C511-H(3/84)	W/Ford pump	1
	G - - without A/C	8	302	★ D80Z 3C511-A	r/b E2BZ 3C511-A(12/81)	1
79	J - - without A/C	6	171	D4ZZ 3C511-C		1
	J	6	171	D8FZ 3C511-A		1
79	J - - with A/T	6	200	D8BZ 3C511-A		1
	J	4	140	D9BZ 3C511-A		1
	J - - with A/C	8	302	D9ZZ 3C511-A		1
	J - - without A/C	8	302	D9ZZ 3C511-B		1
78/	K "From 10/1/77"	8	400	★ D8AZ 3C511-A(3/84)		1
75/76	L	4	All	★ D4ZZ 3C511-A(9/83)		1
77/78	L	4	140	★ D7FZ 3C511-B(3/84)	Adjusting	1
75/78	L - - A/C	6	All	★ D4ZZ 3C511-B(6/82)		1
	L - - without A/C	6	All	D4ZZ 3C511-C		1
77/78	L "From 6/27/77"	4	140	★ D8FZ 3C511-B(3/84)	Rear	1
		6	171	D8FZ 3C511-A		1
79	L	4	140	D9BZ 3C511-A		1
	L	6	171	D8FZ 3C511-A		1
	L - - without A/C	6	171	D4ZZ 3C511-C		1
73/76	P	6	200	★ C80Z 3C511-A(3/84)	Front support	1
				D0DZ 3C511-B	Rear support and hose	1
				★ D3DZ 3C511-A(6/82)	Top support	1
73/74	P "Before 6/1/74"	8	302	★ D1ZZ 3C511-A(3/81)		1
74/76	P "From 6/1/74"	8	302	★ D5DZ 3C511-A	#D5DW 3C511-AA-r/b D70Z 3C511-A(12/80)	1
77	P	6	200	★ C80Z 3C511-A(3/84)	Front	1
	P	6	200	★ D7DZ 3C511-A(3/81)	Rear	1
	P - - exc. Canada	6	250	D6DZ 3C511-B	Rear	1
	P - - without A/C	8	302	★ D70Z 3C511-A(3/81)	Front #D70A 3C511-AA	1
78	P	4	140	★ D8FZ 3C511-B(3/84)	Rear	1
		4	140	★ D7FZ 3C511-B(3/84)	Adjusting	1
	P	6	200	D8BZ 3C511-A		1
	P - -with A/C	8	302	D8ZZ 3C511-A		1
	P - - without A/C	8	302	★ D80Z 3C511-A	r/b E2BZ 3C511-A(12/81)	1
	P - - without A/C	8	302	D5ZZ 3C511-B	Rear	1
79	P	4	140	D9BZ 3C511-A		1
	P	6	200	D8BZ 3C511-A	W/Ford pump	1
	P	6	200	D9BZ 3C511-B	W/Saginaw pump	1
	P - - with A/C	8	302	D8ZZ 3C511-A		1
	P - - without A/C	8	302	★ D80Z 3C511-A	r/b E2BZ 3C511-A(12/81)	1
77	V	8	All	D7DZ 3C511-B		1
78/	V	2	All	★ D8DZ 3C511-H(3/84)		1
73/77	A,Y	8	351	370608-S2	(BB-579)-bolt (support to water pump hsg.)- 3/8"-16 x 3/4"	2
	A,C,Y	8	400			2
				384387-S2	(BB-563-BK)-bolt (support to engine)- 7/16"-14 x 1 1/2"	1

YEAR	MODEL/RESTRICTIONS	ENGINE CYL.	ENGINE C.I.D. (C.C.D.)	PART NUMBER	DESCRIPTION	QTY.
3C511	SUPPORT (POWER STEERING PUMP)-Also refer to group 3A732 — Cont'd					
73/77	A,Y	8	429,460	381649-S2	(BB-563-AH)-bolt (front support to engine)-3/8"-16 x 1 1/8"	AR
	A,Y - - without A/C	8	429,460	384094-S2	(BB-563-BJ)-bolt (rear support to engine)-7/16"-14 x 1 1/4"	AR
78 78/	A D,K	8 8	351M,400 400	386069-S2	(BB-891-H)-bolt (support to engine)-7/16"-14 x 6 13/64"	1 1
73/76	C - - A/C	8	302	370608-S2	(BB-579)-bolt (support to water pump hsg.)-3/8"-16 x 3/4"	2
				353723-S2	(WW-6-FD)-stud (support to engine)	
				34988-S	(M-89-D)-nut	1
				385243-S2	(BB-564-BL)-bolt (support to engine)-7/16"-14 x 1 7/8"	1
73/76 73/77	C - - without A/C P	8 8	302 302	370608-S2	(BB-579)-bolt (support to water pump hsg.)-3/8"-16 x 3/4"	2 2
				383722-S2	(BB-518-K)-bolt (support to engine)-7/16"-14 x 6 3/8"	1
73/76	C,F	8	351C	370608-S2	(BB-579)-bolt (support to water pump hsg.)-3/8"-16 x 3/4"	2
				383721-S100	(BB-518-J)-bolt (support to engine)-7/16"-14 x 6 3/8"	1
73/76 73/76	C C,Y	8 8	351W 429,460	370608-S2	(BB-579)-bolt (support to water pump hsg.)-3/8"-16 x 3/4"	AR AR
				383723-S2	(WW-6-FD)-stud (support to engine without A/C)-7/16"-14 x 2 5/8"	1
				34988-S	(M-89-D)-nut-7/16"-14	1
77	L	4 6	140 171	387408-S2	(MM-38-AM)-nut (support to pump) 5/8"-18 hex	1 1
73/77	P	6	200	382860-S2	(BB-890)-bolt (front support to top)-3/8"-16 x 6 3/16"	1
				384027-S2	(BB-575)-bolt (top support to engine side)-5/16"-18 x 1"	2
				383721-S2	(BB-518-J)Bolt (3C511 & 3A732 to 9B450)-7/16"-14 x 6 1/8"	1
79	P - - w/Saginaw pump			388750-S2	(BB-638-G)-bolt (support to 9B450)-7/16"-14 x 6 3/16"	1
				388751-S	(VV-1-AD)-spacer (support to 9B450)-7/16" x 1"	1

YEAR	MODEL/RESTRICTIONS	PART NUMBER	DESCRIPTION	QTY.
3A512-3	PLUG (POWER STEERING CONTROL VALVE REACTION CONTROL SPRING)			
75/ 73/77 77/	G P V	B9M 3A512-A B9M 3A513-A	Sleeve end Cap end	1 1 1
3A513	Refer to group 3A512			
3514	TUBE ASSY. (STEERING COLUMN)			
73	A,Y - - w/fixed wheel	★ D3AZ 3514-C(6/82)		1
74/76	A,Y - - w/fixed wheel	★ D3AZ 3514-C(6/82)		1
	A,Y - - w/tilt wheel	★ D4AZ 3514-A(6/82)		1
77/78	A - - w/fixed wheel	★ D3AZ 3514-C(6/82)		1
	A - - w/tilt wheel	★ D4AZ 3514-A(6/82)		1
79	A - - w/fixed wheel	★ D9AZ 3514-A(9/83)		1
79	A - - w/tilt wheel	D9AZ 3514-B		1
74/76	C - - w/column shift, fixed wheel and A/T	D40Z 3514-B		1
	C - - w/column shift, fixed wheel and M/T	D40Z 3514-A		1
	C - - w/floor shift	D40Z 3514-C		1
	C - - w/tilt wheel	★ D40Z 3514-D(6/83)		1

COPYRIGHT © 1986 — FORD MOTOR COMPANY — DEARBORN, MICHIGAN

1973/79 LINCOLN-MERCURY CARS

YEAR	MODEL/RESTRICTIONS	PART NUMBER	DESCRIPTION	QTY.
3514	TUBE ASSY. (STEERING COLUMN) — Cont'd			
73	D - - w/fixed wheel			
	"Before 11/27/72"	D1VY 3514-D		1
	"From 11/27/72"	r/bD3VY 3514-B		1
	D - - w/tilt wheel "Before 11/27/72"	D1VY 3514-C		1
	"From 11/27/72"	★ D3VY 3514-A	Not replaced (6/79)	1
74/	D - - w/tilt wheel	★ D8VY 3514-B(9/83)		1
74/76	D - - w/fixed wheel "Before 5/31/76"	★ D3VY 3514-B	R/b 1 pc. D8VY 3514-A & 1 pc. D6VY 11A599-A(12/80)	1
76/	D - - w/fixed wheel "From 5/31/76"	D8VY 3514-A		1
74/	F - - w/column shift, fixed wheel and A/T	D40Z 3514-B		1
	F - - w/floor shift	D40Z 3514-C		1
	F - - w/tilt wheel	★ D40Z 3514-D(6/83)		1
75/76	G - - w/column shift and M/T	★ D5DZ 3514-A	Not replaced	1
75/	G - - w/column shift, A/T and fixed wheel	★ D5DZ 3514-B(3/84)		1
	G - - w/floor shift	★ D5DZ 3514-C(3/84)		1
76/	G - - w/tilt wheel	★ D6DZ 3514-A(3/84)		1
73/78	J	D3RY 3514-A		1
		20346-S8	(B-501)-bolt-hex. hd.-5/16"-18 x 3/4"	2
		20386-S8	(B-53)-bolt (column to support)-5/16"-18 x 1"	AR
		34806-S7	(X-64)-lockwasher-split ring-5/16"	2
79	J	D8BZ 3514-A		1
73	K - - w/tilt wheel	★ D2SZ 3514-A	Not replaced	1
74/	K - - w/fixed wheel	D40Z 3514-B		1
	K - - w/tilt wheel	★ D40Z 3514-D(6/83)		1
74/	L	★ D4ZZ 3514-A(3/84)		1
		385791-S2	(WW-129-G)-stud (column to brake pedal support assy.)-3/8"-16 x 2 1/4"	2
		385848-S2	(BB-198-EG)-bolt (column to brake pedal support assy.)-3/8"-16 x 1 1/2"	2
74/77	P - - w/column shift and A/T	★ D4DZ 3514-B(3/81)		1
74/76	P - - w/column shift and M/T	D4DZ 3514-A		1
74/77	P - - w/floor shift	★ D4DZ 3514-B(3/81)		1
77	P - - w/column shift and M/T	★ D7DZ 3514-A(3/81)		1
78/	P - - w/fixed wheel	D8BZ 3514-A		1
79	P - - w/tilt wheel	D9BZ 3514-A		1
77/	V - - w/floor shift	★ D5DZ 3514-C(3/84)		1
	V - - w/column shift, fixed wheel	★ D5DZ 3514-B(3/84)		1
	V - - w/column shift, tilt wheel	★ D6DZ 3514-A(3/84)		1
3F514	NUT (STEERING GEAR RACK & SPINDLE CONNECTING ROD LOCK)			
73/78	J - - M/S	★ D5RY 3F514-B	Included pin-r/b D8RZ 3F514-A (6/79)	
76/78	J - - P/S	D5RY 3F514-A	Includes pin	1
74/	L - - M/S	D4FZ 3F514-A	Includes pin	1
75/76	L - - P/S	D4ZZ 3F514-A	Includes pin	1
3F515	BEARING (STEERING GEAR RACK ADJUSTMENT)			
73/78	J - - M/S	★ D3RY 3F515-A	R/b D8RZ 3F515-A (3/79)	
76/78	J - - P/S	★ D5RY 3F515-A(3/81)		1
79	J - - M/S	D8BZ 3F515-B		1
	J - - P/S	D4ZZ 3F515-A	With #SPR-R (TRW) gear	1
	J- - P/S	E0SZ 3F515-A	With #SPR-R (Ford) gear	1
74/	L - - M/S	D3FZ 3F515-B	Yoke-rack support	1
75/	L - - P/S	D4ZZ 3F515-A		1

YEAR	MODEL/RESTRICTIONS	PART NUMBER	DESCRIPTION	QTY.
3F515	BEARING (STEERING GEAR RACK ADJUSTMENT) — Cont'd			
78	P - - P/S	D4ZZ 3F515-A	With #SPR-B,D (TRW) gear	1
78/	P - - P/S	E0SZ 3F515-A	With #SPR-A,C,E,P (Ford) gear	1
	P - - M/S	D8BZ 3F515-B	Incl. spring	1
3517	BEARING ASSY. (STEERING COLUMN TUBE)			
73/ 73/76 73/77	A,D,F,G,V - - w/fixed wheel C,Y - - w/fixed wheel P - - w/fixed wheel	★C7SZ 3517-D r/bE1FZ 3517-B(12/85)	3/4" I.D. x 1 3/16" O.D. x 1/4" thick	1 1 1
73/78 73/ 73 73/76	A - - w/tilt wheel D - - w/tilt wheel F - - w/tilt wheel Y- - w/tilt wheel	★C7SZ 3517-D r/bE1FZ 3517-B(12/85) C7SZ 3517-C	Upper-3/4" x 1 3/16" O.D. x 1/4" thick Lower-1 1/16" I.D. x 1 1/2" O.D. x 1/4" thick	1 1 1 1
79	A - - w/tilt wheel	★C7SZ 3517-D r/bE1FZ 3517-B(12/85)	Upper	1
	A	D9AZ 3517-A	Top	1
	A	D1FZ 3517-A	Lower	1
	A	E2AZ 3517-A	Lower-(1) on shift tube, (1) on 3524 shaft	2
74/76 74/	C - - w/tilt wheel F - - w/tilt wheel	★C7SZ 3517-D r/bE1FZ 3517-B(12/85)	Upper-flange bearing-3/4" I.D. x 1 3/16" O.D. x 1/4" thick	1
		C7SZ 3517-C	Lower-flange bearing-1 1/16" I.D. x 1 1/2" O.D. x 1/4" thick	1
		D1FZ 3517-A	Lower-shaft bearing-1" I.D. x 1 1/2" O.D. x 1/2" thick	1
73/76	C - - w/fixed wheel	★C7SZ 3517-D r/bE1FZ 3517-B(12/85)	Upper-3/4" I.D. x 1 3/16" O.D. x 1/4" thick	1
73/	K - - w fixed wheel	D1FZ 3517-A	Lower-1" I.D. x 1 1/2" O.D. x 1/2" thick	1
73/	F - - w/fixed wheel	D1FZ 3517-A	Lower-1 1/2" O.D.-1" I.D.-1/2" thick	1
76/	G - - w/tilt wheel	★C7SZ 3517-D r/bE1FZ 3517-B(12/85)	Upper	1
77/	V	C7SZ 3517-C	Lower	1
73/78	J	D1RY 3517-C	Upper	1
		D0RY 3517-A	Lower	1
		111125-ES	Washer-flat-11/16"	1
		111963-ES	Ring-snap-5/8"	1
79	J	★C7SZ 3517-D r/bE1FZ 3517-B(12/85)	Upper	1
	J - - w/tilt wheel	D9AZ 3517-A	Top	1
	J	D1FZ 3517-A	Lower	1
73/	K - - w/tilt wheel	★C7SZ 3517-D r/bE1FZ 3517-B(12/85)	Upper-flange bearing-3/4" I.D. x 1 3/16" O.D. x 1/4" thick	1
		C7SZ 3517-C	Lower-flange bearing-1 1/16" I.D. x 1 1/2" O.D. x 1/4" thick	1
		D1FZ 3517-A	Lower-shaft bearing-1 1/2" I.D. x 1 1/2" O.D. x 1/4" thick	1
74/	L	★C7SZ 3517-D r/bE1FZ 3517-B(12/85)	Upper-3/4" I.D. x 1 3/16" O.D. x 1/4" thick	1
		D1FZ 3517-A	Lower-1" I.D. x 1 1/2" O.D. x 1/2" thick	1
78/	P	★C7SZ 3517-D r/bE1FZ 3517-B(12/85)	Upper	1
		D1FZ 3517-A	Lower	1
79	P - - w/tilt wheel	D9AZ 3517-A	Top	1
73/78 73/76	A C,Y	97663-S	(Q-4-A)-snap ring (upper bearing to shaft)-11/16" I.D. x 1 3/16" O.D. x 3/64" thick	AR
73/ 73/77	D,F,K,L P	372876-S	(QQ-38-A)-snap ring (upper bearing to shaft)-11/16" I.D. x 3/4" O.D. x 1/64" thick	AR
79	A,J,P - - w/tilt wheel	97476-S2	(Q-4-G)-"C"-clip-retains top bearing-27/32" O.D.	1

COPYRIGHT © 1986— FORD MOTOR COMPANY —DEARBORN, MICHIGAN

1973/79 LINCOLN-MERCURY CARS

YEAR	MODEL/RESTRICTIONS	PART NUMBER	DESCRIPTION	QTY.
3D517	**SHAFT and CONTROL ASSY. (POWER STEERING GEAR INPUT)**			
73/78	A,C,D,K,F,Y "Before 5/30/78"	★ D6AZ 3D517-B r/b D9AZ 3D517-B (3/79)	Use w/gear ident. #SPA-AA,AM,AS,BH,BK,BM vehicles built before 6/10/74 also require (1) D5AZ 3A525-D for fixed Wheel or (1) D5AZ 3A525-E for tilt wheel	1
73/	C,F		For Saginaw gears #SPA-AH,AT,CA refer to group 3812	
79	A(54,66)	D9AZ 3D517-A	Use w/gear ident. #SPA-BU,CL	1
78	A,D,F,K "From 5/30/78"	D9AZ 3D517-B	Use w/gear ident. #SPA-BW,CM	1
79	A(74),D,F,K			1
76	J "Before 11/1/75"	D5RY 3D517-B		1
	Consists of			
	1-74EB 3E571-AA Gasket		1-E420009-S100 Nut	
	1-74EB 3E571-BA Gasket		1-E432000-S Washer	
	1-74EB 3A730-AA Valve & pinion assy.		1-E854023-S "O" ring	
	1-74EB 3K768-AA Shaft		1-E854029-S "O" ring	
76/78	J "From 11/1/75"	★ D6RY 3D517-A(9/82)		1
	Consists of			
	1-74EB 3E571-AA Gasket		1-E420009-S100 Nut	
	1-74EB 3E571-BA Gasket		1-E432000-S Washer	
	1-74EB 3A730-AA Valve & pinion assy.		1-E854023-S "O" ring	
	1-74EB 3K768-AB Shaft		1-E854029-S "O" ring	
79	J	★ D9ZZ 3D517-A r/b E0ZZ 3D517-A(3/80)	Use w/#SPR-M,Z (TRW) gear	1
	J	E0BZ 3D517-A	Use w/#SPR-R (Ford) gear	1
75/76	L	★ D5ZZ 3D517-A	R/b D7FZ 3D517-B(11/79)	1
77	L "Before 7/6/77"	★ D7FZ 3D517-A	R/b D7FZ 3D517-B(6/81)	1
77/78	L "From 7/6/77 to 5/15/78"	★ D8FZ 3D517-A	R/b D8FZ 3D517-B(11/79)	1
78/	L "From 5/15/78"	★ D8FZ 3D517-B	R/b E0FZ 3D517-A (11/85)	1
78/	P	E0BZ 3D517-A	Use with #SPR-A,C,E,P (FORD) gear	1
78	P	★ E1BZ 3D517-A	Use with #SPR-B,D (TRW) gear-r/b E0ZZ 3D517-A	1
3L517	**WASHER (POWER STEERING PUMP RESERVOIR COVER BOLT)**			
76/78	J	★ D5RY 3L517-A(3/81)		1
3518	**SLEEVE (STEERING COLUMN TUBE BEARING)**			
73/78	A	★ D1AZ 3518-A r/b E2AZ 3518-A(1/84)	Upper-1 3/16" I.D. x 1 5/16" O.D. x 3/8" thick	1
73/76	C,Y			1
73/	D,F,G,K,L,V			1
77	P			1
79	A	★ D8BZ 3518-A	Lower-r/b D1AZ 3518-A(11/79)	1
		★ D1AZ 3518-A r/b E2AZ 3518-A(1/84)	Upper	1
73/76	C	D20Z 3518-A	Lower-1 1/2" I.D. x 1 9/16" O. D. x 11/32" thick	1
73/	D,K			1
74/	F			1
79	J	★ D8BZ 3518-A	Lower-r/b D1AZ 3518-A(11/79)	1
78/	P	★ D1AZ 3518-A r/b E2AZ 3518-A(1/84)	Upper	1
3E518	**CAP (STEERING COLUMN POSITION LOCK SPRING)**			
73/78	A - - w/tilt wheel	C7SZ 3E518-A	1/2" I.D.-to retain 3B768 springs	2
73/76	C,Y - - w/tilt wheel	C7SZ 3E518-B	1/8" I.D. x 3/8" long - to retain 3B664 spring	1
73/	D,F,G,K,L,V - - w/tilt wheel			
79	A,J,P - - w/tilt wheel	D9AZ 3E518-A		1

YEAR	MODEL/RESTRICTIONS	PART NUMBER	DESCRIPTION	QTY.
3F518	GASKET and SHIM KIT (STEERING GEAR SECTOR SHAFT HOUSING COVER)			
79	J	D3FZ 3F518-A		1
74/	L - - M/S			1
78/	P - - M/S			1
	Consists of			
	1-D32R 3F518-AA Shim-.002" thick		1-D32R 3F518-CA Shim-.010" thick	
	1-D32R 3F518-BA Shim-.005" thick		1-D32R 3F519-AA Gasket-yoke cover	
3A519	BUSHING (POWER STEERING CONTROL VALVE SPOOL)			
75/	G,V	★ C20Z 3A519-B(3/84)		2
73/77	P			2
3520	SPRING (STEERING COLUMN UPPER BEARING)			
79	A,J,P - - w/tilt wheel	D9AZ 3520-A		1
73/78	J	★ D5RY 3520-A(3/84)		1
3F521	SEAL (STEERING GEAR RACK TUBE)			
79	J - - P/S	D8BZ 3F521-A	Also included in 3E501 kit	1
78/	L - - P/S "From 5/15/78"			1
78/	P - - P/S		With #SPR-A,C,E,P (Ford) gear	1
3523	GUIDE (STEERING GEAR BALL RETURN)			
73/78	A	C9AZ 3523-A		2
79	A		Use w/gear ident. SPA-BW	2
73/76	C,Y		Use w/Ford gear	2
73/	D,K			2
74/	F		Use w/Ford gear	2
79	A	D9AZ 3523-A	Use w/gear ident. SPA-BU	2
73/74	C - - M/S	C5AZ 3523-B		4
73	F - - M/S			4
75/	G - - M/S	C70Z 3523-B	Use w/gear ident. SMA-F1, incl. (1) guide and	1
73/77	P - - M/S		(1) clamp	1
75/	G - - P/S	★ C50Z 3523-A(3/84)	Use w/gear ident. SMA-B1,Y	4
73/77	P - - P/S			4
77/	V			4
3524	WORM GEAR and RACK ASSY. (STEERING GEAR INPUT)			
73/	A,C - - P/S		Refer to group 3D517	
73/76	C - - M/S	★ D1AZ 3524-A(3/81)	Use w/gear ident. SMA-T	1
73	F - - M/S			1
73/76	C - - P/S	★ C5AZ 3524-D(3/84)	Use w/gear ident. SPA-AH,AT	1
73	F - - P/S	★ D1ZZ 3524-D	Use w/gear ident. SPA-T,V-AD or AF-Not replaced	1
		★ C5AZ 3524-D(3/84)	Use w/gear ident. SPA-S,U-AC or AE	1
75/	F - - P/S	★ C5AZ 3524-D(3/84)	Use w/gear ident. SPA-AH,AT,CA (Saginaw)	1
73/74	J - - M/S	★ D1RY 3524-D(9/83)		1
76/78	J - - M/S	★ D5RY 3524-C(6/82)		1
79	J - - M/S	D9BZ 3524-A		1
74/78	L - - M/S	D5FZ 3524-B	Use w/#SMC-H,J,M gear -vehicles built before 5/15/75 also require (1) D5FZ 3A525-A	1
79	L - - M/S	D9FZ 3524-A		1
75/	G - - M/S	C70Z 3524-A		1
	G - - P/S	★ D10Z 3524-A(3/84)		1
73/77	P - - M/S	C70Z 3524-A		1
	P - - P/S	★ D10Z 3524-A(3/84)		1
78	P - - M/S	D8BZ 3524-B		1
79	P - - M/S	D9BZ 3524-A		1
77/	V	★ D10Z 3524-A(3/84)		1
3524	SHAFT ASSY. (STEERING COLUMN)			
73	A,Y - - w/fixed wheel	★ D2AZ 3524-A(3/81)	34 9/16" long	1
	A,Y - - w/tilt wheel	D4AZ 3524-B		1
74	A,Y - - w/fixed wheel	★ D4AZ 3524-A(2/80)		1
	A,Y - - w/tilt wheel	★ D4AZ 3524-B(2/80)		1
75/76	A,Y - - w/fixed wheel	D5AZ 3524-B		1
	A,Y - - w/tilt wheel	★ D5AZ 3524-A(6/82)		1

COPYRIGHT © 1986— FORD MOTOR COMPANY —DEARBORN, MICHIGAN

1973/79 LINCOLN-MERCURY CARS

YEAR	MODEL/RESTRICTIONS	PART NUMBER	DESCRIPTION	QTY.
3524	SHAFT ASSY. (STEERING COLUMN) — Cont'd			
77/78	A - - w/fixed wheel	D5AZ 3524-B		1
	A - - w/tilt wheel	★ D5AZ 3524-A(6/82)		1
79	A - - w/fixed wheel	E0AZ 3524-A	Upper	1
	A - - w/tilt wheel	E0AZ 3524-B	Upper	1
	A	D9AZ 3B676-A	Lower	1
73/76	C - - w/fixed wheel	D20Z 3524-B	Upper	1
74/76	C - - w/tilt wheel	★ D40Z 3524-A(9/83)	Upper	1
73	C - - M/S "Before 11/1/72"	D30Z 3B676-A	Lower	1
	C - - M/S "From 11/1/72"	D30Z 3B676-C	Lower	1
73/76	C	D40Z 3B676-A	Lower	1
73	D - - w/fixed wheel	★ D2VY 3524-A	36 13/16" long-not replaced	1
	D - - w/tilt wheel	★ D0VY 3524-D	Not replaced	1
74/75	D - - w/fixed wheel	★ D4VY 3524-A	Not replaced	1
74	D - - w/tilt wheel	★ D4VY 3524-B	Not replaced	1
75/	D - - w/tilt wheel	★ D5VY 3524-A(3/84)		1
76/	D - - w/fixed wheel	D6VY 3524-A		1
73	F - - w/tilt wheel	★ D1ZZ 3524-B	Not replaced	1
74/	F - - w/fixed wheel	D20Z 3524-B	Upper	1
	F - - w/tilt wheel	★ D40Z 3524-A(9/83)	Upper	1
74/	F - - (Exc. Police & taxi)	D40Z 3B676-A	Lower	1
77/	F - - (Police & taxi)	★ D70Z 3B676-A(6/83)	Lower	1
75	G - - w/fixed wheel	D5DZ 3524-A		1
76/	G - - w/tilt wheel	★ D6DZ 3524-C	r/b E0DZ 3524-D(12/81)	1
	G - - w/fixed wheel	★ D6DZ 3524-B	r/b E0DZ 3524-C(12/81)	1
73/78	J - - M/S	D3RY 3524-A	Upper	1
73/78	J - - M/S	D5RY 3B676-B	Lower and coupling assy.	1
		131093-ES	Bolt (lower to upper and to steering gear input shaft)	2
		114685-ES	Nut-5/16"-18	2
76/78	J - - P/S	D5RY 3B676-B	Lower and coupling assy.	1
		★ D5RY 3524-B(3/81)	Upper	1
79	J - - w/fixed wheel w/o speed control	D8BZ 3524-A	Upper	1
	J - - w/speed control	D9ZZ 3524-A	Upper	1
	J - - w/tilt wheel	★ D9ZZ 3524-B(6/83)	Upper	1
	J - - 4 cyl. exc. Turbo, 6 cyl.	D8BZ 3B676-A	Lower	1
	J- - 4 cyl. Turbo	★ D9ZZ 3B676-A	Lower-r/b E0BZ 3B676-A (9/82)	1
	J - - 8 cyl.	★ D9ZZ 3B676-A	Lower-r/b E0BZ 3B676-A (9/82)	1
73/	K - - w/fixed wheel	D2SZ 3524-C	Upper-29 7/32" long	1
	K - - w/tilt wheel	D2SZ 3524-D	Upper-25" long	1
	K	D4SZ 3B676-A	Lower-6 3/8" long	1
74	L	D2SZ 3524-C	Upper	1
		D5FZ 3B676-A	Lower	1
75/	L	D5FZ 3524-A	Upper	1
		D5FZ 3B676-A	Lower	1
73/77	P	★ D3DZ 3524-A(6/83)	31 1/2" long	1
78	P	D8BZ 3524-A	Upper 31 1/16" long	1
	P - - 4 cyl.	D8BZ 3B676-A	Lower	1
	P - - 6 cyl. exc. Police & Taxi			1
	P - - 6 cyl. Police & Taxi	★ D9ZZ 3B676-A	Lower	1
	P - - 8 cyl.	r/bE0BZ 3B676-A(9/82)		1
79	P - - w/speed control	D9ZZ 3524-A	Upper	1
	P - - w/tilt wheel	★ D9ZZ 3524-B(6/83)	Upper	1
	P - - w/fixed wheel w/o speed control	D8BZ 3524-A	Upper	1
	P - - exc. Police and Taxi	D8BZ 3B676-A	Lower	1
	P - - Police and Taxi	★ D9ZZ 3B676-A	Lower-r/b E0BZ 3B676-A (9/82)	1
77/	V - - w/fixed column	★ E04Y 3524-A(3/84)		1
	V - - w/tilt column	★ E04Y 3524-B(3/84)		1
73	C,K	★ 58636-S2	Bolt (upper to lower)-3/8"-16 x 1 1/2"	1
		385349-S100	(MM-151-EF)-nut-3/8"-16	1
79	A,J,P	388795-S100	(MM-295-AJ)-NUT-7/16"-14 (attaches 3B676 to strg. col. shaft)	1

YEAR	MODEL/RESTRICTIONS	PART NUMBER	DESCRIPTION	QTY.
3A525	COUPLING (STEERING GEAR INPUT SHAFT TO STEERING COLUMN SHAFT)			
	● D5AZ 3A525-D or E coupling must be used, when spool valve type of steering gear assy. (3504) identified as SPA-AA or shaft & control assy. (3D517) of the steering gear assy. has been replaced by 1975 rotary valve type assy's.			
73	A,Y - - fixed wheel	D4AZ 3A525-A	#Green or white paint on insulator	1
		● D5AZ 3A525-D	#White or silver paint on insulator	1
	A,Y - - tilt wheel	★●D5AZ 3A525-E(9/83)		1
74	A,Y - - w/fixed wheel "Before 6/10/74"	● D5AZ 3A525-D	#White & silver paint on insulator	1
74	A,Y - - w/tilt wheel	★●D5AZ 3A525-E(9/83)	#White & silver paint on insulator	1
74/75	A,Y - - w/fixed wheel "From 6/10/74"	D5AZ 3A525-D		1
75	A,D,Y - - w/tilt wheel	D6AZ 3A525-B		1
76	A,D,Y - - w/fixed wheel	D6AZ 3A525-A		1
77/78	A,D - - w/fixed wheel	D6AZ 3A525-A		1
79	A			1
76/78	A,Y - - w/tilt wheel	D6AZ 3A525-B		1
73/76	C,K	D30Z 3A525-A	Use w/Ford gear	1
77/	K			1
73/76	C	D30Z 3A525-B	Use w/Saginaw gear	1
73/74	D "Before 6/10/74"	★●D5AZ 3A525-E(9/83)	#Green or white paint on insulator	1
74/	D - - w/tilt wheel "From 6/10/74"	D6AZ 3A525-B		1
73	F - - w/fixed wheel and M/S	C6AZ 3A525-A		1
	F - - w/fixed wheel and P/S	D1ZZ 3A525-A		1
	F - - w/tilt wheel and P/S	★ D1ZZ 3A525-B	Not replaced	1
74/	F	D30Z 3A525-A	Use w/Ford gear	1
74/	F	D30Z 3A525-B	Use w/Saginaw gear	1
75	G	D5DZ 3A525-D		1
76/	G	D6DZ 3A525-A		1
79	J - - M/S	D9BZ 3A525-A		1
	J - - P/S	D8BZ 3A525-B		1
74/75	L - - M/S "Before 5/15/75"	D3FZ 3A525-B	Use w/SMC-H gear assy.	1
75/78	L - - M/S "From 5/15/75"	D5FZ 3A525-A	Use w/SMC-J gear assy.	1
75/	L - - P/S	D30Z 3A525-A		1
79	L - - M/S	D9BZ 3A525-A		1
73	P	C6AZ 3A525-A		1
74	P - - P/S with T/E	D4AZ 3A525-A		1
	P - - M/S			1
	P - - P/S without T/E	C6AZ 3A525-A		1
75/77	P	D5DZ 3A525-C		1
78	P - - M/S	★ D8BZ 3A525-A(3/84)	Lower	1
	P - - P/S	D8BZ 3A525-B	Lower	1
79	P - - M/S	D9BZ 3A525-A		1
	P - - P/S	D8BZ 3A525-B		1
77/	V	★ D74Y 3A525-A(6/82)	Lower	1
		★ D74Y 3A525-B(3/84)	Upper	1
3D525	BEARING (POWER STEERING GEAR INPUT SHAFT)			
73/74	A,C,D,K,Y	C5AZ 3D525-A	Use w/Ford gear alternate with C5AZ 3D525-C, #8750-roller bearing	1
74	F			1
		C5AZ 3D525-C	Use w/Ford gear alternate with C5AZ 3D525-A, #8750-ball bearing	1
75/78	A,D,F,K	D5AZ 3D525-A	Used w/Ford gear	1
75/76	C,Y			1
79	A,D,F,K	D8AZ 3D525-A	Use w/Ford gear	1
79	J		Use w/#SPR-R (Ford) gear	1
78/	P - - P/S		Use w/#SPR-A,C,E,P Ford gear	1
73/75	C	C5AZ 3D525-B	Use w/Saginaw gear	1
73/	F		Use w/Saginaw gear	1
75/	L - - P/S		Use w/rack and pinion	1

COPYRIGHT © 1986— FORD MOTOR COMPANY —DEARBORN, MICHIGAN

1973/79 LINCOLN-MERCURY CARS

YEAR	MODEL/RESTRICTIONS	PART NUMBER	DESCRIPTION	QTY.
3L525	PLATE (STEERING COLUMN SHROUD CLIP RETAINER)			
79	A,J,P - - w/tilt column	E0AZ 3L525-A		1
3D526	SEAL (POWER STEERING GEAR INPUT SHAFT)			
73/	A,D,F,K	★ D5AZ 3D526-A	Use w/Ford gear ident. - also serviced in 3E502 kit	1
73/76	C,Y	r/bD6AZ 3D526-A(12/81)		1
79	J		With #SPR-R (Ford) gear	1
78/	P - - P/S		With #SPR-A,C,E (FORD) gear	1
3D527	SEAL (POWER STEERING GEAR INPUT SHAFT DUST)			
73/	A,D,F,K	D5AZ 3D527-A	With Ford gear-also serviced in 3E502 kit	1
73/76	C,Y			1
79	J		With #SPR-R (Ford) gear	1
78/	P - - P/S		With #SPR-A,C,E,P (Ford) gear	1
3F527	LEVER ASSY. (STEERING COLUMN LOCK ACTUATOR)			
73/76	C "From 11/1/72"	D40Z 3F527-A		1
76/77	P "From 4/19/76"			1
73/	F,G,L,V "From 11/1/72"			1
79	J	D8BZ 3F527-A		1
78/	P - - floor shift			1
3A528	FLANGE (STEERING SHAFT INSULATOR)			
75/77	A,D - - w/tilt wheel "From 8/13/75"	★ D5AZ 3A528-A(3/84)	Bolt on type	1
76/	G			1
75/76	Y			1
3C528	Serviced only in kit-group 3C651			
3D529	SPACER (POWER STEERING GEAR SECTOR SHAFT SEAL)			
73/	A,D,K	D3AZ 3D529-A	Also serviced in kits-groups 3E501 or 3C538	2
73/76	C,Y			2
74/	F			2
3530	SHROUD (STEERING COLUMN)			
73/78	A	★ D3AZ 3530-A(3/84)	Paint to match	1
73/76	Y			1
79	A - - w/fixed wheel	D9AZ 3530-A	Upper-paint to match	1
		D9AZ 3530-B	Lower-paint to match	1
	A - - w/tilt wheel	D9AZ 3530-C	Upper-paint to match	1
		D9AZ 3530-D	Lower-paint to match	1
73/76	C	D30Z 3530-D	Paint to match-incl. upper and lower shroud and (1) 55928-S2 screw	1
73/74	D - - w/fixed wheel	★ D3VY 3530-B	Paint to match-not replaced	1
	D - - w/tilt wheel	★ D3VY 3530-A(2/80)	Paint to match	1
75	D - - w/fixed wheel	★ D3VY 3530-B	Paint to match-not replaced	1
	D - - w/tilt wheel	★ D5VY 3530-B(6/82)	Paint to match	1
76/	D - - w/fixed wheel	★ D6VY 3530-A(3/81)	Paint to match	1
	D - - w/tilt wheel	★ D5VY 3530-B(6/82)	Paint to match	1
78/	D	★ D8VZ 3530-A(9/83)	Outer	1
73	F	★ D3ZZ 3530-A	Paint to match-not replaced	1
74/	F	D30Z 3530-D	Paint to match-incl. upper and lower shroud and (1) 55928-S2 screw	1
75	G "Before 1/6/75"	D30Z 3530-D	Paint to match-incl. upper and lower shroud and (1) 55928-S2 screw	1
75/	G - - w/fixed wheel "From 1/6/75"	D5DZ 3530-A	Paint to match-incl. upper and lower shroud and (2) 55928-S2 screw	1
76/	G - - w/tilt wheel	★ D6DZ 3530-E(3/84)	Upper-paint to match	1
		★ D6DZ 3530-B(3/84)	Lower-paint to match	1
73	J	★ D3RY 3530-B(12/81)	B(12/81)lack-upper	1
		★ D3RY 3530-E	Black-lower-r/b D6RY 3530-J(12/81)	1
		D3RY 3530-D	Tan (dark)-upper	1
		D3RY 3530-F	Tan (dark)-lower	1
74/76	J "Before 2/1/76"	★ D3RY 3530-B(12/81)	Black-upper	1
	"Before 2/1/76"	★ D3RY 3530-E	Black-lower-r/b D6RY 3530-J(12/81)	1

YEAR	MODEL/RESTRICTIONS	PART NUMBER	DESCRIPTION	QTY.
3530	SHROUD (STEERING COLUMN) — Cont'd			
74/78	J	★ D6RY 3530-B(3/81)	Chocolate-upper	1
		★ D6RY 3530-D(2/80)	Chocolate-lower	1
		★ D4RY 3530-A(3/81)	Saddle-upper	1
		★ D4RY 3530-C	Saddle-lower-r/b D6RY 3530-J(9/78)-paint to match	1
		★ D3RY 3530-D(9/83)	Tan (dark)-upper	1
		★ D3RY 3530-F(9/83)	Tan (dark)-lower	1
74/75	J "Before 11/1/75"	★ D4RY 3530-B(2/80)	Tan (medium)-upper	1
	J "Before 11/1/75"	★ D4RY 3530-D(2/80)	Tan (medium)-lower	1
76/78	J "Before 2/1/76"	★ D5RY 3530-A(2/81)	Gray-lower	1
	J "From 2/1/76"	★ D6RY 3530-M(2/80)	Gray-lower	1
	J "Before 2/1/76"	★ D5RY 3530-B(2/80)	Gray-upper	1
	J "From 2/1/76"	★ D6RY 3530-F(2/80)	Gray-upper	1
	J "From 11/1/75 to 2/1/76"	★ D6RY 3530-A(2/80)	Tan (medium)-upper	1
	J "From 2/1/76"	★ D6RY 3530-G(2/80)	Tan (medium)-upper	1
	J "From 11/1/75 to 2/1/76"	★ D6RY 3530-C(2/80)	Tan (medium)-lower	1
	J "From 2/1/76"	★ D6RY 3530-L(2/80)	Tan (medium)-lower	1
	J "Before 2/1/76"	★ D6RY 3530-B(3/81)	Chocolate-upper	1
	J "From 2/1/76"	★ D6RY 3530-H(2/80)	Chocolate-upper	1
	J "Before 8/1/76"	D6RY 3530-D	Chocolate-lower	1
	J "From 8/1/76"	★ D6RY 3530-K(2/80)	Chocolate-lower	1
	J "From 2/1/76"	★ D6RY 3530-E(2/80)	Black-upper	1
	J "From 2/1/76"	D6RY 3530-J	Black-lower	1
79	J - - w/speed control w/o tilt wheel	D9BZ 3530-E	Upper-paint to match	1
		D9BZ 3530-B	Lower-paint to match	1
	J - - w/tilt wheel	D9BZ 3530-F	Upper-paint to match	1
		D9BZ 3530-D	Lower-paint to match	1
	J - - w/fixed wheel w/o speed control	D9ZZ 3530-B	Upper-paint to match	1
		D9ZZ 3530-A	Lower-paint to match	1
73/	K	D30Z 3530-D	Paint to match-incl. upper and lower shroud and (1) 55928-S2 screw	1
74	L	★ D3FZ 3530-A(2/80)	Upper top-paint to match	1
		★ D3FZ 3530-B(2/80)	Upper bottom-paint to match	1
		★ D3FZ 3530-C(2/80)	Lower bottom-paint to match	1
75/	L	D5FZ 3530-A	Upper-paint to match	1
		D5FZ 3530-B	Lower-paint to match	1
73	P	★ D3DZ 3530-B	Not replaced	1
74/77	P	★ D4DZ 3530-A(3/81)	Paint to match	1
78	P	1 pc. D9ZZ 3530-A 1 pc. 55931-S2	Lower-paint to match	1
	P - - column shift	1 pc. D9BZ 3530-G 1 pc. 55931-S2	Upper-paint to match	1
	P - - floor shift	★ D8BZ 3530-C(12/80)	Upper-paint to match-r/b D9ZZ 3530-B & 1 pc. 55931-S2	1
79	P - - w/column shift w/fixed wheel w/o speed control	D9BZ 3530-G	Upper-paint to match	1
	P - - w/floor shift w/fixed wheel w/o speed control	D9ZZ 3530-B	Upper-paint to match	1
	P - - w/fixed wheel w/o speed control	D9ZZ 3530-A	Lower-paint to match	1
	P - - w/column shift w/speed control w/o tilt wheel	D9BZ 3530-A(3/84)	Upper-paint to match	1
	P - - w/floor shift w/speed control w/o tilt wheel	D9BZ 3530-E	Upper-paint to match	1
	P - - w/speed control w/o tilt wheel	D9BZ 3530-B	Lower-paint to match	1
	P - - w/column shift w/tilt wheel	D9BZ 3530-C	Upper-paint to match	1
	P - - w/floor shift w/tilt wheel	★ D9BZ 3530-F	Upper-paint to match	1
	P - - w/tilt wheel	D9BZ 3530-D	Lower-paint to match	1
77/	V - - w/tilt wheel	★ D6DZ 3530-B(3/84)	Lower-paint to match	1
		★ D6DZ 3530-E(3/84)	Upper-paint to match	1
73/78	J	E864207-S81	Clip (attaches shroud to 13351 bracket)	2
73/78	J	E610447-S74	(AU-5-E)-screw-self-tap (shroud to steering column)-Metric coarse	2
79	J,P	55931-S2	(U-380-G)-screw (lower shroud to upper shroud)-#8-18 x 1 1/2" panhead tap	4

COPYRIGHT © 1986 — FORD MOTOR COMPANY — DEARBORN, MICHIGAN

1973/79 LINCOLN-MERCURY CARS

YEAR	MODEL/RESTRICTIONS	PART NUMBER	DESCRIPTION	QTY.
3530	**SHROUD (STEERING COLUMN) — Cont'd**			
74/	L	384831-S2	(WW-129-ZX)-stud (lower shroud and 3668 clamp to column support)-3/8"-16 x 2 1/2"	2
		382802-S2	(MM-173-JB)-nut-3/8"-16	2
3D530	**CAP (POWER STEERING GEAR CYLINDER PISTON)**			
73/	A,D,K	C5AZ 3D530-A	Use w/Ford gear	1
73/76	C,Y			1
74/	F			1
73/76	C	C5AZ 3D530-B	Use w/Saginaw gear	1
73/	F			1
3F531	**KNOB (STEERING COLUMN LOCK ACTUATOR LEVER)**			
73/75	C	D1FZ 3F531-A		1
74/	F,L			1
75/	G			1
77/	V			1
76/77	P "From 4/19/76"			1
79	J	E4FZ 3F531-A		1
78/	P - - w/floor shift	E4FZ 3F531-A		1
3F532	**SPRING (STEERING COLUMN LOCK ACTUATOR LEVER)**			
73/76	C	D1FZ 3F532-A		1
74/	F,L			1
75/	G			1
76/77	P "From 4/19/76"			1
77/	V			1
3A533	**BALL STUD KIT (STEERING DRAG LINK)**			
75/	G - - P/S	C2AZ 3A533-A		1
73/77	P - - P/S			1

Consists of

2-AJ 3320-A	Seat	1-C2AZ 3A728-A	Clamp	1-AJ 33711-A	Spring
1-C0AA 3A533-A	Stud	1-C70Z 3A729-A	Cover	2-33119-S8	Screw
1-C2AZ 3C706-A	Seal	1-AJ 33327-A	Bumper		

3C533	**PLATE (STEERING COLUMN OPENING COVER RETAINING)**			
77/78	V "Before 10/24/77"	★ D74Y 3C533-A(6/82)		1
3538	**PLUG (STEERING GEAR HOUSING OIL FILLER)**			
73/76	C,F - - M/S	B6A 3538-A		1
75/	G,V			1
73/76	P			1
3C538	**SEAL and GASKET KIT (POWER STEERING GEAR)**			
73/77	A,D,F,K	★ D5AZ 3C538-A	Use w/Ford gear ident. #SPA-AA,AM or AS-r/b	1
73/76	C,Y		(1) D7AZ 3E501-A Sector shaft kit & (1) D7AZ 3E502-A input shaft kit(9/78)	1

Consists of

1-D5AW 3D526-AA	Seal	1-D5AW 3D642-AA	Seal	1-382743-S94	"0" ring
1-D5AW 3D527-AA	Seal	1-C5AZ 3805-A	Seal	1-384223-S	"0" ring
2-D3AZ 3D529-A	Spacer	1-97625-S	Ring	1-386265-S	"0" ring
4-D5AW 3F586-AA	"0" ring	1-97628-S	Ring	1-386266-S	Seal
1-D5AW 3591-AA	Seal	1-352109-S7	Ring	1-Instruction sheet	

73/75	C	C5AZ 3C538-D	Use w/Saginaw gear	1
73/	F			1

Consists of

1-Snap ring-adj. plug seal	3-Snap ring-valve body	1-Seal-sector shaft inner oil
1-Seal-actuator shaft dust	3- "0" ring-valve body	1-Seal-sector shaft cover
1-Seal-actuator shaft oil	1-Snap ring-sector shaft oil seal	2-Seal-housing end plug
1- "0" ring-adj. plug	2-Washer-sector shaft oil seal	2-Snap ring-end plug retainer
2- "0" ring-valve spool dampener	1-Seal-sector shaft outer oil	1-Nut-sector shaft adj.
1- "0" ring-actuator valve cap		

1973/79 LINCOLN-MERCURY CARS

YEAR	MODEL/RESTRICTIONS	PART NUMBER	DESCRIPTION	QTY.
3A540	**CYLINDER ASSY. (POWER STEERING)**			
75/78	G "Before 2/1/78"	★ D6DZ 3A540-B	Vehicles built before 4/5/76 also require	1
76/77	P "From 4/5/76"		(2) D7ZZ 3N668-B adapters-	1
77/78	V "Before 2/1/78"		r/b D8DZ 3A540-A (12/78)	1
78/	G,V "From 2/1/78"	D8DZ 3A540-A		1
73/74	P	★ D00Z 3A540-A(3/84)		1
75/76	P "Before 4/5/76"	D5DZ 3A540-B		1
76/77	P "From 4/5/76"	★ D6DZ 3A540-B	R/b D8DZ 3A540-A (12/78)	1
75/	G	33925-S7	(M-33)-nut (cyl. to idler arm bracket)-3/8"-24	1
73/77	P	45218-S8	(M-172)-nut (cyl. to idler arm bracket)-3/8"-24	1
77/	V	34033-S18	(M-11)-nut-castle (cyl. to idler arm)-9/16"-18	1
		373430-S	(TT-5)-seat-5/16" tube	2
76/	G "From 4/5/76"	387497-S94	(KK-42-A)-"O"-ring-1/4" I.D.	AR
76/77	P "From 4/5/76"			AR
77/	V			AR
		87006-S94	(T-1-AB)-"O"-ring-5/16" I.D.	AR
3F540	**SHIELD (STEERING SHAFT U-JOINT)**			
79	A	D9AZ 3F540-A	Upper	1
		D9AZ 3F540-B	Lower	1
3E543	**RETAINER (STEERING COLUMN RELEASE LEVER)**			
73/78	A - - w/tilt wheel	D1AZ 3E543-A		2
73/76	C,Y - - w/tilt wheel			2
73/	D,F,G,K,V - - w/tilt wheel			2
79	A	D8BZ 3E543-A		2
78/	P - - column shift			2
3F543	**RING (STEERING SHAFT LOWER BEARING RETAINER)**			
79	A	D8BZ 3F543-A		1
73/76	C,K - - w/column shift and A/T	D20Z 3F543-A	1 5/16" I.D. x 1 11/16" O.D.-4 tabs-plastic	1
77/	K			1
74/	F - - w/column shift			1
79	J	D8BZ 3F543-A		1
78/	P			1
3544	**CLAMP (STEERING GEAR BALL RETURN GUIDE)**			
73/	A,D,K	C5AZ 3544-A	Use w/Ford gear	1
73/76	C,Y - - P/S			1
74/	F - - P/S			1
73/74	C - - M/S	C5AZ 3544-B		1
73	F - - M/S			1
73/75	C - - P/S	C5AZ 3544-C	Use w/Saginaw gear	1
73/	F - - P/S			1
75/	G - - M/S	★3544	Serviced only in kit-group 3523	
	G - - P/S	★ C50Z 3544-A(3/84)		1
73/77	P - - M/S	★3544	Serviced only in kit-group 3523	
	P - - P/S	★ C50Z 3544-A(3/84)		1
77/	V	★ C50Z 3544-A(3/84)		1
3C544	**COVER ASSY. (POWER STEERING GEAR CONTROL VALVE)**			
76/78	J	D5RY 3C544-B	Incl. bearing, "O" ring and seal	1
3C544	**LEVER (STEERING COLUMN RELEASE)**			
73/78	A - - w/tilt wheel	D1AZ 3D544-A		1
73/76	C,Y - - w/tilt wheel			1
73/	D,F,G,K,V - - w/tilt wheel			1
79	A,J,P - - w/tilt wheel	E0AZ 3D544-A		1
79	A,J,P - - w/tilt wheel	N800329-S	(AN-15-E)-pin (round end)-lever to 3511 flange-4mm O.D. x 15.75mm long	1
3548	**HOUSING ASSY. (STEERING GEAR)**			
73/77	A,D,K	★ D2AZ 3548-A	#C9AR 3550-C-incl. (1) 385348-S seal	1
73/76	Y	r/bD9AZ 3548-A(6/79)		1
78	A,D,F,K "Before 5/30/78"	★ D7AZ 3548-A	Use with Ford gear	1
		r/bD9AZ 3548-A(6/79)		

COPYRIGHT © 1986 — FORD MOTOR COMPANY — DEARBORN, MICHIGAN

1973/79 LINCOLN-MERCURY CARS

YEAR	MODEL/RESTRICTIONS	PART NUMBER	DESCRIPTION	QTY.
3548	HOUSING ASSY. (STEERING GEAR) — Cont'd			
78/	A,D,F,K "From 5/30/78"	D9AZ 3548-A	Use w/Ford gear	1
73/76	C - - M/S	★ D1ZZ 3548-A	#D1ZR 3550-AA-Not replaced (3/79)	1
	C - - P/S	★ D2AZ 3548-A r/bD9AZ 3548-A(6/79)	#C9AR 3550-C-incl. (1) 385348-S seal-use w/Ford gear	1
73/75	C - - P/S	D1ZZ 3548-B	Use w/Saginaw gear	1
73	F - - M/S	★ D1ZZ 3548-A	#D1ZR 3550-AA-Not replaced (3/79)	1
73/	F - - P/S	D1ZZ 3548-B	Use w/Saginaw gear	1
74/77	F	★ D2AZ 3548-A r/bD9AZ 3548-A(6/79)	Use w/Ford gear-#C9AR 3550-C incl. (1) 385348-S seal	1
75/	G	★ D2DZ 3548-A(3/84)	#D2DR 3550-AA	1
73/77	P			1
77/	V			1
73/78	J - - M/S	★	Serviced only in assy.-group 3504	1
76/78	J - - P/S	★ D6RY 3548-A	R/b D6RY 3504-A(2/81)	1
79	J - - M/S	D8BZ 3548-C		1
	J - - P/S	D9ZZ 3548-B	With #SPR-M,Y,Z (TRW) gear	1
	J - - P/S	★ D8BZ 3548-D(3/83) r/b 1pc.E0BZ 3548-B & 1 pc.D8BZ 3A766-A	With #SPR-R (Ford) gear	1
74/	L - - M/S	D4FZ 3548-A		1
75/76	L - - P/S	★ D5FZ 3548-A(2/80)	#SMD-E	1
77	L - - P/S "Before 7/6/77"	★ D7FZ 3548-A(9/83)	#SMD-J	1
77/78	L - - P/S "From 7/6/77 to 5/15/78"	★ D8FZ 3548-B	R/b 1 pc. D8FZ 3548-C & 1 pc. D8FZ 3A714-A(6/79)	1
78/79	L - - P/S "From 5/15/78 to 12/1/78"	★ D8FZ 3548-C	R/b D9FZ 3548-A(11/79)	1
79	L - - P/S "From 12/1/78"	D9FZ 3548-A		1
78	P - - P/S	★ D8BZ 3548-D(3/83) r/b 1pc.E0BZ 3548-B & 1 pc.D8BZ 3A766-A	With #SPR-A,C,E (Ford) gear	1
	P - - P/S	★ D8BZ 3548-B	With #SPR,B,D (TRW) gear-r/b D9ZZ 3548-B(6/79)	1
	P - - M/S	D8BZ 3548-C		1
79	P - - M/S	D8BZ 3548-C		1
	P - - P/S "Before 4/2/79"	D8BZ 3548-A	#SPR-A,C,E (Ford) gear-incl. (2) connectors	1
	P - - P/S "From 4/2/79"	★ D8BZ 3548-D(3/83) r/b 1pc.E0BZ 3548-B & 1 pc.D8BZ 3A766-A	#SPR-P (Ford) gear-incl. (2) connectors	1
73/	A,C,D,K,Y - - P/S	374309-S	(TT-5-A)-seat (oil inlet tube)-5/16"	1
74/	F - - P/S	374480-S	(TT-7-A)-seat (oil outlet tube)-3/8"	1
73/	C,F,P - - M/S	351701-S	(PP-87)-plug-1 5/16" expansion	1
3550	Refer to group 3548			
3552	CUP (STEERING GEAR WORM BEARING)			
73/74	C - - M/S	C2AZ 3552-A		2
73	F - - M/S			2
73/	G			2
73/77	P			2
77/	V			2
73/78	J - - M/S	★ D5RY 3552-A	R/b D1RY 3L566-A(9/83)	2
79	J - - M/S	D1FZ 3552-A		1
	J - - P/S	D8BZ 3552-A		1
74/	L - - M/S	D3FZ 3552-A		2
75/77	L - - P/S "Before 7/6/77"	D4ZZ 3552-A		1
78/	L - - P/S "From 7/6/77"	D8BZ 3552-A		1
78/	P - - P/S	388009-S2	(MM-150-E)-nut-hex lock-7/16"-20	1
78/	P - - M/S	D1FZ 3552-A		1
3L555	TIE ROD & BALL JOINT KIT (STEERING GEAR)			
72/77	J	D2RY 3L555-A		1

Consists of

1-69AB 3K660-A1A	Spring	1-69AB 3K659-A1A	Pin	1-71AB 3K658-A1A	Seat
1-71BB 3K657-A1A	Housing	1-71AB 3K743-A1A	Plate	1-E426045-S	Locknut
1-77EB 3K651-AA	Tie rod	1-E863086-S82	Clip	1-71BB 3K666-A2A	Clip
1-77FB 3K662-A2A	Clip	1-77AB 3K666-AA	Clip		

1973/79 LINCOLN-MERCURY CARS

YEAR	MODEL/RESTRICTIONS	PART NUMBER	DESCRIPTION	QTY.
3B559	SHAFT (POWER STEERING PUMP ROTOR)			
73/77	A,D,F,G,P,V - - w/Ford pump	D0AZ 3B559-A		1
73/76	C,Y - - w/Ford pump			1
77	L "Before 6/27/77"			1
73/74	A,D,K,Y - - w/Saginaw pump	★ D2VY 3B559-A(6/82)	Bolt on pulley	1
75/76	A,D,K,Y - - w/Saginaw pump	★ D5AZ 3B559-A(6/82)	Pressed on pulley	1
76/78	A - - w/Saginaw pump	D6AZ 3B559-A	Use w/pump ident. HBA-GM,GN,GR,GS,GT	1
76/	D,K			1
76	Y - - w/Saginaw pump			1
79	G,P - - Saginaw pump			1
78/	A,F,G,P,V	D8AZ 3B559-A	Use with all #HBC Ford pumps	1
79	J			1
77/	L "From 6/27/77"	387949-S	(XX-22-E)-washer-retaining -7/16" C-type	1
3C560	STOP (POWER STEERING CONTROL VALVE SPOOL TRAVEL REGULATOR)			
73/76	G,P	C1AA 3C560-A		1

IDENTIFICATION CHART

IDENTIFICATION	PART NUMBER	IDENTIFICATION	PART NUMBER
3A561 VALVE ASSY. (POWER STEERING PUMP)			
* Reference Model Application			
HBA-CK	* D3AZ 3A561-B	HBA-EG	D6DZ 3A561-A
HBA-CK	★*D5AZ 3A561-A	HBA-EH	D6DZ 3A561-A
HBA-CK	* D6TZ 3A561-A	HBA-EJ	★ D6AZ 3A561-A
HBA-CL	* D3DZ 3A561-A	HBA-EK	D6TZ 3A561-A
HBA-CL	* D6DZ 3A561-A	HBA-EL	D4ZZ 3A561-A
HBA-CM	* D3DZ 3A561-A	HBA-EM	* D6TZ 3A561-A
HBA-CM	* D6DZ 3A561-A	HBA-ER	D6DZ 3A561-A
HBA-CN	* D3AZ 3A561-B	HBA-ES	D6DZ 3A561-A
HBA-CN	* D3ZZ 3A561-A	HBA-EZ	D4ZZ 3A561-A
HBA-CV	* D3AZ 3A561-B	HBA-EU	D6DZ 3A561-A
HBA-CV	* D6TZ 3A561-A	HBA-FA	D6DZ 3A561-A
HBA-CW	D3VZ 3A561-A	HBA-FB	D6DZ 3A561-A
HBA-CY	D3MY 3A561-A	HBA-FC	D6DZ 3A561-A
HBA-DA	* D3DZ 3A561-A	HBA-GA	D3MY 3A561-A
HBA-DA	* D5DZ 3A561-A	HBA-GB	D3MY 3A561-A
HBA-DA	* D6DZ 3A561-A	HBA-GD	★ D2VY 3A561-A
HBA-DB	D2VY 3A561-A	HBA-GF	D3MY 3A561-A
HBA-DD	* D3AZ 3A561-B	HBA-GG	* D3MY 3A561-A
HBA-DD	* D5TZ 3A561-A	HBA-GG	* D6TZ 3A561-A
HBA-DD	* D6TZ 3A561-A	HBA-GH	D3MY 3A561-A
HBA-DF	* D3AZ 3A561-B	HBA-GJ	D3MY 3A561-A
HBA-DF	* D6TZ 3A561-A	HBA-GM	D3MY 3A561-A
HBA-DM	* D3DZ 3A561-A	HBA-GN	D3MY 3A561-A
HBA-DM	* D6DZ 3A561-A	HBA-GR	D2VY 3A561-A
HBA-DN	* D3DZ 3A561-A	HBA-GS	D3MY 3A561-A
HBA-DN	* D5DZ 3A561-A	HBA-GT	D3MY 3A561-A
HBA-DN	* D6DZ 3A561-A	HBA-GY	★ D9BZ 3A561-A
HBA-DR	D4ZZ 3A561-A	HBC-T	★ D8AZ 3A561-A
HBA-DT	* D5DZ 3A561-A	HBC-U	D80Z 3A561-A
HBA-DT	* D6DZ 3A561-A	HBC-V	★ D8FZ 3A561-B
HBA-DU	* D5DZ 3A561-A	HBC-W	★ D8FZ 3A561-B
HBA-DU	* D6DZ 3A561-A	HBC-X	★ D8FZ 3A561-B
HBA-DY	D5DZ 3A561-A	HBC-AA	D8AZ 3A561-A
HBA-DZ	D6DZ 3A561-A	HBC-AB	D80Z 3A561-A
HBA-EA	D6DZ 3A561-A	HBC-AC	★ D8FZ 3A561-B
HBA-EB	D6DZ 3A561-A	HBC-AD	★ D8FZ 3A561-B
HBA-EC	D6DZ 3A561-A	HBC-AE	★ D8FZ 3A561-B
HBA-EF	D6DZ 3A561-A		

COPYRIGHT © 1986 — FORD MOTOR COMPANY — DEARBORN, MICHIGAN

APPLICATION CHART

YEAR	MODEL/RESTRICTIONS	PART NUMBER	DESCRIPTION	QTY.
73/76	A,C,Y - - w/Ford pump "Before 4/1/76"	★ D5AZ 3A561-A r/b D6AZ 3A561-A(11/79)	Use w/pump ident. HBA-CK,CV,DD,DF	1
76	A,Y - - w/Ford pump "From 4/1/76"	D6TZ 3A561-A	Use w/pump ident. HBA-CK,CV,DD,DF,GG	1
73/76 77	A,Y - - w/Saginaw pump A	D3MY 3A561-A	Use w/pump ident. HBA-CY,GF,GG,GH,GJ	1 1
76 77	A,C,F,Y A,F	★ D6AZ 3A561-A(3/84)	Use w/pump ident. HBA-EJ	1 1
78	A	★ D8AZ 3A561-A	Use w/pump ident. HBC-T-r/b E0TZ 3A561-A(12/81)	1
79	A	D80Z 3A561-A	Use w/pump ident. HBC-U,Y,AB	1
76	C	★ D5AZ 3A561-A r/b D6AZ 3A561-A(11/79)	Use w/pump ident. HBA-CK	1
76	C	★ D5TZ 3A561-A	Use w/pump ident. HBA-DD-r/b D6TZ 3A561-A (6/78)	1
76	C "From 4/1/76"	D6TZ 3A561-A	Use w/pump ident. HBA-EK,EM	1
73	D,K	★ D3VZ 3A561-A	Use w/pump ident. HBA-CW,CZ-not replaced	1
73/★	D,K	★ D2VY 3A561-A(6/82)	Use w/pump ident. HBA-DB,GD	1
73	F	D3AZ 3A561-B	Use w/pump ident. HBA-CN	1
74/75	F	D3AZ 3A561-B	Use w/pump ident. HBA-CK,CN	1
76	F	★ D5AZ 3A561-A r/b D6AZ 3A561-A(11/79)	Use w/pump ident. HBA-CK	1
77	F	D6TZ 3A561-A	Use w/pump ident. HBA-EK	1
78/	F	D80Z 3A561-A	Use w/pump ident. HBC-U,AB	1
78/	F	★ D8AZ 3A561-A	Use w/pump ident. HBC-T,AA-r/b E0TZ 3A561-A(12/81)	1
73/75	G	D3DZ 3A561-A	Use w/pump ident. HBA-CL,CM,DA,DM,DN	1
76/77	G	D6DZ 3A561-A	Use w/pump ident. HBA-CL,CM,DA,DM,DN, DT,DU,DY,DZ,EB,EC,EF,EG,EH,ES,EU,FA	1
78/	G	★ D8FZ 3A561-B	Use w/pump ident. HBC-V,W,AC-r/b E1SZ 3A561-A(12/81)	1
79	G	★ D9BZ 3A561-A(3/84)	With #HBA-GY Saginaw pump	1
79	J - - 4.2L & 5.0L	★ D8FZ 3A561-B	Use w/pump ident. HBC-V,AC-r/b E1SZ 3A561-A(12/81)	1
	J - - 2.3L & 3.3L	D8BZ 3A561-A	w/Ford CII-B pump	1
	J	D80Z 3A561-A	Use w/pump ident. HBC-U,AB	1
76/77	L "Before 6/27/77"	★ D6FZ 3A561-A(6/82)	Use w/pump ident. HBA-DR,EL,EZ	1
77/	L "From 6/27/77"	★ D8FZ 3A561-B	Use w/pump ident. HBC-V,W,X,AE-r/b E1SZ 3A561-A(12/81)	1
73/75	P	D3DZ 3A561-A	Use w/pump ident. HBA-CL,CM,DA,DM or DN	1
76/77	P	D6DZ 3A561-A	Use w/pump ident. HBA-CL,CM,DA,DM,DN,DT, DU,DY,DZ,EB,EC,EF,DG,EH,ES,EU,FA,FB,FC	1
78/	P - - 4.2 & 5.0L	★ D8FZ 3A561-B	Use w/pump ident. HBC-V,W,AC-r/b E1SZ 3A561-A(12/81)	1
78/	P - - 2.3L & 3.3L	D8BZ 3A561-A	w/Ford CII-B pump	1
78/	P	D80Z 3A561-A	Use w/pump ident. HBC-U,AB	1
79	P	★ D9BZ 3A561-A(3/84)	With #HBA-GY Saginaw pump	1
77	V	D6DZ 3A561-A	Use w/pump ident. HBA-EU,FC	1
78/	V	★ D8FZ 3A561-B	Use w/pump ident. HBC-W,AD-r/b E1SZ 3A561-A(12/81)	1
3562	BRACKET (POWER STEERING PUMP SUPPORT)			
76/78	J - - 6 cyl.	★ D5RY 3562-A(3/81)	#75TF 6M073-AA	1
3C562	INSULATOR (POWER STEERING CONTROL VALVE SPOOL STOP)			
75/ 73/77	G P	C20Z 3C562-A		2 2
3C563	SPRING (POWER STEERING CONTROL VALVE REACTION LIMITING)			
73/77	G,P	C3AZ 3C563-A	Spring only-also serviced in kit	2
73/77 73/77	G "Before 1/17/77" P	C3AZ 3C563-C	Kit	1 1
	Consists of 1-B4A 2428-A "O" ring 1-B9M 3A512-A Plug	1-B9M 3A513-A Plug 2-C3AZ 3C563-A Spring	1-C1AA 3A740-C Gasket 2-372299-S Washer	
77/ 77/	G "From 1/17/77" V	D74Z 3C563-A		1 1

YEAR	MODEL/RESTRICTIONS	PART NUMBER	DESCRIPTION	QTY.
3B564	INSULATOR (STEERING COLUMN LOWER FLANGE)			
73/78	J	D0RY 3B564-A		1
3E564	HOUSING ASSY. (POWER STEERING GEAR ACTUATOR)			
79	J	D8BZ 3E564-A		1
75/76	L	D5ZZ 3E564-A		1
77/	L	D7FZ 3E564-A	Inc. (2) flare gaskets	1
78	P	D8BZ 3E564-A	With #SPR-B,D (TRW) gear	1
3R564	EXTENSION (STEERING COLUMN SHROUD)			
79	A,J,P - - tilt column	★ D9AZ 3R564-A	R/b E1LY 3R564-A(12/80)	1
3L566	STEERING GEAR REPAIR KIT (INNER)			
73/77	J	D1RY 3L566-A		1
	Consists of			
	2-Bearing Assys 1-Pinion seal	7-Shims-pinion brg.	1-Gasket-pinion cover 1-Cap-pinion seal	
	1-Bearing-rack adjustment 1-Spring	6-Shims-rack brg.	1-Gasket-brg. cover	
3568	COVER (STEERING GEAR HOUSING END)			
79	J - - M/S	D8BZ 3568-C		1
	J - - P/S	D8FZ 3568-A	With #SPR-M (TRW) gear	1
	J - - P/S	D8BZ 3568-A	With #SPR-R (Ford) gear-input shaft nut cap	1
	J - - P/S	D8BZ 3568-B	With #SPR-R (Ford) gear-end plate	1
74/	L - - M/S	D4FZ 3568-A		1
	Consists of			
	1-D42W 3593-AA Gasket	1-D12R 3595-BA Shim	1-D12R 3595-EA Shim	
	1-D12R 3595-AA Shim	1-D12R 3595-CA Shim		
75/77	L - - P/S "Before 7/6/77"	D4ZZ 3568-A	Incl. 87047-S94 "O" ring	1
77/	L - - P/S "From 7/6/77"	D8FZ 3568-A	Threaded plug	1
78/	P - - P/S	D8BZ 3568-A	With #SPR-A,C,E,P (Ford) gear-input shaft nut cap	1
	P - - P/S	D8BZ 3568-B	With #SPR-A,C,E,P (Ford) gear-end plate	1
78	P - - P/S	D8FZ 3568-A	With #SPR-B,D (TRW) gear-threaded plug	1
78/	P - - M/S	D8BZ 3568-C	Inc. (4) shims & (1) gasket	1
3571	BEARING (STEERING GEAR WORM THRUST)			
73/74	C - - M/S	C2AZ 3571-A		2
73	F - - M/S			2
75/	G			2
73/77	P			2
77/	V			1
75/76	L - - P/S	D4ZZ 3571-A	Incl. (2) 385954-S washer	1
3575	SHAFT (STEERING GEAR SECTOR)			
73/78	A,D,K "Before 5/30/78"	D3AZ 3575-A	Use w/Ford gear	1
73/76	C,Y - - P/S			1
78/	A,D,F,K "From 5/30/78"	D9AZ 3575-A	Use w/Ford gear	1
73/74	C - - M/S	C5AZ 3575-D		1
73	F - - P/S "Before 1/2/73"	★ D1ZZ 3575-A	Use w/gear ident. SPA-T,V-not replaced	1
		C5AZ 3575-C	Use w/gear ident. SPA-S,U	1
	F - - P/S "From 1/2/73"	C5AZ 3575-E	Use w/gear ident. SPA-AC,AE	1
	F - - M/S	C5AZ 3575-D		1
74/78	F - - P/S "Before 5/30/78"	D3AZ 3575-A	Use w/Ford gear	1
73/	F - - P/S	C5AZ 3575-E	Use w/Saginaw gear ident. SPA-AH,AT,CA	1
	F - - P/S	D9UZ 3575-A	Campaign #325	1
75/	G - - M/S	C60Z 3575-A	1 1/8" dia., 9 11/32" long	1
73/77	P - - M/S			1
75/	G - - P/S	C20Z 3575-B	1/1/8" dia.,9 1/4" long	1
73/77	P - - P/S			1
77/	V - - P/S			1
73/78	J - - M/S	D1RY 3575-A		1
76/78	J - - P/S	★ D5RY 3575-A(9/82)		1
79	J - - M/S	D8BZ 3575-B		1
	J - - P/S	D8FZ 3575-B	With #SPR-M (TRW) gear	1
	J - - P/S	D8BZ 3575-A	With #SPR-R (Ford) gear	1
74/	L - - M/S	D4FZ 3575-A		1
75/77	L - - P/S "Before 7/6/77"	D4ZZ 3575-A		1
77/	L - - P/S	D8FZ 3575-B		1
78/	P - - P/S	D8BZ 3575-A	With #SPR-A,C,E,P (Ford) gear	1
78	P - - P/S	D8FZ 3575-B	With #SPR-B,D (TRW) gear	1
78/	P - - M/S	D8BZ 3575-B	With #SMC-P,R gear	1

COPYRIGHT © 1986 — FORD MOTOR COMPANY — DEARBORN, MICHIGAN

1973/79 LINCOLN-MERCURY CARS

YEAR	MODEL/RESTRICTIONS	PART NUMBER	DESCRIPTION	QTY.
3576	**BUSHING (STEERING GEAR HOUSING SECTOR SHAFT)**			
73	A,Y	C1AZ 3576-B	1 1/8" I.D. x 1 3/8" O.D. x 1" long	1
73/74	C - - M/S	C1AZ 3576-B		1
73	F - - M/S			1
73/75	C - - P/S	C5AZ 3576-B	Use w/Saginaw gear	1
73/	F - - P/S			1
75/	G	C4DZ 3576-B	Upper	1
73/77	P			1
77/	V	C1AZ 3576-B	Lower	1
73/78	J - - M/S	D2RY 3576-A		1
76/78	J - - P/S	★ D5RY 3576-A(3/81)	Incl. (1) E490003-S "O" ring	1
79	J - - P/S	D8FZ 3576-A	With #SPR-M (TRW) gear	1
	J - - P/S	D9BZ 3576-A	With #SPR-R (Ford) gear	1
75/76	L - - P/S	D4ZZ 3576-A	Incl. (1) D4ZW 3F606-AA nut, (1) D4ZW 3K664-BA seal and (1) 87059-S94 "O" ring	1
77	L - - P/S "Before 4/1/77"	★ D7FZ 3576-A r/bD7FZ 3576-B(6/79)	Incl. (1) D7EA 3F514-AA nut, (1) D4ZW 3K664-BA seal and (1) 87059-S94 "O" ring	1
77	L - - P/S "From 4/1/77 to 7/6/77"	★ D7FZ 3576-B(3/84)	Incl. (1) D7EA 3F514-AA nut, (1) D6ZW 3K664-BA Seal, (1) 87059-S94 "O" ring	1
77/	L - - P/S "From 7/6/77"	D8FZ 3576-B	With #SMD-L,M,R gear	1
78/79	P - - P/S "From 4/2/79"	D9BZ 3576-A	With #SPR-A,C,E,P (Ford) gear	1
78	P - - P/S	D8FZ 3576-A	With #SPR-B,D (TRW) gear-incl. (1) 388001-S lock ring and (1) 388003-S pin	1
3E576	**Refer to group 3A719**			
3K576	**SPRING (STEERING GEAR RACK ADJUSTMENT)**			
73/74	J - - M/S	D2RY 3K576-A		1
76/78	J - - M/S	★ D6RY 3K576-A(3/81)		1
3577	**SCREW (STEERING GEAR SECTOR SHAFT ADJUSTING)**			
73/74	C - - M/S	B8AZ 3577-A	7/16"-20 x 1 15/32"	1
73	F - - M/S			1
75/	G			1
73/77	P	34690-S8	(M-34)-nut (screw retaining)-7/16"-20	1
3579	**WASHER (STEERING GEAR WORM SECTOR THRUST)**			
73/78	J - - M/S	D1RY 3579-A	5/8" I.D. x 15/16" O.D. x 1/8" thick	1
76/78	J - - P/S	★ D5RY 3579-A(3/81)		1
3580	**COVER (STEERING GEAR SECTOR SHAFT HOUSING)**			
73/78	A,D,K "Before 5/30/78"	E0AZ 3580-A	#D1AR 3583-AA-Use w/Ford gear	1
73/76	C,Y - - P/S			1
74/78	F "Before 5/30/78"			1
78/	A,D,F,K "From 5/30/78"	★ D9AZ 3580-A	Use w/Ford gear-r/b E0AZ 3580-A(3/82)	1
73/74	C - - M/S	★ D1ZZ 3580-A(3/84)	#D1ZR 3583-AA	1
73	F - - M/S			1
73/75	C - - P/S	D6TZ 3580-B	Use w/Saginaw gear-r/b D6TZ 3580-B(3/79)	1
75/	F		Use w/Saginaw gear	1
75/	G	★ C3AZ 3580-A(3/84)		1
73/77	P			1
77/	V			1
73/78	J - - M/S	D1RY 3580-C	Bearing cover-upper	1
		21706-S72	Bolt	2
		D1RY 3580-B	Shaft end-front lower	1
		18271-S72	Bolt	2
76/78	J - - P/S	★ D5RY 3580-C(3/84)	Bearing cover-lower	1
	Consists of 1-74EB 3E571-AA Gasket	1-74EB 3E571-BA Gasket	1-74EB 3N572-AA Cover	
76/78	J - - P/S	★ D5RY 3580-B(2/80)	Spring end-front-upper	1
79	J - - M/S	D3FZ 3580-A		1
	J - - P/S	D8FZ 3580-A	Witn #SPR-M (TRW) gear	1
	J - - P/S	D8BZ 3580-A	With #SPR-R (Ford) gear	1

YEAR	MODEL/RESTRICTIONS	PART NUMBER	DESCRIPTION	QTY.
3580	COVER (STEERING GEAR SECTOR SHAFT HOUSING) — Cont'd			
74/	L - - M/S	D3FZ 3580-A		1
75/77	L - - P/S "Before 7/6/77"	★ D4ZZ 3580-A(6/83)		1
77/	L - - P/S "From 7/6/77"	D8FZ 3580-A	Includes (1) nut	1
78/	P - - P/S	D8BZ 3580-A	With #SPR-A,C,E,P (Ford) gear-incl. (1) nut	1
78	P - - P/S	D8FZ 3580-A	with #SPR-B,D (TRW) gear-incl. (1) nut	1
78/	P - - M/S	D3FZ 3580-A		1
73/	A,C,D,K,Y - - P/S	383685-S2	(BB-395-F)-bolt (cover to hsg.)-hex. head-7/16"-20 x 1 1/8"	AR
		385348-S	(KK-52-CG)-seal (cover to hsg.)-2 13/16" I.D. x 3" O.D. x 9/64" thick	1
3581	GASKET (STEERING GEAR SECTOR SHAFT HOUSING COVER)			
73/74	C - - M/S	C3AZ 3581-A		1
73	F - - M/S			1
75/	G			1
73/77	P			1
77/	V			1
73/75	C - - P/S	C5AZ 3581-A	Use w/Saginaw gear	1
73/	F - - P/S			1
73/78	J - - M/S	★ D1RY 3581-C	Bearing cover-upper-r/b D1RY 3L566-A(9/82)	1
		D1RY 3581-D	Shaft end-front	1
3D581	BUSHING (RECLINING SEAT PIVOT SHAFT)			
74/76	C	C4VY 3D581-A		2
73/	F,K			2
3A582	COVER ASSY. (POWER STEERING PUMP RESERVOIR)			
76/78	J	★ D5RY 3A582-B(3/81)		1
3B584	SEAL and GASKET KIT (POWER STEERING PUMP)			
73/77	A,C,F,G,L,P,V,Y	D1AZ 3B584-A	Overhaul seal kit for Ford pumps	1
75/77	L "Before 6/27/77"			1

Consists of

1-C5AR 3D587-B	Seal	1-D1AR 3D594-A	Seal	1-D4AZ 3A760-AA	Gasket
1-C5AZ 3B592-C	Seal	1-D5BW 3D594-AA	Seal	1-383201-S	Seal
1-C5AZ 3D594-B	Seal	1-C5AZ 3D684-A	Gasket	1-386213-S	Seal

78/79	A,F,G,P,V	E1AZ 3B584-A		1
79	J			1
77/79	L "From 6/27/77"			1

Consists of

1-D8AC 3B592-AA	Seal	1-387569-S100	O-ring	1-387572-S100	O-ring
1-D9AC 3F655-AA	Retainer	1-387570-S100	O-ring	1-388004-S94	O-ring
1-87134-S100	O-ring	1-387571-S100	Seal	2-Instruction sheet	
1-384975-S94	Seal	1-389349-S	Seal		

73/78	A	D2VY 3B584-A	Saginaw pump-consists of 7 seals	1
73/	D,K			1
79	G,P			1
73/76	Y			1
76/78	J	★ D5RY 3B584-A(6/83)		1

Consists of

1-E854050-S	"O" ring	1-E854051-S	"O" ring

3B585	INSERT (POWER STEERING PUMP CAM)			
73/76	A,K,Y	D2VY 3B585-A		1
73/74	D - - w/o hydro boost "Before 4/8/74"		Use w/pump ident. #CW,DB	1
77/78	A	D4VY 3B585-A	Use w/Saginaw pump	1
74/	D - - w/hydro boost "From 4/8/74"			1
77/	K			1

COPYRIGHT © 1986 — FORD MOTOR COMPANY — DEARBORN, MICHIGAN

1973/79 LINCOLN-MERCURY CARS

YEAR	MODEL/RESTRICTIONS	PART NUMBER	DESCRIPTION	QTY.
3D586	SPRING (POWER STEERING PUMP FLOW CONTROL VALVE)			
73/78	A	D2VY 3D586-A	Saginaw pump	1
73/	D,K			1
79	G,P			1
73/76	Y			1
78/	A,F,G,P,V	D8AZ 3D586-A	Ford pump	1
79	J			1
77/	L "From 6/27/77"			1
3D589	PLATE (POWER STEERING PUMP RETAINER END)			
73/78	A	D2VY 3D589-A		1
73/	D,K			1
79	G,P			1
73/76	Y			1
76/78	A	D6AZ 3D589-A	Use w/pump ident. HBA-GM,GN	1
77/	D,K		Use w/pump ident. HBA-GR,GS,ST	1
76	Y			1
3590	ARM (STEERING GEAR SECTOR SHAFT)			
73/74	A,Y	C9AZ 3590-B	#D3AA 3B153-BB,D4AW 3B153-AA	1
75/76	A	D7AZ 3590-A		1
77/78	A	D7AZ 3590-B	#Blue	1
79	A	D9AZ 3590-A		1
73/74	C - - P/S	D20Z 3590-B	#D20Z 3B153-BB,D40W 3B153-BA	1
73/74	C - - M/S	★ D40Z 3590-A(3/81)		1
75/76	C - - P/S	D70Z 3590-A		1
73/74	D	D0VY 3590-A	#D3VA 3590-AB,D4VW 3590-AA	1
75/76	D "Before 7/12/76"	★ D5VY 3590-A	#D5VW 3B153-AA-r/b D7VY 3590-A(3/79)	1
76	D "From 7/12/76"	D7VY 3590-A	#D5VW 3590-AA	1
77/	D	D7VY 3590-B		1
73	F - - M/S	★ D1ZZ 3590-A(6/82)	#D3ZA 3B153-AB	1
	F - - P/S	D1ZZ 3590-B	#D3ZA 3B153-BB	1
74	F	D20Z 3590-B	#D20A 3B153-BB, D40W 3B153-BA	1
75/76	F	D70Z 3590-A		1
77/	F	D70Z 3590-B	#Blue/Orange	1
75/	G - - M/S	D7DZ 3590-A	#D5DW 3590-AA	1
75/77	P - - M/S			1
75/	G - - P/S	C9DZ 3590-A		1
75/77	P - - P/S			1
77/	V - - P/S			1
73/74	K	D20Z 3590-B	#D20A 3B153-BB	1
75/76	K	D70Z 3590-A		1
77/	K	D70Z 3590-B	#Blue/Orange	1
73/74	P - - M/S	D0DZ 3590-A	#D3DA 3B153-AB	1
	P - - P/S	C9DZ 3590-A	#D3DA 3B153-BB	1
73/	A,C,D,F,K,P,Y	380771-S100	(MM-38-FA)-nut (pitman arm to gear)-7/8"-14	1
3C590	BUSHING KIT (POWER STEERING CYLINDER MOUNTING ROD END)			
75/	G	C60Z 3C590-A		1
73/77	P			1
77/	V			1
	Consists of			
	2-C70A 3A344-A Insulator	1-AJ 3652-A	Spacer	1-45218-S8 Nut
	2-C3AA 3A345-A Washer	1-33925-S8	Nut	
3D590	PLATE (POWER STEERING PUMP PRESSURE)			
73/77	A,F,G,P	D0AZ 3D590-A	Front-use w/Ford pump	1
73/76	C,Y			
75/77	L "Before 6/27/77"	D1AZ 3D590-A	Rear-use w/Ford pump	1
78/	A,F,G,P,V	D8AZ 3D590-A	Front-use with all #HBC Ford pumps	1
79	J			1
77/	L "From 6/27/77"	D8AZ 3D590-B	Rear-use with all #HBC Ford pumps	1

YEAR	MODEL/RESTRICTIONS	PART NUMBER	DESCRIPTION	QTY.
3D590	PLATE (POWER STEERING PUMP PRESSURE) — Cont'd			
73/78	A	★ D2VY 3D590-A	Front-w/Saginaw pump	1
73/	D,K	r/bE1UZ 3C772-A(3/82)		1
79	G,P			1
73/76	Y			1
73/77	A	D2VY 3D590-B	Rear-w/Saginaw pump except HBA-GM,GN,GR,GS,GT	1
73/76	D,K,Y			1
76/78	A	★ D6AZ 3D590-A	Rear-w/Saginaw pump HBA-GM,GN,GR,GS,GT	1
76/	D,K	r/bE1UZ 3C772-A(3/82)		1
79	G,P			1
76	A,Y	387297-S	(NN-143-F) Pin-3/16" x 1 13/16" dowl use w/HBA-GM-GN pump	2
78/	A,F,G,P,V	387579-S	(NN-143-L) - - pin 3/16" x 2 1/4"	1
79	J			1
77/	L "From 6/27/77"			1
3591	SEAL (STEERING GEAR SECTOR SHAFT HOUSING OIL)			
73/	A,C,D,K,Y - - P/S	★3591	Serviced only in 3E501 kit	1
74/	F - - P/S			1
73/74	C,F - - M/S	C70Z 3591-A		1
75/	G			1
73/77	P			1
77/	V			1
73/78	J - - M/S	★ D6RY 3591-A	R/b D1RY 3L566-A (9/82)	1
79	J - - P/S	D9BZ 3591-A	With #SPR-R(Ford) gear-also included with 3A714 & 3A717 tubes	4
79/	J - - P/S	D4ZZ 3591-A	w/TRW gear	4
75/	L - - P/S		w/TRW gear	4
78/	P - - P/S		w/TRW gear	4
78/79	P - - P/S "Before 4/2/79"	D8BZ 3591-A	With #SPR-A,C,E (Ford) gear	4
79	P - - P/S "From 4/2/79"	D9BZ 3591-A	With #SPR-P (Ford) gear-also included with 3A714 & 3A717 tubes	4
3B592	SEAL (POWER STEERING PUMP ROTOR SHAFT OIL)			
73/77	A,F,G,P,V	★ C5AZ 3B592-C	Use w/Ford pump-also serviced in kit-group 3B584	1
73/76	C,Y	r/bD9AZ 3B592-A(12/81)		1
75/77	L "Before 6/27/77"			1
73/78	A	★ D2VY 3B592-A(3/84)	Use w/Saginaw pump	1
73/	D,K			1
79	G,P			1
73/76	Y			1
78/79	A,F,G,P,V "Before 11/6/78"	★ D8AZ 3B592-A	Use with all #HBC Ford pumps	1
79	J "Before 11/6/78"	r/bD9AZ 3B592-A(1/80)		1
77/79	L "From 6/27/77 to 11/6/78"			1
79	A,F,G,J,L,P,V "From 11/6/78"	D9AZ 3B592-A	Ford pump-incl. retainer	1
3593	SHIM (STEERING GEAR HOUSING COVER PLATE GASKET)			
73/74	J - - M/S	D1RY 3593-C	Bearing cover-selective fit	AR
		D1RY 3593-D	.005" thick	AR
		D1RY 3593-E	.010" thick	AR
		D1RY 3593-F	.015" thick	AR
		D1RY 3593-G	.020" thick	AR
		★ D1RY 3593-H	Shaft end-selective fit-.005" thick-r/b D1RY 3L566-A(9/83)	AR
		★ D1RY 3593-J	.007" thick-r/b D1RY 3L566-A(9/83)	AR
		★ D1RY 3593-K	.010" thick-r/b D1RY 3L566-A(9/83)	AR
		★ D1RY 3593-L	.040" thick-r/b D1RY 3L566-A(9/83)	AR
75/78	J - - M/S	★ D4RY 3593-B(6/82)	.005" thick	AR
		★ D4RY 3593-A	Kit - selective fit - .006" thick thru .060" thick-r/b D1RY 3L566-A(9/83)	AR

COPYRIGHT © 1986 — FORD MOTOR COMPANY — DEARBORN, MICHIGAN

1973/79 LINCOLN-MERCURY CARS

YEAR	MODEL/RESTRICTIONS	PART NUMBER	DESCRIPTION	QTY.
3A594	SPRING (POWER STEERING GEAR CONTROL VALVE SPOOL)			
74/76	C	C5AZ 3A594-A	Use w/Saginaw gear	1
73/	F			1
3E595	SHIELD (POWER STEERING SPLASH UPPER)-Improvise			
3D596	SPRING (POWER STEERING PUMP PRESSURE PLATE)			
73/77	A,F,G,P,V	★ C5AZ 3D596-C(6/82)	Use w/Ford pump	1
73/76	C,Y			1
75/77	L "Before 6/27/77"			1
73/77	A	D2VY 3D596-A	Use w/Saginaw pump except HBA-GM,GN,GR,GS,GT	1
73/	D,K			1
73/76	Y			1
76/78	A	★ D6AZ 3D596-A	Use w/pump ident. HBA-GM,GN,GR,GS,GT	1
77/	D,K	r/bE2UZ 3D596-A(6/83)		1
79	G,P		With Saginaw pump	1
76	Y			1
78/	A,F,G,P,V	D8AZ 3D596-A	Use with all #HBC Ford pumps	1
79	J			1
77/	L "From 6/27/77"			1
3E596	BRACKET (POWER STEERING PUMP PRESSURE and RETURN TUBE)-Improvise			
3N597	SHIM (POWER STEERING GEAR SIDE COVER)			
76/78	J	★ D5RY 3N597-A(3/81)	.0022"	1
		★ D5RY 3N597-C(3/81)	.02"	AR
		★ D5RY 3N597-D(3/81)	.03"	AR
3E598	ADAPTOR (POWER STEERING PUMP OUTLET)			
76/78	J	★ D5RY 3E598-A(3/81)		1
3K599	SPACED (STEERING GEAR PINION BEARING)			
79	J	D4FZ 3K599-A		1
74/	L - - M/S			1
78/	P - - M/S			1

3600 WHEEL ASSY. (STEERING)

HOW TO FIND STEERING WHEELS, PADS, CAPS and COVERS

To find Steering Wheel and related parts you must know:

YEAR, MODEL and COLOR

1. Identify Year and Model by referring to the Certification Label Codes as shown in the General Information Section.

2. Determine color by:
   (a) Visual identification or
   (b) Trim code (second character of trim code generally applicable to each color)

3. Refer to listing below and find the appropriate Year and Model.

4. Match Year and Model with appropriate color and/or trim code to select desired part number.

PART NUMBER		ENGINEERING NBR		TYPE #
D2GY	3649–A	D2GA	3649–AA	1
D3AZ	3649–B	C9AA	3A515–B	2
D3GY	3649–A	C9GA	3A515–A	3
D3MY	3649–A	D3MA	3649–AA	4
D3RY	3649–A	73EB	3A515–AA	5
D3WY	3649–A	D3MA	3649–AA	6
D5AZ	3649–B	D5AW	3A515–BC	7
D5MY	3649–A	D5MW	3A515–AA	8
D5VY	3649–A	D5VW	3A515–AA	10
D5WY	3649–A	D5MW	3A515–AA	9
D6AZ	3649–A	D6AW	3A515–AA	11
D6MY	3649–A	D6MW	3A515–AA	9
D6VY	3649–A	D6VW	3A515–AA	10
D6WY	3649–A	D6WW	3A515–AA	9
D7MY	3649–A	D7MW	3A515–AA	12
D70Z	3649–A	D70C	3A515–AA	13
D8BZ	3649–A	D8BC	3A515–F05BA	14 (BLUE)
D8BZ	3649–B	D8BC	3A515–F28CA	14 (RUSSET)
D8BZ	3649–C	D8BC	3A515–F28TA	14 (CHAMOIS)
D8BZ	3649–E	D8BC	3A515–H05BA	15 (BLUE)
D8BZ	3649–F	D8BC	3A515–H28CA	15 (RUSSET)
D8BZ	3649–G	D8BC	3A515–H28TA	15 (CHAMOIS)
D8BZ	3649–J	D8BC	3A515–H88YA	15 (GOLD)
D8BZ	3649–L	D8BC	3A515–F09AA	14 (BLACK)
D8BZ	3649–M	D8BC	3A515–H09AA	15 (BLACK)
D70Z	3649–B	D70C	3A515–AA	16
D8BZ	3649–K	D8BC	3A515–EA	17
D6AZ	3649–B	D6AW	3A515–BA	7
D8LY	3649–A	D8LC	3649–AA	18
D9BZ	3649–A	D8BC	3A515–F09DA	14 (RED)
D9BZ	3649–B	D8BC	3A515–H09DA	15 (RED)
D9BZ	3649–C	D9BC	3A515–A05BA	19 (BLUE)
D9BZ	3649–D	D9BC	3A515–A09AA	19 (BLACK)
D9BZ	3649–E	D9BC	3A515–A09DA	19 (RED)
D9BZ	3649–F	D9BC	3A515–A28TA	19 (CHAMOIS)
D9BZ	3649–G	D9BC	3A515–A88YA	19 (GOLD)
D9KY	3649–A	D9KC	3A515–AA	20
D9MY	3649–A	D9MC	3A515–BB	20
D9ZZ	3649–A	D9BC	3A515–A61BA	19 (BLUE)
D9ZZ	3649–B	D9BC	3A515–A24FA	19 (VAQUERO)

COPYRIGHT © 1986 — FORD MOTOR COMPANY — DEARBORN, MICHIGAN

TYPE 1 (D2GY-3649-A)

TYPE 2 (D3AZ-3649-B)

TYPE 3 (D3GY-3649-A)

TYPE 4 (D3MY-3649-A)

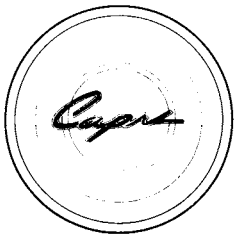

TYPE 5 (D3RY-3649)

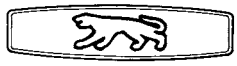
TYPE 6 (D3WY-3649-A)

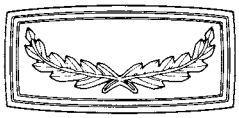
#TYPE 7 (D6AZ-3649-B)
#TYPE 7 (D5AZ-3649-B)

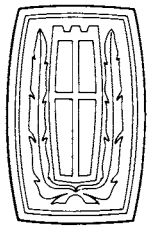
#TYPE 8 (D5MY-3649-A)
#TYPE 8 (D6MY-3649-A)

#TYPE 9 (D5WY-3649-A)
#TYPE 9 (D6WY-3649-A)

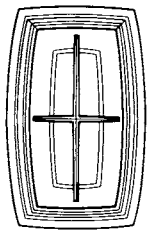
#TYPE 10 (D5VY-3649-A)
#TYPE 10 (D6VY-3649-A)

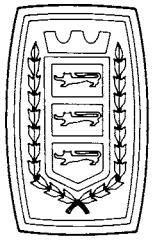
TYPE 11 (D6AZ-3649-A)

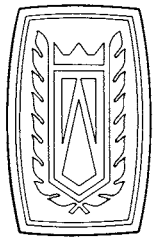
TYPE 12 (D7MY-3649-A)

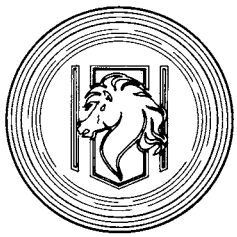
TYPE 13 (D7OZ-3649-A)

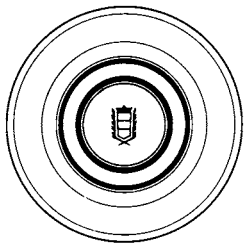
TYPE 14 (D8BZ-3649-A-D)

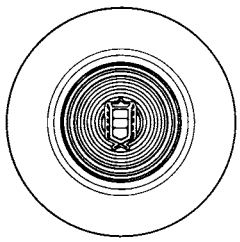
TYPE 15 (D8BZ-3649-E-J)

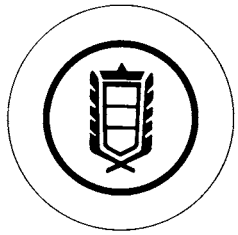
TYPE 16 (D7OZ-3649-B)

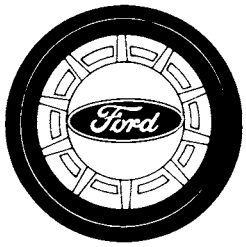

TYPE 17 (D8BZ-3649-K)

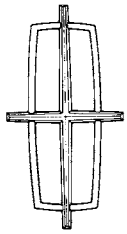
TYPE 18 (D8LY-3649-A)

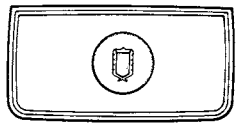
TYPE 19 (D9BZ-3649)
(D9ZZ-3649)

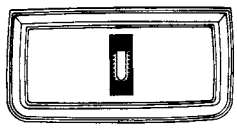
TYPE 20 (D9MY-3649-A)

#REFER TO TEXT FOR MODEL CLARIFICATION

P-13399

1973/Emblem (Steering Wheel Hub)

MODEL	PART NUMBER LESS SUFFIX	TRIM CODES,COLORS and APPLICABLE PART NUMBER SUFFIXES														Q T Y
	TRIM CODES ➧		SECOND CHARACTER OF TRIM CODE										ALL CODES	ALL CODES	OTHER	
			-B or L	-C	-D or N	-F or 3	-G or 6	-R or 5	-T	-U	Y or 8	-Z or 9				
	COLORS ➧		BLUE	ORANGE	RED	GIN-GER	AVO-CADO	GREEN	BEIGE	TAN	GRAY GOLD	TOB-ACCO	BLACK	WHITE	SEE NOTE	
3600	WHEEL ASSY. (STEERING)															

Notes: ‡ Not a coded color part, ● Use Black,@ without leather covered rim wheel, ⊕ with leather covered rim wheel, % Gray, □ Silver, ◊ Cranberry, ▲ Use Tobacco, † Dark Tobacco, ¿ Yellow, ✠ Use Saddle, # Taupe, △ Aqua, ◭ Aqua (dark maple), + Aqua (lt. maple), $ Bright red, ϕ Dark red, ■ Coral, * Emerald green

1973

A (Mercury)

Wheel assy.–2 spokes (w/o speed control)	D2AZ 3600		●			▲		●	T			●	K			1
Pad assy.	D3AZ 3623		★B			▲			S			●	E			1
Cover and horn pad	13A915															
Emblem – – standard	‡ D3MY 3649		★A			★A		★A	★A			★A	★A			1
– – deluxe	‡ D3GY 3649		★A			★A		★A	★A			★A	★A			1
Wheel assy.–2 spokes (w/speed control)	D3AZ 3600		●			●		●	●			●	G	●		1
Pad assy.	D3AZ 3623		BA			▲		●	●			●	★BD	●		1
Cover assy.	‡ D3AZ 3D752		★A			★A		★A	★A			★A	★A	★A		1
Wheel assy.–3 spokes	D2AZ 3600		★BB			▲		●	BL			●	BA	●		1
	D3AZ 3600										★C					1
Pad assy.	D3AZ 3623					▲		●	●		●			●		1

C (Montego)

Wheel assy.–2 spokes	@ D2AZ 3600		●			●		●	T			●	K			1
	⊕ D3FZ 3600		★H					★K	★J		★M	★L	★B			1
Pad assy.	D3AZ 3623		★B			●			S		W	P	E			1
Cover and horn pad	13A915															
Emblem – – standard	‡ D3MY 3649		★A			★A		★A	★A			★A	★A			1
– – deluxe	‡ D3GY 3649		★A			★A		★A	★A			★A	★A			1
Wheel assy.–3 spokes	D2AZ 3600		★BB			●		●	BL			●	BA	●		1
	D3AZ 3600										★C					1
Pad assy. (exc. Cyclone)	D3AZ 3623					●		●	●		●			●		1

D (Lincoln)

Wheel assy.–2 spokes (w/speed control)	D3AZ 3600		●		J	●		N	●		●	●	G	●	%E	1
Pad assy.	D3AZ 3623		BH		BF	▲		BM	●		●	●	★BD	●	%BU	1
Cover assy.	‡ D3AZ 3D752		★A		★A	★A		★A	★A		★A	★A	★A	★A	★A	1
Wheel assy.–3 spokes	D2AZ 3600		●		●	▲		●	BL			●	BA			1
	D3AZ 3600										★C				★%B	1
Pad assy.	D3AZ 3623		●		●	▲		●	●		●			●	%AC	1
Cover assy.	D3VY 3D752					▲								●		1

F (Cougar)

Wheel assy.–2 spokes	@ D2AZ 3600		●			●	●			●			K	●		1
	⊕ D3FZ 3600		●			★F	●			★C			★B			1
Pad assy.	D3AZ 3623		★B			E							E	●		1
Cover and horn pad	13A915															
Emblem	‡ D3WY 3649		A			A	A			A			A	A		1

COPYRIGHT © 1986— FORD MOTOR COMPANY —DEARBORN, MICHIGAN

1973/79 LINCOLN-MERCURY CARS

MODEL	PART NUMBER LESS SUFFIX	TRIM CODES,COLORS and APPLICABLE PART NUMBER SUFFIXES														QTY
	TRIM CODES ➧	SECOND CHARACTER OF TRIM CODE										ALL CODES	ALL CODES	OTHER		
		-B or L	-C	-D or N	-F or 3	-G or 6	-R or 5	-T	-U	Y or 8	-Z or 9					
	COLORS ➧	BLUE	ORANGE	RED	GIN-GER	AVO-CADO	GREEN	BEIGE	TAN	GRAY GOLD	TOB-ACCO	BLACK	WHITE	SEE NOTE		

3600 WHEEL ASSY. (STEERING) — Cont'd

Notes: ‡ Not a coded color part, ● Use Black,@ without leather covered rim wheel, ⊕ with leather covered rim wheel, % Gray, □ Silver, ◊ Cranberry, ▲ Use Tobacco, † Dark Tobacco, ¿ Yellow, ✠ Use Saddle, # Taupe, △ Aqua, ⅄ Aqua (dark maple), + Aqua (lt. maple), $ Bright red, ϕ Dark red, ■ Coral, * Emerald green

1973

F (Cougar) — Cont'd

Wheel assy.-3 spokes	D2AZ 3600		★BB			★BD							BA	●		1
	D3AZ 3600						★D			★Y						1
Pad assy.	D3AZ 3623					●	●			●				●		1
Cover assy. (cherry wood)	D3WY 3D752					●	●							●		1
Cover assy. (camera case)	D3WY 3D752															1

J (Capri)

Wheel (exc. GT)	D3RY 3600	B	Black													1
	D3RY 3600	C	Tan													1
Cover	D3RY 3623	A	Black													1
Emblem	D3RY 3649	A														1

K (Mark IV)

Wheel assy.-2 spokes (w/speed control)	D3AZ 3600	◊●	L		J	●		N	●		●	●	G	●	□●	1
															★%E	1
Pad assy.	D3AZ 3623	◊BP	BH		BF	▲		BM	●		●	●	★BD	●	□●	1
	D3AZ 3623														%BU	
Cover (incl. emblem)	‡ D3AZ 3D752	★A	★A		★A	★A		★A	★A		★A	★A	★A	★A	★A	1
Wheel assy.-3 spokes	D2AZ 3600	★◊BJ	●		●	▲		●	BL			●	BA	●		1
	D3AZ 3600										★C				□●	1
Pad assy.	D3AZ 3623	●	●		●	▲		●	●		●			●	●	1
Cover (incl. emblem)	D3LY 3D752					▲		●						●		1

P (Comet)

Wheel assy.-2 spokes	@ D2AZ 3600		●	●		●	●		●	●			K	●		1
deluxe (w/horn bars)	⊕ D3FZ 3600		●	★E		★F	●		★J	★C			★B			1
Pad assy.	D3AZ 3623		★B	●		E			S				E	●		1
Cover & horn pad	13A915															
Emblem	‡ D3GY 3649		★A	★A		★A	★A		★A	★A			★A	A		1

Y (Meteor)

Wheel assy.-2 spokes (w/o speed control)	D2AZ 3600		●			▲		P	●			●	K			1
Pad assy.	D3AZ 3623		★B			▲			S			●	E			1
Cover and horn pad	13A915															
Emblem - - standard	‡ D3MY 3649		★A			★A		★A	★A			★A	★A			1
- - deluxe	‡ D3GY 3649		★A			★A		★A	★A			★A	★A			1
Wheel assy.-2 spokes (w/speed control)	D3AZ 3600		●			●		M	●			●	G			1
Pad assy.	D3AZ 3623		BA			▲		BL	●			●	★BD			1
Cover assy.	D3AZ 3D752		★A			★A		★A	★A			★A	★A			1

MODEL	PART NUMBER LESS SUFFIX	TRIM CODES,COLORS and APPLICABLE PART NUMBER SUFFIXES														QTY
	TRIM CODES ➧	SECOND CHARACTER OF TRIM CODE										ALL CODES	ALL CODES	OTHER		
		-B or L	-C	-D or N	-F or 3	-G or 6	-R or 5	-T	-U	Y or 8	-Z or 9					
	COLORS ➧	BLUE	ORANGE	RED	GIN-GER	AVO-CADO	GREEN	BEIGE	TAN	GRAY GOLD	TOB-ACCO	BLACK	WHITE	SEE NOTE		
3600	WHEEL ASSY. (STEERING) — Cont'd															
Notes:	‡ Not a coded color part, ● Use Black,@ without leather covered rim wheel, ⊕ with leather covered rim wheel, % Gray, □ Silver, ◊ Cranberry, ▲ Use Tobacco, † Dark Tobacco, ¿ Yellow, ✠ Use Saddle, # Taupe, △ Aqua, ⊿ Aqua (dark maple), + Aqua (lt. maple), $ Bright red, ϕ Dark red, ■ Coral, * Emerald green															

1973

Y (Meteor) — Cont'd

Wheel assy.-3 spokes	D2AZ 3600	BB			▲		●	BL			BK	BA			1
	D3AZ 3600									C					1
Pad assy.	D3AZ 3623				▲		●	●		●					1

MODEL	PART NUMBER LESS SUFFIX	TRIM CODES,COLORS and APPLICABLE PART NUMBER SUFFIXES														QTY.
	TRIM CODES ➧	SECOND CHARACTER OF TRIM CODE									ALL CODES	ALL CODES	OTHER	OTHER		
		-B or L	-C	-D or N	-G or 6	-R or 5	-T	M or U	-Y or 8	-Z or 9						
	COLORS ➧	BLUE	ORANGE	RED	AVO-CADO	GREEN	BEIGE	TAN	GOLD	SADDLE	BLACK	WHITE	SEE NOTE	SEE NOTE		
3600	WHEEL ASSY. (STEERING) — Cont'd															
Notes:	‡ Not a coded color part, ● Use Black,@ without leather covered rim wheel, ⊕ with leather covered rim wheel, % Gray, □ Silver, ◊ Cranberry, ▲ Use Tobacco, † Dark Tobacco, ¿ Yellow, ✠ Use Saddle, # Taupe, △ Aqua, ⊿ Aqua (dark maple), + Aqua (lt. maple), $ Bright red, ϕ Dark red, ■ Coral, * Emerald green															

1974

A (Mercury)

Wheel assy.-2 spokes	D2AZ 3600	●				P	●	●			K				1
(w/o speed control)	D3AZ 3600								●						1
Pad assy.	D3AZ 3623	★B				L	S	●	W		E				1
	D4AZ 3623														1
Cover and horn pad	13A915														
Emblem - - standard	‡ D3MY 3649	★A				★A	★A	★A	★A	★A	★A				1
- - deluxe	‡ D3GY 3649	★A				★A	★A	★A	★A	★A	★A				1
Wheel assy.-2 spokes	D3AZ 3600	●				●	●		F		G				1
(w/speed control)	D4AZ 3600							●		●					1
Pad assy.	D3AZ 3623	●				BL	●	●	●		★BD				1
	D4AZ 3623									F					1
Cover assy.	‡ D3AZ 3D752	★A				★A	★A	★A	★A		★A				1
Wheel assy.-3 spokes	D3AZ 3600							★Y							1
Pad assy.	D3AZ 3623							●							1
Cover assy.	D4MY 3D752														1

C (Montego)

Wheel assy.-2 spokes	D2AZ 3600	●				P		●			K				1
(w/o speed control-w/o leather covered rim)	D3AZ 3600								●						1
Pad assy.	D3AZ 3623	●				L		T	W		E				1
	D4AZ 3623														1
Cover and horn pad	13A915														
Emblem - - standard	‡ D3MY 3649	★A				★A		★A	★A	★A	★A				1
- - deluxe	‡ D3GY 3649	★A				★A		★A	★A	★A	★A				1

COPYRIGHT © 1986— FORD MOTOR COMPANY —DEARBORN, MICHIGAN

1973/79 LINCOLN-MERCURY CARS

MODEL	PART NUMBER LESS SUFFIX	TRIM CODES,COLORS and APPLICABLE PART NUMBER SUFFIXES														QTY.
	TRIM CODES ▶	SECOND CHARACTER OF TRIM CODE									ALL CODES	ALL CODES	OTHER	OTHER		
		-B or L	-C	-D or N	-G or 6	-R or 5	-T	M or U	-Y or 8	-Z or 9						
	COLORS ▶	BLUE	ORANGE	RED	AVO-CADO	GREEN	BEIGE	TAN	GOLD	SADDLE	BLACK	WHITE	SEE NOTE	SEE NOTE		
3600	WHEEL ASSY. (STEERING) — Cont'd															
Notes:	‡ Not a coded color part, ● Use Black,@ without leather covered rim wheel, ⊕ with leather covered rim wheel, % Gray, □ Silver, ◊ Cranberry, ▲ Use Tobacco, † Dark Tobacco, ¿ Yellow, ⌘ Use Saddle, # Taupe, △ Aqua, ⊿ Aqua (dark maple), + Aqua (lt. maple), $ Bright red, ϕ Dark red, ■ Coral, * Emerald green															

1974

C (Montego) — Cont'd

Wheel assy.-2 spokes	D3AZ 3600		●				●			●		G				1
(w/speed control)	D4AZ 3600								●		●					1
Pad assy.	D3AZ 3623		●				●		●	●		★BD				1
	D4AZ 3623															1
Cover assy.	‡ D3AZ 3D752		★A				★A		★A	★A	★A	★A				1
Wheel assy.-2 spokes	D3FZ 3600						●					★B				1
(w/o speed control- w/leather covered rim)	D4FZ 3600		★N							★P	★F					1
Pad assy.	D3AZ 3623		★B				L			W		E				1
	D4AZ 3623															1
Cover and horn pad	13A915															
Emblem - - standard	‡ D3MY 3649		★A				★A			★A	★A	★A				1
- - deluxe	‡ D3GY 3649		★A				★A			★A	★A	★A				1
Wheel assy.-3 spokes	D2AZ 3600		★BB				●					BA				1
	D3AZ 3600									★C						1
	D4AZ 3600										★C					1
Pad assy.	D3AZ 3623						●			●	●					1

D (Lincoln)

Wheel assy.-2 spokes	D3AZ 3600		●		●		●	●		●		G		●		1
(w/speed control)	D4AZ 3600								●		●					1
Pad assy.	D3AZ 3623		BA		BF		●	●	●	●		★BD		%BU		1
	D4AZ 3623										F					1
Cover (incl. emblem)	‡ D3AZ 3D752		★A		★A		★A	★A	★A	★A	★A	★A		★A		1
Wheel assy.-3 spokes	D2AZ 3600		★BB		●		●	BL				BA				1
	D3AZ 3600									★C				★%B		1
	D4AZ 3600										★C					1
Pad assy.	D3AZ 3623		●		●		●	●		●	●			%AC		1
Cover	D3VY 3D752							H								1
	D4VY 3D752															1

F (Cougar)

Wheel assy.-2 spokes	D3FZ 3600											★B				1
(w/o speed control)	D4FZ 3600		★N		C		M		★J		★F			●E		1
Pad assy.	D3AZ 3623		★B				L					E				1
	D4AZ 3623													●G		1
Cover and horn pad	13A915															
Emblem	‡ D3WY 3649		A				A		A		A	A		A		1
Wheel assy.-2 spokes	D3AZ 3600		●		●		●			●		G				1
(w/speed control)	D4AZ 3600								●		●			●		1
Pad assy.	D3AZ 3623		●		●		●		●	●		★BD				1
	D4AZ 3623										F			●E		1
Cover (incl. emblem)	‡ D3AZ 3D752		★A				★A		★A	★A	★A	★A		★A		1

MODEL	PART NUMBER LESS SUFFIX	TRIM CODES,COLORS and APPLICABLE PART NUMBER SUFFIXES														QTY.
	TRIM CODES ▶		SECOND CHARACTER OF TRIM CODE									ALL CODES	ALL CODES	OTHER	OTHER	
			-B or L	-C	-D or N	-G or 6	-R or 5	-T	M or U	-Y or 8	-Z or 9					
	COLORS ▶		BLUE	ORANGE	RED	AVO-CADO	GREEN	BEIGE	TAN	GOLD	SADDLE	BLACK	WHITE	SEE NOTE	SEE NOTE	

3600 WHEEL ASSY. (STEERING) — Cont'd

Notes: ‡ Not a coded color part, ● Use Black,@ without leather covered rim wheel, ⊕ with leather covered rim wheel, % Gray, □ Silver, ◇ Cranberry, ▲ Use Tobacco, † Dark Tobacco, ¿ Yellow, ✠ Use Saddle, # Taupe, △ Aqua, ◭ Aqua (dark maple), + Aqua (lt. maple), $ Bright red, ϕ Dark red, ■ Coral, * Emerald green

1974

F (Cougar) — Cont'd

Wheel assy.-3 spokes	D2AZ 3600		★BB		●		●					BA				1
	D3AZ 3600								★Y							1
	D4AZ 3600										★C			●B		1
Pad assy.	D3AZ 3623		AB		●		●		●		●					1
	D4AZ 3623													●B		1
Cover assy.	D3WY 3D752															1
	D4WY 3D752															1

MODEL/RESTRICTIONS	PART NUMBER	DESCRIPTION	QTY.

1974

J (Capri)

Wheel (exc. Decor Group)	★D3RY 3600-B(6/82)	Black	1
	★D3RY 3600-C	Tan (dark)	1
Decor Group	D3RY 3600-A	Black (leather simulated vinyl covered rim)	1
All	★D4RY 3600-A(6/81)	Saddle	1
	★D4RY 3600-A(6/81)	Tan (medium)	1
Cover	D3RY 3623-A	Black	1
	★D4RY 3623-A(3/81)	Saddle	1
	★D4RY 3623-B(2/80)	Tan (medium)	1
Emblem	‡ D3RY 3649-A		1

MODEL	PART NUMBER LESS SUFFIX	TRIM CODES,COLORS and APPLICABLE PART NUMBER SUFFIXES														QTY.
	TRIM CODES ▶		SECOND CHARACTER OF TRIM CODE									ALL CODES	ALL CODES	OTHER	OTHER	
			-B or L	-C	-D or N	-G or 6	-R or 5	-T	M or U	-Y or 8	-Z or 9					
	COLORS ▶		BLUE	ORANGE	RED	AVO-CADO	GREEN	BEIGE	TAN	GOLD	SADDLE	BLACK	WHITE	SEE NOTE	SEE NOTE	

3600 WHEEL ASSY. (STEERING) — Cont'd

Notes: ‡ Not a coded color part, ● Use Black,@ without leather covered rim wheel, ⊕ with leather covered rim wheel, % Gray, □ Silver, ◇ Cranberry, ▲ Use Tobacco, † Dark Tobacco, ¿ Yellow, ✠ Use Saddle, # Taupe, △ Aqua, ◭ Aqua (dark maple), + Aqua (lt. maple), $ Bright red, ϕ Dark red, ■ Coral, * Emerald green

1974

K (Mark IV)

Wheel assy.-2 spokes	D3AZ 3600	◇●	●		●		●			●		G		□●	●	1
(w/speed control)	D4AZ 3600								D		●					1
Pad assy.	D3AZ 3623	◇BP	BA		●		BL		●	●		★BD		□●	%BU	1
	D4AZ 3623										F					1
Cover (incl. emblem)	‡ D3AZ 3D752	★A	★A		★A		★A		★A	★A	★A	★A		★A	★A	1

COPYRIGHT © 1986— FORD MOTOR COMPANY —DEARBORN, MICHIGAN

MODEL	PART NUMBER LESS SUFFIX	TRIM CODES,COLORS and APPLICABLE PART NUMBER SUFFIXES														Q T Y.
	TRIM CODES ➧	SECOND CHARACTER OF TRIM CODE									ALL CODES	ALL CODES	OTHER	OTHER		
		-B or L	-C	-D or N	-G or 6	-R or 5	-T	M or U	-Y or 8	-Z or 9						
	COLORS ➧	BLUE	ORANGE	RED	AVO-CADO	GREEN	BEIGE	TAN	GOLD	SADDLE	BLACK	WHITE	SEE NOTE	SEE NOTE		

3600 WHEEL ASSY. (STEERING) — Cont'd

Notes: ‡ Not a coded color part, ● Use Black,@ without leather covered rim wheel, ⊕ with leather covered rim wheel, % Gray, □ Silver, ◊ Cranberry, ▲ Use Tobacco, † Dark Tobacco, ¿ Yellow, ✠ Use Saddle, # Taupe, △ Aqua, ◭ Aqua (dark maple), + Aqua (lt. maple), $ Bright red, ϕ Dark red, ■ Coral, * Emerald green

1974

K (Mark IV) — Cont'd

Wheel assy.-3 spokes	D2AZ	3600	★◊BJ	★BB		●		●					BA				1
	D3AZ	3600								★Y	★C				□●	★%B	1
	D4AZ	3600										★C					1
Pad assy.	D3AZ	3623	●	●		●		●		●	●	●			●	%AC	1
Cover (incl. emblem)	D3LY	3D752															1
	D4LY	3D752															1

L (Bobcat)

Wheel assy.-2 spokes	D2FZ	3600					●										1
(w/horn button-w/o	D4FZ	3600										●					1
leather covered rim)	D7FZ	3600		A						E			D				1
●heel assy.-2 spokes	D2AZ	3600		●	●		●						K				1
(w/horn bars-w/o	D3AZ	3600									¿T						1
leather covered rim)	D4AZ	3600										A					1
Pad assy.	D3AZ	3623		★B	●						¿●		E				1
	D4AZ	3623															1
Cover and horn pad		13A915															
Emblem	‡ D3AZ	3649		B	B		B			B	B	B	B				1
Wheel assy.-2 spokes	D3FZ	3600											B				1
(w/horn bars-w/leather	D4FZ	3600		★N	★K		★L			★J	★¿H	★F					1
covered rim)																	
Pad assy.	D3AZ	3623		★B	●						¿●		E				1
	D4AZ	3623															1
Cover and horn pad		13A915															
Emblem	‡ D3AZ	3649		B	B		B			B	B	B	B				1

P (Comet)

●heel assy.-2 spokes	D2AZ	3600		●	●		●			●			K				1
(w/o leather covered	D4AZ	3600										A					1
rim)																	
Pad assy.	D3AZ	3623		★B	●								E				1
Cover and horn pad		13A915															
Emblem	‡ C9GY	3649		A	A		A			A			A				1
Wheel assy.-2 spokes	D3FZ	3600											★B				1
(w/leather covered	D4FZ	3600		★N		★K		★L			★J						
rim)																	
Pad assy.	D3AZ	3623		★B	●								E				1
	D4AZ	3623														%J	1
Cover and horn pad		13A915															
Emblem	‡ D3GY	3649		★A	★A		★A			★A			★A			★A	1

MODEL	PART NUMBER LESS SUFFIX	TRIM CODES,COLORS and APPLICABLE PART NUMBER SUFFIXES														Q T Y.
	TRIM CODES ➧		SECOND CHARACTER OF TRIM CODE									ALL CODES	ALL CODES	OTHER	OTHER	
			-B or L	-C	-D or N	-G or 6	-R or 5	-T	M or U	-Y or 8	-Z or 9					
	COLORS ➧		BLUE	ORANGE	RED	AVO-CADO	GREEN	BEIGE	TAN	GOLD	SADDLE	BLACK	WHITE	SEE NOTE	SEE NOTE	

3600 WHEEL ASSY. (STEERING) — Cont'd

Notes: ‡ Not a coded color part, ● Use Black,@ without leather covered rim wheel, ⊕ with leather covered rim wheel, % Gray, □ Silver, ◊ Cranberry, ▲ Use Tobacco, † Dark Tobacco, ¿ Yellow, ✠ Use Saddle, # Taupe, △ Aqua, ⅄ Aqua (dark maple), + Aqua (lt. maple), $ Bright red, ϕ Dark red, ■ Coral, * Emerald green

1974

Y (Meteor)

Wheel assy.-2 spokes	D2AZ 3600		●				●	●	●			K				1
(w/o speed control)	D3AZ 3600									A						1
	D4AZ 3600										A					1
Pad assy.	D3AZ 3623		★B					●		W		E				1
	D4AZ 3623															1
Cover and horn pad	13A915															
Emblem - - standard	‡ D3MY 3649		★A				★A	★A	★A	★A	★A	★A				1
- - deluxe	‡ D3GY 3649		★A				★A	★A	★A	★A	★A	★A				1
Wheel assy.-2 spoke	D3AZ 3600		●				●	●		●		G				1
(w/speed control)	D4AZ 3600								●		●					1
Pad assy.	D3AZ 3623		●				●	●	●	●		★BD				1
	D4AZ 3623										F					1
Cover assy.	‡ D3AZ 3D752		★A				★A	★A	★A	★A	★A	★A				1

MODEL	PART NUMBER LESS SUFFIX	TRIM CODES,COLORS and APPLICABLE PART NUMBER SUFFIXES														Q T Y.
	TRIM CODES ➧		SECOND CHARACTER OF TRIM CODE									ALL CODES	ALL CODES	OTHER	OTHER	
			-B or Q	-C	-D or N	-E or S	-G or 5	-P	-U OR 4	-Y OR 8	-Z or 9					
	COLORS ➧		BLUE	ORANGE	RED	SILVER BLUE	GREEN	SILVER	TAN	GOLD	SADDLE	BLACK	WHITE	SEE NOTE	SEE NOTE	

3600 WHEEL ASSY. (STEERING) — Cont'd

Notes: ‡ Not a coded color part, ● Use Black,@ without leather covered rim wheel, ⊕ with leather covered rim wheel, % Gray, □ Silver, ◊ Cranberry, ▲ Use Tobacco, † Dark Tobacco, ¿ Yellow, ✠ Use Saddle, # Taupe, △ Aqua, ⅄ Aqua (dark maple), + Aqua (lt. maple), $ Bright red, ϕ Dark red, ■ Coral, * Emerald green, ◯ Woodgrain rim r/b w/o woodgrain rim

1975

A (Mercury)

Wheel assy.-2 spokes (w/o speed control-w/o wood grain rim)	D5AZ 3600		B		●		●				E	C				1
Emblem	‡ D6AZ 3649		B		B		B				B	B				1
Cover and horn pad	13A915															
Wheel assy.-2 spokes	D5SZ 3600						★G									1
(w/o speed control-	D5AZ 3600		◯B								◯E	◯C				1
w/wood grain rim)	D6AZ 3600				J											1
Emblem	‡ D5MY 3649		A		A		A				A	A		A		1
Cover and horn pad	13A915															
Wheel assy.-2 spokes	D5AZ 3600						AG					●				1
	D6AY 3600										H					1
(w/speed control)	D6AZ 3600		G		J						K					1
Emblem	‡ D5MY 3649		A		A		A				A	A				1
Cover and horn pad	13A915															

COPYRIGHT © 1986— FORD MOTOR COMPANY —DEARBORN, MICHIGAN

1973/79 LINCOLN-MERCURY CARS

MODEL	PART NUMBER LESS SUFFIX	TRIM CODES,COLORS and APPLICABLE PART NUMBER SUFFIXES														QTY.
	TRIM CODES ▶		SECOND CHARACTER OF TRIM CODE									ALL CODES	ALL CODES	OTHER	OTHER	
			-B or Q	-C	-D or N	-E or S	-G or 5	-P	-U OR 4	-Y OR 8	-Z or 9					
	COLORS ▶		BLUE	ORANGE	RED	SILVER BLUE	GREEN	SILVER	TAN	GOLD	SADDLE	BLACK	WHITE	SEE NOTE	SEE NOTE	

3600 WHEEL ASSY. (STEERING) — Cont'd

Notes: ‡ Not a coded color part, ● Use Black,@ without leather covered rim wheel, ⊕ with leather covered rim wheel, % Gray, □ Silver, ◊ Cranberry, ▲ Use Tobacco, † Dark Tobacco, ¿ Yellow, ✠ Use Saddle, # Taupe, △ Aqua, ◭ Aqua (dark maple), + Aqua (lt. maple), $ Bright red, ϕ Dark red, ■ Coral, * Emerald green, ◯ Woodgrain rim r/b w/o woodgrain rim

1975

C (Montego)

Wheel assy.-2 spokes (w/o speed control-w/o wood grain rim)	D5AZ 3600		B				●		✠		E	C				1
Emblem	‡ D5AZ 3649		A				A		A		A	A				1
Cover and horn pad	13A915															
Wheel assy.-2 spokes (w/o speed control-w/leather covered rim)	D50Z 3600		H				●		✠	C	●	★F				1
Emblem	‡ D5MY 3649		A				A		A	A	A	A				1
Cover and horn pad	13A915															
Wheel assy.-2 spokes (w/o speed control-w/wood grain rim	D5SZ 3600						★G									1
	D5SY 3600									A				$E		1
	D5AZ 3600		◯B						◯A			◯C				
Emblem	‡ D5MY 3649		A				A		A	A		A		A		1
Cover and horn pad	13A915															
Wheel assy.-2 spokes (w/speed control)	D5AZ 3600						AG		●			●				1
	D6AY 3600		G							◯F	K	H				1
Emblem	‡ D5MY 3649		A				A		A	A		A				1
Cover and horn pad	13A915															

D (Lincoln)

Wheel assy.-2 spokes	D5AY 3600													★#B		1
	D6AZ 3600		G		J					◯F					◯E	1
(w/speed control)	D6AY 3600										H					1
(w/speed control)	D5AZ 3600						AG		●			●				1
Emblem	‡ D6VY 3649		A		A		A		A			A		A	A	1
Cover and horn pad	13A915															
Wheel assy.-2 spokes	D5SY 3600									★A				#●		1
	D5AZ 3600	◯B						◯A			◯C					1
	D6AZ 3600			◯J												1
(w/o speed control)	D5SZ 3600						G									1
	D6AZ 3600														C	1
Emblem	‡ D6VY 3649		A		A		A		A	A		A		A	A	1
Cover and horn pad	13A915															

F (Cougar)

Wheel assy.-2 spokes	D5SY 3600									★A						1
(w/o speed control-	D5SZ 3600						★G									1
w/wood grain rim)	D5AZ 3600		◯B						◯A			◯C				
	D6AZ 3600			◯J												1
Emblem	‡ D6WY 3649		A		A		A		A	A	A	A				1
Cover and horn pad	13A915															

MODEL	PART NUMBER LESS SUFFIX	TRIM CODES,COLORS and APPLICABLE PART NUMBER SUFFIXES														QTY.
	TRIM CODES ➧		SECOND CHARACTER OF TRIM CODE									ALL CODES	ALL CODES	OTHER	OTHER	
			-B or Q	-C	-D or N	-E or S	-G or 5	-P	-U OR 4	-Y OR 8	-Z or 9					
	COLORS ➧		BLUE	ORANGE	RED	SILVER BLUE	GREEN	SILVER	TAN	GOLD	SADDLE	BLACK	WHITE	SEE NOTE	SEE NOTE	
3600	WHEEL ASSY. (STEERING) — Cont'd															

Notes: ‡ Not a coded color part, ● Use Black,@ without leather covered rim wheel, ⊕ with leather covered rim wheel, % Gray, □ Silver, ◊ Cranberry, ▲ Use Tobacco, † Dark Tobacco, ¿ Yellow, ✠ Use Saddle, # Taupe, △ Aqua, ◭ Aqua (dark maple), + Aqua (lt. maple), $ Bright red, ϕ Dark red, ■ Coral, * Emerald green, ◯ Woodgrain rim r/b w/o woodgrain rim

1975

F (Cougar) — Cont'd

Wheel assy.-2 spokes (w/o speed control-w/leather covered rim)	D50Z 3600		H		D		●		✠	C	●	★F				1
Emblem	‡ D6AZ 3649		B		B		B		B	B		B				1
Cover and horn pad	13A915															
(w/speed control)	D5AZ 3600						AG		●			●				1
(w/speed control)	D6AY 3600										H					1
(w/speed control)	D6AZ 3600		G		J					◯F	K					
Emblem	‡ D6WY 3649		A		A		A		A	A		A				1
Cover and horn pad	13A915															

G (Monarch)

Wheel assy.-2 spokes (w/o leather covered or wood grain rim	D5AZ 3600				●	●	●		A			C		#F		1
Emblem	‡ D6AZ 3649				B	B	B		B			B		B		1
Cover and horn pad	13A915															
Wheel assy.-2 spokes (w/leather covered rim)	D50Z 3600				D	●	G	B	E			★F				1
	D50Y 3600													★†A		1
Emblem	‡ D5MY 3649				A	A	A	A	A			A		A		1
Cover and horn pad	13A915															
Wheel assy.-2 spokes (w/wood grain rim)	D5SZ 3600					J	★G							#J		1
	D5AZ 3600								◯A			◯C				
	D6AZ 3600			◯J												
Emblem	‡ D5MY 3649				A	A	A		A			A		A		1
Cover and horn pad	13A915															

K (Mark IV)

Wheel assy.-2 spokes (w/speed control)	D5AY 3600													△C		1
(w/speed control)	D5AZ 3600						AG		●			●		△●		1
	D6AY 3600						F				H					1
	D6AZ 3600		G		J						K					1
Emblem	‡ D6VY 3649		A		A		A	A	A		A	A		A	A	1
Cover and horn pad	13A915															
Wheel assy.-2 spokes (w/o speed control)	D6AZ 3600				◯J									◯△D		1
	D5SZ 3600						★G									1
	D5AZ 3600	◯B						◯A		◯E	◯C					
	D7AZ 3600				◯A											
Emblem	‡ D6VY 3649		A		A	A	A		A		A	A		A	A	1
Cover and horn pad	13A915															

L (Bobcat)

Wheel assy.-2 spokes (w/o leather covered rim)	D5AZ 3600		AA		AC		AG				AF	●				1
	D6AY 3600											H				1
Emblem	‡ D6AZ 3649		B	B					B			B		B		1
Cover and horn pad	13A915															
Wheel assy.-2 spokes (w/horn bar & leather covered rim)	D50Z 3600		H	●			●		●			★F				1
Emblem	‡ D6AZ 3649		B	B			B		B			B				1
Cover and horn pad	13A915															

COPYRIGHT © 1986— FORD MOTOR COMPANY —DEARBORN, MICHIGAN

1973/79 LINCOLN-MERCURY CARS

MODEL	PART NUMBER LESS SUFFIX	TRIM CODES,COLORS and APPLICABLE PART NUMBER SUFFIXES														Q T Y.
	TRIM CODES ➧		SECOND CHARACTER OF TRIM CODE									ALL CODES	ALL CODES	OTHER	OTHER	
			-B or Q	-C	-D or N	-E or S	-G or 5	-P	-U OR 4	-Y OR 8	-Z or 9					
	COLORS ➧		BLUE	ORANGE	RED	SILVER BLUE	GREEN	SILVER	TAN	GOLD	SADDLE	BLACK	WHITE	SEE NOTE	SEE NOTE	

3600 Notes: WHEEL ASSY. (STEERING) — Cont'd
‡ Not a coded color part, ● Use Black,@ without leather covered rim wheel, ⊕ with leather covered rim wheel,
% Gray, □ Silver, ◊ Cranberry, ▲ Use Tobacco, † Dark Tobacco, ¿ Yellow,
✠ Use Saddle, # Taupe, △ Aqua, ⅄ Aqua (dark maple), + Aqua (lt. maple),
$ Bright red, ϕ Dark red, ■ Coral, * Emerald green, ◯ Woodgrain rim r/b w/o woodgrain rim

1975

P (Comet)

Wheel assy.-2 spokes (w/o leather covered rim)	D5AZ 3600		B				●		A			C				1
Emblem	‡ D6AZ 3649		B				B		B			B				1
Cover and horn pad	13A915															
Wheel assy.-2 spokes (w/leather covered rim)	D50Z 3600		H	●			●		●			★F				1
Emblem	‡ D6AZ 3649		B				B		B			B				1
Cover and horn pad	13A915															

Y (Meteor)

Wheel assy.-2 spokes (w/o speed control-w/o wood grain rim)	D5AZ 3600		B		●		●				E	C				1
Emblem	‡ D6AZ 3649		B		B		B				B	B				1
Cover and horn pad	13A915															
Wheel assy.-2 spokes (w/o speed control-w/wood grain rim)	D5SZ 3600						★G									1
	D5AZ 3600		◯B		◯J							◯C				1
	D6AZ 3600															1
Emblem	‡ D5MY 3649		A		A		A					A				1
Cover and horn pad	13A915															
Wheel assy.-2 spokes (w/speed control)	D5AZ 3600		B	M			G		A			C		■K		1
Emblem	‡ D5MY 3649		A		A		A				A	A				1
Cover and horn pad	13A915															

MODEL	PART NUMBER LESS SUFFIX	TRIM CODES,COLORS and APPLICABLE PART NUMBER SUFFIXES														Q T Y.
	TRIM CODES ➧		SECOND CHARACTER OF TRIM CODE										ALL CODES	OTHER	OTHER	
			-B or Q	-C	-D or N	-E or 7	-G or 5	-R OR 5	-Z OR 9	-U OR 4	V-Y8	-9				
	COLORS ➧		BLUE	APRCO	RED	GRAY	GREEN	JADE	SADDLE	TAN	GOLD	DARK TOBAC	BLACK	SEE NOTE	SEE NOTE	

3600 Notes: WHEEL ASSY. (STEERING) — Cont'd
‡ Not a coded color part, ● Use Black,@ without leather covered rim wheel, ⊕ with leather covered rim wheel,
% Gray, □ Silver, ◊ Cranberry, ▲ Use Tobacco, † Dark Tobacco, ¿ Yellow,
✠ Use Saddle, # Taupe, △ Aqua, ⅄ Aqua (dark maple), + Aqua (lt. maple),
$ Bright red, ϕ Dark red, ■ Coral, * Emerald green, ◯ Woodgrain rim r/b w/o woodgrain rim

1976

A (Mercury)

Wheel assy.-2 spokes (w/o speed control-w/o wood grain rim)	D5AZ 3600		B		●		●		E				C			1
	D6AZ 3600										A					1
Emblem-"Before 9/2/75"	‡ D6AZ 3649		B		B		B		B		B		B			1
"From 9/2/75"	‡ D6AZ 3649		A		A		A		A		A		A			1
Cover and horn pad	13A915															

MODEL	PART NUMBER LESS SUFFIX	TRIM CODES,COLORS and APPLICABLE PART NUMBER SUFFIXES														Q T Y.
	TRIM CODES ▶		SECOND CHARACTER OF TRIM CODE										ALL CODES	OTHER	OTHER	
			-B or Q	-C	-D or N	-E or 7	-G or 5	-R OR 5	-Z OR 9	-U OR 4	V-Y8	-9				
	COLORS ▶		BLUE	APRCO	RED	GRAY	GREEN	JADE	SADDLE	TAN	GOLD	DARK TOBAC	BLACK	SEE NOTE	SEE NOTE	

3600 WHEEL ASSY. (STEERING) — Cont'd

Notes: ‡ Not a coded color part, ● Use Black,@ without leather covered rim wheel, ⊕ with leather covered rim wheel, % Gray, □ Silver, ◊ Cranberry, ▲ Use Tobacco, † Dark Tobacco, ¿ Yellow, ✠ Use Saddle, # Taupe, △ Aqua, ⚠ Aqua (dark maple), + Aqua (lt. maple), $ Bright red, ϕ Dark red, ■ Coral, * Emerald green, ◯ Woodgrain rim r/b w/o woodgrain rim

1976

A (Mercury) — Cont'd

Wheel assy.-2 spokes	D5SY 3600										★A					1
(w/o speed control-	D5SZ 3600						G									1
w/wood grain rim)	D5AZ 3600		◯B						◯E				◯C			1
	D6AZ 3600				◯J											1
Emblem- "Before 9/2/75"	‡ D5MY 3649		A		A		A		A		A		A			1
"From 9/2/75"	‡ D6MY 3649		★A		★A		★A		★A		★A		★A			1
Cover and horn pad	13A915															
Wheel assy.-2 spokes	D6AZ 3600		●G		J				●		●					1
(w/speed control)	D5AZ 3600						AG						●			1
-w/woodgrain rim)	D6AY 3600												★H			1
Emblem "Before 9/7/75"	‡ D5MY 3649		A		A		A		A		A		A			1
"From 9/2/75"	‡ D6MY 3649		★A		★A		★A		★A		★A		★A			1
Cover and horn pad	13A915															
Wheel assy. 2 spokes-	D6AY 3600												★H			1
(w/speed control-	D6AZ 3600		●G		J		★L		K		●					1
w/o woodgrain rim)	D6AY 3600												★H			1
Emblem fore 9/2/75"	‡ D5MY 3649		A		A		A		A		A		A			1
"From 9/2/75"	‡ D6MY 3649		★A		★A		★A		★A		★A		★A			1
Cover and horn pad	13A915															

C (Montego)

Wheel assy.-2 spokes	D5AZ 3600		B		●		●		E				C			1
(w/o speed control-	D6AZ 3600										★A					1
w/o wood grain rim)																
Emblem- "Before 9/2/75"	‡ D5AZ 3649		A		A		A		A		A		A			1
"From 9/2/75"	‡ D6AZ 3649		A		A		A		A		A		A			1
Cover and horn pad	13A915															
Wheel assy.-2 spokes	D50Z 3600		H		D		●		●				★F			1
(w/o speed control-	D60Z 3600							★C			★A			★△D		1
w/leather covered rim)																
Emblem- "Before 9/2/75"	‡ D5MY 3649		A		A		A		A		A		A	A		1
"From 9/2/75"	‡ D6MY 3649		★A		★A		★A		★A		★A		★A	★A		1
Cover and horn pad	13A915															
Wheel assy.-2 spokes	D5SZ 3600					★G				★A					1	
(w/o speed control-	D5AZ 3600		◯B										◯C			
w/wood grain rim)	D6AZ 3600				◯J				◯E							
Emblem- "Before 9/2/75"	‡ D5MY 3649		A		A		A		A		A		A			1
"From 9/2/75"	‡ D6MY 3649		★A				★A		★A		★A		★A			1
Cover and horn pad	13A915															

COPYRIGHT © 1986— FORD MOTOR COMPANY —DEARBORN, MICHIGAN

1973/79 LINCOLN-MERCURY CARS

MODEL	PART NUMBER LESS SUFFIX	TRIM CODES,COLORS and APPLICABLE PART NUMBER SUFFIXES														Q T Y.
	TRIM CODES ➧		SECOND CHARACTER OF TRIM CODE										ALL CODES	OTHER	OTHER	
			-B or Q	-C	-D or N	-E or 7	-G or 5	-R OR 5	-Z OR 9	-U OR 4	V-Y8	-9				
	COLORS ➧		BLUE	APRCO	RED	GRAY	GREEN	JADE	SADDLE	TAN	GOLD	DARK TOBAC	BLACK	SEE NOTE	SEE NOTE	

3600 WHEEL ASSY. (STEERING) — Cont'd

Notes: ‡ Not a coded color part, ● Use Black,@ without leather covered rim wheel, ⊕ with leather covered rim wheel, % Gray, □ Silver, ◊ Cranberry, ▲ Use Tobacco, † Dark Tobacco, ¿ Yellow, ✠ Use Saddle, # Taupe, △ Aqua, ◭ Aqua (dark maple), + Aqua (lt. maple), $ Bright red, ϕ Dark red, ■ Coral, * Emerald green, ◯ Woodgrain rim r/b w/o woodgrain rim

1976

C (Montego) — Cont'd

Wheel assy.-2 spokes	D5AZ	3600						AG						●			1
(w/speed control	D6AZ	3600		●◯G		◯J				●		●					1
-w/woodgrain rim)	D6AY	3600												★H			1
Emblem-	‡ D5MY	3649		A		A		A		A		A		A			1
"Before 9/2/75"																	
"From 9/2/75"	‡ D6MY	3649		★A		★A		★A		★A		★A		★A			1
Cover and horn pad		13A915															
Wheel assy.-2 spokes	D6AZ	3600		●G		J		★L		K							1
(w/speed control -	D6AY	3600													H		1
w/o woodgrain rim)																	
Emblem	‡ D6MY	3649		★A		★A		★A		★A					★A		
"Before 9/2/75"																	
"From 9/2/75"	‡ D6MY	3649		★A		★A		★A		★A					★A		1
Cover and horn pad		13A915															

D (Lincoln)

Wheel assy.-2 spokes	D5AY	3600							◯			◯			#B		1
(w/speed control -	D5AZ	3600		AA		AC					●			●			1
w/woodgrain rim)	D7AZ	3600													%A		1
	D6AY	3600												★H	◯F		1
	‡ D6VY	3649		A		A			A		A	A		A	A		1
Cover and horn pad		13A915															
Wheel assy.-2 spokes	D6AY	3600												★H	□F		1
(w/ speed control-	D6AZ	3600		●G		J			★M		★S	●					1
w/o woodgrain rim)																	
Emblem	‡ D6VY	3649		A		A			A		A	A		A	A		1
Cover and horn pad		13A915															
Wheel assy.-2 spokes	D5SY	3600										A			#B		1
	D5AZ	3600		◯B										◯C			1
	D7AZ	3600													◯F		1
	D5SZ	3600															1
(w/o speed control	D6AZ	3600				◯J			C						%E		1
-w/woodgrain rim)																	
Emblem-	‡ D6VY	3649		A		A			A		A	A		A	A		1
Cover and horn pad		13A915															
Wheel assy.-2 spokes	D5AZ	3600		B		●					●			C			1
(w/o speed control	D6AY	3600														#●	1
-w/o woodgrain rim)	D6AZ	3600							C			★A			□B		1
Emblem-	‡ D6VY	3649		A		A			A		A	A		A	A	A	1
Cover assy.		13A932															

MODEL	PART NUMBER LESS SUFFIX	TRIM CODES,COLORS and APPLICABLE PART NUMBER SUFFIXES														Q T Y.
	TRIM CODES ▶		SECOND CHARACTER OF TRIM CODE										ALL CODES	OTHER	OTHER	
			-B or Q	-C	-D or N	-E or 7	-G or 5	-R OR 5	-Z OR 9	-U OR 4	V-Y8	-9				
	COLORS ▶		BLUE	APRCO	RED	GRAY	GREEN	JADE	SADDLE	TAN	GOLD	DARK TOBAC	BLACK	SEE NOTE	SEE NOTE	
3600	WHEEL ASSY. (STEERING) — Cont'd															
Notes:	‡ Not a coded color part, ● Use Black,@ without leather covered rim wheel, ⊕ with leather covered rim wheel, % Gray, □ Silver, ◊ Cranberry, ▲ Use Tobacco, † Dark Tobacco, ¿ Yellow, ✠ Use Saddle, # Taupe, △ Aqua, ⅄ Aqua (dark maple), + Aqua (lt. maple), $ Bright red, ϕ Dark red, ■ Coral, * Emerald green, ◯ Woodgrain rim r/b w/o woodgrain rim															

1976

F (Cougar)

Wheel assy.-2 spokes	D5SY	3600							E			★A					1
(w/o speed control-	D5SZ	3600						★G									1
w/wood grain rim)	D5AZ	3600		●B										◯C			
	D6AZ	3600				◯J				◯C							1
Emblem-	‡ D6WY	3649		A		A		A		A		A		A	A		1
Cover and horn pad		13A915															
Wheel assy.-2 spokes	D50Z	3600		H		D		●		●				★F			1
(w/o speed control- w/leather covered rim)	D60Z	3600							★C			★A					1
Emblem- "Before 9/2/75"	‡ D6AZ	3649		B		B		B		B		B		B			1
"From 9/2/75"	‡ D6AZ	3649		A		A		A		A		A		A			1
Cover and horn pad		13A915															
Wheel assy.-2 spokes	D5AY	3600							◯			◯					1
(w/speed control	D5AZ	3600						AG						●			1
	D6AY	3600											H				1
-w/woodgrain rim	D6AZ	3600		●◯G		◯J				●					△AB		1
Emblem-	‡ D6WY	3649		A		A		A		A		A		A	A		1
Cover and horn pad		13A915															
Wheel assy.-2 spoke	D6AY	3600												★H			1
(w/speed control- w/o woodgrain rim)	D6AZ	3600		●G		J		★L	★M	●		●			△P		1
Emblem	‡ D6WY	3649		A		A		A	A	A		A		A	A		1
Cover and horn pad		13A915															
Wheel assy.-2 spokes	D5AZ	3600		B		●		●		E				C			1
(w/o speed control- w/o wood grain rim)	D6AZ	3600							C			★A				●	1
Emblem- "Before 9/2/75"	‡ D6AZ	3649		A		A		A	A	A		A		A		A	1
"From 9/2/75"	‡ D6AZ	3649		A		A		A	A	A		A		A		A	1
Cover and horn pad		13A915															

COPYRIGHT © 1986— FORD MOTOR COMPANY —DEARBORN, MICHIGAN

MODEL	PART NUMBER LESS SUFFIX	TRIM CODES,COLORS and APPLICABLE PART NUMBER SUFFIXES															QTY.
	TRIM CODES ▶	SECOND CHARACTER OF TRIM CODE											ALL CODES	OTHER	OTHER		
		-B or Q	-C	-D or N	-E or 7	-G or 5	-R OR 5	-Z OR 9	-U OR 4	V-Y8	-9						
	COLORS ▶	BLUE	APRCO	RED	GRAY	GREEN	JADE	SADDLE	TAN	GOLD	DARK TOBAC		BLACK	SEE NOTE	SEE NOTE		
3600	WHEEL ASSY. (STEERING) — Cont'd																
Notes:	‡ Not a coded color part, ● Use Black,@ without leather covered rim wheel, ⊕ with leather covered rim wheel, % Gray, □ Silver, ◊ Cranberry, ▲ Use Tobacco, † Dark Tobacco, ¿ Yellow, ⌘ Use Saddle, # Taupe, △ Aqua, ⚠ Aqua (dark maple), + Aqua (lt. maple), $ Bright red, ϕ Dark red, ■ Coral, * Emerald green, ◯ Woodgrain rim r/b w/o woodgrain rim																

1976

G (Monarch)

Wheel assy.-2 spokes (w/o leather covered-w/o speed control-w/o wood grain rim)	D5AZ 3600				●	F				●			C			1
	D6AZ 3600						C									1
	D6AY 3600											E				1
	D7AZ 3600													%A		1
Emblem- "Before 9/2/75"	‡ D6AZ 3649				B	B	B			B			B	B		1
"From 9/2/75"	‡ D6AZ 3649				A	A	A			A			A	A		1
Cover and horn pad	13A915															
Wheel assy.-2 spokes (w/leather covered rim)	D50Y 3600											★A				1
	D50Z 3600				D	●				●			★F			1
	D60Z 3600							★C						□E	★△D	1
Emblem- "Before 9/2/75"	‡ D5MY 3649				A	A		A		A		A	A	A	A	1
"From 9/2/75"	‡ D6MY 3649				★A	★A		★A		★A		★A	★A	★A	★A	1
Cover and horn pad	13A915															
Wheel assy.-2 spokes (w/wood grain rim)	D5SY 3600													★A		1
	D5AZ 3600									◯A			◯C			1
	D5SZ 3600					J								□H		1
	D6AZ 3600								C							1
	D6SY 3600											★B				1
	D7AZ 3600													□A		1
Emblem- "Before 9/2/75"	‡ D5MY 3649				A	A		A		A			A	A		1
"From 9/2/75"	‡ D6MY 3649				★A	★A		★A		★A			★A	★A		1
Cover and horn pad	13A915															
Wheel assy.-2 spokes (w/speed control-	D5AY 3600							◯						△C		1
	D5AZ 3600									AD			AB		●AH	1
	D6AY 3600												★H			1
w/woodgrain rim	D6AZ 3600				◯J	●AA						H				1
Emblem- "Before 9/2/75"	‡ D6AZ 3649				B	B		B		B		B	B	B	B	1
"From 9/2/75"	‡ D6AZ 3649				A	A		A		A		A	A	A	A	1
Cover and horn pad	13A915															
Wheel assy.-2 spokes (w/speed control-	D6AY 3600												★H	□F		1
w/o woodgrain rim	D6AZ 3600				J	T		★M		★S		H				1
Emblem "Before 9/2/75"	‡ D6AZ 3649				B	B		B		B			B	B		1
Cover and horn pad	13A915															
"From 9/2/75"	‡ D6AZ 3649				A	A		A		A			A	A		1
Cover and horn pad	13A915															

MODEL/RESTRICTIONS	PART NUMBER	DESCRIPTION	QTY.
J (Capri)			
Wheel (64D, Base Group)	★D5RY 3600-B	Black	1
	★D5RY 3600-C	Saddle-r/b D5RY 3600-B (6/83)	1
"Before 11/1/75"	★D5RY 3600-D	Tan (medium)-r/b D5RY 3600-B (6/83)	1
"From 11/1/75"	D6RY 3600-A	Tan (medium)	1
"From 11/1/75"	★D6RY 3600-B(6/83)	Chocolate	1
Cover	D3RY 3623-A	Black	1
	★D4RY 3623-A(3/81)	Saddle	1
"Before 11/1/75"	★D4RY 3623-B(2/80)	Tan (medium)	1
"From 11/1/75"	★D6RY 3623-A(2/80)	Tan (medium)	1
"From 11/1/75"	★D6RY 3623-B(2/80)	Chocolate	1
Emblem	‡ D3RY 3649-A		1
Wheel (64P,Decor, 64S,Special)	★D5RY 3600-A	Black (leather simulated vinyl covered rim)	1
Cover	D3RY 3623-A	Black	1
	★D6RY 3623-A(2/80)	Tan (medium)	1
	★D6RY 3623-B(2/80)	Chocolate	1
Emblem(64P,Decor)	‡ D3RY 3649-A		1
Emblem(64S,Special)	‡ D6RY 3649-B		1
Wheel (64T,Ghia)	★D5RY 3600-E(6/83)	Gray	1
"Before 11/1/75"	★D5RY 3600-F(6/83)	Tan (medium)	1
"From 11/1/75"	★D6RY 3600-C(6/83)	Tan (medium)	1
	★D5RY 3600-G	Black	1
Cover	★D5RY 3623-A(3/81)	Black	1
"Before 11/1/75"	★D5RY 3623-B(2/80)	Tan (medium)	1
"From 11/1/75"	★D6RY 3623-C(3/81)	Tan (medium)	1
	★D5RY 3623-C(3/81)	Gray	1
Emblem	★D5RY 3649-A(3/81)	Black	1
"Before 11/1/75"	★D5RY 3649-B(2/80)	Tan (medium)	1
"From 11/1/75"	★D6RY 3649-A(2/80)	Tan (medium)	1
	★D5RY 3649-C(3/81)	Gray	1

MODEL	PART NUMBER LESS SUFFIX	TRIM CODES,COLORS and APPLICABLE PART NUMBER SUFFIXES													QTY.
	TRIM CODES ▶	SECOND CHARACTER OF TRIM CODE										ALL CODES	OTHER	OTHER	
		-B or Q	-C	-D or N	-E or 7	-G or 5	-R OR 5	-Z OR 9	-U OR 4	V-Y8	-9				
	COLORS ▶	BLUE	APRCO	RED	GRAY	GREEN	JADE	SADDLE	TAN	GOLD	DARK TOBAC	BLACK	SEE NOTE	SEE NOTE	

3600 WHEEL ASSY. (STEERING) — Cont'd

Notes: ‡ Not a coded color part, ● Use Black,@ without leather covered rim wheel, ⊕ with leather covered rim wheel, % Gray, □ Silver, ◇ Cranberry, ▲ Use Tobacco, † Dark Tobacco, ¿ Yellow, ✠ Use Saddle, # Taupe, △ Aqua, ◭ Aqua (dark maple), + Aqua (lt. maple), $ Bright red, ϕ Dark red, ■ Coral, * Emerald green, ◯ Woodgrain rim r/b w/o woodgrain rim

1976

K (Mark IV)

Wheel assy.-2 spokes	D5AY 3600								E			◯			◭C	+●	1
(w/speed control-	D5AZ 3600													●			1
w/woodgrain rim)	D6AY 3600		★◯G	A	◯J					◯K				★◯H	◯□F		1
Emblem-	‡ D6VY 3649		A	A	A			A	A		A		A	A			1
Cover and horn pad	13A915																

COPYRIGHT © 1986 — FORD MOTOR COMPANY — DEARBORN, MICHIGAN

1973/79 LINCOLN-MERCURY CARS

MODEL	PART NUMBER LESS SUFFIX	TRIM CODES,COLORS and APPLICABLE PART NUMBER SUFFIXES														Q T Y.
	TRIM CODES ➧		SECOND CHARACTER OF TRIM CODE										ALL CODES	OTHER	OTHER	
			-B or Q	-C	-D or N	-E or 7	-G or 5	-R OR 5	-Z OR 9	-U OR 4	V-Y8	-9				
	COLORS ➧		BLUE	APRCO	RED	GRAY	GREEN	JADE	SADDLE	TAN	GOLD	DARK TOBAC	BLACK	SEE NOTE	SEE NOTE	

3600 WHEEL ASSY. (STEERING) — Cont'd

Notes: ‡ Not a coded color part, ● Use Black,@ without leather covered rim wheel, ⊕ with leather covered rim wheel, % Gray, □ Silver, ◇ Cranberry, ▲ Use Tobacco, † Dark Tobacco, ¿ Yellow, ✠ Use Saddle, # Taupe, △ Aqua, ◭ Aqua (dark maple), + Aqua (lt. maple), $ Bright red, ϕ Dark red, ■ Coral, * Emerald green, ◯ Woodgrain rim r/b w/o woodgrain rim

1976

K (Mark IV)

Wheel assy.-2 spokes (w/speed control -w/o wood grain rim)	D6AY	3600												★H	%F		1
	D6AZ	3600		●G		J			★M	●					+P		1
Emblem	‡ D6VY	3649		A		A			A	A				A	A		1
Cover and horn pad		13A915															
Wheel assy.-2 spokes (w/o speed control -w/wood grain rim)	D5AY	3600													◭C		1
	D5SY	3600				$F						★A					1
	D5SZ	3600								F							1
	D5AZ	3600		◯B										◯C			1
	D7AZ	3600													□A		1
	D6AY	3600			A										%E	#●	1
	D6AZ	3600				◯J				C							
	D6LY	3600													★+A		1
Emblem-	‡ D6VY	3649		A	A	A			A	A		A		A	A	A	1
Cover and horn pad		13A915															
Wheel assy.- 2 spokes (w/o speed control -w/o wood grain rim)	D5AZ	3600		B		●			M	E				C			1
	D6AZ	3600				★$R			C			●			△P		1
Emblem-	‡ D6VY	3649		A		A			A	A		A		A	A		1
Cover and horn pad		13A915															

L (Bobcat)

Wheel assy.-2 spokes (w/o leather covered rim)	D5AZ	3600		B				●			●			C			1
	D6AZ	3600				★B											1
Emblem- "Before 9/2/75"	‡ D6AZ	3649		B		B		B			B			B			1
"From 9/2/75"	‡ D6AZ	3649		A		A		A			A			A			1
Cover and horn pad		13A915															
Wheel assy.-2 spokes (w/horn bar & leather covered rim)	D50Z	3600		H				G			●			★F			1
	D60Z	3600				★B											1
Emblem- "Before 9/2/75"	‡ D6AZ	3649		B		B		B			B			B			1
"From 9/2/75"	‡ D6AZ	3649		A		A		A			A			A			1
Cover and horn pad		13A915															

P (Comet)

Wheel assy.-2 spokes (w/horn button)	D2FZ	3600		T													1
	D4FZ	3600									A						1
	D5FZ	3600						A									1

MODEL	PART NUMBER LESS SUFFIX	TRIM CODES,COLORS and APPLICABLE PART NUMBER SUFFIXES														Q T Y.
	TRIM CODES ▶		SECOND CHARACTER OF TRIM CODE										ALL CODES	OTHER	OTHER	
			-B or Q	-C	-D or N	-E or 7	-G or 5	-R OR 5	-Z OR 9	-U OR 4	V-Y8	-9				
	COLORS ▶		BLUE	APRCO	RED	GRAY	GREEN	JADE	SADDLE	TAN	GOLD	DARK TOBAC	BLACK	SEE NOTE	SEE NOTE	
3600	WHEEL ASSY. (STEERING) — Cont'd															
Notes:	‡ Not a coded color part, ● Use Black,@ without leather covered rim wheel, ⊕ with leather covered rim wheel, % Gray, □ Silver, ◊ Cranberry, ▲ Use Tobacco, † Dark Tobacco, ¿ Yellow, ✠ Use Saddle, # Taupe, △ Aqua, ◭ Aqua (dark maple), + Aqua (lt. maple), $ Bright red, ϕ Dark red, ■ Coral, * Emerald green, ◯ Woodgrain rim r/b w/o woodgrain rim															

1976

P (Comet) — Cont'd

Wheel assy.-2 spokes (w/o leather covered rim)	D5AZ 3600		B				●			●			C			1
Emblem- "Before 9/2/75"	‡ D6AZ 3649		B				B			B			B			1
"From 9/2/75"	‡ D6AZ 3649		A				A			A			A			1
Cover and horn pad	13A915															
Wheel assy.-2 spokes (w/leather covered rim)	D50Z 3600		H				J			●			★F			1
Emblem-	‡ D6AZ 3649		B				B			B			B			1
"From 9/2/75"	‡ D6AZ 3649		A				A			A			A			1
Cover and horn pad	13A915															

Y (Meteor)

Wheel assy.-2 spokes (w/o speed control- w/o wood grain rim)	D5AZ 3600		B		●		●		E				C			1
Emblem- "Before 9/2/75"	‡ D6AZ 3649		B		B		B		B				B			1
"From 9/2/75"	‡ D6AZ 3649		A		A		A		A				A			1
Cover and horn pad	13A915															
Wheel assy.-2 spokes (w/o speed control- w/wood grain rim)	D5SY 3600										★A					1
	D5SZ 3600						G									1
	D5AZ 3600		◯B						◯E				◯C			1
	D6AZ 3600			◯J												
Emblem- "Before 9/2/75"	‡ D5MY 3649		A		A		A		A		A		A			1
"From 9/2/75"	‡ D6MY 3649		★A		★A		★A		★A		★A		★A			1
Cover and horn pad	13A915															
Wheel assy.-2 spokes (w/speed control -w/woodgrain rim)	D6AZ 3600		●◯G		◯J				●		●					1
	D5AZ 3600						AG						AB			1
	D6AY 3600												★◯H			1
Emblem- "Before 9/2/75"	‡ D5MY 3649		A		A		A		A		A		A			1
"From 9/2/75"	‡ D6MY 3649		★A		★A		★A		★A		★A		★A			1
Cover and horn pad	13A915															
Wheel assy.-2 spokes- (w/speed control - w/o wood grain rim)	D6AZ 3600		●G		J		★L		●		●					1
	D6AY 3600													H		1
Emblem "Before 9/2/75"	‡ D5MY 3649		A		A		A		A		A			A		1
"From 9/2/75"	‡ D6MY 3649		★A		★A		★A		★A		★A			★A		1
Cover and horn pad	13A915															

COPYRIGHT © 1986— FORD MOTOR COMPANY —DEARBORN, MICHIGAN

MODEL/RESTRICTIONS	PART NUMBER LESS SUFFIX	TRIM CODES,COLORS and APPLICABLE PART NUMBER SUFFIXES														QTY.
	TRIM CODES ➧	SECOND CHARACTER OF TRIM CODE												ALL CODES	OTHER	
		B-Q V L-N	D-N-H	D-L S	F-6	G-5	K-7	J-P	R-5	S	T-2	U-Z-3-9	V-Y-8			
	COLORS ➧	BLUE	DARK RED	BRIGHT RED	CORD-OVAN	GREEN	AQUA	PLUM	JADE	SILVER	CHAM-OIS	SADDLE	GOLD	BLACK	SEE NOTE	

3600 WHEEL ASSY. (STEERING) — Cont'd

Notes: ‡ Not a coded color part, ● Use Black,@ without leather covered rim wheel, ⊕ with leather covered rim wheel, % Gray, □ Silver, ◊ Cranberry, ▲ Use Tobacco, † Dark Tobacco, ¿ Yellow, ✠ Use Saddle, # Taupe, △ Aqua, ⊿ Aqua (dark maple), + Aqua (lt. maple), $ Bright red, ϕ Dark red, ■ Coral, * Emerald green

1977

A (Mercury)

Wheel assy.-2 spokes (w/o speed control)	D5AZ 3600	B	●									E				1
	D6AZ 3600								C				★A			1
	D7AZ 3600									A						1
Emblem-Type 11	‡ D6AZ 3649	A	A						A	A		A	A			1
Cover and horn pad	13A915															
Wheel assy.-2 spokes (w/speed control)	D6AY 3600									★F				★H		1
	D6AZ 3600	●G	J			★L			★M			●	●			1
Emblem-Type 12	‡ D7MY 3649	A	A			A			A	A		A	A	A		1
Cover and horn pad	13A915															

D (Lincoln)

Wheel assy.-2 spokes- (w/o speed control)	D5AZ 3600	B	●											C		1
	D6AZ 3600								C				★A			1
	D7AY 3600				C						A					1
	D7AZ 3600									A						1
Emblem-Type 10	‡ D6VY 3649	A	A		A				A	A	A		A	A		1
Cover and horn pad	13A915															
Wheel assy.-2 spokes (w/speed control)	D6AY 3600									★F				★H		1
	D6AZ 3600	●G	J						★M				●			1
	D7AY 3600				★D											1
	D7AZ 3600										★D					1
Emblem-Type 10	‡ D6VY 3649	A	A		A				A	A	A		A	A		1
Cover and horn pad	13A915															

F (Cougar)

Wheel assy.-2 spokes (w/o speed control)	D5AZ 3600	B	●									E		C		1
	D6AZ 3600			★B					C							1
	D7AY 3600										A					1
	D7AZ 3600									A						1
Emblem-Type 11	‡ D6AZ 3649	A	A	A					A	A	A	A		A		1
Cover and horn pad	13A915															
Wheel assy.-2 spokes (w/speed control)	D6AY 3600									★F				★H		1
	D6AZ 3600	●G	J	★R					★M			●				1
	D7AZ 3600										★D					1
Emblem-Type 12	‡ D7MY 3649	A	A	A					A	A	A	A		A		1
Cover and horn pad	13A915															
Wheel assy. - 3 spokes (w/leather covered rim)	D70Z 3600													A		1
Emblem-Type 13	‡ D70Z 3649													A		1

MODEL/RESTRICTIONS	PART NUMBER LESS SUFFIX	TRIM CODES,COLORS and APPLICABLE PART NUMBER SUFFIXES														QTY.
	TRIM CODES ▶	SECOND CHARACTER OF TRIM CODE												ALL CODES	OTHER	
		B-Q V L-N	D-N-H	D-L S	F-6	G-5	K-7	J-P	R-5	S	T-2	U-Z-3-9	V-Y-8			
	COLORS ▶	BLUE	DARK RED	BRIGHT RED	CORD-OVAN	GREEN	AQUA	PLUM	JADE	SILVER	CHAM-OIS	SADDLE	GOLD	BLACK	SEE NOTE	

3600 WHEEL ASSY. (STEERING) — Cont'd

Notes: ‡ Not a coded color part, ● Use Black,@ without leather covered rim wheel, ⊕ with leather covered rim wheel, % Gray, □ Silver, ◊ Cranberry, ▲ Use Tobacco, † Dark Tobacco, ¿ Yellow, ✠ Use Saddle, # Taupe, △ Aqua, ◭ Aqua (dark maple), + Aqua (lt. maple), $ Bright red, ϕ Dark red, ■ Coral, * Emerald green

1977

G (Monarch)

MODEL/RESTRICTIONS	PART NUMBER	B-Q V L-N	D-N-H	D-L S	F-6	G-5	K-7	J-P	R-5	S	T-2	U-Z-3-9	V-Y-8	ALL CODES	OTHER	QTY.
Wheel assy.-2 spokes (w/o leather covered-	D5AZ 3600	B	●									●				1
	D6AZ 3600								C				★A			1
	D7AZ 3600									A						1
Emblem-Type 11	‡ D6AZ 3649	A	A						A	A		A	A			1
Cover and horn pad	13A915															
Wheel assy.-2 spokes (w/speed control)	D6AY 3600									★F				★H		1
	D6AZ 3600	●G	J						★M			S	●			1
Emblem-Type 12	‡ D7MY 3649	A	A						A	A		A	A	A		1
Cover and horn pad	13A915															
Wheel assy.-3 spokes- (w/leather covered rim)	D70Z 3600													A		1
Emblem - Type 13	‡ D70Z 3649													A		1
- Type 16	‡ D70Z 3649													B		1

3600 WHEEL ASSY. (STEERING) — Cont'd

Notes: ‡ Not a coded color part

J (Capri)

MODEL/RESTRICTIONS	PART NUMBER	DESCRIPTION	QTY.
Wheel-64D	★D5RY 3600-B	Black	1
	★D5RY 3600-C	Saddle-r/b D5RY 3600-B (6/83)	1
	D6RY 3600-A	Tan (medium)	1
	★D6RY 3600-B(6/83)	Chocolate	1
Cover	D3RY 3623-A	Black	1
	D4RY 3623-A	Saddle	1
	D6RY 3623-A	Tan (medium)	1
	D6RY 3623-B	Chocolate	1
Emblem-Type 5	‡ D3RY 3649-A		1
Wheel-64P (Decor),64S (JPS)	★D5RY 3600-A	Black (simulated leather rim)	1
Cover	D3RY 3623-A	Black	1
	D6RY 3623-A	Tan (medium)	1
	D6RY 3623-B	Chocolate	1
Emblem-64P	‡ D3RY 3649-A		1
-64S	‡ D6RY 3649-B		1
Wheel-64T (Ghia)	★D5RY 3600-G	Black	1
	★D6RY 3600-C(6/83)	Tan (medium)	1
	★D5RY 3600-E(6/83)	Gray	1
Cover	D5RY 3623-A	Black	1
	D6RY 3623-C	Tan (medium)	1
	D5RY 3623-C	Gray	1
Emblem	D5RY 3649-A	Black	1
	D6RY 3649-A	Tan (medium)	1
	D5RY 3649-C	Gray	1

COPYRIGHT © 1986— FORD MOTOR COMPANY —DEARBORN, MICHIGAN

MODEL/RESTRICTIONS	PART NUMBER LESS SUFFIX	TRIM CODES,COLORS and APPLICABLE PART NUMBER SUFFIXES														QTY.
	TRIM CODES ➧	SECOND CHARACTER OF TRIM CODE												ALL CODES	OTHER	
		B-Q V L-N	D-N-H	D-L S	F-6	G-5	K-7	J-P	R-5	S	T-2	U-Z-3-9	V-Y-8			
	COLORS ➧	BLUE	DARK RED	BRIGHT RED	CORD-OVAN	GREEN	AQUA	PLUM	JADE	SILVER	CHAM-OIS	SADDLE	GOLD	BLACK	SEE NOTE	

3600 WHEEL ASSY. (STEERING) — Cont'd

Notes: ‡ Not a coded color part, ● Use Black,@ without leather covered rim wheel, ⊕ with leather covered rim wheel, % Gray, □ Silver, ◊ Cranberry, ▲ Use Tobacco, † Dark Tobacco, ¿ Yellow, ✠ Use Saddle, # Taupe, △ Aqua, ⚠ Aqua (dark maple), + Aqua (lt. maple), $ Bright red, ϕ Dark red, ■ Coral, * Emerald green

1977

K (Mark V)

Wheel assy.-2 spokes (w/o speed control)	D5AZ 3600	B	●											C		1
	D6AZ 3600								C				★A			1
	D7AY 3600				C						A					1
	D7AZ 3600									A						1
Emblem-Type 10	‡ D6VY 3649	A	A		A				A	A	A		A	A		1
Cover and horn pad	13A915															
Wheel assy. 2 spokes (w/speed control)	D6AY 3600									★F				★H		1
	D6AZ 3600	●G	J						★M				●			1
	D7AY 3600				★D											1
	D7AZ 3600										★D					1
Emblem-Type 10	‡ D6VY 3649	A	A		A				A	A	A		A	A		1
Cover and horn pad	13A915															

L (Bobcat) "Before 6/27/77"

For units built "From 6/27/77" refer to 1978

Wheel assy.-2 spokes (w/horn button)	D7FZ 3600	●		B		G					F			D		1
Wheel assy.-3 spokes (w/leather covered rim)	D70Z 3600													A		1
Emblem-Type 13	‡ D70Z 3649													A		1
Wheel assy.-2 spokes (w/horn bar)	D5AZ 3600	B				●									C	
	D6AZ 3600			★B												1
	D7AY 3600										A					1
Emblem-Type 11	‡ D6AZ 3649	A		A		A					A			A	A	1
Cover and horn pad	13A915															
Wheel assy.-3 spokes (w/soft foam covered rim)	D70Z 3600													B		1
	‡ D70Z 3649													A		1

P (Comet)

Wheel assy.-2 spokes (w/horn button)	D7FZ 3600	●		B		G						★E		D		1
Wheel assy. - 2 spokes (w/horn bar)	D5AZ 3600	B				G						A		C		1
	D6AZ 3600			★B												1
Emblem -Type 11	‡ D6AZ 3649	A		A		A						A		A		1
Cover and horn pad	13A915															
Wheel assy.-3 spokes (w/leather covered rim)	D70Z 3600													A		1
Emblem-Type 13	‡ D70Z 3649													A		1
Wheel assy.-3 spokes (w/soft foam covered rim)	D70Z 3600													B		1
Emblem-Type 13	‡ D70Z 3649													A		1

MODEL/RESTRICTIONS	PART NUMBER LESS SUFFIX	TRIM CODES,COLORS and APPLICABLE PART NUMBER SUFFIXES														QTY.
	TRIM CODES ▶	SECOND CHARACTER OF TRIM CODE												ALL CODES	OTHER	
		B–Q V L–N	D–N–H	D–L S	F–6	G–5	K–7	J–P	R–5	S	T–2	U–Z–3–9	V–Y–8			
	COLORS ▶	BLUE	DARK RED	BRIGHT RED	CORD–OVAN	GREEN	AQUA	PLUM	JADE	SILVER	CHAM–OIS	SADDLE	GOLD	BLACK	SEE NOTE	

3600 WHEEL ASSY. (STEERING) — Cont'd

Notes: ‡ Not a coded color part, ● Use Black,@ without leather covered rim wheel, ⊕ with leather covered rim wheel, % Gray, □ Silver, ◊ Cranberry, ▲ Use Tobacco, † Dark Tobacco, ¿ Yellow, ✠ Use Saddle, # Taupe, △ Aqua, ◭ Aqua (dark maple), + Aqua (lt. maple), $ Bright red, ϕ Dark red, ■ Coral, * Emerald green

1977

V (Versailles)

Wheel assy. – 2 spokes	D84Y 3600				C						A					1
(w/leather covered rim	D50Z 3600	H														1
–without speed control)	D60Z 3600									E						1
Emblem–Type 10	‡ D6VY 3649	A			A							A				
Cover and horn pad	13A915															
Wheel assy.–2 spokes	D74Y 3600				★C					★A	★D					1
(W/leather covered rim– with speed control)																
Emblem–Type 10	‡ D6VY 3649	A			A					A	A					1
Cover and horn pad	13A915															

MODEL/RESTRICTIONS	PART NUMBER LESS SUFFIX	TRIM CODES,COLORS and APPLICABLE PART NUMBER SUFFIXES														QTY.
	TRIM CODES ▶	SECOND CHARACTER OF TRIM CODE													ALL CODES	
		B–Q	D–H–L–N	E–7	F–3–6	K–7	M–R–5	P–V	S	T–2	U–Z	V–4	Y	Y–8		
	COLORS ▶	BLUE	RED	RUSSET	CORD–OVAN	AQUA	JADE	CREAM	GRAY	CHAM–OIS	SADDLE	CHAM–PAGNE	CAMEL	GOLD	BLACK	

3600 WHEEL ASSY. (STEERING) — Cont'd

Notes: ‡ Not a coded color part, ● Use Black, @ Without leather covered rim wheel, ⊕ with leather covered rim wheel, % Gray, □ Silver, ◊ Cranberry, ▲ Use Tobacco, † Dark Tobacco, ¿ Yellow, ✠ Use Saddle, # Taupe, △ Aqua,◭ Aqua (dark maple), + Aqua (lt. maple), $ Bright red, ϕ Dark red, ■ Coral, * Emerald green

1978

A (Mercury)

Wheel assy. – 2 spokes	D5AZ 3600	B	●								E					1
	D6AZ 3600						C									1
	D7AZ 3600								A							1
	D8AZ 3600												C			1
Emblem– Type 7	‡ D6AZ 3649	B	B				B		B		B		B	B		1
– Type 12	‡ D7MY 3649	A	A				A		A		A		A	A		1
Cover and horn pad	13A915															

D (Lincoln)

Wheel assy.–2 spokes	D5AZ 3600	B	●												C	1
	D6AZ 3600						C									1
	D7AY 3600				C					A						1
	D7AZ 3600								A							1
	D8LY 3600											P		N		1
Emblem– Type 10	‡ D6VY 3649	A	A		A		A			A		A		A	A	1
Cover and horn pad	13A915															

COPYRIGHT © 1986 — FORD MOTOR COMPANY — DEARBORN, MICHIGAN

1973/79 LINCOLN-MERCURY CARS

MODEL/RESTRICTIONS	PART NUMBER LESS SUFFIX	TRIM CODES,COLORS and APPLICABLE PART NUMBER SUFFIXES														QTY.
	TRIM CODES ➧	SECOND CHARACTER OF TRIM CODE													ALL CODES	
		B-Q	D-H-L-N	E-7	F-3-6	K-7	M-R-5	P-V	S	T-2	U-Z	V-4	Y	Y-8		
	COLORS ➧	BLUE	RED	RUSSET	CORD-OVAN	AQUA	JADE	CREAM	GRAY	CHAM-OIS	SADDLE	CHAM-PAGNE	CAMEL	GOLD	BLACK	

3600 WHEEL ASSY. (STEERING) — Cont'd

Notes: ‡ Not a coded color part, ♦ Midnight Blue ϕ Wedgewood (medium) blue
● Use black, @ without leather covered rim wheel, ⊕ with leather covered rim wheel,
% Gray, □ Silver, ◊ Cranberry, ▲ Use Tobacco, † Dark Tobacco, ¿ Yellow,
⌘ Use Saddle, # Taupe, △ Aqua, ⊿ Aqua (dark maple), + Aqua (lt. maple),
$ Bright red, ϕ Dark red, ■ Coral, * Emerald green

1978

F (Cougar)

Wheel assy.-2 spokes	D5AZ 3600	B									E					1
	D6AZ 3600		★B				C									1
	D7AY 3600									A						1
	D7AZ 3600								A							1
	D80Z 3600			A												1
Emblem- Type 7	‡ D6AZ 3649	B	B	B			B		B	B	B					1
- Type 9	‡ D6WY 3649	A	A	A			A		A	A	A					1
- Type 12	‡ D7MY 3649	A	A	A			A		A	A	A					1
Cover and horn pad	13A915															
Wheel assy.-3 spokes sport w/leather wrap	D70Z 3600														A	1
Emblem- Type 16	‡ D70Z 3649														B	1
Cover and horn pad	13A915															

G (Monarch)

Wheel assy.-2 spokes w/o leather wrap	D5AZ 3600	B	●												C	1
	D6AZ 3600						C									1
	D7AY 3600				C											1
	D7AZ 3600								A							1
	D8AZ 3600												C			1
Emblem- Type 7	‡ D6AZ 3649	B	B		B		B		B		B		B	B	B	1
- Type 12	‡ D7MY 3649	A	A		A		A		A		A		A	A	A	1
Cover and horn pad	13A915														A	1
Wheel assy. - 2 spokes w/leather wrap	D50Z 3600														★F	1
Emblem - Type 7	‡ D6AZ 3649														B	1
- Type 12	‡ D7MY 3649														A	1
Cover and horn pad	13A915															
Wheel assy.-3 spokes sport w/leather wrap	D70Z 3600														A	1
Emblem- Type 16	‡ D70Z 3649														B	1
Cover and horn pad	13A915															

J (Capri)

For Capri Vehicles Registered as 1978 in Canada, Use Service Parts Shown in 1977

K (Mark V)

Wheel assy.-2 spokes w/o luxury decor	D5AZ 3600	B	●											C	1	
	D6AZ 3600						C									1
	D7AY 3600				C					A						1
	D7AZ 3600								A							1
	D8LY 3600											P		N		1
Emblem- Type 10	‡ D6VY 3649	A	A		A		A			A		A		A	A	1
Cover and horn pad	13A915															
Wheel assy.-2 spokes w/luxury decor (Diamond Jubilee)	D8LY 3600	L												M		1
Emblem- Type 18	‡ D8LY 3649	A												A		1
Cover and horn pad	13A915															

MODEL/RESTRICTIONS	PART NUMBER LESS SUFFIX	TRIM CODES,COLORS and APPLICABLE PART NUMBER SUFFIXES														QTY.
TRIM CODES ▶		SECOND CHARACTER OF TRIM CODE													ALL CODES	
		B-Q	D-H-L-N	E-7	F-3-6	K-7	M-R-5	P-V	S	T-2	U-Z	V-4	Y	Y-8		
COLORS ▶		BLUE	RED	RUSSET	CORD-OVAN	AQUA	JADE	CREAM	GRAY	CHAM-OIS	SADDLE	CHAM-PAGNE	CAMEL	GOLD	BLACK	
3600	WHEEL ASSY. (STEERING) — Cont'd															
Notes:	‡ Not a coded color part, ♦ Midnight Blue ∅ Wedgewood (medium) blue															
	● Use black, @ without leather covered rim wheel, ⊕ with leather covered rim wheel,															
	% Gray, □ Silver, ◊ Cranberry, ▲ Use Tobacco, † Dark Tobacco, ¿ Yellow,															
	✠ Use Saddle, # Taupe, △ Aqua, ◭ Aqua (dark maple), + Aqua (lt. maple),															
	$ Bright red, ϕ Dark red, ■ Coral, * Emerald green															

1978

L (Bobcat)

Wheel assy.-2 spokes w/horn bar	D5AZ	3600	B					*G								C	1
	D6AZ	3600		★B													1
	D7AY	3600									A						1
	D8FZ	3600						A									1
Emblem- Type 18	‡ D6AZ	3649	B	B				B			B					B	1
Cover and horn pad		13A915															
Wheel assy.-3 spokes sport-w/leather wrap	D70Z	3600														A	1
-w/soft foam rim	D70Z	3600														B	1
Emblem- Type 13	‡ D70Z	3649														A	1
Cover and horn pad		13A915															
Wheel assy.-2 spokes	D7FZ	3600	●	B							F					D	1
with center horn button	D8FZ	3600						B									1

P (Zephyr)

Wheel assy. - 2 spokes	D8BZ	3600	A		D						C				J	M	1
Emblem- Type 14	D8BZ	3649	A		B						C					L	1
Type 15	D8BZ	3649	E		★F						G				J	M	1
Wheel assy.-3 spokes sport-w/chrome spokes	D8BZ	3600														K	1
-w/black spokes	D8BZ	3600														L	1
Emblem- Type 17	‡ D8BZ	3649														K	1
Emblem- Type 16	‡ D70Z	3649														B	1

V (Versailles)

Wheel assy.-2 spokes	D50Z	3600	H	D													1
with leather wrap	D60Z	3600								E							1
	D70Z	3600				C											1
	D84Y	3600									A						1
Emblem- Type 10	‡ D6VY	3649	A	A		A				A	A						1
Cover and Horn Pad		13A915															

COPYRIGHT © 1986 — FORD MOTOR COMPANY — DEARBORN, MICHIGAN

1973/79 LINCOLN-MERCURY CARS

MODEL/RESTRICTIONS	PART NUMBER LESS SUFFIX	TRIM CODES,COLORS and APPLICABLE PART NUMBER SUFFIXES														QTY.
	TRIM CODES ▶	SECOND CHARACTER OF TRIM CODE													ALL CODES	
		B-Q	D-H-N	F-6	G-K	J	L-3	M-R-5	P-V-Y-8	S	T-U-2	U-4	Y	Z-9		
	COLORS ▶	BLUE	RED	CORD-OVAN	BERYL (AQUA)	TANG-ERINE	AME-THYST	JADE-GREEN	CREAM (GOLD)	GRAY	CHAMOIS	CHAM-PAGNE	CAMEL	VAQUERO	BLACK	

3600 WHEEL ASSY. (STEERING) — Cont'd

Notes: ‡ Not a coded color part, ♦ Midnight Blue ∅ Wedgewood (medium) blue
● Use black, @ without leather covered rim wheel, ⊕ with leather covered rim wheel,
% Gray, □ Silver, ◊ Cranberry, ▲ Use Tobacco, † Dark Tobacco, ¿ Yellow,
✠ Use Saddle, # Taupe, △ Aqua, ⚠ Aqua (dark maple), + Aqua (lt. maple),
$ Bright red, ϕ Dark red, ■ Coral, * Emerald green

1979

A (MERCURY)

Wheel assy.-4 spoke standard w/o woodgrain insert w/o speed control	D9AZ 3600	G	K	L				J		M			H			1
Emblem-Type 20	D9MY 3649	A	A	A				A		A			A			1
Wheel assy.-4 spoke Luxury w/woodgrain insert w/o speed control	D9AZ 3600	N	T	U				R		P			S			1
Emblem-Type 20	D9MY 3649	A	A	A				A		A			A			1
Wheel assy.-4 spoke w/speed control	D9AZ 3600	A	E	F				C		B			D			1
Emblem-Type 20	D9MY 3649	A	A	A				A		A			A			1

D (LINCOLN)

Wheel assy.-2 spoke w/o woodgrain insert	D5AZ 3600	∅B	●												C	1
	D7AY 3600			C												1
	D7AZ 3600									A						1
	D8LY 3600								N			P				1
	D9LY 3600				C											1
Emblem-Type 10	‡ D6VY 3649	A	A	A	A				A	A		A			A	1
Cover & pad	13A915															
Wheel assy.-2 spoke luxury w/woodgrain insert	D9VY 3600	♦B														1
Emblem-Type 10	‡ D6VY 3649	A														1
Cover & pad	13A915															

F (COUGAR)

Wheel assy.-2 spoke	D5AZ 3600	B	●													1
	D6AZ 3600							C								1
	D7AY 3600			C							A					1
	D7AZ 3600									A						1
Emblem-Type 7	‡ D6AZ 3649	B	B	B				B		B	B					1
-Type 9	‡ D6WY 3649	A	A	A				A		A	A					1
-Type 12	‡ D7MY 3649	A	A	A				A		A	A					1
Cover & pad	13A915															

G (MONARCH)

Wheel assy.-2 spoke w/o leather wrap	D5AZ 3600	B	●													1
	D6AZ 3600							C								1
	D7AY 3600			C												1
	D7AZ 3600									A						1
	D8AZ 3600												C			1
Emblem-Type 7	‡ D6AZ 3649	B	B	B				B		B			B			1
-Type 12	‡ D7MY 3649	A	A	A				A		A			A			1
Cover & pad	13A915															

MODEL/RESTRICTIONS	PART NUMBER LESS SUFFIX	TRIM CODES,COLORS and APPLICABLE PART NUMBER SUFFIXES														Q T Y.
	TRIM CODES ➧	SECOND CHARACTER OF TRIM CODE													ALL CODES	
		B-Q	D-H-N	F-6	G-K	J	L-3	M-R-5	P-V-Y-8	S	T-U-2	U-4	Y	Z-9		
	COLORS ➧	BLUE	RED	CORD-OVAN	BERYL (AQUA)	TANG-ERINE	AME-THYST	JADE-GREEN	CREAM (GOLD)	GRAY	CHAMOIS	CHAM-PAGNE	CAMEL	VAQUERO	BLACK	
3600	WHEEL ASSY. (STEERING) — Cont'd															

Notes: ‡ Not a coded color part, ♦ Midnight Blue ∅ Wedgewood (medium) blue
● Use black, @ without leather covered rim wheel, ⊕ with leather covered rim wheel,
% Gray, □ Silver, ◊ Cranberry, ▲ Use Tobacco, † Dark Tobacco, ¿ Yellow,
✠ Use Saddle, # Taupe, △ Aqua, ⅄ Aqua (dark maple), + Aqua (lt. maple),
$ Bright red, ϕ Dark red, ■ Coral, * Emerald green

1979

G (MONARCH) — Cont'd.

Wheel assy.-2 spoke w/leather wrap	D50Z 3600															F	1
Emblem-Type 7	‡ D6AZ 3649															B	1
-Type 12	‡ D7MY 3649															A	1
Cover & pad	13A915																
Wheel assy.-3 spoke sport w/leather wrap	D70Z 3600															A	1
Emblem-Type 16	‡ D70Z 3649															B	1
Cover & pad	13A915																

J (CAPRI)

Wheel assy.-4 spoke w/o speed control	D9AZ 3600	G															1
	D9ZZ 3600		K								M			L	J	1
Emblem-Type 22	D9BZ 3649										F				D	1
	D9ZZ 3649	A												B		1
	E0ZZ 3649		R													
Wheel assy.-4 spoke w/speed control	D9AZ 3600	A														1
	D9ZZ 3600		E								F			H	G	1
Emblem-Type 22	D9BZ 3649		E								F				D	1
"Before 10/23/78"	D9ZZ 3649	A												B		1
Wheel assy.-3 spoke sport-foam wrap																
-w/chrome spokes	D8BZ 3600														K	1
-w/black spokes	D8BZ 3600														L	1
Emblem-Type 16	‡ D70Z 3649														B	1
Wheel assy.-3 spoke sport-leather wrap																
-w/black spokes	D9ZZ 3600														N	1
Emblem-Type 16	‡ D70Z 3649														B	1

K (MARK V)

Wheel assy.-2 spoke w/o woodgrain insert	D5AZ 3600	∅B	●													C	1
	D7AY 3600			C													1
	D7AZ 3600									A							1
	D8LY 3600								N			P					1
	D9LY 3600				C		B										1
Emblem-Type 10	D6VY 3649	A	A	A	A		A		A	A		A				A	1
Cover & pad	13A915																
Wheel assy.-2 spoke w/woodgrain insert	D9LY 3600	♦D															1
Emblem-Type 18	‡ D8LY 3649	A															1
Cover & pad	13A915																

COPYRIGHT © 1986 — FORD MOTOR COMPANY — DEARBORN, MICHIGAN

1973/79
LINCOLN-MERCURY CARS

MODEL/RESTRICTIONS	PART NUMBER LESS SUFFIX	TRIM CODES,COLORS and APPLICABLE PART NUMBER SUFFIXES														QTY.
	TRIM CODES ▶	SECOND CHARACTER OF TRIM CODE													ALL CODES	
		B–Q	D–H–N	F–6	G–K	J	L–3	M–R–5	P–V–Y–8	S	T–U–2	U–4	Y	Z–9		
	COLORS ▶	BLUE	RED	CORD–OVAN	BERYL (AQUA)	TANG–ERINE	AME–THYST	JADE–GREEN	CREAM (GOLD)	GRAY	CHAMOIS	CHAM–PAGNE	CAMEL	VAQUERO	BLACK	

3600 WHEEL ASSY. (STEERING) — Cont'd

Notes: ‡ Not a coded color part, ♦ Midnight Blue ∅ Wedgewood (medium) blue
● Use black, @ without leather covered rim wheel, ⊕ with leather covered rim wheel,
% Gray, □ Silver, ◇ Cranberry, ▲ Use Tobacco, † Dark Tobacco, ¿ Yellow,
✠ Use Saddle, # Taupe, △ Aqua, ⚠ Aqua (dark maple), + Aqua (lt. maple),
$ Bright red, ϕ Dark red, ■ Coral, * Emerald green

1979

L (BOBCAT)

Wheel assy.–2 spoke	D5AZ 3600	B													C	1
	D6AZ 3600		★B													1
	D7AY 3600										A					1
Emblem–Type 7	D6AZ 3649	B	B								B				B	1
Cover & pad	13A915															
Wheel assy.–3 spoke																
sport–soft foam rim	D70Z 3600														B	1
–w/leather wrap	D70Z 3600														A	1
Emblem–type 16	D70Z 3649														B	1
–Type 13	D70Z 3649														A	1
Cover & pad	13A915															

P (ZEPHYR)

Wheel assy.–2 spoke	D8BZ 3600	A							J		C				M	1
	D9ZZ 3600		B													1
Emblem–Type 14	D8BZ 3649	A									C				L	1
	D9BZ 3649		A													1
–Type 15	D8BZ 3649	E							J		G				M	1
	D9BZ 3649		B													1
Wheel assy.–4 spoke	D9BZ 3600	F	G						E		H					1
w/o speed control	E0LY 3600														AJ	1
Emblem–Type 20 "Before 10/23/78"	D9BZ 3649								G		F				D	1
	E0ZZ 3649	K	R													
Emblem–Type 20 "From 10/23/78 "Before 6/1/79"	‡ D9KY 3649	★A	★A						★A		★A				★A	1
Emblem–Type 20 w/luxury decor "From 6/1/79"	‡ D9BZ 3649	H	H						H		H				H	1
Emblem–Type 20 w/o luxury decor "From 6/1/79"	‡ E0BZ 3649	L	L						L		L				L	
Wheel assy.–4 spoke	D9BZ 3600	B							★A							1
w/speed control	D9ZZ 3600		E								F				G	1
Emblem–Type 20	D9BZ 3649		E						G		F				D	1
"Before 10/23/78"	E0ZZ 3649	K														1
Emblem–Type 20 "From 10/23/78" "Before 6/1/79"	‡ D9KY 3649	★A	★A						★A		★A				★A	1
Emblem–Type 20 w/luxury decor "From 6/1/79"	‡ D9BZ 3649	H	H						H		H				H	1
Emblem–Type 20 w/o luxury decor "From 6/1/79"	‡ E0BZ 3649	L	L						L		L				L	
Wheel assy.–3 spoke																
sport–w/chrome spokes	D8BZ 3600														K	1
–w/black spokes	D8BZ 3600														L	1
Emblem–Type 17	‡ D8BZ 3649														K	1
–Type 16	‡ D70Z 3649														B	1

MODEL/RESTRICTIONS	PART NUMBER LESS SUFFIX	TRIM CODES,COLORS and APPLICABLE PART NUMBER SUFFIXES														Q T Y.
	TRIM CODES ➧	SECOND CHARACTER OF TRIM CODE													ALL CODES	
		B-Q	D-H-N	F-6	G-K	J	L-3	M-R-5	P-V-Y-8	S	T-U-2	U-4	Y	Z-9		
	COLORS ➧	BLUE	RED	CORD-OVAN	BERYL (AQUA)	TANG-ERINE	AME-THYST	JADE-GREEN	CREAM (GOLD)	GRAY	CHAMOIS	CHAM-PAGNE	CAMEL	VAQUERO	BLACK	

3600 WHEEL ASSY. (STEERING) — Cont'd

Notes: ‡ Not a coded color part, ♦ Midnight Blue ∅ Wedgewood (medium) blue
● Use black, @ without leather covered rim wheel, ⊕ with leather covered rim wheel,
% Gray, □ Silver, ◊ Cranberry, ▲ Use Tobacco, † Dark Tobacco, ⚷ Yellow,
⊠ Use Saddle, # Taupe, △ Aqua, ⚠ Aqua (dark maple), + Aqua (lt. maple),
$ Bright red, ϕ Dark red, ■ Coral, * Emerald green

1979

V (VERSAILLES)

Wheel assy.-2 spoke w/leather wrap	D50Z 3600	H	D												F	1
	D60Z 3600									E						1
	D70Z 3600			C												1
	D94Y 3600				A							B				1
Emblem-Type 10	‡ D6VY 3649	A	A	A	A					A		A			A	1
Cover & pad	13A915															

YEAR	MODEL/RESTRICTIONS	PART NUMBER	DESCRIPTION	QTY.
3600	WHEEL ASSY. (STEERING) — Cont'd			
73/78	J	E802020-S72	Screw-oval head (3623 pad to wheel)-M4 x 25-(metric coarse)	2
		55755-S2	(M-89-GE)-nut (shaft to wheel)-9/16"-18	1
3D600	SPACER (POWER STEERING PUMP ADJUSTING BRACKET)			
73/77	A,Y - - 8 cyl. 351 without A/C	385049-S100	Spacer (between bracket and engine block)-7/16" I.D. x 1" O.D. x 1 1/16" long	1
73/76	C - - 8 cyl. 351W,400,429,460 without A/C			1
73/76	Y - - 8 cyl. 429,460 without A/C			1
73/78	A,Y - - 8 cyl. 400 without A/C	384545-S	(XX-164)-spacer (between bracket and engine block) 7/16" I.D. x 13/16" long	1
73/77	A,Y - - 8 cyl. 351,429,460 with A/C	★ D2SZ 3D600-A(3/81)	Spacer (between bracket and engine block)-1/2" I.D. x 1 1/4" O.D. x 1 9/16" long	1
73/76	C - - 8 cyl. 302 without A/C	384542-S2	(XX-173-A)-spacer (between bracket and engine block)-7/16" I.D. x 3/4" long	1
77/	G - - 6 cyl. 250 without A/C exc. Calif.	★ D7DZ 3D600-A(6/82)	# D7DA 3642-AA	1
77	P - - 6 cyl. 250 exc. Canada			1
78	P - - 6 cyl. 200 M/T exc. Calif.	D8BZ 3D600-A		1
	P - - 6 cyl. 200 A/T			1
79	J - - 6 cyl. 200 A/T			1
79	P - - 6 cyl. 200 exc. Calif.			1
3L600	COVER KIT (STEERING WHEEL)			
78/	All	D8AZ 3L600-A	Black	1
		D8AZ 3L600-B	Red	1
		D8AZ 3L600-C	Tan	1
		E1AZ 36600-B	Blue	1
		E1AZ 36600-C	Green	1
3B601	SPRING (POWER STEERING PUMP SLIPPER)			
73/76	A,C,F,G,P,Y	C5AZ 3B601-B		8
77	A,F,G,P,V			8
3C602	FILTER ASSY. (POWER STEERING PUMP OIL)			
73/76	A,D,K,Y	D3MY 3C602-A	Use w/Saginaw pump	1
77	A,D,K			1
73/76	A,C,F,G,P,Y	D1AZ 3C602-A	Use w/Ford pump	1
77	A,F,G,P,V			1
76/78	J	★ D5RY 3C602-A(6/82)		1

COPYRIGHT © 1986 — FORD MOTOR COMPANY — DEARBORN, MICHIGAN

1973/79 LINCOLN-MERCURY CARS

YEAR	MODEL/RESTRICTIONS	PART NUMBER	DESCRIPTION	QTY.
3D607	**ROTOR ASSY. (POWER STEERING PUMP)**			
73/76	A,C,F,G,L,P,Y	D3AZ 3D607-A	Use w/Ford pump	1
77	A,F,G,P,V			1
77	L "Before 6/27/77"			1
78/	A,F,G,P,V	★ D8AZ 3D607-A	Use with all #HBC Ford pumps	1
79	J	r/bE1AZ 3D607-A(12/80)		1
77/	L "From 6/27/77"			1
73/74	A,Y	★ D2VY 3D607-A	Use w/Saginaw pump ident. HBA-CY-7/8" thick	1
73/74	D - - w/o hydro boost- "Before 4/8/74"		Use w/Saginaw pump ident. CW,DB - r/b D4VY 3D607-A (9/78)	1
73/74	K			1
74/	D - - w/hydro boost- "From 4/8/74"	★ D4VY 3D607-A(6/82)	Use w/Saginaw pump ident. GA,GD-7/8" thick	1
75	A,K,Y		Use w/Saginaw pump ident. GD,GF,GG,GH,GJ	1
75/77	L "Before 6/27/77"	★ D4ZZ 3D607-A	R/b D3AZ 3D607-A (6/83)	1
76	A,Y	D6AZ 3D607-A	Use w/pump ident. HBA-GM,GN-5/8" thick	1
77/78	A		use w/pump ident. HBA-GR,GS,GT	1
77/	D,K		use w/pump ident. HBA-GR	1
79	G - - 8 cyl. 302		Use w/pump ident. HBA-GY	1
	P - - 6 cyl. 200			1
3R608	**CONNECTOR (POWER STEERING TUBE)** To be used only when hose is received without connector			
78/	A,F,G,P,V	D8BZ 3R608-A	3/8" Quick connect fitting- with all HBC pumps	1
79	J			1
77/	L "From 6/27/77"			1
79	J - - w/#SPR-R(Ford) gear	D8BZ 3R608-B	5/16" Quick connect-3A719 to 3504	1
78/	P - - w/#SPR-A,C,E,P(Ford) gear			1
		D8BZ 3R608-A	3/8" Quick connect-3A713 to 3504	1
3R608	**CONNECTOR KIT (P/S PRESSURE, RETURN, & PUMP OUTLET LINE)**			
78/	J,L,P	D8BZ 3R608-C	W/Ford gear-pressure line-5/16"	A/R
78/	J,L,P		W/TRW gear-pressure line-5/16"	A/R
	Consists of 1-D8BC 3C751-AA Connector-5/16" 1-N802489-S Retaining ring	1-388748-S "O"-ring 1-IS 5156 Instruction sheet		
78/	A,D,F,G,J,K,L,P	D8BZ 3R608-D	W/Ford pump-outlet line	A/R
78/	J,L,P		W/Ford gear-return line	A/R
78/	J,L,P		W/TRW gear-return line	A/R
	Consists of 1-D8BZ 3R608-A Connector-3/8" 1-N802490-S Retaining ring	1-388749-S "O"-ring 1-IS 5156 Instruction sheet		
3A609	**INSULATOR (POWER STEERING HOSE MOUNTING)-Also refer to group 3A719**			
73	F	D1ZZ 3A609-A		1
77/	G			1
73/75	G,P - - w/o hydro boost and skid control	C7ZZ 3A609-A		1
75/78	G - - w/hydro boost and skid control	★ D5DZ 3A609-B(3/84)	With (1) 17/32" and (1) 25/32" holes	1
77/	V			1
75/78	G - - w/hydro boost and skid control	★ D6DZ 3A609-A(3/84)	With (2) 3/8" holes and step shoulder	1
77/	V			1
78/	G - - w/o 4 wheel disc brakes	D8FZ 3A609-A		1
79	J			1
77/	L "From 6/27/77"			1
76/77	P	C7ZZ 3A609-A		1
78/79	P "Before 10/1/78"	D8FZ 3A609-A	Not required after 10/1/78	1
73/76	A,C,D,F,G,K,L,P,Y	C7AZ 3A609-A	Cut to length from bulk stock	AR
77/	A,D,F,G,K,L			AR
3F609	**HANDLE & SHANK ASSY. (TILT WHEEL)**			
79	A,J,P	★ D9AZ 3F609-A r/bD9AZ 3F609-B(11/85)		1

YEAR	MODEL/RESTRICTIONS	PART NUMBER	DESCRIPTION	QTY.
3A610	**RETAINER (POWER STEERING HOSE INSULATOR MOUNTING)**			
73	F	D00Z 3A610-A		1
73/	G - - w/o hydro boost and skid control			1
73/77	P			1
76/78	G - - w/hydro boost and skid control	★ D5DZ 3A610-A(3/84)		1
77/	V - - w/hydro boost and skid control			1
3C610	**RETAINER (STEERING COLUMN UPPER BEARING)**			
73/76	A,C,D,F,G,K,L,P,Y	D0AZ 3C610-A	Use as key lock (11582) retainer	1
77	A,D,F,G,K,L,P,V			1
78	A,D,F,G,K,L,V	D0AZ 3C610-B	Use as bearing (3517 and 3518) retainer	1
79	D,F,G,K,L,V			1
79	A,J,P - - w/fixed wheel	D0AZ 3C610-B		1
78/	P - - w/fixed wheel "From 6/19/78	D9AZ 3C610-A	Retains top bearing (3517)	1
79	A,J - - w/fixed wheel			1
79	A,J,P	D8BZ 3C610-A	Snap ring-retains 11582	1
79	A,J,P - - w/tilt wheel	97476-S2	(Q-4-G)-"C" clip - retains top bearing	1
78	P	D8BZ 3C610-A	Snap ring type-retains 11582	1
78	P "Before 6/19/78"	D8BZ 3C610-B	Bracket type	1
		D0AZ 3C610-B	Snap ring-retains (3517) bearing	1
3A611	**BRACKET (POWER STEERING HOSE INSULATOR)**			
73/74	P - - 8 cyl. 302	★ D0DZ 3A611-A	Not replaced	1
75	G - - 8 cyl.	★ D5DZ 3A611-A	Not replaced	1
3C611	**BOOT (STEERING COLUMN TUBE)**			
79	A	D9AZ 3C611-A		1
73	C,K	D20Z 3C611-D	# D20A 3E735-AF	1
74/76	C	D70Z 3C611-A		1
74/	F,K			1
75/78	G "Before 10/24/77"	★ D5DZ 3C611-A(6/83)	# D5DW 3E735-AA	1
77/78	V "Before 10/24/77"		Also see group 3C533	1
78/79	G,V "From 10/24/27"	★ D9DZ 3C611-A(3/84)		1
79	J - - 4 cyl. 140	D9ZZ 3C611-A		1
	J - - 6 cyl. 171, 8 cyl. 302			1
74/	L	★ D2FZ 3C611-A		1
78	P - - A/T w/floor shift	D9ZZ 3C611-A		1
78/	P - - A/T w/column shift	D8BZ 3C611-B		1
3F619	**BRACKET (POWER STEERING HOSE FILTER SUPPORT)**			
75/76	A,K,Y - - w/hydro boost	★ D5VY 3F619-A(6/82)		1
77	A - - w/hydro boost			1
74/76	D - - w/hydro boost			1
3623	**Refer to group 3600**			
3D627	**NUT (POWER STEERING GEAR RACE)**			
73/76	A,C,D,K,Y	C8AZ 3D627-A		1
77/	A,D,K			1
74/	F			1
3E629	**CLIP (STEERING COLUMN SHAFT)**			
73/76	A,C,D,F,G,K,L,P,Y	D4AZ 3E629-A		2
77/78	A			2
77/	D,F,G,K,L,P,V			2
79	J			2
79	A	D9AZ 3E629-A		1

COPYRIGHT © 1986— FORD MOTOR COMPANY —DEARBORN, MICHIGAN

POWER STEERING INSTALLATION KITS

REFER TO SECTION 36.1 FOR KIT DETAILS

YEAR	MODEL	ENGINE CYL.	ENGINE C.I.D. C.C.D.	LINKAGE KIT	PUMP KIT	ADAPTER KIT POWER STEERING TO AIR CONDITIONER	QTY.
3A634–5	INSTALLATION KIT (POWER STEERING)						

POWER STEERING INSTALLATION KIT

REFER TO SECTION 36.1 FOR KIT DETAILS

Note

● Mandatory equipment–kits are not available
◊ Not available for vehicles with BR78–14 tire size
% In addition to kit for A/C unit (1) C9PZ 8620–CK is required.
■ In addition to kit for A/C unit (1) C9PZ 8620–S belt, (1) D6DZ 3A732–A bracket, (1) 382802–S2 nut, (1) D6DZ 3A719–B hose, is required.
▲ In addition to kit for A/C unit (2) D6PZ 8620–E belts, (1) D6DZ 3A732–D bracket, (1) D6DZ 3A733–A pulley, (1) D6DZ 3C511–B support, (1) 56141–S bolt, is required.
△ In addition to kit for A/C units–(1) D7DZ 3C511–B bracket, (1) D7DZ 3A719–D hose, (1) D6DZ 3A732–A bracket, (2) 55738–S2 nut, (1) 383671–S2 nut is required.
□ In addition to Kit for A/C unit (2) D6PZ 8620–C belts, (1) D6DZ 3A733–A pulley, is required.
ϕ In addition to kit for A/C unit (1) DODZ 3A732–A Bracket, (1) D6DZ 3A719–T hose is required.
$In addition to kit for A/C unit (1) DOAZ 3A733–A pulley, (HBC–V Pump) or (1) DOOZ 3A733–B (HBC–AE Pump), (1) D8DZ 3A732–B bracket,(1) D8AZ 3C510–B bracket, (1) 382802–S2 nut, (3) N800199–S bolt and (3) 381649–S2 bolts are required

C (Montego)

73	C	6	250	None required	★ D30Z 3A635–A	None required	1
	C – – without A/C	8	302	None required	★ D30Z 3A635–B	None required	1
	C – – A/C	8	302	None required	★ D30Z 3A635–C	None required	1
	C – – A/C	8	351	●	●		1
	C – – without A/C	8	351C	None required	★ D30Z 3A635–E	None required	1
	C – – without A/C	8	351CJ	None required	★ D30Z 3A635–F	None required	1
	C – – without A/C	8	351W	None required	★ D30Z 3A635–D	None required	1
	C	8	400,429, 460	●	●		
74	C – – without A/C	8	302	None required	★ D40Z 3A635–B	None required	1
75/76	C	8	351,400, 460	Not available	Not available	Not available	

F (Cougar)

73	F	8	302,351	None required	D3ZZ 3A635–D	★ D3ZZ 3A635–F	1 ea.
74/	F	8	302,351, 400,460	Not available	Not available	Not available	

G (Monarch)

75	G	6	200	Not available	Not available	Not available	
	G	6	250	D5DZ 3A634–B	★ D5DZ 3A635–B	None required	1 ea.
	G	8	302	D5DZ 3A634–B	★ D5DZ 3A635–G	None required	1 ea.
	G "Before 5/1/75"	8	351	D5DZ 3A634–B	★ D5DZ 3A635–D	None required	1 ea.
	G "From 5/1/75"	8	351	D5DZ 3A634–B	★ D5DZ 3A635–H	None required	1 ea.

POWER STEERING INSTALLATION KITS

REFER TO SECTION 36.1 FOR KIT DETAILS

YEAR	MODEL	ENGINE CYL.	ENGINE C.I.D. C.C.D.	LINKAGE KIT	PUMP KIT	ADAPTER KIT POWER STEERING TO AIR CONDITIONER	QTY.
3A634-5	INSTALLATION KIT (POWER STEERING) — Cont'd						
76	G	6	200	Not available	Not available	Not available	
	G "From 6/1/76"	6	250	D5DZ 3A634-B	★ D6DZ 3A635-G	▲	1 ea.
	G "Before 6/1/76"	8	302	D5DZ 3A634-B	★ D6DZ 3A635-J	■	1 ea.
	G "From 6/1/76"	8	302	D5DZ 3A634-B	★ D6DZ 3A635-J	None required	1 ea.
	G "Before 6/1/76"	8	351	D5DZ 3A634-B	★ D6DZ 3A635-D	ϕ	1 ea.
	G "From 6/1/76"	8	351	D5DZ 3A634-B	D7DZ 3A635-C	None required	1 ea.
77	G	6	200	D5DZ 3A634-B	★ D7DZ 3A635-B	None required	1 ea.
	G	6	250	D5DZ 3A634-B	★ D7DZ 3A635-A	□	1 ea.
	G	8	302	D5DZ 3A634-B	★ D6DZ 3A635-J	△	1 ea.
	G	8	351	D5DZ 3A634-B	★ D7DZ 3A635-C	None required	1 ea.
78	G	6	250	Not available	Not available	Not available	
	G	8	302	D5DZ 3A634-B	★ D8DZ 3A635-B	$	1 ea.
79	G	6	250	Not available	Not available	Not available	
	G "Before 2/1/79"	8	302	D5DZ 3A634-B	★ D8DZ 3A635-B	$	1 ea.
	G "From 2/1/79"	8	302	★ D8DZ 3A634-A	★ D8DZ 3A635-B	$	1 ea.

J (Capri)

76/	J	4	140 (2300)	Not available	Not available	Not available	
		6	171 (2800)	Not available	Not available	Not available	
		8	302	Not available	Not available	Not available	

L (Bobcat)

75/	L	4	140 (2300)	Not available	Not available	Not available	
		6	171 (2800)	Not available	Not available	Not available	

P (Comet)

73	P	6	200	★ D3DZ 3A634-A	★ D3DZ 3A635-A	None required	1 ea.
		6	250	★ D3DZ 3A634-A	★ D3DZ 3A635-B	None required	1 ea.
		8	302	★ D3DZ 3A634-A	★ D3DZ 3A635-C	None required	1 ea.
74	P	6	200	★ D3DZ 3A634-A	★ D3DZ 3A635-A	None required	1 ea.
		6	250	★ D3DZ 3A634-A	★ D4DZ 3A635-B	None required	1 ea.
		8	302	★ D3DZ 3A634-A	★ D4DZ 3A635-A	None required	1 ea.
75	P	6	200	D5DZ 3A634-B	★ D5DZ 3A635-F	◇	1 ea.
	P	6	250	D5DZ 3A634-B	★ D5DZ 3A635-E	◇	1 ea.
	P	8	302	D5DZ 3A634-B	★ D5DZ 3A635-A	None required	1 ea.
76	P "Before 6/1/76"	6	200	D5DZ 3A634-B	★ D6DZ 3A635-E r/b D7DZ 3A635-B (6/78)	None required	1 ea.
	P "From 6/1/76"	6	200	D5DZ 3A634-B	★ D7DZ 3A635-B	None required	1 ea.
	P "Before 6/1/76"	6	250	D5DZ 3A634-B	★ D6DZ 3A635-G	None required	1 ea.
	P "From 6/1/76"	6	250	D5DZ 3A634-B	★ D6DZ 3A635-G	None required	1 ea
	P "Before 6/1/76"	8	302	D5DZ 3A634-B	★ D6DZ 3A635-B r/b D6DZ 3A635-H (3/79)	%	1 ea.
	P "From 6/1/76"	8	302	D5DZ 3A634-B	D6DZ 3A635-H	%	1 ea.
77	P	6	200	D5DZ 3A634-B	★ D7DZ 3A635-B	None required	1 ea.
	P	6	250	D5DZ 3A634-B	★ D7DZ 3A635-A	□	1 ea.
	P	8	302	D5DZ 3A634-B	D6DZ 3A635-H	None required	1 ea.

P (Zephyr)

78/	P	All	All	Not available	Not available	Not available	

COPYRIGHT © 1986 — FORD MOTOR COMPANY — DEARBORN, MICHIGAN

1973/79 LINCOLN-MERCURY CARS

YEAR	MODEL/RESTRICTIONS	PART NUMBER	DESCRIPTION	QTY.
3F637	**KIT (POWER STEERING CONTROL VALVE ORIFICE REPAIR)**			
75/76	G - - P/S	D6DZ 3F637-A		1
3641	**BOLT (STEERING COLUMN TUBE FLANGE)**			
73/78	A	D0AZ 3641-A		2
73/76	C,Y			2
73/	D,F,G,K,L,V			2
73/77	P			2
3A642	**GASKET (POWER STEERING PUMP OIL RESERVOIR COVER)**			
76/78	J - - 6 cyl. 171	★ D5RY 3A642A(3/81)		1
3A643	**HOUSING ASSY. (POWER STEERING PUMP)**			
73/76	A,C,F,L,Y	★ D1AZ 3A643-A(6/83)	Use w/Ford pump	1
77	A,F		Use w/Ford pump	1
73/77	G,P - 6 cyl.		Use w/pump ident. HBA-CL,DN	1
77	L "Before 6/27/77"	351335-S38	(MM-123-D)-nut (fitting to reservoir)-5/8"-18	1
76	A,C,F,L,Y	★ D6AZ 3A643-A(3/81)	Use w/pum ident. HBA-EJ,EL,EM	1
77	A			1
73/78	A	D2VY 3A643-A	Use w/Saginaw pump	1
73/	D,K			1
79	G,P	385643-S94	(KK-52-CD) "O" ring (housing)-2 7/8" O.D.	1
73/76	Y	384977-S94	(KK-52-CC) "O" ring (housing)-2 7/8" O.D.	1
78/	A,F,G,P,V	★ D8AZ 3A643-A	Use with all #HBC Ford pumps	1
79	J	r/bE1AZ 3A643-A(6/81)		1
77/	L "From 6/27/77"	387573-S	(QQ-67-G)-retaining ring	1
73/76	G,P - - 8 cyl. "Before 1/5/76"	★ D0ZZ 3A643-A(3/81)	Use w/pump ident. HBA-CM,DA,DM,DZ,EA	1
76	G,P - - 8 cyl. "From 1/5/75 to 4/5/76"	★ D6DZ 3A643-A(3/81)	Use w/pump ident. HBA-EF,EG,EH,ER,ES	1
76/77	G,P,V - - 8 cyl. "From 6/1/76"	★ D6DZ 3A643-B(3/81)	Use w/pump ident. HBA-ER,ES,EU,FA,FC	1
		383671-S2	(MM-125-AA)-nut (fitting to reservoir)-7/8"-20	1
3D643	**PLATE and BUSHING (POWER STEERING PUMP)**			
73/76	A,C,F,G,L,P,Y	★ D3AZ 3D643-A(9/83)		1
77	A,F,G,P,V			1
77	L "Before 6/27/77"	379375-S	(NN-143-H)-pin-dowel-3/16" x 2 1/32"	2
		384454-S2	(BB-416-BE)-bolt (plate to housing)-3/8"-16 x 29/32"	3
78/79	A,F,G,P,V "Before 11/6/78"	★ D8AZ 3D643-A	Use with all #HBC Ford pumps	1
79	J "Before 11/6/78"	r/b1 pc. E1AZ 3D643-A		1
77/79	L "From 6/27/77 to 11/6/78"	& 1 pc. E1AZ 3D584-A(12/81)		1
79	A,F,G,J,L,P,V "From 11/6/78"	★ D9AZ 3D643-A	With all HBC Ford pumps-r/b E1AZ 3D643-A(12/81)	1
3647	**BALL KIT (STEERING GEAR WORM)**			
73/74	C - - M/S	B8A 3647-B	Consists of 60 balls (.281 dia.)	1
73	F - - M/S			1
75/	G			1
73/77	P			1
77/	V			1
73/	F - - P/S w/Saginaw gear	C5AZ 3647-B	Consists of 11 balls (.28117" dia.) & 11 spacers	1
73/75	C - - P/S w/Saginaw gear	C5AZ 3647-D	Consists of 11 balls (.28133" dia.) & 11 spacers	1
3649	**Refer to group 3600**			
3650	**RETAINER (STEERING WHEEL HUB EMBLEM)**			
76/78	J(64T,GHIA)	★ D5RY 3650-A(3/81)		1
3A650	**VALVE REPAIR KIT (POWER STEERING HYDRAULIC CONTROL)**			
73/76	G,P "Before 6/1/76"	C3AZ 3A650-B		1

Consists of

2-B4A 2428-A	"O" ring	1-C2AZ 3A728-A	Clamp	2-32873-S7	Screw
2-C20A 3C513-A	Seal	1-C70Z 3A729-A	Cover		
2-C20Z 3A519-B	Bushing	1-C1AA 3A740-C	Gasket		

YEAR	MODEL/RESTRICTIONS	PART NUMBER	DESCRIPTION	QTY.
3A650	VALVE REPAIR KIT (POWER STEERING HYDRAULIC CONTROL) — Cont'd			
76/77	G,P "From 6/1/76 to 1/17/77"	D6DZ 3A650-A		1
	Consists of			
	2-Screw		2-Bushings	
	1-Cover-dust		1-nut	
	1-Clamp		1-Seal "0"-ring	
77/	G,V "From 1/17/77"	D74Z 3A650-A		1
77	P "From 1/17/77"			1
3C650	CLAMP (STEERING GEAR BOOT)			
79	J - - P/S-w/#SPR-R (Ford) gear	D8BZ 3C650-A	Inner	2
78/	P - - P/S-w/#SPR-A,C,E,P (Ford) gear	D8BZ 3C650-B	Outer	2
77/	L - - P/S "From 7/6/77"	D8FZ 3C650-A		2
78	P - - P/S		Use w/#SPR-B,D (TRW) gear	2
3C651	BOOT and INSULATOR KIT (POWER STEERING CYLINDER)			
75/	G	C60Z 3C651-A		1
73/77	P			1
77/	V			1
	Consists of			
	2-C70A 3A344-A Insulator	1-C3AA 3C528-A Boot	1-C3AZ 3C755-A Clamp	
	2-D1UA 3A345-AA Washer			
3D651	FLANGE (STEERING COLUMN TUBE LOWER)			
73	A,D,F,K,Y - - w/tilt wheel	D1AZ 3D651-A	#D2SA 3508-AA	1
74/78	A - - w/tilt wheel	D4AZ 3D651-A	#D4AW 3508-AA	1
74/76	C,Y - - w/tilt wheel			1
74/	D,F,G,K,V - - w/tilt wheel			1
3652	Serviced only in kit-group 3C590			
3A652	BRACKET (POWER STEERING CYLINDER MOUNTING)			
73/	G	D0DZ 3A652-A		1
73/77	P			1
77/	V			1
		★ 58636-S2	Bolt (bracket to underbody)-3/8"-16 x 1 1/2"-grade 8	
		34807-S2	(X-66)-washer-3/8"	1
		375474-S8	(MM-120-B)-nut-3/8"-16	1
3F652-3	RETAINER (STEERING WHEEL EMBLEM)			
79	A,J,P	D9AZ 3F652-A	R.H.	1
		D9AZ 3F653-A	L.H.	1
3D654	FITTING (POWER STEERING PUMP VALVE OUTLET)			
73/75	A,Y	D2VY 3D654-A	With Saginaw pump	1
76/78	A - - w/hydroboost			1
73/	D,K			1
76	Y - - w/hydroboost			1
76/78	A,Y - - w/o hydroboost	★ D6AZ 3D654-A(3/81)	With Saginaw pump	1
78/	A,F,G,P,V	★ D8AZ 3D654-A	Use with #HBC-T,U,V,W Ford pumps	1
79	J	-r/bE1AZ 3D654-B(12/81)		1
77/	L "From 6/27/77"	& 1 pc.389349-S		1
79	G,P	D9BZ 3D654-A	With #HBA-GY Saginaw pump	1
77/	L "From 6/27/77"	★ D8FZ 3D654-A(3/84)	With #HBC-X Ford pump	1
78/	A,F,G,P,V	384975-S94	(KK-46-F)-"0" ring (3D654 to 3A643)-19/32" O.D.-also serviced in 3D684 & 3B584 kits	1
79	J			
77/	L "From 6/29/77"	387571-S100	(KK-48-F)-"0" ring(3D654 to 3A643)-13/16" O.D.-also serviced in 3D684 & 3B584 kits	1
3K654	SPRING (POWER STEERING GEAR RACK ADJUSTMENT)			
76/78	J	★ D5RY 3K654-A(6/81)		1
3D655	SPRING (STEERING COLUMN POSITION)			
73/78	A - - w/tilt wheel	D0AZ 3D655-A		1
73/76	C,Y - - w/tilt wheel			1
73/	D,F,G,K,V - - w/tilt wheel			1
79	A,J,P - - w/tilt wheel	D9AZ 3D655-A		1

COPYRIGHT © 1986 — FORD MOTOR COMPANY — DEARBORN, MICHIGAN

1973/79 LINCOLN-MERCURY CARS

YEAR	MODEL/RESTRICTIONS	PART NUMBER	DESCRIPTION	QTY.
3656	**RETAINER (STEERING WHEEL HUB TRIM)**			
73/78	J(w/Decor group)	★ D3RY 3656-A(6/82)	Black	1
	J(w/o Decor group)	★ D3RY 3656-B(6/82)	Black	1
		★ D3RY 3656-C(3/81)	Tan (dark)	1
74/78	J	★ D4RY 3656-A(3/81)	Saddle	1
	J "Before 11/1/75"	★ D4RY 3656-B(2/80)	Tan (medium)	1
75/76	J "From 11/1/75"	★ D6RY 3656-A(2/80)	Tan (medium)	1
75/76	J "From 11/1/75"	★ D6RY 3656-B(2/80)	Chocolate	1
76/78	J(64T,GHIA)	★ D5RY 3656-A(3/81)	Pin type	2
76/78	J(64T,GHIA)	★ D5RY 3656-B(3/81)	Bar type	1
76/78	J(64S, Special)	★ D6RY 3656-C(3/81)		1
76/78	J	D6RY 3656-E	Orange	1
3D656	**BUMPER (STEERING COLUMN TUBE UPPER FLANGE)**			
73/	A,D,F,G,K,V - - w/tilt wheel	D0AZ 3D656-A		1
74/76	C - - w/tilt wheel			1
79	J,P - - w/tilt wheel			1
3A657	**SHIM KIT (STEERING GEAR SECTOR SHAFT ADJUSTING)**			
73/74	C,F - - M/S	B8AZ 3A657-A		1
73/	G			1
73/77	P			1
77/	V			1

Consists of
1- Shim (.063" thick) 1- Shim (.067" thick) 1- Shim (.069" thick)
1- Shim (.065" thick)

3A658	**SPACER (POWER STEERING CONTROL VALVE SPOOL)**			
75/	G	C1AA 3A658-A		1
73/77	P			1
77/	V			1
3C660	**WASHER (STEERING SHAFT COUPLING BOLT)**			
73/75	A,F,P,Y - - w/fixed wheel	C30Z 3C660-A		2
75	G	C30Z 3C660-A		2
77	P	C30Z 3C660-A		2
76/78	A	★ D6AZ 3C660-A(6/82)		2
76	D,G,Y			2
3B661	**LEVER (STEERING COLUMN LOCKING)**			
73/78	A - - w/tilt wheel	★ D0AZ 3B661-A		1
73/76	C,Y - - w/tilt wheel	r/bE2TZ 3B661-A(9/82)		1
73/	D,F,G,K,V - - w/tilt wheel			1
79	A,J,P	D9AZ 3B661-A		1
79	A,J,P - - w/tilt wheel	N801013-S	(AN-17-E)-pin (round end)-3B661 to 3511 - 4.8 mm O.D. x 25.6 mm	1
3B664	**SPRING (STEERING COLUMN LOCKING LEVER)**			
73/78	A - - w/tilt wheel	D0AZ 3B664-A		1
73/76	C,Y - - w/tilt wheel			1
73/	D,F,G,K,V - - w/tilt wheel			1
79	A,J,P - - w/tilt wheel	D9AZ 3B664-A		1
3K666	**WIRE (POWER STEERING GEAR GROUND STRAP)**			
76/78	J	★ D5RY 3K666-A(3/81)		1
3668	**CLAMP (STEERING COLUMN TO INSTRUMENT PANEL)**			
73/76	C	D20Z 3668-B	Lower	1
74/	F,K			1
74/	G,L,V	★ D4AZ 3668-A(3/84)	Upper-refer to group 3676-8	1
3N668	**ADAPTER ASSY - POWER STEERING-TUBE**			
75/	G,L	D7ZZ 3N668-A	3/8" Adapter seat - Incl. 87006-S94 (T-1-AB) - 5/16" "O"-ring used to convert flared fittings to tube - O fittings	AR
75/77	P			
		D7ZZ 3N668-B	5/16" Adapter seat - Incl. 387497-S94 (KK-42-A) - 1/4" "O" ring used to convert flared fittings to tube - O fittings	AR

YEAR	MODEL/RESTRICTIONS	PART NUMBER	DESCRIPTION	QTY.
3F669	HOUSING KIT (POWER STEERING CONTROL VALVE)			
75/	A,D,K	D5AZ 3F669-A		AR
	Consists of			
	1-D5AW 3C516-AA Housing assy.	1-D6AZ 3D526-A	Seal	1-D5AZ 3D527-AA Seal
	1-D8AZ 3D525-A Bearing	1-97625-S	or alternate	1-382095-S Set screw
	1-3869751-S "O"-ring	352109-S	Snap ring	1-372454-S94 or alternate
	1-386266-S Seal-cover			386265-S "O"-ring
3A670	ADJUSTER (STEERING GEAR WORM THRUST BEARING)			
73/74	C,F - - M/S	C3AZ 3A670-A		1
75/	G			1
73/77	P			1
77/	V			1
3D672	RETAINER (STEERING COLUMN CLAMP)			
73/76	C	D20Z 3D672-B		2
73/	K			2
75/	F,G			2
79	J			2
74/	L			2
78/	P			2
77/	V			2

IDENTIFICATION CHART

IDENTIFICATION	SERVICE PART NO.	IDENTIFICATION	SERVICE PART NO.
3A674 PUMP ASSY. (POWER STEERING)			
HBA-CK	D3AZ 3A674-A	HBA-ER	D6DZ 3A674-J
HBA-CL	★ D3DZ 3A674-A	HBA-ES	★ D6DZ 3A674-K
HBA-CM	D3DZ 3A674-B	HBA-EU	D6DZ 3A674-L
HBA-CN	D3ZZ 3A674-A	HBA-EZ	D5ZZ 3A674-A
HBA-CV	D3AZ 3A674-B	HBA-FA	D6DZ 3A674-J
HBA-CW	D3VY 3A674-A	HBA-FB	★ D6DZ 3A674-K
HBA-CW	D8AZ 3A674-B	HBA-FC	D6DZ 3A674-L
HBA-CX	D8AZ 3A674-C	HBA-GA	D4VY 3A674-A
HBA-CY	★ D3MY 3A674-A	HBA-GB	★ D4MY 3A674-A
HBA-DA	★ D3DZ 3A674-C	HBA-GD	D5VY 3A674-A
HBA-DB	★ D3VY 3A674-B	HBA-GF	D5AZ 3A674-A
HBA-DD	★ D4AZ 3A674-A	HBA-GG	D5MY 3A674-C
HBA-DF	D40Z 3A674-A	HBA-GH	★ D5MY 3A674-A
HBA-DM	★ D5DZ 3A674-B	HBA-GJ	D5MY 3A674-B
HBA-DN	D5DZ 3A674-A	HBA-GM	D6AZ 3A674-B
HBA-DR	D5ZZ 3A674-A	HBA-GN	D6AZ 3A674-A
HBA-DT	★ D5DZ 3A674-D	HBA-GR	D5VZ 3A674-A
HBA-DU	D5DZ 3A674-C	HBA-GS	D6AZ 3A674-D
HBA-DY	D6DZ 3A674-A	HBA-GT	D6AZ 3A674-C
HBA-DZ	★ D6DZ 3A674-B	HBC-T	★ D8AZ 3A674-A
HBA-EA	D6DZ 3A674-C	HBC-U	★ D80Z 3A674-A
HBA-EB	★ D6DZ 3A674-D	HBC-V	D8FZ 3A674-A
HBA-EC	D6DZ 3A674-E	HBC-W	D8DZ 3A674-A
HBA-EF	D6DZ 3A674-F	HBC-X	D8FZ 3A674-C
HBA-EG	D6DZ 3A674-J	HBC-AA	D9AZ 3A674-B
HBA-EH	★ D6DZ 3A674-H	HBC-AB	★ D90Z 3A674-A
HBA-EJ	D3AZ 3A674-A	HBC-AC	★ D9FZ 3A674-B
HBA-EK	D6TZ 3A674-C	HBC-AD	D9DZ 3A674-A
HBA-EL	D5ZZ 3A674-A	HBC-AE	D9FZ 3A674-A
HBA-EM	★ D4AZ 3A674-A		

COPYRIGHT © 1986 — FORD MOTOR COMPANY — DEARBORN, MICHIGAN

1973/79 LINCOLN-MERCURY CARS

APPLICATION CHART

YEAR	MODEL/RESTRICTIONS	PART NUMBER	DESCRIPTION	QTY.
3A674	PUMP ASSY. (POWER STEERING) — Cont'd			
73/74	A(exc. P/C), Y - - 8 cyl. 351,400	D3AZ 3A674-A	#HBA-CK (Ford pump)	1
73	A(P/C) - - 8 cyl. 351,400	D3AZ 3A674-B	#HBA-CV (Ford pump)	1
73 74	A,Y - - 8 cyl. 429,460 A,Y - - 8 cyl. 460 without A/C	★ D3MY 3A674-A(6/81)	#HBA-CY (Saginaw pump)	1 1
74	A,Y - - 8 cyl. 460 with A/C	★ D4MY 3A674-A(3/81)	#HBA-GB (Saginaw pump)	1
75	A,Y - - 8 cyl. 351,400	D3AZ 3A674-A	#HBA-CK (Ford pump)	1
	A,Y - - 8 cyl. 400,460 and w/o hydro boost	D5AZ 3A674-A	#HBA-GF-paint marking on reservoir (Saginaw pump)	1
	A,Y - - 8 cyl. 460 with A/C and w/o hydro boost	★ D5MY 3A674-A(6/81)	#HBA-GH-paint marking on reservoir (Saginaw pump)	1
	A,Y - - 8 cyl. 460 hydro boost	D6AZ 3A674-D	#HBA-GG-paint marking on reservoir (Saginaw pump)	1
76	A,Y - - 8 cyl. 351,400 w/o hydro boost	D3AZ 3A674-A	#HBA-CK,EJ (Ford pump)	1
	A,Y - - 8 cyl. 351-400-460 -460 P.I. w/hydro boost	D6AZ 3A674-D	#HBA-GG,GJ,GS (Saginaw pump)	1
	A,Y - - 8 cyl. 400 w/o hydro boost A,Y - - 8 cyl. 460, 460 P/I without A/C and w/o hydro boost "Before 4/5/76"	D6AZ 3A674-B	#HBA-GM (Saginaw pump)	1 1
	A,Y - - 8 cyl. 460,460 P.I. w/o hydro boost "From 4/5/76"	★ D6AZ 3A674-C(11/85)	#HBA-GT (Saginaw pump)	1
	A,Y - - 8 cyl. 460-460 P.I. w/A/C and hydro boost "From 6/3/75"	D5VZ 3A674-A	#HBA-GR (Saginaw pump)	1
77	A - - 8 cyl. 351 w/o A/C and w/o hydro boost	D3AZ 3A674-A	#HBA-EJ (Ford pump)	1
	A - - 8 cyl. 351,400,460,460 P.I. w/o hydro boost	★ D6AZ 3A674-C(11/85)	#HBA-GT (Saginaw pump)	1
	A - - 8 cyl. 400 w/hydro boost A - - 8 cyl. 460,460 P.I. without A/C and w/hydro boost	D6AZ 3A674-D	#HBA-GS (Saginaw pump)	1 1
	A - - 8 cyl. 460,460 P.I. with A/C with hydro boost	D5VZ 3A674-A	#HBA-GR (Saginaw pump)	1
78	A - - 8 cyl. 351M, 400 w/hydro boost A - - 8 cyl. 460,460 P.I. w/hydro boost w/o A/C	D6AZ 3A674-D	#HBA-GS (Saginaw)	1 1
	A - - 8 cyl. 460,460 P.I. w/hydro boost w/A/C	D5VZ 3A674-A	#HBA-GR (Saginaw)	1
	A - - 8 cyl. 351M-400-460 w/o hydroboost	★ D8AZ 3A674-A r/bE0TZ 3A674-A(5/80)	#HBC-T (Ford)	1
	A - - 8 cyl. 351M,400,460,460 P.I. w/o hydroboost	★ D6AZ 3A674-C(11/85)	#HBA-GT (Saginaw)	1
79	A(exc. P/C) "Before 11/6/78"	★ D80Z 3A674-A	#HBC-U (Ford pump)-r/b D90Z 3A674-A (7/79)	1
79	A(exc. P/C) "From 11/6/78"	★ D90Z 3A674-A	#HBC-AB (Ford pump)-r/b E0AZ 3A674-A(12/81)	
	A(P/C)	E0LY 3A674-A	HBC-AM	1
73/76	C(exc. P/C)	D3AZ 3A674-A	#HBA-CK (Ford pump)	1
73	C(P/C)	D3AZ 3A674-B	#HBA-CV (Ford pump)	1
73/75	C	D40Z 3A674-A	#HBA-DF (Ford pump)	1
74/76	C(P/C)	★ D4AZ 3A674-A(6/81)	#HBA-DD (Ford pump)	1
73	D "Before 3/9/73"	D3VY 3A674-A	#HBA-CW (Saginaw pump)	1
73/74	D "From 3/9/73 to 4/8/74"	★ D3VY 3A674-B(6/82)	#HBA-DB (Saginaw pump)	1

APPLICATION CHART

YEAR	MODEL/RESTRICTIONS	PART NUMBER	DESCRIPTION	QTY.
	3A674 PUMP ASSY. (POWER STEERING) — Cont'd			
74	D - - w/hydro boost- "From 4/8/74"	★ D4VY 3A674-A(11/79)	#HBA-GA (Saginaw pump)	1
75/77	D	D5VZ 3A674-A	#HBA-GD,GR paint marking on reservoir (Saginaw pump)	1
78	D - - 8 cyl. 460			1
78	D - - 8 cyl. 400 "Before 5/8/78"	D6AZ 3A674-D	#HBA-GS (Saginaw)	1
78/	D - - 8 cyl. 400 "From 5/8/78"	D8AZ 3A674-C	#HBA-CX,GW (Saginaw pump)	1
73	F	D3ZZ 3A674-A	#HBA-CN (Ford pump)	1
74/77	F	D3AZ 3A674-A	#HBA-CK,EJ (Ford pump)	1
75	F	D40Z 3A674-A	#HBA-DF (Ford pump)	1
77	F	D6TZ 3A674-C	#HBA-EK (Ford pump)	1
78	F - - 8 cyl. 302,351W w/o A/C	D8AZ 3A674-A	#HBC-T (Ford pump)	1
	F - - 8 cyl. 302,351W with A/C	D80Z 3A674-A	#HBC-U (Ford pump)	1
	F - - 8 cyl. 351M,400			1
79	F - - exc. Police "Before 11/6/78"	★ D80Z 3A674-A	#HBC-U (Ford pump)-r/b D90Z 3A674-A (7/79)	1
	F - - Police "Before 11/6/78"	★ D8AZ 3A674-A	#HBC-T (Ford pump) r/b D9AZ 3A674-B	1
79	F "From 11/6/78"	★ D90Z 3A674-A r/bE0AZ 3A674-A(12/81)	#HBC-AB (Ford pump)-w/Ford gear	1
	F "From 11/6/78"	★ D9AZ 3A674-B r/bE0TZ 3A674-A(5/80)	#HBC-AA (Ford pump)-w/Saginaw gear	1
75	G,P - - 6 cyl. w/o hydro boost	D5DZ 3A674-A	#HBA-DN (Ford pump)	1
	G,P - - 8 cyl. without A/C and w/o hydro boost	★ D3DZ 3A674-C(6/83)	#HBA-DA (Ford pump)	1
	G,P - - 8 cyl. with A/C and w/o hydro boost	★ D5DZ 3A674-B(7/80)	#HBA-DM (Ford pump)	1
75	G - - 6 cyl. and w/hydro boost	D5DZ 3A674-C	#HBA-DU (Ford pump)	1
	G - - 8 cyl. and w/hydro boost	★ D5DZ 3A674-D(6/81)	#HBA-DT (Ford pump)	1
76	G - - 6 cyl. 200,250-w/o hydro boost "Before 4/5/76"	D6DZ 3A674-A	#HBA-DY (Ford pump)	1
	G - - 6 cyl. 200,250 - w/o hydro boost "From 4/5/76"	D6DZ 3A674-J	#HBA-ER,FA (Ford pump)	1
76	G - - 6 cyl. 200,250-w/hydro boost "Before 4/5/76"	★ D6DZ 3A674-D(6/81)	#HBA-EB (Ford pump)	1
	G - - 6 cyl. 200,250 - w/hydro boost "From 4/5/76"	★ D6DZ 3A674-K(6/81)	#HBA-ES,FB (Ford pump)	1
	G - - 8 cyl. 302,351-w/o hydro boost "Before 1/5/76"	D6DZ 3A674-C	#HBA-EA (Ford pump)	1
	G - - 8 cyl. 302,351-w/o hydro boost "From 1/5/76"	D6DZ 3A674-J	#HBA-EG (Ford pump)	1
	G - - 8 cyl. 302,351-w/hydro boost "Before 1/5/76"	D6DZ 3A674-E	#HBA-EC (Ford pump)	1
	G - - 8 cyl. 302,351-w/hydro boost "From 1/5/76 to 4/5/76"	★ D6DZ 3A674-H(6/81)	#HBA-EH (Ford pump)	1
	G - - 8 cyl. 302,351-w/hydro boost "From 4/5/76"	D6DZ 3A674-L	#HBA-EU,FC (Ford pump)	1
77	G - - without hydro boost	D6DZ 3A674-J	#HBA-ER,FA (Ford pump)	1
	G - - 6 cyl. 200,250-w/hydro boost	★ D6DZ 3A674-K(6/81)	#HBA-ES,FB (Ford pump)	1
	G - - 8 cyl. 302,351 w/hydro boost	D6DZ 3A674-L	#HBA-EU,FC (Ford pump)	1
78	G - - w/hydro boost	★ D8DZ 3A674-A(7/80)	#HBC-W (Ford)	1
78	G - - w/o hydro boost	★ D8FZ 3A674-A	#HBC-V (Ford) -r/b D9FZ 3A674-B(11/79)	1
79	G "Before 11/6/78"	★ D8FZ 3A674-C	#HBC-X (Ford) -r/b E0FZ 3A674-A(1/80)	1
79	G "From 11/6/78"	★ D9FZ 3A674-A	#HBC-AE (Ford pump) -r/b E0FZ 3A674-A(1/80)	1
79	G	D9DZ 3A674-B	#HBA-GY (Saginaw pump)	1
76/78	J - - 4 cyl.	D5RY 3A674-F		1
	J - - 6 cyl.	D5RY 3A674-D		1
79	J - - 4 cyl. 140 "Before 11/6/78"	★ D8FZ 3A674-A	#HBC-V (Ford pump) -r/b D9FZ 3A674-B(11/79)	1
	J - - 6 cyl. 171, 8 cyl. 302 "Before 11/6/78"	★ D80Z 3A674-A	#HBC-U (Ford pump) -r/b D90Z 3A674-A (7/79)	1

COPYRIGHT © 1986 — FORD MOTOR COMPANY — DEARBORN, MICHIGAN

APPLICATION CHART

YEAR	MODEL/RESTRICTIONS	PART NUMBER	DESCRIPTION	QTY.
3A674	**PUMP ASSY. (POWER STEERING) — Cont'd**			
79	J - - 4 cyl. 140 "From 11/6/78"	★ D9FZ 3A674-B	#HBC-AC (Ford pump)	1
79	J - - 6 cyl. 200 A/T	r/bE1DZ 3A674-A(12/81)		1
	J - - 6 cyl. 171, 8 cyl. 302 "From 11/6/78"	★ D90Z 3A674-A r/bE0AZ 3A674-A(12/81)	#HBC-AB (Ford pump)	1
73/74	K	★ D3VY 3A674-B(6/82)	#HBA-CW,DB (Saginaw pump)	1
75/78	K - - 8 cyl. 460	D5VZ 3A674-A	#HBA-GD,GR-paint marking on reservoir (Saginaw pump)	1
77/78	K - - 8 cyl. 400 "Before 5/8/78"	D6AZ 3A674-D	#HBA-GS (Saginaw)	1
78/	K - - 8 cyl. 400 "From 5/8/78"	D8AZ 3A674-C	#HBA-CX (Saginaw pump)	1
75/77	L "Before 6/27/77"	D5ZZ 3A674-A	#HBA-DR,EL,EZ (Ford pump)	1
77/78	L "From 6/27/77"	★ D8FZ 3A674-A	#HBC-V (Ford) -r/b D9FZ 3A674-B(11/79)	1
77/79	L "From 6/27/77 to 11/6/78"	★ D8FZ 3A674-C	#HBC-X(Ford pump) -r/b E0FZ 3A674-A(1/80)	1
79	L "From 11/6/78"	★ D9FZ 3A674-A	#HBC-AE (Ford pump) -r/b E0FZ 3A674-A(1/80)	1
73/74	P - - 6 cyl.	★ D3DZ 3A674-A(6/82)	#HBA-CL (Ford pump)	1
73/74	P - - 8 cyl.	★ D3DZ 3A674-C(6/83)	#HBA-CM,DA (Ford pump)	1
76	P - - 6 cyl. "Before 4/5/76"	D6DZ 3A674-A	#HBA-DY (Ford pump)	1
	P - - 6 cyl. 200,250 w/o hydro boost "From 4/5/76"	D6DZ 3A674-J	#HBA-ER,FA (Ford pump)	1
	P - - 6 cyl. 200,250 w/hydro boost "From 4/5/76"	D6DZ 3A674-K	#HBA-ES (Ford pump)	1
76	P - - 8 cyl. "Before 1/5/76"	★ D6DZ 3A674-B(3/84)	#HBA-DZ (Ford pump)	1
	P - - 8 cyl. "From 1/5/76"	D6DZ 3A674-F	#HBA-EF (Ford pump)	1
77	P	D6DZ 3A674-J	#HBA-ER,FA (Ford pump)	1
78/79	P - - 4 cyl. 140, 6 cyl. 200 "Before 11/6/78"	★ D8FZ 3A674-A	#HBC-V (Ford) -r/b D9FZ 3A674-B(11/79)	1
	P - - 8 cyl. 302 "Before 11/6/78"	D80Z 3A674-A	#HBC-U (Ford pump)	1
79	P - - 4 cyl. 140, 6 cyl. 200 "From 11/6/78"	★ D9FZ 3A674-B r/bE1DZ 3A674-A(12/81)	#HBC-AC (Ford pump)	1
	P - - 8 cyl. 302 "From 11/6/78"	★ D90Z 3A674-A	#HBC-AB (Ford pump)-r/b E0AZ 3A674-A(12/81)	1
	P - - 6 cyl. 200	D9DZ 3A674-B	#HBA-GY (Saginaw pump)	1
77	V	D6DZ 3A674-L	#HBA-EU,FC (Ford pump)	1
78/79	V "Before 11/6/78"	★ D8DZ 3A674-A(7/80)	#HBC-W (Ford)	1
79	V "From 11/6/78"	★ D9DZ 3A674-A	#HBC-AD (Ford pump)-r/b E0DZ 3A674-A(9/82)	1
3675	**CYLINDER and KEYS (STEERING and IGNITION LOCK)**			
73/78	J	D3RY 3675-B	Ignition cylinder & key assy. (use with original lock assy.)	1
		D7RY 3675-A	Lock assy. less ignition cylinder & switch (use D9RZ 3675-A cylinder assy.)	1
		D9RZ 3675-A	Cylinder assy.-includes barrel (11582) & plate (use with D7RY 3675-A lock assy.)	1
		E804057-S72	Bolt	2
		D8RY 3675-A	Cylinder assy.-less barrel (11582) & plate (use with D7RY 3675-A lock assy.)	1
3A675	**SPRING CENTERING KIT (POWER STEERING CONTROL VALVE)**			
73/76	G "Before 6/1/76"	C3AZ 3A675-B		1
73/77	P			1

Consists of

1-C70Z 3A594-A	Spring	2-B9M 3799-A	Seat	1-55672-S	Nut
1-C20A 3C706-A	"O" ring	1-AJ 37707-B	Spacer	2-372300-S	Washer

YEAR	MODEL/RESTRICTIONS	PART NUMBER	DESCRIPTION	QTY.
3A675	SPRING CENTERING KIT (POWER STEERING CONTROL VALVE) — Cont'd			
76/77	G "From 6/1/76 to 1/17/77"	D6DZ 3A675-A		1
	Consists of 1-Spacer-Centering spring 2-Washer-spacer 1-Nut		2-Washer-centering spring 1-"O"-ring 1-Spring centering	
77/ 77/	G "From 1/17/77" V	D74Z 3A675-A		1 1
3676-8	BRACKET (STEERING COLUMN TO INSTRUMENT PANEL)			
73/76 77/78	A,Y A	★ D3AZ 3676-A(6/82)		1 1
73/76 74/	C F	D20Z 3678-D	Upper column mounting Lower-refer to group 3668	1 1
73	C	(RH) D20Z 3678-B	(LH) D20Z 3678-C Brace-column support	1
74/76	C,F "Before 1/12/76"	(RH) D20Z 3678-B	(LH) D40Z 3678-A Brace-column support	1
76 77/	C,F "From 1/12/76" F	(RH) D20Z 3678-B	(LH) D60Z 3678-A Brace-column support	1 1
73	D	D0AZ 3676-A		1
74/	D	D4VY 3676-A		1
73	F	D1AZ 3676-A		1
75/ 77/	G V	★ D5DZ 3678-A(3/84)		1 1
73/	K	D20Z 3678-D	Upper column mounting	1
75/	L	★ D5DZ 3678-A(3/84)		1
73/77	P	D0AZ 3676-A		1
73/76 74/	C F	57140-S2	(B-340-H)-screw and washer (brace to brake pedal support)-5/16"-18 x 1	4 4
		379670-S2	(MM-192-AB)-Nut & retainer-5/16"-18	4
73/76 74/ 73/	C F K	384713-S2	(BB-429-UU)-bolt (bracket to pedal support)-3/8"-16 x 1 5/8"	2 2
73/	F	384841-S2	(WW-129-ZX)-stud (bracket to pedal support)-3/8"-16 x 2 1/4"	2
		55738-S2	Nut-3/8"-16	2
73 73/77	F P	383481-S2	(BB-545-EU)-bolt (bracket to column)-3/8"-16 x 1 1/2"	2 2
74/	L	382802-S2	(MM-173-JB)-nut-3/8"-16	2
3B676	Refer to group 3524			
3678	Refer to group 3676-8			
3C680	INSERT (STEERING WHEEL PAD)			
73/78	J(Decor group)	★ D3RY 3C680-A(6/82)	Black	1
		★ D3RY 3C680-B(3/81)	Tan (dark)	1
74/78	J(Decor group)	★ D4RY 3C680-A(3/81)	Saddle	1
74/76	J "Before 11/1/75"	D4RY 3C680-B	Tan (medium)	1
76	J(64-D,P,S) "From 11/1/75"	★ D6RY 3C680-A(3/81)	Tan (medium)	1
		★ D6RY 3C680-B(3/81)	Chocolate	1
3B681	COVER (POWER STEERING PUMP)			
76/78	J - - 4 cyl.	★ D5RY 3B681-B(3/81)	#74EB 3B681-BA	1
3D681	RETAINER ASSY. (STEERING COLUMN LOWER BEARING)			
74/	F - - w/floor shift	D4ZZ 3D681-A		1
73/76 77/ 74/	C,K - - w/column shift and A/T K F - - w/column shift	D20Z 3D681-B		1 1 1
74/	L	D4ZZ 3D681-A		1

COPYRIGHT © 1986 — FORD MOTOR COMPANY — DEARBORN, MICHIGAN

1973/79 LINCOLN-MERCURY CARS

YEAR	MODEL/RESTRICTIONS	PART NUMBER	DESCRIPTION	QTY.
3682	**INSULATOR (STEERING COLUMN BRACKET)**			
73/76	C	★ D20Z 3682-A(3/84)		2
74/	F			2
73/	K			2
74	L			2
75/	G,L	★ D4ZZ 3682-A(3/84)		2
77/	V			2
3D684	**SEAL and GASKET KIT (POWER STEERING PUMP TO RESERVOIR)-Also serviced in kit-group 3B584**			
73/77	A,F,G,L,P,V	D1AZ 3D684-A		1
73/76	C,Y			1
	Consists of			
	1-D0AR 3D594-A Seal	1-C5AR 3D684-A	Gasket	1-383213-S94 Seal
	1-D1ZR 3D594-A Seal			
78/	A,F,G,P,V	★ D8AZ 3D684-A		1
79	J	r/bE1AZ 3D684-A(6/81)		1
77/	L "From 6/27/77"			1
	Consists of			
	1-384975-S94 O-ring	1-387571-S100	O-ring	1-387572-S100 O-ring
3685	**KEY (BLANK)**			
	▲ Refer to Technical Service Information, Issue No. 2, dated 11/19/71 for additional key cutting information			
73/78	J	▲ D1RY 3685-A	Ignition lock-Ford stamped #1 or #2 on key shank (Curtis blank stamped FC-2, Part No. 19064)	1
		★▲D1RY 3685-C(6/82)	Ignition lock-Ford stamped #3 on key shank (Curtis blank stamped FC-3, Part No. 19065)	1
3C686	**SPACER (STEERING COLUMN TUBE)**			
78/	A,P	E0AZ 3C686-A	3/64" thick-silver	AR
		E0AZ 3C686-B	1/16" thick-pink	AR
		E0EZ 3C686-N	5/64" thick-green	AR
		E0AZ 3C686-M	3/32" thick-black	AR
		E0AZ 3C686-E	7/64" thick-white	AR
		E0AZ 3C686-F	1/8" thick-blue	AR
		E0AZ 3C686-G	9/64" thick-yellow	AR
		E0AZ 3C686-H	11/64" thick-orange	AR
		E0AZ 3C686-J	3/16" thick-violet	AR
		E0AZ 3C686-K	5/32" thick-brown	AR
		E0AZ 3C686-L	1/32" thick-gold	AR
3D688	**SHIM (POWER STEERING GEAR VALVE CENTERING)**			
73/74	A,C,D,K,Y	C5AZ 3D688-A	.006" thick	AR
74	F	C5AZ 3D688-B	.008" thick	AR
		C5AZ 3D688-C	.010" thick	AR
		C5AZ 3D688-D	.012" thick	AR
		C5AZ 3D688-E	.013" thick	AR
3E691	**PAWL (STEERING COLUMN LOCK)**			
79	A,J	D8BZ 3E691-A		1
78/	P			1
3D694	**RING (STEERING COLUMN SHROUD)**			
73/75	D	★ D2SY 3D694-A(3/84)	Paint to match	1
75/	G			1
77/	V			1
73/	K			1
3D695	**RETAINER (STEERING COLUMN SHROUD)**			
73/	D - - w/tilt wheel	D1AZ 3D695-B		1
73	F - - w/tilt wheel			1
73/	D - - w/fixed wheel	★ D1AZ 3D695-A(3/84)		1
73/77	P			1
73	F - - w/fixed wheel			1
3E696	**SPRING (STEERING COLUMN LOCK)**			
79	A	D8BZ 3E696-A		1
79	J			2
73/76	P - - w/column shift and M/T "Before 4/19/76"	★ D0AZ 3E696-A(2/80)	5/8" free length-5/16" dia.	1
78/	P - - column shift	D8BZ 3E696-A		1
	P - - floor shift			2

YEAR	MODEL/RESTRICTIONS	PART NUMBER	DESCRIPTION	QTY.
3A697	RESERVOIR ASSY. (POWER STEERING PUMP OIL)			
73	A(exc. P/C),C(exc. P/C),Y	C7AZ 3A697-A	Use w/pump ident. HBA-CK	1
	A(P/C),C(P/C),F,Y	★ D1ZZ 3A697-A(6/82)	Use w/pump ident. HBA-CN or CV	1
73/74	A,Y	★ D3MZ 3A697-A(9/83)	Use w/pump ident. HBA-CY,GF,GH	1
74/76	A,Y	★ D7AZ 3A697-C(9/83)	Use w/pump ident. HBA-GH,GK,GN	1
74/77	A,F,Y	C7AZ 3A697-A	Use w/pump ident. HBA-CK,DF,EJ,EK	1
74/76	C(exc. P/C)			1
75/76	A,Y	D7AZ 3B697-B	Use w/pump ident. HBA-GG	1
75/76	A,Y	★ D5MY 3A697-A	Use w/pump ident. HBA-GJ-r/b D7AZ 3A697-A (3/79)	1
77	A	★ D7AZ 3A697-A(6/82)	Use w/pump ident. HBA-GJ,GS	1
77	A	D7AZ 3A697-B	Use w/pump ident. HBA-GD,GG,GR	1
77	A	★ D7AZ 3A697-C(9/83)	Use w/pump ident. HBA-GE,GM,GN,GT	1
78/	A	★ D8AZ 3A697-A r/bE1AZ 3A697-A(1/81)	Use with all #HBC Ford pumps	1
74/75	C(P/C)	D4ZZ 3A697-A	Use w/pump ident. HBA-DD	1
76	C(P/C)	D5ZZ 3A697-A	Use w/pump ident. HBA-DD,EM	1
73/74	D "Before to 4/8/74"	★ D7AZ 3A697-C(9/83)	Use w/pump ident. HBA-DB,CW	1
74	D "From 4/8/74"	★ D4VY 3A697-A	Use w/pump ident. HBA-GA - not replaced	1
75/	D	D7AZ 3A697-B		1
78/	F	★ D8AZ 3A697-A r/bE1AZ 3A697-A(1/81)	Use with all #HBC Ford pumps	1
75	G,P - - 6 cyl. and w/o hydro boost	D5DZ 3A697-A	Use w/pump ident. HBA-DN	1
	G,P - - 8 cyl. without A/C and w/o hydro boost	D3DZ 3A697-A	Use w/pump ident. HBA-DA	1
	G,P - - 8 cyl. with A/C and w/o hydro boost	D5DZ 3A697-B	Use w/pump ident. HBA-DM	1
75	G - - 6 cyl. and w/hydro boost	★ D5DZ 3A697-C r/bD6DZ 3A697-D (3/79)	Use w/pump ident. HBA-DU	1
	G - - 8 cyl. and w/hydro boost	★ D6DZ 3A697-F(3/84)	Use w/pump ident. HBA-DT	1
76/77	G,P - - 6 cyl. w/o hydro boost	D6DZ 3A697-A	Use w/pump ident. HBA-DK,DN,DY	1
	G - - w/o hydro boost	D6DZ 3A697-C	Use w/pump ident. HBA-DM,EA,EG,ER,FA	1
	G - - 6 cyl. w/hydro boost	D6DZ 3A697-D	Use w/pump ident. HBA-EB	1
	G - - 6 cyl. w/hydro boost	★ D6DZ 3A697-F(3/84)	Use w/pump ident. HBA-ES	1
	G - - 8 cyl. w/hydro boost "Before 4/5/76"	★ D6DZ 3A697-E	Use w/pump ident. HBA-EC,EH,ES-r/b D6DZ 3A697-F (9/78)	1
	G - - 8 cyl. w/hydro boost "From 4/5/76"	★ D6DZ 3A697-F(3/84)	Use w/pump ident. HBA-ES	1
	G - - 8 cyl. w/hydro boost	★ D6DZ 3A697-G(3/84)	Use w/pump ident. HBA-EU	1
78/	G - - w/o hydro boost	★ D8AZ 3A697-A	Use with #HBC-U Ford pump-r/b E1AZ 3A697-A(1/81)	1
78	G - - w/hydro boost	D8DZ 3A697-A	Use with #HBC-W Ford pump	1
79	G	D9BZ 3A697-A	With #HBA-GY Saginaw pump	1
76/78	J - - 4 cyl.	★ D5RY 3A697-A(3/81)	#74EB 3A578-BA	1
	J - - 6 cyl.	★ D5RY 3A697-B(3/81)		1
79	J	★ D8AZ 3A697-A	Use with all #HBC Ford pumps-r/b E1AZ 3A697-A (1/81)	1
73/74	K	D7AZ 3A697-C	Use w/pump ident. HBA-DB,CW	1
75/	K	D7AZ 3A697-B		1
75/77	L "Before 6/27/77"	D5ZZ 3A697-A	Use w/pump ident. HBA-DR,DL,EL,EZ	1
77/	L "From 6/27/77"	★ D8AZ 3A697-A	Use with all #HBC Ford pumps-r/b E1AZ 3A697-A(1/81)	1
73/74	P - - 6 cyl.	★ C7OZ 3A697-A(9/82)	Use w/pump ident. HBA-CL	1
	P - - 8 cyl.	D3DZ 3A697-A	Use w/pump ident. HBA-CM,DA	1
76	P - - 8 cyl. w/o hydro boost	★ D6DZ 3A697-B(6/82)	Use w/pump ident. HBA-DA,DZ,EF	1
	P - - w/hydro boost	★ D6DZ 3A697-F(3/84)	Use w/pump ident. HBA-ES	1
78/	P	★ D8AZ 3A697-A	Use with all #HBC Ford pumps-r/b E1AZ 3A697-A(1/81)	1
79	P	D9BZ 3A697-A	With #HBA-GY Saginaw pump	1
77	V	★ D6DZ 3A697-G(3/84)	Use w/pump ident. HBA-EU,FC	1
78/	V	D8DZ 3A697-A	Use with #HBC-W Ford pump	1
76/78	J - - 6 cyl.	E620413-S72	Nut (reservoir to body)-M-8	2
		E830256-S100	(AX-13-A)-washer-flat (reservoir to body)	2
3-3698	BOLT (POWER STEERING CONTROL VALVE SPOOL)			
75/	G	AC 33698-A		1
73/77	P			1
77/	V	34443-S8	(M-79)-nut (threaded end of bolt)-hex. lock-5/16"-24	1
		370235-S	(NN-102)-pin (retain bolt to stop)-1/8" x 1" long	1

COPYRIGHT © 1986 — FORD MOTOR COMPANY — DEARBORN, MICHIGAN

1973/79 LINCOLN-MERCURY CARS

YEAR	MODEL/RESTRICTIONS	PART NUMBER	DESCRIPTION	QTY.
3A700	**ORIFICE KIT (POWER STEERING GEAR CONTROL VALVE HOUSING)**			
76/78	J - - P/S	★ D5RY 3A700-A(3/81)		1
	Consists of 2-E455020-S Sleeve		2-E455030-S Sleeve	
3B700	**ADJUSTER (POWER STEERING CONTROL VALVE SPOOL)**			
73/75	C	C5AZ 3B700-A		1
73/	F			1
3E700	**BEARING (STEERING COLUMN LOCK HOUSING)**			
76/78	A	D6AZ 3E700-A		1
76	C,Y			1
76	D "Before 11/3/75"			1
78/	D			1
76/	F,G,K,L,V			1
76/77	P			1
79	A,J	D8BZ 3E700-A		1
76/77	D "From 11/3/75"	★7347		1
78/	P	D8BZ 3E700-A		1
3E701	**SPRING (STEERING COLUMN LOCK CYLINDER)**			
73/76	A,C,D,F,G,K,L,P,Y "Before 2/2/76"	D0AZ 3E701-A		2
3C705	**CAP (POWER STEERING CONTROL VALVE SPOOL CENTERING SPRING)**			
73/76	G,P	C2AZ 3C705-A	Cap only-Also serviced in kit	1
		34805-S8	(X-62)-lockwasher-1/4"	1
73/76	G,P "Before 5/1/76"	C2AZ 3C705-B	Cap kit	1
	Consists of 1-C2AZ 3C705-A Cap	1-C2AZ 3C706-A "O" ring	2-358533-S Screw & washer	
76/77	G "From 5/1/76 to 1/17/77"	D6DZ 3C705-A	Cap kit	1
76/77	P "From 5/1/76"			1
	Consists of 2-Screw & Lockwasher Assy. 1-Cap-spring 1-"O"-ring		1-Plate adapter 1-Nut	
77/	G "From 1/17/77"	D74Z 3C705-A		1
77/	V			1
3C706	**"O" RING (POWER STEERING CONTROL VALVE SPOOL CENTERING SPRING)**			
75/	G	C2AZ 3C706-A	Also serviced in kit-group 3C705	1
73/77	P			1
77/	V			1
3707	**NUT (STEERING GEAR WORM THRUST BEARING LOCK)**			
73/	A,D,K	★ C5AZ 3707-A(9/82)	Use w/Ford gear	1
73/	C,Y - - P/S			1
74/	F - - P/S			1
73/74	C - - M/S	B8A 3707-A		1
73	F - - M/S			1
75/	G			1
73/77	P			1
77/	V			1
73/75	C - - P/S	C5AZ 3707-B	Use w/Saginaw gear	1
73/	F - - P/S			1
3C707	**SPRING (POWER STEERING GEAR CONTROL VALVE)**			
76/78	J	★ D5RY 3C707-A(3/81)		1
3E710	**VALVE KIT (POWER STEERING CONTROL VALVE RETURN PORT RELIEF)**			
73/76	G,P "Before 4/5/76"	C0AZ 3E710-A		1
	Consists of 1-AC 33710-A Valve	1-372896-S Tube seat		
3A711	**IMPELLER REPAIR KIT (POWER STEERING PUMP)**			
73/78	A	D2VY 3A711-A	Use w/Saginaw pump-consists of 10 vanes	1
73/	D,K			1
73/76	Y			1

YEAR	MODEL/RESTRICTIONS	PART NUMBER	DESCRIPTION	QTY.
3K712	CLIP (STEERING COLUMN SHROUD)			
79	A,J,P - - w/tilt column	D9AZ 3K712-A		1
3-3712	PLATE (POWER STEERING CONTROL VALVE CAP ADAPTOR)			
73/76	G,P	B9M 33712-A		1
3E715	ACTUATOR (STEERING COLUMN LOCK LEVER)			
73	A,D,F,K,Y - - w/tilt wheel	D0AZ 3E715-A	#D0AA 3E715-E	1
74/78	A - - w/tilt wheel	★ D4AZ 3E715-A		1
74/76	C,Y - - w/tilt wheel	r/bE4TZ 3E715-A(3/84)		1
74/	D,F,G,K,V - - w/tilt wheel			1
3C716	INSULATOR (STEERING GEAR)			
79	J	★ D6ZZ 3C716-B	R/b E0SZ 3C716-A(3/82)	2
74/76	L "Before 3/1/76"	★ D4FZ 3C716-A	R/b D6FZ 3C716-A (6/78)	3
76/	L "From 3/1/76"	★ D6FZ 3C716-A	R/b E0SZ 3C716-A(12/81)	2
78/	P	★ D6ZZ 3C716-B	R/b E0SZ 3C716-A(3/82)	2
3E716	INSERT (STEERING COLUMN LOCK)			
73/78	A - - w/fixed wheel	D0AZ 3E716-A		1
73/76	C,Y - - w/fixed wheel			1
73/	D,F,G,K,L,V - - w/fixed wheel			1
73/77	P			1
73/78	A - - w/tilt wheel	D0AZ 3E716-B		1
73/76	C,Y - - w/tilt wheel			1
73/	D,F,G,K,V - - w/tilt wheel			1
3A717	Refer to group 3A719			
3E717	GEAR (STEERING COLUMN LOCK)			
73	A,C,D,F,K,P,Y "Before 7/5/73"	D0AZ 3E717-A	Pie shaped-8 teeth-7/16"thick	1
		356214-S8	(XX-214)-spacer (between gear and retainer)-1/16" I.D. x 3/4" O.D. x 1/32" thick	AR
73	A,C,D,F,G,K,L,P,Y "From 7/5/73"	D4AZ 3E717-A	Rectangular shaped-8 teeth-7/16" thick	1
74/78	A			1
74/76	C,Y			1
74/	D,F,G,K,L,V			1
73/77	P			1
78	A,J	D8BZ 3E717-A		1
78/	P			1

IDENTIFICATION CHART

IDENTIFICATION	PART NUMBER	IDENTIFICATION	PART NUMBER
3A719 HOSE ASSY. (POWER STEERING PRESSURE)			
D5DW 3493-CA	D5DZ 3A713-H	D6DW 3494-DB	D6DZ 3494-D
D5MW 3493-AB	D5MY 3A713-C	D6DW 3494-EA	D6DZ 3494-C
D5MW 3493-AC	D5MY 3A713-C	D6DW 3494-FA	D6DZ 3494-D
★ D5SW 3493-AA	★ D5SZ 3A713-B	D8DC 3494-AA	D8DZ 3494-A
★ D5SW 3493-AB	★ D5SZ 3A713-B	D8DC 3494-BA	D8DZ 3494-A
D5VW 3493-AA	D5VY 3A713-B	★ D7EA 3F522-AA	★ D7FZ 3A714-A
D5VW 3493-AB	D5VY 3A713-B	★ D4VW 3F523-AA	★ D4VY 3A719-A
★ D6SW 3493-AA	★ D6SZ 3A713-C	★ D4VW 3F523-AB	★ D4VY 3A719-A
D0DA 3494-A	D0DZ 3494-A	D5DW 3F523-EA	D5DZ 3A719-V
D1DA 3494-AA	D0DZ 3494-A	★ D5DW 3F523-FA	★ D5DZ 3A719-U
D5DW 3494-AA	D5DZ 3494-A	D5DW 3F523-GA	D5DZ 3A719-T
D5DW 3494-AC	D5DZ 3494-A	D5MW 3F523-AB	D5MY 3A719-H
D6BW 3494-AA	D6DZ 3494-B	★ED D5MW 3F523-AB	★ D5MY 3A719-H
D6BW 3494-AB	D6DZ 3494-B	D5SW 3F523-AA	D5SZ 3A719-E
D6DW 3494-AA	D6DZ 3494-A	ED D5SW 3F523-AA	D5SZ 3A719-E
D6DW 3494-AB	D6DZ 3494-B	D6AW 3F523-AA	D6AZ 3A719-A
D6DW 3494-BA	D6DZ 3494-C	D6AW 3F523-BA	D6AZ 3A719-A
D6DW 3494-BB	D6DZ 3494-C	D6AW 3F523-CA	D6AZ 3A719-A
D6DW 3494-CA	D6DZ 3494-D	ED D6AW 3F523-CA	D6AZ 3A719-A
D6DW 3494-DA	D6DZ 3494-D	D6AW 3F523-EA	D6AZ 3A719-A

COPYRIGHT © 1986 — FORD MOTOR COMPANY — DEARBORN, MICHIGAN

IDENTIFICATION CHART

IDENTIFICATION	PART NUMBER	IDENTIFICATION	PART NUMBER
3A719 HOSE ASSY. (POWER STEERING PRESSURE)— Cont'd			
D6AW 3F523-FA	D5SZ 3A719-E	★ D8AC 3A563-BA	★ D8AZ 3A713-A
★ D6AW 3F523-GA	★ D5MY 3A719-H	D80C 3A563-AA	D80Z 3A713-A
D6AW 3F523-HA	D6AZ 3A719-A	★ D80C 3A563-BA	★ D80Z 3A713-B
D6AW 3F523-JA	D5SZ 3A719-E	D80C 3A563-CA	D80Z 3A713-A
★ D6AW 3F523-KA	★ D5MY 3A719-H	D80C 3A563-DA	D90Z 3A713-A
D6AW 3F523-MA	D6AZ 3A719-P	D9AC 3A563-AB	D9AZ 3A713-A
D6AW 3F523-SA	D5SZ 3A719-E	D8EC 3C566-AA	D8FZ 3A713-A
D6DW 3F523-AA	D6DZ 3A719-H	D5MW 3E576-AB	D5MY 3A719-J
D6DW 3F523-CA	D6DZ 3A719-L	ED D5MW 3E576-AB	D5MY 3A719-J
D6DW 3F523-DA	D6DZ 3A719-J	D5SW 3E576-AB	D5SZ 3A719-G
★ D6DW 3F523-EA	★ D6DZ 3A719-J	ED D5SW 3E576-AB	D5SZ 3A719-G
ED D6DW 3F523-GA	D6DZ 3A719-L	D5ZW 3E576-AA	D5ZZ 3A717-A
D60W 3F523-HA	D6DZ 3A719-P	D6AW 3E576-AA	D6AZ 3A719-C
D6DW 3F523-JA	D6DZ 3A719-R	D6AW 3E576-BA	D6AZ 3A719-D
D6DW 3F523-KA	D6DZ 3A719-AA	D6AW 3E576-CA	D6AZ 3A719-E
★ D6DW 3F523-LA	★ D6DZ 3A719-AB	D6AW 3E576-DA	D6AZ 3A719-C
★ D6DW 3F523-MA	★ D6DZ 3A719-AB	D6AW 3E576-EA	D6AZ 3A719-D
D6DW 3F523-NA	D6DZ 3A719-AA	D6AW 3E576-FA	D6AZ 3A719-E
D6DW 3F523-RA	D6DZ 3A719-P	D6AW 3E576-GA	D6AZ 3A719-M
D6DW 3F523-SA	D6DZ 3A719-R	★ D60W 3E576-AA	★ D60Z 3A719-B
★ D6DW 3F523-TA	★ D6DZ 3A719-AB	D6SW 3E576-BA	D5SZ 3A719-G
D6DW 3F523-UA	D6DZ 3A719-AA	D6SW 3E576-CA	D6SZ 3A719-A
★ D6DW 3F523-VA	★ D6DZ 3A719-P	D7EA 3E576-AA	D7FZ 3A717-A
D6DW 3F523-YA	D6DZ 3A719-R	D7LA 3E576-AA	D7LY 3A719-A
D7AA 3F523-AA	D7AZ 3A719-A	D7LA 3E576-BA	D7LY 3A719-A
D7AA 3F523-BA	D7AZ 3A719-B	★ D8LC 3E576-AA	★ D8LY 3A719-A
★ D7AA 3F523-CA	★ D7AZ 3A719-C	D8LC 3E576-BA	D8LY 3A719-D
D7DC 3F523-AA	D7DZ 3A719-E	D8LC 3E576-CA	D8LY 3A719-E
D7VC 3F523-AA	D7AZ 3A719-B	★ D5DW 3F595-AA	★ D5DZ 3A713-G
★ED D7VC 3F523-AA	N.S.	D5DW 3F595-BA	D5DZ 3A713-G
★ D8AC 3F523-AA	★ D8AZ 3A719-C	★ D5MW 3F595-AA	★ D5MY 3A713-B
D8DC 3F523-BA	D8DZ 3A719-F	★ D5MW 3F595-AB	★ D5MY 3A713-B
D8DC 3F523-CA	D8DZ 3A719-G	★ D5MW 3F595-AC	★ D5MY 3A713-B
D4VW 3F524-AA	D4VY 3A719-B	D5SW 3F595-AB	D5SZ 3A713-A
D4VW 3F524-AB	D4VY 3A719-B	D5SW 3F595-AC	D5SZ 3A713-A
★ D4VW 3F524-BA	★ D4VY 3A719-B	D5VW 3F595-AA	D5VY 3A713-A
D5MW 3F524-AB	D6AZ 3A719-G	D5VW 3F595-BA	D5VY 3A713-A
D5MW 3F524-AC	D5MY 3A719-G	D5VW 3F595-BB	D5VY 3A713-A
D5SW 3F524-AB	D5SZ 3A719-C	D6AW 3F595-AA	D2AZ 3A713-D
D5SW 3F524-AC	D5SZ 3A719-C	D6AW 3F595-BA	D6MY 3A713-B
D5VW 3F524-AC	D5VY 3A719-C	D6AW 3F595-CA	D6AZ 3A713-E
D5VW 3F524-AB	D5VY 3A719-C	D6DW 3F595-AA	D6DZ 3A713-A
D6AW 3F524-AA	D5MY 3A719-G	D6DW 3F595-BA	D6DZ 3A713-A
D6SW 3F524-AA	D5SZ 3A719-C	D6MW 3F595-CA	D6MY 3A713-B
D6VW 3F524-AA	D5VY 3A719-C	D6SW 3F595-CA	D5SZ 3A713-A
D7AA 3F524-AA	D5MY 3A719-G	D6SW 3F595-DA	D6SZ 3A713-B
D7AC 3F524-AA	D5MY 3A719-G	D6VW 3F595-BA	D5VY 3A713-A
D7SA 3F524-AA	D5SZ 3A719-C	D7AA 3F595-AA	D6AZ 3A713-E
D7LA 3F524-AA	D5SZ 3A719-C	D7AA 3F595-BA	D6AZ 3A713-E
D7LC 3F524-AA	D7LY 3A719-C	D7LA 3F595-AA	D6SZ 3A713-B
D7VA 3F524-AA	D5VY 3A719-C	D7SA 3F595-AA	D6SZ 3A713-B
D7VA 3F524-BA	D5VY 3A719-C	D5ZW 3F604-AA	D5ZZ 3A714-A
D7VA 3F524-AA	D7VY 3A719-D	D5DW 3F612-BA	D5DZ 3A719-W
D7VC 3F524-AA	D7VY 3A719-D	ED D5DW 3F612-AA	D5DZ 3A719-W
D5DW 3A562-AA	D5DZ 3A719-Y	D5DW 3F612-BB	D5DZ 3A719-W
D8AC 3A563-AA	D8AZ 3A713-A	D5MW 3F612-AA	D5MY 3A719-E

IDENTIFICATION CHART

IDENTIFICATION	PART NUMBER	IDENTIFICATION	PART NUMBER
3A719 HOSE ASSY. (POWER STEERING PRESSURE) — Cont'd			
D5MW 3F612-AB	D5MY 3A719-F	D4VW 3A713-AB	D4VY 3A713-A
D5MW 3F612-AC	D5MY 3A719-E	★ D4VW 3A713-AC	★ D4VY 3A713-A
D5SW 3F612-AC	D5SZ 3A719-B	D5AW 3A713-BA	D5AZ 3A713-A
D5VW 3F612-BA	D5VY 3A719-B	D5BW 3A713-AA	D5DZ 3A713-J
D5VW 3F612-BB	D5VY 3A719-B	D5BW 3A713-AC	D5DZ 3A713-J
D6SW 3F612-AA	D5SZ 3A719-B	D5BW 3A713-BA	D5DZ 3A713-F
D6VW 3F612-AA	D5VY 3A719-B	★ D5BW 3A713-BB	★ D5DZ 3A713-F
D7LA 3F612-AA	D7LY 3A719-B	D5DW 3A713-AC	D5DZ 3A713-J
D7LC 3F612-AA	D7LY 3A719-E	D5DW 3A713-BC	D5DZ 3A713-B
D7MC 3F612-AA	D7MZ 3A719-A	★ D5DW 3A713-CA	★ D5DZ 3A713-E
D7VA 3F612-AA	D7VY 3A719-B	D5MW 3A713-AA	D5MY 3A713-A
D7VC 3F612-AA	D7VY 3A719-A	D5MW 3A713-AB	D5MY 3A713-A
D7LC 3F612-BA	D7LY 3A719-D	D5MW 3A713-AC	D5MY 3A713-A
D7LC 3F612-CA	D7LY 3A719-F	D5VW 3A713-AA	D5VY 3A713-AA
ED D7LC 3F612-CA	D7LY 3A719-F	D52W 3A713-AA	★ D5FZ 3A713-A
D7VC 3F612-AA	D7VY 3A719-A	D52W 3A713-AB	★ D5FZ 3A713-A
D7VC 3F612-BA	D7VY 3A719-E	D52W 3A713-AC	★ D5FZ 3A713-A
ED D7VC 3F612-BA	D7VY 3A719-E	D6AW 3A713-BA	D6AZ 3A713-B
D7VC 3F612-CA	D7VY 3A719-F	D6AW 3A713-CA	D5AZ 3A713-A
D8LC 3F612-AA	D8LY 3A719-B	D6AW 3A713-DA	D6AZ 3A713-B
D8VC 3F612-AA	D8VY 3A719-B	D6AW 3A713-EA	D6AZ 3A713-C
ED D8VC 3F612-AA	D7VY 3A719-A	★ D6AW 3A713-FA	★ D6AZ 3A713-D
D5ZW 3R623-BA	D5ZZ 3A719-E	★ D6BW 3A713-AA	★ D6DZ 3A713-D
D6EW 3R623-AA	D5ZZ 3A719-E	★ D6BW 3A713-AB	★ D6DZ 3A713-D
D6EW 3R623-BA	D5ZZ 3A719-E	D6DW 3A713-AA	D6DZ 3A713-C
D7FA 3R623-AA	D7ZZ 3A719-A	D6DW 3A713-AB	D6DZ 3A713-C
D7EC 3R623-AA	D7ZZ 3A719-A	D6DW 3A713-BA	D60Z 3A713-E
★ED D7EC 3R623-AA	★ D7FZ 3A719-C	D6DW 3A713-BB	D6DZ 3A713-E
D6DW 3659-AA	D6DZ 3A719-F	D6DW 3A713-CA	D6DZ 3A713-E
★ 74EB 3961-AA	★ D5RY 3691-A	D6EW 3A713-AA	D6FZ 3A713-A
D8BC 3D701-AA	D8BZ 3A717-A	★ D6EW 3A713-BA	★ D6FZ 3A713-A
D8BC 3D701-AB	D8BZ 3A717-A	D60W 3A713-CA	D60Z 3A713-C
D8BC 3D702-AA	D8BZ 3A714-A	★ D60W 3A713-DA	★ D60Z 3A713-D
D0DA 3A713-A	D0DZ 3A713-A	★ED D60W 3A713-DA	★ D60Z 3A713-D
D0DA 3A713-D	D00Z 3A713-A	D60W 3A113-EA	D60Z 3A713-C
D00A 3A713-A	D00Z 3A713-A	★ D60W 3A713-FA	★ D60Z 3A713-D
D00Z 3A713-B	D0DZ 3A713-B	★ D60W 3A713-GA	★ D60Z 3A713-D
D1DA 3A713-AA	D0DZ 3A713-A	D7AA 3A713-BA	D5AZ 3A713-A
D1DA 3A713-CA	D00Z 3A713-A	D7AA 3A713-CA	D6AZ 3A713-C
D10Z 3A713-CA	D3DZ 3A713-B	D7AA 3A713-DA	D6AZ 3A713-D
D1ZA 3A713-AA	D1ZZ 3A713-A	D7AC 3A713-AA	D6AZ 3A713-C
D1ZA 3A713-AB	D1ZZ 3A713-A	D7AC 3A713-BA	D6AZ 3A713-C
D1ZA 3A713-AC	D1ZZ 3A713-A	D7DC 3A713-AA	D7DZ 3A713-A
D2AA 3A713-DA	D2AZ 3A713-C	D7EA 3A713-AA	D7FZ 3A713-A
D20A 3A713-EA	D20Z 3A713-A	D7EC 3A713-AA	D7FZ 3A713-A
D2SA 3A713-HA	D2SZ 3A713-C	D7EC 3A713-AB	D7FZ 3A713-A
★ D2VA 3A713-BB	★ D2VY 3A713-D	★ED D7EC 3A713-AB	★ D7FZ 3A713-B
D3AA 3A713-EA	D3AZ 3A713-A	D7LC 3A713-AA	D7LY 3A713-A
D3AA 3A713-FA	D3AZ 3A713-B	D70C 3A713-AA	D60Z 3A713-C
D3DA 3A713-AA	D3DZ 3A713-A	D70C 3A713-BA	D60Z 3A713-C
D30A 3A713-AA	D30Z 3A713-A	D70C 3A713-CA	D60Z 3A713-C
★ D30A 3A713-BA	★ D30Z 3A713-B	★ D70C 3A713-EA	★ D70Z 3A713-A
D3SA 3A713-AA	D3SZ 3A713-A	D8BC 3A713-AA	D8BZ 3A713-A
D4AW 3A713-AA	D3AZ 3A713-A	D8BC 3A713-BA	D8BZ 3A713-C
D40W 3A713-AA	D40Z 3A713-A	D8BC 3A713-BB	D8BZ 3A713-C
D4VW 3A713-AA	D4VY 3A713-A	D8BC 3A713-CB	D8BZ 3A713-B

COPYRIGHT © 1986 — FORD MOTOR COMPANY — DEARBORN, MICHIGAN

IDENTIFICATION CHART

IDENTIFICATION	PART NUMBER	IDENTIFICATION	PART NUMBER
3A719 HOSE ASSY. (POWER STEERING PRESSURE) — Cont'd			
D8BC 3A713-DA	D8BZ 3A713-B	ED D2AA 3A719-BD	D3AZ 3A719-A
ED D8BC 3A713-DA	D8BZ 3A713-B	★ D20A 3A719-CE	★ D20Z 3A719-G
ED1 D8BC 3A713-DA	D8BZ 3A713-B	D20A 3A719-DB	D20Z 3A719-H
D8BC 3A713-EA	D8BZ 3A713-F	D20A 3A719-HA	D50Z 3A719-B
ED D8BC 3A713-EA	D8BZ 3A713-F	D2SA 3A719-DB	D2SZ 3A719-E
D8BC 3A713-FA	D8BZ 3A713-G	D2ZA 3A719-AA	D2ZZ 3A719-A
ED D8BC 3A713-FA	D8BZ 3A713-G	D3AA 3A719-AA	D3AZ 3A719-A
D8BC 3A713-GA	D8BZ 3A713-D	D3AA 3A719-BA	D3AZ 3A719-B
★ D8BC 3A713-HA	★ D8BZ 3A713-E	D3AA 3A719-BB	D3AZ 3A719-B
D9DC 3A713-AA	D9DZ 3A713-A	D3DA 3A719-AA	D0DZ 3A719-A
D9ZC 3A713-AB	D9ZZ 3A713-A	D3DA 3A719-BA	D0DZ 3A719-B
D9ZC 3A713-BA	D9ZZ 3A713-B	D3DA 3A719-CA	D00Z 3A719-A
★ 74EB 3A713-AA	★ D5RY 3A713-A	D3MA 3A719-AA	D3MY 3A719-A
★ 74EB 3A713-AB	★ D5RY 3A713-A	D3MA 3A719-AB	★ D3MY 3A719-A
★ 74EB 3A713-AC	★ D5RY 3A713-A	D3MA 3A719-AC	★ D3MY 3A719-A
★ 74EB 3A713-BB	★ D5RY 3A713-B	★ D30A 3A719-AA	★ D30Z 3A719-A
★ 74EB 3A713-BC	★ D5RY 3A713-B	D3SA 3A719-AA	D3SZ 3A719-A
★ 74EB 3A713-BD	★ D5RY 3A713-B	D3VA 3A719-BA	D3VY 3A719-B
★ 74FB 3A713-CB	★ D5RY 3A713-C	D5BW 3A719-AC	D5DZ 3A719-G
★ 74EB 3A713-CC	★ D5RY 3A713-C	D5BW 3A719-AD	D5DZ 3A719-Z
★ 7BFB 3A713-CD	★ D5RY 3A713-C	D5BW 3A719-BA	D5DZ 3A719-D
74EB 3A713-DB	D5RY 3A713-D	D5BW 3A719-CA	D6DZ 3A719-A
★ 74EB 3A713-DC	★ D5RY 3A713-E	D5DW 3A719-CA	D5DZ 3A719-E
★ 74EB 3A713-DD	★ D5RY 3A713-E	D5DW 3A719-CB	D5DZ 3A719-J
C60A 3A714-A	C60Z 3A714-A	★ D5DW 3A719-DA	★ D5DZ 3A719-H
D10A 3A714-AA	C60Z 3A714-A	D5DW 3A719-EA	D5DZ 3A719-K
D6DW 3A714-BA	D6DZ 3A714-A	D5DW 3A719-FA	D5DZ 3A719-U
D6DW 3A714-BB	D6DZ 3A714-A	★ D5DW 3A719-LA	★ D5DZ 3A719-L
D8DC 3A714-AA	D8DZ 3A714-A	D5DW 3A719-MA	D5DZ 3A719-M
★ 74FB 3A714-AA	★ D5RY 3A714-A	★ D5DW 3A719-RA	★ D5DZ 3A719-R
D8BC 3A715-AA	D8BZ 3A719-A	★ D5DW 3A719-SA	★ D5DZ 3A719-S
★ D8BC 3A715-BA	★ D8BZ 3A719-B	★ ED D5DW 3A719-SA	★ D5DZ 3A719-S
D8BC 3A715-CA	D8BZ 3A719-D	★ D5DW 3A719-SB	★ D5DZ 3A719-S
D8BC 3A715-DA	D8BZ 3A719-C	D5MW 3A719-AA	D5MY 3A719-A
D8DC 3A715-AA	D8DZ 3A719-E	D5MW 3A719-AB	D5MY 3A719-A
D8DC 3A715-BA	D8DZ 3A719-D	D5MW 3A719-AC	D5MY 3A719-A
D9BC 3A715-BB	D9BZ 3A719-C	ED D5MW 3A719-AC	D5MY 3A719-A
D9BC 3A715-FA	D9BZ 3A719-D	D5MW 3A719-BA	D5MY 3A719-B
D9DC 3A715-AB	D9DZ 3A719-A	D5MW 3A719-BC	D5MY 3A719-B
C60A 3A717-A	C60Z 3A717-A	ED D5MW 3A719-BC	D5MY 3A719-B
D10A 3A717-AA	C60Z 3A717-A	D5MW 3A719-CB	D5MY 3A719-C
D5DW 3A717-AA	D5DZ 3A717-A	D5MW 3A719-DA	D5MY 3A719-D
D5DW 3A717-AB	D5DZ 3A717-B	D5MW 3A719-DB	D5MY 3A719-D
D6DW 3A717-AA	D5DZ 3A717-B	D50W 3A719-AA	D50Z 3A719-A
D6DW 3A717-BA	D6DZ 3A717-A	D5SW 3A719-AA	D5SZ 3A719-A
D6DW 3A717-BB	D6DZ 3A717-A	D5SW 3A719-AB	D5SZ 3A719-A
D8DC 3A717-AA	D8DZ 3A717-A	D5SW 3A719-BA	D5SZ 3A719-F
★ 7BEB 3A717-AA	★ D5RY 3A717-A	D5SW 3A719-BB	D5SZ 3A719-F
★ 74EB 3A717-AB	★ D5RY 3A717-A	D5VW 3A719-AA	D5VY 3A719-A
D0DA 3A719-A	D0DZ 3A719-A	D5VW 3A719-BA	D5VY 3A719-A
D0DA 3A719-C	D0DZ 3A719-B	D5ZW 3A719-CA	D5ZZ 3A719-C
D00A 3A719-A	D00Z 3A719-A	D5ZW 3A719-DA	D5ZZ 3A719-D
D0DA 3A719-D	D00Z 3A719-A	D6AW 3A719-AA	D6AZ 3A719-G
D1DA 3A719-AA	D0DZ 3A719-A	D6AW 3A719-BA	D6AZ 3A719-B
D1DA 3A719-BA	D0DZ 3A719-B	D6AW 3A719-CA	D5MY 3A719-A
D1DA 3A719-CA	D00Z 3A719-A	D6AW 3A719-DA	D5MY 3A719-B

IDENTIFICATION CHART

IDENTIFICATION	PART NUMBER	IDENTIFICATION	PART NUMBER
3A719 HOSE ASSY. (POWER STEERING PRESSURE) — Cont'd			
D6AW 3A719-EA	D6AZ 3A719-J	D7EC 3A719-FA	D7FZ 3A719-A
★ D6AW 3A719-FA	★ D6AZ 3A719-B	D7EC 3A719-GA	D7FZ 3A719-B
D6AW 3A719-GA	D5MY 3A719-C	D7EC 3A719-HA	D7FZ 3A719-A
D6AW 3A719-HA	D6MY 3A719-A	D70A 3A719-AA	D50Z 3A719-A
D6AW 3A719-JA	D5MY 3A719-B	D70A 3A719-BA	D50Z 3A719-B
D6AW 3A719-KA	D6AZ 3A719-K	D70C 3A719-AA	D50Z 3A719-B
D6AW 3A719-LA	D6AZ 3A719-L	D70C 3A719-BA	D50Z 3A719-B
D6AW 3A719-MA	D6AZ 3A719-F	D70C 3A719-BB	D50Z 3A719-B
D6AW 3A719-MB	D6AZ 3A719-A	D70C 3A719-CA	D70Z 3A719-B
D6AW 3A719-NA	D6AZ 3A719-G	D7VA 3A719-AA	D7VY 3A719-C
D6BW 3A719-BA	D6DZ 3A719-A	D8AC 3A719-AA	D8AZ 3A719-A
D6BW 3A719-DA	D6DZ 3A719-X	D8AC 3A719-BB	D8AZ 3A719-B
D6DW 3A719-AA	D6DZ 3A719-C	D8AC 3A719-CA	D8AZ 3A719-D
★ED D6DW 3A719-AA	★ D6DZ 3A719-C	D8AC 3A719-DA	D8AZ 3A719-A
D6DW 3A719-BA	D6DZ 3A719-B	D8AC 3A719-EA	D8AZ 3A719-A
D6DW 3A719-EA	D6DZ 3A719-H	D8AC 3A719-EB	D8AZ 3A719-A
D6DW 3A719-FA	D6DZ 3A719-G	D8BC 3A719-AB	D8BZ 3A719-A
D6DW 3A719-HA	D6DZ 3A719-S	D8BC 3A719-BB	D8BZ 3A719-B
D6DW 3A719-JA	D6DZ 3A719-T	D8BC 3A719-DA	D8BZ 3A719-D
D6DW 3A719-KA	D6DZ 3A719-U	D8BC 3A719-DB	D8BZ 3A719-D
D6DW 3A719-SA	D6DZ 3A719-Y	D8BC 3A719-EA	D8BZ 3A719-A
D6DW 3A719-SB	D6DZ 3A719-Y	D8BC 3A719-FA	D8BZ 3A719-B
★ D6DW 3A719-TA	★ D5DZ 3A719-M	D8DC 3A719-CA	D8DZ 3A719-E
D6DW 3A719-UA	D6DZ 3A719-G	D8DC 3A719-CB	D8DZ 3A719-E
D6EW 3A719-AA	D6FZ 3A719-A	D8DC 3A719-DA	D8DZ 3A719-D
D6EW 3A719-BA	D6FZ 3A719-B	D8DC 3A719-DB	D8DZ 3A719-D
D6EW 3A719-CA	D6FZ 3A719-A	D8EC 3A719-BA	D8FZ 3A719-B
D6EW 3A719-EA	D6FZ 3A719-B	★ D8EC 3A719-CA	★ D8FZ 3A719-C
D6EW 3A719-FA	D6FZ 3A719-A	★ED D8EC 3A719-CA	★ D8FZ 3A719-C
D6EW 3A719-GA	D6FZ 3A719-B	★ED1 D8EC 3A719-CA	★ D8FZ 3A719-C
D6EW 3A719-HA	D6FZ 3A719-A	D8EC 3A719-DA	D8FZ 3A719-D
★ D6MW 3A719-AA	★ D6MY 3A719-A	D8LC 3A719-AA	D8LY 3A719-C
★ D60W 3A719-AA	★ D60Z 3A719-A	D80C 3A719-AA	D80Z 3A719-A
D60W 3A719-BA	D60Z 3A719-A	D80C 3A719-BA	D80Z 3A719-B
D60W 3A719-CA	D50Z 3A719-A	D80C 3A719-CA	D80Z 3A719-B
D60W 3A719-DA	D50Z 3A719-B	D80C 3A719-DA	D80Z 3A719-C
D60W 3A719-EA	D60Z 3A719-A	D80C 3A719-EA	D80Z 3A719-A
D60W 3A719-GA	D60Z 3A719-A	D80C 3A719-EB	D80Z 3A719-A
D7AA 3A719-AA	D5MY 3A719-C	D80C 3A719-GA	D90Z 3A719-A
D7AA 3A719-BA	D6AZ 3A719-K	D8VC 3A719-AA	D8VY 3A719-A
D7AA 3A719-CA	D6AZ 3A719-L	D9AC 3A719-BA	D9AZ 3A719-A
D7AC 3A719-AA	D6AZ 3A719-K	D9BC 3A719-BB	D9BZ 3A719-C
D7DA 3A719-AA	D7DZ 3A719-B	D9BC 3A719-CA	D9BZ 3A719-B
D7DA 3A719-BA	D7DZ 3A719-C	D9BC 3A719-DA	D9BZ 3A719-A
D7DC 3A719-AA	D7DZ 3A719-A	D9BC 3A719-FA	D9BZ 3A719-D
D7DC 3A719-AB	D7DZ 3A719-A	D9DC 3A719-AB	D9DZ 3A719-A
D7DC 3A719-BA	D7DZ 3A719-C	D9DC 3A719-BA	D9DZ 3A719-B
D7DC 3A719-CA	D7DZ 3A719-B	★ D9EC 3A719-AA	★ D9FZ 3A719-A
D7DC 3A719-DA	D7DZ 3A719-D	D90C 3A719-AA	D90Z 3A719-B
D7DC 3A719-EA	D7DZ 3A719-G	D9ZC 3A719-CB	D9ZZ 3A719-C
D7DC 3A719-FA	D7DZ 3A719-H	D9ZC 3A719-EA	D9ZZ 3A719-D
D7EC 3A719-AA	D7FZ 3A719-A	74EB 3A719-BB	D5RY 3A719-A
D7EC 3A719-BA	D7FZ 3A719-B	74EB 3A719-BC	D5RY 3A719-A
D7EC 3A719-CA	D7EZ 3A719-B	74EB 3A719-BD	D5RY 3A719-A
D7EC 3A719-DA	D7FZ 3A719-A	74EB 3A719-DB	D5RY 3A719-B
D7EC 3A719-EA	D7FZ 3A719-B	74EB 3A719-DC	D5RY 3A719-B

COPYRIGHT © 1986 — FORD MOTOR COMPANY — DEARBORN, MICHIGAN

1973/79 LINCOLN-MERCURY CARS

YEAR	MODEL/RESTRICTIONS	PART NUMBER	DESCRIPTION	QTY.
3A719	HOSE ASSY. (POWER STEERING PRESSURE)			
	@ Improvise from bulk hose C7AZ 3A005-A (3/8" I.D. x 5/8" O.D.) and use (2) B5A 2344 clamps.			
	♦ Cut hose portion to required length			

POWER STEERING HOSE MODEL APPLICATION CHART

ALL POWER STEERING HOSES ARE LISTED UNDER GROUP 3A719.
THE DESCRIPTION COLUMN INDICATES FUNCTIONS OF THE PARTS.

A (Mercury)

73/74	A,Y	★ D2AZ 3A713-D(3/81)	From gear to oil cooler-w/Ford pump (kit-filter) consists of (1) D6AW 3F595-AA Filter assy. (1) D5VW 3F619-AA Bracket (1) 34976-S2 Nut (1) 95873-S100 Strap (1) 384161-S100 Clamp (1) Installation sketch	1
	A,Y - - 8 cyl. 351,400	D2AZ 3A713-C	From gear to pump or engine mounted oil cooler (return)	1
		D3AZ 3A713-A	From gear to radiator mounted oil cooler (return)	1
		@ 3A005	From cooler to pump (return)	AR
	"Before 10/23/72"	D3AZ 3A719-A	From pump to gear (pressure)	1
	"From 10/23/72"	★ D3AZ 3A719-B r/b D5MY 3A719-C(12/80)	From pump to gear (pressure)	1
73/74	A,Y(exc. P/C)-8 cyl. 429,460 with A/C "Before 5/1/74"	D3AZ 3A713-A	From gear to oil cooler (return)	1
	"From 5/1/74"	D5MY 3A713-A	From gear to oil cooler (return)	1
	A,Y(exc. P/C) - - 8 cyl. 429,460 without A/C	D3AZ 3A713-A	From gear to oil cooler (return)	1
	A,Y(P/C) - - 8 cyl. 460 with A/C "Before 5/1/74"	D3AZ 3A713-B	From gear to oil cooler (return)	1
	"From 5/1/74"	D5MY 3A713-A	From gear to oil cooler (return)	1
	A,Y(P/C) - - 8 cyl. 460 without A/C	D3AZ 3A713-B	From gear to oil cooler (return)	1
	A,Y - - 8 cyl. 429,460	@ 3A005	From cooler to pump (return)	AR
	A,Y - - A/C "Before 5/1/74"	D5MY 3A719-B	From pump to gear (pressure)	1
	"From 5/1/74"	D5MY 3A719-A	From pump to gear (pressure)	1
	A,Y - - without A/C	D5MY 3A719-B	From pump to gear (pressure)	1
75	A,Y - - w/o hydro boost			
		@ 3A005	From cooler to pump (return)	AR
		D5AZ 3A713-A	From gear to cooler (return)	1
	8 cyl. 351	D5MY 3A719-C	From pump to gear (pressure)	1
	8 cyl. 400 w/Ford pump- "Before 11/1/74"	D5MY 3A719-C	From pump to gear (pressure)	1
	8 cyl. 400 w/Saginaw pump- "From 11/1/74"	D5MY 3A719-B	From pump to gear (pressure)	1
	8 cyl. 460 with A/C	D5MY 3A719-B	From pump to gear (pressure)	1
	8 cyl. 460 without A/C	D5MY 3A719-A	From pump to gear (pressure)	1
	A,Y - - w/hydro boost and w/o skid control	★ D5MY 3A713-B(6/82)	From gear to pump (return)	1
		@ 3A005	From cooler to pump (return)	AR
		★ D5MY 3A719-H(6/82)	From pump to booster (pressure)-without A/C	1
	with A/C	D5SZ 3A719-E	From pump to booster (pressure)	1
		D5MY 3A719-G	From booster to gear (pressure)	1
		@ 3A005	From booster to pump (return)	AR

YEAR	MODEL/RESTRICTIONS	PART NUMBER	DESCRIPTION	QTY.
3A719	HOSE ASSY. (POWER STEERING PRESSURE) — Cont'd			
	@ Improvise from bulk hose C7AZ 3A005-A (3/8" I.D. x 5/8" O.D.) and use (2) B5A 2344 clamps.			
	♦ Cut hose portion to required length			

POWER STEERING HOSE MODEL APPLICATION CHART

ALL POWER STEERING HOSES ARE LISTED UNDER GROUP 3A719.
THE DESCRIPTION COLUMN INDICATES FUNCTIONS OF THE PARTS.

A (Mercury) — Cont'd

75	A,Y - - w/hydro boost and skid control	★ D5MY 3A719-J(2/80)	Pump pressure outlet tube (pressure)	1
		★ D5MY 3A719-D(2/80)	From pump outlet tube to skid control actuator (pressure)	1
		★ D5MY 3A719-E(2/80)	From hydro boost to skid control (pressure)	1
		D5MY 3A719-G	From hydro boost to gear (pressure)	1
		D5MY 3A713-C	From hydro boost to skid control actuator and to pump return (3A005) hose	1
		@ 3A005	From T-fitting to pump of the booster to skid control actuator return hose	AR
		D5MY 3A713-A	From gear to cooler (return)	1
		@ 3A005	From cooler to pump (return)	AR
76	A,Y - - w/o hydro boost exc. P/C	@ 3A005	From cooler to pump (return)	AR
	A,Y - - 8 cyl. 351M			
	"Before 11/17/75"	D5AZ 3A713-A	From gear to cooler (return)	1
	"From 11/17/75"	D6AZ 3A713-B	From gear to cooler (return)	1
		D5MY 3A719-C	From pump to gear (pressure)	1
	A,Y - - 8 cyl. 400	D6AZ 3A713-C	From gear to pump (return)	1
	A,Y - - 8 cyl. 460 w/o A/C			
	"Before 11/17/75"	D5MY 3A719-B	From pump to gear (pressure)	1
	"From 11/17/75 to 4/5/76"	★ D6AZ 3A719-B(3/84)	From pump to gear (pressure)	1
	"From 4/5/76"	D6AZ 3A719-K	From pump to gear (pressure)	1
	A,Y - - 8 cyl. 460 w/A/C	★ D6AZ 3A713-D	From gear to pump (return) -r/b D6AZ 3A713-C (9/79)	1
	"Before 11/17/75"	D5MY 3A719-A	From pump to gear (pressure)	1
	"From 11/17/75"	D6AZ 3A719-L	From pump to gear (pressure)	1
76	A,Y (P/C) - - w/o hydro boost	@ 3A005	From cooler to pump (return)	1
		D6AZ 3A713-B	From gear to cooler (return)	1
	A,Y - - 8 cyl. 351	D6AZ 3A719-C	Pump outlet tube (pressure)	1
		D6AZ 3A719-G	From outlet tube to gear (pressure)	1
	A,Y - - 8 cyl. 400			
	"Before 5/3/76"	D6AZ 3A719-D(2/80)	Pump outlet tube (pressure)	1
	"From 5/3/76"	D6AZ 3A719-M	Pump outlet tube (pressure)	1
		★ D6AZ 3A719-B(3/84)	From outlet tube to gear (pressure)	1
76	A,Y - - w/hydro boost w/o skid control	@ 3A005	From hydro boost to pump (return)	AR
		@ 3A005	From filter to pump (return)	AR
		@ 3A005	From filter to cooler (return)	AR
		@ 3A005	From cooler to pump (return)	AR
		D6MY 3A713-B	From gear to 3A005 (return)-inc. filter	1
		D5MY 3A719-G	From hydro boost to gear (pressure)	1
	8 cyl. 400 "Before 6/3/76"	D6AZ 3A719-A	From pump to hydro boost (pressure)	1
	"From 6/3/76"	★ D6AZ 3A719-P(2/81)	From pump to hydro boost (pressure)	1
	8 cyl. 460 w/o A/C	★ D5MY 3A719-H(6/82)	From pump to hydro boost (pressure)	1
	8 cyl. 460 w/A/C	D5SZ 3A719-E	From pump to hydro boost (pressure)	1

COPYRIGHT © 1986 — FORD MOTOR COMPANY — DEARBORN, MICHIGAN

YEAR	MODEL/RESTRICTIONS	PART NUMBER	DESCRIPTION	QTY.
3A719	HOSE ASSY. (POWER STEERING PRESSURE) — Cont'd @ Improvise from bulk hose C7AZ 3A005-A (3/8" I.D. x 5/8" O.D.) and use (2) B5A 2344 clamps. ♦ Cut hose portion to required length			

POWER STEERING HOSE MODEL APPLICATION CHART

ALL POWER STEERING HOSES ARE LISTED UNDER GROUP 3A719.
THE DESCRIPTION COLUMN INDICATES FUNCTIONS OF THE PARTS

A (Mercury) — Cont'd

76	A,Y - - w/hydro boost w/skid control	@ 3A005	From filter to pump (return)	AR
		@ 3A005	From tee to pump (return)	AR
		D6MY 3A713-B	From gear to 3A005 (return)-inc. filter	1
		D5MY 3A713-C	From hydro boost & skid control to 3A005 (return)-inc. tee	1
		★ D5MY 3A719-J(2/80)	Pump outlet tube (pressure)	1
		★ D5MY 3A719-D(2/80)	From outlet tube to skid control (pressure)	1
		★ D5MY 3A719-E(2/80)	From skid control to hydro boost (pressure)	1
		D5MY 3A719-G	From hydro boost to gear (pressure)	1
77	A - - w/o hydro boost w/o cooler	D6AZ 3A713-C	From gear to pump (return)	1
	8 cyl. 351M,400	D6AZ 3A719-K	From pump to gear (pressure)	1
	8 cyl. 460 w/o A/C			1
	8 cyl. 460 w/A/C	D6AZ 3A719-L	From pump to gear (pressure)	1
77	A(exc. P/C) - - w/o hydro boost w/cooler	@ 3A005	From cooler to pump (return)	AR
		D5AZ 3A713-A	From gear to cooler (return)	1
	8 cyl. 400	D6AZ 3A719-K	From pump to gear (pressure)	1
	8 cyl. 460 w/o A/C			1
	8 cyl. 460 w/A/C	D6AZ 3A719-L	From pump to gear (pressure)	1
77	A(P/C) - - w/o hydro boost	@ 3A005	From cooler to pump (return)	AR
		D6AZ 3A713-B	From gear to cooler (return)	1
		D6AZ 3A719-M	Pump outlet tube (pressure)	1
		D6AZ 3A719-G	From outlet tube to gear (pressure)	1
77	A - - w/hydro boost w/o cooler	@ 3A005	From hydro boost to pump (return)	AR
		D6AZ 3A713-C	From gear to pump (return)	1
		D7AZ 3A719-D	From hydro boost to gear (pressure)	1
	8 cyl. 351M	D7AZ 3A719-A	From pump to hydro boost (pressure)	1
	8 cyl. 400	★ D7LY 3A719-A	Pump outlet tube (pressure)	1
		D7MZ 3A719-A	From outlet tube to hydro boost (pressure)	1
	8 cyl. 460 w/o A/C	★ D7AZ 3A719-C(6/82)	From pump to hydro boost (pressure)	1
	8 cyl. 460 w/A/C	D7AZ 3A719-B	From pump to hydro boost (pressure)	1
77	A - - w/hydro boost w/cooler	@ 3A005	From hydro boost to pump (return)	AR
		@ 3A005	From cooler to pump (return)	AR
		D5AZ 3A713-A	From gear to cooler (return)-w/o filter	1
		D6MY 3A713-B	From gear to cooler (return)-inc. filter	1
		D7AZ 3A719-D	From hydro boost to gear (pressure)	1
	8 cyl. 400	★ D7LY 3A719-A	Pump outlet tube (pressure)	1
		D7MY 3A719-A	From outlet tube to hydro boost (pressure)	1
	8 cyl. 460,460 P.I. w/o A/C	★ D7AZ 3A719-C(6/82)	From pump to hydro boost (pressure)	1
	8 cyl. 460,460 P.I. w/A/C	D7AZ 3A719-B	From pump to hydro boost (pressure)	1

YEAR	MODEL/RESTRICTIONS	PART NUMBER	DESCRIPTION	QTY.
3A719	HOSE ASSY. (POWER STEERING PRESSURE) — Cont'd			
	@ Improvise from bulk hose C7AZ 3A005-A (3/8" I.D. x 5/8" O.D.) and use (2) B5A 2344 clamps.			
	♦ Cut hose portion to required length			

POWER STEERING HOSE MODEL APPLICATION CHART

ALL POWER STEERING HOSES ARE LISTED UNDER GROUP 3A719.
THE DESCRIPTION COLUMN INDICATES FUNCTIONS OF THE PARTS

A (Mercury) — Cont'd

78	A - - w/o hydroboost	@ 3A005	From 3A713 to pump (return)	AR
		@ 3A005	From cooler to pump (return)	AR
	A - - w/Ford pump	★ D8AZ 3A713-A(3/84)	From gear to 3A005 (return)	1
		D8AZ 3A719-A	From pump to gear (pressure)-w/P/S cooler	1
		D8AZ 3A719-B	From pump to gear (pressure)-w/o P/S cooler	1
	A - - 8 cyl. 351,400-w/Saginaw pump w/o Police package	D5AZ 3A713-A	From gear to cooler (return)-w/P/S cooler	1
		D6AZ 3A713-C	From gear to pump (return)-w/o P/S cooler	1
		D6AZ 3A719-K	From pump to gear (pressure)-w/P/S cooler	1
		D8AZ 3A719-D	From pump to gear (pressure)-w/o P/S cooler	1
	A - - 8 cyl. 400 w/Saginaw pump w/o Police Package	D6AZ 3A713-B	From gear to pump (return)	1
		D6AZ 3A719-M	Pump outlet tube (pressure)	1
		D6AZ 3A719-G	From pump outlet tube to gear (pressure)	1
	A - - 8 cyl. 460 w/o Police Package w/o A/C	D6AZ 3A173-C	From gear to pump (return)-w/o P/S cooler	1
		D5AZ 3A713-A	From gear to cooler (return)-w/P/S cooler	1
		D6AZ 3A719-K	From pump to gear (pressure)	1
	A - - 8 cyl. 460 w/o Police Package w/A/C	D6AZ 3A713-C	From gear to pump (return)-w/o P/S cooler	1
		D5AZ 3A713-A	From gear to cooler (return)- w/P/S cooler	1
		D6AZ 3A719-L	From pump to gear (pressure)	1
	A - - 8 cyl. 460,460 P/C w/ Police Package	★ D6AZ 3A719-B(3/84)	From gear to cooler (return)	1
		D6SZ 3A719-A	Pump outlet tube (pressure)	1
		D6AZ 3A719-H	From pump outlet tube to gear (pressure)	1
78	A - - w/hydro boost	@ 3A005	From filter to pump (return)	AR
		@ 3A005	From filter to cooler (return)	AR
		@ 3A005	From hydroboost to pump (return)	AR
		@ 3A005	From cooler to pump (return)	AR
	A - - 8 cyl. 400 w/Police Package	D6AZ 3A713-E	From gear to 3A005 (return)-incl. filter	1
		D5AZ 3A713-A	From gear to cooler (return)	1
	"Before 10/1/77"	D7AZ 3A719-A	From pump to hydro boost (pressure)	1
	"From 10/1/77"	★ D8AZ 3A719-C(6/83)	From pump to hydroboost (pressure)	1
		D7AZ 3A719-D	From hydroboost to gear (pressure)	1
	A - - 8 cyl. 400	D6AZ 3A713-E	From gear to 3A005 (return)-incl. filter	1
		D5AZ 3A713-A	From gear to cooler (return)	1
	"Before 10/1/77"	★ D7LY 3A719-A	Pump outlet tube (pressure)	1
	"Before 10/1/77"	D8LY 3A719-A	Pump outlet tube (pressure)	1
	"From 10/1/77"	D7MZ 3A719-A	Pump outlet tube to hydroboost (pressure)	1
		D7AZ 3A719-D	Hydroboost to gear (pressure)	1
	A - - 8 cyl. 460,460 P/C	D6AZ 3A713-E	From gear to 3A005 (return)-inc. filter	1
		D5AZ 3A713-A	From gear to cooler (return)	1
		★ D7AZ 3A719-C(6/82)	From pump to hydroboost (pressure)-w/o A/C	1
		D7AZ 3A719-B	From pump to hydroboost (pressure)-w/A/C	1
		D7AZ 3A719-D	From hydroboost to gear (pressure)	1
79	A	@ 3A005	From gear outlet tube to pump (return)-w/o cooler	AR

COPYRIGHT © 1986— FORD MOTOR COMPANY —DEARBORN, MICHIGAN

YEAR	MODEL/RESTRICTIONS	PART NUMBER	DESCRIPTION	QTY.
3A719	HOSE ASSY. (POWER STEERING PRESSURE) — Cont'd @ Improvise from bulk hose C7AZ 3A005-A (3/8" I.D. x 5/8" O.D.) and use (2) B5A 2344 clamps. ♦ Cut hose portion to required length			

POWER STEERING HOSE MODEL APPLICATION CHART

ALL POWER STEERING HOSES ARE LISTED UNDER GROUP 3A719.
THE DESCRIPTION COLUMN INDICATES FUNCTIONS OF THE PARTS

A (Mercury) — Cont'd

79	A	@ 3A005	From gear outlet tube to cooler (return)-w/ cooler	AR
		@ 3A005	From cooler to pump (return)-w/cooler	AR
		D9AZ 3A713-A	Gear outlet tube (return)	1
		E0AZ 3A719-A	From pump to gear (pressure)	1

C (Montego)

73/74	C	★D2AZ 3A713-D(3/81)	From gear to oil cooler-w/Ford pump (kit-filter) consists of (1) D6AW 3F595-AA Filter assy. (1) D5VW 3F619-AA Bracket (1) 34976-S Nut (1) 95873-S100 Strap (1) 384161-S100 Clamp (1) Installation sketch	1
73/75	C - - 6 cyl	D20Z 3A713-A	From gear to pump (return)	1
		★D20Z 3A719-G(12/80)	From pump to gear (pressure)	1
73/75	C (exc. P/C) - - 8 cyl. w/Ford gear	D20Z 3A713-A	From gear to pump (return)	1
	C (exc. P/C) - - 8 cyl. w/Saginaw gear	D40Z 3A713-A	From gear to pump (return)	1
	C (P/C) - - 8 cyl.	★D30Z 3A713-B(3/84)	From gear to pump (return)	1
	C - - 8 cyl.	@ 3A005	From cooler to pump (return)	1
73/75	C - - 8 cyl. w/Saginaw gear	D70Z 3A719-B	From pump to gear (pressure)	1
73/75	C - - 8 cyl. w/Ford gear	D70Z 3A719-A	From pump to gear (pressure)	1
76	C - - 8 cyl.	@ 3A005	From cooler to pump (return)	1
	(exc. P/C) "From 11/17/75"	D60Z 3A713-C	From gear to cooler (return)	1
	(P/C) "Before 11/17/75"	★D30Z 3A713-B(3/84)	From gear to cooler (return)	1
	(P/C) "From 11/17/75"	D60Z 3A713-D	From, gear to cooler (return)	1
	(P/C)	D6AZ 3A719-C	From pump to gear (pressure) (lower)	1
	(P/C) "From 4/15/76"	★D60Z 3A719-B(6/82)	From pump (upper) to gear	1
	C - - 8 cyl. w/Ford gear	D70Z 3A719-A	From pump to gear (pressure)	1
	(P/C) "From 11/17/75"	★D60Z 3A719-A(3/84)	From pump to gear (pressure)	1

D (Lincoln)

73/74	D	★D2AZ 3A713-D(3/81)	From gear to oil cooler-w/Ford pump (kit-filter) consists of (1) D6AW 3F595-AA Filter assy. (1) D5VW 3F619-AA Bracket (1) 34976-S Nut (1) 95873-S100 Strap (1) 384161-S100 Clamp (1) Installation sketch	1
73	D	★D2VY 3A713-D(3/81)	From gear to pump (return)	1
		@ 3A005	From cooler to pump (return)	1
		D3VY 3A719-B	From pump to gear (pressure)	1

YEAR	MODEL/RESTRICTIONS	PART NUMBER	DESCRIPTION	QTY.
3A719	HOSE ASSY. (POWER STEERING PRESSURE) — Cont'd			
	@ Improvise from bulk hose C7AZ 3A005-A (3/8" I.D. x 5/8" O.D.) and use (2) B5A 2344 clamps.			
	♦ Cut hose portion to required length			

POWER STEERING HOSE MODEL APPLICATION CHART

ALL POWER STEERING HOSES ARE LISTED UNDER GROUP 3A719.
THE DESCRIPTION COLUMN INDICATES FUNCTIONS OF THE PARTS

D (Lincoln) — Cont'd

74	D – – w/o hydro boost– "Before 4/8/74"	★ D4VY 3A713-A(3/81)	From gear to pump (return)	1
		@ 3A005	From cooler to pump (return)	1
		D3VY 3A719-B	From pump to gear (pressure)	1
	D – – with hydro boost– "From 4/8/74"	★ D4VY 3A719-A(6/82)	From pump to brake booster (pressure)	1
		★ D4VY 3A719-B(6/82)	From booster to steering gear (pressure)	1
		@ 3A005	From booster to pump (return)	1
		D5VY 3A713-A	From gear to oil cooler tube (return)–incl. filter	1
		@ 3A005	From oil cooler to pump (return)	1
75/76	D – – w/hydro boost and w/o skid control	D5SZ 3A719-E	From pump to hydro boost (pressure)	1
		D5VY 3A719-C ✓	From hydro boost to gear (pressure)	1
		D5VY 3A713-A	From gear to cooler (return)	1
		@ 3A005	From cooler to pump (return)	AR
75/76	D – – w/hydro boost and w/skid control	D6SZ 3A719-A	Pump pressure outlet tube to skid control actuator hose (pressure)	1
		D5VY 3A719-A	From pump outlet tube to skid control actuator (pressure)	1
		D5VY 3A719-B	From hydro boost to skid control actuator (pressure)	1
		D5VY 3A719-C ✓	From hydro boost to gear (pressure)	1
		D5VY 3A713-B	From hydro boost to skid control actuator and to pump (3A005) return hose (return)	1
		@ 3A005	Pump return hoses from oil cooler and from hydro boost T-bar hose	AR
		D5VY 3A713-A	From gear to oil cooler (return)	1
77	D – – 8 cyl. 400	D5MY 3A713-C	From hydro boost to skid control actuator and to pump return (3A005) hose	1
77	D – – w/hydro boost and w/o skid control	@ 3A005	From cooler to pump (return)	AR
		@ 3A005	From booster to pump (return)	AR
		D5VY 3A713-A	From gear to pump (return)	1
		D6AZ 3A713-E	From gear to pump (return) incl. filte	1
		D7VY 3A719-D	From hydro boost to gear (pressure) ✓	1
	D – – 8 cyl. 460–with A/C "From 1/26/77"	D6SZ 3A719-A	From pump to pressure hose (pump outlet tube)	1
	D – – 8 cyl. 460 – – with A/C "Before 1/26/77"	D7AZ 3A719-B	From hydro boost to pump (pressure)	1
	D – – 8 cyl. 460–with A/C "From 1/26/77"	D7VY 3A719-E	From pump outlet tube to hydro boost (pressure)	1
	D – – 8 cyl. 400	D7AZ 3A719-A	From pump to hydro boost (pressure)	1
	D – – 8 cyl. 400	D7VY 3A719-E	From pump to booster (pressure) (center)	1
		★ D6AZ 3A719-P(2/81)	From pump to booster (pressure) (upper)	1
	D – – w/hydro boost and w/skid control	@ 3A005	From cooler to pump (return)	AR
		@ 3A005	Pump return hoses from oil cooler and from hydro boost T-bar hose	AR
		D5VY 3A713-A	From gear to cooler (return) incl. filter	1

COPYRIGHT © 1986 — FORD MOTOR COMPANY — DEARBORN, MICHIGAN

YEAR	MODEL/RESTRICTIONS	PART NUMBER	DESCRIPTION	QTY.
3A719	HOSE ASSY. (POWER STEERING PRESSURE) — Cont'd			
	@ Improvise from bulk hose C7AZ 3A005–A (3/8" I.D. x 5/8" O.D.) and use (2) B5A 2344 clamps.			
	♦ Cut hose portion to required length			

POWER STEERING HOSE MODEL APPLICATION CHART

ALL POWER STEERING HOSES ARE LISTED UNDER GROUP 3A719.
THE DESCRIPTION COLUMN INDICATES FUNCTIONS OF THE PARTS

D (Lincoln) — Cont'd

77	D – – w/hydro boost and w/skid control	D5VY 3A713–B	From hydro boost to skid control actuator and to pump (3A005) return hose (return)	1
		D6AZ 3A713–E	From gear to cooler (return)	1
		D6SZ 3A719–A	Pump pressure outlet tube (pressure)	1
	D	D7VY 3A719–F	From skid control actuator to hydro booster (pressure)	1
		D7VY 3A719–C	From pump outlet tube to skid control actuator (pressure)	1
78	D – – w/o skid control w/o cooler	@ 3A005	From hydroboost to pump (return)	AR
		D6AZ 3A713–C	From gear to pump (return)	1
		D7VY 3A719–D	From hydroboost to gear (pressure)	1
		D8VY 3A719–B	From pump outlet tube to hydroboost (pressure)	1
	D – – 8 cyl. 400	D8LY 3A719–E	Pump outlet tube (pressure)	1
	D – – 8 cyl. 460	D8LY 3A719–D	Pump outlet tube (pressure)	1
78	D – – w/skid control w/o cooler	@ 3A005	From tee (3A713) to pump (return)	1
		D5VY 3A713–B	From hydroboost and skid control to 3A005 (return)–inc. tee	1
		D6AZ 3A713–C	From gear to pump (return)	1
		D7VY 3A719–D	From hydroboost to gear (pressure)	1
		D7VY 3A719–F	From skid control to hydroboost (pressure)	1
	"Before 9/15/77"	D7VY 3A719–C	From pump outlet tube to skid control (pressure)	1
	"From 9/15/77"	D8VY 3A719–A	From pump outlet tube to skid control (pressure)	1
	D – – 8 cyl. 400 "Before 3/1/78"	D8LY 3A719–A	Pump outlet tube (pressure)	1
	D – – 8 cyl. 400 "From 3/1/78"	D8LY 3A719–E	Pump outlet tube (pressure)	1
	D – – 8 cyl. 460	D8LY 3A719–D	Pump outlet tube (pressure)	1
78	D – – w/o skid control w/cooler	@ 3A005	From cooler to pump (return)	AR
		@ 3A005	From hydroboost to pump (return)	AR
		D5AZ 3A713–A	From gear to cooler (return)	1
		D7VY 3A719–D	From hydroboost to gear (pressure)	1
	D "Before 9/15/77"	D7VY 3A719–E	From pump outlet tube to hydroboost (pressure)	1
	D "From 9/15/77"	D8VY 3A719–B	From pump outlet tube to hydroboost (pressure)	1
	D – – 8 cyl. 400 "Before 3/1/78"	D8LY 3A719–A	Pump outlet tube (pressure)	1
	D – – 8 cyl. 400 "From 3/1/78"	D8LY 3A719–E	Pump outlet tube (pressure)	1
	D – – 8 cyl. 460	D8LY 3A719–D	Pump outlet tube (pressure)	1
78	D – – w/skid control w/cooler	@ 3A005	From cooler to pump (return)	AR
		@ 3A005	From tee (3A713) to pump (return)	AR
		D5VY 3A713–B	From hydroboost and skid control to 3A005 (return)–inc. tee	1
		D5AZ 3A713–A	From gear to cooler (return)	1
		D7VY 3A719–D	From hydroboost to gear (pressure)	1
		D7VY 3A719–F	From skid control to hydroboost (pressure)	1
	"Before 9/15/77"	D7VY 3A719–C	From pump outlet tube to skid control (pressure)	1
	"From 9/15/77"	D8VY 3A719–A	From pump outlet tube to skid control (pressure)	1
	D – – 8 cyl. 400 "Before 3/1/78"	D8LY 3A719–A	Pump outlet tube (pressure)	1
	D – – 8 cyl. 400 "From 3/1/78"	D8LY 3A719–E	Pump outlet tube (pressure)	1
	D – – 8 cyl. 460	D8LY 3A719–D	Pump outlet tube (pressure)	1

YEAR	MODEL/RESTRICTIONS	PART NUMBER	DESCRIPTION	QTY.
3A719	HOSE ASSY. (POWER STEERING PRESSURE) — Cont'd			
	@ Improvise from bulk hose C7AZ 3A005-A (3/8" I.D. x 5/8" O.D.) and use (2) B5A 2344 clamps.			
	♦ Cut hose portion to required length			

POWER STEERING HOSE MODEL APPLICATION CHART

ALL POWER STEERING HOSES ARE LISTED UNDER GROUP 3A719.
THE DESCRIPTION COLUMN INDICATES FUNCTIONS OF THE PARTS

D (Lincoln) — Cont'd

79	D – – w/o skid control w/o cooler	@ 3A005	From hydroboost to pump (return)	AR
		D6AZ 3A713-C	From gear to pump (return)	1
		D7VY 3A719-D	From hydroboost to gear (pressure)	1
		D8VY 3A719-B	From pump outlet tube to hydroboost (pressure)	1
		D8LY 3A719-E	Pump outlet tube (pressure)	1
79	D – – w/skid control w/o cooler	@ 3A005	From tee (3A713) to pump (return)	AR
		D5VY 3A713-B	From hydroboost and skid control to 3A005 (return) – includes tee	1
		D6AZ 3A713-C	From gear to pump (return)	1
		D7VY 3A719-D	From hydroboost to gear (pressure)	1
		D7VY 3A719-F	From skid control to hydroboost (pressure)	1
		D8VY 3A719-A	From pump outlet tube to skid control (pressure)	1
		D8LY 3A719-E	Pump outlet tube (pressure)	1
79	D – – w/o skid control w/cooler	@ 3A005	From cooler to pump (return)	AR
		@ 3A005	From hydroboost to pump (return)	AR
		D5AZ 3A713-A	From gear to cooler (return)	1
		D7VY 3A719-D	From hydroboost to gear (pressure)	1
		D8VY 3A719-B	From pump outlet tube to hydroboost (pressure)	1
		D8LY 3A719-E	Pump outlet tube (pressure)	1
79	D – – w/skid control w/cooler	@ 3A005	From cooler to pump (return)	AR
		@ 3A005	From tee (3A713) to pump (return)	AR
		D5VY 3A713-B	From hydroboost and skid control to 3A005 (return)–includes tee	1
		D5AZ 3A713-A	From gear to cooler (return)	1
		D7VY 3A719-D	From hydroboost to gear (pressure)	1
		D7VY 3A719-F	From skid control to hydroboost (pressure)	1
		D8VY 3A719-A	From pump outlet tube to skid control (pressure)	1
		D8LY 3A719-E	Pump outlet tube (pressure)	1

F (Cougar)

73/74	F	★ D2AZ 3A713-D(3/81)	From gear to oil cooler–w/Ford pump (kit–filter)	1

Consists of

(1) D6AW 3F595-AA	Filter assy.	(1) 95873-S100	Strap
(1) D5VW 3F619-AA	Bracket	(1) 384161-S100	Clamp
(1) 34976-S2	Nut	(1)	Installation sketch

73	F	★ D1ZZ 3A713-A(1/84)	From gear to pump (return)	1
		@ 3A005	From cooler to pump (return)	AR
		D2ZZ 3A719-A	From pump to gear (pressure)	1
		★ D1ZA 3E576-AC	Pressure line outlet tube	1
74	F – – 8 cyl. 351,400–w/Ford gear	D70Z 3A719-A	From pump to gear (pressure)	1
	F – – 8 cyl. 460–w/Ford gear	D20Z 3A719-J	From pump to gear (pressure)	1
74/76	F "Before 11/17/75"	★ D30Z 3A713-B(3/84)	From gear to pump (return)	1
	"From 11/17/75"	D60Z 3A713-C	From gear to pump (return)	1
		@ 3A005	From cooler to pump (return)	1
74/75	F – – w/Saginaw gear	D40Z 3A713-A	From gear to pump (return)	1
	F – – w/Saginaw gear	D70Z 3A719-B	From pump to gear (pressure)	1
75/76	F – – 8 cyl. w/Ford gear	D70Z 3A719-A	From pump to gear (pressure)	1

COPYRIGHT © 1986 — FORD MOTOR COMPANY — DEARBORN, MICHIGAN

YEAR	MODEL/RESTRICTIONS	PART NUMBER	DESCRIPTION	QTY.
3A719	HOSE ASSY. (POWER STEERING PRESSURE) — Cont'd			
	@ Improvise from bulk hose C7AZ 3A005-A (3/8" I.D. x 5/8" O.D.) and use (2) B5A 2344 clamps.			
	♦ Cut hose portion to required length			

POWER STEERING HOSE MODEL APPLICATION CHART

ALL POWER STEERING HOSES ARE LISTED UNDER GROUP 3A719.
THE DESCRIPTION COLUMN INDICATES FUNCTIONS OF THE PARTS

F (Cougar) — Cont'd

77	F (exc. Police)	@ 3A005	From cooler to pump (return)	AR
		D60Z 3A713-C	From gear to cooler (return)-w/Ford gear	1
		★ D70Z 3A713-A(3/84)	From gear to cooler (return)-w/Saginaw gear	1
		D70Z 3A719-A	From pump to gear (pressure)-w/Ford pump and Ford gear	1
		D70Z 3A719-B	From pump to gear (pressure)-w/Ford pump and Saginaw gear	1
		D70Z 3A719-A	From pump to gear (pressure)-w/Saginaw pump	1
77	F (Police)	@ 3A005	From cooler to pump (return)	AR
		★ D60Z 3A713-D(3/81)	From gear to cooler (return)	1
		D6AZ 3A719-C	Pump outlet tube (pressure)	1
		D60Z 3A719-A	From pump outlet tube to gear (pressure)	1
78	F	@ 3A005	From 3A713 to pump (return)	AR
		@ 3A005	From 3A713 to cooler (return)	AR
		@ 3A005	From cooler to pump (return)	AR
		D80Z 3A713-A	From gear to 3A005 (return)-w/Ford gear	1
		★ D80Z 3A713-B(6/82)	From gear to 3A005 (return)-w/Saginaw gear	1
	F - - exc. Taxi and Police	D80Z 3A719-B ✓	From pump to gear (pressure)-w/Ford gear	1
	F - - exc. Taxi and Police	D80Z 3A719-C	From pump to gear (pressure)-w/Saginaw gear	1
	F - - Taxi and Police	D80Z 3A719-A	From pump to gear (pressure)	1
79	F - - w/Ford gear	@ 3A005	From 3A713 to pump (return)	AR
		@ 3A005	From 3A713 to cooler (return)	AR
		@ 3A005	From cooler to pump (return)	AR
		D80Z 3A713-A	From gear to 3A005 (return)	1
		D80Z 3A719-B	From pump to gear (pressure)	1
		@ 3A005	From 3A713 to gear (return)	AR
79	F - - w/Saginaw gear	@ 3A005	From 3A713 to cooler (return)	AR
		@ 3A005	From 3A713 to pump (return)	AR
		@ 3A005	From cooler to pump (return)	AR
		D90Z 3A713-A	From gear to 3A005 (return)	1
	F(Police & Taxi)	D90Z 3A719-B	From pump to gear (pressure)	1
	F(Exc. Police & Taxi)	D80Z 3A719-C	From pump to gear (pressure)	1

YEAR	MODEL/RESTRICTIONS	PART NUMBER	DESCRIPTION	QTY.
3A719	HOSE ASSY. (POWER STEERING PRESSURE) — Cont'd			
	@ Improvise from bulk hose C7AZ 3A005-A (3/8" I.D. x 5/8" O.D.) and use (2) B5A 2344 clamps.			
	♦ Cut hose portion to required length			

POWER STEERING HOSE MODEL APPLICATION CHART

ALL POWER STEERING HOSES ARE LISTED UNDER GROUP 3A719.
THE DESCRIPTION COLUMN INDICATES FUNCTIONS OF THE PARTS

G (Monarch)

75	G – – w/o hydro boost and w/o skid control–6 cyl. 200	★ D5DZ 3A713-E(3/84)	From control valve to pump (return)	1
	"Before 6/30/75"	D5DZ 3A714-A	From control valve to cylinder (front)	1
	"From 6/30/75"	D5DZ 3A714-B	From control valve to cylinder (front)	1
		D5DZ 3A717-B	From cylinder to valve (rear)	1
		★ D5DZ 3A719-H(3/84)	From pump to control valve (pressure)	1
	G – – w/o hydro boost and w/o skid control–6 cyl. 250	@ 3A005	From cooler to pump (return)	AR
		D5DZ 3A713-J	From control valve to cooler (return)	1
		D5DZ 3A714-B	From control valve to cylinder (front)	1
		D5DZ 3A717-B	From cylinder to valve (rear)	1
	"Before 4/7/75"	D5DZ 3A719-G	From pump to control valve (pressure)	1
	"From 4/7/75"	D6DZ 3A719-A	From pump to control valve (pressure)	1
	G – – w/o hydro boost and w/o skid control–8 cyl.	D5DZ 3A713-B	From control valve to pump (return)	1
		D5DZ 3A714-B	From control valve to cylinder (front)	1
		D5DZ 3A717-B	From cylinder to valve (rear)	1
		D5DZ 3494-A	From control valve to pressure hose	1
	"Before 2/17/75"	D6DZ 3A719-B	From pump to control valve hose (pressure)	1
	G – – 8 cyl. 302– "From 2/17/75"	D5DZ 3A719-K	From pump to control valve hose (pressure)	1
	G – – 8 cyl. 351 "From 2/17/75"	D6DZ 3A719-B	From pump to control valve hose (pressure)	1

COPYRIGHT © 1986 — FORD MOTOR COMPANY — DEARBORN, MICHIGAN

YEAR	MODEL/RESTRICTIONS	PART NUMBER	DESCRIPTION	QTY.
3A719	HOSE ASSY. (POWER STEERING PRESSURE) — Cont'd			
	@ Improvise from bulk hose C7AZ 3A005-A (3/8" I.D. x 5/8" O.D.) and use (2) B5A 2344 clamps.			
	♦ Cut hose portion to required length			

POWER STEERING HOSE MODEL APPLICATION CHART

ALL POWER STEERING HOSES ARE LISTED UNDER GROUP 3A719.
THE DESCRIPTION COLUMN INDICATES FUNCTIONS OF THE PARTS

G (Monarch) — Cont'd

75	G - - w/hydro boost w/o skid control	D5DZ 3A005-A	From hydro boost to pump (return)	1
		@ 3A005	From cooler to pump (return)	AR
		★ D5DZ 3A713-G(3/81)	From junction block to pump (return)- incl. filter	1
	"Before 6/30/75"	D5DZ 3A714-A	From control valve to cylinder (front)	1
	"From 6/30/75"	D5DZ 3A714-B	From control valve to cylinder (front)	1
		D5DZ 3A717-B	From cylinder to valve (rear)	1
	"Before 4/7/75"	D5DZ 3A719-G	From pump pressure hose at shock tower to hydro boost (pressure)	1
	"From 4/7/75"	D6DZ 3A719-A	From pump pressure hose at shock tower to hydro boost (pressure)	1
	6 cyl. 200,250	★ D5DZ 3A719-T	Not replaced	1
		★ D5DZ 3A719-M(3/84)	From hydro boost to shock tower (pressure)	1
		D5DZ 3A713-B	From control valve to junction block (return)	1
		D5DZ 3494-A	From shock tower to control valve (pressure)	1
	8 cyl. 302	★ D5DZ 3A719-U(3/81)	From pump to shock tower (pressure)	1
	8 cyl. 351	★ D5DZ 3A719-V(2/80)	From pump to shock tower (pressure)	1
	G - - w/hydro boost w/skid control	D5DZ 3A005-A	From hydro boost to pump (return)	1
		@ 3A005	From cooler to pump (return)	AR
		@ 3A005	From tee to pump (return)	AR
		★ D5DZ 3A713-G(3/81)	From junction block to pump (return)- incl. filter	1
		★ D5DZ 3A713-H(3/84)	From hydro boost & skid control to 3A005 (return)	1
		D5DZ 3A714-B	From control valve to cylinder (front)	1
		D5DZ 3A717-B	From cylinder to valve (rear)	1
	"Before 4/7/75"	D5DZ 3A719-G	From shock tower to hydro boost (pressure)	1
	"From 4/7/75"	D5DZ 3A719-Z	From shock tower to hydro boost (pressure)	1
	6 cyl. 200, 250	★ D5DZ 3A719-L	Not replaced	1
		★ D5DZ 3A719-M(3/84)	From hydro boost (rear)	1
		★ D5DZ 3A719-W	Not replaced	1
		★ D5DZ 3A719-Y	Not replaced	1
		D5DZ 3A713-B	From control valve to junction block (return)	1
	8 cyl. 302	★ D5DZ 3A719-R	Not replaced	1
	8 cyl. 351	★ D5DZ 3A719-S	Not replaced	1
		★ D5DZ 3494-B(6/82)	From shock tower to control valve (pressure)	1
76	G - - 6 cyl. 200 - - w/o hydro boost and w/o skid control	★ D5DZ 3A713-E(3/84)	From control valve to pump (return)	1
	"Before 5/3/76"	D5DZ 3A714-B	From control valve to cylinder (front)	1
	"From 5/3/76"	D8DZ 3A714-A	From control valve to cylinder (front)	1
	"Before 5/3/76"	D5DZ 3A717-B	From control valve to cylinder (rear)	1
	"From 5/3/76"	★ D6DZ 3A717-A	From control valve to cylinder (rear)- r/b D8DZ 3A717-A (12/78)	1
		★ D5DZ 3A719-H(3/84)	From pump to control valve (pressure)	1

YEAR	MODEL/RESTRICTIONS	PART NUMBER	DESCRIPTION	QTY.
3A719	HOSE ASSY. (POWER STEERING PRESSURE) — Cont'd			
	@ Improvise from bulk hose C7AZ 3A005-A (3/8" I.D. x 5/8" O.D.) and use (2) B5A 2344 clamps.			
	♦ Cut hose portion to required length			

POWER STEERING HOSE MODEL APPLICATION CHART

ALL POWER STEERING HOSES ARE LISTED UNDER GROUP 3A719.
THE DESCRIPTION COLUMN INDICATES FUNCTIONS OF THE PARTS

G (Monarch) — Cont'd

76	G - - 6 cyl. 250 - - w/o hydro boost and w/o skid control "Before 4/5/76"	D5DZ 3A713-J	From control valve to pump (return)	1
	"From 4/5/76"	D5DZ 3A713-C	From control valve to pump (return)	1
	"Before 5/3/76"	D5DZ 3A714-B	From control valve to cylinder (front)	1
	"From 5/3/76"	D8DZ 3A714-A	From control valve to cylinder (front)	1
	"Before 5/3/76"	D5DZ 3A717-B	From cylinder to valve (rear)	1
	"From 5/3/76"	★ D6DZ 3A717-A	From control valve to cylinder (rear)- r/b D8DZ 3A717-A(12/78)	1
	"Before 4/5/76"	D6DZ 3A719-A	From pump to control valve (pressure)	1
	"From 4/5/76"	★ D6DZ 3A719-Y(12/83)	From pump to control valve (pressure)	1
76	G - - 8 cyl. w/o hydro boost w/o skid control	@ 3A005	From junction block to pump (return)	AR
	"Before 5/3/76"	D5DZ 3A713-B	From control valve to 3A005 (return)	1
	"From 5/3/76"	D6DZ 3A713-E	From control valve to 3A005 (return)	1
	"Before 5/3/76"	D5DZ 3A714-B	From control valve to cylinder (front)	1
	"From 5/3/76"	D8DZ 3A714-A	From control valve to cylinder (front)	1
	"Before 5/3/76"	D5DZ 3A717-B	From control valve to cylinder (rear)	1
	"From 5/3/76"	★ D6DZ 3A717-A	From control valve to cylinder (rear)- r/b D8DZ 3A717-A(12/78)	1
	"Before 5/3/76"	D5DZ 3494-A	From junction block to control valve (pressure)	1
	"From 5/3/76"	D6DZ 3494-C	From junction block to control valve (pressure)	1
	302 - - w/o A/C "Before 1/5/76"	★ D6DZ 3A719-C(6/83)	From pump to junction block (pressure)	1
	302 - - w/o A/C "From 1/5/76"	★ D6DZ 3A719-S(3/84)	From pump to junction block (pressure)	1
	302 - - w/A/C "Before 1/5/76"	D6DZ 3A719-B	From pump to junction block (pressure)	1
	302 - - w/A/C "From 1/5/76"	D7DZ 3A719-D	From pump to junction block (pressure)	1
	351 "Before 1/5/76"	D6DZ 3A719-B	From pump to junction block (pressure)	1
	351 "From 1/5/76"	D7DZ 3A719-D	From pump to junction block (pressure)	1
	G - - w/hydro boost and w/o skid control	@ 3A005	From cooler to pump (return)	AR
		D6DZ 3A713-A	From control valve to pump (return) - incl. filter	1
		D5DZ 3A713-B	From control valve to junction block (return)	1
	"Before 5/3/76"	D5DZ 3A714-B	From control valve to cylinder (front)	1
	"From 5/3/76"	D8DZ 3A714-A	From control valve to cylinder (front)	1
	"Before 5/3/76"	D5DZ 3A717-B	From control valve to cylinder (rear)	1
	"From 5/3/76"	★ D6DZ 3A717-A	From control valve to cylinder (rear)- r/b D8DZ 3A717-A(12/78)	1
	"Before 5/3/76"	D6DZ 3494-A	From control valve to pressure hose	1
	"From 5/3/76"	D6DZ 3494-D	From control valve to pressure hose	1
		★ D5DZ 3A719-M(3/84)	From hydro boost to shock tower (pressure)	1
	"From 4/5/76"	★ D6DZ 3A719-Y(12/83)	From pump to control valve (pressure)	1
	6 cyl. 200 "Before 4/5/76"	★ D6DZ 3A719-H(2/80)	From hydro boost to pump (pressure) (rear-upper)	1
	6 cyl. 250 "Before 4/5/76"	★ D6DZ 3A719-J(3/81)	from hydro boost to pump (pressure) (rear-upper)	1
		D5DZ 3A719-G	From pump to hydro boost (pressure)	1
	8 cyl. 302 with A/C and 351	D6DZ 3A719-L	From pump to hydro boost (pressure) Ref. at shock tower (upper)	1
		D6DZ 3A719-G	From shock tower to hydro boost (pressure) (rear)	1

COPYRIGHT © 1986 — FORD MOTOR COMPANY — DEARBORN, MICHIGAN

YEAR	MODEL/RESTRICTIONS	PART NUMBER	DESCRIPTION	QTY.
3A719	HOSE ASSY. (POWER STEERING PRESSURE) — Cont'd @ Improvise from bulk hose C7AZ 3A005-A (3/8" I.D. x 5/8" O.D.) and use (2) B5A 2344 clamps. ♦ Cut hose portion to required length			

POWER STEERING HOSE MODEL APPLICATION CHART

ALL POWER STEERING HOSES ARE LISTED UNDER GROUP 3A719.
THE DESCRIPTION COLUMN INDICATES FUNCTIONS OF THE PARTS

G (Monarch) — Cont'd

76	G - - w/hydro boost and w/skid control	@ 3A005	From cooler to pump (return)	AR
		@ 3A005	From tee to pump (return)	AR
		D6DZ 3494-A	From shock tower to control valve (pressure)	1
		D5DZ 3A713-B	From control valve to filter (return)	1
		D6DZ 3A713-A	From junction block to cooler (return) incl. filter	1
		★ D5DZ 3A713-H(3/84)	From hydro boost and skid control to 3A005 (return)-inc. tee	1
	"Before 5/3/76"	D5DZ 3A714-B	From control valve to cylinder (front)	1
	"From 5/3/76"	D8DZ 3A714-A	From control valve to cylinder (front)	1
	"Before 5/3/76"	D5DZ 3A717-B	From control valve to cylinder (rear)	1
	"From 5/3/76"	★ D6DZ 3A717-A	From control valve to cylinder (rear)- r/b D8DZ 3A717-A (12/78)	1
		★ D5DZ 3A719-M(3/84)	From hydro boost to shock tower (pressure)	1
	302	★ D6DZ 3A719-V(2/80)	From pump to skid control (pressure)	1
	351	★ D6DZ 3A719-U(2/80)	From pump to skid control (pressure)	1
		D5DZ 3A719-W	From skid control to shock tower (pressure)	1
		D6DZ 3A719-G	From shock tower to hydro boost (pressure) (pressure) (rear)	1
77	G - - 6 cyl. 200-250w/o hydro boost	D7DZ 3A713-A	From control valve to pump (return)	1
		D8DZ 3A714-A	From control valve to cylinder (front)	1
		★ D6DZ 3A717-A	From control valve to cylinder (rear)- r/b D8DZ 3A717-A (12/78)	1
		D7DZ 3A719-A	From pump to control valve (pressure)	1
	G - - 8 cyl. 302,351 w/o hydro boost	@ 3A005	From junction block to pump (return)	AR
		D6DZ 3A713-E	From control valve to 3A005 (return)	1
		D8DZ 3A714-A	From control valve to cylinder (front)	1
		★ D6DZ 3A717-A	From control valve to cylinder (rear)- r/b D8DZ 3A717-A (12/78)	1
		D6DZ 3494-C	From junction block to control valve (pressure)	1
	302 w/o A/C	★ D6DZ 3A719-S(6/84)	From pump to junction block (pressure)	1
	302 w/A/C,351	D7DZ 3A719-D	From pump to junction block (pressure)	1
	G - - w/hydro boost	@ 3A005	From filter to pump (return)	AR
		@ 3A005	From hydro boost to pump (return)	AR
		D6DZ 3494-D	From shock tower to control valve (pressure)	1
		D6DZ 3A713-A	From junction block to 3A005 (return-incl. filter)	1
		D6DZ 3A713-E	From control valve to junction block (return)	1
		D8DZ 3A714-A	From control valve to cylinder (front)	1
		★ D6DZ 3A717-A	From control valve to cylinder (rear)- r/b D8DZ 3A717-A(12/78)	1
		D7DZ 3A719-H	From shock tower to hydro boost (pressure)	1
	"Before 4/1/77"	D7DZ 3A719-G	From hydro boost to shock tower (pressure)	
	"From 4/1/77"	D7DZ 3A719-G	From hydro boost to shock tower (pressure)	1
	6 cyl. 200	★ D6DZ 3A719-AA(2/80)	From pump to shock tower (pressure)	1
	6 cyl. 250	★ D6DZ 3A719-AB(6/82)	From pump to shock tower (pressure)	1
	8 cyl. 302, 351 w/o A/C	D6DZ 3A719-P	From pump to shock tower (pressure)	1
	8 cyl. 302-351 w/ A/C "Before 9/1/76"	D6DZ 3A719-R	From pump to shock tower (pressure)	1
	8 cyl. 302-351 w/ A/C "From 9/1/76"	D7DZ 3A719-E	From pump to shock tower (pressure)	1

YEAR	MODEL/RESTRICTIONS	PART NUMBER	DESCRIPTION	QTY.
3A719	HOSE ASSY. (POWER STEERING PRESSURE) — Cont'd			
	@ Improvise from bulk hose C7AZ 3A005-A (3/8" I.D. x 5/8" O.D.) and use (2) B5A 2344 clamps.			
	♦ Cut hose portion to required length			

POWER STEERING HOSE MODEL APPLICATION CHART

ALL POWER STEERING HOSES ARE LISTED UNDER GROUP 3A719.
THE DESCRIPTION COLUMN INDICATES FUNCTIONS OF THE PARTS

G (Monarch) — Cont'd

78	G - - w/o hydroboost	@ 3A005	From junction block to pump (return)	AR
		D6DZ 3494-C	From junction block to control valve (pressure)	1
		D6DZ 3A713-E	From control valve to junction block (return)	1
		D8DZ 3A714-A	From control valve to cylinder (front)	1
	"Before 4/3/78"	★ D6DZ 3A717-A	From control valve to cylinder (rear)-r/b D8DZ 3A717-A (12/78)	1
	"From 4/3/78"	D8DZ 3A717-A	From control valve to cylinder (rear)	1
	G - - 6 cyl. 250	D8DZ 3A719-D	From pump to junction block (pressure)	1
	G - - 8 cyl. 302	D8DZ 3A719-E	From pump to junction block (pressure)	1
78	G - - w/hydroboost	@ 3A005	From hydroboost to pump (return)	AR
		@ 3A005	From filter to pump (return)	AR
		D8DZ 3494-A	From shock tower to control valve (pressure)	1
		D6DZ 3A713-E	From control valve to junction block (return)	1
		D6DZ 3A713-A	From junction block to 3A005 (return)-inc. filter	1
		D8DZ 3A714-A	From control valve to cylinder (front)	1
	"Before 4/3/78"	D6DZ 3A717-A	From control valve to cylinder (rear)	1
	"From 4/3/78"	D8DZ 3A717-A	From control valve to cylinder (rear)	1
		D7DZ 3A719-H	From shock tower to hydroboost (pressure)	1
		D7DZ 3A719-G	From hydroboost to shock tower (pressure)	1
	G - - 6 cyl. 250	D8DZ 3A719-G	From pump to shock tower (pressure)	1
	G - - 8 cyl. 302	D8DZ 3A719-F	From pump to shock tower (pressure)	1
79	G - - 6 cyl. 250	D9DZ 3A713-A	From control valve to pump (return)	1
		D8DZ 3A714-A	From control valve to cylinder (pressure) - front	1
		D8DZ 3A717-A	From cylinder to control valve (pressure)-rear	1
		D9DZ 3A719-A	From pump to control valve (pressure)	1
	G - - 8 cyl. 302	@ 3A005	From junction block to pump (return)	AR
		D6DZ 3A713-E	From control valve to junction block (return)	1
		D8DZ 3A714-A	From control valve to cylinder (pressure) - front	1
		D8DZ 3A717-A	From cylinder to control valve (pressure)-rear	1
		D6DZ 3494-C	From junction block to control valve (pressure)	1
		D8DZ 3A719-E	From pump to junction block (pressure)-w/Ford pump	1
		D9DZ 3A719-B	From pump to junction block (pressure)-w/Saginaw pump	1

J (Capri)

76/78	J - - 4 cyl.	★ D5RY 3A713-A(3/81)	From gear to cooler (return)	1
		★ D5RY 3A713-B(3/81)	From cooler to pump (return)	1
		★ D5RY 3A714-A	From gear valve to inner port (pressure)	1
		★ D5RY 3A717-A(6/82)	From gear valve to outer port (pressure)	1
		★ D6RY 3A719-A(2/81)	From pump to gear (pressure)	1
		E864637-S81	(AG-47)-clip (gear pressure hose to body)-3/8"	2
	J - - 6 cyl.	★ D5RY 3A713-C(3/81)	From gear to cooler (return)	1
		★ D5RY 3A713-E(3/81)	From cooler to reservoir (return)	1
		★ D5RY 3691-A(3/81)	From reservoir to pump (feed)	1
		★ D5RY 3A714-A(3/81)	From gear valve to inner port (pressure)	1
		★ D5RY 3A717-A(6/82)	From gear valve to outer port (pressure)	1
		D5RY 3A719-B	From pump to gear (pressure)	1
		E864638-S81	(AG-51)-clip (gear pressure hose to body)-3/8"	2

COPYRIGHT © 1986 — FORD MOTOR COMPANY — DEARBORN, MICHIGAN

YEAR	MODEL/RESTRICTIONS	PART NUMBER	DESCRIPTION	QTY.
3A719	HOSE ASSY. (POWER STEERING PRESSURE) — Cont'd @ Improvise from bulk hose C7AZ 3A005-A (3/8" I.D. x 5/8" O.D.) and use (2) B5A 2344 clamps. ♦ Cut hose portion to required length			

POWER STEERING HOSE MODEL APPLICATION CHART

ALL POWER STEERING HOSES ARE LISTED UNDER GROUP 3A719.
THE DESCRIPTION COLUMN INDICATES FUNCTIONS OF THE PARTS

J (Capri) — Cont'd

79	J - - w/#SPR-M,Y,Z (TRW) gear	@ 3A005	From cooler to pump (return)	AR
		D9ZZ 3A713-A	From gear to cooler (return) - - w/cooler From gear to pump (return) - - w/o cooler	1
		D8BZ 3A714-B	Tube (steering gear right turn pressure)	1
		D8BZ 3A717-B	Tube (steering gear left turn pressure)	1
		D9ZZ 3A719-C	From pump to gear (pressure)	1
79	J - - w/#SPR-R (Ford) gear	@ 3A005	From cooler to pump (return)	AR
		★D9ZZ 3A713-B r/bE0ZZ 3A713-C(2/80)	From gear to cooler (return) - - w/cooler From gear to pump (return) - - w/o cooler	1
		D9BZ 3A714-A	Tube (steering gear left turn pressure)	1
		D9BZ 3A717-A	Tube (steering gear right turn pressure)	1
	exc. 6 cyl. 200	★D9ZZ 3A719-D	From pump to gear (pressure) -r/b E0ZZ 3A719-E(3/81)	1
79	J - - 6 cyl. 200	D9ZZ 3A719-E	From pump to gear (pressure)	1

K (Mark IV)

73/74	K	★D2AZ 3A713-D(3/81)	From gear to oil cooler-w/Ford pump (kit-filter)	1

Consists of

(1) D6AW 3F595-AA	Filter assy.	(1) 95873-S100	Strap
(1) D5VW 3F619-AA	Bracket	(1) 384161-S100	Clamp
(1) 34976-S2	Nut	(1)	Installation sketch

73/74	K	D2SZ 3A713-C	From gear to oil cooler (return)	1
		@ 3A005	From cooler to pump (return)	1
		D2SZ 3A719-E	From pump to gear (pressure)	1
75/76	K - - w/hydro boost and w/o skid control	@ 3A005	From hydro boost to pump (return)	AR
		@ 3A005	From cooler to pump (return)	AR
	"Before 6/3/76"	D5SZ 3A713-A	From gear to cooler (return)	1
	"From 6/3/76"	D6SZ 3A713-B	From gear to cooler (return)	1
		D5SZ 3A719-C	From hydro boost to gear (pressure)	1
		D5SZ 3A719-E	From pump to hydro boost (pressure)	1
75/76	K - - with hydro boost and w/skid control	D6SZ 3A719-A	Pump outlet tube	1
		D5SZ 3A719-A	Pump outlet tube to skid control actuator (pressure)	1
		D5SZ 3A719-B	From hydro boost to skid control (pressure)	1
		D5SZ 3A719-C	From hydro boost to gear (pressure)	1
	"Before 6/3/76"	★D5SZ 3A713-B(3/84)	From hydro boost to skid control and to pump (3A005) return hose (return)	1
	"From 6/3/76"	★D6SZ 3A713-C(6/82)	From hydro boost to skid control and to pump (3A005) return hose (return)	1
		@ 3A005	Pump return hoses from oil cooler and from hydro boost T-bar hose	AR
	"Before 6/3/76"	D5SZ 3A713-A	From gear to cooler (return)	1
	"From 6/3/76"	D6SZ 3A713-B	From gear to cooler (return)	1

YEAR	MODEL/RESTRICTIONS	PART NUMBER	DESCRIPTION	QTY.
3A719	HOSE ASSY. (POWER STEERING PRESSURE) — Cont'd			
	@ Improvise from bulk hose C7AZ 3A005-A (3/8" I.D. x 5/8" O.D.) and use (2) B5A 2344 clamps.			
	♦ Cut hose portion to required length			

POWER STEERING HOSE MODEL APPLICATION CHART

ALL POWER STEERING HOSES ARE LISTED UNDER GROUP 3A719.
THE DESCRIPTION COLUMN INDICATES FUNCTIONS OF THE PARTS

K (Mark IV) — Cont'd

77	K - - 8 cyl. 400 w/o skid control	@ 3A005	From hydro boost to pump (return)	AR
		@ 3A005	From filter to pump (return)	AR
		D7LY 3A713-A	From gear to pump (return)-less filter	1
		D6SZ 3A713-B	From gear to 3A005 (return)-inc. filter	1
		D7LY 3A719-A	Pump outlet tube (pressure)	1
		D7LY 3A719-F	From pump outlet tube to hydro boost (pressure)	1
		D7LY 3A719-C	From hydro boost to gear (pressure)	1
	K - - 8 cyl. 460 w/o skid control	@ 3A005	From hydro boost to pump (return)	1
		@ 3A005	From filter to pump (return)	1
		D7LY 3A713-A	From gear to pump(return)-less filter	1
		D6SZ 3A713-B	From gear to 3A005 (return)-inc. filter	1
		D7LY 3A719-C	From hydro boost to gear (pressure)	1
	"Before 1/26/77"	D7AZ 3A719-B	From pump to hydro boost (pressure)	1
	"From 1/26/77"	D6SZ 3A719-A	Pump outlet tube (pressure)	1
	"From 1/26/77"	D7LY 3A719-F	From pump outlet tube to hydro boost (pressure)	1
77	K - - 8 cyl. 400 w/skid control	@ 3A005	From tee to pump (return)	AR
		@ 3A005	From filter to pump (return)	AR
		D5MY 3A713-C	From hydro boost and skid control to 3A005 (return)-inc. tee	1
		D7LY 3A713-A	From gear to pump (return)-less filter	1
		D6SZ 3A713-B	From gear to 3A005 (return)-inc. filter	1
		D7LY 3A719-A	Pump outlet tube (pressure)	1
		D5SZ 3A719-A	From pump outlet tube to skid control (pressure)	1
		D7LY 3A719-D	From skid control to hydro boost (pressure)	1
		D7LY 3A719-C	From hydro boost to gear (pressure)	1
	K - - 8 cyl. 460 w/skid control	@ 3A005	From tee to pump (return)	AR
		@ 3A005	From filter to pump (return)	AR
		★ D6SZ 3A713-C(6/82)	From hydro boost and skid control to 3A005 (return)-inc. tee	1
		D7LY 3A713-A	From gear to pump (return)-less filter	1
		D6SZ 3A713-B	From gear to 3A005 (return)-inc. filter	1
		D7LY 3A719-C	From hydro boost to gear (pressure)	1
		D5SZ 3A719-A	From pump outlet tube to skid control (pressure)	1
	"Before 1/26/77"	D5SZ 3A719-G	Pump outlet tube (pressure)	1
	"From 1/26/77"	D6SZ 3A719-A	Pump outlet tube (pressure)	1
		D7LY 3A719-D	From skid control to hydro boost (pressure)	1
78	K - - w/o skid control w/o cooler	@ 3A005	From hydroboost to pump (return)	AR
		D7LY 3A713-A	From gear to pump (return)	1
		D7LY 3A719-C	From hydroboost to gear (pressure)	1
	"Before 9/15/77"	D7LY 3A719-F	From pump outlet tube to hydroboost (pressure)	1
	"From 9/15/77"	D8LY 3A719-B	From pump outlet tube to hydroboost (pressure)	1
	K - - 8 cyl. 400	D8LY 3A719-A	Pump outlet tube (pressure)	1
	K - - 8 cyl. 460"Before 9/15/77"	D6SZ 3A719-A	Pump outlet tube (pressure)	1
	K - - 8 cyl. 460 "From 9/15/77"	D8LY 3A719-D	Pump outlet tube (pressure)	1

COPYRIGHT © 1986 — FORD MOTOR COMPANY — DEARBORN, MICHIGAN

YEAR	MODEL/RESTRICTIONS	PART NUMBER	DESCRIPTION	QTY.
3A719	HOSE ASSY. (POWER STEERING PRESSURE) — Cont'd @ Improvise from bulk hose C7AZ 3A005-A (3/8" I.D. x 5/8" O.D.) and use (2) B5A 2344 clamps. ♦ Cut hose portion to required length			

POWER STEERING HOSE MODEL APPLICATION CHART

ALL POWER STEERING HOSES ARE LISTED UNDER GROUP 3A719.
THE DESCRIPTION COLUMN INDICATES FUNCTIONS OF THE PARTS

K (Mark IV) — Cont'd

78	K - - w/skid control w/o cooler	@ 3A005	From tee (3A713) to pump (return)	AR
		D7LY 3A713-A	From gear to pump (return)	1
		D7LY 3A719-C	From hydroboost to gear (pressure)	1
		D7LY 3A719-D	From skid control to hydroboost (pressure)	1
	"Before 9/15/77"	D5SZ 3A719-A	From pump outlet tube to skid control (pressure)	1
	"From 9/15/77"	D8LY 3A719-C	From pump outlet tube to skid control (pressure)	1
	K - - 8 cyl. 400	D5MY 3A713-C	From hydroboost and skid control to 3A005 (return)-inc. tee	1
	K - - 8 cyl. 460	★ D6SZ 3A713-C(6/82)	From hydroboost and skid control to 3A005 (return)-inc. tee	1
	K - - 8 cyl. 400 "Before 3/1/78"	D8LY 3A719-A	Pump outlet tube (pressure)	1
	K - - 8 cyl. 400 "From 3/1/78"	D8LY 3A719-E	Pump outlet tube (pressure)	1
	K - - 8 cyl. 460	D8LY 3A719-D	Pump outlet tube (pressure)	1
78	K - - w/o skid control w/cooler	@ 3A005	From cooler to pump (return)	AR
		@ 3A005	From hydroboost to pump (return)	AR
		D8LY 3A713-A	From gear to cooler (return)	1
		D7LY 3A719-C	From hydroboost to gear (pressure)	1
		D8LY 3A719-B	From pump outlet tube to hydroboost (pressure)	1
	K - - 8 cyl. 400 "Before 3/1/78"	D8LY 3A719-A	Pump outlet tube (pressure)	1
	K - - 8 cyl. 400 "From 3/1/78"	D8LY 3A719-E	Pump outlet tube (pressure)	1
	K - - 8 cyl. 460 "Before 9/1/77"	D6SZ 3A719-A	Pump outlet tube (pressure)	1
	K - - 8 cyl. 460 "From 9/1/77"	D8LY 3A719-D	Pump outlet tube (pressure)	1
78	K - - w/skid control w/cooler	@ 3A005	From cooler to pump (return)	AR
		@ 3A005	From tee (3A713) to pump (return)	AR
		D8LY 3A713-A	From gear to cooler (return)	1
		D7LY 3A719-D	From skid control to hydroboost (pressure)	1
		D7LY 3A719-C	From hydroboost to gear (pressure)	1
	"Before 9/1/77"	D5SZ 3A719-A	From pump outlet tube to skid control (pressure)	1
	"From 9/1/77"	D8LY 3A719-C	From pump outlet tube to skid control (pressure)	1
	K - - 8 cyl. 400	D5MY 3A713-C	From hydroboost and skid control to 3A005 (return)-inc. tee	1
	K - - 8 cyl. 460	★ D6SZ 3A713-C(6/82)	From hydroboost and skid control to 3A005 (return)-inc. tee	1
	K - - 8 cyl. 400	D8LY 3A719-E	Pump outlet tube (pressure)	1
	K - - 8 cyl. 460	D8LY 3A719-D	Pump outlet tube (pressure)	1
79	K - - w/o skid control w/o cooler	@ 3A005	From hydroboost to pump (return)	AR
		D7LY 3A713-A	From gear to pump (return)	1
		D7LY 3A719-C	From hydroboost to gear (pressure)	1
		D8LY 3A719-B	From pump outlet tube to hydroboost (pressure)	1
		D8LY 3A719-E	Pump outlet tube (pressure)	1
79	K - - w/skid control w/o cooler	@ 3A005	From tee (3A713) to pump (return)	AR
		D7LY 3A713-A	From gear to pump (return)	1
		D7LY 3A719-C	From hydroboost to gear (pressure)	1
		D7LY 3A719-D	From skid control to hydroboost (pressure)	1
		D8LY 3A719-C	From pump outlet tube to skid control (pressure)	1
		D5MY 3A713-C	From hydroboost and skid control to 3A005 (return)-includes tee	1
		D8LY 3A719-E	Pump outlet tube (pressure)	1
79	K - - w/o skid control w/cooler	@ 3A005	From cooler to pump (return)	AR
		@ 3A005	From hydroboost to pump (return)	AR
		D8LY 3A713-A	From gear to cooler (return)	1

YEAR	MODEL/RESTRICTIONS	PART NUMBER	DESCRIPTION	QTY.
3A719	HOSE ASSY. (POWER STEERING PRESSURE) — Cont'd			
	@ Improvise from bulk hose C7AZ 3A005-A (3/8" I.D. x 5/8" O.D.) and use (2) B5A 2344 clamps.			
	♦ Cut hose portion to required length ‡ Incl. (2) 385956-S gaskets			
	▲ Incl. (2) 385956-S gaskets & (2) 386752-S gaskets			

POWER STEERING HOSE MODEL APPLICATION CHART

ALL POWER STEERING HOSES ARE LISTED UNDER GROUP 3A719.
THE DESCRIPTION COLUMN INDICATES FUNCTIONS OF THE PARTS

K (Mark IV) — Cont'd

79	K - - w/o skid control w/cooler	D7LY 3A719-C	From hydroboost to gear (pressure)	1
		D8LY 3A719-B	From pump outlet tube to hydroboost (pressure)	1
		D8LY 3A719-E	Pump outlet tube (pressure)	1
79	K - - w/skid control w/cooler	@ 3A005	From cooler to pump (return)	AR
		@ 3A005	From tee (3A713) to pump (return)	AR
		D8LY 3A713-A	From gear to cooler (return)	1
		D7LY 3A719-D	From skid control to hydroboost (pressure)	1
		D7LY 3A719-C	From hydroboost to gear (pressure)	1
		D8LY 3A719-C	From pump outlet tube to skid control (pressure)	1
		D5MY 3A713-C	From hydroboost and skid control to 3A005 (return)-includes tee	1
		D8LY 3A719-E	Pump outlet tube (pressure)	1

L (Bobcat)

75/76	L "Before 5/3/76"	★D5FZ 3A713-A(9/83)	From gear to cooler (return)	1
	"From 5/3/76"	★D6FZ 3A713-A(3/84)	From gear to cooler (return)	1
		@ 3A005	From cooler to pump (return)	AR
		★‡D5ZZ 3A714-A(9/83)	Tube (steering gear left turn) (pressure)	1
		‡ D5ZZ 3A717-A	Tube (steering gear right turn) (pressure)	1
		D5ZZ 3A719-E	Gear inlet tube from pump hose (pressure)	1
	L - - 4 cyl.	D6FZ 3A719-A	From pump to gear outlet tube (pressure)	1
	L - - 6 cyl. "Before 4/6/76"	D5ZZ 3A719-D	From pump to gear outlet tube (pressure)	1
	L - - 6 cyl. "From 4/6/76"	D6FZ 3A719-B	From pump to gear outlet tube (pressure)	1
77	L "Before 7/6/77"	D7FZ 3A713-A	From gear to cooler (return) w/tube "O" fitting	1
		★D7FZ 3A713-B(3/81)	From gear to cooler (return), w/flare fitting	1
		★▲D7FZ 3A714-A(6/83)	Tube (steering gear left turn) (pressure)	1
		▲ D7FZ 3A717-A	Tube (steering gear right turn) (pressure)	1
	L - - 4 cyl.	D7FZ 3A719-A	From pump to gear outlet tube (pressure)	1
	L - - 6 cyl.	D7FZ 3A719-B	From pump to gear outlet tube (pressure)	1
		D7ZZ 3A719-A	From pump to gear inlet tube w/tube "O" fitting	1
		★D7FZ 3A719-C(6/83)	From pump to gear inlet tube, w/flare fitting	1
77/78	L "From 7/6/77"	@ 3A005	From gear outlet tube to pump (return)	AR
		@ 3A005	From gear outlet tube to cooler (return)	AR
		@ 3A005	From cooler to pump (return)	AR
		D8FZ 3A713-A	Gear outlet tube (return)	1
	"Before 5/15/78"	★D8FZ 3A714-B(6/83)	Tube (steering gear left turn pressure)	1
	"From 5/15/78"	D8FZ 3A714-A	Tube (steering gear left turn pressure)	1
		D7FZ 3A717-A	Tube (steering gear right turn pressure)	1
	L - - 4 cyl. 140	D8FZ 3A719-B	From pump to gear (pressure)	1
77/	L - - 6 cyl. 171 "From 7/6/77"	D8FZ 3A719-D	From pump to gear (pressure)	1
79	L	@ 3A005	From gear outlet tube to pump (return)	AR
		@ 3A005	From gear outlet tube to cooler (return)	AR
		@ 3A005	From cooler to pump (return)	AR
		D8FZ 3A713-A	Gear outlet tube (return)	1
		D8FZ 3A714-A	Tube (steering gear left turn pressure)	1
		D7FZ 3A717-A	Tube (steering gear right turn pressure)	1
	L - - 4 cyl. 140	★D9FZ 3A719-A	Pump to gear (pressure)	1
		r/bE0FZ 3A719-A &		
		1pc388557-S100(12/80)		

COPYRIGHT © 1986— FORD MOTOR COMPANY —DEARBORN, MICHIGAN

YEAR	MODEL/RESTRICTIONS	PART NUMBER	DESCRIPTION	QTY.
3A719	HOSE ASSY. (POWER STEERING PRESSURE) — Cont'd			
	@ Improvise from bulk hose C7AZ 3A005-A (3/8" I.D. x 5/8" O.D.) and use (2) B5A 2344 clamps.			
	♦ Cut hose portion to required length			

POWER STEERING HOSE MODEL APPLICATION CHART

ALL POWER STEERING HOSES ARE LISTED UNDER GROUP 3A719.
THE DESCRIPTION COLUMN INDICATES FUNCTIONS OF THE PARTS

P (Comet)

73/74	P - - 6 cyl. 200- "Before 10/1/74"	★ D0DZ 3A713-B(6/83)	From control valve to pump (return)	1
	"From 10/1/74"	★ D5DZ 3A713-F(6/83)	From control valve to pump (return)	1
		D0DZ 3A719-B	From pump to control valve (pressure)	1
		C60Z 3A714-A	From control valve to cylinder (front)	1
		C60Z 3A717-A	From cylinder to valve (rear)	1
	P - - 6 cyl. 250-without A/C	★ D00Z 3A713-A	From control valve to pump (return)-not replaced	1
	-with A/C	D3DZ 3A713-A	From control valve to cooler (return)	1
		D00Z 3A719-A	From pump to control valve (pressure)	1
		C60Z 3A714-A	From control valve to cylinder (front)	1
		C60Z 3A717-A	From cylinder to valve (rear)	1
	P - - 8 cyl. 302	D0DZ 3A713-A	From control valve to pump (return)	1
		C60Z 3A714-A	From control valve to cylinder (front)	1
		C60Z 3A717-A	From cylinder to valve (rear)	1
		D0DZ 3A719-A	From pump to control valve (pressure)	1
		D0DZ 3494-A	Valve outlet tube to pressure hose	1
		@ 3A005	From cooler to pump (return)	1
75	P - - 6 cyl. 200	★ D5DZ 3A713-F(6/83)	From control valve to pump (return)	1
		D0DZ 3A719-B	From pump to control valve (pressure)	1
	"Before 6/30/75"	D5DZ 3A714-A	From control valve to cylinder (front)	1
	"From 6/30/75"	D5DZ 3A714-B	From control valve to cylinder (front)	1
		D5DZ 3A717-B	From cylinder to valve (rear)	1
	P - - 6 cyl. 250	D5DZ 3A713-J	From control valve to pump (return)	1
	"Before 4/7/75"	D5DZ 3A719-G	From pump to control valve (pressure)	1
	"From 4/7/75"	D6DZ 3A719-A	From pump to control valve (pressure)	1
	"Before 6/30/75"	D5DZ 3A714-A	From control valve to cylinder (front)	1
	"From 6/30/75"	D5DZ 3A714-B	From control valve to cylinder (front)	1
		D5DZ 3A717-B	From cylinder to valve (rear)	1
	P - - 8 cyl. 302	D0DZ 3A713-A	From control valve to pump (return)	1
	"Before 6/30/75"	D5DZ 3A714-A	From control valve to cylinder (front)	1
	"From 6/30/75"	D5DZ 3A714-B	From control valve to cylinder (front)	1
		D5DZ 3A717-B	From cylinder to valve (rear)	1
		D5DZ 3A719-D	From pump to control valve (pressure)	1
		D0DZ 3494-A	Valve outlet tube to pressure hose	1
		@ 3A005	From cooler to pump (return)	1

YEAR	MODEL/RESTRICTIONS	PART NUMBER	DESCRIPTION	QTY.
3A719	HOSE ASSY. (POWER STEERING PRESSURE) — Cont'd			
	@ Improvise from bulk hose C7AZ 3A005-A (3/8" I.D. x 5/8" O.D.) and use (2) B5A 2344 clamps.			
	♦ Cut hose portion to required length			

POWER STEERING HOSE MODEL APPLICATION CHART

ALL POWER STEERING HOSES ARE LISTED UNDER GROUP 3A719.
THE DESCRIPTION COLUMN INDICATES FUNCTIONS OF THE PARTS

P (Comet) — Cont'd

76	P - - 6 cyl. 200	★D5DZ 3A713-F(6/83)	From control valve to pump (return)	1
	"Before 4/5/76"	D5DZ 3A714-B	From control valve to cylinder (front)	1
	"From 4/5/76"	D6DZ 3A714-A	From control valve to cylinder (front)	1
	"Before 4/5/76"	D5DZ 3A717-B	From control valve to cylinder (rear)	1
	"From 4/5/76"	★D6DZ 3A717-A	From control valve to cylinder (rear)- r/b D8DZ 3A717-A (12/78)	1
		D0DZ 3A719-B	From pump to control valve(pressure)	1
	"From 4/5/76"	★D6DZ 3A719-Y(12/83)	From pump to control valve (pressure)	1
	"From 4/5/76"	D6DZ 3A719-A	From pump to control valve (pressure)	1
		@ 3A005	From cooler to pump (return)	AR
	P - - 6 cyl. 250	@ 3A005	From cooler to pump (return)	AR
	"Before 4/5/76"	D5DZ 3A713-J	From control valve to pump (return)	1
	"From 4/5/76"	D6DZ 3A713-C	From control valve to pump (return)	1
	"Before 4/5/76"	D5DZ 3A714-B	From control valve to cylinder (front)	1
	"From 4/5/76"	D6DZ 3A714-A	From control valve to cylinder (front)	1
	"Before 4/5/76"	D5DZ 3A717-B	From control valve to cylinder (rear)	1
	"From 4/5/76"	★D6DZ 3A717-A	From control valve to cylinder (rear)- r/b D8DZ 3A717-A (12/78)	1
	"Before 4/5/76"	D6DZ 3A719-A	From pump to control valve (pressure)	1
	"From 4/5/76"	★D6DZ 3A719-Y(12/83)	From pump to control valve (pressure)	1
	P - - 8 cyl. 302	@ 3A005	From cooler to pump (return)	AR
	"Before 5/3/76"	D0DZ 3494-A	Valve outlet tube to pressure hose	1
	"From 5/3/76"	D6DZ 3494-B	Valve outlet tube to pressure hose	1
	"Before 5/3/76"	D0DZ 3A713-A	From control valve to pump (return)	1
	"From 5/3/76"	★D6DZ 3A713-D(3/84)	From control valve to pump (return)	1
	"Before 4/5/76"	D5DZ 3A714-B	From control valve to cylinder (front)	1
	"From 4/5/76"	D6DZ 3A714-A	From control valve to cylinder (front)	1
	"Before 4/5/76"	D5DZ 3A717-B	From cylinder to valve (rear)	1
	"From 4/5/76"	★D6DZ 3A717-A	From control valve to cylinder (rear)- r/b D8DZ 3A717-A (12/78)	1
	"Before 1/5/76"	D5DZ 3A719-D	From pump to control valve (pressure)	1
	"From 1/5/76"	D6DZ 3A719-X	From pump to control valve (pressure)	1
77	P - - 6 cyl. 200-250	D7DZ 3A713-A	From valve to pump (return)	1
		D6DZ 3A714-A	From control valve to cylinder (front)	1
		★D6DZ 3A717-A	From control valve to cylinder (rear)- r/b D8DZ 3A717-A (12/78)	1
		D7DZ 3A719-A	From pump to control valve (pressure)	1
	P - - 8 cyl. 302	D6DZ 3494-B	Valve outlet tube to pressure hose	1
		D6DZ 3A713-D	From control to pump (return)	1
		D6DZ 3A714-A	From control valve to cylinder (front)	1
		★D6DZ 3A717-A	From control valve to cylinder (rear)- r/b D8DZ 3A717-A (12/78)	1
		D6DZ 3A719-X	From pump to control valve (pressure)	1

COPYRIGHT © 1986 — FORD MOTOR COMPANY — DEARBORN, MICHIGAN

YEAR	MODEL/RESTRICTIONS	PART NUMBER	DESCRIPTION	QTY.
3A719	HOSE ASSY. (POWER STEERING PRESSURE) — Cont'd @ Improvise from bulk hose C7AZ 3A005-A (3/8" I.D. x 5/8" O.D.) and use (2) B5A 2344 clamps. ♦ Cut hose portion to required length			

POWER STEERING HOSE MODEL APPLICATION CHART

ALL POWER STEERING HOSES ARE LISTED UNDER GROUP 3A719.
THE DESCRIPTION COLUMN INDICATES FUNCTIONS OF THE PARTS

P (Zephyr)

78	P - - w/#SPR-A,C,E (Ford) gear	@ 3A005	From cooler to pump (return)	AR
	P - - 4 cyl. 140	E0BZ 3A713-D	From gear to pump (return)-w/o cooler From gear to cooler (return)-w/cooler	1 1
	P - - 6 cyl. 200,8 cyl. 302	★D8BZ 3A713-E r/bE0BZ 3A713-C(12/81)	From gear to pump (return)-w/o cooler From gear to cooler (return)-w/cooler	1 1
		D8BZ 3A714-A	Tube (steering gear left turn pressure)-inc. (2) D8BZ 3591-A seals	1
		D8BZ 3A717-A	Tube (steering gear right turn pressure)-inc. (2) D8BZ 3591-A Seals	1
	P - - 4 cyl. 140	★D8BZ 3A719-B	From pump to gear (pressure) r/b D9BZ 3A719-C (6/79)	1
	P - - 6 cyl. 200, 8 cyl. 302	★D8BZ 3A719-A	From pump to gear (pressure) r/b E0BZ 3A719-B(2/81)	1
78	P - - w/#SPR-B,D (TRW) gear	@ 3A005	From cooler to pump (return)	AR
	P - - 6 cyl. 200	D8BZ 3A713-G	From gear to pump (return)-w/o cooler From gear to cooler (return)-w/cooler	1 1
	P	D8BZ 3A714-B	Tube (steering gear right turn pressure)	1
		D8BZ 3A717-B	Tube (steering gear left turn pressure)	1
	P - - 6 cyl. 200	D8BZ 3A719-D	From pump to gear (pressure)	1
79	P	@ 3A005	From cooler to pump (return)	AR
	P - - 4 cyl. 140	E0BZ 3A713-D	From gear to pump (return)-w/o cooler From gear to cooler (return)-w/cooler	1 1
	P - - 6 cyl. 200, 8 cyl. 302	★D8BZ 3A713-E r/bE0BZ 3A713-C(12/81)	From gear to pump (return)-w/o cooler From gear to cooler (return)-w/cooler	1 1
	P "Before 4/2/79"	D8BZ 3A714-A	Tube (steering gear left turn pressure)-incl. (2) D8BZ 3591-A seals	1
	"From 4/2/79"	D9BZ 3A714-A	Tube (steering gear left turn pressure)-incl. (2) D9BZ 3591-A copper seals	1
	"Before 4/2/79"	D8BZ 3A717-A	Tube (steering gear right turn pressure)-incl. (2) D8BZ 3591-A seals	1
	"From 4/2/79"	D9BZ 3A717-A	Tube (steering gear right turn pressure)-incl. (2) D9BZ 3591-A copper seals	1
	P - - 4 cyl. 140, 8 cyl. 302 P - - 6 cyl. 200 w/Ford pump	★D9BZ 3A719-C r/bE0BZ 3A719-B(6/80)	From pump to gear (pressure) From pump to gear (pressure)	1 1
	P - - 6 cyl. 200 w/Saginaw pump	D9BZ 3A719-D	From pump to gear (pressure)	1

V (Versailles)

77	V	@ 3A005	From filter to pump (return)	AR
		@ 3A005	From hydro boost to pump (return)	AR
		D6DZ 3494-D	From shock tower to control valve (pressure)	1
		D6DZ 3A713-A	From control valve to cylinder (return)-incl. filter	1
		D6DZ 3A713-E	From control valve to junction block (return)	1
		D8DZ 3A714-A	From control valve to cylinder (front)	1
		D6DZ 3A717-A	From control valve to cylinder (rear)	1
		D7DZ 3A719-E	From pump to shock tower (pressure)	1
	"Before 4/1/77"	D7DZ 3A719-F	From shock tower to hydro boost (pressure)	1
	"From 4/1/77"	D7DZ 3A719-H	From shock tower to hydro boost (pressure)	1
		D7DZ 3A719-G	From hydro boost to junction block (pressure)	1

YEAR	MODEL/RESTRICTIONS	PART NUMBER	DESCRIPTION	QTY.
3A719	HOSE ASSY. (POWER STEERING PRESSURE) — Cont'd			
	@ Improvise from bulk hose C7AZ 3A005-A (3/8" I.D. x 5/8" O.D.) and use (2) B5A 2344 clamps.			
	♦ Cut hose portion to required length			

POWER STEERING HOSE MODEL APPLICATION CHART

ALL POWER STEERING HOSES ARE LISTED UNDER GROUP 3A719.
THE DESCRIPTION COLUMN INDICATES FUNCTIONS OF THE PARTS

V (Versailles) — Cont'd

78/	V	@ 3A005	From hydroboost to pump (return)	AR
		@ 3A005	From filter to pump (return)	AR
		D8DZ 3494-A	From shock tower to control valve (pressure)	1
		D6DZ 3A713-E	From control valve to junction block (return)	1
		D6DZ 3A713-A	From junction block to 3A005 (return) -inc. filter	1
		D8DZ 3A714-A	From control valve to cylinder (front)	1
	"Before 4/3/78"	D6DZ 3A717-A	From control valve to cylinder (rear)	1
	"From 4/3/78"	D8DZ 3A717-A	From control valve to cylinder (rear)	1
		D7DZ 3A719-H	From shock tower to hydroboost (pressure)	1
		D7DZ 3A719-G	From hydroboost to shock tower (pressure)	1
		D8DZ 3A719-F	From pump to shock tower (pressure)	1

Y (Meteor) (Refer to Mercury)

76 77	G,P G,L,P	387497-S94	(KK-42-A)"O"-ring (hose end)1/4" x .05-use w/tube "O" fitting	AR
76 77	G,P G,L,P	87006-S94	(T-1-AB)"O"-ring (hose end)5/16" x 29/64"-use w/tube "O" fitting	AR
78 79 77/	A,F,G,P,V J L "From 6/27/77"	388748-S	(TT-40-C)-"O" ring (hose end)-use with quick connect fitting	AR
		388749-S	(TT-40-D)-"O" ring (hose end)-use with quick-connect fitting	AR
78/	P	388897-S	(TT-40-E)-Seal-teflon-15/32" x 9/16"	1
79/	F	388898-S	(TT-40-G)-Seal-teflon-39/64" x 33/64"	1
77/	L "From 6/27/77"	388149-S	(GG-415-E)-clip-5/16" x 3/8"-attaches 3A713 & 3A719 to 3504	1
77/	L "From 6/27/77"	388036-S2	(GG-410)-clip-(hose to frame)-without vinyl coating	1
		388117-S100	(GG-411)-clip-(hose to frame)-with vinyl coating	1
3K722	CAP (STEERING GEAR BOOT CLIP)			
73/78	J	D2RY 3K722-A		2
3E723	ACTUATOR ASSY. (STEERING COLUMN LOCK)			
73/78	A - - w/fixed wheel	D4AZ 3E723-A		1
73/76	C,Y - - w/fixed wheel			1
73/	D,F,G,K,L,V - - w/fixed wheel			1
73/77	P			1
73/78	A - - w/tilt wheel	D1AZ 3E723-C		1
74/76	C - - w/tilt wheel			1
73/	D,F,G,K,V - - w/tilt wheel			1
73/76	Y - - w/tilt wheel			1
79	A,J	E2AZ 3E723-A		1
78/	P			1
3D727	GUIDE KIT (POWER STEERING GEAR BALL RETURN)			
73/75	C	C5AZ 3D727-A	Consists of 2 guides-w/Saginaw gear	1
73/	F			1
3A728	CLAMP (POWER STEERING CONTROL VALVE DUST COVER)			
75/	G	C2AZ 3A728-A	Also serviced in kit-groups 3A533 and 3A650	1
73/77	P			1
77/	V			1

COPYRIGHT © 1986 — FORD MOTOR COMPANY — DEARBORN, MICHIGAN

1973/79 LINCOLN-MERCURY CARS

YEAR	MODEL/RESTRICTIONS	PART NUMBER	DESCRIPTION	QTY.
3D728	VALVE KIT (POWER STEERING GEAR REAR CHECK)			
73/75	C	C5AZ 3D728-A	With Saginaw gear	1
73/	F			1
	Consists of 1- Connector	1-	Poppet 1-	Spring
79	J	D8FZ 3D728-A	With #SPR-M (TRW) gear	1
	Consists of 4-D9ZC 3F521-AA Valve seal 1-D4ZW 3D525-AA Bearing 1-D5ZW 3D526-AA Seal		1-D4ZW 3D527-AA Dust seal 1-D8EC 3K664-AA Pinion seal 1-385954-S Washer	
79	J	★ D8BZ 3D728-A	With #SPR-R (Ford) gear-r/b E2SZ 3D728-A(3/82)	1
	Consists of 1-D6AZ 3D526-A Seal 1-D5AZ 3D527-A Seal 4-D7AC 3F586-AA Seal	1-388897-S 1-388898-S 1-97625-S	"O" ring 1-D8BZ 3K664-AA Seal "O" ring 1-34988-S2 Lock nut Snap ring	
75/76	L	D4ZZ 3D728-A		1
	Consists of 1-D4ZW 3D525-AA Bearing 1-D4ZW 3D527-AA Seal 1-D4ZW 3F601-AA Seat		1-D4FW 3F602-AA Seat 1-D5ZW 3K664-AA Seal 4-385955-S Seal	
77	L "Before 7/6/78"	D7ZZ 3D728-A	TRW	1
	Consists of 1-D4ZW 3D525-AA Bearing 1-D5ZW 3D526-AA Seal 1-D4ZW 3D527-AA Seal		1-87047-S94 O-ring 1-87155-S94 O-ring 1-385954-S Washer 4-385955-S Seal	
77/	L "From 7/6/77"	D8FZ 3D728-A		1
78	P		With #SPR-B,D (TRW) gear	1
	Consists of 4-D9ZC 3F521-AA Valve seal 1-D4ZW 3D525-AA Bearing 1-D5ZW 3D526-AA Seal		1-D4ZW 3D527-AA Dust seal 1-D8EC 3K664-AA Pinion seal 1-385954-S Washer	
78/	P(exc. P/C)	D8BZ 3D728-A	With #SPR-A,C,E,P (Ford) gear	1
	Consists of 1-D6AZ 3D526-A Seal 1-D5AZ 3D527-A Seal 4-D7AC 3F586-AA Seal	1-D8BC 3K664-AA 1-34988-S2 1-97625-S	Seal 1-388897-S "O" ring Nut-lock 1-388898-S "O" ring Snap ring	
78/	P(P/C)	E2SZ 3D728-A	With Ford gear	1
	Consists of 1-D6AZ 3D526-A Input seal 1-D5AZ 3D527-A Dust seal 4-D5AW 3F586-A1A Valve seal 1-388897-S "O"-ring		1-D8BC 3K664-AA Pinion seal 1-34988-S2 Locknut 1-97625-S Snap ring 1-388897-S "O"-ring	
3A729	COVER (POWER STEERING CONTROL VALVE BALL STUD DUST)			
75/	G	C7OZ 3A729-A	Also serviced in kit-groups 3A533 and 3A650	1
73/77	P			1
77/	V			1
3D729-30	BEARING KIT (POWER STEERING GEAR THRUST)			
73/76	C	C5AZ 3D730-C	Lower-w/Saginaw gear	1
73/	F	★ C5AZ 3D729-B(3/84)	Upper	1
		★ C5AZ 3D730-B r/bC5AZ 3D730-C and ★ C5AZ 3D729-B(3/79)	Lower and upper	1
3A730	VALVE ASSY. (POWER STEERING GEAR HYDRAULIC CONTROL)			
75/77	G "Before 1/17/77"	★ D6DZ 3A730-B	w/tube-"O" fittings-r/b D7DZ 3A730-A(3/79)-vehicles built before 4/5/76 also require (1) D7ZZ 3N668-A & (3) D7ZZ 3N668-B fittings	1
77/	G "From 1/17/77"	D7DZ 3A730-A	w/tube "O" fittings	1
73/77	P	D6DZ 3A730-C	w/tube"O" fittings vehicles built before 4/5/76 also require (1) D7ZZ 3N668-A & (3) D7ZZ 3N668-B fittings	1
77/	V	D7DZ 3A730-A	w/tube"O" fittings	1

YEAR	MODEL/RESTRICTIONS	PART NUMBER	DESCRIPTION	QTY.
3A730	VALVE ASSY. (POWER STEERING GEAR HYDRAULIC CONTROL) — Cont'd			
76/	G "From 4/5/76"	387497-S94	(KK-42-A)-"O" ring-1/4" I.D.	AR
76/77	P "From 4/5/76"			
77/	V			
		87006-S94	(T-1-AB)-"O" ring-5/16" I.D.	AR
3D730	Refer to group 3D729-30			

YEAR	MODEL/RESTRICTIONS	ENGINE CYL.	ENGINE C.I.D. (C.C.D.)	PART NUMBER	DESCRIPTION	QTY.
3D731	SEAL KIT (POWER STEERING GEAR BACK UP VALVE)					
73/75	C			C5AZ 3D731-A	Consists of 3 rings and 3 seals-w/Saginaw gear	1
73/	F					1
3A732	BRACKET (POWER STEERING PUMP ADJUSTING)-Also refer to group 3C511					
73/76	A,Y	8	351	D1AZ 3A732-A		1
73/75	A,Y - - w/Ford pump- "Before 11/1/74"	8	400			1
75/76	A,Y - - w/Saginaw pump- "From 11/1/74"	8	400	★ D5AZ 3A732-A(3/84)		1
73	A,Y	8	429,460	★ D3MY 3A732-A(6/82)		1
74/76	A,Y - - without A/C	8	429,460			1
77/	A - - without A/C	8	460			1
74	A,Y - - with A/C and York or Tecumseh compressor- "Before 5/1/74"	8	429,460			1
74/76	A,Y - - with A/C and Frigidaire compressor- "From 5/1/74"	8	460	D2VY 3A732-A		1
77	A - - with A/C	8	351-400	D1AZ 3A732-A		1
77/78	A - - with A/C	8	460	D2VY 3A732-A		1
78	A - - w/Ford pump	8	351M,400	D8AZ 3A732-A		1
	A - - w/hydroboost "Before 10/1/77"	8	351M, 400	★ D5AZ 3A732-A(3/84)		1
	A - - w/hydroboost "From 10/1/77"	8	351M,400	D9BZ 3A732-A		1
	A - - w/o hydroboost w/Saginaw pump	8	351M, 400			1
73	C	6	250	D6DZ 3A732-C		1
73/74	C - - without A/C	8	302	D0AZ 3A732-C		1
	C	8	351C			1
	C - - A/C "From 9/30/73"	8	302			1
73/76	C - - A/C "Before 9/30/73"	8	302	D1AZ 3A732-A		1
	C	8	351W, 400,429, 460			1
73/77	D,K	8	460	★ D2VY 3A732-A(12/84)		1
77	D,K	8	400	★ D5AZ 3A732-A(3/84)		1
78/79	D	8	400	D9BZ 3A732-A	Incl. 388751-S spacer	1
73	F	8	351-2/B	D0AZ 3A732-C		1
	F - - A/C	8	351CJ			1
74/76	F	8	351-2/B	D0AZ 3A732-C		1
74/76	F	8	351-4/B, 400,460	D1AZ 3A732-A		1
77	F	8	302	D0AZ 3A732-C		1
	F	8	351,400	D1AZ 3A732-A		1
78/	F	8	All	D8AZ 3A732-A		1
75	G	6	200	C7SZ 3A732-A		1
		6	250	★ D6DZ 3A732-C(9/83)		1
		8	302	★ D0ZZ 3A732-A(1/83)		1
		8	351	★ D5DZ 3A732-A(3/81)		1
76/77	G	6	200	C7SZ 3A732-A		1
76	G - - without A/C	6	250	★ D6DZ 3A732-C(9/83)		1
	- - with A/C	6	250	D6DZ 3A732-D		1

COPYRIGHT © 1986 — FORD MOTOR COMPANY — DEARBORN, MICHIGAN

1973/79 LINCOLN-MERCURY CARS

YEAR	MODEL/RESTRICTIONS	ENGINE CYL.	ENGINE C.I.D. (C.C.D.)	PART NUMBER	DESCRIPTION	QTY.
3A732	BRACKET (POWER STEERING PUMP ADJUSTING)-Also refer to group 3C511 — Cont'd					
76/77	G - - without A/C	8	302	D0ZZ 3A732-A		1
	- - with A/C	8	302	★ D6DZ 3A732-A(6/83)		1
	- - without A/C	8	351	★ D5DZ 3A732-A(3/81)		1
	- - with A/C	8	351	★ D6DZ 3A732-A(6/83)		1
77	G	6	250	D70Z 3A732-A		1
78	G	6	250	★ D8DZ 3A732-A(3/84)		1
	G - - w/o A/C	8	302	D8AZ 3A732-A		1
	G - - with A/C "Before 4/10/78"	8	302	D8DZ 3A732-B		1
	G - - with A/C "From 4/10/78"	8	302	★ D8DZ 3A732-C(3/84)		1
79	G - - w/o A/C	8	302	D8AZ 3A732-A		1
	G - - w/A/C	8	302	★ D8DZ 3A732-C(3/84)	W/Ford pump	1
	G - - w/A/C	8	302	★ D8AZ 3A732-C(6/83)	W/Saginaw pump	1
76/78	J	4	140	D6RY 3A732-B	#757F 3C631-AB	1
79	J	6	171	D8FZ 3A732-B		1
79	J - - with A/T "From 3/5/79"	6	200	D8AZ 3A732-A		1
	J - - w/o A/C	8	302	D8AZ 3A732-A		1
78/79	K	8	400	D9BZ 3A732-A	Incl. 388751-S spacer	1
75/76	L	4	All	★ D4ZZ 3A732-A(6/83)		1
75/77	L "Before 6/27/77"	6	All	★ D4ZZ 3A732-B(6/82)		1
77	L "Before 6/27/77"	4	140	★ D7FZ 3A732-A(3/81)		1
77/78	L "From 6/27/77"	4	140	D8FZ 3A732-A		1
77/	L	6	171	D8FZ 3A732-B		1
73	P	6	200	C7SZ 3A732-A		1
	P - - without T/E	6	250	★ D6DZ 3A732-C(9/83)		1
	P	8	302	★ D0ZZ 3A732-A(1/83)		1
74/75	P	6	200	C7SZ 3A732-A		1
	P	6	250	★ D6DZ 3A732-C(9/83)		1
	P	8	302	★ D0ZZ 3A732-A(1/83)		1
76/77	P	6	200	C7SZ 3A732-A		1
76	P	6	250	★ D6DZ 3A732-C(9/83)		1
77	P - - Canada only	6	250	★ D6DZ 3A732-C(9/83)		1
76/77	P	8	302	★ D0ZZ 3A732-A(1/83)		1
77	P - - exc. Canada	6	250	D70Z 3A732-A		1
78	P	4	140	D8FZ 3A732-A		1
78/	P	6	200	D8AZ 3A732-A	W/Ford pump	1
	P - - without A/C	8	302			1
	P	6	200	D9BZ 3A732-A	W/Saginaw pump-388751-S spacer incl. with bracket not required for this application	1
	P - - with A/C	8	302	D8ZZ 3A732-A		1
77	V	8	302,351	D6DZ 3A732-A		1
78	V "Before 4/10/78"	8	302	D8DZ 3A732-B		1
78/	V "From 4/10/78"	8	302	★ D8DZ 3A732-C(6/83)		1
73	A,C,F	6&8	All	382802-S2	(MM-173-JB)-nut (bracket to suppt.)-3/8"-16	1
73	C,P	6	250	370608-S2	(BB-579)-bolt (bracket to eng.)-3/8"-16 x 3/4"	4
76/	J	4	140	E804061-S72	(AB-190-G)-bolt-bracket head (bracket to eng.)-M8 x 20	1
		6	200	383721-S2	(BB-518-J) Bolt (3C511 & 3A732 to 9B450)-7/16"-14 x 6 1/8"	
79	P - - w/Saginaw pump			388750-S2	(BB-638-G)-bolt (support to 9B450)-7/16" - 14 x 6 3/16"	1
				388751-S	(VV-1-AD)-spacer (support to 9B450)-7/16" x 1"	1

YEAR	MODEL/RESTRICTIONS	PART NUMBER	DESCRIPTION	QTY.
3D732	SEAL KIT (POWER STEERING GEAR SECTOR SHAFT ARM)			
73/75	C	C5AZ 3D732-A	w/Saginaw gear	1
73/	F			1
	Consists of 1-Ring 2-Seals 2-Washers			

3A733 **PULLEY (POWER STEERING PUMP)-Also refer to group 6A312**
An identification number appears on the front portion of the pulley assembly. The following chart will provide a quick cross reference to the service part number when identification is known. Pulleys may also be selected by model application which follows the identification chart

IDENTIFICATION CHART

IDENTIFICATION	O.D.	SHEAVE WIDTH	PART NUMBER	IDENTIFICATION	O.D.	SHEAVE WIDTH	PART NUMBER
7AA	5 1/4"	3/8"	C7AZ 3A733-A	D5ZW-AA	5 13/16"	1/2"	D5ZZ 3A733-A
80A	4 1/4"	3/8"	★C80Z 3A733-A	D6DW-AA	5 15/16"	3/8"	D6DZ 3A733-A
C5AA-B	4 3/4"	3/8"	C5AZ 3A733-B	D8AC-AA	5 13/32"	1/2"	D8AZ 3A733-A
D0AR-A	5 5/8"	7/16"	D0AZ 3A733-A	D8DC-AA	5 15/32"	3/8"	D8DZ 3A733-A
D0AR-B	5 13/32"	7/16"	★C9TZ 3A733-D	D8DC-BA	6 3/64"	3/8"	D8DZ 3A733-B
D00R-B	6 1/4"	7/16"	D00Z 3A733-B	D8ZC-AA	5 27/32"	1/2"	D8ZZ 3A733-A
D00R-C	5 1/2"	5/16"	D00Z 3A733-C	757F 3A733-BA	4 1/2"	3/8"	D5RY 3A733-C
D2VR-AA	5 29/32"	1/2"	D2VY 3A733-A	757F 3A733-AA	6 7/32"	3/8"	D5RY 3A733-D
D3MR-AA	5 7/16"	1/2"	D3MY 3A733-A	757F 3D673-AA	6 7/32"	3/8"	D5RY 3A733-D
D4ZW-AA	5 3/4"	3/8"	D4ZZ 3A733-A	D9AC-AA	5 13/16"	3/4"	D9AZ 3A733-A
D5AW-AA	5 23/64"	1/2"	D5AZ 3A733-A	D9BC-AA	4 1/2"	3/8"	D9BZ 3A733-A
D5VW-AA	6"	1/2"	D5VZ 3A733-A	D9ZC-AA	5 3/8"	3/4"	D9ZZ 3A733-A

APPLICATION CHART

YEAR	MODEL/RESTRICTIONS	ENGINE CYL.	ENGINE C.I.D. (C.C.D.)	PART NUMBER	DESCRIPTION	QTY.
73/74	A,Y	8	351,400	★C9TZ 3A733-D r/bD9TZ 3A733-A	#D0AR-B	1
73	A,Y (exc. P/C) - - A/C	8	429,460	D2VY 3A733-A	#D2VR-AA	1
	A,Y (P/C)	8	429,460	D2VY 3A733-A	#D2VR-AA	1
74	A,Y (exc. P/C) - - A/C	8	460	D2VY 3A733-A	#D2VR-AA	1
75	A,Y	8	351	★C9TZ 3A733-D r/bD9TZ 3A733-A	#D0AR-D	1
	A,Y - - w/Ford pump- "Before 11/1/74"	8	400	C9TZ 3A733-D	#D0AR-D	1
	A,Y - - w/Saginaw pump- "From 11/1/74"	8	400	D5AZ 3A733-A	#D5AW-AA	1
	A,Y - - A/C	8	460	D5VZ 3A733-A	#D5VW-AA	1
	A,Y - - without A/C- "Before 1/20/75"	8	460	D5AZ 3A733-A	#D5AW-AA	1
	A,Y - - without A/C "From 1/20/75"	8	460	D5VZ 3A733-A	#D5VW-AA	1
76	A,Y	8	351	★C9TZ 3A733-D r/bD9TZ 3A733-A	#D0AR-B	1
76/77	A,Y	8	400	D5AZ 3A733-A	#D5AW-AA	1
76/78	A,Y (exc. P/C) - - A/C	8	460	D5VZ 3A733-A	#D5VW-AA	1
	A,Y (exc. P/C) - - without A/C	8	460	D5AZ 3A733-A	#D5AW-AA	1
	A,Y (P/C)	8	460	D5VZ 3A733-A	#D5VW-AA	1
78	A - - w/Ford pump	8	All	D5ZZ 3A733-A	#D5ZW-AA	1
78	A - - w/hydroboost "Before 10/1/77"	8	351M,400	D5AZ 3A733-A	#D5AW-AA	1
78	A - - w/hydroboost "From 10/1/77"	8	351M,400	D8AZ 3A733-A	#D8AC-AA	1
	A - - w/o hydroboost w/ Saginaw pump	8	351M, 400			1
79	A	8	All	D9AZ 3A733-A	#D9AC-AA	1

COPYRIGHT © 1986 — FORD MOTOR COMPANY — DEARBORN, MICHIGAN

1973/79 LINCOLN-MERCURY CARS

APPLICATION CHART

YEAR	MODEL/RESTRICTIONS	ENGINE CYL.	ENGINE C.I.D. (C.C.D.)	PART NUMBER	DESCRIPTION	QTY.
73	C	6	250	D00Z 3A733-C	#D00R-C	1
	C	8	302,351	★ C9TZ 3A733-D r/b D9TZ 3A733-A	#D0AR-B	1
	C	8	351CJ	D0AZ 3A733-A	#D0AR-A	1
	C	8	400 r/b	★ C9TZ 3A733-D D9TZ 3A733-A	#D0AR-B	1
	C (exc. P/C) - - A/C	8	429	D00Z 3A733-B	#D00R-B	1
	C (exc. P/C) - - without A/C	8	429	★ C9TZ 3A733-D r/b D9TZ 3A733-A	#D0AR-B	1
	C (P/C)	8	429,460	D0AZ 3A733-A	#D0AR-A	1
74/75	C	8	302, 351-2B	★ C9TZ 3A733-D r/b D9TZ 3A733-A	#D0AR-B	1
	C	8	400	C9TZ 3A733-D r/b D9TZ 3A733-A	#D0AR-B	1
	C (exc. P/C) - - A/C	8	460	D00Z 3A733-B	#D00R-B	1
	C (exc. P/C) - - without A/C	8	460	★ C9TZ 3A733-D r/b D9TZ 3A733-A	#D0AR-B	1
	C (P/C)	8	460	D0AZ 3A733-A	#D0AR-A	1
76	C	8	351,400	★ C9TZ 3A733-D r/b D9TZ 3A733-A	#D0AR-B	1
	C (exc. P/C) - - A/C	8	460	D00Z 3A733-B	#D00R-B	1
	C (exc. P/C) - - without A/C	8	460	★ C9TZ 3A733-D r/b D9TZ 3A733-A	#D0AR-B	1
	C (P/C)	8	460	D0AZ 3A733-A	#D0AR-A	1
73/74	D,K	8	All	D2VY 3A733-A	#D2VR-AA	1
75/76	D,K	8	All	D5VZ 3A733-A	#D5VW-AA	1
77	D,K	8	400	D5AZ 3A733-A	#D5AW-AA	1
77/78	D,K	8	460	D5VZ 3A733-A	#D5VW-AA	1
78/	D	8	400	D8AZ 3A733-A	#D8AC-AA	1
73	F	8	302,351	D0AZ 3A733-A	#D0AR-A	1
74/76	F	8	351-2/B, 400	★ C9TZ 3A733-D r/b D9TZ 3A733-A	#D0AR-B	1
		8	351-4/B	D0AZ 3A733-A	#D0AR-A	1
	F - - A/C	8	460	D00Z 3A733-B	#D00R-B	1
	F - - without A/C	8	460	★ C9TZ 3A733-D r/b D9TZ 3A733-A	#D0AR-B	1
77	F	8	302,351W	D0AZ 3A733-A	#D0AR-A	1
	F	8	351M,400	C9TZ 3A733-D	#D0AR-B	1
78/	F	8	All	D5ZZ 3A733-A	#D5ZW-AA	1
73/77	G,P	6	200	★ C80Z 3A733-A(3/84)	#80A	1
73/75	G,P	6	250	D00Z 3A733-C	#D00R-C	1
76/77	G,P - - without A/C	6	250	D00Z 3A733-C	#D00R-C	1
76/77	G,P - - w/ A/C	6	250	D6DZ 3A733-A	#D6DW-AA	1
73/77	G,P	8	302	D0AZ 3A733-A	#D0AR-A	1
	G	8	351	D0AZ 3A733-A	#D0AR-A	1
78	G	6	250	D8DZ 3A733-B	#D8DC-BA	1
	G - - w/o A/C	8	302	D5ZZ 3A733-A	#D5ZW-AA	1
	G - - with A/C	8	302	D0AZ 3A733-A	#D0AR-A	1
79	G	6	250	D8DZ 3A733-B	#D8DC-BA	1
	G - - w/o A/C	8	302	D0AZ 3A733-A	#D0AR-A	1
	G - - w/A/C	8	302	D00Z 3A733-B	#D00R-B-w/Ford pump	1
	G - - w/A/C	8	302	D5AZ 3A733-A	#D5AW-AA-w/Saginaw pump	1
76/78	J	4	140	★ D5RY 3A733-D(3/84)	#757F 3D673-AA	1
		6	171	D5RY 3A733-C	#757F 3A733-BA	1

APPLICATION CHART

YEAR	MODEL/RESTRICTIONS	ENGINE CYL.	ENGINE C.I.D. (C.C.D.)	PART NUMBER	DESCRIPTION	QTY.
79	J	4	140 (2300)	D4ZZ 3A733-A	#D4ZW-AA	1
	J	6	171 (2800)	C7AZ 3A733-A	#7AA	1
79	J - - with A/T "From 3/5/79"	6	200	C5AZ 3A733-B	#C5AR-B	1
	J	8	302	D9ZZ 3A733-A	#D9ZC-AA	1
78/	K	8	400	D8AZ 3A733-A	#D8AC-AA	1
75/	L	4	All	D4ZZ 3A733-A	#D4ZW-AA	1
		6	All	C7AZ 3A733-A	#7AA	1
78/	P	4	140	D4ZZ 3A733-A	#D4ZW-AA	1
	P	6	200	C5AZ 3A733-B	#C5AA-A-w/Ford pump	1
	P	6	200	D9BZ 3A733-A	#D9BC-AA-w/Saginaw pump	1
	P - - with A/C	8	302	D5ZZ 3A733-A	#D5ZW-AA	1
	P - - without A/C	8	302	D8ZZ 3A733-A	#D8ZC-AA	1
77/	V	8	All	D0AZ 3A733-A	#D0AR-A	1
	Y-refer to A					

YEAR	MODEL/RESTRICTIONS	PART NUMBER	DESCRIPTION	QTY.
3D733	SEAL KIT (POWER STEERING GEAR ADJUSTER PLUG)			
73/75	C	C5AZ 3D733-A	Consists of 3 seals-w/Saginaw gear	1
73/	F			1
3D734	SEAL KIT (POWER STEERING GEAR "O" RING)			
73/75	C	C5AZ 3D734-B		1
73/	F			1
	Consists of 2- "O" ring 6- Seal 1- Instruction sheet			
3E735	Refer to group 3C611			
3738	SEAL (STEERING GEAR SECTOR SHAFT OIL)			
73/74	C - - M/S	B5S 3738-A		1
73	F - - M/S			1
75/	G			1
73/77	P			1
77/	V			1
79	J - - M/S	D1FZ 3738-A		1
74/	L - - M/S			1
78/	P - - M/S			1
3D739	PIN (STEERING COLUMN PIVOT)			
73/78	A - - w/tilt wheel	D0AZ 3D739-A		2
73/76	C,Y - - w/tilt wheel			2
73/	D,F,G,K,V - - w/tilt wheel			2
79	A,J,P - - w/tilt wheel	E2LY 3D739-A		2
3E739	RETAINER (STEERING COLUMN COLLAR)			
73/76	C,K	★ D20Z 3E739-A(3/81)		1
77	K			1
74/	F,G,L			1
77	A			1
3-3739	CLAMP (POWER STEERING CONTROL VALVE BALL STUD SLEEVE)			
73/77	P	★ B7A 33739-A(3/84)		1
75/	G			1
77/	V			1
3A740	GASKET (POWER STEERING CONTROL VALVE BODY)			
73/77	P	C1AA 3A740-C		1
75/	G			1
77/	V			1

COPYRIGHT © 1986 — FORD MOTOR COMPANY — DEARBORN, MICHIGAN

1973/79
LINCOLN-MERCURY CARS

YEAR	MODEL/RESTRICTIONS	PART NUMBER	DESCRIPTION	QTY.
3B741	RETAINER ASSY. (STEERING COLUMN SUPPORT)			
75/	G	★ D5DZ 3B741-A(3/84)		2
77/	V			2
3E742	SPACER (STEERING COLUMN BRACKET INSULATOR)			
74/78	A - - w/tilt wheel	★ D4AZ 3E742-A(3/84)		1
74/76	C,Y - - w/tilt wheel			1
74/	D,F,G,K,V - - w/tilt wheel			1
3A745	CAP (POWER STEERING GEAR CYLINDER)			
73/75	C	D1ZZ 3A745-A		1
75/	F			1
73	F	C5AZ 3A745-A		1
3E745	COVER (STEERING COLUMN LOCK ACTUATOR)			
79	A,J,P - - w/tilt column	D9AZ 3E745-A		1
3A746	RING (POWER STEERING GEAR CYLINDER CAP RETAINING)			
73/75	C	D6UZ 3A746-A		1
73/	F			1
3C746	CLAMP (POWER STEERING HOSE)-Improvise			

YEAR	MODEL/RESTRICTIONS	ENGINE CYL.	ENGINE C.I.D. (C.C.D.)	PART NUMBER	DESCRIPTION	QTY.
3D746	COOLER ASSY. (POWER STEERING OIL)					
73	A,Y (exc. P/C),Y	8	351,400	★ D1AZ 3D746-D(3/84)	#D1AA 3D746-AB	1
73	A,Y	8	429,460	★ D3MY 3D746-A	Not replaced	1
74	A,Y	8	All	★ D4AZ 3D746-A	Not replaced	1
	A,Y - - without A/C	8	All	★ D2AZ 3D746-A(2/80)	#D4AW 3D746-BA-engine mounted	1
	A,Y - - A/C	8	All	★ D1AZ 3D746-D(3/84)	#D1AA 3D746-AB-compressor mounted	1
75/76	A,Y	8	All	★ D5AZ 3D746-A(6/83)	#D5AW 3D746-AA	1
77	A					1
78	A	8	All	D8AZ 3D746-A		1
79	A	8	All	★ D9AZ 3D746-A(6/83)		1
73	C	8	351,460	★ D1AZ 3D746-D(3/84)	#D1AA 3D746-AB	1
	C - - without A/C	8	400,429			1
	C - - A/C	8	400,429	★ D3MY 3D746-A	Not replaced	1
74/76	C,F	8	302,351	★ D1AZ 3D746-D(3/84)	#D1AA 3D746-AB-compressor mounted	1
77/	F	8	302,351 400,460	D40Z 3D746-A	#D40W 3D746-AB-radiator mounted	1
		8	400,460	★ D2AZ 3D746-A(2/80)	#D4AW 3D746-AA-engine mounted	1
73	D	8	All	★ D2VY 3D746-A(2/80)	#D2VA 3D746-AA	1
74	D	8	All	★ D4AZ 3D746-A	Not replaced	1
75/77	D	8	All	★ D5AZ 3D746-A(6/83)	#D5AW 3D746-AA	1
78/	D	8	All	D8AZ 3D746-A		1
73	F - - A/C	8	351CJ	★ D1AZ 3D746-D(3/84)	#D1AA 3D746-AA	1
	F - - without A/C	8	351CJ	★ D1ZZ 3D746-A	Not replaced	1
75/76	G	6&8	All	★ D5DZ 3D746-C(6/82)	#D5DW 3D746-AB,AC	1
76	J "Before 5/1/75"	4	140	★ D5RY 3D746-B(3/81)		1
76/78	J "From 5/1/75"	4	140	★ D5RY 3D746-C(3/81)		1
	J	6	171	★ D5RY 3D746-B(3/81)		1
79	J "Before 7/2/79"	All	All	D9ZZ 3D746-A		1
79	J "From 7/2/79"	All	All	D9ZZ 3D746-B	#D9ZC 3D746-BA	1
73/77	K	8	All	★ D3SZ 3D746-A	#D3SA 3D746-AA-(finned type)	1
74/77	K	8	All	★ D4SZ 3D746-A(9/82)	Tube type	1
78/	K	8	All	D8AZ 3D746-A		1
75/76	L	4&6	All	★ D5FZ 3D746-A(6/82)	#D52W 3D746-A(6/82)B	1
77/	L "From 6/27/77"	All	All	D8FZ 3D746-A	#D8EC 3D746-AA	1
74	P	6&8	250,302	D4DZ 3D746-A	#D4DW 3D746-AA	1
75/76	P	6&8	250,302	★ D5DZ 3D746-B(6/83)	#D5BW 3D746-AA	1

1973/79 LINCOLN-MERCURY CARS

YEAR	MODEL/RESTRICTIONS	ENGINE CYL.	ENGINE C.I.D. (C.C.D.)	PART NUMBER	DESCRIPTION	QTY.
3D746	COOLER ASSY. (POWER STEERING OIL) — Cont'd					
78/	P	6&8	All	D8BZ 3D746-A	#D8BC 3D746-AA	1
	Y-refer to A					
73	C - - A/C	8	All	C7AZ 4346-A	Bolt (cooler to radiator support)-3/8"-16 x 5/8"	2
73/	D,K	8	All	40923-S2	(U-264)-screw (cooler to radiator support)-5/16"-18 x 1/2"	2

YEAR	MODEL/RESTRICTIONS	PART NUMBER	DESCRIPTION	QTY.
3E746	SPRING ASSY. (IGNITION SWITCH RETURN)			
73/78	A - - w/tilt wheel	D0AZ 3E746-A	7/8" free length	1
73/76	C,Y - - w/tilt wheel			1
73/	D,F,G,K,V - - w/tilt wheel			1
3D752	Refer to group 3600			
3A754	SOCKET (POWER STEERING CONTROL VALVE BALL STUD)			
75/	G	C1AA 3A754-C	Also serviced in assy.-group 3A730	1
73/77	P			1
77/	V			1
3A754	SOCKET (FRONT WHEEL SPINDLE CONNECTING ROD BALL)			
73	J - - M/S	D0RY 3A754-A		2
74/78	J - - M/S	D2RY 3A754-A		2
3C755	CLAMP (POWER STEERING CYLINDER PISTON ROD BOOT)			
75/	G	C3AZ 3C755-A	Also serviced in kit-group 3C651	1
73/77	P			1
77/	V			1
3756	" O" RING (POWER STEERING GEAR CONTROL VALVE TO HOUSING)			
73/	A,D,F,K	D3AZ 3756-A		1
73/76	C,Y			1
3757	RING KIT (POWER STEERING GEAR VALVE SPOOL RETAINING)			
73/74	A,C,D,K,Y	C7AZ 3757-A	Consists of (1) each C7AR 3757-A thru E ring,	1
74	F		use w/gear ident. SPA-AA	1
3D759	INSULATOR (STEERING WHEEL SPOKE)			
73/78	J	★ D3RY 3D759-A(2/80)	Outer	2
		★ D3RY 3D759-B(3/81)	Inner	1
		★ D3RY 3D759-C(3/81)	Spacer	1
3A760	GASKET (POWER STEERING PUMP COVER)-Also serviced in kit-group 3B584			
73/74	A,C,F,P,Y "Before 1/7/74"	C9AZ 3A760-A		1
74/76	A,C,F,G,L,P,Y "From 1/7/74"	★ D4AZ 3A760-A(6/82)		1
77	A,F,G,L,P			1
3K762	TUBE (POWER STEERING GEAR RACK)			
76/78	J	★ D5RY 3K762-A(3/81)		1
79	J	D8FZ 3K762-A	With #SPR-M (TRW) gear	1
79	J	D8BZ 3K762-A	With #SPR-R (Ford) gear	1
75/	L	D8FZ 3K762-B		1
78/	P	D8BZ 3K762-A	With #SPR-A,C,E,P (Ford) gear	1
78	P	D8FZ 3K762-A	With #SPR-B,D (TRW) gear	1
3A764	SEAL KIT (POWER STEERING CYLINDER)			
73/	G	C1AZ 3A764-A		1
73/77	P			1
77/	V			1

Consists of

1-C1AA 3C561-A	Spacer	1-C1AA 3A752-A	Seal	2-AJ 33656-A	Seal
1-C1AA 3A751-A	Bushing	1-C0AA 3A753-A	Spacer	1-371033-S	Ring

COPYRIGHT © 1986 — FORD MOTOR COMPANY — DEARBORN, MICHIGAN

1973/79 LINCOLN-MERCURY CARS

YEAR	MODEL/RESTRICTIONS	PART NUMBER	DESCRIPTION	QTY.
3A766	CONNECTOR KIT (POWER STEERING GEAR)			
79	J - - w/Ford gear	D8BZ 3A766-A	Used for housing replacement	AR
78/	P - - w/Ford gear			AR
	Consists of			
	1-E2BC 3A766-AA Connector	1-E2BC 3F656-AA	Connector 1- Instruction sheet	
79	J - - w/Ford gear	D8BZ 3A766-B	Used for gear replacement	AR
78/	P - - w/Ford gear			AR
	Consists of			
	1-E2BC 3A766-AA Connector	1-E2BC 3A656-AA	Connector 1-E0SZ 3A525-A Flange	
	2-E1SZ 3A130-A End assy.	1-	Instruction sheet	
3B768	SPRING (STEERING COLUMN POSITION LOCK)			
73/78	A - - w/tilt wheel	C7SZ 3B768-A	15/32" dia.-1" free length	2
73/76	C,Y - - w/tilt wheel			2
73/	D,F,G,K,V - - w/tilt wheel			2
79	A,J,P - - w/tilt wheel	E0AZ 3B768-A		1
3K769	BEARING ASSY. (POWER STEERING GEAR PINION)			
76/78	J	★ D5RY 3K769-B(3/81)	Upper	1
		★ D6RY 3K769-A(3/81)	Lower	1
3K771	BEARING (POWER STEERING GEAR VALVE COVER)			
76/78	J	D5RY 3K771-A		1
3783	ACTUATOR KIT (POWER STEERING CONTROL VALVE)			
73/76	G,P "Before 6/1/76"	C60Z 3783-B	Consists of (1) actuator assy and 1 roll pin	1
76/77	G,P "From 6/1/76"	D6DZ 3783-A		1
78/	G			1
77/	V			1
3790	EXTENSION (STEERING COLUMN TUBE FLANGE)			
73	C "Before 11/1/72"	★ D3FZ 3790-A	#Black-paint to match - Not repl. (6/76)	1
73/76	C "From 11/1/72"	D80Z 3790-A	#Black	1
73/76	C	D2FZ 3790-J	#Blue	1
		D2FZ 3790-M	#Green	1
		★ D2FZ 3790-F	#Tan-r/b D80Z 3790-A(9/80)	1
73	F - - w/fixed wheel	★ D0AZ 3790-A(6/82)	#D0AA 3790-CW	1
	F - - w/tilt wheel	D0ZZ 3790-A	#D0ZA 3790-CW	1
74	F	D80Z 3790-A	#Black	1
		D2FZ 3790-J	#Blue	1
		★ D4FZ 3790-A	#Copper-r/b D80Z 3790-A	1
		★ D4FZ 3790-C	#Saddle-r/b D80Z 3790-A	1
		★ D2FZ 3790-F	#Tan-r/b D80Z 3790-A(9/80)	1
75/78	F "Before 10/17/77"	D80Z 3790-A	#Black-paint to match	1
		D2FZ 3790-J	#Blue	1
		★ D5FY 3790-A(2/80)	#Gold	1
		★ D5FZ 3790-C	#Green-r/b D80Z 3790-A	1
		D80Z 3790-A	#Red	1
		★ D2FZ 3790-F	#Tan-r/b D80Z 3790-A(9/80)	1
78/	F - - floor shift "From 10//17/77"	D80Z 3790-A	Black-paint to match	1
75/78	G "Before 10/17/77"	D80Z 3790-A	#Black-paint to match	1
		D5FY 3790-D	#Gold (1976 only)	1
		D5FZ 3790-A	#Gray	1
		★ D5FZ 3790-C	#Green-r/b D80Z 3790-A	1
		D80Z 3790-A	#Red	1
		★ D2FZ 3790-F	#Tan-r/b D80Z 3790-A(9/80)	1
		D6FZ 3790-A	#Tobacco (1976 only)	1
78/	G - - floor shift "From 10/17/77"	D80Z 3790-A	Black-paint to match	1
73/74	J	★ D3RY 3790-A(6/82)	Black	1
		★ D4RY 3790-A(3/81)	Saddle	1
74	J	★ D5RY 3790-A(3/81)	#Gray	1
		★ D4RY 3790-A(3/81)	#Saddle	1
		★ D4RY 3790-B(2/80)	#Tan (medium)	1

YEAR	MODEL/RESTRICTIONS	PART NUMBER	DESCRIPTION	QTY.
3790	EXTENSION (STEERING COLUMN FLANGE) — Cont'd			
76/78	J(exc. Ghia)	★ D3RY 3790-A(6/82)	#Black	1
		★ D4RY 3790-A(3/81)	#Saddle	1
76	J "Before 11/1/75"	★ D4RY 3790-B(2/80)	#Tan (medium)	1
76	J "From 11/1/75"	★ D6RY 3790-A(3/81)	#Tan (medium)	1
	"From 11/1/75"	★ D6RY 3790-B(3/81)	#Chocolate	1
76/78	J	★ D5RY 3790-A(3/81)	#Gray	1
76/78	J (Ghia)	★ D5RY 3790-B(3/81)	#Black	1
76/78	J	★ D5RY 3790-C(3/83)	#Gray	1
76/78	J	★ D5RY 3790-D(3/81)	#Tan (medium)	1
76	J "From 11/1/75"	★ D6RY 3790-C(3/81)	#Chocolate	1
		55923-ES42	Screw-oval head tapping-No. 6-20 x 1/2"	6
		117513-ES	Nut-speed	6
	"Before 11/1/75"	E802020-S72	Screw-oval head tapping-74-25	2
	"From 11/1/75"	E802033-S72	(AB-124-G)Screw-oval head tapping-74-20	2
74	L	D2FZ 3790-D	#Black	1
		D2FZ 3790-J	#Blue	1
		★ D2FZ 3790-E	#Orange-r/b D80Z 3790-A	1
		★ D4FZ 3790-C	#Saddle-r/b D80Z 3790-A	1
75/78	L "Before 10/17/77"	D80Z 3790-A	#Black	1
		D2FZ 3790-J	#Blue	1
		D5FZ 3790-D	#Cranberry (1976 only)	1
		★ D5FY 3790-A(2/80)	#Gold (1976 only)	1
		D5FZ 3790-A	#Gray (1976 only)	1
		★ D5FZ 3790-C	#Green-r/b D80Z 3790-A	1
		D6FZ 3790-A	#Red (1976 only)	1
		★ D2FZ 3790-F	#Tan-r/b D80Z 3790-F(9/80)	1
78/	L "From 10/17/77"	D80Z 3790-A	Black-paint to match	1
73/76	P "Before 4/19/76"	D0AZ 3790-A	Paint to match	1
76/77	P "From 4/19/76"	★ D6DZ 3790-A(3/81)	Paint to match #D6BW 3790-AA	1
77/	V - - floor shift	D80Z 3790-A	Black-paint to match	1
3805	SEAL (POWER STEERING GEAR PISTON)			
73/76	A,C,D,K,Y	C5AZ 3805-A	Also serviced in kit-group 3C538 - - 3 1/32" I.D.	1
77/	A,D,K			1
74/	F			1
73/75	C	★ C5AZ 3805-B	Use w/Saginaw gear - - 2 5/8" I.D.	1
73/76	F	r/bD6TZ 3805-A(12/81)		1
		87144-S91	(T-5-D)- "o" ring-2 27/64" I.D.	1
77/	F	D6TZ 3805-A	Use w/Saginaw gear-2 5/8" I.D.	1
		87144-S91	(T-5-D)-"O" ring-2 27/64" I.D.	1
3812	ACTUATOR (POWER STEERING GEAR VALVE)			
73/76	C	D30Z 3812-A		1
75/	F			1
73	F	★ D1ZZ 3812-B	Not replaced (9/78)	1

COPYRIGHT © 1986 — FORD MOTOR COMPANY — DEARBORN, MICHIGAN

POWER STEERING KIT PARTS LISTS

Model application for power steering kits is shown in groups 3A634–5.
Use the Page Index below to find the page in this group where the components of each kit are listed.

INDEX

PART NUMBER	PAGE	PART NUMBER	PAGE
D3DZ 3A634–A	1	D5DZ 3A635–D	7
D5DZ 3A634–A	2	D5DZ 3A635–E	7
D5DZ 3A634–B	2	D5DZ 3A635–F	7
D8DZ 3A634–A	2	D5DZ 3A635–G	8
D3DZ 3A635–A	2	D5DZ 3A635–H	8
D3DZ 3A635–B	3	D6DZ 3A635–A	8
D3DZ 3A635–C	3	D6DZ 3A635–B	8
D30Z 3A635–A	3	D6DZ 3A635–C	9
D30Z 3A635–B	3	D6DZ 3A635–D	9
D30Z 3A635–C	4	D6DZ 3A635–E	9
D30Z 3A635–D	4	D6DZ 3A635–F	9
D30Z 3A635–E	4	D6DZ 3A635–G	10
D30Z 3A635–F	4	D6DZ 3A635–H	10
D3ZZ 3A635–D	5	D6DZ 3A635–J	10
D3ZZ 3A635–F	5	D6DZ 3A635–K	10
D4DZ 3A635–A	5	D6DZ 3A635–L	11
D4DZ 3A635–B	5	D6DZ 3A635–M	11
D40Z 3A635–B	6	D7DZ 3A635–A	11
D5DZ 3A635–A	6	D7DZ 3A635–B	11
D5DZ 3A635–B	6	D7DZ 3A635–C	12
D5DZ 3A635–C	6	D8DZ 3A635–B	12

POWER STEERING KIT PARTS LISTS

■ D3DZ 3A634–A

Consists of

QTY.	PART NUMBER	DESCRIPTION
1	D3DZ 3304–B	Rod assy.–Pitman to idler arm
2	C70A 3A344–A	Insulator–piston rod
2	D1UA 3A345–A	Washer–cyl. insulator
1	C3AA 3C528–A	Boot–cyl.
1	D5DZ 3A540–A	Cylinder assy.
1	C9DZ 3590–A	Arm–steering gear–Pitman
1	C3DA 3A594–B	Spring–control valve spool
1	AJ 3652–A	Spacer–cyl. insulator
1	D0DZ 3A652–A	Bracket–cyl. mounting
1	C60Z 3A714–A	Hose assy.–control valve cyl. hd.
1	C60Z 3A717–A	Hose assy.–control valve cyl. end
1	C80Z 3A730–A	Valve assy.–hydraulic control
1	C3AA 3C755–A	Clamp–cyl. piston rod boot
1	33799–S36	Nut–3/8"–16
1	33925–S8	Nut–3/8"–14

■ D3DZ 3A634–A — Cont'd

Consists of

QTY.	PART NUMBER	DESCRIPTION
1	33985–S2	Nut–9/16"–18
1	34443–S7	Nut–lock–5/16"–24
2	34782–S2	Washer–lock–3/8"
1	45218–S8	Nut–3/8"–24
5	72035–S	Pin–cotter–1/8"–1"
1	304759–S2	Bolt–5/16"–24 x 1 1/2"
1	304760–S36	Bolt–3/8"–16 x 1 1/2"
1	305039–S	Pin–spring–1/8" x 5/8"
1	351819–S	Clamp–hose
2	374706–S2	Bolt–3/8"–16 x 1 1/2"
2	375474–S100	Nut–rivet type–3/8"–16
1	378544–S2	Washer–flat–3/8"
1	383406–S100	Nut–lock–3/8"–16
1	383496–S100	Bolt–3/8"–16 x 3 5/8"
1		Installation sketch

COPYRIGHT © 1986 — FORD MOTOR COMPANY — DEARBORN, MICHIGAN

POWER STEERING KIT PARTS LISTS — Cont'd

■ D5DZ 3A634-A

Consists of

QTY.	PART NUMBER		DESCRIPTION
1	D5DZ	3304-B	Rod assy.-Pitman to idler arm (Granada & Monarch)
1	D5DZ	3304-D	Rod assy.-Pitman to idler arm (Maverick, Comet)
2	C70A	3A344-A	Insulator-piston rod
2	D1UA	3A345-AA	Washer-cyl. insulator
1	C3AA	3C528-A	Boot-cyl.
1	D5DZ	3A540-B	Cylinder assy.
1	C9DZ	3590-A	Arm-steering gear-Pitman
1	C3DA	3A594-B	Spring-control valve spool
1	AJ	3552-A	Spacer-cyl. insulator
1	D0DZ	3A652-A	Bracket-cyl. mounting
1	D5DZ	3A714-A	Hose assy.-control valve cyl. hd.
1	D5DZ	3A717-A	Hose assy.-control valve cyl. end
1	D5DZ	3A730-A	Valve assy.-hydraulic control
1	C3AA	3C755-A	Clamp-cyl. piston rod boot
1	33799-S36		Nut-3/8"-16
1	33925-S8		Nut-3/8"-14
1	33925-S8		Nut-3/8"-14
1	34443-S7		Nut-lock-5/16"-24
2	34782-S2		Washer-lock-3/8"
1	45218-S8M		Nut-3/8"-24
2	58636-S2		Bolt-3/8"-16 x 1 1/2"
5	72044-S100		Pin-cotter-1/8" x 1 1/8"
1	304759-S2		Bolt-5/16"-24 x 1 1/2"
1	304760		Bolt-3/8"-16 x 1 1/2"
1	305034-S		Pin-spring-1/8" x 5/8"
1	351819-S		Clamp-hose
2	375474-S100		Nut-rivet type-3/8"-16
1	378544-S2		Washer-flat-3/8"
1	383406-S100		Nut-lock-3/8"-16
1	383496-S100		Bolt-3/8"-16 x 3 5/8"
2	386034-S100		Nut-9/16"-18
1			Installation sketch

D5DZ 3A634-B

Consists of

QTY.	PART NUMBER		DESCRIPTION
1	D5DZ	3304-B	Rod assy.-Pitman to idler arm (Granada & Monarch)
1	D5DZ	3304-D	Rod assy.-Pitman to idler arm (Maverick & Comet)
2	C70A	3A344-A	Insulator-piston rod
1	D1UA	3A345-AA	Washer-cyl. insulator
1	C3AA	3C528-A	Boot-cyl.
1	D6DZ	3A540-B	Cylinder assy.
1	C9DZ	3590-A	Arm-steering gear-Pitman
1	C3DA	3A594-B	Spring-control valve spool
1	AJ	3652-A	Spacer-cyl. insulator
1	D0DZ	3A652-A	Bracket-cyl. mounting
1	D6DZ	3A714-A	Hose assy.-control valve cyl. hd.
1	D6DZ	3A717-A	Hose assy-control valve cyl. end
1	D6DZ	3A730-C	Valve assy-hydraulic control
1	C3AA	3C733-A	Clamp-cyl. piston rod boot
1	33799-S36		Nut-3/8"-16
1	33925-SB		Nut-3/8"-14
1	34443-S7		Nut-5/16"-24
1	34443-S8		Nut-5/16"-24
2	34782-S2		Washer-lock-3/8"
1	34987-S2		Nut-lock-3/8"-16
1	45218-S8		Nut-3/8"-24
2	58636-S2		Bolt-3/8"-16 x 1 1/2"
5	72044-S100		Pin-cotter-1/8" x 1 1/8"
1	304759-S2		Bolt-5/16"-24 x 1 1/2"
1	304760-S36		Bolt-3/8"-16 x 1 1/2"
1	305039-		
1	351819-S		Clamp-hose
2	375474-S100		Nut-rivet type-3/8"-16
1	383496-S2		Bolt-3/8"-16 x 3 5/8"
2	386034-S100		Nut-9/16"-18
1			Installation sketch

POWER STEERING KIT PARTS LISTS — Cont'd

D8DZ 3A634-A

Consists of

QTY.	PART NUMBER	DESCRIPTION
1	D5DZ 3304-B	Rod assy.
2	C70A 3A344-A	Insulator
2	D1UA 3A345-AA	Washer
1	C3AA 3C528-A	Boot
1	D8DZ 3A540-A	Cylinder
1	C9DZ 3590-A	Pitman arm
1	AJ 3652-A	Spacer
1	D0DZ 3A652-A	Bracket
1	D8DZ 3A714-A	Hose assy.
1	D8DZ 3A717-A	Hose assy.
1	D7DZ 3A730-A	Valve assy.
1	C3AZ 3C755-A	Clamp
1	33799-S36	Nut-3/8"-16
1	33925-S8	Nut-3/8"-24
1	34443-S7	Nut-5/16"-24
2	34782-S2	Washer-3/8"
1	34987-S2	Nut-3/8"-16
1	45218-S8	Nut-3/8"-24
2	58636-S2	Bolt-3/8"-16 x 1 1/2"
5	72044-S100	Cotter pin
1	304759-S2	Bolt-5/16"-24 x 1 1/2"
1	305039-S	Spring pin
1	351819-S	Clamp
1	359099-S2	Bolt-3/8"-16 x 3"
2	375474-S100	Rivet nut
1	378544-S2	Washer-3/8"
1	383496-S2	Bolt-3/8"-16 x 3 5/8"
2	386034-S100	Nut-9/16"-18
1	IS 4069-P	Installation sheet

■ D3DZ 3A635-A

Consists of

QTY.	PART NUMBER	DESCRIPTION
1	C8OZ 3C511-A	Support-P/S pump
1	D0DZ 3C511-B	Support-P/S pump-rear
1	D3DZ 3C511-A	Support-pump bracket-rear
1	D3DA 3E601-BA	Insulator assy.-hose
1	D3DZ 3A674-A	Pump assy.-P/S
1	C7SZ 3A732-A	Bracket-pump adjustment
1	C8OZ 3A733-A	Pulley assy.-pump
1	C8DZ 6A312-A	Pulley assy.-crankshaft
1	C9PZ 8620-GM	Belt-P/S pump
3	34790-S2	Washer-lock-1/4"
2	40923-S2	Screw-5/16"-18 x 1/2"
2	300864-S2	Screw-1/4"-20 x 2"
1	304775-S2	Screw-1/4"-10 x 1 5/8"
1	304803-S8	Bolt-9/16"-18 x 1 3/4"
4	371041-S2	Screw-3/8"-16 x 7/8"
1	378720-S2	Nut-5/16"
1	382860-S2	Screw-3/8"-16 x 6 1/4"
3	383165-S2	Bolt-3/8"-16 x 3/4"
3	384072-S2	Screw-5/16"-18 x 1"
1	384161-S100	Clamp-hose
1		Installation sketch

■ D3DZ 3A635-B

Consists of

QTY.	PART NUMBER	DESCRIPTION
1	C8ZA 3A005-A	Hose-return line
1	D3DA 3E601-AB	Insulator assy.-hose
1	D3DZ 3A674-A	Pump assy.-P/S
1	D3DZ 3A732-A	Bracket-pump adjustment
1	D0OZ 3A733-C	Pulley assy.-pump
1	D3DZ 3D746-B	Cooler assy.-oil
1	C9ZZ 6A312-A	Pulley assy.-crankshaft
1	C9PZ 8620-FY	Belt-P/S pump
2	40923-S2	Screw-5/16"-18 x 1/2"
1	40962-S2	Screw-5/16"-18 x 7/8"
3	370608-S2	Screw-3/8"-16 x 3/4"
2	371041-S	Screw-3/8"-16 x 7/8"
3	383165-S2	Bolt-3/8"-16 x 3/4"
3	384161-S100	Clamp-hose
1		Installation sketch

■ D3DZ 3A635-C

Consists of

QTY.	PART NUMBER	DESCRIPTION
1	C9AA 3A005-A	Hose-return line
1	D1DA 3A005-AA	Hose-return line
1	D3DA 3A005-AA	Hose-return line
1	D1ZZ 3C511-A	Support-pump
1	D1DA 3E601-AA	Insulator assy.-hose
1	D3DZ 3A674-B	Pump assy.-P/S
1	D0DZ 3A719-A	Hose-pressure line
1	D0ZZ 3A732-B	Bracket assy.-pump adjusting
1	D0AZ 3A733-A	Pulley assy.-pump
1	D3DZ 3D746-A	Cooler assy.-oil
1	D0OZ 6A312-E	Pulley assy.-crankshaft
1	D1AZ 8509-B	Pulley assy.-water pump
1	C9PZ 8620-CK	Belt-P/S pump (without A/C)
1	C9PZ 8620-CL	Belt-P/S (with A/C)
1	C9PZ 8620-P	Belt-alternator
1	34987-S2	Nut-lock-3/8"-16
2	40962-S2	Screw-5/16"-18 x 7/8"
5	370608-S2	Screw-3/8"-16 x 3/4"
1	377278-S2	Stud-3/8"-16 x 2"
1	382092-S	Screw-7/16"-14 x 3/4"
1	383671-S2	Nut-7/8"-10
1	383722-S2	Bolt-hex. hd.-7/16"-14 x 6 5/16"
4	384161-S100	Clamp-hose
1	384542-S2	Washer-flat-7/16" x 3/4" thick
1		Installation sketch

COPYRIGHT © 1986 — FORD MOTOR COMPANY — DEARBORN, MICHIGAN

POWER STEERING KIT PARTS LISTS — Cont'd

■ D30Z 3A635–A

Consists of

QTY.	PART NUMBER	DESCRIPTION
1	D3AZ 3504–A	Gear assy.–P/S
1	D2AA 3E506–AA	Clip–pressure and return tube
1	D20Z 3590–B	Arm assy.–Pitman
1	D3AZ 3A674–A	Pump assy.–P/S
1	D20Z 3A713–A	Hose assy.–return line
1	D20Z 3A719–G	Hose assy.–pressure line
1	C9ZZ 3A732–A	Bracket–pump adjusting
1	D00Z 3A733–C	Pulley assy.–pump
1	C9AA 3C746–C	Clamp–hose
1	C9ZZ 6A312–A	Pulley assy.–crankshaft
1	C9PZ 8620–FY	Belt–pump
1	72035–S	Pin–cotter–1/8" x 1"
3	370608–S2	Screw–3/8"–16 x 3/4"
2	371041–S2	Screw–3/8"–16 x 1/8"
3	383165–S2	Bolt–3/8"–16 x 3/4"
1	384161–S100	Clamp–hose
1		Installation sketch

■ D30Z 3A635–B

Consists of

QTY.	PART NUMBER	DESCRIPTION
1	D3AZ 3504–A	Gear assy.
1	D2AA 3E506–AA	Clip–pressure and return tube
1	D1AZ 3C510–A	Bracket–tube front
1	D1ZZ 3C511–A	Support–pump
1	D20Z 3590–B	Arm assy.–Pitman
1	D3AZ 3A674–A	Pump assy.
1	D20Z 3A713–A	Hose assy.–return line
1	D20Z 3A719–H	Hose assy.–pressure line
1	D0AZ 3A732–C	Bracket assy.–pump adjusting
1	C9TZ 3A733–D	Pulley assy.–pump
1	C9AA 3C746–C	Clamp–hose
1	D00Z 6A312–E	Pulley assy.–crankshaft
1	D1AZ 8509–B	Pulley assy.–water pump
1	C9PZ 8620–P	Belt–alternator
1	D0TZ 8620–B	Belt–P/S pump
1	72035–S	Pin–cotter–1/8" x 1"
5	370608–S2	Screw–3/8"–16 x 3/4"
1	378720–S2	Nut–5/8"–18
1	382092–S2	Screw–7/16"–14 x 3/4"
1	383722–S2	Bolt–7/16"–14 x 6 5/16"
1	384161–S100	Clamp–hose
1	384542–S2	Washer–flat–7/16" x 3/4" thick
1		Installation sketch

■ D30Z 3A635–C

Consists of

QTY.	PART NUMBER	DESCRIPTION
1	D0AA 3A005–B	Hose–pump to cooler
1	D3AZ 3504–A	Gear assy.
1	D2AA 3E506–AA	Clip–pressure and return tube
1	D1AZ 3C510–A	Bracket–tube front
1	D1AZ 3C511–A	Support–pump
1	D20Z 3590–B	Arm assy.–Pitman
1	D3AZ 3A674–A	Pump assy.
1	D20Z 3A713–A	Hose assy.–return line
1	D20Z 3A719–H	Hose assy.–pressure line
1	D1AZ 3A732–A	Bracket assy.–pump adjusting
1	C9TZ 3A733–D	Pulley assy.–pump
1	C9AA 3C746–C	Clamp–hose
1	D1AZ 3D746–D	Cooler assy.–P/S
2	C7AZ 4346–A	Screw–3/8"–16 x 5/8"
1	D0TZ 8620–B	Belt–P/S pump
1	34987–S2	Nut–lock–3/8"–16
4	55738–S2	Nut–3/8"–16
1	72035–S	Pin–cotter–1/8" x 1"
4	370608–S2	Screw–3/8"–16 x 3/4"
1	377278–S2	Stud–3/8"–16 x 2"
1	378720–S2	Nut–5/8"–18
3	384161–S100	Clamp–hose
1	384906–S	Washer–flat–7/16" x 5/16"
1	385243–S2	Bolt–7/16"–14 x 1 7/8" hex. washer hd.
1		Installation sketch

■ D30Z 3A635–D

Consists of

QTY.	PART NUMBER	DESCRIPTION
1	D3AZ 3504–A	Gear assy.
1	D2AA 3E506–AA	Clip–pressure and return tube
1	D1AZ 3C510–A	Bracket–tube front
1	D1AZ 3C511–A	Support–pump
1	D20Z 3590–B	Arm assy.–Pitman
1	D3AZ 3A674–A	Pump assy.–P/S
1	D20Z 3A713–A	Hose assy.–return line
1	D20Z 3A719–H	Hose assy.–pressure line
1	D1AZ 3A732–A	Bracket assy.–pump adjusting
1	C9TZ 3A733–D	Pulley assy.–pump
1	C9AA 3C746–C	Clamp–hose
1	D00Z 6A312–E	Pulley assy.–crankshaft
1	D1AZ 8509–B	Pulley assy.–water pump
1	C9PZ 8620–P	Belt–alternator
1	D0VZ 8620–B	Belt–P/S pump
4	55738–S2	Nut–3/8"–16
1	72035–S	Pin–cotter–1/8" x 1"
5	370608–S2	Screw–3/8"–16 x 3/4"
1	378720–S2	Nut–5/8"–18
1	384161–S100	Clamp–hose
1	385049–S100	Washer–flat–7/16" x 1" thick
1	385243–S2	Bolt–7/16"–14 x 1 7/8"
1		Installation sketch

POWER STEERING KIT PARTS LISTS — Cont'd

■ D30Z 3A635-E

Consists of

QTY.	PART NUMBER	DESCRIPTION
1	D3AZ 3504-A	Gear assy.
1	D2AA 3E506-AA	Clip-pressure and return tube
1	D1AZ 3C510-A	Bracket-tube front
1	D0ZZ 3C511-A	Support-pump
1	D20Z 3590-B	Arm assy.-Pitman
1	D3AZ 3A674-A	Pump assy.
1	D20Z 3A713-A	Hose assy.-return line
1	D20Z 3A719-H	Hose assy.-pressure line
1	D0AZ 3A732-C	Bracket assy.-pump adjusting
1	C9TZ 3A733-D	Pulley assy.-pump
1	C9AA 3C746-C	Clamp-hose
1	D00Z 6A312-E	Pulley assy.-crankshaft
1	D1AZ 8509-B	Pulley assy.-water pump
1	C9PZ 8620-P	Belt-alternator
1	D0VZ 8620-B	Belt-pump
1	72035-S	Pin-cotter-1/8" x 1"
5	370608-S2	Screw-3/8"-16 x 3/4"
1	378720-S2	Nut-5/8"-18
1	382092-S2	Screw-7/16"-14 x 3/4"
1	383721-S2	Bolt-7/16"-14 x 6 3/16"
1	384161-S100	Clamp-hose
1	384543-S8	Washer-flat-7/16" x 1/2" thick
1		Installation sketch

■ D30Z 3A635-F

Consists of

QTY.	PART NUMBER	DESCRIPTION
1	D3AZ 3504-A	Gear assy.
1	D2AA 3E506-AA	Clip-pressure and return tube
1	D1AZ 3C510-A	Bracket-tube front
1	D0ZZ 3C511-A	Support-pump
1	D30Z 3590-B	Arm assy.-Pitman
1	D3AZ 3A674-A	Pump assy.
1	D20Z 3A713-A	Hose assy.-return line
1	D20Z 3A719-H	Hose assy.-pressure line
1	D0AZ 3A732-C	Bracket assy.-pump adjusting
1	D0AZ 3A733-A	Pulley assy.-pump
1	C9AA 3C746-C	Clamp-hose
1	D20Z 6A312-B	Pulley assy.-crankshaft
1	D1AZ 8509-B	Pulley assy.-water pump
1	C9PZ 8620-CM	Belt-P/S pump
1	C9PZ 8620-K	Belt-alternator
1	72035-S	Pin-cotter-1/8" x 1"
5	370608-S2	Screw-3/8"-16 x 3/4"
1	378720-S2	Nut-5/8"-18
1	382092-S2	Screw-7/16"-14 x 3/4"
1	384161-S100	Clamp-hose
1	384543-S8	Washer-flat-7/16" x 1/2" thick
1		Installation sketch

■ D3ZZ 3A635-D

Consists of

QTY.	PART NUMBER	DESCRIPTION
1	D1ZA 3A005-AA	Hose-pump to cooler
1	D3ZA 3A500-AA	Gear & flange assy.-steering
1	D1ZA 3E506-AC	Clip-pressure and return tube
1	D1ZZ 3C510-A	Bracket-tube front
1	D0ZZ 3C511-A	Support-pump
1	D1ZA 3E576-AC	Tube assy.-pressure line
1	D1ZZ 3590-B	Arm assy.-Pitman
1	D3ZZ 3A674-A	Pump assy.
1	D1ZZ 3A713-A	Hose assy.-return line
1	D2ZZ 3A719-A	Hose assy.-pressure line
1	D1ZZ 3A732-A	Bracket assy.-pump
1	D0AZ 3A733-A	Pulley assy.-pump
1	D1ZZ 3D746-A	Cooler assy.-P/S
1	D2SZ 6A313-E	Pulley assy.-crankshaft
1	D1AZ 8509-B	Pulley assy.-water pump
1	C9PZ 8620-CM	Belt-P/S pump
1	C9PZ 8620-P	Belt-alternator
1	40962-S2	Screw-5/16"-18 x 7/8"
1	72035-S	Pin-cotter-1/8" x 1"
5	370608-S2	Screw-3/8"-16 x 3/4"
1	378459-S36M	Screw-5/16"-18 x 5/8"
1	378720-S2	Nut-5/8"-18
1	382092-S2	Screw-7/16"-14 x 3/4"
1	383721-S100	Bolt-7/16"-14 x 6 1/8"
3	384161-S100	Clamp-hose
1	384543-S8	Washer-flat-7/16" x 1/2" thick
1		Installation sketch

■ D3ZZ 3A635-F

Consists of

QTY.	PART NUMBER	DESCRIPTION
1	D3ZA 3A005-AA	Hose assy.-return line
1	C9AA 3C746-C	Clamp-P/S hose
1	D1AZ 3D746-D	Cooler assy.-P/S
1	C9PZ 8620-CK	Belt-P/S pump (302 eng.)-1/2" x 50"
1	C9PZ 8620-CL	Belt-P/S pump (351 eng.)-1/2" x 51"
1	34987-S2	Nut-lock-3/8"-16
1	377278-S2	Stud-3/8"-16 x 2"
2	381673-S2	Screw-3/8"-16 x 5/8"
1		Installation sketch

COPYRIGHT © 1986 — FORD MOTOR COMPANY — DEARBORN, MICHIGAN

POWER STEERING KIT PARTS LISTS — Cont'd

■ **D4DZ 3A635–A**

Consists of

QTY.	PART NUMBER	DESCRIPTION
1	C9AA 3A005–A	Hose–return line
1	D1ZZ 3C511–A	Support–pump
1	D1DA 3E601–AA	Insulator assy.–hose
1	D3DZ 3A674–B	Pump assy.
1	D0DZ 3A719–A	Hose–pressure line
1	D0ZZ 3A732–B	Bracket–pump adjusting
1	D0AZ 3A733–A	Pulley assy.–pump
1	D4DZ 3D746–A	Cooler assy.–oil
1	D0OZ 6A312–E	Pulley assy.–crankshaft
1	D4AZ 6A312–A	Pulley assy.–crankshaft (w/o A/C–Calif. only)
1	D1AE 8509–BA	Pulley assy.–water pump
1	C9PZ 8620–P	Belt–alternator
1	C9PZ 8620–CK	Belt–pump (with A/C)
1	C9PZ 8620–CL	Belt–pump (w/o A/C)
1	34987–S2	Nut–lock–3/8"–16
2	40962–S2	Screw–5/16"–18 x 7/8"
5	370608–S2	Screw–3/8"–16 x 3/4"
1	377278–S2	Stud–3/8"–16 x 2
1	382092–S2	Screw–7/16"–14 x 3/4"
1	383671–S2	Nut–7/8"–20
1	383722–S2	Bolt–7/16"–14 x 6 5/16"
4	384161–S100	Clamp–hose
1	384542–S2	Washer–flat–7/16" x 3/4" thick
1		Installation sketch

D4DZ 3A635–B

Consists of

QTY.	PART NUMBER	DESCRIPTION
1	D30A 3A005–BA	Hose–return line
1	D4DW 3E601–AA	Insulator assy.–hose
1	D3DZ 3A674–A	Pump assy.
1	D4DZ 3A732–A	Bracket assy.–pump adjusting
1	D0OZ 3A733–C	Pulley assy.–pump
1	D4DZ 3D746–A	Cooler assy.–oil
1	C9ZZ 6A312–A	Pulley assy.–crankshaft
1	C9PZ 8620–FY	Belt P/S pump
2	40923–S2	Screw–5/16"–18 x 1/2"
1	40962–S2	Screw–5/16"–18 x 7/8"
3	370608–S2	Screw–3/8"–16 x 3/4"
2	371041–S2	Screw–3/8"–16 x 7/8"
3	383165–S2	Bolt–3/8"–16 x 3/4"
3	384161–S100	Clamp hose
1		Installation sketch

D40Z 3A635–B

Consists of

QTY.	PART NUMBER	DESCRIPTION
1	D3AZ 3504–A	Gear assy.
1	D2AA 3E506–AA	Clip–pressure and return tube
1	D1AZ 3C510–A	Bracket–tube front
1	D1ZZ 3C511–A	Support–pump
1	D20Z 3590–B	Arm assy.–Pitman
1	D40Z 3A674–A	Pump assy.
1	D20Z 3A713–A	Hose assy.–return line
1	D20Z 3A719–H	Hose assy.–pressure line
1	D0AZ 3A732–C	Bracket assy.–pump adjusting
1	C9TZ 3A733–D	Pulley assy.–pump
1	C9AA 3C746–C	Clamp–hose
1	D0OZ 6A312–E	Pulley assy.–crankshaft
1	D1AZ 8509–B	Pulley assy.–water pump
1	C9PZ 8620–P	Belt–alternator
1	D0TZ 8620–B	Belt–P/S pump
1	72044–S100	Pin–cotter–1/8" x 1"
5	370608–S2	Screw–3/8"–16 x 3/4"
1	378720–S2	Nut–5/8"–18
1	382092–S2	Screw–7/16"–14 x 3/4"
1	383722–S2	Bolt–7/16"–14 x 5/16"
1	384161–S100	Clamp–hose
1	384542–S2	Washer–flat–7/16" x 3/4" thick
1		Installation sketch

D5DZ 3A635–A

Consists of

QTY.	PART NUMBER	DESCRIPTION
1	C9AA 3A00–A	Hose–return line
1	D0AA 3A00–A	Hose–return line
1	D5DZ 3C511–A	Support–pump
1	D1DA 3R601–AA	Insulator assy.–hose
1	D3DZ 3A674–C	Pump assy.
1	D5DZ 3A719–D	Hose–pressure line
1	D0ZZ 3A732–A	Bracket–pump adjusting
1	D0AZ 3A733–A	Pulley assy.–pump
1	D5DZ 3D746–B	Cooler assy.–oil
1	D4AZ 6A312–E	Pulley assy.–crankshaft
1	D1AZ 8509–B	Pulley assy.–water pump
1	C9PZ 8620–P	Belt–alternator
1	C9PZ 8620–P	Belt–pump (with A/C)
1	C9PZ 8620–CL	Belt–pump (w/o A/C)
1	34987–S2	Nut–lock–3/8"–16
2	40962–S2	Screw–5/16"–18 x 7/8"
5	370608–S2	Screw–3/8"–16 x 3/4"
1	382092–S2	Screw–7/16"–14 x 3/4"
1	383671–S2	Nut–7/8"–20
1	383722–S2	Bolt–7/16"–14 x 6 3/8"
4	384161–S100	Clamp–hose–5/8"
1	384542–S2	Washer–flat–7/16" x 3/4" thick
1	386388–S100	Clip
1		Installation sketch

POWER STEERING KIT PARTS LISTS — Cont'd

D5DZ 3A635–B

Consists of

QTY.	PART NUMBER	DESCRIPTION
1	D5DW 3A005–BB	Hose–return line
1	D5DZ 3A674–A	Pump assy.
1	D5DZ 3A713–J	Hose assy.–return line
1	D5DZ 3A719–Z	Hose assy.–pressure line
1	D5DZ 3A732–B	Bracket–pump adjusting
1	D00Z 3A733–C	Pulley assy.–pump
1	D5DZ 3D746–A	Cooler assy.–oil
1	C9ZZ 6A312–A	Pulley assy.–crankshaft
1	C9PZ 8620–FY	Belt–pump drive
1	40962–S2	Screw
1	45264–S100	U–nut–5/16"–18
1	95873–S100	Strap
2	352981–S8	Washer–3/8"
3	370608–S2	Screw–3/8"–16 x 3/4"
2	371041–S2	Screw–3/8"–16 x 7/8"
1	382184–S	Clip
3	383165–S2	Bolt–3/8" x 16 x 3/4"
3	384161–S100	Clamp
2	384676–S2	Screw–5/16"–18 x 7/8"
1	386286–S	Stud–3/8"–16–24 x 1 1/2"
1	386302–S2	Screw
1	386388–S100	Clip
1	386888–S100	Clip–
1		Instruction sheet

D5DZ 3A635–C

Consists of

QTY.	PART NUMBER	DESCRIPTION
1	D5DW 3A005–BB	Hose–return line insulator
1	D5DW 3A005–CA	Hose–return line
1	D1ZZ 3C511–A	Support–pump
1	D5DW 3E601–BC	Insulator assy.–hose
1	D5DZ 3A674–B	Pump assy.
1	D5DZ 3A719–E	Hose assy.–pressure
1	D0ZZ 3A732–A	Bracket assy.–pump adjusting
1	D0AZ 3A733–A	Pulley assy.–pump
1	D5DZ 3D746–A	Cooler assy.–oil
1	D4AZ 6A312–A	Pulley assy.–crankshaft
1	D1AZ 8509–B	Pulley assy.–water pump
1	C9PZ 8620–CL	Belt–pump drive (w/o–A/C)
1	C9PZ 8620–P	Belt–alternator (w/o–A/C)
1	45264–S101	U–nut–5/16"–18
3	40962–S2	Screw–5/16"–18 x 7/8"
1	95873–S100	Strap
5	370608–S2	Screw–3/8"–16 x 3/4"
1	382092–S2	Screw–7/16"–14 x 3/4"
1	383671–S2	Nut–7/8"–20
1	383722–S2	Bolt–7/16"–14 x 6 3/8"
4	384161–S100	Clamp
1	384542–S2	Washer–7/16"
2	384676–S2	Screw–5/16"–18 x 7/8"
1	386388–S100	Clip
1		Instruction sheet

D5DZ 3A635–D

Consists of

QTY.	PART NUMBER	DESCRIPTION
1	D5DW 3A005–BB	Hose–return line insulator
1	D5DW 3A005–CA	Hose–return line
1	D1AZ 3C511–A	Support–pump
1	D5DW 3E601–BC	Insulator assy.–hose
1	D5DZ 3A674–B	Pump assy.
1	D5DZ 3A719–E	Hose assy.–pressure
1	D5DZ 3A732–A	Bracket assy.–pump adjusting
1	D0AZ 3A733–A	Pulley assy.–pump
1	D5DZ 3D746–A	Cooler assy.–oil
1	D4AZ 6A312–A	Pulley assy.–crankshaft
1	D1AZ 8509–B	Pulley assy.–water pump
1	C9PZ 8620–CM	Belt–pump drive
1	C9PZ 8620–P	Belt–alternator
1	45264–S101	U–nut–5/16"–18
3	40962–S2	Screw–5/16"–18 x 7/8"
1	95873–S100	Strap
5	370608–S2	Screw–3/8"–16 x 3/4"
1	383671–S2	Nut–7/8"–20
4	384161–S100	Clamp
2	384676–S2	Screw–5/16"–18 x 7/8"
1	385049–S100	Spacer–7/16" I.D. x 1 1/16" long
1	385243–S2	Screw–7/16"–14 x 1 7/8"
1	386388–S100	Clip
1		Instruction sheet

COPYRIGHT © 1986 — FORD MOTOR COMPANY — DEARBORN, MICHIGAN

POWER STEERING KIT PARTS LISTS — Cont'd

D5DZ 3A635–E

Consists of

QTY.	PART NUMBER	DESCRIPTION
1	D5DW 3A005–AA	Hose–return line
1	D5DZ 3A674–A	Pump assy.
1	D5DZ 3A713–J	Hose assy.–return line
1	D5DZ 3A719–Z	Hose assy.–pressure line
1	D5DZ 3A732–B	Bracket–pump adjusting
1	D0OZ 3A733–C	Pulley assy.–pump
1	D5DZ 3D746–B	Cooler assy.–oil
1	C9ZZ 6A312–A	Pulley assy.–crankshaft
1	C9PZ 8620–FY	Belt–pump drive
1	45264–S101	U–nut–5/16"–18
1	95873–S100	Strap
2	352981–S8	Washer–3/8"
3	370608–S2	Screw–3/8"–16 x 3/4"
2	371041–S2	Screw–3/8"–16 x 7/8"
1	372184–S	Clip
3	383165–S2	Bolt–3/8" x 16 x 3/4"
3	384161–S100	Clamp
2	384676–S2	Screw–5/16"–18 x 7/8"
1	386286–S	Stud–3/8"–16–24 x 1 1/2"
1	386302–S2	Screw–#20–9 x .88
1		Instruction sheet

D5DZ 3A635–F

Consists of

QTY.	PART NUMBER	DESCRIPTION
1	C80Z 3C511–A	Support–P/S pump
1	D0DZ 3C511–B	Support–P/S pump–rear
1	D3DZ 3C511–A	Support–pump bracket–rear
1	D5BW 3E601–AB	Insulator assy.–hose
1	D5DZ 3A674–A	Pump assy.–P/S
1	C7SZ 3A732–A	Bracket–pump adjustment
1	C80Z 3A733–A	Pulley assy.–pump
1	C8DZ 6A312–A	Pulley assy.–crankshaft
1	C9PZ 8620–GM	Belt–P/S pump
3	34790–S2	Washer–lock–1/4"
2	40923–S2	Screw–5/16"–18 x 1/2"
2	300864–S2	Screw–1/4"–20 x 2"
1	304775–S2	Screw–1/4"–20 x 1 5/8"
1	304803–S8	Bolt–9/16"–18 x 1 3/4"
4	371041–S2	Screw–3/8"–16 x 7/8"
1	376720–S2	Nut–5/8"–18
1	382860–S2	Screw–5/16"–18 x 1"
3	383165–S2	Bolt–3/8"–16 x 3/4"
1	384161–S100	Clamp–hose–5/8"
1		Installation sketch

D5DZ 3A635–G

Consists of

QTY.	PART NUMBER	DESCRIPTION
1	D5DW 3A005–BB	Hose–return line insulator
1	D5DW 3A005–CA	Hose–return line
1	D1ZZ 3C511–A	Support–pump
1	D5DW 3E601–BE	Insulator assy.–hose
1	D5DZ 3A674–B	Pump assy.
1	D5DZ 3A719–K	Hose assy.–pressure
1	D0ZZ 3A732–A	Bracket assy.–pump adjusting
1	D0AA 3A733–A	Pulley assy.–pump
1	C9AA 3C746–C	Clamp
1	D5DZ 3D746–C	Cooler assy.–oil
1	D4AZ 6A312–A	Pulley assy.–crankshaft
1	D1AZ 8509–B	Pulley assy.–water pump
1	C9PZ 8620–CL	Belt–pump drive (w/o–A/C)
1	C9PZ 8620–P	Belt–alternator (w/o–A/C)
3	40962–S2	Screw–5/16"–18 x 7/8"
1	45264–S101	U–nut–5/16"–18
5	370608–S2	Screw–3/8"–16 x 3/4"
5	370608–S2	Screw–3/8" x 3/4"
1	382092–S2	Screw–7/16"–14 x 3/4"
1	383671–S2	Nut–7/8"–20
1	383722–S2	Bolt–7/16"–14 x 6 3/8"
4	384161–S100	Clamp
1	384542–S2	Washer–7/16"
2	384676–S2	Screw–5/16"–18 x 7/8"
1	386760–S100	Clip
1	386302–S2	Screw–#20–9 x .88
1	386888–S100	Clip
1		Instruction sheet

D5DZ 3A635–H

Consists of

QTY.	PART NUMBER	DESCRIPTION
1	D5DW 3A005–BB	Hose–return line insulator
1	D5DW 3A005–CA	Hose–return line
1	D1AA 3C511–AA	Support–pump
1	D5DW 3E601–BE	Insulator assy.–hose
1	D5DZ 3A674–B	Pump assy.
1	D5DZ 3A719–J	Hose assy.–pressure
1	D5DZ 3A732–A	Bracket assy.–pump adjusting
1	D0AZ 3A733–A	Pulley assy.–pump
1	C9AA 3C746–C	Clamp
1	D5DZ 3D746–C	Cooler assy.–oil
1	D4AZ 6A312–A	Pulley assy.–crankshaft
1	D1AZ 8509–B	Pulley assy.–water pump
1	C9PZ 8620–CM	Belt–pump drive
1	C9PZ 8620–P	Belt–alternator
3	40962–S2	Screw–5/16"–18 x 7/8"
1	45264–S101	U–nut–5/16"–18
4	55738–S2	Nut–5/16"–18
5	370608–S2	Screw–3/8"–16 x 3/4"
1	383671–S2	Nut–7/8"–20
4	384161–S100	Clamp–hose–5/8"
2	384676–S2	Screw–5/16"–18 x .88"
1	385049–S100	Spacer–7/16"
1	385243–S2	Screw–7/16"–14 x 1.88"
1	386302–S2	Screw–#20–9 x .88"
1	386760–S100	Clip
1		Instruction sheet

POWER STEERING KIT PARTS LISTS — Cont'd

D6DZ 3A635–A

Consists of

QTY.	PART NUMBER	DESCRIPTION
1	D4ZW 3A005–AD	Hose–return line
1	D6DZ 3C510–A	Bracket–hose
1	D6DZ 3A674–A	Pump assy.
1	D5DZ 3A713–J	Hose assy.–return line
1	D5DZ 3A719–E	Hose assy.–pressure
1	D6DZ 3A732–C	Bracket–pump adjusting
1	D0OZ 3A733–C	Pulley assy.–pump
1	C9AA 3C746–C	Clamp
1	D5DZ 3D746–B	Cooler assy.–oil
1	C9ZZ 6A312–A	Pulley assy.–crankshaft
1	C9DZ 8620–FY	Belt–drive
1	40962–S2	Screw–5/16"–18 x 7/8"
2	352981–S	Washer–3/8"
3	370608–S2	Screw–3/8"–16 x 3/4"
2	371041–S2	Screw–3/8"–16 x 7/8"
1	378720–S2	Nut–5/16"
2	381673–S2	Screw–3/8"
3	383165–S2	Bolt–3/8"–16 x 3/4"
3	384161–S100	Clamp–hose–5/8"
1	386286–S	Stud–3/8"–16–24 x 1 1/2"
1	386302–S2	Screw–#20–9 x .88
1	386388–S100	Clip–
1		Installation sketch

D6DZ 3A635–B

Consists of

QTY.	PART NUMBER	DESCRIPTION
1	C7SA 3A005–A	Hose–return line
1	D0OA 3A005–A	Hose–return line
1	D5DZ 3C511–A	Support–pump
1	D1DA 3E601–AA	Insulator assy.–hose
1	D6DZ 3A674–F	Pump assy.
1	D6DZ 3A719–X	Hose assy.–pressure line
1	D0ZZ 3A732–A	Bracket–pump adjusting
1	D0AZ 3A733–A	Pulley assy.–pump
1	D5DZ 3D746–B	Cooler assy.–oil
1	D3AE 6312–AA	Pulley assy.–crankshaft
1	C9PZ 8620–CL	Belt–pump drive
1	40923–S2	Screw–5/16"–18 x 1/2"
2	40962–S2	Screw–5/16"–18 x 7/8"
5	370608–S2	Screw–3/8"–16 x 3/4"
1	382092–S2	Screw–7/16"–14 x 3/4"
1	383671–S2	Nut–7/8"–10
1	383722–S2	Bolt–hex.hd.–7/16"–14 x 6 5/16"
4	384161–S100	Clamp–hose–5/8"
1	384542–S2	Washer–flat–7/16" x 3/4" thick
1	386383–S100	Clip–
1		Installation sketch

D6DZ 3A635–C

Consists of

QTY.	PART NUMBER	DESCRIPTION
1	D5DW 3A005–BB	Hose–return line
1	D5DW 3A005–CA	Hose–return line
1	D5DZ 3C511–A	Support–pump
1	D6DZ 3A674–G	Pump assy.
1	D6DZ 3A719–S	Hose assy.–pressure
1	D0ZZ 3A732–A	Bracket assy.–pump adjusting
1	D0AZ 3A733–A	Pulley assy.–pump
1	D5DZ 3D746–C	Cooler assy.–oil
1	D4AZ 6A312–A	Pulley assy.–crankshaft
1	D1AZ 8509–B	Pulley assy.–water pump
1	C9PZ 8620–P	Belt–alternator
1	C9PZ 8620–CL	Belt–pump drive
1	C9AA 3C746–C	Clamp
3	40962–S2	Screw–5/16"–18 x 7/8"
1	45264–S101	U–Nut–5/16"–18
5	370608–S2	Screw–3/8"–16 x 3/4"
1	382092–S2	Screw–7/16"–14 x 3/4"
1	383722–S2	Bolt–hex. hd.–7/16"–14 x 6 5/16"
4	384161–S100	Clamp–hose–5/8"
1	384542–S2	Washer–flat–7/16" x 3/4" thick
2	384676–S2	Screw & washer–5/16"–18 x .88"
1	386302–S2	Screw–#20–9 x .88
1	386760–S100	Clip–
1		Installation sketch

D6DZ 3A635–D

Consists of

QTY.	PART NUMBER	DESCRIPTION
1	D5DW 3A005–BB	Hose–return line
1	D5DW 3A005–CA	Hose–return line
1	D1AA 3C511–AA	Support–pump
1	D5DW 3E601–BE	Insulator assy.–hose
1	D6DZ 3A674–C	Pump assy.
1	D6DZ 3A719–B	Hose assy.–pressure
1	D5DZ 3A732–A	Bracket assy.–pump adjusting
1	D0AZ 3A733–A	Pulley assy.–pump
1	C9AA 3C746–C	Clamp
1	D5DZ 3D746–C	Cooler assy.–oil
1	D4AZ 6A312–A	Pulley assy.–crankshaft
1	D1AZ 8509–B	Pulley assy.–water pump
1	C9PZ 8620–CM	Belt–pump drive
1	C9PZ 8620–P	Belt–alternator
3	40962–S2	Screw–5/16"–18 x 7/8"
1	45264–S101	U–nut–5/16"–18
4	55738–S2	Nut–5/16"–18
5	370608–S2	Screw–3/8"–16 x 3/4"
1	383671–S2	Nut–7/8"–10
4	384161–S100	Clamp–hose–5/8"
2	384676–S2	Screw–5/16"–18 x .88
1	385049–S100	Spacer–7/16"
1	385243–S2	Screw–7/16"–14 x 1.88"
1	386302–S100	Screw–#20–9 x .88
1	386760–S100	Clip
1	386888–S100	Clip
1		Instruction sheet

COPYRIGHT © 1986 — FORD MOTOR COMPANY — DEARBORN, MICHIGAN

POWER STEERING KIT PARTS LISTS — Cont'd

D6DZ 3A635–E

Consists of

QTY.	PART NUMBER	DESCRIPTION
1	C80Z 3C511–A	Support–pump
1	D0DZ 3C511–B	Support–pump
1	D5BW 3E601–AB	Insulator assy.–hose
1	D6DZ 3A674–A	Pump assy.
1	C7SZ 3A732–A	Bracket assy.–pump adjusting
1	C80Z 3A733–A	Pulley assy.–pump
1	C8DZ 6A312–A	Pulley assy.–crankshaft
1	C9PZ 8620–GM	Belt–pump drive
3	34790–S2	Washer–lock–1/4"
2	40923–S2	Screw–5/16"–18 x 1/2"
1	300864–S2	Bolt–1/4"–20 x 2"
2	304775–S2	Bolt–1/4"–20 x 1 5/8"
1	304803–S8	Bolt–9/16"–18 x 1 3/4"
4	371041–S2	Bolt–3/8"–16 x 7/8"
1	376720–S2	Nut–5/8"–18
1	382860–S2	Bolt–5/16"–18 x 1"
1	383165–S2	Bolt–3/8"–16 x 3/4"
1	384161–S100	Clamp–hose–5/8"
1		Installation sketch

D6DZ 3A635–F

Consists of

QTY.	PART NUMBER	DESCRIPTION
1	D5DW 3A005–JA	Hose–return line
1	D6DZ 3C510–A	Bracket–tube front
1	D6DZ 3C511–B	Support pump
1	D6DZ 3A674–A	Pump assy.
1	D5DZ 3A713–J	Hose assy.–return line
1	D5DZ 3A719–E	Hose assy.–pressure line
1	D6DZ 3A732–D	Bracket–pump adjusting
1	D00Z 3A733–C	Pulley assy.–pump
1	D5DZ 3D746–C	Cooler assy.–oil
1	C9ZZ 6A312–A	Pulley assy.–crankshaft
1	C9PZ 8620–FY	Belt–drive
3	40962–S2	Screw–5/16"–18 x 7/8"
1	46009–S2	Bolt–3/8"–16 x 1 1/8"
1	55738–S2	Nut–5/16"–18
4	370608–S2	Screw–3/8"–16 x 3/4"
1	371042–S2	Screw–3/8"–16 x 7/8"
1	378720–S2	Nut–5/8"–18
3	383165–S2	Bolt–3/8"–16 x 3/4"
1	45264–S101	U–nut–5/16"–18
3	384161–S100	Clamp–hose–5/8"
2	384676–S2	Screw & washer–5/16"–18 x .88"
1	386302–S2	Screw–#20–9 x .88"
2	386388–S100	Clip
1		Installation sketch

D6DZ 3A635–G

Consists of

QTY.	PART NUMBER	DESCRIPTION
1	D6DZ 3C510–B	Bracket–hose
1	D6DZ 3A674–J	Pump assy.
1	D6DZ 3A713–C	Hose assy.–return line
1	D6DZ 3A719–Y	Hose assy.–pressure
1	D6DZ 3A732–C	Bracket–pump adjusting
1	D00Z 3A733–C	Pulley assy.–crankshaft
1	C9ZZ 6A312–A	Pulley assy.–crankshaft
1	C9PZ 8620–FY	Belt–drive
1	352981–S8	Washer–3/8"
3	370608–S2	Screw–3/8"–16 x 3/4"
1	371041–S2	Screw–3/8"–16 x 7/8"
1	381673–S2	Screw–3/8"
3	383165–S2	Bolt–3/8"–16 x 3/4"
1	383671–S2	Nut–7/8"
1	384161–S100	Clamp–hose–5/8"
1	386302–S2	Screw–#20–9 x .88"
1	386388–S100	Clip–
1		Installation sketch

D6DZ 3A635–H

Consists of

QTY.	PART NUMBER	DESCRIPTION
1	D6DW 3A005–BA	Hose–return line
1	D5DZ 3C511–A	Support–pump
1	D6BW 3E601–AB	Insulator assy.–hose
1	D6DZ 3A674–J	Pump assy.
1	D6DX 3A719–X	Hose assy.–pressure line
1	D0ZZ 3A732–A	Bracket–pump adjusting
1	D0AZ 3A733–A	Pulley assy.–pump
1	D4AZ 3A612–A	Pulley assy.–crankshaft
1	C90Z 8509–D	Pulley assy.–water pump
1	C9PZ 8620–CL	Belt–pump drive
1	C9PZ 8620–P	Belt–alternator
1	40923–S2	Screw–5/16"–18 x 1/2"
1	40962–S2	Screw–5/16"–18 x 7/8"
5	370608–S2	Screw–3/8"–16 x 3/4"
1	382092–S2	Screw–7/16"–14 x 3/4"
1	383671–S2	Nut–7/8"–10
1	383722–S2	Bolt–hex. hd.–7/16"–14 x 6 5/16"
2	384161–S100	Clamp–hose–5/8"
1	384542–S2	Washer–flat–7/16" x 3/4" thick
1	386388–S100	Clip–
1		Installation sketch

POWER STEERING KIT PARTS LISTS — Cont'd

D6DZ 3A635–J

Consists of

QTY.	PART NUMBER	DESCRIPTION
1	D6DW 3A005–DA	Hose–return line
1	D5DZ 3C511–A	Support–pump
1	D6DZ 3A674–J	Pump assy.
1	D6DZ 3E601–HA	Insulator assy.–hose
1	D6DZ 3A719–S	Hose assy.–pressure
1	D0ZZ 3A732–A	Bracket assy. pump adjusting
1	D0AZ 3A733–A	Pulley assy.–pump
1	D4AZ 6A312–A	Pulley assy.–crankshaft
1	D1AZ 8509–B	Pulley assy.–water pump
1	C9PZ 8620–CL	Belt–pump drive
1	C9PZ 8620–P	Belt–alternator
5	370608–S2	Screw–3/8"–16 x 3/4"
1	382092–S2	Screw–7/16"–14 x 3/4"
1	383722–S2	Bolt–hex. hd.–7/16"–14 x 6 5/16"
1	383671–S2	Nut–7/8"
2	384161–S100	Clamp–hose–5/8"
1	384542–S2	Washer–flat–7/16" x 3/4" thick
3	386302–S2	Screw–#20–9 x .88"
1	386760–S100	Clip–
1		Installation sketch

D6DZ 3A635–K

Consists of

QTY.	PART NUMBER	DESCRIPTION
1	D6DW 3A005–DA	Hose–return line
1	D1AA 3C511–A	Support–pump
1	D6DW 3E601–HA	Installation assy.–hose
1	D6DZ 3A674–J	Pump assy.
1	D6DZ 3A719–J	Hose assy.–pressure
1	D5DZ 3A732–A	Bracket assy.–pump adjusting
1	D0AZ 3A733–A	Pulley assy.–pump
1	D4AZ 6A312–A	Pulley assy.–crankshaft
1	D1AZ 8509–B	Pulley assy.–water pump
1	C9PZ 8620–CM	Belt–pump drive
1	C9PZ 8620–P	Belt–alternator
1	55738–S2	Nut–3/8"–16
5	370608–S2	Screw–3/8"–16 x 3/4"
1	383671–S2	Nut–7/8"–10
2	384161–S100	Clamp–hose–5/8"
1	385049–S100	Spacer–7/16"
1	385243–S2	Screw–7/16"–14 x 1.88"
3	386302–S2	Screw–#20–9 x .88"
1	386760–S100	Clip–
1		Installation sketch

D6DZ 3A635–L

Consists of

QTY.	PART NUMBER	DESCRIPTION
1	D6DZ 3C511–C	Support–pump
1	D6DZ 3A674–J	Pump assy.
1	D6DZ 3A713–C	Hose assy.–return line
1	D6DZ 3A719–Y	Hose assy.–pressure line
1	C7SZ 3A732–A	Bracket assy.–pump adjusting
1	C8OZ 3A732–A	Bracket assy.–pump adjusting
1	C8OZ 3A733–A	Pulley assy.–pump
1	C9PZ 8620–GM	Belt–pump drive
3	34790–S2	Washer–lock–1/4"
2	300864–S2	Bolt–1/4"–20 x 2"
1	304775–S2	Bolt–1/4"–20 x 1 5/8"
1	304803–S8	Bolt–9/16"–18 x 1 3/4"
4	371041–S2	Bolt–3/8"–16 x 7/8"
1	382860–S2	Bolt–5/16–18 x 1"
3	383165–S2	Bolt–3/8"–16 x 3/4"
1	383671–S2	Nut–7/8"
1	384161–S100	Clamp–hose–5/8"
1	386302–S2	Screw–#20–9 x .88"
1	386388–S10	Clip
1		Installation sketch

D6DZ 3A635–M

Consists of

QTY.	PART NUMBER	DESCRIPTION
1	D6DZ 3C510–B	Bracket
1	D6DZ 3A674–J	Pump assy.
1	D6DZ 3A713–C	Hose assy.–return line
1	D6DZ 3A719–Y	Hose assy.–pressure line
1	D6DZ 3A732–C	Bracket–pump adjusting
1	D0OZ 3A733–C	Pulley assy.–pump
1	C9ZZ 6A312–A	Pulley assy.–crankshaft
1	C9PZ 8620–FY	Belt–drive
1	352981–S8	Washer–3/8"
3	370608–S2	Screw–3/8"–16 x 3/4"
1	371041–S2	Screw–3/8"–16 x 7/8"
1	381673–S2	Bolt–3/8"
3	383165–S2	Bolt–3/8"–16 x 3/4"
1	384161–S100	Clamp–hose–5/8"
1	386302–S2	Screw–#20–9 x .88"
1	386388–S100	Clip–
1		Installation sketch

COPYRIGHT © 1986 — FORD MOTOR COMPANY — DEARBORN, MICHIGAN

POWER STEERING KIT PARTS LISTS — Cont'd

D7DZ 3A635–A

Consists of

QTY.	PART NUMBER	DESCRIPTION
1	D6DZ 3C511–B	Support–pump
1	D7DZ 3D600–A	Spacer–pump
1	D6DZ 3A674–J	Pump assy.
1	D70Z 3A732–A	Bracket assy.–pump adjusting
1	D00Z 3A733–C	Pulley assy.–pump
1	D7DZ 3A713–A	Hose assy.–return
1	D7DZ 3A719–A	Hose assy.–pressure
1	D4VW 3C746–AA	Clamp–hose
1	C9ZZ 6A312–A	Pulley assy.–crankshaft
1	C9PZ 8620–FY	Belt–pump drive
1	55738–S2	Nut–3/8"–16 hex
1	56541–S2	Screw–3/8"–16 x 1 1/4"
1	370608–S2	Screw–3/8"–16 x 3/4"
1	382802–S2	Nut–3/8"–16
1	384161–S100	Clamp–hose
1		Installation sketch

D7DZ 3A635–B

Consists of

QTY.	PART NUMBER	DESCRIPTION
1	D7DZ 3C511–A	Support–pump
1	D7DZ 3A674–J	Pump assy.
1	D7DZ 3A713–A	Hose assy.–return
1	D7DZ 3A719–A	Hose assy.–pressure
1	C7SZ 3A732–A	Bracket–adjustment
1	C80Z 3A732–A	Support–pump
1	C80Z 3A733–A	Pulley assy.–pump
1	D4VW 3C746–AA	Clamp–hose
1	C8DZ 6A312–A	Pulley assy.–crankshaft
1	C9PZ 8620–GM	Belt–pump drive
5	34790–S2	Washer–1/4" Lock
2	300864–S2	Bolt–1/4"–20 x 2 1/8"
1	304803–S8	Bolt–9/16"–18 x 1 3/4"
1	371041–S2	Bolt–3/8"–16 x 7/8"
3	383165–S2	Bolt–3/8"–16 x 3/4"
1	383671–S2	Nut–7/8"–20
1	382860–S2	Bolt–3/8"–16 x 6 3/8"
1	384161–S100	Clamp–hose–5/8"
1		Installation sketch

D7DZ 3A635–C

Consists of

QTY.	PART NUMBER	DESCRIPTION
1	D6DW 3A005–DA	Hose–return
1	D1AZ 3D511–A	Support–pump
1	D6DW 3E601–HA	Insulator assy. hose
1	D6DZ 3A674–J	Pump assy.
1	D7DZ 3A719–D	Hose assy.–pressure
1	D5DZ 3A732–A	Bracket–adjusting
1	D0AZ 3A733–A	Pulley assy.–pump
1	D4AZ 6A312–A	Pulley assy.–crankshaft
1	D1AZ 8509–B	Pulley assy.–water pump
1	C9PZ 8620–CM	Belt–pump
1	C9PZ 8620–P	Belt–alternator
4	55738–S2	Nut–3/8"
5	370608–S2	Screw–3/8"–16 x 3/4"
1	383671–S2	Nut–7/8"–20
2	384161–S100	Clamp–hose
1	385049–S100	Spacer–7/16" x 1"
1	385243–S2	Screw–7/16"–14 x 1 7/8"
3	386302–S2	Screw–#20–9 x 7/8"
1	386760–S100	Clip–7/8" I.D.
1		Installation sketch

D8DZ 3A635–B

Consists of

QTY.	PART NUMBER	DESCRIPTION
1	D3AA 3A005–C	Hose–return
1	D80Z 3C511–A	Support–pump
1	D6DZ 3494–C	Hose–pressure
1	D6DW 3E506–AA	Clamp (Improvise)
1	D5DZ 3C510–F	Bracket
1	D8AZ 3C510–A	Bracket
1	D6DW 3E596–AA	Bracket (Improvise)
1	D1ZZ 3A609–A	Insulator
1	D00Z 3A610–A	Bracket
1	D6DZ 3A713–E	Hose–return
1	40923–S	Bolt–5/16"–18 x 1/2"
1	D9FZ 3A674–A	Pump assy.
1	D8DZ 3C510–A	Bracket
1	D8DZ 3A719–E	Hose–pressure
1	D8FZ 3A609–A	Insulator
1	D8AZ 3A732–A	Bracket
1	D5ZZ 3A733–A	Pulley–pump
1	D4AZ 6A312–A	Pulley–crankshaft
1	C90Z 8509–D	Pulley–water pump
1	C9PZ 8620–CM	Belt–pump
1	C9PZ 8620–P	Belt–alternator
3	370608–S2	Screw–3/4"–16 x 3/4"
1	383721–S2	Bolt–7/16"–14 x 6 3/16"
2	384161–S100	Clamp (Improvise)
3	386302–S2	Screw–#20–9 x 7/8"
1	387765–S	Spacer–7/16" x 3/4" thick
3	N800199–S2	Screw–M10 x 1.5"
1		Instruction sheet

4001 REAR AXLE ASSY.

HOW TO FIND REAR AXLE PARTS

1. Determine the basic number of the part.
A. Use the Illustration Index to find a detailed view of the rear axle on the unit being repaired and identify the part needed.
b. Use the Alphabetical Index.
2. Determine the axle model tag number.
The picture below shows the location of axle model identification tags.
3. Find the axle model tag number in the Identification Chart which starts on the next page and note the information given there about ratio, ring gear, type, wheel bearings, differential bearings and shaft splines.
4. Turn to the Group Number of the part needed and select the correct part, using the information on ring gear size, type, etc.

MODEL IDENTIFICATION TAG

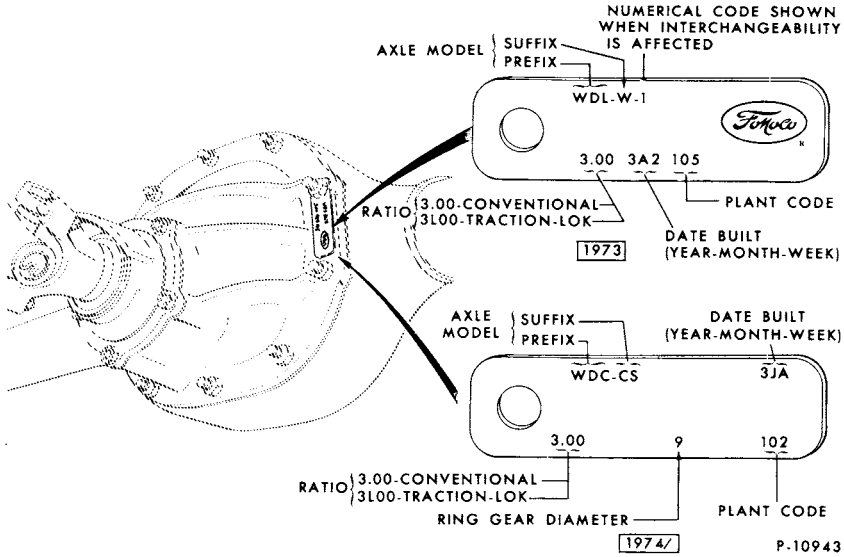

● CODE IDENTIFICATION CHART

The chart on the following page is in alphabetical order. Axle model suffixes with numerical codes are shown where interchangeability is affected. This chart will assist in determining the application for rear axle components which are cataloged throughout Sections 40 and 46 by size, description, ratio, type of differential or reference to size of ring gear, wheel bearings and differential bearings. Abbreviations used in the "type" , "whl. brg." and "diff. brg. & cup" columns have the following meanings:

TYPE

C . . . . . Conventional–	2 pinion– non–locking
C4 . . . . Conventional–	4 pinion– non–locking
T . . . . . Traction lock–	2 pinion– locking
T4 . . . . Traction lock–	4 pinion– locking

COPYRIGHT © 1986 — FORD MOTOR COMPANY — DEARBORN, MICHIGAN

1973/79 LINCOLN–MERCURY CARS

WHEEL BEARING					DIFFERENTIAL BEARING					
						CONE–ROLLER			CUP	
CODE	TYPE	PART NO.	I.D. (Inches)	O.D. (Inches)	CODE	TYPE	PART NO.	I.D. (Inches)	PART NO.	O.D. (Inches)
R	Straight roller	C7AZ 1225–A	1 1/8	2 1/4	XS	Extra	B7C 1201–A	1 3/8	B7C 1202–A	2 3/16
M	Medium	D20Z 1225–B	1 3/8	2 13/16	SL	Slim line	C9AZ 4221–A (#LM102949) 8.7RG 1973–74	1 25/32	C9AZ 4222–A (#LM102910)	2 57/64
S	Small	D5DZ 1225–A	1 3/8	2 53/64	M	Medium	B7A 4221–A (#LM501349) (#HM503049)	1 5/8	B7A 4222–A (#LM501310)	2 57/64
S	Small	D8DZ 1225–A	1 3/8	2 53/64						
L	Large	C9AZ 1225–A	1 17/32	3 5/32						
L	Large	D5DZ 1225–B	1 17/32	3 5/32	M	Medium	B7A 4221–A (#LM501349) 7.5 RG	1 5/8	C6TZ 4222–A	
L	Large	D8AZ 1225–A	1 17/32	3 9/64						
TR	Tapered roller	D5AZ 1225–A	1 9/16	3 9/64						
					L	Large	B7A 4221–B (#LM603049)	1 25/32	B7A 4222–B (#LM603011)	3 1/16
					L	Large	B7A 4221–B (#LM603049)	1 25/32	D9AZ 4222–A (#LM603012)	3 1/16
					XL	Extra large	B7T 1201–A (#25523)	1 51/64	8M 4222	3 17/64

IDENTIFICATION CHART

AXLE MODEL	YEAR	CAR LINE	RATIO	RING GEAR O.D. (Inches)	● TYPE	● WHL. BRG.	● DIFF. BRG. & CUP	SHAFT SPLINES	AXLE MODEL	YEAR	CAR LINE	RATIO	RING GEAR O.D. (Inches)	● TYPE	● WHL. BRG.	● DIFF. BRG. & CUP	SHAFT SPLINES
NOTE:					**●Refer to page 1 of section 40 for an explanation of the codes shown.**												
4001					**REAR AXLE ASSY. — Cont'd**												
WDC–CA4,5	73	A,Y	2.75	9	C	L	SL	28	WDC–EH,EH1	76/78	A,Y	2.75	9	C	TR	SL	28
WDC–CK4,5	73/76	A,Y	3.25	9	C	L	SL	28	WDC–EJ	76	A,Y	2.75	9	C4	TR	SL	28
WDC–CN	74	A,Y	3.25	9	C	L	SL	28	WDC–EK,EK1	77/78	A	3.00	9	C	TR	SL	28
WDC–CR4,5	73/76	A,Y	3.25	9	C4	L	SL	28	WDC–EL,EL1	77/78	A	2.50	9	C	L	SL	28
WDC–CU5	73/76	A,Y	2.75	9	C4	L	SL	28	"Before 3/15/78"								
WDC–CY5	73	A	2.75	9	C	L	SL	28	WDC–EL	78	A	2.47	9	C	L	SL	28
WDC–CZ5	73/74	A	3.25	9	C4	L	SL	28	"From 3/15/78"								
WDC–DA	73	A,Y	3.00	9	C4	L	SL	28	WDC–EM,EM1	77/78	A	2.50	9	C	TR	SL	28
	74/76	A,Y	3.00	9	C4	TR	SL	28	"Before 3/15/78"								
WDC–DB5	73/76	A	2.75	9	C4	L	SL	28	WDC–EM	78	A	2.47	9	C	TR	SL	28
WDC–DD	74	A	3.25	9	C4	L	SL	28	"From 3/15/78"								
WDC–DF	73	A	3.00	9	C	L	SL	28	WDC–FB	76	A,Y	3.25	9	C	TR	SL	28
WDC–DH	74/76	A,Y	2.75	9	C4	L	SL	28	WDW–AA	75/78	G	2.79	8	C	S	M	28
WDC–DJ	74/76	A,Y	3.25	9	C4	TR	SL	28	WDW–AB	75/78	G	2.79	8	C	S	M	28
WDC–DK	74	A,Y	2.75	9	C4	L	SL	28	WDW–AD	77	G	3.40	8	C	S	SL	28
WDC–DL	74/76	A,Y	3.25	9	C4	TR	SL	28	WDW–AF	79	G	2.79	8	C	S	M	28
WDC–DM	74	A,Y	3.00	9	C	TR	SL	28	WDW–T	73	G	2.79	8	C	M	M	28
WDC–DN	74/76	A,Y	3.25	9	C	TR	SL	28	WDW–U,U1	73/78	G	3.00	8	C	M	M	28
WDC–DR	74/76	A,Y	3.00	9	C4	L	SL	28	WDW–Z	75/79	G	3.00	8	T	S	M	28
WDC–DT	75	A,Y	3.00	9	C4	TR	SL	28	WDX–A	75/76	G	2.75	9	C	L	SL	28
WDC–DU	75/76	A,Y	3.00	9	C4	TR	SL	28	WDX–B	75	G	3.00	9	C		SL	28
WDC–DV	75	A,Y	3.25	9	C4	TR	SL	28	WDX–D	77/78	V	2.50	9	C	L	SL	28
WDC–DW	78	A	2.75	9	C	L	SL	28	WDX–E,E1	77/78	V	2.75	9	C	L	SL	28
WDC–DW,DW1	75/77	A,Y	3.00	9	C	L	SL	28	WDX–F	77	V	3.00	9	C	L	SL	28
WDC–DX	75	A,Y	3.00	9	C	TR	SL	28	WDX–G	78	V	2.50	9	C	L	SL	28
WDC–DY	75/76	A,Y	2.75	9	C4				"Before 3/15/78"								
WDC–DZ	75/76	A,Y	2.75	9	C4				WDX–G1,G2	78/79	V	2.47	9	C	L	SL	28
WDC–EA	75/77	A,Y	2.75	9	C	TR	SL	28	"From 3/15/78"								
WDC–EB,EB1	76/78	A,Y	2.75	9	C	TR	SL	28	WDX–K	79	V	2.75	9	C	L	SL	28
WDC–EE,EE1	76/78	A,Y	3.00	9	C	TR	SL	28	WDY–A5	73	C	3.00	8	C	L	M	28
WDC–EG	76/78	A,Y	3.00	9	C	TR	SL	28		74	C	3.00	8	C	TR	M	28

IDENTIFICATION CHART

NOTE: ●Refer to page 1 of section 40 for an explanation of the codes shown.

4001 REAR AXLE ASSY. — Cont'd

AXLE MODEL	YEAR	CAR LINE	RATIO	RING GEAR O.D. (Inches)	● TYPE	● WHL. BRG.	● DIFF. BRG. & CUP	SHAFT SPLINES
WDY–B5	73	C	3.25	8	C	L	M	28
	74	C	3.25	8	C	TR	M	28
WDY–F5	73/74	C	3.00	8	C	L	M	28
WDY–G5	73	C	2.79	8	C	L	M	28
WDY–J5	73	C	2.79	8	C	L	M	28
WDY–K	73/74	C	3.25	8	C	L	M	28
WDY–M	74	C	3.00	8	C	L	M	28
WDY–W	75/78	L	3.00	8	C	M	M	28
WDY–X	75	L	2.79	8	C	M	M	28
WDY–AJ	78	L	3.40	8	C	S	M	28
WDY–AL	78	L	3.40	8	C	S	M	28
WDY–AM	78	L	3.40	8	C	S	M	28
WEB–A5	74	C	3.00	9	C4	TR	SL	28
WEB–AD5	73	C	2.75	9	C	L	SL	28
	74	C,F	2.75	9	C	TR	SL	28
WEB–AF5	73	C	3.25	9	C4	L	SL	28
	74/76	C	3.25	9	C4	TR	SL	28
WEB–AG5	73	C	3.00	9	C	L	SL	28
	74/76	C	3.00	9	C	TR	SL	28
WEB–AH5	73	C	3.25	9	C4	L	SL	28
	74/76	C,F	3.25	9	C4	TR	SL	28
WEB–AJ5	73	C	3.00	9	C	L	SL	28
WEB–AM5	73	C	2.75	9	C	L	SL	28
	74	C	2.75	9	C	TR	SL	28
WEB–AN	73	C	3.00	9	C4	L	SL	28
WEB–AR	73/74	C	3.25	9	C4	L	SL	28
	75/76	C,F	3.25	9	C4	L	SL	28
WEB–AS	74	C	3.00	9	C4	TR	SL	28
	75/76	C	3.00	9	C4	TR	SL	28
WEB–AT	74/76	C,F	2.75	9	C4	L	SL	28
WEB–AU	74/76	C	2.75	9	C4	TR	SL	28
WEB–AV	74/76	C,F	3.00	9	C	L	SL	28
WEB–AY	74/76	C,F	3.00	9	C4	L	SL	28
WEB–BA	74	C	2.75	9	C	L	SL	28
WEB–BB	74	C	2.75	9	C4	L	SL	28
WEB–BC	75/	C,F	2.75	9	C	L	SL	28
WEB–BD	75/76	C	2.75	9	C	L	SL	28
WEB–BF	77/78	F	2.50	9	C	L	SL	28
"Before 5/20/78"								
WEB–BF								
"From 5/20/78"	78/79	F	2.47	9	C	L	SL	28
WEB–BH	77/78	F	2.50	9	C	TR	SL	28
"Before 5/20/78"								
WEB–BH	78/79	F	2.47	9	C	TR	SL	28
"From 5/20/78"								
WEB–BJ	76/78	C,F	3.00	9	C	L	SL	28
WEB–BK	78	F	3.00	9	C	L	SL	28
WEB–BL	76/78	C,F	3.00	9	C	TR	SL	28
WEB–BM	77/79	F	2.75	9	C	L	SL	28
WEB–BN	77/79	F	2.75	9	C	TR	SL	28
WEB–BR	78/79	F	3.00	9	C	L	SL	28
WEB–BS	78	B	2.50	9	C	TR	SL	28
WEB–BT	78	B	2.75	9	C	TR	SL	28
WEC–AC5	73	C	3.50	9	C4	L	SL	28
	74	C	3.50	9	C4	TR	SL	28
WEC–AD	73	C	3.00	9	C4	L	SL	28
	74/76	C	3.00	9	C4	TR	SL	28
WEC–AF	74	C	3.50	9	C4	L	SL	28
WEC–V5	73/74	C,F	3.50	9	C4	L	SL	28
WEC–Z5	73	C	3.25	9	C4	L	SL	28
	74	C	3.25	9	C4	TR	SL	28
WER–F5	73	A,Y	2.75	8.7	C	R	SL	28
WER–H5	73	A,Y	3.25	8.7	C	R	SL	28
WER–J5	73	A,Y	2.75	8.7	C	R	SL	28
WER–K	74	A	3.07	8.7	C	R	SL	28
WER–P	75/76	A,Y	3.07	8.7	C	R	SL	28
WER–R	75	A,Y	3.07	8.7	C	R	SL	28
WER–S	75	A,Y	3.07	8.7	C	R	SL	28
WER–T	75/76	G	3.07	8.7	C	R	SL	28
WER–U	75/76	A,Y	2.75	8.7	C	R	SL	28
WER–V	75/78	G	2.75	8.7	C	R	SL	28
WER–W	75/76	A	2.75	8.7	C	R	SL	28
WER–AA	77/78	A	2.47	8.7	C	R	SL	28
WER–AB	77/78	A	2.47	8.7	C	R	SL	28
WER–AC	77/78	G	2.47	8.7	C	R	SL	28
WER–AD	78	A	2.75	8.7	C	R	SL	28
WES–AD,	73	F	3.25	9	C	M	SL	28
AD3								
WES–AK2	73	F	3.50	9	C4	M	SL	28
WES–T1	73	F	2.75	9	C	M	SL	28
WFA–AA	74/78	C,F	3.00	9	T4	TR	SL	28
WFA–AB	74	C	2.75	9	T4	L	SL	28
WFA–AD,	76	C,F	2.75	9	T4	TR	SL	28
AD3								
WFA–AE	76	C,F	2.75	9	T4	TR	SL	28
WFA–AF	77	F	2.50	9	T4	L	SL	28
WFA–AG	77	F	2.50	9	T4	TR	SL	28
WFA–AH	76/78	C	3.00	9	T4	TR	SL	28
WFA–AK	77	F	2.50	9	T4	TR	SL	28
WFA–AL	77/79	F	2.75	9	T4	L	SL	28
"Before 10/15/78"								
WFA–AL	79	F	2.75	9	T	L	SL	28
"From 10/15/78"								
WFA–AM	77	F	2.75	9	T4	TR	SL	28
WFA–AN	77	F	2.75	9	T4	TR	SL	28
WFA–AR	78/79	F	2.75	9	T4	TR	SL	28
"Before 10/15/78"								
WFA–AR	79	F	2.75	9	T	TR	SL	28
"From 10/15/78"								
WFA–AS	78	F	2.50	9	T4	L	SL	28
"Before 5/20/78"								
WFA–AS	78/79	F	2.47	9	T4	L	SL	28
"From 5/20/78								
to 10/15/78"								
WFA–AS	79	F	2.47	9	T	L	SL	28
"From 10/15/78"								
WFA–AT	78/79	F	2.75	9	T4	TR	SL	28
"Before 10/15/78"								
WFA–AT	79	F	2.75	9	T	TR	SL	28
"From 10/15/78"								

COPYRIGHT © 1986 — FORD MOTOR COMPANY — DEARBORN, MICHIGAN

IDENTIFICATION CHART

NOTE: ●Refer to page 1 of section 40 for an explanation of the codes shown.

4001 REAR AXLE ASSY. — Cont'd

AXLE MODEL	YEAR	CAR LINE	RATIO	RING GEAR O.D. (Inches)	● TYPE	● WHL. BRG.	● DIFF. BRG. & CUP	SHAFT SPLINES
WFA–AU	78	F	2.50	9	T4	L	SL	28
"Before 5/20/78"								
WFA–AU	78/79	F	2.47	9	T4	TR	SL	28
"From 5/20/78								
to 10/15/78"								
WFA–AU	79	F	2.47	9	T	TR	SL	28
"From 10/15/78"								
WFA–AV	78	F	2.50	9	T4	TR	SL	28
WFA–AV	79	F	2.47	9	T4	TR	SL	28
"Before 10/15/78"								
WFA–AV	79	F	2.47	9	T	TR	SL	28
"From 10/15/78"								
WFA–L4,5	73/74	C,F	2.75	9	T4	L	SL	28
WFA–M5	73	C	3.25	9	T4	L	SL	28
	74/76	C	3.25	9	T4	TR	SL	28
WFA–N5	73	C	3.00	9	T4	L	SL	28
WFA–R5	73	C	3.25	9	T4	L	SL	28
	74	C	3.25	9	T4	TR	SL	28
	75/76	C,F	3.25	9	T4	TR	SL	28
WFA–S5	73	C	3.00	9	T4	L	SL	28
WFA–V5	73	C	2.75	9	T4	L	SL	28
	74/76	C	2.75	9	T4	TR	SL	28
WFA–Y	73	C	3.25	9	T4	L	SL	28
	74	C	3.25	9	T4	TR	SL	28
	75	C,F	3.25	9	T4	TR	SL	28
WFA–Z,Z3	74/78	C,F	3.00	9	T4	L	SL	28
WFB–C	73	F	3.25	9	T4	M	SL	28
WFB–D2	73	F	2.75	9	T4	M	SL	28
WFB–E	75/76	G	3.00	9	T	L	SL	28
WFB–F	75/76	G	3.00	9	T	L	SL	28
WFB–G	77/78	G	2.50	9	T4	L	SL	28
"Before 3/15/78"								
WFB–G								
"From 3/15/78"	78	G	2.47	9	T4	L	SL	28
WFB–K	77/78	V	2.50	9	T4	L	SL	28
WFB–L	77	V	2.50	9	C		SL	28
WFB–M	77	V	2.75	9	C		SL	28
WFB–AM	77	V	2.75	9	T4	L	SL	28
WFC–AA,AA1	74	C	3.50	9	T4	L	SL	28
WFC–C5	74	D	2.75	9	T4	TR	SL	28
WFC–J5	73	C	3.50	9	T4	L	SL	28
WFC–L5	73/74	C,F	3.50	9	T4	L	SL	28
WFC–T5	73/74	C	3.25	9	T4	L	SL	28
	74	C	3.25	9	T4	TR	SL	28
WFC–Y	73	C	3.00	9	T4	L	SL	28
	74/76	C	3.00	9	T4	TR	SL	28
WFC–Z	73	C	3.50	9	T4	L	SL	28
WFD–F3	73	F	3.50	9	T4	M	SL	28
WFD–R	76	G	3.00	8	T	S	M	28
WFG–A5	73/74	A,Y	2.75	9	T	L	SL	28
WFG–AA, AA1	74/	A,Y	2.75	9	T4	TR	SL	28
WFG–AB	74/76	A,Y	3.25	9	T4	TR	SL	28
WFG–AC	74	A,Y	2.75	9	T4	L	SL	28
WFG–AD	74/76	A,Y	3.25	9	T4	TR	SL	28
WFG–AE	74/76	A,Y	3.00	9	T	TR	SL	28
WFG–AF	74	A,Y	2.75	9	T	L	SL	28
WFG–AG	74/76	A,Y	3.00	9	T4	L	SL	28
WFG–AK	75	A,Y	3.00	9	T4	TR	SL	28
WFG–AL,AL1	75/78	A,Y	3.00	9	T4	TR	SL	28
WFG–AM	75	A,Y	3.25	9	T4	TR	SL	28
WFG–AN	75/76	A,Y	2.75	9	T4	TR	SL	28
WFG–AR	75/76	A,Y	2.75	9	T			
WFG–AS	75/76	A,Y	2.75	9	T	L	SL	28
WFG–AT	75/76	A,Y	2.75	9	T	L	SL	28
WFG–AU	75/76	A,Y	3.00	9	T	TR	SL	28
WFG–AZ	76	A,Y	2.75	9	T	TR	SL	28
WFG–B	77	G	2.50	9	T4	L	SL	28
WFG–BA	76	A,Y	3.25	9	T	TR	SL	28
WFG–BG	76	A,Y	2.75	9	T4	TR	SL	28
WFG–BH	77	A	3.00	9	T4	TR	SL	28
WFG–BJ,BJ1	77/78	A	2.75	9	T4	L	SL	28
WFG–BK1	78	A	2.50	9	T4	L	SL	28
"Before 3/15/78"								
WFG–BK	78	A	2.47	9	T4	L	SL	28
"From 3/15/78"								
WFG–BL	78	A	2.50	9	T4	L	SL	28
WFG–BM	78	A	2.75	9	L	TR	SL	28
WFG–EC	76	A	2.75	9	T	TR	SL	28
WFG–C5	73/74	A,Y	3.25	9	T	L	SL	28
WFG–E5	73/74	A,Y	3.25	9	T4	L	SL	28
WFG–K5	73/76	A	3.00	9	T	L	SL	28
WFG–M5	73	A	2.75	9	T	L	SL	28
WFG–N5	73/74	A,Y	3.25	9	T4	L	SL	28
WFG–R	73	A,Y	3.00	9	T4	L	SL	28
	74/77	A,Y	3.00	9	T4	TR	SL	28
WFG–S5	73/74	A	2.75	9	T4	L	SL	28
WFG–T	73	A	2.75	9	T4	L	SL	28
WFG–U	74	A,Y	3.25	9	T4	L	SL	28
WFG–Y	73/76	A,Y	3.00	9	T	L	SL	28
WFG–Z	74/76	A,Y	3.25	9	T	L	SL	28
WFK–A5	73	C	3.00	8	T	L	M	28
	74	C	3.00	8	T	TR	M	28
WFK–B5	73	C	3.25	8	T	L	M	28
	74	C	3.25	8	T	TR	M	28
WFK–C5	73/74	C	3.00	8	T	L	M	28
WFK–D	73/74	C	3.25	9	T	L	M	28
WFK–F	74	C	3.00	8	T	L	M	28
WFK–M	75	L	3.40	8	T			
WFK–P	75/76	L	3.40	8	T			
WFV–A5	74	K	3.25	9	T4	TR	SL	28
WFV–B5	74	K	3.25	9	T4	TR	SL	28
WFV–D5	73	K	2.75	9	T4	L	XL	28
	74/76	K	2.75	9	T4	TR	SL	28
WFV–E	73	K	3.00	9	T4	L	XL	28
WFV–F	73	K	3.25	9	T4	L	XL	28
WFV–F5	74	K	3.25	9	T4	TR	SL	28
WFV–S	77	K	3.00	9	T4	TR	SL	28
WFV–M	74/76	K	3.00	9	T4	TR	SL	28

IDENTIFICATION CHART

NOTE: ●Refer to page 1 of section 40 for an explanation of the codes shown.

4001 REAR AXLE ASSY. — Cont'd

AXLE MODEL	YEAR	CAR LINE	RATIO	RING GEAR O.D. (Inches)	● TYPE	● WHL. BRG.	● DIFF. BRG. & CUP	SHAFT SPLINES
WFV–P	75/78	K	300	9	T4	TR	SL	28
WFV–T,T1	77/79	K	2.75	9	T4	TR	SL	28
"Before 10/15/78"								
WFV–T	79	K	2.75	9	T	TR	SL	28
"From 10/15/78"								
WFV–U	78	K	2.50	9	T4	TR	SL	28
"Before 5/1/78"								
WFV–U								
"From 5/1/78"	78	K	2.47	9	T4	TR	SL	28
WFY–A,A1	78/79	D	2.75	9	T4	L	SL	28
"From 3/15/78								
to 10/15/78"								
WFY–A1	79	D	2.75	9	T	L	SL	28
"From 10/15/78"								
WFY–A1	73	D	2.75	9	T4	L	XL	28
WFY–A,A1,A5	74/78	D	2.75	9	T4	TR	SL	28
"Before 3/15/78"								
WFY–B1	73	D	3.00	9	T4	L	XL	28
WFY–B5	74/76	D	3.00	9	T4	TR	SL	28
WFY–C	73	D	2.75	9	T4	L	XL	28
WFY–F,F5	74/76	D	3.00	9	T4	TR	SL	28
WFY–G	75/76	D	3.[illegible]0	9	T4	TR	SL	28
WFY–H	76	D	2.75	9	T4	TR	SL	28
WFY–K,K1	77/78	D	3.00	9	T4	TR	SL	28
"Before 3/15/78"								
WFY–K	78	D	3.00	9	T4	L	SL	28
"From 3/15/78"								
WFY–N	77	D	3.00	9	T4	TR	SL	28
WGB–K	77	D	2.50	9	C	TR	SL	28
WGB–K5	73	K	2.75	9	C4	L	SL	28
	74/76	K	2.75	9	C4	TR	SL	28
WGB–M	73	K	3.00	9	C4	M	SL	28
WGB–N	73	K	3.25	9	C4	M	SL	28
WGB–N5	74	K	3.25	9	C4	TR	SL	28
WGB–U	74/78	K	3.00	9	C4	TR	SL	28
WGB–V,V1	75/79	K	2.75	9	C4	TR	SL	28
WGB–W	75/77	K	3.00	9	C4	TR	SL	28
WGB–W,W1	78/79	K	3.00	9	C	TR	SL	28
WGB–X	77	K	2.75	9	C4	TR	SL	28
WGB–AA	76/77	K	3.00	9	C	TR	SL	28
WGB–AB,AB1	77/78	K	2.50	9	C	TR	SL	28
"Before 5/1/78"								
WGB–AB,AB1	78/79	K	2.47	9	C	TR	SL	28
"From 5/1/78"								
WGB–AC	76/78	K	3.00	9	C	TR	SL	28
WGB–AD,AD1	77/79	K	2.75	9	C	TR	SL	28

AXLE MODEL	YEAR	CAR LINE	RATIO	RING GEAR O.D. (Inches)	● TYPE	● WHL. BRG.	● DIFF. BRG. & CUP	SHAFT SPLINES
WGC–A,A1	78/79	K	2.75	9	C	L	SL	28
WGC–A1	73/75	D	2.75	9	C4	L	XL	28
WGC–A5	74/75	D	2.75	9	C4	TR	SL	28
WGC–B1	73	D	3.00	9	C4	L	XL	28
WGC–B5	74/78	D	3.00	9	C4	TR	SL	28
WGC–C	73	D	2.75	9	C4	L	XL	28
WGC–C5	74/78	D	2.75	9	C4	TR	SL	28
WGC–D	73	D	3.00	9	C4	L	XL	28
WGC–D5	74/78	D	3.00	9	C4	TR	SL	28
WGC–G	75/78	D	2.75	9	C4	TR	SL	28
WGC–H	75/78	D	3.00	9	C4	TR	SL	28
WGC–J	76/78	D	3.00	9	C	TR	SL	28
WGC–K,K1	77/78	D	2.50	9	C	TR	SL	28
"Before 3/15/78"								
WGC–K,K1	78/79	D	2.47	9	C	L	SL	28
"From 3/15/78"								
WGC–L	76/78	D	2.75	9	C	TR	SL	28
WGC–M	76/78	D	3.00	9	C	TR	SL	28
WGC–N,N1	77/79	D	2.75	9	C4	TR	SL	28
WGC–R,R1	79	D	3.00	9	C	L	SL	28
WGF–AB	76	L	3.40	6 3/4	C	S	XS	23
WGF–AC	76	L	3.55	6 3/4	C	S	XS	23
WGF–AE	76	L	3.55	6 3/4	C	S	XS	23
WGF–AJ	77/78	L	2.73	6 3/4	C	S	XS	23
WGF–AK	78	L	2.73	6 3/4	C	S	XS	23
WGF–AL	78	L	3.18	6 3/4	C	S	XS	23
WGF–AM	79	L	2.73	6 3/4	C	S	M	25
WGF–AN	79	L	3.08	6 3/4	C	S	M	25
WGF–H	74/78	L	3.40	6 3/4	C	M	XS	23
WGF–K	74/78	L	3.18	6 3/4	C	M	XS	23
WGF–N	74/78	L	3.55	6 3/4	C	M	XS	23
WGF–U	75/78	L	3.18	6 3/4	C4	M	S	23
WGG–C	79	P	2.73	6 3/4	C	S	M	25
WGG–D	79	P	3.08	6 3/4	C	S	M	25
WGG–E	79	P	3.08	6 3/4	C4	S	M	25
WGX–A	78	P	2.73	7 .5	C	R	M	28
WGX–B,BX,B1,B2	78/79	P	3.08	7 .5	C	R	M	28
WGX–C,CX,C1,C2	78/79	P	2.47	7 .5	C	R	M	28
WGX–HX,H1,H2	79	J	3.45	7.5	C	R	M	28
WGX–LX,L1,L2	79	P	2.26	7.5	C	R	M	28
WGX–NX,N1,N2	79	P	2.73	7.5	C	R	M	28
WGY–A	79	A	3.08	8.5	C	R	L	28
WGY–B	79	A	3.08	8.5	C	R	L	28
WGY–C	79	A	2.73	8.5	C	R	L	28
WGY–D	79	A	2.26	8.5	C	R	L	28
WGZ–B	79	A	2.26	7.5	C	R	M	28
WGZ–C,C1,C2	79	A	2.26	7.5	C	R	M	28

COPYRIGHT © 1986 — FORD MOTOR COMPANY — DEARBORN, MICHIGAN

1973/79 LINCOLN-MERCURY CARS

YEAR	MODEL/RESTRICTIONS	AXLE IDENT.	PART NUMBER	DESCRIPTION	QTY.
4A001	HOSE (REAR AXLE HOUSING VENT)-Improvise from bulk hose (9324 or 17543)				
73/	A,D,F,G,K,V,Y	All	C9AZ 8287-A	Clamp-9/16" hose	AR
73/	A,D,F,G,K,V	All	374998-S100	Clip	
73/	A,D,F,G,K,V	All	381877-S2	(UU-52-AF) Screw- (attaches hose to side rail) 5/16"-18 x 3/4"	1

YEAR	MODEL/RESTRICTIONS	AXLE IDENT.	PART NUMBER	RATIO	GEAR SIZE (INCHES)	LOCK	DESCRIPTION	QTY.
‡4005	AXLE ASSY. (REAR LESS HUBS, DRUMS and BRAKES) ‡ Rear axle assemblies although not normally stocked as service items may be obtained from the nearest assembly plant when used in current production. Order through your local parts distribution center. REFER TO CHART BEGINNING ON PAGE 2 BEFORE SELECTING PARTS FROM GROUPS BELOW							

YEAR	MODEL/RESTRICTIONS	AXLE IDENT	PART NUMBER	DESCRIPTION	QTY.
4010 NOTE 1-	HOUSING ASSY. (REAR AXLE) TO OBTAIN CORRECT PART FOR ALL 1979 VEHICLES, YOU MUST MEASURE THE BRAKE BACKING PLATE BOLT TO SEE IF THE VEHICLE HAS 1/2" OR 3/8" BOLTS AND ORDER PART THAT IS RESTRICTED WITH THE CORRECT BOLT SIZE DIAMETER				
73	A - - with 9" R/G	All	★ D3AZ 4010-B	not replaced	1
74	A - - with 9" R/G	All	★ D4AZ 4010-B	not replaced	1
75/78	A - - with 9" R/G	All	★ D5AZ 4010-A	Less wheel bearings & seals -not replaced	1
73/78	A - - with 8.7" R/G	All	★ D7AZ 4010-A	Less wheel bearings & seals -not replaced	1
79	A - - with 7.5" R/G	All	D9AZ 4010-A	With wheel bearings & seals	1
79	A - - with 8.5" R/G	All	D9AZ 4010-B	With wheel bearings & seals	1
73/74	C - - with 8" R/G	All	★ D30Z 4010-B	Less wheel bearings & seals-not replaced	1
73/76	C - - with 9" R/G -P/C and taxi only	All	D60Z 4010-B	Less wheel bearings & seals	1
73/76	C - - with 9" R/G all exc. P/C and taxi	All	D70Z 4010-A	Less wheel bearings & seals	1
73	D	All	★ D3AZ 4010-B	not replaced	1
74	D	All	★ D4AZ 4010-B	not replaced	1
75/78	D	All	★ D5AZ 4010-A	Less wheel bearings & seals-not replaced	1
79	D - - use with 1/2" brake backing plate bolt	Note 1			1
79	D - - use with 3/8" brake backing plate bolt	Note 1	★ D8AZ 4010-A	Less wheel bearings & seals-not replaced	1
73	F	All	D1ZZ 4010-B	Less wheel bearings & seals	1
74/76	F - - with 9" R/G -P/C and taxi only	All	D60Z 4010-B	Less wheel bearings & seals	1

YEAR	MODEL/RESTRICTIONS	AXLE IDENT	PART NUMBER	DESCRIPTION	QTY.
4010	HOUSING ASSY. (REAR AXLE) — Cont'd				
NOTE 1–	TO OBTAIN CORRECT PART FOR ALL 1979 VEHICLES, YOU MUST MEASURE THE BRAKE BACKING PLATE BOLT TO SEE IF THE VEHICLE HAS 1/2" OR 3/8" BOLTS AND ORDER PART THAT IS RESTRICTED WITH THE CORRECT BOLT SIZE DIAMETER				
74/76	F – – with 9" R/G all exc. P/C and taxi	All	D70Z 4010–A	Less wheel bearings & seals	1
77/	F	All			1
75/	G – – with 8" R/G	All	D5DZ 4010–F	Less wheel bearings & seals	1
77/78	G – – with 8.7" R/G "Before 5/22/78"	All	★ D7DZ 4010–A	Less wheel bearings & seals–not replaced	1
78	G – – with 8.7" R/G "From 5/22/78"	WER–AC	★ D8DZ 4010–B	Less wheel bearings & seals–not replaced	1
75/78	G – – with 9" R/G – – and 1/2" brake backing plate bolt "Before 4/1/78"	All	★ D5DZ 4010–B	Less wheel bearings & seals–not replaced	
78	G – – with 9" R/G and 3/8" brake backing plate bolt "From 4/1/78"		D8DZ 4010–A	Less wheel bearings & seals	1
73/74	J	All	★ D3RY 4010–A	not replaced	1
76/78	J	All	★ D5RY 4010–A	not replaced	1
79	J – – with 6 3/4" R/G	All	D9BZ 4010–C	Less wheel bearings & seals	1
79	J – – with 7.5" R/G	All	E0BZ 4010–A	With wheel bearings & seals	1
73/74	K	All	D70Z 4010–A	Less wheel bearings & seals	1
75/78	K	All	★ D7LY 4010–A	Less wheel bearings & seals–not replaced	1
79	K – – use with 1/2" brake backing plate bolt	Note 1	★ D7LY 4010–A	Less wheel bearings & seals–not replaced	1
79	K – – use with 3/8" brake backing plate bolt	Note 1	★ D8LY 4010–A	Less wheel bearings & seals–not replaced	1
74	L	All	★ D4ZZ 4010–C	Less wheel bearings & seals–not replaced	1
75/78	L – – with 8" R/G	All	D5FZ 4010–C	With 7/16"–20 vent hole–less wheel bearings & seals "Must use D6BZ 4022–A vent"	1
75/78	L – – with 6 3/4" R/G	All	★ D7FZ 4010–A	Less wheel bearings & seals–not replaced	1
79	L – – with 6 3/4" R/G	All	★ D9FZ 4010–B	Less wheel bearings & seals–not replaced	1
73/74	P	All	★ D7DZ 4010–B	Less wheel bearings & seals–not replaced	1
75	P "Before 11/26/74"	All	★ D5DZ 4010–C	With 9/16" vent hole–less wheel bearings & seals not replaced	1
75/77	P "From 11/26/74"	All	D7DZ 4010–D	With 7/16" vent hole–less wheel bearings & seals	1
78	P	All	D8BZ 4010–A	With wheel bearings & seals	1
79	P – – with 6 3/4" R/G	All	D9BZ 4010–C	Less wheel bearings & seals	1
79	P – – with 7.5" R/G	All	E0BZ 4010–A	With wheel bearings & seals	1
77/78	V	All	★ D5DZ 4010–B	Less wheel bearings & seals–not replaced	1
79	V – – with 1/2" brake backing plate bolt	Note 1			1
79	V – – with 3/8" brake backing plate bolt	Note 1	D8DZ 4010–A	Less wheel bearings & seals	1
73/75	Y – – with 8.7" R/G "Before 2/15/74"	WER	D3AZ 4010–A	Integral axle–less wheel bearings & seals	1
75/76	Y – – with 8.7" R/G "From 2/15/74"	WER	D5AZ 4010–B	Less wheel bearings & seals	1
73	Y – – with 9" R/G	All	★ D3AZ 4010–B	not replaced	1

COPYRIGHT © 1986 — FORD MOTOR COMPANY — DEARBORN, MICHIGAN

YEAR	MODEL/RESTRICTIONS	AXLE IDENT	PART NUMBER	DESCRIPTION	QTY.
4010	HOUSING ASSY. (REAR AXLE) — Cont'd				
NOTE 1-	TO OBTAIN CORRECT PART FOR ALL 1979 VEHICLES, YOU MUST MEASURE THE BRAKE BACKING PLATE BOLT TO SEE IF THE VEHICLE HAS 1/2" OR 3/8" BOLTS AND ORDER PART THAT IS RESTRICTED WITH THE CORRECT BOLT SIZE DIAMETER				
74	Y - - with 9" R/G	All	★ D4AZ 4010-B	not replaced	1
75/76	Y - - with 9" R/G	All	★ D5AZ 4010-A	Less wheel bearings & seals-not replaced	1
73/78	J	All	388390-GS2	Bolt	10
73/78	J	All	E450100-S76	(AP-15)-plug-1/2" (Metric coarse)	1
75/	A,C,D,F,G,K,P - - with 7.5", 8.7" and 9" R/G	All	46108-S	(B-271-D)-bolt (differential bearing cap)-1/2"-13 x 2 1/7.5"	4
73/	L - - with 6 3/4" R/G	All	43005-S	(B-257-E)- bolt (differential bearing cap)-3/8"-16 x 1 7/8"	4
73/	L,G - - with 8" R/G	All	43048-S	(B-263-D)-bolt (differential bearing cap-7/16-14 x 2.00	4
75/77	G	WER	358059-S	(PP-42)-plug-filler-1/8"-14	1
78/	A,D,F,G,K, L,P,V	All	373098-S100	(PA 42-B)-plug-filler-1/2"-14	1
73/78	J	All	E800119-S76	(AB-127)-bolt (differential bearing cap)-M16 x 42mm	4
4020	RETAINER (REAR AXLE WHEEL BEARING OUTER)				
73	A,D,Y "Before 12/15/72"	All	C6AZ 4020-A		1
73/78	A,D,Y - - with 1/2" brake backing plate bolt "From 12/15/72"	All	D3AZ 4020-A	Use w/large wheel bearing	2
79	D - - with 1/2" brake backing plate bolt	Note 1			2
73/78	A,D,Y	All	D4AZ 4020-B	Use w/tapered roller wheel bearing	2
79	D - - with 1/2" brake backing plate bolt	Note 1			2
79	D - - with 3/8" brake backing plate bolt	Note 1	D8AZ 4020-B		1
73/76	C	All	D30Z 4020-A	Use w/large wheel bearing	2
73	K	All			2
75/	F	All			2
74	C,F,K	All	D40Z 4020-B	Use w/tapered roller wheel bearing	2
75/	C,F	All			2
73	F,P "Before 12/15/72"	All	C8UZ 4020-A		2
73	F "From 12/15/72"	All	D3ZZ 4020-A	Use w/medium wheel bearing	2
73/77	P "From 12/15/72"	All			2
75/	G	All			2
73/74	J	All	★ D0RY 4020-A	not replaced	2
76/78	J	All	★ D5RY 4020-A	not replaced	2
74/78	L	All	D4FZ 4020-A	Use w/medium wheel bearings	2
79	J - - with 6 3/4" R/G	All			1
79	L - - with 6 3/4" R/G	All			1
79	P - - with 6 3/4" R/G	All			1
74/	A,D,F,G,K - - with 9" R/G	All	377735-S7	(MM-169-JH)-nut-attach 4020 to 4010-1/2"-20	8
73/	A,C,D,F,K,L	All	385696-S100	(MM-169-NH)-nut-attach 4020 to 4010-3/8"-24	8
73/	A,C,D,F,G,K,L,P,V	All	★	Bolt-attach 4020 to 4010-refer to group 2248	
4022	VENT (REAR AXLE HOUSING) REFER TO CHART BEGINNING ON PAGE 2 BEFORE SELECTING PARTS FROM GROUPS BELOW				
73/78	A - - with 8.7" R/G	All	D2AZ 4022-A		1
73/78	A - - with 9" R/G	All	C9AZ 4022-A		1

YEAR	MODEL/RESTRICTIONS	AXLE IDENT	PART NUMBER	DESCRIPTION	QTY.
4022	VENT (REAR AXLE HOUSING) — Cont'd				
	REFER TO CHART BEGINNING ON PAGE 2 BEFORE SELECTING PARTS FROM GROUPS BELOW				
79	A - - with 7.5" or 8.5" R/G	All	D9AZ 4022-B		1
73/74	C - - with 8" R/G	All	★ D20Z 4022-B	not replaced	1
73/76	C - - with 9" R/G	All	D20Z 4022-A		1
73	D	All	C9AZ 4022-A		1
74	D	All	D20Z 4022-A		1
75/	D	All	C9AZ 4022-A		1
73	F	All	C5ZZ 4022-B		1
74/	F - - with 9" R/G	All	D20Z 4022-A		1
75/	G	All	D6BZ 4022-A	7/16-20 x 2 1/8" long	1
73/74	J "Before 9/1/74"	All	★ D0RY 4022-A	not replaced	1
74	J "From 9/1/74"	All	★ D5RY 4022-A	not replaced	1
76/78	J	All	★ D6RY 4022-A	not replaced	1
79	J - - with 6 3/4" R/G	All	D2AZ 4022-A		1
79	J - - with 7.5" R/G	All	D8BZ 4022-B		1
73/	K	All	D20Z 4022-A		1
74	L	All	★ D1FZ 4022-A	Not replaced	1
75	L - - with 6 3/4" and 8" R/G	All	★ D4ZZ 4022-A	9/16" - 18 thread-not replaced	1
75/78	L - - with 6 3/4" and 8" R/G	All	D6BZ 4022-A	7/16" - 20 x 2 1/8" long	1
79	L - - with 6 3/4" R/G	All	D2AZ 4022-A		1
73/74	P	All	★ D10Z 4022-A	7/16"-r/b E3TZ 4022-D	1
75	P "Before 11/26/74"	All	★ D4ZZ 4022-A	9/16"-not replaced	1
75/77	P - - with 6 3/4" and 8" R/G "From 11/26/74"	All	D6BZ 4022-A	7/16"	1
78/	P - - with 7.5" R/G	All	D8BZ 4022-B		1
79	P - - with 6 3/4" R/G	All	D2AZ 4022-A		1
77/	V	All	D6BZ 4022-A	1/2" -20	1
73/76	Y - - with 8.7" R/G	All	D1FZ 4022-A		1
73/76	Y - - with 9" R/G	All	C9AZ 4022-A		1
4026	DIFFERENTIAL ASSY. (REAR AXLE LOCKING)				
75/78	A,C,D,F,G,K,V,Y - - with 9" R/G	All	D3SZ 4026-A		1
75/	D,F,K - - with 9" R/G	All			1
73/74	C - - with 8" R/G	All	★ C90Z 4026-D	Medium diff. bearing-28 spline shaft-r/b details	1
73	F - - with 9" R/G	All	D4TZ 4026-A	31 spline shaft	1
75/76	G - - with 8" R/G	All	★ C90Z 4026-D	Medium diff. bearing-28 spline shaft-r/b details	1
75	L - - with 6 3/4" R/G	All	★ D4ZZ 4026-A	not replaced	1
4026	DIFFERENTIAL ASSY. (REAR AXLE NON-LOCKING)				
73/78	J	All	★ D0RY 4026-A	not replaced	1
4A031	SEAL REPAIR KIT (REAR AXLE YOKE)				
73/74	K	All	C8SZ 4A031-A		2
4033	COVER ASSY. (REAR AXLE HOUSING)				
73/78	A,G - - with 8.7" R/G	WER	★ D5DZ 4033-A	Not replaced	1
79	A - - with 8.5" R/G	All	E3AZ 4033-A		1
78/79	A,J,P - - with 7.5" R/G	All	★ D9BZ 4033-E	R/b E3TZ 4033-A (3/84)	1
73/78	J	All	★ D3RY 4033-A	not replaced	1
79	J,L,P - - with 6 3/4" R/G	All	D9BZ 4033-D		1
74/78	L	All	D1FZ 4033-A		1
73/74	A,Y	WER	20328-S	(B-76)-bolt (attach cover to housing)-hex. hd.-3/8"-16 x 5/8"	9
73/74	A,Y	WER	34807-S	(X-66)-lockwasher-attach cover to housing-3/8"	9
73/74	A,Y	WER	353051-S	(PP-32)-plug-filler hole in axle carrier cover	1

COPYRIGHT © 1986 — FORD MOTOR COMPANY — DEARBORN, MICHIGAN

1973/79 LINCOLN-MERCURY CARS

YEAR	MODEL/RESTRICTIONS	AXLE IDENT	PART NUMBER	DESCRIPTION	QTY.
4033	**COVER ASSY. (REAR AXLE HOUSING) — Cont'd**				
75/78	G - - with 8.7" R/G	WER	379058-S7-8	(BB-574-E)-bolt (cover to carrier)-5/16"-18 x 5/8"	10
73/78	J	All	388390-GS	Bolt-hex. hd.-M8 x 15 (Metric coarse)	10
74	L	All	20348-S8	(B-77)-bolt (cover to carrier)-3/8"-16 x 3/4"	8
4035	**GASKET (REAR AXLE DIFFERENTIAL CARRIER)**				
73/74	C,P - - with 8" R/G	All	C90Z 4035-A		1
75/77	P	All			1
75/78	L - - with 8" R/G	All			1
75/	G - - with 8" R/G	All			1
73/78	A,G - - with 9" R/G	All	★ D5AZ 4035-A	R/b E3TZ 4035-A (2/84)	1
73/	D,F,K,V - - with 9" R/G	All			1
73/76	C,Y - - with 9" R/G	All			1
4036	**GASKET (REAR AXLE COVER TO HOUSING)**				
73/78	A,G,Y - - with 8.7" R/G	WER	C7AZ 4036-A		1
73/78	J	All	D0RY 4036-A		1
74/78	L	All	D1FZ 4036-B		1
78/	P - - with 7.5" R/G	All	D6AZ 19562-B	Silicone Rubber	AR
79	A,J,L - - with 6 3/4", 7.5" and 8.5" R/G	All			AR
4067	**ADJUSTER (REAR AXLE DIFFERENTIAL BEARING)**				
73/76	C,Y	All	B7AZ 4067-A	Nut-2 31/32"-16 for medium bearing carriers-incl. (1) C6AZ 4143-B lock	2
73/77	P - - with 8" R/G				
73/78	A,G,L,Y - - exc. 6 3/4" R/G	All		For slim-line bearing carriers	2
73/	D,F,K,V - - with 9" R/G	All			1
79	G - - with 8" R/G	All			1
73	A,D,K	All	★ C6AZ 4067-B	Nut-3 11/32"-16 for extra large bearing carriers-incl. (1) C6AZ 4143-B lock-not replaced	2
73/78	J	All	D0RY 4067-A	.0023" thick	AR
		All	D0RY 4067-B	.004" thick	AR
		All	D0RY 4067-C	.008" thick	AR
		All	D0RY 4067-D	.0195" thick	AR
74/78	L - - with 6 3/4" R/G	All	C0DZ 4067-A	Nut-2 5/8"-16-for integral carrier	2

YEAR	MODEL/RESTRICTIONS	AXLE IDENT	PART NUMBER	DESCRIPTION	QTY.
4067	SHIMS (REAR AXLE DIFFERENTIAL BEARING)				
78	P – – with 7.5" R/G	All	D8BZ 4067–BR	.241" thick	AR
79	A,J,L,P – – with	All	D8BZ 4067–BS	.243" thick	AR
	6 3/4" or 7.5" R/G		D8BZ 4067–AH	.245" thick	AR
			D8BZ 4067–AJ	.247" thick	AR
			D8BZ 4067–AK	.249" thick	AR
			D8BZ 4067–AL	.251" thick	AR
			D8BZ 4067–AM	.253" thick	AR
			D8BZ 4067–AN	.255" thick	AR
			D8BZ 4067–AP	.257" thick	AR
			D8BZ 4067–AR	.259" thick	AR
			D8BZ 4067–AS	.261" thick	AR
			D8BZ 4067–AT	.263" thick	AR
			D8BZ 4067–AU	.265" thick	AR
			D8BZ 4067–AV	.267" thick	AR
			D8BZ 4067–AW	.269" thick	AR
			D8BZ 4067–AX	.271" thick	AR
			D8BZ 4067–AY	.273" thick	AR
			D8BZ 4067–AZ	.275" thick	AR
			D8BZ 4067–BA	.277" thick	AR
			D8BZ 4067–BB	.279" thick	AR
			D8BZ 4067–BC	.281" thick	AR
			D8BZ 4067–BD	.283" thick	AR
			D8BZ 4067–BE	.285" thick	AR
			D8BZ 4067–BF	.287" thick	AR
			D8BZ 4067–BG	.289" thick	AR
			D8BZ 4067–BH	.291" thick	AR
			D8BZ 4067–BJ	.293" thick	AR
			D8BZ 4067–BK	.295" thick	AR
			D8BZ 4067–BL	.297" thick	AR
			D8BZ 4067–BM	.299" thick	AR
			D8BZ 4067–BN	.301" thick	AR
			D8BZ 4067–BP	.303" thick	AR
			D8BZ 4067–BT	.305" thick	AR
			D8BZ 4067–BU	.307" thick	AR

COPYRIGHT © 1986 — FORD MOTOR COMPANY — DEARBORN, MICHIGAN

1973/79 LINCOLN-MERCURY CARS

YEAR	MODEL/RESTRICTIONS	AXLE IDENT	PART NUMBER	DESCRIPTION	QTY.
4067	SHIMS (REAR AXLE DIFFERENTIAL BEARING) — Cont'd				
79	A - - with 8.5" R/G	All	D9AZ 4067-A	.241" thick	AR
			D9AZ 4067-B	.243" thick	AR
			D9AZ 4067-C	.245" thick	AR
			D9AZ 4067-D	.247" thick	AR
			D9AZ 4067-E	.249" thick	AR
			D9AZ 4067-F	.251" thick	AR
			D9AZ 4067-G	.253" thick	AR
			D9AZ 4067-H	.255" thick	AR
			D9AZ 4067-J	.257" thick	AR
			D9AZ 4067-K	.259" thick	AR
			D9AZ 4067-L	.261" thick	AR
			D9AZ 4067-M	.263" thick	AR
			D9AZ 4067-N	.265" thick	AR
			D9AZ 4067-P	.267" thick	AR
			D9AZ 4067-R	.269" thick	AR
			D9AZ 4067-S	.271" thick	AR
			D9AZ 4067-T	.273" thick	AR
			D9AZ 4067-U	.275" thick	AR
			D9AZ 4067-V	.277" thick	AR
			D9AZ 4067-W	.279" thick	AR
			D9AZ 4067-X	.281" thick	AR
			D9AZ 4067-Y	.283" thick	AR
			D9AZ 4067-Z	.285" thick	AR
			D9AZ 4067-AA	.287" thick	AR
			D9AZ 4067-AB	.289" thick	AR
			D9AZ 4067-AC	.291" thick	AR
			D9AZ 4067-AD	.293" thick	AR
			D9AZ 4067-AE	.295" thick	AR
			D9AZ 4067-AF	.297" thick	AR
			D9AZ 4067-AG	.299" thick	AR
			D9AZ 4067-AH	.301" thick	AR
			D9AZ 4067-AJ	.303" thick	AR
			D9AZ 4067-AK	.305" thick	AR
			D9AZ 4067-AL	.307" thick	AR
4A073	SPRING (DRIVESHAFT CENTERING SOCKET RACE BALL)				
73/77	D - - use with D0VY 4602-A only "Before 5/1/77"	All	C3VY 4A073-A		2
77/79	V - - with 302 and 351 eng w/1330 size U/JT "Before 8/6/78"	All			2
79	V - - w/1310 U/JT "From 8/6/78"	All	C9TZ 4A073-A		1

YEAR	MODEL/RESTRICTIONS	AXLE IDENT	PART NUMBER	DESCRIPTION	QTY.
4090	HOSE (REAR AXLE)				
73/	A,C,D,F,J,K,L,P,V,Y	All	C9PZ 4090-G	*KK-7 11/32" I.D. x 11/16" O.D.-50 ft. roll	AR
73/	A,C,D,F,J,K,L,P,V,Y	All	C9PZ 4090-F	*KK-6 15/32" I.D. x 13/16" O.D.-50 ft. roll	AR
73/	A,C,D,F,J,K,L,P,V,Y	All	C9PZ 4090-E	*KK-5 1/2" I.D. x 15/16" O.D.-50 ft. roll	AR
73/	A,C,D,F,J,K,L,P,V,Y	All	C9PZ 4090-C	*KK-3 3/4" I.D. x 29/32" O.D.-10 ft. roll	AR
4109	SHIM (REAR AXLE PINION BEARING ADJUSTING)				
73/78	J	All	★ D0RY 4109-A	.032" thick-not replaced	AR
			★ D0RY 4109-B	.035" thick-not replaced	AR
			★ D0RY 4109-C	.036" thick-not replaced	AR
			D0RY 4109-D	.038" thick	AR
			★ D0RY 4109-E	.040" thick-not replaced	AR
			★ D0RY 4109-F	.042" thick-not replaced	AR
			★ D0RY 4109-G	.044" thick-not replaced	AR
			★ D0RY 4109-H	.046" thick-not replaced	AR
			★ D0RY 4109-J	.047" thick-not replaced	AR
4141	CARRIER ASSY. (REAR AXLE DIFFERENTIAL)				
73/76	A,C,D,F,G,K,Y - - with 9" R/G	All-Daytona	★ D00Z 4141-B	Refer to Ford Motorsport Performance Equipment Catalog	1
73/76	A,C,D,F,G,K,Y - - with 9" R/G	All-Non Daytona	★ D60Z 4141-A	Order by model	1
77/78	A,G - - with 9" R/G	All	D7AZ 4141-A		1
77/	D,F,K,V - - with 9" R/G	All			1
73/78	C,L,P - - with 8" R/G	All	★ C20Z 4141-D	Not replaced	1
75/	G - - with 8" R/G	All			1
4143	LOCK (REAR AXLE DIFFERENTIAL BEARING ADJUSTER)				
73/78	A,C,D,F,G,K,P,V,Y (exc. 6 3/4", 7.5" and 8.7" R/G)	All	C6AZ 4143-B		2
74/78	L - - with 6 3/4" R/G	All	★ D0ZZ 4143-A	Not replaced	2
4204	CASE ASSY. (REAR AXLE DIFFERENTIAL)				
73/76	A - - with 8.7" R/G and integral axle	WER	C9AZ 4204-B		1
77/78	A - - with 8.7" R/G	WER	D7AZ 4204-A		1
73/78	A - - with 9" R/G - conventional axle and 4 pinion diff.	All	D00Z 4204-D	Use with 28 or 31 spline shaft	1
73/78	A - - with 9" R/G-conventional axle and 2 pinion diff.	All	★ D2AZ 4204-A	Repl. by D00Z 4204-D (4/83)	1
73/78	A - - with 9" R/G and traction-lok	All	D3TZ 4204-A		1
79	A - - with 7.5" R/G	All	D9AZ 4204-A		1
79	A - - with 8.5" R/G	All	D9AZ 4204-B		1
73/74	C - - with 8" R/G and conventional axle	All	D00Z 4204-A		1
73/74	C - - with 8" R/G and traction-lok	All	★ D30Z 4204-A	Not replaced	1
73/76	C - - with 9" R/G-conventional axle and 4 pinion diff.	All	D00Z 4204-D	Use with 28 or 31 spline shaft	1
73/76	C - - with 9" R/G-conventional axle and 2 pinion diff.	All	★ D2AZ 4204-A	Repl. by D00Z 4204-D (4/83)	1
73/	C - - with 9" R/G and traction-lok	All	D3TZ 4204-A		1
73/	D - - w/conventional axle and 4 pinion diff.	All	D00Z 4204-D		1
73/	D - - with 9" R/G-conventional axle and 2 pinion diff.	All	★ D2AZ 4204-A	Repl. by D00Z 4204-D (4/83)	1
73/	D - - w/traction-lok	All	D3TZ 4204-A		1
73/78	F - - with 8" R/G and conventional axle	All	D00Z 4204-A		1

COPYRIGHT © 1986 — FORD MOTOR COMPANY — DEARBORN, MICHIGAN

1973/79 LINCOLN-MERCURY CARS

YEAR	MODEL/RESTRICTIONS	AXLE IDENT	PART NUMBER	DESCRIPTION	QTY.
4204	CASE ASSY. (REAR AXLE DIFFERENTIAL) — Cont'd				
73/	F - - with 9" R/G - conventional axle and 4 pinion diff.	All	D00Z 4204-D	Use with 28 or 31 spline shaft	1
73/	F - - with 9" R/G-conventional axle and 2 pinion diff.	All	★ D2AZ 4204-A	Repl. by D00Z 4204-D (4/83)	1
73/	F - - with 9" R/G and traction-lok	All	D3TZ 4204-A		1
73/	G - - with 8" R/G and conventional axle	All	D00Z 4204-A		1
75/76	G - - with 8.7" R/G	WER	C9AZ 4204-B		1
77/78	G - - with 8.7" R/G	WER	D7AZ 4204-A		1
75/78	G - - with 9" R/G - conventional axle and 4 pinion diff.	All	D00Z 4204-D		1
75/78	G - - with 9" R/G-conventional axle and 2 pinion diff.	All	★ D2AZ 4204-A	Repl. by D00Z 4204-D (4/83)	1
75/78	G - - with 9" R/G-traction-lok	All	D3TZ 4204-A		1
75	G - - with 8" R/G and traction-lok	All	★ D30Z 4204-A	Not replaced	1
73/78	J - - with 4 cyl.	All	★ D1RY 4204-B	not replaced	1
73/78	J - - with 6 cyl.	All	★ D0RY 4204-A	not replaced	1
79	J - - with 6 3/4" R/G	All	D9BZ 4204-A	Use with 4/pinion and 2 pinion	1
79	J - - with 6 3/4" R/G	All	★ D9BZ 4204-B	Use with 2/pinion-repl. by D9BZ 4204-A(4/83)	1
79	J - - with 7.5" R/G	All	D9AZ 4204-A		1
73/	K - - with 9" R/G and traction-lok	All	D3TZ 4204-A		1
73/	K - - with 9" R/G-conventional axle and 4 pinion diff.	All	D00Z 4204-D		1
73/	K - - with 9" R/G-conventional axle and 2 pinion diff.	All	★ D2AZ 4204-A	Repl. by D00Z 4204-D (4/83)	1
74/78	L - - with 6 3/4" R/G	All	D1FZ 4204-A		1
73/78	L,P - - with 8" R/G and conventional axle	All	D00Z 4204-A		1
79	L - - with 6 3/4" R/G	All	D9BZ 4204-A	Use with 4/pinion and 2 pinion	1
79	L - - with 6 3/4" R/G	All	★ D9BZ 4204-B	Use with 2/pinion-repl. by D9BZ 4204-A(6/83)	1
79	P - - with 6 3/4" R/G	All	D9BZ 4204-A	Use with 4/pinion and 2 pinion	1
79	P - - with 6 3/4" R/G	All	★ D9BZ 4204-B	Use with 2/pinion-repl. by D9BZ 4204-A(6/83)	1
78/79	P - - with 7.5" R/G	All	D9AZ 4204-A		1
77	V - - 9" R/G and traction-lok	All	D3TZ 4204-A		1
77/	V - - 9" R/G - conventional axle and 4 pinion diff.	All	D00Z 4204-D		1
77/	V - - 9" R/G-conventional axle and 2 pinion diff.	All	★ D2AZ 4204-A	Repl. by D00Z 4204-D (4/83)	1
73/76	Y - - with 8.7" R/G and integral axle	WER	C9AZ 4204-B		1
73/76	Y - - with 9" R/G - conventional axle and 4 pinion diff.	All	D00Z 4204-D		1
73/76	Y - - with 9" R/G-conventional axle and 2 pinion diff.	All	★ D2AZ 4204-A	Repl. by D00Z 4204-D (4/83)	1
73/76	Y - - with 9" R/G and traction-lok	All	D3TZ 4204-A		1
73/78	J	All	72746-GS	Pin	1
73/78	J	All	E800100-S	Bolt-M10 x 1 x 20 (Metric fine)	8

IDENTIFICATION CHART

LISTED NUMERICALLY BY STAMPED NUMBER ON RING GEAR

IDENTIFICATION NUMBER		RING GEAR & PINION	REPLACED BY
RING GEAR	PINION	PART NUMBER	
4209 RING GEAR and PINION KIT (REAR AXLE DIFFERENTIAL)			
D2AW 4210-A, C2AW 4210-D, or 2AA	C2AW 4610-R, or 1	C0AZ 4209-E	
D2AW 4210-B, C3AW 4210-B, or 2AB	C3AW 4610-A, or D	B8AZ 4209-C	
C4DW 4210-A	C4DW 4610-A	★ C4DZ 4209-D	Not replaced
D1AW 4210-A, C7AW 4210-F, or 1AA	C7AW 4610-H, or T	C7AZ 4209-J	
D2TW 4210-A	C2AW 4610-L	★ C90Z 4209-A	E3UZ 4209-A
D2AW 4210-C, D0AW 4210-A, or 2AC	D0AW 4610-A	C9AZ 4209-B	
D0AW 4210-B, or 0AB	D0AW 4610-B	★ C9AZ 4209-C	Not replaced
D2AW 4210-D, D0AW 4210-C, or 2AD	D0AW 4610-C	C9AZ 4209-D	
D10W 4210-A, or 10A	C60W 4610-A,or 0B	C40Z 4209-K	
D10W 4210-B, or 10B	C40W 4610-B	C40Z 4209-H	
D22W 4210-BB	D12W 4610-C	D1FZ 4209-C	
D32W 4210-A,B, or 32B	D32W 4610-A, or 32A	D3FZ 4209-A	
D32W 4210-BB	D32W 4610-A	D3FZ 4209-A	
D42W 4210-A, or 42A	D42W 4610-A, or 42A	D4ZZ 4209-A	
D42W 4210-AB	D42W 4610-A	D4ZZ 4209-A	
None	None	D0RY 4209-B	
D7AW 4210-AA	D7AW 4610-AA	D7AZ 4209-A	
D7AW 4210-BA	D7AW 4610-BA	★ D7AZ 4209-B	D8AZ 4209-B
D7EW 4210-AA	D7EW 4610-AA	D7FZ 4209-A	
D9ZW 4210-BA	D7EW 4610-AA	D7FZ 4209-A	
D7AW 4210-CA	D7AW 4610-CA	D8AZ 4209-B	
D8AW 4210-AA	D0AW 4610-A	★ D8AZ 4209-A	Not replaced
None	None	D0RY 4209-D	
None	None	D2RY 4209-B	
None	None	D3RY 4209-E	
D8BW 4210-AA	D8BW 4610-AA, or AB	★ D8BZ 4209-A	E5SZ 4209-A
D8BW 4210-BA	D8BW 4610-BA, or BB	★ D8BZ 4209-B	E25Y 4209-A
D8BW 4210-DA	D8BW 4610-EA, or EB	D8BZ 4209-C	
D9AW 4210-AA	D9AW 4610-FA	★ D9AZ 4209-A	D9AZ 4209-G
D9AW 4210-BA	D9AW 4610-GA	★ D9AZ 4209-D	D9AZ 4209-H
D9AW 4210-EA	D9AW 4610-JA	D9AZ 4209-F	
D9BW 4210-BA	D9BW 4610-DB	D9BZ 4209-B	
D9ZW 4210-BA	D9BW 4610-EA	D9BZ 4209-C	
D9ZW 4210-AA	D9ZW 4610-BB,BC	★ D9ZZ 4209-B	E25Y 4209-B
D9BW 4210-AB	D9ZW 4610-CB	D9ZZ 4209-D	
E0AW 4210-AA	E0AW 4610-AA	★ D9BZ 4209-D	E25Y 4209-A

COPYRIGHT © 1986 — FORD MOTOR COMPANY — DEARBORN, MICHIGAN

APPLICATION CHART

YEAR	MODEL/RESTRICTIONS	AXLE IDENT.	PART NUMBER	RATIO	GEAR TEETH	PINION TEETH	DESCRIPTION	QTY.
4209	RING GEAR and PINION KIT (REAR AXLE DIFFERENTIAL) — Cont'd							
73/78	A,G - - with 9" R/G	All	C7AZ 4209-J	2.75	44	16		1
73/	D,F,K,V - - with 9" R/G	All						1
73/76	C,Y - - with 9" R/G	All						1
73/	A,D,F,G,K,V - - with 9" R/G	All	C0AZ 4209-E	3.00	39	13		1
73/76	C,Y - - with 9" R/G	All						1
73/76	A,C,F,K,Y - - with 9" R/G	All	B8AZ 4209-C	3.25	39	12		1
73/75	C,F - - with 9" R/G	All	★ C90Z 4209-A	3.50	35	10	Repl. by E3UZ 4209-A	1
77/78	A,D,F,G,K,V - - with 9" R/G	All	★ D7AZ 4209-B	2.50	45	18	Repl. by D8AZ 4209-B	1
78	A,D,F,G,K,V - - with 9" R/G	All	D8AZ 4209-B	2.47	47	19		1
79	D,F,K,V - - with 9" R/G	All						1
73/76	A,Y - - with 8.7" R/G	All	C9AZ 4209-B	2.75	44	16		1
75/76	G - - with 8.7" R/G	All						1
			C9AZ 4209-D	3.25	39	12		1
			★ C9AZ 4209-C	3.07	43	14	Not replaced	1
77/78	A,G - - with 8.7" R/G	All	D7AZ 4209-A	2.47	42	17		1
78	A - - with 8.7" R/G	All	★ D8AZ 4209-A	2.75	44	16	Not replaced	1
79	A - - with 8.5" R/G	All	★ D9AZ 4209-A	2.73	41	15	Repl. by E3AZ 4209-A	1
79	A - - with 8.5" R/G	All	★ D9AZ 4209-D	3.08	40	13	Repl. by E3TZ 4209-H	1
79	A - - with 8.5" R/G	All	D9AZ 4209-F	2.26	52	23		1
73/74	C - - with 8" R/G	All	C40Z 4209-K	2.79	39	14		1
75/	G - - with 8" R/G	All						1
75/77	G,P - - with 8" R/G	All						1
75/78	L - - with 8" R/G	All	C40Z 4209-H	3.00	39	13		1
75/77	P - - with 8" R/G	All						1
75/	G - - with 8" R/G	All						1
73/74	C - - with 8" R/G	All						1
73/74	C,P - - with 8" R/G	All	★ C4DZ 4209-D	3.25	39	12	Not replaced	1
79	J - - with 7.5" R/G	All	★ D9ZZ 4209-B	3.45	38	11	Repl. by E25Y 4209-B	1
79	A,P - - with 7.5 R/G	All	★ D9BZ 4209-B	2.26	43	19	Repl. by E0AZ 4209-A	1
79	A,P - - with 7.5" R/G	All	E0AZ 4209-A	2.26	43	19		1
79	J,L,P - - with 6 3/4" R/G	All	D9BZ 4209-C	2.73	41	15		1
79	J,L,P - - with 6 3/4" R/G	All	D9ZZ 4209-D	3.08	37	12		1
78/	J,P - - with 7.5" R/G	All	★ D8BZ 4209-A	2.73	41	15	Repl. by E5SZ 4209-A	
78/79	J,P - - with 7.5" R/G	All	E25Y 4209-A	3.08	37	12		1
78	P - - with 7.5" R/G	All	D8BZ 4209-C	2.47	37	15		1
79	J - - with 7.5" R/G	All						1
73	J - - 4 cyl.	All	★ D3RY 4209-E	3.75			Not replaced	1
73/78	J - - 4 cyl.	All	D0RY 4209-B	3.44				1
73/78	J - - 6 cyl.	All	★ D2RY 4209-B	3.22			Not replaced	1
76/78	J - - 6 cyl.	All	★ D5RY 4209-A	3.09			Not replaced	1
74/76	L - - with 6 3/4" R/G	All	D3FZ 4209-A	3.40				1
			D4ZZ 4209-A	3.55	32	9		1
74/78	L - - with 6 3/4" R/G	All	D1FZ 4209-C	3.18				1
77/78	L - - with 6 3/4" R/G	All	D7FZ 4209-A	2.73	41	15		1
75/78	L - - with 8" R/G	All	★ D4ZZ 4209-B	3.40	34	10	Not replaced	1
77	G - - with 8" R/G	All						1
73/78	J	All	E422103-S79				Nut-hex. 3/4"-20 (Metric coarse)	1

YEAR	MODEL/RESTRICTIONS	AXLE IDENT.	PART NUMBER	DESCRIPTION	QTY.
4211	SHAFT (REAR AXLE DIFFERENTIAL PINION) REFER TO CHART BEGINNING ON PAGE 2 BEFORE SELECTING PARTS FROM GROUPS BELOW				
73/	A - - with 9"or 8.7" R/G & 2 pinion diff.	All	B7AZ 4211-A	8.7" R/G use C7AZ 4241-A pin and when replacing 8.5" R/G use D8BZ 4241-A pin	1
79	A - - with 8.5" R/G	All		Incl. (1) C9AZ 4211-A shaft-4 29/32" long and (1) 305105-S pin	1
79	A - - with 7.5"	All	D8BZ 4211-A	Incl. (1) D8BW 4211-AA shaft and D8BZ 4241-A pin	1
73/78	A - - 4 pinion diff.	All	D3SZ 4211-A	Incl. (2) D3SW 4419-A short shaft, (1) D50Z 4420-A seat and (3) 305105-S pin	1
73/76	C - - 2 pinion diff.	All	B7AZ 4211-A	Incl. (1) C9AW 4211-A shaft-4 29/32" long and (1) 305105-S pin	1
73/76	C - - 4 pinion diff.	All	D3SZ 4211-A	Incl. (2) D3SW 4419-A short shaft, (1) C90W 4420-B and (3) 305105-S pin	1
73/	D - - 4 pinion diff.	All	D3SZ 4211-A	Incl. (2) D3SW 4419-A short shaft, (1) C90W 4420-B seat and (3) 305105-S pin	1
73/	D - - 2 pinion diff.	All	B7AZ 4211-A	Long shaft kit	1
73/	F - - 2 pinion diff.	All	B7AZ 4211-A	Incl. (1) C9AW 4211-A shaft-4 29/32" long and (1) 305105-S pin	1
73/	F - - 4 pinion diff.	All	D3SZ 4211-A	Incl. (2) D3SW 4419-A short shaft, (1) C90W 4420-B seat and (3) 305105-S pin	1
75/	G - - 2 pinion diff	All	B7AZ 4211-A	Incl. (1) C9AW 4211-A shaft-4 29/32" long and (1) 305105-S pin	1
77/78	G - - 4 pinion diff	All	D3SZ 4211-A	Incl. (2) D3SW 4419-A short shaft (1) C90W 4420-B seat and (3) 305105-S pin	1
73/78	J	All	D0RY 4211-A		1
79	J - - with 6 3/4" R/G	All exc. WGG-E	E0BZ 4211-A	Incl. (1) 305086-S pin	1
79	J - - with 6 3/4" R/G	WGG-E	D9BZ 4211-A	Short shaft kit-incl. (1) D22W 4420-A seat (2) D9BW 4419-AA shaft, (3) 305110-S pin	1
79	J - - with 7.5" R/G	All	D8BZ 4211-A	Incl. (1) D8BW 4211-AA shaft and D8BZ 4241-A pin	1
73/	K - - 4 pinion diff.	All	D3SZ 4211-A	Incl. (2) D3SW 4419-A short shaft, (1) C90W 4420-B seat and (3) 305105-S pin	1
73/	K - - 2 pinion diff.	All	B7AZ 4211-A	Incl.(1) C9AW 4211-A shaft-4 29/32" long and (1) 305105-S pin	1
74/	L - - with 6 3/4" R/G	All exc. WGG-E	D9ZZ 4211-A	Incl. (1) 305086-S pin	1
79	L - - with 6 3/4" R/G	WGG-E	D9BZ 4211-A	Short shaft kit-incl. (1) D22W 4420-A seat, (2) D9BW 4419-AA shaft, (3) 305110-S pin	1
75/78	L - - with 8" R/G	All	B7AZ 4211-A	Incl. (1) C9AW 4211-A shaft-4 29/32" long and (1) 305105-S pin	1
73/77	P - - with 8" R/G	All	B7AZ 4211-A	Incl. (1) C9AW 4211-A shaft-4 29/32" long and (1) 305105-S pin	1
78	P - - with 7.5" R/G	All	D8BZ 4211-A		1
79	P - - with 6 3/4" R/G	All exc. WGG-E	E0BZ 4211-A	Incl. (1) 305086-S pin	1
79	P - - with 6 3/4" R/G	WGG-E	D9BZ 4211-A	Short shaft kit-incl. (1) D22W 4420-A seat (2) D9BW 4419-AA shaft, and (3) 305110-S pin	1
79	P - - with 7.5" R/G	All	D8BZ 4211-A	Incl. (1) D8BW 4211-AA shaft and D8BZ 4241-A pin	1
77/	V - - 2 pinion diff	All	B7AZ 4211-A		1
77/	V - - 4 pinion diff	All	D3SZ 4211-A		1

COPYRIGHT © 1986 — FORD MOTOR COMPANY — DEARBORN, MICHIGAN

1973/79 LINCOLN-MERCURY CARS

YEAR	MODEL/RESTRICTIONS	AXLE IDENT.	PART NUMBER	DESCRIPTION	QTY.
4211	SHAFT (REAR AXLE DIFFERENTIAL PINION) — Cont'd REFER TO CHART BEGINNING ON PAGE 2 BEFORE SELECTING PARTS FROM GROUPS BELOW				
73/76	Y - - 2 pinion diff.	All	B7AZ 4211-A	Incl. (1) C9AW 4211-A shaft-4 29/32" long and (1) 305105-S pin-when replacing 8.7" R/G use C7AZ 4241-A pin	1
73/76	Y - - 4 pinion diff.	All	D3SZ 4211-A	Incl. (2) D3SW 4419-A short shaft, (1) C90W 4420-B seat and (3) 305105-S pin	1
4214	SPRING (REAR AXLE DIFFERENTIAL CLUTCH)				
73/78	A,G,L,V - - w/traction-lok	All	D0AZ 4214-A	1 1/16" free length x 7/16" O.D.-8 coils	4
73/76	C,Y - - w/traction-lok	All			4
73/	D,F,K - - w/traction-lok	All			1
4215	PINION KIT (REAR AXLE DIFFERENTIAL) REFER TO CHART BEGINNING ON PAGE 2 BEFORE SELECTING PARTS FROM GROUPS BELOW				
73/78	A - - with 8.7" R/G -conventional axle	All	C9AZ 4215-A	Incl. (2) pinions and washers	1
73/78	A,L,P - - with 8" or 9" R/G-conventional axle	All			2
73/76	C,Y - - conventional axle	All			1
75/78	G - - with 8.7" R/G	WER			1
73/	D,F,G,K,V - - with 8" or 9" R/G-conventional axle	All			1or2
73/76	C,L,Y - - traction-lok	All	C80Z 4215-A	Incl. (4) pinions and washers	1
73/78	A,V - - traction-lok	All			1
75/78	G - - traction-lok	All			1
73/	D,F,K - - traction-lok	All			1
73/78	J	All	D0RY 4215-A		2
79	A - - with 8.5" R/G	All	★ D9AZ 4215-A	Repl. by E3TZ 4215-A	1
78/79	A,J,P - - with 7.5" R/G	All	★ D9AZ 4215-B	Repl. by E4DZ 4215-A	1
74/	L - - with 6 3/4" R/G	All	E0BZ 4215-A	Incl. (2) C0DW 4215-C pinion,(2) C0DW 4230-C washer	1or2
79	J,P - - with 6 3/4" R/G	All			1or2
4216	BOLT (REAR AXLE DIFFERENTIAL GEAR TO CASE)				
73/78	A,G,Y	WER	D5AZ 4216-A	7/16"-20 x 3/4"	10
78/	P - - with 7.5" R/G	All			10
79	A,J - - with 7.5" or 8.5" R/G	All			10
73/78	J	All	★ D2RY 4216-A	not replaced	8
76/	L - - with 6 3/4" R/G	All	D6FZ 4216-A	3/8"-24 x 3/4"	8
79	J,P - - with 6 3/4" R/G	All			8
73/	A,D,F,G,K,P,V,Y - - with 8" or 9" R/G-conventional axle	All	D80Z 4216-B	7/16"-20 x 15/16"	10
73/	A,C,D,F,K,Y - - with 8" or 9" R/G - traction-lok	All	D80Z 4216-A	(BB 432)-bolt (gear to case)-7/16"-20 x 1 13/64"	10
79	A,C,D,F,K,Y - - with 8" or 9" R/G-traction-lok	All	356214-S8	(XX-162)-washer-flat-29/64"	10

IDENTIFICATION CHART

CONE-ROLLER IDENTIFICATION	CONE-ROLLER PART NUMBER	CUP IDENTIFICATION	CUP PART NUMBER
4221-2 CONE, ROLLER and CUP (REAR AXLE DIFFERENTIAL BEARING)			
25590	B7T 1201-A	25520	C3TZ 1202-B
LM48548	B7C 1201-A	LM48510	B7C 1202-A
LM102949	C9AZ 4221-A	LM102910	C9AZ 4222-A
LM501349	B7A 4221-A	LM501310	B7A 4222-A
		LM501314	C6TZ 4222-A

YEAR	MODEL/RESTRICTIONS	PART NUMBER CONE-ROLLER	PART NUMBER CUP	DESCRIPTION	QTY.

APPLICATION CHART

● Refer to page 1 of Section 40 for explanation of differential bearing codes

73/78	A - - All	C9AZ 4221-A	C9AZ 4222-A	●SL-slim-line size	2 ea.
79	A - - with 7.5" R/G	B7A 4221-A	C6TZ 4222-A	●M-Medium size	2 ea.
79	A - - with 8.5" R/G	B7A 4221-B	D9AZ 4222-A	●M-Medium size	2 ea.
73/74	C - - with 8" R/G	B7A 4221-A	B7A 4222-A	●M-medium size	2 ea.
73/76	C - - with 9" R/G	C9AZ 4221-A	C9AZ 4222-A	●SL-slim-line size	2 ea.
73/	D	C9AZ 4221-A	C9AZ 4222-A	●SL-slim-line size	2 ea.
73/	F	C9AZ 4221-A	C9AZ 4222-A	●SL-slim-line size	2 ea.
75/	G - - with 8" R/G	B7A 4221-A	B7A 4222-A	●M-medium size	2 ea.
75/78	G - - with 8.7" and 9" R/G	C9AZ 4221-A	C9AZ 4222-A	●SL-slim-line size	2 ea.
73/78	J	D0RY 4221-A (Incl. cup)	Incl. in 4221 assy.		
79	J - - with 6 3/4" and 7.5" R/G	B7A 4221-A	C6TZ 4222-A	● M-Medium size	2 ea.
73/	K	C9AZ 4221-A	C9AZ 4222-A		2 ea.
74/78	L - - with 6 3/4" R/G	B7C 1201-A	B7C 1202-A	●XS-extra small size	2 ea.
79	L - - with 6 3/4" R/G	B7A 4221-A	C6TZ 4222-A	●M-Medium size	2 ea.
76	L - - with 8" R/G	B7A 4221-A	B7A 4222-A	●M-medium size	2 ea.
73/77	P - - with 8" R/G	B7A 4221-A	B7A 4222-A	●M-medium size	2 ea.
78/	P - - with 7.5" R/G	B7A 4221-A	C6TZ 4222-A	●M-medium size	2 ea.
79	P - - with 6 3/4" R/G				2 ea.
77/	V - - All	C9AZ 4221-A	C9AZ 4222-A	●SL-slim-line size	2 ea
73/76	Y - - All	C9AZ 4221-A	C9AZ 4222-A	●SL-slim-line size	2 ea.

YEAR	MODEL/RESTRICTIONS	AXLE IDENT	PART NUMBER	DESCRIPTION	QTY.
4228	**WASHER (REAR AXLE DIFFERENTIAL SIDE GEAR THRUST)-Also serviced in kit-group 4236**				
73/78	A,G,L - - with 8", 8.7" and 9" R/G	All	C90Z 4228-B	1 25/32" I.D. x 2 27/32" O.D. x 031" thick	AR
73/77	P	All			1
79	A - - with 8.5" R/G	All			1
79	D,F,K,V - - with 9" R/G	All			1
75/78	G - - wwth 8", 8..7" and 9" R/G	All			1
79	G - - with 8" R/G	All			1
73/76	C,Y - - with 8", 8.7" and 9" R/G	All			1
78/	P - - with 7.5" R/G	All	D8BZ 4228-A		2
79	A,J - - with 7.5" R/G	All			2
79	J,L,P - - with 6 3/4" R/G	All	D9BZ 4228-A		2
73/78	J	All	D0RY 4228-A	.043" thick	AR
			D0RY 4228-B	.049" thick	AR
			★ D0RY 4228-C	.050" thick-not replaced	AR
74/78	L	All	C0DW 4228-A	1 25/64" I.D. x 2 1/4" O.D. x .032" thick-also supplied in 4236 kit	2

COPYRIGHT © 1986 — FORD MOTOR COMPANY — DEARBORN, MICHIGAN

1973/79 LINCOLN-MERCURY CARS

YEAR	MODEL/RESTRICTIONS	AXLE IDENT	PART NUMBER	DESCRIPTION	QTY.
4230	WASHER (REAR AXLE DIFFERENTIAL PINION THRUST) - Also serviced in kit-group 4215				
73/78	A,L - - with 8.7" and 9" R/G and conventional axle	WER	D0AZ 4230-B	3/4" I.D. x 1 1/2" O.D.	AR
73/77	P	All			AR
79	A - - with 8.5" R/G	All			AR
73/	D,F,K,V - - with 9" R/G and conventional axle	All			AR
73/76	C,Y	All			AR
75/	G - - conventional axle	All			AR
73/78	A,L,V - - with 8" and 9" R/G with traction-lok	All	C90Z 4230-A	3/4" I.D. x 1 7/16" O.D.	AR
73/	D,F,K - - with 9" R/G and traction-lok	All			AR
73/76	C,Y	All			AR
75/78	G - - with 8" and 9" R/G with traction-lok	All			AR
73/78	J	All	D0RY 4230-A		2
74/	L - -with 6 3/4" axle	All	C0DW 4230-C	#White cadmium plate-also supplies in 4215 kit-21/32" I.D. x 1 11/32" O.D. x .032" thick	AR
79	J,P - - with 6 3/4" axle	All			AR
78/	P - - with 7.5" R/G	All	D8BZ 4230-A		2
79	A,J - - with 7.5" R/G	All			2

4234 SHAFT ASSY. (REAR AXLE)

% Incl. D4AZ 1225-A bearing (tapered roller), D4AW 4212-A spacer and D4AZ 4020-B retainer assy.
♦ Incl. D5AZ 1225-B bearing (tapered roller) and D5MY 1177-A seal
▲ Incl. C9AZ 1225-A bearing
† Incl. D4AZ 1225-A bearing (tapered roller), D4AW 4212-A spacer and D40Z 4020-B retainer assy.
⊕ Incl. B7A 1225-A or D0AZ 1225-A bearing
◊ Incl. D5DZ 1225-B bearing and D3AZ 4020-A retainer assy.
X Incl. D4AZ 1225-A bearing
△ Incl. D20Z 1225-B bearing
■ Incl. D8AZ 1225-A bearing and D8AZ 4020-B retainer assy.

REFER TO CHART BEGINNING ON PAGE 2 BEFORE SELECTING PARTS FROM GROUPS BELOW

A (Mercury)

75	A - - with 4 wheel disc brakes	All	♦ D5VY 4234-B	R.H.-28 splines-33 1/16" long	1
			♦ D6AZ 4234-F	L.H.-28 splines-30 7/16" long	1
73/78	A - - with 9" R/G-exc. disc brakes	All	X D6AZ 4234-A	R.H.-28 splines-33 1/4" long	1
			X D6AZ 4234-B	L.H.-28 splines-30 19/32" long	1
73/78	A - - with 8.7" R/G	All	D6AZ 4234-C	R.H.-28 splines-33 3/16" long	1
			D6AZ 4234-D	L.H.-28 splines-31 3/32" long	1
76/78	A - - with 9" R/G and disc brakes	All	D6AZ 4234-E	R.H.-28 splines 33 1/16" long	1
			D6AZ 4234-F	L.H.-28 splines-30 27/64" long	1
79	A - - with 7.5" or 8.5" R/G	All	D9AZ 4234-A	R.H. and L.H. 30 7/8" long	2

C (Montego)

73/76	C(exc. P/C) - - with 8" ,9" R/G and ball type wheel bearing "Before 10/1/75"	All	★▲D30Z 4234-A	R.H.-28 spline-32 29/64" long- (Repl. by D60Z 4234-C)	1
			★▲D30Z 4234-B	L.H.-28 spline-29 51/64" long (Repl. by D60Z 4234-D)	1
73/74	C(P/C) - - with 9" R/G and ball type wheel bearing	All	★▲D3SZ 4234-A	R.H.-28 spline-32 15/32" long-not replaced	1
			★ D3SZ 4234-B	L.H.-28 spline-29 25/32" long-not replaced	1
74/76	C(exc. P/C) - - w/roller type wheel bearing "Before 10/1/75"	All	★†D40Z 4234-A	R.H.-28 spline-32 7/16" long-not replaced	1
			★†D40Z 4234-B	L.H.-28 spline-29 25/32" long-not replaced	1

YEAR	MODEL/RESTRICTIONS	AXLE IDENT	PART NUMBER	DESCRIPTION	QTY.
4234	SHAFT ASSY. (REAR AXLE) — Cont'd % Incl. D4AZ 1225-A bearing (tapered roller), D4AW 4212-A spacer and D4AZ 4020-B retainer assy. ♦ Incl. D5AZ 1225-B bearing (tapered roller) and D5MY 1177-A seal ▲ Incl. C9AZ 1225-A bearing † Incl. D4AZ 1225-A bearing (tapered roller), D4AW 4212-A spacer and D40Z 4020-B retainer assy. ⊕ Incl. B7A 1225-A or D0AZ 1225-A bearing ◊ Incl. D5DZ 1225-B bearing and D3AZ 4020-A retainer assy. X Incl. D4AZ 1225-A bearing △ Incl. D20Z 1225-B bearing ■ Incl. D8AZ 1225-A bearing and D8AZ 4020-B retainer assy. REFER TO CHART BEGINNING ON PAGE 2 BEFORE SELECTING PARTS FROM GROUPS BELOW				
NOTE 1-	To obtain correct part for all 1979 vehicles, you must measure the brake backing plate bolt to see if the vehicle has 1/2" or 3/8" bolts and order part that is restricted with the correct bolt size diameter				
	C (Montego)				
74/75	C(P/C) - - w/roller type wheel bearing	All	★†D40Z 4234-C ★†D40Z 4234-D	R.H.-28 spline-32 7/16" long-not replaced L.H.-28 spline-29 25/32" long-not replaced	1 1
76	C - - with 9" R/G with 4 1/2" bolt pattern "From 10/1/75"	WEB-AG,AH, AR,AS,AT,AU, AV,AY,BC,BD, WFA-AA,R,Z	♦ D60Z 4234-C ♦ D60Z 4234-D	R.H.-28 splines-32 7/16" long L.H.-28 splines-29 51/64" long	1 1
73/76	C - - with 9" R/G with 5" bolt pattern	WEB-AF, WEC-AD, WFA-M, WFC-Y	★♦D60Z 4234-E ★♦D60Z 4234-F	R.H.-28 splines-32 7/16" long-not replaced L.H.-28 splines-29 51'64" long-not replaced	1 1
	D (Lincoln)				
73	D "Before 12/15/72"	All	▲ D3AZ 4234-A ▲ D3AZ 4234-B	R.H.-28 spline-33 1/4" long L.H.-28 spline-30 5/8" long	1 1
75/	D - - with 9" R/G and disc brakes	All	D6AZ 4234-E D6AZ 4234-F	R.H.-28 splines-33 1/16" long L.H.-28 splines-30 27/64" long	1 1
73/78 79	D - - exc. disc brakes "From 12/15/72" D - - exc. disc brakes-use with 1/2" brake backing plate bolt	All NOTE 1	X D6AZ 4234-A X D6AZ 4234-B	R.H. 28 splines-33 1/4" long L.H. 28 splines-30 19/32"	1 1
79	D - - exc. disc brakes-use with 3/8" brake backing plate bolt	NOTE 1	■ D9AZ 4234-B ■ D9AZ 4234-C	R.H. 28 splines-33 1/4" long L.H. 28 splines-30 5/8" long	1 1
	F (Cougar)				
73	F - - with 8" and 9" R/G w/medium wheel bearings	WCL,WCZ, WES-T,AD, WFB,WFL	★⊕D00Z 4234-C ★⊕D00Z 4234-D	R.H.-28 spline-31 7/8" long-not replaced L.H.-28 spline-27 13/16" long-not replaced	1 1
73	F - - with 9" R/G w/medium wheel bearings	WES-T1,2, AD2,AK2, WFB-C,D2, WFD-F3	★△D3ZZ 4234-A ★△D3ZZ 4234-B	R.H.-28 spline-31 25/32" long-not replaced L.H.-28 spline-27 13/16" long-not replaced	1 1
74/76	F - - w/ball type wheel bearing "Before 10/1/75"	All	★▲D30Z 4234-A ★▲D30Z 4234-B	R.H.-28 spline-32 7/16" long- (Repl. by D60Z 4234-A) L.H.-28 spline-29 51/64" long (Repl. by D60Z 4234-B)	1 1
74/76	F - - w/roller type wheel bearing "Before 10/1/75"	All	★†D40Z 4234-A ★†D40Z 4234-B	R.H.-28 spline-32 7/16" long-not replaced L.H.-28 spline-29 25/32" long-not replaced	1 1
76/77	F - - with 9" R/G & ball type bearing "From 10/1/75"	All	★◊D60Z 4234-A ★◊D60Z 4234-B	R.H.-28 splines-32 29/64" long (Repl. by D60Z 4234-C) L.H.-28 splines-29 51/64" long- (Repl. by D60Z 4234-D)	1 1
76/	F - - with 9" R/G with 4 1/2" bolt pattern "From 10/1/75"	All	X D60Z 4234-C X D60Z 4234-D	R.H.-28 splines-32 7/16" long L.H.-28 splines-29 51/64" long	1 1

COPYRIGHT © 1986 — FORD MOTOR COMPANY — DEARBORN, MICHIGAN

YEAR	MODEL/RESTRICTIONS	AXLE IDENT	PART NUMBER	DESCRIPTION	QTY.
4334	SHAFT ASSY. (REAR AXLE) — Cont'd % Incl. D4AZ 1225-A bearing (tapered roller), D4AW 4212-A spacer and D4AZ 4020-B retainer assy. ♦ Incl. D5AZ 1225-B bearing (tapered roller) and D5MY 1177-A seal ▲ Incl. C9AZ 1225-A bearing † Incl. D4AZ 1225-A bearing (tapered roller), D4AW 4212-A spacer and D40Z 4020-B retainer assy. ⊕ Incl. B7A 1225-A or D0AZ 1225-A bearing ◊ Incl. D5DZ 1225-B bearing and D3AZ 4020-A retainer assy. X Incl. D4AZ 1225-A bearing △ Incl. D20Z 1225-B bearing ■ Incl. D8AZ 1225-A bearing and D8AZ 4020-B retainer assy. REFER TO CHART BEGINNING ON PAGE 2 BEFORE SELECTING PARTS FROM GROUPS BELOW				
	F (Cougar)				
76/	F - - with 9" R/G and 5" bolt pattern	All	★♦D60Z 4234-E ★♦D60Z 4234-F	R.H. 28 splines-32 7/16" long-not replaced L.H. 28 splines-29 51/64" long-not replaced	1 1
	G (Monarch)				
75/78	G - - with 9" R/G-with 4 wheel disc brakes	All	D5DZ 4234-H D5DZ 4234-G	R.H. L.H.	1 1
75/	G - - with 8" R/G	All	& D6DZ 4234-A & D6DZ 4234-B	R.H.-28 splines-30 3/16" long L.H.-28 splines-26 1/8" long	1 1
75/78	G - - with 8.7" R/G	All	D6DZ 4234-C D6DZ 4234-D	R.H.-28 splines-28 7/8" long L.H.-28 splines-27 53/64" long	1 1
	J (Capri)				
73/74	J	All	D1RY 4234-B	Includes wheel bearing	2
76/78	J	All	D5RY 4234-A	Includes wheel bearing	2
79	J - - with 6 3/4" R/G	All	$ D9BZ 4234-A $ D9BZ 4234-B	R.H. 25 splines-30 15/64" long L.H. 25 splines-27 55/64" long	1 1
79	J - - with 7.5" R/G	All	D9BZ 4234-C	R.H. and L.H. 29 15/32" long	2
	K (Mark IV-V)				
73/74	K - - w/ball type wheel bearing	All	★▲D3SZ 4234-A ★ D3SZ 4234-B	R.H.-28 splines-32 15/32" long-not replaced L.H.-28 splines 25/32" long-not replaced	1 1
74	K - - w/roller type wheel bearing	All	★†D40Z 4234-C ★†D40Z 4234-D	R.H.-28 spline-32 7/16" long-not replaced L.H-28 splines-29 25/32" long-not replaced	1 1
75/	K - - with 4 wheel disc brakes	All	D5SZ 4234-B D5SZ 4234-A	R.H.-28 splines-32 3/32" long L.H.-28 splines-29 7/16" long	1 1
75/76	K - - exc. 4 wheel disc brakes	All	★XD6SZ 4234-A ★XD6SZ 4234-B	R.H.-28 splines 32 7/16" long-not replaced L.H.-28 splines 29 51/64" long-not replaced	1 1
	L (Bobcat)				
74/78	L - - with 6 3/4" R/G	All	$ D6FZ 4234-A $ D6FZ 4234-B	R.H.-23 splines-29 11/16" long L.H.-23 splines-26 3/16" long must use with D4FZ 1177-A oil seal	1 1
75/78	L - - with 8" R/G	All	$ D6FZ 4234-C $ D6FZ 4234-D	R.H.-28 splines-29 7/8" long L.H.-28 splines-25 13/16" long	1 1

YEAR	MODEL/RESTRICTIONS	AXLE IDENT	PART NUMBER	DESCRIPTION	QTY.
4234	SHAFT ASSY. (REAR AXLE) — Cont'd				
	% Incl. D4AZ 1225-A bearing (tapered roller), D4AW 4212-A spacer and D4AZ 4020-B retainer assy.				
	▲ Incl. C9AZ 1225-A bearing				
	♦ Incl. D5AZ 1225-B bearing (tapered roller) and D5MY 1177-A seal				
	& Incl. D8DZ 1225-B beaing				
	$ Incl. D8DZ 1225-B bearing and D4FZ 4020-A retainer assy.				
	X Incl. D4AZ 1225-A bearing				
	△ Incl. D20Z 1225-B bearing				
	REFER TO CHART BEGINNING ON PAGE 2 BEFORE SELECTING PARTS FROM GROUPS BELOW				
	L (Bobcat)				
79	L - - with 6 3/4" R/G	All	$ D9BZ 4234-A	R.H. 25 splines-30 15/64" long	1
			$ D9FZ 4234-A	L.H. 25 splines-25 5/8" long	1
	P (Comet-Zephyr)				
73	P	All	★ D3DZ 4234-A	R.H.-28 spline-29 5/8" long-not replaced	1
			★ D3DZ 4234-B	L.H.-28 spline-29 9/16" long-not replaced	1
74/77	P	All	★& D6DZ 4234-E	R.H.-28 splines-29 39/64" long-not replaced	1
			& D6DZ 4234-F	L.H.-28 splines-25 35/64" long	1
79	P - - with 6 3/4" R/G	All	$ D9BZ 4234-A	R.H. 25 splines 30 15/64" long	1
			$ D9BZ 4234-B	L.H. 25 splines-27 55/64" long	1
78/	P - - with 7.5" R/G	All	D9BZ 4234-C	R.H. and L.H. 29 15/32" long	2
	V (Versailles)				
77/	V - - 9" R/G	All	D5DZ 4234-H	R.H.	1
			D5DZ 4234-G	L.H.	1
	Y (Meteor)				
73/76	Y - - with 9" R/G - exc. disc brakes	All	X D6AZ 4234-A	R.H.-28 splines-33 1/4" long	1
			X D6AZ 4234-B	L.H.-28 splines-30 19/32" long	1
73/76	Y - - with 8.7" R/G	All	D6AZ 4234-C	R.H.-28 splines-33 3/16" long	1
			D6AZ 4234-D	L.H.-28 splines-31 3/32" long	1
76	Y - - with 9" R/G and disc brakes	All	D6AZ 4234-E	R.H.-28 splines-33 1/16" long	1
			D6AZ 4234-F	L.H.-28 splines-30 27/64" long	1
4236	GEAR (REAR AXLE DIFFERENTIAL SIDE)				
73/78	A,L,P - - with 8" and 9" R/G and conventional axle	All	C9AZ 4236-B	28 spline shaft-incl. (2) D8AW 4236-CA gears 1 3/16" long-(2) C9OZ 4228-A washers	1
73/	D,F,G,K,V - - with 8" and 9" R/G and conventional axle	All			1
73/76	C,Y - - with 8" and 9" R/G conventional	All			1
73/78	A,V - - with 8" and 9" R/G and traction-lok	All	C9AZ 4236-A	28 spline shaft-incl. (1) D8AW 4236-BA gear-21/32" long-(1) D8AW 4236-CA gear-1 3/16" long-(2) C9OZ 4228-A washer	1
73/	D,F,G,K - - with 8" and 9" R/G and traction-lok	All			1
73/76	C,K,L,P,Y - - with 8" and 9" R/G and traction-lok	All			1

COPYRIGHT © 1986 — FORD MOTOR COMPANY — DEARBORN, MICHIGAN

1973/79 LINCOLN-MERCURY CARS

YEAR	MODEL/RESTRICTIONS	AXLE IDENT	PART NUMBER	DESCRIPTION	QTY.
4236	**GEAR (REAR AXLE DIFFERENTIAL SIDE) — Cont'd**				
73/78 75/78	A,Y - - with 8.7" R/G G - - with 8.7" R/G	WER WER	C7AZ 4236-A	28 spline shaft-4 omitted-w/hub-incl. (2) D8AW 4236-AA gears-(2) C90Z 4228-A washer	1 1
73/74	D - - 9" R/G and traction-lok	WFY	★ C2AZ 4236-B	Hub type-not replaced	1
73	F - - with 9" R/G and conventional axle	All	C80Z 4236-A	31 spline shaft-16 teeth-13/16" long	2
73	F - - with 9" R/G and traction-lok	All	C80Z 4236-A ★ C80Z 4236-B	R.H.-31 spline shaft-16 teeth-13/16" long L.H.-31 spline shaft-16 teeth-21/32" long-repl. by E2UZ 4236-A (4/83)	1 1
79	A - - with 8.5" R/G	All	D9AZ 4236-B	Incl. (2) E1AW 4236-BA gear, (2) C90Z 4228-A washers	1
79 78/79	A,J - - with 7.5" R/G P - - with 7.5" R/G	All All	D9AZ 4236-A	Incl. (2) E1AW 4236-AA gear, (2) D8BZ 4228-A washers	1
79	J,L,P - - with 6 3/4" R/G	All	D9BZ 4236-A	Incl. (2) D9BW 4236-AA gear, (2) D9BZ 4228-A washers	1
73/78	J	All	★ D0RY 4236-A	not replaced	2
74/78	L	All	D1FZ 4236-A	23 splines-16 teeth-also serviced in D1FZ 4236-B kit	1
74/78	L	All	D1FZ 4236-B	Incl. (2) D1FZ 4236-A gears, (2) C0DW 4228-A washers	1
4N237	**"U" WASHER (REAR AXLE SHAFT RETAINING)**				
73/78 78/ 79 79	A,G,Y P - - with 7.5" R/G A,J - - with 7.5" R/G A - - with 8.5" R/G	WER All All All	C7AZ 4N237-A		2 2 2 2
4241	**PIN (REAR AXLE DIFFERENTIAL and PINION SHAFT LOCK)**				
73/78	A,G,Y	WER	C7AZ 4241-A	2" long x 1/2" shoulder with 5/16"-18 thread-pin-1/4" dia.	1
78/ 79 79	P - - with 7.5" R/G A - - with 8.5" R/G A,J - - with 7.5" R/G	All All All	D8BZ 4241-A		1 1 1
4A263	**DAMPER (REAR AXLE DRIVE LINE VIBRATION)**				
73/78 75/78	A (exc. P/C) A (exc. P/C)	351,400, 429 460	★ C9AZ 4A263-A	Exc. 3.25 axle trailer pkg-.-15" long-not replaced	1 1
73/74	A	460	★ D2MY 4A263-A	not replaced	1
79	A - - with 302 engine	All	D9AZ 4A263-A	On transmission	1
73/	D	All	D3VY 4A263-A		1
77/	F (exc. P/C)	All	★ D80Z 4A263-A	On transmission-not replaced	1
75/	G - - 302,351 with C4 A/T and 9" R/G	All	★ D74Y 4A263-A	On transmission-not replaced	1
79	J - - with 4 speed M/T and turbo 2300 engine	All	★ D9ZZ 4A263-D	On transmission-not replaced	1
79	J - - with 4 spd. M/T and non-turbo 2300 engine	All	D9ZZ 4A263-A	On transmission	1
79	J - - with C3 trans. and 2300 engine	All	D9ZZ 4A263-C	On transmission	1
73/76	L - - with A/T	All	★ D4FZ 4A263-A	On transmission-not replaced	1
73/76	L - - with M/T	All	★ D2FZ 4A263-B	On transmission-not replaced	1
77/	L - - with A/T and 2300 engine	All	★ D8FZ 4A263-A	On transmission-not replaced	1
78/	P - - with 4 spd. M/T and 2300 engine	All	D8BZ 4A263-A	On transmission	1
78/	P - - with C/3 trans. and 2300 engine	All	D8BZ 4A263-B	On transmission	1

YEAR	MODEL/RESTRICTIONS	AXLE IDENT	PART NUMBER	DESCRIPTION	QTY.
4A263	DAMPER (REAR AXLE DRIVE LINE VIBRATION) — Cont'd				
78/	P - - with C/3 trans., 2300 engine and A/C	All	D8BZ 4A263-C	On No. 3 crossmember	1
77/79	V - - 302 with C4 A/T "Before 4/2/79"	All	D74Y 4A263-C	On transmission	1
79	V - - 302 with C4 A/T "From 4/2/79"	All	★ D94Y 4A263-A	On transmission-not replaced	1
79	V- - 302 with high altitude axle	All	★ D94Y 4A263-B	On rear axle - - incl. (3) 387187-S100 bolt-not replaced	1
77	V - - 351 with C4 A/T	All	★ D74Y 4A263-B	On transmission-not replaced	1
77	V - - 351 with C4 A/T	All	★ D74Y 4A263-D	On No. 3 crossmember-not replaced	1
73/76 75/76	Y (exc. P/C)-exc. B/W trans. Y (exc. P/C)	351,400,429 460	★ C9AZ 4A263-A	Exc. 3.25 axle trailer pkg.-15" long-not replaced	1 1
74	Y	460	★ D2MY 4A263-A	not replaced	1
4A263	KIT DAMPER (REAR AXLE DRIVE LINE VIBRATION)				
79	G - - with 8" R/G and 2.79 or 3.00 ratio	All	D9DZ 4A263-B	On rear axle Incl. (1) D9DW 4A263-DA damper assy. (2) 300916-S2 bolt,(3) 388337-S2 washer,(2) 382802-S2 nut, (3) 46014-S100 bolt, (3) 370172-S washer	1
			300916-S2	(BB-169-H)-hex bolt (attaches upper half of assy. to lower half) 3/8"-16-4.00"	2
			388337-S2	(XX-147-E)-washer (attaches upper half of assy. to lower half)-3/8"	2
			382802-S2	(MM-173-J8)-nut (attaches upper half of assy. to lower half)-3/8"-16	2
			46014-S100	(B-257-C)-bolt (attaches damper assy. to 4614)- 3/8"-16-1 3/4"	3
			370172-S	(XX-165-J)-washer (attaches damper assy. to 4614)-flat 7/16"	3

COPYRIGHT © 1986 — FORD MOTOR COMPANY — DEARBORN, MICHIGAN

1973/79 LINCOLN-MERCURY CARS

YEAR	MODEL/RESTRICTIONS	AXLE IDENT	PART NUMBER	DESCRIPTION	QTY.
4A263	**KIT DAMPER (REAR AXLE DRIVE LINE VIBRATION) — Cont'd**				
78/79	J,P - - with 6 3/4" and 7.5" R/G	All	E1DZ 4A263-C	On rear axle Incl. (1) E1DW 4A267-CA damper (1) D9BC 4937-AA support (2) D9BW 4A444-AB strap-long (1) D9BW 4A445-AB strap-short (4) 378489-S2 nut, (1) I.S.	1
			378489-S2	(MM-173-JD)-hex. lock nut 3/8"-16 (attaches damper to rear axle)	4
4298	**BRACKET (REAR AXLE DRIVING PINION BEARING RETAINER)**				
73	F	All	★ C5ZZ 4298-B	not replaced	1
73/	K - - exc. sure-track	All	D2SZ 4298-A		1
75/	K - - with sure-track	All	D3SZ 4298-A		1
74	L	All	★ D2FZ 4298-A	not replaced	1
75/78	L "Before 7/1/78"	All	★ D5FZ 4298-A	not replaced	1
78/	L - - with 6 3/4" R/G "From 7/1/78"	All	★ D9FZ 4298-A	not replaced	1
73/74	P	All	★ D0DZ 4298-A	not replaced	1
4A300	**SLEEVE (REAR AXLE SHAFT SEAL)**				
73	F	All	C70Z 4A300-A	Steel-1 3/8" I.D. x 1 1/2" O.D. x 5/8" thick-with 31 spline shafts	2
4A323	**GUIDE (REAR AXLE DIFFERENTIAL CLUTCH PLATE)**				
73/78	A,C,G,L,V,Y - - with 8" and 9" R/G and traction-lok	All	D00Z 4A323-A		4
73/	D,F,K - - with 9" R/G and traction-lok	All			1

YEAR	MODEL/RESTRICTIONS	AXLE IDENT	PART NUMBER	DESCRIPTION	QTY.
4A324	SHIM KIT (REAR AXLE DIFFERENTIAL CLUTCH)				
73/78	A,C,G,L,V,Y - - w/traction-lok and 8" or 9" R/G	All	C80Z 4A324-A	Incl. (4) C90W 4A324-E-.010" thick- (2) C90W 4A324-F-.005" thick	1
73/	D,F,K - - with 9" R/G and traction-lok	All			1
4A325	PLATE (REAR AXLE DIFFERENTIAL CLUTCH)				
73/78	A,C,D,F,G,L,K,V,Y - - w/traction-lok and 8" or 9" R/G	All	C80Z 4A325-B	4 7/8" O.D. with 4 tabs-.085" thick	1
73/	D,F,K - - with 9" R/G and traction-lok	All			1
4A326	PLATE (REAR AXLE DIFFERENTIAL CLUTCH SPRING PRELOAD)				
73/78	A,C,D,F,G,K,L,V,Y - - with 8" and 9" R/G and traction-lok	All	C80Z 4A326-A		1or2
73/	D,F,K - - with 9" R/G and traction-lok	All			1 or 2
4A332	"O" RING (REAR AXLE SHAFT)				
73/78	A,Y	WER	C7AZ 4A332-A		2
75/78	G	WER			2
79	A - - with 7.5" and 8.5" R/G	All			2
79	J - - with 7.5" R/G	All			2
78/	P - - with 7.5" R/G	All			2
4346	BOLT (REAR AXLE DIFFERENTIAL COVER TO HOUSING)				
73/78	A,G,Y	WER	D9AZ 4346-A	Hex. washer head locking-5/16"-18 x 5/8"	10
74/78	L	WGF			8
78	P - - with 7.5" R/G	All			8
79	A,J,L,P - - with 6 3/4", 7.5", 8.5" R/G	All			AR
4347	BOLT (DIFFERENTIAL CARRIER TO REAR AXLE HOUSING)				
73/78	A,C,D,F,G,K,L,P,V	All	D9AZ 4347-B		10
79	D,F,G,K,V - - with 8", 9" R/G	All			10
4A404-5	ADAPTER (REAR AXLE SHAFT)				
75/78	A,D,Y - - with 4 wheel disc brakes	All	★ D5VZ 4A404-A	R.H.-not replaced	1
79	D - - with 4 wheel disc brakes and 1/2" brake backing plate bolt	WGC-N			
			★ D5VZ 4A405-A	L.H.-not replaced	1
79	D - - with 4 wheel disc brakes and 3/8" brake backing plate bolt	WGC-N1	D8AZ 4A404-A D8AZ 4A405-A	R.H. L.H.	1 1
75/78	G - - with 4 wheel disc brakes and 1/2" brake backing plate bolt "Before 4/1/78"	WDX	★ D5DZ 4A405-A	R.H. and L.H.-not replaced	2
77/79	V - - with 4 wheel disc brakes and 1/2" brake backing plate bolt "Before 7/15/78	All			2
75/78	K - - with 4 wheel disc brakes	All	★ D5SZ 4A404-A	R.H. and L.H.-not replaced	2
79	K - - with 4 wheel disc brakes and 1/2" brake backing plate bolt	WFV-T, WGB-V,W AB,AD			2

COPYRIGHT © 1986 — FORD MOTOR COMPANY — DEARBORN, MICHIGAN

1973/79 LINCOLN-MERCURY CARS

YEAR	MODEL/RESTRICTIONS	AXLE IDENT	PART NUMBER	DESCRIPTION	QTY.
4A404-5	**ADAPTER (REAR AXLE SHAFT) — Cont'd**				
78	G - - with 4 wheel disc brakes and 3/8" brake backing plate bolt "From 4/1/78"	All	★ D8DZ 4A405-A	R.H. and L.H.-not replaced	2
79	V - - with 4 wheel disc brakes and 3/8" brake locking plate bolt "From 7/15/78"	All			2
79	K - - with 4 wheel disc brakes and 3/8" brake backing plate bolt	WGC-T1, WGB-V1,W1, AB1,AD1	★ D8LY 4A404-A	R.H. and L.H.-not replaced	2
4A408	**SHIELD (DRIVESHAFT UNIVERSAL JOINT HEAT)**				
75	G - - 8 cyl. 351-Calif.	All	★ D5DZ 4A408-B	Not replaced	1
76	G - - 8 cyl. 302,351-Calif.	All	★ D6DZ 4A408-A	Not replaced	1
75/76	L - - 6 cyl. - Calif.	All	★ D5FZ 4A408-B	Not replaced	1
4420	**SEAT (REAR AXLE DIFFERENTIAL PINION SHAFT)-Also refer to kit 4211**				
74	L	All	D2FZ 4420-A		1
79	J,P - - with 4 pinion 6 3/4" R/G	All			1
75/78	A,C,G,L,V,Y - - with 8" or 9" R/G and traction lok	All	E2UZ 4420-A		1
75/	D,F,K - - with 9" R/G and traction-lok	All			1
4A448	**SHIELD (REAR AXLE DIFFERENTIAL HOUSING COVER)**				
78	G - - with 8.7" R/G "From 5/22/78"	WER-AC	★ D8DZ 4A448-A	Not replaced	1
4529	**BOLT (DRIVESHAFT UNIVERSAL JOINT)**				
73/77	P	All	D3AZ 4529-B		2
73/76	C,Y	All			2
75/	G	All			2
73/78	A	All			2
73/	F - - with 9" R/G	All			2
73/	L - - with 6 3/4" and 8" R/G	All			2
73/78	A,C,P,Y	All	34976-S4	(M-89-CA)-locknut-5/16"-18	4
73/	F - - with 9" R/G	All			4
73/	L - - with 6 3/4" and 8" R/G	All			4

4602 DRIVESHAFT ASSY.

Driveshafts group 4602, Universal Joints group 4635 and Slip Yoke Assy. group

chart form under group number 4602. The driveshafts and related parts are listed by model year designated by car line. The various codes designating the universal joints and slip yoke assy. are explained below. Identification charts showing the various dimensions of universal joints and slip yoke assy. appear under groups 4635 and 4841.

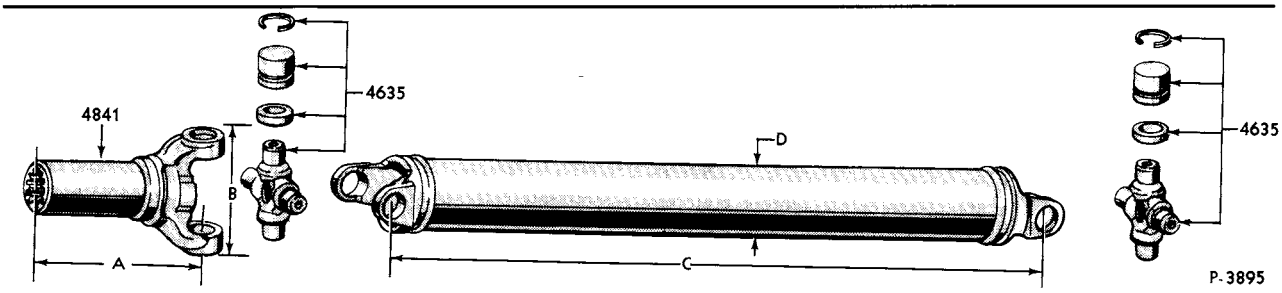

CODE NUMBER TO PART NUMBER LISTING–Quantity As Required

CODE NO.	PART NUMBER	DESCRIPTION	CODE NO.	PART NUMBER	DESCRIPTION
	Universal Joint Codes used throughout the chart apply to part numbers as indicated. Also refer to group 4635 for Universal Joint Identification Chart				
E	C3AZ 4635-E	Cleveland Steel-1310-3 15/32" span	R	D4RY 4635-A	
F	C3AZ 4635-F	Cleveland Steel-1310-3 15/32" span	U	C8SZ 4635-A	Saginaw-1330
G	C3AZ 4635-G	Cleveland Steel-1330-3 5/8" span	V	★ B6TZ 4635-A	
H	C3AZ 4635-H	Cleveland Steel-1330-3 5/8" span		r/bC3AZ 4635-E	
J	★ C4SZ 4635-B	Dana (Spicer)-1330-3 5/8" span	W	D90Z 4635-A	Saginaw-1330
	r/bC3AZ 4635-G				

CODE CROSS REFERENCE CHART

CODE NO	PART NUMBER	A	B	NO. SPLINES	CODE NO	PART NUMBER	A	B	NO. SPLINES
	Slip Yoke Codes used throughout the chart apply to part numbers as indicated. Also refer to group 4841 for Slip Yoke Identification Chart † Production ‡ Service								
2	★ C3AZ 4841-A	8 7/32"	3 1/2"	31	16	D2SZ 4841-A	8 9/64"	3 15/16"	31
	r/bD7TZ 4841-A (11/81)				17	D2AZ 4841-A	†8 9/16"	3 29/32"	31
3	C3AZ 4841-D	8 3/32"	3 1/2"	28			‡6 29/32"	3 29/32"	31
4	C3AZ 4841-G	†8 7/32"	3 7/8"	28	18	D2ZZ 4841-A	8 1/4"	3 17/32"	28
		‡ 5 29/32			24	D1FZ 4841-B	5 29/32"	3 1/2"	25
7	C7AZ 4841-C	8 7/32"	3 15/16"	31	29	D3TZ 4841-A	6 1/32"	3 11/32"	28
8	C7SZ 4841-A	8 5/32"	3 29/32"	31	35	★ D7AZ 4841-A	5 29/32"	3 15/16"	28
9	C8SZ 4841-A	9 7/16"	3 1/2"	31		r/bE0TZ 4841-A			
10	D0VY 4841-A	8 13/32"	3 5/8"	31	38	D8BZ 4841-A	5 29/32"	3 17/32"	25
12	★ D1AZ 4841-C	8 1/8"	3 15/16"	31	39	D8BZ 4841-B	5 29/32"	3 17/32"	28
	Not replaced				40	D8BZ 4841-C	5 29/32"	3 17/32"	25
14	D2AZ 4841-C	†8 1/8"	3 1/2"	31	41	C5TZ 4841-E	6	3 11/32	
		‡ 6 2/3"			45	★ D90Z 4841-A			
15	D1AZ 4841-A	†8 1/2"	3 1/2"	28		Not replaced			
		‡ 5 29/32"			46	E0WY 4841-A			28

COPYRIGHT © 1986 — FORD MOTOR COMPANY — DEARBORN, MICHIGAN

APPLICATION CHART

MODEL	ENGINE C.I.D. (C.C.D.)	TRANSMISSION C3	C4 & JATCO	FMX & B/W	C6	3/M/T	4/M/T	U-JOINT IND. DESIGN	FRONT ●	REAR ●	SLIP YOKE CODE ●	DRIVESHAFT TYPE @	D DIA. (INCHES)	C LENGTH (INCHES)	PART NUMBER

NOTES: ●REFER TO PAGE 1 OF SECTION 46 TO TRANSLATE CODES INTO PART NUMBERS
@TYPE 1-STEEL SHAFT, 2-CARDBOARD LINED, 4-T/T TUBE IN TUBE DRIVE THRU RUBBER, 5-TUNED YOKE AND DAMPER, 8-INTERNAL TUNED DAMPER

4602 DRIVESHAFT ASSY. — Cont'd

A (Mercury) 1973

A (exc. 71) - - with 8.7" R/G	351			x				1310	E	F	14	5	3 1/2	64 29/32	★ D2MY 4602-C Not replaced
A (exc. 71) - - with 9" R/G	351			x				1330	G	H	7	4	3 1/2	64 11/16	★ D1MY 4602-A Not replaced
A (71) - - with 8.7" R/G	351			x				1310	E	F	14	5	3 1/2	61 15/16	★ D1AZ 4602-B Not replaced
A (71) - - with 9" R/G	351			x				1330	G	H	8	4	3 1/2	61 11/16	★ D0AZ 4602-E Not replaced
A - - with 8.7" and 9" R/G	400			x				1330	G	H	8	4	3 1/2	64 29/32	★ D0AZ 4602-E Not replaced
A (exc. 71) - - with 8.7" R/G	400				x			1330	G	H	15	5	3 1/2	64 1/16	★ D2MY 4602-G Not replaced
A(71) - - with 8.7" R/G	400				x			1330	G	H	17	5	3 1/2	61 3/64	★ D2AZ 4602-A Not replaced
A (exc. 71) - - with 9" R/G	400				x			1330	G	H	8	4	3 1/2	64 5/16	★ C9MY 4602-F Not replaced
A (71) - - with 9" R/G	400				x			1330	G	H	8	4	3 1/2	61 5/16	★ C9AZ 4602-H Not replaced
A (exc. 71 and P/C) - - with 9" R/G and 2.75 ratio	429				x			1330	G	H	8	4	3 1/2	64 5/16	★ C9MY 4602-F Not replaced
A (exc. 71 and P/C) - - with 9" R/G and 3.25 ratio	429				x			1330	G	H	8	2	3 3/4	64 5/16	★ D3MY 4602-A Not replaced
A (71) - - with 9" R/G	429				x			1330	G	H	8	4	3 1/2	61 5/16	★ C9AZ 4602-H Not replaced
A (exc. 71 and P/C) - - with 9" R/G and 2.75 ratio	460				x			1330	G	H	8	4	3 1/2	64 5/16	★ C9MY 4602-F Not replaced
A (exc. 71 and P/C) - - with 9" R/G and 3.25 ratio	460				x			1330	G	H	8	2	3 3/4	64 5/16	★ D3MY 4602-A Not replaced
A (71 exc. P/C) - - with 9" R/G	460				x			1330	G	H	8	4	3 1/2	61 5/16	★ C9AZ 4602-H Not replaced
A (P/C exc. 71) - - with 9" R/G	460				x			1330	G	H	12	2	3 3/4	60 13/16	★ D1MY 4602-D Not replaced
A (71 P/C) - - with 9" R/G and 3.00 ratio	460				x			1330	G	H	12	2	3 3/4	57 13/16	★ D1AZ 4602-C Not replaced

C (Montego)

C(53) - - with 8" R/G	250		x			x		1310	E	F	18	2	3	61 39/64	D20Z 4602-B
C (63,65) - - with 8" R/G	250		x			x		1310	E	F	18	2	3	57 13/16	★ D40Z 4602-A Not replaced
C (53,71) - - with 9" R/G	250		x			x		1330	G	H	4	2	3 1/2	60 11/32	D20Z 4602-D
C (63,65) - - with 9" R/G	250					x		1330	G	H	4	2	3 1/2	56 3/8	★ D40Z 4602-B Not replaced
C (53) - - with 8" R/G	302		x			x		1310	E	F	18	2	3	61 39/64	D20Z 4602-B

APPLICATION CHART

MODEL	ENGINE C.I.D. (C.C.D.)	TRANSMISSION C3	C4 & JATCO	FMX & B/W	C6	3/M/T	4/M/T	U-JOINT IND. DESIGN	FRONT ●	REAR ●	SLIP YOKE CODE ●	DRIVESHAFT TYPE @	D DIA. (INCHES)	C LENGTH (INCHES)	PART NUMBER
NOTES:	●REFER TO PAGE 1 OF SECTION 46 TO TRANSLATE CODES INTO PART NUMBERS @TYPE 1-STEEL SHAFT, 2-CARDBOARD LINED, 4-T/T TUBE IN TUBE DRIVE THRU RUBBER, 5-TUNED YOKE AND DAMPER, 8-INTERNAL TUNED DAMPER 6-with constant velocity joint, 7-w/o velocity joint														
4602	DRIVESHAFT ASSY. — Cont'd ● Universal Joint (4635) not serviced, part of 4602 assembly % Slip yoke (4841) not serviced, part of 4602 assy. ▲ 2000 cc ♦ 2600 cc														
C (Montego) 1973															
C (53) – – with 8" R/G	302		x			x		1310	E	F	18	2	3 1/2	61 3/4	★ D20Z 4602-J Not replaced
C (63,65) – – with 8" R/G	302		x			x		1310	E	F	18	2	3	57 29/32	D20Z 4602-A
C (53,71) – – with 9" R/G	302		x					1330	G	H	4	2	3 1/2	60 11/32	D20Z 4602-D
C (53,71) – – with 9" R/G	302,351-2/B			x				1330 1310	G	F	8	4	3 1/2	60 13/16	★ D2AZ 4602-B Not replaced
C (63,65) – – with 9" R/G	302,351-2/B, 460 P/C			x	x			1330	G	H	8	2	3 1/2	57	D40Z 4602-D
C (63,65) – – with 9" R/G	351-4/B						x	1330	G	H	4	2	3 1/2	56 13/32	D20Z 4602-C
C (53,71) – – with 9" R/G and 28 spline yokes	351		x				x	1330	G	H	4	2	3 1/2	60 11/32	D20Z 4602-D
C (53,71) – – with 9" R/G and 31 spline yokes	351-4/B				x		x	1330	G	H	8	2	3 1/2	57	D40Z 4602-D
C (63,65) – – with 9" R/G and 28 spline yokes	351-2/B		x			x		1330	G	H	4	2	3 1/2	56 13/32	D20Z 4602-C
C (63,65) – – with 9" R/G and 31 spline yokes	351-4/B				x		x	1330	G	H	8	2	3 1/2	53 1/8	★ D40Z 4602-E Not replaced
C (53,71) – – with 9" R/G	400,429			x	x			1330	G	H	8	2	3 1/2	57	D40Z 4602-D
C (63,65) – – with 9" R/G	400,429				x		x	1330	G	H	8	2	3 1/2	53 1/8	★ D40Z 4602-E Not replaced
D (Lincoln)															
D	460				x			1330	2-J	2-J	10	4	3 1/2	57 13/16	★ D0VY 4602-A r/b D7VY 4602-A
D	460				x			1330	2-U	2-U	9	4	3 1/2	57 13/16	D7VY 4602-A
F (Cougar)															
F	351			x				1310	E	F	2	2	3	54 1/4	★ D1WY 4602-B Not replaced
F – – 3.25 and below ratio	351				x			1310	E	F	2	2	3	50 13/32	★ D1WY 4602-C Not replaced
F – – 3.25 and below ratio	351						x	1310	E	F	3	2	3	53 15/16	★ D1WY 4602-A Not replaced
F – – 3.50 ratio	351				x			1330	G	H	8	2	3 1/2	50 13/32	★ D1WY 4602-E Not replaced
F – – 3.50 ratio	351						x	1330	G	H	4	2	3	53 13/16	★ D1WY 4602-D Not replaced
J (Capri)															
J	122 (2000 cc)		x						R	R	%			45 15/64	★ D2RY 4602-F Not replaced
J	122 (2000 cc)			x					R	R	%			45 15/64	★ D1RY 4602-H Not replaced
J	122 (2000 cc)						x		R	R	%	6		46 27/64	★ D2RY 4602-J Not replaced

COPYRIGHT © 1986 — FORD MOTOR COMPANY — DEARBORN, MICHIGAN

1973/79 LINCOLN-MERCURY CARS

APPLICATION CHART

MODEL	ENGINE C.I.D. (C.C.D.)	TRANSMISSION C3	C4 & JATCO	FMX & B/W	C6	3/M/T	4/M/T	U-JOINT IND. DESIGN	FRONT ●	REAR ●	SLIP YOKE CODE ●	DRIVESHAFT TYPE @	D DIA. (INCHES)	C LENGTH (INCHES)	PART NUMBER
J (Capri)															
J	122 (2000 cc)						x		R	R	%	7		46 27/64	D2RY 4602-K
J	159 (2600 cc)		x						R	R	%			47 15/64	D2RY 4602-G
J	159 (2600 cc)			x					R	R	%			45 7/8	★ D2RY 4602-D Not replaced
J	159 (2600 cc)						x		R	R	%	6		46 27/64	★ D2RY 4602-E Not replaced
J	159 (2600 cc)						x		R	R	%	7		46 27/64	D2RY 4602-H
K (Mark IV) 1973															
K	460				x			1330	G	G	16	2	3	55 19/32	D8LY 4602-A
P (Comet)															
P (54)	200,250		x			x		1310	E	F	15	5	2 3/4	52 17/32	★ D4DZ 4602-B Not replaced
P (54)	302		x			x		1310	E	F	15	5	2 3/4	53 17/32	★ D4DZ 4602-C Not replaced
P (62)	200,250		x			x		1310	E	F	18	1	2 1/4	45 21/32	D2DZ 4602-B
P (62)	302		x			x		1310	E	F	15	5	2 1/4	46 21/32	D2DZ 4602-D
Y (Meteor)															
Y (exc. 71) - - with 8.7" R/G	351			x				1310	E	F	14	5	3 1/2	64 29/32	★ D2MY 4602-C Not replaced
Y (exc. 71) - - with 9" R/G	351			x				1330	G	H	7	4	3 1/2	64 11/16	★ D1MY 4602-A Not replaced
Y (71) - - with 8.7" R/G	351			x				1310	E	F	14	5	3 1/2	61 15/16	★ D1AZ 4602-B Not replaced
Y (71) - - with 9" R/G	351			x				1330	G	H	8	4	3 1/2	61 11/16	★ D0AZ 4602-E Not replaced
Y - - with 8.7" and 9" R/G	400			x				1330	G	H	8	4	3 1/2	61 11/16	★ D0AZ 4602-E Not replaced
Y (exc. 71) - - with 8.7" R/G	400				x			1330	G	H	15	5	3 1/2	64 1/16	★ D2MY 4602-G Not replaced
Y (exc. 71) - - with 9" R/G	400				x			1330	G	H	8	4	3 1/2	64 5/16	★ C9MY 4602-F Not replaced
Y (71) - - with 9" R/G	400				x			1330	G	H	8	4	3 1/2	61 5/16	★ C9AZ 4602-H Not replaced
Y (exc. 71) - - with 9" R/G and 2.75 ratio	429				x			1330	G	H	8	4	3 1/2	64 5/16	★ C9MY 4602-F Not replaced
Y (exc. 71) - - with 9" R/G and 3.25 ratio	429				x			1330	G	H	8	2	3 3/4	64 5/16	★ D3MY 4602-A Not replaced
Y (71) - - with 9" R/G	429				x			1330	G	H	8	4	3 1/2	61 5/16	★ C9AZ 4602-H Not replaced
Y (exc. 71 and P/C) - - with 9" R/G and 2.75 ratio	460				x			1330	G	H	8	4	3 1/2	64 5/16	★ C9MY 4602-F Not replaced

NOTES: ●REFER TO PAGE 1 OF SECTION 46 TO TRANSLATE CODES INTO PART NUMBERS
@TYPE 1-STEEL SHAFT, 2-CARDBOARD LINED, 4-T/T TUBE IN TUBE DRIVE THRU RUBBER, 5-TUNED YOKE AND DAMPER, 8-INTERNAL TUNED DAMPER
6-with constant velocity joint, 7-w/o velocity joint

4602 DRIVESHAFT ASSY. — Cont'd
● Universal Joint (4635) not serviced, part of 4602 assembly % Slip yoke (4841) not serviced, part of 4602 assy.
▲ 2000 cc ♦ 2600 cc

APPLICATION CHART

MODEL	ENGINE C.I.D. (C.C.D.)	TRANSMISSION C3	C4 & JATCO	FMX & B/W	C6	3/M/T	4/M/T	U-JOINT IND. DESIGN	FRONT ●	REAR ●	SLIP YOKE CODE ●	DRIVESHAFT TYPE @	D DIA. (INCHES)	C LENGTH (INCHES)	PART NUMBER
NOTES:	●REFER TO PAGE 1 OF SECTION 46 TO TRANSLATE CODES INTO PART NUMBERS @TYPE 1-STEEL SHAFT, 2-CARDBOARD LINED, 4-T/T TUBE IN TUBE DRIVE THRU RUBBER, 5-TUNED YOKE AND DAMPER, 8-INTERNAL TUNED DAMPER 6-with constant velocity joint, 7-w/o velocity joint														
4602	DRIVESHAFT ASSY. — Cont'd ● Universal Joint (4635) not serviced, part of 4602 assembly % Slip yoke (4841) not serviced, part of 4602 assy. ▲ 2000 cc ♦ 2600 cc														
Y (Meteor)					**1973**										
Y (exc. 71 and P/C) - - with 9" R/G and 3.25 ratio	460				x			1330	G	H	8	2	3 3/4	64 5/16	★D3MY 4602-A Not replaced
Y (71 exc. P/C) - - with 9" R/G	460				x			1330	G	H	8	4	3 1/2	61 5/16	★C9AZ 4602-H Not replaced
Y (P/C exc. 71) - - with 9" R/G and 2.75 ratio	460				x			1330	G	H	12	2	3 3/4	60 13/16	★D1MY 4602-D Not replaced
Y (71 P/C) - - with 9" R/G and 300 ratio	460				x			1330	G	H	12	2	3 3/4	57 13/16	★D1AZ 4602-C Not replaced
A (Mercury)					**1974**										
A (exc. 71)-with 8.7" R/G	351-C			x				1310-	E	F	14	5	3 1/2	64 29/32	D2MY 4602-L
A (exc. 71) - - with 8.7" and 9" R/G (exc. 3.25 ratio)	400				x			1330	G	H	15	5	3 1/2	64 1/16	★D2MY 4602-G Not replaced
A (71) - - with 8.7" R/G	400				x			1330	G	H	17	5	3 1/2	61 3/64	★D2AZ 4602-A Not replaced
A - - with 9" R/G	400			x				1330	G	H	8	4	3 1/2	64 11/16	★D1MY 4602-A Not replaced
A (exc. 71) - - with 9" R/G and 3.25 ratio	400				x			1330	G	H	8	4	3 1/2	64 5/16	★C9MY 4602-F Not replaced
A (71) - - with 9" R/G	400				x			1330	G	H	17	5	3 1/2	61 3/64	D2AZ 4602-A
A (71) - - with 9" R/G	400				x			1330	G	H	8	4	3 1/2	61 5/16	★C9AZ 4602-H Not replaced
A (exc. 71) - - with 2.75 ratio	460 (exc. P/C)				x			1330	G	H	8	5	3 1/2	64 1/16	★D2MY 4602-G Not replaced
A (exc. 71) - - with 3.00 ratio	460 (exc. P/C)				x			1330	G	H	8	4	3 1/2	64 5/16	★C9MY 4602-F Not replaced
A (exc. 71) - - with 3.25 ratio	460 (exc. P/C)				x			1330	G	H	8	2	3 1/2	64 5/16	★D3MY 4602-A Not replaced
A (71) - - with 3.25 ratio	460 (exc. P/C)				x			1330	G	H	8	4	3 1/2	61 5/16	★C9AZ 4602-H Not replaced
A (71) - - with 2.75 and 3.00 ratio	460 (exc. P/C)				x			1330	G	H	17	5	3 1/2	61 3/64	★D2AZ 4602-A Not replaced
A (P/C)	460 P/C				x			1330	G	H	12	2	3 3/4	60 13/16	★D1MY 4602-D Not replaced
C (Montego)															
C (53) - - with 8" R/G	250		x			x		1310	E	F	18	2	3	61 39/64	D20Z 4602-B
C (63,65) - - with 8" R/G	250		x			x		1310	E	F	18	2	3	57 13/16	★D40Z 4602-A Not replaced
C (53,71) - - with 9" R/G	250		x			x		1310	G	H	4	2	3 1/2	60 11/32	D20Z 4602-D
C (63,65) - - with 9" R/G	250		x			x		1330	G	H	4	2	3 1/2	56 3/8	★D40Z 4602-B Not replaced
C (53) - - with 8" R/G	302		x			x		1310	E	F	18	2	3	61 39/64	D20Z 4602-B

COPYRIGHT © 1986 — FORD MOTOR COMPANY — DEARBORN, MICHIGAN

1973/79 LINCOLN-MERCURY CARS

APPLICATION CHART

MODEL	ENGINE C.I.D. (C.C.D.)	TRANSMISSION C3	C4 & JATCO	FMX & B/W	C6	3/M/T	4/M/T	U-JOINT IND. DESIGN	FRONT ●	REAR ●	SLIP YOKE CODE ●	DRIVESHAFT TYPE @	D DIA. (INCHES)	C LENGTH (INCHES)	PART NUMBER
C (Montego)															
C (53) – – with 8" R/G	302			x				1310	E	F	2	2	3	61 31/32	★ D20Z 4602-L Not replaced
C (63,65) – – with 8" R/G	302		x			x		1310	E	F	18	2	3	57 13/16	D40Z 4602-A
C (63,65) – – with 8" R/G	302			x				1310	E	F	2	2	3	58 1/64	★ D40Z 4602-C Not replaced
C (53,71) – – with 9" R/G	302		x			x		1330	G	H	4	2	3 1/2	60 11/32	D20Z 4602-D
C (63,65) – – with 9" R/G	302		x			x		1330	G	H	4	2	3 1/2	56 3/8	★ D40Z 4602-B Not replaced
C (53,71) – – with 9" R/G	302			x				1330 1310	G	 F	8	2	3 1/2	60 13/16	★ D2AZ 4602-B Not replaced
C (63,65) – – with 9" R/G	302			x				1330	G	H	8	2	3 1/2	56 29/32	D40Z 4602-D
C (53,71)	351		x					1330	G	H	4	2	3 1/2	60 11/32	D20Z 4602-D
C (53,71)	351			x				1330 1310	G	 H	8	2	3 1/2	60 13/16	D2AZ 4602-B
C (53,71)	351				x			1330	G	H	8	2	3 1/2	56 29/32	D40Z 4602-D
C (63,65)	351		x					1330	G	H	4	2	3 1/2	56 3/8	★ D40Z 4602-B Not replaced
C (63,65)	351				x			1330	G	H	8	2	3 1/2	53 1/8	★ D40Z 4602-E Not replaced
C (63,65)	351			x				1330	G	H	8	2	3 1/2	56 29/32	D40Z 4602-D
C (53,71)	400,460				x			1330	G	H	8	2	3 1/2	56 29/32	D40Z 4602-D
C (63,65)	400,460				x			1330	G	H	8	2	3 1/2	53 1/8	★ D40Z 4602-E Not replaced
D (Lincoln)															
D	460				x			1330	2-J	2-J	10	4	3 1/2	57 13/16	★ D0VY 4602-A r/b D7VY 4602-A
D	460				x			1330	2-U	2-U	9	4	3 1/2	57 13/16	D7VY 4602-A
F (Cougar)															
F	351		x					1330	G	H	4	2	3 1/2	56 3/8	★ D40Z 4602-B Not replaced
F	351,400,460				x			1330	G	H	8	2	3 1/2	53 1/8	★ D40Z 4602-E Not replaced
F	351			x				1330	G	H	8	2	3 1/2	56 29/32	D40Z 4602-D
J (Capri)															
J	122 (2000 cc)		x						R	R	%			45 15/64	★ D2RY 4602-F Not replaced
J	122 (2000 cc)			x					R	R	%			45 15/64	D1RY 4602-H
J	122 (2000 cc)						x		R	R	%			46 27/64	D2RY 4602-K
J	171 (2800 cc)						x		R	R	%			46 35/64	D2RY 4602-H
J	171 (2800 cc)		x						R	R	%			47 15/64	D2RY 4602-G

NOTES: ●REFER TO PAGE 1 OF SECTION 46 TO TRANSLATE CODES INTO PART NUMBERS
@TYPE 1-STEEL SHAFT, 2-CARDBOARD LINED, 4-T/T TUBE IN TUBE DRIVE THRU RUBBER, 5-TUNED YOKE AND DAMPER, 8-INTERNAL TUNED DAMPER
6-with constant velocity joint, 7-w/o velocity joint

4602 DRIVESHAFT ASSY. — Cont'd
● Universal Joint (4635) not serviced, part of 4602 assembly % Slip yoke (4841) not serviced, part of 4602 assy.
▲ 2000 cc ♦ 2600 cc

1974

APPLICATION CHART

MODEL	ENGINE C.I.D. (C.C.D.)	TRANSMISSION C3	C4 & JATCO	FMX & B/W	C6	3/M/T	4/M/T	U-JOINT IND. DESIGN	FRONT ●	REAR ●	SLIP YOKE CODE ●	DRIVESHAFT TYPE @	D DIA. (INCHES)	C LENGTH (INCHES)	PART NUMBER
NOTES:	●REFER TO PAGE 1 OF SECTION 46 TO TRANSLATE CODES INTO PART NUMBERS @TYPE 1-STEEL SHAFT, 2-CARDBOARD LINED, 4-T/T TUBE IN TUBE DRIVE THRU RUBBER, 5-TUNED YOKE AND DAMPER, 8-INTERNAL TUNED DAMPER 6-with constant velocity joint, 7-w/o velocity joint														
4602	DRIVESHAFT ASSY. — Cont'd % Slip yoke (4841) not serviced, part of 4602 assembly $ Consists of retainer and two (4616) cups ⊕ Also serviced in retainer and cup assy. (4614)														
K (Mark IV) 1974															
K	460				x			1330	G	G	16	2	3	55 19/32	D8LY 4602-A
L (Bobcat)															
L	122 (2000 cc), 140 (2300 cc)		x					1310	E	F	3	4	2 3/4	45 23/32	D2FZ 4602-B
L	122 (2000 cc), 140 (2300 cc)						x	1310	E	F	24	1	2 3/4	46 15/16	★ D2FZ 4602-C Not replaced
L	140 (2300 cc)	x						1310	E	F	24	8	2 3/4	48 9/64	★ D5FZ 4602-A r/b D9FZ 4602-E
P (Comet)															
P(54)	200,250		x			x		1310	E	F	15	5	2 3/4	52 17/32	★ D4DZ 4602-B Not replaced
P(54)	302		x			x		1310	E	F	15	5	2 3/4	53 17/32	★ D4DZ 4602-C Not replaced
P(62)	200,250		x			x		1310	E	F	15	5	2 1/4	45 21/32	D4DZ 4602-A
P(62)	302		x			x		1310	E	F	15	5	2 1/4	46 21/32	★ D4DZ 4602-D Not replaced
Y (Meteor)															
Y(exc. 71) - - with 8.7" R/G	351			x				1310	E	F	14	5	3 1/2	64 29/32	★ D2MY 4602-C Not replaced
Y(exc. 71) - - with 9" R/G	351			x				1330	G	H	7	4	3 1/2	64 11/16	★ D1MY 4602-A Not replaced
Y(71) - - with 8.7" R/G	351			x				1310	E	F	14	5	3 1/2	61 15/16	★ D1AZ 4602-B Not replaced
Y	400			x				1330	G	H	7	4	3 1/2	64 11/16	D1MY 4602-A
Y(exc. 71) - - with 8.7" or 9" R/G (exc. 3.25 ratio)	400				x			1330	G	H	15	5	3 1/2	64 1/16	★ D2MY 4602-G Not replaced
Y(exc. 71) - - with 9" R/G and 3.25 ratio	400				x			1330	G	H	8	4	3 1/2	64 5/16	★ C9MY 4602-F Not replaced
Y(71) - - with 8.7" R/G	400				x			1330	G	H	17	5	3 1/2	61 3/64	D2AZ 4602-A
Y(71) - - with 9" R/G	400				x			1330	G	H	8	4	3 1/2	61 5/16	★ C9AZ 4602-H Not replaced
Y(71) - - with 9" R/G	400				x			1330	G	H	17	5	3 1/2	61 3/64	★ D2AZ 4602-A Not replaced
Y(exc. 71) - - with 2.75 ratio	460				x			1330	G	H	8	4	3 1/2	64 1/16	★ D2MY 4602-G Not replaced
Y(exc. 71) - - with 3.00 ratio	460				x			1330	G	H	8	4	3 1/2	64 5/16	★ C9MY 4602-F Not replaced
Y(exc. 71) - - with 3.25 ratio	460				x			1330	G	H	8	2	3 3/4	64 5/16	★ D3MY 4602-A Not replaced
Y(71) - - with 2.75 and 3.00 ratio	460				x			1330	G	H	17	5	3 1/2	61 3/64	★ D2AZ 4602-A Not replaced
Y(71) - - with 3.25 ratio	460				x			1330	G	H	8	4	3 1/2	61 5/16	C9AZ 4602-H Not replaced

COPYRIGHT © 1986 — FORD MOTOR COMPANY — DEARBORN, MICHIGAN

1973/79 LINCOLN-MERCURY CARS

APPLICATION CHART

MODEL	ENGINE C.I.D. (C.C.D.)	TRANSMISSION C3	C4 & JATCO	FMX & B/W	C6	3/M/T	4/M/T	U-JOINT IND. DESIGN	FRONT ●	REAR ●	SLIP YOKE CODE ●	DRIVESHAFT TYPE @	D DIA. (INCHES)	C LENGTH (INCHES)	PART NUMBER
NOTES:	●REFER TO PAGE 1 OF SECTION 46 TO TRANSLATE CODES INTO PART NUMBERS @TYPE 1-STEEL SHAFT, 2-CARDBOARD LINED, 4-T/T TUBE IN TUBE DRIVE THRU RUBBER, 5-TUNED YOKE AND DAMPER, 8-INTERNAL TUNED DAMPER 6-with constant velocity joint, 7-w/o velocity joint														
4602	DRIVESHAFT ASSY. — Cont'd % Slip yoke (4841) not serviced, part of 4602 assembly $ Consists of retainer and two (4616) cups ⊕ Also serviced in retainer and cup assy. (4614)														
A (Mercury) 1975/1976															
A(exc. 71) - - with 8.7" R/G	400				x			1330	G	H	17	5	3 1/2	64 1/16	★D2MY 4602-G Not replaced
A(71) - - with 8.7" R/G	400				x			1330	G	H	17	5	3 1/2	61 3/64	★D2AZ 4602-A Not replaced
A(exc. 71) - - with 8.7" and 9" R/G	400			x				1330	G	H	8	4	3 1/2	64 11/16	★D1MY 4602-A Not replaced
A(71) - - with 9" R/G					x			1330	G	H	8	4	3 1/2	61 5/16	★C9AZ 4602-H Not replaced
A(exc. 71) - - with 9" R/G	400,460				x			1330	G	H	8	4	3 1/2	64 5/16	★C9MY 4602-F Not replaced
A(exc. 71) - - with 9" R/G	460 (exc. P/C)				x			1330	G	H	8	2	3 1/2	64 5/16	★D3MY 4602-A Not replaced
A(P/C)	460 (P/C)				x			1330	G	H	12	2	3 3/4	60 13/16	★D1MY 4602-D Not replaced
A(71) - - with 9" R/G	460 (P/C)				x			1330	G	H	12	2	3 3/4	57 13/16	★D1AZ 4602-C Not replaced
C (Montego)															
C(65) - - with 9" R/G	351		x					1330	G	H	4	2	3 1/2	56 3/8	★D40Z 4602-B Not replaced
C(53,71) - - with 9" R/G	351		x					1330	G	H	4	2	3 1/2	60 11/32	D20Z 4602-D
C(65) - - with 9" R/G	351,400			x				1330	G	H	8	2	3 1/2	56 29/32	D40Z 4602-D
C(53,71) - - with 9" R/G	351M,400			x				1330	G	F	8	2	3 1/2	60 13/16	★D2AZ 4602-B Not replaced
C(53,71) - - with 9" R/G	351,400,460				x			1330	G	H	8	2	3 1/2	56 29/32	D40Z 4602-D
C(65) - - with 9" R/G	400,460				x			1330	G	H	8	2	3 1/2	53 1/8	★D40Z 4602-E Not replaced
C(65) - - with 8" R/G	351		x					1310	E	F	15	5	3	57 15/32	★D50Z 4602-A Not replaced
D (Lincoln)															
D	460				x			1330	2-J	2-J	10	4	3 1/2	57 13/16	★D0VY 4602-A r/bD7VY 4602-A
D	460				x			1330	2-U	2-U	9	4	3 1/2	57 13/16	D7VY 4602-A
F (Cougar)															
F - - with 9" R/G	351		x					1330	G	H	4	2	3 1/2	56 3/8	★D40Z 4602-B Not replaced
F - - with 9" R/G	351,400			x				1330	G	H	8	2	3 1/2	56 29/32	D40Z 4602-D
F - - with 9" R/G	400,460				x			1330	G	H	8	2	3 1/2	53 1/8	★D40Z 4602-E Not replaced
G (Monarch)															
G - - with 8" R/G	200,250		x			x		1310	E	F	15	2	2 3/4	52 1/2	★D7DZ 4602-G Not replaced

APPLICATION CHART

MODEL	ENGINE C.I.D. (C.C.D.)	TRANSMISSION C3	C4 & JATCO	FMX & B/W	C6	3/M/T	4/M/T	U-JOINT IND. DESIGN	FRONT ●	REAR ●	SLIP YOKE CODE ●	DRIVESHAFT TYPE @	D DIA. (INCHES)	C LENGTH (INCHES)	PART NUMBER

NOTES: ●REFER TO PAGE 1 OF SECTION 46 TO TRANSLATE CODES INTO PART NUMBERS
@TYPE 1-STEEL SHAFT, 2-CARDBOARD LINED, 4-T/T TUBE IN TUBE DRIVE THRU RUBBER, 5-TUNED YOKE AND DAMPER, 8-INTERNAL TUNED DAMPER
6-with constant velocity joint, 7-w/o velocity joint

4602 DRIVESHAFT ASSY. — Cont'd
% Slip yoke (4841) not serviced, part of 4602 assembly
$ Consists of retainer and two (4616) cups ⊕ Also serviced in retainer and cup assy. (4614)

G (Monarch) 1975/1976

G – – with 8.7" R/G	200,250		x			x		1310	E	F	15	5	2 3/4	51 41/64	★ D5DZ 4602-H Not replaced
G – – with 9" R/G	200,250		x			x		1310 1330	E	H	14	5	3	51 15/32	D5DZ 4602-E
G – – with 8" R/G-transmission filler tube located in pan	302		x			x		1310	E	F	15	5	2 3/4	53 9/16	D7DZ 4602-H
G – – with 8" R/G-transmission filler tube located in case	302		x					1310	E	F	15	2	2 3/4	53 1/5	D6DZ 4602-A
G – – with 8.7" R/G-transmission filler tube located in pan	302		x			x		1310	E	F	15	2	2 3/4	52 1/2	★ D7DZ 4602-G Not replaced
G – – with 9" R/G transmission filler tube located in pan	302		x			x		1310 1330	E	H	14	5	3	52 15/32	★ D5DZ 4602-F Not replaced
G – – with 8.7" R/G-transmission filler tube located in case	302,351		x					1310	E	F	15	2	2 3/4	52 1/4	D5DZ 4602-C
G – – with 9" R/G transmission filler tube located in case	302,351		x					1310 1330	E	H	15	5	3	52 5/64	★ D5DZ 4602-G Not replaced

J (Capri) Refer to 1976

K (Mark IV)

K	460				x			1330	G	G	16	2	3	55 19/32	D8LY 4602-A

L (Bobcat)

L – – with 6 3/4" R/G	140 (2300 cc)						x	1310	E	F	24	8	2 3/4	47 3/16	★ D9FZ 4602-F Not replaced
L – – with 6 3/4" R/G	140 (2300 cc)	x						1310	E	F	24	1	2 3/4	48 9/64	★ D5FZ 4602-A r/b D9FZ 4602-E
L	140 (2300 cc)		x					1310	E	F	29	1	2 3/4	45 23/32	★ D2FZ 4602-A Not replaced
L – – with 8" R/G	140 (2300 cc)		x					1310	E	F	29	1	2 3/4	45 5/8	★ D5FZ 4602-B Not replaced
L – – with 8" R/G	140 (2300 cc)						x	1310	E	F	24	2	2 3/4	46 13/16	★ D5FZ 4602-D Not replaced
L – – with 6 3/4" R/G	140,171 (2300, 2800 cc)		x					1310	E	F	29	8	2 3/4	46	★ D9FZ 4602-D Not replaced
L – – with 8" R/G	171 (2800 cc)		x					1310	E	F	29	1	2 3/4	45 5/8	★ D5FZ 4602-G Not replaced
L – – with 8" R/G	171 (2800 cc) 140 (2300 cc)	x x						1310	E	F	24	1	2 3/4	47 3/4	★ D5FZ 4602-H Not replaced

COPYRIGHT © 1986 — FORD MOTOR COMPANY — DEARBORN, MICHIGAN

APPLICATION CHART

MODEL	ENGINE C.I.D. (C.C.D.)	TRANSMISSION C3	C4 & JATCO	FMX & B/W	C6	3/M/T	4/M/T	U-JOINT IND. DESIGN	FRONT ●	REAR ●	SLIP YOKE CODE ●	DRIVESHAFT TYPE @	D DIA. (INCHES)	C LENGTH (INCHES)	PART NUMBER
NOTES:	●REFER TO PAGE 1 OF SECTION 46 TO TRANSLATE CODES INTO PART NUMBERS @TYPE 1-STEEL SHAFT, 2-CARDBOARD LINED, 4-T/T TUBE IN TUBE DRIVE THRU RUBBER, 5-TUNED YOKE AND DAMPER, 8-INTERNAL TUNED DAMPER 6-with constant velocity joint, 7-w/o velocity joint														
4602	DRIVESHAFT ASSY. — Cont'd % Slip yoke (4841) not serviced, part of 4602 assembly $ Consists of retainer and two (4616) cups ⊕ Also serviced in retainer and cup assy. (4614)														
P (Comet) 1975/1976															
P(62)	200,250		x			x		1310	E	F	15	5	2 1/4	45 21/32	D4DZ 4602-A
P(54)	200,250		x			x		1310	E	F	15	5	2 1/4	52 17/32	★ D4DZ 4602-B Not replaced
P(62) - - transmission filler tube located in pan	302		x			x		1310	E	F	15	5	2 1/4	46 21/32	★ D4DZ 4602-D Not replaced
P(62) - - 12" A/T converter transmission filler tube located in case	302		x					1310	E	F	15	5	2 1/4	46 1/3	★ D6DZ 4602-B Not replaced
P(54) - - transmission filler tube located in pan	302		x			x		1310	E	F	15	5	2 3/4	53 17/32	★ D4DZ 4602-C Not replaced
P(54) - - 12" A/T converter transmission filler tube located in case	302		x					1310	E	F	15	5	2 3/4	53 1/5	D6DZ 4602-C
Y (Meteor)															
Y(exc. 71) - - with 8.7" R/G	351			x				1310	E	F	14	5	3 1/2	64 29/32	★ D2MY 4602-C Not replaced
Y(71) - - with 8.7" R/G	351			x				1310	E	F	7	4	3 1/2	61 15/16	★ D1AZ 4602-B Not replaced
Y(exc. 71) - - with 8.7" R/G	400				x			1330	G	H	8	5	3 1/2	64 1/16	★ D2MY 4602-G Not replaced
Y(71) - - with 8.7" R/G	400				x			1330	G	H	8	5	3 1/2	61 3/64	★ D2AZ 4602-A Not replaced
Y(exc. 71) - - with [illegible] 7" and 9" R/G	400			x				1330	G	H	4	4	3 1/2	64 11/16	★ D1MY 4602-A Not replaced
Y(71) - - with [illegible] R/G	400,460				x			1330	G	H	8	4	3 1/2	61 5/16	★ C9AZ 4602-H Not replaced
Y(exc. 71) - - with 9" R/G	400,460				x			1330	G	H	8	4	3 1/2	64 5/16	★ C9MY 4602-F Not replaced
Y(exc. 71) - - with 9" R/G	460 (exc. P/C)				x			1330	G	H	8	2	3 1/2	64 5/16	★ D3MY 4602-A Not replaced
Y(P/C)	460 (P/C)				x			1330	G	H	12	2	3 3/4	60 13/16	★ D1MY 4602-D Not replaced
Y(71) - - with 9" R/G	460 (P/C)				x			1330	G	H	12	2	3 3/4	57 13/16	★ D1AZ 4602-C Not replaced
J (Capri)															
J	140 (2300 cc)						x		R	R	%			46 35/64	★ D5RY 4602-A Not replaced
J	140 (2300 cc) 171 (2800 cc)	x							R	R	%			47 15/64	★ D5RY 4602-B Not replaced
J	171 (2800 cc)						x		R	R	%				★ D5RY 4602-E Not replaced

APPLICATION CHART

MODEL	ENGINE C.I.D. (C.C.D.)	TRANSMISSION C3	C4 & JATCO	FMX & B/W	C6	3/M/T	4/M/T	U-JOINT IND. DESIGN	FRONT ●	REAR ●	SLIP YOKE CODE ●	DRIVESHAFT TYPE @	D DIA. (INCHES)	C LENGTH (INCHES)	PART NUMBER
NOTES:	●REFER TO PAGE 1 OF SECTION 46 TO TRANSLATE CODES INTO PART NUMBERS @TYPE 1-STEEL SHAFT, 2-CARDBOARD LINED, 4-T/T TUBE IN TUBE DRIVE THRU RUBBER, 5-TUNED YOKE AND DAMPER, 8-INTERNAL TUNED DAMPER 6-with constant velocity joint, 7-w/o velocity joint														
4602	DRIVESHAFT ASSY. — Cont'd %Slip yoke (4841) not serviced, part of 4602 assembly $Consists of retainer and two (4616) cups ⊕ Also serviced in retainer and cup assy. (4614)														
A (Mercury) 1977															
A(71) - - with 8.7 R/G	351			x				1310	E	F	14	5	3 1/2	61 15/16	★D1AZ 4602-B Not replaced
A(exc.71) - - with 8.7" R/G	351			x				1310	E	F	14	5	3 1/2	64 29/32	★D2MY 4602-C Not replaced
A(71) - - with 8.7" R/G	400				x			1330	G	H	17	5	3 1/2	61 3/64	★D2AZ 4602-A Not replaced
A(exc.71) - - with 8.7" R/G	400				x			1330	G	H	17	5	3 1/2	64 1/16	★D2MY 4602-G Not replaced
A(exc.71) - - with 8.7" and 9" R/G "Before 6/13/77"	351,400			x				1330	G	H	8	4	3 1/2	64 1/16	★D1MY 4602-A Not replaced
A(exc. 71) - - with 8.7" and 9" R/G "From 6/13/77"	351,400			X				1330	G	H	17	2,5	3	64 5/16	★D7MY 4602-A Not replaced
A(exc. 71) - - with 8.7" R/G	400				X			1330	G	H	8	4	3 1/2	64 5/16	★C9MY 4602-F Not replaced
A(71) - - with 8.7" R/G	400			X				1330	G	H	8	4	3 1/2	61 11/16	★D0AZ 4602-E Not replaced
A(71) - - with 8.7" R/G	460				X			1330	G	H	8	4	3 1/2	61 5/16	★C9AZ 4602-H Not replaced
A(71) - - with 9" R/G	351,400			x				1330	G	H	8	4	3 1/2	61 11/16	★D0AZ 4602-E Not replaced
A(71) - - with 9" R/G	351,400,460				x			1330	G	H	8	4	3 1/2	61 5/16	★C9AZ 4602-H Not replaced
A(exc.71) - - with 9" R/G	351,400,460				x			1330	G	H	8	4	3 1/2	64 5/16	★C9MY 4602-F Not replaced
A(71) - - with 9" R/G	460(P/I)				x			1330	G	H	12	2	3 3/4	57 13/16	★D1AZ 4602-C Not replaced
A(exc 71) - - with 9" R/G	460 (P/I)				X			1330	G	H	12	2	3 3/4	60 13/16	★D1MY 4602-D Not replaced
D (LINCOLN)															
D - - "Before 5/1/77"	400,460				x			1330	2-J	2-J	10	4	3 1/2	57 13/16	★D0VY 4602-A r/bD7VY 4602-A
D - - "From 5/1/77"	400,460				x			1330	2-U	2-U	9	4	3 1/2	57 13/16	D7VY 4602-A
F (COUGAR)															
F(65) - - with 9" R/G (2.75 ratio and above)	302,351M		x					1330	G	H	4	2	3 1/2	56 3/8	★D40Z 4602-B Not replaced
F(53,71) - - with 9" R/G (2.75 ratio and above)	351M,400				x			1330	G	H	8	2	3 1/2	56 29/32	D40Z 4602-D
F(65) - - with 9" R/G (2.75 ratio and above)	351M,400			x				1330	G	H	8	2	3 1/2	56 29/32	D40Z 4602-D

COPYRIGHT © 1986 — FORD MOTOR COMPANY — DEARBORN, MICHIGAN

1973/79 LINCOLN-MERCURY CARS

APPLICATION CHART

MODEL	ENGINE C.I.D. (C.C.D.)	TRANSMISSION C3	C4 & JATCO	FMX & B/W	C6	3/M/T	4/M/T	U-JOINT IND. DESIGN	FRONT ●	REAR ●	SLIP YOKE CODE ●	DRIVESHAFT TYPE @	D DIA. (INCHES)	C LENGTH (INCHES)	PART NUMBER
NOTES:	●REFER TO PAGE 1 OF SECTION 46 TO TRANSLATE CODES INTO PART NUMBERS @TYPE 1-STEEL SHAFT, 2-CARDBOARD LINED, 4-T/T TUBE IN TUBE DRIVE THRU RUBBER, 5-TUNED YOKE AND DAMPER, 8-INTERNAL TUNED DAMPER 6-with constant velocity joint, 7-w/o velocity joint														
4602	DRIVESHAFT ASSY. — Cont'd % Slip yoke (4841) not serviced, part of 4602 assembly $ Consists of retainer and two (4616) cups ⊕ Also serviced in retainer and cup assy. (4614)														
F (COUGAR) 1977															
F(65) - - with 9" R/G (2.75 ratio and above)	351M,400				x			1330	G	H	8	2	3 1/2	53 1/8	★ D40Z 4602-E Not replaced
F(65) - - with 9" R/G (2.50 ratio only)	351M,400				x			1330	G	H	8	5	3	53 7/64	★ D70Z 4602-A Not replaced
F(65) - - with 9" R/G (2.50 ratio only)	351,400			x				1330	G	H	8	5	3	56 29/32	★ D70Z 4602-B Not replaced
F(53,71) - - with 9" R/G (2.50 ratio only)	351M,400				x			1330	G	H	8	5	3	56 29/32	★ D70Z 4602-B Not replaced
F(53,71) - - with 9" R/G (all ratios)	351,400			x				1330	G	H	8	5	3	60 13/16	★ D70Z 4602-C Not replaced
F(53,71) - - with 9" R/G (2.50 ratio only)	351W,302		x					1330	G	H	4	5	3	60 11/32	★ D70Z 4602-D Not replaced
F(53,71) - - with 9" R/G (2.75 ratio and above)	351M,302		X					1330	G	H	4	2	3	60 11/32	D70Z 4602-K
F(65) - - with 9" R/G (2.50 ratio only)	351,302		x					1330	G	H	4	5	3	56 13/64	★ D70Z 4602-E Not replaced
G (MONARCH)															
G - - with 8" R/G	200,250		x				x	1310	E	F	15	2	2 3/4	52 1/2	★ D7DZ 4602-G Not replaced
G - - with 8" R/G	302						x	1310	E	F	15	5	2 3/4	53 9/16	D7DZ 4602-H
G - - with 8" R/G	302		x					1310	E	F	15	2	2 3/4	53 1/5	D6DZ 4602-A
G - - with 8.7" R/G	250		x					1310	E	F	15	5	2 3/4	51 41/64	★ D5DZ 4602-H Not replaced
G - - with 8.7" R/G	302,351		x					1310	E	F	15	2	2 3/4	52 1/4	D5DZ 4602-C
G - - with 9" R/G w/half - circular flange	250		x					1330	G	H	4	4	3 1/2	51 15/32	D7DZ 4602-F
G - - 9" R/G w/circular flange	250		x					1330	G	H	4	5	3	50 63/64	★ D7DZ 4602-K Not replaced
G - - 9"R/G w/half-circular flange	250		x					1330	G	H	4	8	3	51 17/64	★ D7DZ 4602-L Not replaced
G - - with 9" R/G	302						x	1330	G	H	4	4	3 1/2	52 15/32	★ D7DZ 4602-A Not replaced
G - - with 9" R/G w/half - circular flange	302,351		x					1330	G	H	4	4	3 1/2	52 5/64	D7DZ 4602-E
G - - 9" R/G w/circular flange	302,351		x					1330	G	H	4	5	3	51 37/64	★ D7DZ 4602-J Not replaced
G - - 9" R/G w/half-circular flange	302,351		x					1330	G	H	4	8	3	52 5/64	★ D7DZ 4602-M Not replaced
J (CAPRI)															
J	140 (2300CC)						X		R	R	%			46 35/64	★ D5RY 4602-A Not replaced
J	140 (2300cc) 171 (2800cc)	X X							R	R	%			47 15/64	★ D5RY 4602-B Not replaced
J	171 (2800CC)						X		R	R	%				★ D5RY 4602-E Not replaced

APPLICATION CHART

MODEL	ENGINE C.I.D. (C.C.D.)	TRANSMISSION C3	C4 & JATCO	FMX & B/W	C6	B/M/T	4/M/T	U-JOINT IND. DESIGN	FRONT ●	REAR ●	SLIP YOKE CODE ●	DRIVESHAFT TYPE @	D DIA. (INCHES)	C LENGTH (INCHES)	PART NUMBER
K (MARK V)															
K	400,460				x			1330	G	G	16	2	3	55 19/32	D8LY 4602-A
L (BOBCAT)															
L - - with 6 3/4" R/G	140(2300cc)						x	1310	E	F	24	2	2 3/4	47 3/16	D5FZ 4602-C
L - - with 6 3/4" R/G	140(2300cc)	x						1310	E	F	24	1	2 3/4	48 5/32	D5FZ 4602-A
L - - with 6 3/4" R/G	140(2300cc)		x					1310	E	F	29	8	2 3/4	46	★ D9FZ 4602-D Not replaced
L - - with 8" R/G	171(2800cc)		x					1310	E	F	29	1	2 3/4	45 5/8	★ D5FZ 4602-G Not replaced
L - - with 8" R/G	171(2800cc)	x						1310	E	F	24	1	2 3/4	47 3/4	★ D5FZ 4602-H Not replaced
P (COMET)															
P(62)	200,250		x			x		1310	E	F	15	5	2 1/4	45 21/32	D4DZ 4602-A
P(54)	200,250		x			x		1310	E	F	15	5	2 1/4	52 17/32	★ D4DZ 4602-B Not replaced
P(62) - - 12" A/T converter	302		x					1310	E	F	15	5	2 1/4	46 1/3	★ D6DZ 4602-B Not replaced
P(54) - - 12" A/T converter	302		x					1310	E	F	15	5	2 3/4	53 1/5	★ D6DZ 4602-C Not replaced
V (VERSAILLES)															
V - - 9" R/G	302,351		X					1330	1-J	2-J	35	8	3	48 31/32	★ D74Y 4602-B r/b D94Y 4602-A
V - - 9" R/G	302,351		X					1310	1-V	2-V	41	8	3	49 1/4	D94Y 4602-A
A (MERCURY)															
A(71) - - with 8.7" and 9" R/G	351(M),400			X				1330	G	H	8	4	3 1/2	61 5/16	★ C9AZ 4602-H Not replaced
A(exc. 71) - - with 8.7" R/G and 9" R/G	351(M),400			X				1330	G	H	17	5	3	64 5/16	★ D7MY 4602-A Not replaced
A(exc. 71) - - with 9" R/G	460(P/I)				X			1330	G	H	12	2	3 3/4	60 13/16	★ D1MY 4602-D Not replaced
A(71) - - with 9" R/G	351(M),400,460				X			1330	G	H	17	5	3 1/2	61 3/64	★ D2AZ 4602-A Not replaced
A(exc. 71) - - with 8.7" or 9" R/G	351(M),400,460 (exc. P/I)				X			1330	G	H	17	5	3 1/2	64 1/16	★ D2MY 4602-G Not replaced
A(71) - - with 8.7" R/G	351			X				1310	E	F	14	5	3 1/2	61 15/16	★ D1AZ 4602-B Not replaced
A(71) - - with 8.7" R/G	351(M)				X			1310	E	F	14	5,2	3	61 3/64	D7AZ 4602-B
D (LINCOLN)															
D	400,460				X			1330	2-U	2-U	9	4	3 1/2	57 13/15	D7VY 4602-A
F (COUGAR)															
F(53) - - with 9" R/G (2.75 ratio and above)	302,351M		X					1330	G	H	4	2	3	60 11/3	D70Z 4602-K
F(65) - - with 9" R/G (2.47 & 2.50 ratio only)	351		X					1330	G	H	4	5	3	56 13/64	★ D70Z 4602-E Not replaced

NOTES: ●REFER TO PAGE 1 OF SECTION 46 TO TRANSLATE CODES INTO PART NUMBERS
@TYPE 1-STEEL SHAFT, 2-CARDBOARD LINED, 4-T/T TUBE IN TUBE DRIVE THRU RUBBER, 5-TUNED YOKE AND DAMPER, 8-INTERNAL TUNED DAMPER
6-with constant velocity joint, 7-w/o velocity joint

4602 DRIVESHAFT ASSY. — Cont'd
% Slip yoke (4841) not serviced, part of 4602 assembly
$ Consists of retainer and two (4616) cups ⊕ Also serviced in retainer and cup assy. (4614)

COPYRIGHT © 1986 — FORD MOTOR COMPANY — DEARBORN, MICHIGAN

APPLICATION CHART

MODEL	ENGINE C.I.D. (C.C.D.)	TRANSMISSION C3	C4 & UATCO	FMX & B/W	C6	3/M/T	4/M/T	U-JOINT IND. DESIGN	FRONT ●	REAR ●	SLIP YOKE CODE ●	DRIVESHAFT TYPE @	D DIA. (INCHES)	C LENGTH (INCHES)	PART NUMBER
F (COUGAR)															
F(65) – – with 9" R/G (all ratios)	351(M),400				X			1330	G	H	8	2	3 1/2	53 1/8	★ D40Z 4602-E Not replaced
F(53) – – with 9" R/G (2.47 & 2.50 ratio only)	351(W)&(M)		X					1330	G	H	4	5	3	60 11/32	★ D70Z 4602-D Not replaced
F(65) – – with 9" R/G (all ratios)	302,351(M)		X					1330	G	H	4	2	3 1/2	56 3/8	★ D40Z 4602-B Not replaced
F(65) – – with 9" R/G (2.47 & 2.50 ratio only – – exc. Canada), (2.75 ratio – – Canada w/o cat. conv.)	351,400			X				1330	G	H	8	5	3	56 29/32	★ D70Z 4602-B Not replaced
F(53) – – with 9" R/G (2.47 & 2.50 ratio only)	351,400			X				1330	G	H	8	5	3	60 13/16	★ D70Z 4602-C Not replaced
F(53) – – with 9" R/G (all ratios)	351(M),460				X			1330	G	H	8	2	3 1/2	56 29/32	D40Z 4602-D
F(65) – – with 9" R/G (all ratios)	351(M)			X				1330	G	H	8	2	3 1/2	56 29/32	D40Z 4602-D
G (MONARCH)															
G – – with 8" R/G	250						X	1310	E	F	15	5	2 3/4	52 1/2	★ D7DZ 4602-G Not replaced
G – – with 8.7" R/G	302		X					1310	E	F	15	2	2 3/4	52 1/4	D5DZ 4602-C
G – – with 8.7" R/G (transmission filler tube located in pan)	250		X					1310	E	F	15	5	2 3/4	51 29/64	★ D7DZ 4602-D Not replaced
G – – with 8.7" R/G (transmission filler tube located in case)	250		X					1310	E	F	15	5	2 3/4	51 41/64	★ D5DZ 4602-H Not replaced
G – – with 9" R/G (transmission filler tube located in pan)	250		X					1330	G	H	4	8	3	51 1/8	★ D8DZ 4602-A Not replaced
G – – with 9" R/G (transmission filler tube located in case)	250		X					1330	G	H	4	8	3	51 17/64	★ D7DZ 4602-L Not replaced
G – – with 8" R/G	302						X	1310	E	F	15	5	2 3/4	53 9/16	D7DZ 4602-H
G – – with 9" R/G	302		X					1330	G	H	4	8	3	52 5/64	★ D7DZ 4602-M Not replaced
G – – with 8" R/G	302		X					1310	E	F	15	2	2 3/4	53 1/5	D6DZ 4602-A
K (MARK V)															
K	400,460				X			1330	G	G	16	2	3	55 19/32	D8LY 4602-A
L (BOBCAT)															
L – – with 6 3/4" R/G	140(2300)						X	1310	E	F	24	2	2 3/4	47 3/16	D5FZ 4602-C
L – – with 6 3/4" R/G	140(2300)	X						1310	E	F	24	1	2 3/4	48 9/64	★ D5FZ 4602-A r/b D9FZ 4602-E

NOTES: ●REFER TO PAGE 1 OF SECTION 46 TO TRANSLATE CODES INTO PART NUMBERS
@TYPE 1-STEEL SHAFT, 2-CARDBOARD LINED, 4-T/T TUBE IN TUBE DRIVE THRU RUBBER, 5-TUNED YOKE AND DAMPER, 8-INTERNAL TUNED DAMPER
6-with constant velocity joint, 7-w/o velocity joint

4602 DRIVESHAFT ASSY. — Cont'd
% Slip yoke (4841) not serviced, part of 4602 assembly
$ Consists of retainer and two (4616) cups ⊕ Also serviced in retainer and cup assy. (4614)

APPLICATION CHART

MODEL	ENGINE C.I.D. (C.C.D.)	TRANSMISSION C3	C4 & JATCO	FMX & B/W	C6	3/M/T	4/M/T	U-JOINT IND. DESIGN	FRONT ●	REAR ●	SLIP YOKE CODE ●	DRIVESHAFT TYPE @	D DIA. (INCHES)	C LENGTH (INCHES)	PART NUMBER
NOTES:	●REFER TO PAGE 1 OF SECTION 46 TO TRANSLATE CODES INTO PART NUMBERS @TYPE 1-STEEL SHAFT, 2-CARDBOARD LINED, 4-T/T TUBE IN TUBE DRIVE THRU RUBBER, 5-TUNED YOKE AND DAMPER, 8-INTERNAL TUNED DAMPER 6-with constant velocity joint, 7-w/o velocity joint														
4602	DRIVESHAFT ASSY. — Cont'd % Slip yoke (4841) not serviced, part of 4602 assembly														
L (BOBCAT)															
L - - with 6 3/4" R/G	140(2300)		X					1310	E	F	29	8	2 3/4	46	★D9FZ 4602-D Not replaced
L - - with 8" R/G	171(2800)		X					1310	E	F	29	1	2 3/4	45 5/8	★D5FZ 4602-G Not replaced
L - - with 8" R/G	171(2800)	X						1310	E	F	24	1	2 3/4	47 3/4	★D5FZ 4602-H Not replaced
P (ZEPHYR)															
P - - "Before 2/15/78"	140(2300)	X						1310	E	E	40	1,5	3	53 15/64	D8BZ 4602-W
P	200					X		1310	E	E	39	2,5	2 3/4	50 1/8	★D8BZ 4602-X Not replaced
P	140(2300)						X	1310	E	E	40	2,5	3	51 43/64	D8BZ 4602-Z
P - - "From 2/15/78"	140(2300)	X						1310	E	E	40	1,5	3	52 31/32	D8BZ 4602-AA
P	302		X					1310	E	E	39	1,5	2 3/4	51 3/32	D8BZ 4602-AE
P	200	X						1310	E	E	38	1,5	2 3/4	51 23/32	★D8BZ 4602-Y Not replaced
P	200		X					1310	E	E	39	1,5	2 3/4	50 37/64	★D8BZ 4602-C Not replaced
V (VERSAILLES)															
V - - 9" R/G	302		X					1330	1-J	2-J	35	8	3	51 33/64	★D74Y 4602-B r/bD94Y 4602-A
V - - 9" R/G	302		X					1310	1-V	2-V	41	8	3	49 1/4	D94Y 4602-A
J (CAPRI)															
J	140(2300cc)						X		R	R	%			46 35/64	★D5RY 4602-A Not replaced
J	140(2300cc)	X							R	R	%			47 15/64	★D5RY 4602-B Not replaced
J	171(2800cc)	X							R	R	%			47 15/64	★D5RY 4602-B Not replaced
J	171(2800cc)						X		R	R	%				★D5RY 4602-E Not replaced

APPLICATION CHART

MODEL	ENGINE C.I.D. (C.C.D.)	TRANSMISSION C3	JATCO	C4	FMX & B/W	C6	3/M/T	4/M/T	U-JOINT IND. DESIGN	FRONT ●	REAR ●	SLIP YOKE CODE ●	DRIVESHAFT TYPE @	D DIA. (INCHES)	C LENGTH (INCHES)	PART NUMBER
NOTES:	●REFER TO PAGE 1 OF SECTION 46 TO TRANSLATE CODES INTO PART NUMBERS @TYPE 1-STEEL SHAFT, 2-CARDBOARD LINED, 4-T/T TUBE IN TUBE DRIVE THRU RUBBER, 5-TUNED YOKE AND DAMPER, 8-INTERNAL TUNED DAMPER															
4602	DRIVESHAFT ASSY. — Cont'd %Slip yoke (4841) not serviced, part of 4602 assy.															
A (MERCURY) 1979																
A - - All with trailer towing	351W						X			1330	G	G	16	8	3	52 1/2	D9AZ 4602-A

COPYRIGHT © 1986 — FORD MOTOR COMPANY — DEARBORN, MICHIGAN

APPLICATION CHART

MODEL	ENGINE C.I.D. (C.C.D.)	TRANSMISSION C3	JATCO	C4	FMX & B/W	C6	3/M/T	4/M/T	U-JOINT IND. DESIGN	FRONT ●	REAR ●	SLIP YOKE CODE ●	DRIVESHAFT TYPE @	D DIA. (INCHES)	C LENGTH (INCHES)	PART NUMBER
NOTES:	●REFER TO PAGE 1 OF SECTION 46 TO TRANSLATE CODES INTO PART NUMBERS @TYPE 1-STEEL SHAFT, 2-CARDBOARD LINED, 4-T/T TUBE IN TUBE DRIVE THRU RUBBER, 5-TUNED YOKE AND DAMPER, 8-INTERNAL TUNED DAMPER															
4602	DRIVESHAFT ASSY. — Cont'd %Slip yoke (4841) not serviced, part of 4602 assy.															
A (MERCURY) 1979																
A - - All w/out trailer towing	351W					X			1310	E	E	2	8	3	52 1/2	★D9AZ 4602-C r/bE0AZ 4602-C
A - - 54,66 & 74 exc. P/C with 8.5" R/G	302,351			X					1310	E	E	29	8	3	55 7/10	E1AZ 4602-A
A - - 74 with 7.5" R/G	302,351			X					1310	E	E	29	8	3	55 7/10	E1AZ 4602-A
A - - 54 & 66 with 7.5" R/G	302,351			X					1310	E	E	29	8	3	56 23/64	E0AZ 4602-J
A - - 54 & 66 P/C with 8.5" R/G	302			X					1330	G	G	35	8	3	55 61/64	★D9AZ 4602-J r/bE2AZ 4602-C
A - - All with 7.5" R/G	302				X				1310	E	E	2	8	3	56 29/32	E0AZ 4602-H
D (LINCOLN)																
D	400,460					X			1330	2-U	2-U	9	4	3 1/2	57 13/16	D7VY 4602-A
F (COUGAR)																
F(65) - - 2.47 ratio	351			X					1330	G	H	4	8	3	56 23/64	★D70Z 4602-E Not replaced
F(65) - - All ratio	302			X					1330	G	H	4	2	3 1/2	56 3/8	★D40Z 4602-B Not replaced
F(65) - - 3.00 ratio	351			X					1330	G	H	4	2	3 1/2	56 3/8	★D40Z 4602-B Not replaced
F(65) - - 2.47 ratio	351M				X				1330	G	H	8	8	3	56 31/64	★D70Z 4602-B Not replaced
F(65) - - All ratios	351W				X				1330	G	H	8	8	3	56 31/64	★D70Z 4602-B Not replaced
F(65) - - All ratios Ford shaft w/o "S" stamped on slip yoke	302				X				1330	G	H	8	2	3 1/2	56 29/32	D40Z 4602-D
F(65) - - All ratios Saginaw shaft with "S" stamped on slip yoke	302				X				1330	U	W	45	2	3	56 29/32	★D90W 4602-KA Use D40Z 4602-D
F(65) - - 3.00 ratio Ford shaft w/o "S" stamped on slip yoke	351M				X				1330	G	H	8	2	3 1/2	56 29/32	D40Z 4602-D
F(65) - - 3.00 ratio Saginaw shaft with "S" stamped on slip yoke	351M			X					1330	U	W	45	2	3	56 29/32	★D90W 4602-KA Use D40Z 4602-D
F(53) - - All ratios	302			X					1330	G	H	4	2	3	60 11/32	D70Z 4602-K
F(53) - - 3.00 ratio	351			X					1330	G	H	4	2	3	60 11/32	D70Z 4602-K
F(53) - - 2.47 ratio	351			X					1330	G	H	4	5	3	60 11/32	★D70Z 4602-D Not replaced
F(53) - - All ratios	302,351				X				1330	G	H	8	5	3	60 13/16	★D70Z 4602-C Not replaced
F(53) - - 3.00 ratio Ford shaft-without "S" stamped on slip yoke	351					X			1330	G	H	8	2	3 1/2	56 29/32	D40Z 4602-D

APPLICATION CHART

MODEL	ENGINE C.I.D. (C.C.D.)	TRANSMISSION C3	JATCO	C4	FMX & B/W	C6	3/M/T	4/M/T	U-JOINT IND. DESIGN	FRONT ●	REAR ●	SLIP YOKE CODE ●	DRIVESHAFT TYPE @	D DIA. (INCHES)	C LENGTH (INCHES)	PART NUMBER

NOTES: ●REFER TO PAGE 1 OF SECTION 46 TO TRANSLATE CODES INTO PART NUMBERS
@TYPE 1-STEEL SHAFT, 2-CARDBOARD LINED, 4-T/T TUBE IN TUBE DRIVE THRU RUBBER, 5-TUNED YOKE AND DAMPER, 8-INTERNAL TUNED DAMPER

4602 DRIVESHAFT ASSY. — Cont'd
%Slip yoke (4841) not serviced, part of 4602 assy.

F (COUGAR) 1979

F(53) - - 3.00 ratio Saginaw shaft with "S" stamped on slip yoke	351			X					1230	U	W	45	2	3	56 29/32	★ D90W 4602-KA Use D40Z 4602-D
F(65) - - 3.00 ratio	351					X			1330	G	H	8	2	3 1/2	53 1/8	★ D40Z 4602-E Not replaced

G (MONARCH)

G - - with 8" R/G	250			X					1310	E	F	15	2	2 3/4	52 1/4	D5DZ 4602-C
G - - with 8" R/G	302			X					1310	E	F	15	2	2 3/4	53 1/5	D6DZ 4602-A
G - - with 8" R/G	250		X					X	1310	E	F	15	2	2 3/4	52 1/2	★ D9DZ 4602-G Not replaced
G - - with 8" R/G	302							X	1310	E	F	15	2	2 3/4	53 27/64	D9DZ 4602-H

J (CAPRI)

J - - with 6 3/4" R/G	140 (2300)	X							1310	E	E	24	8	3	48 55/64	E1ZZ 4602-B
J - - with 6 3/4" R/G	140 (2300)							X	1310	E	E	24	8	3	47 1/2	E1ZZ 4602-A
J - - with 7.5" R/G	302			X					1310	E	E	29	8	2 3/4	46 1/4	D9ZZ 4602-Z
J - - with 6 3/4" R/G	171 (2800)	X							1310	E	E	24	8	3	48 55/64	E1ZZ 4602-B
J - - with 6 3/4" R/G	171 (2800)			X					1310	E	E	29	1	2 3/4	46 49/64	★ D9ZZ 4602-W Not replaced
J - - with 7.5" R/G and 25 spline slip yoke	140 (2300) (exc. turbo)							X	1310	E	E	24	2	3	46 27/32	D9ZZ 4602-U
J - - with 7.5" R/G and 28 spline slip yoke	141(2300) (exc. turbo)							X	1310	E	E	29	8	3	46 11/16	E1ZZ 4602-C
J - - with 7.5" R/G	140 (2300) (turbo)							X	1310	E	E	29	8	3	46 11/16	E1ZZ 4602-C
J - - with 7.5" R/G "Before 11/1/78"	302							X	1310	E	E	29	8	2 3/4	45 53/64	★ D9ZZ 4602-S r/b E1ZZ 4602-J
J - - with 7.5" R/G	140(2300)	X							1310	E	E	24	8	3	48 5/32	E1ZZ 4602-E
J - - with 7.5" R/G "From 11/1/78 to 3/5/79"	302							X	1310	E	E	29	8	2 3/4	45 5/8	★ D9ZZ 4602-AE r/b E1ZZ 4602-J
J - - with 7/5" R/G	171(2800)							X	1310	E	E	29	2	2 3/4	45 37/64	E1ZZ 4602-J
J - - with 7.5" R/G	200			X					1310	E	E	29	8	2 3/4	45 37/64	★ D9ZZ 4602-AE r/b E1ZZ 4602-J

K (MARK V)

K	400,460					X			1330	G	G	16	2	3	55 19/32	D8LY 4602-A

L (BOBCAT)

L - - with 6 3/4" R/G	140 (2300) 171 (2800)	X							1310	E	F	24	8	2 3/4	48 9/64	D9FZ 4602-E
L - - with 6 3/4" R/G	140 (2300)							X	1310	E	F	24	8	2 3/4	47 3/16	★ D9FZ 4602-F Not replaced
L - - with 6 3/4" R/G	140 (2300) 171 (2800)			X					1310	E	F	29	8	2 3/4	46	★ D9FZ 4602-D Not replaced
L - - with 8" R/G	171 (2800)			X					1310	E	F	29	1	2 3/4	45 5/8	★ D5FZ 4602-G Not replaced
L - - with 8" R/G	171(2800)	X							1310	E	F	24	1	2 3/4	47 3/4	★ D5FZ 4602-H Not replaced

COPYRIGHT © 1986 — FORD MOTOR COMPANY — DEARBORN, MICHIGAN

APPLICATION CHART

MODEL	ENGINE C.I.D. (C.C.D.)	TRANSMISSION C3	JATCO	C4	FMX & B/W	C6	B/M/T	4/M/T	U-JOINT IND. DESIGN	FRONT ●	REAR ●	SLIP YOKE CODE ●	DRIVESHAFT TYPE @	D DIA. (INCHES)	C LENGTH (INCHES)	PART NUMBER
NOTES:	●REFER TO PAGE 1 OF SECTION 46 TO TRANSLATE CODES INTO PART NUMBERS @TYPE 1-STEEL SHAFT, 2-CARDBOARD LINED, 4-T/T TUBE IN TUBE DRIVE THRU RUBBER, 5-TUNED YOKE AND DAMPER, 8-INTERNAL TUNED DAMPER															
4602	DRIVESHAFT ASSY. — Con't %Slip yoke (4841) not serviced, part of 4602 assy.															
P (ZEPHYR)																
P - - 7.5" R/G (3.08 ratio)	140 (2300)							X	1310	E	E	40	2,5	3	51 43/64	D8BZ 4602-Z
P - - 6 3/4" R/G (3.08 ratio)	140 (2300)							X	1310	E	E	40	2,5	3	52 7/16	★D9BZ 4602-M Not replaced
P - - 7.5" R/G (3.08 ratio)	140 (2300)	X							1310	E	E	40	1,5	3	52 31/32	D8BZ 4602-AA
P - - 6 3/4" R/G (3.08 ratio)	140 (2300)	X							1310	E	E	40	1,5	3	53 3/4	D9BZ 4602-N
P - - 6 3/4" R/G (2.73 & 3.08 ratio)	200	X							1310	E	E	38	1,5	2 3/4	52 17/32	D9BZ 4602-P
P - - 6 3/4" R/G (3.08 ratio)	200							X	1310	E	E	39	2,5	2 3/4	50 7/16	D9BZ 4602-R
P - - 7.5" R/G (3.08 ratio)	302							X	1310	E	E	39	2,5	2 3/4	50 7/16	D9BZ 4602-R
P - - 7.5" R/G (3.08 ratio)	200							X	1310	E	E	39	2,5	2 3/4	49 23/32	★D9BZ 4602-S Not replaced
P - - 7.5" R/G (2.26,2.73,3.08 ratio)	302			X					1310	E	E	39	1,5	2 3/4	51 3/32	D8BZ 4602-AE
P - - 6 3/4" R/G (2.73,3.08 ratio)	200			X					1310	E	E	39	1,5	2 3/4	51 3/32	D8BZ 4602-AE
P - - 7.5" R/G (2.73,3.08 ratio)	200			X					1310	E	E	39	2,5	2 3/4	50 7/16	D9BZ 4602-R
P - - 7.5" R/G (2.73 ratio)	200	X							1310	E	E	38	1,5	2 3/4	51 49/64	D8BZ 4602-AC
V (VERSAILLES)																
V - - 9" R/G "Before 8/6/78"	302			X					1330	1-J	2-J	35	8	3	48 31/32	★D74Y 4602-B r/bD94Y 4602-A
V - - 9" R/G "From 8/6/78"	302			X					1310	1-V	2-V	41	8	3	49 1/4	★D94Y 4602-A r/bE04Y 4602-A
V - - 9" R/G "From 8/6/78"	302			X					1310	1-E	2-E	46	8	3	49 1/4	E04Y 4602-A

YEAR	MODEL/RESTRICTIONS	PART NUMBER	DESCRIPTION	QTY.
78 79	P A,J,P	N800594-S100	(AB-308-D)-screw (driveshaft to axle)-M12 x 1.75 x 27.0 Metric	4
78/ 79	P A,J	N630175-S2	(AX-33-E)-washer (driveshaft to axle)-M12 Metric	4 4
73/ 79	D,K G - - with 8" R/G	384341-S2	Bolt (driveshaft to axle)-hex. head-7/16"-14 x 1 1/2"	4
		384353-S2	(MM-173-X)-nut-7/16"-14	4
73/78	J	E800359-S200	(AU-26-EG)-bolt-(driveshaft to axle)-hex. hd. M10 x 18mm	6
77/	V	387941-S100	(BB-922-E)-Bolt and Tab-7/16-14	4

IDENTIFICATION CHART

CONE-ROLLER IDENTIFICATION	CONE-ROLLER PART NUMBER	CUP IDENTIFICATION	CUP PART NUMBER
4614-21	**RETAINER ASSY. (REAR AXLE PINION BEARING)**		
	$ Consists of retainer and two (4616) cups ⊕ Also serviced in retainer and cup assy. (4616)		
HM88510	B5A 4616-B	M86649	CODW 4621-A
HM88542	B5A 4621-B	M88010	B7A 4616-A
HM89410	TBAA 4616-A	M88048	B7A 4621-A
HM89443	TBAA 4621-A	M802011	C7AZ 4628-A
HM89444	★ C6AZ 4630-A	M802048	C7AZ 4630-A
M86610	CODW 4616-A	HM88610	CODW 4628-A
HM88648	D9BZ 4630-A		

APPLICATION CHART

YEAR	MODEL	AXLE IDENT.	RETAINER & CUP ASSY. ☆4614	PINION BEARINGS CUP ⊕4616 OR 4628	FRT.	REAR	CONE-ROLLER 4621 OR 4630	FRT.	REAR
NOTES:			**☆CONSISTS OF RETAINER AND TWO (4616) CUPS ⊕ALSO SERVICED IN RETAINER AND CUP ASSY. (4614) FOR 8" AND 9" AXLES**						
Note 1-			**Refer to FORD Motorsport Performance Equipment Catalog**						
4614-21			**RETAINER ASSY. (REAR AXLE PINION BEARING) — Cont'd**						
73/78	A - - with 8.7" R/G-integral carrier	All	None req'd.	B7A 4616-A C7AZ 4628-A	1	 1	B7A 4621-A C7AZ 4630-A	1	 1
73/78	A - - with 9" R/G and sure-track	All	D3VY 4614-A	B7A 4616-A	1	1	B7A 4621-A	1	1
73/78	A - - with 9" R/G without sure-track	All	C7AZ 4614-D	B7A 4616-A	1	1	B7A 4621-A	1	1
79	A - - 7.5", 8.5" R/G	All	None Req'd	B7A 4616-A C7AZ 4628-A	1	 1	B7A 4621-A C7AZ 4630-A	1	 1
73/74	C - - with 8" R/G	All	C60Z 4614-B	CODW 4616-A	1	1	CODW 4621-A	1	1
73/75	C - - with 9" R/G	WEC,WFC	★ D20Z 4614-A Not replaced	B7A 4616-A TBAA 4616-A	1 1		B7A 4621-A B5A 4621-B	1	 1
73/76	C - - with 9" R/G	WEB,WFA	C7AZ 4614-D	B7A 4616-A	1	1	B7A 4621-A	1	1
73/	D - - w/sure-track	All	D3VY 4614-A	B7A 4616-A	1	1	B7A 4621-A	1	1
73/	D - - w/o sure-track	All	C7AZ 4614-D	B7A 4616-A	1	1	B7A 4621-A	1	1
73	F	WES-T, AD,WFB	D2SZ 4614-A	B7A 4616-A	1	1	B7A 4621-A	1	1
73	F	WES-AK, WFD	★ C3AZ 4614-B Note 1	B7A 4616-A	1		B7A 4621-A	1	
74/	F	WEB,WFA	C7AZ 4614-D	B7A 4616-A	1	1	B7A 4621-A	1	1
74	F	WEC	★ D20Z 4614-A Not replaced	B7A 4616-A TBAA 4616-A	1	 1	B7A 4621-A	1	1
75/	G - - with 8" R/G	All	C60Z 4614-B	CODW 4616-A	1	1	CODW 4621-A	1	1
75/78	G - - with 8.7" R/G	All	None req'd.	B7A 4616-A C7AZ 4628-A	1	 1	B7A 4621-A C7AZ 4630-A	1	 1
75/78	G - - with 9" R/G	All	C7AZ 4614-D	B7A 4616-A	1	1	B7A 4621-A	1	1
75/76	G - - with 9" R/G and sure-track	WDX-B	D3VY 4614-A	B7A 4616-A	1	1	B7A 4621-A	1	1
73/78	J	All	None req'd.	None req'd.			DORY 4621-A DORY 4630-A	1	 1
79	J - - 6 3/4" R/G	All	None req'd	CODW 4616-A CODW 4628-A	1	 1	CODW 4621-A D9BZ 4630-A	1	 1
79	J - - 7.5" R/G	All	None req'd	B7A 4616-A C7AZ 4628-A	1	 1	B7A 4621-A C7AZ 4630-A	1	 1
73/	K-with 9" R/G without sure-track	All	D2SZ 4614-A	B7A 4616-A	1	1	B7A 4621-A	1	1
73/	K - - with 9" R/G and sure-track	All	★ D3SZ 4614-A Not replaced	B7A 4616-A	1	1	B7A 4621-A	1	1

COPYRIGHT © 1986 — FORD MOTOR COMPANY — DEARBORN, MICHIGAN

APPLICATION CHART

YEAR	MODEL	AXLE IDENT.	RETAINER & CUP ASSY. ☆4614	PINION BEARINGS CUP ⊕4616 OR 4628	FRT.	REAR	CONE-ROLLER 4621 OR 4630	FRT.	REAR
74/78	L - - 6 3/4" R/G	All	None req'd.	C0DW 4616-A	1		C0DW 4621-A	1	
				B7A 4616-A		1	B7A 4621-A		1
75/78	L - - 8" R/G	All	C60Z 4614-B	C0DW 4616-A	1	1	C0DW 4621-A	1	1
79	L - - 6 3/4" R/G	All	None req'd	C0DW 4616-A	1		C0DW 4621-A	1	
				C0DW 4628-A		1	D9BZ 4630-A		1
73/77	P - - with 8" R/G	All	C60Z 4614-B	C0DW 4616-A	1	1	C0DW 4621-A	1	1
78/	P - - with 7.5" R/G	All	None req'd.	B7A 4616-A	1		B7A 4621-A	1	
				C7AZ 4628-A		1	C7AZ 4630-A		1
79	P - - 6 3/4" R/G	All	None req'd.	C0DW 4616-A	1		C0DW 4621-A	1	
				C0DW 4628-A		1	D9BZ 4630-A		1
77/	V	All	C7AZ 4614-D	B7A 4616-A	1	1	B7A 4621-A	1	1
73/76	Y - - with 8.7" R/G-integral carrier	All	None req'd.	B7A 4616-A	1		B7A 4621-A	1	
				C7AZ 4628-A		1	C7AZ 4630-A		1
73/76	Y - - with 9" R/G w/o sure-track	All	C7AZ 4614-D	B7A 4616-A	1	1	B7A 4621-A	1	1
73/76	Y - - with 9" R/G and sure-track	All	D3VY 4614-A	B7A 4616-A	1	1	B7A 4621-A	1	1

NOTES: ☆CONSISTS OF RETAINER AND TWO (4616) CUPS ⊕ALSO SERVICED IN RETAINER AND CUP ASSY. (4614) FOR 8" AND 9" AXLES

Note 1- Refer to FORD Motorsport Performance Equipment Catalog

4614-21 RETAINER ASSY. (REAR AXLE PINION BEARING) — Cont'd

YEAR	MODEL/RESTRICTIONS	PART NUMBER	DESCRIPTION	QTY.
73/	D,F,G,K,U,V	42999-S	(B-253)-bolt-hex. hd.-self-locking	5
73/	K - - with sure track	384245-S	(WW-97-CX)-stud-5/16"-18 & 3/8"-16 x 1 29/32"	1

YEAR	MODEL/RESTRICTIONS	AXLE IDENT	PART NUMBER	DESCRIPTION	QTY.

4616 Refer to group 4614

4621 Refer to group 4614

4625 BEARING (REAR AXLE DRIVE PINION PILOT)

73/78	A,C,G,Y - - with 9" R/G	All	C2AZ 4625-B		1
73/	D,F,K,V	All			1
73/74	C,P - - with 8" R/G	All	C20Z 4625-B		1
75/78	L,P - - with 8" R/G	All	(#R1558-TAV)		1
75/	G - - with 8" R/G	All			1

4627 RETAINER (REAR AXLE DRIVING PINION PILOT BEARING)

73/78	A,G - - with 9" R/G	All	B7AZ 4627-A		1
73/76	C,Y - - with 9" R/G	All			1
73/	D,F,K,V - - with 9" R/G	All			1
73/78	C,L,P - - with 8" R/G	All	C20Z 4627-A		1
75/	G - - with 8" R/G	All			1

4628 Refer to group 4614

4630 Refer to group 4614

4635 UNIVERSAL JOINT KIT (DRIVESHAFT)

UNIVERSAL JOINT IDENTIFICATION CHART

Universal joints are also listed by Model Application in group 4602

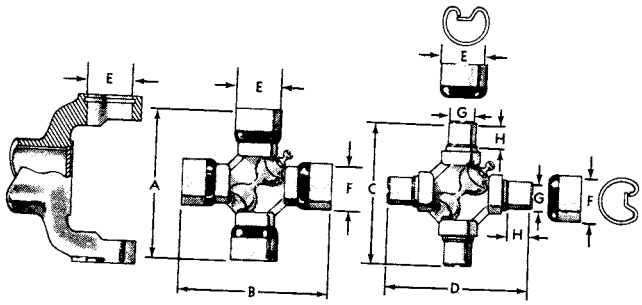

DANA (SPICER) OR FORD DESIGN

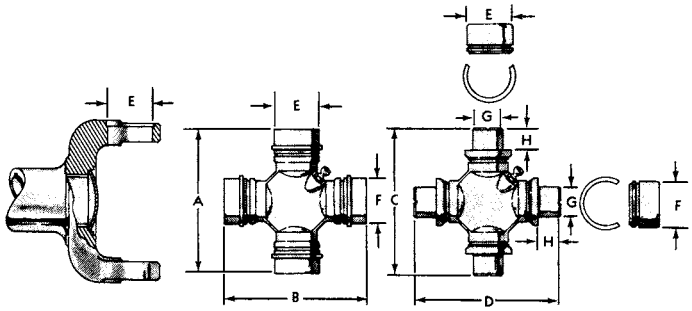

MECHANICS, CLEVELAND STEEL OR SACO DESIGN

P-4917

SIZE CHART

INDUSTRY DESIGNATION	DIMENSIONS (INCHES) A	B	C	D	E	F	G	H	CODE ☆	PART NUMBER	DESIGN
NOTE: ☆ UNIVERSAL JOINTS ARE LISTED BY MODEL APPLICATION WITH THE RELATED SHAFTS - SEE PAGE 1 OF SECTION 46 FOR ADDITIONAL INFORMATION											
1310	3 1/4	3 1/4	3	3	1 1/16	1 1/16	11/16	17/32	E	C3AZ 4635-E	Cleveland
1310	3 1/4	3 1/4	3	3	1 1/16	1 1/8	11/16	17/32	F	C3AZ 4635-F	Cleveland
1330	3 5/8	3 5/8	3 13/32	3 13/32	1 1/16	1 1/16	11/16	19/32	G	C3AZ 4635-G	Cleveland
1330	3 5/8	3 5/8	3 13/32	3 13/32	1 1/16	1 1/8	11/16	19/32	H	C3AZ 4635-H	Cleveland
1330	3 5/8	3 5/8	3 3/8	3 3/8	1 1/16	1 1/16	21/32	35/64	J	★C4SZ 4635-B r/bC3AZ 4635-G	Dana (Spicer)
									R	D4RY 4635-A	
1330									U	C8SZ 4635-A	Saginaw
1330									W	D90Z 4635-A	Saginaw

COPYRIGHT © 1986 — FORD MOTOR COMPANY — DEARBORN, MICHIGAN

1973/79 LINCOLN-MERCURY CARS

YEAR	MODEL/RESTRICTIONS	AXLE IDENT	PART NUMBER	DESCRIPTION	QTY.
4637	**WASHER (FLAT REAR AXLE DRIVESHAFT)**				
4662	**SPACER (REAR AXLE DRIVING PINION BEARING)-Selective fit**				
73/78	A,G - - with 9" R/G-28 spline shaft	All (exc. WER)	B7A 4662-A		1
78/	P - - 7.5" R/G	All			1
73/76	C,Y - - with 9" R/G-28 spline shaft	All			1
73/	D,F,K,V - - with 9" R/G	All			1
79	A - - with 7.5" and 8.5" R/G	All			1
79	J - - with 7.5" R/G	All			1
73/78	A,Y - - with 8.7" R/G	WER	D0AZ 4662-B	1 3/8" small I.D. x 1 21/32" large I.D.	1
75/78	G - - with 8.7" R/G	WER		1 9/16" small O.D. x 1 27/32" large O.D.	1
75/78	L - - with 6 3/4" R/G	All	D1FZ 4662-A	1 1/4" x 1 11/32" tapered I.D. x 1 1/8" long	1
73/78	J	All	D5RY 4662-A	Collapsible type	1
79	J,L,P - - with 6 3/4" R/G	All	D9BZ 4662-A		1
73/78	L,P - - with 8" R/G	All			1
73/76	C - - with 8" R/G	All			1
73/	G - - with 8" R/G	All			1
4662	**RING GEAR and PINION ADJUSTING KIT**				
76/78	J - - 140 (2300 cc), 171 (2800 cc)	All	★ D5RY 4662-B	Not replaced	1
	CONSISTS OF D0RY 4109-A,B,C,D,E,F,G,H,J Shims and D5RY 4662-A Spacer				
4663	**SHIM KIT (REAR AXLE PINION BEARING)-Also serviced in 4209 kit**				
73	D	WFY-A,B, WGC-A,B	MGK 4663-A	Seal	1
4669	**SEAL (REAR AXLE DRIVING PINION BEARING RETAINER)**				
73/78	A,G - - with 9" R/G	All	B7A 4669-A		1
73/76	C,Y - - with 9" R/G	All			1
73/	D,F,K,V - - with 9" R/G	All			1
73/78	C,L,P - - with 8" R/G	All	C20Z 4669-A	4" I.D.	1
75/	G - - with 8" R/G	All			1

1973/79
LINCOLN-MERCURY CARS

YEAR	MODEL/RESTRICTIONS	AXLE IDENT	PART NUMBER	DESCRIPTION	QTY.
4670	**SLINGER (REAR AXLE DRIVING PINION SHAFT OIL)**				
73/75	A,C,D,F,G,K,Y	All exc. WER	★ C3AZ 4670-A	Repl. by D5AZ 4670-A	1
73/	L,P - - with 8" R/G	All	C30Z 4670-A		1
75/	G - - with 8" R/G	All			1
73/78	A,C,G,Y - - with 8.7" and 9" R/G	All	D5AZ 4670-A		1
78/	P - - with 7.5" R/G	All			1
76/	D,F,K,V - - with 9" R/G	All			1
79	A - - with 7.5" and 8.5" R/G	All			1
79	J - - with 7.5" R/G	All			1
4676	**SEAL (REAR AXLE DRIVING PINION OIL)**				
73/78	A,C,G,Y - - with 9" R/G	All	E0TZ 4676-B		1
73/76	C,Y - - with 9" R/G	All			1
73/	D,F,K,V - - with 9" R/G	All			1
73/78	A,Y - - with 8.7" R/G	WER	★ C7AZ 4676-A	3 1/8" flange dia. x 2 25/32" seal dia. x 1 13/16"	1
75/78	G - - with 8.7" R/G	WER		I.D. x 17/32" thick, r/b D9AZ 4676-A	1
73/78	L,G,P - - with 6 3/4" and 8" R/G "From 11/14/75"	All	D9BZ 4676-A		1
73/78	J	All	D3RY 4676-B		1
79	A - - with 7.5" and 8.5" R/G	All	★ D9AZ 4676-A	R/b E3TZ 4676-A (4/84)	1
79	J - - with 7.5" R/G	All			1
78/79	P - - with 7.5" R/G	All			1
79	G - - with 8" R/G	All	D9BZ 4676-A		1
79	J,L,P - - with 6 3/4" R/G	All			1
4693	**PLATE (DRIVESHAFT FLANGE LOCK)**				
73/78	J	All	★ D0RY 4693-A	Not replaced	1
			20389-GS40	Bolt-hex. head-M10 x 1 x 25 (Metric fine)	1
4730	**BUMPER (REAR AXLE)**				
73/78	A	All	C5ZZ 4730-B	Pinion-differential carrier	1
73/74	A "Before 10/5/73"	All	C9AZ 4730-A	Frame to rear axle	2
74/78	A "From 10/5/73"	All	D4AZ 4730-A	Frame to rear axle	2
79	A	All	D5DZ 4730-A	Pinion	1
79	A	All	D9AZ 4730-A	Frame to rear axle	2
73/76	C	All	D20Z 4730-E	Differential carrier	1
73/76	C(71)	All	D20Z 4730-A	R.H. and L.H.-frame to rear axle	2
73/76	C(exc. 71)	All	D20Z 4730-C	R.H. and L.H.-frame to rear axle	2
73	D	All	C8SZ 4730-A	Differential carrier	1
73/74	D	All	C9AZ 4730-A	Frame to rear axle	2
74	D	All	D2SZ 4730-A	Differential carrier	1
75/	D	All	C8SZ 4730-A	Differential carrier	1
75	D "Before 1/6/75"	All	D4AZ 4730-A	Frame to rear axle	2
75/	D "From 1/6/75"	All	D5VY 4730-A	Frame to rear axle	2
73	F	All	C6AZ 4730-A	Frame to rear axle	2
73	F	WES,WFB, WFD	★ C3AZ 4730-B	Differential carrier-not replaced	1
74/	F(exc.71)	All	D20Z 4730-C	Frame to rear axle	2
74/	F	All	D20Z 4730-E	Differential carrier	1
77	F(71)	All	D20Z 4730-A	Axle bumper	2
75/	G	All	D5DZ 4730-A	Frame to rear axle	2

COPYRIGHT © 1986 — FORD MOTOR COMPANY — DEARBORN, MICHIGAN

1973/79 LINCOLN-MERCURY CARS

YEAR	MODEL/RESTRICTIONS	AXLE IDENT	PART NUMBER	DESCRIPTION	QTY.
4730	BUMPER (REAR AXLE) — Cont'd				
75/	G	All	★ D5DZ 4730-B	Pinion-not replaced	1
79	J	All	D8BZ 4730-A	Frame to rear axle	2
73/	K	All	D2SZ 4730-A	Differential carrier	2
73/	K	All	D20Z 4730-A	R.H. and L.H.-frame to rear axle	2
74/	L - - 6 3/4" R/G	All	★ D9FZ 4730-A	Pinion-not replaced	1
75/76	L - - with 6 3/4" R/G	All	★ D5FZ 4730-A	Frame to rear axle-not replaced	2
75/76	L - - with 8" R/G	All	★ D5ZZ 4730-B	Frame to rear axle-not replaced	2
77/	L	All	★ D7FZ 4730-A	Axle-not replaced	2
73/77	P	All	D1DZ 4730-A	Differential carrier	1
73/74	P	All	C6AZ 4730-A	Frame to rear axle	1
75/77	P	All	D5DZ 4730-A	Frame to rear axle	2
78/	P	All	D8BZ 4730-A	Frame to rear axle	2
77/	V	All	★ D7DZ 4730-A	Frame to rear axle-not replaced	2
77/	V	All	★ D7DZ 4730-C	Pinion-not replaced	1
73/74	Y "Before 10/5/73"	All	C9AZ 4730-A	Frame to rear axle	2
74/76	Y "From 10/5/73"	All	D4AZ 4730-A	Frame to rear axle	2
73/76	Y	All	C5ZZ 4730-B	Pinion-differential carrier	1
73	A,D,Y	All	40923-S	(U-264)-screw-self-tap.-5/16"-18 x 1/2"	4
4731	BRACKET (REAR AXLE BUMPER)				
75/	G	All	★ D5DZ 4731-A	Pinion-not replaced	1
73/	K	All	★ D2SZ 4731-A	Not replaced	1
74	L(73)	All	★ D4FZ 4731-A	L.H.-outer - - not replaced	1
			★ D4FZ 4731-B	R.H.-outer - - not replaced	1
75/76	L	All	★ D4FZ 4731-C	Pinion - - not replaced	1
75/76	L - - with 6 3/4" R/G	All	★ D5FZ 4731-A	R.H.-not replaced	1
			★ D5FZ 4731-B	L.H.-not replaced	1
75/76	L - - with 8" R/G	All	★ D5FZ 4731-C	R.H.-outer - - not replaced	1
			★ D5FZ 4731-D	L.H.-outer - - not replaced	1
77/	L(73)	All	★ D7FZ 4731-A	R.H. and L.H.-not replaced	2
77/	L(Exc.73)	All	★ D7FZ 4731-B	R.H.-not replaced	1
77/	L(Exc.73)	All	★ D7FZ 4731-C	L.H.-not replaced	1
73/76	P	All	★ D4DZ 4731-A	Not replaced	1
75/77	P	All	★ D5DZ 4731-A	Pinion-not replaced	1
78/	J,P-(54,74)	All	★ D8BZ 4731-A	R.H.-not replaced	1
			★ D8BZ 4731-B	L.H.-not replaced	1
77/	V	All	★ D5DZ 4731-A	Pinion-not replaced	1
4782	YOKE (DRIVESHAFT CENTERING SOCKET)				
73/77	D - - use with D0VY 4602-A only	All	C3VY 4782-A	Front - 2 7/8" across	1
73/77	D - - use with D0VY 4602-A only	All	D0VY 4782-A	Rear-incl. bearing	1
77/79	V - - w/1330 size u/jt "Before 8/6/78"	All			1
79	V - - w/1310 size u/jt "From 8/6/78"	All	D94Y 4782-A		1
77/	D - - use with D7VY 4602-A only	All	D7VY 4782-A		1
73/	K	All	D2SZ 4782-A		1
77/78	G - - 9" R/G w/circular flange	All			1
78/	P - - w/1310 Universal joint	All	D8BZ 4782-B		1
79	A,J - - w/1310 Universal joint	All			1

YEAR	MODEL/RESTRICTIONS	AXLE IDENT	PART NUMBER	DESCRIPTION	QTY.
4782	YOKE (DRIVESHAFT CENTERING SOCKET) — Cont'd				
79	A - - w/1330 Universal joint	All	D9AZ 4782-B		1
73/	D	All	★ 350758-S	(BB-211)-bolt-hex. hd.-5/16"-24 x 1 3/4"-(front)-not replaced	AR
4784	YOKE (DRIVESHAFT CENTER)				
73/77 77/79	D - - use with D0VY 4602-A only V - - w/1330 size u/jt "Before 8/6/78"	All All	★ C3VY 4784-A	3 7/8" yoke span with (4) 1 1/16" dia. holes-r/b D9TZ 4784-A	AR 1
78/	D - - use with D7VY 4602-A	All	C8SZ 4784-A		1
79	V - - w/1310 size u/jt "From 8/6/78"	All	C9TZ 4784-A		1
4789	BEARING (DRIVESHAFT ROLLER SPLINE)				
73/74	D	All	C3VY 4789-A		AR
4790	SEAL (DRIVESHAFT STUD YOKE CENTERING BALL)				
73/77 77/79	D - - use with D0VY 4602-A only V - - w/1330 size u/jt. "Before 8/6/78"	All All	C3VY 4790-A		AR
79	V - - w/1310 size u/jt "From 8/6/78"	All	★ D94Y 4790-A	Not replaced	1
4790	SEAL KIT (DRIVESHAFT STUD YOKE CENTERING BALL)				
77/	D - - use with D7VY 4602-A only	All	D7VY 4790-A	Incl. (1) seal, (1) seat, (1) spring, (1) ball, (2) washers	AR
4791	SLINGER (DRIVESHAFT STUD YOKE)				
73/77 77/79	D - - use with D0VY 4602-A only V - - w/1330 size u/jt "Before 8/6/78"	All All	C3VY 4791-A		AR
79	V - - w/1310 size u/jt "From 8/6/78"	All	D94Y 4791-A		1
4805	BAFFLE (BEARING GROOVED COVER)				
74/78	J	All	D3RY 4805-A		1
4819	SPACER (DRIVESHAFT UNIVERSAL JOINT HOUSING)				
73/78	J	All	D0RY 4819-A		1
4826	INSULATOR (DRIVESHAFT UNIVERSAL JOINT CENTER BEARING)				
73/78	J	All	D0RY 4826-A		1
4831	BRACKET (COUPLING SHAFT SUPPORT)				
73/78	J - - 4 cyl. 122 (2000 cc), 6 cyl. 171(2800 cc)	All	★ D5RY 4831-A	Not replaced	1

COPYRIGHT © 1986 — FORD MOTOR COMPANY — DEARBORN, MICHIGAN

4841 SLIP YOKE (UNIVERSAL JOINT)

UNIVERSAL JOINT SLIP YOKE IDENTIFICATION CHART

Universal joint slip yoke assy., group 4841 are cataloged also by year and model in the Driveshaft and Universal Joint Chart under group 4602.

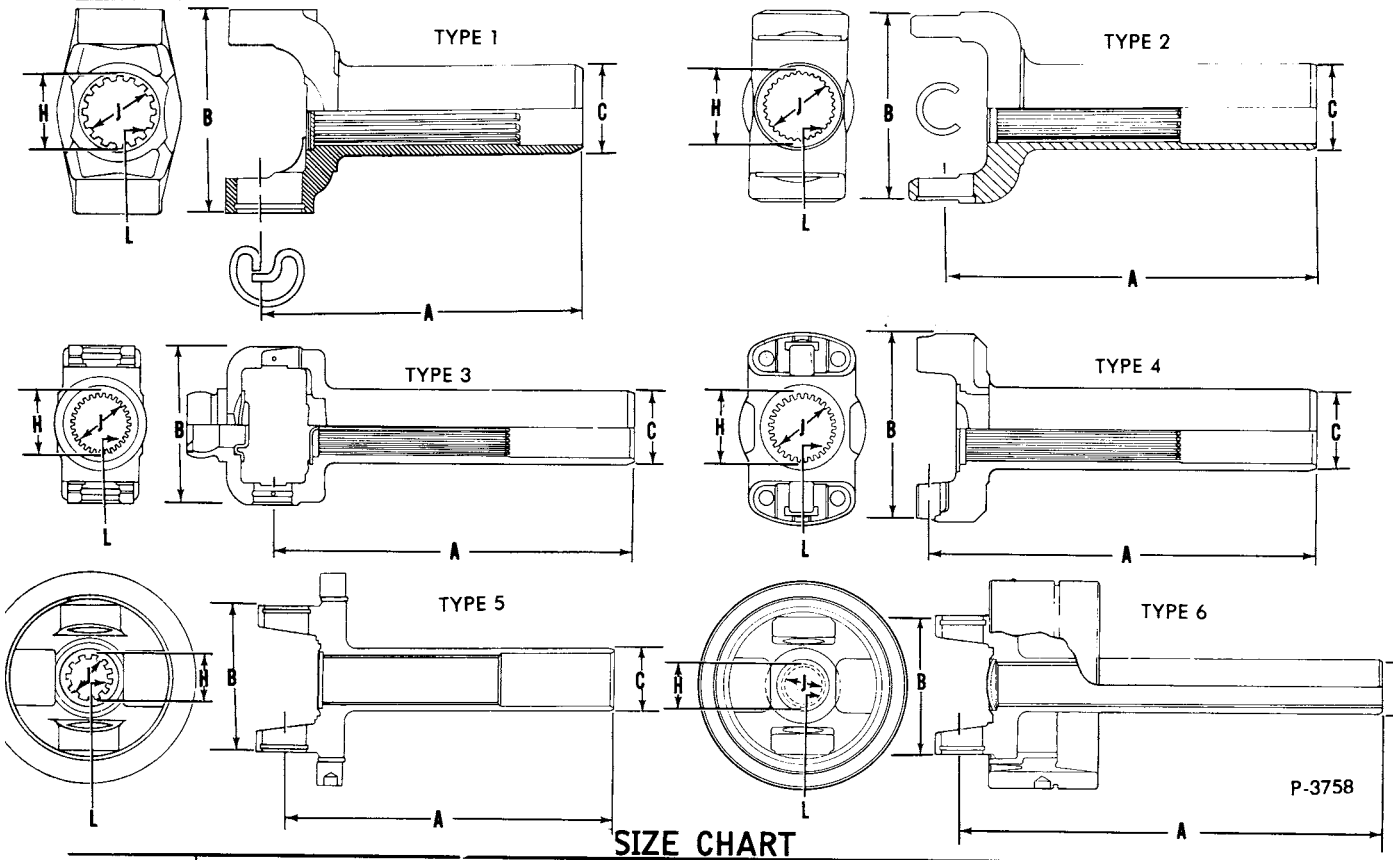

SIZE CHART

TYPE	DIMENSIONS (INCHES) A	B	C	H	J	L	CODE ☆	PART NUMBER
NOTE: ☆ SLIP YOKES ARE LISTED BY MODEL APPLICATION WITH THE RELATED DRIVE SHAFTS - SEE PAGE 1 OF SECTION 46 FOR ADDITIONAL INFORMATION								
● This code shown with driveshaft in group 4602 ▲ Inertia type † Production ‡ Service								
1	8 7/32	3 1/2	1 11/16	1 3/8	1 17/64	31	2	★ C3AZ 4841-A r/bD2TZ 4841-A()
1	8 3/32	3 1/3	1 1/2	1 7/32	1 3/32	28	3	★ C3AZ 4841-D r/bD2ZZ 4841-A
1	†8 7/32 ‡5 29/32	3 7/8	1 1/2	1 7/32	1 3/32	28	4	C3AZ 4841-G
1	8 7/32	3 15/16	1 11/16	1 3/8	1 17/64	31	7	★▲C7AZ 4841-C r/bC7SZ 4841-A
1	8 5/32	3 29/32	1 11/16	1 3/8	1 17/64	31	8	C7SZ 4841-A
4	8 13/32	3 5/8	1 11/16	1 3/8	1 17/64	31	10	D0VY 4841-A
5	†8 1/8 ‡ 5 29/32	3 1/2	1 1/2	1 7/32	1 3/32	28	15	D1AZ 4841-A
5	†8 1/8 ‡ 6 2/3	3 1/2	1 11/16	1 3/8	1 1/4	31	14	D2AZ 4841-C
1	8 1/8	3 15/16	1 11/16	1 25/64	1 17/64	31	12	★ D1AZ 4841-C Not replaced
5	†8 9/16 ‡6 29/32	3 29/32 3 29/32	1 11/16 1 11/16	1 25/64 1 25/64	1 5/32 1 5/32	31 31	17	D2AZ 4841-A
1	8 9/64	3 15/16	1 11/16	1 25/64	1 1/8	31	16	D2SZ 4841-A
1	8 1/4	3 17/32	1 1/2	1 13/64	1 7/64	28	18	D2ZZ 4841-A
1	5 29/32	3 1/2	1 3/8	1 1/8	1	25	24	D1FZ 4841-B
1	6 1/32	3 11/32	1 9/32			28	29	D3TZ 4841-A

SIZE CHART

TYPE	DIMENSIONS (INCHES) A	B	C	H	J	L	CODE ☆	PART NUMBER
NOTE:	☆ SLIP YOKES ARE LISTED BY MODEL APPLICATION WITH THE RELATED DRIVE SHAFTS - SEE PAGE 1 OF SECTION 46 FOR ADDITIONAL INFORMATION							
	● This code shown with driveshaft in group 4602 ▲ Inertia type † Production ‡ Service							
3	9 7/16	3 1/2	1 11/16	1 3/8	1 17/64	31	9	C8SZ 4841-A
1	5 29/32	3 15/16	1 1/2	1 7/32	1 3/32	28	35	★ D7AZ 4841-A r/bE0TZ 4841-A
5	5 29/32	3 17/32	1 3/8	1 7/64	63/64		38	D8BZ 4841-A
5	5 29/32	3 17/32	1 1/2	1 7/32			39	D8BZ 4841-B
5	5 29/32	3 17/32	1 3/8	1 7/64	63/64		40	D8BZ 4841-C
1	6	3 11/32	1 1/2	1 13/64	1 3/32		41	C5TZ 4841-E
1							45	★ D90Z 4841-A Not replaced

COPYRIGHT © 1986 — FORD MOTOR COMPANY — DEARBORN, MICHIGAN

4851 FLANGE ASSY. (REAR AXLE UNIVERSAL JOINT)
NOTE: UNIVERSAL JOINT FLANGES, GROUP 4851 ARE ALSO LISTED BY YEAR AND MODEL FOLLOWING THE IDENTIFICATION CHART

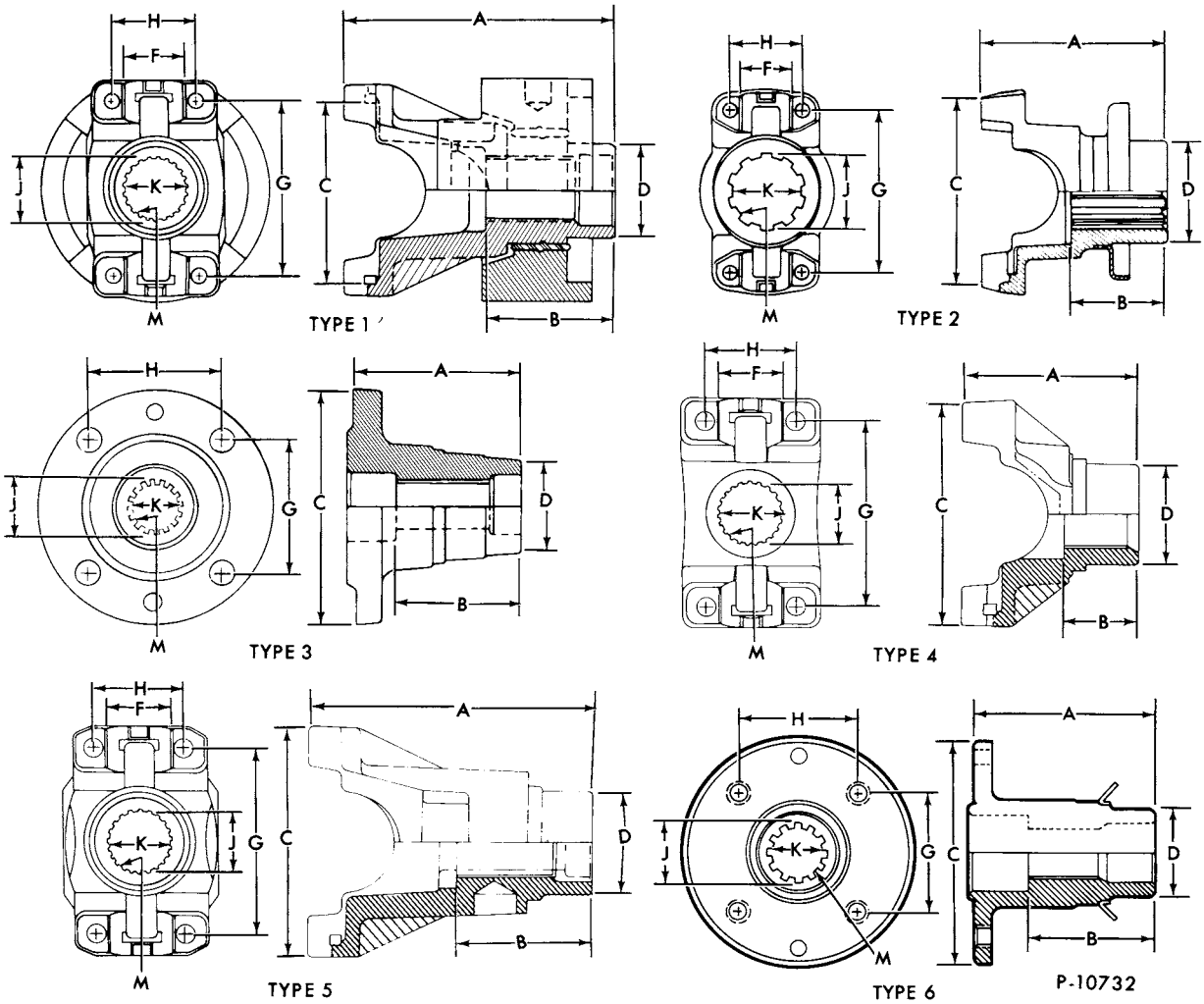

SIZE CHART

TYPE	DIMENSIONS (INCHES) A	B	†C	D	E	F	G	H	J	K	M	PART NUMBER
†"C" DIMENSION DETERMINES INDUSTRY DESIGNATION												
4851 FLANGE ASSY. (REAR AXLE UNIVERSAL JOINT) — Cont'd												
2	5 1/16	2 27/64	3 5/8	1 13/16		1 1/8	2 31/32	1 37/64	1 15/64	1 9/64	28	★ C3AZ 4851-L r/b C30Z 4851-C
2	4 13/32	2 5/8	3 7/32	1 13/16		1 1/8	2 31/32	1 37/64	1 7/64	1 1/64	25	C30Z 4851-A
2	2 59/64	1 19/64	3 9/16	1 13/16		1 1/8	2 21/32	1 37/64	1 15/64	1 9/64	28	D4AZ 4851-A
2	3 1/64	1 19/64	3 5/8	1 13/16		1 1/8	3 5/16	1 37/64	1 15/64	1 9/64	28	D4AZ 4851-B
3	3 3/4	2 27/64	4 45/64	2 3/16							28	D0SZ 4851-B
4	2 59/64	1 5/16	3 7/32	1 13/16		1 1/16	2 31/32	1 37/64	1 15/64	1 9/64	28	★ D2AZ 4851-A r/b D4AZ 4851-A
4	3 5/32	1 5/16	3 5/8	1 13/16		1 1/16	3 5/16	1 37/64	1 15/64	1 9/64	28	★ D2AZ 4851-B r/b D4AZ 4851-B

SIZE CHART

TYPE	DIMENSIONS (INCHES) A	B	†C	D	E	F	G	H	J	K	M	PART NUMBER
†"C" DIMENSION DETERMINES INDUSTRY DESIGNATION												
4851 FLANGE ASSY. (REAR AXLE UNIVERSAL JOINT) — Cont'd												
5	5 1/16	2 27/64	4	1 13/16		1 1/16	3 5/16	1 37/64	1 15/64	1 9/64	28	★ D2SZ 4851-A r/b D4AZ 4851-C
5	5 1/16	2 27/64	4	2		1 37/64	3 5/16	1 37/64	1 7/32	1 9/64	28	D4AZ 4851-C
5	4 25/32	2 9/64	3 5/8	1 13/16		1 1/16	3 5/16	1 37/64	1 15/64	1 19/64	28	★ D20Z 4851-A Not replaced
4	2 61/64	1 21/64	3 37/64	1 13/16			2 3/32	1 37/64	1 1/64	15/16	23	D2FZ 4851-A
3	3 61/64	2 27/64	4 45/64	1 13/16			2 21/32	2 15/16	1 7/32	1 9/64	28	D3SZ 4851-A
												D0RY 4851-B
5	4 25/32	2 9/64	3 5/8	1 13/16		1 1/8	3 5/16	1 37/64	1 15/64	1 9/64	28	★ D40Z 4851-A Not replaced
5	5 1/16	2 27/64	4	1 13/16		1 1/8	3 5/16	1 37/64	1 7/32	1 9/64	28	★ D2SZ 4851-B Not replaced
6	1 29/64	1 1/8	4 19/64	1 13/16			1 15/64	1 15/64	1 7/32	1 9/64		D8BZ 4851-A
6	1 29/64	1 1/8	4 19/64	1 13/16			2 15/32	2 15/32	1 1/64	15/16	23	D9BZ 4851-A
6	3 3/4	2 5/8	4 7/10	1 13/16			2 15/32	2 15/32	1 7/64	1 1/64	25	D9DZ 4851-B

YEAR	MODEL/RESTRICTIONS	AXLE IDENT.	PART NUMBER	DESCRIPTION	QTY.
4851 FLANGE ASSY. (REAR AXLE UNIVERSAL JOINT) — Cont'd ● Industry size					
A (Mercury)					
73/78	A - - with 8.7" R/G	WER	D4AZ 4851-B	●1330 flange	1
74/78	A - - with 8.7" R/G	WER	D4AZ 4851-A	●1310 flange	1
73/78	A	WDC,WFG	D4AZ 4851-C	●1330 flange	1
73/76	A - - with 9" R/G-and sure-track	WDC-L,T, WFG-D,K	★ D2SZ 4851-B	●1330 flange-not replaced	1
79	A - - with 7.5" or 8.5" R/G	All	D8BZ 4851-A		1
C (Montego)					
73/74	C - - with 8" R/G	All	C30Z 4851-A	●1260 flange	1
73/76	C	WFA,WEB	D4AZ 4851-C	●1330 flange	1
73/75	C - - with 9" R/G	WEC,WFC	★ D40Z 4851-A	●1330 flange-not replaced	1
D (Lincoln)					
73/	D - - w/sure-track	All	D3SZ 4851-A		1
73/	D - - w/o sure-track	All	D0SZ 4851-B		1
F (Cougar)					
73	F - - with 9" R/G and 28 spline shaft	All	C30Z 4851-C	●1310 flange	1
73	F - - with 9" R/G and 31 spline shaft	All	D20Z 4851-A	●1330 flange	1
74/75	F	WEC,WFC	★ D40Z 4851-A	●1330 flange-not replaced	1
75/	F	WEB,WFA	D4AZ 4851-C	●1330 flange	1

COPYRIGHT © 1986 — FORD MOTOR COMPANY — DEARBORN, MICHIGAN

1973/79 LINCOLN-MERCURY CARS

YEAR	MODEL/RESTRICTIONS	AXLE IDENT.	PART NUMBER	DESCRIPTION	QTY.
4851	FLANGE ASSY. (REAR AXLE UNIVERSAL JOINT) — Cont'd ● Industry size				
	G (Monarch)				
75/	G - - with 8" R/G	All	C30Z 4851-A	●1260 flange	1
75/78	G - - with 8.7" R/G	All	D4AZ 4851-A	● 1310 flange	1
75/78	G - - with 9" R/G	All-exc. WDX-B,WFB-K	D4AZ 4851-C	●1330 flange	1
77/78	G - - with 9" R/G	WFB-K	D0SZ 4851-B		1
75/76	G - - and 9" R/G and sure-track	WDX-B	★ D2SZ 4851-B	●1330 flange-not replaced	1
	J (Capri)				
73/78	J	All	D0RY 4851-C	Use with D3RY 4676-B	1
79	J - - with 7.5" R/G	All	D8BZ 4851-A		1
79	J - - with 6 3/4" R/G	All	D9BZ 4851-A		1
	K (Mark IV)				
73/	K - - w/sure-track	All	D3SZ 4851-A	●1330	1
73/	K - - w/o sure-track	All	D0SZ 4851-B	●1330	1
	L (Bobcat)				
74/	L - - 6 3/4" R/G	All	D2FZ 4851-A	●1260	1
75/	L - - 8" R/G	All	C30Z 4851-A	●1260	1
	P (Comet-Zephyr)				
73/77	P	All	C30Z 4851-A	●1260	1
78/	P - - with 7.5" R/G	All	D8BZ 4851-A		1
79	P - - with 6 3/4" R/G	All	D9BZ 4851-A		1
	V (Versailles)				
77/	V - - with 9" R/G	All	D0SZ 4851-B		1
	Y (Meteor)				
74/76	Y - - with 8.7" R/G	WER	D4AZ 4851-A	●1310 flange	1
73/76	Y - - with 8.7" R/G	WER	D4AZ 4851-B	●1330 flange	1
73/76	Y	WDC,WFC	D4AZ 4851-C	●1330 flange	1
75/76	Y - - with 9" R/G and sure-track	WDC-L,T, WFG-D,K	★ D2SZ 4851-B	●1330 flange-not replaced	1
4859	DEFLECTOR (REAR AXLE DRIVING PINION OIL SEAL)				
73/	A,C,G,L,P,Y - - with 8" or 8.7" R/G-without sure-track	All	D2AZ 4859-A	2 15/16" large I.D. x 2" small I.D.	1
73/78	A,G,Y - - with 9" R/G and sure-track	All	D0SZ 4859-A		1
73/	D,K - - with 9" R/G and sure-track	All			1
73/	A,C,D,F,G,K,V,Y - - with 9" R/G-without sure-track	All	D2SZ 4859—A	2 25/32" large I.D. x 2" small I.D.	1

YEAR	MODEL/RESTRICTIONS	AXLE IDENT.	PART NUMBER	DESCRIPTION	QTY.
4891	SNAP RING (UNIVERSAL JOINT BEARING)				
73/	A,C,F,P,Y	All	C3AZ 4891-A	Canada only	6
4945	PLATE (REAR AXLE DIFFERENTIAL CLUTCH)				
73/78	A,C,G,L,V,Y - - with 8" and 9" R/G and traction-lok	All	C80Z 4945-B		4
73/	D,F,K - - with 9" R/G and traction-lok	All			4
4946	HUB (REAR AXLE DIFFERENTIAL GEAR CLUTCH)				
73/78	A,C,G,L,V,Y - - with 8" and 9" R/G, 28 spline shaft and traction-lok	All	C90Z 4946-B		1
73/	D,F,K - - with 9" R/G and traction-lok	All			1
73	F - - with 9" R/G, 31 spline shaft and traction-lok	All	C90Z 4946-C		1
4947	PLATE (REAR AXLE DIFFERENTIAL GEAR CLUTCH)				
73/78	A,C,G,L,V,Y - - with traction-lok	All	C80Z 4947-A		4
73/	D,F,K - - with 9" R/G and traction-lok	All			1

COPYRIGHT © 1986 — FORD MOTOR COMPANY — DEARBORN, MICHIGAN

1973/79
LINCOLN-MERCURY CARS

YEAR	MODEL/RESTRICTIONS	PART NUMBER	DESCRIPTION	QTY.
5005	FRAME ASSY.			
73	A(53,57,65), Y(53,57,65)	D3MY 5005-A		1
	A(71), Y(71)	D3AZ 5005-A		1
74	A(53,57,65), Y(53,57,65)	D4MY 5005-A		1
75/76	A(53,65), Y(53,65)	★ D5MY 5005-A	#White dot	1
77/78	A (53,65)	D7MY 5005-A		1
74/76	A(71), Y(71) "Before 3/1/75"	★ D5AZ 5005-B	#Blue dot	1
76	A(71),Y(71) "From 3/1/75"	★ D6AZ 5005-C	R/b D7AZ 5005-B	1
77/78	A (71)	D7AZ 5005-B		1
79	A(54,66) P/C & TT3	D9MY 5005-A		1
	A(74)	★ D9MY 5005-B		1
79	A(54,66) exc. P/C & TT3	D9MY 5005-C		1
73	C(53) "Before 1/2/73"	★ D30Z 5005-E	R/b D30Z 5005-B and D20Z 5025-A	1
	C(53) "From 1/2/73"	D30Z 5005-B		1
	C(63,65) "Before 1/2/73"	★ D30Z 5005-F	R/b D30Z 5005-C and D20Z 5025-A	1
	C(63,65) "From 1/2/73"	D30Z 5005-C		1
	C(71) "Before 1/2/73"	★ D30Z 5005-D	R/b D30Z 5005-A and D20Z 5025-A	1
	C(71) "From 1/2/73"	D30Z 5005-A		1
74	C(53)	★ D60Z 5005-B		1
	C(65)	★ D60Z 5005-A		1
	C(71)	D40Z 5005-D		1
75	C(71) "Before 6/9/75"	D50Z 5005-D	#2 blue stripes	1
75/76	C(53)	★ D60Z 5005-B		1
	C(65)	★ D60Z 5005-A		1
	C(71) "From 6/9/75 to 12/1/75"	★ D60Z 5005-D		1
76	C(71) "From 12/1/75"	★ D60Z 5005-G		1
73	D	D3VY 5005-A		1
74	D	★ D4VY 5005-A	R/b D5VY 5005-A	1
75/	D	D7VY 5005-A		1
74/76	F	★ D60Z 5005-A		1
77/	F (53) - - length 193.34"	D70Z 5005-B	Eng. #D90C 5005-EC	1
	F (65) - - length 189.34"	D70Z 5005-A	Eng. #D90C 5005-DC	1
77	F (71)	D70Z 5005-C		1
73	K	D3SZ 5005-A		1
74	K	★ D4SZ 5005-A	R/b D5SZ 5005-A	1
75	K "Before 6/9/75"	★ D5SZ 5005-A	R/b D6SZ 5005-A	1
75/76	K "From 6/9/75"	★ D6SZ 5005-A		1
77/	K	★ D7LY 5005-A		1
5A007	PLATE (REAR FRAME SIDE)			
74/	A(71),Y(71)	D6AZ 5A007-A	Used only with D6AZ 17787-D & D6AZ 17788-D isolators	1
5019	CROSSMEMBER ASSY. (FRAME FRONT)			
73/78	A,Y	D3AZ 5019-A		1
79	A	★5019	Part of 5005	1
73/76	C	D4SZ 5019-A		1
74/	F			1
73/	K			1
73/	D	D3VY 5019-A		1
73/74	J	D4RY 5019-A		1
76/78	J - - w/power steering	D5RY 5019-E		1
76/78	J - - w/o power steering	D5RY 5019-D		1
5C021	CLAMP and INSULATOR (FRAME NO. 3 CROSSMEMBER)			
73/	K	D2SZ 5C021-A		2
5C024	ROD (FRAME STABILIZER)			
73/76	C	(RH) ★ D30Z 5C024-A	(LH) ★ D30Z 5C024-B	1
74/76	F			1
79	J	★ D8BZ 5C024-A		1
73/74	K	(RH) ★ D2SZ 5C024-C	(LH) ★ D2SZ 5C024-D	1
75/	K	(RH) D5SZ 5C024-A	(LH) ★ D5SZ 5C024-B	1
78/	P	D8BZ 5C024-A		1

COPYRIGHT © 1986— FORD MOTOR COMPANY —DEARBORN, MICHIGAN

1973/79 LINCOLN-MERCURY CARS

YEAR	MODEL/RESTRICTIONS	PART NUMBER	DESCRIPTION	QTY.
5025-6	**CROSSMEMBER ASSY. (FRAME NO. 2 or 3)**			
73/78	A,Y	★ C9AZ 5025-A	No. 3	1
79	A	D9AZ 5025-A		1
73	C "Before 1/2/73"	★ D20Z 5025-A	No. 3-not replaced	1
73/76	C "From 1/2/73"	D30Z 5025-A	No. 3	1
73/	D	★ D0VY 5025-A	No. 3	1
73	F	C5ZZ 5026-A	No. 2-tubular	1
74/76	F	★ D30Z 5025-A	No. 3	1
77/	F	★ D70Z 5025-A		1
79	J - - Exc. 3.3L	E0BZ 5025-C	No. 2	1
79	J - - 3.3L	★ D9BZ 5025-B r/bE0BZ 5025-A	No. 2	1
73/	K	★ D2SZ 5025-A	No. 3	1
73/77	P - - 8 cyl.	★ D0DZ 5025-A	No. 2	1
78	P - - 2.3 L & 5.0L	★ D8BZ 5025-A	R/b D9BZ 5025-A	1
78	P - - 3.3L	★ D8BZ 5025-B	R/b D9BZ 5025-B	1
79	P - - Exc. 3.3L	E0BZ 5025-C		1
	P - - 3.3L-(exc. Police & Taxi	★ D9BZ 5025-B r/bE0BZ 5025-A		1
	P - - 3.3L Police & Taxi	★ D9BZ 5025-D	R/b E0BZ 5025-B	1
79	P - - 5.0L P/C & Taxi	★ D9BZ 5025-C	R/b E0BZ 5025-D	1
73/	A,Y	380437-S2	(BB-199-H)-bolt (to frame)-9/16"-12 x 1 3/8"	2
73/	A,Y	382484-S	(MM-173-FA)-locknut (cross member to frame)-9/16"-12	2
73/76	C	★ 384928-S100 r/b383386-S2	(BB-429-WN)-bolt (to frame)-hex. head-9/16"-12 x 1 1/2"	2
73/76	C	★384651-S	Clip-to side rail	2
73/76	C	★ 384650-S2 r/b385321-S2	(MM-192-XA)-nut and retainer assy. (to frame)-9/16"-12	2
73/76	C	383386-S2	(XX-345-F)-washer (to frame)-9/16" tab	2
73/	F	379068-S	(BB-817-Q)-bolt (to side rail)-1/2"-13 x 1 1/8"	2
5C027	**BRACKET (FRAME STABILIZER ROD)**			
73/74	C	(RH) ★ D2SZ 5C027-B	(LH) ★ D2SZ 5C027-A	1
73/	K			1
5C030	**PLATE (NO. 2 CROSSMEMBER TO BODY)**			
79/80	J,P	D8BZ 5B030-A		2
5035	**CROSSMEMBER (FRAME REAR)**			
73	A(53,57,65), Y(53,57,65)	★ D3AZ 5035-C	Not replaced	1
73/78	A(71), Y(71)	★ D4AZ 5035-B		1
74/78	A (53,57,65), Y(53,57,65)	★ D5AZ 5035-A		1
79	A H/D Sedan	D9AZ 5035-A		1
73	C(53,63,65)	★ D20Z 5035-B		1
73	C(71)	★ D20Z 5035-A		1
74/76	C(53,65)	★ D40Z 5035-B		1
74/76	C(71)	★ D40Z 5035-A		1
73	D	★ C9AZ 5035-B		1
74/	D	★ D4VY 5035-A		1
74/	F(53,65)	★ D40Z 5035-B		1
77	F (71)	★ D40Z 5035-A		1
73	K	★ D20Z 5035-B		1
74/	K	★ D40Z 5035-B		1
5C036	**Refer to Body Bolt Chart in Section 000**			
5B098	**Refer to Body Bolt Chart in Section 000**			
5A103	**Refer to Body Bolt Chart in Section 000**			
5C122	**DEFLECTOR (FRAME CROSSMEMBER #1)**			
79	F(65L)	D90Z 5C122-A	No. 1	1

HOW TO FIND EXHAUST SYSTEM PARTS

1. USE CAR MODEL APPLICATION

Refer to the Year–Model Index as follows:

YEAR	MODELS	SECTION	PAGE
1973	All	52.73	A
1974	All	52.74	A
1975	All	52.75	A
1976	All	52.76	A
1977	All	52.77	A
1978	All	52.78	A
1979	All	52.79	A

These symbols are used in the parts tables:

□ is used for major components. They are numbered in order from engine to end of exhaust system.

○ is used for clamps. They are marked A,B,C from front to rear.

Δ is used for brackets or hangers. They are numbered from front to rear.

2. USE STAMPED NUMBERS

Refer to Cross–Reference charts in Section 50, as follows:

NAME	GROUP NUMBER	SECTION	PAGE
Inlet extension pipe	5A212	50	4
Converter	5E212	50	4
Muffler	5230	50	6
Inlet pipe	5246	50	13
Outlet pipe	5255	50	17
Resonator	5A289	50	18

COPYRIGHT © 1986 — FORD MOTOR COMPANY — DEARBORN, MICHIGAN

3. USE SIZES

Refer to Size charts in Section 50, as follows:

NAME	GROUP NUMBER	SECTION	PAGE
Inlet extension pipe	5A212	50	4
Muffler	5230	50	9
Inlet pipe	5246	50	15
Outlet pipe	5255	50	18
Resonator	5A289	50	19

SHELL LENGTH

When two or more catalytic converters are shown for the same application and the shell length is specified, to facilitate the selection of the proper converter, use the following diagram to determine the shell length.

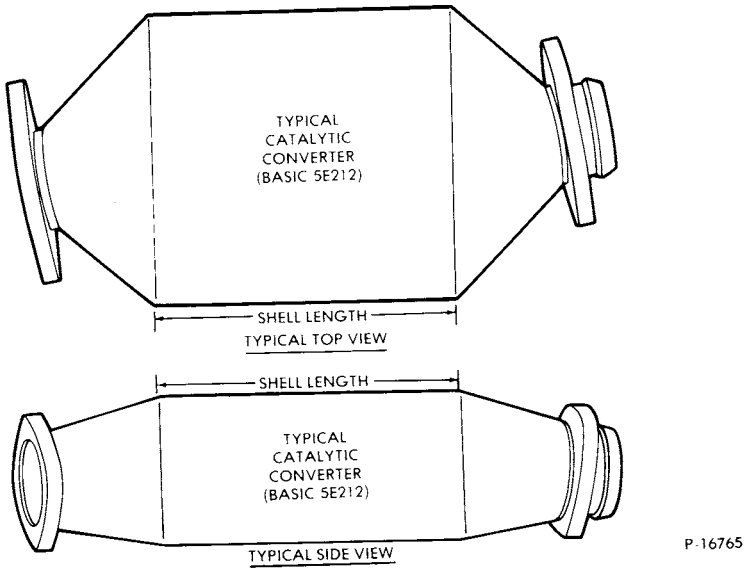

4. USE HANGER REPAIR KITS

Some original–equipment hangers may be repaired by universal–type replacement kits. Refer to group 5260 in Section 50, page 18 to determine which kit to use.

5. CONVERTER IDENTIFICATION

Any numbers appearing in the suffix of converter stamping number should be emitted, before using identification chart. Example (5E212–A1A) would be 5E212–AA

5E209	Refer to group 5230 Cross Reference Chart
5E210	Refer to group 5255 Cross Reference Chart
5212	Refer to group 5A289 Cross Reference Chart

5A212 PIPE (MUFFLER INLET EXTENSION)
Use the Chart below to translate the Number Stamped on the Extension Pipe to a Service Part Number.
For model application, refer to Section 50, page 3
@ Crossover Pipe

CROSS REFERENCE CHART

IDENTIFICATION	PART NUMBER	IDENTIFICATION	PART NUMBER
D8BC 5A212–AD	D8BZ 5A212–A	D4DZ 5D294–AB	★ D4DZ 5A212–A
D1WJ 5A216–AA	D1WY 5A212–A	D5BA 5D294–AA	D5DZ 5A212–A
D1DJ 5245–AA	D1DZ 5A212–A	D5ZA 5D294–BA	D5ZZ 5A212–C
D1DJ 5245–BA	D1DZ 5A212–C	D5ZA 5D294–AB	D5ZZ 5A212–B
@ 69EB 5A260–BB	D2RY 5A212–A	D5ZA 5D294–BA	D5ZZ 5A212–C
D4DA 5D294–AA	★ D4DZ 5A212–A	D6BA 5D294–AA	D5DZ 5A212–A

SIZE CHART

PART NUMBER	INCHES		PART NUMBER	INCHES	
	LENGTH	DIA.		LENGTH	DIA.
D1DZ 5A212–A	50 3/4	1 3/4	D5DZ 5A212–A	6 7/8	2
★ D1DZ 5A212–C	61 1/4	1 3/4	D5DZ 5A212–B	6 7/8	2
D1WY 5A212–A	37 7/8	2 1/4	D5ZZ 5A212–B	7 1/4	2
D4DZ 5A212–A	6 3/4		D5ZZ 5A212–C	7 1/4	2

5E212 CONVERTER (EXHAUST CATALYST)
Use the Chart below to translate the Number Stamped on the Converter to a Service Part Number.
For model application, refer to Section 50, page 3

IDENTIFICATION CHART

IDENTIFICATION	PART NUMBER	IDENTIFICATION	PART NUMBER
D8BE 5E211–BA	D8BZ 5E212–H	D50E 5E212–AE	D50Z 5E212–B
D9ZE 5E211–EA	D9ZZ 5E212–B	D50E 5E212–AF	D50Z 5E212–B
D9ZE 5E211–FA	D9ZZ 5E212–B	D50E 5E212–BE	D50Z 5E212–A
D9ZE 5E211–GA	D9ZZ 5E212–B	D50E 5E212–BF	D50Z 5E212–A
D9ZE 5E211–GB	D9ZZ 5E212–B	D52E 5E212–BD	D5FZ 5E212–C
D9ZE 5E211–GC	D9ZZ 5E212–B	D52E 5E212–CD	D5FZ 5E212–A
D9ZE 5E211–GD	D9ZZ 5E212–B	D52E 5E212–EB	D5FZ 5E212–C
D9ZE 5E211–GE	D9ZZ 5E212–B	D6AE 5E212–AA	D6AZ 5E212–B
D9ZE 5E211–GF	D9ZZ 5E212–B	D6AE 5E212–AB	D6AZ 5E212–B
D5AE 5E212–AB	D5AZ 5E212–A	D6AE 5E212–AC	D6AZ 5E212–B
D5AE 5E212–AE	D5AZ 5E212–A	D6AE 5E212–BA	D6AZ 5E212–B
D5AE 5E212–AF	D5AZ 5E212–A	D6AE 5E212–BB	D6AZ 5E212–B
D5AE 5E212–BD	D5AZ 5E212–B	D6AE 5E212–BC	D6AZ 5E212–B
D5AE 5E212–BF	D5AZ 5E212–B	D6AE 5E212–CA	D5AZ 5E212–A
D5AE 5E212–CA	D5AZ 5E212–A	D6AE 5E212–DA	D5AZ 5E212–B
D5AE 5E212–CB	D5AZ 5E212–A	D6AE 5E212–EA	D5AZ 5E212–A
D5AE 5E212–GB	D5AZ 5E212–G	D6BE 5E212–CA	D6DZ 5E212–B
D5AE 5E212–KB	D5AZ 5E212–G	D6BE 5E212–DA	D5DZ 5E212–F
D5DE 5E212–AE	D5DZ 5E212–A	D6BE 5E212–EA	D5DZ 5E212–F
D5DE 5E212–CE	D5DZ 5E212–C	D6DE 5E212–AB	D6DZ 5E212–A
D5DE 5E212–FB	D5DZ 5E212–E	D6DE 5E212–AC	D6DZ 5E212–A
D5DE 5E212–FC	★ D5DZ 5E212–E	D6EE 5E212–BA	D6FZ 5E212–A
D5DE 5E212–GA	★ D5DZ 5E212–E	D6EE 5E212–BB	D6FZ 5E212–A
D5DE 5E212–GB	D5DZ 5E212–E	D6EE 5E212–CA	D5FZ 5E212–C
D5DE 5E212–JA	D5DZ 5E212–C	D6EE 5E212–DA	D5FZ 5E212–A
D5DE 5E212–KA	D5DZ 5E212–F	D60E 5E212–AA	D60Z 5E212–C
D5DE 5E212–KB	D5DZ 5E212–F	D60E 5E212–AB	D60Z 5E212–C
D5DE 5E212–LA	D6DZ 5E212–B	D60E 5E212–AC	D60Z 5E212–C
D5DE 5E212–LB	D6DZ 5E212–B	D60E 5E212–CA	D50Z 5E212–A

COPYRIGHT © 1986 — FORD MOTOR COMPANY — DEARBORN, MICHIGAN

IDENTIFICATION CHART

IDENTIFICATION	PART NUMBER	IDENTIFICATION	PART NUMBER
D60E 5E212–BA	D50Z 5E212–B	D9ME 5E212–CD	D9MY 5E212–G
D6SE 5E212–CA	D5SZ 5E212–C	D9ME 5E212–DA	D9MY 5E212–J
D7AE 5E212–BB	D7AZ 5E212–D	D9ME 5E212–DB	D9MY 5E212–J
D7AE 5E212–BC	D7AZ 5E212–D	D9TE 5E212–FA	D9TZ 5E212–E
D7AE 5E212–CC	D7AZ 5E212–A	D9ZE 5E212–BB	D9ZZ 5E212–A
D7AE 5E212–FA	D7AZ 5E212–A	D9ZE 5E212–BC	D9ZZ 5E212–A
D7AE 5E212–GA	D7AZ 5E212–D	D5AE 5E214–AB	D5AZ 5E212–C
D7AE 5E212–GB	D7AZ 5E212–D	D5AE 5E214–AG	D5AZ 5E212–C
D7AE 5E212–JA	D7AZ 5E212–D	D5AE 5E214–DC	D5AZ 5E212–E
D7AE 5E212–JB	D7AZ 5E212–D	D5AE 5E214–EA	D5AZ 5E212–F
D7AE 5E212–KA	D7AZ 5E212–A	D5AE 5E214–EB	D5AZ 5E212–F
D7BE 5E212–CC	D7DZ 5E212–A	D5AE 5E214–EC	D5AZ 5E212–F
D7BE 5E212–DC	D7DZ 5E212–D	D5AE 5E214–GA	D5AZ 5E212–G
D7BE 5E212–EC	D7DZ 5E212–C	D5AE 5E214–FB	D5AZ 5E212–D
D7BE 5E212–FC	D7DZ 5E212–E	D5AE 5E214–GB	D5AZ 5E212–G
D7BE 5E212–GA	D7DZ 5E212–B	D5AE 5E214–HA	D5AZ 5E212–H
D7BE 5E212–HA	D7DZ 5E212–B	D5AE 5E214–HB	D5AZ 5E212–H
D7BE 5E212–JA	D7DZ 5E212–A	D5AE 5E214–JA	D5AZ 5E212–F
D7BE 5E212–KA	D7DZ 5E212–D	D5AE 5E214–JB	D5AZ 5E212–F
D7BE 5E212–LA	D7DZ 5E212–C	D5AE 5E214–KA	D5AZ 5E212–G
D7EE 5E212–JA	D7FZ 5E212–C	D5AE 5E214–KB	D5AZ 5E212–G
D70E 5E212–AD	D70Z 5E212–A	D5AE 5E214–LA	D5AZ 5E212–H
D70E 5E212–EB	D70Z 5E212–A	D5AE 5E214–LB	D5AZ 5E212–H
D7SE 5E212–BC	D7SZ 5E212–D	D50E 5E214–FA	D50Z 5E212–E
D7SE 5E212–CC	D7SZ 5E212–A	D50E 5E214–FB	D50Z 5E212–E
D7SE 5E212–CD	D7SZ 5E212–A	D50E 5E214–HA	D50Z 5E212–G
D7SE 5E212–DA	D7SZ 5E212–A	D50E 5E214–HB	D50Z 5E212–G
D7SE 5E212–DB	D7SZ 5E212–A	D50E 5E214–JA	D50Z 5E212–H
D7SE 5E212–EA	D7SZ 5E212–D	D50E 5E214–JB	D50Z 5E212–H
D7ZE 5E212–BA	D7DZ 5E212–A	D50E 5E214–KA	D50Z 5E212–J
D8BE 5E212–EA	D7DZ 5E212–A	D50E 5E214–KB	D50Z 5E212–J
D8BE 5E212–FA	D8BZ 5E212–A	D50E 5E214–MA	D50Z 5E212–K
D8BE 5E212–GA	D8BZ 5E212–B	D50E 5E214–MB	D50Z 5E212–K
D8BE 5E212–JA	D8BZ 5E212–D	D5SE 5E214–AE	D5SZ 5E212–A
D8BE 5E212–KA	D8BZ 5E212–E	D5SE 5E214–AG	D5SZ 5E212–A
D8BE 5E212–LA	D8BZ 5E212–F	D5SE 5E214–BA	D5SZ 5E212–B
D8EE 5E212–BA	D7DZ 5E212–A	D5SE 5E214–BC	D5SZ 5E212–B
D8EE 5E212–BB	D8FZ 5E212–A	D52E 5E214–BA	D5FZ 5E212–E
D8EE 5E212–DA	D7DZ 5E212–A	D52E 5E214–CA	D5FZ 5E212–E
D8VE 5E212–BA	D8VY 5E212–B	D5SE 5E214–CB	D5SZ 5E212–C
D9AE 5E212–CA	D9AZ 5E212–B	D6AE 5E214–AA	D5AZ 5E212–C
D9AE 5E212–CB	D9AZ 5E212–C	D6AE 5E214–AB	D5AZ 5E212–C
D9AE 5E212–GA	D9AZ 5E212–D	D6AE 5E214–BA	D5AZ 5E212–E
D9AE 5E212–GC	D9AZ 5E212–G	D6AE 5E214–CA	D5AZ 5E212–F
D9AE 5E212–JB	D9AZ 5E212–C	D6AE 5E214–DA	D5AZ 5E212–D
D9AE 5E212–JC	D9AZ 5E212–C	D6AE 5E214–EA	D5AZ 5E212–G
D9AE 5E212–KB	D9AZ 5E212–F	D6AE 5E214–FA	D5AZ 5E212–H
D9AE 5E212–KC	D9AZ 5E212–F	D6AE 5E214–GA	D5AZ 5E212–F
D9BE 5E212–EA	D9BZ 5E212–A	D6AE 5E214–HA	D5AZ 5E212–G
D9BE 5E212–GA	D9BZ 5E212–C	D6AE 5E214–JA	D5AZ 5E212–H
D9BE 5E212–JA	D9BZ 5E212–D	D6AE 5E214–KA	D5AZ 5E212–C
D9BE 5E212–JB	D9BZ 5E212–D	D6EE 5E214–AA	D5FZ 5E212–E
D9BE 5E212–KA	D9BZ 5E212–B	D6EE 5E214–BA	D6FZ 5E212–B
D9BE 5E212–KB	D9BZ 5E212–B	D6EE 5E214–BB	D6FZ 5E212–B
D9BE 5E212–RA	D9BZ 5E212–B	D60E 5E214–AA	D50Z 5E212–E
D9ME 5E212–AC	D9MY 5E212–A	D60E 5E214–BA	D50Z 5E212–G
D9ME 5E212–BB	D9MY 5E212–D	D60E 5E214–BB	D50Z 5E212–G
D9ME 5E212–BC	D9MY 5E212–D	D60E 5E214–CA	D50Z 5E212–H
D9ME 5E212–CB	D9MY 5E212–G	D60E 5E214–DA	D50Z 5E212–J
D9ME 5E212–CC	D9MY 5E212–E	D60E 5E214–FA	★D50Z 5E212–K

IDENTIFICATION CHART

IDENTIFICATION	PART NUMBER	IDENTIFICATION	PART NUMBER
D6SE 5E214–AA	D5SZ 5E212–A	D7VE 5E214–BB	D7VY 5E212–A
D6SE 5E214–BA	D5SZ 5E212–B	D7VE 5E214–BC	D7VY 5E212–A
D6SE 5E214–CA	★ D5SZ 53212–C	D7VE 5E214–CA	D7VY 5E212–A
D7AE 5E214–BB	D7AZ 5E212–C	D7VE 5E214–CB	D7VY 5E212–A
D7AE 5E214–BC	D7AZ 5E212–C	D9AE 5E214–BA	D9AZ 5E212–A
D7AE 5E214–CC	D7AZ 5E212–B	D9AE 5E214–BB	D9AZ 5E212–A
D7AE 5E214–EA	D7AZ 5E212–B	D9AE 5E214–EA	D9AZ 5E212–H
D7AE 5E214–FA	D7AZ 5E212–C	D9AE 5E214–GB	D9AZ 5E212–D
D7AE 5E214–FB	D7AZ 5E212–C	D9AE 5E214–GC	D9AZ 5E212–G
D7LE 5E214–AC	D7LY 5E212–A	D9AE 5E214–HB	D9AZ 5E212–E
D7LE 5E214–AD	D7LY 5E212–A	D9AE 5E214–HC	D9AZ 5E212–E
D7LE 5E214–BA	D7LY 5E212–A	D9AE 5E214–HD	D9AZ 5E212–E
D7LE 5E214–BB	D7LY 5E212–A	D9ME 5E214–AB	D9MY 5E212–C
D70E 5E214–AC	D70Z 5E212–C	D9ME 5E214–AC	D9MY 5E212–C
D70E 5E214–CA	D70Z 5E212–C	D9ME 5E214–BC	D9MY 5E212–B
D7SE 5E214–BC	D7SZ 5E212–C	D9ME 5E214–CA	D9MY 5E212–E
D7SE 5E214–CC	D7SZ 5E212–B	D9ME 5E214–CD	D9MY 5E212–E
D7SE 5E214–DA	D7SZ 5E212–B	D9ME 5E214–DB	D9MY 5E212–H
D7SE 5E214–EA	D7SZ 5E212–C		

YEAR	MODEL/RESTRICTIONS	PART NUMBER	DESCRIPTION	QTY.
5F215	SHIELD (NOISE WRAP CONVERTER)			
79	A	D9AZ 5F215–A	CONVERTER NOISE WRAP	2
5A216	Refer to group 5A212 Cross Reference Chart			
5A217	Refer to group 5A289 Cross Reference Chart			
5C219	Refer to group 5255 Cross Reference Chart			
5E224	Refer to group 5230 Cross Reference Chart			
5E225	Refer to group 5255 Cross Reference Chart			

IDENTIFICATION CHART

IDENTIFICATION	PART NUMBER	IDENTIFICATION	PART NUMBER
5230 MUFFLER			
For dimensions refer to Size Chart page 9			
For model application, refer to Section 50, page 3			
Use the Chart below to translate the Number Stamped on the Muffler to a Service Part Number.			
D3MA 5E209–A1A	D3MY 5230–E	D50A 5E209–AC	D50Z 5230–AA
D3MA 5E209–A1B	D3MY 5230–J	D50A 5E209–AD	D50Z 5230–AA
D3MA 5E209–A2B	D3MY 5230–J	D50A 5E209–AE	D50Z 5230–AA
D3MA 5E209–B1A	D3MY 5230–F	D50A 5E209–B1A	★ D50Z 5230–M
D3MA 5E209–B1B	★ D3MY 5230–H	D50A 5E209–BB	D50Z 5230–AB
D3MA 5E209–B2A	D3MY 5230–F	D50A 5E209–BC	D50Z 5230–AB
D3MA 5E209–B2B	★ D3MY 5230–H	D50A 5E209–BD	D50Z 5230–AB
D30A 5E209–AB	D30Z 5230–C	D6AA 5E209–AA	D5AZ 5230–W
D30A 5E209–BA	D30Z 5230–F	D6AA 5E209–BA	D5AZ 5230–AE
D30A 5E209–CA	D30Z 5230–G	D60A 5E209–BA	D50Z 5230–AA
D30A 5E209–DA	D30Z 5230–H	D7AC 5E209–AA	D7AZ 5230–C
D3WA 5E209–AA	D3WY 5230–A	D7AC 5E209–BA	D7AZ 5230–D
D3WA 5E209–BA	D3WY 5230–B	D80C 5E209–AA	D80Z 5230–E
D4AA 5E209–C1A	D4AZ 5230–H	D3WA 5E224–AA	★ D3WY 5230–C
D4AA 5E209–C2A	D4AZ 5230–H	D50A 5E224–AB	D50Z 5230–B
D4AA 5E209–D1A	D4AZ 5230–J	D50A 5E224–AC	D50Z 5230–AE
D4AA 5E209–D2A	D4AZ 5230–J	D50A 5E224–AD	D50Z 5230–AE
D4MA 5E209–A1B	D4MY 5230–E	D50A 5E224–AE	D50Z 5230–AE
D4MA 5E209–A2B	D4MY 5230–E	D60A 5E224–AA	D50Z 5230–AE
D5AA 5E209–AD	★ D5AZ 5230–A	D0AJ 5230–C	D0AZ 5230–U
D5AA 5E209–AE	★ D5AZ 5230–W	D0VA 5230–D	D0VY 5230–A
D5AA 5E209–AF	★ D5AZ 5230–W	D1AJ 5230–CA	D0AZ 5230–U
D5AA 5E209–B1E	D5AZ 5230–C	D1AJ 5230–DA	D0AZ 5230–V
D5AA 5E209–B1G	★ D5AZ 5230–AE	D1DJ 5230–CA	D1DZ 5230–L
D50A 5E209–AB	D50Z 5230–A	D1ZJ 5230–BA	D0ZZ 5230–R

COPYRIGHT © 1986 — FORD MOTOR COMPANY — DEARBORN, MICHIGAN

IDENTIFICATION CHART

5230 MUFFLER — Cont'd

For dimensions refer to Size Chart page 9

For model application, refer to Section 50, page 3

Use the Chart below to translate the Number Stamped on the Muffler to a Service Part Number.

IDENTIFICATION	PART NUMBER	IDENTIFICATION	PART NUMBER
D20A 5230-ZA	D20Z 5230-AE	D60A 5230-BA	D50Z 5230-AC
D20J 5230-AA	D20Z 5230-AC	D60A 5230-CA	D60Z 5230-D
D20J 5230-BA	D20Z 5230-AA	D6SA 5230-AA	★ D5SZ 5230-B
D2SA 5230-BC	D2SZ 5230-E	D6VA 5230-AA	D5VY 5230-E
D2WA 5230-BA	D2WY 5230-A	D7AC 5230-AA	D5AZ 5230-AC
D3MA 5230-B1C	D3MY 5230-G	D7AC 5230-BA	D7AZ 5230-A
D3MA 5230-B2C	D3MY 5230-G	D7AC 5230-BB	D7AZ 5230-A
D3MA 5230-B4C	D3MY 5230-G	D7AC 5230-BC	D7AZ 5230-A
D3MA 5230-EA	D0MY 5230-F	D7AC 5230-CA	★ D7AZ 5230-B
D30A 5230-AA	D30Z 5230-A	D7AC 5230-DB	D7AZ 5230-E
D30A 5230-CB	D30Z 5230-J	D7EA 5230-AC	D7FZ 5230-A
D30A 5230-EA	D20Z 5230-AE	D7EA 5230-BC	D7FZ 5230-B
D30A 5230-JB	D30Z 5230-D	D7EA 5230-CC	D7FZ 5230-C
D30A 5230-KB	D30Z 5230-E	D7EA 5230-DC	D7FZ 5230-D
D4DA 5230-AA	D4DZ 5230-A	D70C 5230-AA	★ D70Z 5230-A
D4DA 5230-BA	D4DZ 5230-B	D70C 5230-AB	D70Z 5230-F
D4MA 5230-AB	D4MY 5230-A	D70C 5230-BA	★ D70Z 5230-B
D4MA 5230-DB	D4MY 5230-C	D70C 5230-BB	D70Z 5230-G
D4MA 5230-FA	D4MY 5230-J	D70C 5230-CA	D70Z 5230-D
D40A 5230-AA	D40Z 5230-A	D70C 5230-DA	D70Z 5230-E
D40A 5230-DB	D40Z 5230-E	D7ZA 5230-AB	D7ZZ 5230-L
D40A 5230-EB	D40Z 5230-F	D7ZA 5230-BB	D7ZZ 5230-M
D40A 5230-FB	D40Z 5230-G	D8AC 5230-AA	D8AZ 5230-A
D40A 5230-S1A	D40Z 5230-AC	D8BC 5230-ED	D8BZ 5230-A
D40A 5230-TA	D40Z 5230-Y	D8BC 5230-FA	D8BZ 5230-B
D4SA 5230-AB	D4SZ 5230-D	D8BC 5230-FB	D8BZ 5230-B
D4SA 5230-AC	D4SZ 5230-D	D8BC 5230-FC	D8BZ 5230-B
D42A 5230-AC	D4FZ 5230-A	D8BC 5230-FD	D8BZ 5230-B
D42A 5230-AD	D4FZ 5230-J	D8BC 5230-GD	D8BZ 5230-C
D42A 5230-CE	D4FZ 5230-D	D8BC 5230-JD	D8BZ 5230-E
ED- D5AA 5230-A1B	D5AZ 5230-J	D8BC 5230-KD	D8BZ 5230-F
D5AA 5230-AC	D5AZ 5230-Y	D8BC 5230-LD	D8BZ 5230-G
D5AA 5230-AD	D5AZ 5230-Y	D8BC 5230-MD	D8BZ 5230-H
ED- D5AA 5230-BB	D5AZ 5230-G	D8BC 5230-ND	D8BZ 5230-J
D5AA 5230-BD	D5AZ 5230-AF	D8BC 5230-RA	D8BZ 5230-K
D5AA 5230-CA	D5AZ 5230-AC	D8EC 5230-AA	D8FZ 5230-A
D5AA 5230-CB	D5AZ 5230-AC	D8EC 5230-AB	D8FZ 5230-A
D5AA 5230-CC	D5AZ 5230-AC	D8EC 5230-BA	D8FZ 5230-B
D5AA 5230-CD	D5AZ 5230-AC	D8EC 5230-CB	D8FZ 5230-C
D50A 5230-CA	D50Z 5230-S	D8EC 5230-EA	D7FZ 5230-C
D50A 5230-CB	D50Z 5230-S	D8EC 5230-FA	D7FZ 5230-A
D50A 5230-DA	D50Z 5230-N	D80C 5230-AA	D80Z 5230-A
D50A 5230-DB	D50Z 5230-AC	D80C 5230-BA	D80Z 5230-B
D50A 5230-DC	D50Z 5230-AC	D9AC 5230-AC	D9AZ 5230-A
D50A 5230-DD	D50Z 5230-AC	D9AC 5230-AE	D9AZ 5230-A
D52J 5230-CB	D5FZ 5230-S	D9AC 5230-BE	D9AZ 5230-B
D6AA 5230-AA	D5AZ 5230-Y	D9AC 5230-BF	D9AZ 5230-B
D6AA 5230-AB	D5AZ 5230-Y	D9AC 5230-CD	D9AZ 5230-C
D6AA 5230-BA	D5AZ 5230-AF	D9BC 5230-AC	D9BZ 5230-A
D6AA 5230-BB	D5AZ 5230-AF	D9BC 5230-AD	D9BZ 5230-A
D6AA 5230-CA	D5AZ 5230-AC	D9BC 5230-BD	D9BZ 5230-B
D6AA 5230-CB	D5AZ 5230-AC	D9BC 5230-CA	D9BZ 5230-C
D6EA 5230-AA	D6FZ 5230-F	D9BC 5230-DA	D9BZ 5230-D
D6EA 5230-BA	D6FZ 5230-G	D9BC 5230-ED	D9BZ 5230-E
D6EA 5230-CA	D6FZ 5230-H	D9BC 5230-FA	D9BZ 5230-F
D6EA 5230-DA	D6FZ 5230-J		

IDENTIFICATION CHART

5230 MUFFLER — Cont'd

For dimensions refer to Size Chart page 9

For model application, refer to Section 50, page 3

Use the Chart below to translate the Number Stamped on the Muffler to a Service Part Number.

IDENTIFICATION	PART NUMBER	IDENTIFICATION	PART NUMBER
D9BC 5230-GA	D9BZ 5230-G	D7AC 5232-AA	D5AZ 5230-AD
D9BC 5230-HA	D9BZ 5230-H	D4DA 5C257-A1A	D4DZ 5230-E
D9BC 5230-JC	D9BZ 5230-J	D4DA 5C257-A1B	D4DZ 5230-E
D9BC 5230-LC	D9BZ 5230-K	D4DA 5C257-A2A	D4DZ 5230-E
D9BC 5230-MC	D9BZ 5230-L	D4DA 5C257-A2B	D4DZ 5230-E
D9BC 5230-RB	D9BZ 5230-M	D4DA 5C257-B1A	D4DZ 5230-F
D9BC 5230-SB	D9BZ 5230-N	D4DA 5C257-B1B	D4DZ 5230-F
D9BC 5230-T1A	D9BZ 5230-R	D4DA 5C257-B2A	D4DZ 5230-F
D9BC 5230-T1B	D9BZ 5230-R	D4DA 5C257-B2B	D4DZ 5230-F
D9BC 5230-TC	D9BZ 5230-R	D4DA 5C257-C1A	D4DZ 5230-D
D9BC 5230-TD	D9BZ 5230-R	D4DA 5C257-C2A	D4DZ 5230-D
D9EC 5230-BB	D9FZ 5230-C	D4DA 5C257-D1A	D4DZ 5230-C
D9EC 5230-FA	D9FZ 5230-B	D4DA 5C257-D2A	D4DZ 5230-C
D9EC 5230-EB	D9FZ 5230-A	D40A 5C257-AA	D40Z 5230-AD
D9EC 5230-GA	★ D9FZ 5230-D	D4SA 5C257-AA	D4SZ 5230-A
D9EC 5230-HA	D9FZ 5230-E	D42A 5C257-AB	D4FZ 5230-E
D90C 5230-AD	D90Z 5230-A	D42A 5C257-AC	D4FZ 5230-K
D90C 5230-BE	D90Z 5230-B	D42A 5C257-CC	D4FZ 5230-G
D90C 5230-CC	D90Z 5230-C	D5BA 5C257-A1G	★ D5DZ 5230-D
D90C 5230-DD	D90Z 5230-D	D5BA 5C257-A1H	★ D5DZ 5230-D
D9ZC 5230-AF	D9ZZ 5230-A	D5BA 5C257-A1J	★ D5DZ 5230-D
D9ZC 5230-BA	D9ZZ 5230-B	D5BA 5C257-A2H	★ D5DZ 5230-D
D9ZC 5230-CF	D9ZZ 5230-C	D5BA 5C257-A2J	★ D5DZ 5230-D
D9ZC 5230-DC	D9ZZ 5230-H	D5BA 5C257-AK	★ D5DZ 5230-D
D9ZC 5230-KA	D9ZZ 5230-P	D5BA 5C257-B1G	★ D5DZ 5230-E
D20A 5232-JA	D20Z 5230-AD	D5BA 5C257-B1H	★ D5DZ 5230-E
D2WA 5232-AA	D2WY 5230-B	D5BA 5C257-B1J	★ D5DZ 5230-E
D3MA 5232-BA	D0MY 5230-C	D5BA 5C257-B2H	★ D5DZ 5230-E
D30A 5232-AA	D30Z 5230-B	D5BA 5C257-B2J	★ D5DZ 5230-E
D30A 5232-CA	D20Z 5230-AD	D5BA 5C257-BK	★ D5DZ 5230-E
D4MA 5232-BA	D4MY 5230-H	D5BA 5C257-C1G	★ D5DZ 5230-F
D4SA 5232-AA	D4SZ 5230-C	D5BA 5C257-C1H	★ D5DZ 5230-F
D4SA 5232-AB	D4SZ 5230-C	D5BA 5C257-C2H	★ D5DZ 5230-F
D4SA 5232-BA	D4SZ 5230-E	D5BA 5C257-D1G	★ D5DZ 5230-G
ED- D5AA 5232-A1B	★ D5AZ 5230-K	D5BA 5C257-D1H	★ D5DZ 5230-G
D5AA 5232-AC	D5AZ 5230-AA	D5BA 5C257-D2H	★ D5DZ 5230-G
D5AA 5232-AD	D5AZ 5230-AA	D5BA 5C257-J1B	D5DZ 5230-AE
ED- D5AA 5232-BC	★ D5AZ 5230-H	D5BA 5C257-J1C	D5DZ 5230-AE
D5AA 5232-BE	D5AZ 5230-AG	D5BA 5C257-J2B	D5DZ 5230-AE
D5AA 5232-CA	D5AZ 5230-AD	D5BA 5C257-J2C	D5DZ 5230-AE
D5AA 5232-CB	D5AZ 5230-AD	D5BA 5C257-K1A	D5DZ 5230-AF
D5AA 5232-CC	D5AZ 5230-AD	D5BA 5C257-K1B	D5DZ 5230-AF
D50A 5232-AA	★ D50Z 5230-R	D5BA 5C257-K1C	D5DZ 5230-AF
D50A 5232-AB	D50Z 5230-AD	D5BA 5C257-K2A	D5DZ 5230-AF
D50A 5232-AC	D50Z 5230-AD	D5BA 5C257-K2B	D5DZ 5230-AF
D50A 5232-AD	D50Z 5230-AD	D5BA 5C257-K2C	D5DZ 5230-AF
D5VA 5232-AC	D5VY 5230-B	D5DA 5C257-AG	★ D5DZ 5230-M
D5VA 5232-AD	D5VY 5230-B	D5DA 5C257-AH	★ D5DZ 5230-M
D6AA 5232-A1A	D5AZ 5230-AA	D5DA 5C257-BG	D5DZ 5230-N
D6AA 5232-A3A	D5AZ 5230-AA	D5DA 5C257-BH	D5DZ 5230-N
D6AA 5232-BA	D5AZ 5230-AG	D5DA 5C257-BJ	D5DZ 5230-N
D6AA 5232-CA	D5AZ 5230-AD	D5DA 5C257-GA	D5DZ 5230-AG
D60A 5232-BA	D50Z 5230-AD	D5DA 5C257-GB	D5DZ 5230-AG
D6SA 5232-AA	★ D5SZ 5230-C	D5DA 5C257-GC	D5DZ 5230-AG
D6SA 5232-BA	D5SZ 5230-A	D5DA 5C257-HA	D5DZ 5230-W
D6SA 5232-BB	D5SZ 5230-A		

COPYRIGHT © 1986 — FORD MOTOR COMPANY — DEARBORN, MICHIGAN

IDENTIFICATION CHART

5230 MUFFLER — Cont'd

For dimensions refer to Size Chart page 9

For model application, refer to Section 50, page 3

Use the Chart below to translate the Number Stamped on the Muffler to a Service Part Number.

IDENTIFICATION	PART NUMBER	IDENTIFICATION	PART NUMBER
D5SA 5C257-AB	D5SZ 5230-E	D9ZC 5C257-CF	D9ZZ 5230-F
D5SA 5C257-AD	D5SZ 5230-E	D9ZC 5C257-DC	D9ZZ 5230-G
D5VA 5C257-AB	D5VY 5230-C	D9ZC 5C257-EB	D9ZZ 5230-J
D5VA 5C257-AC	D5VY 5230-G	D9ZC 5C257-FA	D9ZZ 5230-K
D5VA 5C257-AD	D5VY 5230-G	D9ZC 5C257-KA	D9ZZ 5230-P
D6BA 5C257-AA	D6DZ 5230-D	D94C 5C257-AB	D94Y 5230-A
D6BA 5C257-BA	D6DZ 5230-E	D40A 5C258-AA	D40Z 5230-AE
D6BA 5C257-CA	D6DZ 5230-K	D4SA 5C258-AA	D4SZ 5230-C
D6BA 5C257-DA	D6DZ 5230-L	D5SA 5C258-AB	★ D5SZ 5230-F
D6DA 5C257-AB	★ D5DZ 5230-N	D5SA 5C258-AD	★ D5SZ 5230-F
D6DA 5C257-AC	★ D5DZ 5230-N	D5SA 5C258-BB	★ D5SZ 5230-D
ED D6DA 5C257-AC	★ D5DZ 5230-N	D5SA 5C258-BD	★ D5SZ 5230-D
D6DA 5C257-AD	D6DZ 5230-M	D6SA 5C258-AA	★ D5SZ 5230-F
D6DA 5C257-BB	D5DZ 5230-AG	D6SA 5C258-BA	★ D5SZ 5230-D
D6DA 5C257-CB	D6DZ 5230-C	D6SA 5C258-BB	★ D5SZ 5230-D
ED D6DA 5C257-CB	D5DZ 5230-Y	D7LC 5C258-AA	D7LY 5230-B
D6DA 5C257-CC	D6DZ 5230-C	D7LC 5C258-BA	D7LY 5230-C
D6DA 5C257-DB	D6DZ 5230-B	D6BA 5E276-AA	D6DZ 5230-F
D6DA 5C257-DC	D6DZ 5230-B	D6BA 5E276-BA	D6DZ 5230-G
D6DA 5C257-EB	★ D6DZ 5230-A	D5BA 5E276-EE	★ D5DZ 5230-H
D6DA 5C257-EC	★ D6DZ 5230-A	D5BA 5E276-EF	★ D5DZ 5230-H
ED D6DA 5C257-EC	★ D6DZ 5230-A	D5BA 5E276-FE	★ D5DZ 5230-J
D6DA 5C257-ED	★ D6DZ 5230-A	D5BA 5E276-FF	★ D5DZ 5230-J
D6DA 5C257-FA	D6DZ 5230-H	D5BA 5E276-GD	D5DZ 5230-K
D6DA 5C257-GA	D6DZ 5230-J	D5BA 5E276-HD	D5DZ 5230-L
D6EA 5C257-AA	★ D6FZ 5230-C	D5BA 5E276-JA	★ D5DZ 5230-AH
D6SA 5C257-AA	D5SZ 5230-E	D5BA 5E276-KA	★ D5DZ 5230-AJ
D7BA 5C257-JA	D7DZ 5230-AA	D5DA 5E276-AC	★ D5DZ 5230-V
D7BA 5C257-KA	D7DZ 5230-AB	D5DA 5E276-BD	D5DZ 5230-W
D7BC 5C257-AB	D7DZ 5230-AH	D5DA 5E276-CA	D5DZ 5230-Y
D7BC 5C257-BA	D7DZ 5230-AK	D5DA 5E276-CB	D5DZ 5230-Y
D7BC 5C257-CA	D7DZ 5230-AL	D5VA 5E276-AB	D5VY 5230-D
D7BC 5C257-DB	★ D7DZ 5230-AJ	D5VA 5E276-AC	★ D5VY 5230-H
D7BC 5C257-EA	D7DZ 5230-AS	D5VA 5E276-AD	★ D5VY 5230-H
D7BC 5C257-FA	D7DZ 5230-AT	D52A 5E276-AC	★ D5FZ 5230-A
D7BC 5C257-NA	D7DZ 5230-AC	D52A 5E276-BC	★ D5FZ 5230-B
D7BC 5C257-PA	D7DZ 5230-AD	D52A 5E276-CD	D5FZ 5230-G
D7DA 5C257-HA	D7DZ 5230-W	D52A 5E276-CE	D5FZ 5230-G
D7DC 5C257-LA	D7DZ 5230-AM	D52A 5E276-DD	D5FZ 5230-H
D7DC 5C257-MA	D7DZ 5230-AN	D52A 5E276-DE	D5FZ 5230-H
D7LC 5C257-AA	D7LY 5230-A	D52A 5E276-FD	D5FZ 5230-D
D7VC 5C257-AA	★ D7VY 5230-A	D52A 5E276-HD	★ D5FZ 5230-F
D74C 5C257-AA	D74Y 5230-A	D52A 5E276-JB	D5FZ 5230-J
D74C 5C257-BA	D74Y 5230-B	D52A 5E276-JC	D5FZ 5230-J
D8DC 5C257-AA	★ D8DZ 5230-A	D52A 5E276-KB	D5FZ 5230-K
D8DC 5C257-AB	D8DZ 5230-E	D52A 5E276-KC	D5FZ 5230-K
D8DC 5C257-BA	D8DZ 5230-B	D6EA 5E276-AA	D6FZ 5230-A
D8DC 5C257-BB	D8DZ 5230-F	D6EA 5E276-AB	D6FZ 5230-D
D8DC 5C257-CA	D8DZ 5230-C	D6EA 5E276-BA	D6FZ 5230-B
D8DC 5C257-DA	D8DZ 5230-D	D6EA 5E276-BB	D6FZ 5230-E
D84C 5C257-AA	D84Y 5230-A	D6VA 5E276-AA	D5VY 5230-H
D9VC 5C257-AB	D9VY 5230-A	D7LC 5E276-AB	D7LY 5230-D
D9ZC 5C257-AF	D9ZZ 5230-D	D7VC 5E276-AA	D7VY 5230-B
D9ZC 5C257-BC	D9ZZ 5230-E	D9LC 5E276-AB	D9LY 5230-A

5230 MUFFLER — Cont'd

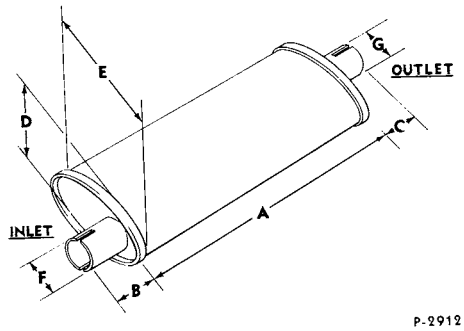

Also refer to Muffler Cross Reference Chart on page 6
For model application, refer to Section 50, page 3

SIZE CHART

PART NUMBER	SIZE (INCHES)						
	A	B	C	D	E	F	G
D0AZ 5230–U	22 1/2	1 3/4	1 3/4	4 1/2	11	2 1/2	2
D0AZ 5230–V	22 1/2	1 5/8	1 5/8	4 5/8	11	2 1/4	2
D0MY 5230–C	24 1/2	2	6 1/8	4 1/2	11	2 1/2	2 1/4
D0MY 5230–F	24 1/2	2	5 1/8	4 1/2	11	2 1/2	2 1/4
D0VY 5230–A	25 3/8	2	28 1/2	4 1/2	11	2 1/2	2 1/2
D0ZZ 5230–R	19	1 3/4	1 3/4	4	10 1/2	2 1/4	1 7/8
D1DZ 5230–L	19	1 1/2	2 3/4	6	6	1 3/4	1 3/4
D20Z 5230–AA	21 3/4	1 5/8	1 5/8	4	10 1/2	2 1/4	2
D20Z 5230–AC	21 3/4	1 5/8	1 5/8	4	10 1/2	2	2
D20Z 5230–AD	26 1/2	2	46 3/4	4	10 1/2	2 1/4	2 1/4
D20Z 5230–AE	26 1/2	2	46 3/4	4	10 1/2	2 1/4	2 1/4
D2SZ 5230–E	48 7/8	2	22 1/4	4	10 1/2	2 1/4	2 1/4
D2WY 5230–A	21 3/4	32	41 1/4	4	10 1/2	2 1/4	2
D2WY 5230–B	21 3/4	34 1/4	41 1/4	4	10 1/2	2 1/4	2
★ D3MY 5230–C	24 1/2	2	8 3/16	4 1/2	11	2 1/2	2 1/8
★ D3MY 5230–D	24 1/2	2	8 3/16	4 1/2	11	2 1/2	2 1/8
D3MY 5230–E	24 1/2	2	51	4 1/2	11	2 1/2	3
D3MY 5230–F	24 1/2	2	51	4 1/2	11	2 1/2	3
D3MY 5230–G	24 1/2	2	54 1/2	4 1/2	11	2 1/2	2 1/4
★ D3MY 5230–H	24 1/2	2	51	4 1/2	11	2 1/2	3
D3MY 5230–J	24 1/2	2	51	4 1/2	11	2 1/2	3
D30Z 5230–A	24	2	40 7/8	4	10 1/2	2 1/4	2 1/4
D30Z 5230–B	24	2	40 7/8	4	10 1/2	2 1/4	2 1/4
D30Z 5230–C	24	2	45 1/4	4	10 1/2	2 1/4	3
D30Z 5230–D	24 1/2	2	51 1/4	4 1/2	11	2	2 1/4
D30Z 5230–E	24 1/2	2	51 1/4	4 1/2	11	2 1/4	2 1/4
D30Z 5230–F	24 1/2	2	51 1/4	4 1/2	11	2 1/2	2 1/4
D30Z 5230–G	24 1/2	2	51 1/4	4 1/2	11	2 1/4	2 1/4
D30Z 5230–H	24	2	43 1/2	4	10 1/2	2 1/4	3
D30Z 5230–J	24	2	41 3/8	4	10 1/2	2 1/4	2 1/4
D3WY 5230–A	21 3/4	20 1/2	41 7/8	4	10 1/2	2 1/4	3

COPYRIGHT © 1986 — FORD MOTOR COMPANY — DEARBORN, MICHIGAN

SIZE CHART

PART NUMBER	SIZE (INCHES)						
	A	B	C	D	E	F	G
D3WY 5230–B	21 3/4	20 1/2	41 7/8	4	10 1/2	2 1/4	3
★ D3WY 5230–C	21 3/4	20 1/2	41 1/4	4	10 1/2	2 1/4	3
D4AZ 5230–H	24 1/2	2	52 1/8	4 1/2	11	2 1/2	3 1/2
D4AZ 5230–J	24 1/2	2	52 1/8	4 1/2	11	2 1/2	3 1/2
D4DZ 5230–A	19	71 5/8	1 7/8	6	6	1 3/4	1 1/2
D4DZ 5230–B	19	70	2	6	6	1 3/4	1 1/2
D4DZ 5230–C	19	69 3/8	1 7/8	6	6	2	2
D4DZ 5230–D	19	74 3/8	1 7/8	6	6	2	2
D4DZ 5230–E	19	70	1 7/8	6	6	1 3/4	1 3/4
D4DZ 5230–F	19	77	2 5/8	6	6	1 3/4	1 3/4
D4FZ 5230–A	17	68 7/8	4	4 1/2	11	1 3/4	1 7/8
D4FZ 5230–D	15	67 1/4	7 1/2	4 1/2	11	1 3/4	1 7/8
D4FZ 5230–E	17	77 7/8	4	4 1/2	11	1 3/4	1 7/8
D4MY 5230–A	24 1/2	2	52 5/8	4 1/2	11	2 1/2	2 1/4
D4MY 5230–C	24 1/2	2	52 5/8	4 1/2	11	2 1/4	2
D4MY 5230–E	24 1/2	2	50	4 1/2	11	2 1/2	3
D4MY 5230–H	24 1/2	2	45 7/8	4 1/2	11	2 1/2	2 1/4
D4MY 5230–J	24 1/2	2	46	4 1/2	11	2 1/2	2 1/4
D40Z 5230–A	21 3/4	26	52 1/2	4	10 1/2	2	2
D40Z 5230–B	21 3/4	26	52 1/2	4	10 1/2	2	2
D40Z 5230–E	24 1/2	1 7/8	24 1/2	4 1/2	11	2 1/4	2
D40Z 5230–F	24 1/2	1 7/8	24 1/2	4 1/2	11	2 1/4	2 1/4
D40Z 5230–G	24 1/2	1 7/8	24 1/2	4 1/2	11	2	2 1/4
D40Z 5230–Y	24 1/2	1 7/8	24 1/2	4 1/2	11	2 1/4	2 1/4
D40Z 5230–AC	24	2	51 7/8	4	10 1/2	2 1/4	2 1/4
D40Z 5230–AD	24	2	51 7/8	4	10 1/2	2 1/4	3
D40Z 5230–AE	24	2	51 7/8	4	10 1/2	2 1/4	3
★ D4SZ 5230–A	21 3/4	2	51 5/8	4	10 1/2	2 1/4	2 1/2
★ D4SZ 5230–B	21 3/4	2	51 5/8	4	10 1/2	2 1/4	2 1/2
D4SZ 5230–C	21 3/4	2	17 1/2	4	10 1/2	2 1/4	2 1/4
D4SZ 5230–D	21 3/4	2	17 1/2	4	10 1/2	2 1/4	2 1/4
D4SZ 5230–E	21 3/4	2	17 1/4	4	10 1/2	2 1/2	2 1/4
★ D5AZ 5230–A	24 1/2	2	43 1/2	4 1/2	11	2 1/2	3
D5AZ 5230–C	24 1/2	2	52 1/8	4 1/2	11	2 1/2	3 1/2
D5AZ 5230–G	24 1/2	2	52 1/8	4 1/2	11	2 1/4	2 1/2
★ D5AZ 5230–H	24 1/2	2	52 1/8	4 1/2	11	2 1/4	2 1/2
D5AZ 5230–J	24 1/2	2	43 1/2	4 1/2	11	2 1/4	3
★ D5AZ 5230–K	24 1/2	2	43	4 1/2	11	2 1/4	2 1/4
★ D5AZ 5230–W	24 1/2	2	43 1/2	4 1/2	11	2 1/2	3
D5AZ 5230–Y	24 1/2	2	43	4 1/2	11	2 1/4	2 1/4
D5AZ 5230–AA	24 1/2	2	43	4 1/2	11	2 1/4	2 1/4
D5AZ 5230–AC	24 1/2	2 1/4	43	4 1/2	11	2 1/4	2 1/4
D5AZ 5230–AD	24 1/2	2 1/4	43	4 1/2	11	2 1/4	2 1/4
★ D5AZ 5230–AE	24 1/2	2 1/4	52 5/16	4 1/2	11	2 1/2	2 1/2
D5AZ 5230–AF	24 1/2	2 1/4	52 5/16	4 1/2	11	2 1/4	2 1/2
D5AZ 5230–AG	24 1/2	2 1/4	52 5/16	4 1/2	11	2 1/4	2 1/2
★ D5DZ 5230–D	19	63	9 5/8	7	7	2 1/4	2
★ D5DZ 5230–E	19	69 7/8	9 5/8	7	7	2 1/4	2
★ D5DZ 5230–F	19	52 5/8	9 5/8	7	7	2 1/4	2 1/4
★ D5DZ 5230–G	19	59 1/2	9 5/8	7	7	2 1/4	2 1/4
★ D5DZ 5230–H	19	64	8 5/8	7	7	2 1/4	2 1/2
★ D5DZ 5230–J	19	69 7/8	9 5/8	7	7	2 1/4	2 1/2
D5DZ 5230–K	19	52 7/8	9 5/8	7	7	2 1/4	2 1/2
D5DZ 5230–L	19	59 1/2	9 5/8	7	7	2 1/4	2 1/2
★ D5DZ 5230–M	19	59 1/2	9 5/8	7	7	2 1/4	2
★ D5DZ 5230–N	19	69 7/8	9 5/8	7	7	2 1/4	2

SIZE CHART

PART NUMBER	SIZE (INCHES)						
	A	B	C	D	E	F	G
★ D5DZ 5230–V	19	69 7/8	9 5/8	7	7	2 1/4	2
D5DZ 5230–W	19	58 1/2	9 5/8	7	7	2 1/4	2
D5DZ 5230–Y	19	71 9/16	7 15/16	7	7	2 1/4	3
D5DZ 5230–AE	63	9 5/8	19	7	7	2	2
D5DZ 5230–AF	69 7/8	9 5/8	19	7	7	2	2
D5DZ 5230–AG	69 7/8	9 5/8	19	7	7	2	3
★ D5DZ 5230–AH	19	52 7/8	9 5/8	7	7	2 1/4	2 1/2
★ D5DZ 5230–AJ	19	59 1/2	9 5/8	7	7	2 1/4	2 1/2
★ D5FZ 5230–A	18	58 3/8	24	4 1/2	11	2	2 1/4
★ D5FZ 5230–B	18	58 3/4	4 3/8	4 1/2	11	2	2 1/4
D5FZ 5230–D	18	62 3/8	24	4 1/2	11	2	2 1/4
★ D5FZ 5230–F	18	61 3/4	4 3/8	4 1/2	11	2	2 1/4
★ D5FZ 5230–G	18	68 3/8	24	4 1/2	11	1 3/4	2 1/4
★ D5FZ 5230–H	18	67 3/4	4 3/8	4 1/2	11	1 3/4	2 1/4
D5FZ 5230–J	18	65 7/8	4 7/16	4 1/2	11	1 3/4	2 1/4
D5FZ 5230–K	18	66 11/16	4 1/16	4 1/2	11	1 3/4	2 1/4
D5FZ 5230–S	18	2	4 7/16	4 1/2	11	1 3/4	2 1/4
D50Z 5230–A	24 1/2	2	28	4 1/2	11	2 1/4	3 1/2
D50Z 5230–B	24 1/2	2	27 3/4	4 1/2	11	2 1/4	3 1/2
★ D50Z 5230–M	24	2	51 1/8	4	10 1/2	2 1/4	3 1/2
D50Z 5230–N	24	2	51 1/8	4	10 1/2	2 1/4	3 1/2
★ D50Z 5230–R	24	2	51 1/8	4	10 1/2	2 1/4	3 1/2
D50Z 5230–S	24 1/2	1 7/8	24 1/2	4 1/2	11	2 1/4	2 1/4
D50Z 5230–AA	24	2	28 5/8	4	10 1/2	2 1/4	3 1/2
D50Z 5230–AB	24	2	48 1/4	4	10 1/2	2 1/4	3
D50Z 5230–AC	24	2	48 1/4	4	10 1/2	2 1/4	3
D50Z 5230–AD	24	2	48 1/4	4	10 1/2	2 1/4	3
D50Z 5230–AE	24	2	28 5/8	4	10 1/2	2 1/4	3 1/2
★ D5SZ 5230–D	21 3/4	2	54 5/8	4	10 1/2	2 1/2	2 1/2
D5SZ 5230–E	21 3/4	2	54 5/8	4	10 1/2	2 1/4	2 1/2
★ D5SZ 5230–F	21 3/4	2	54 5/8	4	10 1/2	2 1/4	2 1/2
D5VY 5230–B	25 1/2	2	27 1/2	4 1/2	11	2 1/4	2 1/4
D5VY 5230–C	25 3/8	2 1/2	55 1/4	4 1/2	11	2 1/4	3
D5VY 5230–D	25 3/8	2 1/2	55 1/4	4 1/2	11	2 1/2	3
D5VY 5230–G	25 7/16	2	55 3/4	4 1/2	11	2 1/4	3
★ D5VY 5230–H	25 7/16	2	55 3/4	4 1/2	11	2 1/2	3
D6DZ 5230–A	19	59 1/2	7 15/16	7	7	2 1/4	2
D6DZ 5230–B	19	59 1/2	7 15/16	7	7	2 1/4	2
D6DZ 5230–C	19	18 1/8	9 5/8	7	7	2	2 1/4
D6DZ 5230–D	19	52 7/8	9 5/8	6	6	2 1/4	2
D6DZ 5230–E	19	59 7/8	9 5/8	6	6	2 1/4	2
D6DZ 5230–F	19	53	9 5/8	6	6	2 1/4	2 1/2
D6DZ 5230–G	19	59 7/8	9 5/8	6	6	2 1/4	2 1/2
D6DZ 5230–H	19	59 1/2	9 5/8	7	7	1 3/4	2
D6DZ 5230–J	19	59 1/2	9 5/8	7	7	2	2 1/4
D6DZ 5230–K	19	53	9 5/8	6	6	2	2 1/2
D6DZ 5230–L	19	53	9 5/8	6	6	2	2 1/2
D6DZ 5230–M	19	70 1/8	9 5/8	7	7	2 1/4	2
★ D6FZ 5230–C	18	58 3/4	4 7/16	4 1/2	11	2	2 1/4
D6FZ 5230–D	18	61 11/16	4 7/16	4 1/2	11	2	2 1/4
D6FZ 5230–E	18	61 11/16	16 3/16	4 1/2	11	2	2 1/4
D6FZ 5230–F	18	59 3/8	28 3/8	4 1/2	11	1 3/4	2 1/4
D6FZ 5230–G	18	68 5/8	28 1/4	4 1/2	11	1 3/4	2 1/4
D6FZ 5230–H	18	58 3/4	4 3/8	4 1/2	11	1 3/4	2 1/4
D6FZ 5230–J	18	68	4 3/8	4 1/2	11	1 3/4	2 1/4
D60Z 5230–D	24	2 1/2	48 1/4	4	10 1/2	2 1/4	2 1/4

COPYRIGHT © 1986 — FORD MOTOR COMPANY — DEARBORN, MICHIGAN

SIZE CHART

PART NUMBER	SIZE (INCHES)						
	A	B	C	D	E	F	G
D7AZ 5230–A	24 1/2	2 1/4	43	4 1/2	11	2 1/4	2 1/2
D7AZ 5230–B	24 1/2	2 1/4	52 1/8	4 1/2	11	2 1/4	2 1/2
D7AZ 5230–C	24 1/2	2 1/4	52 1/8	4 1/2	11	2 1/4	3 1/2
D7AZ 5230–D	24 1/2	2 1/4	43 1/2	4 1/2	11	2 1/4	3
D7DZ 5230–W	19	67 3/16	9 5/8	7	7	2	2
D7DZ 5230–AA	19	65 11/16	9 5/8	6	6	2	2
D7DZ 5230–AB	19	72 9/16	9 5/8	6	6	2	2
D7DZ 5230–AC	19	65 5/8	9 5/8	6	6	2	2
D7DZ 5230–AD	19	72 9/16	9 5/8	6	6	2	2 1/2
D7DZ 5230–AH	19	65 5/8	9 5/8	6	6	2	2
D7DZ 5230–AJ	19	72 9/16	9 5/8	6	6	2	2
D7DZ 5230–AK	19	65 11/16	9 5/8	6	6	2	2 1/2
D7DZ 5230–AL	19	72 9/16	9 5/8	6	6	2	2 1/2
D7DZ 5230–AM	19	67 3/16	9 5/8	7	7	2	2 1/4
D7DZ 5230–AN	19	67 3/16	9 5/8	7	7	2	2 1/4
D7DZ 5230–AS	19	63 1/4	9 5/8	7	7	2 1/4	2 1/4
D7DZ 5230–AT	19	70 1/8	9 5/8	7	7	2 1/4	2 1/4
D7FZ 5230–A	18	63 9/16	4 3/8	4 1/2	11	1 3/4	2 1/4
D7FZ 5230–B	18	64 3/16	4 1/16	4 1/2	11	1 3/4	2 1/4
D7FZ 5230–C	18	63 9/16	4 1/16	4 1/2	11	1 3/4	2 1/4
D7FZ 5230–D	18	64 3/16	4 1/16	4 1/2	11	1 3/4	2 1/4
D7LY 5230–A	21 11/16	2 1/4	29 5/8	4 1/16	10 1/2	2 1/4	2 1/4
D7LY 5230–B	21 11/16	2 1/4	29 5/8	4 1/16	10 1/2	2 1/4	2 1/4
D7LY 5230–C	21 11/16	2 1/4	29 5/8	4 1/16	10 1/2	2 1/2	2 1/4
D7LY 5230–D	21 11/16	2 1/4	32	4	10 1/2	2 1/2	2 1/4
★ D70Z 5230–A	24	2 1/4	48 1/4	4	10 1/2	2 1/4	2
★ D70Z 5230–B	24	2 1/4	48 1/4	4	10 1/2	2 1/4	2 1/4
D70Z 5230–D	24	2 1/4	53 7/16	4	10 1/2	2 1/4	2
D70Z 5230–E	24	2 1/4	53 7/16	4	10 1/2	2 1/4	2 1/4
D70Z 5230–F	24	2 1/4	48 1/4	4	10 1/2	2 1/4	2
D70Z 5230–G	24	2 1/4	48 1/4	4	10 1/2	2 1/4	2 1/4
D7VY 5230–A	25 3/8	2 1/4	43 7/8	4 1/2	11	2 1/2	2 1/2
D7VY 5230–B	25 3/8	2 1/4	55 3/4	4 1/2	11	2 1/2	2 1/2
D8AZ 5230–A	21 1/4	2 1/4	55 1/8	4 1/2	11	2 1/4	2 1/2
D8BZ 5230–A	20 3/4	41 1/16	26	5	9 1/4	2	2
D8BZ 5230–B	20 3/4	41 1/16	26	5	9 1/4	2	2
D8BZ 5230–C	20 3/4	41 1/16	45 1/4	5	9 1/4	2 1/4	2 1/4
D8BZ 5230–E	20 3/4	41 1/16	47 1/16	5	9 1/4	2 1/4	2 1/4
D8BZ 5230–F	20 3/4	41 1/16	26	5	9 1/4	2	2
D8BZ 5230–G	20 3/4	41 1/16	26	5	9 1/4	2	2
D8BZ 5230–H	20 3/4	36 1/16	45 1/4	5	9 1/4	2 1/4	2 1/4
D8BZ 5230–J	20 3/4	36 1/16	47 1/16	5	9 1/4	2 1/4	2 1/4
D8BZ 5230–K	20 1/4	41 1/16	26	5	9 1/4	2	2
★ D8DZ 5230–A	19	67 3/16	9 5/8	7	7	2 1/4	2 1/4
D8DZ 5230–B	19	67 3/16	9 5/8	7	7	2 1/4	2 1/4
D8DZ 5230–C	19	67 3/16	9 5/8	7	7	2 1/4	2 1/4
D8DZ 5230–D	19	67 3/16	9 5/8	7	7	2 1/4	2 1/4
D8DZ 5230–E	19	67 3/16	9 5/8	7	7	2 1/4	2 1/4
D8DZ 5230–F	19	67 3/16	9 5/8	7	7	2 1/4	2 1/4
D8FZ 5230–A	18	63 9/16	4 7/16	4 1/2	11	1 3/4	2
D8FZ 5230–B	18	64 3/16	4 1/16	4 1/2	11	1 3/4	2
D80Z 5230–A	21 11/16	2 5/8	48 1/4	4	10 1/2	2 1/4	2
D80Z 5230–B	21 11/16	2 5/8	48 1/4	4	10 1/2	2 1/4	2 1/4
D80Z 5230–E	21 11/16	2 5/8	51 1/8	4	10 1/2	2 1/4	3 1/2
D84Y 5230–A	19	67 3/16	9 5/8	7	7	2	2 1/4

SIZE CHART

PART NUMBER	SIZE (INCHES)						
	A	B	C	D	E	F	G
D9AZ 5230-A	22	2	62	4	10 1/2	2	2
D9AZ 5230-B	22	2	59	59 1/16	16 1/2	2	2
D9AZ 5230-C	22	2	59	4	10 1/2	2	2
D9BZ 5230-A	20 3/4	41 5/8	25 3/8	5	9 1/4	2	2
D9BZ 5230-B	20 3/4	41 5/8	25 3/8	5	9 1/4	2	2
D9BZ 5230-C	20 3/4	41 5/8	44 5/8	5	9 1/4	2 1/4	2 1/4
D9BZ 5230-D	20 3/4	41 5/8	46 5/8	5	9 1/4	2 1/4	2 1/4
D9BZ 5230-E	20 3/4	41 5/8	25 5/8	5	9 1/4	2	2
D9BZ 5230-F	20 3/4	36 5/8	44 5/8	5	9 1/4	2 1/4	2 1/4
D9BZ 5230-G	20 3/4	36 5/8	46 5/8	5	9 1/4	2 1/4	2 1/4
D9BZ 5230-H	20 3/4	41 5/8	25 3/8	5	9 1/4	2	2
D9BZ 5230-J	20 3/4	38 1/2	38 1/2	5	9 1/4	2 1/4	2 1/4
D9BZ 5230-R	20 3/4	38 1/2	64 3/8	5	9 1/4	2	2
D9FZ 5230-A	18	75	6	4 1/2	11	1 3/4	2 1/4
D9FZ 5230-B	18	75	10	4 1/2	11	1 3/4	2 1/4
D9FZ 5230-C	18	70	29 1/8	4 1/2	11	1 3/4	2 1/4
★ D9FZ 5230-D	18	70	29 1/8	4 1/2	11	1 3/4	2 1/4
D9FZ 5230-E	18	75	10	4 1/2	11	1 3/4	2 1/4
D9LY 5230-A	21 11/16	2 1/4	54 1/16	4 1/16	10 1/2	2 1/2	2 1/4
D90Z 5230-A	21 3/4	2 1/4	48 1/4	4 1/16	10 1/2	2 1/4	2
D90Z 5230-B	21 3/4	2 1/4	48 1/4	4 1/16	10 1/2	2 1/4	2 1/4
D90Z 5230-C	21 1/4	2 15/16	49 15/16	4 1/2	11	2 1/4	2
D90Z 5230-D	21 1/4	2 15/16	49 15/16	4 1/2	11	2 1/4	2 1/4
D9VY 5230-A	25 3/8	2 1/4	55 3/16	4 1/2	11	2 1/2	2 1/2
D9ZZ 5230-A	18	38 15/16	27 3/4	4 3/4	10 1/4	2	2
D9ZZ 5230-B	18	38 15/16	27 3/4	4 3/4	10 1/6	2	2
D9ZZ 5230-C	18	38 15/16	27 3/4	4 3/4	10 1/4	2	2
D9ZZ 5230-D	18	34 3/16	39 15/16	4 3/4	10 1/4	2 1/4	2 1/4
D9ZZ 5230-E	18	34 3/16	39 15/16	4 3/4	10 1/4	2 1/4	2 1/4
D9ZZ 5230-F	18	29 5/8	39 15/16	4 3/4	10 1/4	2 1/4	2 1/4
D9ZZ 5230-G	18	29 5/8	39 15/16	4 3/4	10 1/4	2 1/4	2 1/4
D9ZZ 5230-H	14	42 15/16	37 1/2	5	9	2 1/4	2 1/4
D9ZZ 5230-J	14	26	18	5	9	2 1/4	2 1/4
D9ZZ 5230-K	14	26	18 15/16	5	9	2 1/4	2 1/4
D94Y 5230-A	20 1/2	63 1/4	15 15/16	7	9 5/8	2	2
D9ZZ 5230-P	18	38 3/8	58 15/16	4 15/16	10 1/4	2 1/4	2 1/4

SIZE CHART

SIZE (INCHES)	PART NUMBER	SIZE (INCHES)	PART NUMBER	SIZE (INCHES)	PART NUMBER	SIZE (INCHES)	PART NUMBER
5A231	CLAMP ASSY. (MUFFLER INLET and OUTLET PIPE-YOKE TYPE)						
	For model application, refer to Section 50, page 3						
	● "Before 1/2/76" ▲ "From 1/2/76"						
1 3/4	D1AZ 5A231-B	2	D1AZ 5A231-C	2 1/4	● D1AZ 5A231-A	2 1/2	● D1AZ 5A231-D
3	C1TT 5A231-D			2 1/4	▲ D6AZ 5A231-A	2 1/2	▲ D6AZ 5A231-B
5A231	CLAMP ASSY. (MUFFLER INLET PIPE-PRESTOLE TYPE)						
	For model application, refer to Section 50, Page 3						
1 3/4	D5ZZ 5A231-A	2	D5AZ 5A231-A	2 1/4	D5AZ 5A231-B	2 1/2	D5SZ 5A231-A
		2	D9AZ 5A231-A				

5232	Refer to group 5230 Cross Reference Chart
5A238	Refer to Model Application Index page 3 of Section 50.
5B241	Refer to Model Application Index page 3 of Section 50.
5245	Refer to group 5A212 Cross Reference Chart

COPYRIGHT © 1986 — FORD MOTOR COMPANY — DEARBORN, MICHIGAN

IDENTIFICATION CHART

5246 PIPE (MUFFLER INLET)

For model application, refer to Section 50, page 3

Use the Chart below to translate the number stamped on the inlet pipe to a Service Part Number.

▲ Rear Intermediate Pipe

IDENTIFICATION	PART NUMBER	IDENTIFICATION	PART NUMBER
D1AA 5246–AB	D1AZ 5246–A	D40A 5246–SA	D40Z 5246–T
D1AA 5246–GA	D1AZ 5246–G	D4SA 5246–AD	D4SZ 5246–A
D1DA 5246–BB	D1DZ 5246–B	D4VA 5246–BA	D4VY 5246–B
D1DA 5246–CB	D1DZ 5246–D	D42A 5246–AC	D4FZ 5246–A
D1DJ 5246–AA	▲ D1DZ 5246–E	D42A 5246–BA	D4FZ 5246–B
D1ZA 5246–FA	D1ZZ 5246–B	D5AA 5246–AE	★ D5AZ 5246–C
D1ZA 5246–HA	D1ZZ 5246–H	D5AA 5246–AH	D5AZ 5246–L
D2AA 5246–CA	D2AZ 5246–C	D5AA 5246–BF	D5AZ 5246–D
D2DA 5246–AA	D2DZ 5246–A	D5AA 5246–BH	D5AZ 5246–M
D20A 5246–CC	D20Z 5246–AR	D5AA 5246–CF	★ D5AZ 5246–B
D20A 5246–JC	D20Z 5246–AS	D5AA 5246–CH	D5AZ 5246–N
D20A 5246–SB	D20Z 5246–M	D5AA 5246–DC	D5AZ 5246–G
D20A 5246–TB	D20Z 5246–N	D5AA 5246–DD	D5AZ 5246–G
D20A 5246–UA	★ D20Z 5246–AD	D5AA 5246–EE	D5AZ 5246–A
D20A 5246–VA	★ D20Z 5246–AE	D5AA 5246–EF	D5AZ 5246–A
D20A 5246–YA	D20Z 5246–AF	D5AA 5246–FC	D5AZ 5246–F
D20A 5246–ZC	D20Z 5246–AV	D5AA 5246–FD	D5AZ 5246–F
D20A 5246–AAA	D20Z 5246–AH	D5AA 5246–FE	D5AZ 5246–F
D20A 5246–ABC	D20Z 5246–AW	D5BA 5246–AD	D5DZ 5246–B
D20A 5246–ACA	D20Z 5246–AK	D5BA 5246–AE	D5DZ 5246–B
D20A 5246–ADA	D20Z 5246–AL	D5BA 5246–BD	D5DZ 5246–A
D20A 5246–AEA	D20Z 5246–AM	D5BA 5246–BE	D5DZ 5246–M
D20A 5246–AFA	★ D20Z 5246–AN	D5BA 5246–DA	D5DZ 5246–L
D20A 5246–AGA	D20Z 5246–AT	D5BA 5246–EA	D5DZ 5246–T
D20A 5246–AHA	D20Z 5246–AU	D5DA 5246–AF	D5DZ 5246–C
D2VA 5246–AA	D2VY 5246–A	D5DA 5246–BF	D5DZ 5246–E
D3AA 5246–BA	D3AZ 5246–B	D5DA 5246–CF	D5DZ 5246–H
D3AA 5246–CA	D3AZ 5246–D	D5DA 5246–DB	D5DZ 5246–F
D3AA 5246–DA	★ D3AZ 5246–C	D5DA 5246–DD	D5DZ 5246–F
D3AA 5246–EA	D3AZ 5246–E	D5DA 5246–EB	D5DZ 5246–J
D3AA 5246–FA	D3AZ 5246–F	D5DA 5246–EC	D5DZ 5246–J
D30A 5246–AA	D30Z 5246–A	D5DA 5246–FC	D5DZ 5246–K
D30A 5246–BA	D30Z 5246–B	D5DA 5246–FD	★ D5DZ 5246–K
D30A 5246–CA	D30Z 5246–C	D5DA 5246–FE	★ D5DZ 5246–N
D30A 5246–DA	D30Z 5246–D	ED– D5DA 5246–FE	★ D5DZ 5246–N
D30A 5246–EA	D30Z 5246–E	D5DA 5246–GA	D5DZ 5246–R
D30A 5246–FA	D30Z 5246–F	D5DA 5246–GB	D5DZ 5246–R
D3SA 5246–BA	D3SZ 5246–A	D5DA 5246–HA	D5DZ 5246–S
D3SA 5246–CA	D3SZ 5246–B	D5MA 5246–BF	D5MY 5246–C
D3VA 5246–BA	D3VY 5246–A	D5MA 5246–BH	D5MY 5246–K
D4AA 5246–AB	D4AZ 5246–A	D5MA 5246–CF	★ D5MY 5246–B
D4AA 5246–EA	D4AZ 5246–E	D5MA 5246–CH	D5MY 5246–L
D4AA 5246–FA	D4AZ 5246–F	D5MA 5246–DC	D5MY 5246–G
D4AA 5246–GA	D4AZ 5246–G	D5MA 5246–DD	D5MY 5246–G
D4DA 5246–AB	D4DZ 5246–A	D5MA 5246–EE	D5MY 5246–A
D4DA 5246–AC	D4DZ 5246–A	D5MA 5246–EF	D5MY 5246–A
D4DA 5246–BA	D4DZ 5246–B	D5MA 5246–FD	★ D5MY 5246–E
D40A 5246–AB	D40Z 5246–A	D5MA 5246–FF	D5MY 5246–J
D40A 5246–BB	D40Z 5246–B	D5MA 5246–FG	D5MY 5246–J
D40A 5246–CC	D40Z 5246–C	D5MA 5246–GC	D5MY 5246–F
D40A 5246–DB	D40Z 5246–D	D5MA 5246–GD	D5MY 5246–F
D40A 5246–LA	D40Z 5246–N	D5MA 5246–GE	D5MY 5246–F
D40A 5246–MA	D40Z 5246–R	D5MA 5246–HA	D5MY 5246–H
D40A 5246–NA	D40Z 5246–S	D5MA 5246–HB	D5MY 5246–H
D40A 5246–PA	D40Z 5246–L	D50A 5246–AE	D50Z 5246–A
D40A 5246–RA	D40Z 5246–M		

IDENTIFICATION CHART

IDENTIFICATION	PART NUMBER	IDENTIFICATION	PART NUMBER
5246	**PIPE (MUFFLER INLET) — Cont'd**		
	For model application, refer to Section 50, page 3		
	Use the Chart below to translate the number stamped on the inlet pipe to a Service Part Number.		
	▲ Rear Intermediate Pipe		
D50A 5246-AG	D50Z 5246-A	D6DA 5246-EC	D6DZ 5246-H
D50A 5246-BF	D50Z 5246-B	D6DA 5246-HB	D6DZ 5246-L
D50A 5246-BG	D50Z 5246-B	D6DA 5246-JA	D6DZ 5246-P
D50A 5246-CD	D50Z 5246-C	D6DA 5246-JB	D6DZ 5246-P
D50A 5246-CE	D50Z 5246-C	D6DA 5246-KA	D6DZ 5246-N
D50A 5246-DD	D50Z 5246-D	D6DA 5246-LA	D5DZ 5246-L
D50A 5246-DE	★ D50Z 5246-D	D6DA 5246-MA	D5DZ 5246-G
D50A 5246-ED	D50Z 5246-E	D6EA 5246-AA	D5FZ 5246-C
D50A 5246-EE	D50Z 5246-E	D6MA 5246-AA	D6MY 5246-A
D50A 5246-FD	D50Z 5246-G	D6MA 5246-BA	D7MY 5246-C
D50A 5246-FE	D50Z 5246-G	D6SA 5246-AA	D6SZ 5246-A
D50A 5246-GD	D50Z 5246-J	D6VA 5246-AA	D5VY 5246-G
D50A 5246-GE	D50Z 5246-J	D6VA 5246-BA	D5VY 5246-F
D50A 5246-HE	★ D50Z 5246-L	D7AA 5246-AB	D7AZ 5246-A
D50A 5246-HG	D50Z 5246-N	D7AC 5246-CA	D7AZ 5246-C
ED- D50A 5246-HG	D50Z 5246-N	D7AC 5246-DA	D5AZ 5246-A
D50A 5246-JD	D50Z 5246-H	D7DC 5246-AA	D7DZ 5246-P
D50A 5246-JE	D50Z 5246-H	D7DC 5246-CA	★ D7DZ 5246-G
D50A 5246-KD	D50Z 5246-K	D7DC 5246-CB	D7DZ 5246-S
D50A 5246-KF	D50Z 5246-K	D7DC 5246-DB	D7DZ 5246-H
D50A 5246-LE	D50Z 5246-M	D7DC 5246-EC	D7DZ 5246-J
D50A 5246-LG	★ D50Z 5246-R	D7DC 5246-GC	D7DZ 5246-L
ED- D50A 5246-LG	★ D50Z 5246-R	D7DC 5246-HA	D7DZ 5246-M
D50A 5246-MD	D50Z 5246-F	D7DC 5246-JA	D7DZ 5246-N
D50A 5246-ME	D50Z 5246-F	D7DC 5246-KA	D7DZ 5246-R
D50A 5246-NA	D60Z 5246-A	D7DC 5246-KB	D7DZ 5246-R
D50A 5246-RA	D60Z 5246-B	D7EA 5246-AB	D7FZ 5246-A
D5SA 5246-AC	D5SZ 5246-F	D7EA 5246-BB	D7FZ 5246-B
D5SA 5246-AD	D5SZ 5246-F	D7EC 5246-AA	D7FZ 5246-A
D5SA 5246-CD	D5SZ 5246-A	D7LA 5246-AA	D7LY 5246-A
D5SA 5246-CE	D5SZ 5246-A	D7LC 5246-CA	D6SZ 5246-A
D5SA 5246-DD	D5SZ 5246-B	D7LC 5246-DA	D5SZ 5246-C
D5SA 5246-DE	D5SZ 5246-B	D7MA 5246-AB	D7MY 5246-A
D5SA 5246-ED	D5SZ 5246-C	D7MC 5246-CA	D7MY 5246-B
D5SA 5246-EE	D5SZ 5246-C	D7MC 5246-DA	D7MY 5246-D
D5VA 5246-BF	D5VY 5246-A	D70A 5246-CC	D70Z 5246-A
D5VA 5246-BG	D5VY 5246-A	D70A 5246-DC	D70Z 5246-B
D5VA 5246-DE	D5VY 5246-B	D70A 5246-EA	D50Z 5246-K
D5VA 5246-DF	D5VY 5246-B	D70A 5246-FA	D50Z 5246-J
D5VA 5246-EB	D5VY 5246-F	D70C 5246-GA	D70Z 5246-C
D5VA 5246-EC	D5VY 5246-F	D70C 5246-HA	D70Z 5246-D
D5VA 5246-FE	D5VY 5246-E	D7VA 5246-AA	D7VY 5246-A
D5VA 5246-FF	D5VY 5246-E	D8BC 5246-AE	D8BZ 5246-B
D5VA 5246-GA	D5VY 5246-G	D8BC 5246-BB	D8BZ 5246-A
D52A 5246-AG	D5FZ 5246-C	D8BC 5246-CB	D8BZ 5246-C
D52A 5246-BG	D5FZ 5246-A	D8DC 5246-BA	D7DZ 5246-S
D52A 5246-BH	D5FZ 5246-A	D8DC 5246-CA	D7DZ 5246-H
D52A 5246-CF	D5FZ 5246-B	D8DC 5246-DA	D7DZ 5246-J
D52A 5246-FA	D5FZ 5246-F	D8DC 5246-EA	D7DZ 5246-M
D52A 5246-FB	D5FZ 5246-F	D8DC 5246-FA	D7DZ 5246-N
D6AA 5246-AA	D7AZ 5246-D	D8EC 5246-AA	D7FZ 5246-B
D6BA 5246-AA	D6DZ 5246-D	D8EC 5246-BA	D7FZ 5246-A
D6BA 5246-BC	D6DZ 5246-E	D8LC 5246-AA	D8LY 5246-A
D6BA 5246-CC	D6DZ 5246-F	D80C 5246-AA	D80Z 5246-A
D6BA 5246-DA	★ D6DZ 5246-M	D80C 5246-BA	D80Z 5246-B
D6BA 5246-DB	D6DZ 5246-R	D80C 5246-CA	D80Z 5246-C
D6DA 5246-DA	D6DZ 5246-G		

COPYRIGHT © 1986 — FORD MOTOR COMPANY — DEARBORN, MICHIGAN

IDENTIFICATION CHART

5246 PIPE (MUFFLER INLET)

For model application, refer to Section 50, page 3

Use the Chart below to translate the number stamped on the inlet pipe to a Service Part Number.

▲ Rear Intermediate Pipe

IDENTIFICATION	PART NUMBER	IDENTIFICATION	PART NUMBER
D80C	5246–DA	D80Z	5246–D	D9EC	5246–CA	D9FZ	5246–A
D80C	5246–EA	D80Z	5246–E	D9ZC	5246–AA	D9ZZ	5246–A
D80C	5246–FA	D80Z	5246–F	D9ZC	5246–AB	D9ZZ	5246–A
D9AC	5246–AA	D9AZ	5246–A	D9ZC	5246–BA	D9ZZ	5246–B
D9AC	5246–AB	D9AZ	5246–A	D9ZC	5246–BB	D9ZZ	5246–B
D9AC	5246–AC	D9AZ	5246–A	D9ZC	5246–BC	D9ZZ	5246–B
D9AC	5246–AD	D9AZ	5246–A	D9ZC	5246–CA	D9ZZ	5246–C
D9AC	5246–AE	D9AZ	5246–A	D9ZC	5246–CB	D9ZZ	5246–C
D9AC	5246–BA	D9AZ	5246–B	D9ZC	5246–CC	D9ZZ	5246–C
D9AC	5246–CA	D9AZ	5246–C	D9ZC	5246–DA	D9ZZ	5246–D
D9DC	5246–AB	D9DZ	5246–B	D9ZC	5246–DB	D9ZZ	5246–D

SIZE CHART

5246 PIPE (MUFFLER INLET) — Cont'd

For model application, refer to Section 50, page 3

▲ Rear Intermediate Pipe

PART NUMBER	INCHES		PART NUMBER	INCHES	
	IDENTIFICATION CHART	DIA.		LENGTH	DIA.
D1AZ 5246–A	81 1/4	2 1/4 & 2 1/2	D30Z 5246–D	75 3/8	2 1/4
			D30Z 5246–E	77 1/2	2
D1AZ 5246–G	81 3/8	2 1/4	D30Z 5246–F	81 1/2	2
D1DZ 5246–B	39	2	D3SZ 5246–A	83	2 1/2
D1DZ 5246–D	41 1/4	1 3/4	D3SZ 5246–B	83 1/4	2 1/2
▲ D1DZ 5246–E	19 3/8	1 3/4	D3VY 5246–A	86 11/16	2 1/2
D1ZZ 5246–B	39 13/16	2 & 2 1/4	D4AZ 5246–A	83	2 1/2
D1ZZ 5246–H	40	2 1/4	D4AZ 5246–E	81 1/4	2 1/2
D2AZ 5246–C	82 7/8	2 1/2	D4AZ 5246–F	81 1/4	2 1/4
D2DZ 5246–A	41 3/16	1 3/4	D4AZ 5246–G	82 3/4	2 1/2
D20Z 5246–M	72 5/8	2 1/4	D4DZ 5246–A	39	2
D20Z 5246–N	76 5/8	2 1/4	D4DZ 5246–B	39 3/4	2
★ D20Z 5246–AD	72 3/4	2 1/4	D4FZ 5246–A	39 1/4	1 3/4
★ D20Z 5246–AE	76 3/4	2 1/4	D4FZ 5246–B	43 1/2	1 3/4
D20Z 5246–AF	73 1/4	2	D40Z 5246–A	74 1/4	2 1/4
D20Z 5246–AH	77 1/4	2	D40Z 5246–B	78 1/4	2 1/4
D20Z 5246–AK	71 1/4	2 1/4	D40Z 5246–C	74 1/4	2 1/4
D20Z 5246–AL	75 1/4	2 1/4	D40Z 5246–D	78 1/4	2 1/4
D20Z 5246–AM	71 1/4	2 1/4	D40Z 5246–L	72 3/4	2 1/4
★ D20Z 5246–AN	75 1/4	2 1/4	D40Z 5246–M	76 3/4	2 1/4
D20Z 5246–AR	72 1/2	2 1/4	D40Z 5246–N	78 1/4	2 1/4
D20Z 5246–AS	76 1/2	2 1/4	D40Z 5246–R	72 5/8	2 1/4
D20Z 5246–AT	72 3/4	2 1/4	D40Z 5246–S	76 5/8	2 1/4
D20Z 5246–AU	76 3/4	2 1/4	D40Z 5246–T	77 1/2	2
D20Z 5246–AV	69 1/8	2	D4SZ 5246–A	83	2 1/4
D20Z 5246–AW	73 1/8	2	D4VY 5246–B	86 1/2	2 1/2
D2VY 5246–A	86 1/2	2 1/2	D5AZ 5246–A	61 3/4	2 1/4
D3AZ 5246–B	83	2 1/2	D5AZ 5246–B	61 3/4	2 1/2
★ D3AZ 5246–C	80	2 1/2	★ D5AZ 5246–C	61 3/4	2 1/2
D3AZ 5246–D	79 3/4	2 1/2	D5AZ 5246–D	81 3/8	2 1/2
D3AZ 5246–E	79 3/4	2 1/2	D5AZ 5246–F	62 1/4	2 1/4
D3AZ 5246–F	79 3/4	2 1/2	D5AZ 5246–G	73 5/8	2 1/4
D30Z 5246–A	71 3/8	2 1/4	D5AZ 5246–L	62 1/4	2 1/2
D30Z 5246–B	71 3/8	2 1/4	D5AZ 5246–M	81 5/16	2 1/2
D30Z 5246–C	75 3/8	2 1/4	D5AZ 5246–N	62 1/4	2 1/2

SIZE CHART

5246 PIPE (MUFFLER INLET) — Cont'd

For model application, refer to Section 50, page 3

▲ Rear Intermediate Pipe

PART NUMBER	INCHES IDENTIFICATION CHART	INCHES (inches)	PART NUMBER	INCHES –B–Q	INCHES BLUE
D5DZ 5246–A	33 5/16	2 1/2	D5VY 5246–G	67	2 1/2
D5DZ 5246–B	42 13/16	2 1/4	D6DZ 5246–D	42 13/16	2 1/4
D5DZ 5246–C	33 5/8	2 1/2	D6DZ 5246–E	34 11/16	2 1/2
D5DZ 5246–E	33 5/8	2 1/2	D6DZ 5246–F	34 11/16	2 1/2
D5DZ 5246–F	47 1/8	2 1/4	D6DZ 5246–G	41 3/4	2 1/4
D5DZ 5246–G	37 11/16	2	D6DZ 5246–H	33 5/8	2 1/2
D5DZ 5246–H	37 11/16	2	D6DZ 5246–L	33 5/8	2 1/2
D5DZ 5246–J	41 3/4	2 1/4	D6DZ 5246–N	36	2 1/2
★ D5DZ 5246–K	41 3/4	2 1/4	D6DZ 5246–P	34 7/8	2 1/2
D5DZ 5246–L	37 13/16	1 3/4	D6MY 5246–A	65 3/16	2 1/2
D5DZ 5246–M	34 11/16	2 1/2	D60Z 5246–A	55 15/16	2 1/4
★ D5DZ 5246–N	41 3/4	2 1/4	D60Z 5246–B	59 15/16	2 1/4
D5DZ 5246–R	47 1/2	2	D6SZ 5246–A	63 3/4	2 1/2
D5DZ 5246–S	41 3/4	2 1/4	D7AZ 5246–A	70 3/4	2 1/4
D5DZ 5246–T	34 11/16	2 1/2	D7AZ 5246–C	62 3/16	2 1/4
D5FZ 5246–A	43 7/16	1 3/4	D7AZ 5246–D	81 3/8	2 1/4
D5FZ 5246–B	30 15/16		★ D7DZ 5246–G	44 1/4	2
D5FZ 5246–C	36 5/8	2	D7DZ 5246–H	41 1/2	2
D5FZ 5246–F	36 3/4	1 3/4	D7DZ 5246–J	34 1/4	2 1/4
D5MY 5246–A	64 3/4	2 1/4	D7DZ 5246–L	31 1/2	2 1/4
★ D5MY 5246–B	64 3/4	2 1/2	D7DZ 5246–M	34 1/4	2 1/4
D5MY 5246–C	84 3/8	2 1/2	D7DZ 5246–N	31 1/2	2 1/4
★ D5MY 5246–E	65 1/4	2 1/2	D7DZ 5246–P	44 1/4	1 3/4
D5MY 5246–F	65 1/4	2 1/4	D7DZ 5246–R	48 1/2	2 1/4
D5MY 5246–G	76 5/8	2 1/4	D7DZ 5246–S	44 1/4	2
D5MY 5246–H	84 1/2	2 1/2	D7FZ 5246–A	37 7/8	2
D5MY 5246–J	65 1/4	2 1/2	D7FZ 5246–B	42 7/8	2
D5MY 5246–K	84 3/8	2 1/2	D7LY 5246–A	70 1/16	2 1/2
D5MY 5246–L	62 1/4	2 1/2	D7MY 5246–A	73 3/4	2 1/4
D50Z 5246–A	72 3/4	2 1/4	D7MY 5246–B	65 3/16	2 1/4
D50Z 5246–B	76 3/4	2 1/4	D7MY 5246–C	84 3/8	2 1/4
D50Z 5246–C	72 3/4	2 1/4	D7MY 5246–D	65 3/16	2 1/4
★ D50Z 5246–D	76 3/4	2 1/4	D70Z 5246–A	60 3/16	2 1/4
D50Z 5246–E	60	2 1/4	D70Z 5246–B	64 3/16	2 1/4
D50Z 5246–F	56	2 1/4	D70Z 5246–C	72 3/4	2 1/4
D50Z 5246–G	60	2 1/4	D70Z 5246–D	76 3/4	2 1/4
D50Z 5246–H	56	2 1/4	D7VY 5246–A	73 1/4	2 1/2
D50Z 5246–J	60	2 1/4	D8BZ 5246–A	32 3/8	1 3/4
D50Z 5246–K	56	2 1/4	D8BZ 5246–B	22 3/8	2 1/4
★ D50Z 5246–L	60	2 1/4	D8BZ 5246–C	32 3/8	1 3/4
D50Z 5246–M	56	2 1/4	D8LY 5246–A	70 1/16	2 1/4
D50Z 5246–N	60	2 1/4	D80Z 5246–A	62 1/2	2 1/4
★ D50Z 5246–R	55 15/16	2 1/4	D80Z 5246–B	66 1/2	2 1/4
D5SZ 5246–A	63 11/16	2 1/4	D80Z 5246–C	77 1/2	2 1/4
D5SZ 5246–B	79 1/2	2 1/2	D80Z 5246–D	81 1/2	2 1/4
D5SZ 5246–C	63 5/8	2 1/4	D80Z 5246–E	62 1/2	2 1/4
D5SZ 5246–F	79 1/2	2 1/2	D80Z 5246–F	66 1/2	2 1/4
D5VY 5246–A	66 3/4	2 1/4	D9AZ 5246–A	41.28	2
D5VY 5246–B	67 1/16	2 1/4	D9ZZ 5246–A	17.97	2
D5VY 5246–E	84	2 1/2	D9ZZ 5246–B	22.17	2.25
D5VY 5246–F	84	2 1/2	D9ZZ 5246–C	17.20	2.25

COPYRIGHT © 1986 — FORD MOTOR COMPANY — DEARBORN, MICHIGAN

IDENTIFICATION CHART

IDENTIFICATION	PART NUMBER	IDENTIFICATION	PART NUMBER
5A246	Refer to Model Application Index page 3 Section 50.		
5255	PIPE (MUFFLER OUTLET)		
	For model application, refer to Section 50, page 3		
	Use the chart below to translate the number stamped on the outlet pipe to a Service Part Number.		
D3MA 5E210-AA	D3MY 5255-C	D3AJ 5C262-BB	D3AZ 5255-H
D20J 5C219-AA	D20Z 5255-H	D3AJ 5C262-CB	D3AZ 5255-G
D20J 5C219-BA	D20Z 5255-J	D3AJ 5C262-DA	D3AZ 5255-J
D40Z 5E225-AA	D40Z 5255-A	D3MJ 5C262-AA	D3MY 5255-A
D1WJ 5255-A	D1WY 5255-A	D40A 5C262-AA	D40Z 5255-E
D20J 5255-AA	D20Z 5255-G	D40A 5C262-BA	D40Z 5255-F
D20J 5255-BA	D20Z 5255-D	D50A 5C262-AA	D50Z 5255-A
D20J 5255-CA	D20Z 5255-F	D50A 5C262-AB	D50Z 5255-A
D20J 5255-EA	D20Z 5255-C	D20J 55257-AA	D20Z 5255-E
D3MA 5255-AA	D3MY 5255-B		

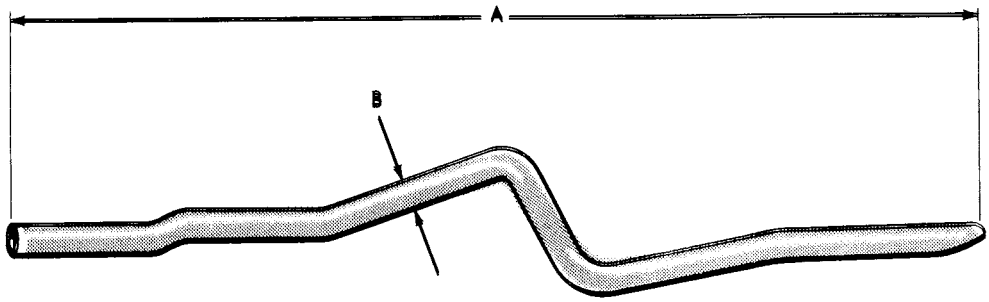

P-2921

SIZE CHART

PART NUMBER	INCHES A	INCHES B	PART NUMBER	INCHES A	INCHES B
D00Z 5255-A	11	2 1/4 & 2 3/4	D3AZ 5255-G	54 1/2	2
			D3AZ 5255-H	54 1/2	2
D1WY 5255-A	44 1/2	1 7/8	D3AZ 5255-J	31 5/16	2
D20Z 5255-C	21	2 & 2 1/4	D3MY 5255-A	53 5/8	2
D20Z 5255-D	21	2	D3MY 5255-B	48 7/16	2 1/8
D20Z 5255-E	49 3/8	2 & 2 1/4	D3MY 5255-C	48 7/16	2 1/8
D20Z 5255-F	49 3/8	2 & 2 1/4	D4AZ 5255-A	45 3/16	2 1/4
D20Z 5255-G	43 1/2	2	D40Z 5255-A	28 5/8	2 1/4
D20Z 5255-H	41 3/4	2	D40Z 5255-E	28 5/8	2
D20Z 5255-J	41 3/4	2	D40Z 5255-F	28 5/8	2 1/4
			D50Z 5255-A	27 7/8	2

5-5257	Refer to group 5255 Cross Reference Chart
5C257	Refer to group 5230 Cross Reference Chart
5C258	Refer to group 5230 Cross Reference Chart
5E258	Refer to Model Application Index page 3, Section 50

5260 BRACKET and INSULATOR KIT (MUFFLER OUTLET PIPE)
For model application, refer to Section 50, page 3
The following Bracket Assemblies can be repaired with the kit shown.

REPLACEMENT CHART

ORIGINAL HANGAR	MAY BE REPAIRED BY	ORIGINAL HANGAR	MAY BE REPAIRED BY
C9AZ 5260-A	C0AZ 5260-A	D1WY 5260-B	D1AZ 5260-C
D0AZ 5260-A	C30Z 5260-A	D20Z 5260-A	C30Z 5260-A
D0VY 5260-B	C0AZ 5260-A	D20Z 5260-G	D1AZ 5260-C
D1DZ 5260-A	C30Z 5260-A	D20Z 5260-H	D1AZ 5260-C
D1ZZ 5260-A	C30Z 5260-A	D2WY 5260-A	C30Z 5260-A
D1ZZ 5260-B	C30Z 5260-A	D40Z 5260-E	D1AZ 5260-C
D1WY 5260-A	D1AZ 5260-C		

5A260 Refer to group 5A212 Cross Reference Chart

5C262 Refer to group 5255 Cross Reference Chart

5263-77 Refer to Model Application Index on page 3 of Section 50.

YEAR	MODEL/RESTRICTIONS	PART NUMBER	DESCRIPTION	QTY.
5269	FLANGE MUFFLER INLET PIPE			
79	J,P	D9BZ 5269-A	Warranty Service Fix	1

5C264 Refer to Model Application Index Page 3, Section 50

5E272 Refer to group 5A289 Cross Reference Chart

IDENTIFICATION CHART

IDENTIFICATION	PART NUMBER	IDENTIFICATION	PART NUMBER
5A289 RESONATOR (MUFFLER OUTLET PIPE)			
For model application, refer to Section 50, page 3			
Use the Chart below to translate the number stamped on the Resonator to a Service Part Number.			
● Front intermediate pipe			
D0VA 5212-C	D0VY 5212-A	D4LA 5A289-AA	D4LY 5A289-C
D20A 5212-EC	D20Z 5A289-F	D4LA 5A289-AB	D4LY 5A289-C
D3VA 5212-AA	D3VY 5212-A	ED-D4LA 5A289-AB	D4LY 5A289-C
D4LA 5212-AB	D4LY 5A289-B	D4LA 5A289-BA	D4LY 5A289-A
ED-D4LA 5212-AB	D4LY 5A289-B	ED-D4LA 5A289-BA	D4LY 5A289-A
D4LA 5212-BA	D4LY 5A289-B	D5SA 5A289-AC	D5SZ 5A289-C
D5SA 5212-AC	D5SZ 5A289-B	D5SA 5A289-BC	D5SZ 5A289-A
D5VA 5212-BB	D5VY 5A289-F	D5VA 5A289-AD	D5VY 5A289-A
D52J 5212-DA	D5FZ 5A289-L	D5VA 5A289-AE	D5VY 5A289-E
D6SA 5212-AA	D5SZ 5A289-B	D52A 5A289-AE	D5FZ 5A289-E
D1DJ 5A217-AA	● D1DZ 5A289-D	D52A 5A289-BJ	D5FZ 5A289-A
D1DJ 5A217-BA	● D1DZ 5A289-C	D52A 5A289-CC	D5FZ 5A289-B
D4VA 5E272-AA	★ D4VY 5A289-B	D52A 5A289-DF	D5FZ 5A289-C
D5VA 5E272-AB	D5VY 5A289-G	D52A 5A289-DJ	D5FZ 5A289-C
D6VA 5E272-AA	D5VY 5A289-G	D52A 5A289-DL	D5FZ 5A289-C
D3SA 5A289-AA	D3SZ 5A289-A	D6SA 5A289-AA	D5SZ 5A289-C
D3SA 5A289-BA	D3SZ 5A289-B	D6SA 5A289-BA	D5SZ 5A289-A

COPYRIGHT © 1986 — FORD MOTOR COMPANY — DEARBORN, MICHIGAN

1973/79 LINCOLN–MERCURY CARS

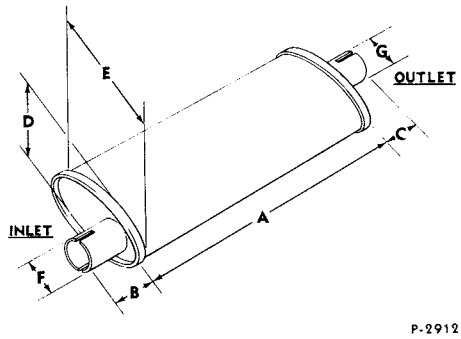

For model application, refer to Section 50, page 3

● Front intermediate pipe

SIZE CHART

PART NUMBER	SIZE (INCHES)						
	A	B	C	D	E	F	G
D0VY 5212–A	20	3 3/4	4 1/4	7	7	2 1/2	2 1/2
D3VY 5212–A	20	3 3/4	3 5/8	7	7	2 1/2	2 1/2
● D1DZ 5A289–C	10 1/8	43 1/2	1 3/4	7 7/8	7 7/8	2	1 3/4
● D1DZ 5A289–D	10 1/8	36 5/8	1 3/4	7 7/8	7 7/8	2	1 3/4
D20Z 5A289–F	18	2	21 1/8	5	5	2 1/4	2 1/4
D3SZ 5A289–A	20	14 1/4	3 7/8	6	6	2	2 1/2
D3SZ 5A289–B	20	11 3/4	4 1/4	7	7	2 1/4	2 1/2
D4LY 5A289–A	20	9 3/4	5 1/4	6	6	2 1/4	2 1/2
D4LY 5A289–B	20	9 5/8	5 1/4	6	6	2 1/4	2 1/2
D4LY 5A289–C	20	9 3/4	5 1/4	6	6	2 1/4	2 1/2
★ D4VY 5A289–B	13 1/2	2	13	9	7	2 1/2	3
D5FZ 5A289–A	14	40 1/8	15 1/8	2 1/2	8 1/8	1 3/4	1 3/4
D5FZ 5A289–B	9	33 3/4	18 3/8	2 1/2	8 1/8	2	1 3/4
D5FZ 5A289–C	9	41 3/8	17 1/2	2 1/2	8 1/8	1 3/4	1 3/4
D5FZ 5A289–E	9	34 15/16	17 1/2	2 1/2	8 1/8	2	1 3/4
D5FZ 5A289–L	9	40 3/16	1 1/2	2 1/2	8 1/8	1 3/4	1 3/4
D5SZ 5A289–A	20	9 11/16	6	6	6	2 1/4	2 1/2
D5SZ 5A289–B	20	9 11/16	6	6	6	2 1/4	2 1/2
D5SZ 5A289–C	20	9 11/16	6	6	6	2 1/4	2 1/2
D5VY 5A289–A	13 1/2	2 13/16	4 1/2	7	9	2 1/2	2 1/2
D5VY 5A289–E	13 1/2	2 13/16	11 3/4	7	9	2 1/4	
D5VY 5A289–F	13 1/2	2 13/16	11 3/4	7	9	2 1/4	3
D5VY 5A289–G	13 1/2	2 13/16	11 3/4	7	9	2 1/2	3

EXHAUST PARTS MODEL INDEX

How to use this index -

1. Find the car model desired.
2. Find the line which lists the engine displacement needed.
3. Select the correct page and turn to that page.

For stamped number cross-reference information and for size information, refer to Section 50, page 3.

1973

CYL.	C.I.D.	MODEL		TYPE ▲	SECTION	PAGE	ILLUS. NO. ♦
		A (MERCURY)					
8	351-2/B	(53,65)		S	52.73	1	EG 58
	400-2/B	(53,57,65)	"Before 1/19/73"	S	52.73	2	EG 59
		(53,57,65)	"From 1/19/73"	S	52.73	3	EG 65
		(71)		S	52.73	4	EG 60
	429-4/B	(53,57,65)		S	52.73	5	EG 61
		(71)		S	52.73	6	EG 62
	460-4/B	(53,57,65 - exc. P/C)		S	52.73	5	EG 61
		(53,57,65 -P/C)		D	52.73	7	EG 64
		(71-exc. P/C)		S	52.73	6	EG 62
		(71-P/C)		S	52.73	8	EG 63
		C (MONTEGO)					
6	250-1/B	(53,63,65)		S	52.73	1	ED 88
8	302-2/B	(53,63,65)		S	52.73	2	ED 90
		(71)	"Before 2/13/73"	S	52.73	3	ED 91
		(71)	"From 2/13/73"	S	52.73	4	ED 101
	351-2/B	(53,63,65)--All Rear Axle Ratios	"Before 1/19/73"	S	52.73	5	ED 92
		(53,63,65)--All Rear Axle Ratios exc. 3.25	"From 1/19/73"	S	52.73	5	ED 92
		(53,63,65)--3.25 Rear Axle Ratio	"From 1/19/73"	S	52.73	6	ED 102
		(71)	"Before 2/5/73"	S	52.73	7	ED 93
		(71)	"From 2/5/73"	S	52.73	8	ED 103
	351-4/B	(53,63,65-exc. P/C)		D	52.73	9	ED 94
		(53-P/C)		D	52.73	10	ED 95
	400-2/B	(53,63,65)--All Rear Axle Ratios	"Before 1/19/73"	S	52.73	11	ED 96
		(53,63,65)--All Rear Axle Ratios exc. 3.25	"From 1/19/73"	S	52.73	11	ED 96
		(53,63,65)--3.25 Rear Axle Ratio	"From 1/19/73"	S	52.73	12	ED 104
		(71)	"Before 1/19/73"	S	52.73	13	ED 97
		(71)	"From 1/19/73"	S	52.73	14	ED 105
	429-4/B	(53,63,65)		S	52.73	15	ED 98
		(71)	"Before 2/22/73"	S	52.73	16	ED 99
		(71)	"From 2/22/73"	S	52.73	17	ED 106
	460-4/B	(P/C)		D	52.73	18	ED 100

♦ For control purposes only ▲ S - Single D - Dual

COPYRIGHT © 1986 — FORD MOTOR COMPANY — DEARBORN, MICHIGAN

EXHAUST PARTS MODEL INDEX cont'd.

1973

CYL.	C.I.D.	MODEL		TYPE ▲	SECTION	PAGE	ILLUS. NO. ♦
		D (LINCOLN)					
8	460-4/B			S	52.73	1	EJ 10
		F (COUGAR)					
8	351-2/B	All Rear Axle Ratios	"Before 2/5/73"	S	52.73	1	EB 21
		All Rear Axle Ratios exc. 3.25	"From 2/5/73"	S	52.73	1	EB 21
		3.25 Rear Axle Ratio	"From 2/5/73"	S	52.73	2	EB 23
	351-4/B	All Rear Axle Ratios	"Before 2/5/73"	D	52.73	3	EB 22
		All Rear Axle Ratios exc. 3.50	"From 2/5/73"	D	52.73	3	EB 22
		3.50 Rear Axle Ratio	"From 2/5/73"	D	52.73	4	EB 24
		J (CAPRI)					
4	122-2/B (2000 cc)			S	52.73	1	EM 7
6	159-2/B (2600 cc)			D	52.73	2	EM 8
		K (MARK IV)					
8	460-4/B			S	52.73	1	EK 5
		P (COMET)					
6	200-1/B		"Before 7/5/73"	S	52.73	1	EP 12
		W/o resonator	"From 7/5/73"	S	52.73	2	EP 14
		W/resonator	"From 7/5/73"	S	52.73	3	EP 15
	250-1/B		"Before 7/5/73"	S	52.73	1	EP 12
		W/o resonator	"From 7/5/73"	S	52.73	2	EP 14
		W/resonator	"From 7/5/73"	S	52.73	3	EP 15
8	302-2/B		"Before 7/5/73"	S	52.73	4	EP 13
			"From 7/5/73"	S	52.73	5	EP 16
		Y (METEOR)					
8	351-2/B	(53,65)		S	52.73	1	ES 59
	400-2/B	(53,57,65)	"Before 1/19/73"	S	52.73	2	ES 60
		(53,57,65)	"From 1/19/73"	S	52.73	3	ES 66
		(71)		S	52.73	4	ES 61
	429-4/B	(53,57,65)		S	52.73	5	ES 62
		(71)		S	52.73	6	ES 63
	460-4/B	(53,57,65-exc. P/C)		S	52.73	5	ES 62
		(53,57,65-P/C)		D	52.73	7	ES 65
		(71-exc. P/C)		S	52.73	6	ES 63
		(71-P/C)		S	52.73	8	ES 64

♦ For control purposes only ▲ S - Single D - Dual

1973 MERCURY—8 CYL. 351-2/B SEDAN & HARDTOP

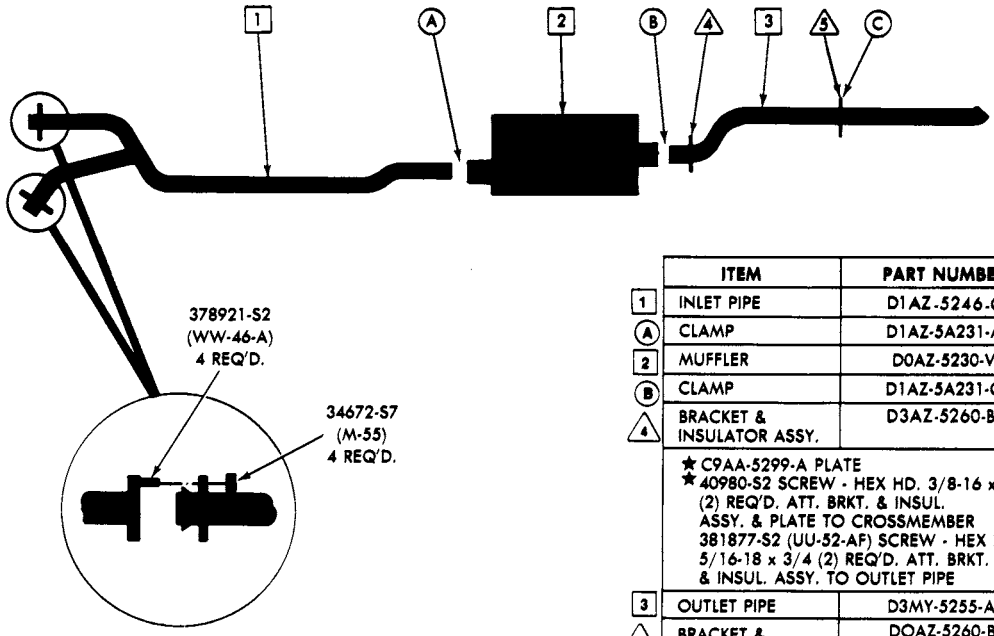

	ITEM	PART NUMBER
1	INLET PIPE	D1AZ-5246-G
A	CLAMP	D1AZ-5A231-A
2	MUFFLER	D0AZ-5230-V
B	CLAMP	D1AZ-5A231-C
4	BRACKET & INSULATOR ASSY.	D3AZ-5260-B
	★ C9AA-5299-A PLATE ★ 40980-S2 SCREW - HEX HD. 3/8-16 x 1 (2) REQ'D. ATT. BRKT. & INSUL. ASSY. & PLATE TO CROSSMEMBER 381877-S2 (UU-52-AF) SCREW - HEX HD. 5/16-18 x 3/4 (2) REQ'D. ATT. BRKT. & INSUL. ASSY. TO OUTLET PIPE	
3	OUTLET PIPE	D3MY-5255-A
5	BRACKET & INSULATOR ASSY.	D0AZ-5260-B
	★ 40980-S2 SCREW - HEX HD. 3/8-16 x 1 (2) REQ'D. ATT. BRKT. & INSUL. ASSY. TO FRAME & OUTLET PIPE	
C	CLAMP	D1AZ-5A231-C

Original equipment muffler and outlet pipe are a welded assembly. To service this assembly you must replace it with both parts (muffler and outlet pipe) used together.

E-G-58

COPYRIGHT © 1986 — FORD MOTOR COMPANY — DEARBORN, MICHIGAN

1973 MERCURY—8 CYL. 400-2/B SEDAN & HARDTOP

(BEFORE 1/19/73)

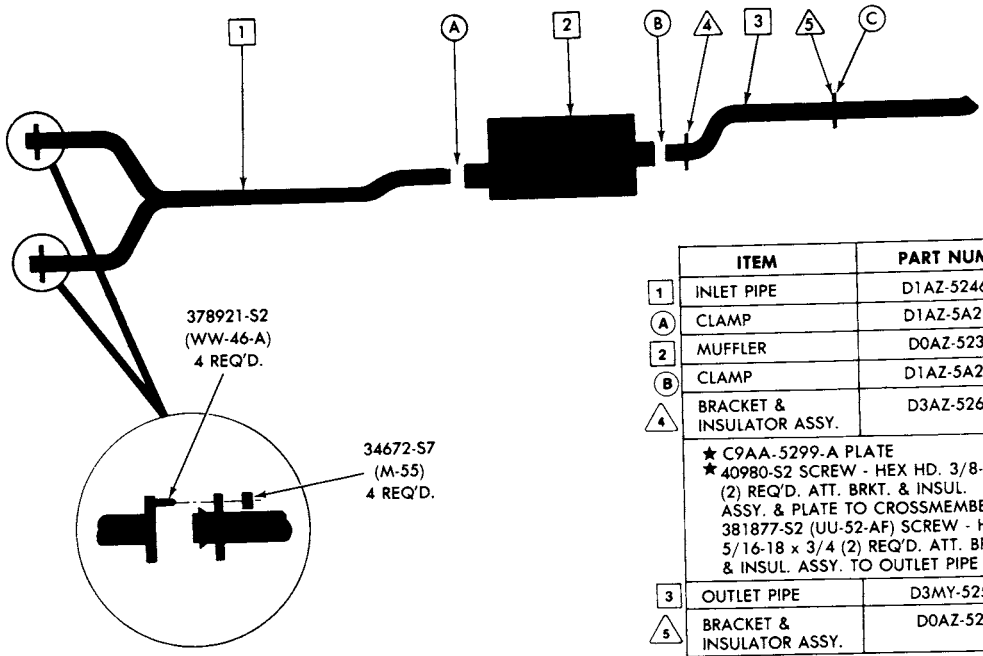

	ITEM	PART NUMBER
1	INLET PIPE	D1AZ-5246-A
A	CLAMP	D1AZ-5A231-D
2	MUFFLER	D0AZ-5230-U
B	CLAMP	D1AZ-5A231-C
4	BRACKET & INSULATOR ASSY.	D3AZ-5260-B
	★ C9AA-5299-A PLATE ★ 40980-S2 SCREW - HEX HD. 3/8-16 x 1 (2) REQ'D. ATT. BRKT. & INSUL. ASSY. & PLATE TO CROSSMEMBER 381877-S2 (UU-52-AF) SCREW - HEX HD. 5/16-18 x 3/4 (2) REQ'D. ATT. BRKT. & INSUL. ASSY. TO OUTLET PIPE	
3	OUTLET PIPE	D3MY-5255-A
5	BRACKET & INSULATOR ASSY.	D0AZ-5260-B
	★ 40980-S2 SCREW - HEX HD. 3/8-16 x 1 (2) REQ'D. ATT. BRKT. & INSUL. ASSY. TO FRAME	
C	CLAMP	D1AZ-5A231-C

Original equipment muffler and outlet pipe are a welded assembly. To service this assembly you must replace it with both parts (muffler and outlet pipe) used together.

1973 MERCURY —8 CYL. 400-2/B SEDAN & HARDTOP (FROM 1/19/73)

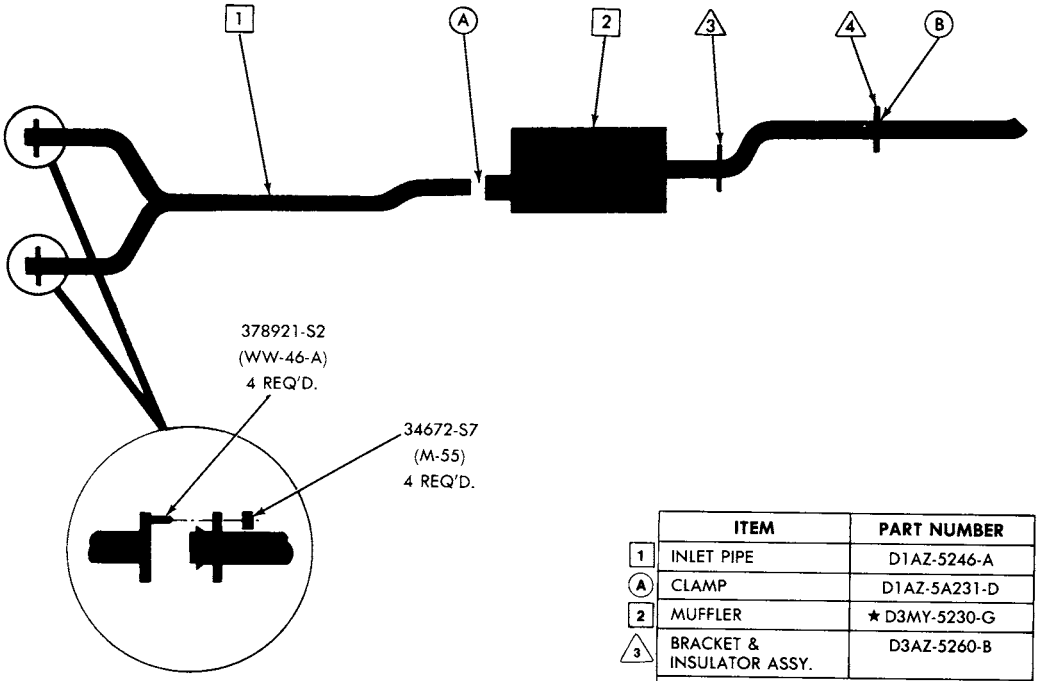

	ITEM	PART NUMBER
1	INLET PIPE	D1AZ-5246-A
A	CLAMP	D1AZ-5A231-D
2	MUFFLER	★ D3MY-5230-G
3	BRACKET & INSULATOR ASSY.	D3AZ-5260-B
	★ C9AA-5299-A PLATE ★ 40980-S2 SCREW-HEX HD. 3/8-16 x 1 (2) REQ'D. ATT. BRKT. & INSUL. ASSY. & PLATE TO CROSSMEMBER 381877-S2 (UU-52-AF) SCREW - HEX HD. 5/16-18 x 3/4 (2) REQ'D. ATT. BRKT. & INSUL. ASSY. TO OUTLET PIPE	
4	BRACKET & INSULATOR ASSY.	D0AZ-5260-B
	★ 40980-S2 SCREW - HEX HD. 3/8-16 x 1 (2) REQ'D. ATT. BRKT. & INSUL. ASSY. TO FRAME	
B	CLAMP	D1AZ-5A231-A

E-G-65

COPYRIGHT © 1986 — FORD MOTOR COMPANY — DEARBORN, MICHIGAN

1973 MERCURY—8 CYL. 400-2/B STATION WAGON

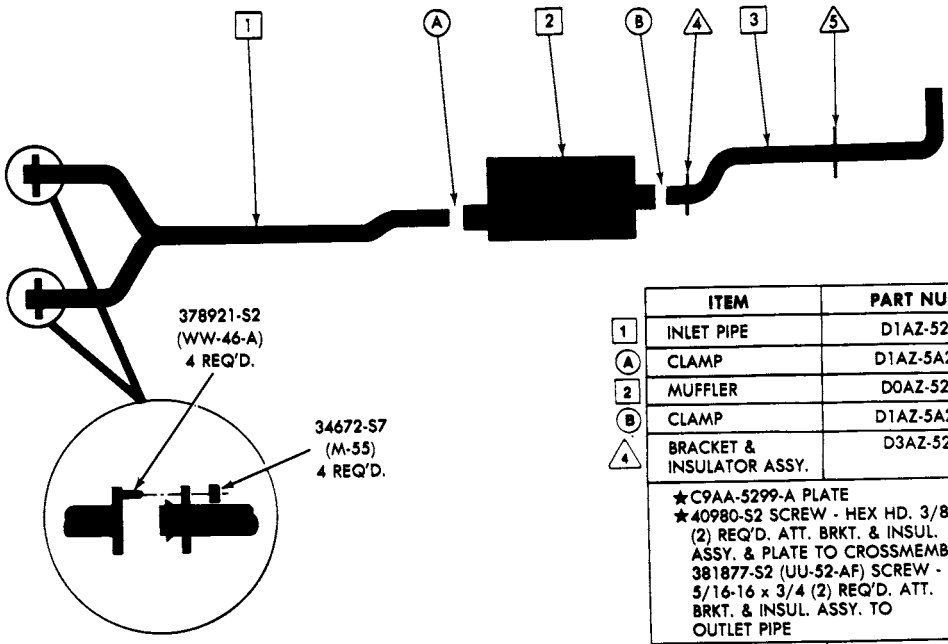

	ITEM	PART NUMBER
1	INLET PIPE	D1AZ-5246-A
A	CLAMP	D1AZ-5A231-D
2	MUFFLER	D0AZ-5230-U
B	CLAMP	D1AZ-5A231-C
4	BRACKET & INSULATOR ASSY.	D3AZ-5260-B
	★C9AA-5299-A PLATE ★40980-S2 SCREW - HEX HD. 3/8-16 x 1 (2) REQ'D. ATT. BRKT. & INSUL. ASSY. & PLATE TO CROSSMEMBER 381877-S2 (UU-52-AF) SCREW - HEX HD. 5/16-16 x 3/4 (2) REQ'D. ATT. BRKT. & INSUL. ASSY. TO OUTLET PIPE	
3	OUTLET PIPE	D3AZ-5255-H
5	BRACKET & INSULATOR ASSY.	D3AZ-5260-A
	★40980-S2 SCREW - HEX HD. 3/8-16 x 1 (2) REQ'D. ATT. BRKT. & INSUL. ASSY. TO CROSS MEMBER ★D3AA-5299-AB PLATE 384871-S2 (UU-52-AM) SCREW - HEX HD. 5/16-18 x 1 (2) REQ'D. ATT. BRKT. & INSUL. ASSY. TO OUTLET PIPE	

Original equipment muffler and outlet pipe are a welded assembly. To service this assembly you must replace it with both parts (muffler and outlet pipe) used together.

1973 MERCURY—8 CYL. 429-4/B & 460-4/B (EXCEPT 460-4/B POLICE)

SEDAN & HARDTOP

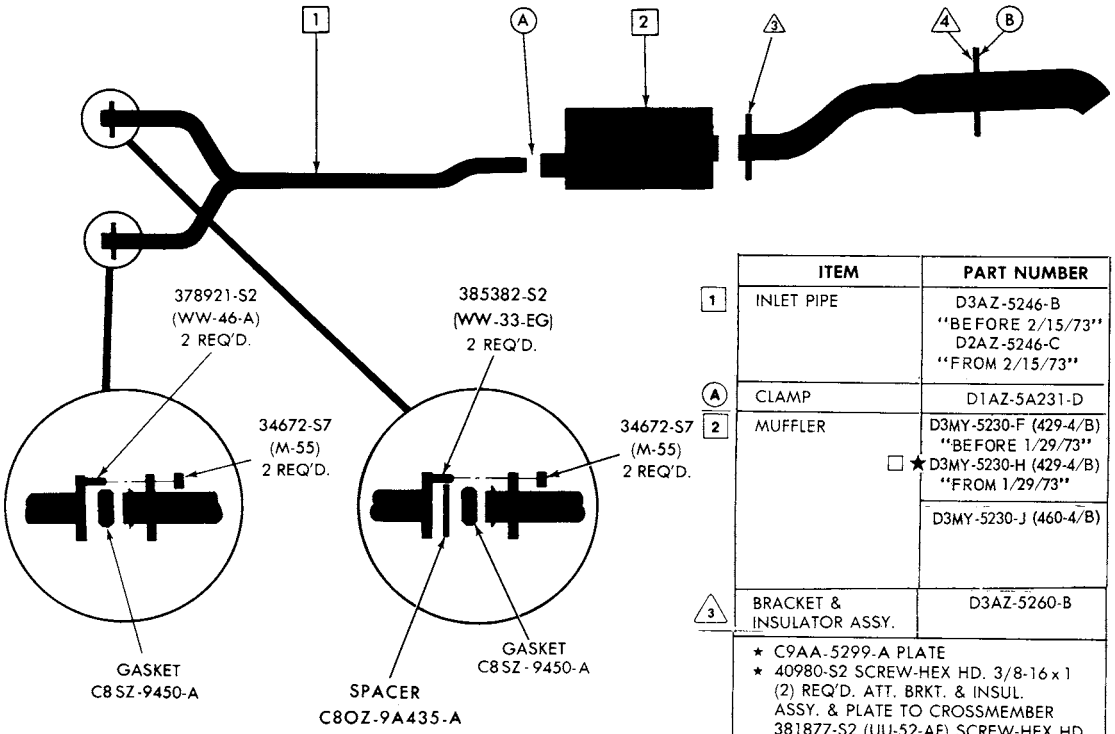

	ITEM	PART NUMBER
1	INLET PIPE	D3AZ-5246-B "BEFORE 2/15/73" D2AZ-5246-C "FROM 2/15/73"
A	CLAMP	D1AZ-5A231-D
2	MUFFLER	D3MY-5230-F (429-4/B) "BEFORE 1/29/73"
		☐ ★ D3MY-5230-H (429-4/B) "FROM 1/29/73"
		D3MY-5230-J (460-4/B)
3	BRACKET & INSULATOR ASSY.	D3AZ-5260-B
	★ C9AA-5299-A PLATE ★ 40980-S2 SCREW-HEX HD. 3/8-16 x 1 (2) REQ'D. ATT. BRKT. & INSUL. ASSY. & PLATE TO CROSSMEMBER 381877-S2 (UU-52-AF) SCREW-HEX HD. 5/16-18 x 3/4 (2) REQ'D. ATT. BRKT. & INSUL. ASSY. TO OUTLET PIPE	
4	BRACKET & INSULATOR ASSY.	D3AZ-5260-C
	★ 40980-S2 SCREW-HEX HD. 3/8-16 x 1 (2) REQ'D. ATT. BRKT. & INSUL. ASSY. TO FRAME	
B	CLAMP	C1TT-5A231-D

☐ r/b D0AZ-5230-U (MUFFLER)
D4MY-5255-B (TAIL PIPE)

E-G-61

COPYRIGHT © 1986 — FORD MOTOR COMPANY — DEARBORN, MICHIGAN

1973 MERCURY—8 CYL. 429-4/B & 460-4/B (EXCEPT 460-4/B POLICE) STATION WAGON

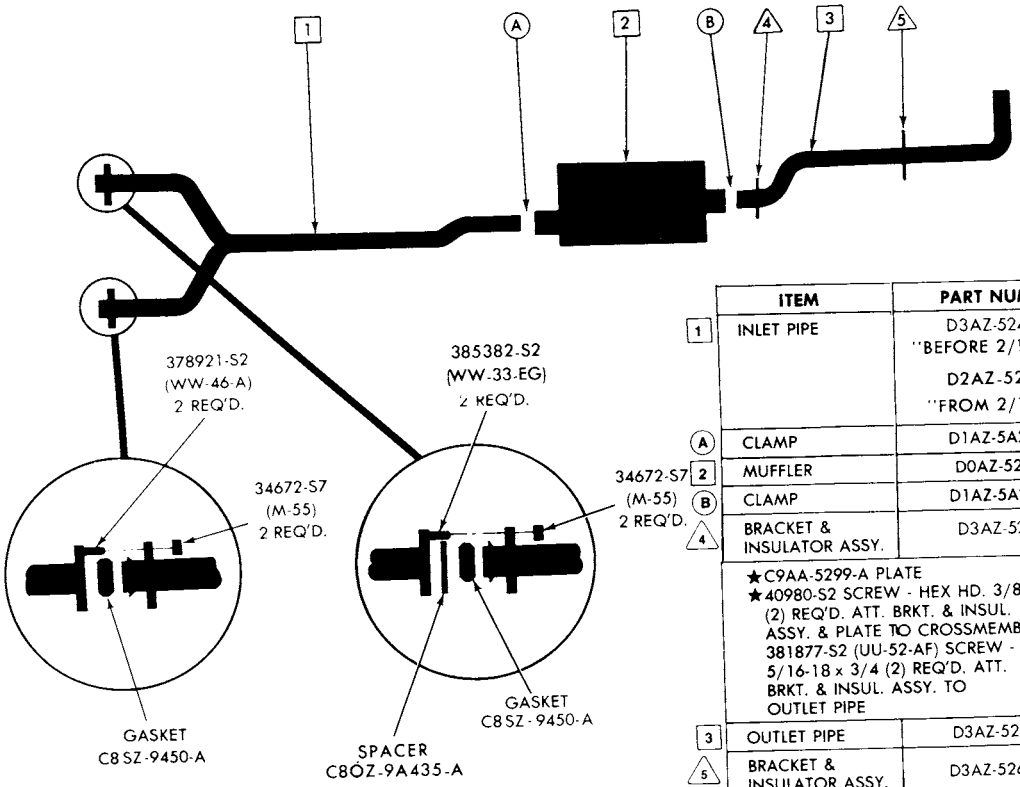

	ITEM	PART NUMBER
1	INLET PIPE	D3AZ-5246-B "BEFORE 2/15/73" D2AZ-5246-C "FROM 2/15/73"
A	CLAMP	D1AZ-5A231-D
2	MUFFLER	D0AZ-5230-U
B	CLAMP	D1AZ-5A231-C
4	BRACKET & INSULATOR ASSY.	D3AZ-5260-B
	★C9AA-5299-A PLATE ★40980-S2 SCREW - HEX HD. 3/8-16 x 1 (2) REQ'D. ATT. BRKT. & INSUL. ASSY. & PLATE TO CROSSMEMBER 381877-S2 (UU-52-AF) SCREW - HEX HD. 5/16-18 x 3/4 (2) REQ'D. ATT. BRKT. & INSUL. ASSY. TO OUTLET PIPE	
3	OUTLET PIPE	D3AZ-5255-G
5	BRACKET & INSULATOR ASSY.	D3AZ-5260-A
	★40980-S2 SCREW - HEX HD. 3/8-16 x 1 (2) REQ'D. ATT. BRKT. & INSUL. ASSY. TO CROSS MEMBER ★D3AA-5299-AB PLATE 384871-S2 (UU-52-AM) SCREW - HEX HD. 5/16-18 x 1 (2) REQ'D. ATT. BRKT. & INSUL. ASSY. TO OUTLET PIPE	

Original equipment muffler and outlet pipe are a welded assembly. To service this assembly you must replace it with both parts (muffler and outlet pipe) used together.

1973 MERCURY—8 CYL. 460-4/B (POLICE ONLY) SEDAN & HARDTOP

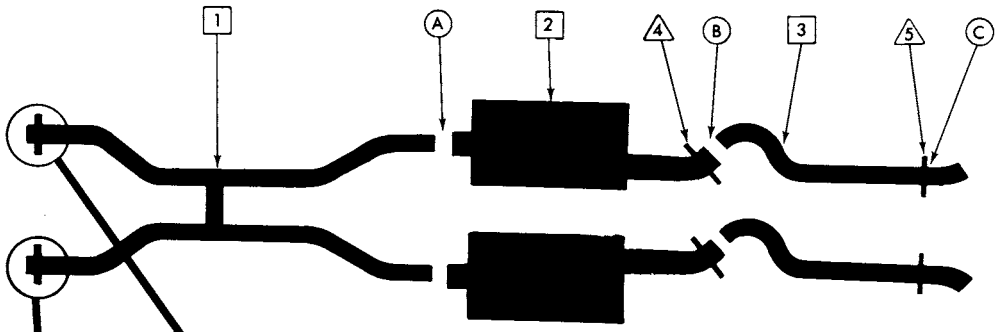

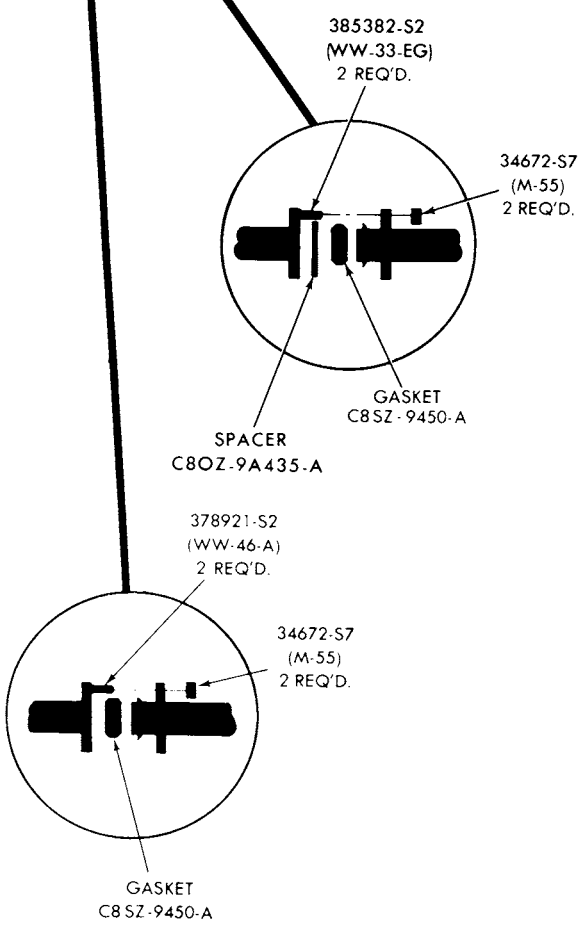

	ITEM	L.H.	R.H.
1	INLET PIPE	★ D3AZ-5246-C "BEFORE 2/15/73" D3AZ-5246-E "FROM 2/15/73"	
A	CLAMP	D1AZ-5A231-D	D1AZ-5A231-D
2	MUFFLER	D0MY-5230-C	D0MY-5230-F
B	CLAMP	D1AZ-5A231-A	D1AZ-5A231-A
4	BRACKET & INSULATOR ASSY.	D3AZ-5260-B	D3AZ-5260-B
	★ C9AA-5299-A PLATE (2) REQ'D. ★ 40980-S2 SCREW - HEX HD. 3/8-16 x 1 (4) REQ'D. ATT. BRKT. & INSUL. ASSY. TO UNDERBODY 381877-S2 (UU-52-AF) SCREW - HEX HD. 5/16-18 x 3/4 (4) REQ'D. ATT. BRKT. & INSUL. ASSY. TO OUTLET PIPE		
3	OUTLET PIPE	D3MY-[illegible]-C	D3MY-5255-B
5	BRACKET & INSULATOR ASSY.	D0AZ-5260-A	D0AZ-5260-B
	★ 40980-S2 SCREW - HEX HD. 3/8-16 x 1 (4) REQ'D. ATT. BRKT. TO FRAME		
C	CLAMP	D1AZ-5A231-A	D1AZ-5A231-A

EG-64

COPYRIGHT © 1986 — FORD MOTOR COMPANY — DEARBORN, MICHIGAN

1973 MERCURY—8 CYL. 460-4/B (POLICE) STATION WAGON

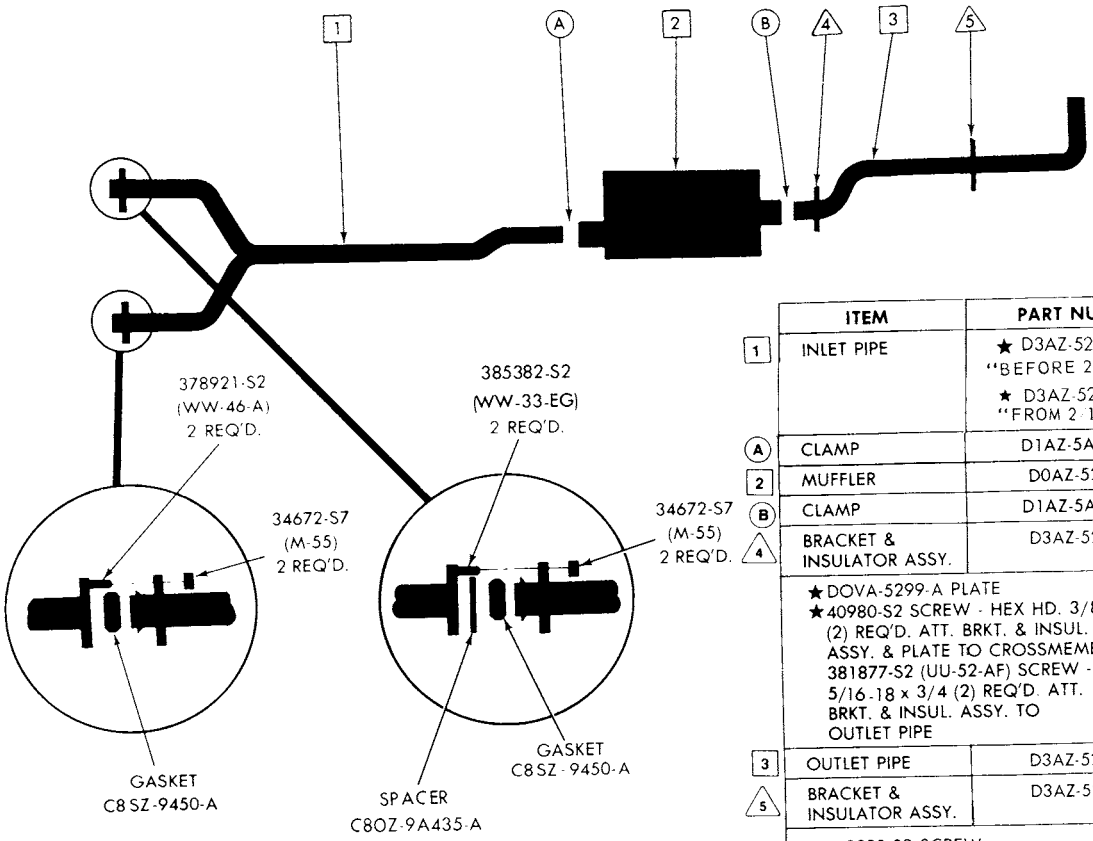

	ITEM	PART NUMBER
1	INLET PIPE	★ D3AZ-5246-D "BEFORE 2/15/73" ★ D3AZ-5246-F "FROM 2/15/73"
A	CLAMP	D1AZ-5A231-D
2	MUFFLER	D0AZ-5230-U
B	CLAMP	D1AZ-5A231-C
4	BRACKET & INSULATOR ASSY.	D3AZ-5260-
	★DOVA-5299-A PLATE ★40980-S2 SCREW - HEX HD. 3/8-16 x 1 (2) REQ'D. ATT. BRKT. & INSUL. ASSY. & PLATE TO CROSSMEMBER 381877-S2 (UU-52-AF) SCREW - HEX HD. 5/16-18 x 3/4 (2) REQ'D. ATT. BRKT. & INSUL. ASSY. TO OUTLET PIPE	
3	OUTLET PIPE	D3AZ-5255-G
5	BRACKET & INSULATOR ASSY.	D3AZ-5260-A
	★40980-S2 SCREW HEX HD. 3/8-16 x 1 (2) REQ'D. ATT. BRKT. & INSUL. ASSY. TO CROSSMEMBER ★D3AA-5299-AB PLATE 384871-S2 (UU-52-AM) SCREW - HEX HD. 5/16-18 x 1 (2) REQ'D. ATT. BRKT. & INSUL. ASSY. & PLATE TO OUTLET PIPE	

Original equipment muffler and outlet pipe are a welded assembly. To service this assembly you must replace it with both parts (muffler and outlet pipe) used together.

1973 MONTEGO—6 CYL. 250-1/B SEDAN & HARDTOP

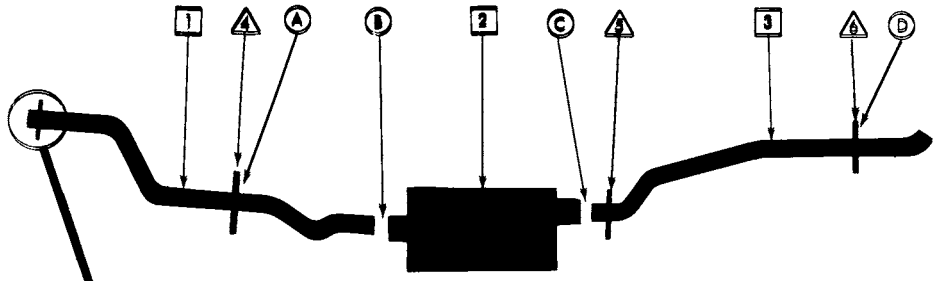

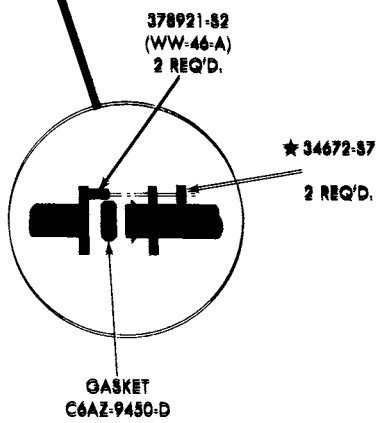

	ITEM	PART NUMBER
1	INLET PIPE	★ D3OZ-5246-E (2 DR.) D3OZ-5246-F (4 DR.)
4	BRACKET	D1DZ-5277-B
A	CLAMP	D1DZ-5A231-A
B	CLAMP	D1AZ-5A231-C
2	MUFFLER	D2OZ-5230-AC
C	CLAMP	D1AZ-5A231-C
5	BRACKET & INSULATOR ASSY.	D4OZ-5260-E
	★40980-S2 SCREW - HEX HD. 3/8-16 x 1 (2) REQ'D. ATT. BRKT. & INSUL. ASSY. TO UNDERBODY 381877-S2 (UU-52-AF) SCREW - HEX HD. 5/16-18 x 3/4 (2) REQ'D. ATT. BRKT. & PLATE TO OUTLET PIPE	
3	OUTLET PIPE	D2OZ-5255-G
6	BRACKET & INSULATOR ASSY.	D2OZ-5260-A
	★40980-S2 SCREW - HEX HD. 3/8-16 x 1 (1) REQ'D. ATT. BRKT. TO FRAME	
D	CLAMP	D1AZ-5A231-C

Original equipment muffler and outlet pipe are a welded assembly. To service this assembly you must replace it with both parts (muffler and outlet pipe) used together.

E-D-88

COPYRIGHT © 1988 — FORD MOTOR COMPANY — DEARBORN, MICHIGAN

1973 MONTEGO–8 CYL. 302-2/B SEDAN & HARDTOP

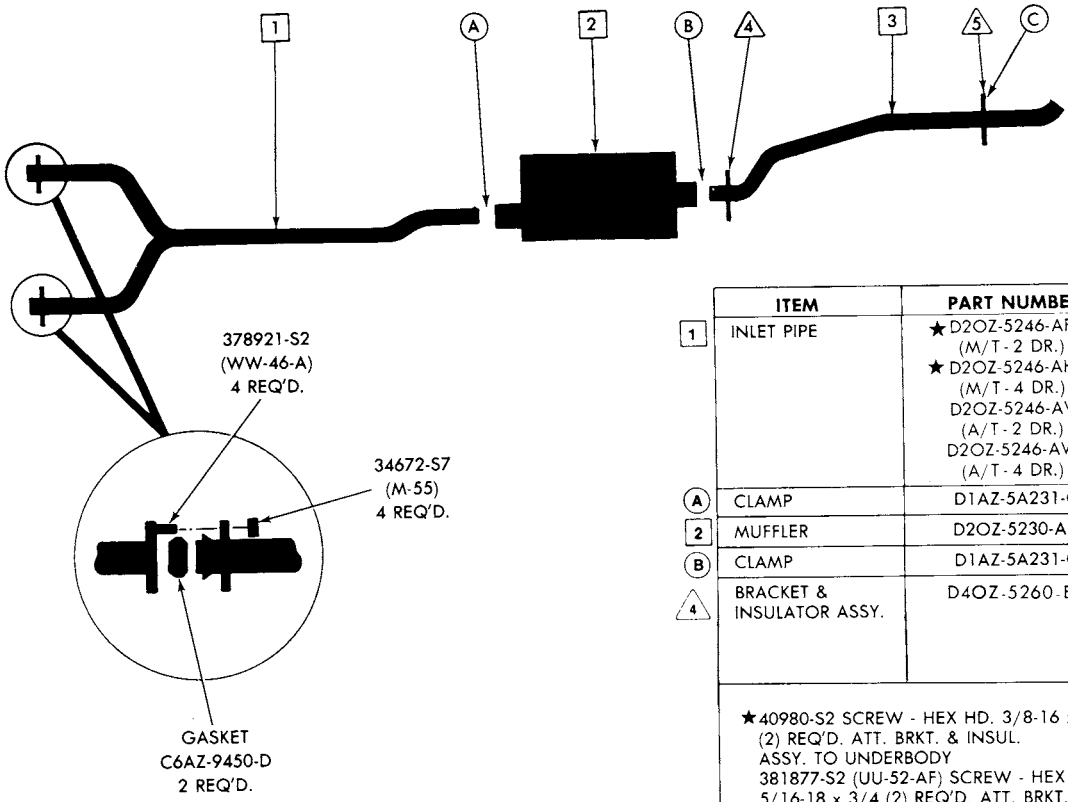

	ITEM	PART NUMBER
1	INLET PIPE	★D2OZ-5246-AF (M/T-2 DR.) ★D2OZ-5246-AH (M/T-4 DR.) D2OZ-5246-AV (A/T-2 DR.) D2OZ-5246-AW (A/T-4 DR.)
A	CLAMP	D1AZ-5A231-C
2	MUFFLER	D2OZ-5230-AC
B	CLAMP	D1AZ-5A231-C
4	BRACKET & INSULATOR ASSY.	D4OZ-5260-E
	★40980-S2 SCREW - HEX HD. 3/8-16 x 1 (2) REQ'D. ATT. BRKT. & INSUL. ASSY. TO UNDERBODY 381877-S2 (UU-52-AF) SCREW - HEX HD. 5/16-18 x 3/4 (2) REQ'D. ATT. BRKT. & PLATE TO OUTLET PIPE	
3	OUTLET PIPE	D2OZ-5255-G
5	BRACKET & INSULATOR ASSY.	D2OZ-5260-A
	★40980-S2 SCREW - HEX HD. 3/8-16 x 1 (1) REQ'D. ATT. BRKT. TO FRAME	
C	CLAMP	D1AZ-5A231-C

Original equipment muffler and outlet pipe are a welded assembly. To service this assembly you must replace it with both parts (muffler and outlet pipe) used together.

1973 MONTEGO—8 CYL. 302-2/B STATION WAGON
(BEFORE 2/13/73)

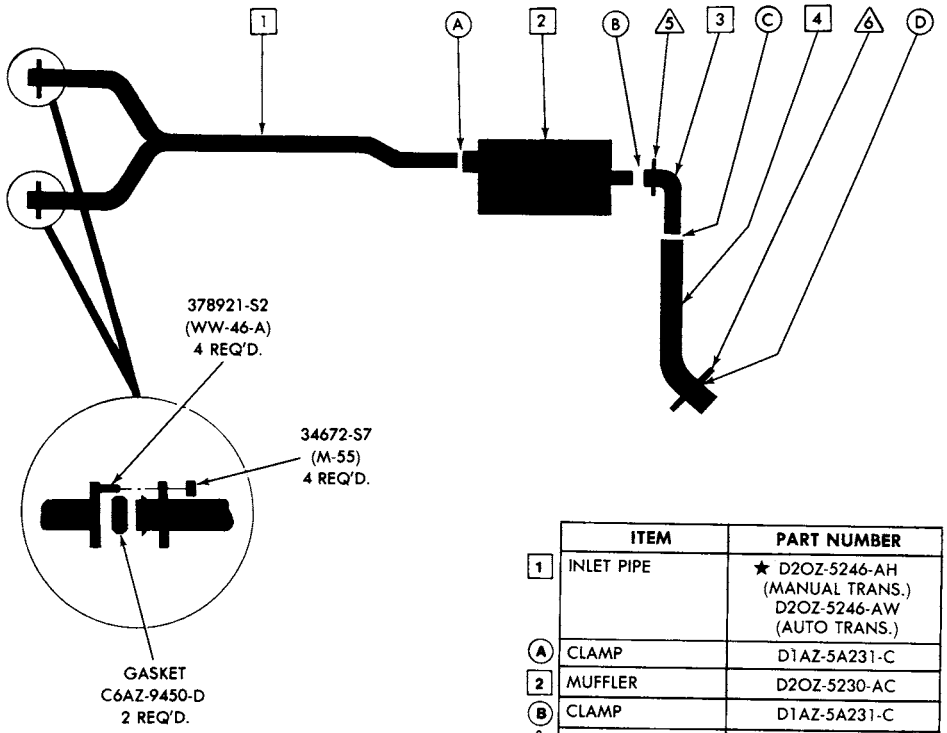

Original equipment muffler and outlet pipe are a welded assembly. To service this assembly you must replace it completely with three parts (muffler and two outlet pipes) used together.

	ITEM	PART NUMBER
1	INLET PIPE	★ D2OZ-5246-AH (MANUAL TRANS.) D2OZ-5246-AW (AUTO TRANS.)
A	CLAMP	D1AZ-5A231-C
2	MUFFLER	D2OZ-5230-AC
B	CLAMP	D1AZ-5A231-C
5	BRACKET & INSULATOR ASSY.	D4OZ-5260-E
	★40980-S2 SCREW - HEX HD. 3/8-16 x 1 (2) REQ'D. ATT. BRKT. & INSUL. ASSY. TO UNDERBODY 381877-S2 (UU-52-AF) SCREW - HEX HD. 5/16-18 x 3/4 (2) REQ'D. ATT. BRKT. & INSUL. ASSY. TO OUTLET PIPE	
3	OUTLET PIPE	D2OZ-5255-D
C	CLAMP	D1AZ-5A231-C
4	OUTLET PIPE (REAR)	D2OZ-5255-H
6	BRACKET & INSULATOR ASSY.	D2OZ-5260-K
	★40980-S2 SCREW - HEX HD. 3/8-16 x 1 (1) REQ'D. ATT. BRKT. & INSUL. ASSY. TO UNDERBODY	
D	CLAMP	D1AZ-5A231-C

E-D-91

COPYRIGHT © 1986 — FORD MOTOR COMPANY — DEARBORN, MICHIGAN

1973 MONTEGO —8 CYL. 302-2/B STATION WAGON (FROM 2/13/73)

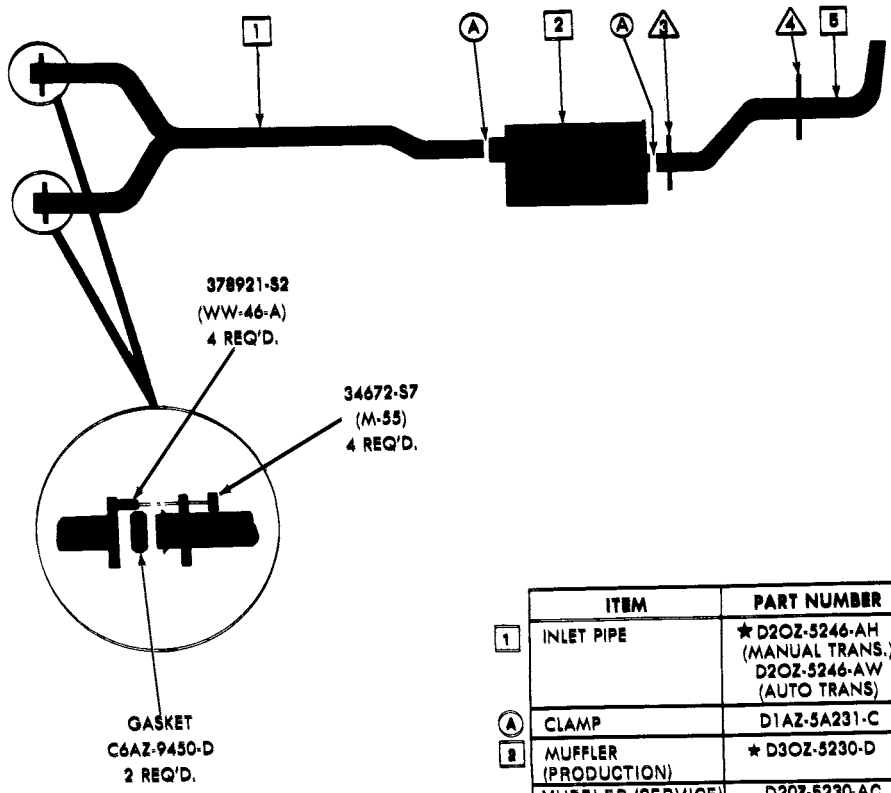

	ITEM	PART NUMBER
1	INLET PIPE	★ D2OZ-5246-AH (MANUAL TRANS.) D2OZ-5246-AW (AUTO TRANS)
A	CLAMP	D1AZ-5A231-C
2	MUFFLER (PRODUCTION)	★ D3OZ-5230-D
	MUFFLER (SERVICE)	D2OZ-5230-AC
3	BRACKET & INSULATOR ASSY.	D4OZ-5260-E
	★ 40980-S2 SCREW-HEX HD. 3/8-16 x 1 (2) REQ'D. ATT. BRKT. & INSUL. ASSY. TO UNDERBODY 381877-S2 (UU-52-AF) SCREW-HEX HD. 5/16-18 x 3/4 (2) REQ'D. ATT. BRKT. & INSUL. ASSY. TO MUFFLER	
4	BRACKET & INSULATOR ASSY.	D3OZ-5260-A
	★ 40980-S2 SCREW-HEX HD. 3/8-16 x 1 (1) REQ'D. ATT. BRKT. & INSUL. ASSY. TO UNDERBODY ★ DOVA-5299-A PLATE 382062-S2 (UU-52-AA) SCREW-HEX HD. 3/8-16 x 1-1/4 (2) REQ'D. ATT. BRKT. & INSUL. ASSY. & PLATE TO OUTLET PIPE BRKT.	
5	OUTLET PIPE (SERVICE)	★ D3OZ-5255-B

E-D-101

1973 MONTEGO—8 CYL. 351-2/B SEDAN & HARDTOP

(USED FOR ALL REAR AXLE RATIOS BEFORE 1/19/73)
(USED FOR ALL REAR AXLE RATIOS EXC. 3.25 FROM 1/19/73)

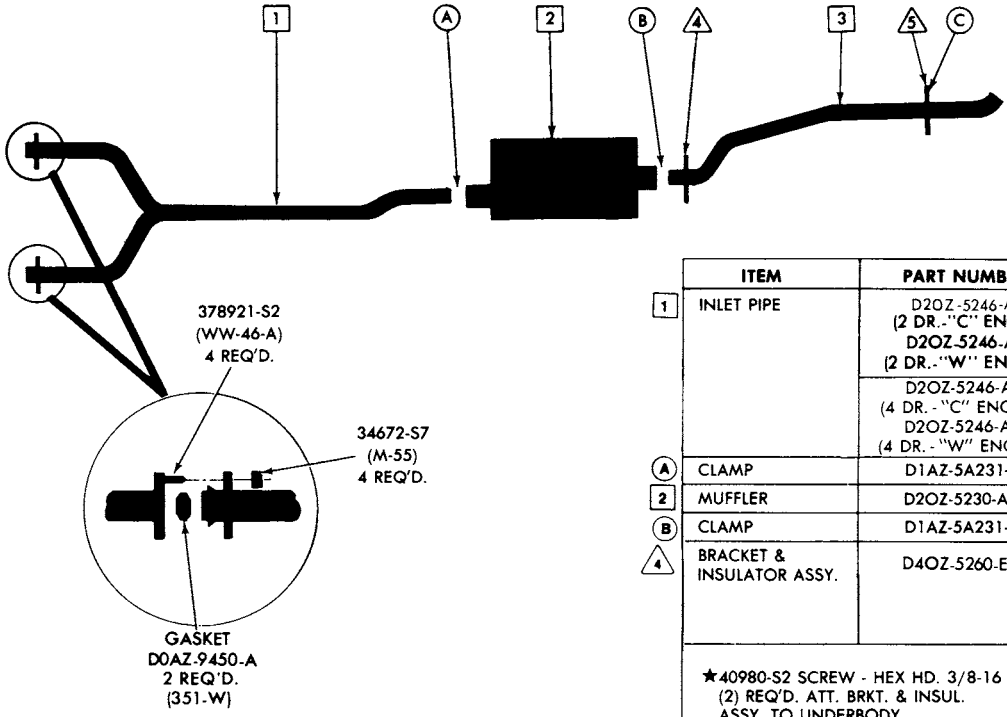

	ITEM	PART NUMBER
1	INLET PIPE	D2OZ-5246-AR (2 DR.-"C" ENGINE) D2OZ-5246-AT (2 DR.-"W" ENGINE)
		D2OZ-5246-AS (4 DR.-"C" ENGINE) D2OZ-5246-AU (4 DR.-"W" ENGINE)
A	CLAMP	D1AZ-5A231-A
2	MUFFLER	D2OZ-5230-AA
B	CLAMP	D1AZ-5A231-C
4	BRACKET & INSULATOR ASSY.	D4OZ-5260-E
	★40980-S2 SCREW - HEX HD. 3/8-16 x 1 (2) REQ'D. ATT. BRKT. & INSUL. ASSY. TO UNDERBODY 381877-S2 (UU-52-AF) SCREW - HEX HD. 5/16-18 x 3/4 (2) REQ'D. ATT. BRKT. & PLATE TO OUTLET PIPE	
3	OUTLET PIPE	D2OZ-5255-G
5	BRACKET & INSULATOR ASSY.	D2OZ-5260-A
	★40980-S2 SCREW - HEX HD. 3/8-16 x 1 (1) REQ'D. ATT. BRKT. TO FRAME	
C	CLAMP	D1AZ-5A231-C

Original equipment muffler and outlet pipe are a welded assembly. To service this assembly you must replace it with both parts (muffler and outlet pipe) used together.

E-D-92

COPYRIGHT © 1986 — FORD MOTOR COMPANY — DEARBORN, MICHIGAN

1973 MONTEGO —8 CYL. 351-2/B SEDAN & HARDTOP

(USED FOR 3.25 REAR AXLE RATIO FROM 1/19/73)

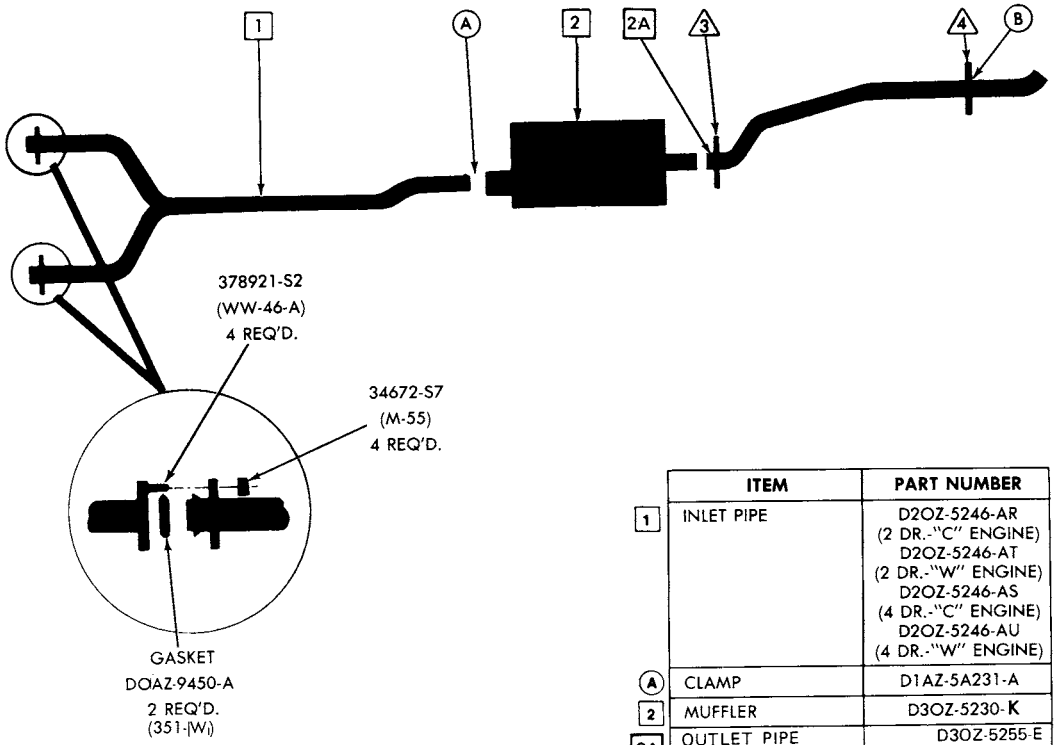

	ITEM	PART NUMBER
1	INLET PIPE	D2OZ-5246-AR (2 DR.-"C" ENGINE) D2OZ-5246-AT (2 DR.-"W" ENGINE) D2OZ-5246-AS (4 DR.-"C" ENGINE) D2OZ-5246-AU (4 DR.-"W" ENGINE)
A	CLAMP	D1AZ-5A231-A
2	MUFFLER	D3OZ-5230-K
2A	OUTLET PIPE	D3OZ-5255-E
3	BRACKET & INSULATOR ASSY.	D4OZ-5260-E
	★ 40980-S2 SCREW-HEX HD. 3/8-16 x 1 (2) REQ'D. ATT. BRKT. & INSUL. ASSY. TO UNDERBODY 381877-S2 (UU-52-AF) SCREW-HEX HD. 5/16-18 x 3/4 (2) REQ'D. ATT. BRKT. & PLATE TO MUFFLER	
4	BRACKET & INSULATOR ASSY.	D2OZ-5260-A
	★ 40980-S2 SCREW-HEX HD. 3/8-16 x 1 (1) REQ'D. ATT. BRKT. TO FRAME	
B	CLAMP	D1AZ-5A231-A

1973 MONTEGO—8 CYL. 351-2/B STATION WAGON
(BEFORE 2/5/73)

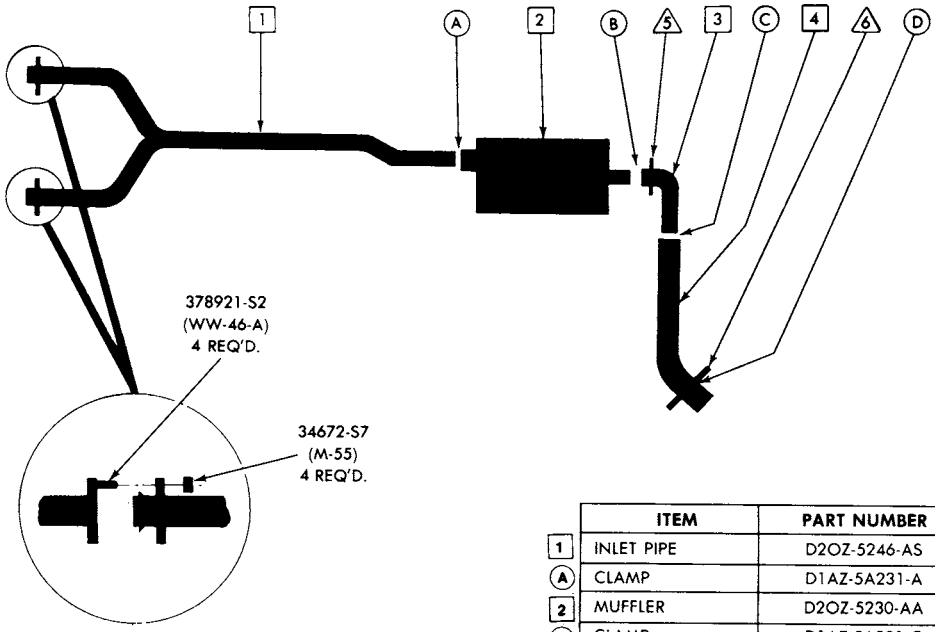

	ITEM	PART NUMBER
1	INLET PIPE	D2OZ-5246-AS
A	CLAMP	D1AZ-5A231-A
2	MUFFLER	D2OZ-5230-AA
B	CLAMP	D1AZ-5A231-C
5	BRACKET & INSULATOR ASSY.	D4OZ-5260-E
	*40980-S2 SCREW - HEX HD. 3/8016 x 1 (2) REQ'D. ATT. BRKT. & INSUL. ASSY. TO UNDERBODY 381877-S2 (UU-52-AF) SCREW - HEX HD. 5/16-18 x 3/4 (2) REQ'D. ATT. BRKT. & INSUL. ASSY. TO OUTLET PIPE	
3	OUTLET PIPE (FRONT)	D2OZ-5255-D
C	CLAMP	D1AZ-5A231-C
4	OUTLET PIPE (REAR)	D2OZ-5255-H
6	BRACKET & INSULATOR ASSY.	D2OZ-5260-K
	*40980-S2 SCREW - HEX HD. 3/8-16 x 1 (1) REQ'D. ATT. BRKT. & INSUL. ASSY. TO UNDERBODY	
D	CLAMP	D1AZ-5A231-C

Original equipment muffler and outlet pipe are a welded assembly. To service this assembly you must replace it completely with three parts (muffler and two outlet pipes) used together.

E-D-93

COPYRIGHT © 1986 — FORD MOTOR COMPANY — DEARBORN, MICHIGAN

1973 MONTEGO —8 CYL. 351-2/B STATION WAGON (FROM 2/5/73)

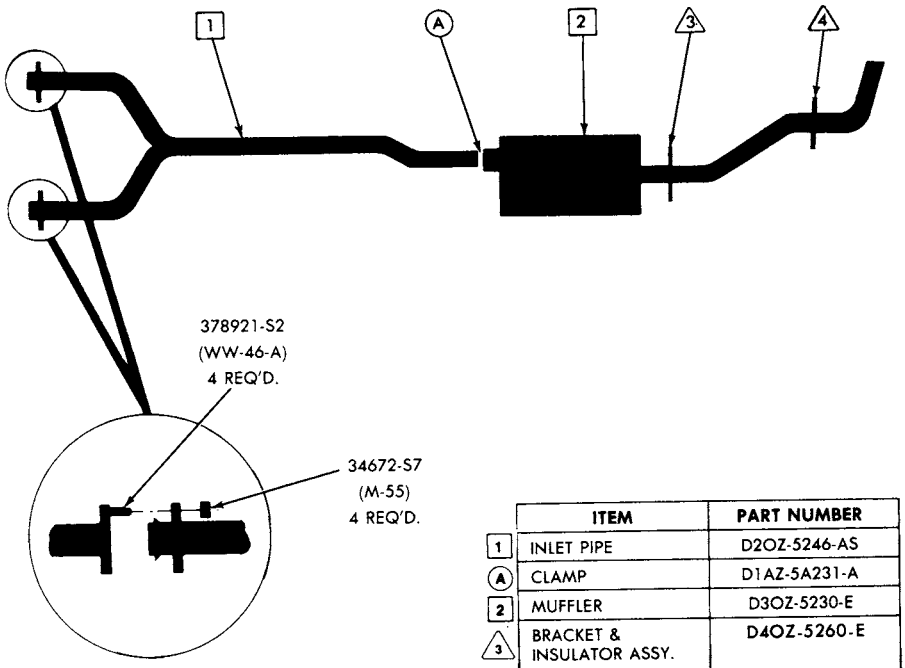

	ITEM	PART NUMBER
1	INLET PIPE	D2OZ-5246-AS
A	CLAMP	D1AZ-5A231-A
2	MUFFLER	D3OZ-5230-E
3	BRACKET & INSULATOR ASSY.	D4OZ-5260-E
	★ 40980-S2 SCREW-HEX HD. 3/8-16 x 1 (2) REQ'D. ATT. BRKT. & INSUL. ASSY. TO UNDERBODY 381877-S2 (UU-52-AF) SCREW-HEX HD. 5/16-18 x 3/4 (2) REQ'D. ATT. BRKT. & INSUL. ASSY. TO MUFFLER	
4	BRACKET & INSULATOR ASSY.	D3OZ-5260-A
	★ 40980-S2 SCREW-HEX HD. 3/8-16 x 1 (1) REQ'D. ATT. BRKT. & INSUL. ASSY. TO UNDERBODY ★ DOVA-5299-A PLATE 382062-S2 (UU-52-AA) SCREW - HEX HD. 3/8-16 x 1-1/4 (2) REQ'D. ATT. BRKT. & INSUL. ASSY. & PLATE TO OUTLET PIPE BRKT.	

E-D-103

COPYRIGHT © 1986 — FORD MOTOR COMPANY — DEARBORN, MICHIGAN

1973 MONTEGO—8 CYL. 351-4/B SEDAN & HARDTOP (EXCEPT POLICE)

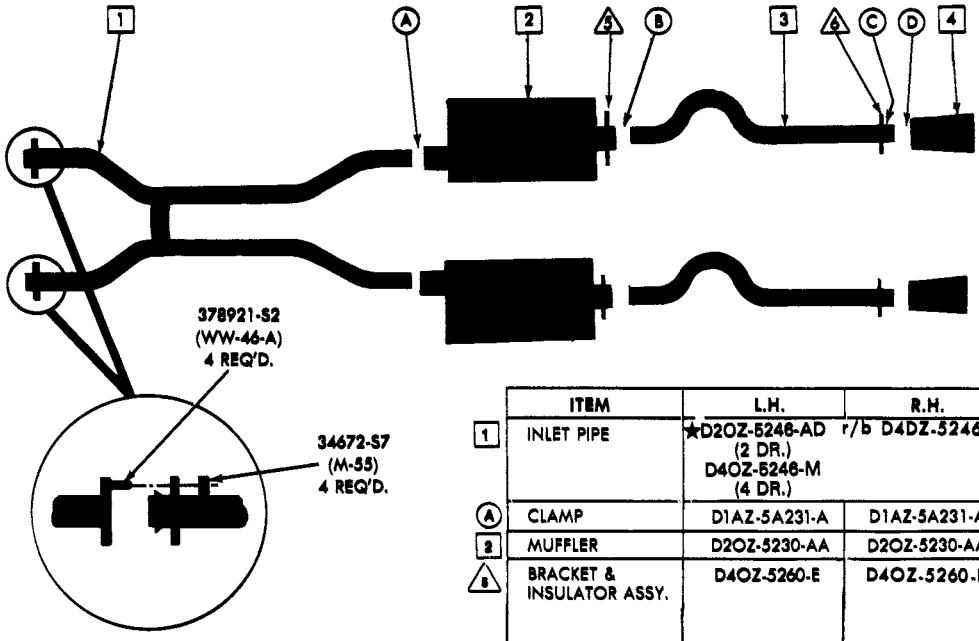

	ITEM	L.H.	R.H.
1	INLET PIPE	★D2OZ-5246-AD (2 DR.) D4OZ-5246-M (4 DR.)	r/b D4DZ-5246-L
A	CLAMP	D1AZ-5A231-A	D1AZ-5A231-A
2	MUFFLER	D2OZ-5230-AA	D2OZ-5230-AA
5	BRACKET & INSULATOR ASSY.	D4OZ-5260-E	D4OZ-5260-E
	★40980-S2 SCREW - HEX HD. 3/8-16 x 1 (4) REQ'D. ATT. BRKT. & INSUL. ASSY. TO UNDERBODY 381877-S2 (UU-52-AF) SCREW - HEX HD. 5/16-18 x 3/4 (4) REQ'D. ATT. BRKT. & INSUL. ASSY. TO OUTLET PIPE		
B	CLAMP	D1AZ-5A231-C	D1AZ-5A231-C
3	OUTLET PIPE	★ D2OZ-5255-E	D2OZ-5255-F
6	BRACKET & INSULATOR ASSY.	D2OZ-5260-A	D2OZ-5260-A
	★40980-S2 SCREW - HEX HD. 3/8-16 x 1 (2) REQ'D. ATT. BRKT. & INSUL. ASSY. TO UNDERBODY		
C	CLAMP	D1AZ-5A231-A	D1AZ-5A231-A
D	CLAMP	D1AZ-5A231-A (SPORTY OPTION)	D1AZ-5A231-A (SPORTY OPTION)
4	OUTLET PIPE EXTENSION	D0OZ-5255-A (SPORTY OPTION)	D0OZ-5255-A (SPORTY OPTION)

Original equipment muffler and outlet pipe are a welded assembly. To service this assembly you must replace it with both parts (muffler and outlet pipe) used together.

E-D-94

COPYRIGHT © 1986 — FORD MOTOR COMPANY — DEARBORN, MICHIGAN

1973 MONTEGO—8 CYL. 351-4/B 4 DOOR SEDAN (POLICE ONLY)

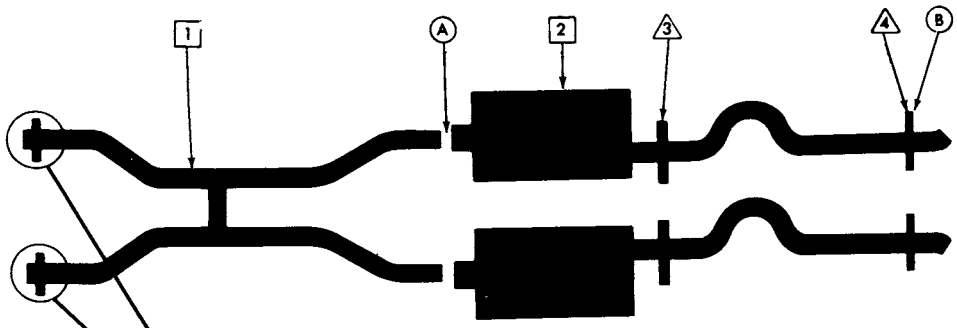

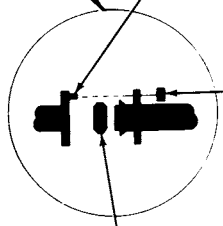

	ITEM	L.H.	R.H.
1	INLET PIPE	D4OZ-5246-M	
A	CLAMP	D1AZ-5A231-A	D1AZ-5A231-A
2	MUFFLER	D3OZ-5230-B	D3OZ-5230-A
3	BRACKET & INSULATOR ASSY.	D4OZ-5260-E	D4OZ-5260-E
	★40980-S2 SCREW - HEX HD. 3/8-16 x 1 (4) REQ'D. ATT. BRKT. & INSUL. ASSY. TO UNDERBODY 381877-S2 (UU-52-AF) SCREW-HEX. HD. 5/16-18 x 3/4 (4) REQ'D. ATT. BRKT. & INSUL. ASSY. TO MUFFLER		
4	BRACKET & INSULATOR ASSY.	D2OZ-5260-A	D2OZ-5260-A
	★40980-S2 SCREW - HEX. HD. 3/8-16 x 1 (2) REQ'D. ATT. BRKT. & INSUL. ASSY. TO UNDERBODY		
B	CLAMP	D1AZ-5A231-A	D1AZ-5A231-A

1973 MONTEGO—8 CYL. 400-2/B SEDAN & HARDTOP

(USED FOR ALL REAR AXLE RATIOS BEFORE 1/19/73)
(USED FOR ALL REAR AXLE RATIOS EXC. 3.25 FROM 1/19/73)

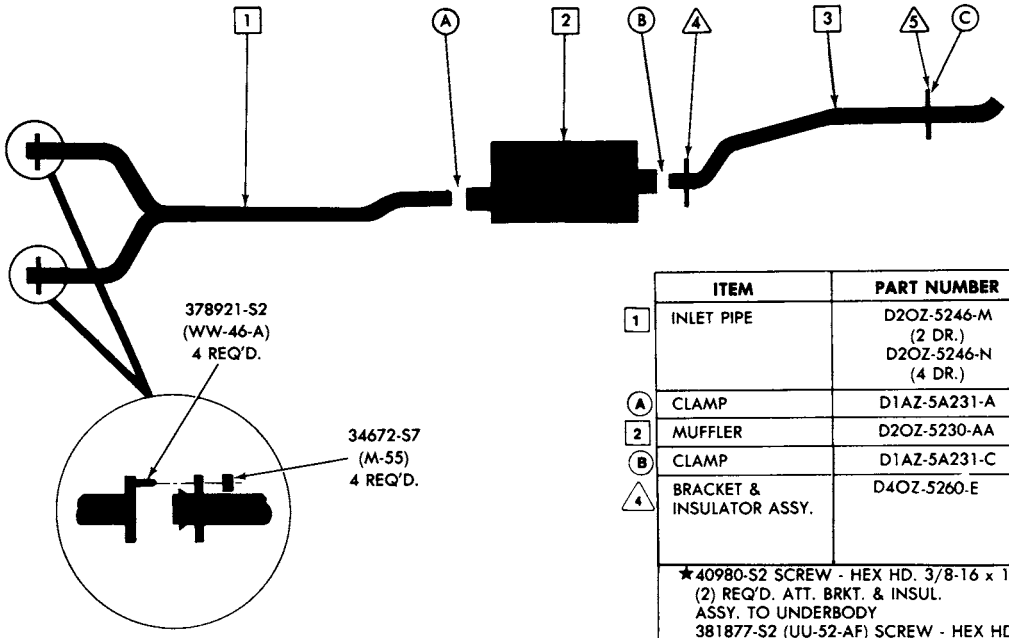

	ITEM	PART NUMBER
1	INLET PIPE	D2OZ-5246-M (2 DR.) D2OZ-5246-N (4 DR.)
A	CLAMP	D1AZ-5A231-A
2	MUFFLER	D2OZ-5230-AA
B	CLAMP	D1AZ-5A231-C
4	BRACKET & INSULATOR ASSY.	D4OZ-5260-E
	★40980-S2 SCREW - HEX HD. 3/8-16 x 1 (2) REQ'D. ATT. BRKT. & INSUL. ASSY. TO UNDERBODY 381877-S2 (UU-52-AF) SCREW - HEX HD. 5/16-18 x 3/4 (2) REQ'D. ATT. BRKT. & PLATE TO OUTLET PIPE	
3	OUTLET PIPE	D2OZ-5255-G
5	BRACKET & INSULATOR ASSY.	D2OZ-5260-A
	★40980-S2 SCREW - HEX HD. 3/8-16 x 1 (1) REQ'D. ATT. BRKT. TO FRAME	
C	CLAMP	D1AZ-5A231-C

Original equipment muffler and outlet pipe are a welded assembly. To service this assembly you must replace it with both parts (muffler and outlet pipe) used together.

E-D-96

COPYRIGHT © 1986 — FORD MOTOR COMPANY — DEARBORN, MICHIGAN

1973 MONTEGO —8 CYL. 400-2/B SEDAN & HARDTOP

(USED FOR 3.25 REAR AXLE RATIO FROM 1/19/73)

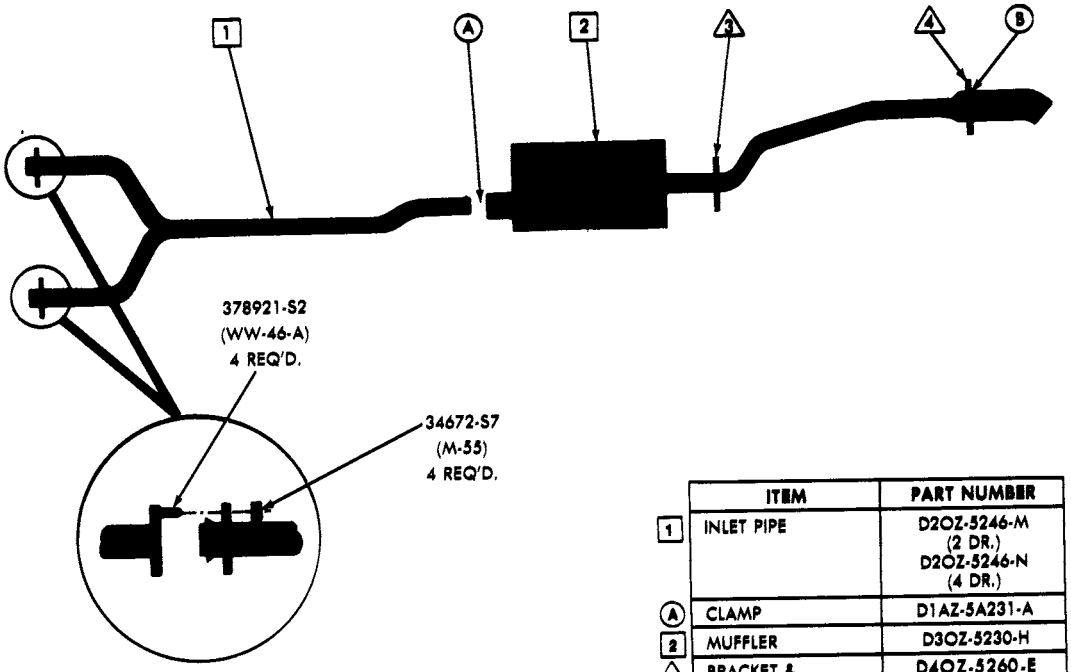

	ITEM	PART NUMBER
1	INLET PIPE	D2OZ-5246-M (2 DR.) D2OZ-5246-N (4 DR.)
A	CLAMP	D1AZ-5A231-A
2	MUFFLER	D3OZ-5230-H
3	BRACKET & INSULATOR ASSY.	D4OZ-5260-E
	★ 40980-S2 SCREW-HEX HD. 3/8-16 x 1 (2) REQ'D. ATT. BRKT. & INSUL. ASSY. TO UNDERBODY 381877-S2 (UU-52-AF) SCREW-HEX HD. 5/16-18 x 3/4 (2) REQ'D. ATT. BRKT. & PLATE TO OUTLET PIPE MUFFLER	
4	BRACKET & INSULATOR ASSY.	D2OZ-5260-A
	★ 40980-S2 SCREW-HEX HD. 3/8-16 x 1 (1) REQ'D. ATT. BRKT. TO FRAME	
B	CLAMP	C1TT-5A231-D

1973 MONTEGO—8 CYL. 400-2/B STATION WAGON
(BEFORE 1/19/73)

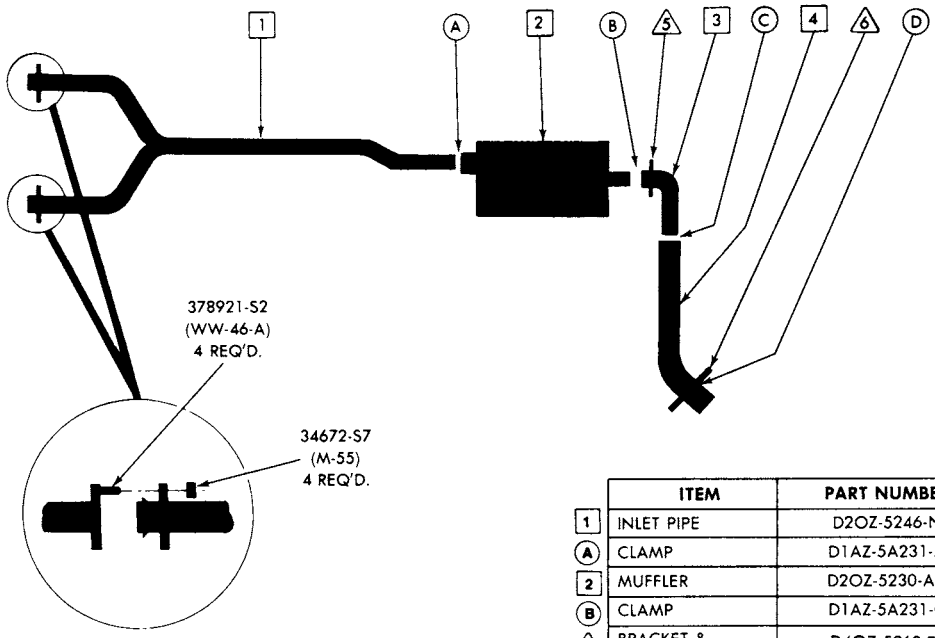

	ITEM	PART NUMBER
1	INLET PIPE	D2OZ-5246-N
A	CLAMP	D1AZ-5A231-A
2	MUFFLER	D2OZ-5230-AA
B	CLAMP	D1AZ-5A231-C
5	BRACKET & INSULATOR ASSY.	D4OZ-5260-E
	★40980-S2 SCREW - HEX HD. 3/8-16 x 1 (2) REQ'D. ATT. BRKT. & INSUL. ASSY. TO UNDERBODY 381877-S2 (UU-52-AF) SCREW - HEX HD. 5/16-18 x 3/4 (2) REQ'D. ATT. BRKT. & INSUL. ASSY. TO OUTLET PIPE	
3	OUTLET PIPE (FRONT)	**D2OZ-5255-C**
C	CLAMP	D1AZ-5A231-A
4	OUTLET PIPE (REAR)	D2OZ-5255-J
6	BRACKET & INSULATOR ASSY.	D2OZ-5260-K
	★40980-S2 SCREW - HEX HD. 3/8-16 x 1 (1) REQ'D. ATT. BRKT. & INSUL. ASSY. TO UNDERBODY	
D	CLAMP	D1AZ-5A231-A

Original equipment muffler and outlet pipe are a welded assembly. To service this assembly you must replace it completely with three parts (muffler and two outlet pipes) used together.

E-D-97

COPYRIGHT © 1986 — FORD MOTOR COMPANY — DEARBORN, MICHIGAN

1973 MONTEGO —8 CYL. 400-2/B STATION WAGON (FROM 1/19/73)

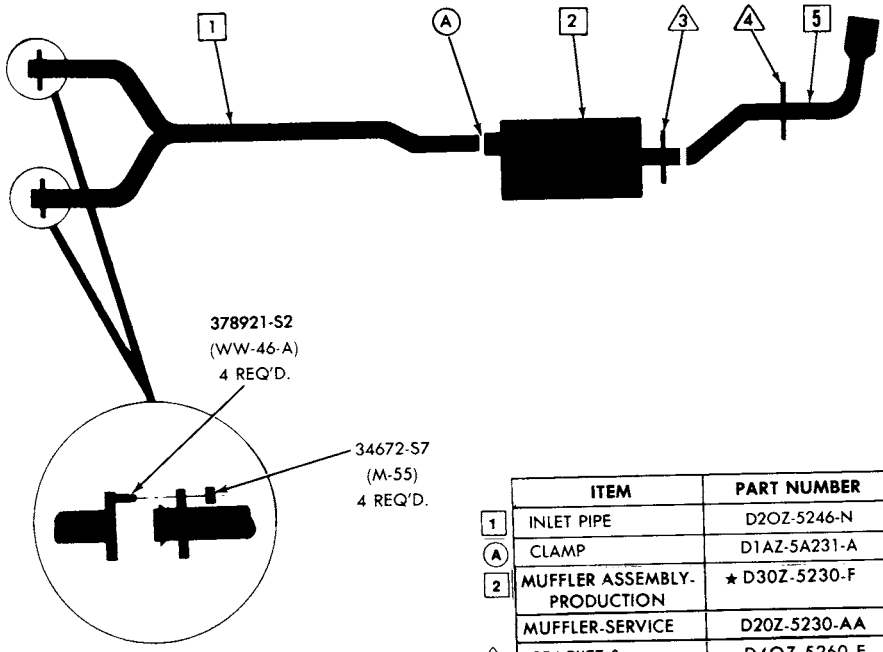

	ITEM	PART NUMBER
1	INLET PIPE	D2OZ-5246-N
A	CLAMP	D1AZ-5A231-A
2	MUFFLER ASSEMBLY-PRODUCTION	★ D30Z-5230-F
	MUFFLER-SERVICE	D20Z-5230-AA
3	BRACKET & INSULATOR ASSY.	D4OZ-5260-E
	★ 40980-S2 SCREW-HEX HD. 3/8-16 x 1 (2) REQ'D. ATT. BRKT. & INSUL. ASSY. TO UNDERBODY 381877-S2 (UU-52-AF) SCREW-HEX HD. 5/16-18 x 3/4 (2) REQ'D. ATT. BRKT. & INSUL. ASSY. TO MUFFLER	
4	BRACKET & INSULATOR ASSY.	D3OZ-5260-A
	★ 40980-S2 SCREW-HEX HD. 3/8-16 x 1 (1) REQ'D. ATT. BRKT. & INSUL. ASSY. TO UNDERBODY ★ DOVA-5299-A PLATE 382062-S2 (UU-52-AA) SCREW - HEX HD. 3/8-16 x 1-1/4 (2) REQ'D. ATT. BRKT. & INSUL. ASSY. & PLATE TO OUTLET PIPE BRKT.	
5	OUTLET PIPE-SERVICE	D30Z-5255-A

1973 MONTEGO—8 CYL. 429-4/B SEDAN & HARDTOP

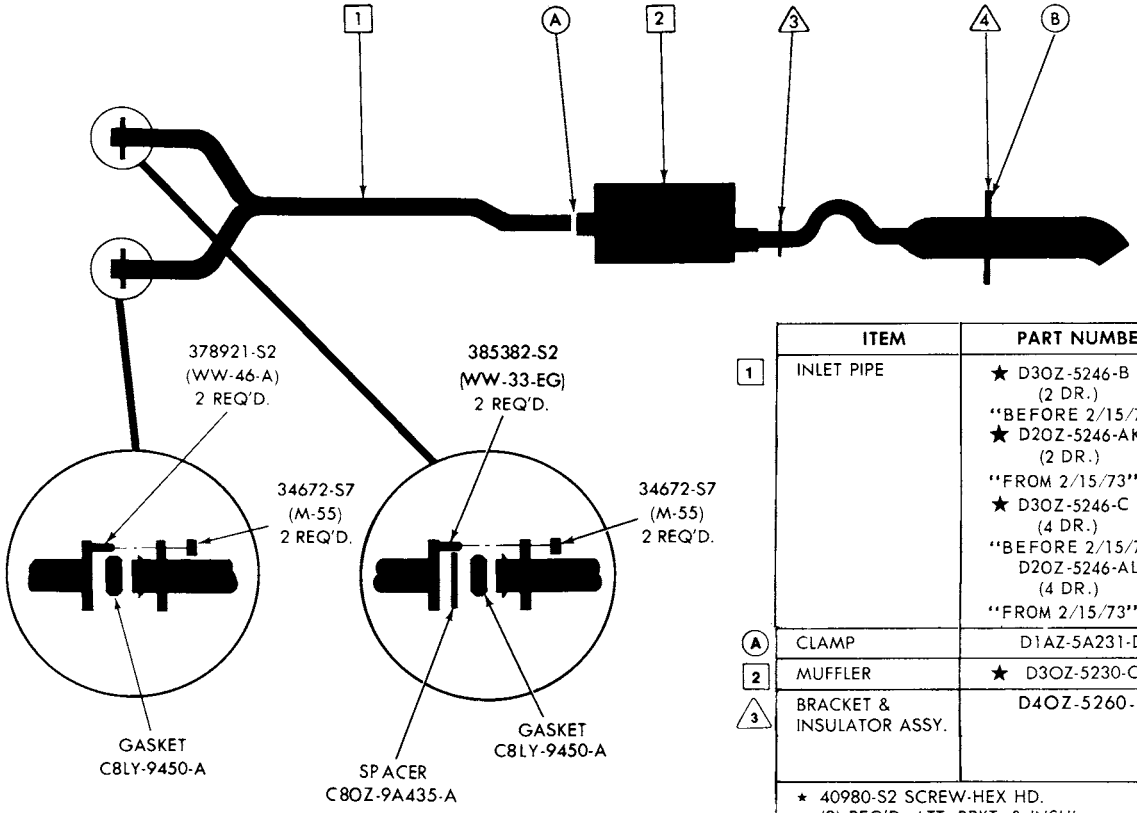

	ITEM	PART NUMBER
1	INLET PIPE	★ D3OZ-5246-B (2 DR.) "BEFORE 2/15/73" ★ D2OZ-5246-AK (2 DR.) "FROM 2/15/73" ★ D3OZ-5246-C (4 DR.) "BEFORE 2/15/73" D2OZ-5246-AL (4 DR.) "FROM 2/15/73"
A	CLAMP	D1AZ-5A231-D
2	MUFFLER	★ D3OZ-5230-C
3	BRACKET & INSULATOR ASSY.	D4OZ-5260-E
	★ 40980-S2 SCREW-HEX HD. (2) REQ'D. ATT. BRKT. & INSUL. ASSY. TO UNDERBODY 381877-S2 (UU-52-AF) SCREW-HEX HD. 5/16-18 x 3/4 (2) REQ'D. ATT. BRKT. & INSUL. ASSY. TO OUTLET PIPE	
4	BRACKET & INSULATOR ASSY.	D2OZ-5260-A
	★ 40980-S2 SCREW-HEX HD. 3/8-16 x 1 (1) REQ'D. ATT. BRKT. & INSUL. ASSY. TO UNDERBODY	
B	CLAMP	C1TT-5A231-D

E-D-98

COPYRIGHT © 1986 — FORD MOTOR COMPANY — DEARBORN, MICHIGAN

1973 MONTEGO—8 CYL. 429-4/B STATION WAGON
(BEFORE 2/22/73)

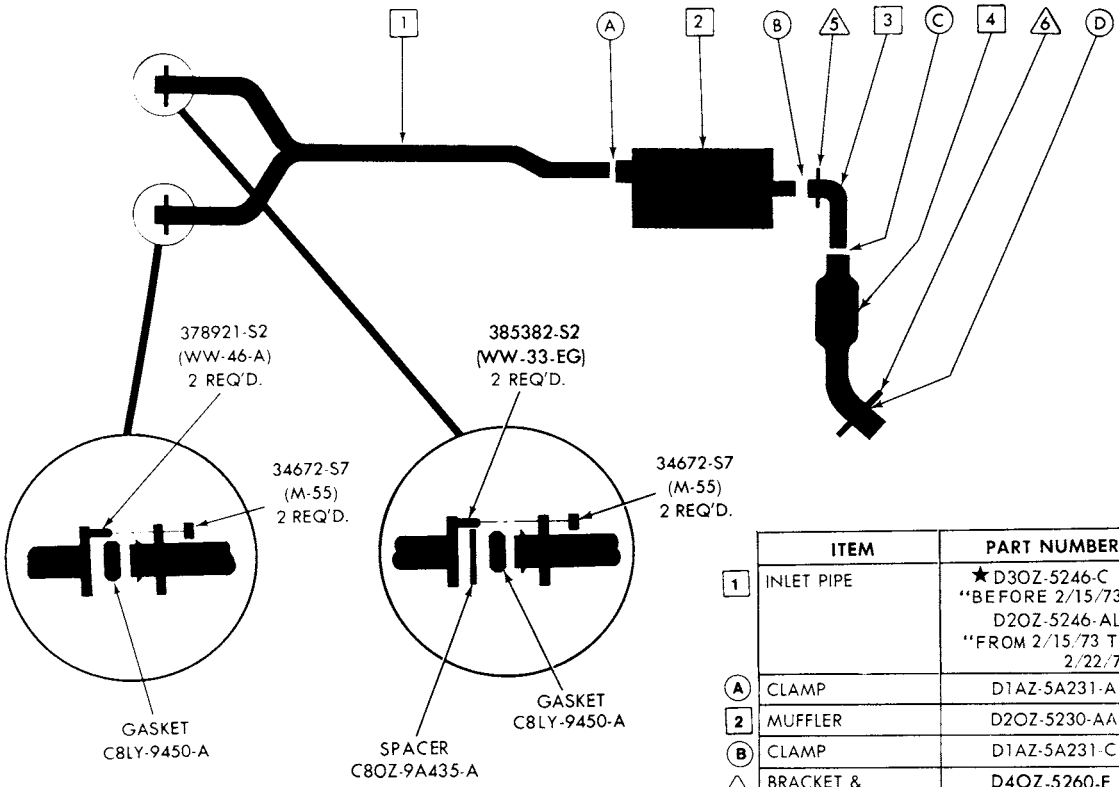

	ITEM	PART NUMBER
1	INLET PIPE	★D3OZ-5246-C "BEFORE 2/15/73" D2OZ-5246-AL "FROM 2/15/73 TO 2/22/73"
A	CLAMP	D1AZ-5A231-A
2	MUFFLER	D2OZ-5230-AA
B	CLAMP	D1AZ-5A231-C
5	BRACKET & INSULATOR ASSY.	D4OZ-5260-E
	★40980-S2 SCREW - HEX HD. 3/8-16 x 1 (2) REQ'D. ATT. BRKT. & INSUL. ASSY. TO UNDERBODY 381877-S2 (UU-52-AF) SCREW - HEX HD. 5/16-18 x 3/4 (2) REQ'D. ATT. BRKT. & INSUL. ASSY. TO OUTLET PIPE	
3	OUTLET PIPE	D2OZ-5255-C
C	CLAMP	D1AZ-5A231-A
4	RESONATOR	★D2OZ-5A289-F
6	BRACKET & INSULATOR ASSY.	D2OZ-5260-K
	★40980-S2 SCREW - HEX HD. 3/8-16 x 1 (1) REQ'D. ATT. BRKT. & INSUL. ASSY. TO UNDERBODY	
D	CLAMP	D1AZ-5A231-A

The service resonator is interchangeable with the original equipment resonator. The service muffler and outlet pipe (front) used together are interchangeable with the original equipment muffler.

1973 MONTEGO —8 CYL. 429-4/B STATION WAGON (FROM 2/22/73)

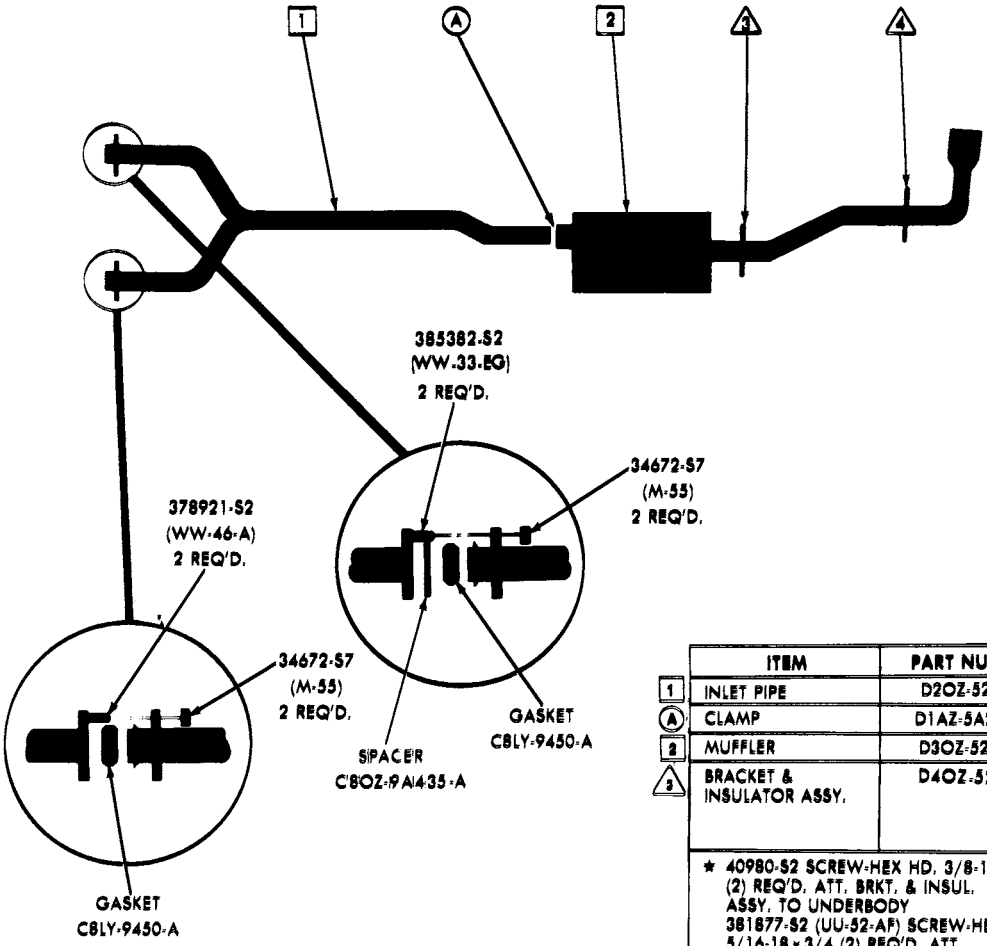

	ITEM	PART NUMBER
1	INLET PIPE	D2OZ-5246-AL
A	CLAMP	D1AZ-5A231-A
2	MUFFLER	D3OZ-5230-G
3	BRACKET & INSULATOR ASSY.	D4OZ-5260-E
	★ 40980-S2 SCREW-HEX HD. 3/8-16 x 1 (2) REQ'D. ATT. BRKT. & INSUL. ASSY. TO UNDERBODY 381877-S2 (UU-52-AF) SCREW-HEX HD. 5/16-18 x 3/4 (2) REQ'D. ATT. BRKT. & INSUL. ASSY. TO MUFFLER	
4	BRACKET & INSULATOR ASSY.	D3OZ-5260-A
	★ 40980-S2 SCREW-HEX HD. 3/8-16 x 1 (1) REQ'D. ATT. BRKT. & INSUL. ASSY. TO UNDERBODY ★ DOVA-5299-A PLATE 382062-S2 (UU-52-AA) SCREW-HEX HD. 3/8-16 x 1-1/4 (2) REQ'D. ATT. BRKT. & INSUL. ASSY. & PLATE TO OUTLET PIPE BRKT.	

E-D-106

COPYRIGHT © 1986 — FORD MOTOR COMPANY — DEARBORN, MICHIGAN

1973 MONTEGO—8 CYL. 460-4/B (POLICE ONLY) SEDAN & HARDTOP

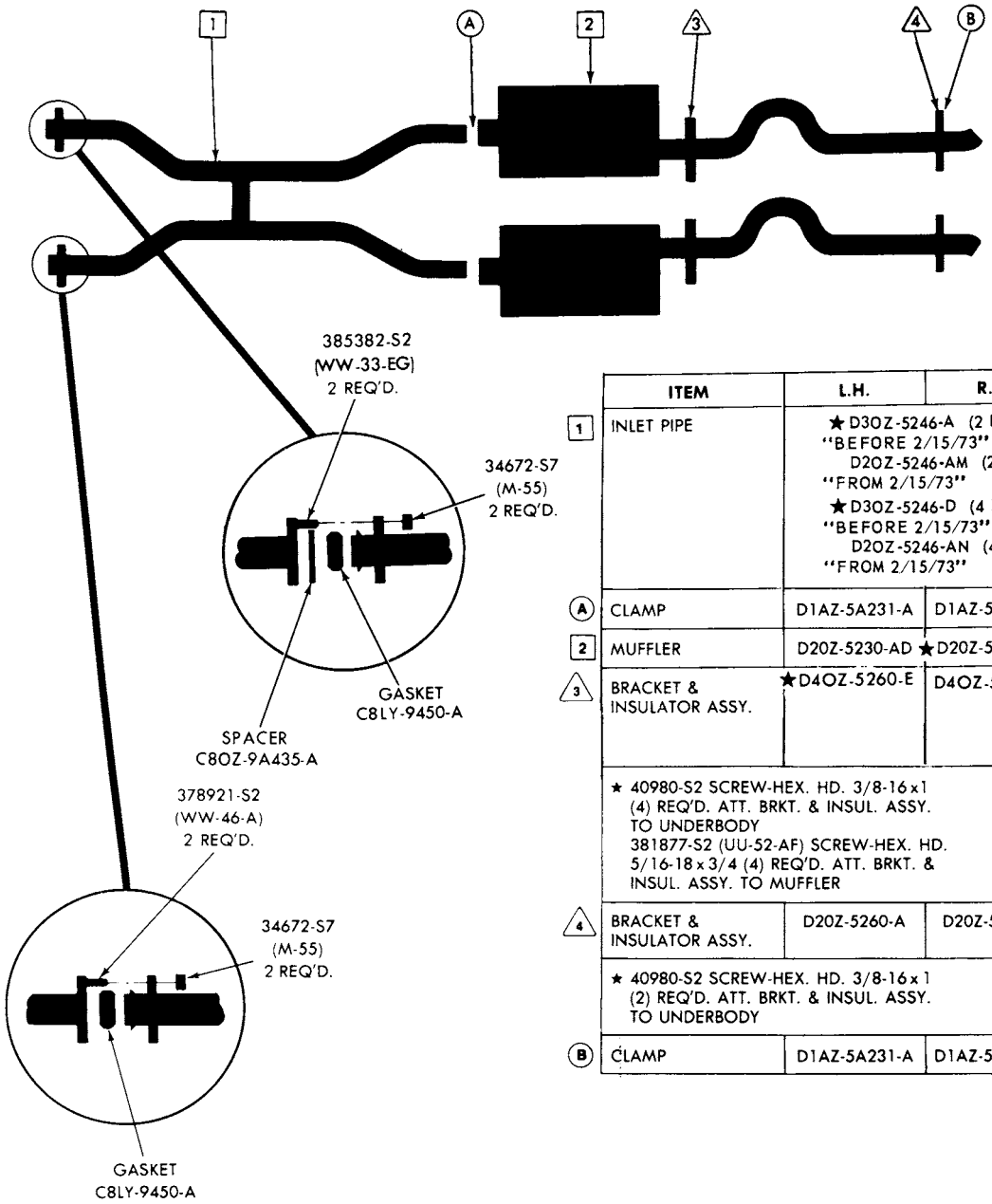

	ITEM	L.H.	R.H.
1	INLET PIPE	★D3OZ-5246-A (2 DR.) "BEFORE 2/15/73" D2OZ-5246-AM (2 DR.) "FROM 2/15/73" ★D3OZ-5246-D (4 DR.) "BEFORE 2/15/73" D2OZ-5246-AN (4 DR.) "FROM 2/15/73"	
A	CLAMP	D1AZ-5A231-A	D1AZ-5A231-A
2	MUFFLER	D20Z-5230-AD	★D20Z-5230-AE
3	BRACKET & INSULATOR ASSY.	★D4OZ-5260-E	D4OZ-5260-E
	★ 40980-S2 SCREW-HEX. HD. 3/8-16x1 (4) REQ'D. ATT. BRKT. & INSUL. ASSY. TO UNDERBODY 381877-S2 (UU-52-AF) SCREW-HEX. HD. 5/16-18x3/4 (4) REQ'D. ATT. BRKT. & INSUL. ASSY. TO MUFFLER		
4	BRACKET & INSULATOR ASSY.	D20Z-5260-A	D20Z-5260-A
	★ 40980-S2 SCREW-HEX. HD. 3/8-16x1 (2) REQ'D. ATT. BRKT. & INSUL. ASSY. TO UNDERBODY		
B	CLAMP	D1AZ-5A231-A	D1AZ-5A231-A

1973 LINCOLN—8 CYL. 460-4/B

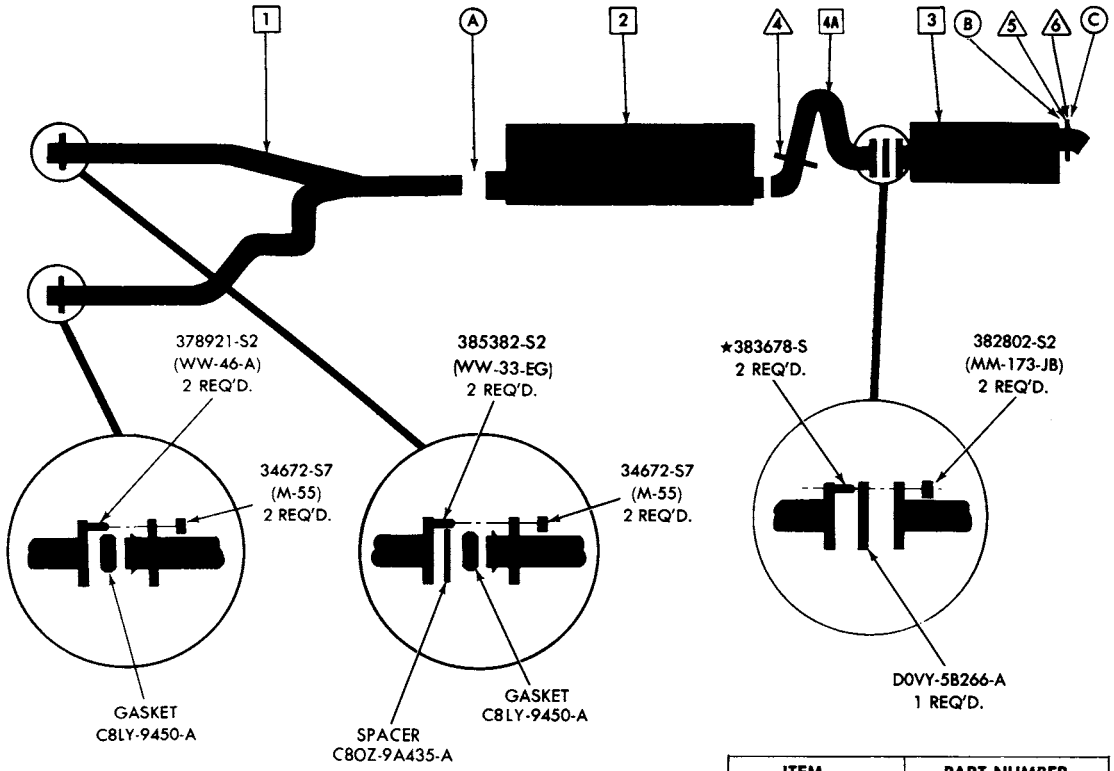

	ITEM	PART NUMBER
1	INLET PIPE	D3VY-5246-A "Before 2/15/73" D2VY-5246-A "From 2/15/73"
A	CLAMP	D1AZ-5A231-D
2	MUFFLER	★ D0VY-5230-B
4A	INTERMEDIATE PIPE	D0VY- 5A212-A (SERVICE)

	ITEM	PART NUMBER
4	BRACKET & INSULATOR ASSY.	D0VY-5260-B
	381877-S2 (UU-52-AF) SCREW - HEX HD. 5/16-18 x 3/4 (2) REQ'D. ATT. BRKT. TO MUFFLER ★D0VA-5299-A PLATE ASSY. ★40980-S2 SCREW - HEX HD. 3/8-16 x 1 (2) REQ'D, ATT. PLATE & BRKT. TO BODY	
3	RESONATOR	★ D0VY-5212-A "BEFORE 1/17/73" ★ D3VY-5212-A "FROM 1/17/73"
B	CLAMP	D1AZ-5A231-D
	ATT. CLAMP TO BRKT. ASSY.	
5	BRACKET & INSULATOR ASSY.	D0VY-5260-C "BEFORE 1/17/73" D3VY-5260-A "FROM 1/17/73"
6	BRACKET RESONATOR INSULATOR	D3VY-5277-A "FROM 1/17/73"
	381877-S2 (UU-52-AF) SCREW - HEX HD. 5/16-18 x 3/4 (2) REQ'D. ATT. BRKT. TO BODY	
C	CLAMP	★ D0VY-5266-A

E-J-10

COPYRIGHT © 1986 — FORD MOTOR COMPANY — DEARBORN, MICHIGAN

1973 COUGAR—8 CYL. 351-2/B HARDTOP & CONVERTIBLE

(USED FOR ALL REAR AXLE RATIOS BEFORE 2/5/73)
(USED FOR ALL REAR AXLE RATIOS EXC. 3.25 FROM 2/5/73)

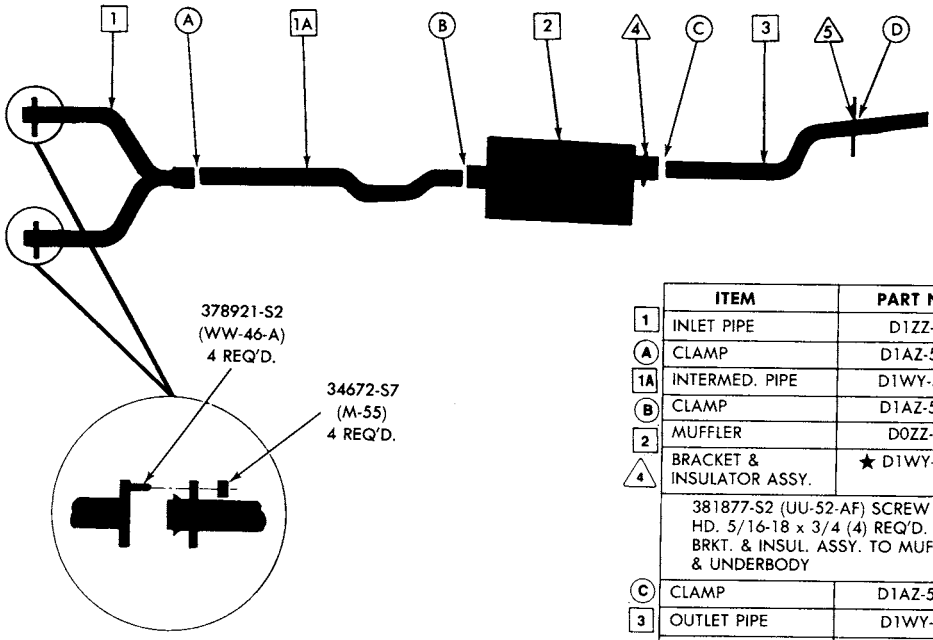

	ITEM	PART NUMBER
1	INLET PIPE	D1ZZ-5246-B
A	CLAMP	D1AZ-5A231-A
1A	INTERMED. PIPE	D1WY-5A212-A
B	CLAMP	D1AZ-5A231-A
2	MUFFLER	D0ZZ-5230-R
4	BRACKET & INSULATOR ASSY.	★ D1WY-5260-A
	381877-S2 (UU-52-AF) SCREW - HEX HD. 5/16-18 x 3/4 (4) REQ'D. ATT. BRKT. & INSUL. ASSY. TO MUFFLER & UNDERBODY	
C	CLAMP	D1AZ-5A231-C
3	OUTLET PIPE	D1WY-5255-A
5	BRACKET & INSULATOR ASSY.	D1ZZ-5260-A
	381877-S2 (UU-52-AF) SCREW - HEX HD. 5/16-18 x 3/4 (2) REQ'D. ATT. BRKT. & INSUL. ASSY. TO UNDERBODY	
D	CLAMP	D1AZ-5A231-C

Original equipment and original service muffler, intermediate pipe and outlet pipe are a welded assembly. To service this assembly you must replace it with all three parts (muffler, intermediate pipe and outlet pipe) used together.

E-B-21

COPYRIGHT © 1986 — FORD MOTOR COMPANY — DEARBORN, MICHIGAN

1973 COUGAR—8 CYL. 351-2/B HARDTOP & CONVERTIBLE

(USED FOR 3.25 REAR AXLE RATIO FROM 2/5/73)

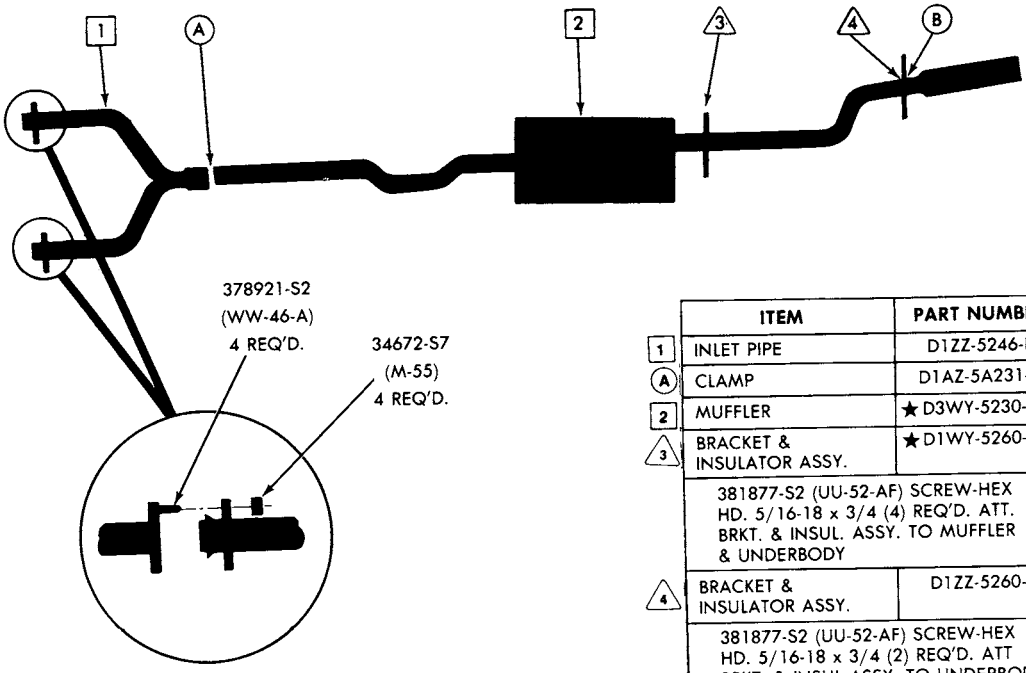

	ITEM	PART NUMBER
1	INLET PIPE	D1ZZ-5246-B
A	CLAMP	D1AZ-5A231-A
2	MUFFLER	★ D3WY-5230-A
3	BRACKET & INSULATOR ASSY.	★ D1WY-5260-A
	381877-S2 (UU-52-AF) SCREW-HEX HD. 5/16-18 x 3/4 (4) REQ'D. ATT. BRKT. & INSUL. ASSY. TO MUFFLER & UNDERBODY	
4	BRACKET & INSULATOR ASSY.	D1ZZ-5260-A
	381877-S2 (UU-52-AF) SCREW-HEX HD. 5/16-18 x 3/4 (2) REQ'D. ATT BRKT. & INSUL ASSY. TO UNDERBODY	
B	CLAMP	D1AZ-5A231-A

1973 COUGAR—8 CYL. 351-4/B HARDTOP & CONVERTIBLE

(USED FOR ALL REAR AXLE RATIOS BEFORE 2/5/73)
(USED FOR ALL REAR AXLE RATIOS EXC. 3.50 ON ALL MODELS WITH M/T & MODEL 65 WITH A/T FROM 2/5/73)

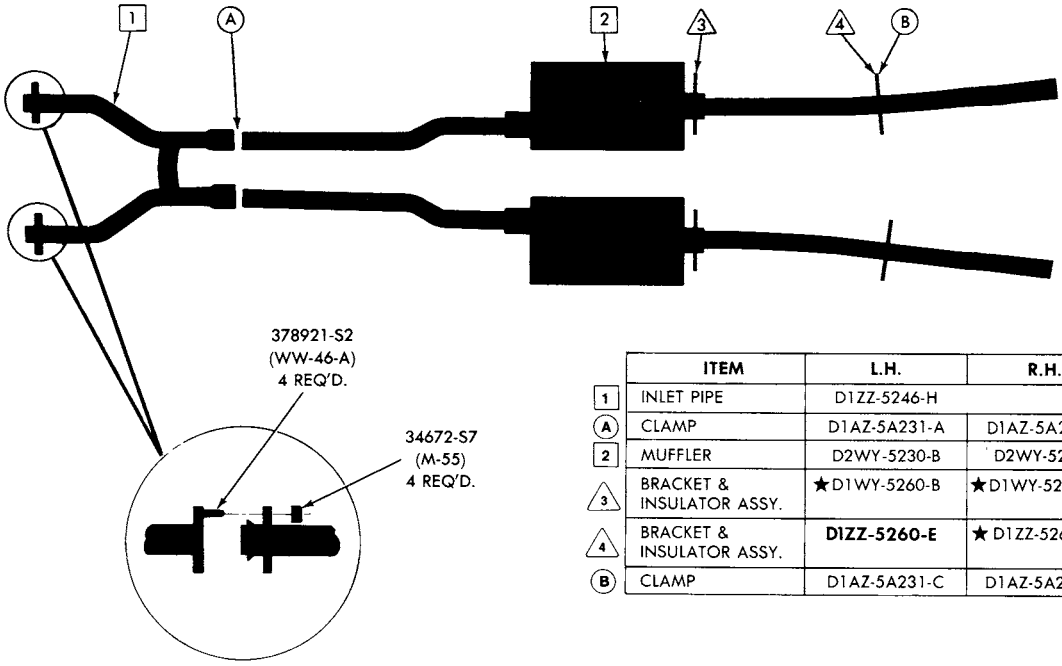

	ITEM	L.H.	R.H.
1	INLET PIPE	D1ZZ-5246-H	
A	CLAMP	D1AZ-5A231-A	D1AZ-5A231-A
2	MUFFLER	D2WY-5230-B	D2WY-5230-A
3	BRACKET & INSULATOR ASSY.	★D1WY-5260-B	★D1WY-5260-A
4	BRACKET & INSULATOR ASSY.	**D1ZZ-5260-E**	★D1ZZ-5260-B
B	CLAMP	D1AZ-5A231-C	D1AZ-5A231-C

E-B-22

COPYRIGHT © 1986 — FORD MOTOR COMPANY — DEARBORN, MICHIGAN

1973 COUGAR—8 CYL. 351-4/B HARDTOP & CONVERTIBLE

(USED FOR 3.50 REAR AXLE RATIO ON ALL MODELS
WITH M/T AND MODEL 65 WITH A/T FROM 2/5/73)

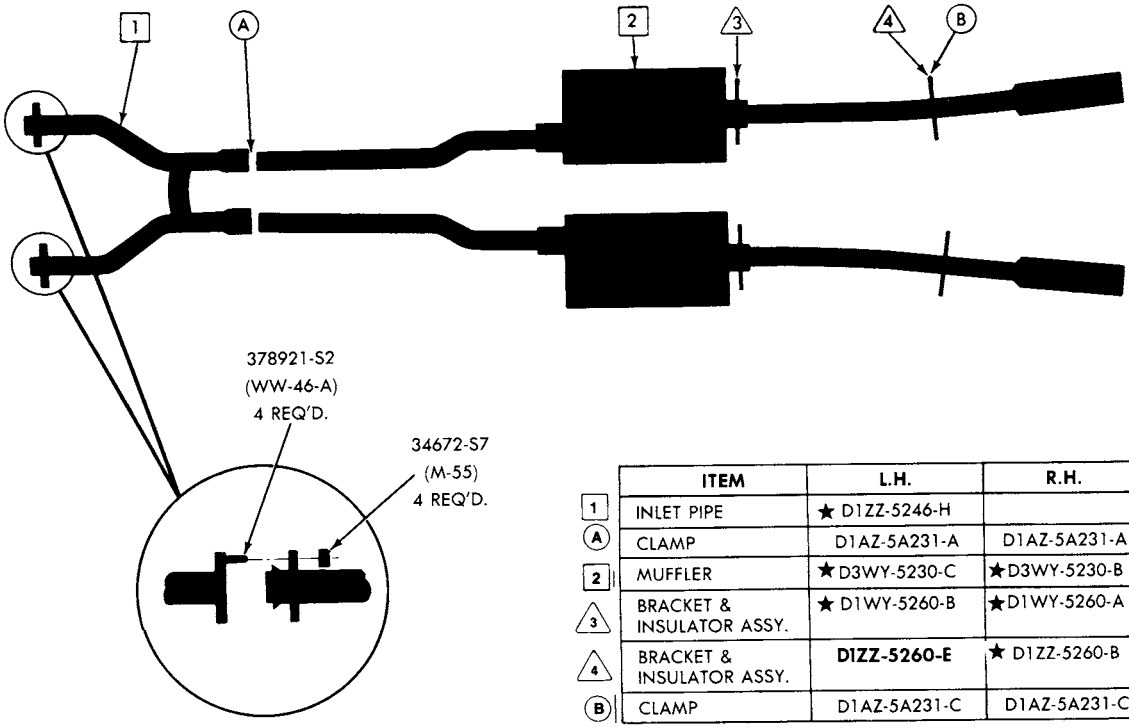

	ITEM	L.H.	R.H.
1	INLET PIPE	★ D1ZZ-5246-H	
A	CLAMP	D1AZ-5A231-A	D1AZ-5A231-A
2	MUFFLER	★ D3WY-5230-C	★ D3WY-5230-B
3	BRACKET & INSULATOR ASSY.	★ D1WY-5260-B	★ D1WY-5260-A
4	BRACKET & INSULATOR ASSY.	**D1ZZ-5260-E**	★ D1ZZ-5260-B
B	CLAMP	D1AZ-5A231-C	D1AZ-5A231-C

1973 CAPRI—4 CYL. 122-2/B (2000 cc)

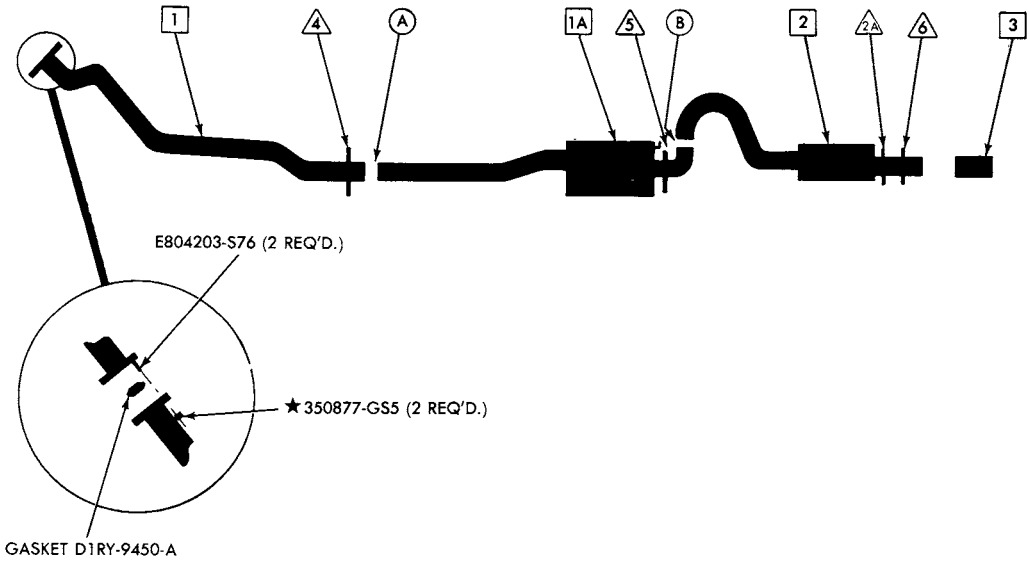

	ITEM	PART NUMBER
	STUD-INLET PIPE TO MANIFOLD (2) REQ'D.	E-804203-S76
	GASKET	D1RY-9450-A
	NUT-INLET PIPE STUD (2) REQ'D.	E620414-S5
1	INLET PIPE (RESONATOR)	D2RY-5246-E
4	SUPPORT	D1RY-5277-J NOTE 1
	BRACKET-RESONATOR INLET PIPE	D1RY-5277-G NOTE 1 #71EB-5K249-AB, #71EB-5K222-AA
	*E602186-S72 BOLT-HEX HD. M8 x 16 (1) REQ'D. ATT. SUPPORT TO BRACKET *E602186-S72 BOLT-HEX HD. M8 x 16 (2) REQ'D. ATT. SUPPORT TO BRKT.	
A	U-BOLT	D1RY-5A231-G
	E350877-GS5 NUT-LOCK M10 x 1.50 (METRIC COARSE) (2) REQ'D. ATT. CLAMP TO U-BOLT.	
1A	RESONATOR	D3RY-5212-C
5	BRACKET-RESONATOR	D2RY-5277-G #71EB-5A204-KA
	U-BOLT-RESONATOR	D2RY-5C223-B #71EB-5C223-BA
	CLAMP-RESONATOR SUPPORT	D2RY-5A215-B #71EB-5A215-AA
	E602185-S72 BOLT-HEX HD. 8M x 1.25 x 14 (METRIC FINE) 2 REQ'D. E630173-S71 WASHER-LOCK M8 (METRIC) (2) REQ'D. ATT. BRKT. RESONATOR TO UNDERBODY E620413-S72 (AM-6) NUT M8 x 1.25 (METRIC FINE) (1) REQ'D. ATT. CLAMP TO U-BOLT	

	ITEM	PART NUMBER
	INSULATOR (RUBBER)	D2RY-5281-A
B	U-BOLT	★D1RY-5A231-G r/b E0RZ-5A231-B
	CLAMP	D2RY-5270-A
	E350877-GS5 NUT-LOCK M10 x 1.50 (METRIC COARSE) (2) REQ'D. ATT. CLAMP TO U-BOLT	
	INSULATOR MUFFLER BRACKET	★D3RY-5278-A
2	MUFFLER	D3RY-5230-C
2A	MUFFLER BRACKET	D1RY-5277-U
6	BOLT	D2RY-5A261-A
	E630031-S71 WASHER-FLAT M10 (METRIC) (1 REQ'D.) ★E350877-GS5 NUT-LOCK M10 x 1.50 (METRIC COARSE) (1) REQ'D. ATT. MUFFLER TO FRAME	
	INSULATOR (RUBBER)	D2RY-5281-A
	U-BOLT	D2RY-5C223-C #71EB-5C223-GA
	CLAMP	D2RY-5A215-C #71EB-5A215-DA
	E620413-S72(AM-6) NUT M8 x 1.25 (METRIC FINE) (1) REQ'D. ATT. CLAMP TO U-BOLT	
3	OUTLET PIPE EXTENSION	D1RY-5255-B
	KIT-EXHAUST SYSTEM MOUNTING CONVERSION - USE TO CORRECT EXHAUST BOOM	D2RY-5K272-A

NOTE 1 - EARLY STYLE REAR ENGINE SUPPORT (6068) INCLUDED A RESONATOR BRACKET. FOR SERVICE USE D3RY-6068-A, D1RY-5277-G AND D1RY-5277-J

E-M-7

COPYRIGHT © 1986 — FORD MOTOR COMPANY — DEARBORN, MICHIGAN

1973 CAPRI—6 CYL. 159-2/B (2600 cc)

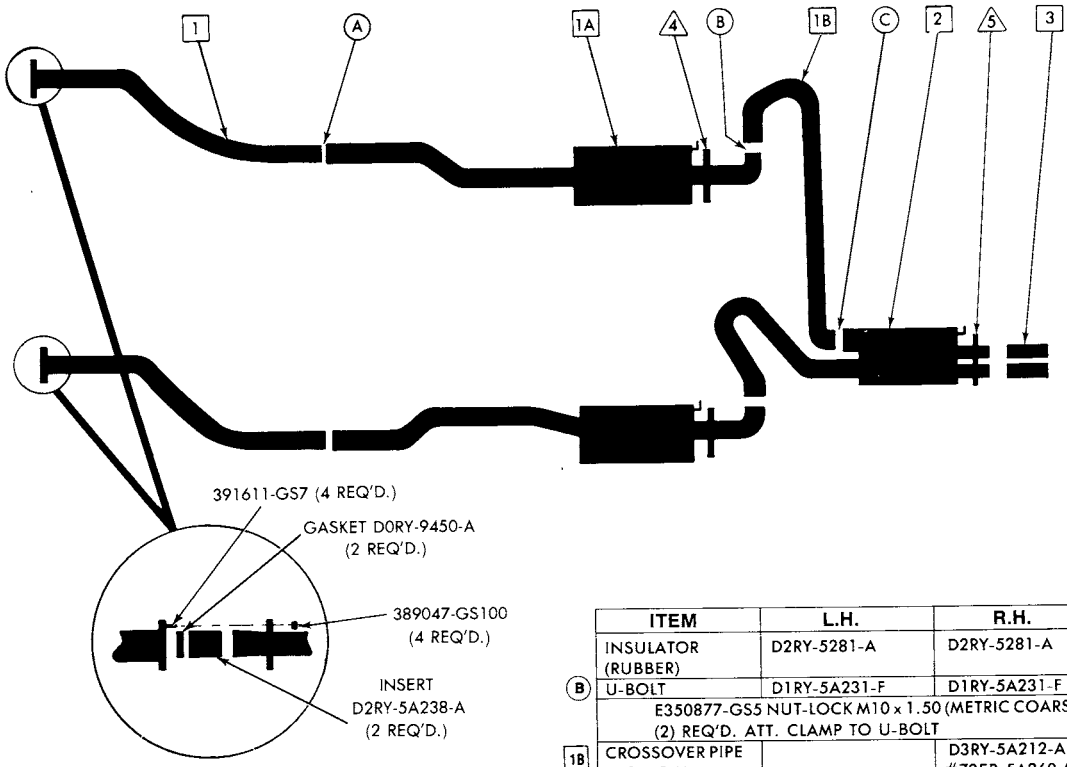

	ITEM	L.H.	R.H.
1	INLET PIPE (RESONATOR)	D2RY-5246-D	D2RY-5246-C
A	U-BOLT	D1RY-5A231-G	D1RY-5A231-G
	CLAMP	D2RY-5270-A	D2RY-5270-A
	E350877-GS5 NUT-LOCK M10 x 1.50 (METRIC COARSE) (4) REQ'D. ATT. CLAMP TO U-BOLT		
1A	RESONATOR	D3RY-5212-B	D3RY-5212-A
4	BRACKET-RESONATOR	D2RY-5277-G #71EB-5A204-KA	D2RY-5277-F #71EB-5A204-LA
	U-BOLT RESONATOR	D2RY-5C223-B #71EB-5C223-BA	D2RY-5C223-A #71EB-5C223-LA
	CLAMP-RESONATOR SUPPORT	D2RY-5A215-B #71EB-5A215-AA	D2RY-5A215-A #71EB-5A215-JA
	E602185-S72 BOLT-HEX HD. 8M x 1.25 x 14 (METRIC FINE) (4) REQ'D. E6030173-S71 WASHER-LOCK M8 (METRIC) (4) REQ'D. ATT. BRKT. TO UNDERBODY E620413-S72 (AM-6) NUT-M8 x 1.25 (METRIC FINE) (1) REQ'D. ATT. L.H. CLAMP TO U-BOLT E600214-S72 BOLT-HEX HD. 8M x 1.25 x 45 (METRIC FINE) (1) REQ'D. ATT. R.H. CLAMP TO U-BOLT		

	ITEM	L.H.	R.H.
	INSULATOR (RUBBER)	D2RY-5281-A	D2RY-5281-A
B	U-BOLT	D1RY-5A231-F	D1RY-5A231-F
	E350877-GS5 NUT-LOCK M10 x 1.50 (METRIC COARSE) (2) REQ'D. ATT. CLAMP TO U-BOLT		
1B	CROSSOVER PIPE FROM R.H. RESONATOR TO MUFFLER		D3RY-5A212-A #73EB-5A260-AA AB
C	U-BOLT	D1RY-5A231-F	
	E350877-GS5 NUT-LOCK M10 x 1.50 (METRIC COARSE) (2) REQ'D. ATT. CLAMP TO U-BOLT		
	INSULATOR MUFFLER BRACKET	★D3RY-5278-A	
2	MUFFLER	D3RY-5230-A	
5	BRACKET - MUFFLER HANGER	D2RY-5A261-A "BEFORE 6/1/73" D4RY-5A261-B "FROM 6/1/73"	
	E630027-S71 (AX-13) WASHER-FLAT M8 (METRIC) E350877-GS5 NUT-LOCK M10 x 1.50 (METRIC COARSE) (1) REQ'D. ATT. MUFFLER TO FRAME		
	INSULATOR (RUBBER)	D2RY-5281-A	
	U-BOLT	D2RY-5C223-C #71EB-5C223-GA	
	CLAMP	D2RY-5A215-C #71EB-5A215-DA	
	E620413-S72 (AM-6) NUT M8 x 1.25 (METRIC FINE) (1) REQ'D. ATT. CLAMP TO U-BOLT		
3	OUTLET PIPE TRIM	D2RY-5263-A	D2RY-5263-A
	KIT-EXHAUST SYSTEM MOUNTING CONVERSION-USE TO CORRECT EXHAUST BOOM	D2RY-5K272-C	

1973 MARK IV—8 CYL. 460-4/B

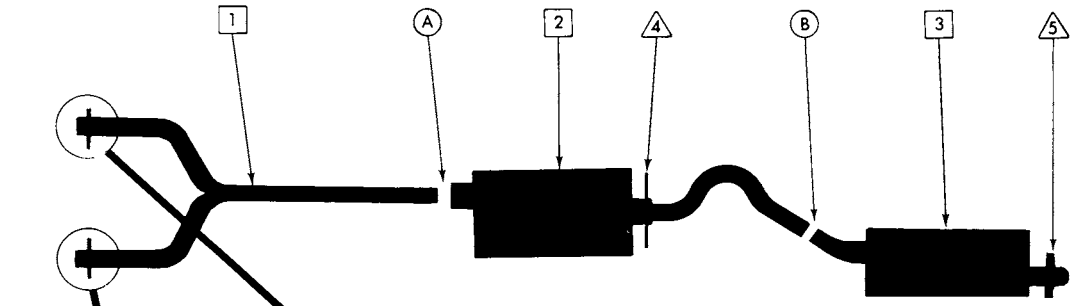

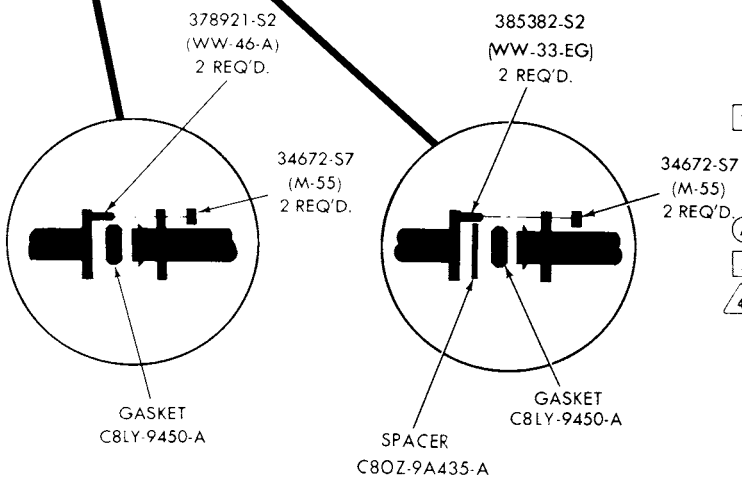

	ITEM	PART NUMBER
1	INLET PIPE	D3SZ-5246-B "BEFORE 2/15/73" D3SZ-5246-A "FROM 2/15/73"
A	CLAMP	D1AZ-5A231-D
2	MUFFLER	D2SZ-5230-E
4	BRACKET & INSULATOR ASSY.	D4OZ-5260-E
	★C9AA-5299-A PLATE ★40980-S2 SCREW - HEX HD. 3/8-16 x 1 (2) REQ'D. ATT. BRKT. & INSUL. ASSY. TO UNDERBODY 381877-S2 (UU-52-AF) SCREW - HEX HD. 5/16-18 x 3/4 (2) REQ'D. ATT. BRKT. & INSUL. ASSY. TO MUFFLER	
B	CLAMP	D1AZ-5A231-A
3	RESONATOR	D3SZ-5A289-A NOTE 1 ★ D3SZ-5A289-B NOTE 2
5	BRACKET & INSULATOR ASSY.	D2SZ-5260-D
	★40980-S2 SCREW - HEX HD. 3/8-16 x 1 (1) REQ'D. ATT. BRKT. & INSUL. ASSY. TO UNDERBODY 381877-S2 (UU-52-AF) SCREW - HEX HD. 5/16-18 x 3/4 (2) REQ'D. ATT. BRKT. TO INSUL. ASSY. TO RESONATOR ASSY.	

Original equipment muffler and resonator assembly are a welded assembly. To service this assembly you must replace it with both parts (muffler and resonator assembly) used together.

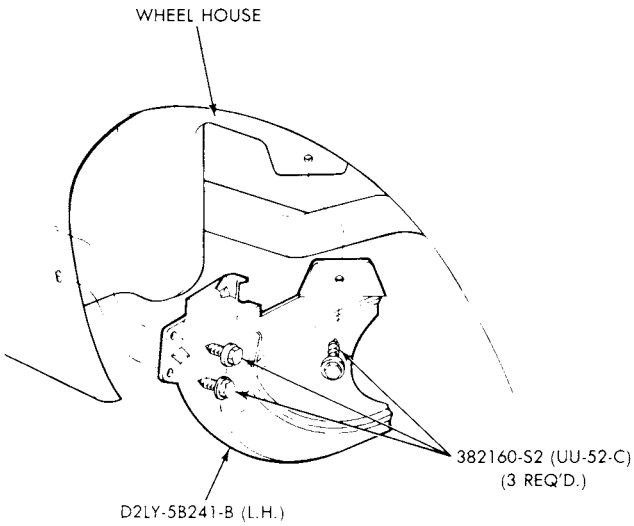

E-K-5 MUFFLER SPLASH SHIELD

NOTE 1 - Used for all Rear Axle Ratios Before 1/17/73
Used for all Rear Axle Ratios Exc. 3.25 and Trailer Towing Pkg. From 1/17/73
NOTE 2 - Used for 3.25 Rear Axle Ratio and Trailer Towing Pkg. From 1/17/73

COPYRIGHT © 1986 — FORD MOTOR COMPANY — DEARBORN, MICHIGAN

1973 COMET—6 CYL. 200-1/B & 250-1/B
(BEFORE 7/5/73)

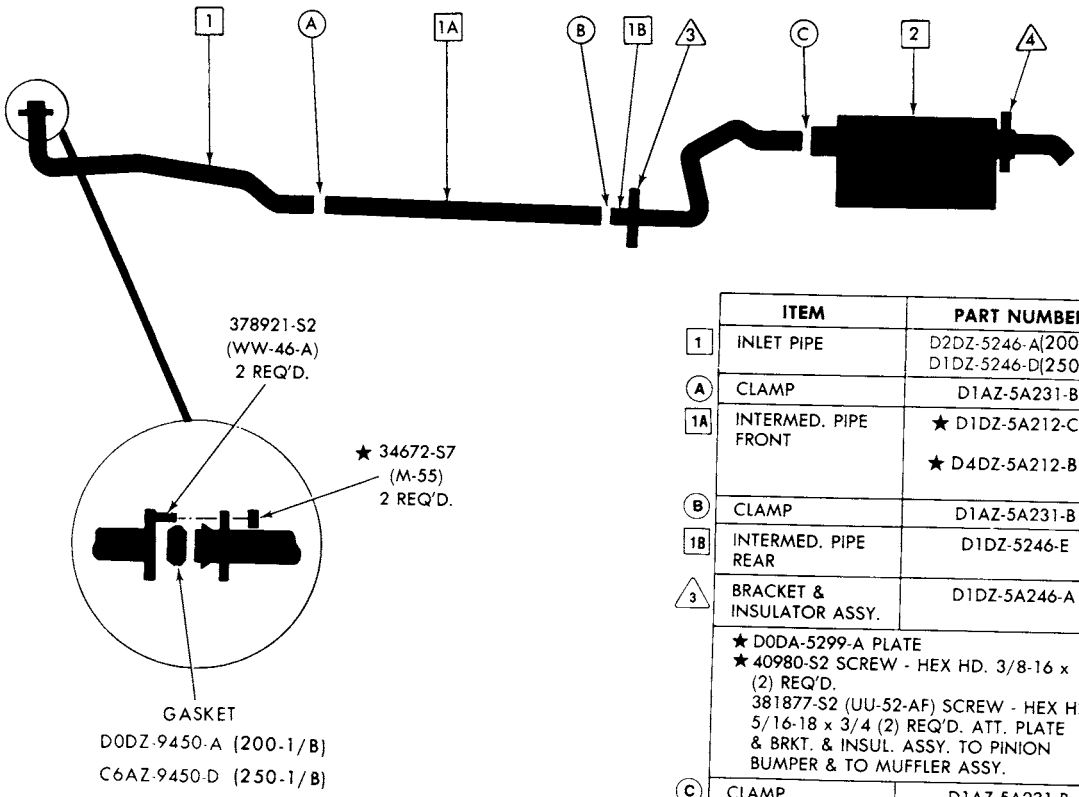

	ITEM	PART NUMBER
1	INLET PIPE	D2DZ-5246-A(200-1/B) D1DZ-5246-D(250-1/B)
A	CLAMP	D1AZ-5A231-B
1A	INTERMED. PIPE FRONT	★ D1DZ-5A212-C ★ D4DZ-5A212-B
B	CLAMP	D1AZ-5A231-B
1B	INTERMED. PIPE REAR	D1DZ-5246-E
3	BRACKET & INSULATOR ASSY.	D1DZ-5A246-A
	★ D0DA-5299-A PLATE ★ 40980-S2 SCREW - HEX HD. 3/8-16 x 1 (2) REQ'D. 381877-S2 (UU-52-AF) SCREW - HEX HD. 5/16-18 x 3/4 (2) REQ'D. ATT. PLATE & BRKT. & INSUL. ASSY. TO PINION BUMPER & TO MUFFLER ASSY.	
C	CLAMP	D1AZ-5A231-B
2	MUFFLER	D1DZ-5230-L
4	BRACKET & INSULATOR ASSY.	D1DZ-5260-A
	381877-S2 (UU-52-AF) SCREW - HEX HD. 5/16-18 x 3/4 (4) REQ'D. ATT. BRKT. & INSUL. ASSY. TO MUFFLER & UNDERBODY	

Original equipment muffler and intermediate pipe are a welded assembly. To service this assembly you must replace it completely with three parts (muffler and two intermediate pipes) used together.

COPYRIGHT © 1986 — FORD MOTOR COMPANY — DEARBORN, MICHIGAN

1973/79 LINCOLN-MERCURY CARS

1973 COMET — 6 CYL. 200-1/B & 250-1/B WITHOUT RESONATOR (FROM 7/5/73)

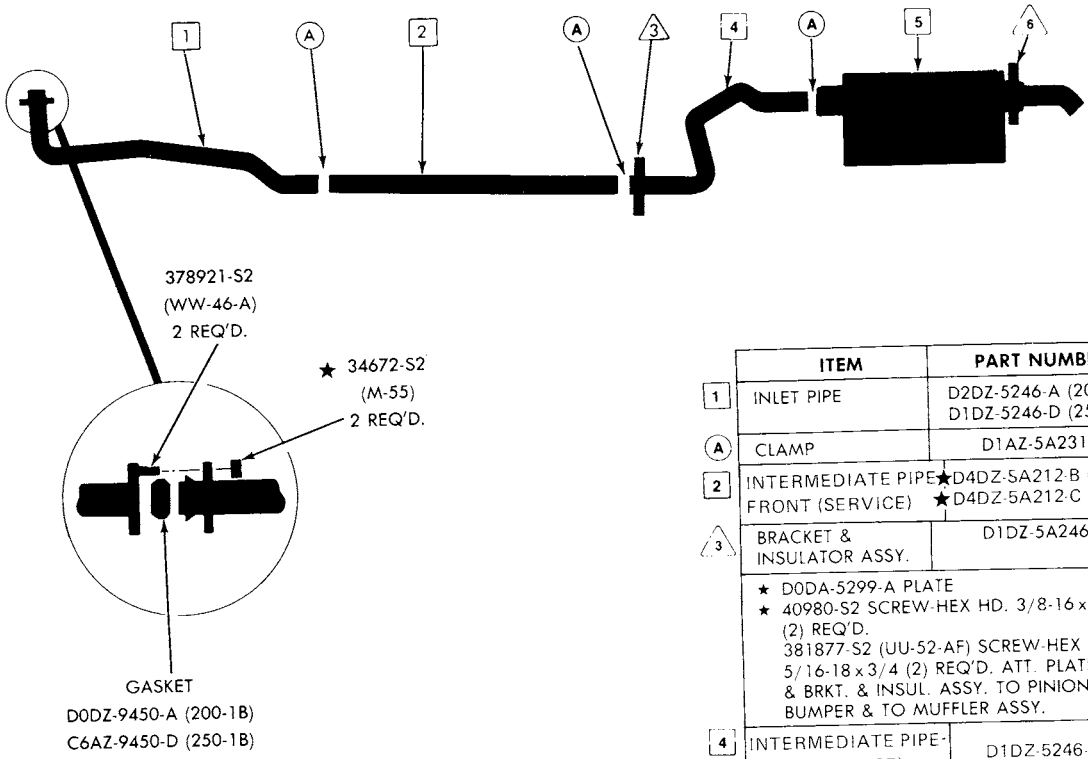

	ITEM	PART NUMBER
1	INLET PIPE	D2DZ-5246-A (200-1B) D1DZ-5246-D (250-1B)
A	CLAMP	D1AZ-5A231-B
2	INTERMEDIATE PIPE-FRONT (SERVICE)	★D4DZ-5A212-B (2DR.) ★D4DZ-5A212-C (4DR.)
3	BRACKET & INSULATOR ASSY.	D1DZ-5A246-A
	★ D0DA-5299-A PLATE ★ 40980-S2 SCREW-HEX HD. 3/8-16 x 1 (2) REQ'D. 381877-S2 (UU-52-AF) SCREW-HEX HD. 5/16-18 x 3/4 (2) REQ'D. ATT. PLATE & BRKT. & INSUL. ASSY. TO PINION BUMPER & TO MUFFLER ASSY.	
4	INTERMEDIATE PIPE-REAR (SERVICE)	D1DZ-5246-E
5	MUFFLER (PRODUCTION)	★ D4DZ-5230-B (2 DR.) ★ D4DZ-5230-A (4 DR.)
	MUFFLER (SERVICE)	D1DZ-5230-L
6	BRACKET & INSULATOR ASSY.	D1DZ-5260-A
	381877-S2 (UU-52-AF) SCREW-HEX HD. 5/16-18 x 3/4 (4) REQ'D. ATT. BRKT. & INSUL. ASSY. TO MUFFLER & UNDERBODY	

1973 COMET — 6 CYL. 200-1/B & 250-1/B WITH RESONATOR (FROM 7/5/73) (NOTE 1)

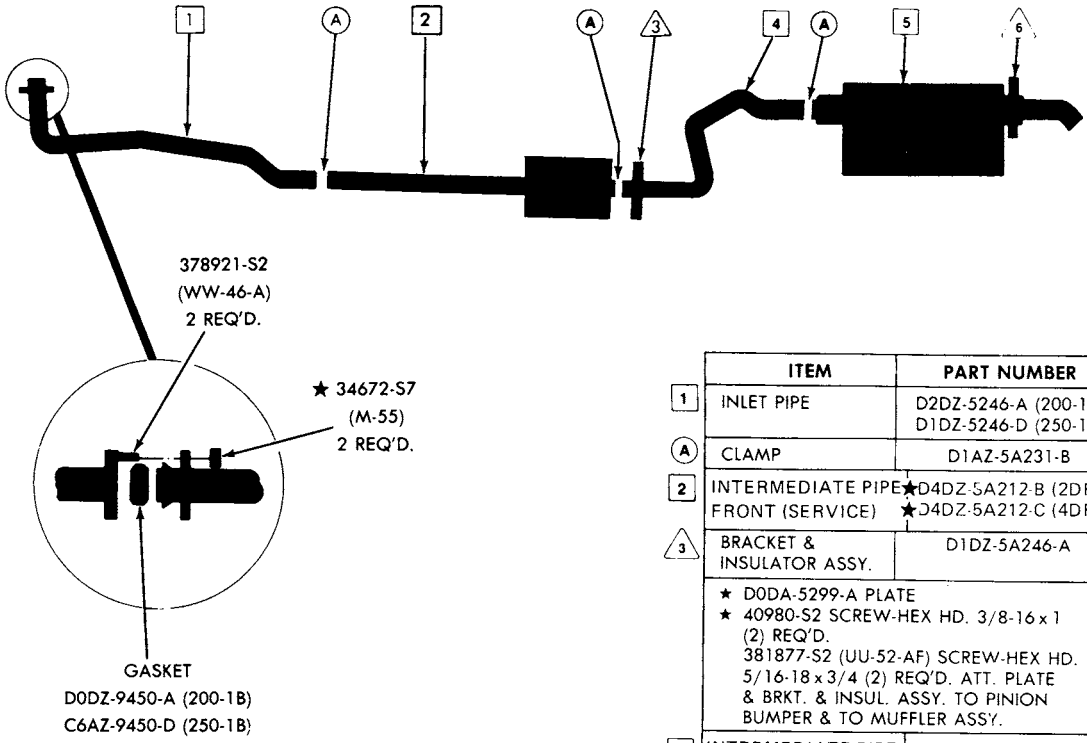

	ITEM	PART NUMBER
1	INLET PIPE	D2DZ-5246-A (200-1B) D1DZ-5246-D (250-1B)
A	CLAMP	D1AZ-5A231-B
2	INTERMEDIATE PIPE FRONT (SERVICE)	★D4DZ-5A212-B (2DR.) ★D4DZ-5A212-C (4DR.)
3	BRACKET & INSULATOR ASSY.	D1DZ-5A246-A
	★ D0DA-5299-A PLATE ★ 40980-S2 SCREW-HEX HD. 3/8-16 x 1 (2) REQ'D. 381877-S2 (UU-52-AF) SCREW-HEX HD. 5/16-18 x 3/4 (2) REQ'D. ATT. PLATE & BRKT. & INSUL. ASSY. TO PINION BUMPER & TO MUFFLER ASSY.	
4	INTERMEDIATE PIPE REAR (SERVICE)	D1DZ-5246-E
5	MUFFLER & RESONATOR (PRODUCTION)	★ D4DZ-5230-E (2 DR.) ★ D4DZ-5230-F (4 DR.)
	MUFFLER (SERVICE)	D1DZ-5230-L
6	BRACKET & INSULATOR ASSY.	D1DZ-5260-A
	381877-S2 (UU-52-AF) SCREW-HEX HD. 5/16-18 x 3/4 (4) REQ'D. ATT. BRKT. & INSUL. ASSY. TO MUFFLER & UNDERBODY	

NOTE 1: SERVICE ONLY SYSTEM DOES NOT INCORPORATE RESONATOR

E-P-15

COPYRIGHT © 1986 — FORD MOTOR COMPANY — DEARBORN, MICHIGAN

1973/79 LINCOLN-MERCURY CARS

1973 COMET—8 CYL. 302-2/B
(BEFORE 7/5/73)

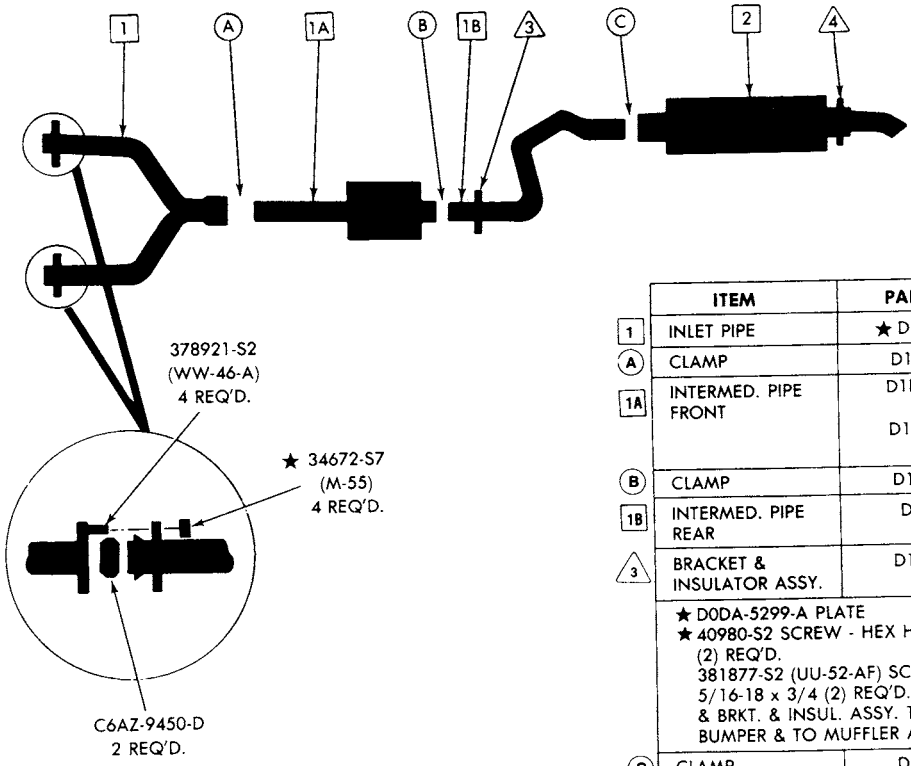

	ITEM	PART NUMBER
1	INLET PIPE	★ D1DZ-5246-B
A	CLAMP	D1AZ-5A231-C
1A	INTERMED. PIPE FRONT	D1DZ-5A289-D (2 DR.) D1DZ-5A289-C (4 DR.)
B	CLAMP	D1AZ-5A231-B
1B	INTERMED. PIPE REAR	D1DZ-5246-E
3	BRACKET & INSULATOR ASSY.	D1DZ-5A246-A
	★ D0DA-5299-A PLATE ★ 40980-S2 SCREW - HEX HD. 3/8-16 x 1 (2) REQ'D. 381877-S2 (UU-52-AF) SCREW - HEX HD. 5/16-18 x 3/4 (2) REQ'D. ATT. PLATE & BRKT. & INSUL. ASSY. TO PINION BUMPER & TO MUFFLER ASSY.	
C	CLAMP	D1AZ-5A231-B
2	MUFFLER	D1DZ-5230-L
4	BRACKET & INSULATOR ASSY.	D1DZ-5260-A
	381877-S2 (UU-52-AF) SCREW - HEX HD. 5/16-18 x 3/4 (4) REQ'D. ATT. BRKT. & INSUL. ASSY. TO MUFFLER & UNDERBODY	

Original equipment muffler and intermediate pipe are a welded assembly. To service this assembly you must replace it completely with three parts (muffler and two intermediate pipes) used together.

1973 COMET — 8 CYL. 302-2/B (FROM 7/5/73)

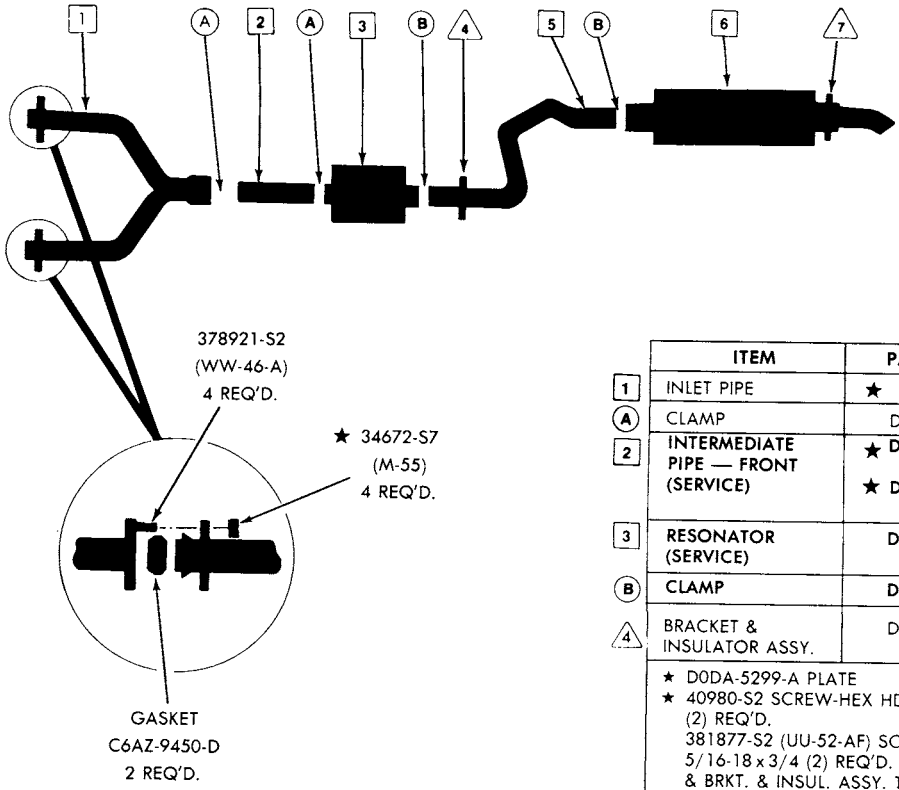

	ITEM	PART NUMBER
1	INLET PIPE	★ D1DZ-5246-B
A	CLAMP	D1AZ-5A231-C
2	**INTERMEDIATE PIPE — FRONT (SERVICE)**	**★ D4DZ-5A212-D (2 DR.) ★ D4DZ-5A212-F (4 DR.)**
3	**RESONATOR (SERVICE)**	**D4DZ-5A289-A**
B	**CLAMP**	**D1AZ-5A231-B**
4	BRACKET & INSULATOR ASSY.	D1DZ-5A246-A
	★ D0DA-5299-A PLATE ★ 40980-S2 SCREW-HEX HD. 3/8-16 x 1 (2) REQ'D. 381877-S2 (UU-52-AF) SCREW-HEX HD. 5/16-18 x 3/4 (2) REQ'D. ATT. PLATE & BRKT. & INSUL. ASSY. TO PINION BUMPER & TO MUFFLER ASSY.	
5	**INTERMEDIATE PIPE — REAR (SERVICE)**	**D1DZ-5246-E**
6	**MUFFLER & RESONATOR ASSY. (PRODUCTION)**	**★ D4DZ-5230-G** (2 DR.) **★ D4DZ-5230-H** (4 DR.)
	MUFFLER (SERVICE)	**★ D4DZ-5230-K**
7	BRACKET & INSULATOR ASSY.	D1DZ-5260-A
	381877-S2 (UU-52-AF) SCREW-HEX HD. 5/16-18 x 3/4 (4) REQ'D. ATT. BRKT. & INSUL. ASSY. TO MUFFLER & UNDERBODY	

[E-P-16]

COPYRIGHT © 1986 — FORD MOTOR COMPANY — DEARBORN, MICHIGAN

1973 METEOR—8 CYL. 351-2/B SEDAN & HARDTOP

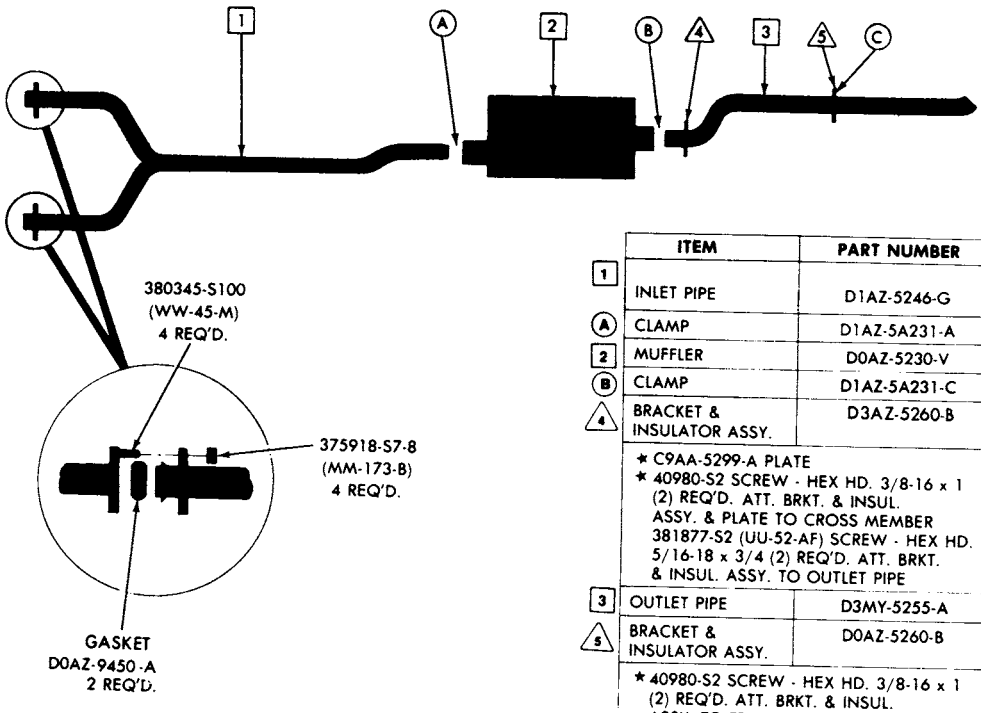

	ITEM	PART NUMBER
1	INLET PIPE	D1AZ-5246-G
A	CLAMP	D1AZ-5A231-A
2	MUFFLER	D0AZ-5230-V
B	CLAMP	D1AZ-5A231-C
4	BRACKET & INSULATOR ASSY.	D3AZ-5260-B
	★ C9AA-5299-A PLATE ★ 40980-S2 SCREW - HEX HD. 3/8-16 x 1 (2) REQ'D. ATT. BRKT. & INSUL. ASSY. & PLATE TO CROSS MEMBER 381877-S2 (UU-52-AF) SCREW - HEX HD. 5/16-18 x 3/4 (2) REQ'D. ATT. BRKT. & INSUL. ASSY. TO OUTLET PIPE	
3	OUTLET PIPE	D3MY-5255-A
5	BRACKET & INSULATOR ASSY.	D0AZ-5260-B
	★ 40980-S2 SCREW - HEX HD. 3/8-16 x 1 (2) REQ'D. ATT. BRKT. & INSUL. ASSY. TO FRAME	
C	CLAMP	D1AZ-5A231-C

Original equipment muffler and outlet pipe are a welded assembly. To service this assembly you must replace it with both parts (muffler and outlet pipe) used together.

Consolidated muffler and outlet pipe must be used together as a matched pair. They will not mate with original service components.

E-S-59

COPYRIGHT © 1986 — FORD MOTOR COMPANY — DEARBORN, MICHIGAN

1973 METEOR—8 CYL. 400-2/B SEDAN & HARDTOP
(BEFORE 1/19/73)

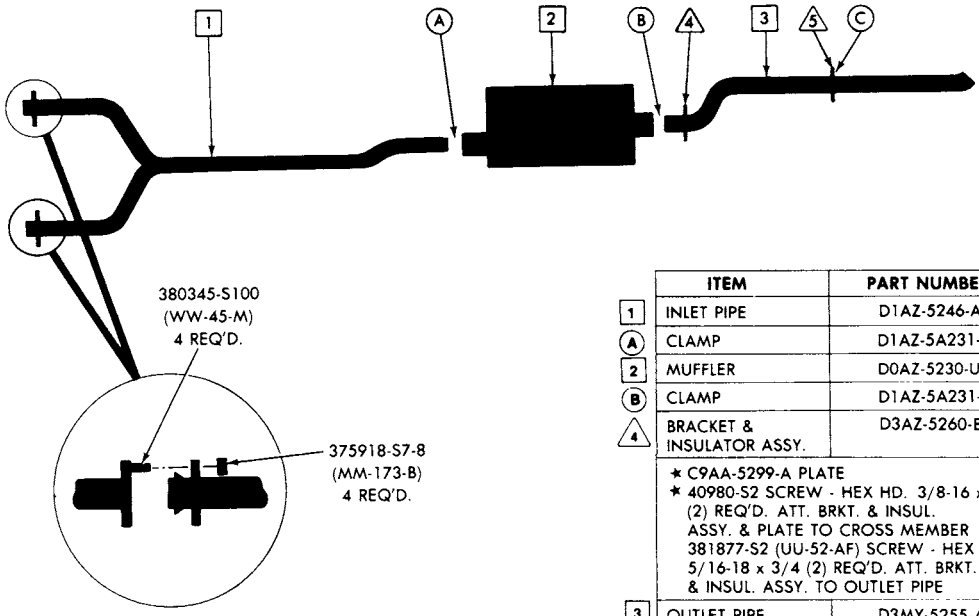

	ITEM	PART NUMBER
1	INLET PIPE	D1AZ-5246-A
A	CLAMP	D1AZ-5A231-D
2	MUFFLER	D0AZ-5230-U
B	CLAMP	D1AZ-5A231-C
4	BRACKET & INSULATOR ASSY.	D3AZ-5260-B
	★ C9AA-5299-A PLATE ★ 40980-S2 SCREW - HEX HD. 3/8-16 x 1 (2) REQ'D. ATT. BRKT. & INSUL. ASSY. & PLATE TO CROSS MEMBER 381877-S2 (UU-52-AF) SCREW - HEX HD. 5/16-18 x 3/4 (2) REQ'D. ATT. BRKT. & INSUL. ASSY. TO OUTLET PIPE	
3	OUTLET PIPE	D3MY-5255-A
5	BRACKET & INSULATOR ASSY.	D0AZ-5260-B
	★ 40980-S2 SCREW - HEX HD. 3/8-16 x 1 (2) REQ'D. ATT. BRKT. & INSUL. ASSY. TO FRAME	
C	CLAMP	D1AZ-5A231-C

Original equipment muffler and outlet pipe are a welded assembly. To service this assembly you must replace it with both parts (muffler and outlet pipe) used together.

1973 METEOR —8 CYL. 400-2/B SEDAN & HARDTOP (FROM 1/19/73)

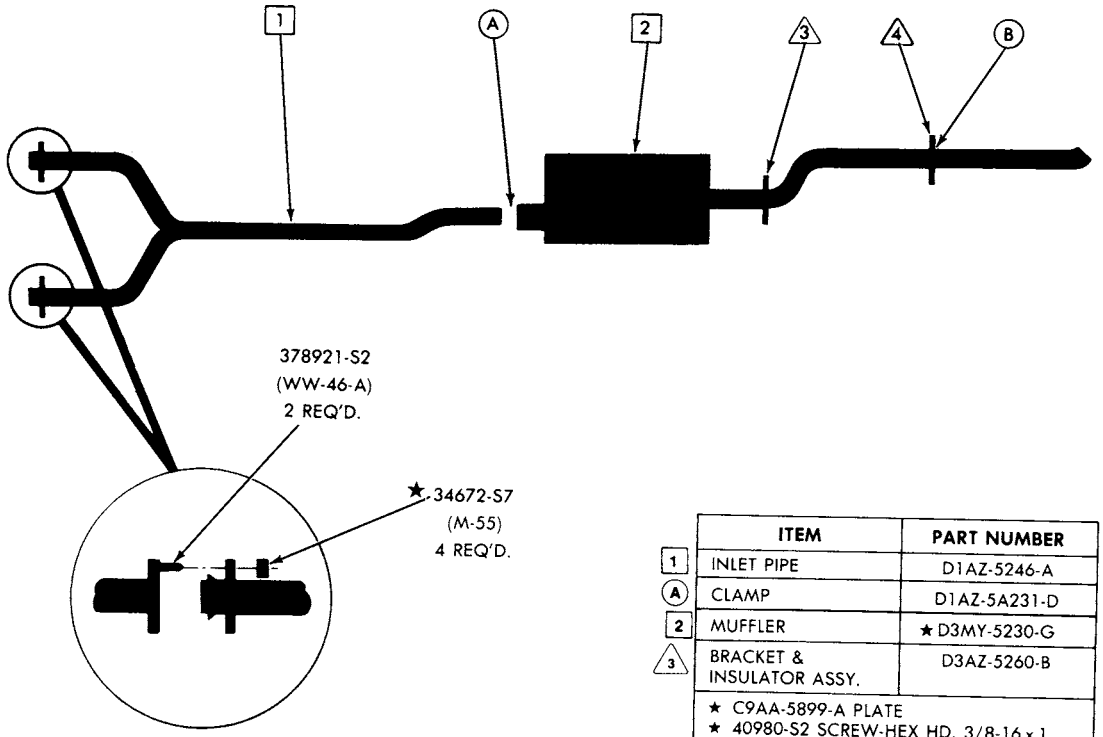

	ITEM	PART NUMBER
1	INLET PIPE	D1AZ-5246-A
A	CLAMP	D1AZ-5A231-D
2	MUFFLER	★ D3MY-5230-G
3	BRACKET & INSULATOR ASSY.	D3AZ-5260-B
	★ C9AA-5899-A PLATE ★ 40980-S2 SCREW-HEX HD. 3/8-16 x 1 (2) REQ'D. ATT. BRKT. & INSUL. ASSY. & PLATE TO CROSSMEMBER 381877-S2 (UU-52-AF) SCREW - HEX HD. 5/16-18 x 3/4 (2) REQ'D. ATT. BRKT. & INSUL. ASSY. TO OUTLET PIPE	
4	BRACKET & INSULATOR ASSY.	D0AZ-5260-B
	★ 40980-S2 SCREW - HEX HD. 3/8-16 x 1 (2) REQ'D. ATT. BRKT. & INSUL. ASSY. TO FRAME	
B	CLAMP	D1AZ-5A231-A

E-S-66

COPYRIGHT © 1986 — FORD MOTOR COMPANY — DEARBORN, MICHIGAN

1973 METEOR—8 CYL. 400-2/B STATION WAGON

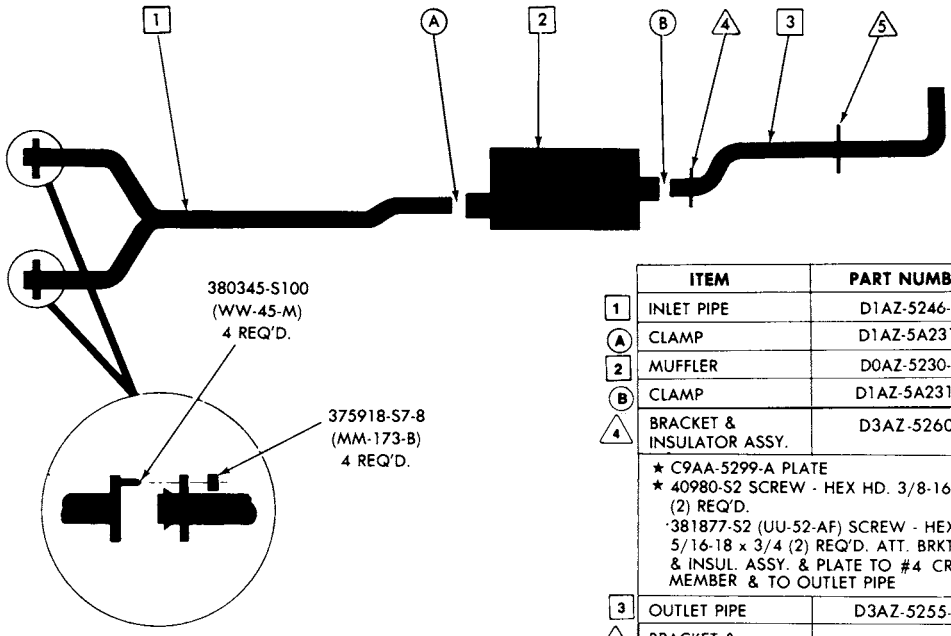

	ITEM	PART NUMBER
1	INLET PIPE	D1AZ-5246-A
A	CLAMP	D1AZ-5A231-D
2	MUFFLER	D0AZ-5230-U
B	CLAMP	D1AZ-5A231-C
4	BRACKET & INSULATOR ASSY.	D3AZ-5260-B
	★ C9AA-5299-A PLATE ★ 40980-S2 SCREW - HEX HD. 3/8-16 x 1 (2) REQ'D. ·381877-S2 (UU-52-AF) SCREW - HEX HD. 5/16-18 x 3/4 (2) REQ'D. ATT. BRKT. & INSUL. ASSY. & PLATE TO #4 CROSS MEMBER & TO OUTLET PIPE	
3	OUTLET PIPE	D3AZ-5255-H
5	BRACKET & INSULATOR ASSY.	D3AZ-5260-A
	★40980-S2 SCREW - HEX HD. 3/8-16 x 1 (2) REQ'D. ATT. BRKT. & INSUL. ASSY. TO CROSS MEMBFR ★D3AA-5299-AB PLATE 384871-S2 (UU-52-AM) SCREW - HEX HD. 5/16-18 x 1 (2) REQ'D. ATT. BRKT. & INSUL. ASSY. TO OUTLET PIPE	

Original equipment muffler and outlet pipe are a welded assembly. To service this assembly you must replace it with both parts (muffler and outlet pipe) used together.

1973 METEOR—8 CYL. 429-4/B & 460-4/B (EXCEPT 460-4/B POLICE) SEDAN & HARDTOP

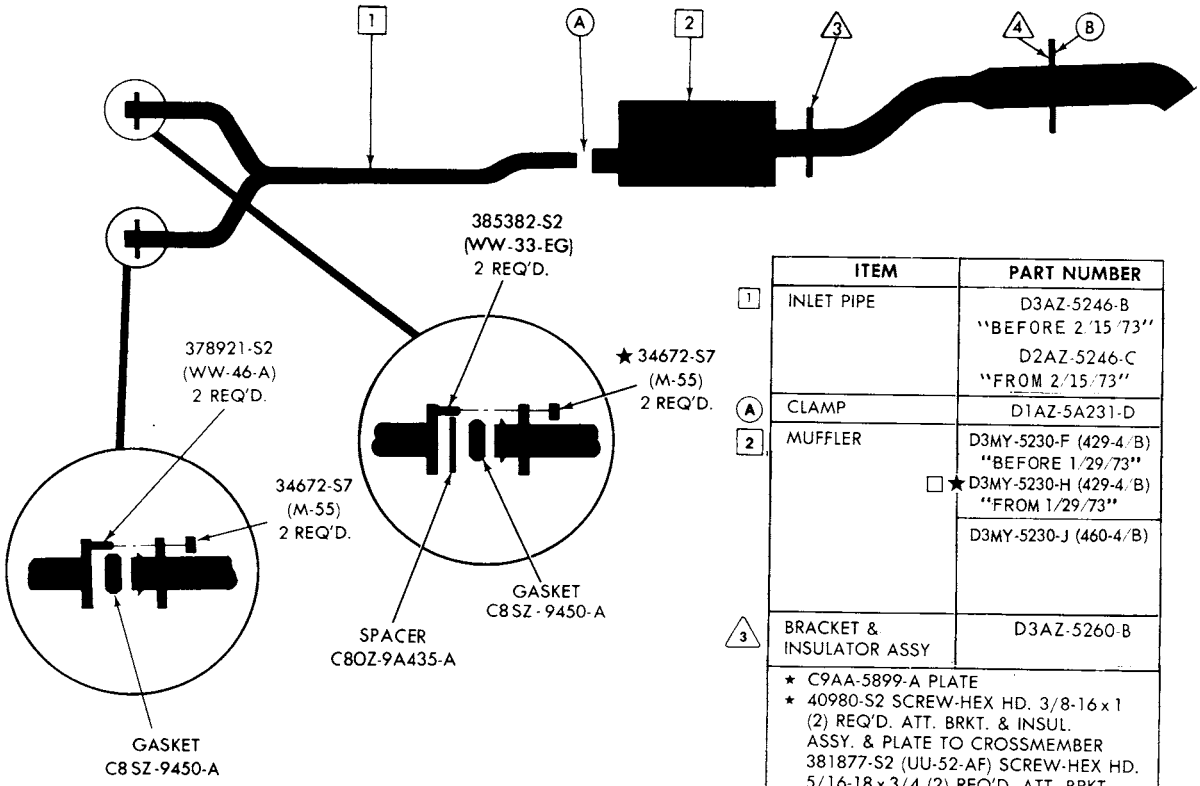

	ITEM	PART NUMBER
1	INLET PIPE	D3AZ-5246-B "BEFORE 2/15/73" D2AZ-5246-C "FROM 2/15/73"
A	CLAMP	D1AZ-5A231-D
2	MUFFLER	D3MY-5230-F (429-4/B) "BEFORE 1/29/73"
		☐ ★ D3MY-5230-H (429-4/B) "FROM 1/29/73"
		D3MY-5230-J (460-4/B)
3	BRACKET & INSULATOR ASSY	D3AZ-5260-B
	★ C9AA-5899-A PLATE ★ 40980-S2 SCREW-HEX HD. 3/8-16 x 1 (2) REQ'D. ATT. BRKT. & INSUL. ASSY. & PLATE TO CROSSMEMBER 381877-S2 (UU-52-AF) SCREW-HEX HD. 5/16-18 x 3/4 (2) REQ'D. ATT. BRKT. & INSUL. ASSY. TO OUTLET PIPE	
4	BRACKET & INSULATOR ASSY.	D3AZ-5260-C
	★ 40980-S2 SCREW-HEX HD. 3/8-16 x 1 (2) REQ'D. ATT. BRKT. & INSUL. ASSY. TO FRAME	
B	CLAMP	C1TT-5A231-D

☐ r/b D0AZ-5230-U (MUFFLER)
D4MY-5255-B (TAIL PIPE)

E-S-62

COPYRIGHT © 1986 — FORD MOTOR COMPANY — DEARBORN, MICHIGAN

1973 METEOR—8 CYL. 429-4/B & 460-4/B (EXCEPT 460-4/B POLICE) STATION WAGON

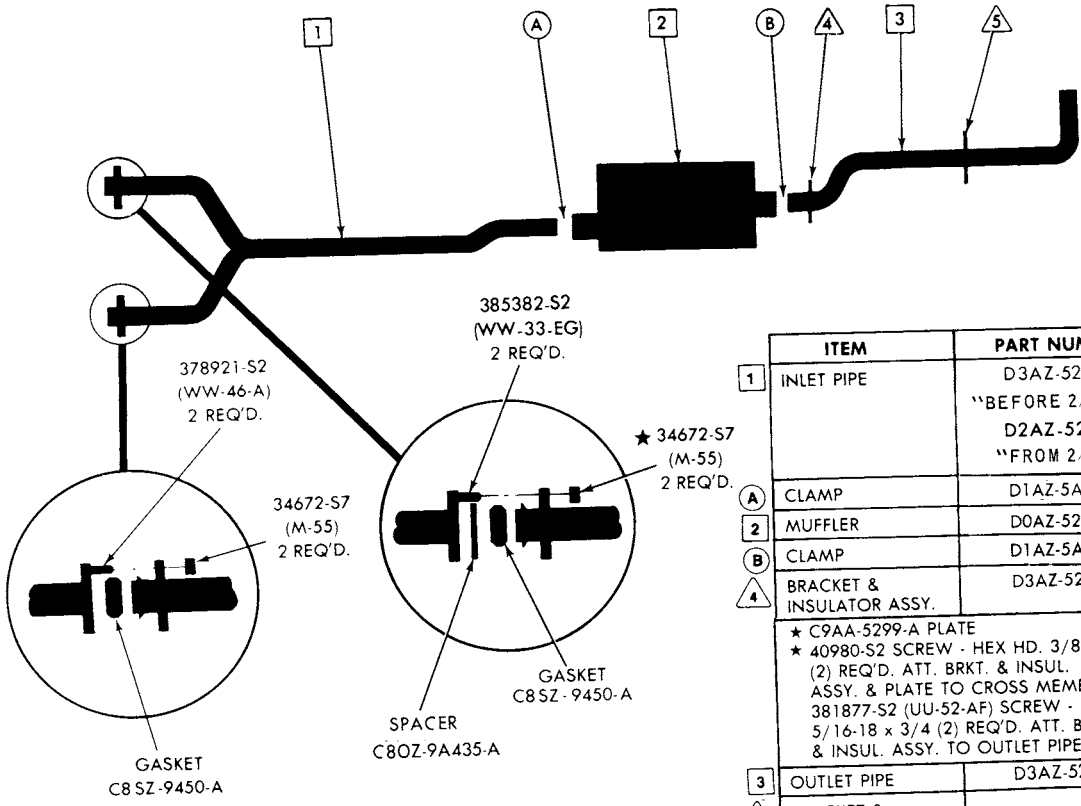

	ITEM	PART NUMBER
1	INLET PIPE	D3AZ-5246-B "BEFORE 2/15/73" D2AZ-5246-C "FROM 2/15/73"
A	CLAMP	D1AZ-5A231-D
2	MUFFLER	D0AZ-5230-U
B	CLAMP	D1AZ-5A231-C
4	BRACKET & INSULATOR ASSY.	D3AZ-5260-B
	★ C9AA-5299-A PLATE ★ 40980-S2 SCREW - HEX HD. 3/8-16 x 1 (2) REQ'D. ATT. BRKT. & INSUL. ASSY. & PLATE TO CROSS MEMBER 381877-S2 (UU-52-AF) SCREW - HEX HD. 5/16-18 x 3/4 (2) REQ'D. ATT. BRKT. & INSUL. ASSY. TO OUTLET PIPE	
3	OUTLET PIPE	D3AZ-5255-G
5	BRACKET & INSULATOR ASSY.	D3AZ-5260-A
	★40980-S2 SCREW - HEX HD. 3/8-16 x 1 (2) REQ'D. ATT. BRKT. & INSUL. ASSY. TO CROSS MEMBER ★D3AA-5299-AB PLATE 384871-S2 (UU-52-AM) SCREW - HEX HD. 5/16-18 x 1 (2) REQ'D. ATT. BRKT. & INSUL. ASSY. TO OUTLET PIPE	

Original equipment muffler and outlet pipe are a welded assembly. To service this assembly you must replace it with both parts (muffler and outlet pipe) used together.

1973 METEOR—8 CYL. 460-4/B (POLICE ONLY) SEDAN & HARDTOP

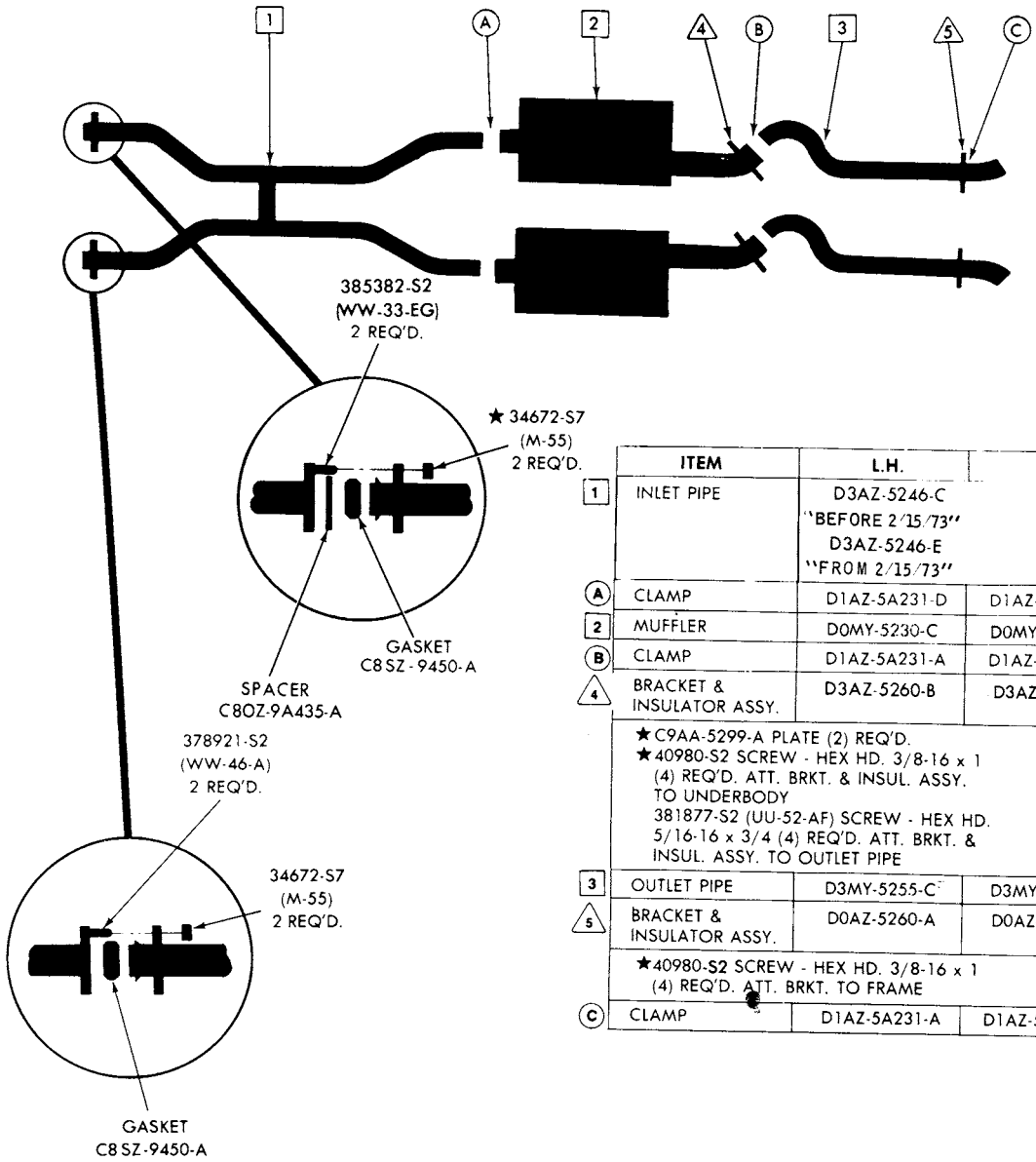

	ITEM	L.H.	R.H.
1	INLET PIPE	D3AZ-5246-C "BEFORE 2/15/73" D3AZ-5246-E "FROM 2/15/73"	
A	CLAMP	D1AZ-5A231-D	D1AZ-5A231-D
2	MUFFLER	D0MY-5230-C	D0MY-5230-F
B	CLAMP	D1AZ-5A231-A	D1AZ-5A231-A
4	BRACKET & INSULATOR ASSY.	D3AZ-5260-B	D3AZ-5260-B
	★C9AA-5299-A PLATE (2) REQ'D. ★40980-S2 SCREW - HEX HD. 3/8-16 x 1 (4) REQ'D. ATT. BRKT. & INSUL. ASSY. TO UNDERBODY 381877-S2 (UU-52-AF) SCREW - HEX HD. 5/16-16 x 3/4 (4) REQ'D. ATT. BRKT. & INSUL. ASSY. TO OUTLET PIPE		
3	OUTLET PIPE	D3MY-5255-C	D3MY-5255-B
5	BRACKET & INSULATOR ASSY.	D0AZ-5260-A	D0AZ-5260-B
	★40980-S2 SCREW - HEX HD. 3/8-16 x 1 (4) REQ'D. ATT. BRKT. TO FRAME		
C	CLAMP	D1AZ-5A231-A	D1AZ-5A231-A

ES-65

COPYRIGHT © 1986 — FORD MOTOR COMPANY — DEARBORN, MICHIGAN

1973 METEOR—8 CYL. 460-4/B (POLICE ONLY) STATION WAGON

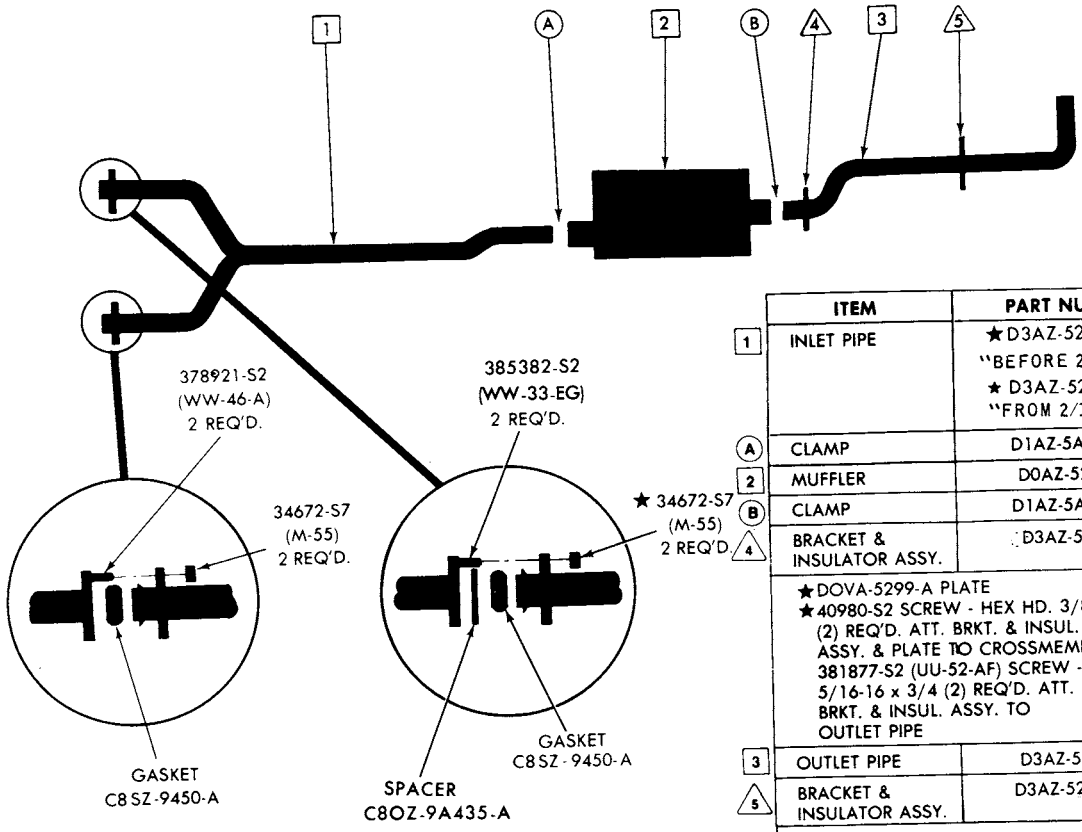

	ITEM	PART NUMBER
1	INLET PIPE	★D3AZ-5246-D "BEFORE 2/15/73" ★ D3AZ-5246-F "FROM 2/15/73"
A	CLAMP	D1AZ-5A231-D
2	MUFFLER	D0AZ-5230-U
B	CLAMP	D1AZ-5A231-C
4	BRACKET & INSULATOR ASSY.	D3AZ-5260-B
	★DOVA-5299-A PLATE ★40980-S2 SCREW - HEX HD. 3/8-16 x 1 (2) REQ'D. ATT. BRKT. & INSUL. ASSY. & PLATE TO CROSSMEMBER 381877-S2 (UU-52-AF) SCREW - HEX HD. 5/16-16 x 3/4 (2) REQ'D. ATT. BRKT. & INSUL. ASSY. TO OUTLET PIPE	
3	OUTLET PIPE	D3AZ-5255-G
5	BRACKET & INSULATOR ASSY.	D3AZ-5260-A
	★40980-S2 SCREW HEX HD. 3/8-16 x 1 (2) REQ'D., ATT. BRKT. & INSUL. ASSY. TO CROSS MEMBER ★D3AA-5299-AB PLATE 384871-S2 (UU-52-AM) SCREW - HEX HD. 5/16-18 x 1 (2) REQ'D. ATT. BRKT. & INSUL. ASSY. & PLATE TO OUTLET PIPE	

Original equipment muffler and outlet pipe are a welded assembly. To service this assembly you must replace it with both parts (muffler and outlet pipe) used together.

EXHAUST PARTS MODEL INDEX

How to use this index -

1. Find the car model desired.
2. Find the line which lists the engine displacement needed.
3. Select the correct page and turn to that page.

For stamped number cross-reference information and for size information, refer to Section 50, page 3.

1974

CYL.	C.I.D.	MODEL	TYPE ▲	SECTION	PAGE	ILLUS. NO. ♦
		A (MERCURY)				
8	400-2/B	(53,57,65)	S	52.74	1	EG 67
		(71)	S	52.74	2	EG 68
	460-4/B	(53,57,65)	S	52.74	3	EG 69
		(71)	S	52.74	5	EG 71
	460 P/C	(53,65-P/C)	D	52.74	4	EG 70
		C (MONTEGO)				
6	250-1/B	(65)	S	52.74	1	ED 107
8	302-2/B	(53,65)	S	52.74	2	ED 108
		(71)	S	52.74	3	ED 109
	351-2/B (C & W)	(53,65)	S	52.74	4	ED 110
	(C)	(71)	S	52.74	5	ED 112
	351-4/B	(53,65-includes P/C)	D	52.74	6	ED 113
	400-2/B	(53,65)	S	52.74	7	ED 114
		(71)	S	52.74	8	ED 115
	460-4/B	(53,65)	D	52.74	9	ED 116
		(71)	S	52.74	10	ED 118
		D (LINCOLN)				
8	460-4/B		S	52.74	1	EJ 11
		F (COUGAR)				
8	351-2/B (C&W)		S	52.74	1	EB 25
	351-4/B		D	52.74	2	EB 27
	400-2/B		S	52.74	3	EB 28
	460-4/B		D	52.74	4	EB 29

♦ For control purposes only ▲ S - Single D - Dual

COPYRIGHT © 1986 — FORD MOTOR COMPANY — DEARBORN, MICHIGAN

EXHAUST PARTS MODEL INDEX cont'd.

1974

CYL.	C.I.D.	MODEL	TYPE ▲	SECTION	PAGE	ILLUS. NO. ♦
		J (CAPRI)				
4	122-2/B (2000 cc)		S	52.74	1	EM 12
6	171-2/B (2800 cc)		D	52.74	2	EM 13
		K (MARK IV)				
8	460-4/B		S	52.74	1	EK 6
			D	52.74	2	EK 7
		L (BOBCAT)				
4	122-2/B (2000 cc)	(62,64)--w/o resonator	S	52.74	1	ET 1
		(62,64)--w/resonator	S	52.74	2	ET 2
		(73)--w/o resonator	S	52.74	3	ET 3
		(73)--w/resonator	S	52.74	4	ET 4
4	140-2/B (2300 cc)	(62,64)--w/o resonator	S	52.74	1	ET 1
		(62,64)--w/resonator	S	52.74	2	ET 2
		(73)--w/o resonator	S	52.74	3	ET 3
		(73)--w/resonator	S	52.74	4	ET 4
		P (COMET)				
6	200-1/B	W/o resonator	S	52.74	1	EP 17
		W/resonator	S	52.74	2	EP 18
	250-1/B	W/o resonator	S	52.74	1	EP 17
		W/resonator	S	52.74	2	EP 18
8	302-2/B	Exc. Calif.	S	52.74	3	EP 19
		Calif. only	S	52.74	4	EP 20
		Y (METEOR)				
8	351-2/B	(53,65)	S	52.74	1	ES 67
	400-2/B	(53,57,65)	S	52.74	2	ES 68
		(71)	S	52.74	3	ES 69
	460-4/B	(53,57,65-exc. P/C)	S	52.74	4	ES 70
		(53,65-P/C)	D	52.74	5	ES 71
		(71)	S	52.74	6	ES 72

♦ For control purposes only ▲ S - Single D - Dual

1974 MERCURY—8 CYL. 400-2/B SEDAN & HARDTOP

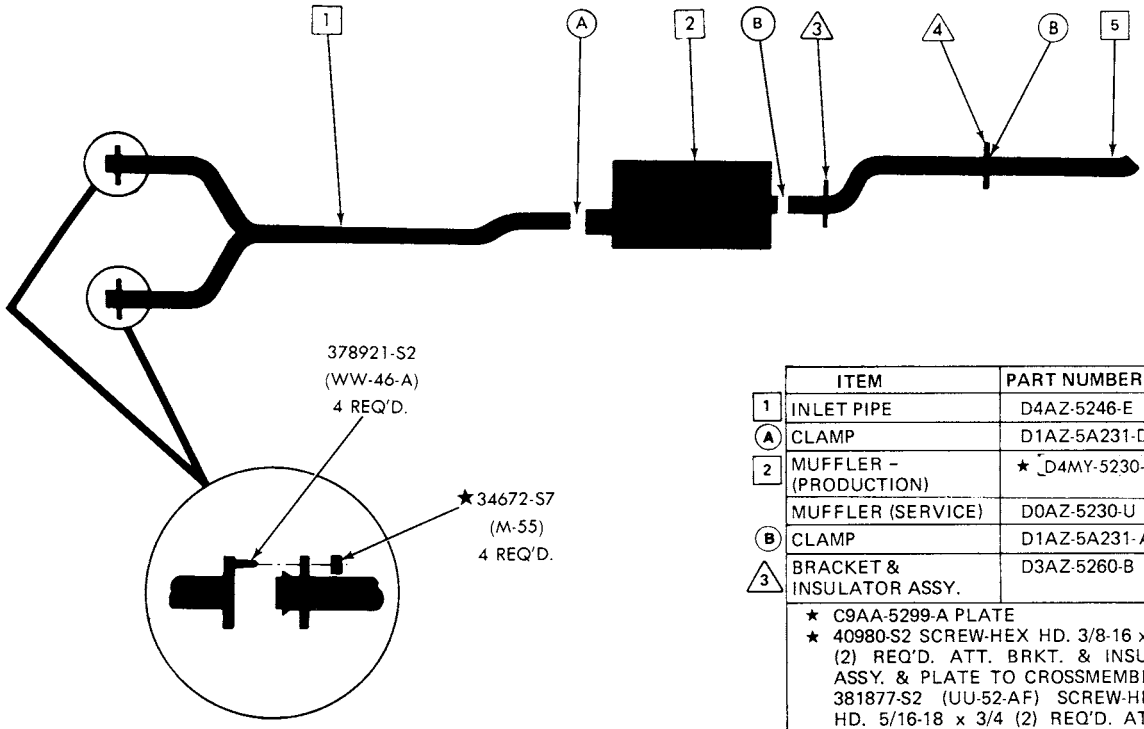

	ITEM	PART NUMBER
1	INLET PIPE	D4AZ-5246-E
A	CLAMP	D1AZ-5A231-D
2	MUFFLER - (PRODUCTION)	★ D4MY-5230-A
	MUFFLER (SERVICE)	D0AZ-5230-U
B	CLAMP	D1AZ-5A231-A
3	BRACKET & INSULATOR ASSY.	D3AZ-5260-B
	★ C9AA-5299-A PLATE ★ 40980-S2 SCREW-HEX HD. 3/8-16 x 1 (2) REQ'D. ATT. BRKT. & INSUL. ASSY. & PLATE TO CROSSMEMBER 381877-S2 (UU-52-AF) SCREW-HEX HD. 5/16-18 x 3/4 (2) REQ'D. ATT. BRKT. & INSUL. ASSY. TO OUTLET PIPE	
4	BRACKET & INSULATOR ASSY.	★D4AZ-5260-A
	★ 40980-S2 SCREW-HEX HD. 3/8-16 x 1 (2) REQ'D. ATT. BRKT. & INSUL. ASSY. TO FRAME	
5	OUTLET PIPE (SERVICE)	★D4MY-5255-A

E-G-67

COPYRIGHT © 1986 — FORD MOTOR COMPANY — DEARBORN, MICHIGAN

1973/79 LINCOLN-MERCURY CARS

1974 MERCURY—8 CYL. 400-2/B STATION WAGON

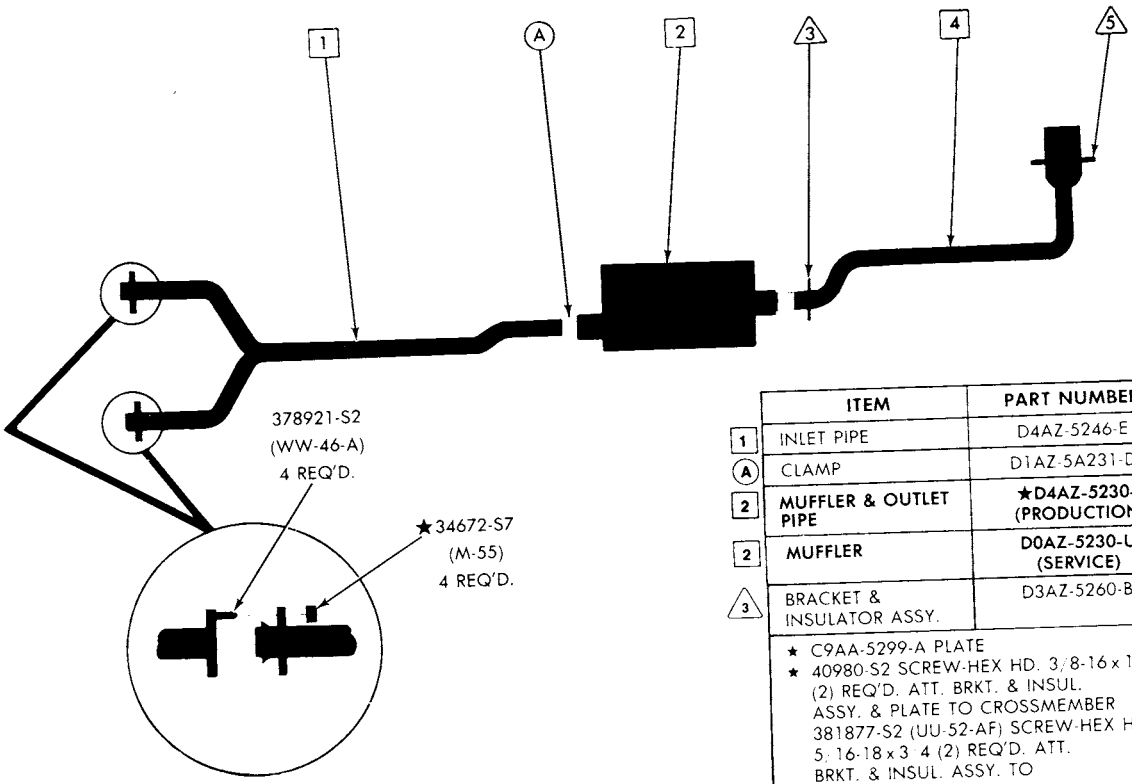

	ITEM	PART NUMBER
1	INLET PIPE	D4AZ-5246-E
A	CLAMP	D1AZ-5A231-D
2	**MUFFLER & OUTLET PIPE**	**★D4AZ-5230-J (PRODUCTION)**
2	**MUFFLER**	**D0AZ-5230-U (SERVICE)**
3	BRACKET & INSULATOR ASSY.	D3AZ-5260-B
	★ C9AA-5299-A PLATE ★ 40980-S2 SCREW-HEX HD. 3/8-16 x 1 (2) REQ'D. ATT. BRKT. & INSUL. ASSY. & PLATE TO CROSSMEMBER 381877-S2 (UU-52-AF) SCREW-HEX HD. 5/16-18 x 3/4 (2) REQ'D. ATT. BRKT. & INSUL. ASSY. TO OUTLET PIPE	
4	**OUTLET PIPE**	**D3AZ-5255-J (SERVICE)**
5	BRACKET & INSULATOR ASSY.	D3AZ-5260-A
	★ 40980-S2 SCREW-HEX HD. 3/8-16 x 1 (2) REQ'D. ATT. BRKT. & INSUL. ASSY. TO CROSSMEMBER ★ D3AA-5299-AB PLATE 384871-S2 (UU-52-AM) SCREW-HEX HD. 5/16-18 x 1 (2) REQ'D. ATT. BRKT. & INSUL. ASSY. & PLATE TO OUTLET PIPE	

1974 MERCURY—8 CYL. 460-4/B (EXCEPT 460-4/B POLICE)
SEDAN & HARDTOP

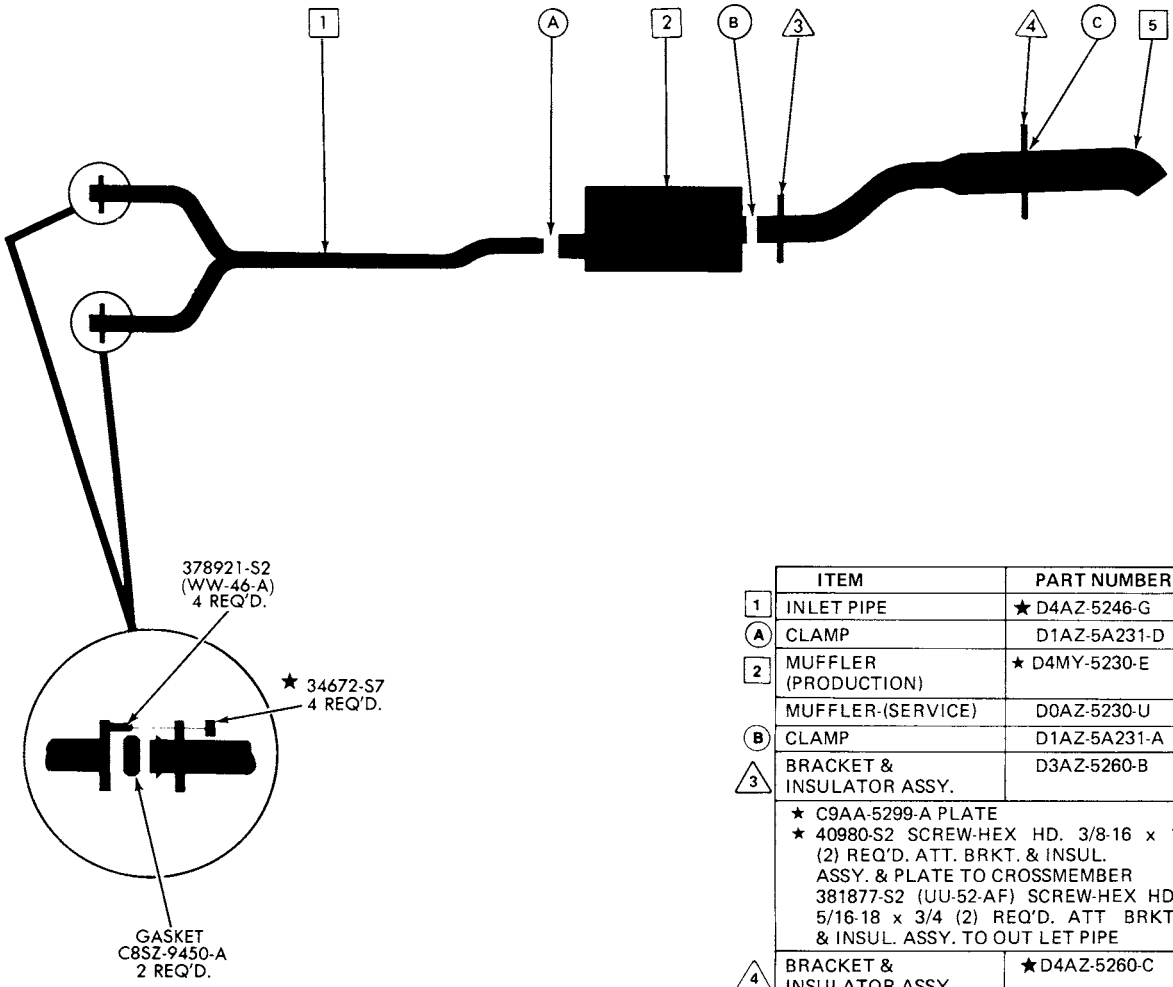

	ITEM	PART NUMBER
1	INLET PIPE	★ D4AZ-5246-G
A	CLAMP	D1AZ-5A231-D
2	MUFFLER (PRODUCTION)	★ D4MY-5230-E
	MUFFLER-(SERVICE)	D0AZ-5230-U
B	CLAMP	D1AZ-5A231-A
3	BRACKET & INSULATOR ASSY.	D3AZ-5260-B
	★ C9AA-5299-A PLATE ★ 40980-S2 SCREW-HEX HD. 3/8-16 x 1 (2) REQ'D. ATT. BRKT. & INSUL. ASSY. & PLATE TO CROSSMEMBER 381877-S2 (UU-52-AF) SCREW-HEX HD. 5/16-18 x 3/4 (2) REQ'D. ATT BRKT. & INSUL. ASSY. TO OUT LET PIPE	
4	BRACKET & INSULATOR ASSY.	★D4AZ-5260-C
	★ 40980-S2 SCREW-HEX HD. 3/8-16 x 1 (2) REQ'D. ATT. BRKT. & INSUL. ASSY. TO FRAME	
C	CLAMP	C1TT-5A231-D
5	OUTLET PIPE-(SERVICE)	★D4MY-5255-B

E-G-69

COPYRIGHT © 1986 — FORD MOTOR COMPANY — DEARBORN, MICHIGAN

1973/79 LINCOLN-MERCURY CARS

1974 MERCURY—8 CYL. 460-4/B (POLICE ONLY) SEDAN

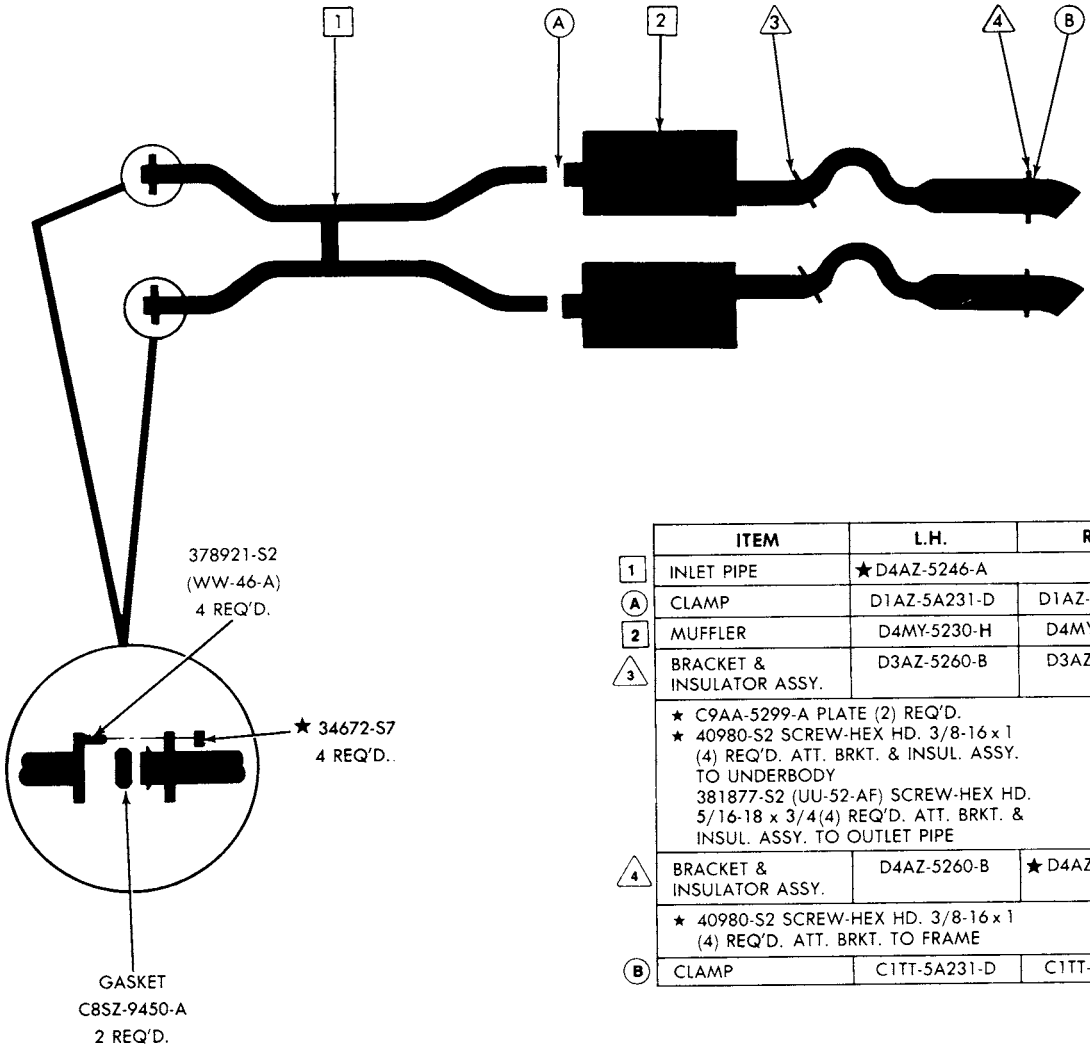

	ITEM	L.H.	R.H.
1	INLET PIPE	★D4AZ-5246-A	
A	CLAMP	D1AZ-5A231-D	D1AZ-5A231-D
2	MUFFLER	D4MY-5230-H	D4MY-5230-J
3	BRACKET & INSULATOR ASSY.	D3AZ-5260-B	D3AZ-5260-B
	★ C9AA-5299-A PLATE (2) REQ'D. ★ 40980-S2 SCREW-HEX HD. 3/8-16 x 1 (4) REQ'D. ATT. BRKT. & INSUL. ASSY. TO UNDERBODY 381877-S2 (UU-52-AF) SCREW-HEX HD. 5/16-18 x 3/4(4) REQ'D. ATT. BRKT. & INSUL. ASSY. TO OUTLET PIPE		
4	BRACKET & INSULATOR ASSY.	D4AZ-5260-B	★D4AZ-5260-C
	★ 40980-S2 SCREW-HEX HD. 3/8-16 x 1 (4) REQ'D. ATT. BRKT. TO FRAME		
B	CLAMP	C1TT-5A231-D	C1TT-5A231-D

1974 MERCURY—8 CYL. 460-4/B STATION WAGON

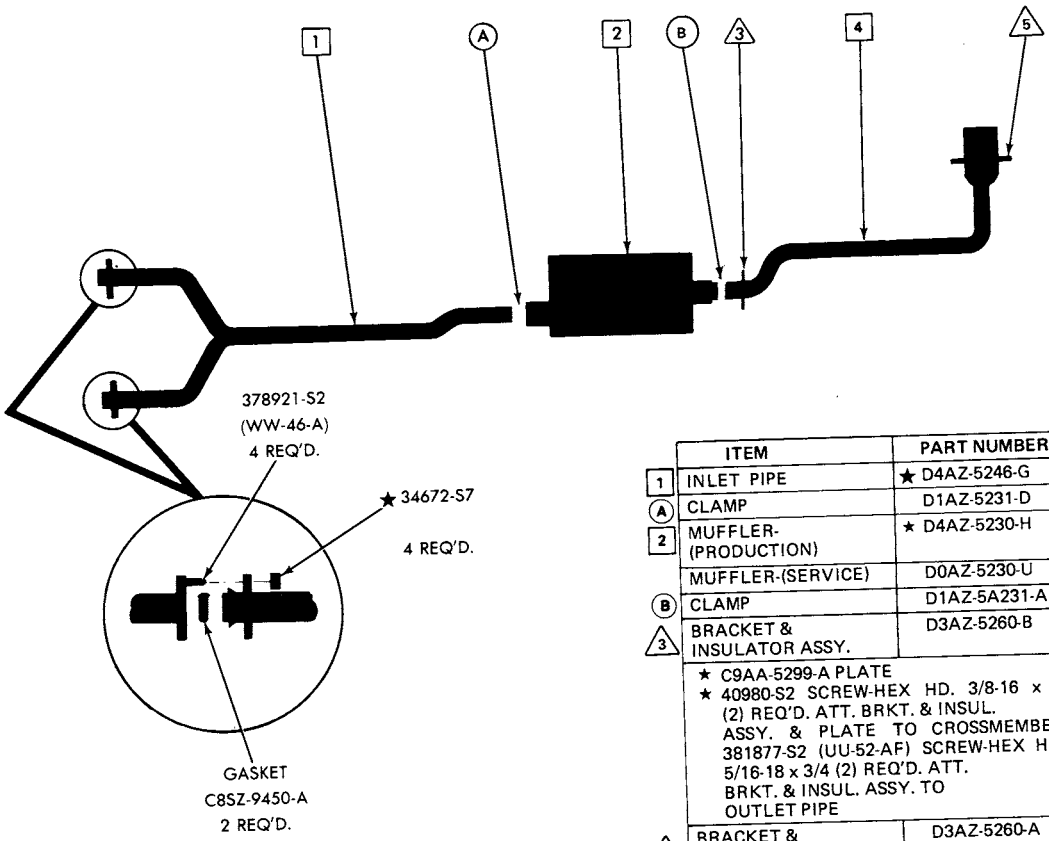

	ITEM	PART NUMBER
1	INLET PIPE	★ D4AZ-5246-G
A	CLAMP	D1AZ-5231-D
2	MUFFLER-(PRODUCTION)	★ D4AZ-5230-H
	MUFFLER-(SERVICE)	D0AZ-5230-U
B	CLAMP	D1AZ-5A231-A
3	BRACKET & INSULATOR ASSY.	D3AZ-5260-B
	★ C9AA-5299-A PLATE ★ 40980-S2 SCREW-HEX HD. 3/8-16 x 1 (2) REQ'D. ATT. BRKT. & INSUL. ASSY. & PLATE TO CROSSMEMBER 381877-S2 (UU-52-AF) SCREW-HEX HD. 5/16-18 x 3/4 (2) REQ'D. ATT. BRKT. & INSUL. ASSY. TO OUTLET PIPE	
5	BRACKET & INSULATOR ASSY.	D3AZ-5260-A
	★ 40980-S2 SCREW-HEX HD. 3/8-16 x 1 (2) REQ'D. ATT. BRKT. & INSUL. ASSY. TO CROSSMEMBER ★ D3AA-5299-AB PLATE 384871-S2 (UU-52-AM) SCREW-HEX HD. 5/16-18 x 1 (2) REQ'D. ATT. BRKT. & INSUL. ASSY. & PLATE TO OUTLET PIPE	
4	OUTLET PIPE-(SERVICE)	★ D4AZ-5255-C

E-G-71

COPYRIGHT © 1986 — FORD MOTOR COMPANY — DEARBORN, MICHIGAN

1974 MONTEGO—6 CYL. 250-1/B HARDTOP

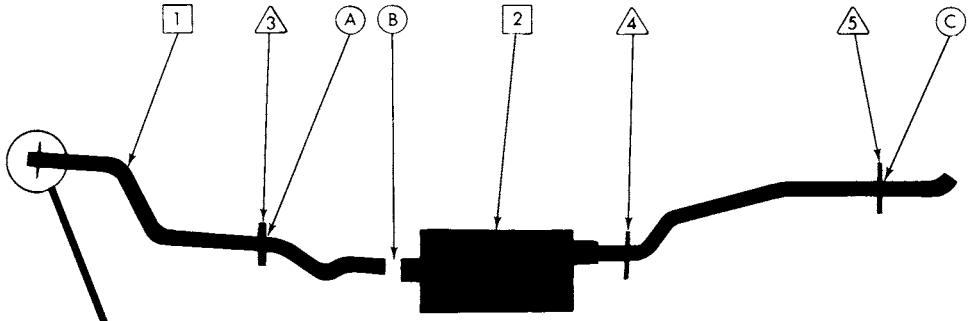

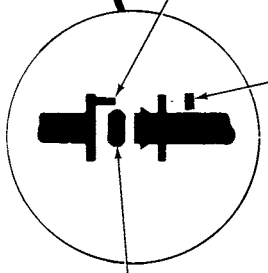

	ITEM	PART NUMBER
1	INLET PIPE	★ D4OZ-5246-T
3	BRACKET	D1DZ-5277-B
A	CLAMP	D1DZ-5A231-A
B	CLAMP	D1AZ-5A231-C
2	MUFFLER	D4OZ-5230-B
4	BRACKET & INSULATOR ASSY.	D4OZ-5260-E
	★ 40980-S2 SCREW-HEX HD. 3, 8-16 x 1 (2) REQ'D. ATT. BRKT. & INSUL. ASSY. TO UNDERBODY 381877-S2 (UU-52-AF) SCREW-HEX HD. 5/16-18 x 3/4 (2) REQ'D. ATT. BRKT. & PLATE TO MUFFLER	
5	BRACKET & INSULATOR ASSY.	★ D4OZ-5260-C
	★ 40980-S2 SCREW-HEX HD. 3, 8-16 x 1 (1) REQ'D. ATT. BRKT. TO FRAME	
C	CLAMP	D1AZ-5A231-C

E-D-107

COPYRIGHT © 1986 — FORD MOTOR COMPANY — DEARBORN, MICHIGAN

1974 MONTEGO—8 CYL. 302-2/B SEDAN & HARDTOP

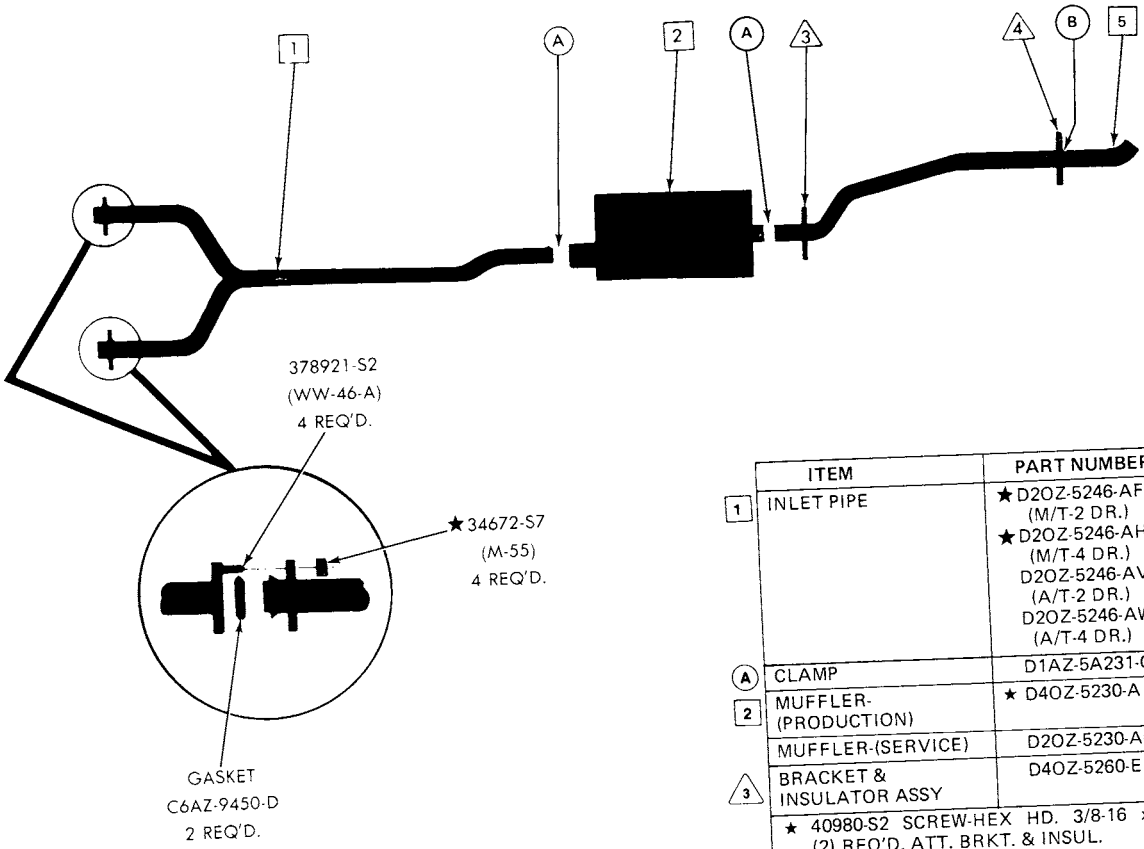

	ITEM	PART NUMBER
1	INLET PIPE	★D2OZ-5246-AF (M/T-2 DR.) ★D2OZ-5246-AH (M/T-4 DR.) D2OZ-5246-AV (A/T-2 DR.) D2OZ-5246-AW (A/T-4 DR.)
A	CLAMP	D1AZ-5A231-C
2	MUFFLER-(PRODUCTION)	★ D4OZ-5230-A
	MUFFLER-(SERVICE)	D2OZ-5230-AC
3	BRACKET & INSULATOR ASSY	D4OZ-5260-E
	★ 40980-S2 SCREW-HEX HD. 3/8-16 x 1 (2) REQ'D. ATT. BRKT. & INSUL. ASSY. TO UNDERBODY 381877-S2 (UU-52-AF) SCREW-HEX HD. 5/16-18 x 3/4 (2) REQ'D. ATT. BRKT. & PLATE TO MUFFLER	
4	BRACKET & INSULATOR ASSY	★ D4OZ-5260-C
	★ 40980-S2 SCREW-HEX HD. 3/8-16 x 1 (1) REQ'D. ATT. BRKT. TO FRAME	
B	CLAMP	D1AZ-5A231-C
5	OUTLET PIPE-(SERVICE)	D4OZ-5255-G

1974 MONTEGO—8 CYL. 302-2/B STATION WAGON

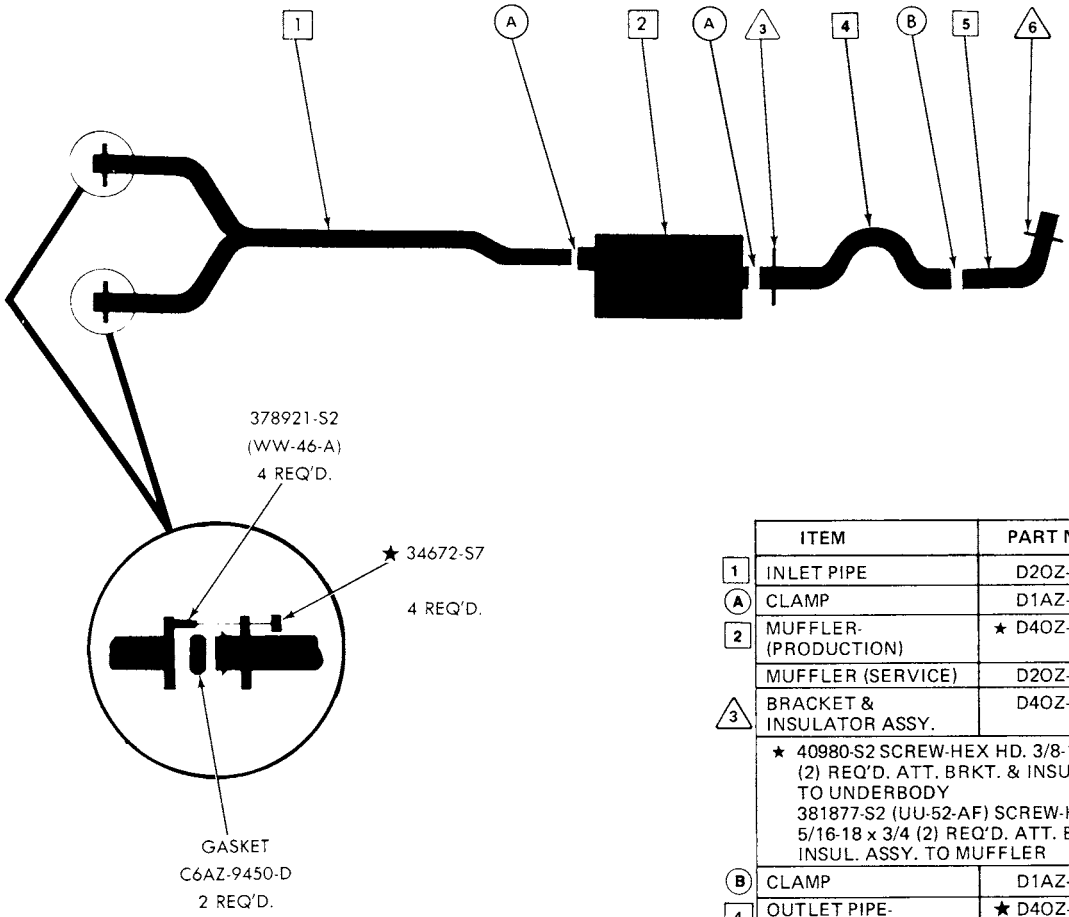

	ITEM	PART NUMBER
1	INLET PIPE	D2OZ-5246-AW
A	CLAMP	D1AZ-5A231-C
2	MUFFLER-(PRODUCTION)	★ D4OZ-5230-E
	MUFFLER (SERVICE)	D2OZ-5230-AC
3	BRACKET & INSULATOR ASSY.	D4OZ-5260-E
	★ 40980-S2 SCREW-HEX HD. 3/8-16 x 1 (2) REQ'D. ATT. BRKT. & INSUL. ASSY. TO UNDERBODY 381877-S2 (UU-52-AF) SCREW-HEX HD. 5/16-18 x 3/4 (2) REQ'D. ATT. BRKT. & INSUL. ASSY. TO MUFFLER	
B	CLAMP	D1AZ-5A231-C
4	OUTLET PIPE-FRONT (SERVICE)	★ D4OZ-5255-J
5	OUTLET PIPE—REAR	★ D4OZ-5255-E
6	BRACKET & INSULATOR ASSY.	D3AZ-5260-A
	★ 40941-S2 SCREW-HEX HD. 3/8-16 x 5/8 (2) REQ'D. ATT. BRKT. & INSUL. ASSY. TO CROSSMEMBER ★ D3AA-5299-AB PLATE 384871-S2 (UU-52-AM) SCREW-HEX HD. 5/16-18 x 1 (2) REQ'D. ATT. BRKT. & INSUL. ASSY. & PLATE TO OUTLET PIPE	

E-D-109

COPYRIGHT © 1986 — FORD MOTOR COMPANY — DEARBORN, MICHIGAN

1974 MONTEGO—8 CYL. 351-2/B (C & W) SEDAN & HARDTOP

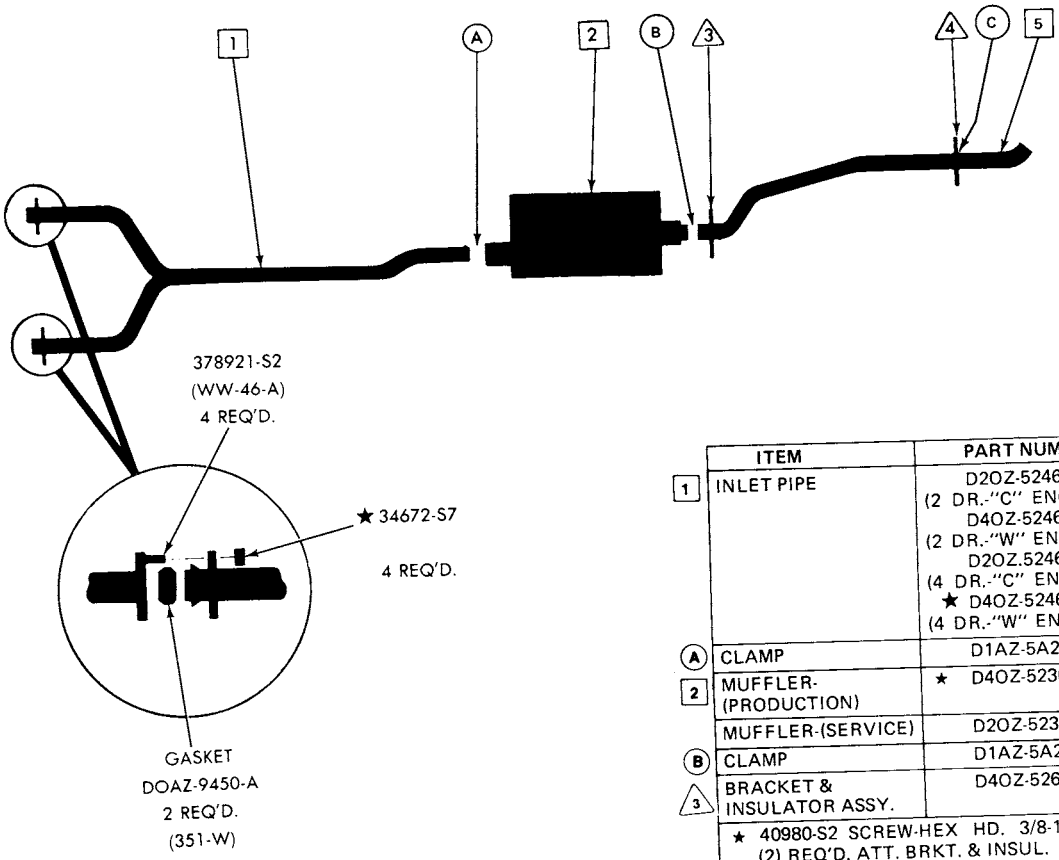

	ITEM	PART NUMBER
1	INLET PIPE	D2OZ-5246-AR (2 DR.-"C" ENGINE) D4OZ-5246-R (2 DR.-"W" ENGINE) D2OZ.5246-AS (4 DR.-"C" ENGINE) ★ D4OZ-5246-S (4 DR.-"W" ENGINE)
A	CLAMP	D1AZ-5A231-A
2	MUFFLER-(PRODUCTION)	★ D4OZ-5230-AC
	MUFFLER-(SERVICE)	D2OZ-5230-AA
B	CLAMP	D1AZ-5A231-C
3	BRACKET & INSULATOR ASSY.	D4OZ-5260-E
	★ 40980-S2 SCREW-HEX HD. 3/8-16 x 1 (2) REQ'D. ATT. BRKT. & INSUL. ASSY. TO UNDERBODY 381877-S2 (UU-52-AF) SCREW-HEX HD. 5/16-18 x 3/4 (2) REQ'D. ATT. BRKT. & PLATE TO MUFFLER	
	BRACKET & INSULATOR ASSY.	★ D4OZ-5260-C
	★ 40980-S2 SCREW-HEX HD. 3/8-16 x 1 (1) REQ'D. ATT. BRKT. TO FRAME	
C	CLAMP	D1AZ-5A231-A
5	OUTLET PIPE-(SERVICE)	D4OZ-5255-G

1974 MONTEGO—8 CYL. 351-2/B STATION WAGON

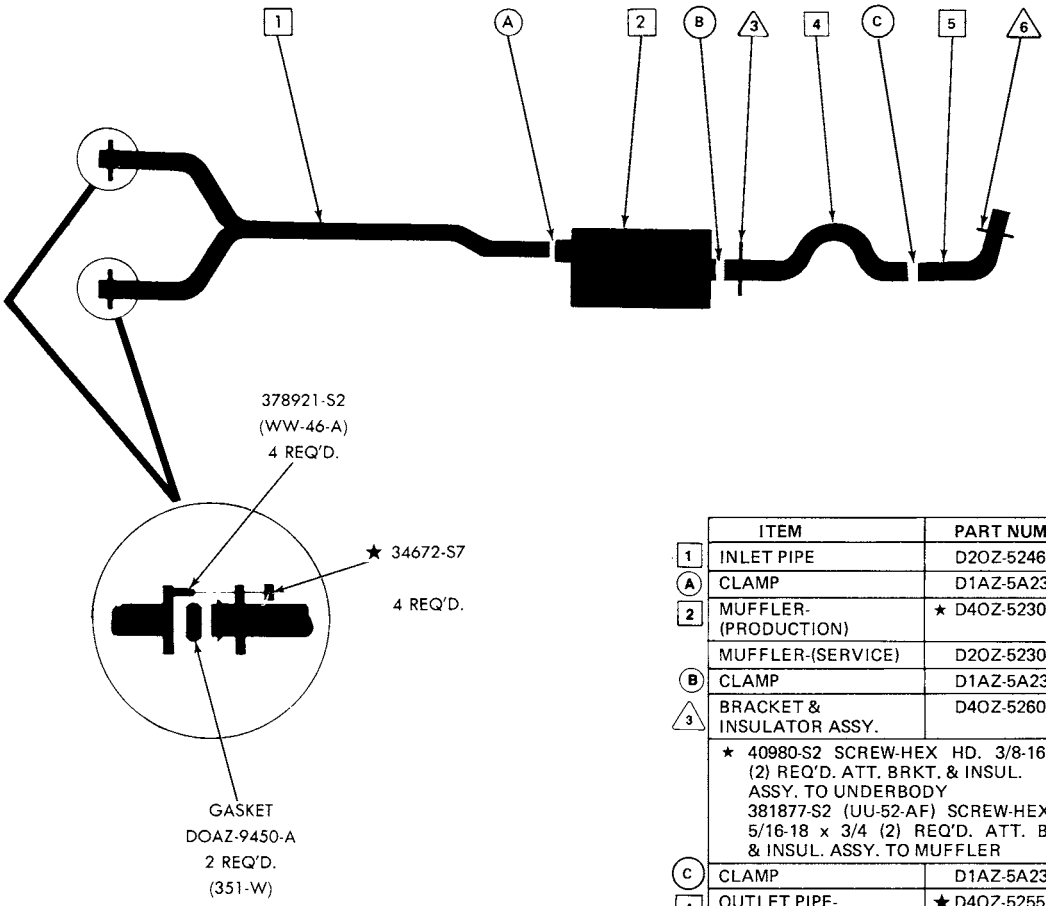

	ITEM	PART NUMBER
1	INLET PIPE	D2OZ-5246-AS
A	CLAMP	D1AZ-5A231-A
2	MUFFLER-(PRODUCTION)	★ D4OZ-5230-F
	MUFFLER-(SERVICE)	D2OZ-5230-AA
B	CLAMP	D1AZ-5A231-C
3	BRACKET & INSULATOR ASSY.	D4OZ-5260-E
	★ 40980-S2 SCREW-HEX HD. 3/8-16 x 1 (2) REQ'D. ATT. BRKT. & INSUL. ASSY. TO UNDERBODY 381877-S2 (UU-52-AF) SCREW-HEX HD. 5/16-18 x 3/4 (2) REQ'D. ATT. BRKT. & INSUL. ASSY. TO MUFFLER	
C	CLAMP	D1AZ-5A231-A
4	OUTLET PIPE-FRONT (SERVICE)	★ D4OZ-5255-H r/b D5OZ-5A212-A
5	OUTLET PIPE-REAR	D4OZ-5255-F
6	BRACKET & INSULATOR ASSY.	D3AZ-5260-A
	★ 40941-S2 SCREW-HEX HD. 3/8-16 x 5/8 (2) REQ'D. ATT. BRKT. & INSUL. ASSY. TO CROSSMEMBER ★ D3AA-5299-AB PLATE 384871-S2 (UU-52-AM) SCREW-HEX HD. 5/16-18 x 1 (2) REQ'D. ATT. BRKT. & INSUL. ASSY & PLATE TO OUTLET PIPE	

E-D-112

COPYRIGHT © 1986 — FORD MOTOR COMPANY — DEARBORN, MICHIGAN

1974 MONTEGO—8 CYL. 351-4/B SEDAN & HARDTOP (INCLUDES POLICE)

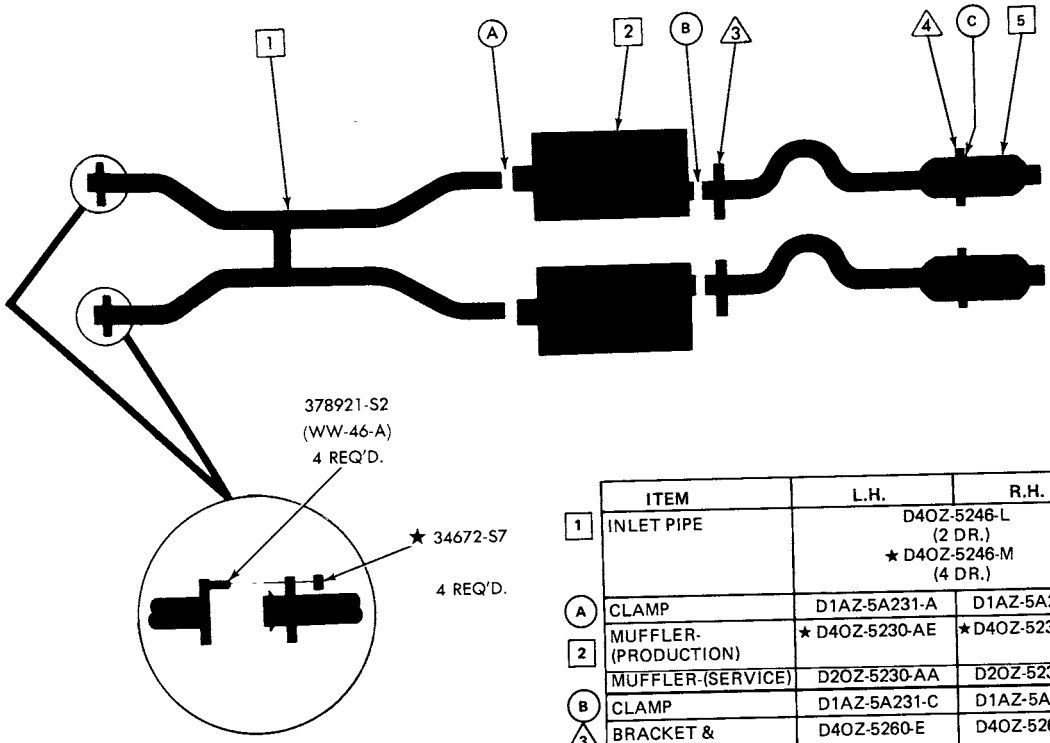

	ITEM	L.H.	R.H.
1	INLET PIPE	D4OZ-5246-L (2 DR.) ★ D4OZ-5246-M (4 DR.)	
A	CLAMP	D1AZ-5A231-A	D1AZ-5A231-A
2	MUFFLER-(PRODUCTION)	★ D4OZ-5230-AE	★ D4OZ-5230-AD
	MUFFLER-(SERVICE)	D2OZ-5230-AA	D2OZ-5230-AA
B	CLAMP	D1AZ-5A231-C	D1AZ-5A231-C
3	BRACKET & INSULATOR ASSY.	D4OZ-5260-E	D4OZ-5260-E
	★ 40980-S2 SCREW-HEX HD. 3/8-16 x 1 (4) REQ'D. ATT. BRKT. & INSUL.ASSY. TO UNDERBODY 381877-S2 (UU-52-AF) SCREW-HEX HD. 5/16-18 x 3/4 (4) REQ'D. ATT. BRKT. & INSUL. ASSY. TO MUFFLER		
4	BRACKET & INSULATOR ASSY.	★D4OZ-5260-C	★D4OZ-5260-C
	★ 40980-S2 SCREW-HEX HD. 3/8-16 x 1 (2) REQ'D. ATT. BRKT. & INSUL. ASSY. TO UNDERBODY		
C	CLAMP	C1TT-5A231-D	C1TT-5A231-D
5	OUTLET PIPE-(SERVICE)	★D4OZ-5255-L	★D4OZ-5255-K

1974 MONTEGO—8 CYL. 400-2/B SEDAN & HARDTOP

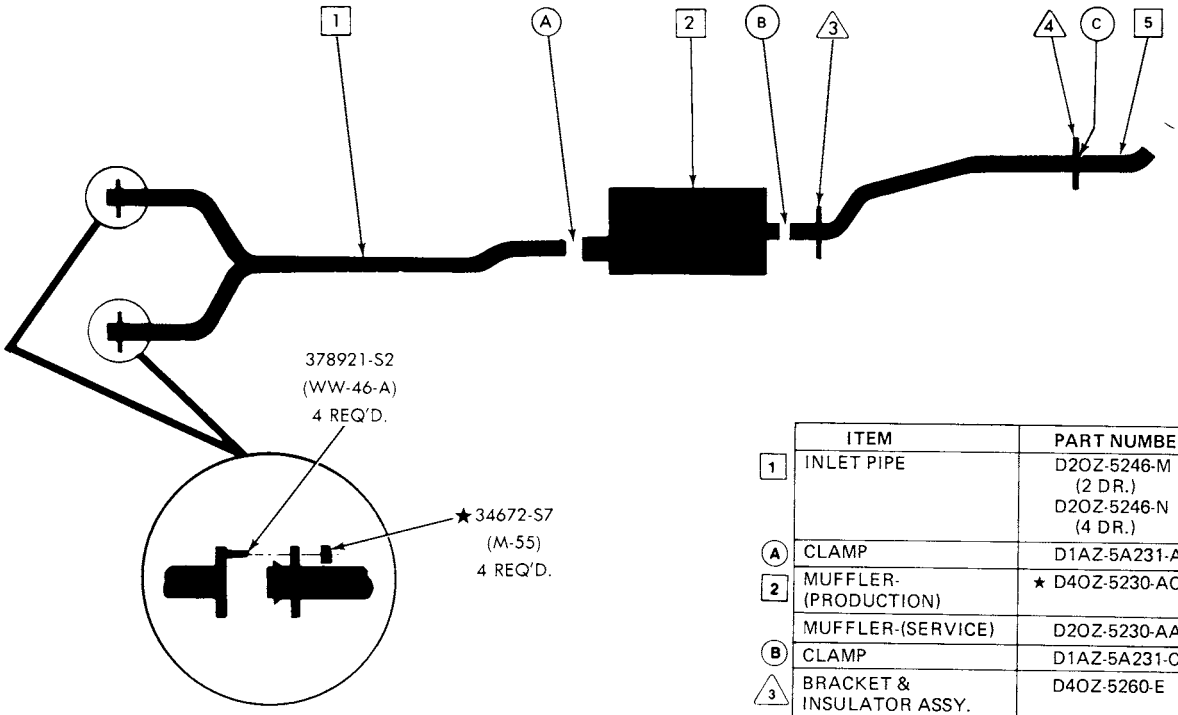

	ITEM	PART NUMBER
1	INLET PIPE	D2OZ-5246-M (2 DR.) D2OZ-5246-N (4 DR.)
A	CLAMP	D1AZ-5A231-A
2	MUFFLER-(PRODUCTION)	★ D4OZ-5230-AC
	MUFFLER-(SERVICE)	D2OZ-5230-AA
B	CLAMP	D1AZ-5A231-C
3	BRACKET & INSULATOR ASSY.	D4OZ-5260-E
	★ 40980-S2 SCREW-HEX HD. 3/8-16 x 1 (2) REQ'D. ATT. BRKT. & INSUL. ASSY. TO UNDERBODY 381877-S2 (UU-52-AF) SCREW-HEX HD. 5/16-17 x 3/4 (2) REQ'D. ATT. BRKT. & PLATE TO MUFFLER	
4	BRACKET & INSULATOR ASSY.	★ D4OZ-5260-C
	★ 40980-S2 SCREW-HEX HD. 3/8-16 x 1 (1) REQ'D. ATT. BRKT. TO FRAME	
C	CLAMP	D1AZ-5A231-A
5	OUTLET PIPE-(SERVICE)	D4OZ-5255-G

E-D-114

COPYRIGHT © 1986 — FORD MOTOR COMPANY — DEARBORN, MICHIGAN

1973/79 LINCOLN-MERCURY CARS

1974 MONTEGO—8 CYL. 400-2/B STATION WAGON

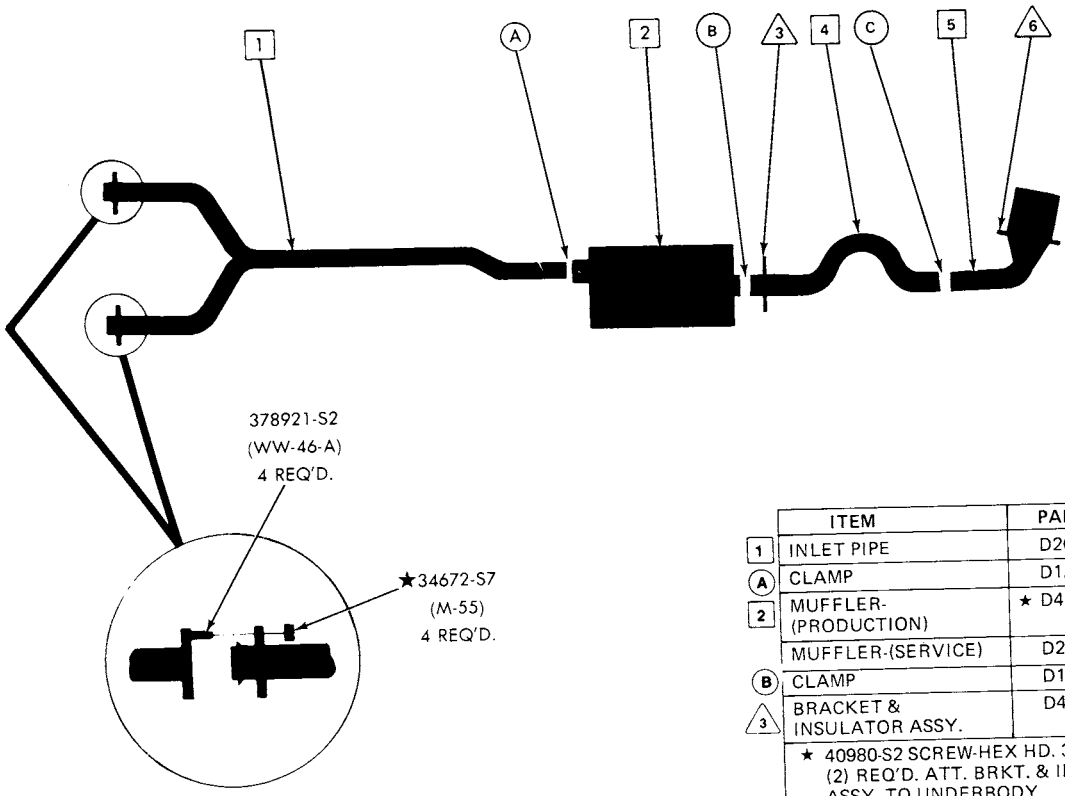

	ITEM	PART NUMBER
1	INLET PIPE	D2OZ-5246-N
A	CLAMP	D1AZ-5A231-A
2	MUFFLER-(PRODUCTION)	★ D4OZ-5230-G
	MUFFLER-(SERVICE)	D2OZ-5230-AA
B	CLAMP	D1AZ-5A231-C
3	BRACKET & INSULATOR ASSY.	D4OZ-5260-E
	★ 40980-S2 SCREW-HEX HD. 3/8-16 x 1 (2) REQ'D. ATT. BRKT. & INSUL. ASSY. TO UNDERBODY 381877-S2 (UU-52-AF) SCREW-HEX HD. 5/16-18 x 3/4 (2) REQ'D. ATT. BRKT. & INSUL. ASSY. TO MUFFLER	
4	OUTLET PIPE FRONT (SERVICE)	D4OZ-5255-H
C	CLAMP	D1AZ-5A231-A
5	OUTLET PIPE-REAR	D4OZ-5255-A
6	BRACKET & INSULATOR ASSY.	D3AZ-5260-A
	★ 40941-S2 SCREW-HEX HD. 3/8-16 x 5/8 (2) REQ'D. ATT. BRKT. & INSUL. ASSY. TO CROSSMEMBER ★ D3AA-5299-AB PLATE 38471-S2 (UU-52-AM) SCREW-HEX HD. 5/16-18 x 1 (2) REQ'D. ATT. BRKT. & INSUL. ASSY. & PLATE TO OUTLET PIPE	

1974 MONTEGO—8 CYL. 460-4/B
SEDAN & HARDTOP

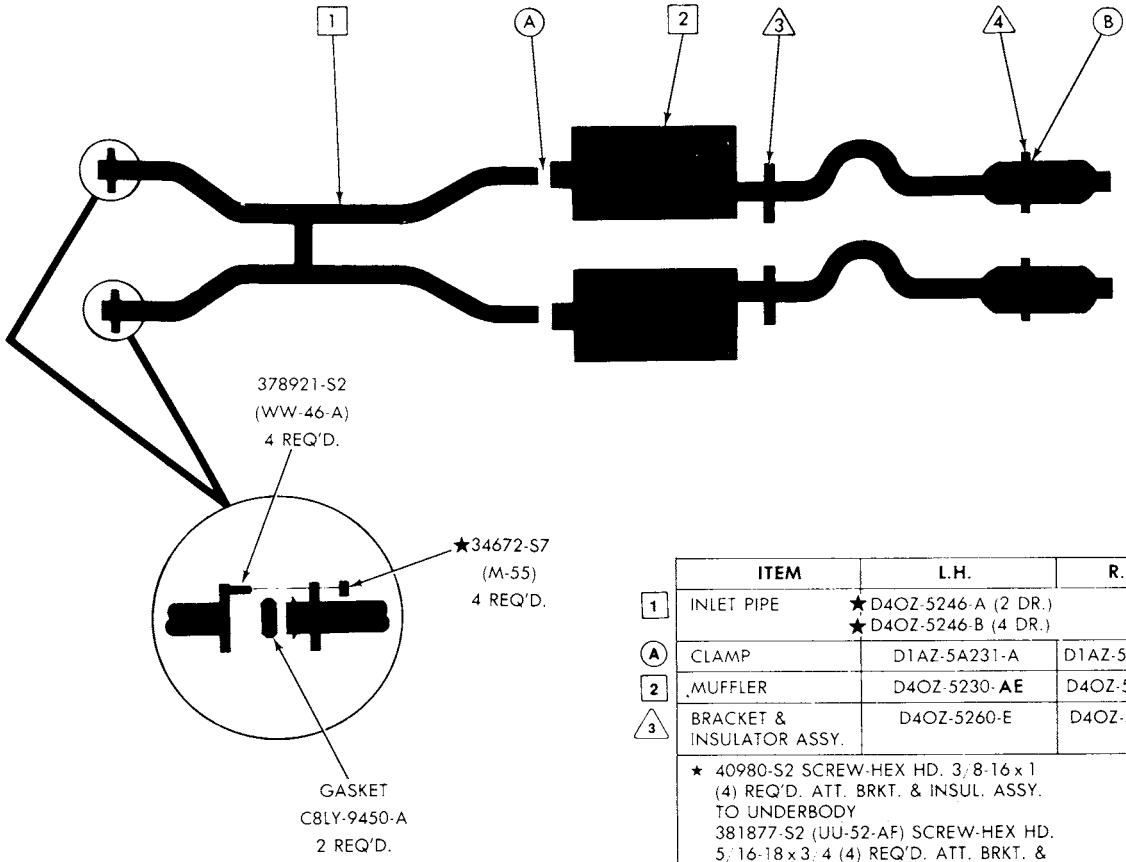

	ITEM	L.H.	R.H.
1	INLET PIPE	★D4OZ-5246-A (2 DR.) ★D4OZ-5246-B (4 DR.)	
A	CLAMP	D1AZ-5A231-A	D1AZ-5A231-A
2	MUFFLER	D4OZ-5230-**AE**	D4OZ-5230-**AD**
3	BRACKET & INSULATOR ASSY.	D4OZ-5260-E	D4OZ-5260-E
	★ 40980-S2 SCREW-HEX HD. 3/8-16 x 1 (4) REQ'D. ATT. BRKT. & INSUL. ASSY. TO UNDERBODY 381877-S2 (UU-52-AF) SCREW-HEX HD. 5/16-18 x 3/4 (4) REQ'D. ATT. BRKT. & INSUL. ASSY. TO MUFFLER		
4	BRACKET & INSULATOR ASSY.	★D4OZ-5260-C	★D4OZ-5260-C
	★ 40980-S2 SCREW-HEX HD. 3/8-16 x 1 (2) REQ'D. ATT. BRKT. & INSUL. ASSY. TO UNDERBODY		
B	CLAMP	C1TT-5A231-D	C1TT-5A231-D

E-D-116

COPYRIGHT © 1986 — FORD MOTOR COMPANY — DEARBORN, MICHIGAN

1974 MONTEGO—8 CYL. 460-4/B STATION WAGON

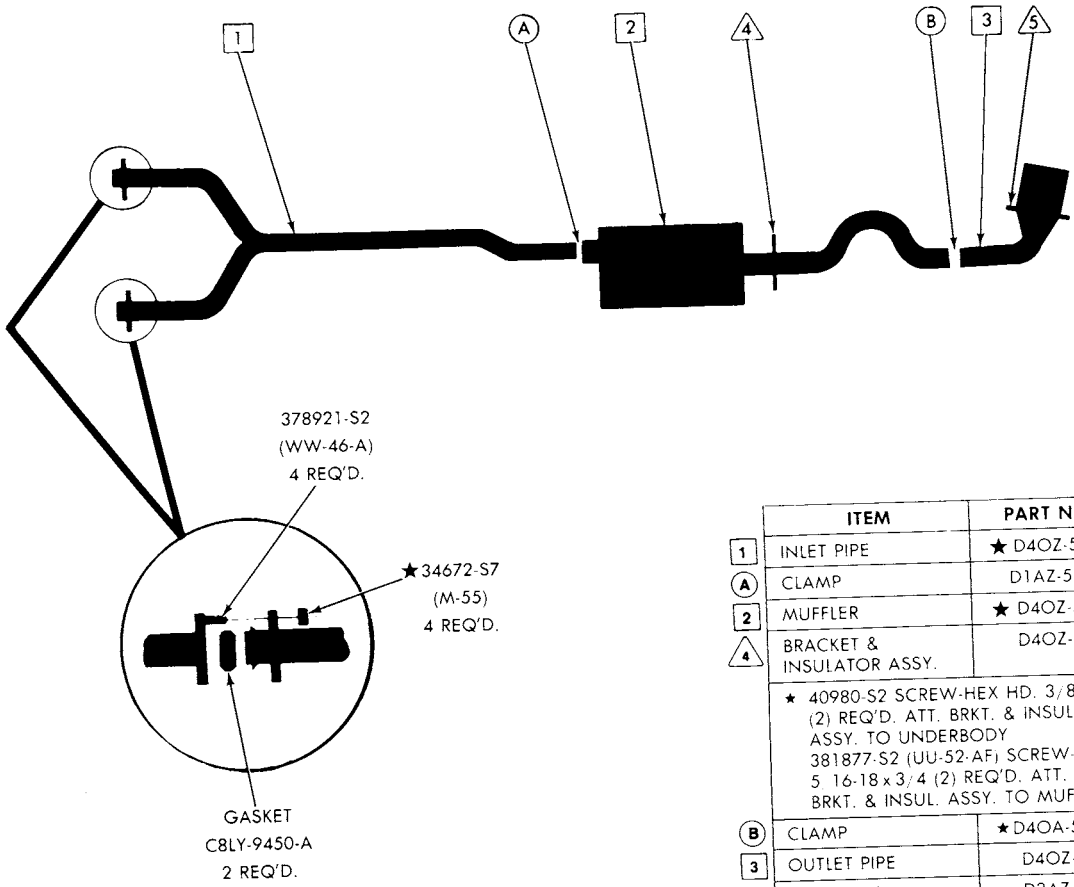

	ITEM	PART NUMBER
1	INLET PIPE	★ D4OZ-5246-N
A	CLAMP	D1AZ-5A231-A
2	MUFFLER	★ D4OZ-5230-Y
4	BRACKET & INSULATOR ASSY.	D4OZ-5260-E
	★ 40980-S2 SCREW-HEX HD. 3/8-16 x 1 (2) REQ'D. ATT. BRKT. & INSUL. ASSY. TO UNDERBODY 381877-S2 (UU-52-AF) SCREW-HEX HD. 5/16-18 x 3/4 (2) REQ'D. ATT. BRKT. & INSUL. ASSY. TO MUFFLER	
B	CLAMP	★ D4OA-5A231-A
3	OUTLET PIPE	D4OZ-5255-A
5	BRACKET & INSULATOR ASSY.	D3AZ-5260-A
	★ 40941-S2 SCREW-HEX HD. 3/8-16 x 5/8 (2) REQ'D. ATT. BRKT. & INSUL. ASSY. TO CROSSMEMBER ★ D3AA-5299-AB PLATE 384871-S2 (UU-52-AM) SCREW-HEX HD. 5/16-18 x 1 (2) REQ'D. ATT. BRKT. & INSUL. ASSY. & PLATE TO OUTLET PIPE	

1974 LINCOLN—8 CYL. 460-4/B

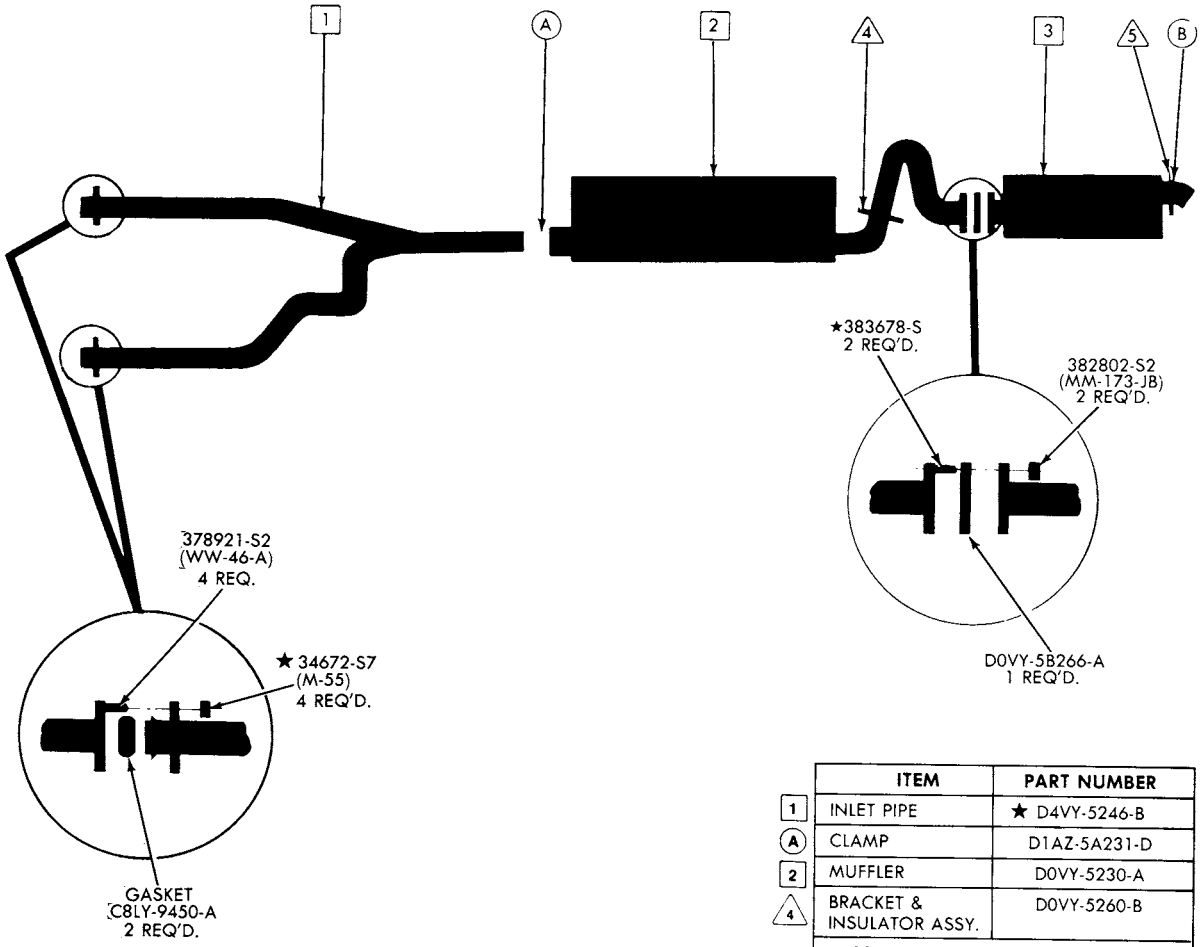

	ITEM	PART NUMBER
1	INLET PIPE	★ D4VY-5246-B
A	CLAMP	D1AZ-5A231-D
2	MUFFLER	D0VY-5230-A
4	BRACKET & INSULATOR ASSY.	D0VY-5260-B
	381877-S2 (UU-52-AF) SCREW-HEX HD. 5/16-18 x 3/4 (2) REQ'D. ATT. BRKT. TO MUFFLER ★ DOVA-5299-A PLATE ASSY. ★ 40980-S2 SCREW-HEX HD. 3/8-16 x 1 (2) REQ'D. ATT. PLATE & BRKT. TO BODY	
3	RESONATOR	★ D4VY-5A289-C
5	BRACKET & INSULATOR ASSY.	D4VY-5260-A
	★ 40980-S2 SCREW-HEX HD. 3/8-16 x 1 (3) REQ'D. ATT. BRKT. TO BODY	
B	CLAMP	C1TT-5A231-D

E-J-11

COPYRIGHT © 1986 — FORD MOTOR COMPANY — DEARBORN, MICHIGAN

1974 COUGAR—8 CYL. 351-2/B (C & W) HARDTOP

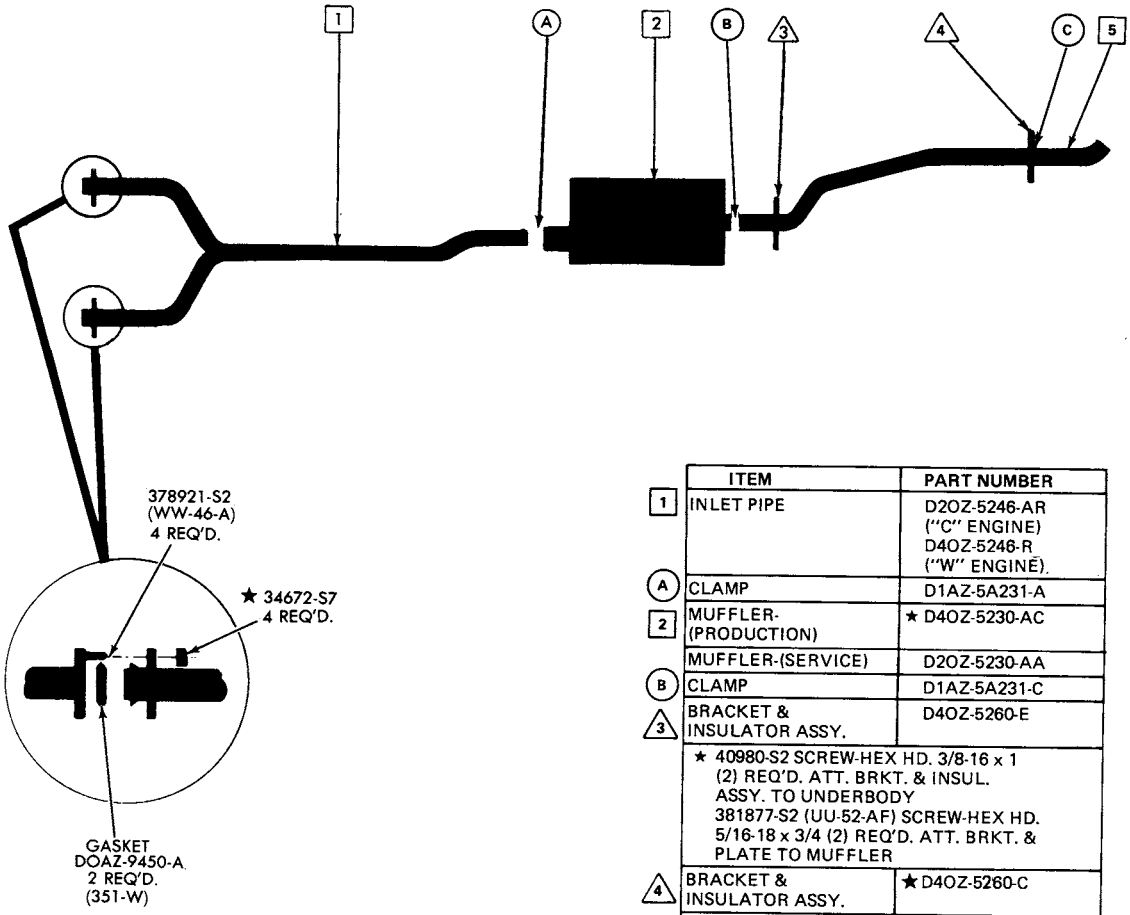

	ITEM	PART NUMBER
1	INLET PIPE	D2OZ-5246-AR ("C" ENGINE) D4OZ-5246-R ("W" ENGINE).
A	CLAMP	D1AZ-5A231-A
2	MUFFLER-(PRODUCTION)	★ D4OZ-5230-AC
	MUFFLER-(SERVICE)	D2OZ-5230-AA
B	CLAMP	D1AZ-5A231-C
3	BRACKET & INSULATOR ASSY.	D4OZ-5260-E
	★ 40980-S2 SCREW-HEX HD. 3/8-16 x 1 (2) REQ'D. ATT. BRKT. & INSUL. ASSY. TO UNDERBODY 381877-S2 (UU-52-AF) SCREW-HEX HD. 5/16-18 x 3/4 (2) REQ'D. ATT. BRKT. & PLATE TO MUFFLER	
4	BRACKET & INSULATOR ASSY.	★ D4OZ-5260-C
	★ 40980-S2 SCREW-HEX HD. 3/8-16 x 1 (1) REQ'D. ATT. BRKT. TO FRAME	
C	CLAMP	D1AZ-5A231-A
5	OUTLET PIPE-(SERVICE)	D4OZ-5255-G

E-B-25

COPYRIGHT © 1986 — FORD MOTOR COMPANY — DEARBORN, MICHIGAN

1974 COUGAR—8 CYL. 351-4/B HARDTOP

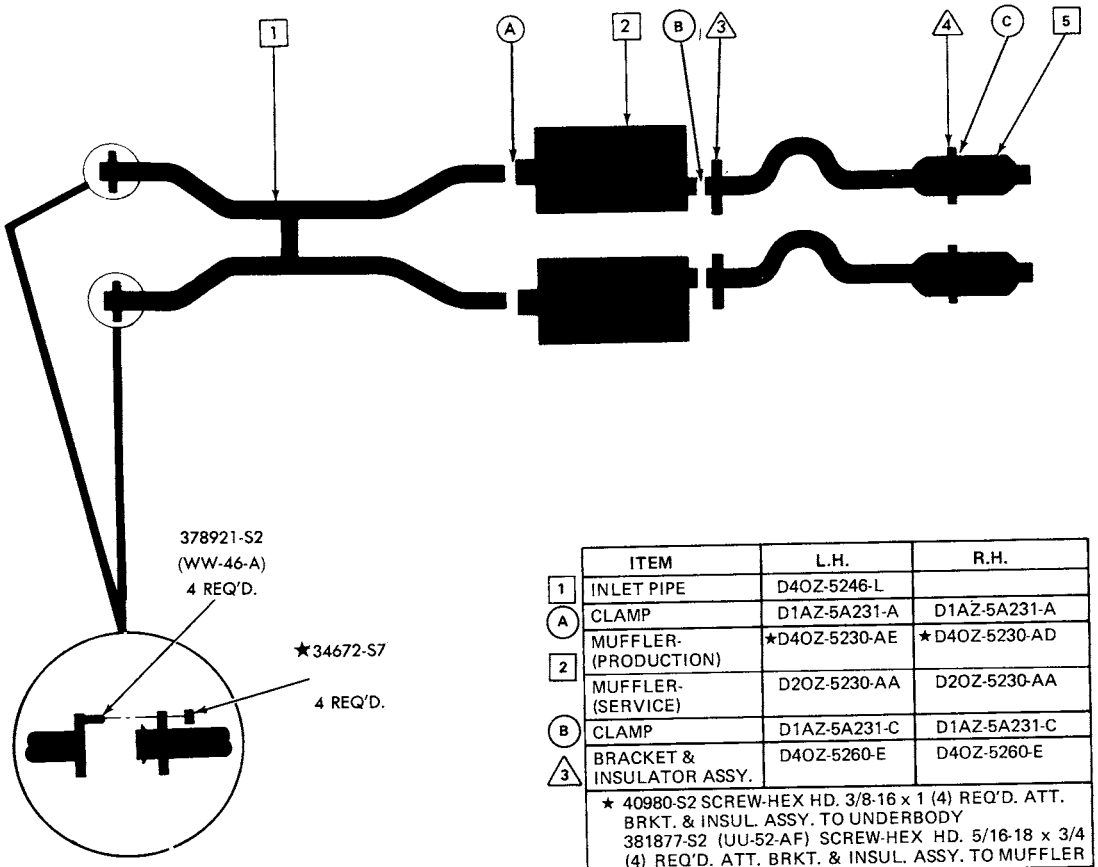

	ITEM	L.H.	R.H.
1	INLET PIPE	D4OZ-5246-L	
A	CLAMP	D1AZ-5A231-A	D1AZ-5A231-A
2	MUFFLER-(PRODUCTION)	★D4OZ-5230-AE	★D4OZ-5230-AD
	MUFFLER-(SERVICE)	D2OZ-5230-AA	D2OZ-5230-AA
B	CLAMP	D1AZ-5A231-C	D1AZ-5A231-C
3	BRACKET & INSULATOR ASSY.	D4OZ-5260-E	D4OZ-5260-E
	★ 40980-S2 SCREW-HEX HD. 3/8-16 x 1 (4) REQ'D. ATT. BRKT. & INSUL. ASSY. TO UNDERBODY 381877-S2 (UU-52-AF) SCREW-HEX HD. 5/16-18 x 3/4 (4) REQ'D. ATT. BRKT. & INSUL. ASSY. TO MUFFLER		
4	BRACKET & INSULATOR ASSY.	★D4OZ-5260-C	★D4OZ-5260-C
	★ 40980-S2 SCREW-HEX HD. 3/8-16 x 1 (2) REQ'D. ATT. BRKT. & INSUL. ASSY. TO UNDERBODY		
C	CLAMP	C1TT-5A231-D	C1TT-5A231-D
5	OUTLET PIPE-(SERVICE)	★D4OZ-5255-L	★D4OZ-5255-K

1974 COUGAR—8 CYL. 400-2/B HARDTOP

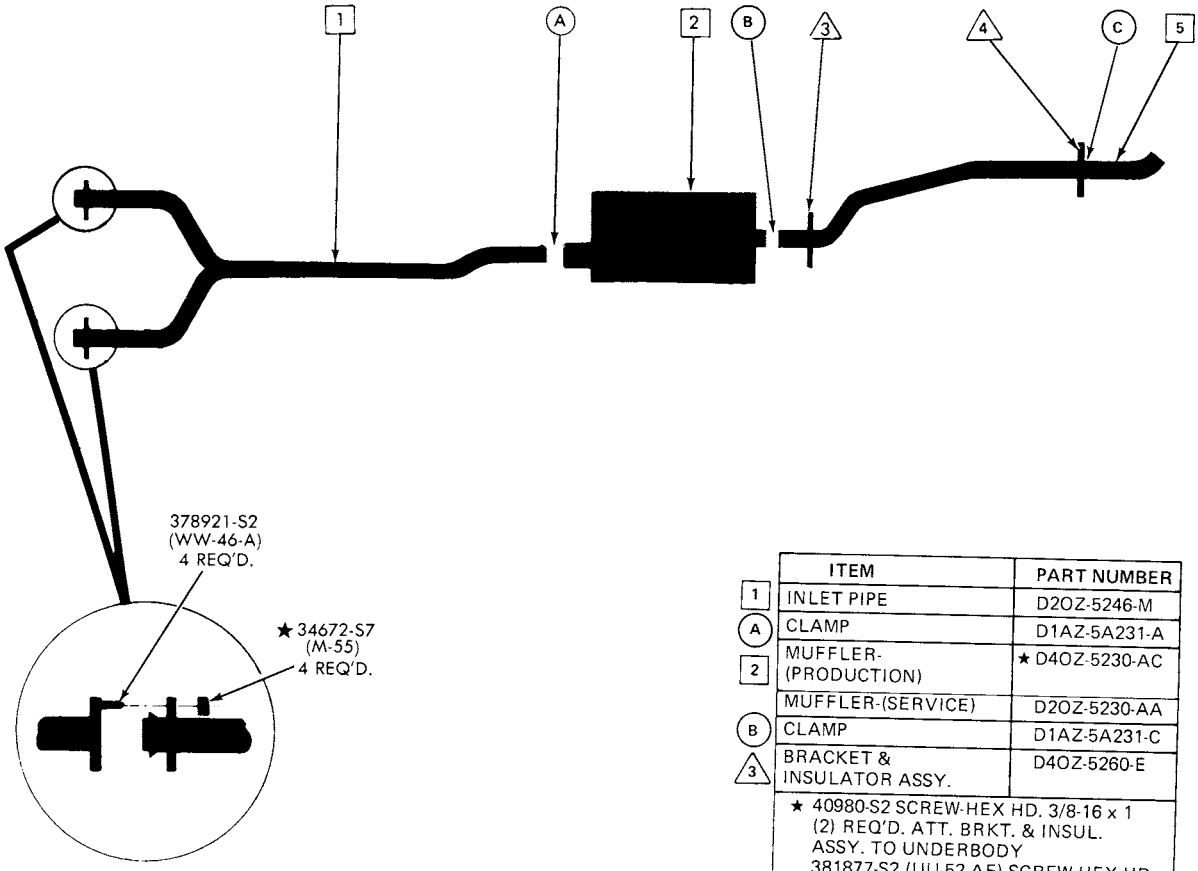

	ITEM	PART NUMBER
1	INLET PIPE	D2OZ-5246-M
A	CLAMP	D1AZ-5A231-A
2	MUFFLER-(PRODUCTION)	★ D4OZ-5230-AC
	MUFFLER-(SERVICE)	D2OZ-5230-AA
B	CLAMP	D1AZ-5A231-C
3	BRACKET & INSULATOR ASSY.	D4OZ-5260-E
	★ 40980-S2 SCREW-HEX HD. 3/8-16 x 1 (2) REQ'D. ATT. BRKT. & INSUL. ASSY. TO UNDERBODY 381877-S2 (UU-52-AF) SCREW-HEX HD. 5/16-18 x 3/4 (2) REQ'D. ATT. BRKT. & PLATE TO MUFFLER	
4	BRACKET & INSULATOR ASSY.	★D4OZ-5260-C
	★ 40980-S2 SCREW-HEX HD. 3/8-16 x 1 (1) REQ'D. ATT. BRKT. TO FRAME	
C	CLAMP	D1AZ-5A231-A
5	OUTLET PIPE-(SERVICE)	D4OZ-5255-G

E-B-28

COPYRIGHT © 1986 — FORD MOTOR COMPANY — DEARBORN, MICHIGAN

1974 COUGAR—8 CYL. 460-4/B HARDTOP

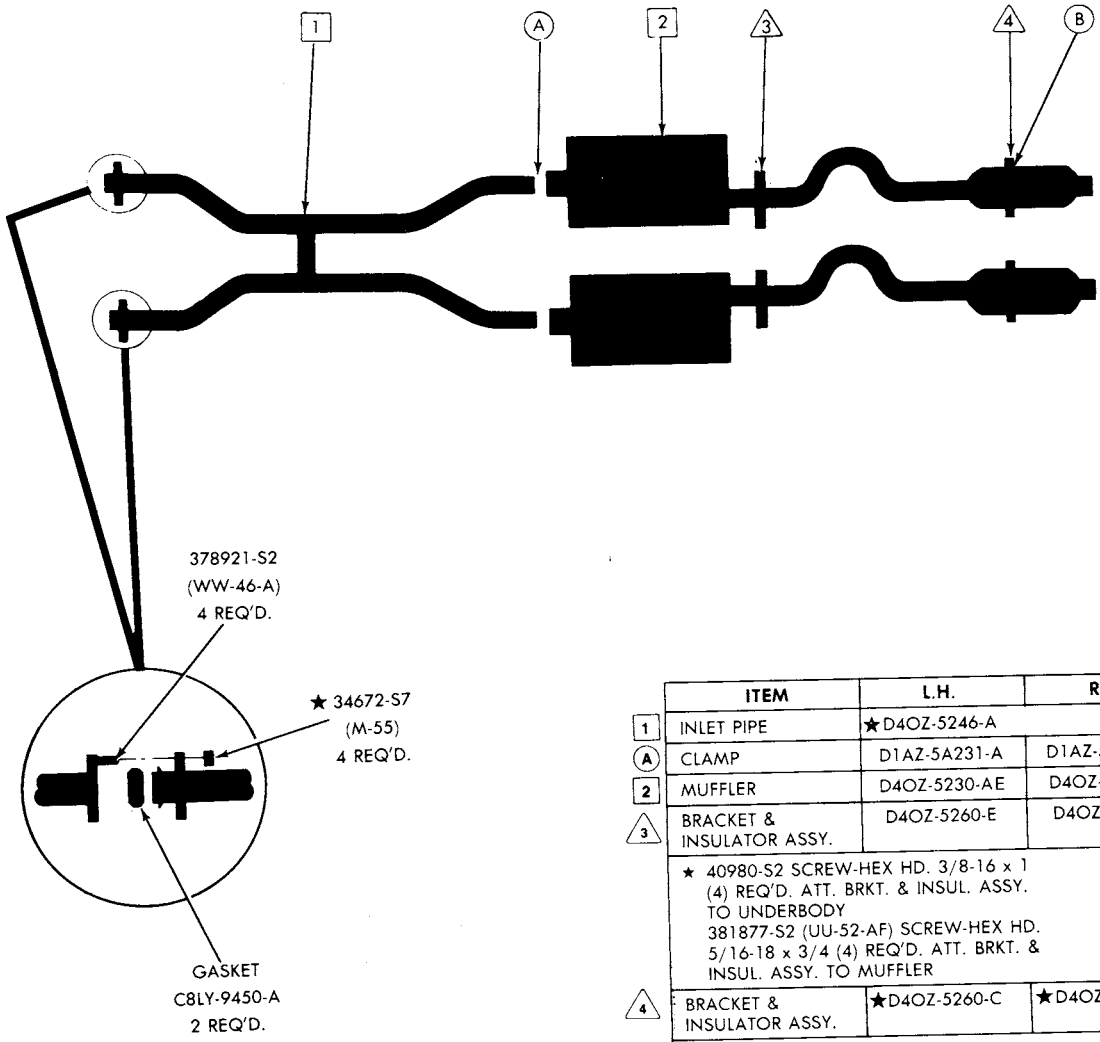

	ITEM	L.H.	R.H.
1	INLET PIPE	★D4OZ-5246-A	
A	CLAMP	D1AZ-5A231-A	D1AZ-5A231-A
2	MUFFLER	D4OZ-5230-AE	D4OZ-5230-AD
3	BRACKET & INSULATOR ASSY.	D4OZ-5260-E	D4OZ-5260-E
	★ 40980-S2 SCREW-HEX HD. 3/8-16 x 1 (4) REQ'D. ATT. BRKT. & INSUL. ASSY. TO UNDERBODY 381877-S2 (UU-52-AF) SCREW-HEX HD. 5/16-18 x 3/4 (4) REQ'D. ATT. BRKT. & INSUL. ASSY. TO MUFFLER		
4	BRACKET & INSULATOR ASSY.	★D4OZ-5260-C	★D4OZ-5260-C
	★ 40980-S2 SCREW-HEX HD. 3/8-16 x 1 (2) REQ'D. ATT. BRKT. & INSUL. ASSY. TO UNDERBODY		
B	CLAMP	C1TT-5A231-D	C1TT-5A231-D

1974 CAPRI—4 CYL. 122-2/B (2000 cc)

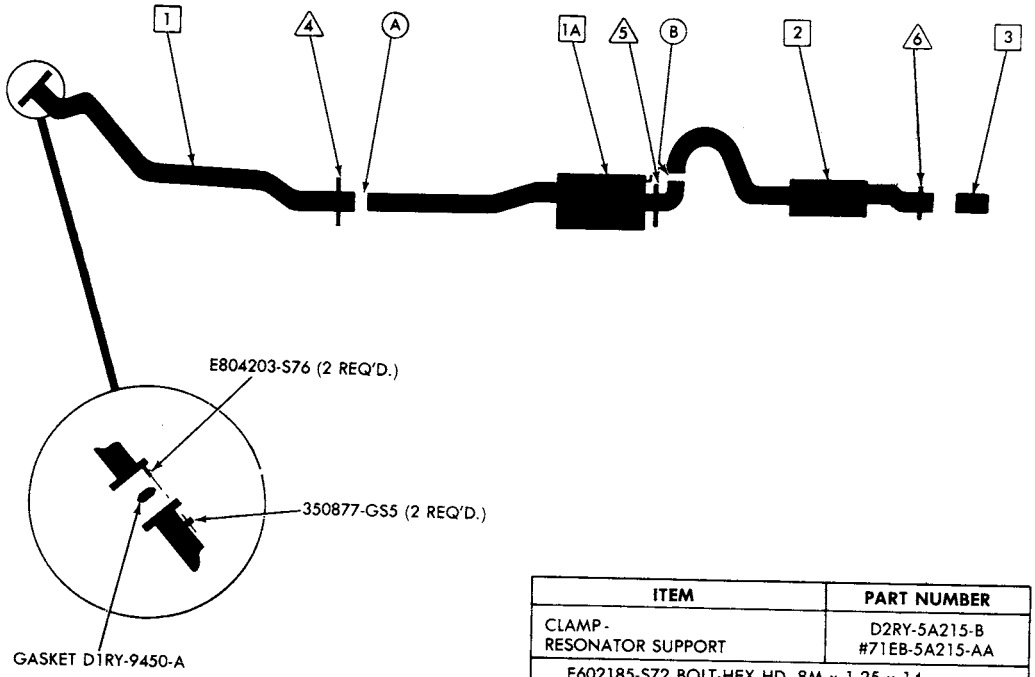

	ITEM	PART NUMBER
1	INLET PIPE (RESONATOR)	D2RY-5246-E
4	SUPPORT	D1RY-5277-J
	BRACKET RESONATOR INLET PIPF	D1RY-5277-G NOTE 1 #71EB-5K249-AB, #71EB-5K222-AA
	★ E602186-S72 BOLT-HEX HD. M8 x 16 (1) REQ'D. ATT. SUPPORT TO BRKT. ★ E602186-S72 BOLT-HEX HD. M8 x 16 (2) REQ'D. ATT. SUPPORT TO BRKT.	
A	U-BOLT	D1RY-5A231-G
	E350877-GS5 NUT-LOCK M10 x 1.50 (METRIC COARSE) (2) REQ'D. ATT. CLAMP TO U-BOLT	
1A	RESONATOR	D3RY-5212-C
5	BRACKET-RESONATOR	D2RY-5277-G #71EB-5A204-KA
	U-BOLT-RESONATOR	D2RY-5C223-B #71EB-5C223-BA

	ITEM	PART NUMBER
	CLAMP - RESONATOR SUPPORT	D2RY-5A215-B #71EB-5A215-AA
	E602185-S72 BOLT-HEX HD. 8M x 1.25 x 14 (METRIC FINE) (2) REQ'D. E630173-S71 WASHER-LOCK M8 (METRIC) (2) REQ'D. ATT. BRKT. RESONATOR TO UNDERBODY E620413-S72 (AM-6) NUT M8 x 1.25 (METRIC FINE) (1) REQ'D. ATT. CLAMP TO U-BOLT	
	INSULATOR (RUBBER)	D2RY-5281-A
B	U-BOLT	★ D1RY-5A231-G r/b E0RZ-5A231-B
	CLAMP	D2RY-5270-A
	E350877-GS5 NUT-LOCK M10 x 1.50 (METRIC COARSE) (2) REQ'D. ATT. CLAMP TO U-BOLT	
2	MUFFLER	D3RY-5230-C
6	BOLT	D2RY-5A261-A
	E630031-S71 WASHER-FLAT M10 (METRIC) (1) REQ'D. E350877-GS5 NUT-LOCK M10 x 1.50 (METRIC COARSE) (1) REQ'D. ATT. MUFFLER TO FRAME	
	INSULATOR (RUBBER)	D2RY-5281-A
	U-BOLT	D2RY-5C223-C #71EB-5C223-GA
	CLAMP	D2RY-5A215-C #71EB-5A251-DA
	E620413-S72 (AM-6) NUT M8 x 1.25 (METRIC FINE) (1) REQ'D. ATT. CLAMP TO U-BOLT	
3	OUTLET PIPE EXTENSION	D1RY-5255-B
	KIT-EXHAUST SYSTEM MOUNTING CONVERSION - USE TO CORRECT EXHAUST BOOM	D2RY-5K272-A

NOTE 1 - EARLY STYLE REAR ENGINE SUPPORT (6068) INCLUDED A RESONATOR BRACKET. FOR SERVICE USE D3RY-6068-A, D1RY-5277-G AND D1RY-5277-J

E-M-12

COPYRIGHT © 1986 — FORD MOTOR COMPANY — DEARBORN, MICHIGAN

1973/79 LINCOLN-MERCURY CARS

1974 CAPRI—6 CYL. 171-2/B (2800 cc)

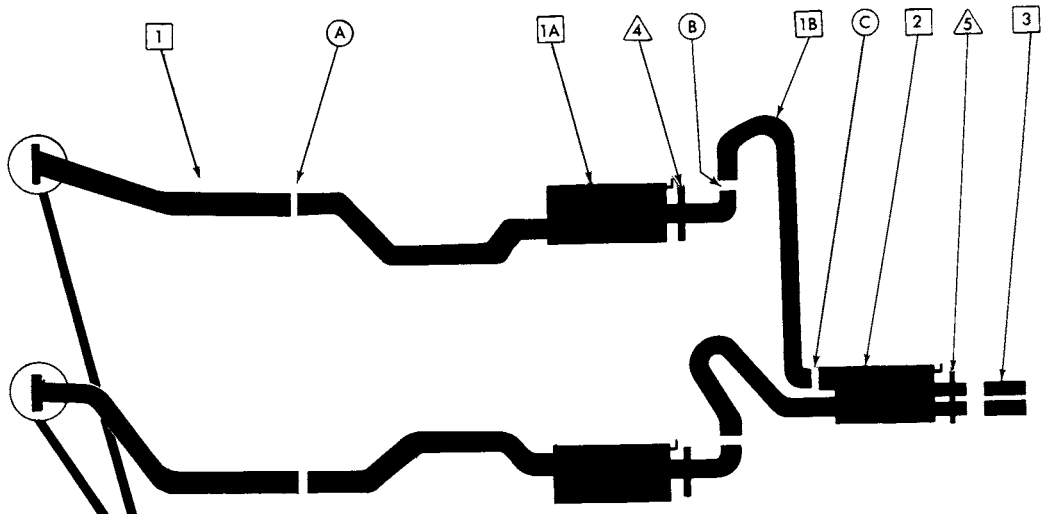

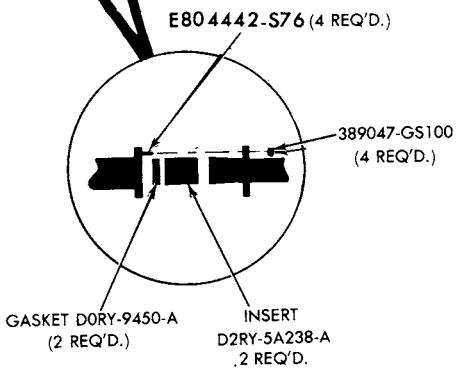

	ITEM	L.H.	R.H.
1	INLET PIPE	D4RY-5246-B	D4RY-5246-A
A	U-BOLT	D1RY-5A231-G	D1RY-5A231-G
	CLAMP	D2RY-5270-A	D2RY-5270-A
	E350877-GS5 NUT-LOCK M10 x 1.50 (METRIC COARSE) (4) REQ'D. ATT. CLAMP TO U-BOLT		
1A	RESONATOR	D3RY-5212-B	D3RY-5212-A
4	BRACKET-RESONATOR	D2RY-5277-G #71EB-5A204-KA	D2RY-5277-F #71EB-5A204-LA
	U-BOLT-RESONATOR	★ D2RY-5C223-B #71EB-5C223-BA	★ D2RY-5C223-A #71EB-5C223-LA

	ITEM	L.H.	R.H.
	CLAMP-RESONATOR SUPPORT	★ D2RY-5A215-B #71EB-5A215-AA	★ D2RY-5A215-A #71EB-5A215-JA
	E602185-S72 BOLT-HEX HD. 8M x 1.25 x 14 (METRIC FINE) (4) REQ'D. E630173-S71 WASHER-LOCK M8 (METRIC) (4) REQ'D. ATT. BRKT. TO UNDERBODY E620413-S72 (AM-6) NUT-M8 x 1.25 (METRIC FINE) (1) REQ'D. ATT. L.H. CLAMP TO U-BOLT E600214-S72 BOLT-HEX HD. 8M x 1.25 x 45 (METRIC FINE) (1) REQ'D. ATT. R.H. CLAMP TO U-BOLT		
	INSULATOR (RUBBER)	D2RY-5281-A	D2RY-5281-A
B	U-BOLT	D1RY-5A231-F	D1RY-5A231-F
	E350877-GS5 NUT-LOCK M10 x 1.50 (METRIC COARSE) (2) REQ'D. ATT. CLAMP TO U-BOLT		
1B	CROSSOVER PIPE FROM R.H. RESONATOR TO MUFFLER		D3RY-5A212-A #73EB-5A260-AA
C	U-BOLT	D1RY-5A231-F	
	E350877-GS5 NUT-LOCK M10 x 1.50 (METRIC COARSE) (2) REQ'D. ATT. CLAMP TO U-BOLT		
2	MUFFLER	D4RY-5230-C	
5	BRACKET-MUFFLER HANGER	D4RY-5A261-B #74EB-5A261-AA-AB	
	E630027-S71 (AX-13) WASHER-FLAT M8 (METRIC) E350877-GS5 NUT-LOCK M10 x 1.50 (METRIC COARSE) (1) REQ'D. ATT. MUFFLER TO FRAME		
	INSULATOR (RUBBER)	D2RY-5281-A	
	U-BOLT	D2RY-5C223-C #71EB-5C223-GA	
	CLAMP	★ D2RY-5A215-C #71EB-5A215-DA	
	E620413-S72 (AM-6) NUT M8 x 1.25 (METRIC FINE) (1) REQ'D. ATT. CLAMP TO U-BOLT		
3	OUTLET PIPE TRIM	D2RY-5263-A	D2RY-5263-A
	KIT-EXHAUST SYSTEM MOUNTING CONVERSION-USE TO CORRECT EXHAUST BOOM	D2RY-5K272-C	

1974 MARK IV—8 CYL. 460-4/B

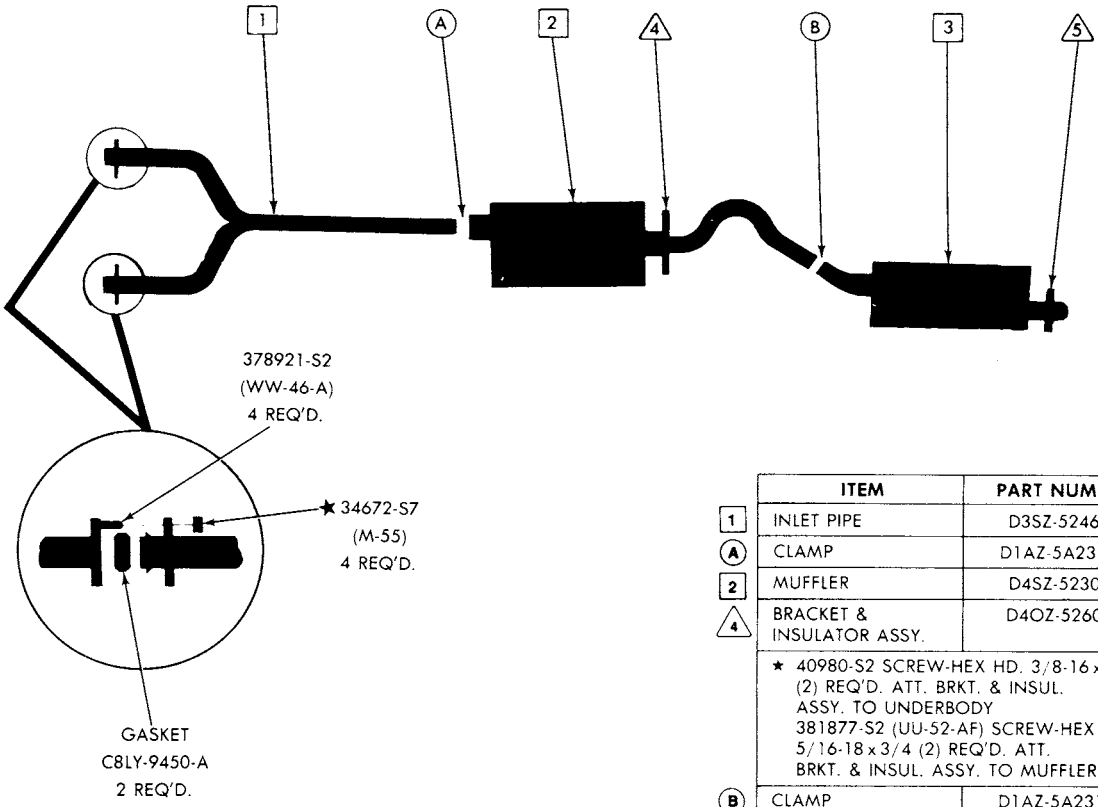

	ITEM	PART NUMBER
1	INLET PIPE	D3SZ-5246-A
A	CLAMP	D1AZ-5A231-D
2	MUFFLER	D4SZ-5230-E
4	BRACKET & INSULATOR ASSY.	D4OZ-5260-E
	★ 40980-S2 SCREW-HEX HD. 3/8-16 x 1 (2) REQ'D. ATT. BRKT. & INSUL. ASSY. TO UNDERBODY 381877-S2 (UU-52-AF) SCREW-HEX HD. 5/16-18 x 3/4 (2) REQ'D. ATT. BRKT. & INSUL. ASSY. TO MUFFLER	
B	CLAMP	D1AZ-5A231-A
3	RESONATOR	D4LY-5A289-A
5	BRACKET & INSULATOR ASSY.	**D5SZ-5260-B**
	381877-S2 (UU-52-AF) SCREW-HEX HD. 5/16-18 x 3/4 (2) REQ'D. ATT. BRKT. TO RESONATOR	

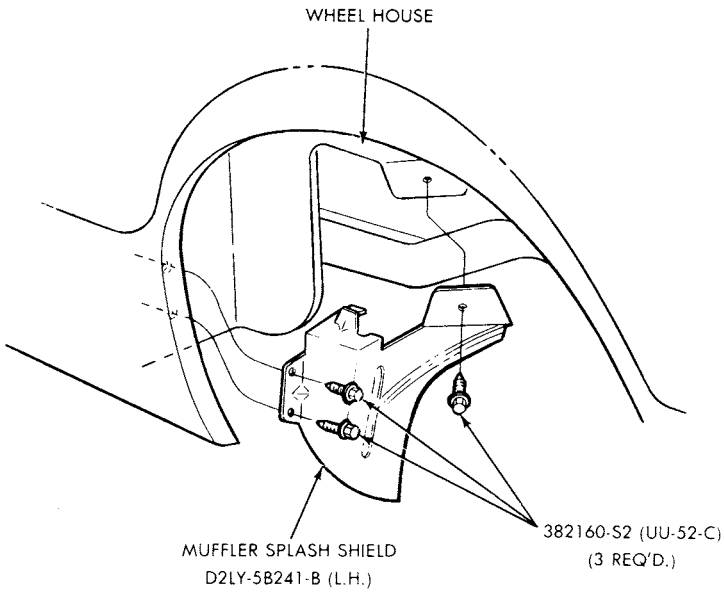

COPYRIGHT © 1986 — FORD MOTOR — DEARBORN, MICHIGAN

1974 MARK IV—8 CYL. 460-4/B

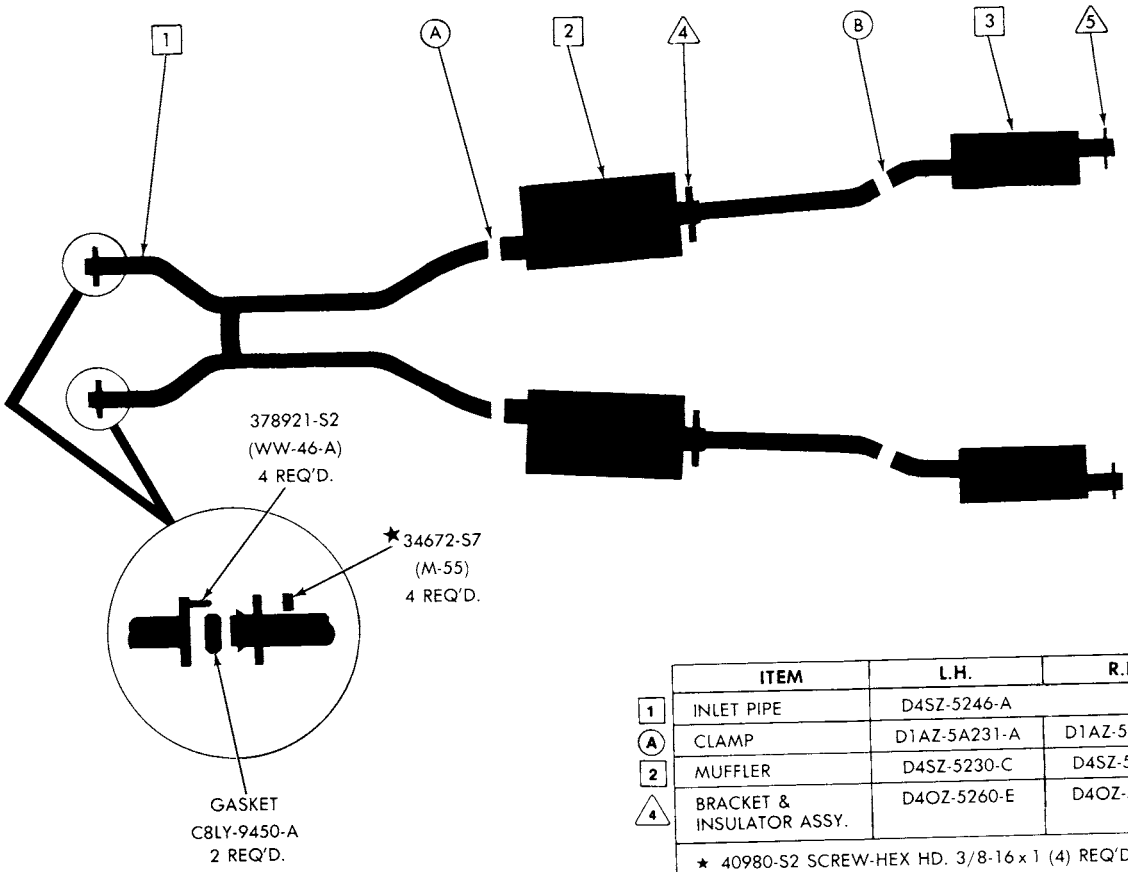

	ITEM	L.H.	R.H.
1	INLET PIPE	D4SZ-5246-A	
A	CLAMP	D1AZ-5A231-A	D1AZ-5A231-A
2	MUFFLER	D4SZ-5230-C	D4SZ-5230-D
4	BRACKET & INSULATOR ASSY.	D4OZ-5260-E	D4OZ-5260-E
	★ 40980-S2 SCREW-HEX HD. 3/8-16 x 1 (4) REQ'D. ATT. BRKT. TO FRAME 381877-S2 (UU-52-AF) SCREW-HEX HD. 5/16-18 x 3/4 (4) REQ'D. ATT. BRKT. TO MUFFLER		
B	CLAMP	D1AZ-5A231-A	D1AZ-5A231-A
3	RESONATOR	D4LY-5A289-C	D4LY-5A289-B
5	BRACKET & INSULATOR ASSY.	**D5SZ-5260-B**	D4SZ-5260-A
	381877-S2 (UU-52-AF) SCREW-HEX HD. 5/16-18 x 3/4 (4) REQ'D. ATT. BRKT. TO RESONATOR		

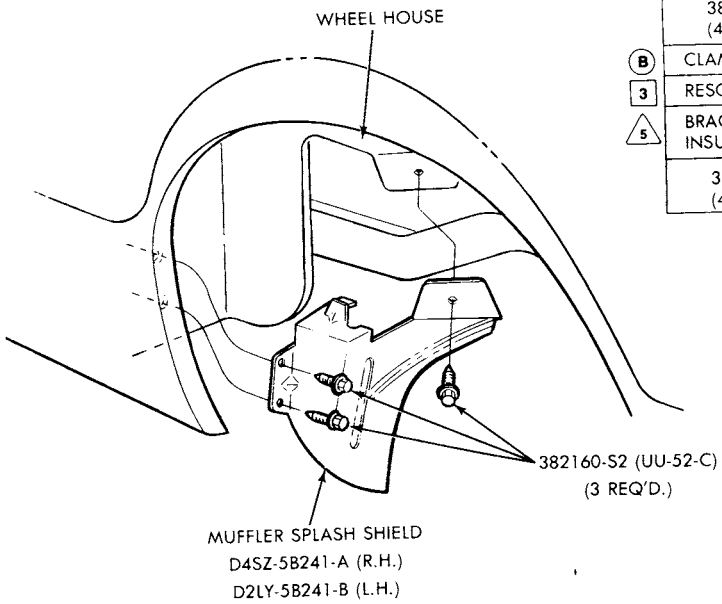

E-K-7

1974 BOBCAT—4 CYL. 122-2/B (2000cc) SEDANS-W/O RESONATOR
1974 BOBCAT—4 CYL. 140-2/B (2300cc) SEDANS-W/O RESONATOR

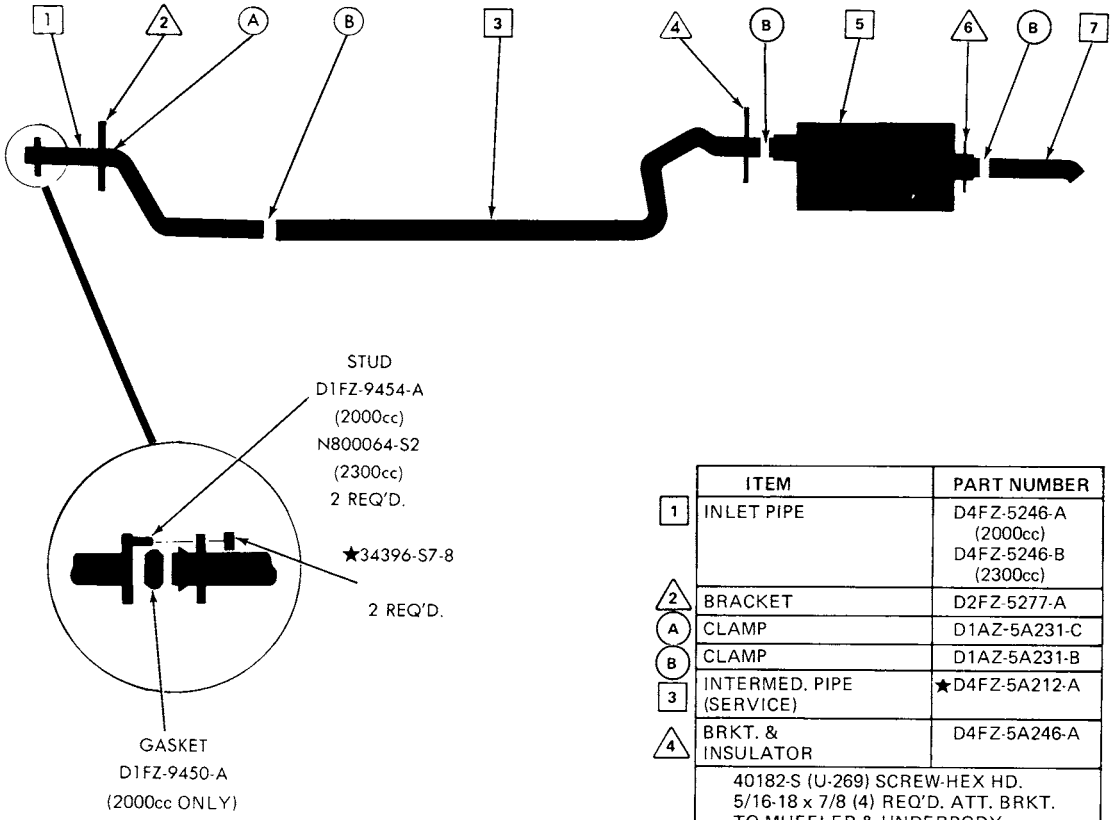

	ITEM	PART NUMBER
1	INLET PIPE	D4FZ-5246-A (2000cc) D4FZ-5246-B (2300cc)
2	BRACKET	D2FZ-5277-A
A	CLAMP	D1AZ-5A231-C
B	CLAMP	D1AZ-5A231-B
3	INTERMED. PIPE (SERVICE)	★D4FZ-5A212-A
4	BRKT. & INSULATOR	D4FZ-5A246-A
	40182-S (U-269) SCREW-HEX HD. 5/16-18 x 7/8 (4) REQ'D. ATT. BRKT. TO MUFFLER & UNDERBODY	
5	MUFFLER-(PRODUCTION)	★D4FZ-5230-D
	MUFFLER-(SERVICE)	D3FZ-5230-A
6	INSULATOR	★D42A-5A238-AA IMPROVISE
	★ D12A-5299-AB PLATE (2) REQ'D. 40182-S (U-269) SCREW-HEX HD' 5/16-18 x 7/8 (4) REQ'D. ATT. PLATE & INSUL. TO MUFFLER & UNDERBODY	
7	OUTLET PIPE-(SERVICE)	★D4FZ-5255-A

E-T-1

COPYRIGHT © 1986 — FORD MOTOR COMPANY — DEARBORN, MICHIGAN

1973/79 LINCOLN-MERCURY CARS

1974 BOBCAT—4 CYL. 122-2/B (2000cc) SEDANS-W/RESONATOR (NOTE 1)
1974 BOBCAT—4 CYL. 140-2/B (2300cc) SEDANS-W/RESONATOR

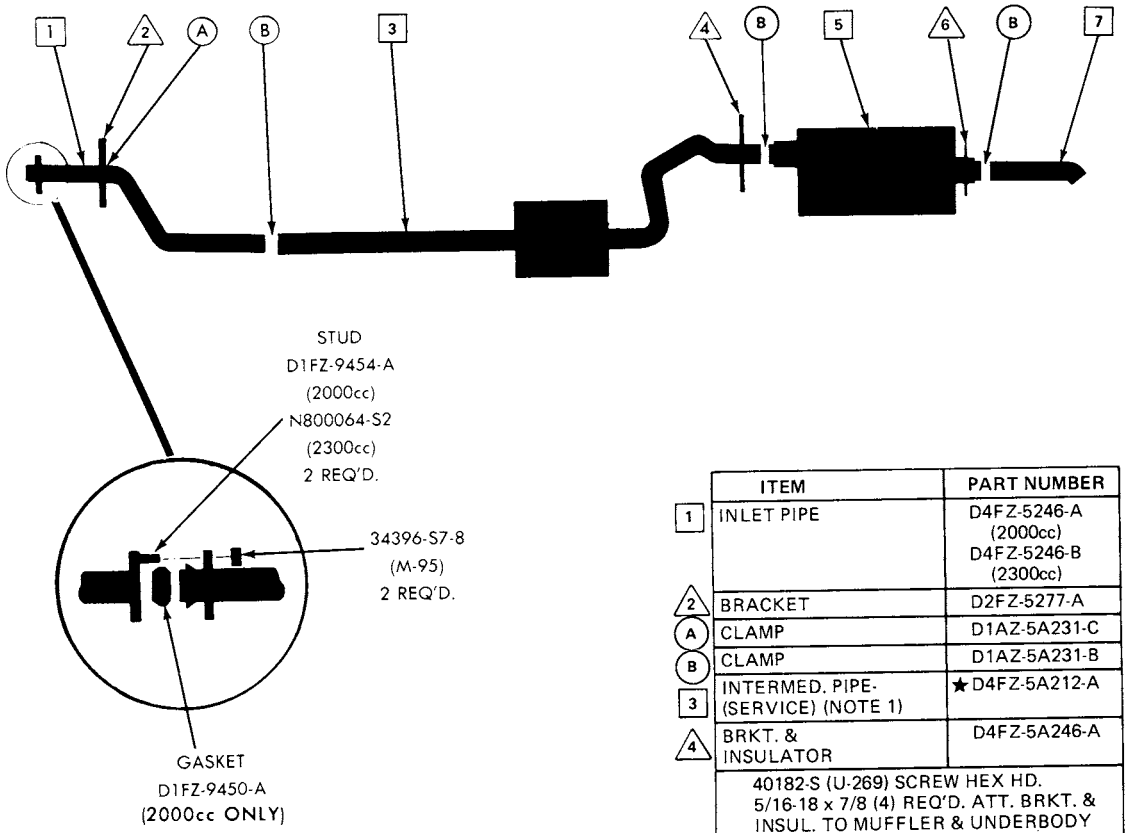

	ITEM	PART NUMBER
1	INLET PIPE	D4FZ-5246-A (2000cc) D4FZ-5246-B (2300cc)
2	BRACKET	D2FZ-5277-A
A	CLAMP	D1AZ-5A231-C
B	CLAMP	D1AZ-5A231-B
3	INTERMED. PIPE-(SERVICE) (NOTE 1)	★D4FZ-5A212-A
4	BRKT. & INSULATOR	D4FZ-5A246-A
	40182-S (U-269) SCREW HEX HD. 5/16-18 x 7/8 (4) REQ'D. ATT. BRKT. & INSUL. TO MUFFLER & UNDERBODY	
5	MUFFLER-(PRODUCTION)	★ D4FZ-5230-G
	MUFFLER-(SERVICE)	D3FZ-5230-A
6	INSULATOR	★D42A-5A238-AA■
	★ D12A-5299-AB PLATE (2) REQ'D. 40182-A (U-269) SCREW HEX HD. 5/16-18 x 7/8 (4) REQ'D. ATT. PLATE & INSUL. TO MUFFLER & UNDERBODY	
7	OUTLET PIPE-(SERVICE)	★ D4FZ-5255-A

■IMPROVISE

NOTE 1: SERVICE ONLY SYSTEM DOES NOT INCORPORATE RESONATOR

1974 BOBCAT—4 CYL. 122-2/B (2000cc) STATION WAGON-W/O RESONATOR
1974 BOBCAT—4 CYL. 140-2/B (2300cc) STATION WAGON-W/O RESONATOR

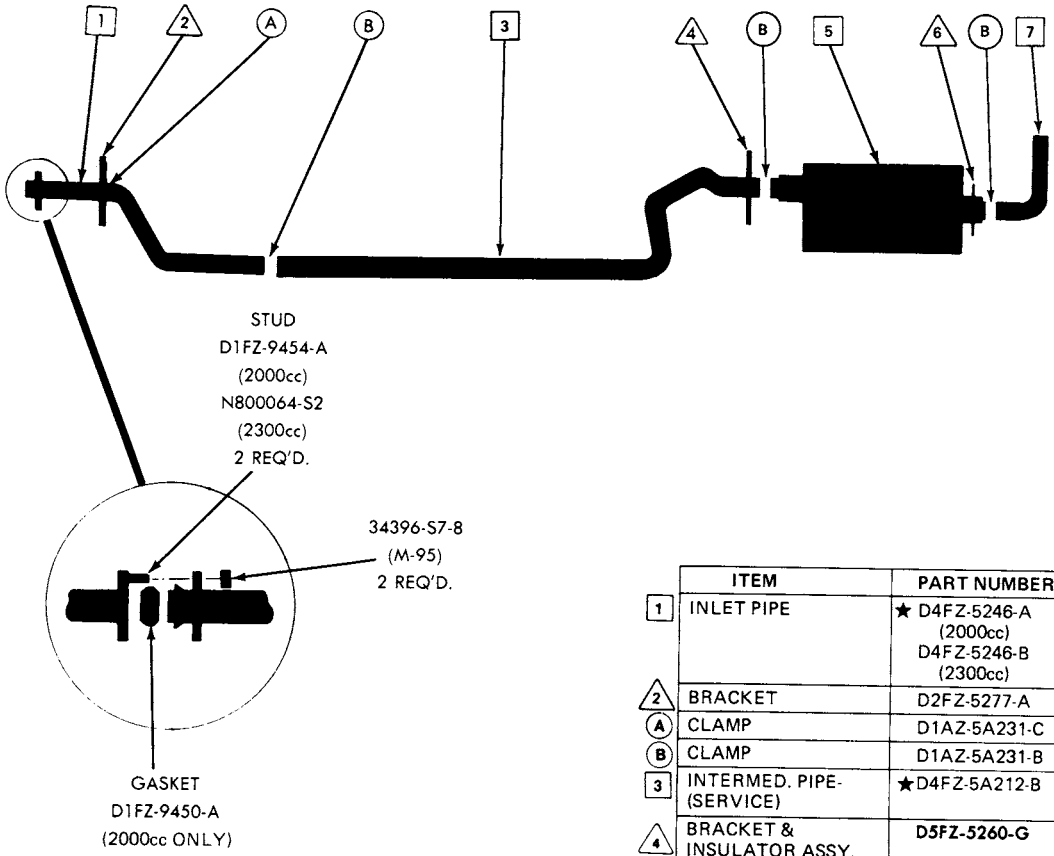

	ITEM	PART NUMBER
1	INLET PIPE	★ D4FZ-5246-A (2000cc) D4FZ-5246-B (2300cc)
2	BRACKET	D2FZ-5277-A
A	CLAMP	D1AZ-5A231-C
B	CLAMP	D1AZ-5A231-B
3	INTERMED. PIPE-(SERVICE)	★D4FZ-5A212-B
4	BRACKET & INSULATOR ASSY.	D5FZ-5260-G
	★ D12A-5299-AB PLATE (1) REQ'D. 40182-S (U-269) SCREW-HEX HD. 5/16-18 x 7/8 (4) REQ'D. ATT. PLATE & INSUL. TO MUFFLER & UNDERBODY	
5	MUFFLER-(PRODUCTION)	★ D4FZ-5230-A "BEFORE 12/3/73" ★ D4FZ-5230-J "FROM 12/3/73"
	MUFFLER-(SERVICE)	D3FZ-5230-A
6	BRKT. & INSULATOR ASSY.	D4FZ-5260-A "BEFORE 12/3/73" ★ D4FZ-5260-D "FROM 12/3/73"
	★ D12A-5299-AB PLATE (1) REQ'D. 40182-S (U-269) SCREW-HEX HD. 5/16-18 x 7/8 (4) REQ'D. ATT. PLATE & INSUL. ASSY. TO MUFFLER & UNDERBODY	
7	OUTLET PIPE-(SERVICE)	D3FZ-5255-B

E-T-3

COPYRIGHT © 1986 — FORD MOTOR COMPANY — DEARBORN, MICHIGAN

1974 BOBCAT—4 CYL. 122-2/B (2000cc) STATION WAGON-W/ RESONATOR (NOTE 1)
1974 BOBCAT—4 CYL. 140-2/B (2300cc) STATION WAGON-W/ RESONATOR

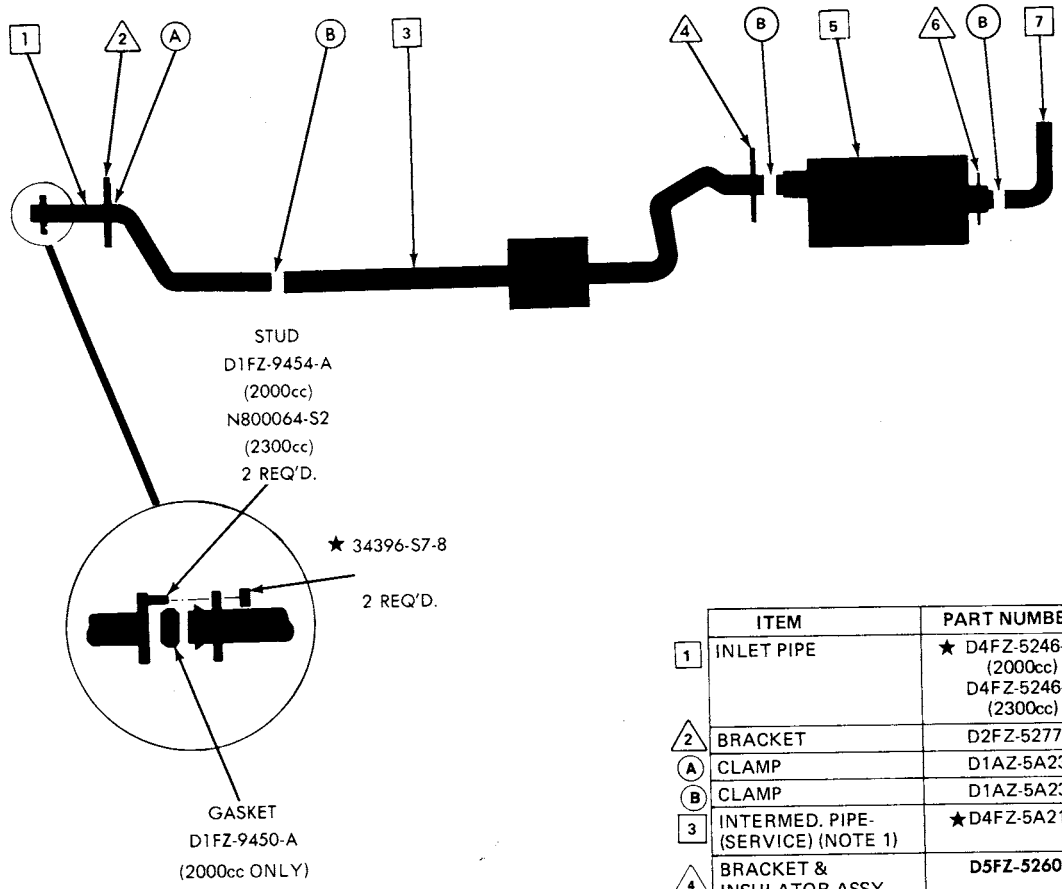

	ITEM	PART NUMBER
1	INLET PIPE	★ D4FZ-5246-A (2000cc) D4FZ-5246-B (2300cc)
2	BRACKET	D2FZ-5277-A
A	CLAMP	D1AZ-5A231-C
B	CLAMP	D1AZ-5A231-B
3	INTERMED. PIPE-(SERVICE) (NOTE 1)	★D4FZ-5A212-B
4	BRACKET & INSULATOR ASSY.	**D5FZ-5260-G**
	★ D12A-5299-AB PLATE (1) REQ'D. 40182-S (U-269) SCREW-HEX HD. 5/16-18 x 7/8 (4) REQ'D. ATT. PLATE & INSUL. TO MUFFLER & UNDERBODY	
5	MUFFLER-(PRODUCTION)	★ D4FZ-5230-E "BEFORE 12/3/73" ★ D4FZ-5230-K "FROM 12/3/73"
	MUFFLER-(SERVICE)	D3FZ-5230-A
6	BRKT. & INSULATOR ASSY.	D4FZ-5260-A "BEFORE 12/3/73" ★ D4FZ-5260-D "FROM 12/3/73"
	★ D12A-5299-AB PLATE (1) REQ'D. 40182-S (U-169) SCREW-HEX HD. 5/16-18 x 7/8 (4) REQ'D. ATT. PLATE & INSUL. ASSY. TO MUFFLER & UNDERBODY	
7	OUTLET PIPE-(SERVICE)	D3FZ-5255-B

NOTE 1: SERVICE ONLY SYSTEM DOES NOT INCORPORATE RESONATOR

1974 COMET—6 CYL. 200-1/B & 250-1/B - W/O RESONATOR

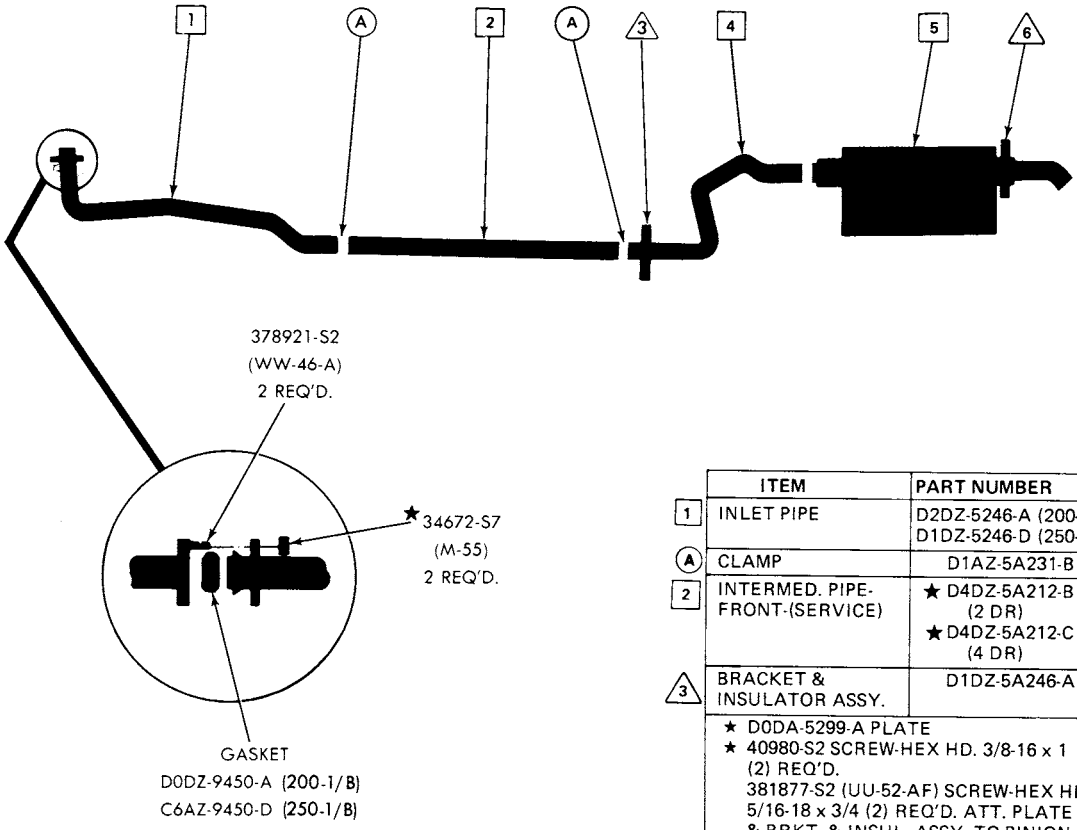

	ITEM	PART NUMBER
1	INLET PIPE	D2DZ-5246-A (200-1/B) D1DZ-5246-D (250-1/B)
A	CLAMP	D1AZ-5A231-B
2	INTERMED. PIPE-FRONT-(SERVICE)	★ D4DZ-5A212-B (2 DR) ★ D4DZ-5A212-C (4 DR)
3	BRACKET & INSULATOR ASSY.	D1DZ-5A246-A
	★ D0DA-5299-A PLATE ★ 40980-S2 SCREW-HEX HD. 3/8-16 x 1 (2) REQ'D. 381877-S2 (UU-52-AF) SCREW-HEX HD. 5/16-18 x 3/4 (2) REQ'D. ATT. PLATE & BRKT. & INSUL. ASSY. TO PINION BUMPER & TO MUFFLER	
4	INTERMED. PIPE-REAR-(SERVICE)	D1DZ-5246-E
5	MUFFLER-(PRODUCTION)	★ D4DZ-5230-B (2 DR) ★ D4DZ-5230-A (4 DR)
	MUFFLER-(SERVICE)	D1DZ-5230-L
6	BRACKET & INSULATOR ASSY.	D4DZ-5260-A
	381877-S2 (UU-52-AF) SCREW-HEX HD. 5/16-18 x 3/4 (4) REQ'D. ATT. BRKT. & INSUL. ASSY. TO MUFFLER & UNDERBODY	

E-P-17

COPYRIGHT © 1986 — FORD MOTOR COMPANY — DEARBORN, MICHIGAN

1974 COMET—6 CYL. 200-1/B & 250-1/B - W/RESONATOR (NOTE 1)

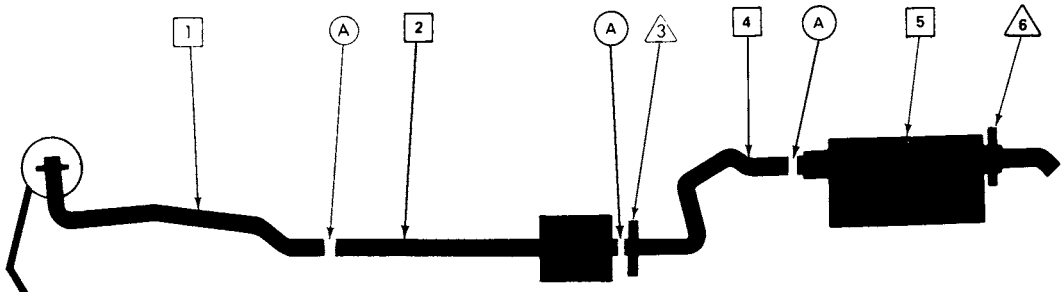

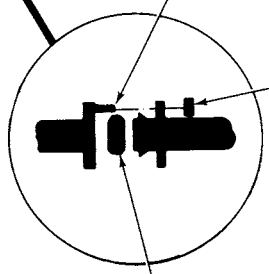

378921-S2
(WW-46-A)
2 REQ'D.

★34672-S7
(M-55)
2 REQ'D.

GASKET
D0DZ-9450-A (200-1/B)
C6AZ-9450-D (250-1/B)

	ITEM	PART NUMBER
1	INLET PIPE	D2DZ-5246-A (200-1 B) D1DZ-5246-D (250-1 B)
A	CLAMP	D1AZ-5A231-B
2	INTERMED. PIPE-FRONT-(SERVICE) (NOTE 1)	★ D4DZ-5A212-B (2 DR) ★ D4DZ-5A212-C (4 DR)
3	BRACKET & INSULATOR ASSY.	D1DZ-5A246-A
	★ D0DA-5299-A PLATE ★ 40980-S2 SCREW-HEX HD. 3/8-16 x 1 (2) REQ'D. 381877-S2 (UU-52-AF) SCREW-HEX HD. 5/16-18 x 3/4 (2) REQ'D. ATT. PLATE & BRKT. & INSUL. ASSY. TO PINION BUMPER & TO MUFFLER	
4	INTERMED. PIPE-REAR-(SERVICE)	D1DZ-5246-E
5	MUFFLER & RESONATOR (PRODUCTION)	★ D4DZ-5230-E (2 DR) ★ D4DZ-5230-F (4 DR)
	MUFFLER-(SERVICE)	D1DZ-5230-L
6	BRACKET & INSULATOR ASSY.	D4DZ-5260-A
	381877-S2 (UU-52-AF) SCREW-HEX HD. 5/16-18 x 3/4 (4) REQ'D. ATT. BRKT. & INSUL. ASSY. TO MUFFLER & UNDERBODY	

E-P-18 NOTE 1: SERVICE ONLY SYSTEM DOES NOT INCORPORATE RESONATOR

1974 COMET—8 CYL. 302-2/B (EXCEPT CALIFORNIA)

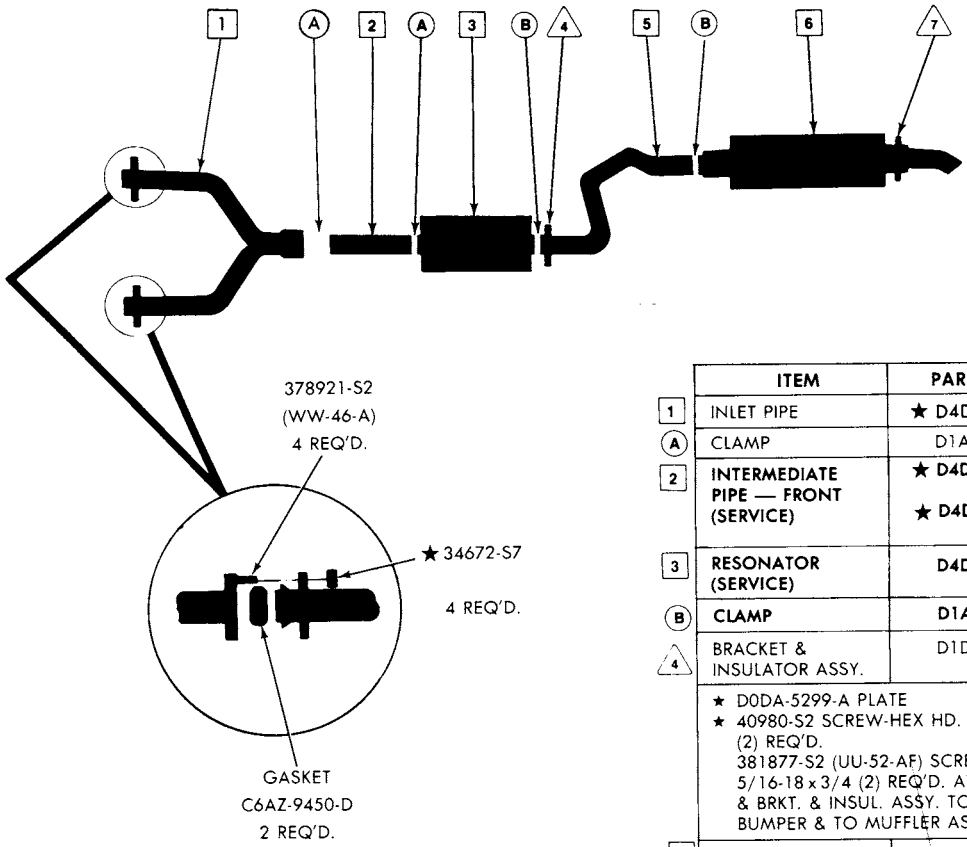

	ITEM	PART NUMBER
1	INLET PIPE	★ D4DZ-5246-B
A	CLAMP	D1AZ-5A231-C
2	INTERMEDIATE PIPE — FRONT (SERVICE)	★ D4DZ-5A212-D (2 DR.) ★ D4DZ-5A212-F (4 DR.)
3	RESONATOR (SERVICE)	D4DZ-5A289-A
B	CLAMP	D1AZ-5A231-B
4	BRACKET & INSULATOR ASSY.	D1DZ-5A246-A
	★ D0DA-5299-A PLATE ★ 40980-S2 SCREW-HEX HD. 3/8-16 x 1 (2) REQ'D. 381877-S2 (UU-52-AF) SCREW-HEX HD. 5/16-18 x 3/4 (2) REQ'D. ATT. PLATE & BRKT. & INSUL. ASSY. TO PINION BUMPER & TO MUFFLER ASSY.	
5	INTERMEDIATE PIPE— REAR (SERVICE)	D1DZ-5246-E
6	MUFFLER (SERVICE)	★ D4DZ-5230-K
	MUFFLER & RESONATOR ASSY. (PRODUCTION)	D4DZ-5230-G (2 DR.) D4DZ-5230-H (4 DR.)
7	BRACKET & INSULATOR ASSY.	D4DZ-5260-A
	381877-S2 (UU-52-AF) SCREW-HEX HD. 5/16-18 x 3/4 (4) REQ'D. ATT. BRKT. & INSUL. ASSY. TO MUFFLER & UNDERBODY	

COPYRIGHT © 1986 — FORD MOTOR COMPANY — DEARBORN, MICHIGAN

1974 COMET—8 CYL. 302-2/B (CALIFORNIA ONLY)

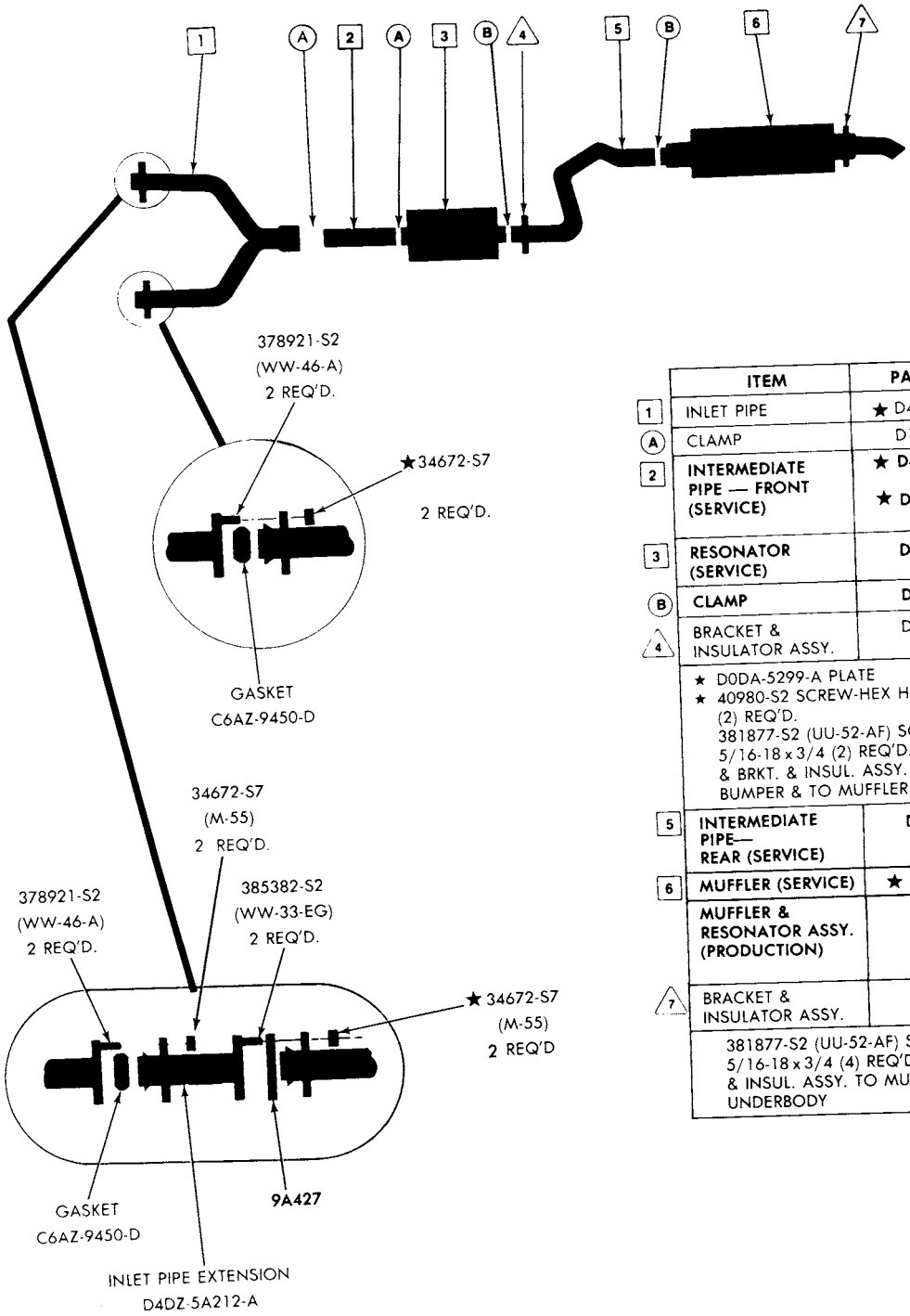

	ITEM	PART NUMBER
1	INLET PIPE	★ D4DZ-5246-A
A	CLAMP	D1AZ-5A231-C
2	**INTERMEDIATE PIPE — FRONT (SERVICE)**	**★ D4DZ-5A212-D (2 DR.) ★ D4DZ-5A212-F (4 DR.)**
3	**RESONATOR (SERVICE)**	**D4DZ-5A289-A**
B	**CLAMP**	**D1AZ-5A231-B**
4	BRACKET & INSULATOR ASSY.	D1DZ-5A246-A
	★ D0DA-5299-A PLATE ★ 40980-S2 SCREW-HEX HD. 3/8-16 x 1 (2) REQ'D. 381877-S2 (UU-52-AF) SCREW-HEX HD. 5/16-18 x 3/4 (2) REQ'D. ATT. PLATE & BRKT. & INSUL. ASSY. TO PINION BUMPER & TO MUFFLER ASSY.	
5	**INTERMEDIATE PIPE— REAR (SERVICE)**	**D1DZ-5246-E**
6	**MUFFLER (SERVICE)**	**★ D4DZ-5230-K**
	MUFFLER & RESONATOR ASSY. (PRODUCTION)	**D4DZ-5230-G** (2 DR.) **D4DZ-5230-H** (4 DR.)
7	BRACKET & INSULATOR ASSY.	**D4DZ-5260-A**
	381877-S2 (UU-52-AF) SCREW-HEX HD. 5/16-18 x 3/4 (4) REQ'D. ATT. BRKT. & INSUL. ASSY. TO MUFFLER & UNDERBODY	

1974 METEOR—8 CYL. 351-2/B SEDAN & HARDTOP

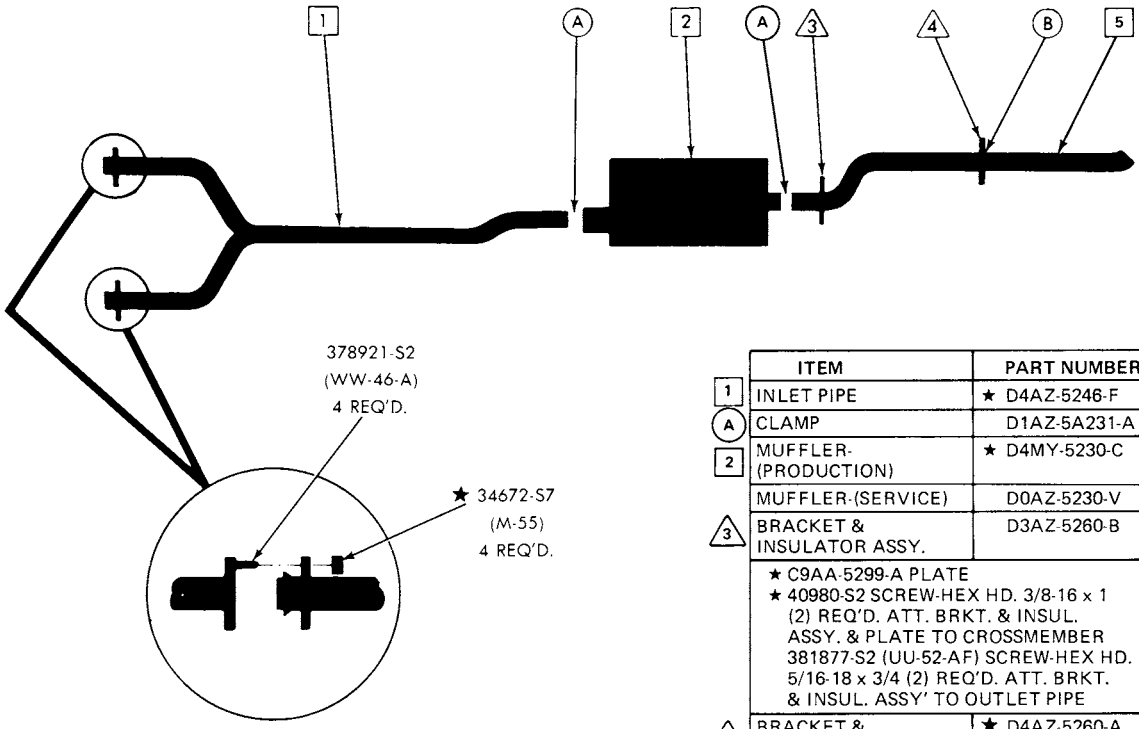

	ITEM	PART NUMBER
1	INLET PIPE	★ D4AZ-5246-F
A	CLAMP	D1AZ-5A231-A
2	MUFFLER-(PRODUCTION)	★ D4MY-5230-C
	MUFFLER-(SERVICE)	D0AZ-5230-V
3	BRACKET & INSULATOR ASSY.	D3AZ-5260-B
	★ C9AA-5299-A PLATE ★ 40980-S2 SCREW-HEX HD. 3/8-16 x 1 (2) REQ'D. ATT. BRKT. & INSUL. ASSY. & PLATE TO CROSSMEMBER 381877-S2 (UU-52-AF) SCREW-HEX HD. 5/16-18 x 3/4 (2) REQ'D. ATT. BRKT. & INSUL. ASSY' TO OUTLET PIPE	
4	BRACKET & INSULATOR ASSY.	★ D4AZ-5260-A
	★ 40980-S2 SCREW-HEX HD. 3/8-16 x 1 (2) REQ'D. ATT. BRKT. & INSUL. ASSY. TO FRAME	
B	CLAMP	D1AZ-5A231-A
5	OUTLET PIPE-(SERVICE)	★ D4MY-5255-A

E-S-67

COPYRIGHT © 1986 — FORD MOTOR COMPANY — DEARBORN, MICHIGAN

1973/79 LINCOLN-MERCURY CARS

1974 METEOR—8 CYL. 400-2/B SEDAN & HARDTOP

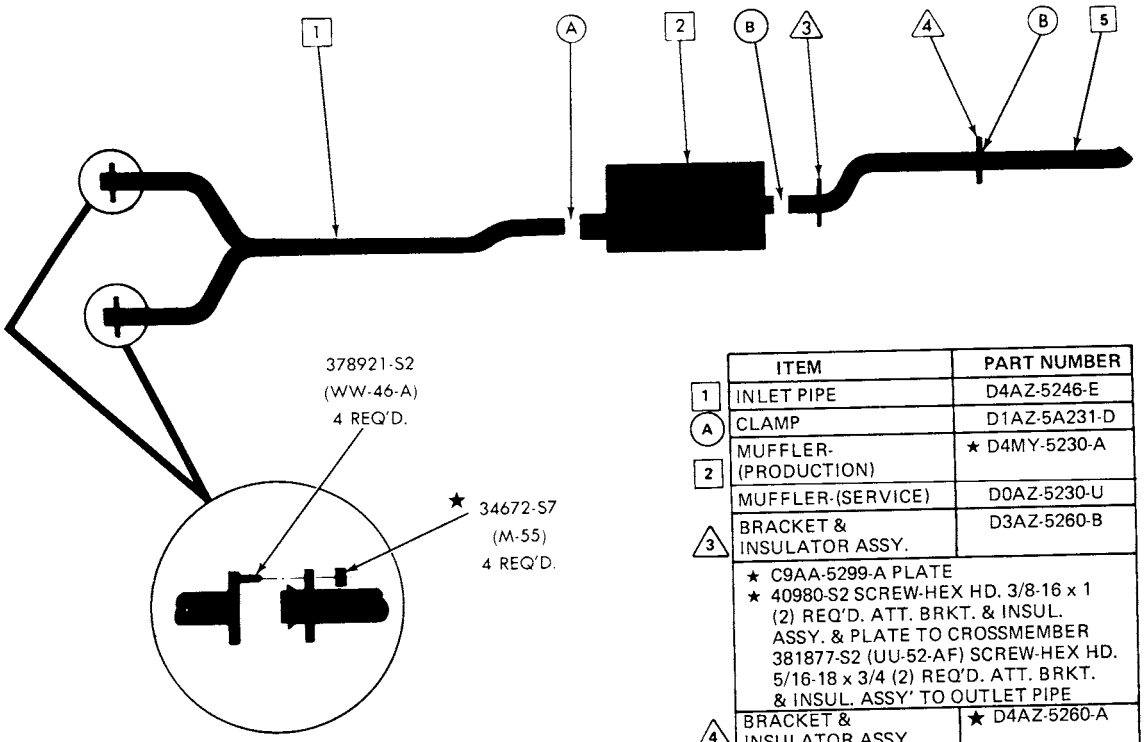

	ITEM	PART NUMBER
1	INLET PIPE	D4AZ-5246-E
A	CLAMP	D1AZ-5A231-D
2	MUFFLER-(PRODUCTION)	★ D4MY-5230-A
	MUFFLER-(SERVICE)	D0AZ-5230-U
3	BRACKET & INSULATOR ASSY.	D3AZ-5260-B
	★ C9AA-5299-A PLATE ★ 40980-S2 SCREW-HEX HD. 3/8-16 x 1 (2) REQ'D. ATT. BRKT. & INSUL. ASSY. & PLATE TO CROSSMEMBER 381877-S2 (UU-52-AF) SCREW-HEX HD. 5/16-18 x 3/4 (2) REQ'D. ATT. BRKT. & INSUL. ASSY' TO OUTLET PIPE	
4	BRACKET & INSULATOR ASSY.	★ D4AZ-5260-A
	★ 40980-S2 SCREW-HEX HD. 3/8-16 x 1 (2) REQ'D. ATT. BRKT. & INSUL. ASSY. TO FRAME	
B	CLAMP	D1AZ-5A231-A
5	OUTLET PIPE-(SERVICE)	D4MY-5255-A

1974 METEOR—8 CYL. 400-2/B STATION WAGON

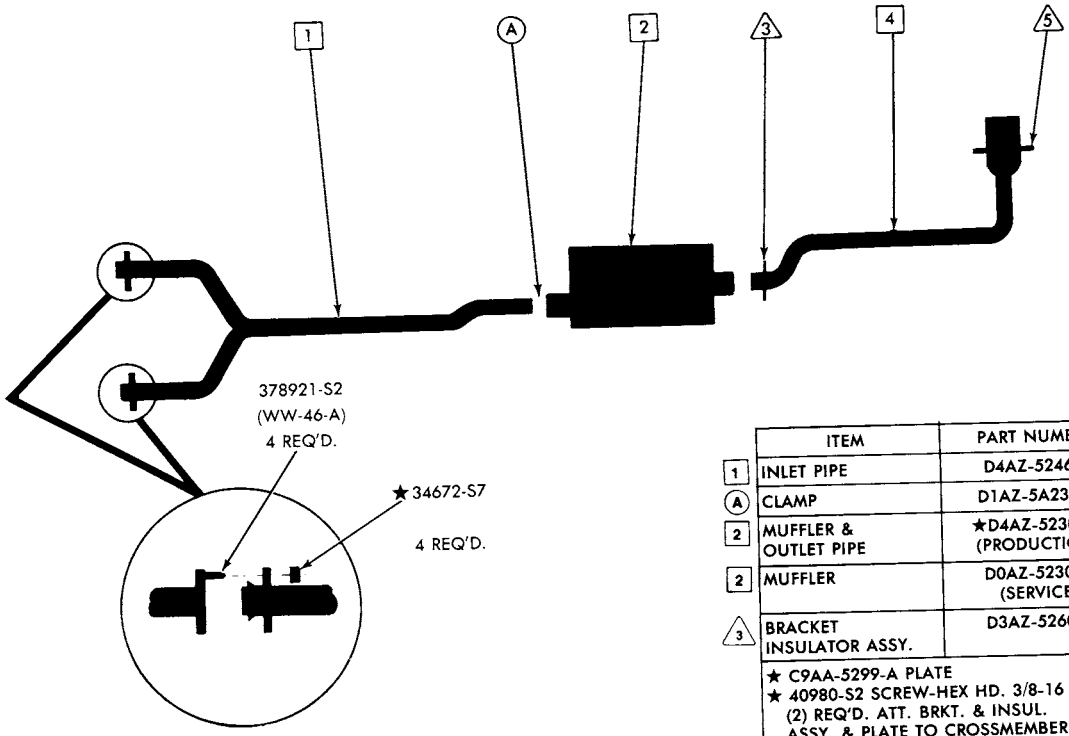

	ITEM	PART NUMBER
1	INLET PIPE	D4AZ-5246-E
A	CLAMP	D1AZ-5A231-D
2	MUFFLER & OUTLET PIPE	★D4AZ-5230-J (PRODUCTION)
2	MUFFLER	D0AZ-5230-U (SERVICE)
3	BRACKET INSULATOR ASSY.	D3AZ-5260-B
	★ C9AA-5299-A PLATE ★ 40980-S2 SCREW-HEX HD. 3/8-16 x 1 (2) REQ'D. ATT. BRKT. & INSUL. ASSY. & PLATE TO CROSSMEMBER 381877-S2 (UU-52-AF) SCREW-HEX HD. 5/16-18 x 3/4 (2) REQ'D. ATT. BRKT. & INSUL. ASSY. TO OUTLET PIPE	
4	OUTLET PIPE	D3AZ-5255-J (SERVICE)
5	BRACKET & INSULATOR ASSY.	D3AZ-5260-A
	★ 40980-S2 SCREW-HEX HD. 3/8-16 x 1 (2) REQ'D. ATT. BRKT. & INSUL. ASSY. TO CROSSMEMBER ★ D3AA-5299-AB PLATE 384871-S2 (UU-52-AM) SCREW-HEX HD. 5/16-18 x 1 (2) REQ'D. ATT. BRKT. & INSUL. ASSY. & PLATE TO OUTLET PIPE	

E-S-69

COPYRIGHT © 1986 — FORD MOTOR COMPANY — DEARBORN, MICHIGAN

1973/79 LINCOLN-MERCURY CARS

1974 METEOR—8 CYL. 460-4/B (EXCEPT 460-4/B POLICE) SEDAN & HARDTOP

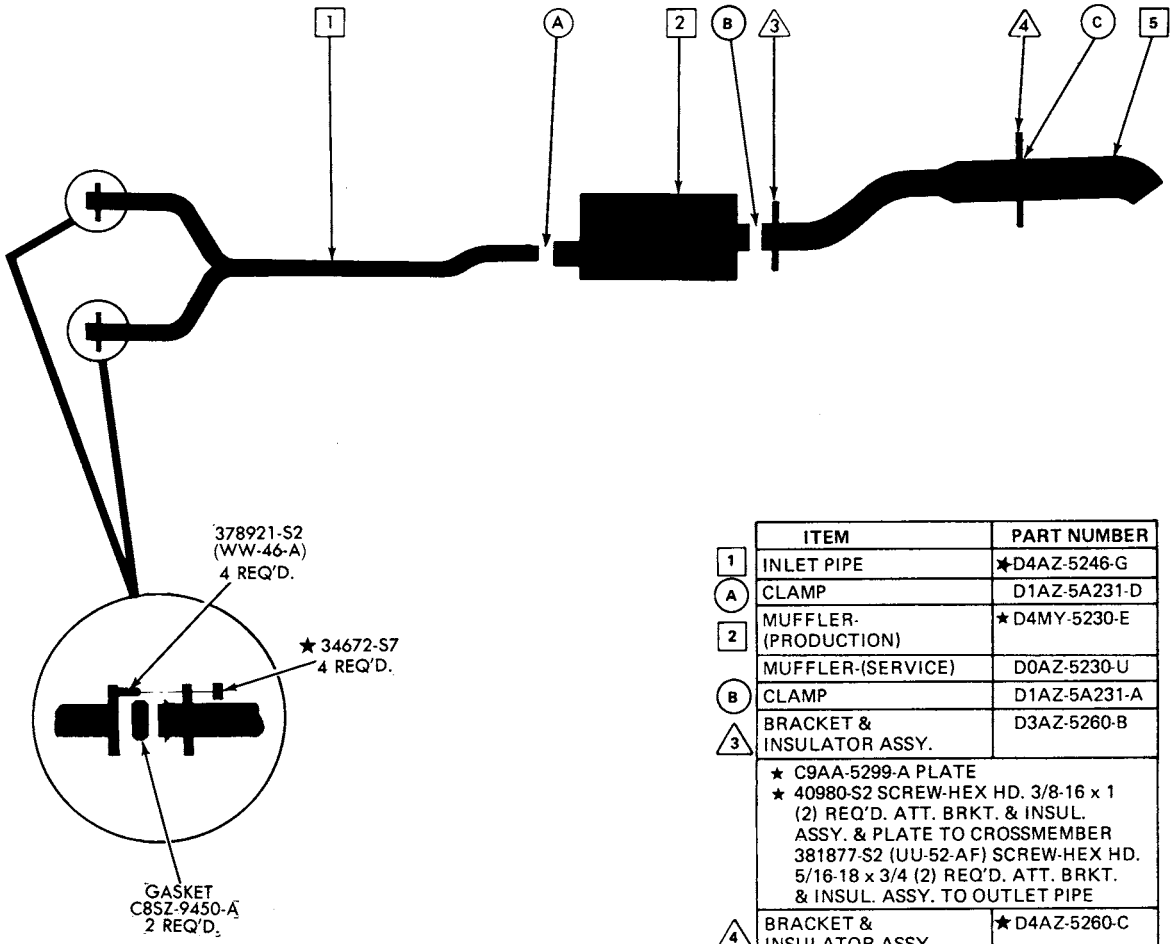

	ITEM	PART NUMBER
1	INLET PIPE	★D4AZ-5246-G
A	CLAMP	D1AZ-5A231-D
2	MUFFLER-(PRODUCTION)	★ D4MY-5230-E
	MUFFLER-(SERVICE)	D0AZ-5230-U
B	CLAMP	D1AZ-5A231-A
3	BRACKET & INSULATOR ASSY.	D3AZ-5260-B
	★ C9AA-5299-A PLATE ★ 40980-S2 SCREW-HEX HD. 3/8-16 x 1 (2) REQ'D. ATT. BRKT. & INSUL. ASSY. & PLATE TO CROSSMEMBER 381877-S2 (UU-52-AF) SCREW-HEX HD. 5/16-18 x 3/4 (2) REQ'D. ATT. BRKT. & INSUL. ASSY. TO OUTLET PIPE	
4	BRACKET & INSULATOR ASSY.	★ D4AZ-5260-C
	★ 40980-S2 SCREW-HEX HD. 3/8-16 x 1 (2) REQ'D. ATT. BRKT. & INSUL. ASSY. TO FRAME	
C	CLAMP	C1TT-5A231-D
5	OUTLET PIPE-(SERVICE)	★ D4MY-5255-B

1974 METEOR—8 CYL. 460-4/B (POLICE ONLY) SEDAN

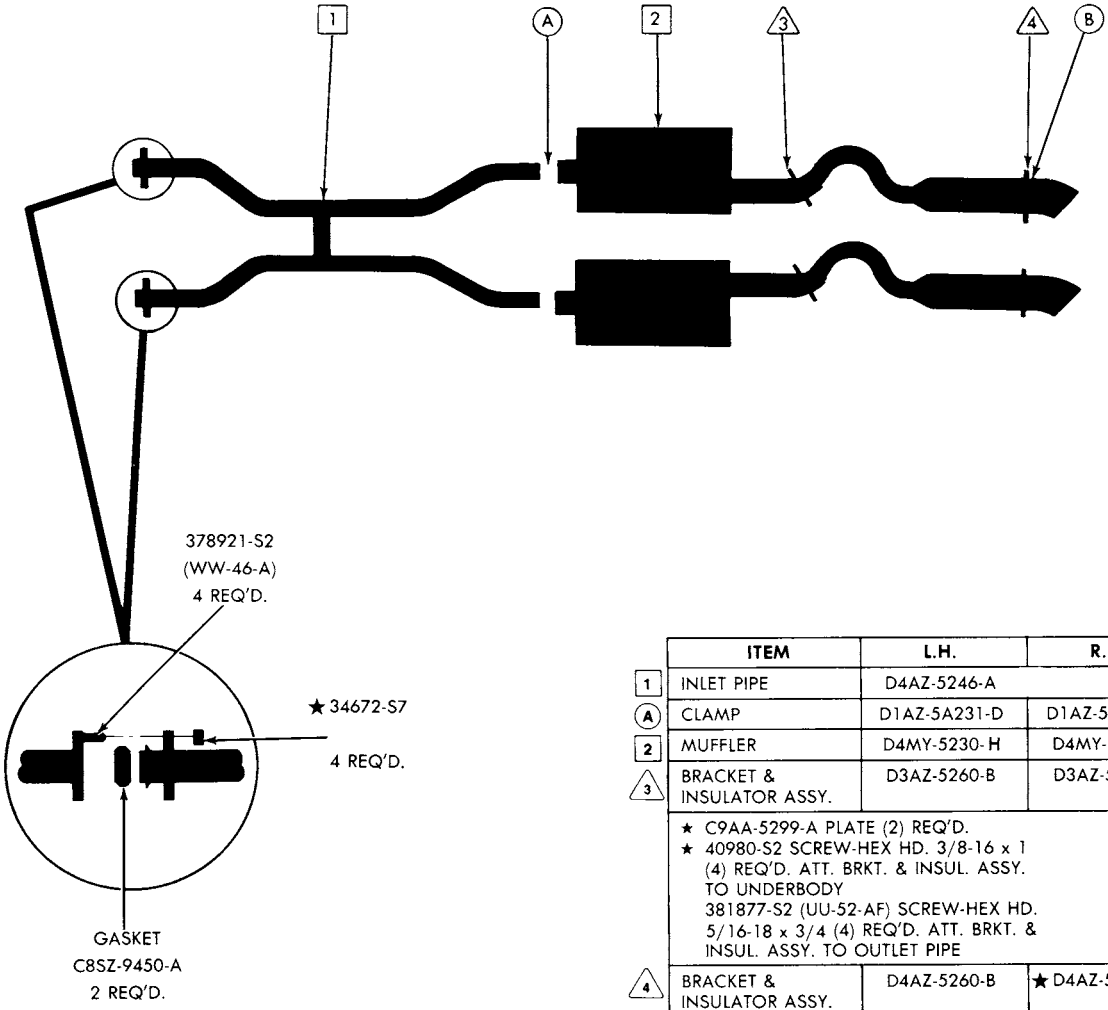

	ITEM	L.H.	R.H.
1	INLET PIPE	D4AZ-5246-A	
A	CLAMP	D1AZ-5A231-D	D1AZ-5A231-D
2	MUFFLER	D4MY-5230-H	D4MY-5230-J
3	BRACKET & INSULATOR ASSY.	D3AZ-5260-B	D3AZ-5260-B
	★ C9AA-5299-A PLATE (2) REQ'D. ★ 40980-S2 SCREW-HEX HD. 3/8-16 x 1 (4) REQ'D. ATT. BRKT. & INSUL. ASSY. TO UNDERBODY 381877-S2 (UU-52-AF) SCREW-HEX HD. 5/16-18 x 3/4 (4) REQ'D. ATT. BRKT. & INSUL. ASSY. TO OUTLET PIPE		
4	BRACKET & INSULATOR ASSY.	D4AZ-5260-B	★ D4AZ-5260-C
	★ 40980-S2 SCREW-HEX HD. 3/8-16 x 1 (4) REQ'D. ATT. BRKT. TO FRAME		
B	CLAMP	C1TT-5A231-D	★C1TT-5A231-D

E-S-71

COPYRIGHT © 1986 — FORD MOTOR COMPANY — DEARBORN, MICHIGAN

1973/79 LINCOLN-MERCURY CARS

1974 METEOR—8 CYL. 460-4/B STATION WAGON

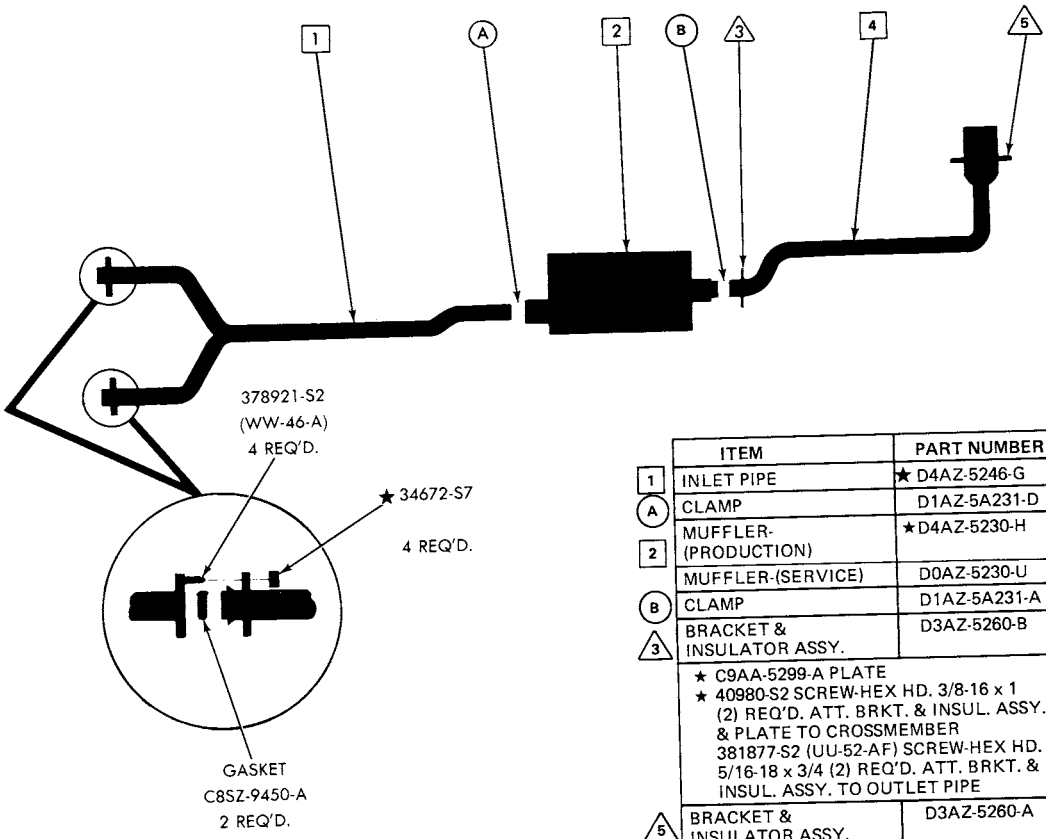

	ITEM	PART NUMBER
1	INLET PIPE	★ D4AZ-5246-G
A	CLAMP	D1AZ-5A231-D
2	MUFFLER-(PRODUCTION)	★ D4AZ-5230-H
	MUFFLER-(SERVICE)	D0AZ-5230-U
B	CLAMP	D1AZ-5A231-A
3	BRACKET & INSULATOR ASSY.	D3AZ-5260-B
	★ C9AA-5299-A PLATE ★ 40980-S2 SCREW-HEX HD. 3/8-16 x 1 (2) REQ'D. ATT. BRKT. & INSUL. ASSY. & PLATE TO CROSSMEMBER 381877-S2 (UU-52-AF) SCREW-HEX HD. 5/16-18 x 3/4 (2) REQ'D. ATT. BRKT. & INSUL. ASSY. TO OUTLET PIPE	
5	BRACKET & INSULATOR ASSY.	D3AZ-5260-A
	★ 40980-S2 SCREW-HEX HD. 3/8-16 x 1 (2) REQ'D. ATT. BRKT. & INSUL. ASSY. TO CROSSMEMBER ★ D3AA-5299-AB PLATE 384871-S2 (UU-52-AM) SCREW-HEX HD. 5/16-18 x 1 (2) REQ'D. ATT. BRKT. & INSUL. ASSY. & PLATE TO OUTLET PIPE	
4	OUTLET PIPE-(SERVICE)	★ D4AZ-5255-C

EXHAUST PARTS MODEL INDEX

How to use this index -

1. Find the car model desired.
2. Find the line which lists the engine displacement needed.
3. Select the correct page and turn to that page.

For stamped number cross-reference information and for size information, refer to Section 50, page 3.

1975

CYL.	C.I.D.	MODEL	CONVERTER USAGE ■	TYPE ▲	SECTION	PAGE	ILLUS. NO. ♦
		A (MERCURY)					
8	400-2/B	(53,65)	1C	S	52.75	1	EG 74
		(53,65)	2C	S	52.75	2	EG 76
	351M-2/B 400-2/B	(53,65)	OC	S	52.75	3	EG 72
	400-2/B	(71)	1C	S	52.75	4	EG 75
		(71)	2C	S	52.75	5	EG 77
		(71)	OC	S	52.75	6	EG 73
	460-4/B	(53,65)	1C	D	52.75	8	EG 78
		(53,65)	2C	D	52.75	7	EG 79
		(53,65)	OC	D	52.75	9	EG 98
		(71)	1C	D	52.75	14	EG 81
		(71)	2C	D	52.75	13	EG 82
		(71)	OC	D	52.75	15	EG 85
	460-P/C	(53,65)	2C	D	52.75	10	EG 117
		(53,65)	1C	D	52.75	11	EG 116
		(53,65)	OC	D	52.75	12	EG 118
		C (MONTEGO)					
8	351W-2/B 351M-2/B 400-2/B	(53,65)	1C	S	52.75	1	ED 119
	351M-2/B 400-2/B	(53,65)	2C	S	52.75	2	ED 121
		(53,65)	OC	S	52.75	3	ED 128
		(71)	1C	S	52.75	4	ED 120
		(71)	2C	S	52.75	5	ED 122
		(71)	OC	S	52.75	6	ED 135
	460-4/B 460-P/C	(53,65)	1C	D	52.75	7	ED 123
		(53,65)	2C	D	52.75	8	ED 126
	460-4/B	(71)	1C	D	52.75	9	ED 127
		(71)	2C	D	52.75	10	ED 125
		D (LINCOLN)					
8	460-4/B	All	1C	S	52.75	1	EJ 12
		All	OC	S	52.75	3	EJ 15
		All	2C	S	52.75	2	EJ 16
		All	1C	D	52.75	4	EJ 13
		All	2C	D	52.75	5	EJ 14

♦ For control purposes only ▲ S - Single D - Dual
■ 1C - one converter 2C - two converter OC - non-converter

COPYRIGHT © 1986 — FORD MOTOR COMPANY — DEARBORN, MICHIGAN

EXHAUST PARTS MODEL INDEX cont'd.

1975

CYL.	C.I.D	MODEL	CONVERTER USAGE ■	TYPE ▲	SECTION	PAGE	ILLUS. NO. ♦
		F (COUGAR)					
8	351M-2/B	All	1C	S	52.75	1	EB 30
	400-2/B	All	2C	S	52.75	2	EB 31
		All	OC	S	52.75	3	EB 34
	460-4/B	All	1C	D	52.75	4	EB 32
		All	2C	D	52.75	5	EB 33
		G (MONARCH)					
6	200-1/B	All	OC	S	52.75	2	EV 2
		All	1C	S	52.75	1	EV 1
	250-1/B	All	1C	S	52.75	1	EV 1
		All	OC	S	52.75	2	EV 2
8	302-2/B	All	1C	S	52.75	3	EV 3
		All	OC	S	52.75	4	EV 7
	351-2/B	All	OC	S	52.75	5	EV 4
		All	1C	S	52.75	6	EV 5
		J (CAPRI) - REFER TO 1976					
		K (MARK IV)					
8	460-4/B	All	1C	S	52.75	1	EK 8
		All	OC	S	52.75	2	EK 11
		All	1C	D	52.75	3	EK 9
		All	2C	D	52.75	4	EK 10
		L (BOBCAT)					
4	140-2/B (2300 cc)	(62,64)	OC	S	52.75	1	ET 5
		(62,64)	1C	S	52.75	2	ET 6
		(73)	OC	S	52.75	3	ET 7
		(73),(C)	1C	S	52.75	4	ET 8
6	171-2/B (2800 cc)	(62,64)	2C	D	52.75	5	ET 9
		(62,64)	OC	D	52.75	6	ET 11
		(73)	2C	D	52.75	7	ET 12
		(73)	OC	D	52.75	8	ET 14
		P (COMET)					
6	200-1/B	All	1C	S	52.75	1	EP 25
		All	OC	S	52.75	2	EP 21
	250-1/B	All	OC	S	52.75	2	EP 21
		All	1C	S	52.75	1	EP 25
8	302-2/B	All	OC	S	52.75	3	EP 23
		All	1C	S	52.75	4	EP 24
		Y (METEOR) - refer to A (MERCURY)					

♦ For control purposes only ▲ S - Single D - Dual
■ 1C - one converter 2C - two converter OC - non-converter

1975 MERCURY—400-2/B SEDAN (ONE CONVERTER)

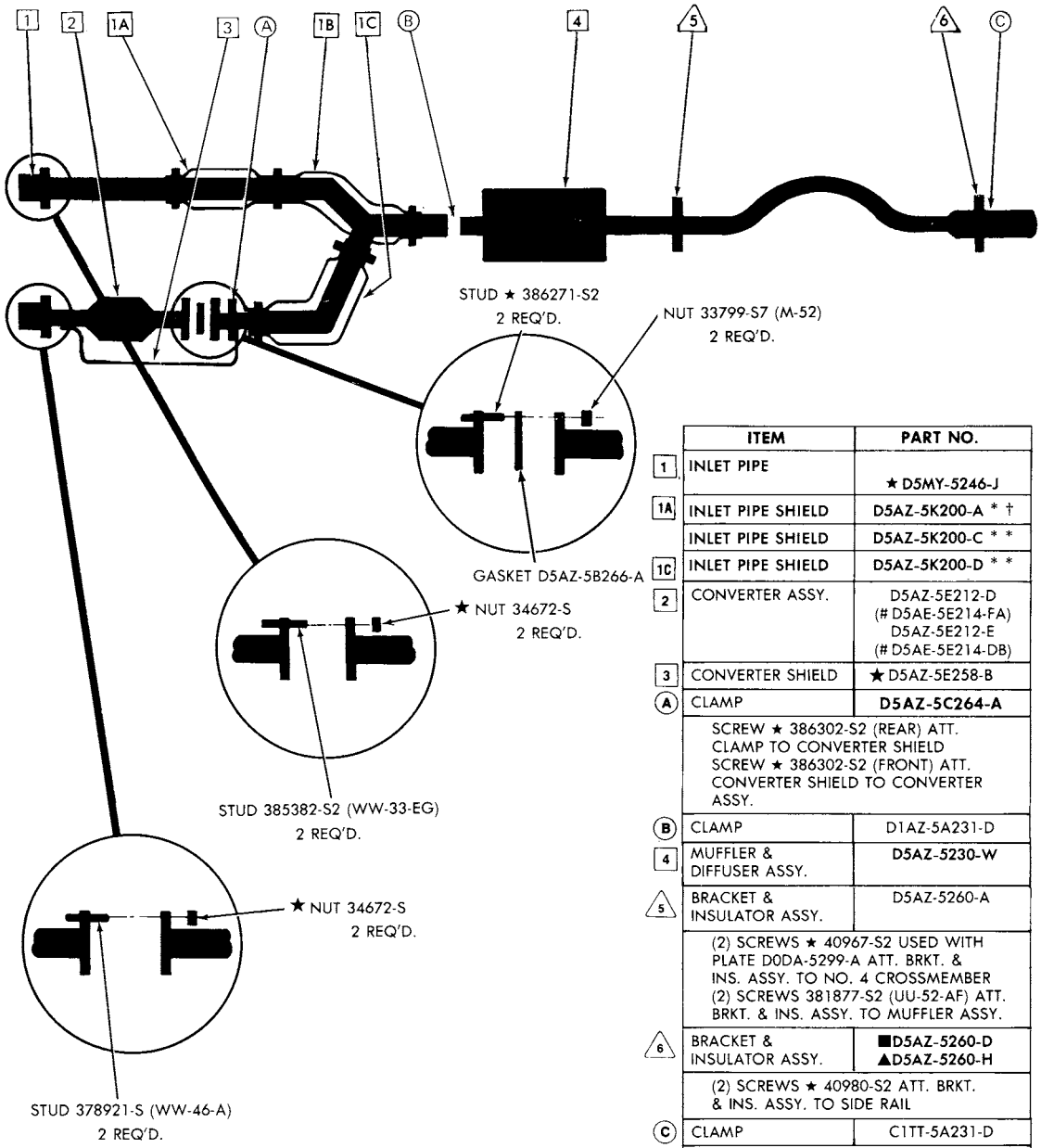

	ITEM	PART NO.
1	INLET PIPE	★ D5MY-5246-J
1A	INLET PIPE SHIELD	D5AZ-5K200-A * †
	INLET PIPE SHIELD	D5AZ-5K200-C * *
1C	INLET PIPE SHIELD	D5AZ-5K200-D * *
2	CONVERTER ASSY.	D5AZ-5E212-D (# D5AE-5E214-FA) D5AZ-5E212-E (# D5AE-5E214-DB)
3	CONVERTER SHIELD	★ D5AZ-5E258-B
A	CLAMP	D5AZ-5C264-A
	SCREW ★ 386302-S2 (REAR) ATT. CLAMP TO CONVERTER SHIELD SCREW ★ 386302-S2 (FRONT) ATT. CONVERTER SHIELD TO CONVERTER ASSY.	
B	CLAMP	D1AZ-5A231-D
4	MUFFLER & DIFFUSER ASSY.	D5AZ-5230-W
5	BRACKET & INSULATOR ASSY.	D5AZ-5260-A
	(2) SCREWS ★ 40967-S2 USED WITH PLATE D0DA-5299-A ATT. BRKT. & INS. ASSY. TO NO. 4 CROSSMEMBER (2) SCREWS 381877-S2 (UU-52-AF) ATT. BRKT. & INS. ASSY. TO MUFFLER ASSY.	
6	BRACKET & INSULATOR ASSY.	■D5AZ-5260-D ▲D5AZ-5260-H
	(2) SCREWS ★ 40980-S2 ATT. BRKT. & INS. ASSY. TO SIDE RAIL	
C	CLAMP	C1TT-5A231-D
	ATT. BRKT. & INS. ASSY. TO OUTLET PIPE	

* * REQUIRES (2) 2¼" CLAMP
* REQUIRES (1) 2¼" CLAMP D5AZ-5A231-B
† REQUIRES (1) 2½" CLAMP D5SZ-5A231-A
■ "BEFORE 1/20/75"
▲ "FROM 1/20/75"

EG-74

COPYRIGHT © 1986 — FORD MOTOR COMPANY — DEARBORN, MICHIGAN

1975 MERCURY—400-2/B SEDAN (TWO CONVERTER)

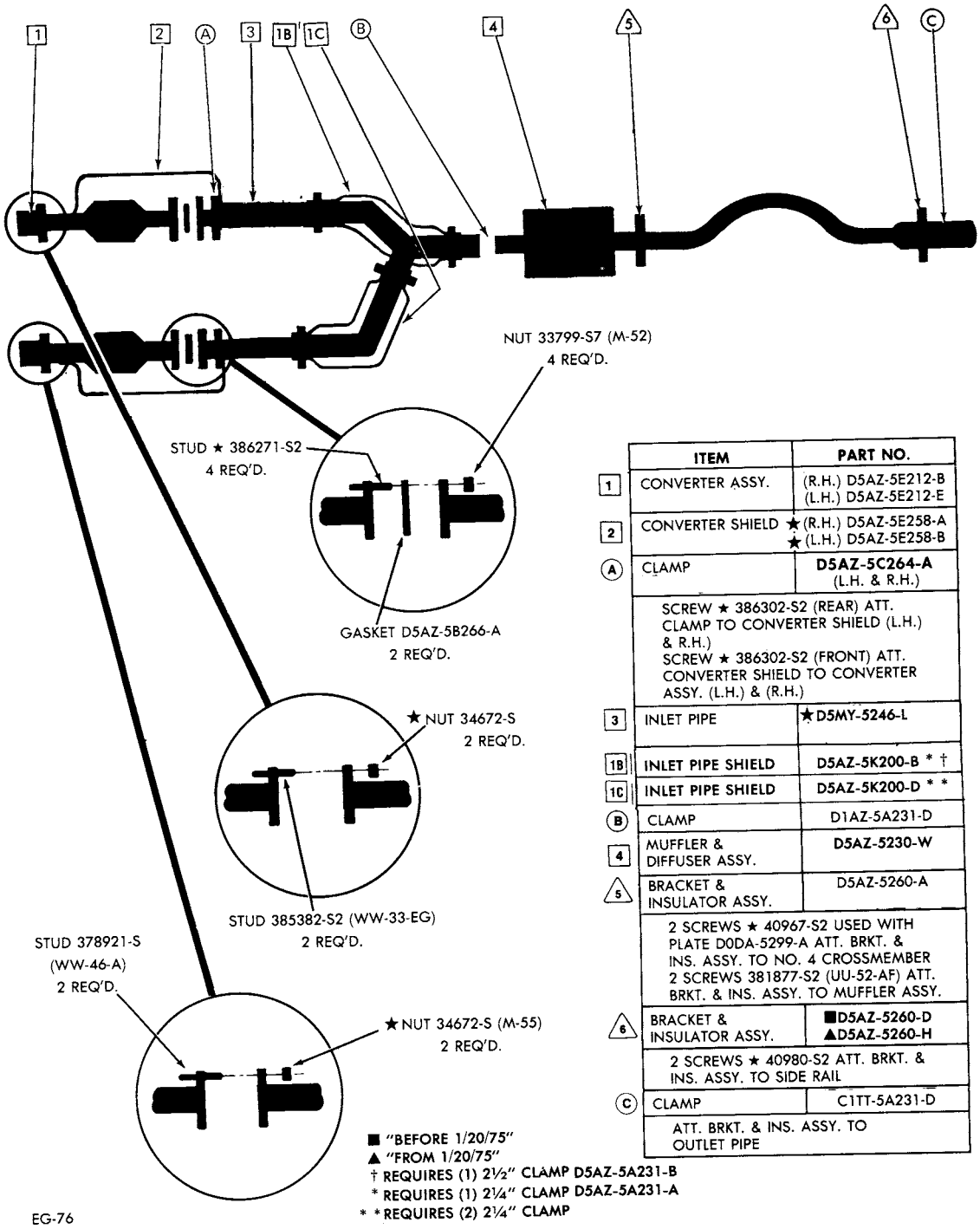

	ITEM	PART NO.
1	CONVERTER ASSY.	(R.H.) D5AZ-5E212-B (L.H.) D5AZ-5E212-E
2	CONVERTER SHIELD	★(R.H.) D5AZ-5E258-A ★(L.H.) D5AZ-5E258-B
A	CLAMP	**D5AZ-5C264-A** (L.H. & R.H.)
	SCREW ★ 386302-S2 (REAR) ATT. CLAMP TO CONVERTER SHIELD (L.H.) & R.H.) SCREW ★ 386302-S2 (FRONT) ATT. CONVERTER SHIELD TO CONVERTER ASSY. (L.H.) & (R.H.)	
3	INLET PIPE	★D5MY-5246-L
1B	INLET PIPE SHIELD	D5AZ-5K200-B * †
1C	INLET PIPE SHIELD	D5AZ-5K200-D * *
B	CLAMP	D1AZ-5A231-D
4	MUFFLER & DIFFUSER ASSY.	D5AZ-5230-W
5	BRACKET & INSULATOR ASSY.	D5AZ-5260-A
	2 SCREWS ★ 40967-S2 USED WITH PLATE D0DA-5299-A ATT. BRKT. & INS. ASSY. TO NO. 4 CROSSMEMBER 2 SCREWS 381877-S2 (UU-52-AF) ATT. BRKT. & INS. ASSY. TO MUFFLER ASSY.	
6	BRACKET & INSULATOR ASSY.	■D5AZ-5260-D ▲D5AZ-5260-H
	2 SCREWS ★ 40980-S2 ATT. BRKT. & INS. ASSY. TO SIDE RAIL	
C	CLAMP	C1TT-5A231-D
	ATT. BRKT. & INS. ASSY. TO OUTLET PIPE	

■ "BEFORE 1/20/75"
▲ "FROM 1/20/75"
† REQUIRES (1) 2½" CLAMP D5AZ-5A231-B
* REQUIRES (1) 2¼" CLAMP D5AZ-5A231-A
* * REQUIRES (2) 2¼" CLAMP

EG-76

1975 MERCURY—351M-2/B & 400-2/B SEDAN (NON-CONVERTER)

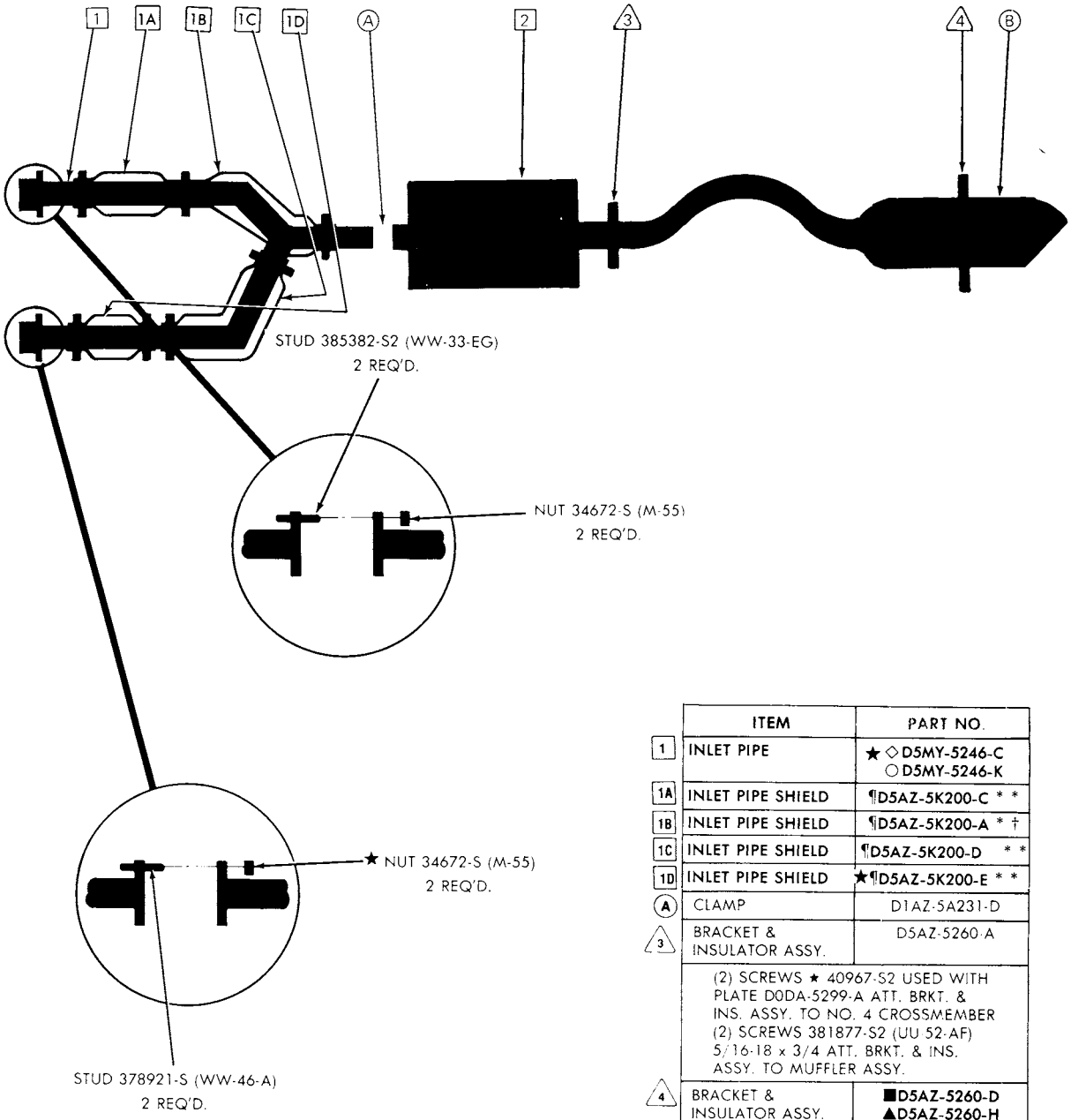

	ITEM	PART NO.
1	INLET PIPE	★ ◇ D5MY-5246-C ○ D5MY-5246-K
1A	INLET PIPE SHIELD	¶D5AZ-5K200-C * *
1B	INLET PIPE SHIELD	¶D5AZ-5K200-A * †
1C	INLET PIPE SHIELD	¶D5AZ-5K200-D * *
1D	INLET PIPE SHIELD	★¶D5AZ-5K200-E * *
A	CLAMP	D1AZ-5A231-D
3	BRACKET & INSULATOR ASSY.	D5AZ-5260-A
	(2) SCREWS ★ 40967-S2 USED WITH PLATE D0DA-5299-A ATT. BRKT. & INS. ASSY. TO NO. 4 CROSSMEMBER (2) SCREWS 381877-S2 (UU-52-AF) 5/16-18 x 3/4 ATT. BRKT. & INS. ASSY. TO MUFFLER ASSY.	
4	BRACKET & INSULATOR ASSY.	■ D5AZ-5260-D ▲ D5AZ-5260-H
	2 SCREWS ★ 40980-S2 ATT. BRKT. & INS. ASSY. TO SIDE RAIL	
2	MUFFLER & DIFFUSER ASSY.	D5AZ-5230-W
B	CLAMP	C1TT-5A231-D

¶ 400 ENG. ONLY
* REQUIRES (1) 2¼" CLAMP D5AZ-5A231-B
* * REQUIRES (2) 2¼" CLAMP
† REQUIRES (1) 2½" CLAMP D5SZ-5A231-A
◇ "BEFORE 12/1/74"
○ "FROM 12/1/74"
■ "BEFORE 1/20/75"
▲ "FROM 1/20/75"

EG-72

COPYRIGHT © 1986 — FORD MOTOR COMPANY — DEARBORN, MICHIGAN

1975 MERCURY—400 2/B STATION WAGON (ONE CONVERTER)

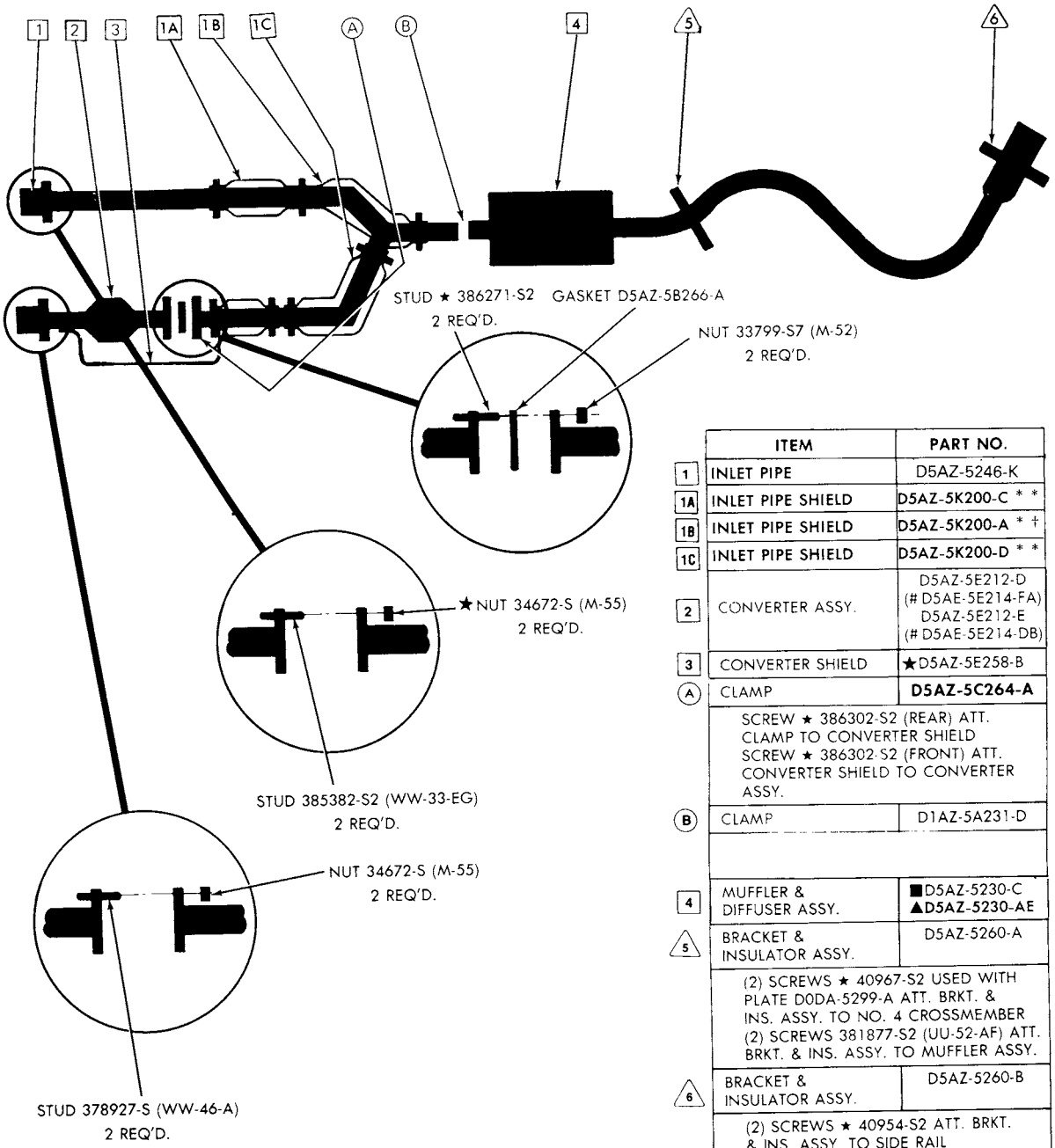

	ITEM	PART NO.
1	INLET PIPE	D5AZ-5246-K
1A	INLET PIPE SHIELD	D5AZ-5K200-C * *
1B	INLET PIPE SHIELD	D5AZ-5K200-A * †
1C	INLET PIPE SHIELD	D5AZ-5K200-D * *
2	CONVERTER ASSY.	D5AZ-5E212-D (# D5AE-5E214-FA) D5AZ-5E212-E (# D5AE-5E214-DB)
3	CONVERTER SHIELD	★D5AZ-5E258-B
A	CLAMP	D5AZ-5C264-A
	SCREW ★ 386302-S2 (REAR) ATT. CLAMP TO CONVERTER SHIELD SCREW ★ 386302-S2 (FRONT) ATT. CONVERTER SHIELD TO CONVERTER ASSY.	
B	CLAMP	D1AZ-5A231-D
4	MUFFLER & DIFFUSER ASSY.	■D5AZ-5230-C ▲D5AZ-5230-AE
5	BRACKET & INSULATOR ASSY.	D5AZ-5260-A
	(2) SCREWS ★ 40967-S2 USED WITH PLATE D0DA-5299-A ATT. BRKT. & INS. ASSY. TO NO. 4 CROSSMEMBER (2) SCREWS 381877-S2 (UU-52-AF) ATT. BRKT. & INS. ASSY. TO MUFFLER ASSY.	
6	BRACKET & INSULATOR ASSY.	D5AZ-5260-B
	(2) SCREWS ★ 40954-S2 ATT. BRKT. & INS. ASSY. TO SIDE RAIL (2) SCREWS ★ 40975-S2 USED WITH PLATE D3AA-5299-AB ATT. BRKT. & INS. ASSY. TO OUTLET PIPE	

* * REQUIRES (2) 2¼" CLAMP D5AZ-5A231-B
* REQUIRES (1) 2¼" CLAMP D5SZ-5A231-A
† REQUIRES (1) 2½" CLAMP
■ "BEFORE 5/15/75"
▲ "FROM 5/15/75"

1975 MERCURY—400-2/B STATION WAGON (TWO CONVERTER)

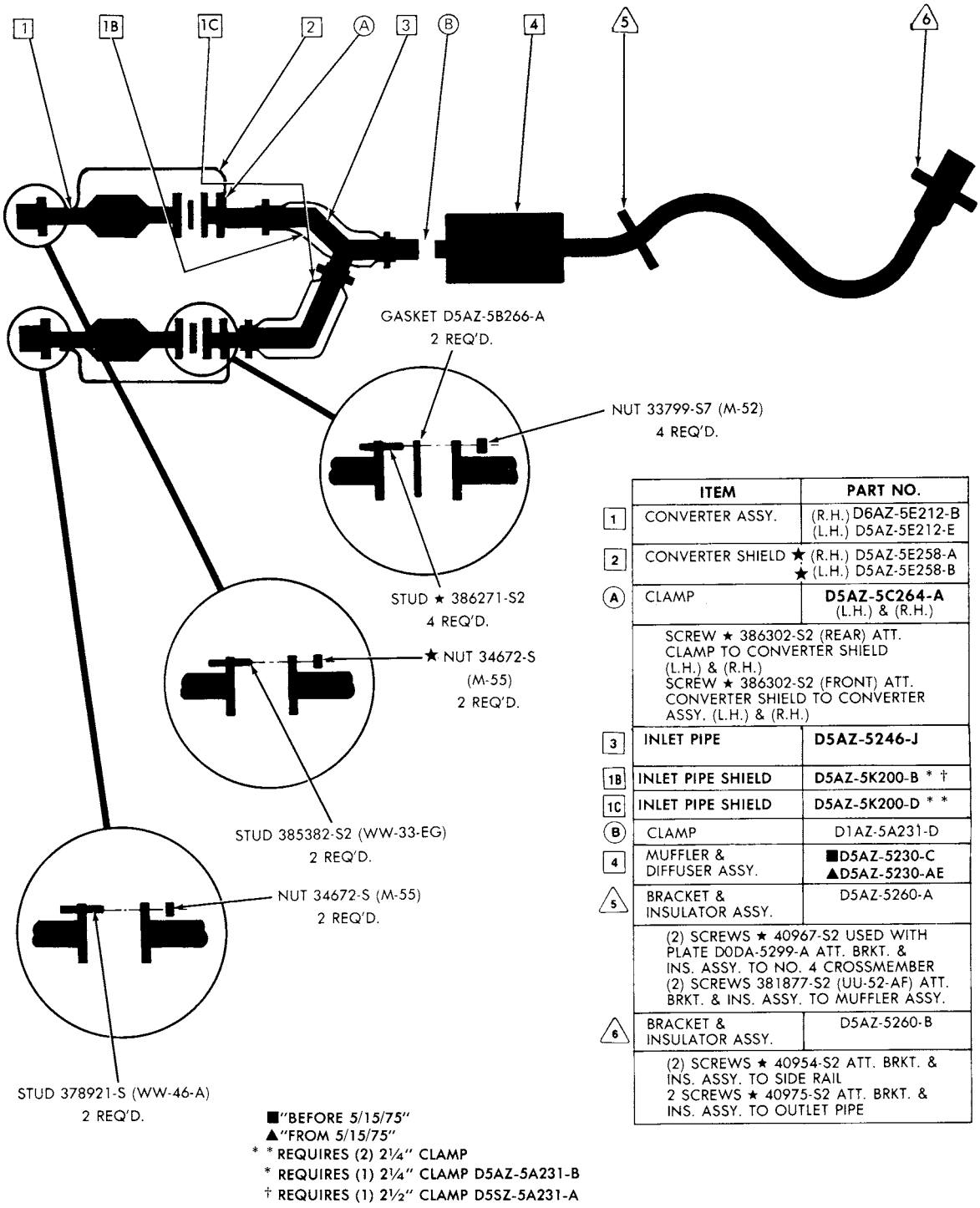

	ITEM	PART NO.
1	CONVERTER ASSY.	(R.H.) D6AZ-5E212-B (L.H.) D5AZ-5E212-E
2	CONVERTER SHIELD	★ (R.H.) D5AZ-5E258-A ★ (L.H.) D5AZ-5E258-B
A	CLAMP	**D5AZ-5C264-A** (L.H.) & (R.H.)
	SCREW ★ 386302-S2 (REAR) ATT. CLAMP TO CONVERTER SHIELD (L.H.) & (R.H.) SCREW ★ 386302-S2 (FRONT) ATT. CONVERTER SHIELD TO CONVERTER ASSY. (L.H.) & (R.H.)	
3	INLET PIPE	**D5AZ-5246-J**
1B	INLET PIPE SHIELD	**D5AZ-5K200-B * †**
1C	INLET PIPE SHIELD	**D5AZ-5K200-D * ***
B	CLAMP	D1AZ-5A231-D
4	MUFFLER & DIFFUSER ASSY.	**■D5AZ-5230-C** **▲D5AZ-5230-AE**
5	BRACKET & INSULATOR ASSY.	D5AZ-5260-A
	(2) SCREWS ★ 40967-S2 USED WITH PLATE D0DA-5299-A ATT. BRKT. & INS. ASSY. TO NO. 4 CROSSMEMBER (2) SCREWS 381877-S2 (UU-52-AF) ATT. BRKT. & INS. ASSY. TO MUFFLER ASSY.	
6	BRACKET & INSULATOR ASSY.	D5AZ-5260-B
	(2) SCREWS ★ 40954-S2 ATT. BRKT. & INS. ASSY. TO SIDE RAIL 2 SCREWS ★ 40975-S2 ATT. BRKT. & INS. ASSY. TO OUTLET PIPE	

■"BEFORE 5/15/75"
▲"FROM 5/15/75"
*** * REQUIRES (2) 2¼" CLAMP**
*** REQUIRES (1) 2¼" CLAMP D5AZ-5A231-B**
† REQUIRES (1) 2½" CLAMP D5SZ-5A231-A

EG-77

COPYRIGHT © 1986 — FORD MOTOR COMPANY — DEARBORN, MICHIGAN

1975 MERCURY—8 CYL. 400-2/B STATION WAGON (NON CONVERTER)

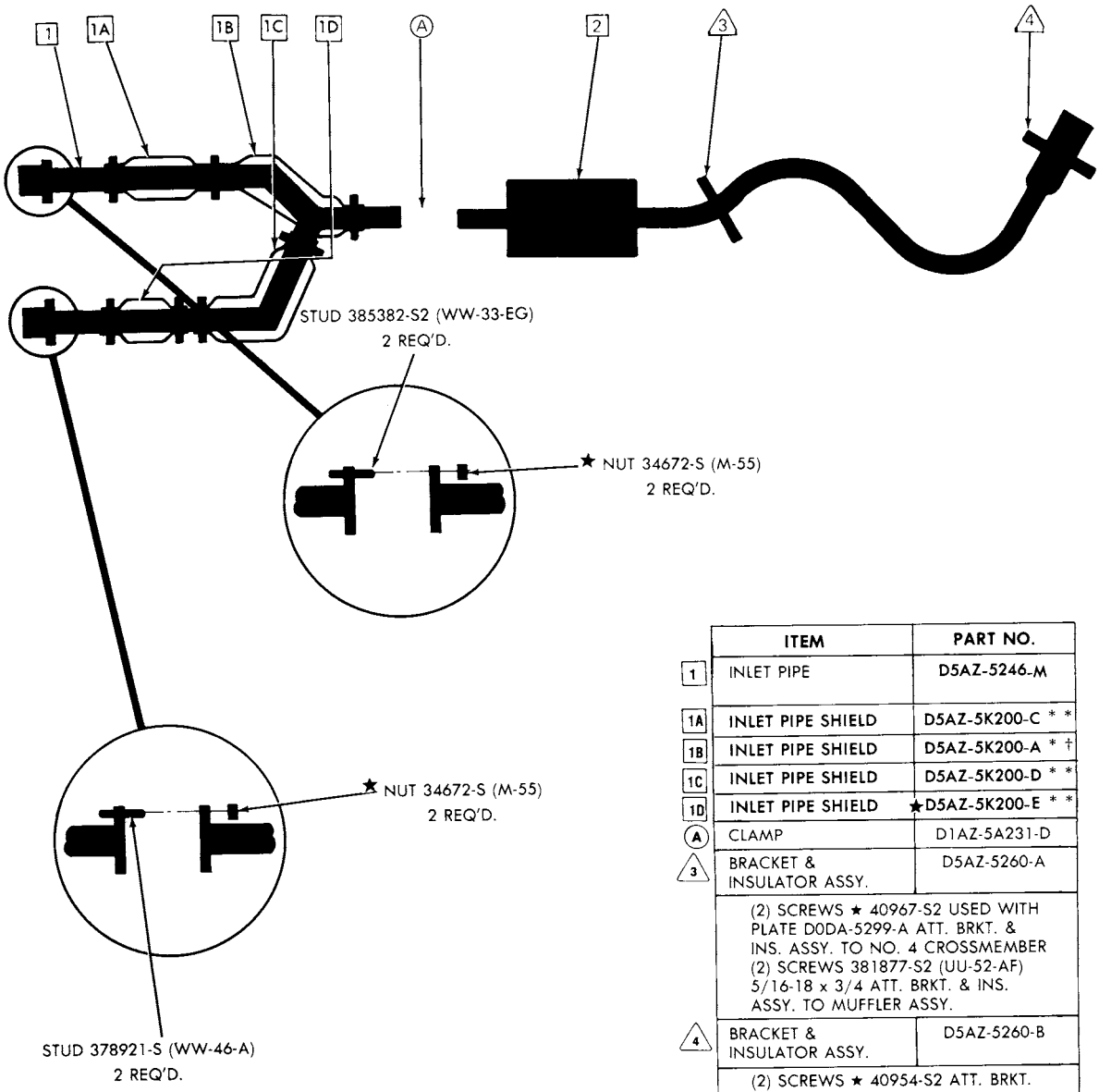

	ITEM	PART NO.
1	INLET PIPE	D5AZ-5246-M
1A	INLET PIPE SHIELD	D5AZ-5K200-C * *
1B	INLET PIPE SHIELD	D5AZ-5K200-A * †
1C	INLET PIPE SHIELD	D5AZ-5K200-D * *
1D	INLET PIPE SHIELD	★D5AZ-5K200-E * *
A	CLAMP	D1AZ-5A231-D
3	BRACKET & INSULATOR ASSY.	D5AZ-5260-A
	(2) SCREWS ★ 40967-S2 USED WITH PLATE D0DA-5299-A ATT. BRKT. & INS. ASSY. TO NO. 4 CROSSMEMBER (2) SCREWS 381877-S2 (UU-52-AF) 5/16-18 x 3/4 ATT. BRKT. & INS. ASSY. TO MUFFLER ASSY.	
4	BRACKET & INSULATOR ASSY.	D5AZ-5260-B
	(2) SCREWS ★ 40954-S2 ATT. BRKT. & INS. ASSY. TO SIDE RAIL (2) SCREWS ★ 40975-S2 USED WITH PLATE D3AA-5299-AB ATT. BRKT. & INS. ASSY. TO OUTLET PIPE	
2	MUFFLER & DIFFUSER ASSY.	■D5AZ-5230-C ▲D5AZ-5230-AE

■"BEFORE 5/15/75"
▲"FROM 5/15/75"
* * REQUIRES (2) 2¼" CLAMP
* REQUIRES (1) 2¼" CLAMP D5AZ-5A231-B
† REQUIRES (1) 2½" CLAMP D5SZ-5A231-A

1975 MERCURY—460-4/B SEDAN (TWO CONVERTER)

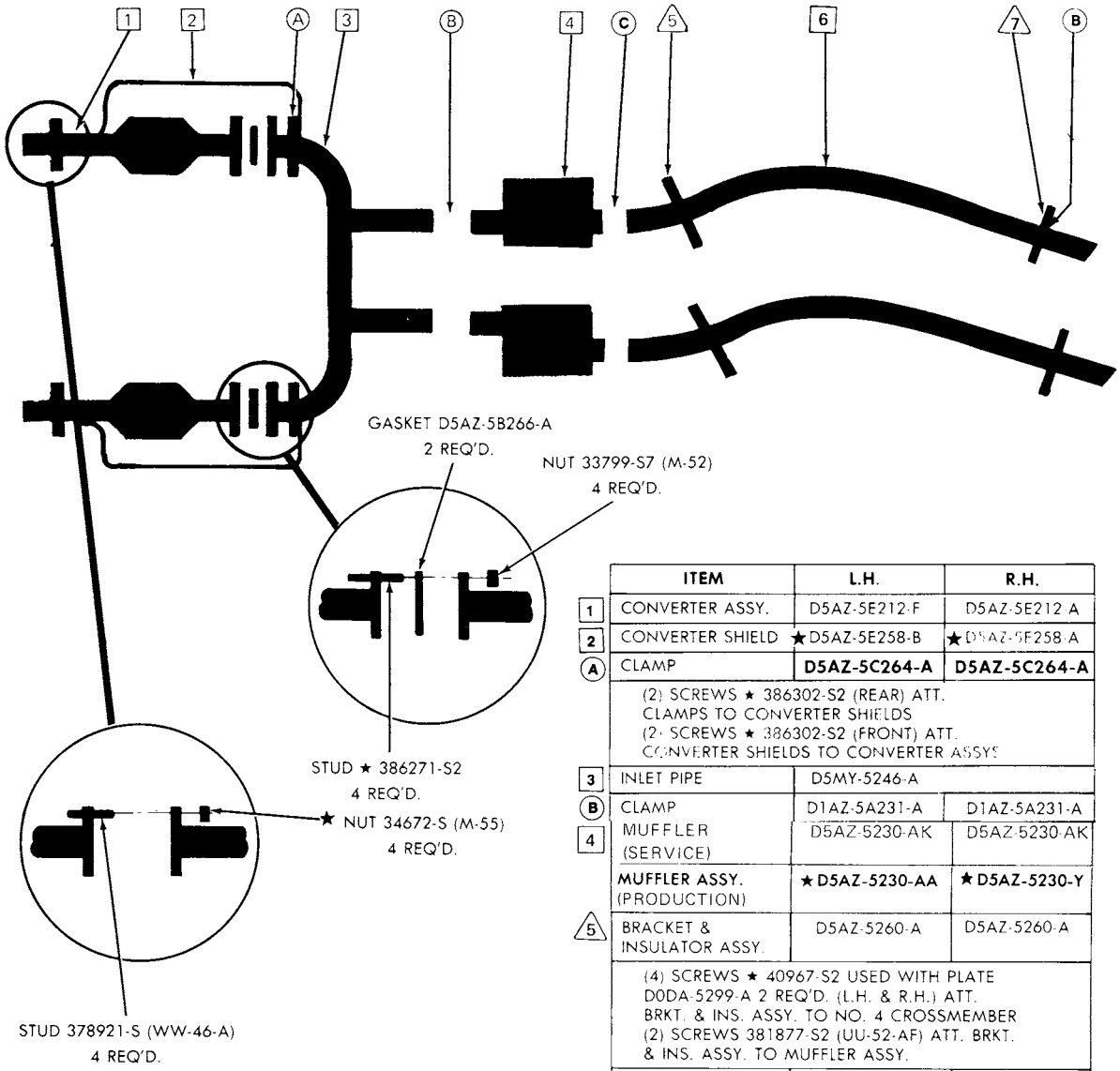

	ITEM	L.H.	R.H.
1	CONVERTER ASSY.	D5AZ-5E212-F	D5AZ-5E212-A
2	CONVERTER SHIELD	★D5AZ-5E258-B	★D5AZ-5E258-A
A	CLAMP	**D5AZ-5C264-A**	**D5AZ-5C264-A**
	(2) SCREWS ★ 386302-S2 (REAR) ATT. CLAMPS TO CONVERTER SHIELDS (2) SCREWS ★ 386302-S2 (FRONT) ATT. CONVERTER SHIELDS TO CONVERTER ASSYS.		
3	INLET PIPE	D5MY-5246-A	
B	CLAMP	D1AZ-5A231-A	D1AZ-5A231-A
4	MUFFLER (SERVICE)	D5AZ-5230-AK	D5AZ-5230-AK
	MUFFLER ASSY. (PRODUCTION)	**★D5AZ-5230-AA**	**★D5AZ-5230-Y**
5	BRACKET & INSULATOR ASSY.	D5AZ-5260-A	D5AZ-5260-A
	(4) SCREWS ★ 40967-S2 USED WITH PLATE D0DA-5299-A 2 REQ'D. (L.H. & R.H.) ATT. BRKT. & INS. ASSY. TO NO. 4 CROSSMEMBER (2) SCREWS 381877-S2 (UU-52-AF) ATT. BRKT. & INS. ASSY. TO MUFFLER ASSY.		
6	OUTLET PIPE (SERVICE)	D5AZ-5255-R	D5AZ-5255-P
7	BRACKET & INSULATOR ASSY.	**■D5AZ-5260-E** **▲D5AZ-5260-G**	**■D5AZ-5260-D** **▲D5AZ-5260-H**
	(4) SCREWS ★ 40980-S2 ATT. BRKT. & INS. ASSY. TO SIDE RAILS		
C	CLAMP	D1AZ-5A231-C	D1AZ-5A231-C

EG-79

■ "BEFORE 1/20/75"
▲ "FROM 1/20/75"

COPYRIGHT © 1986 — FORD MOTOR COMPANY — DEARBORN, MICHIGAN

1975 MERCURY—460-4/B SEDAN (ONE CONVERTER)

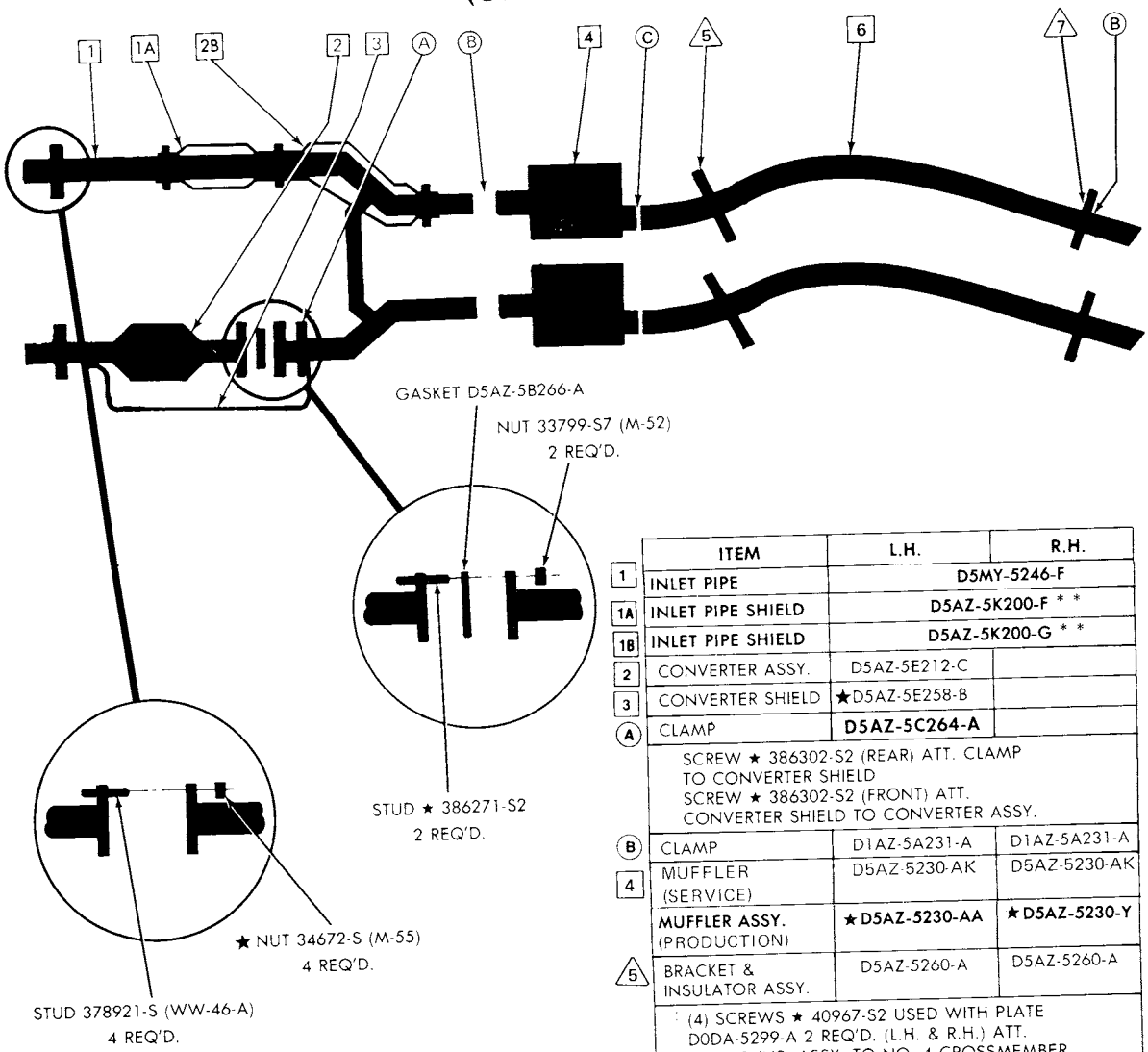

	ITEM	L.H.	R.H.
1	INLET PIPE	D5MY-5246-F	
1A	INLET PIPE SHIELD	D5AZ-5K200-F * *	
1B	INLET PIPE SHIELD	D5AZ-5K200-G * *	
2	CONVERTER ASSY.	D5AZ-5E212-C	
3	CONVERTER SHIELD	★D5AZ-5E258-B	
A	CLAMP	**D5AZ-5C264-A**	
	SCREW ★ 386302-S2 (REAR) ATT. CLAMP TO CONVERTER SHIELD SCREW ★ 386302-S2 (FRONT) ATT. CONVERTER SHIELD TO CONVERTER ASSY.		
B	CLAMP	D1AZ-5A231-A	D1AZ-5A231-A
4	MUFFLER (SERVICE)	D5AZ-5230-AK	D5AZ-5230-AK
	MUFFLER ASSY. (PRODUCTION)	**★D5AZ-5230-AA**	**★D5AZ-5230-Y**
5	BRACKET & INSULATOR ASSY.	D5AZ-5260-A	D5AZ-5260-A
	(4) SCREWS ★ 40967-S2 USED WITH PLATE D0DA-5299-A 2 REQ'D. (L.H. & R.H.) ATT. BRKT. & INS. ASSY. TO NO. 4 CROSSMEMBER (2) SCREWS 381877-S2 (UU-52-AF) ATT. BRKT. & INS. ASSY. TO MUFFLER ASSY.		
6	OUTLET PIPE (SERVICE)	D5AZ-5255-R	D5AZ-5255-P
7	BRACKET & INSULATOR ASSY.	**■D5AZ-5260-E** **▲D5AZ-5260-G**	**■D5AZ-5260-D** **▲D5AZ-5260-H**
	(4) SCREWS ★ 40980-S2 ATT. BRKT. & INS. ASSY. TO SIDE RAILS		
C	CLAMP	D1AZ-5A231-C	D1AZ-5A231-C

■ "BEFORE 1/20/75"
▲ "FROM 1/20/75"
* * REQUIRES (2) 2¼" CLAMP D5AZ-5A231-B

1975 MERCURY–460- 4/B SEDAN (NON CONVERTER)

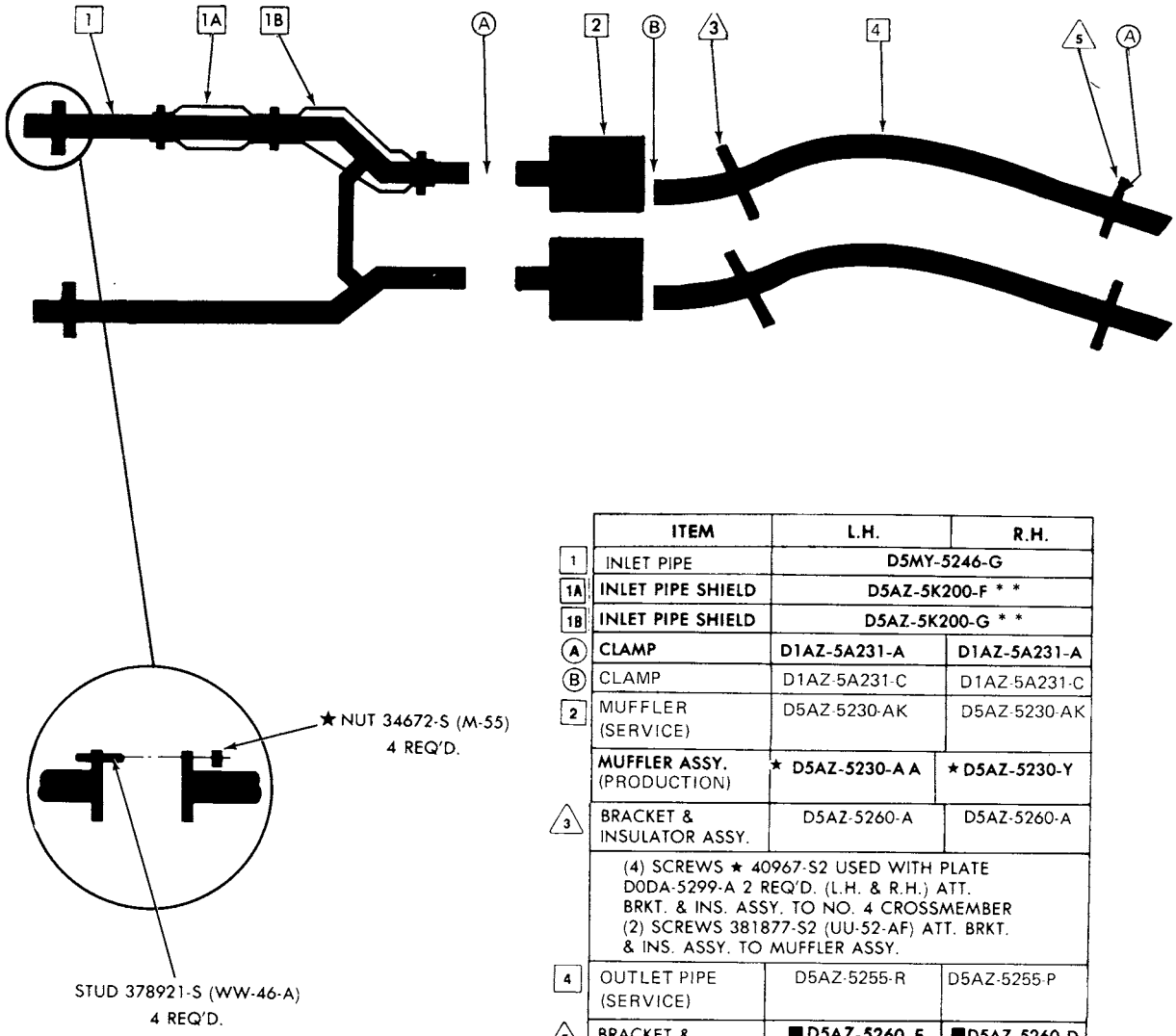

	ITEM	L.H.	R.H.
1	INLET PIPE	D5MY-5246-G	
1A	INLET PIPE SHIELD	D5AZ-5K200-F * *	
1B	INLET PIPE SHIELD	D5AZ-5K200-G * *	
A	CLAMP	D1AZ-5A231-A	D1AZ-5A231-A
B	CLAMP	D1AZ-5A231-C	D1AZ-5A231-C
2	MUFFLER (SERVICE)	D5AZ-5230-AK	D5AZ-5230-AK
	MUFFLER ASSY. (PRODUCTION)	★ D5AZ-5230-A A	★ D5AZ-5230-Y
3	BRACKET & INSULATOR ASSY.	D5AZ-5260-A	D5AZ-5260-A
	(4) SCREWS ★ 40967-S2 USED WITH PLATE D0DA-5299-A 2 REQ'D. (L.H. & R.H.) ATT. BRKT. & INS. ASSY. TO NO. 4 CROSSMEMBER (2) SCREWS 381877-S2 (UU-52-AF) ATT. BRKT. & INS. ASSY. TO MUFFLER ASSY.		
4	OUTLET PIPE (SERVICE)	D5AZ-5255-R	D5AZ-5255-P
5	BRACKET & INSULATOR ASSY.	■ D5AZ-5260-E ▲ D5AZ-5260-G	■ D5AZ-5260-D ▲ D5AZ-5260-H
	(4) SCREWS ★ 40980-S2 ATT. BRKT. & INS. ASSY. TO SIDE RAILS		

■ "BEFORE 1/20/75"
▲ "FROM 1/20/75"
* * REQUIRES (2) 2¼" CLAMP D5AZ-5A231-B

EG-98

COPYRIGHT © 1986 — FORD MOTOR COMPANY — DEARBORN, MICHIGAN

1975 MERCURY— 460-P/C SEDAN (TWO CONVERTER)

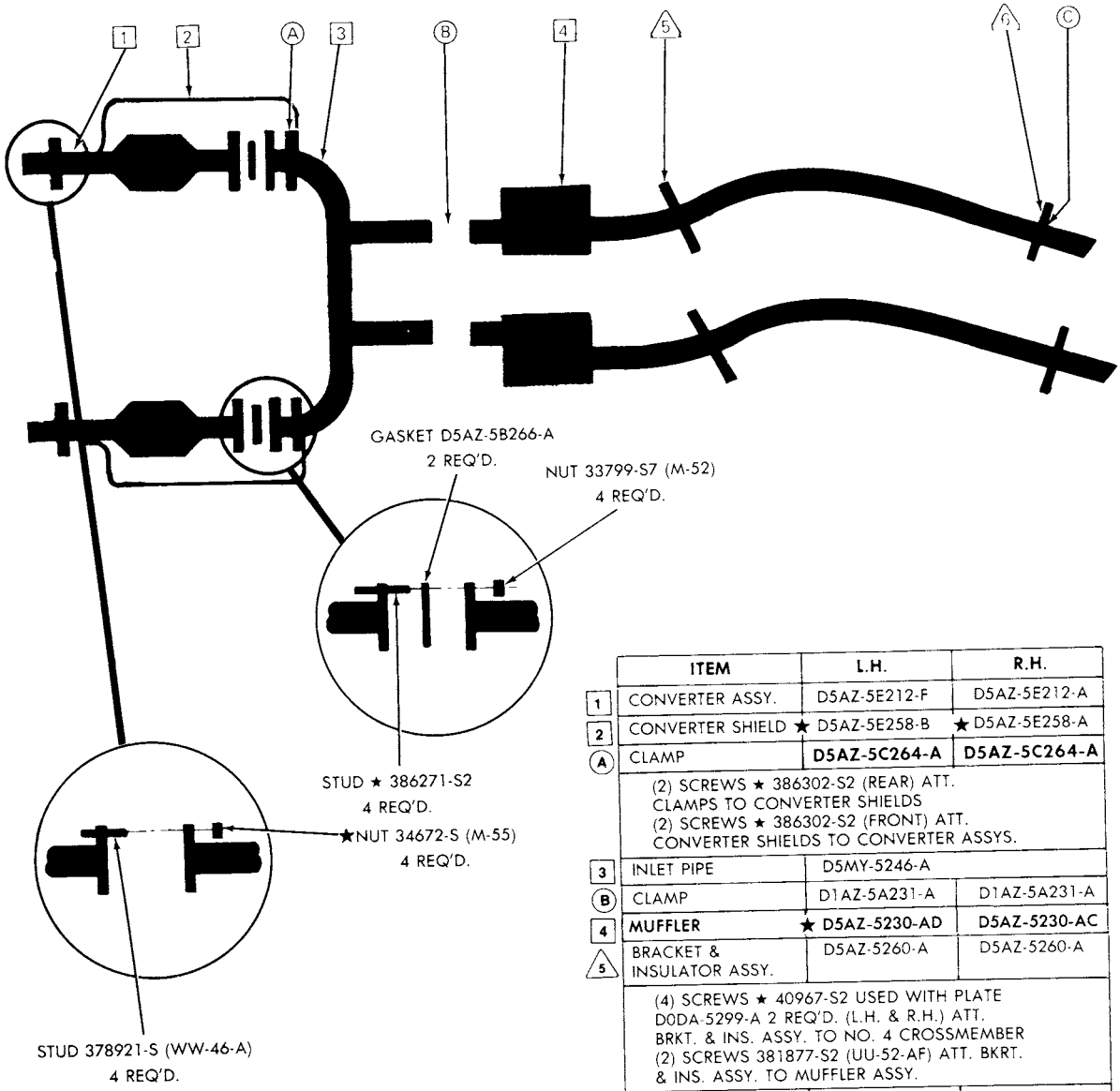

	ITEM	L.H.	R.H.
1	CONVERTER ASSY.	D5AZ-5E212-F	D5AZ-5E212-A
2	CONVERTER SHIELD	★ D5AZ-5E258-B	★ D5AZ-5E258-A
A	CLAMP	**D5AZ-5C264-A**	**D5AZ-5C264-A**
	(2) SCREWS ★ 386302-S2 (REAR) ATT. CLAMPS TO CONVERTER SHIELDS (2) SCREWS ★ 386302-S2 (FRONT) ATT. CONVERTER SHIELDS TO CONVERTER ASSYS.		
3	INLET PIPE	D5MY-5246-A	
B	CLAMP	D1AZ-5A231-A	D1AZ-5A231-A
4	**MUFFLER**	**★ D5AZ-5230-AD**	**D5AZ-5230-AC**
5	BRACKET & INSULATOR ASSY.	D5AZ-5260-A	D5AZ-5260-A
	(4) SCREWS ★ 40967-S2 USED WITH PLATE D0DA-5299-A 2 REQ'D. (L.H. & R.H.) ATT. BRKT. & INS. ASSY. TO NO. 4 CROSSMEMBER (2) SCREWS 381877-S2 (UU-52-AF) ATT. BKRT. & INS. ASSY. TO MUFFLER ASSY.		
6	BRACKET & INSULATOR ASSY.	**■D5AZ-5260-E ▲D5AZ-5260-G**	**■D5AZ-5260-D ▲D5AZ-5260-H**
	(4) SCREWS ★ 40980-S2 ATT. BKRT. & INS. ASSY. TO SIDE RAILS		
C	CLAMP	D1AZ-5A231-A	D1AZ-5A231-A

■ "BEFORE 1/20/75"
▲ "FROM 1/20/75"

1975 MERCURY— 460-P/C SEDAN (ONE CONVERTER)

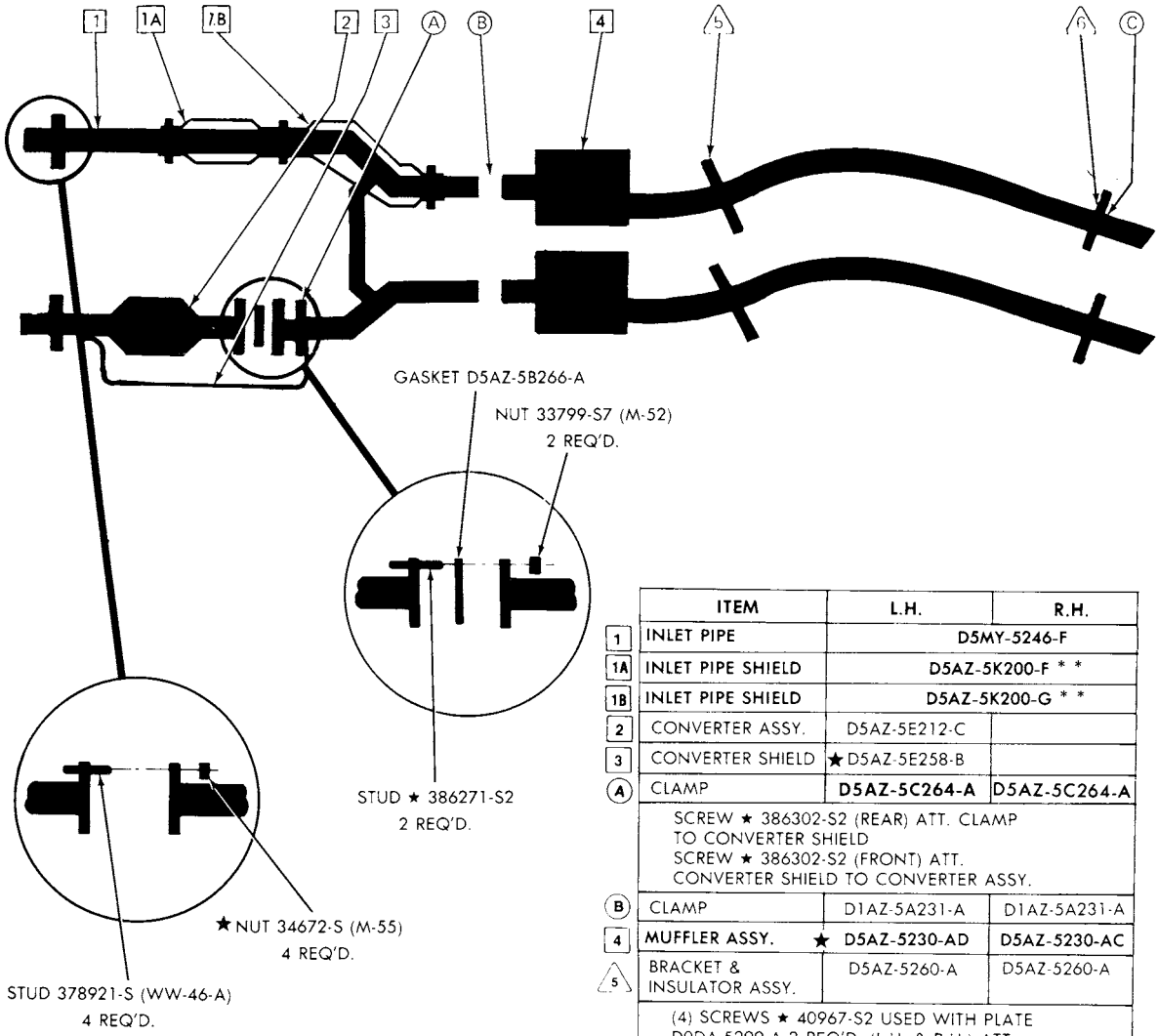

	ITEM	L.H.	R.H.
1	INLET PIPE	D5MY-5246-F	
1A	INLET PIPE SHIELD	D5AZ-5K200-F * *	
1B	INLET PIPE SHIELD	D5AZ-5K200-G * *	
2	CONVERTER ASSY.	D5AZ-5E212-C	
3	CONVERTER SHIELD	★D5AZ-5E258-B	
A	CLAMP	D5AZ-5C264-A	D5AZ-5C264-A
	SCREW ★ 386302-S2 (REAR) ATT. CLAMP TO CONVERTER SHIELD SCREW ★ 386302-S2 (FRONT) ATT. CONVERTER SHIELD TO CONVERTER ASSY.		
B	CLAMP	D1AZ-5A231-A	D1AZ-5A231-A
4	MUFFLER ASSY.	★ D5AZ-5230-AD	D5AZ-5230-AC
5	BRACKET & INSULATOR ASSY.	D5AZ-5260-A	D5AZ-5260-A
	(4) SCREWS ★ 40967-S2 USED WITH PLATE D0DA-5299-A 2 REQ'D. (L.H. & R.H.) ATT. BRKT. & INS. ASSY. TO NO. 4 CROSSMEMBER (2) SCREWS 381877-S2 (UU-52-AF) ATT. BRKT. & INS. ASSY. TO MUFFLER ASSY.		
6	BRACKET & INSULATOR ASSY.	■D5AZ-5260-E ▲D5AZ-5260-G	■D5AZ-5260-D ▲D5AZ-5260-H
	(4) SCREWS ★ 40980-S2 ATT. BRKT. & INS. ASSY. TO SIDE RAILS		
C	CLAMP	D1AZ-5A231-A	D1AZ-5A231-A

■ "BEFORE 1/20/75"
▲ "FROM 1/20/75"
* * REQUIRES (2) 2¼" CLAMP D5AZ-5A231-B

EG-116

COPYRIGHT © 1986 — FORD MOTOR COMPANY — DEARBORN, MICHIGAN

1973/79 LINCOLN-MERCURY CARS

1975 MERCURY–460-P/C SEDAN (NON CONVERTER)

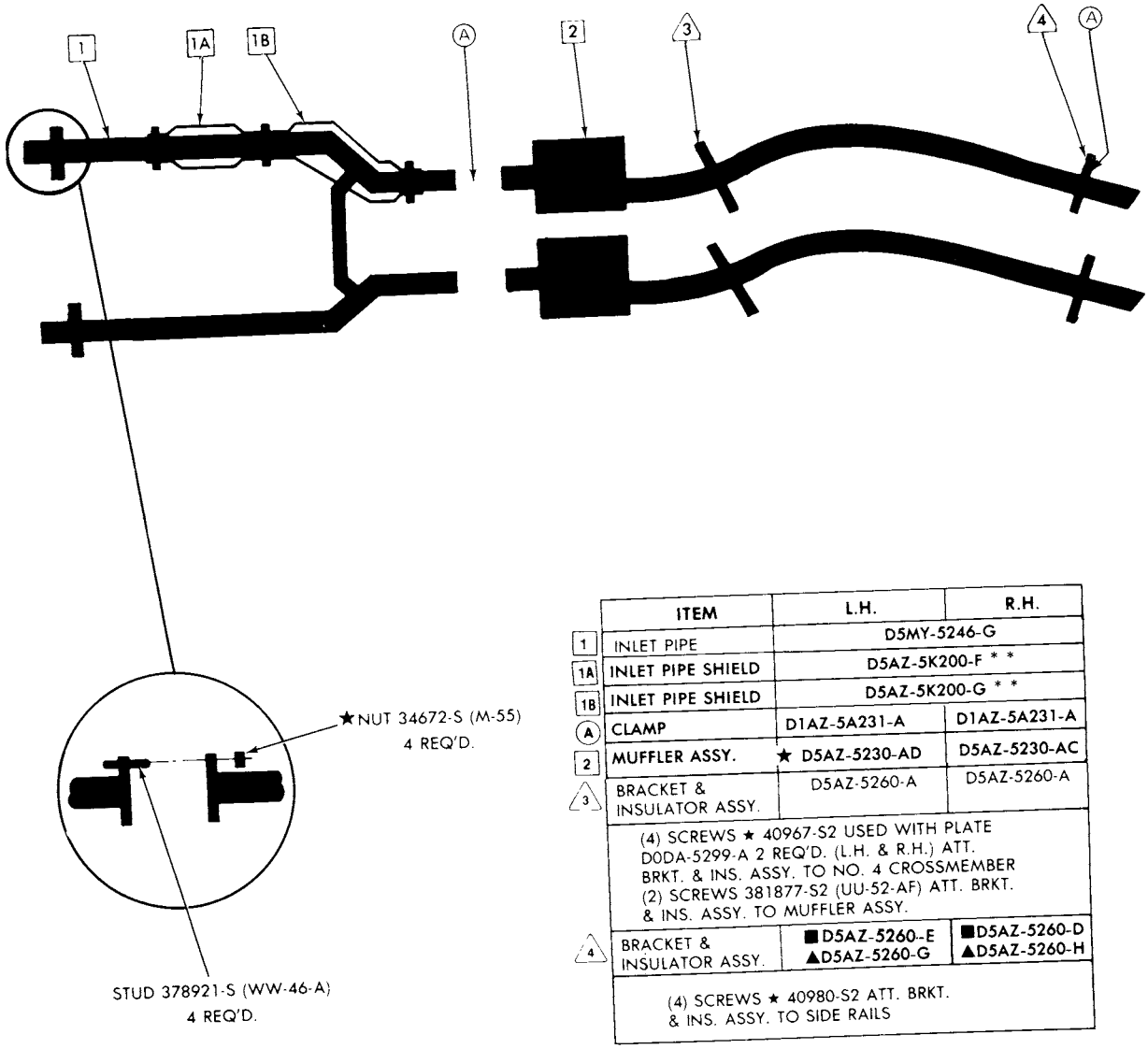

	ITEM	L.H.	R.H.
1	INLET PIPE	D5MY-5246-G	
1A	INLET PIPE SHIELD	D5AZ-5K200-F * *	
1B	INLET PIPE SHIELD	D5AZ-5K200-G * *	
A	CLAMP	D1AZ-5A231-A	D1AZ-5A231-A
2	MUFFLER ASSY.	★ D5AZ-5230-AD	D5AZ-5230-AC
3	BRACKET & INSULATOR ASSY.	D5AZ-5260-A	D5AZ-5260-A
	(4) SCREWS ★ 40967-S2 USED WITH PLATE D0DA-5299-A 2 REQ'D. (L.H. & R.H.) ATT. BRKT. & INS. ASSY. TO NO. 4 CROSSMEMBER (2) SCREWS 381877-S2 (UU-52-AF) ATT. BRKT. & INS. ASSY. TO MUFFLER ASSY.		
4	BRACKET & INSULATOR ASSY.	■D5AZ-5260-E ▲D5AZ-5260-G	■D5AZ-5260-D ▲D5AZ-5260-H
	(4) SCREWS ★ 40980-S2 ATT. BRKT. & INS. ASSY. TO SIDE RAILS		

■ "BEFORE 1/20/75"
▲ "FROM 1/20/75"
* * REQUIRES (2) 2¼" CLAMP D5AZ-5A231-B

EG-118

1975 MERCURY—460-4/B STATION WAGON (TWO CONVERTER)

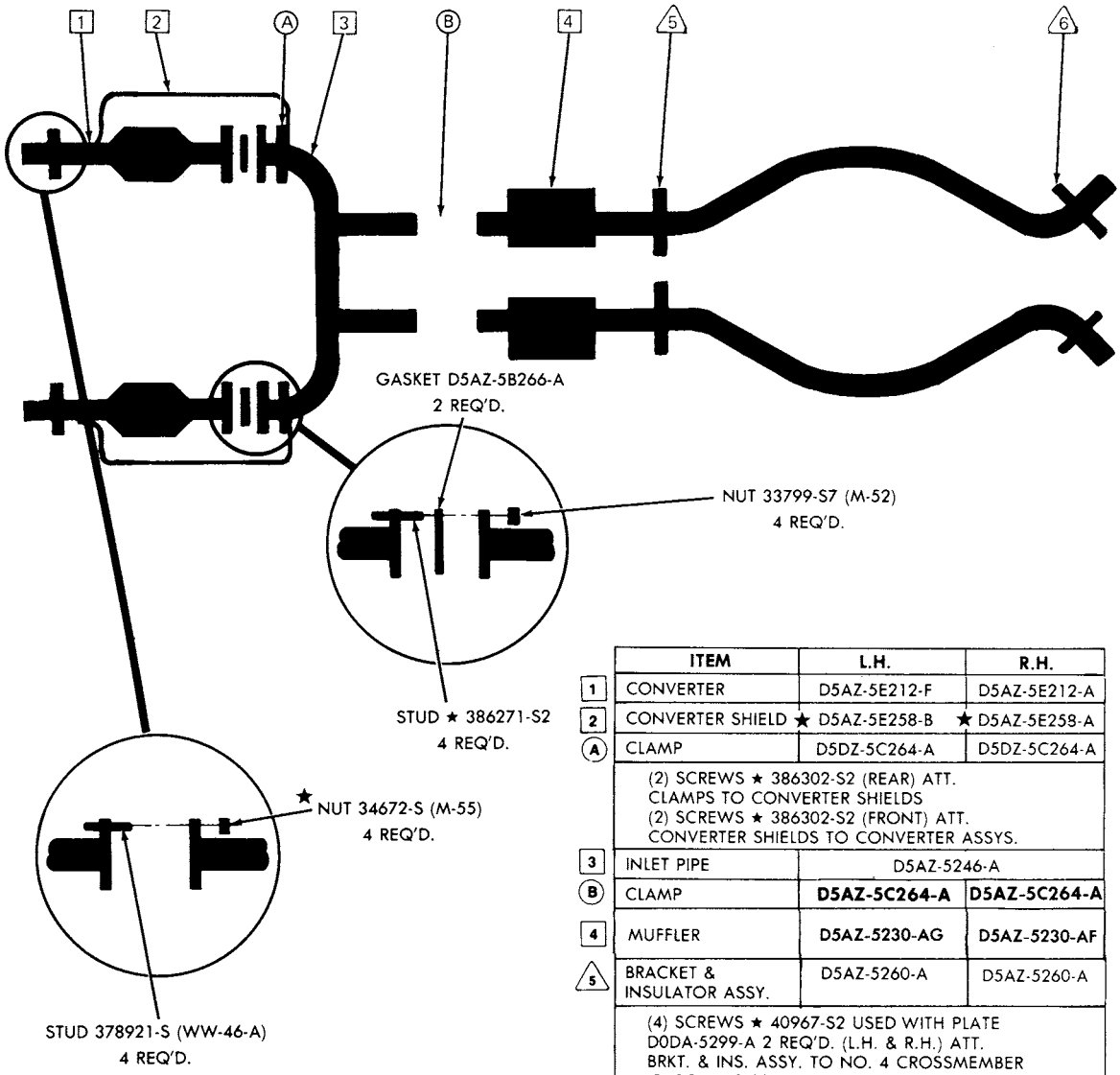

	ITEM	L.H.	R.H.
1	CONVERTER	D5AZ-5E212-F	D5AZ-5E212-A
2	CONVERTER SHIELD	★ D5AZ-5E258-B	★ D5AZ-5E258-A
A	CLAMP	D5DZ-5C264-A	D5DZ-5C264-A
	(2) SCREWS ★ 386302-S2 (REAR) ATT. CLAMPS TO CONVERTER SHIELDS (2) SCREWS ★ 386302-S2 (FRONT) ATT. CONVERTER SHIELDS TO CONVERTER ASSYS.		
3	INLET PIPE	D5AZ-5246-A	
B	CLAMP	**D5AZ-5C264-A**	**D5AZ-5C264-A**
4	MUFFLER	**D5AZ-5230-AG**	**D5AZ-5230-AF**
5	BRACKET & INSULATOR ASSY.	D5AZ-5260-A	D5AZ-5260-A
	(4) SCREWS ★ 40967-S2 USED WITH PLATE D0DA-5299-A 2 REQ'D. (L.H. & R.H.) ATT. BRKT. & INS. ASSY. TO NO. 4 CROSSMEMBER (2) SCREWS 381877-S2 (UU-52-AF) ATT. BRKT. & INS. ASSY. TO MUFFLER ASSY.		
6	BRACKET & INSULATOR ASSY.	D5AZ-5260-C	D5AZ-5260-B
	(4) SCREWS ★ 40954-S2 ATT. BKRT. & INS. ASSY. TO SIDE RAILS (4) SCREWS ★ 40975-S2 USED WITH 2 PLATES D3AA-5299-AB ATT. BRKT. & INS. ASSY. TO OUTLET PIPES		

EG-82

COPYRIGHT © 1986 — FORD MOTOR COMPANY — DEARBORN, MICHIGAN

1975 MERCURY—460-4/B STATION WAGON (ONE CONVERTER)

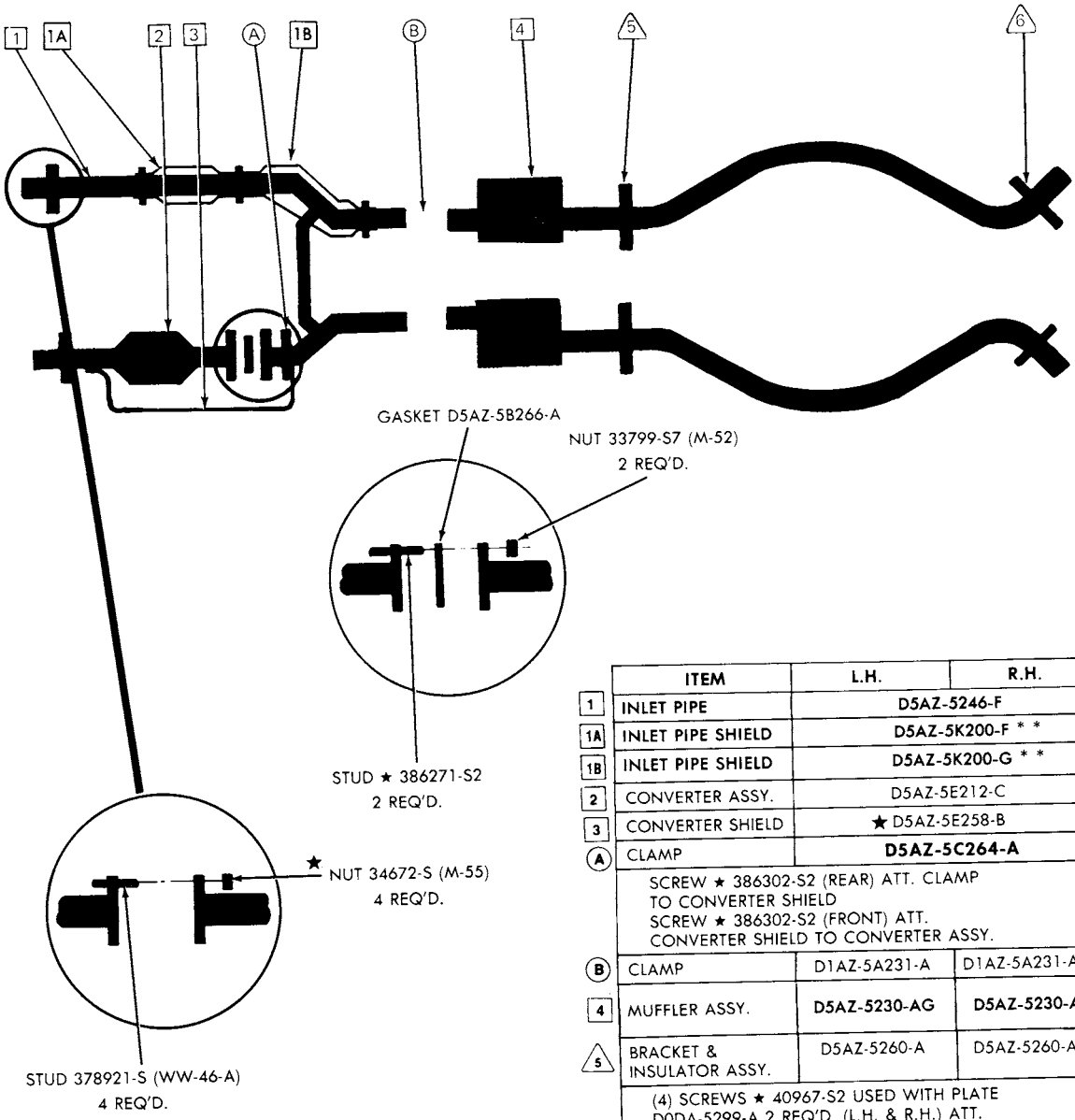

	ITEM	L.H.	R.H.
1	INLET PIPE	D5AZ-5246-F	
1A	INLET PIPE SHIELD	D5AZ-5K200-F * *	
1B	INLET PIPE SHIELD	D5AZ-5K200-G * *	
2	CONVERTER ASSY.	D5AZ-5E212-C	
3	CONVERTER SHIELD	★ D5AZ-5E258-B	
A	CLAMP	D5AZ-5C264-A	
	SCREW ★ 386302-S2 (REAR) ATT. CLAMP TO CONVERTER SHIELD SCREW ★ 386302-S2 (FRONT) ATT. CONVERTER SHIELD TO CONVERTER ASSY.		
B	CLAMP	D1AZ-5A231-A	D1AZ-5A231-A
4	MUFFLER ASSY.	D5AZ-5230-AG	D5AZ-5230-AF
5	BRACKET & INSULATOR ASSY.	D5AZ-5260-A	D5AZ-5260-A
	(4) SCREWS ★ 40967-S2 USED WITH PLATE D0DA-5299-A 2 REQ'D. (L.H. & R.H.) ATT. BRKT. & INS. ASSY. TO NO. 4 CROSSMEMBER (2) SCREWS 381877-S2 (UU-52-AF) ATT. BRKT. & INS. ASSY. TO MUFFLER ASSY.		
6	BRACKET & INSULATOR ASSY.	★D5AZ-5260-C	D5AZ-5260-B
	(4) SCREWS ★ 40954-S2 ATT. BRKT. & INS. ASSY. TO SIDE RAILS (4) SCREWS ★ 40975-S2 USED WITH 2 PLATES D3AA-5299-AB ATT. BRKT. & INS. ASSY. TO OUTER PIPES		

* * REQUIRES (2) 2¼" CLAMP D5AZ-5A231-B

EG-81

1975 MERCURY—460-4/B STATION WAGON (NON-CONVERTER)

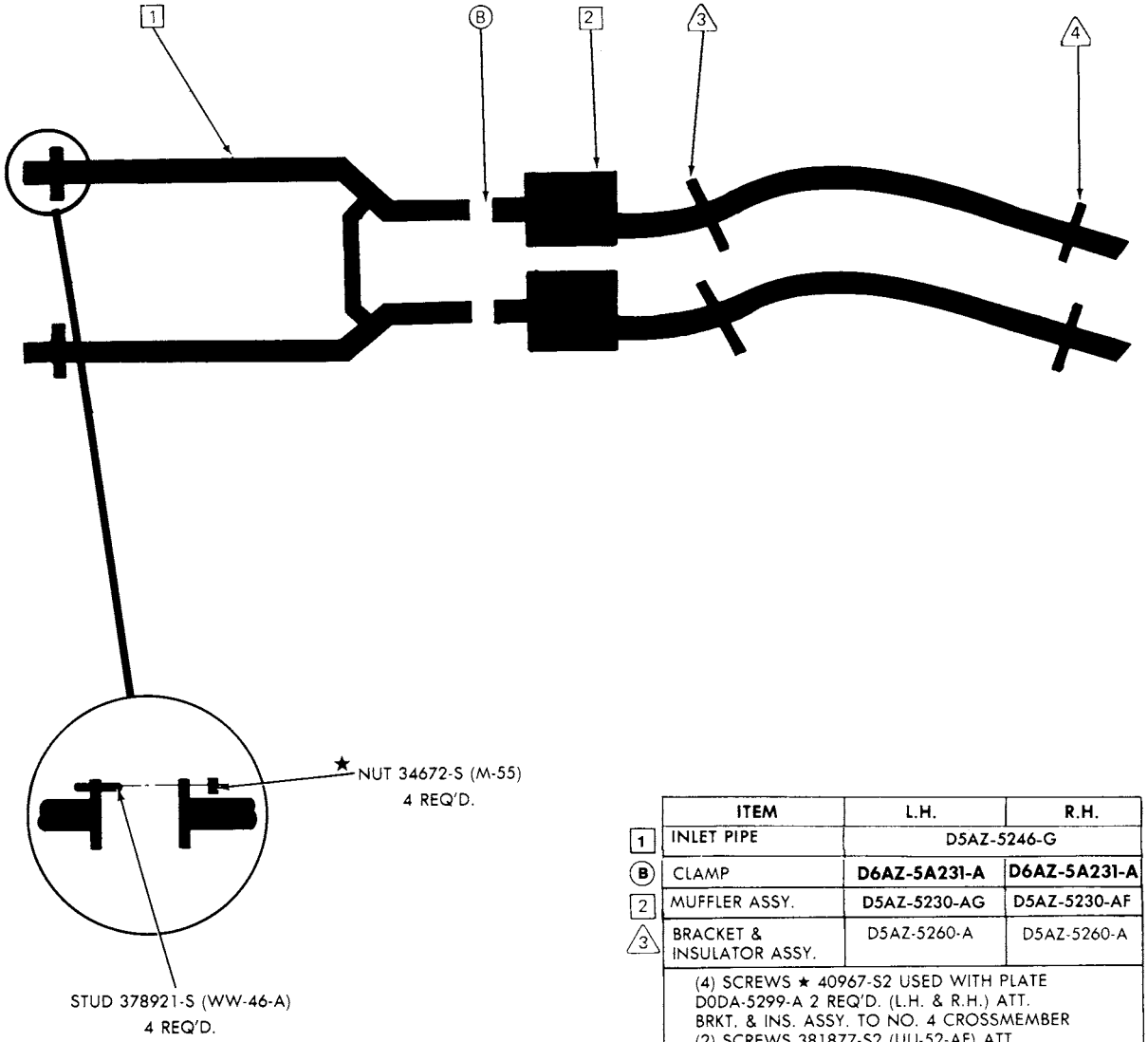

	ITEM	L.H.	R.H.
1	INLET PIPE	D5AZ-5246-G	
B	CLAMP	**D6AZ-5A231-A**	**D6AZ-5A231-A**
2	MUFFLER ASSY.	**D5AZ-5230-AG**	**D5AZ-5230-AF**
3	BRACKET & INSULATOR ASSY.	D5AZ-5260-A	D5AZ-5260-A
	(4) SCREWS ★ 40967-S2 USED WITH PLATE D0DA-5299-A 2 REQ'D. (L.H. & R.H.) ATT. BRKT. & INS. ASSY. TO NO. 4 CROSSMEMBER (2) SCREWS 381877-S2 (UU-52-AF) ATT. BRKT. & INS. ASSY. TO MUFFLER ASSY.		
4	BRACKET & INSULATOR ASSY.	★D5AZ-5260-C	D5AZ-5260-B
	(4) SCREWS ★ 40954-S2 ATT. BRKT. & INS. ASSY. TO SIDE RAILS (4) SCREWS ★ 40975-S2 USED WITH 2 PLATES D3AA-5299-AB ATT. BRKT. & INS. ASSY. TO OUTER PIPES		

* * REQUIRES (2) 2¼" CLAMP D5AZ-5A231-B

EG-85

COPYRIGHT © 1986 — FORD MOTOR COMPANY — DEARBORN, MICHIGAN

1975 MONTEGO—8 CYL. 351-2/B & 400-2/B SEDAN (ONE CONVERTER)

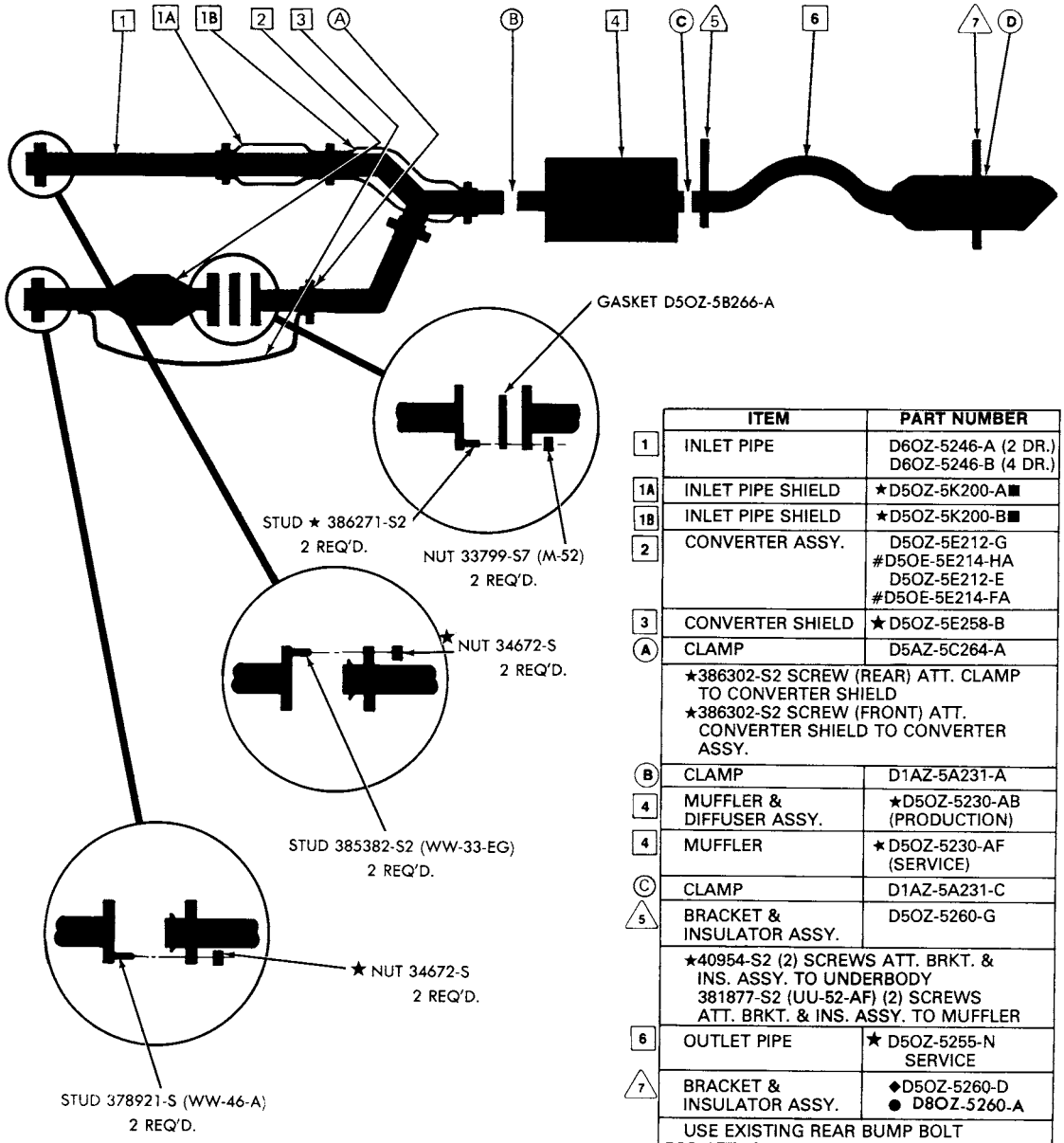

	ITEM	PART NUMBER
1	INLET PIPE	D6OZ-5246-A (2 DR.) D6OZ-5246-B (4 DR.)
1A	INLET PIPE SHIELD	★D5OZ-5K200-A■
1B	INLET PIPE SHIELD	★D5OZ-5K200-B■
2	CONVERTER ASSY.	D5OZ-5E212-G #D5OE-5E214-HA D5OZ-5E212-E #D5OE-5E214-FA
3	CONVERTER SHIELD	★D5OZ-5E258-B
A	CLAMP	D5AZ-5C264-A
	★386302-S2 SCREW (REAR) ATT. CLAMP TO CONVERTER SHIELD ★386302-S2 SCREW (FRONT) ATT. CONVERTER SHIELD TO CONVERTER ASSY.	
B	CLAMP	D1AZ-5A231-A
4	MUFFLER & DIFFUSER ASSY.	★D5OZ-5230-AB (PRODUCTION)
4	MUFFLER	★D5OZ-5230-AF (SERVICE)
C	CLAMP	D1AZ-5A231-C
5	BRACKET & INSULATOR ASSY.	D5OZ-5260-G
	★40954-S2 (2) SCREWS ATT. BRKT. & INS. ASSY. TO UNDERBODY 381877-S2 (UU-52-AF) (2) SCREWS ATT. BRKT. & INS. ASSY. TO MUFFLER	
6	OUTLET PIPE	★ D5OZ-5255-N SERVICE
7	BRACKET & INSULATOR ASSY.	◆D5OZ-5260-D ● D8OZ-5260-A
	USE EXISTING REAR BUMP BOLT FOR ATTACHMENT	
D	CLAMP	C6AZ-5A231-A PRODUCTION
	378836-S2 (UU-39-J) SCREW ATT. CLAMP TO HANGER & PIPE	
	CLAMP	C1TT-5A231-A (SERVICE)

■REQUIRES (2) 2¼" CLAMP D5AZ-5A231-B
◆"BEFORE 1/20/75"
●"FROM 1/20/75"

ED-119

COPYRIGHT © 1986 — FORD MOTOR COMPANY — DEARBORN, MICHIGAN

1975 MONTEGO—8 CYL. 351M-2/B & 400-2/B SEDAN (TWO CONVERTER)

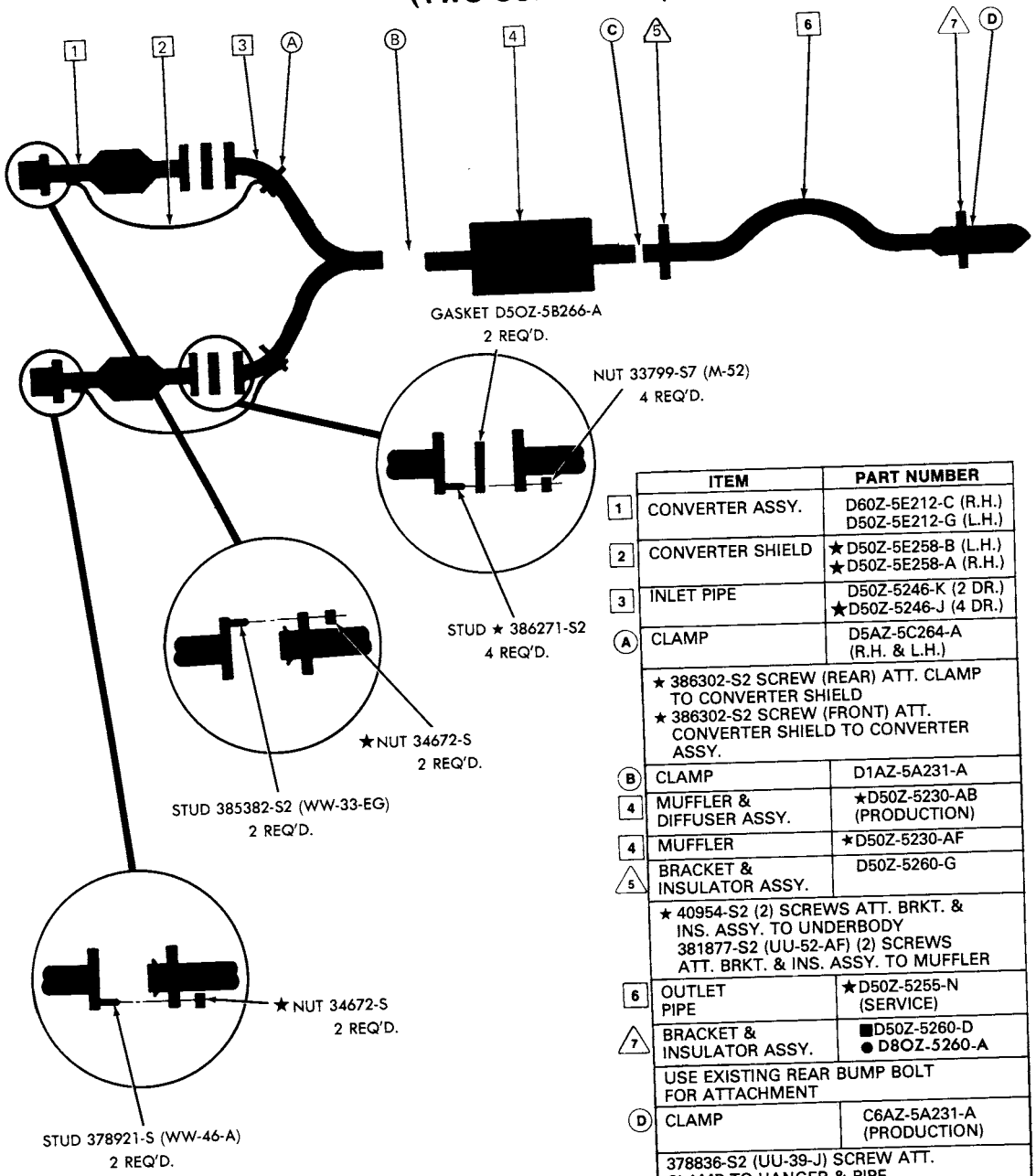

	ITEM	PART NUMBER
1	CONVERTER ASSY.	D60Z-5E212-C (R.H.) D50Z-5E212-G (L.H.)
2	CONVERTER SHIELD	★D50Z-5E258-B (L.H.) ★D50Z-5E258-A (R.H.)
3	INLET PIPE	D50Z-5246-K (2 DR.) ★D50Z-5246-J (4 DR.)
A	CLAMP	D5AZ-5C264-A (R.H. & L.H.)
	★ 386302-S2 SCREW (REAR) ATT. CLAMP TO CONVERTER SHIELD ★ 386302-S2 SCREW (FRONT) ATT. CONVERTER SHIELD TO CONVERTER ASSY.	
B	CLAMP	D1AZ-5A231-A
4	MUFFLER & DIFFUSER ASSY.	★D50Z-5230-AB (PRODUCTION)
4	MUFFLER	★D50Z-5230-AF
5	BRACKET & INSULATOR ASSY.	D50Z-5260-G
	★ 40954-S2 (2) SCREWS ATT. BRKT. & INS. ASSY. TO UNDERBODY 381877-S2 (UU-52-AF) (2) SCREWS ATT. BRKT. & INS. ASSY. TO MUFFLER	
6	OUTLET PIPE	★D50Z-5255-N (SERVICE)
7	BRACKET & INSULATOR ASSY.	■D50Z-5260-D ● D8OZ-5260-A
	USE EXISTING REAR BUMP BOLT FOR ATTACHMENT	
D	CLAMP	C6AZ-5A231-A (PRODUCTION)
	378836-S2 (UU-39-J) SCREW ATT. CLAMP TO HANGER & PIPE	
	CLAMP	C1TT-5A231-D SERVICE

■ "BEFORE 1/20/75"
▲ "FROM 1/20/75"

ED-121

1975 MONTEGO—8 CYL. 351-2/B & 400-2/B SEDAN (NON CONVERTER)

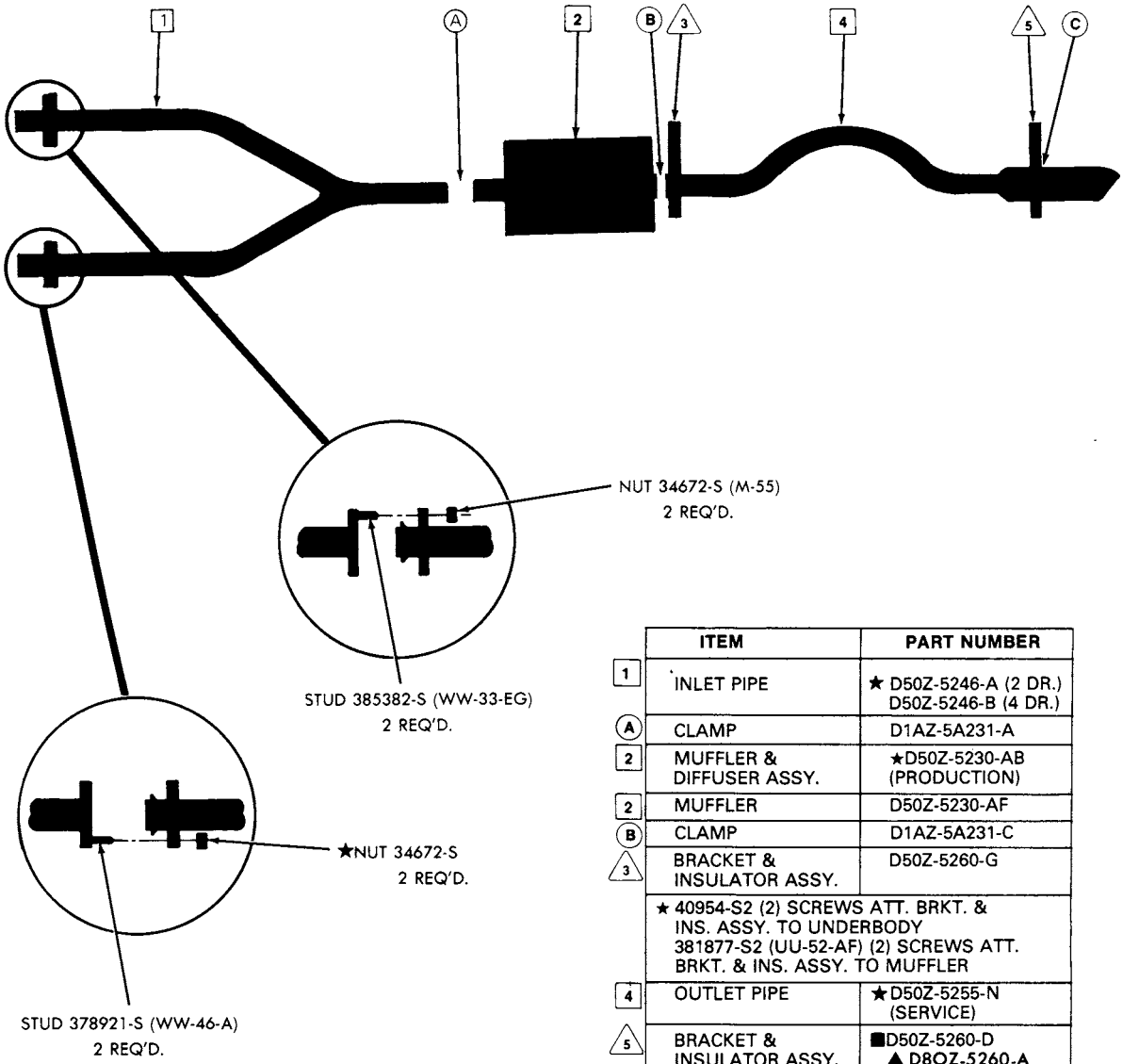

	ITEM	PART NUMBER
1	INLET PIPE	★ D50Z-5246-A (2 DR.) D50Z-5246-B (4 DR.)
A	CLAMP	D1AZ-5A231-A
2	MUFFLER & DIFFUSER ASSY.	★D50Z-5230-AB (PRODUCTION)
2	MUFFLER	D50Z-5230-AF
B	CLAMP	D1AZ-5A231-C
3	BRACKET & INSULATOR ASSY.	D50Z-5260-G
	★ 40954-S2 (2) SCREWS ATT. BRKT. & INS. ASSY. TO UNDERBODY 381877-S2 (UU-52-AF) (2) SCREWS ATT. BRKT. & INS. ASSY. TO MUFFLER	
4	OUTLET PIPE	★D50Z-5255-N (SERVICE)
5	BRACKET & INSULATOR ASSY.	■D50Z-5260-D ▲ D8OZ-5260-A
	USE EXISTING REAR BUMPER BOLT FOR ATTACHMENT	
C	CLAMP	C6AZ-5A231-A (PRODUCTION)
	378836-S2 (UU-39-J) SCREW ATT. CLAMP TO HANGER & PIPE	
	CLAMP	C1TT-5A231-A (SERVICE)

■ "BEFORE 1/20/75"
▲ "FROM 1/20/75"

ED-128

COPYRIGHT © 1986 — FORD MOTOR COMPANY — DEARBORN, MICHIGAN

1975 MONTEGO—8 CYL. 351M-2/B & 400-2/B STATION WAGON (ONE CONVERTER)

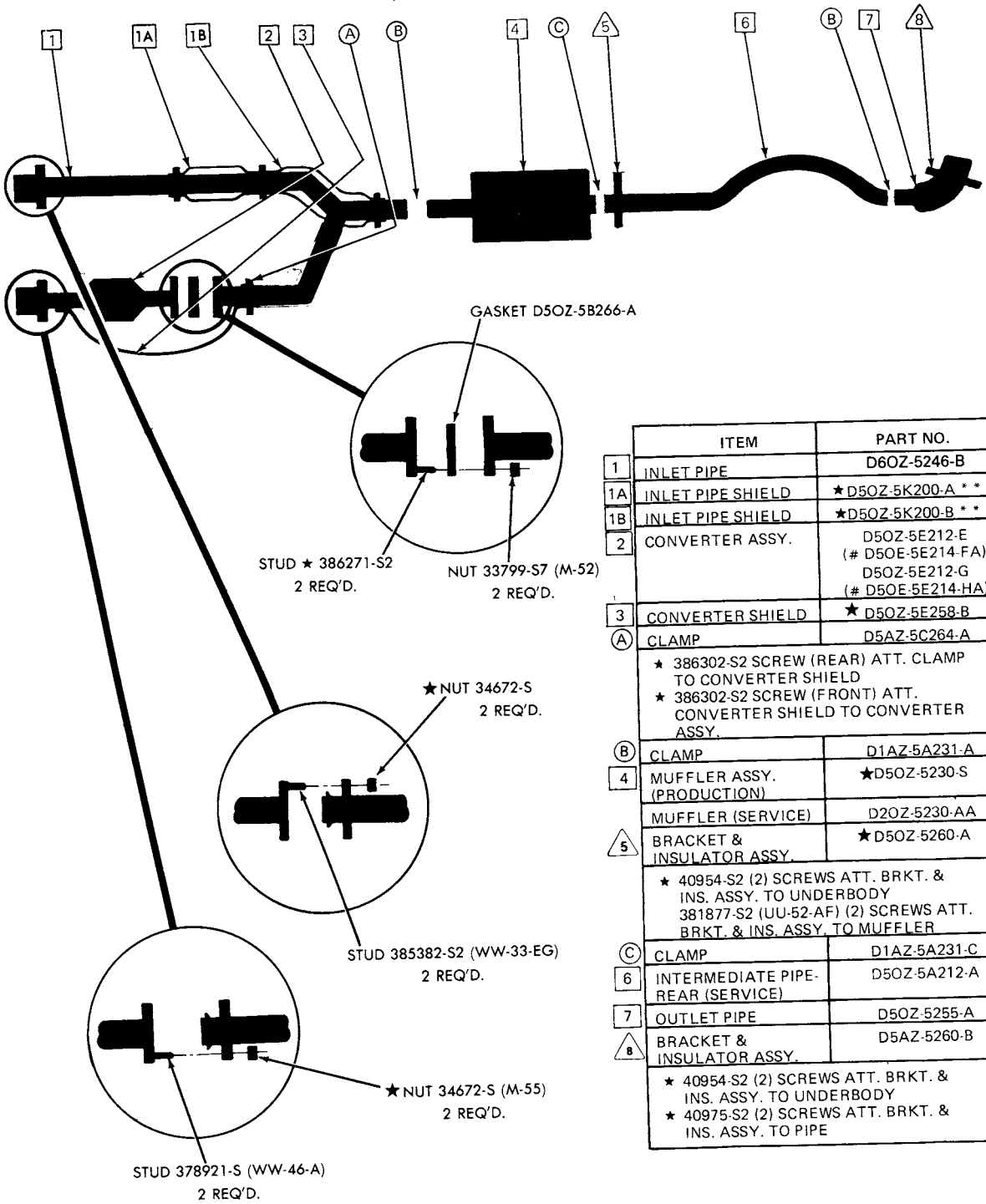

	ITEM	PART NO.
1	INLET PIPE	D6OZ-5246-B
1A	INLET PIPE SHIELD	★D5OZ-5K200-A * *
1B	INLET PIPE SHIELD	★D5OZ-5K200-B * *
2	CONVERTER ASSY.	D5OZ-5E212-E (# D5OE-5E214-FA) D5OZ-5E212-G (# D5OE-5E214-HA)
3	CONVERTER SHIELD	★ D5OZ-5E258-B
A	CLAMP	D5AZ-5C264-A
	★ 386302-S2 SCREW (REAR) ATT. CLAMP TO CONVERTER SHIELD ★ 386302-S2 SCREW (FRONT) ATT. CONVERTER SHIELD TO CONVERTER ASSY.	
B	CLAMP	D1AZ-5A231-A
4	MUFFLER ASSY. (PRODUCTION)	★D5OZ-5230-S
	MUFFLER (SERVICE)	D2OZ-5230-AA
5	BRACKET & INSULATOR ASSY.	★D5OZ-5260-A
	★ 40954-S2 (2) SCREWS ATT. BRKT. & INS. ASSY. TO UNDERBODY 381877-S2 (UU-52-AF) (2) SCREWS ATT. BRKT. & INS. ASSY. TO MUFFLER	
C	CLAMP	D1AZ-5A231-C
6	INTERMEDIATE PIPE-REAR (SERVICE)	D5OZ-5A212-A
7	OUTLET PIPE	D5OZ-5255-A
8	BRACKET & INSULATOR ASSY.	D5AZ-5260-B
	★ 40954-S2 (2) SCREWS ATT. BRKT. & INS. ASSY. TO UNDERBODY ★ 40975-S2 (2) SCREWS ATT. BRKT. & INS. ASSY. TO PIPE	

* * REQUIRES (2) 2¼" CLAMP D5AZ-5A231-B

ED-120

1975 MONTEGO—8 CYL. 351M-2/B & 400-2/B STATION WAGON (TWO CONVERTER)

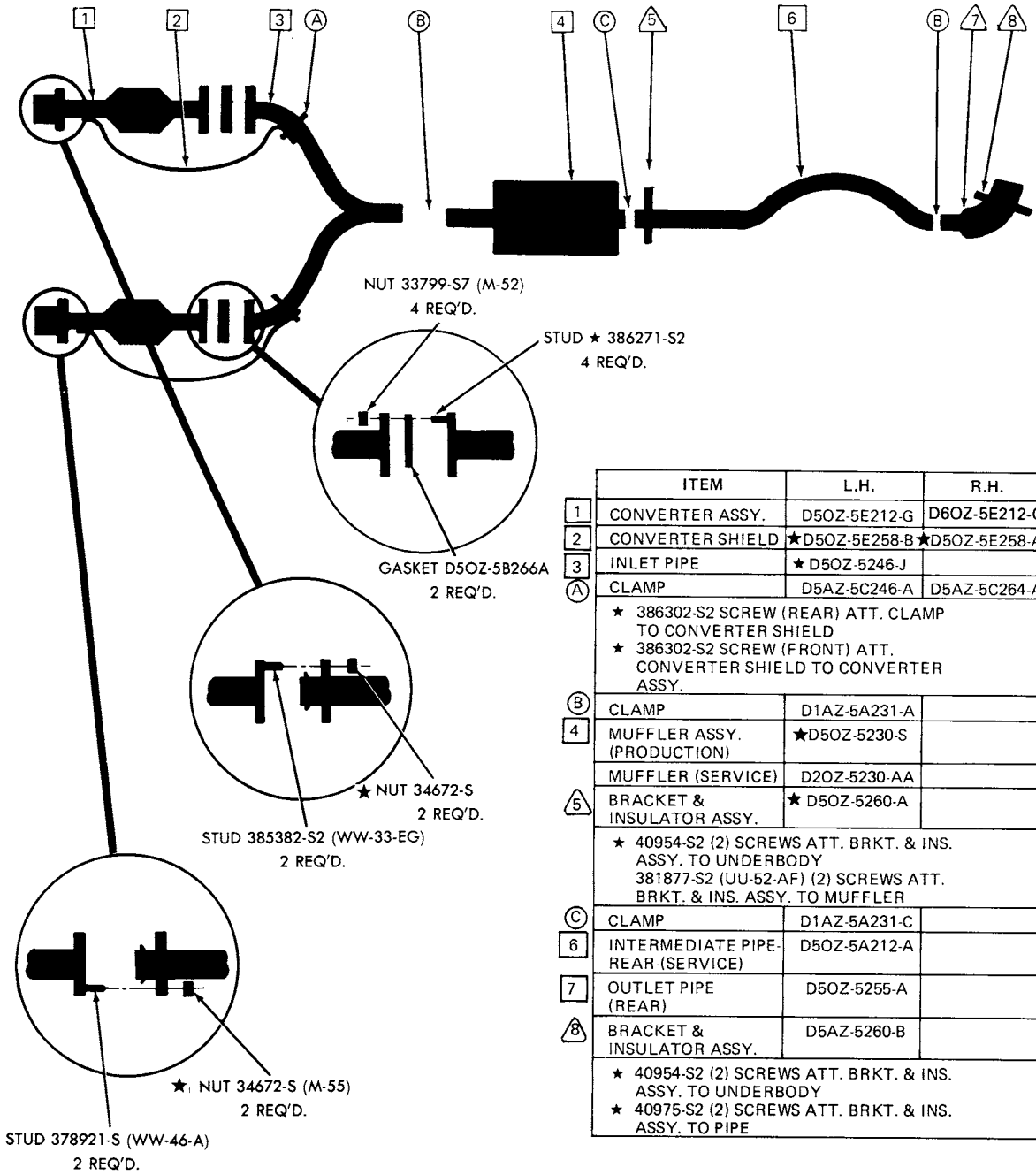

	ITEM	L.H.	R.H.
1	CONVERTER ASSY.	D5OZ-5E212-G	D6OZ-5E212-C
2	CONVERTER SHIELD	★D5OZ-5E258-B	★D5OZ-5E258-A
3	INLET PIPE	★ D5OZ-5246-J	
A	CLAMP	D5AZ-5C246-A	D5AZ-5C264-A
	★ 386302-S2 SCREW (REAR) ATT. CLAMP TO CONVERTER SHIELD ★ 386302-S2 SCREW (FRONT) ATT. CONVERTER SHIELD TO CONVERTER ASSY.		
B	CLAMP	D1AZ-5A231-A	
4	MUFFLER ASSY. (PRODUCTION)	★D5OZ-5230-S	
	MUFFLER (SERVICE)	D2OZ-5230-AA	
5	BRACKET & INSULATOR ASSY.	★ D5OZ-5260-A	
	★ 40954-S2 (2) SCREWS ATT. BRKT. & INS. ASSY. TO UNDERBODY 381877-S2 (UU-52-AF) (2) SCREWS ATT. BRKT. & INS. ASSY. TO MUFFLER		
C	CLAMP	D1AZ-5A231-C	
6	INTERMEDIATE PIPE-REAR (SERVICE)	D5OZ-5A212-A	
7	OUTLET PIPE (REAR)	D5OZ-5255-A	
8	BRACKET & INSULATOR ASSY.	D5AZ-5260-B	
	★ 40954-S2 (2) SCREWS ATT. BRKT. & INS. ASSY. TO UNDERBODY ★ 40975-S2 (2) SCREWS ATT. BRKT. & INS. ASSY. TO PIPE		

ED-122

COPYRIGHT © 1986 — FORD MOTOR COMPANY — DEARBORN, MICHIGAN

1975 MONTEGO — 8 CYL. 351M-2/B & 400-2/B
STATION WAGON
(NON-CONVERTER)

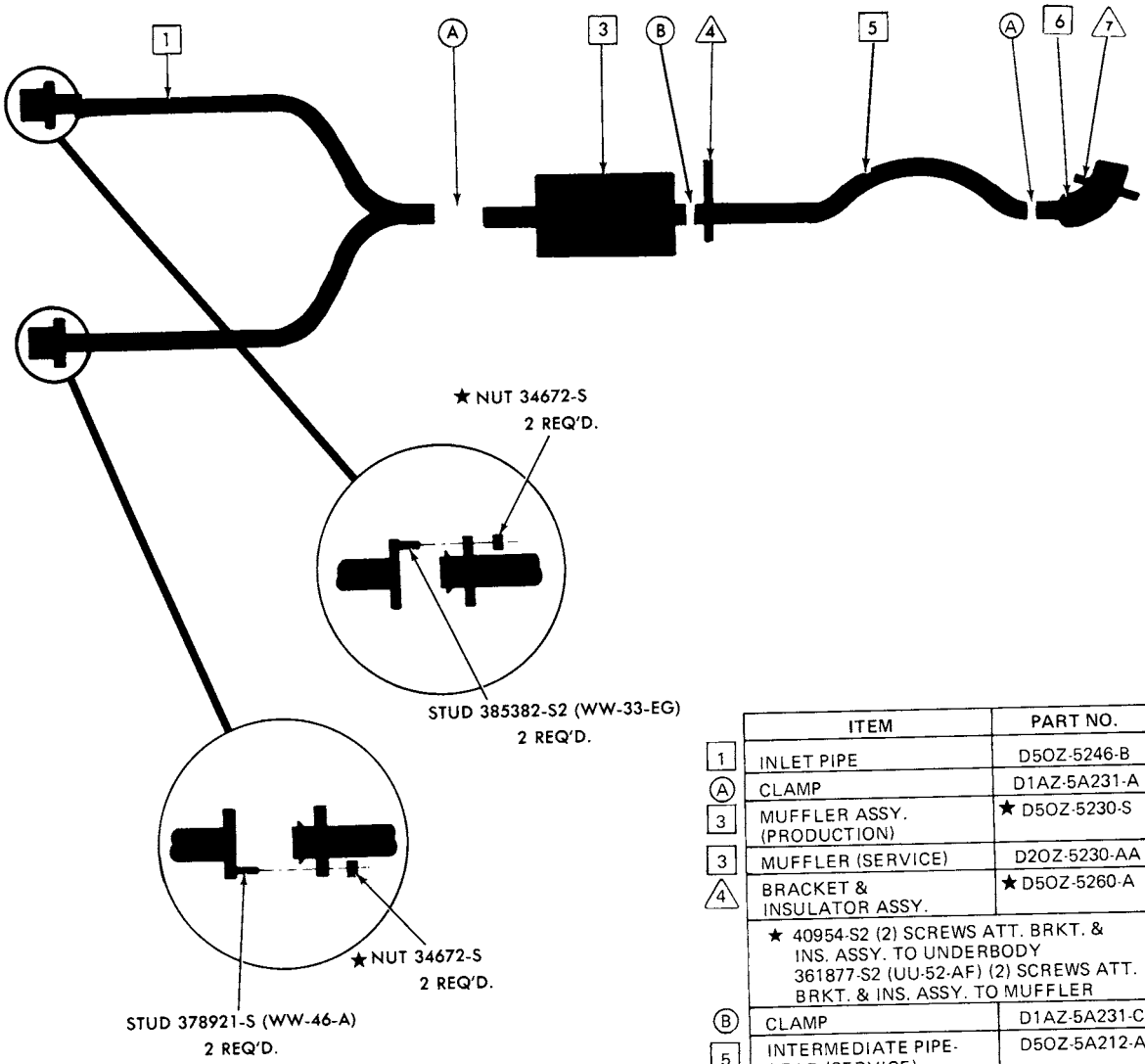

	ITEM	PART NO.
1	INLET PIPE	D5OZ-5246-B
A	CLAMP	D1AZ-5A231-A
3	MUFFLER ASSY. (PRODUCTION)	★ D5OZ-5230-S
3	MUFFLER (SERVICE)	D2OZ-5230-AA
4	BRACKET & INSULATOR ASSY.	★ D5OZ-5260-A
	★ 40954-S2 (2) SCREWS ATT. BRKT. & INS. ASSY. TO UNDERBODY 361877-S2 (UU-52-AF) (2) SCREWS ATT. BRKT. & INS. ASSY. TO MUFFLER	
B	CLAMP	D1AZ-5A231-C
5	INTERMEDIATE PIPE-REAR (SERVICE)	D5OZ-5A212-A
6	OUTLET PIPE	D5OZ-5255-A
7	BRACKET & INSULATOR ASSY.	D5AZ-5260-B
	★ 40954-S2 (2) SCREWS ATT. BRKT. & INS. ASSY. TO UNDERBODY ★ 40975-S2 (2) SCREWS ATT. BRKT. & INS. ASSY. TO PIPE	

1975 MONTEGO—8 CYL. 460-4/B & 460-P/C SEDAN (ONE CONVERTER)

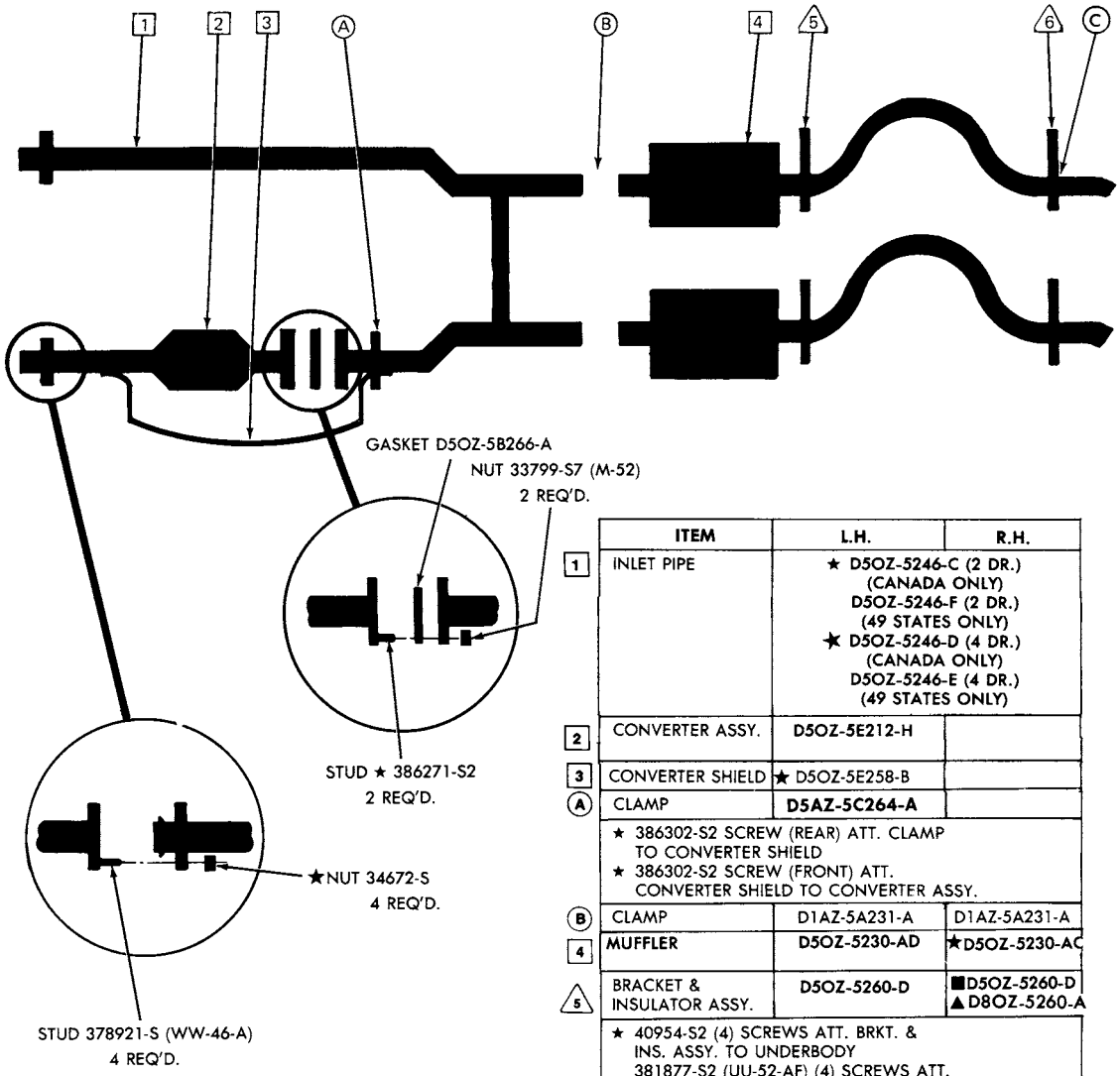

	ITEM	L.H.	R.H.
1	INLET PIPE	★ D5OZ-5246-C (2 DR.) (CANADA ONLY) D5OZ-5246-F (2 DR.) (49 STATES ONLY) ★ D5OZ-5246-D (4 DR.) (CANADA ONLY) D5OZ-5246-E (4 DR.) (49 STATES ONLY)	
2	CONVERTER ASSY.	D5OZ-5E212-H	
3	CONVERTER SHIELD	★ D5OZ-5E258-B	
A	CLAMP	D5AZ-5C264-A	
	★ 386302-S2 SCREW (REAR) ATT. CLAMP TO CONVERTER SHIELD ★ 386302-S2 SCREW (FRONT) ATT. CONVERTER SHIELD TO CONVERTER ASSY.		
B	CLAMP	D1AZ-5A231-A	D1AZ-5A231-A
4	MUFFLER	D5OZ-5230-AD	★D5OZ-5230-AC
5	BRACKET & INSULATOR ASSY.	D5OZ-5260-D	■D5OZ-5260-D ▲D8OZ-5260-A
	★ 40954-S2 (4) SCREWS ATT. BRKT. & INS. ASSY. TO UNDERBODY 381877-S2 (UU-52-AF) (4) SCREWS ATT. BRKT. & INS. ASSY. TO MUFFLER		
6	BRACKET & INSULATOR ASSY.	D5OZ-5260-D	D5OZ-5260-D
	USE EXISTING REAR BUMPER BOLT FOR ATTACHMENT		
C	CLAMP	D1AZ-5A231-C	D1AZ-5A231-C

■ "BEFORE 1/20/75"
▲ "FROM 1/20/75"

ED-123

COPYRIGHT © 1986 — FORD MOTOR COMPANY — DEARBORN, MICHIGAN

1975 MONTEGO—8 CYL. 460-4/B & 460 P/C SEDAN (TWO CONVERTER)

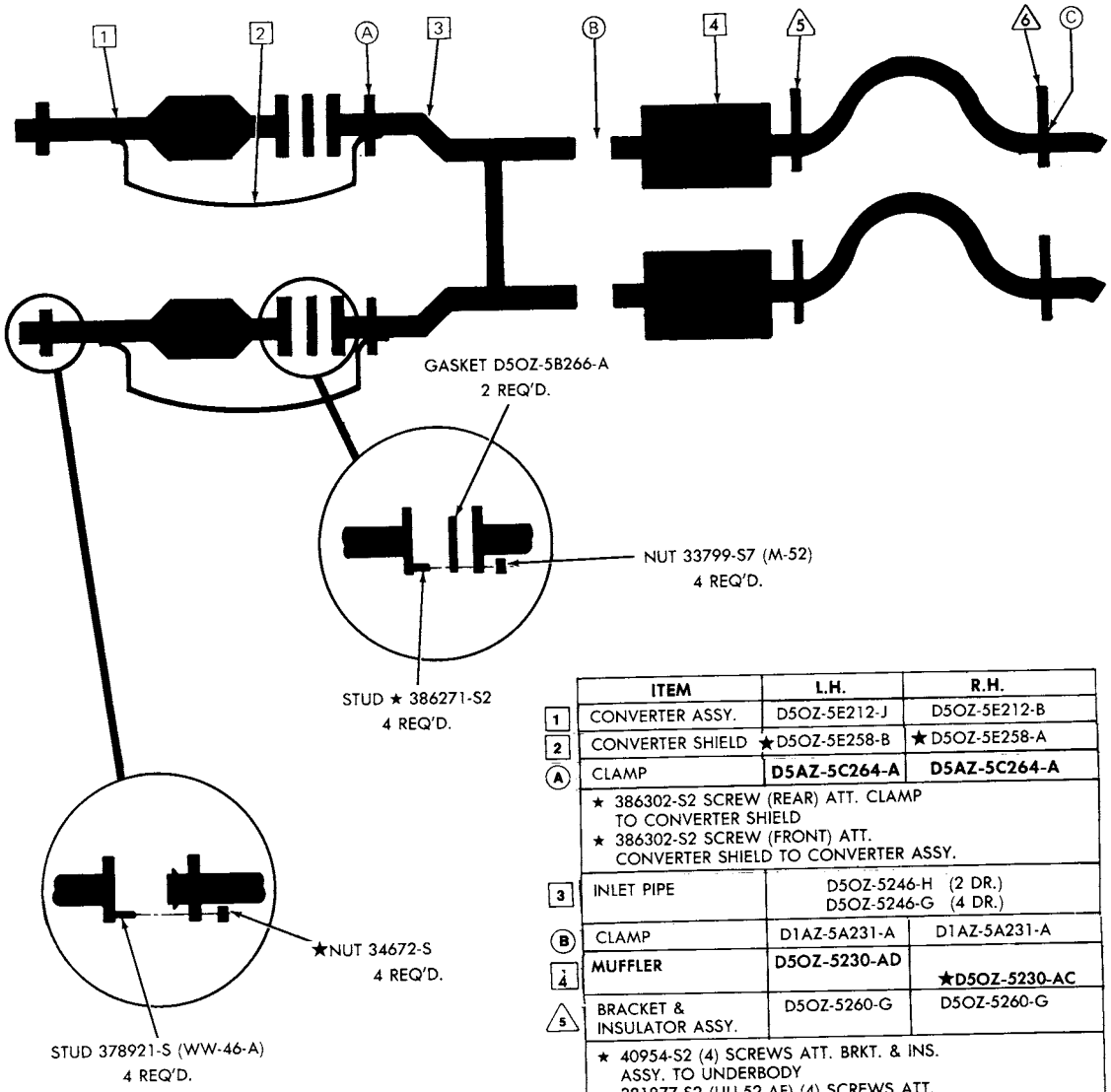

	ITEM	L.H.	R.H.
1	CONVERTER ASSY.	D5OZ-5E212-J	D5OZ-5E212-B
2	CONVERTER SHIELD	★D5OZ-5E258-B	★D5OZ-5E258-A
A	CLAMP	**D5AZ-5C264-A**	**D5AZ-5C264-A**
	★ 386302-S2 SCREW (REAR) ATT. CLAMP TO CONVERTER SHIELD ★ 386302-S2 SCREW (FRONT) ATT. CONVERTER SHIELD TO CONVERTER ASSY.		
3	INLET PIPE	D5OZ-5246-H (2 DR.) D5OZ-5246-G (4 DR.)	
B	CLAMP	D1AZ-5A231-A	D1AZ-5A231-A
4	**MUFFLER**	**D5OZ-5230-AD**	**★D5OZ-5230-AC**
5	BRACKET & INSULATOR ASSY.	D5OZ-5260-G	D5OZ-5260-G
	★ 40954-S2 (4) SCREWS ATT. BRKT. & INS. ASSY. TO UNDERBODY 381877-S2 (UU-52-AF) (4) SCREWS ATT. BRKT. & INS. ASSY. TO MUFFLER		
6	BRACKET & INSULATOR ASSY.	**D5OZ-5260-D**	**■D5OZ-5260-D** **▲D8OZ-5260-A**
	USE EXISTING REAR BUMPER BOLT FOR ATTACHMENT		
C	CLAMP	D1AZ-5A231-C	D1AZ-5A231-C

■ "BEFORE 1/20/75"
▲ "FROM 1/20/75"

1975 MONTEGO—8 CYL. 460-4/B STATION WAGON (ONE CONVERTER)

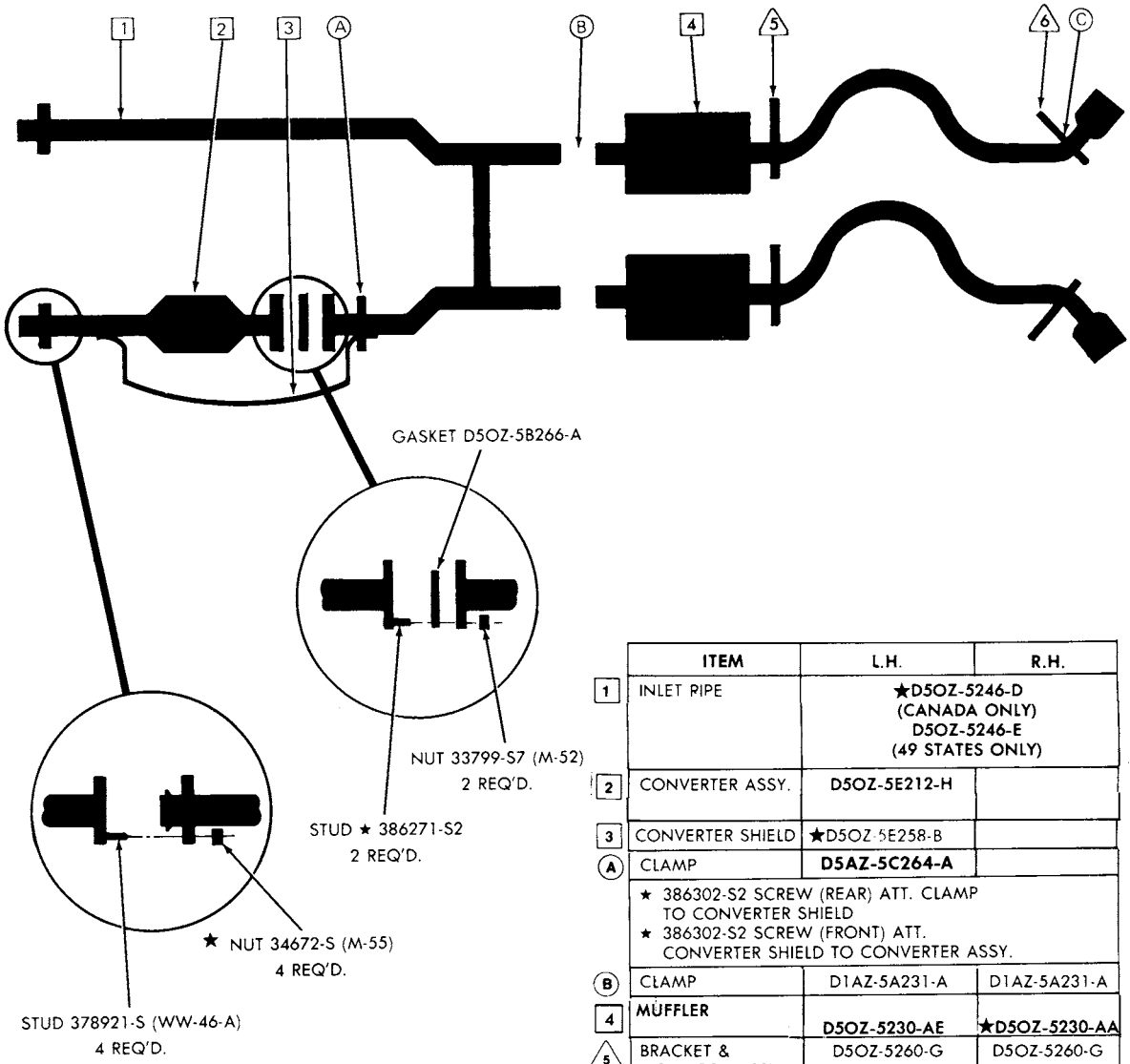

	ITEM	L.H.	R.H.
1	INLET PIPE	★D5OZ-5246-D (CANADA ONLY) D5OZ-5246-E (49 STATES ONLY)	
2	CONVERTER ASSY.	D5OZ-5E212-H	
3	CONVERTER SHIELD	★D5OZ-5E258-B	
A	CLAMP	D5AZ-5C264-A	
	★ 386302-S2 SCREW (REAR) ATT. CLAMP TO CONVERTER SHIELD ★ 386302-S2 SCREW (FRONT) ATT. CONVERTER SHIELD TO CONVERTER ASSY.		
B	CLAMP	D1AZ-5A231-A	D1AZ-5A231-A
4	MUFFLER	D5OZ-5230-AE	★D5OZ-5230-AA
5	BRACKET & INSULATOR ASSY.	D5OZ-5260-G	D5OZ-5260-G
	★ 40954-S2 (4) SCREWS ATT. BRKT. & INS. ASSY. TO UNDERBODY 381877-S2 (UU-52-AF) (4) SCREWS ATT. BRKT. & INS. ASSY. TO MUFFLER		
6	BRACKET & INSULATOR ASSY.	D5OZ-5260-E	D5OZ-5260-E
	★ 40954-S2 (2) SCREWS ATT. BRKT. & INS. ASSY. TO UNDERBODY		
C	CLAMP	D1AZ-5A231-C	D1AZ-5A231-C

ED-127

COPYRIGHT © 1986 — FORD MOTOR COMPANY — DEARBORN, MICHIGAN

1975 MONTEGO—8 CYL. 460-4/B STATION WAGON (TWO CONVERTER)

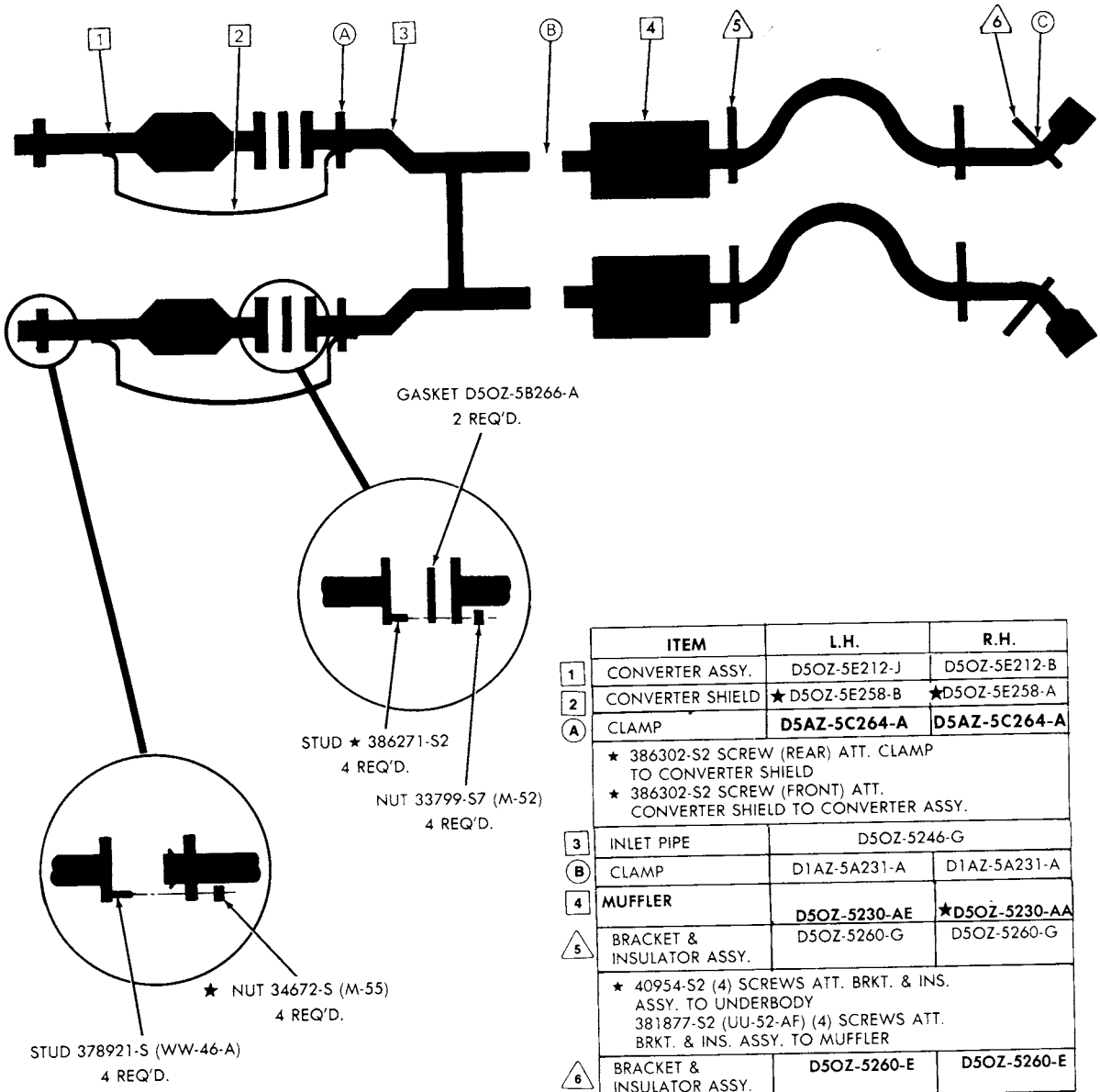

	ITEM	L.H.	R.H.
1	CONVERTER ASSY.	D5OZ-5E212-J	D5OZ-5E212-B
2	CONVERTER SHIELD	★ D5OZ-5E258-B	★D5OZ-5E258-A
A	CLAMP	**D5AZ-5C264-A**	**D5AZ-5C264-A**
	★ 386302-S2 SCREW (REAR) ATT. CLAMP TO CONVERTER SHIELD ★ 386302-S2 SCREW (FRONT) ATT. CONVERTER SHIELD TO CONVERTER ASSY.		
3	INLET PIPE	D5OZ-5246-G	
B	CLAMP	D1AZ-5A231-A	D1AZ-5A231-A
4	**MUFFLER**	**D5OZ-5230-AE**	**★D5OZ-5230-AA**
5	BRACKET & INSULATOR ASSY.	D5OZ-5260-G	D5OZ-5260-G
	★ 40954-S2 (4) SCREWS ATT. BRKT. & INS. ASSY. TO UNDERBODY 381877-S2 (UU-52-AF) (4) SCREWS ATT. BRKT. & INS. ASSY. TO MUFFLER		
6	BRACKET & INSULATOR ASSY.	**D5OZ-5260-E**	**D5OZ-5260-E**
	★ 40954-S2 (2) SCREWS ATT. BRKT. & INS. ASSY. TO UNDERBODY		
C	CLAMP	D1AZ-5A231-C	D1AZ-5A231-C

1975 LINCOLN—8 CYL. 460-4/B
SINGLE EXHAUST
(ONE CONVERTER)

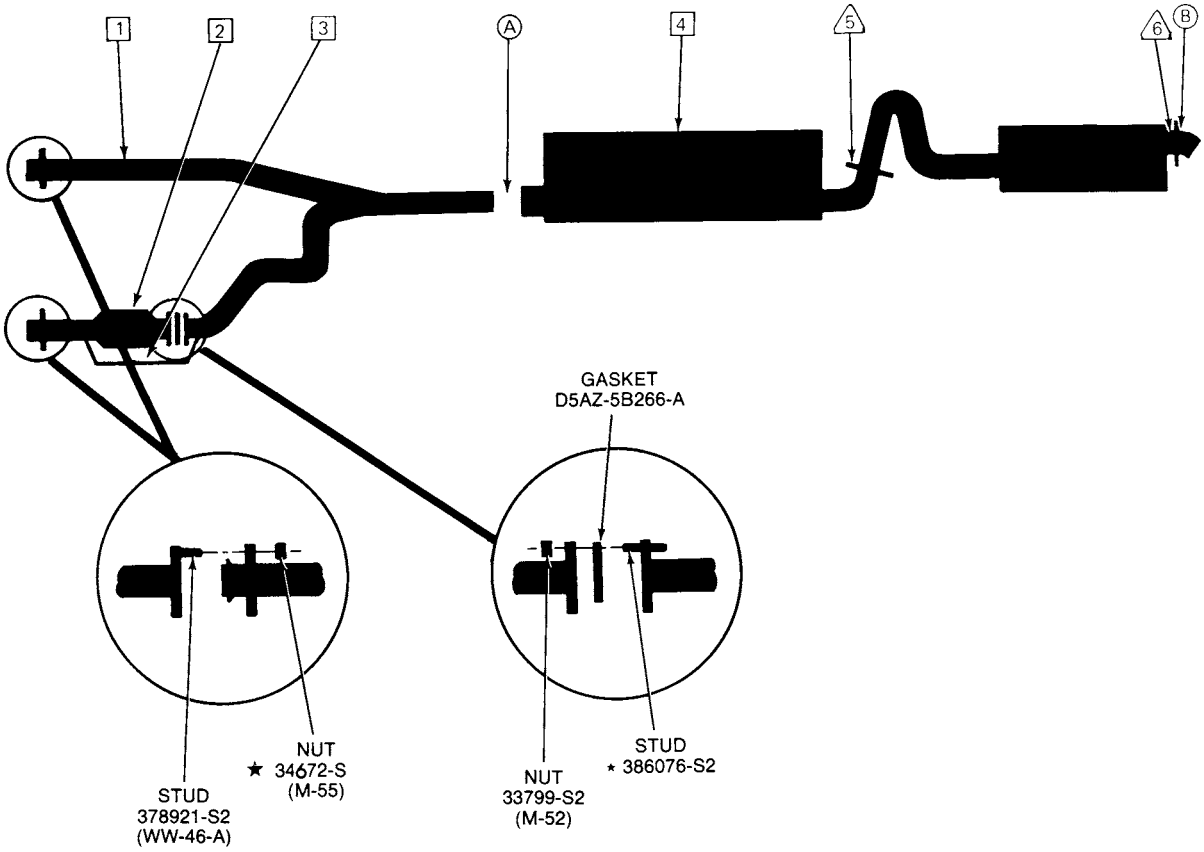

	ITEM	PART NO.
1	INLET PIPE	D5VY-5246-E
2	CONVERTER	♦ D5AZ-5E212-C ◊ D5AZ-5E212-G
3	CONVERTER SHIELD	D5VY-5E258-B
A	CLAMP	D1AZ-5A231-D
4	MUFFLER & RESONATOR	■D5VY-5230-D ▲D5VY-5230-H
5	BRACKET & INSULATOR ASSY.	D5VY-5260-F
6	BRACKET & INSULATOR ASSY.	■D5VY-5260-A ▲D5VY-5260-D
B	CLAMP	C1TT-5A231-D

♦ "BEFORE 4/1/75"
◊ "FROM 4/1/75"
■ "BEFORE 1/20/75"
▲ "FROM 1/20/75"

EJ-12

COPYRIGHT © 1986 — FORD MOTOR COMPANY — DEARBORN, MICHIGAN

1975 LINCOLN—8 CYL. 460-4/B
SINGLE EXHAUST
(TWO CONVERTER)

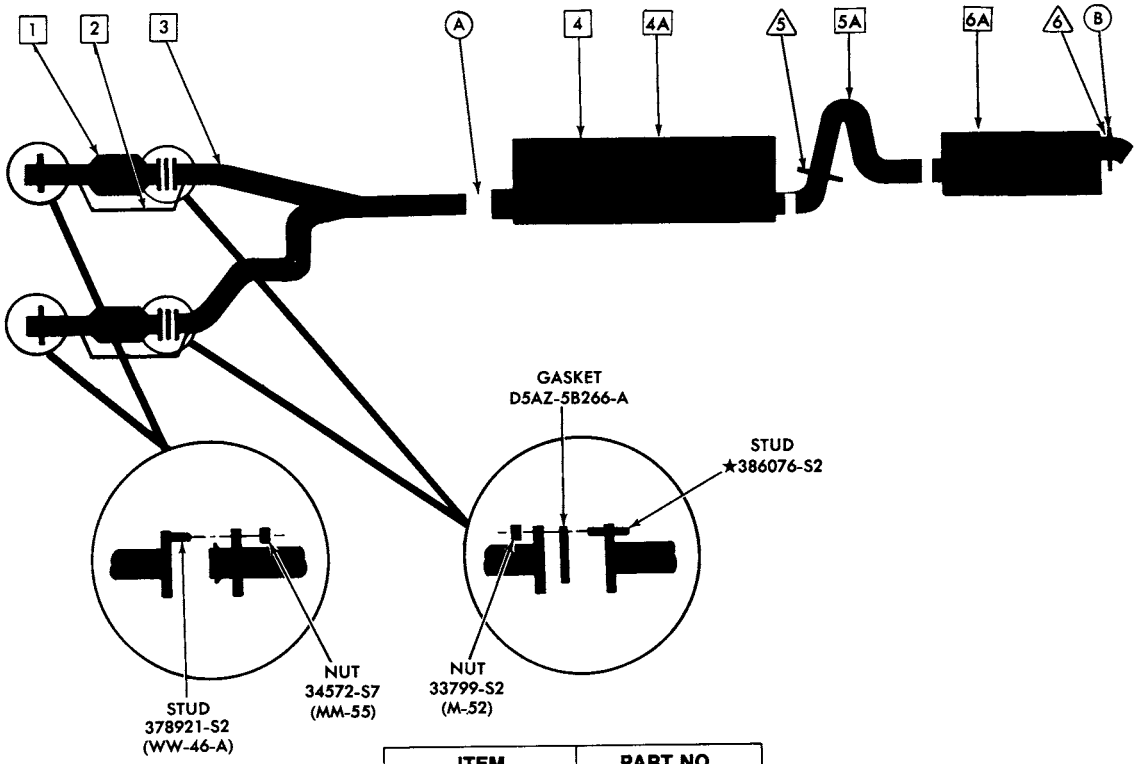

	ITEM	PART NO.
1	CONVERTER	D5AZ-5E212-A (R.H.) D5AZ-5E212-F (L.H.)
2	CONVERTER SHIELD	★D5VY-5E258-A (R.H.) ★D5VY-5E258-B (L.H.)
3	INLET PIPE	D5VY-5246-G
A	CLAMP	D1AZ-5A231-D
4	MUFFLER & RESONATOR	■D5VY-5230-D ▲D5VY-5230-H
4A	MUFFLER ASSY. (SERVICE)	D5VY-5230-J
5	BRACKET & INSULATOR ASSY.	D5VY-5260-F
5A	INTERMEDIATE PIPE (SERVICE)	D5VY-5A212-A
6A	RESONATOR (SERVICE)	★ ■ D5VY-5A289-H ▲ D5VY-5A289-J
6	BRACKET & INSULATOR ASSY.	■D5VY-5260-A ▲D5VY-5260-D
B	CLAMP	C1TT-5A231-D

■ "BEFORE 1/20/75"
▲ "FROM 1/20/75"

1975 LINCOLN—8 CYL. 460-4/B
SINGLE EXHAUST
(NON CONVERTER)

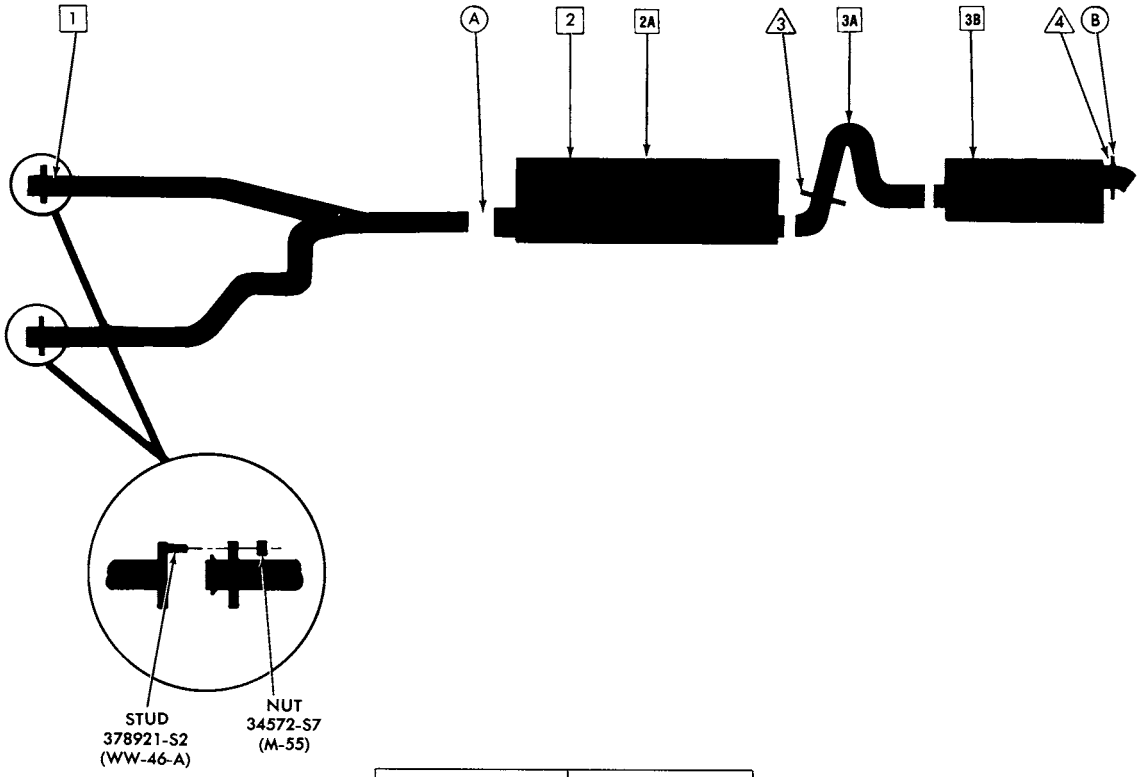

	ITEM	PART NO.
1	INLET PIPE	D5VY-5246-F
A	CLAMP	D1AZ-5A231-D
2	MUFFLER & RESONATOR	■D5VY-5230-D ▲D5VY-5230-H
2A	MUFFLER ASSY. (SERVICE)	D5VY-5230-J
3A	INTERMEDIATE PIPE (SERVICE)	D5VY-5A212-A
3B	RESONATOR (SERVICE)	★ ■ D5VY-5A289-H ▲ D5VY-5A289-J
3	BRACKET & INSULATOR ASSY.	D5VY-5260-F
4	BRACKET & INSULATOR ASSY.	■D5VY-5260-A ▲D5VY-5260-D
B	CLAMP	C1TT-5A231-D

■ "BEFORE 1/20/75"
▲ "FROM 1/20/75"

EJ-15

COPYRIGHT © 1986 — FORD MOTOR COMPANY — DEARBORN, MICHIGAN

1975 LINCOLN—8 CYL. 460-4/B
DUAL EXHAUST
(ONE CONVERTER)

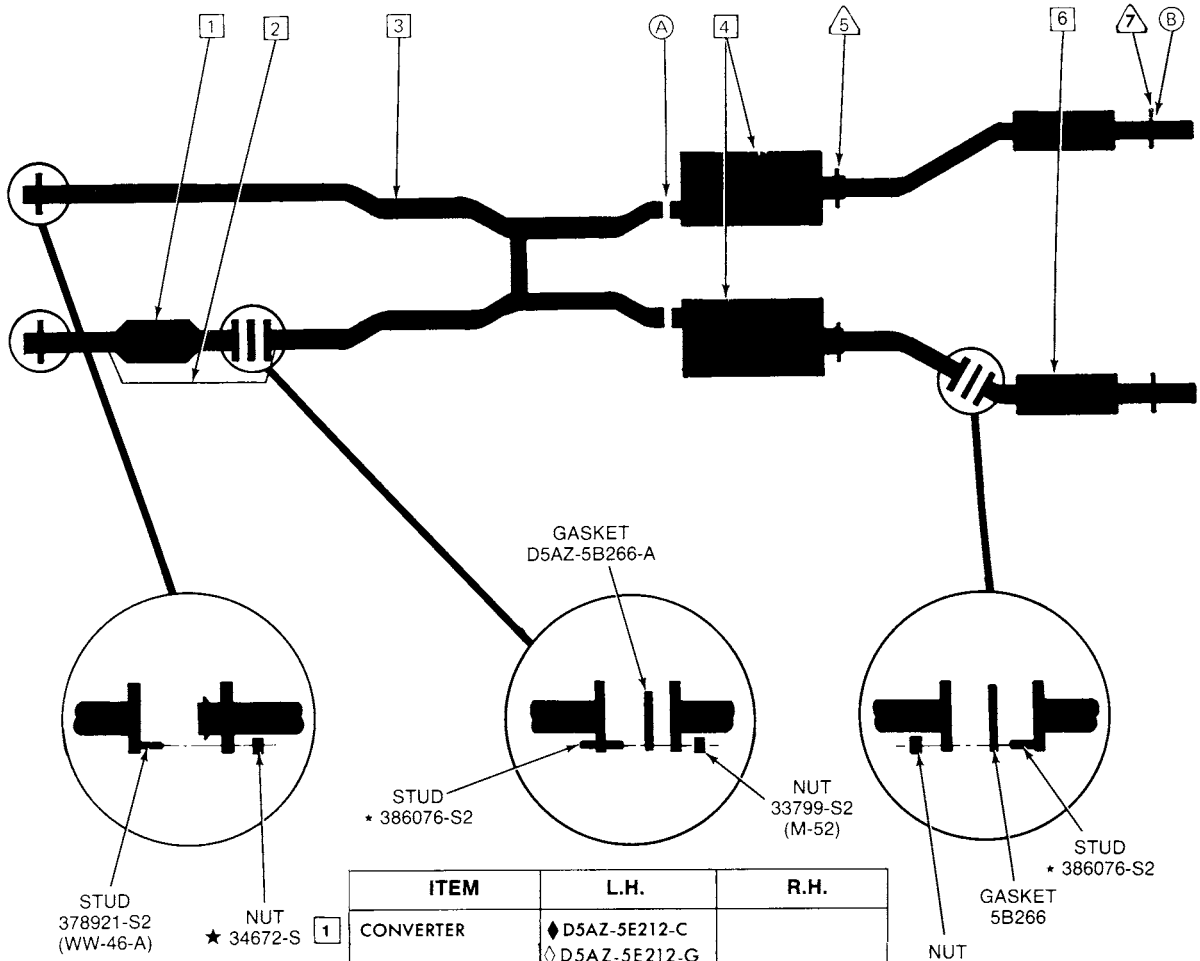

	ITEM	L.H.	R.H.
1	CONVERTER	♦ D5AZ-5E212-C ◊ D5AZ-5E212-G	
2	CONVERTER SHIELD	★D5VY-5E258-B	
3	INLET PIPE	D5VY-5246-B	
A	CLAMP	D1AZ-5A231-D	
4	MUFFLER	★ D5VY-5230-B	★D5VY-5230-C
5	BRACKET & INSULATOR ASSY.	D5VY-5260-F	
6	RESONATOR	D5VY-5A289-A	PART OF 5230
7	BRACKET & INSULATOR ASSY.	★■D5VY-5260-B ★▲D5VY-5260-E	■D5VY-5260-A ▲D5VY-5260-D
B	CLAMP	C1TT-5A231-D	

♦ "BEFORE 4/1/75"
◊ "FROM 4/1/75"
■ "BEFORE 1/20/75"
▲ "FROM 1/20/75"

EJ-13

1975 LINCOLN—8 CYL. 460-4/B
DUAL EXHAUST
(TWO CONVERTER)

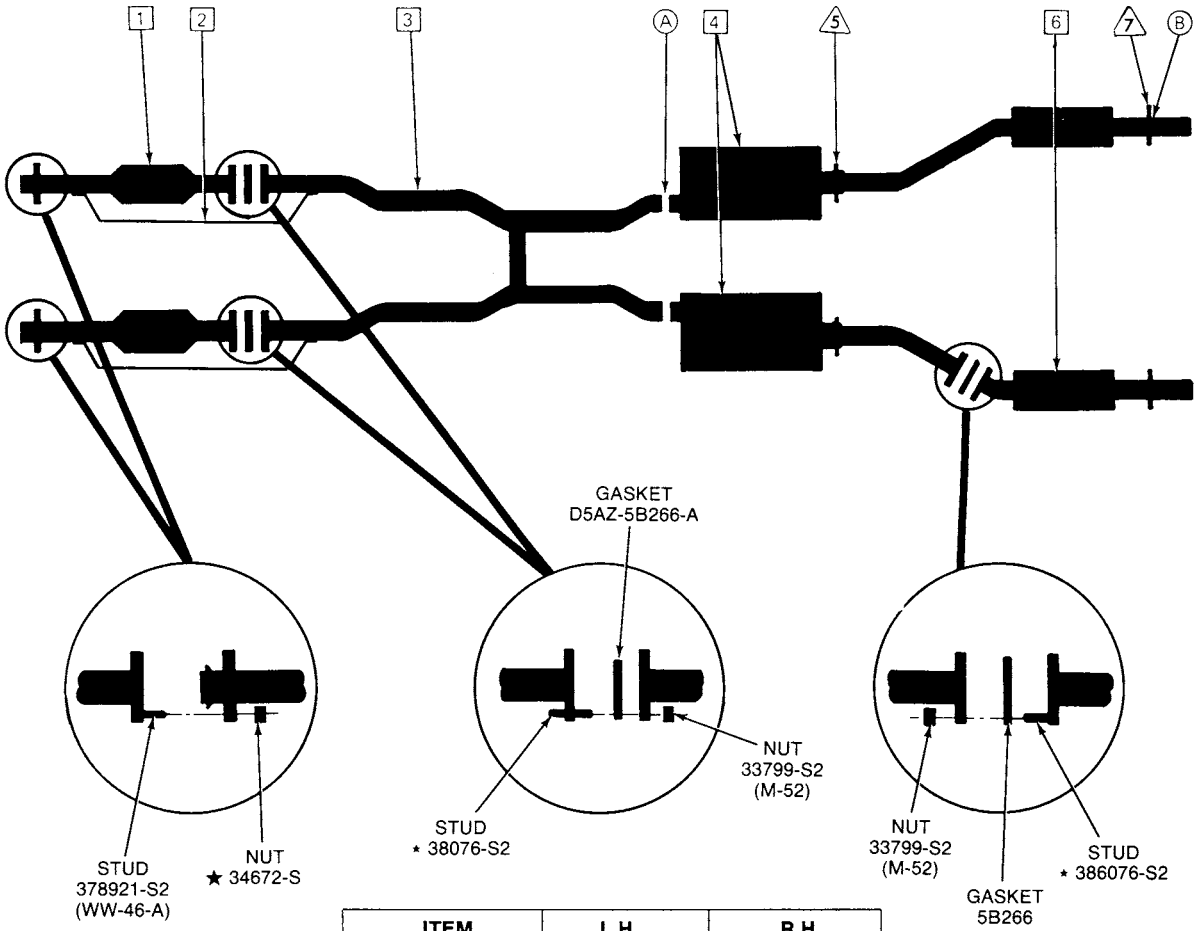

	ITEM	L.H.	R.H.
1	CONVERTER	D5AZ-5E212-F	D5AZ-5E212-A
2	CONVERTER SHIELD	★D5VY-5E258-B	★D5VY-5E258-A
3	INLET PIPE	D5VY-5246-A	
A	CLAMP	D1AZ-5A231-D	
4	MUFFLER	★ D5VY-5230-B	★ D5VY-5230-C
	BRACKET & INSULATOR ASSY.	D5VY-5260-F	
6	RESONATOR	D5VY-5A289-A	PART OF 5230
7	BRACKET & INSULATOR ASSY.	★■D5VY-5260-B ★▲D5VY-5260-E	■D5VY-5260-A ▲D5VY-5260-D
B	CLAMP	C1TT-5A231-D	

■ "BEFORE 1/20/75"
▲ "FROM 1/20/75"

EJ-14

COPYRIGHT © 1986 — FORD MOTOR COMPANY — DEARBORN, MICHIGAN

1975 COUGAR—8 CYL. 351-2/B & 400-2/B SEDAN (ONE CONVERTER)

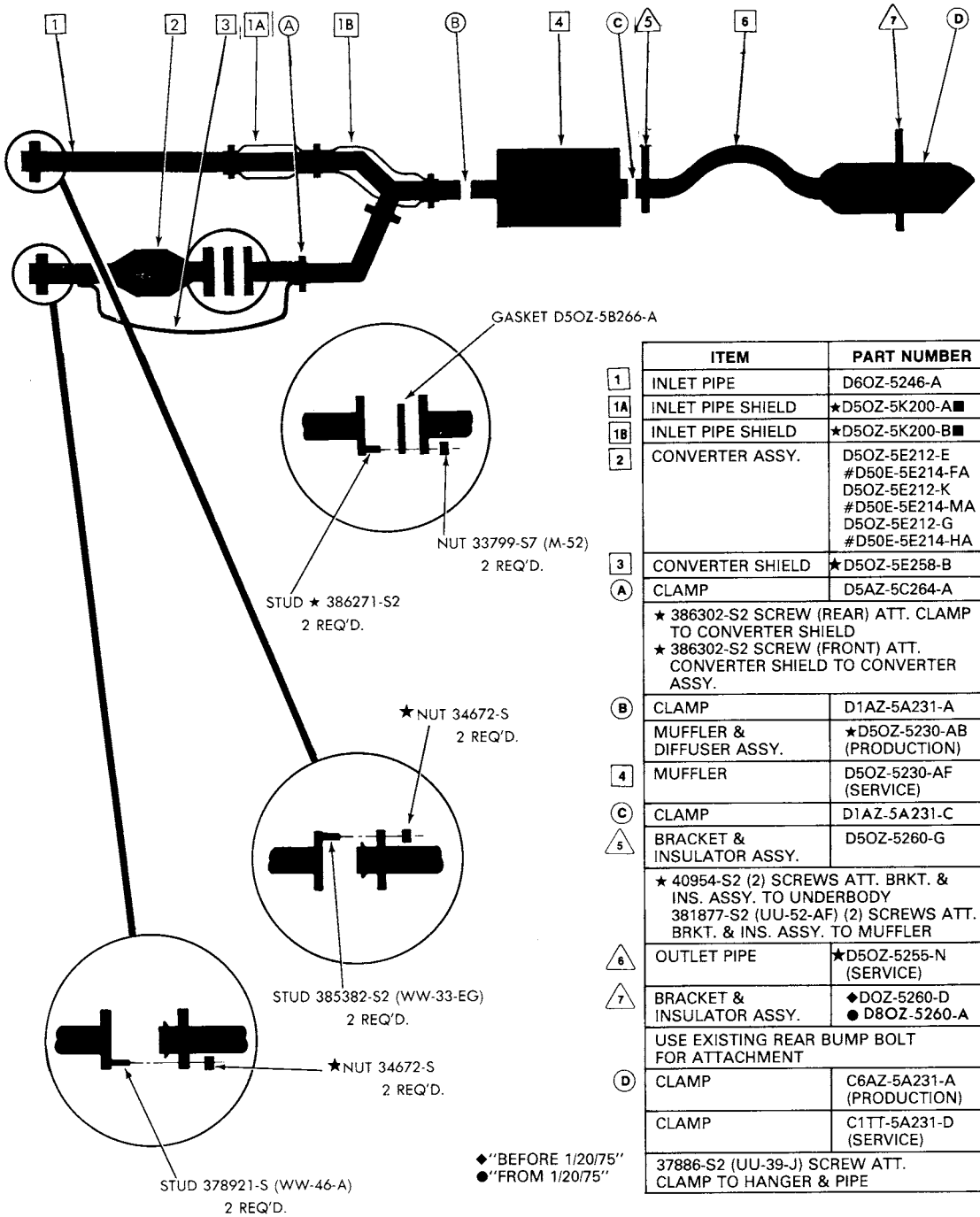

	ITEM	PART NUMBER
1	INLET PIPE	D6OZ-5246-A
1A	INLET PIPE SHIELD	★D5OZ-5K200-A■
1B	INLET PIPE SHIELD	★D5OZ-5K200-B■
2	CONVERTER ASSY.	D5OZ-5E212-E #D50E-5E214-FA D5OZ-5E212-K #D50E-5E214-MA D5OZ-5E212-G #D50E-5E214-HA
3	CONVERTER SHIELD	★D5OZ-5E258-B
A	CLAMP	D5AZ-5C264-A
	★ 386302-S2 SCREW (REAR) ATT. CLAMP TO CONVERTER SHIELD ★ 386302-S2 SCREW (FRONT) ATT. CONVERTER SHIELD TO CONVERTER ASSY.	
B	CLAMP	D1AZ-5A231-A
	MUFFLER & DIFFUSER ASSY.	★D5OZ-5230-AB (PRODUCTION)
4	MUFFLER	D5OZ-5230-AF (SERVICE)
C	CLAMP	D1AZ-5A231-C
5	BRACKET & INSULATOR ASSY.	D5OZ-5260-G
	★ 40954-S2 (2) SCREWS ATT. BRKT. & INS. ASSY. TO UNDERBODY 381877-S2 (UU-52-AF) (2) SCREWS ATT. BRKT. & INS. ASSY. TO MUFFLER	
6	OUTLET PIPE	★D5OZ-5255-N (SERVICE)
7	BRACKET & INSULATOR ASSY.	◆DOZ-5260-D ● D8OZ-5260-A
	USE EXISTING REAR BUMP BOLT FOR ATTACHMENT	
D	CLAMP	C6AZ-5A231-A (PRODUCTION)
	CLAMP	C1TT-5A231-D (SERVICE)
	37886-S2 (UU-39-J) SCREW ATT. CLAMP TO HANGER & PIPE	

◆"BEFORE 1/20/75"
●"FROM 1/20/75"

EB-30

■ REQUIRES (2) 2¼" CLAMP D5AZ-5A231-B

COPYRIGHT © 1986 — FORD MOTOR COMPANY — DEARBORN, MICHIGAN

1975 COUGAR—8 CYL. 351M-2/B & 400-2/B SEDAN (TWO CONVERTER)

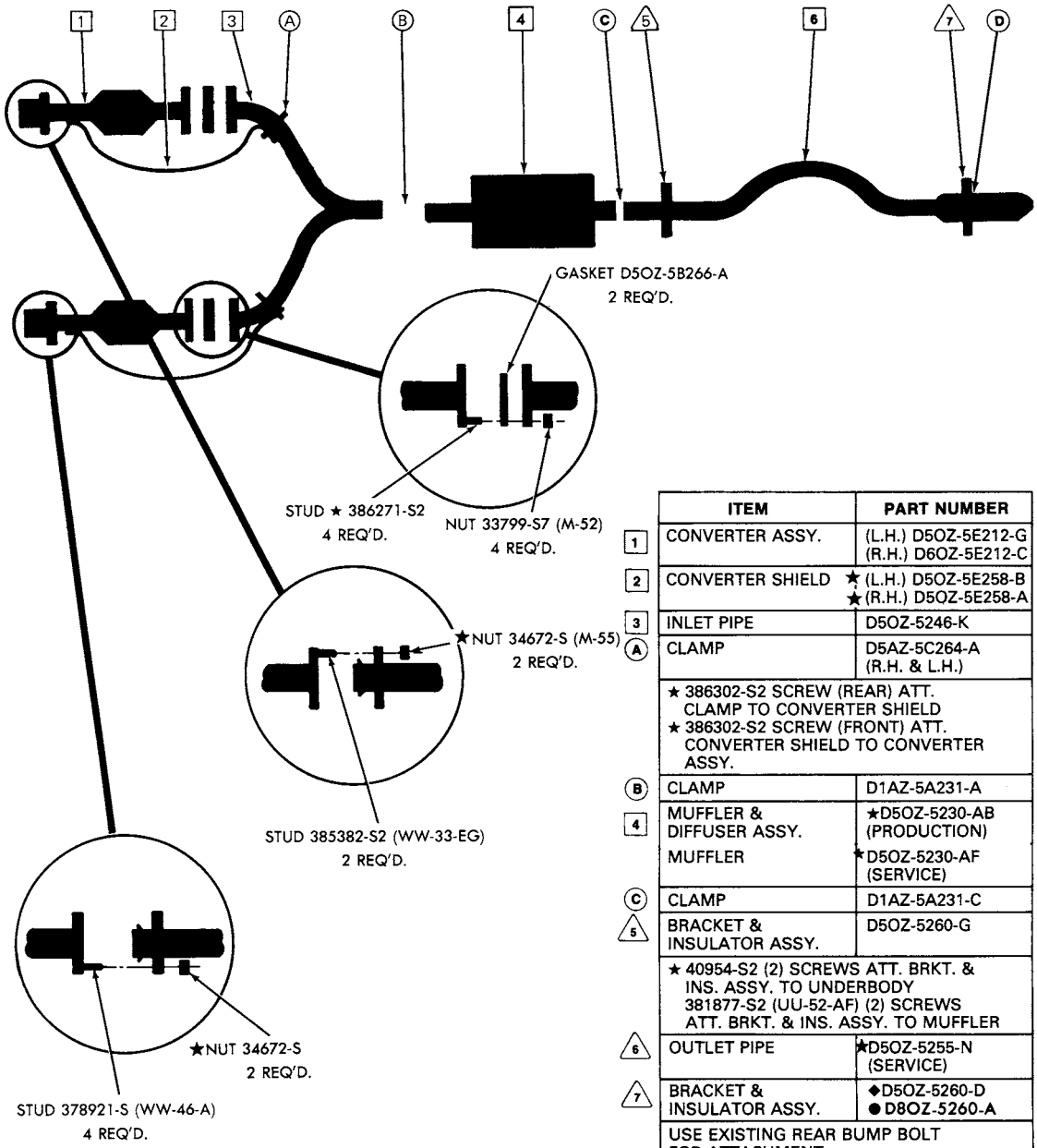

	ITEM	PART NUMBER
1	CONVERTER ASSY.	(L.H.) D5OZ-5E212-G (R.H.) D6OZ-5E212-C
2	CONVERTER SHIELD	★(L.H.) D5OZ-5E258-B ★(R.H.) D5OZ-5E258-A
3	INLET PIPE	D5OZ-5246-K
A	CLAMP	D5AZ-5C264-A (R.H. & L.H.)
	★ 386302-S2 SCREW (REAR) ATT. CLAMP TO CONVERTER SHIELD ★ 386302-S2 SCREW (FRONT) ATT. CONVERTER SHIELD TO CONVERTER ASSY.	
B	CLAMP	D1AZ-5A231-A
4	MUFFLER & DIFFUSER ASSY.	★D5OZ-5230-AB (PRODUCTION)
	MUFFLER	★D5OZ-5230-AF (SERVICE)
C	CLAMP	D1AZ-5A231-C
5	BRACKET & INSULATOR ASSY.	D5OZ-5260-G
	★ 40954-S2 (2) SCREWS ATT. BRKT. & INS. ASSY. TO UNDERBODY 381877-S2 (UU-52-AF) (2) SCREWS ATT. BRKT. & INS. ASSY. TO MUFFLER	
6	OUTLET PIPE	★D5OZ-5255-N (SERVICE)
7	BRACKET & INSULATOR ASSY.	◆D5OZ-5260-D ● D8OZ-5260-A
	USE EXISTING REAR BUMP BOLT FOR ATTACHMENT	
D	CLAMP	C6AZ-5A231-A (PRODUCTION)
	CLAMP	C1TT-5A231-D (SERVICE)
	378836-S2 (UU-39-J) SCREW ATT. CLAMP TO HANGER & PIPE	

◆"BEFORE 1/20/75"
●"FROM 1/20/75"

EB-31

1975 COUGAR—8 CYL. 351M-2/B & 400-2/B SEDAN (NON CONVERTER)

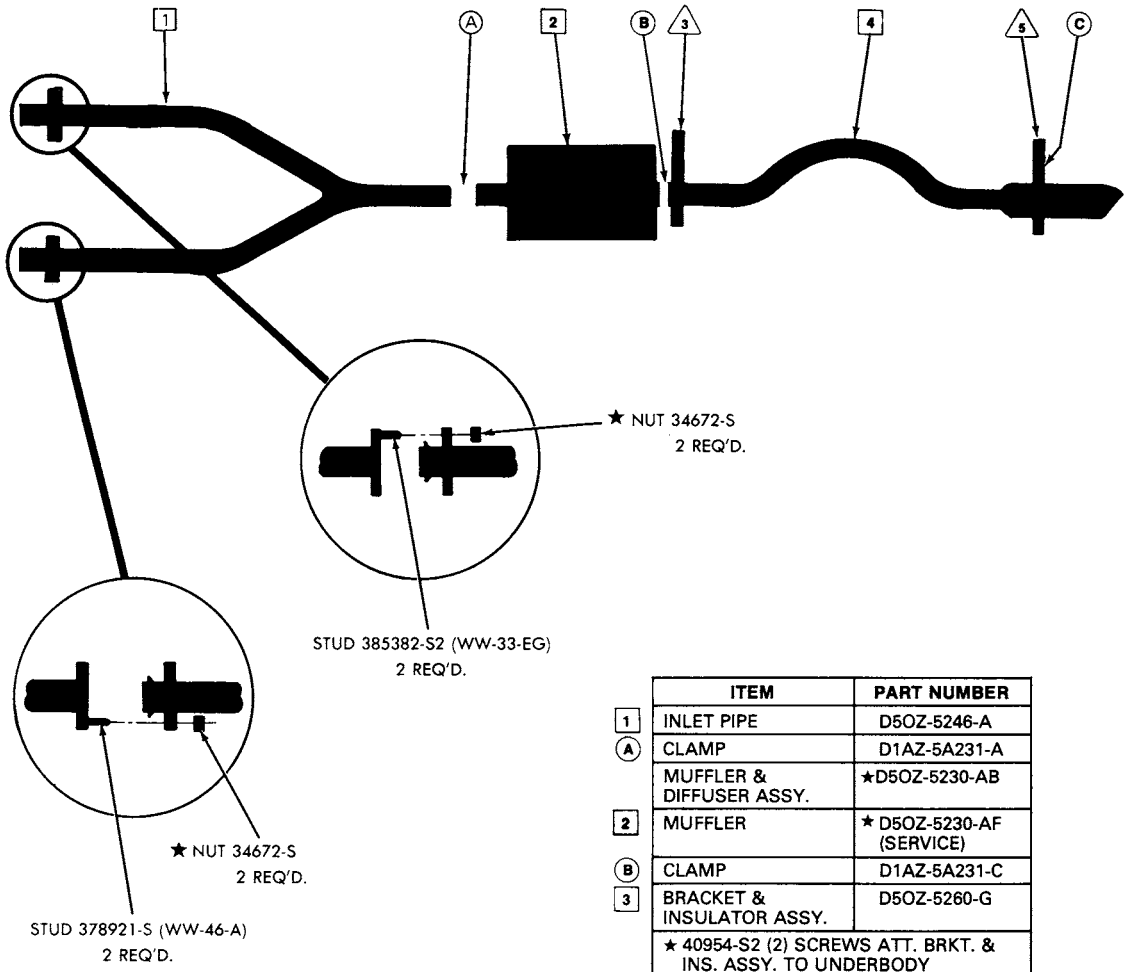

	ITEM	PART NUMBER
1	INLET PIPE	D5OZ-5246-A
A	CLAMP	D1AZ-5A231-A
	MUFFLER & DIFFUSER ASSY.	★D5OZ-5230-AB
2	MUFFLER	★ D5OZ-5230-AF (SERVICE)
B	CLAMP	D1AZ-5A231-C
3	BRACKET & INSULATOR ASSY.	D5OZ-5260-G
	★ 40954-S2 (2) SCREWS ATT. BRKT. & INS. ASSY. TO UNDERBODY 381877-S2 (UU-52-AF) (2) SCREWS ATT. BRKT. & INS. ASSY. TO MUFFLER	
4	OUTLET PIPE	★D5OZ-5255-N (SERVICE)
5	BRACKET & INSULATOR ASSY.	◆D5OZ-5260-D ● D8OZ-5260-A
	USE EXISTING REAR BUMPER BOLT FOR ATTACHMENT	
C	CLAMP	C6AZ-5A231-A (PRODUCTION)
C	CLAMP	C1TT-5A231-D (SERVICE)
	378836-S2 (UU-39-J) SCREW ATT. CLAMP TO HANGER & PIPE	

■ "BEFORE 1/20/75"
▲ "FROM 1/20/75"

◆"BEFORE 1/20/75"
●"FROM 1/20/75"

EB-34

COPYRIGHT © 1986 — FORD MOTOR COMPANY — DEARBORN, MICHIGAN

19[illegible] COUGAR—8 CYL. 460-4/B SEDAN
(ONE CONVERTER)

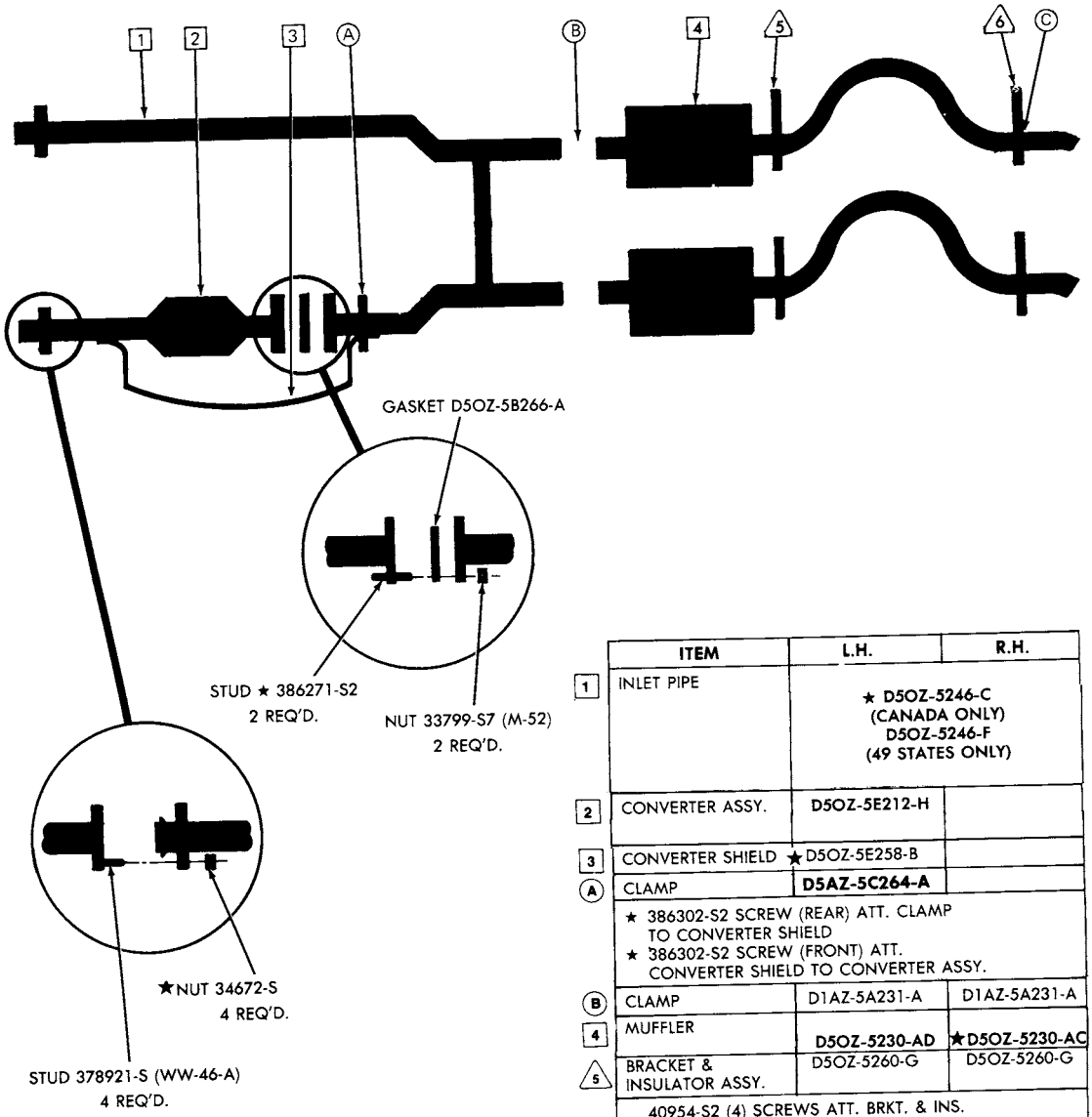

	ITEM	L.H.	R.H.
1	INLET PIPE	★ D5OZ-5246-C (CANADA ONLY) D5OZ-5246-F (49 STATES ONLY)	
2	CONVERTER ASSY.	D5OZ-5E212-H	
3	CONVERTER SHIELD	★D5OZ-5E258-B	
A	CLAMP	D5AZ-5C264-A	
	★ 386302-S2 SCREW (REAR) ATT. CLAMP TO CONVERTER SHIELD ★ 386302-S2 SCREW (FRONT) ATT. CONVERTER SHIELD TO CONVERTER ASSY.		
B	CLAMP	D1AZ-5A231-A	D1AZ-5A231-A
4	MUFFLER	D5OZ-5230-AD	★D5OZ-5230-AC
5	BRACKET & INSULATOR ASSY.	D5OZ-5260-G	D5OZ-5260-G
	40954-S2 (4) SCREWS ATT. BRKT. & INS. ASSY. TO UNDERBODY 381877-S2 (UU-52-AF) (4) SCREWS ATT. BRKT. & INS. ASSY. TO MUFFLER		
6	BRACKET & INSULATOR ASSY.	D5OZ-5260-D	■D5OZ-5260-D ▲D8OZ-5260-A
	USE EXISTING REAR BUMPER BOLT FOR ATTACHMENT		
C	CLAMP	D1AZ-5A231-C	D1AZ-5A231-C

■ "BEFORE 1/20/75"
▲ "FROM 1/20/75"

1975 COUGAR—8 CYL. 460-4/B SEDAN (TWO CONVERTER)

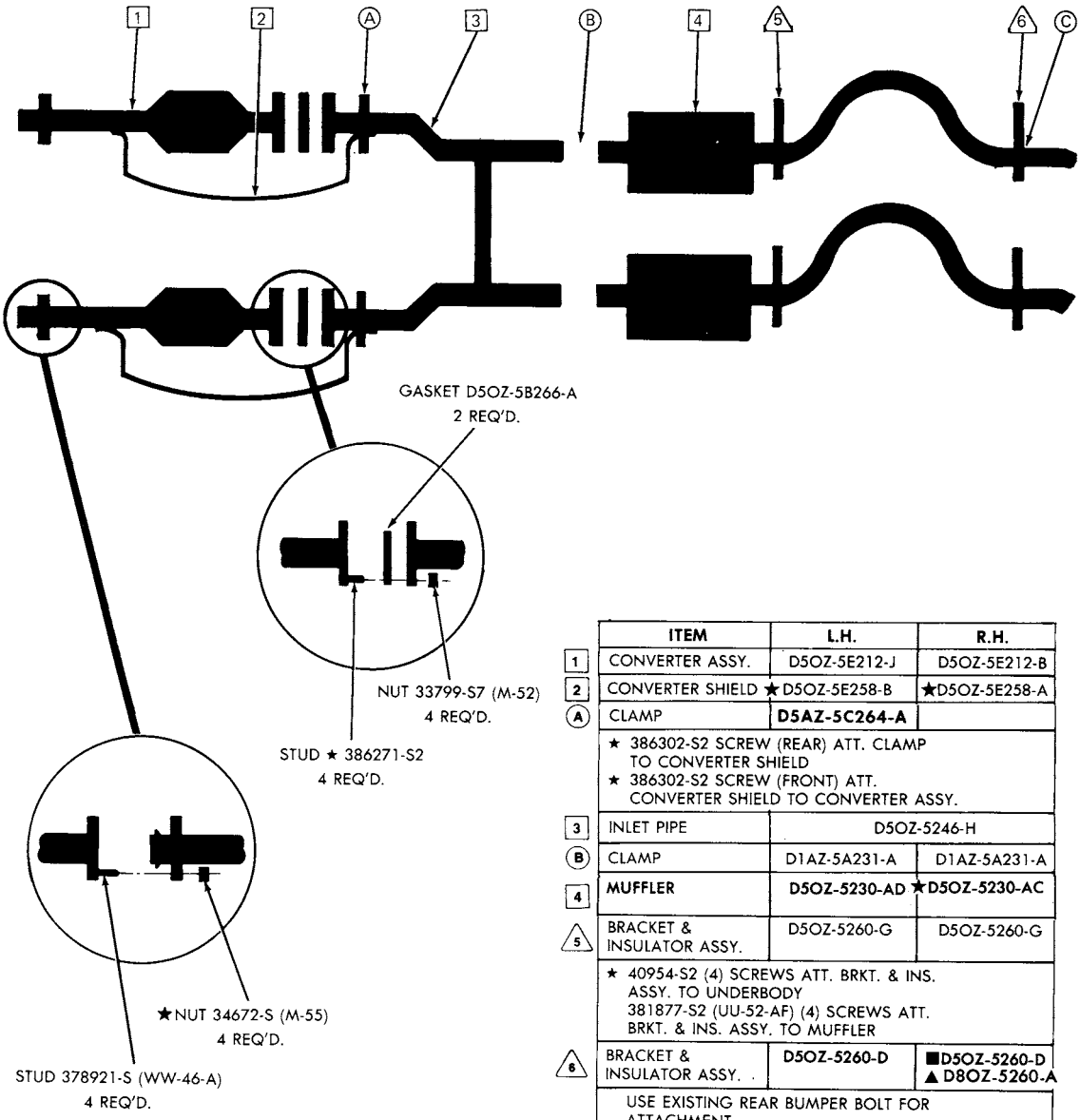

	ITEM	L.H.	R.H.
1	CONVERTER ASSY.	D5OZ-5E212-J	D5OZ-5E212-B
2	CONVERTER SHIELD	★D5OZ-5E258-B	★D5OZ-5E258-A
A	CLAMP	**D5AZ-5C264-A**	
	★ 386302-S2 SCREW (REAR) ATT. CLAMP TO CONVERTER SHIELD ★ 386302-S2 SCREW (FRONT) ATT. CONVERTER SHIELD TO CONVERTER ASSY.		
3	INLET PIPE	D5OZ-5246-H	
B	CLAMP	D1AZ-5A231-A	D1AZ-5A231-A
4	**MUFFLER**	**D5OZ-5230-AD**	**★D5OZ-5230-AC**
5	BRACKET & INSULATOR ASSY.	D5OZ-5260-G	D5OZ-5260-G
	★ 40954-S2 (4) SCREWS ATT. BRKT. & INS. ASSY. TO UNDERBODY 381877-S2 (UU-52-AF) (4) SCREWS ATT. BRKT. & INS. ASSY. TO MUFFLER		
6	BRACKET & INSULATOR ASSY.	**D5OZ-5260-D**	**■D5OZ-5260-D** **▲ D8OZ-5260-A**
	USE EXISTING REAR BUMPER BOLT FOR ATTACHMENT		
C	CLAMP	D1AZ-5A231-C	D1AZ-5A231-C

EB-33

■ "BEFORE 1/20/75"
▲ "FROM 1/20/75"

COPYRIGHT © 1986 — FORD MOTOR COMPANY — DEARBORN, MICHIGAN

1975 MONARCH — 6 CYL. 200-1/B & 250-1/B SEDAN (ALL — WITH CONVERTER)

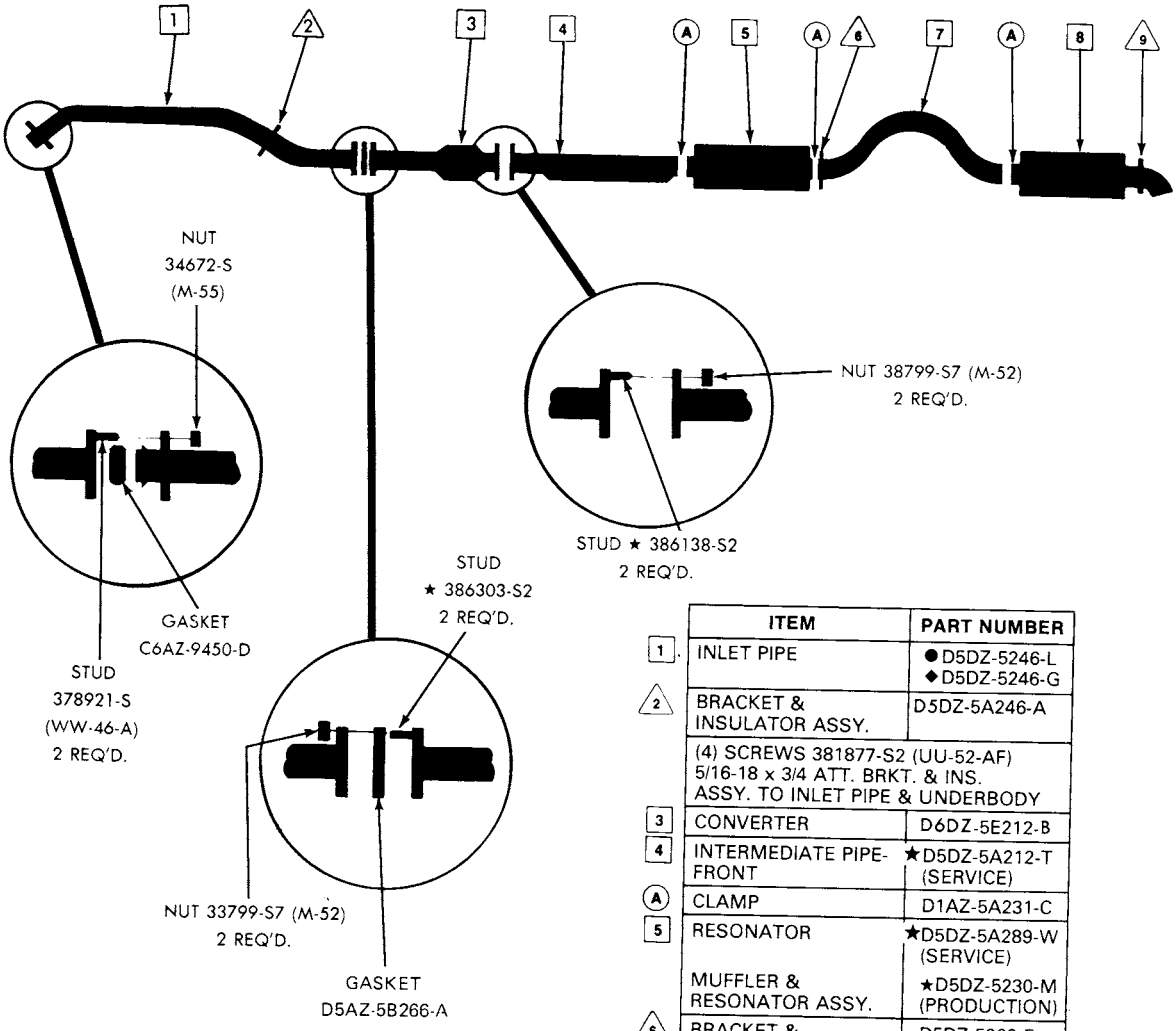

	ITEM	PART NUMBER
1	INLET PIPE	● D5DZ-5246-L ◆ D5DZ-5246-G
2	BRACKET & INSULATOR ASSY.	D5DZ-5A246-A
	(4) SCREWS 381877-S2 (UU-52-AF) 5/16-18 x 3/4 ATT. BRKT. & INS. ASSY. TO INLET PIPE & UNDERBODY	
3	CONVERTER	D6DZ-5E212-B
4	INTERMEDIATE PIPE-FRONT	★D5DZ-5A212-T (SERVICE)
A	CLAMP	D1AZ-5A231-C
5	RESONATOR	★D5DZ-5A289-W (SERVICE)
	MUFFLER & RESONATOR ASSY.	★D5DZ-5230-M (PRODUCTION)
6	BRACKET & INSULATOR ASSY.	D5DZ-5260-F
7	INTERMEDIATE PIPE-REAR	★D5DZ-5A212-V (SERVICE)
	(2) SCREWS 40967-S2 USED WITH PLATE D0DA-5299-A ATT. BRKT. & INS. ASSY. TO BODY PINION BUMPER. (2) SCREWS 381877-S2 (UU-52-AF) 5/16-18 x 3/4 ATT. BRKT. & INS. ASSY. TO RESONATOR.	
8	MUFFLER	★D5DZ-5230-AN (SERVICE)
9	BRACKET & INSULATOR ASSY.	D5DZ-5260-C
	(4) SCREWS 381877-S2 (UU-52-AF) 5/16-18 x 3/4 ATT. BRKT. & INS. ASSY. TO MUFFLER & UNDERBODY.	

EV-1

●200 ENG.
◆250 ENG.

COPYRIGHT © 1986 — FORD MOTOR COMPANY — DEARBORN, MICHIGAN

1975 MONARCH — 6 CYL. 200-1/B & 250-1/B SEDAN (ALL — W/O CONVERTER)

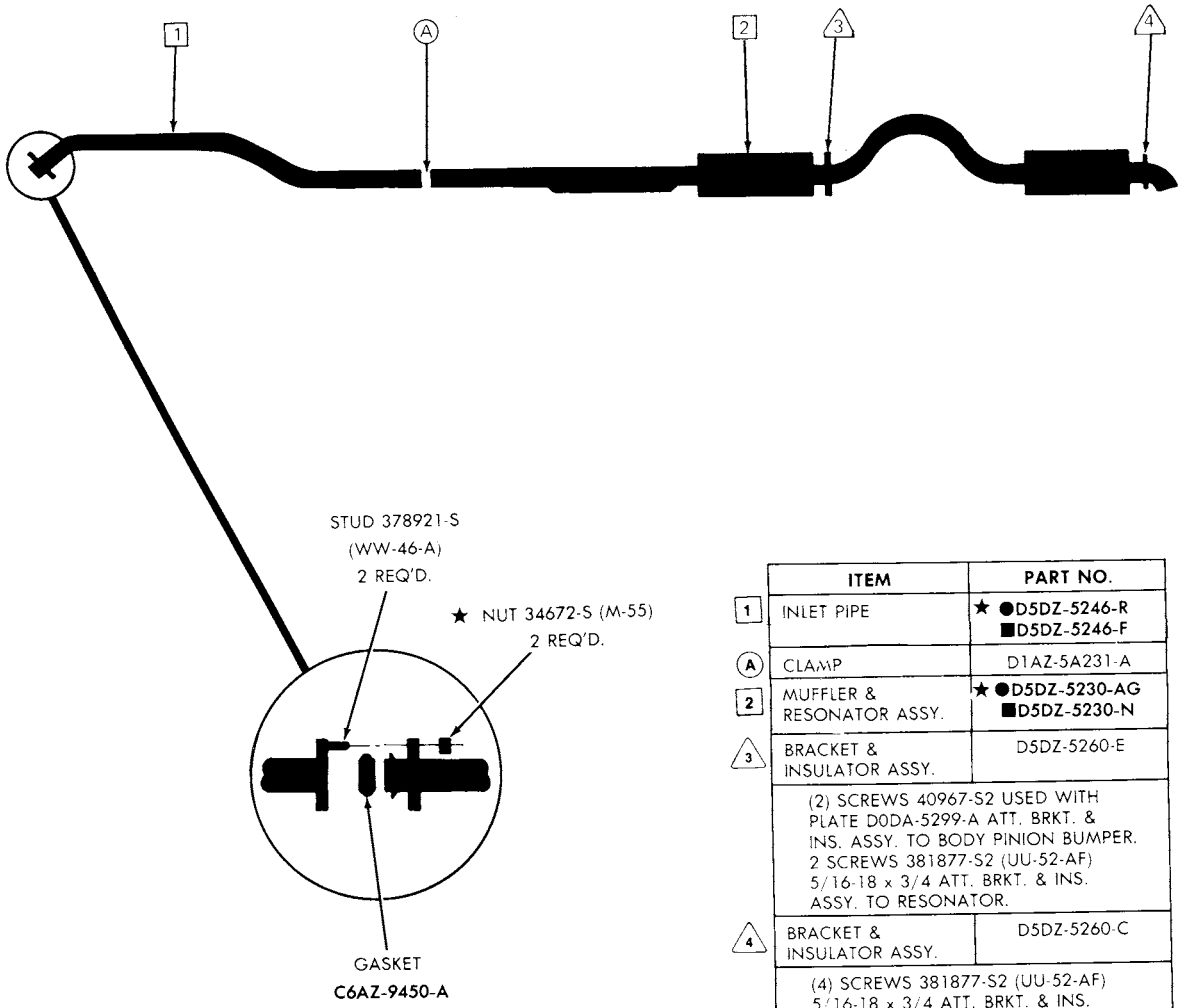

	ITEM	PART NO.
1	INLET PIPE	★ ●D5DZ-5246-R ■D5DZ-5246-F
A	CLAMP	D1AZ-5A231-A
2	MUFFLER & RESONATOR ASSY.	★ ●D5DZ-5230-AG ■D5DZ-5230-N
3	BRACKET & INSULATOR ASSY.	D5DZ-5260-E
	(2) SCREWS 40967-S2 USED WITH PLATE D0DA-5299-A ATT. BRKT. & INS. ASSY. TO BODY PINION BUMPER. 2 SCREWS 381877-S2 (UU-52-AF) 5/16-18 x 3/4 ATT. BRKT. & INS. ASSY. TO RESONATOR.	
4	BRACKET & INSULATOR ASSY.	D5DZ-5260-C
	(4) SCREWS 381877-S2 (UU-52-AF) 5/16-18 x 3/4 ATT. BRKT. & INS. ASSY. TO MUFFLER & UNDERBODY.	

● 200 ENG.
■ 250 ENG.

1975 MONARCH — 8 CYL. 302-2/B SEDAN
(ALL — WITH CONVERTER)

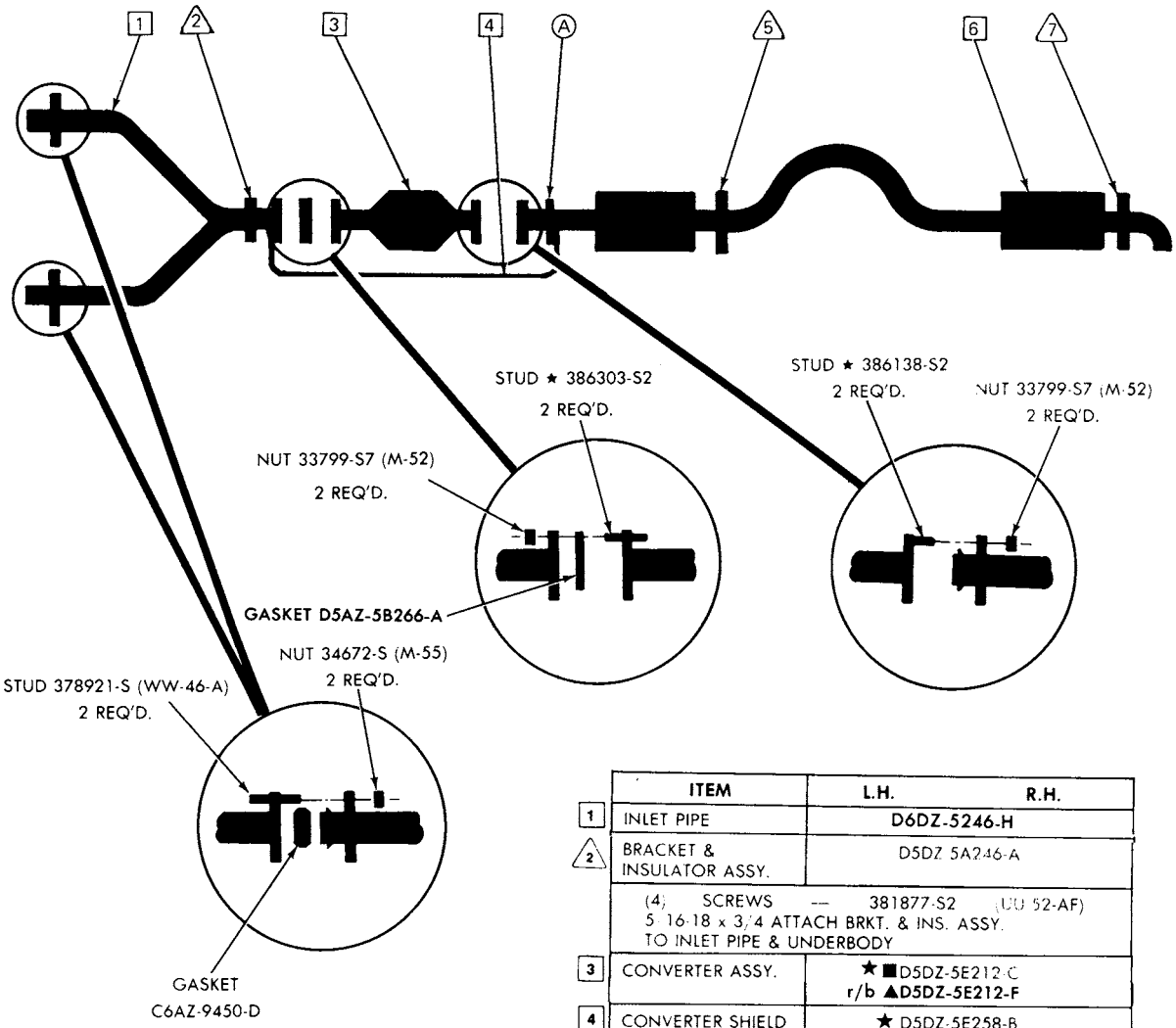

	ITEM	L.H. R.H.
1	INLET PIPE	D6DZ-5246-H
2	BRACKET & INSULATOR ASSY.	D5DZ-5A246-A
	(4) SCREWS — 381877-S2 (UU-52-AF) 5/16-18 x 3/4 ATTACH BRKT. & INS. ASSY. TO INLET PIPE & UNDERBODY	
3	CONVERTER ASSY.	★■D5DZ-5E212-C r/b ▲D5DZ-5E212-F
4	CONVERTER SHIELD	★ D5DZ-5E258-B
A	CLAMP	★D5DZ-5C264-B
	SCREW ★ 386302-S2 ATTACH CLAMP TO CONVERTER SHIELD & RESONATOR ASSY.	
5	BRACKET & INSULATOR ASSY.	D5DZ-5260-F
	(2) SCREWS ★ 40967-S2 — USED WITH PLATE D0DZ-5299-A ATT. BRKT. & INS. ASSY. TO BODY PINION BUMPER. (2) SCREWS 381877-S2 (UU-52-AF) 5/16-18 x 3/4 ATT. BRKT. & INS. ASSY. TO RESONATOR	
6	MUFFLER & RESONATOR ASSY.	D5DZ-5230-W
7	BRACKET & INSULATOR ASSY.	D5DZ-5260-C
	4 SCREWS 381877-S2 (UU-52-AF) 5/16-18 x 3/4 ATT. BRKT. & INS. ASSY. TO MUFFLER & UNDERBODY	

■"BEFORE 6/2/75"
▲"FROM 6/2/75"

EV-3

COPYRIGHT © 1986 — FORD MOTOR COMPANY — DEARBORN, MICHIGAN

1973/79 LINCOLN-MERCURY CARS

1975 MONARCH — 8 CYL. 302-2/B SEDAN (ALL — W/O CONVERTER)

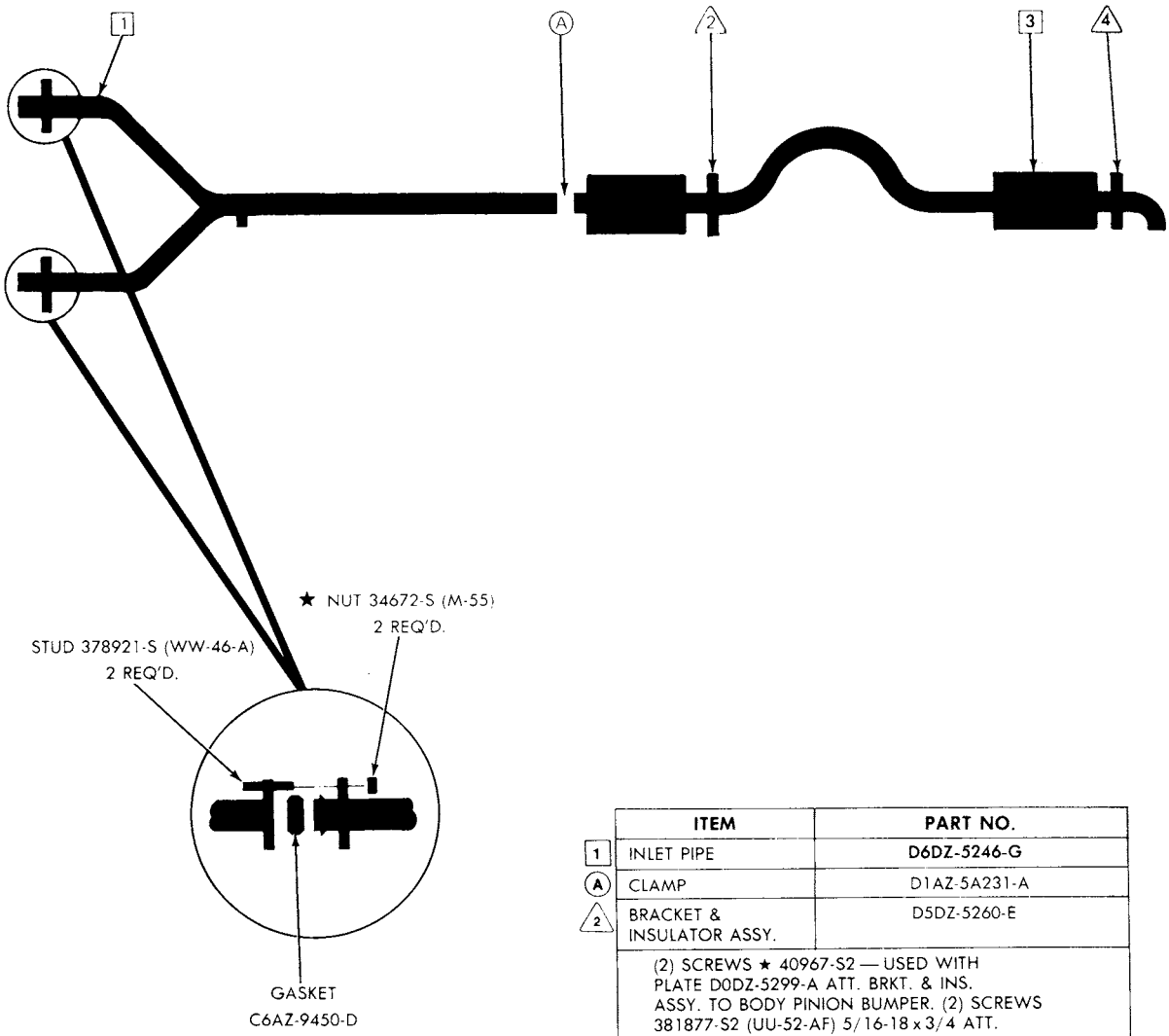

	ITEM	PART NO.
1	INLET PIPE	D6DZ-5246-G
A	CLAMP	D1AZ-5A231-A
2	BRACKET & INSULATOR ASSY.	D5DZ-5260-E
	(2) SCREWS ★ 40967-S2 — USED WITH PLATE D0DZ-5299-A ATT. BRKT. & INS. ASSY. TO BODY PINION BUMPER. (2) SCREWS 381877-S2 (UU-52-AF) 5/16-18 x 3/4 ATT. BRKT. & INS. ASSY. TO RESONATOR	
3	MUFFLER & RESONATOR ASSY.	★D5DZ-5230-Y
4	BRACKET & INSULATOR ASSY.	D5DZ-5260-C

1975 MONARCH — 8 CYL. 351-2/B SEDAN (ALL — W/O CONVERTER)

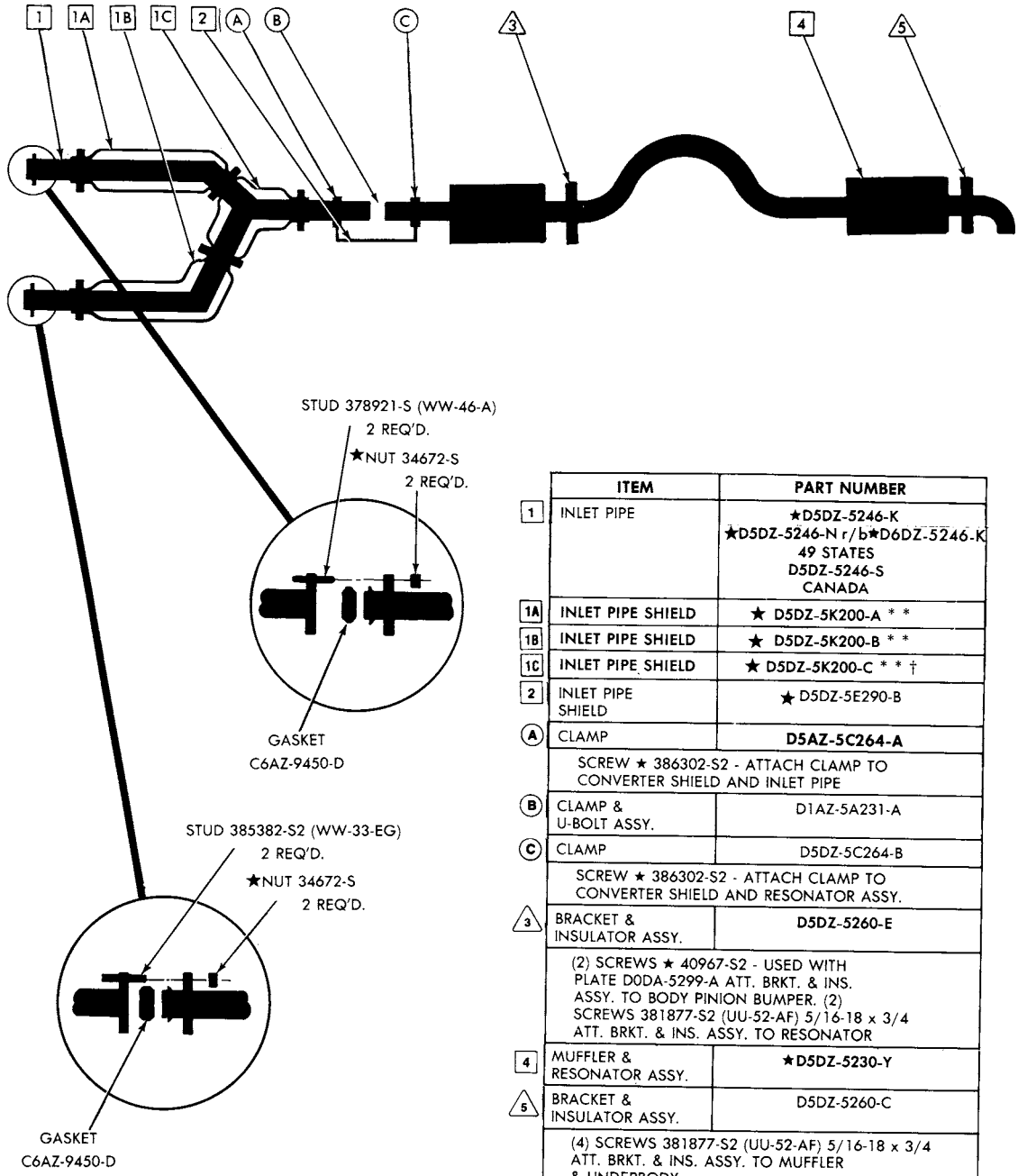

	ITEM	PART NUMBER
1	INLET PIPE	★D5DZ-5246-K ★D5DZ-5246-N r/b★D6DZ-5246-K 49 STATES D5DZ-5246-S CANADA
1A	INLET PIPE SHIELD	★ D5DZ-5K200-A * *
1B	INLET PIPE SHIELD	★ D5DZ-5K200-B * *
1C	INLET PIPE SHIELD	★ D5DZ-5K200-C * * †
2	INLET PIPE SHIELD	★ D5DZ-5E290-B
A	CLAMP	D5AZ-5C264-A
	SCREW ★ 386302-S2 - ATTACH CLAMP TO CONVERTER SHIELD AND INLET PIPE	
B	CLAMP & U-BOLT ASSY.	D1AZ-5A231-A
C	CLAMP	D5DZ-5C264-B
	SCREW ★ 386302-S2 - ATTACH CLAMP TO CONVERTER SHIELD AND RESONATOR ASSY.	
3	BRACKET & INSULATOR ASSY.	D5DZ-5260-E
	(2) SCREWS ★ 40967-S2 - USED WITH PLATE D0DA-5299-A ATT. BRKT. & INS. ASSY. TO BODY PINION BUMPER. (2) SCREWS 381877-S2 (UU-52-AF) 5/16-18 x 3/4 ATT. BRKT. & INS. ASSY. TO RESONATOR	
4	MUFFLER & RESONATOR ASSY.	★D5DZ-5230-Y
5	BRACKET & INSULATOR ASSY.	D5DZ-5260-C
	(4) SCREWS 381877-S2 (UU-52-AF) 5/16-18 x 3/4 ATT. BRKT. & INS. ASSY. TO MUFFLER & UNDERBODY	

* * REQUIRES (2) 2¼" CLAMP D5AZ-5A231-B
† REQUIRES (1) 2½" CLAMP D5SZ-5A231-A

EV-4

COPYRIGHT © 1986 — FORD MOTOR COMPANY — DEARBORN, MICHIGAN

1975 MONARCH — 8 CYL. 351-2/B SEDAN (ALL — WITH CONVERTER)

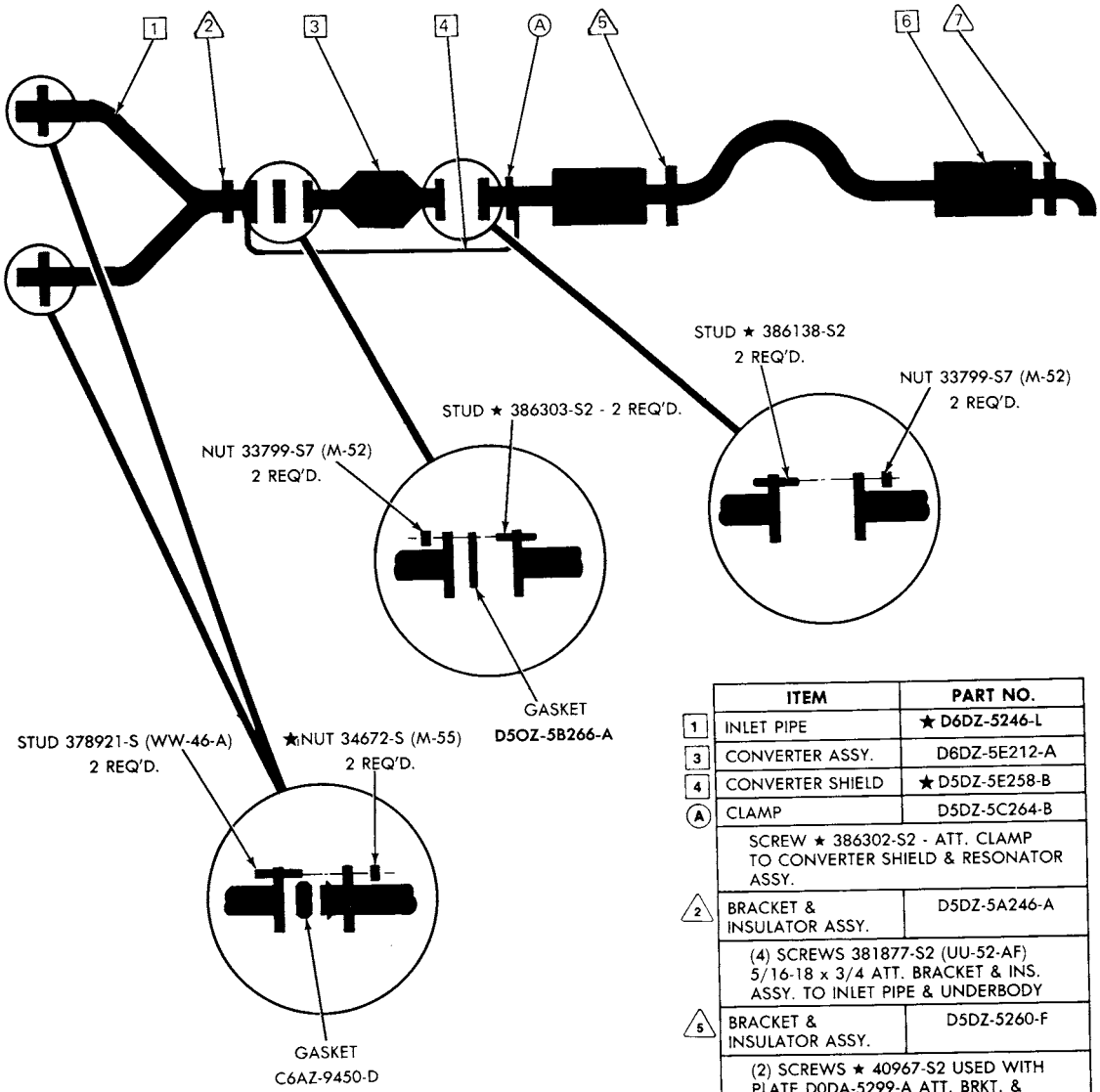

	ITEM	PART NO.
1	INLET PIPE	★ D6DZ-5246-L
3	CONVERTER ASSY.	D6DZ-5E212-A
4	CONVERTER SHIELD	★ D5DZ-5E258-B
A	CLAMP	D5DZ-5C264-B
	SCREW ★ 386302-S2 - ATT. CLAMP TO CONVERTER SHIELD & RESONATOR ASSY.	
2	BRACKET & INSULATOR ASSY.	D5DZ-5A246-A
	(4) SCREWS 381877-S2 (UU-52-AF) 5/16-18 x 3/4 ATT. BRACKET & INS. ASSY. TO INLET PIPE & UNDERBODY	
5	BRACKET & INSULATOR ASSY.	D5DZ-5260-F
	(2) SCREWS ★ 40967-S2 USED WITH PLATE D0DA-5299-A ATT. BRKT. & INS. ASSY. TO BODY PINION BUMPER (2) SCREWS 381877-S2 (UU-52-AF) 5/16-18 x 3/4 ATT. BRKT. & INS. ASSY. TO RESONATOR	
7	BRACKET & INSULATOR ASSY.	D5DZ-5260-C
	(4) SCREWS 381877-S2 (UU-52-AF) 5/16-18 x 3/4 ATT. BRKT. & INS. ASSY. TO MUFFLER UNDERBODY	
6	MUFFLER & RESONATOR ASSY.	D5DZ-5230-W

1975 MARK IV—8 CYL. 460-4/B (ALL—WITH ONE CONVERTER) SINGLE EXHAUST

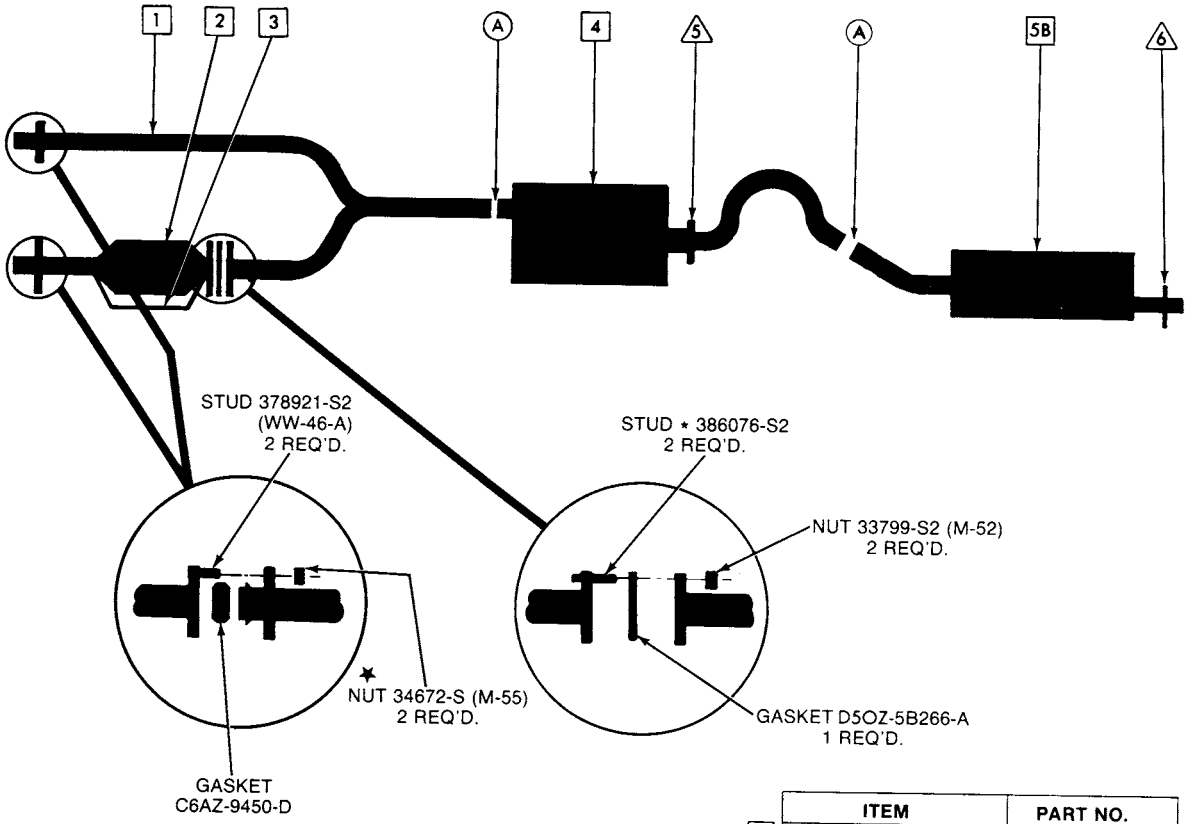

	ITEM	PART NO.
1	INLET PIPE	D5SZ-5246-B
2	CONVERTER	D5SZ-5E212-B
3	CONVERTER SHIELD	★▲D5SZ-5E258-B
A	CLAMP	D1AZ-5A231-A
4	MUFFLER & RESONATOR ASSY-PRODUCTION	★ D5SZ-5230-D
	MUFFLER-SERVICE	D5SZ-5230-A
5B	RESONATOR-SERVICE	★D5SZ-5A289-A
5	MUFFLER BRACKET & INSULATOR	★D5OZ-5260-A
△	RESONATOR BRACKET & INSULATOR	D6SZ-5260-A

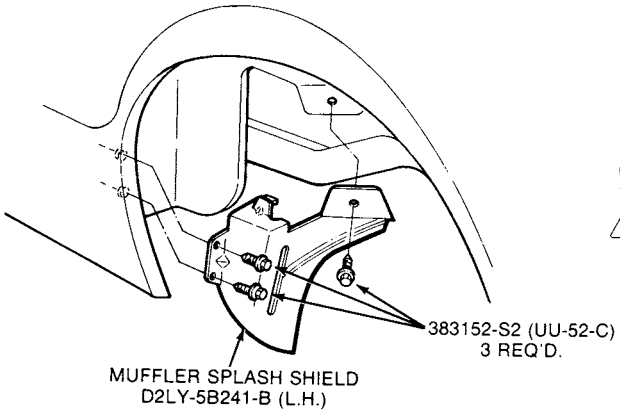

EK-8

COPYRIGHT © 1986 — FORD MOTOR COMPANY — DEARBORN, MICHIGAN

1975 MARK IV—8 CYL. 460-4/B
(ALL—W/O CONVERTER)
SINGLE EXHAUST

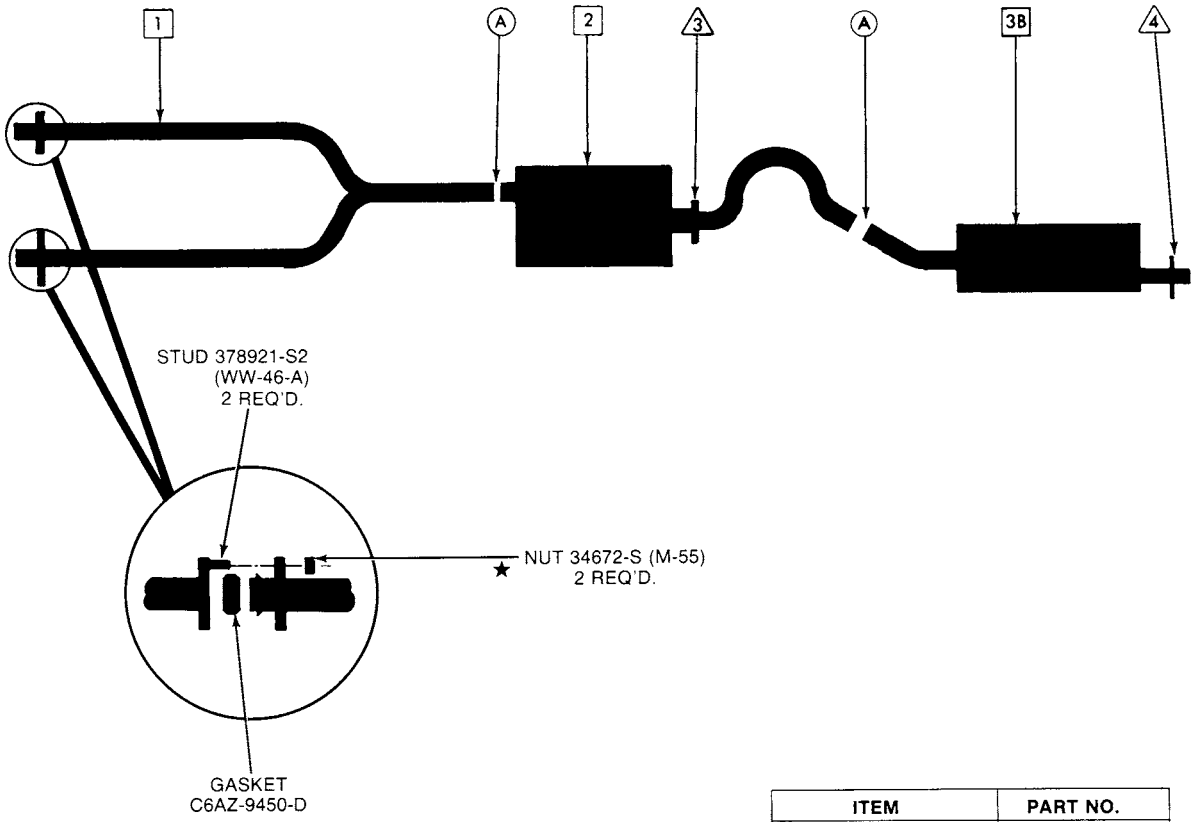

	ITEM	PART NO.
1	INLET PIPE	D5SZ-5246-F
A	CLAMP	D1AZ-5A231-A
2	MUFFLER & RESONATOR ASSY-PRODUCTION	★ D5SZ-5230-D
	MUFFLER-SERVICE	★ D5SZ-5230-A
3B	RESONATOR-SERVICE	★ D5SZ-5A289-A
3	MUFFLER BRACKET & INSULATOR	D5OZ-5260-A
4	RESONATOR BRACKET & INSULATOR	D6SZ-5260-A

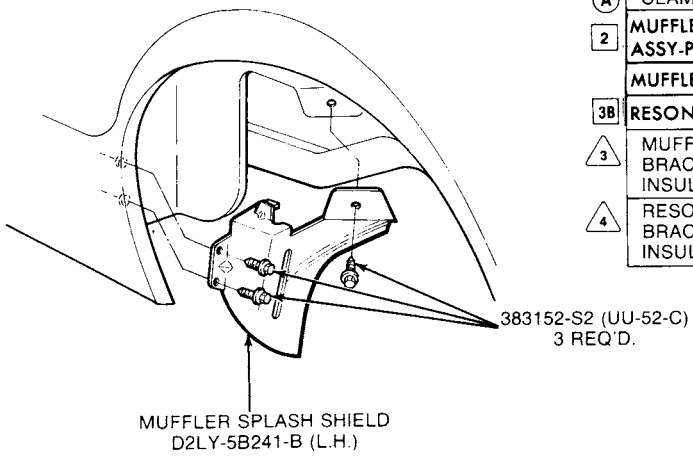

EK-11

1975 MARK IV—8 CYL. 460-4/B
(ALL—WITH ONE CONVERTER)
DUAL EXHAUST

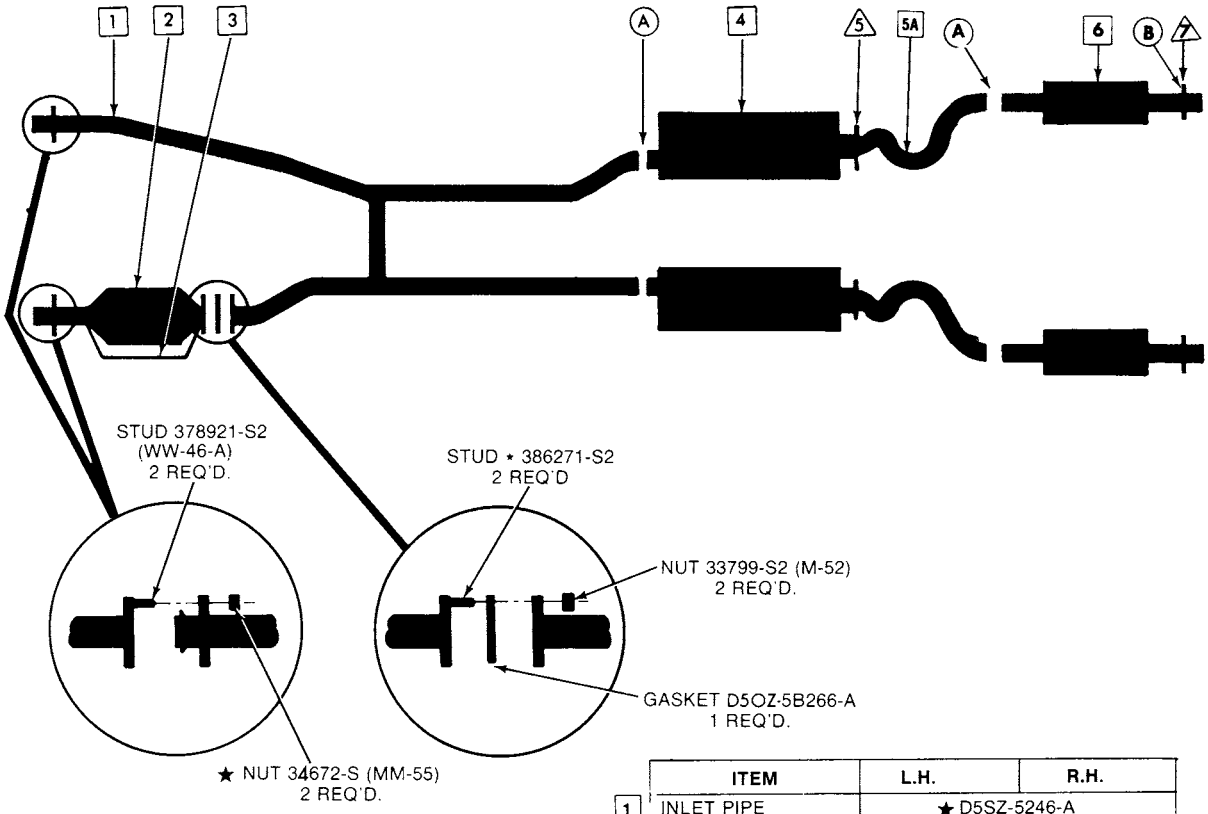

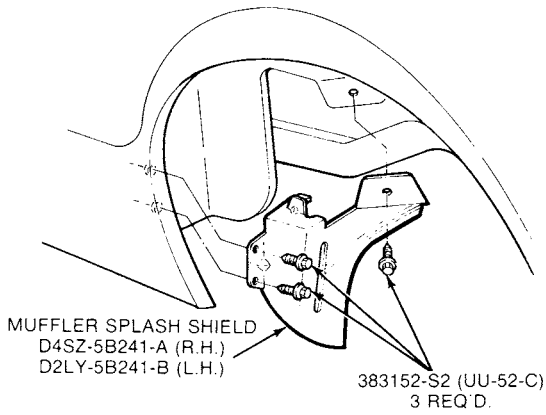

EK-9

	ITEM	L.H.	R.H.
1	INLET PIPE	★ D5SZ-5246-A	
2	CONVERTER	D5SZ-5E212-B	
3	CONVERTER SHIELD	★ ▲D5SZ-5E258-B	
A	CLAMP	D1AZ-5A231-A	D1AZ-5A231-A
4	**MUFFLER & RESONATOR ASSY. - PRODUCTION**	★D5SZ-5230-F	★D5SZ-5230-E
5	**MUFFLER - SERVICE**	D5AZ-5230-AK	D5AZ-5230-AK
	INTERMEDIATE PIPE (SERVICE)	D5SZ-5A212-B	D5SZ-5A212-A
5A	MUFFLER BRACKET & INSULATOR	★ D5OZ-5260-A	★ D5OZ-5260-A
6	**RESONATOR - SERVICE**	D5SZ-5A289-E	
7	RESONATOR BRACKET & INSULATOR	D6SZ-5260-A	D6SZ-5260-A
B	**CLAMP**		**D1AZ-5A231-D**

COPYRIGHT © 1986 — FORD MOTOR COMPANY — DEARBORN, MICHIGAN

1975 MARK IV—8 CYL. 460-4/B
(ALL—WITH TWO CONVERTER)
DUAL EXHAUST

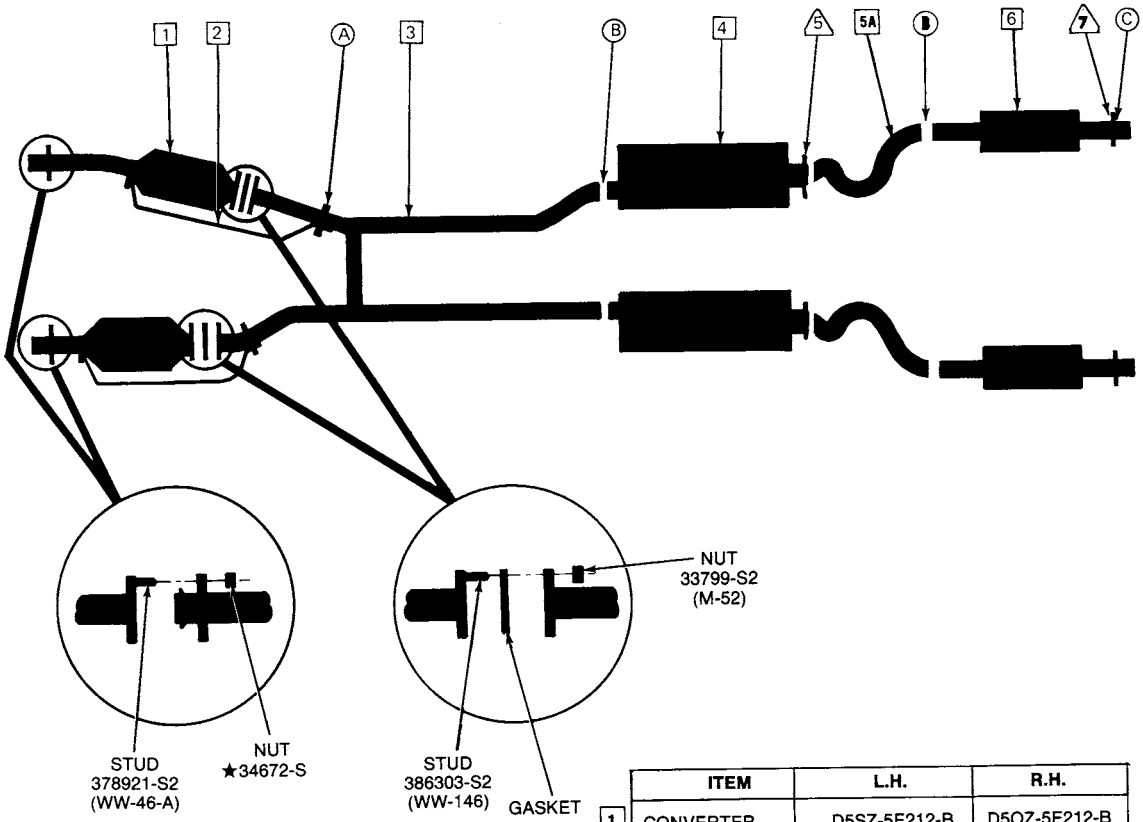

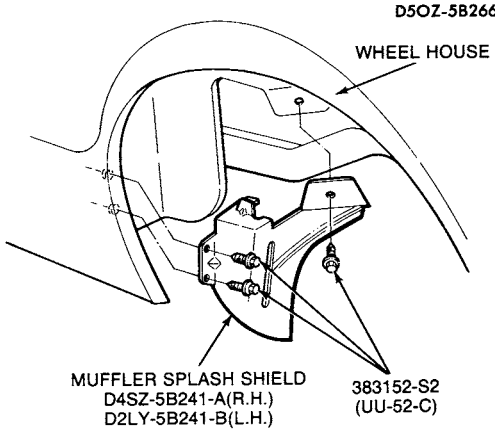

EK-10

	ITEM	L.H.	R.H.
1	CONVERTER	D5SZ-5E212-B	D5OZ-5E212-B
2	CONVERTER SHIELD	★ D5SZ-5E258-B	★ D5SZ-5E258-A
A	CLAMP	★ D5SZ-5C264-B	★D5SZ-5C264-B
3	INLET PIPE	D5SZ-5246-C	
B	CLAMP	D1AZ-5A231-A	D1AZ-5A231-A
4	MUFFLER & RESONATOR ASSY-PRODUCTION	★D5SZ-5230-F	★ D5SZ-5230-E
	MUFFLER -SERVICE	D5AZ-5230-AK	D5AZ-5230-AK
5	BRACKET & INSULATOR	D5OZ-5260-A	D5OZ-5260-A
5A	INTERMEDIATE PIPE (SERVICE)	D5SZ-5A212-B	D5SZ-5A212-A
6	RESONATOR - SERVICE	D5SZ-5A289-E	D5SZ-5A289-B
7	BRACKET & INSULATOR	D6SZ-5260-A	D6SZ-5260-A
C	CLAMP	D1AZ-5A231-D	D1AZ-5A231-D

1975 BOBCAT—4 CYL. 140-2/B (2300cc) SEDAN
(ALL—W/O CONVERTER)

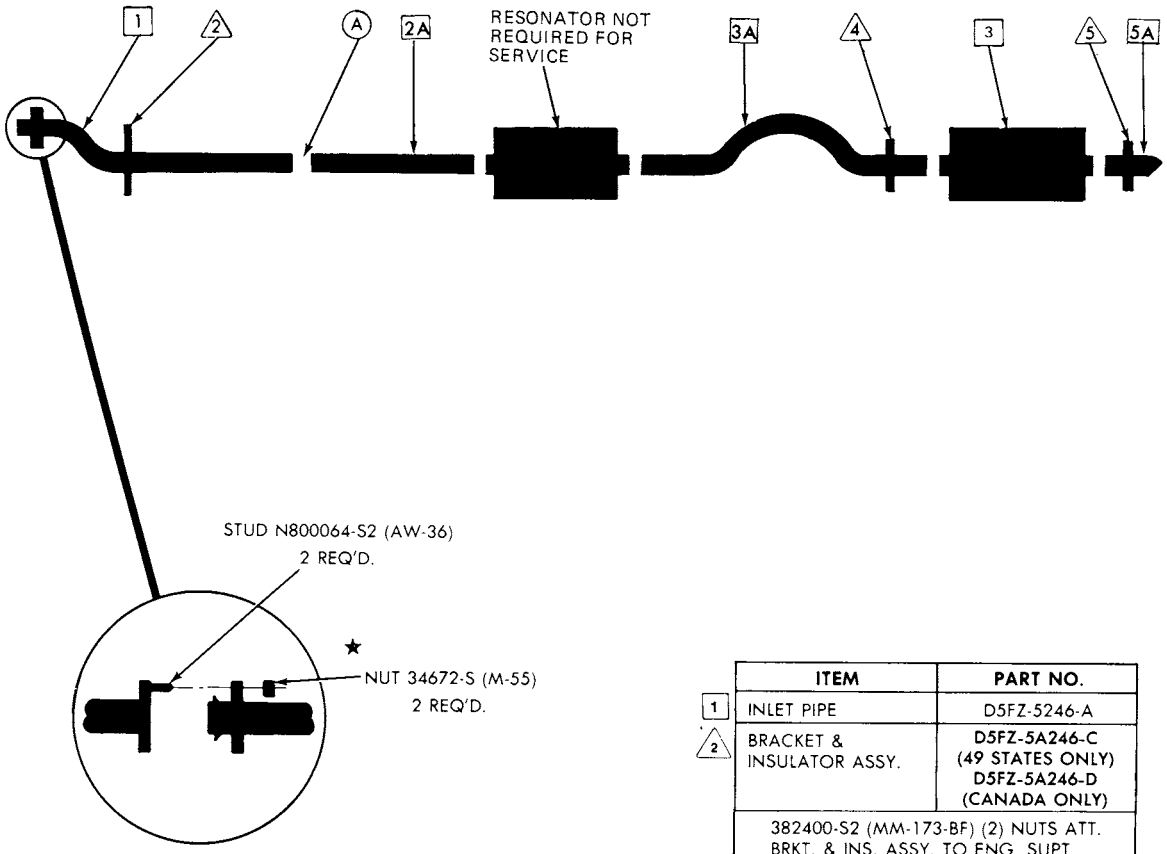

	ITEM	PART NO.
1	INLET PIPE	D5FZ-5246-A
2	BRACKET & INSULATOR ASSY.	D5FZ-5A246-C (49 STATES ONLY) D5FZ-5A246-D (CANADA ONLY)
	382400-S2 (MM-173-BF) (2) NUTS ATT. BRKT. & INS. ASSY. TO ENG. SUPT. ★ 40962-S2 (2) SCREWS ATT. BRKT. & INS. ASSY. TO INLET PIPE	
2A	INTERMEDIATE PIPE (SERVICE)	D5FZ-5A212-V
A	CLAMP	D1AZ-5A231-B
3	MUFFLER & RESONATOR ASSY.	★D5FZ-5230-H (PRODUCTION)
	MUFFLER (SERVICE)	D5FZ-5230-Y
3A	INTERMEDIATE PIPE (SERVICE)	D5FZ-5A212-T
4	BRACKET & INSULATOR ASSY.	D8FZ-5260-B
	★ 40962-S2 (4) SCREWS ATT. BRKT. & INS. ASSY. TO UNDERBODY & PIPE ASSY.	
5	BRACKET & INSULATOR ASSY.	D5FZ-5260-E
	★ 40962-S2 (2) SCREWS ATT. BRKT. & INS. ASSY. TO UNDERBODY 381877-S2 (UU-52-AF) (2) SCREWS ATT. BRKT. & INS. ASSY. TO MUFFLER	
5A	OUTLET PIPE (SERVICE)	D5FZ-5255-E

ET-5

COPYRIGHT © 1986 — FORD MOTOR COMPANY — DEARBORN, MICHIGAN

1975 BOBCAT—4 CYL. 140-2/B (2300cc) SEDAN
(ALL—WITH CONVERTER)

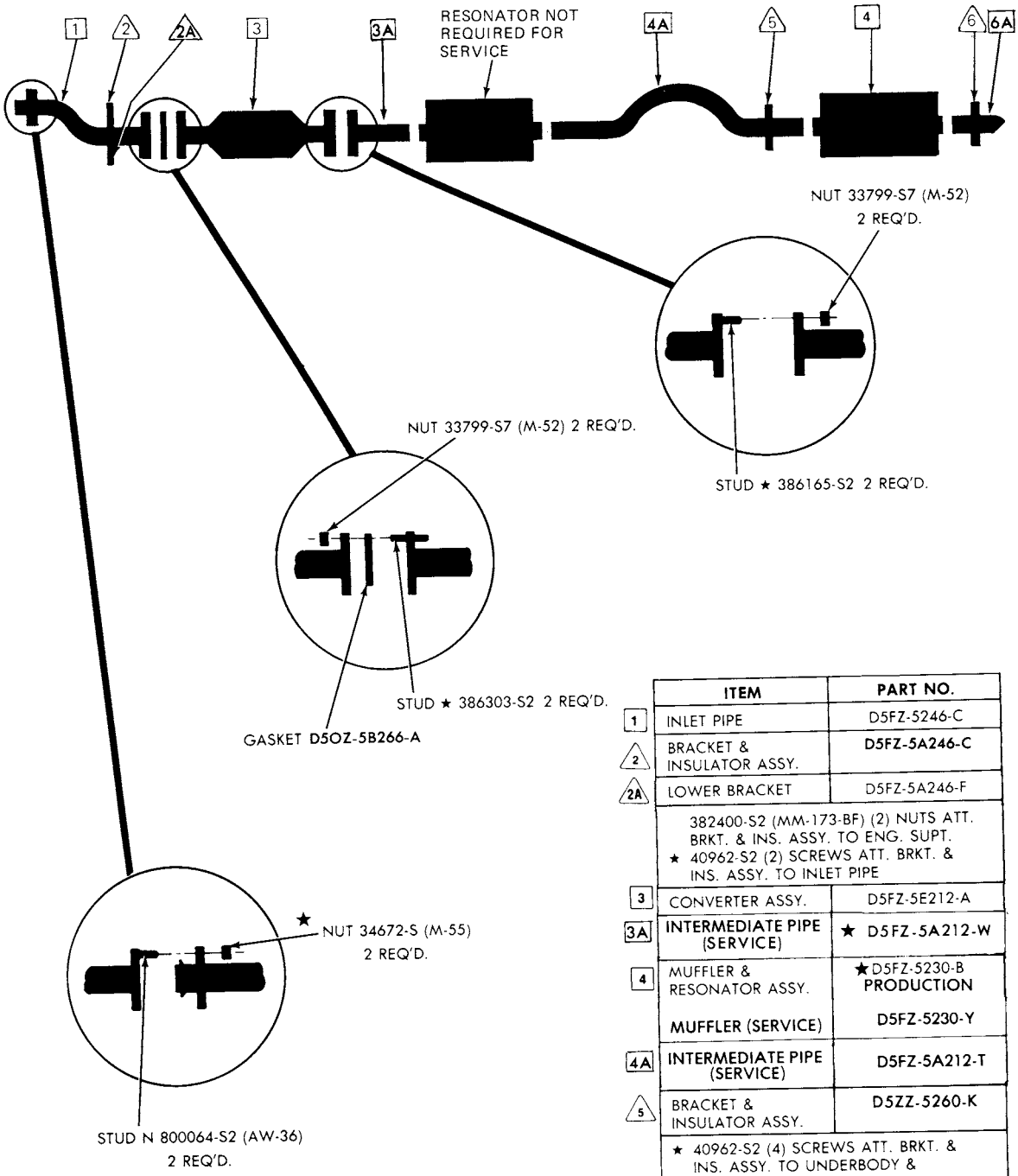

	ITEM	PART NO.
1	INLET PIPE	D5FZ-5246-C
2	BRACKET & INSULATOR ASSY.	D5FZ-5A246-C
2A	LOWER BRACKET	D5FZ-5A246-F
	382400-S2 (MM-173-BF) (2) NUTS ATT. BRKT. & INS. ASSY. TO ENG. SUPT. ★ 40962-S2 (2) SCREWS ATT. BRKT. & INS. ASSY. TO INLET PIPE	
3	CONVERTER ASSY.	D5FZ-5E212-A
3A	INTERMEDIATE PIPE (SERVICE)	★ D5FZ-5A212-W
4	MUFFLER & RESONATOR ASSY.	★D5FZ-5230-B PRODUCTION
	MUFFLER (SERVICE)	D5FZ-5230-Y
4A	INTERMEDIATE PIPE (SERVICE)	D5FZ-5A212-T
5	BRACKET & INSULATOR ASSY.	D5ZZ-5260-K
	★ 40962-S2 (4) SCREWS ATT. BRKT. & INS. ASSY. TO UNDERBODY & PIPE ASSY.	
6	BRACKET & INSULATOR ASSY.	D5FZ-5260-E
	★ 40962-S2 (2) SCREWS ATT. BRKT. & INS. ASSY. TO UNDERBODY 381877-S2 (UU-52-AF) (2) SCREWS ATT. BRKT. & INS. ASSY. TO MUFFLER	
6A	OUTLET PIPE (SERVICE)	D5FZ-5255-E

1975 BOBCAT—4 CYL. 140-2/B (2300cc) STATION WAGON
(ALL—W/O CONVERTER)

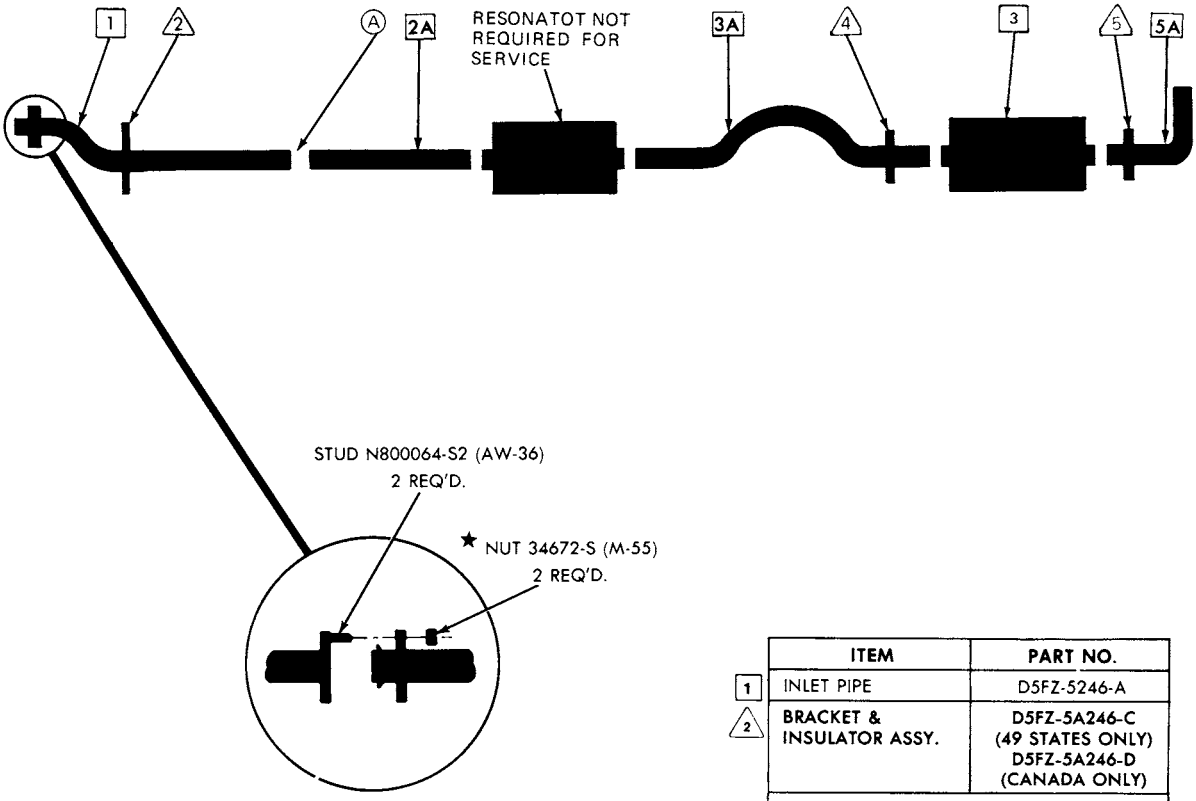

	ITEM	PART NO.
1	INLET PIPE	D5FZ-5246-A
2	**BRACKET & INSULATOR ASSY.**	**D5FZ-5A246-C (49 STATES ONLY) D5FZ-5A246-D (CANADA ONLY)**
	382400-S2 (MM-173-BF) (2) NUTS ATT. BRKT. & INS. ASSY. TO ENG. SUPT. ★ 40962-S2 (2) SCREWS ATT. BRKT. & INS. ASSY. TO INLET PIPE	
A	CLAMP	D1AZ-5A231-B
2A	**INTERMEDIATE PIPE (SERVICE)**	**D5FZ-5A212-V**
3	MUFFLER & RESONATOR ASSY.	D5FZ-5230-G
	MUFFLER (SERVICE)	**D5FZ-5230-Y**
3A	**INTERMEDIATE PIPE (SERVICE)**	**★ D5FZ-5A212-P**
4	BRACKET & INSULATOR ASSY.	**D5FZ-5260-G**
	★ 40962-S2 (4) SCREWS ATT. BRKT. & INS. ASSY. TO UNDERBODY & PIPE ASSY.	
5	BRACKET & INSULATOR ASSY.	**★ D4FZ-5260-D**
	★ 40962-S2 (2) SCREWS ATT. BRKT. & INS. ASSY. TO UNDERBODY 381877-S2 (UU-52-AF) (2) SCREWS ATT. BRKT. & INS. ASSY TO MUFFLER	
5A	**OUTLET PIPE (SERVICE)**	**★ D5FZ-5255-D**

ET-7

COPYRIGHT © 1986 — FORD MOTOR COMPANY — DEARBORN, MICHIGAN

1975 BOBCAT—4 CYL. 140-2/B (2300cc) STATION WAGON
(ALL—WITH CONVERTER)

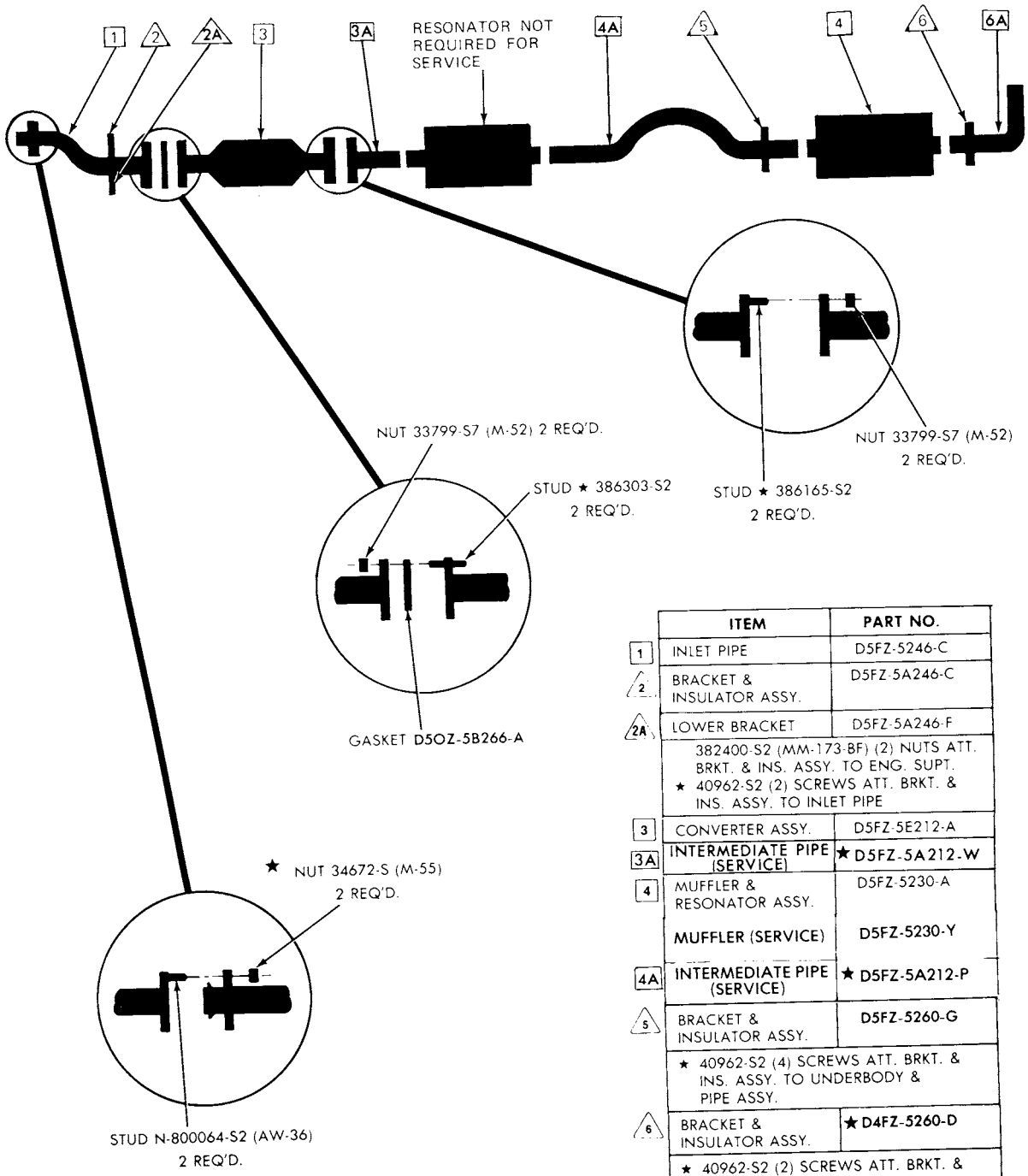

	ITEM	PART NO.
1	INLET PIPE	D5FZ-5246-C
2	BRACKET & INSULATOR ASSY.	D5FZ-5A246-C
2A	LOWER BRACKET	D5FZ-5A246-F
	382400-S2 (MM-173-BF) (2) NUTS ATT. BRKT. & INS. ASSY. TO ENG. SUPT. ★ 40962-S2 (2) SCREWS ATT. BRKT. & INS. ASSY. TO INLET PIPE	
3	CONVERTER ASSY.	D5FZ-5E212-A
3A	INTERMEDIATE PIPE (SERVICE)	★ D5FZ-5A212-W
4	MUFFLER & RESONATOR ASSY.	D5FZ-5230-A
	MUFFLER (SERVICE)	D5FZ-5230-Y
4A	INTERMEDIATE PIPE (SERVICE)	★ D5FZ-5A212-P
5	BRACKET & INSULATOR ASSY.	D5FZ-5260-G
	★ 40962-S2 (4) SCREWS ATT. BRKT. & INS. ASSY. TO UNDERBODY & PIPE ASSY.	
6	BRACKET & INSULATOR ASSY.	★ D4FZ-5260-D
	★ 40962-S2 (2) SCREWS ATT. BRKT. & INS. ASSY. TO UNDERBODY 381877-S2 (UU-52-AF) (2) SCREWS ATT. BRKT. & INS. ASSY. TO MUFFLER	
6A	OUTLET PIPE (SERVICE)	★ D5FZ-5255-D

1975 BOBCAT—6 CYL. 171-2/B (2800cc) SEDAN (TWO CONVERTER)

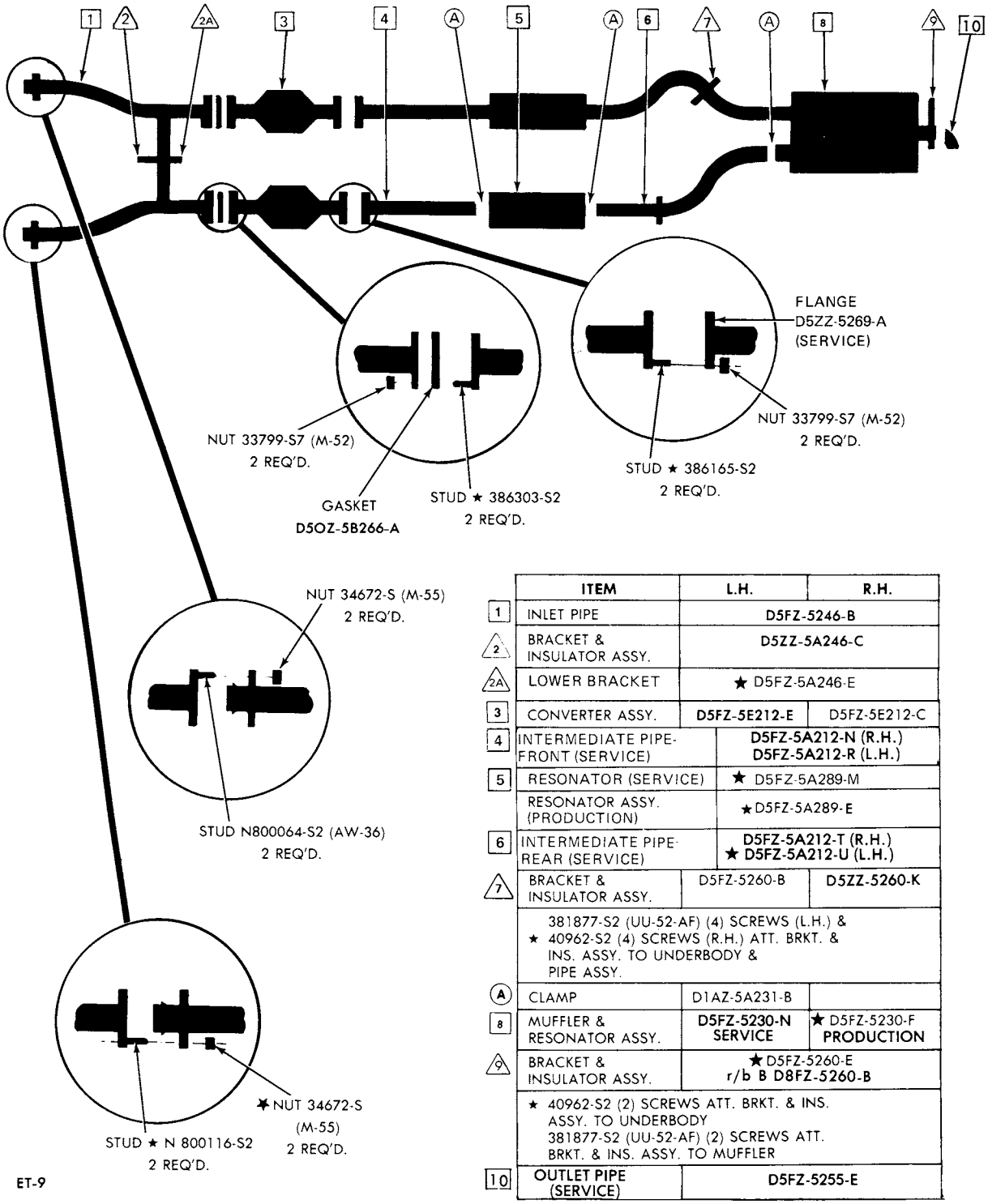

	ITEM	L.H.	R.H.
1	INLET PIPE	D5FZ-5246-B	
2	BRACKET & INSULATOR ASSY.	D5ZZ-5A246-C	
2A	LOWER BRACKET	★ D5FZ-5A246-E	
3	CONVERTER ASSY.	D5FZ-5E212-E	D5FZ-5E212-C
4	INTERMEDIATE PIPE-FRONT (SERVICE)	D5FZ-5A212-N (R.H.) D5FZ-5A212-R (L.H.)	
5	RESONATOR (SERVICE)	★ D5FZ-5A289-M	
	RESONATOR ASSY. (PRODUCTION)	★ D5FZ-5A289-E	
6	INTERMEDIATE PIPE-REAR (SERVICE)	D5FZ-5A212-T (R.H.) ★ D5FZ-5A212-U (L.H.)	
7	BRACKET & INSULATOR ASSY.	D5FZ-5260-B	D5ZZ-5260-K
	381877-S2 (UU-52-AF) (4) SCREWS (L.H.) & ★ 40962-S2 (4) SCREWS (R.H.) ATT. BRKT. & INS. ASSY. TO UNDERBODY & PIPE ASSY.		
A	CLAMP	D1AZ-5A231-B	
8	MUFFLER & RESONATOR ASSY.	D5FZ-5230-N SERVICE	★ D5FZ-5230-F PRODUCTION
9	BRACKET & INSULATOR ASSY.	★ D5FZ-5260-E r/b B D8FZ-5260-B	
	★ 40962-S2 (2) SCREWS ATT. BRKT. & INS. ASSY. TO UNDERBODY 381877-S2 (UU-52-AF) (2) SCREWS ATT. BRKT. & INS. ASSY. TO MUFFLER		
10	OUTLET PIPE (SERVICE)	D5FZ-5255-E	

COPYRIGHT © 1986 — FORD MOTOR COMPANY — DEARBORN, MICHIGAN

1975 BOBCAT—6 CYL. 171-2/B (2800cc) SEDAN (NON CONVERTER)

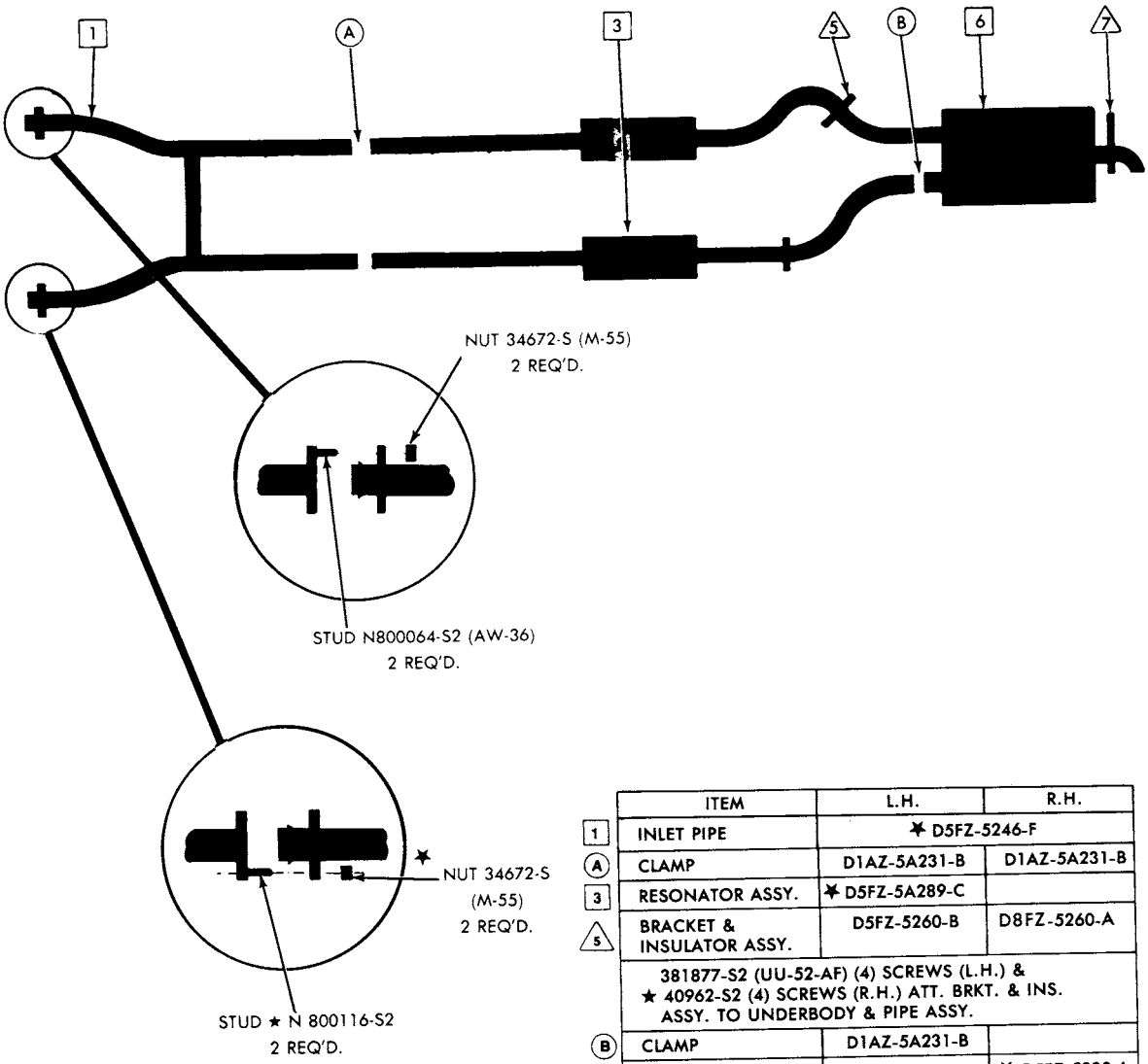

	ITEM	L.H.	R.H.
1	INLET PIPE	✶ D5FZ-5246-F	
A	CLAMP	D1AZ-5A231-B	D1AZ-5A231-B
3	RESONATOR ASSY.	✶ D5FZ-5A289-C	
5	BRACKET & INSULATOR ASSY.	D5FZ-5260-B	D8FZ-5260-A
	381877-S2 (UU-52-AF) (4) SCREWS (L.H.) & ★ 40962-S2 (4) SCREWS (R.H.) ATT. BRKT. & INS. ASSY. TO UNDERBODY & PIPE ASSY.		
B	CLAMP	D1AZ-5A231-B	
6	MUFFLER & RESONATOR ASSY.		✶ D5FZ-5230-J
7	BRACKET & INSULATOR ASSY.	D5FZ-5260-E	
	★ 40962-S2 (2) SCREWS ATT. BRKT. & INS. ASSY. TO UNDERBODY 381877-S2 (UU-52-AF) (2) SCREWS ATT. BRKT. & INS. ASSY. TO MUFFLER.		

1975 BOBCAT—6 CYL. 171-2/B (2800cc) STATION WAGON (TWO CONVERTER)

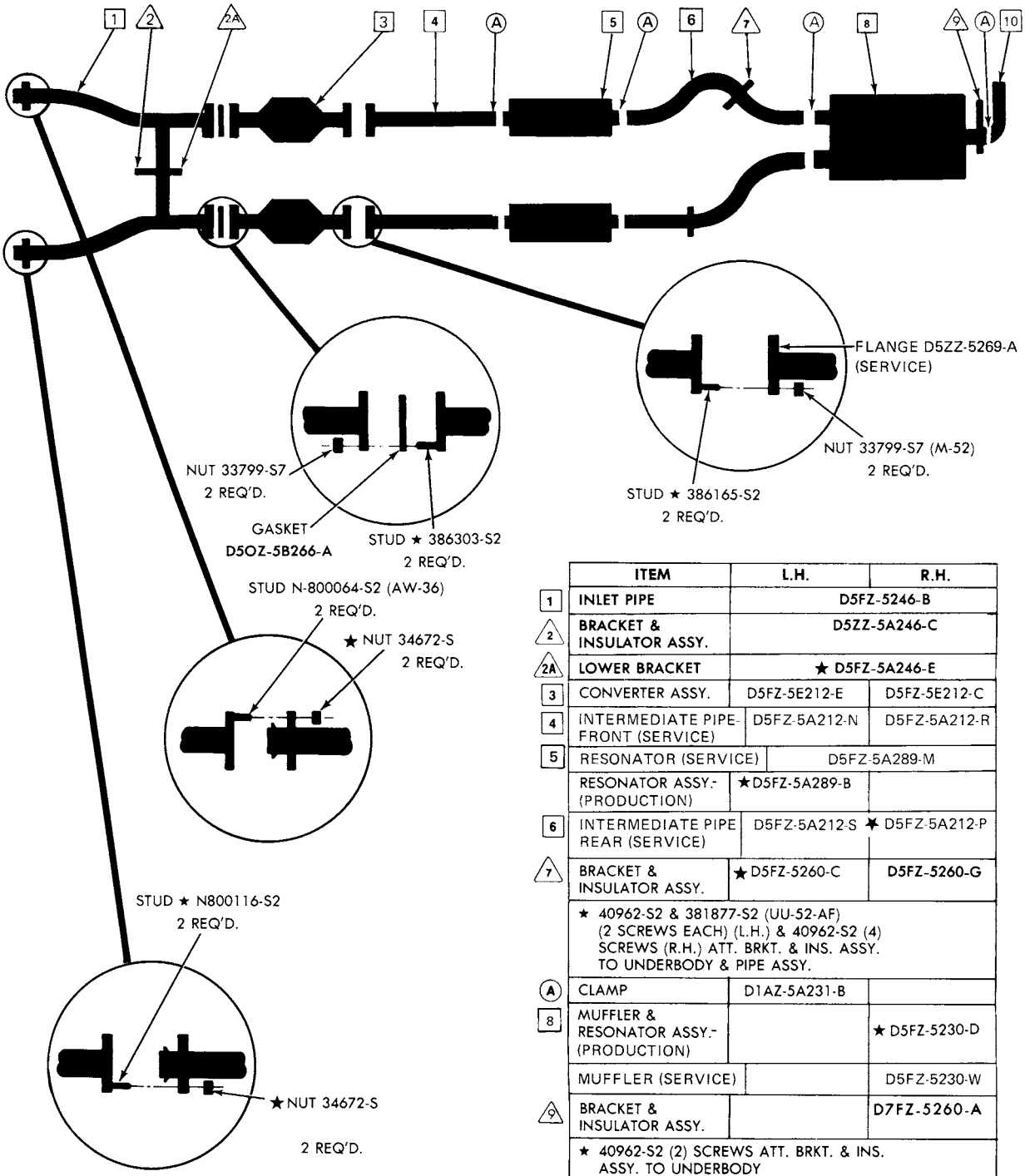

	ITEM	L.H.	R.H.
1	INLET PIPE	D5FZ-5246-B	
2	BRACKET & INSULATOR ASSY.	D5ZZ-5A246-C	
2A	LOWER BRACKET	★ D5FZ-5A246-E	
3	CONVERTER ASSY.	D5FZ-5E212-E	D5FZ-5E212-C
4	INTERMEDIATE PIPE-FRONT (SERVICE)	D5FZ-5A212-N	D5FZ-5A212-R
5	RESONATOR (SERVICE)	D5FZ-5A289-M	
	RESONATOR ASSY.-(PRODUCTION)	★D5FZ-5A289-B	
6	INTERMEDIATE PIPE REAR (SERVICE)	D5FZ-5A212-S	★ D5FZ-5A212-P
7	BRACKET & INSULATOR ASSY.	★ D5FZ-5260-C	D5FZ-5260-G
	★ 40962-S2 & 381877-S2 (UU-52-AF) (2 SCREWS EACH) (L.H.) & 40962-S2 (4) SCREWS (R.H.) ATT. BRKT. & INS. ASSY. TO UNDERBODY & PIPE ASSY.		
A	CLAMP	D1AZ-5A231-B	
8	MUFFLER & RESONATOR ASSY.-(PRODUCTION)		★ D5FZ-5230-D
	MUFFLER (SERVICE)		D5FZ-5230-W
9	BRACKET & INSULATOR ASSY.		D7FZ-5260-A
	★ 40962-S2 (2) SCREWS ATT. BRKT. & INS. ASSY. TO UNDERBODY 381877-S2 (UU-52-AF) (2) SCREWS ATT. BRKT. & INS. ASSY. TO MUFFLER		
10	OUTLET PIPE-(SERVICE)		★D5FZ-5255-D

COPYRIGHT © 1986 — FORD MOTOR COMPANY — DEARBORN, MICHIGAN

1975 BOBCAT—6 CYL. 171-2/B (2800cc) STATION WAGON (NON CONVERTER)

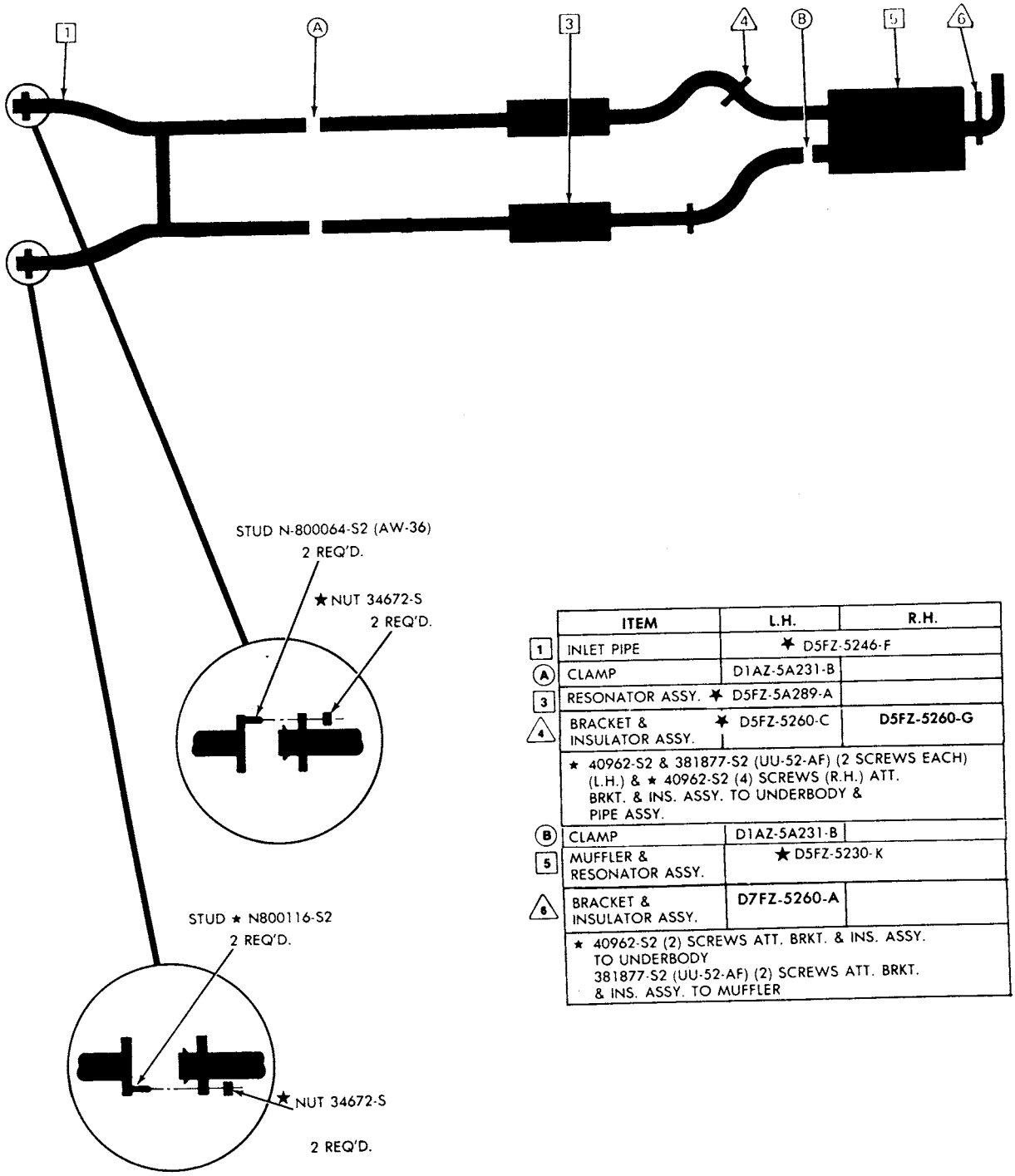

	ITEM	L.H.	R.H.
1	INLET PIPE	★ D5FZ-5246-F	
A	CLAMP	D1AZ-5A231-B	
3	RESONATOR ASSY.	★ D5FZ-5A289-A	
4	BRACKET & INSULATOR ASSY.	★ D5FZ-5260-C	D5FZ-5260-G
	★ 40962-S2 & 381877-S2 (UU-52-AF) (2 SCREWS EACH) (L.H.) & ★ 40962-S2 (4) SCREWS (R.H.) ATT. BRKT. & INS. ASSY. TO UNDERBODY & PIPE ASSY.		
B	CLAMP	D1AZ-5A231-B	
5	MUFFLER & RESONATOR ASSY.	★ D5FZ-5230-K	
6	BRACKET & INSULATOR ASSY.	D7FZ-5260-A	
	★ 40962-S2 (2) SCREWS ATT. BRKT. & INS. ASSY. TO UNDERBODY 381877-S2 (UU-52-AF) (2) SCREWS ATT. BRKT. & INS. ASSY. TO MUFFLER		

ET-14

1975 COMET — 6 CYL. 200-1/B & 250-1/B SEDAN (ALL — WITH CONVERTER)

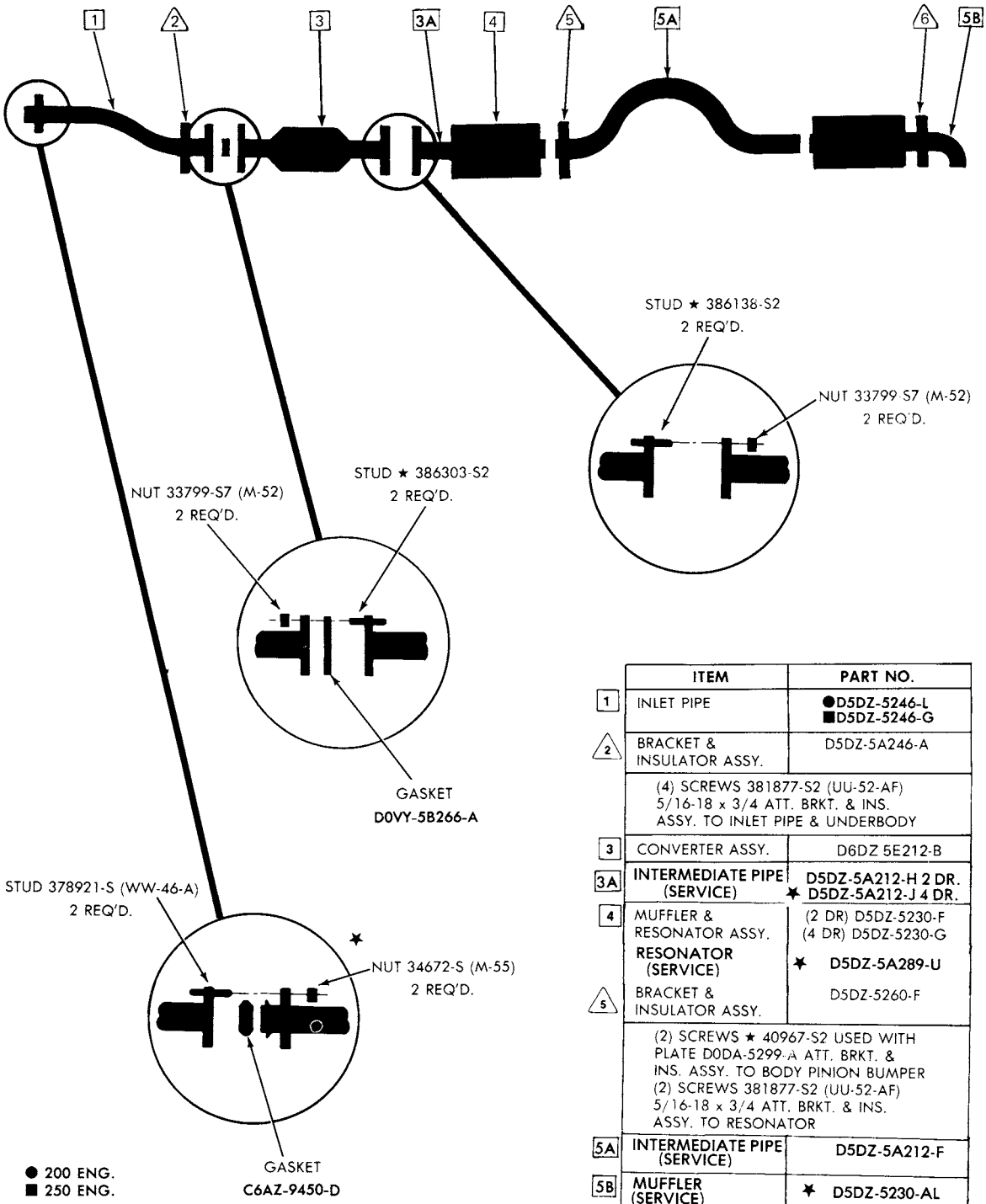

	ITEM	PART NO.
1	INLET PIPE	●D5DZ-5246-L ■D5DZ-5246-G
2	BRACKET & INSULATOR ASSY.	D5DZ-5A246-A
	(4) SCREWS 381877-S2 (UU-52-AF) 5/16-18 x 3/4 ATT. BRKT. & INS. ASSY. TO INLET PIPE & UNDERBODY	
3	CONVERTER ASSY.	D6DZ 5E212-B
3A	INTERMEDIATE PIPE (SERVICE)	D5DZ-5A212-H 2 DR. ✶ D5DZ-5A212-J 4 DR.
4	MUFFLER & RESONATOR ASSY.	(2 DR) D5DZ-5230-F (4 DR) D5DZ-5230-G
	RESONATOR (SERVICE)	✶ D5DZ-5A289-U
5	BRACKET & INSULATOR ASSY.	D5DZ-5260-F
	(2) SCREWS ★ 40967-S2 USED WITH PLATE D0DA-5299-A ATT. BRKT. & INS. ASSY. TO BODY PINION BUMPER (2) SCREWS 381877-S2 (UU-52-AF) 5/16-18 x 3/4 ATT. BRKT. & INS. ASSY. TO RESONATOR	
5A	INTERMEDIATE PIPE (SERVICE)	D5DZ-5A212-F
5B	MUFFLER (SERVICE)	✶ D5DZ-5230-AL
6	BRACKET & INSULATOR ASSY.	D5DZ-5260-C
	(4) SCREWS 381877-S2 (UU-52-AF) 5/16-18 x 3/4 ATT. BRKT. & INS. ASSY. TO MUFFLER & UNDERBODY	

EP-25

COPYRIGHT © 1986 — FORD MOTOR COMPANY — DEARBORN, MICHIGAN

1975 COMET — 6 CYL. 200-1/B & 250-1/B SEDAN (ALL — W/O CONVERTER)

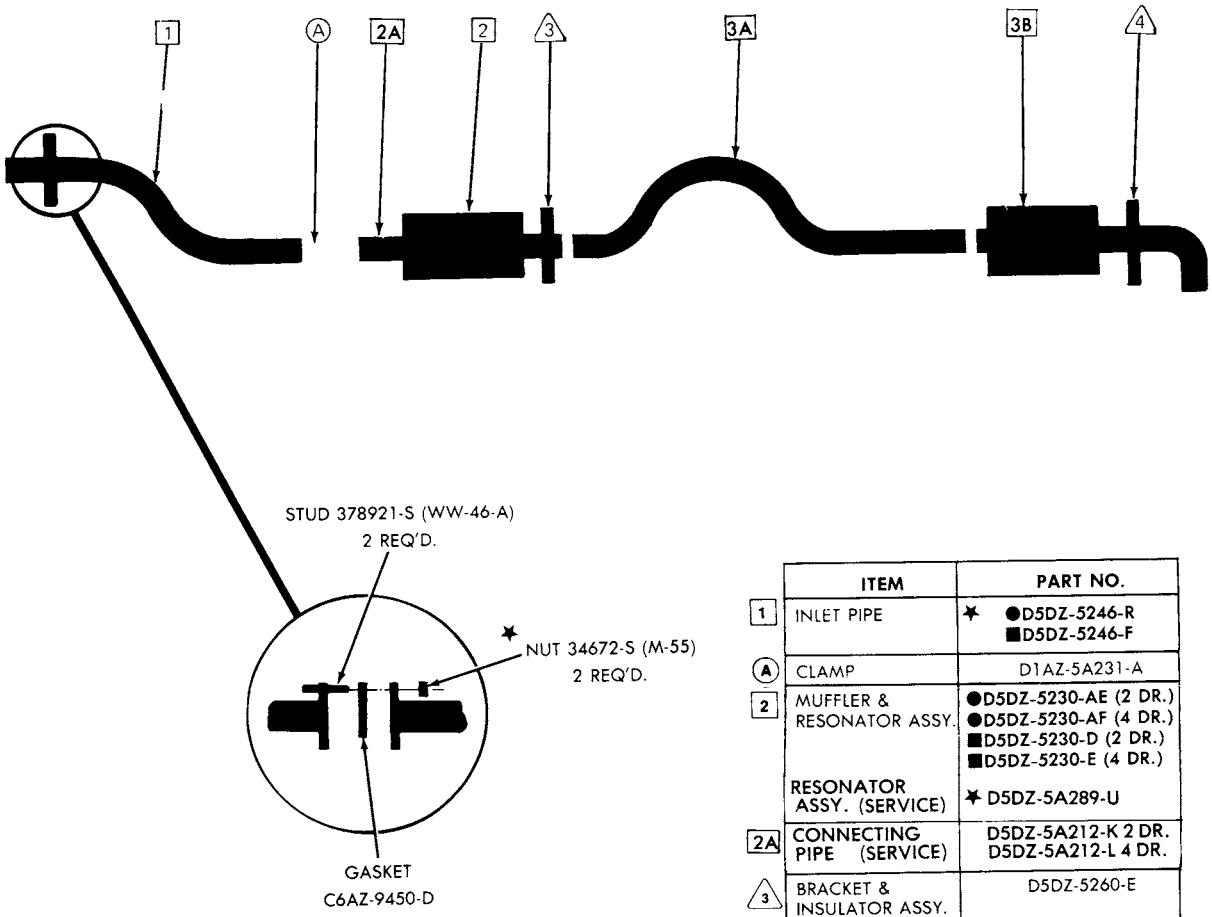

	ITEM	PART NO.
1	INLET PIPE	✶ ●D5DZ-5246-R ■D5DZ-5246-F
A	CLAMP	D1AZ-5A231-A
2	MUFFLER & RESONATOR ASSY.	●D5DZ-5230-AE (2 DR.) ●D5DZ-5230-AF (4 DR.) ■D5DZ-5230-D (2 DR.) ■D5DZ-5230-E (4 DR.)
	RESONATOR ASSY. (SERVICE)	✶ D5DZ-5A289-U
2A	CONNECTING PIPE (SERVICE)	D5DZ-5A212-K 2 DR. D5DZ-5A212-L 4 DR.
3	BRACKET & INSULATOR ASSY.	D5DZ-5260-E
	(2) SCREWS ★ 40967-S2 USED WITH PLATE D0DA-5299-A ATT. BRKT. & INS. ASSY. TO BODY PINION BUMPER (2) SCREWS 381877-S2 (UU-52-AF) 5/16-18 x 3/4 ATT. BRKT. & INS. ASSY. TO RESONATOR	
3A	INTERMEDIATE PIPE (SERVICE)	D5DZ-5A212-F
3B	MUFFLER (SERVICE)	D5DZ-5230-AL
4	BRACKET & INSULATOR ASSY.	D5DZ-5260-C
	(4) SCREWS 381877-S2 (UU-52-AF) 5/16-18 x 3/4 ATT. BRKT. & INS. ASSY. TO MUFFLER & UNDERBODY	

● 200 ENG.
■ 250 ENG.

1975 COMET — 8 CYL. 302-2/B SEDAN
(ALL — W/O CONVERTER)

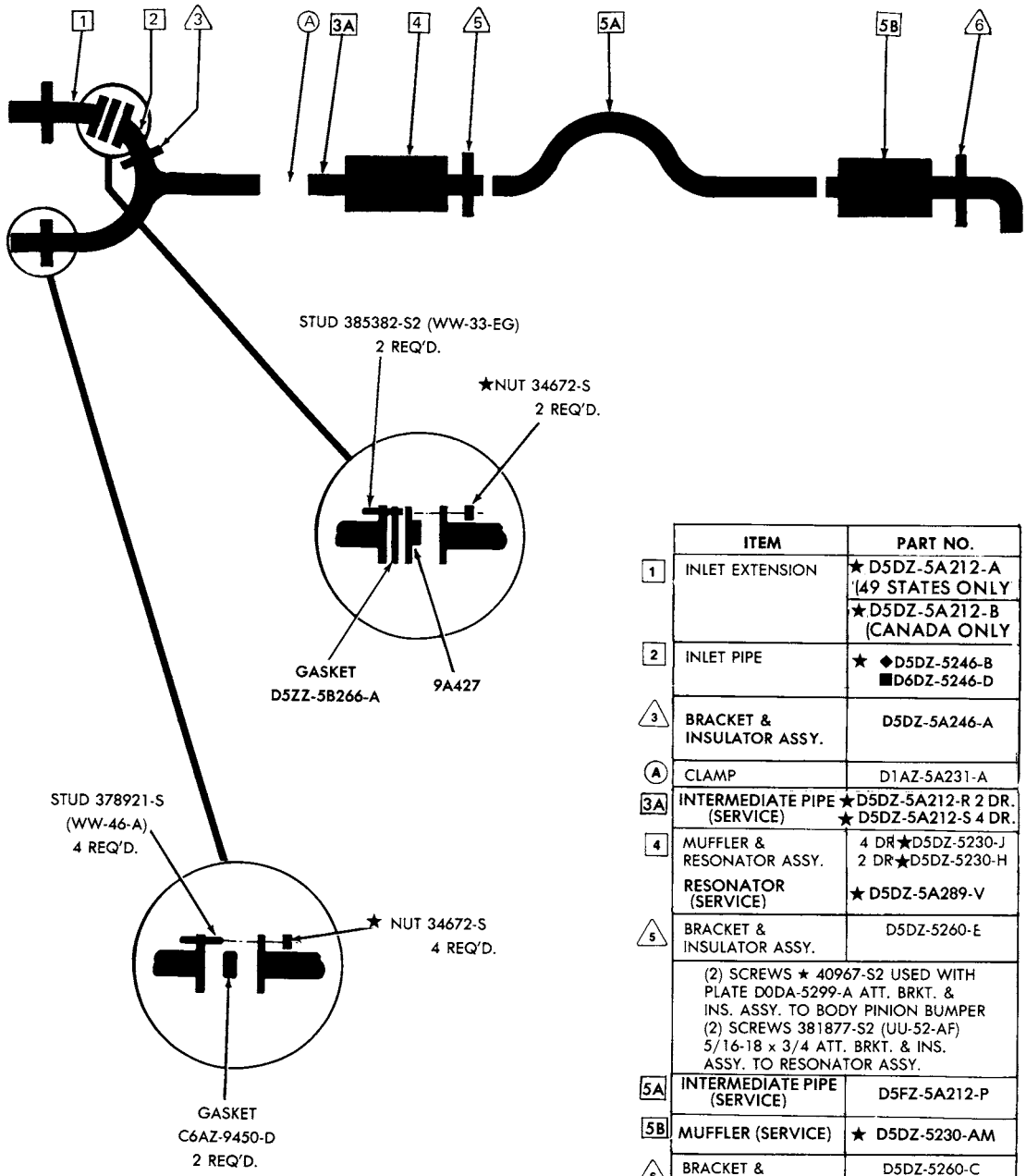

	ITEM	PART NO.
1	INLET EXTENSION	★ D5DZ-5A212-A (49 STATES ONLY
		★ D5DZ-5A212-B (CANADA ONLY
2	INLET PIPE	★ ◆D5DZ-5246-B ■D6DZ-5246-D
3	BRACKET & INSULATOR ASSY.	D5DZ-5A246-A
A	CLAMP	D1AZ-5A231-A
3A	INTERMEDIATE PIPE (SERVICE)	★D5DZ-5A212-R 2 DR. ★ D5DZ-5A212-S 4 DR.
4	MUFFLER & RESONATOR ASSY.	4 DR★D5DZ-5230-J 2 DR★D5DZ-5230-H
	RESONATOR (SERVICE)	★ D5DZ-5A289-V
5	BRACKET & INSULATOR ASSY.	D5DZ-5260-E
	(2) SCREWS ★ 40967-S2 USED WITH PLATE D0DA-5299-A ATT. BRKT. & INS. ASSY. TO BODY PINION BUMPER (2) SCREWS 381877-S2 (UU-52-AF) 5/16-18 x 3/4 ATT. BRKT. & INS. ASSY. TO RESONATOR ASSY.	
5A	INTERMEDIATE PIPE (SERVICE)	D5FZ-5A212-P
5B	MUFFLER (SERVICE)	★ D5DZ-5230-AM
6	BRACKET & INSULATOR ASSY.	D5DZ-5260-C
	(4) SCREWS 381877-S2 (UU-52-AF) 5/16-18 x 3/4 ATT. BRKT. & INS. ASSY. TO MUFFLER & UNDERBODY	

EP-23

◆ "BEFORE 6/2/75"
■ "FROM 6/2/75"

COPYRIGHT © 1986 — FORD MOTOR COMPANY — DEARBORN, MICHIGAN

1975 COMET — 8 CYL. 302-2/B SEDAN (ALL — WITH CONVERTER)

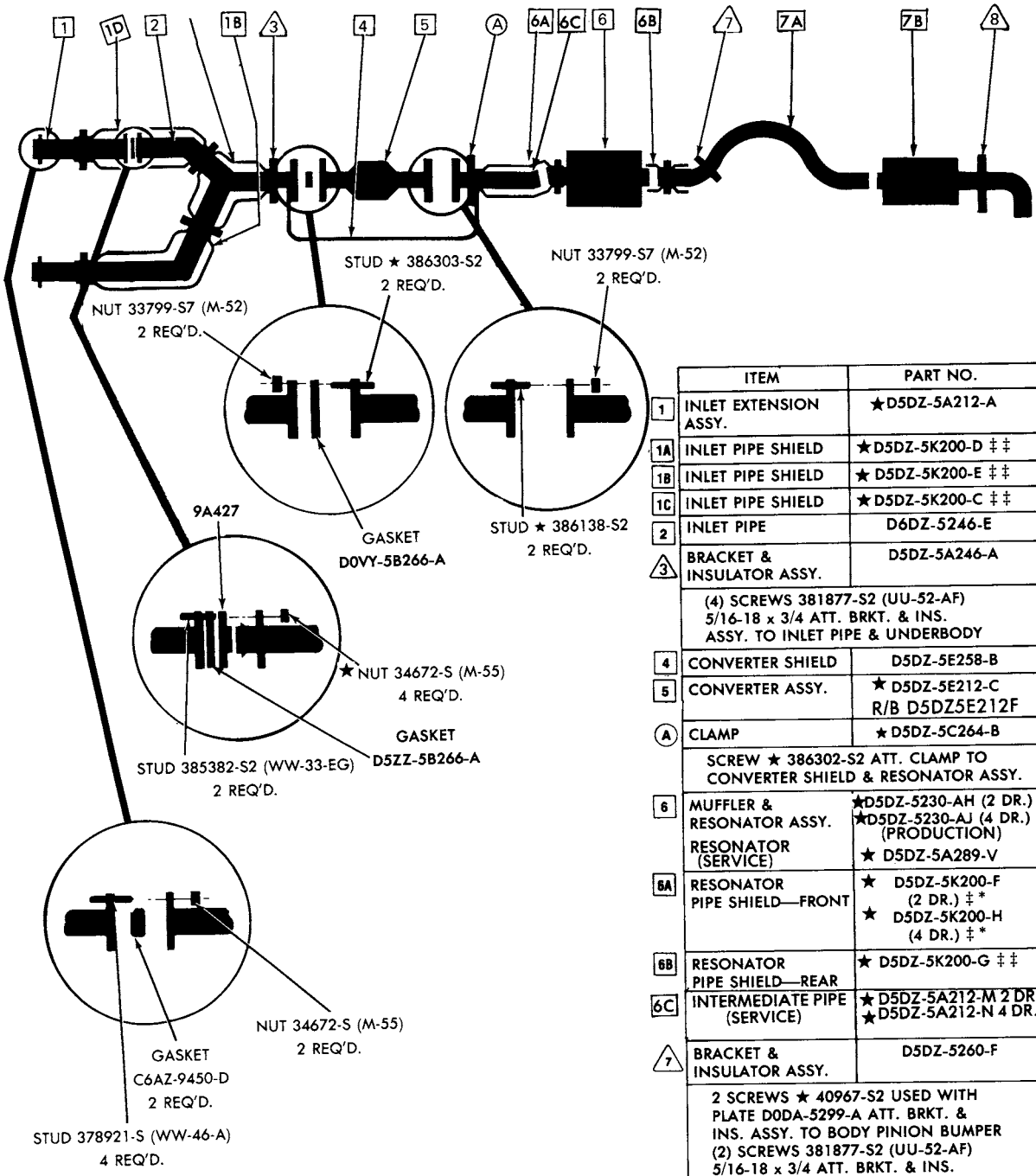

	ITEM	PART NO.
1	INLET EXTENSION ASSY.	★D5DZ-5A212-A
1A	INLET PIPE SHIELD	★D5DZ-5K200-D ‡‡
1B	INLET PIPE SHIELD	★ D5DZ-5K200-E ‡‡
1C	INLET PIPE SHIELD	★D5DZ-5K200-C ‡‡
2	INLET PIPE	D6DZ-5246-E
3	BRACKET & INSULATOR ASSY.	D5DZ-5A246-A
	(4) SCREWS 381877-S2 (UU-52-AF) 5/16-18 x 3/4 ATT. BRKT. & INS. ASSY. TO INLET PIPE & UNDERBODY	
4	CONVERTER SHIELD	D5DZ-5E258-B
5	CONVERTER ASSY.	★ D5DZ-5E212-C R/B D5DZ5E212F
A	CLAMP	★D5DZ-5C264-B
	SCREW ★ 386302-S2 ATT. CLAMP TO CONVERTER SHIELD & RESONATOR ASSY.	
6	MUFFLER & RESONATOR ASSY. RESONATOR (SERVICE)	★D5DZ-5230-AH (2 DR.) ★D5DZ-5230-AJ (4 DR.) (PRODUCTION) ★ D5DZ-5A289-V
6A	RESONATOR PIPE SHIELD—FRONT	★ D5DZ-5K200-F (2 DR.) ‡* ★ D5DZ-5K200-H (4 DR.) ‡*
6B	RESONATOR PIPE SHIELD—REAR	★ D5DZ-5K200-G ‡‡
6C	INTERMEDIATE PIPE (SERVICE)	★ D5DZ-5A212-M 2 DR. ★D5DZ-5A212-N 4 DR.
7	BRACKET & INSULATOR ASSY.	D5DZ-5260-F
	2 SCREWS ★ 40967-S2 USED WITH PLATE D0DA-5299-A ATT. BRKT. & INS. ASSY. TO BODY PINION BUMPER (2) SCREWS 381877-S2 (UU-52-AF) 5/16-18 x 3/4 ATT. BRKT. & INS. ASSY. TO RESONATOR	
7A	CONNECTING PIPE (SERVICE)	D5DZ-5A212-P
7B	MUFFLER (SERVICE)	★D5DZ-5230-AM
8	BRACKET & INSULATOR ASSY.	D5DZ-5260-C
	(4) SCREWS 381877-S2 (UU-52-AF) 5/16-18 x 3/4 ATT. BRKT. & INS. ASSY. TO MUFFLER & UNDERBODY	

* REQUIRES (1) 2¼" CLAMP D5AZ-5A231-B
‡ REQUIRES (1) 2" CLAMP D5AZ-5A231-A
‡‡REQUIRES (2) 2" CLAMP

EXHAUST PARTS MODEL INDEX

How to use this index -

1. Find the car model desired.
2. Find the line which lists the engine displacement needed.
3. Select the correct page and turn to that page.

For stamped number cross-reference information and for size information, refer to Section 50, page 3.

1976

CYL.	C.I.D.	MODEL	CONVERTER USAGE ■	TYPE ▲	SECTION	PAGE	ILLUS. NO. ♦
		A (MERCURY)					
8	351M-2/B 400 2/B	(53,65)	TC	S	52.76	1	EG-87
		(53,65)	NC	S	52.76	2	EG-88
	400-2/B	(71)	TC	S	52.76	3	EG-90
		(71)	NC	S	52.76	4	EG-91
	460-4/B	(53,65)	TC	D	52.76	5	EG-93
		(53,65)	NC	D	52.76	6	EG-96
		(71)	TC	D	52.76	10	EG-95
		(71)	NC	D	52.76	11	EG-97
	460-P/C	(53,65)	TC	D	52.76	7	EG-119
		(53,65)	OC	D	52.76	8	EG-92
		(53,65)	NC	D	52.76	9	EG-120
		C (MONTEGO)					
8	351W-2/B	(53,65)	OC	S	52.76	1	ED-136
	351M-2/B 400-2/B	(53,65)	TC	S	52.76	2	ED-137
		(53,65)	NC	S	52.76	3	ED-138
		(71)	TC	S	52.76	4	ED-141
		(71)	NC	S	52.76	5	ED-140
	460-P/C	(53,65)	OC	D	52.76	6	ED-142
	460-4/B	(53,65)	TC	D	52.76	7	ED-144
		(53,65)	NC	D	52.76	8	ED-143
		(71)	NC	D	52.76	10	ED-145
		(71)	TC	D	52.76	9	ED-146
		D (LINCOLN)					
8	460-4/B	All	TC	S	52.76	1	EJ-17
		All	NC	S	52.76	2	EJ-18
		F (COUGAR)					
8	351W-2/B	All	OC	S	52.76	1	EB-35
	351M-2/B 400-2/B	All	TC	S	52.76	2	EB-36
		All	NC	S	52.76	3	EB-37
	460-4/B	All	TC	D	52.76	4	EB-40
		All	NC	D	52.76	5	EB-39

♦ For control purposes only ▲ S - Single D - Dual
■ OC - one converter TC - two converter NC - non-converter

COPYRIGHT © 1986 — FORD MOTOR COMPANY — DEARBORN, MICHIGAN

EXHAUST PARTS MODEL INDEX cont'd.

1976

CYL.	C.I.D.	MODEL	CONVERTER USAGE ■	TYPE ▲	SECTION	PAGE	ILLUS. NO. ♦
		G (MONARCH)					
6	200-1/B	All	OC	S	52.76	1	EV-8
6	250-1/B	All	OC	S	52.76	1	EV-8
		All	NC	S	52.76	2	EV-9
8	302-2/B	All	OC	S	52.76	3	EV-10
		All	NC	S	52.76	4	EV-11
	351-2/B	All	OC	S	52.76	5	EV-13
		All	NC	S	52.76	6	EV-12
		J (CAPRI)					
4	140-2/B (2300 cc)	"Before 8/30/76"	NC-OC	S	52.76	1	EM-14
		"From 8/30/76"	OC	S	52.76	2	EM-16
6	171-2/B (2800 cc)	"Before 8/30/76"	TC	D	52.76	3	EM-15
		"From 8/30/76"	OC	D	52.76	4	EM-17
		K (MARK IV)					
8	460-4/B	All	TC	S	52.76	1	EK-12
		All	NC	S	52.76	2	EK-13
		All	TC	D	52.76	3	EK-14
		L (BOBCAT)					
4	140-2/B (2300 cc)	(62,64)	OC	S	52.76	1	ET-16
		(62,64)	NC	S	52.76	2	ET-15
		(73)	OC	S	52.76	3	ET-18
		(73)	NC	S	52.76	4	ET-17
6	171-2/B (2800 cc)	(62,64)	TC	S	52.76	5	ET-20
		(62,64)	TC	D	52.76	6	ET-23
		(62,64)	NC	D	52.76	7	ET-19
		(73)	TC	S	52.76	8	ET-21
		(73)	TC	D	52.76	9	ET-24
		(73)	NC	D	52.76	10	ET-22
		P (COMET)					
6	200-1/B	All	OC	S	52.76	1	EP-26
	250-2/B	All	NC	S	52.76	2	EP-27
8	302-2/B	All	OC	S	52.76	4	EP-28
		All	NC	S	52.76	3	EP-29
		Y (METEOR) - refer to **A (MERCURY)**					

♦ For control purposes only

▲ S - Single D - Dual

■ OC - one converter TC - two converter NC - non-converter

1976 MERCURY — 351M-2/B & 400-2/B SEDAN (TWO CONVERTER)

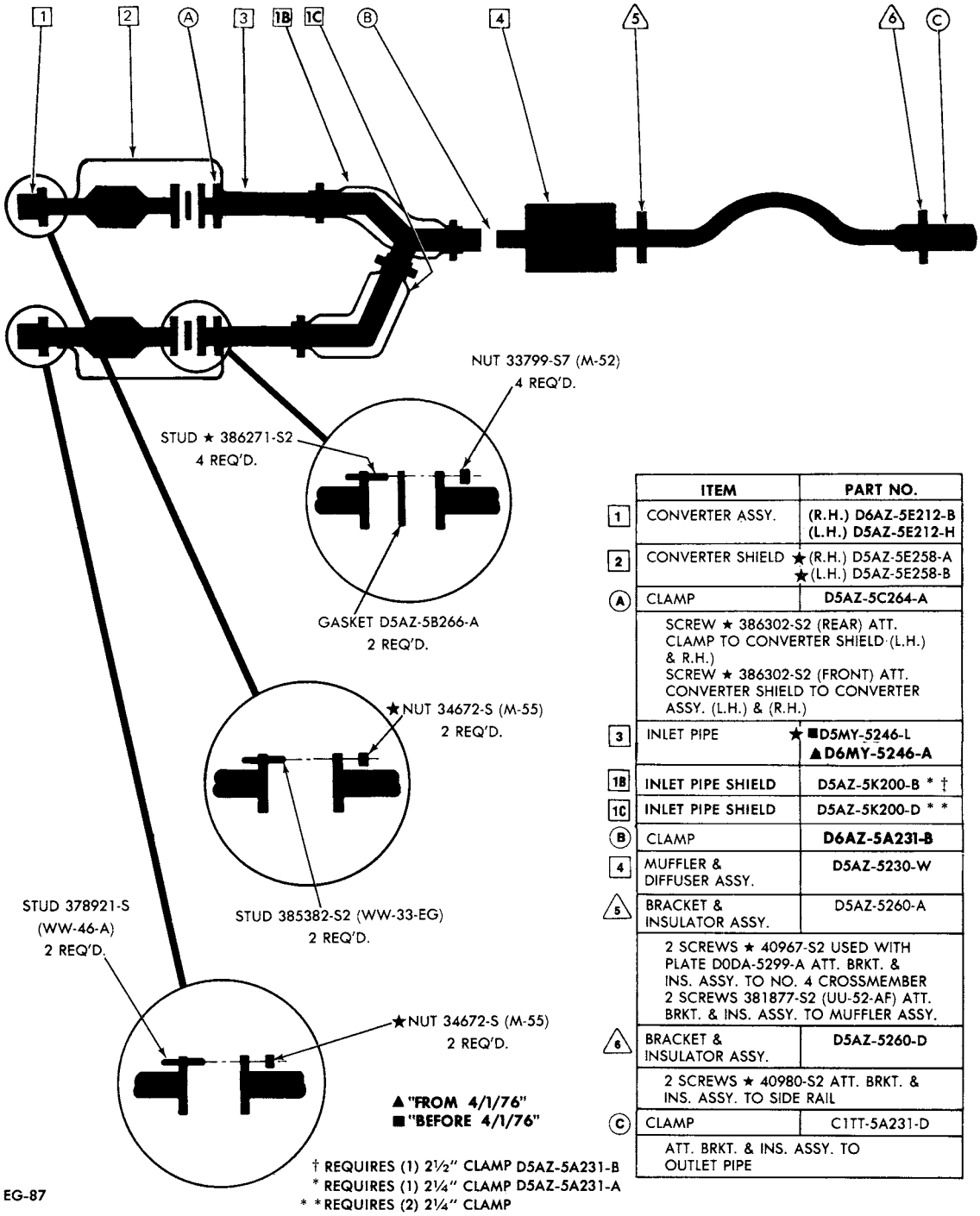

	ITEM	PART NO.
1	CONVERTER ASSY.	(R.H.) D6AZ-5E212-B (L.H.) D5AZ-5E212-H
2	CONVERTER SHIELD	★(R.H.) D5AZ-5E258-A ★(L.H.) D5AZ-5E258-B
A	CLAMP	D5AZ-5C264-A
	SCREW ★ 386302-S2 (REAR) ATT. CLAMP TO CONVERTER SHIELD (L.H.) & R.H.) SCREW ★ 386302-S2 (FRONT) ATT. CONVERTER SHIELD TO CONVERTER ASSY. (L.H.) & (R.H.)	
3	INLET PIPE	★ ■D5MY-5246-L ▲D6MY-5246-A
1B	INLET PIPE SHIELD	D5AZ-5K200-B * †
1C	INLET PIPE SHIELD	D5AZ-5K200-D * *
B	CLAMP	D6AZ-5A231-B
4	MUFFLER & DIFFUSER ASSY.	D5AZ-5230-W
5	BRACKET & INSULATOR ASSY.	D5AZ-5260-A
	2 SCREWS ★ 40967-S2 USED WITH PLATE D0DA-5299-A ATT. BRKT. & INS. ASSY. TO NO. 4 CROSSMEMBER 2 SCREWS 381877-S2 (UU-52-AF) ATT. BRKT. & INS. ASSY. TO MUFFLER ASSY.	
6	BRACKET & INSULATOR ASSY.	D5AZ-5260-D
	2 SCREWS ★ 40980-S2 ATT. BRKT. & INS. ASSY. TO SIDE RAIL	
C	CLAMP	C1TT-5A231-D
	ATT. BRKT. & INS. ASSY. TO OUTLET PIPE	

COPYRIGHT © 1986 — FORD MOTOR COMPANY — DEARBORN, MICHIGAN

1976 MERCURY—351M-2/B & 400-2/B SEDAN (NON CONVERTER)

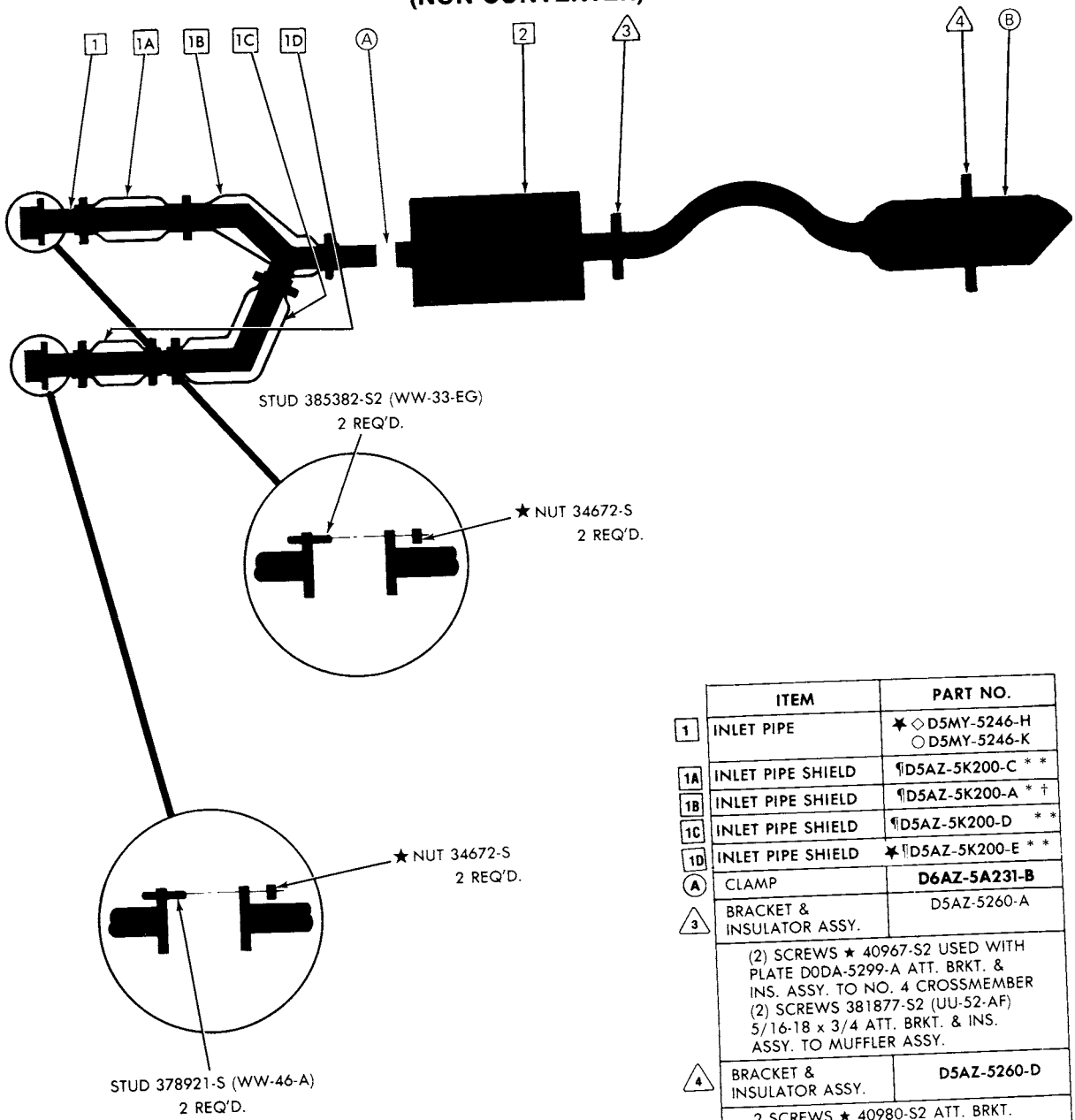

	ITEM	PART NO.
1	INLET PIPE	★ ◇ D5MY-5246-H ○ D5MY-5246-K
1A	INLET PIPE SHIELD	¶D5AZ-5K200-C * *
1B	INLET PIPE SHIELD	¶D5AZ-5K200-A * †
1C	INLET PIPE SHIELD	¶D5AZ-5K200-D * *
1D	INLET PIPE SHIELD	★ ¶D5AZ-5K200-E * *
A	CLAMP	**D6AZ-5A231-B**
3	BRACKET & INSULATOR ASSY.	D5AZ-5260-A
	(2) SCREWS ★ 40967-S2 USED WITH PLATE D0DA-5299-A ATT. BRKT. & INS. ASSY. TO NO. 4 CROSSMEMBER (2) SCREWS 381877-S2 (UU-52-AF) 5/16-18 x 3/4 ATT. BRKT. & INS. ASSY. TO MUFFLER ASSY.	
4	BRACKET & INSULATOR ASSY.	**D5AZ-5260-D**
	2 SCREWS ★ 40980-S2 ATT. BRKT. & INS. ASSY. TO SIDE RAIL	
2	MUFFLER & DIFFUSER ASSY.	**D5AZ-5230-W**
B	CLAMP	C1TT-5A231-D

¶ 400 ENG. ONLY IF REQUIRED
* REQUIRES (1) 2¼" CLAMP D5AZ-5A231-B
* * REQUIRES (2) 2¼" CLAMP
† REQUIRES (1) 2½" CLAMP D5SZ-5A231-A
◇ NON-SHIELDED PIPE
○ SHIELDED PIPE

EG-88

1976 MERCURY—400-2/B STATION WAGON (TWO CONVERTER)

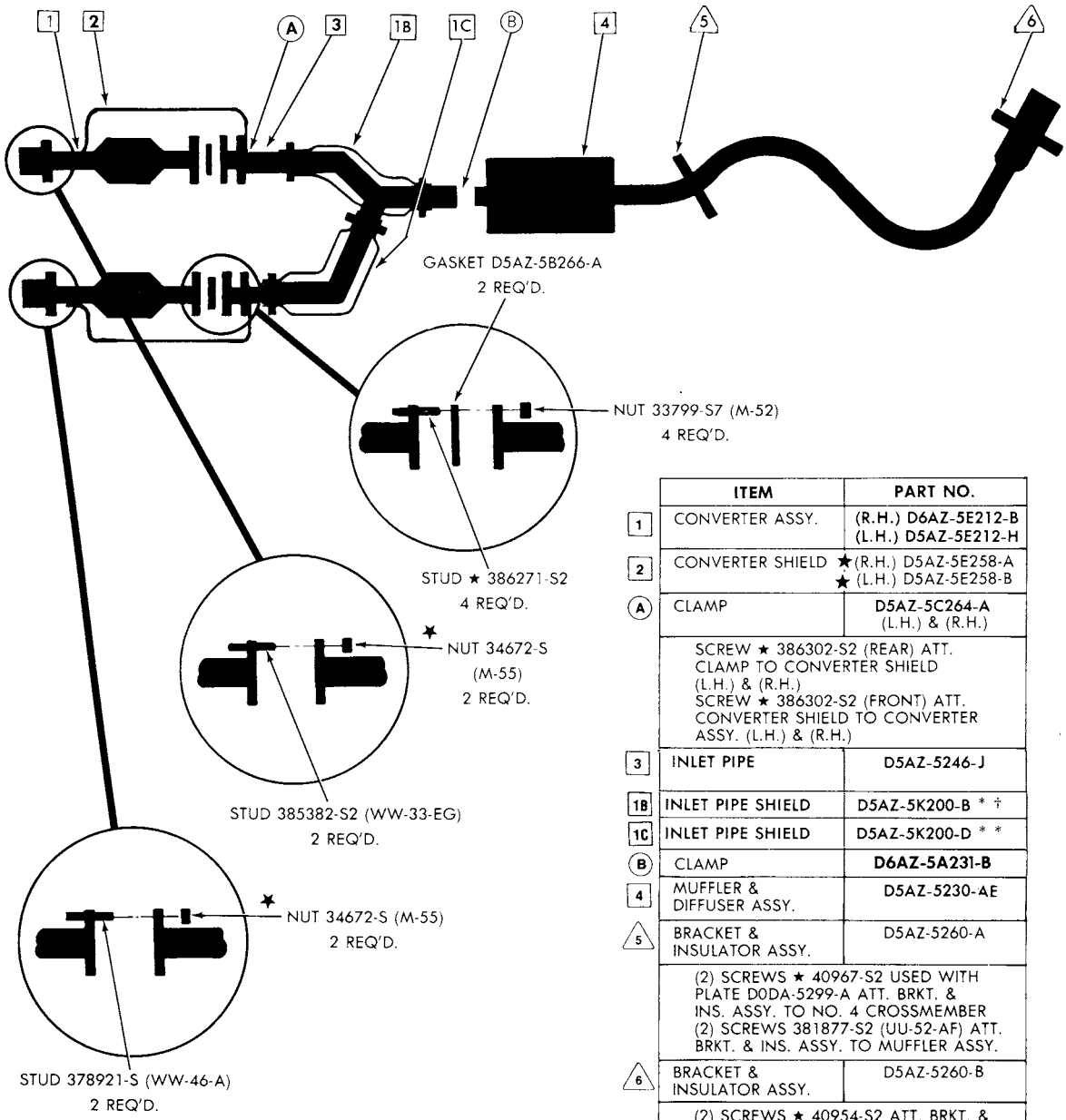

	ITEM	PART NO.
1	CONVERTER ASSY.	(R.H.) D6AZ-5E212-B (L.H.) D5AZ-5E212-H
2	CONVERTER SHIELD	★(R.H.) D5AZ-5E258-A ★(L.H.) D5AZ-5E258-B
A	CLAMP	D5AZ-5C264-A (L.H.) & (R.H.)
	SCREW ★ 386302-S2 (REAR) ATT. CLAMP TO CONVERTER SHIELD (L.H.) & (R.H.) SCREW ★ 386302-S2 (FRONT) ATT. CONVERTER SHIELD TO CONVERTER ASSY. (L.H.) & (R.H.)	
3	INLET PIPE	D5AZ-5246-J
1B	INLET PIPE SHIELD	D5AZ-5K200-B * †
1C	INLET PIPE SHIELD	D5AZ-5K200-D * *
B	CLAMP	D6AZ-5A231-B
4	MUFFLER & DIFFUSER ASSY.	D5AZ-5230-AE
5	BRACKET & INSULATOR ASSY.	D5AZ-5260-A
	(2) SCREWS ★ 40967-S2 USED WITH PLATE D0DA-5299-A ATT. BRKT. & INS. ASSY. TO NO. 4 CROSSMEMBER (2) SCREWS 381877-S2 (UU-52-AF) ATT. BRKT. & INS. ASSY. TO MUFFLER ASSY.	
6	BRACKET & INSULATOR ASSY.	D5AZ-5260-B
	(2) SCREWS ★ 40954-S2 ATT. BRKT. & INS. ASSY. TO SIDE RAIL 2 SCREWS ★ 40975-S2 ATT. BRKT. & INS. ASSY. TO OUTLET PIPE	

* * REQUIRES (2) 2¼" CLAMP
* REQUIRES (1) 2¼" CLAMP D5AZ-5A231-B
† REQUIRES (1) 2½" CLAMP D5SZ-5A231-A

EG-90

COPYRIGHT © 1986 — FORD MOTOR COMPANY — DEARBORN, MICHIGAN

1976 MERCURY—8 CYL. 400-2/B STATION WAGON (NON CONVERTER)

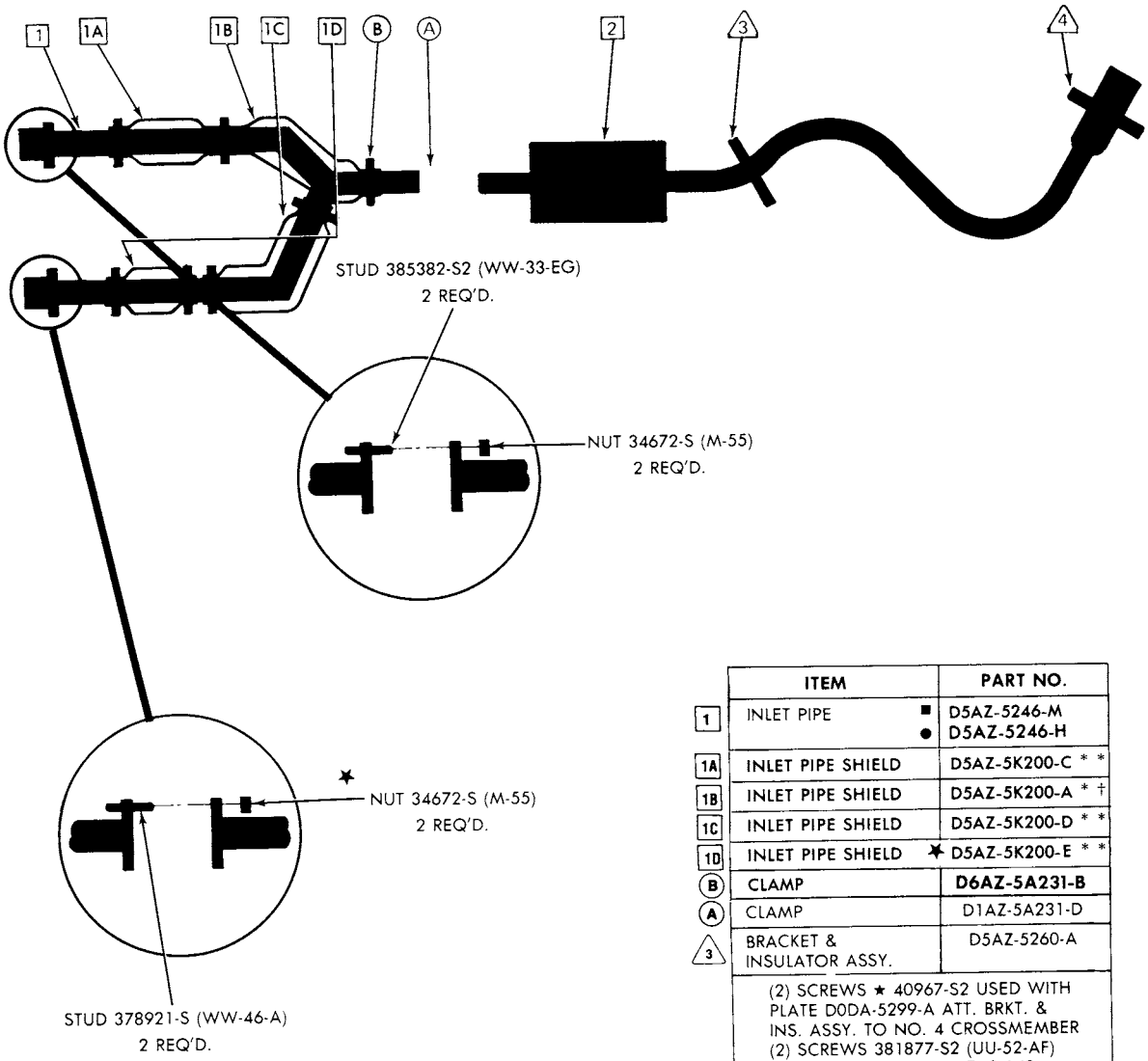

	ITEM	PART NO.
1	INLET PIPE ■ ●	D5AZ-5246-M D5AZ-5246-H
1A	INLET PIPE SHIELD	D5AZ-5K200-C * *
1B	INLET PIPE SHIELD	D5AZ-5K200-A * †
1C	INLET PIPE SHIELD	D5AZ-5K200-D * *
1D	INLET PIPE SHIELD	★ D5AZ-5K200-E * *
B	CLAMP	D6AZ-5A231-B
A	CLAMP	D1AZ-5A231-D
3	BRACKET & INSULATOR ASSY.	D5AZ-5260-A
	(2) SCREWS ★ 40967-S2 USED WITH PLATE D0DA-5299-A ATT. BRKT. & INS. ASSY. TO NO. 4 CROSSMEMBER (2) SCREWS 381877-S2 (UU-52-AF) 5/16-18 x 3/4 ATT. BRKT. & INS. ASSY. TO MUFFLER ASSY.	
4	BRACKET & INSULATOR ASSY.	D5AZ-5260-B
	(2) SCREWS ★ 40954-S2 ATT. BRKT. & INS. ASSY. TO SIDE RAIL (2) SCREWS ★ 40975-S2 USED WITH PLATE D3AA-5299-AB ATT. BRKT. & INS. ASSY. TO OUTLET PIPE	
2	MUFFLER & DIFFUSER ASSY.	D5AZ-5230-AE

■ "BEFORE 2/2/76"
● "FROM 2/2/76"
* * REQUIRES (2) 2¼" CLAMP
* REQUIRES (1) 2¼" CLAMP D5AZ-5A231-B
† REQUIRES (1) 2½" CLAMP D5SZ-5A231-A

1976 MERCURY—460-4/B SEDAN (TWO CONVERTER)

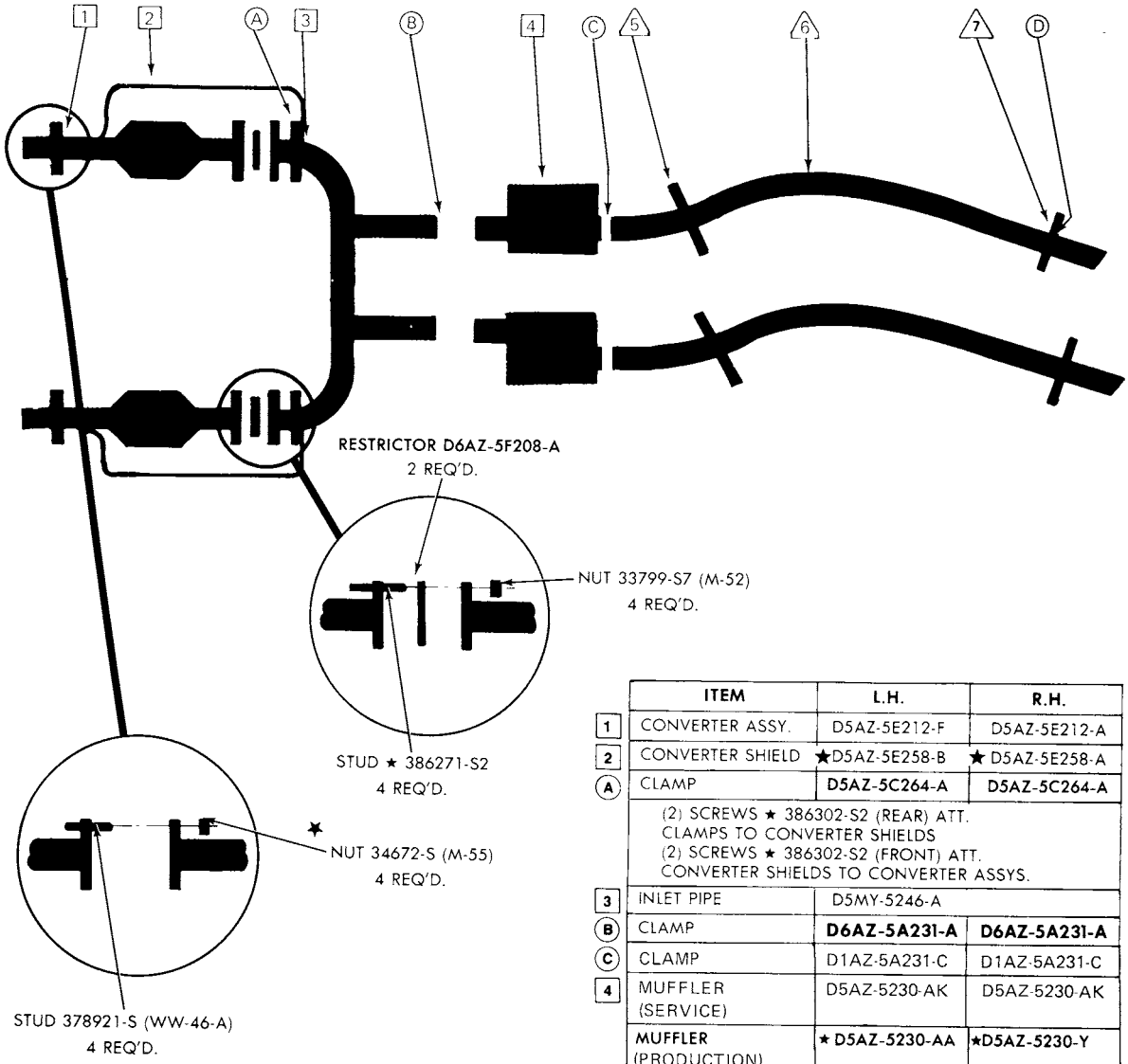

	ITEM	L.H.	R.H.
1	CONVERTER ASSY.	D5AZ-5E212-F	D5AZ-5E212-A
2	CONVERTER SHIELD	★D5AZ-5E258-B	★ D5AZ-5E258-A
A	CLAMP	**D5AZ-5C264-A**	**D5AZ-5C264-A**
	(2) SCREWS ★ 386302-S2 (REAR) ATT. CLAMPS TO CONVERTER SHIELDS (2) SCREWS ★ 386302-S2 (FRONT) ATT. CONVERTER SHIELDS TO CONVERTER ASSYS.		
3	INLET PIPE	D5MY-5246-A	
B	CLAMP	**D6AZ-5A231-A**	**D6AZ-5A231-A**
C	CLAMP	D1AZ-5A231-C	D1AZ-5A231-C
4	MUFFLER (SERVICE)	D5AZ-5230-AK	D5AZ-5230-AK
	MUFFLER (PRODUCTION)	**★ D5AZ-5230-AA**	**★D5AZ-5230-Y**
5	BRACKET & INSULATOR ASSY.	D5AZ-5260-A	D5AZ-5260-A
	(4) SCREWS ★ 40967-S2 USED WITH PLATE D0DA-5299-A 2 REQ'D. (L.H. & R.H.) ATT. BRKT. & INS. ASSY. TO NO. 4 CROSSMEMBER (2) SCREWS 381877-S2 (UU-52-AF) ATT. BKRT. & INS. ASSY. TO MUFFLER ASSY.		
6	OUTLET PIPE (SERVICE)	D5AZ-5255-R	D5AZ-5255-P
7	BRACKET & INSULATOR ASSY.	**D5AZ-5260-E**	**D5AZ-5260-D**
	(4) SCREWS ★ 40980-S2 ATT. BKRT. & INS. ASSY. TO SIDE RAILS		
D	CLAMP	**D6AZ-5A231-A**	**D6AZ-5A231-A**

EG-93

COPYRIGHT © 1986 — FORD MOTOR COMPANY — DEARBORN, MICHIGAN

1976 MERCURY—460-4/B SEDAN (NON CONVERTER)

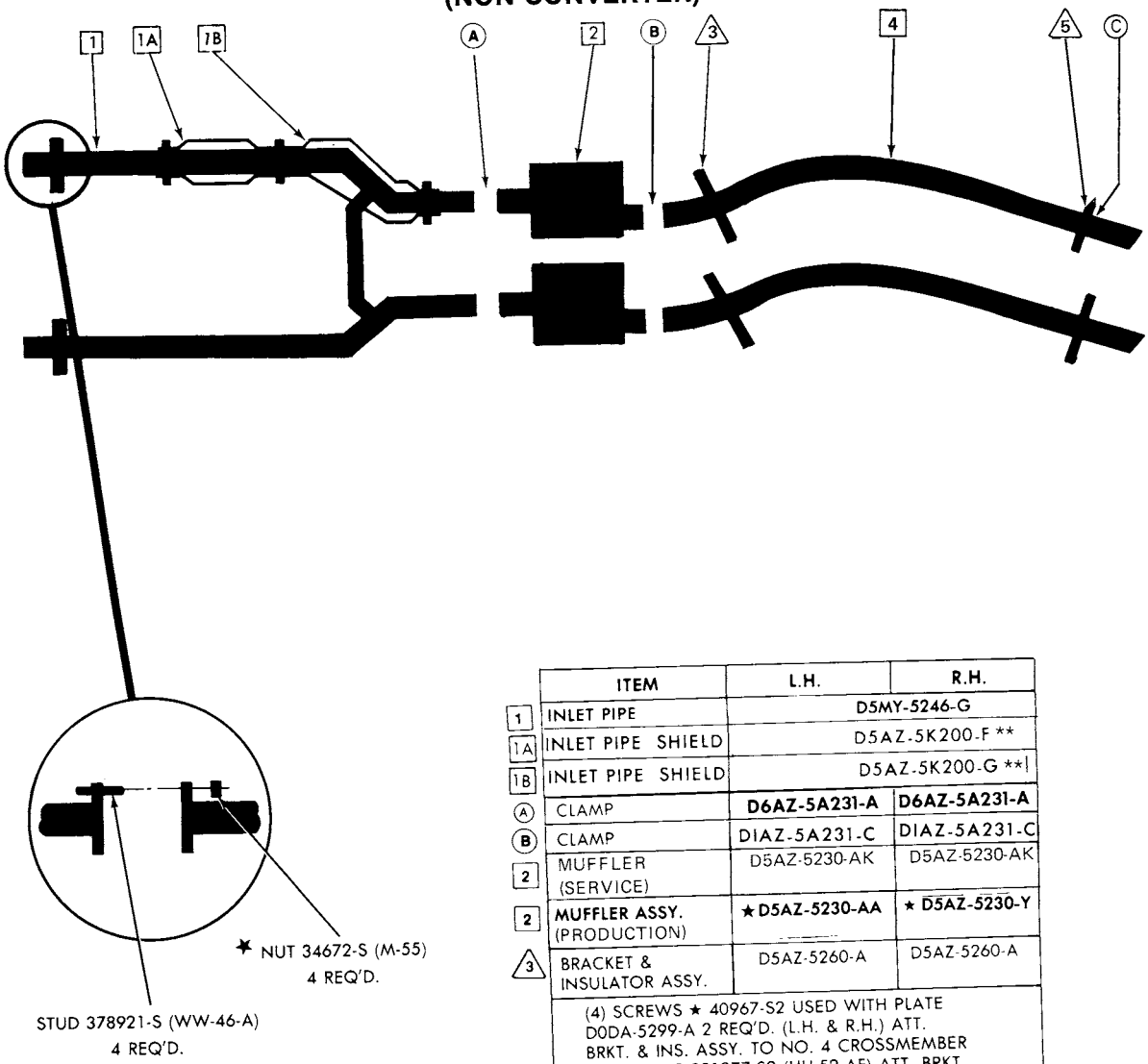

	ITEM	L.H.	R.H.
1	INLET PIPE	D5MY-5246-G	
1A	INLET PIPE SHIELD	D5AZ-5K200-F **	
1B	INLET PIPE SHIELD	D5AZ-5K200-G **	
A	CLAMP	**D6AZ-5A231-A**	**D6AZ-5A231-A**
B	CLAMP	DIAZ-5A231-C	DIAZ-5A231-C
2	MUFFLER (SERVICE)	D5AZ-5230-AK	D5AZ-5230-AK
2	**MUFFLER ASSY.** (PRODUCTION)	**★ D5AZ-5230-AA**	**★ D5AZ-5230-Y**
3	BRACKET & INSULATOR ASSY.	D5AZ-5260-A	D5AZ-5260-A
	(4) SCREWS ★ 40967-S2 USED WITH PLATE D0DA-5299-A 2 REQ'D. (L.H. & R.H.) ATT. BRKT. & INS. ASSY. TO NO. 4 CROSSMEMBER (2) SCREWS 381877-S2 (UU-52-AF) ATT. BRKT. & INS. ASSY. TO MUFFLER ASSY.		
4	OUTLET PIPE (SERVICE)	D5AZ-5255-R	D5AZ-5255-P
5	BRACKET & INSULATOR ASSY.	**■D5AZ-5260-E ▲D5AZ-5260-G**	**■D5AZ-5260-D ▲D5AZ-5260-H**
	(4) SCREWS ★ 40980-S2 ATT. BRKT. & INS. ASSY. TO SIDE RAILS		
C	CLAMP	D6AZ-5A231-A	D6AZ-5A231-A

** REQUIRES (2) 2¼" CLAMP D5AZ-5A231-B

1976 MERCURY— 460-P/C SEDAN (TWO CONVERTER)

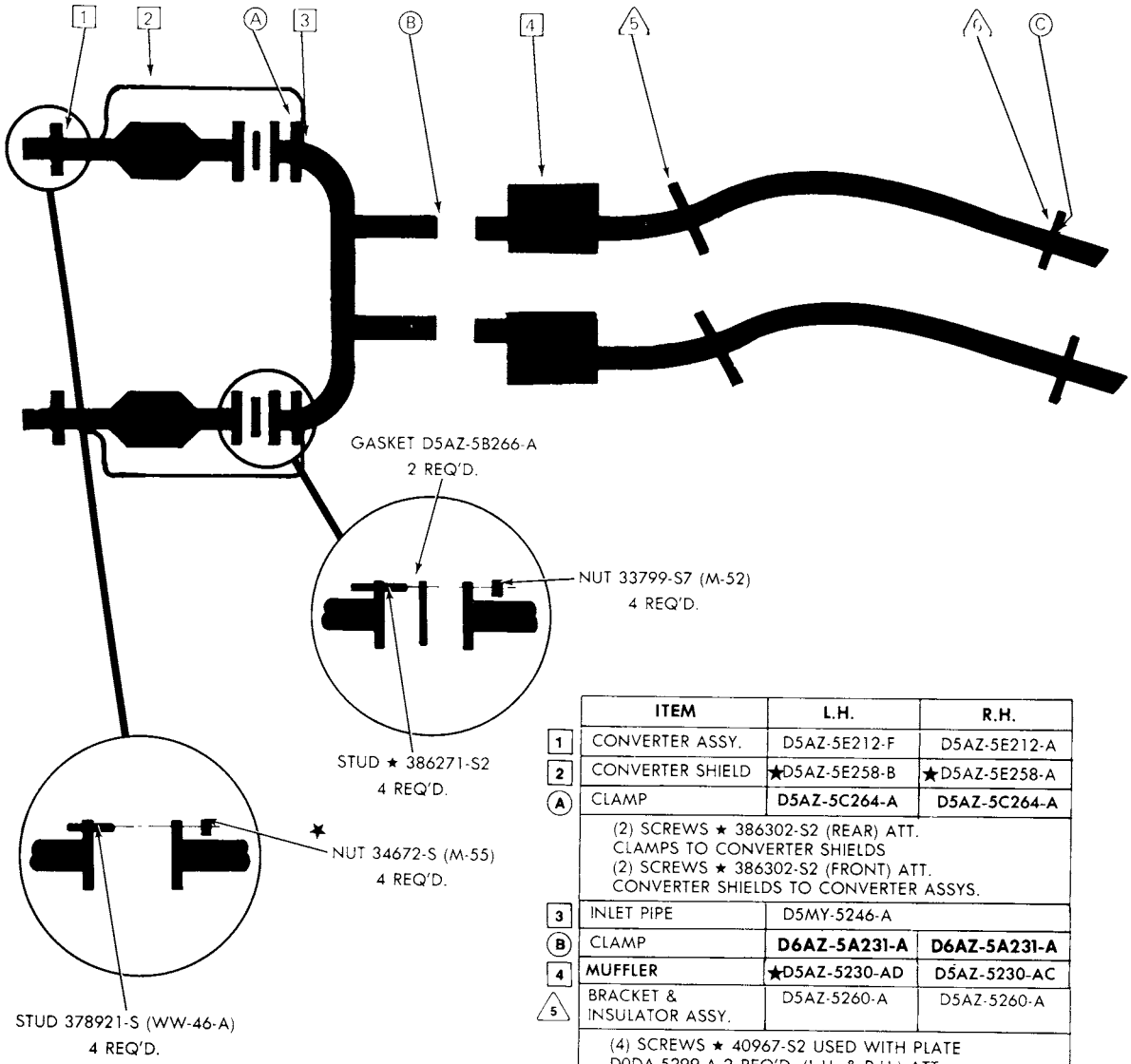

	ITEM	L.H.	R.H.
1	CONVERTER ASSY.	D5AZ-5E212-F	D5AZ-5E212-A
2	CONVERTER SHIELD	★D5AZ-5E258-B	★D5AZ-5E258-A
A	CLAMP	**D5AZ-5C264-A**	**D5AZ-5C264-A**
	(2) SCREWS ★ 386302-S2 (REAR) ATT. CLAMPS TO CONVERTER SHIELDS (2) SCREWS ★ 386302-S2 (FRONT) ATT. CONVERTER SHIELDS TO CONVERTER ASSYS.		
3	INLET PIPE	D5MY-5246-A	
B	CLAMP	**D6AZ-5A231-A**	**D6AZ-5A231-A**
4	MUFFLER	★D5AZ-5230-AD	D5AZ-5230-AC
5	BRACKET & INSULATOR ASSY.	D5AZ-5260-A	D5AZ-5260-A
	(4) SCREWS ★ 40967-S2 USED WITH PLATE D0DA-5299-A 2 REQ'D. (L.H. & R.H.) ATT. BRKT. & INS. ASSY. TO NO. 4 CROSSMEMBER (2) SCREWS 381877-S2 (UU-52-AF) ATT. BKRT. & INS. ASSY. TO MUFFLER ASSY.		
6	BRACKET & INSULATOR ASSY.	**D5AZ-5260-E**	**D5AZ-5260-D**
	(4) SCREWS ★ 40980-S2 ATT. BKRT. & INS. ASSY. TO SIDE RAILS		
C	CLAMP	**D6AZ-5A231-A**	**D6AZ-5A231-A**

EG-119

COPYRIGHT © 1986 — FORD MOTOR COMPANY — DEARBORN, MICHIGAN

1976 MERCURY— 460-P/C SEDAN (ONE CONVERTER)

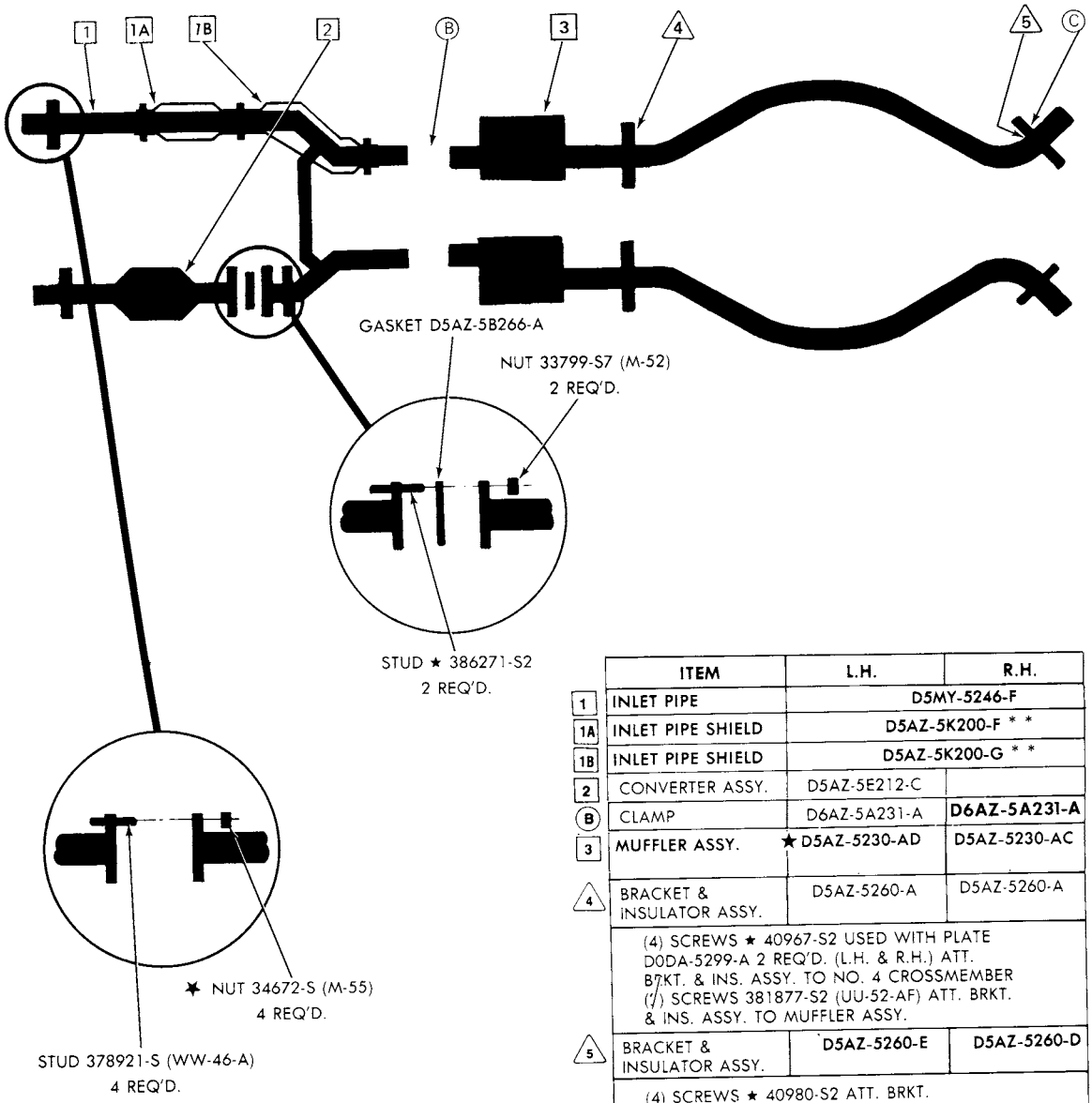

	ITEM	L.H.	R.H.
1	INLET PIPE	D5MY-5246-F	
1A	INLET PIPE SHIELD	D5AZ-5K200-F * *	
1B	INLET PIPE SHIELD	D5AZ-5K200-G * *	
2	CONVERTER ASSY.	D5AZ-5E212-C	
B	CLAMP	D6AZ-5A231-A	D6AZ-5A231-A
3	MUFFLER ASSY.	★ D5AZ-5230-AD	D5AZ-5230-AC
4	BRACKET & INSULATOR ASSY.	D5AZ-5260-A	D5AZ-5260-A
	(4) SCREWS ★ 40967-S2 USED WITH PLATE D0DA-5299-A 2 REQ'D. (L.H. & R.H.) ATT. BRKT. & INS. ASSY. TO NO. 4 CROSSMEMBER (7) SCREWS 381877-S2 (UU-52-AF) ATT. BRKT. & INS. ASSY. TO MUFFLER ASSY.		
5	BRACKET & INSULATOR ASSY.	D5AZ-5260-E	D5AZ-5260-D
	(4) SCREWS ★ 40980-S2 ATT. BRKT. & INS. ASSY. TO SIDE RAILS		
C	CLAMP	D6AZ-5A231-A	D6AZ-5A231-A

* * REQUIRES (2) 2¼" CLAMP D5AZ-5A231-B

1976 MERCURY—460-P/C SEDAN (NON CONVERTER)

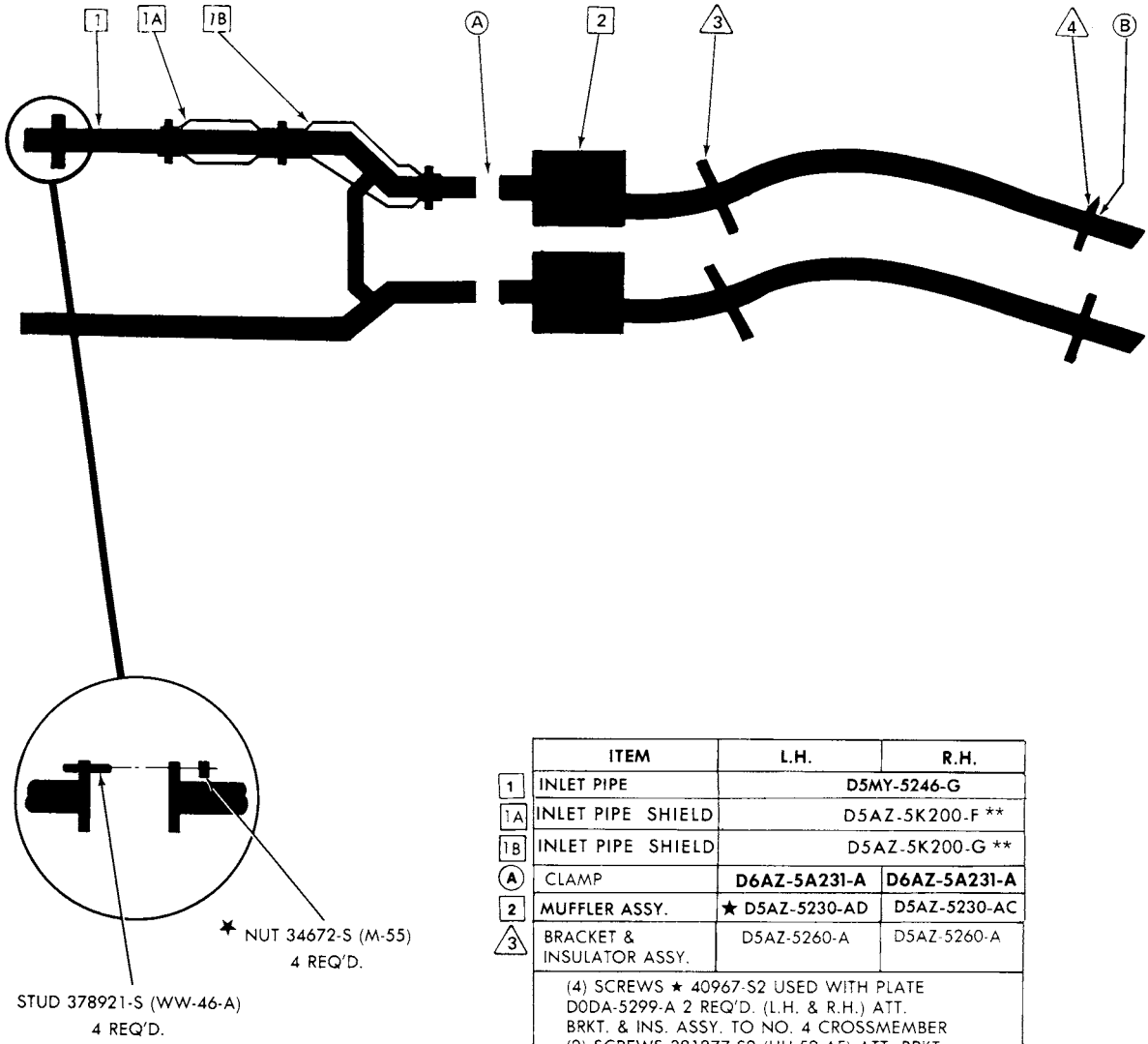

	ITEM	L.H.	R.H.
1	INLET PIPE	D5MY-5246-G	
1A	INLET PIPE SHIELD	D5AZ-5K200-F **	
1B	INLET PIPE SHIELD	D5AZ-5K200-G **	
A	CLAMP	D6AZ-5A231-A	D6AZ-5A231-A
2	MUFFLER ASSY.	★ D5AZ-5230-AD	D5AZ-5230-AC
3	BRACKET & INSULATOR ASSY.	D5AZ-5260-A	D5AZ-5260-A
	(4) SCREWS ★ 40967-S2 USED WITH PLATE D0DA-5299-A 2 REQ'D. (L.H. & R.H.) ATT. BRKT. & INS. ASSY. TO NO. 4 CROSSMEMBER (2) SCREWS 381877-S2 (UU-52-AF) ATT. BRKT. & INS. ASSY. TO MUFFLER ASSY.		
4	BRACKET & INSULATOR ASSY.	D5AZ-5260-E	D5AZ-5260-D
	(4) SCREWS ★ 40980-S2 ATT. BRKT. & INS. ASSY. TO SIDE RAILS		
B	CLAMP	D6AZ-5A231-A	D6AZ-5A231-A

** REQUIRES (2) 2¼" CLAMP D5AZ-5A231-B

EG-120

COPYRIGHT © 1986 — FORD MOTOR COMPANY — DEARBORN, MICHIGAN

1976 MERCURY—460-4/B STATION WAGON (TWO CONVERTER)

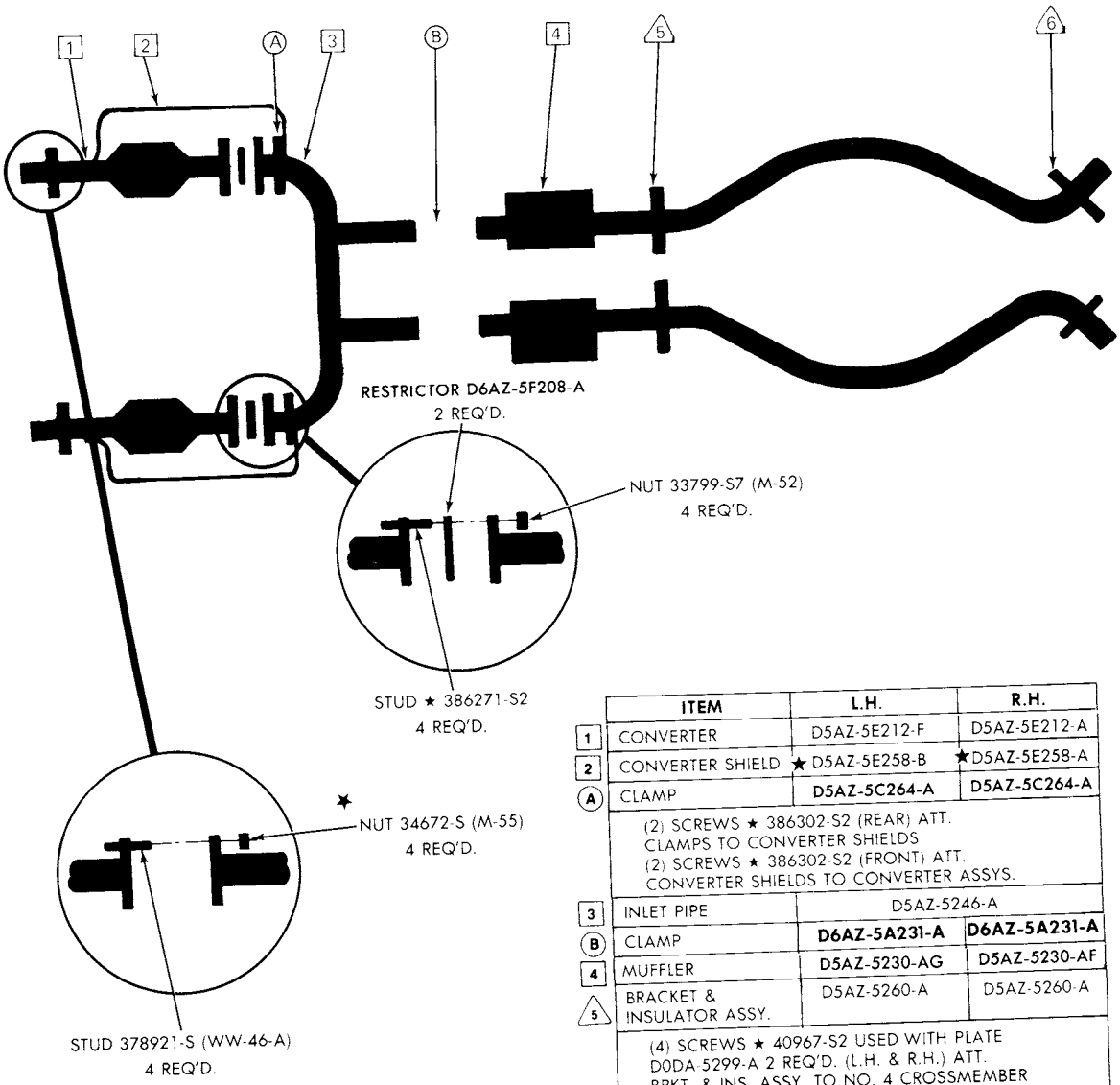

	ITEM	L.H.	R.H.
1	CONVERTER	D5AZ-5E212-F	D5AZ-5E212-A
2	CONVERTER SHIELD	★ D5AZ-5E258-B	★D5AZ-5E258-A
A	CLAMP	D5AZ-5C264-A	D5AZ-5C264-A
	(2) SCREWS ★ 386302-S2 (REAR) ATT. CLAMPS TO CONVERTER SHIELDS (2) SCREWS ★ 386302-S2 (FRONT) ATT. CONVERTER SHIELDS TO CONVERTER ASSYS.		
3	INLET PIPE	D5AZ-5246-A	
B	CLAMP	D6AZ-5A231-A	D6AZ-5A231-A
4	MUFFLER	D5AZ-5230-AG	D5AZ-5230-AF
5	BRACKET & INSULATOR ASSY.	D5AZ-5260-A	D5AZ-5260-A
	(4) SCREWS ★ 40967-S2 USED WITH PLATE D0DA-5299-A 2 REQ'D. (L.H. & R.H.) ATT. BRKT. & INS. ASSY. TO NO. 4 CROSSMEMBER (2) SCREWS 381877-S2 (UU-52-AF) ATT. BRKT. & INS. ASSY. TO MUFFLER ASSY.		
6	BRACKET & INSULATOR ASSY.	★D5AZ-5260-C	D5AZ-5260-B
	(4) SCREWS ★ 40954-S2 ATT. BKRT. & INS. ASSY. TO SIDE RAILS (4) SCREWS ★ 40975-S2 USED WITH 2 PLATES D3AA-5299-AB ATT. BRKT. & INS. ASSY. TO OUTLET PIPES		

1976 MERCURY–460-4V STATION WAGON (NON-CONVERTER)

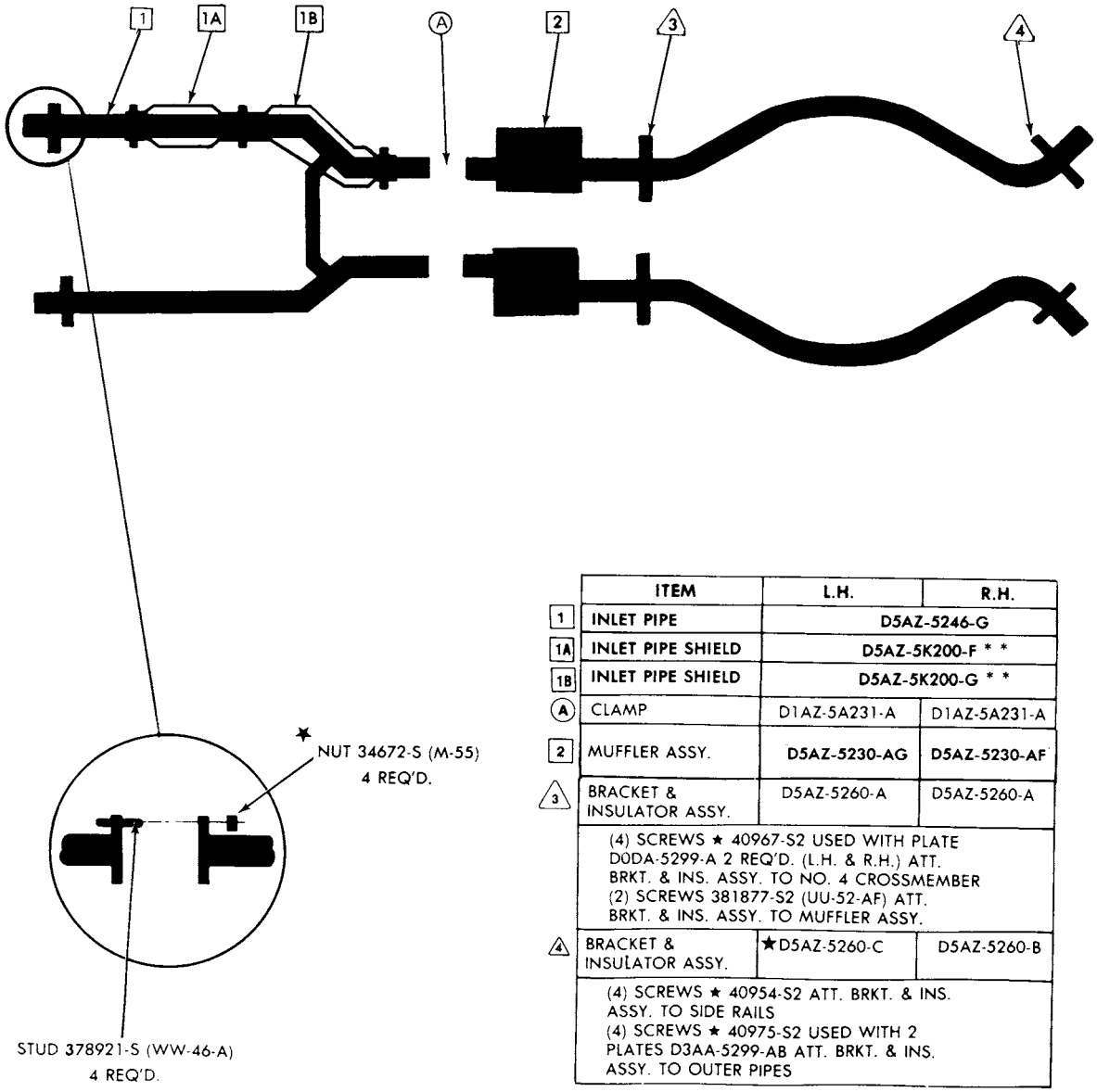

	ITEM	L.H.	R.H.
1	INLET PIPE	D5AZ-5246-G	
1A	INLET PIPE SHIELD	D5AZ-5K200-F * *	
1B	INLET PIPE SHIELD	D5AZ-5K200-G * *	
A	CLAMP	D1AZ-5A231-A	D1AZ-5A231-A
2	MUFFLER ASSY.	D5AZ-5230-AG	D5AZ-5230-AF
3	BRACKET & INSULATOR ASSY.	D5AZ-5260-A	D5AZ-5260-A
	(4) SCREWS ★ 40967-S2 USED WITH PLATE D0DA-5299-A 2 REQ'D. (L.H. & R.H.) ATT. BRKT. & INS. ASSY. TO NO. 4 CROSSMEMBER (2) SCREWS 381877-S2 (UU-52-AF) ATT. BRKT. & INS. ASSY. TO MUFFLER ASSY.		
4	BRACKET & INSULATOR ASSY.	★D5AZ-5260-C	D5AZ-5260-B
	(4) SCREWS ★ 40954-S2 ATT. BRKT. & INS. ASSY. TO SIDE RAILS (4) SCREWS ★ 40975-S2 USED WITH 2 PLATES D3AA-5299-AB ATT. BRKT. & INS. ASSY. TO OUTER PIPES		

* * REQUIRES (2) 2¼" CLAMP D5AZ-5A231-A

EG-97

COPYRIGHT © 1986 — FORD MOTOR COMPANY — DEARBORN, MICHIGAN

1976 MONTEGO — 8 CYL. 351W-2/B SEDAN (ONE CONVERTER)

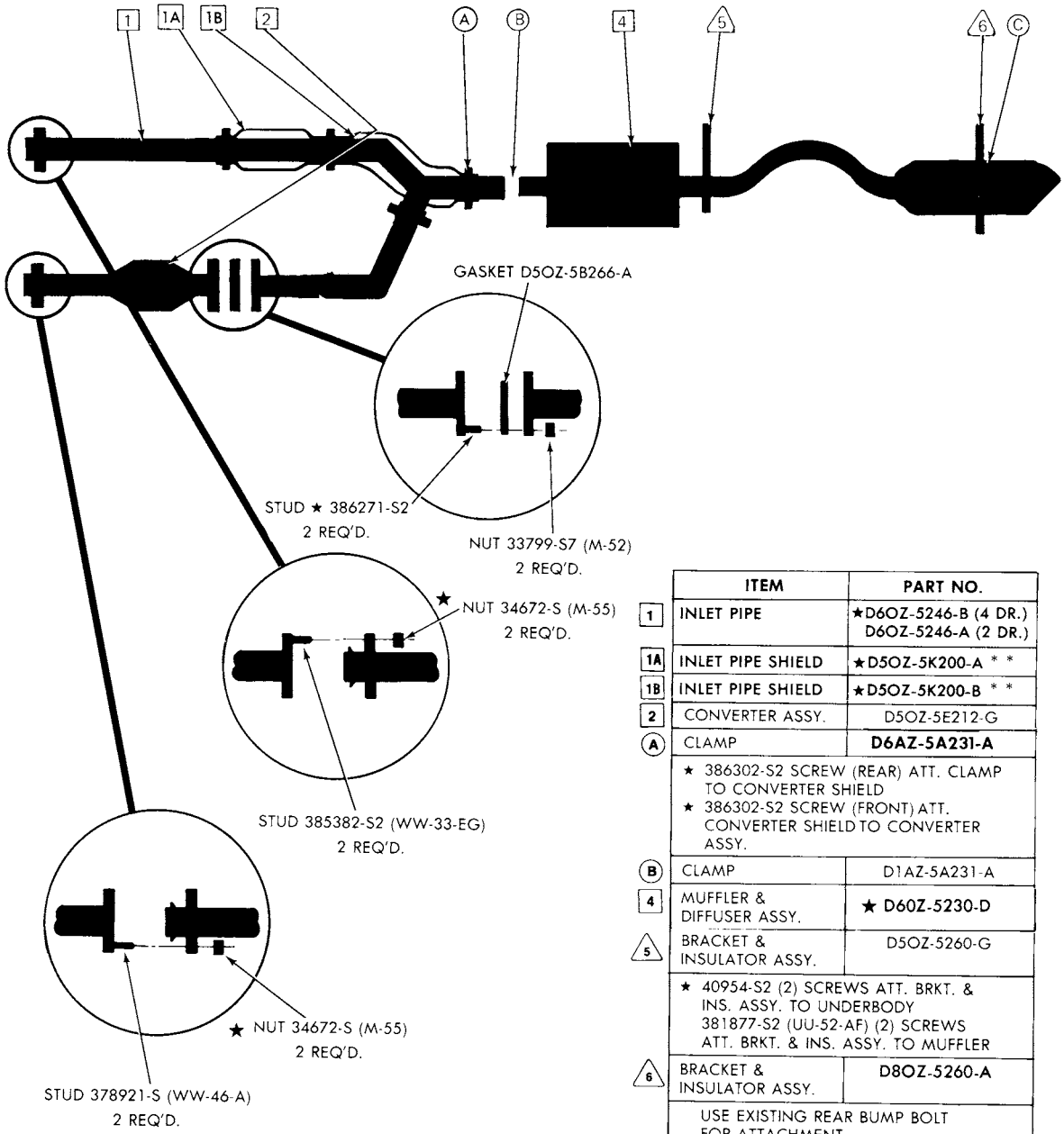

	ITEM	PART NO.
1	INLET PIPE	★D6OZ-5246-B (4 DR.) D6OZ-5246-A (2 DR.)
1A	INLET PIPE SHIELD	★D5OZ-5K200-A * *
1B	INLET PIPE SHIELD	★D5OZ-5K200-B * *
2	CONVERTER ASSY.	D5OZ-5E212-G
A	CLAMP	**D6AZ-5A231-A**
	★ 386302-S2 SCREW (REAR) ATT. CLAMP TO CONVERTER SHIELD ★ 386302-S2 SCREW (FRONT) ATT. CONVERTER SHIELD TO CONVERTER ASSY.	
B	CLAMP	D1AZ-5A231-A
4	MUFFLER & DIFFUSER ASSY.	★ **D60Z-5230-D**
5	BRACKET & INSULATOR ASSY.	D5OZ-5260-G
	★ 40954-S2 (2) SCREWS ATT. BRKT. & INS. ASSY. TO UNDERBODY 381877-S2 (UU-52-AF) (2) SCREWS ATT. BRKT. & INS. ASSY. TO MUFFLER	
6	BRACKET & INSULATOR ASSY.	**D8OZ-5260-A**
	USE EXISTING REAR BUMP BOLT FOR ATTACHMENT	
C	CLAMP	C6AZ-5A231-A
	378836-S2 (UU-39-J) SCREW ATT. CLAMP TO HANGER & PIPE	

ED-136

* * REQUIRES (2) 2¼" CLAMP D5AZ-5A231-B

COPYRIGHT © 1986 — FORD MOTOR COMPANY — DEARBORN, MICHIGAN

1976 MONTEGO—8 CYL. 351M-2/B & 400-2/B SEDAN (TWO CONVERTER)

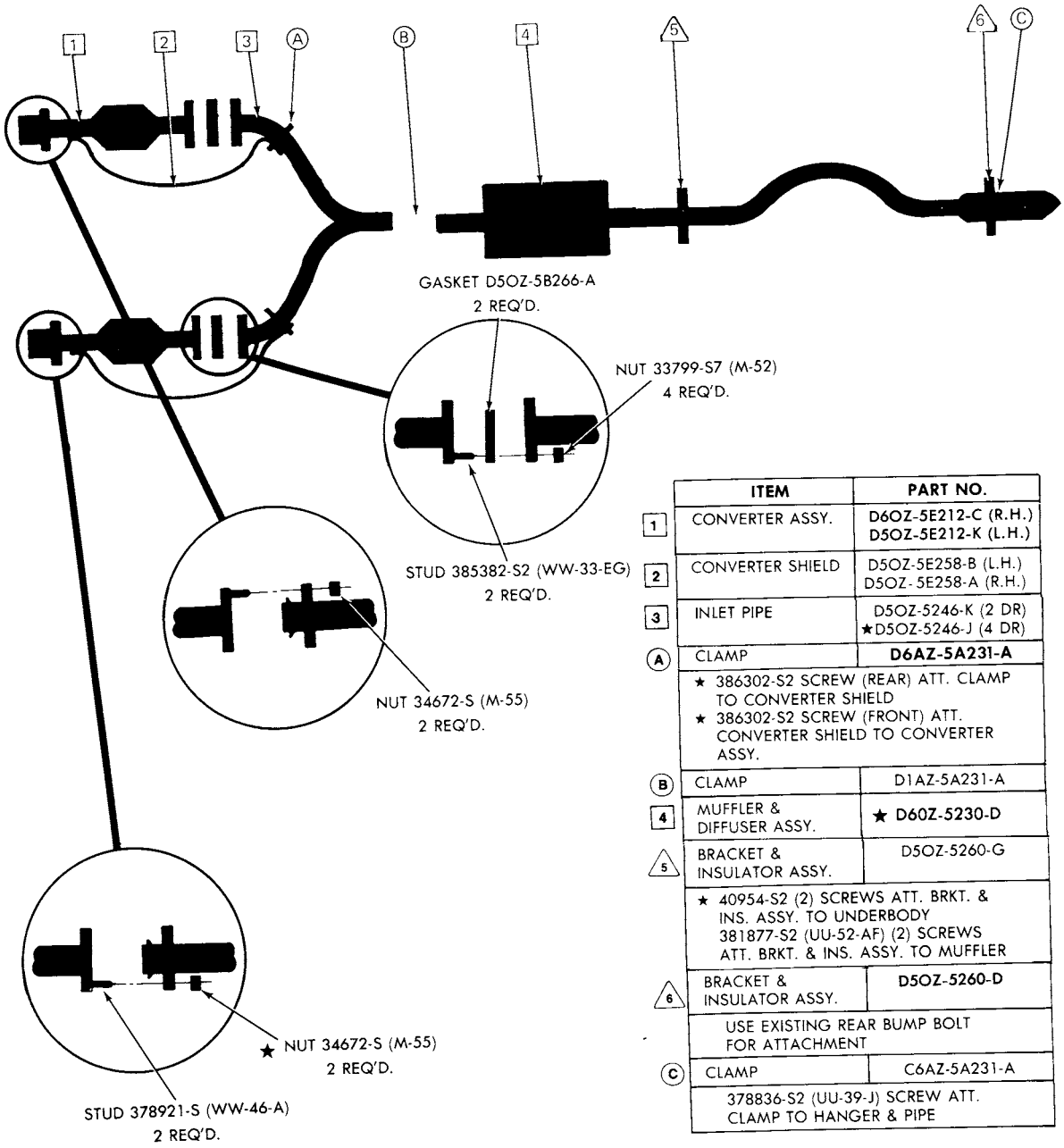

	ITEM	PART NO.
1	CONVERTER ASSY.	D6OZ-5E212-C (R.H.) D5OZ-5E212-K (L.H.)
2	CONVERTER SHIELD	D5OZ-5E258-B (L.H.) D5OZ-5E258-A (R.H.)
3	INLET PIPE	D5OZ-5246-K (2 DR) ★D5OZ-5246-J (4 DR)
A	CLAMP	**D6AZ-5A231-A**
	★ 386302-S2 SCREW (REAR) ATT. CLAMP TO CONVERTER SHIELD ★ 386302-S2 SCREW (FRONT) ATT. CONVERTER SHIELD TO CONVERTER ASSY.	
B	CLAMP	D1AZ-5A231-A
4	MUFFLER & DIFFUSER ASSY.	★ **D60Z-5230-D**
5	BRACKET & INSULATOR ASSY.	D5OZ-5260-G
	★ 40954-S2 (2) SCREWS ATT. BRKT. & INS. ASSY. TO UNDERBODY 381877-S2 (UU-52-AF) (2) SCREWS ATT. BRKT. & INS. ASSY. TO MUFFLER	
6	BRACKET & INSULATOR ASSY.	**D5OZ-5260-D**
	USE EXISTING REAR BUMP BOLT FOR ATTACHMENT	
C	CLAMP	C6AZ-5A231-A
	378836-S2 (UU-39-J) SCREW ATT. CLAMP TO HANGER & PIPE	

ED-137

1976 MONTEGO—8 CYL. 351M-2/B & 400-2/B SEDAN (NON-CONVERTER)

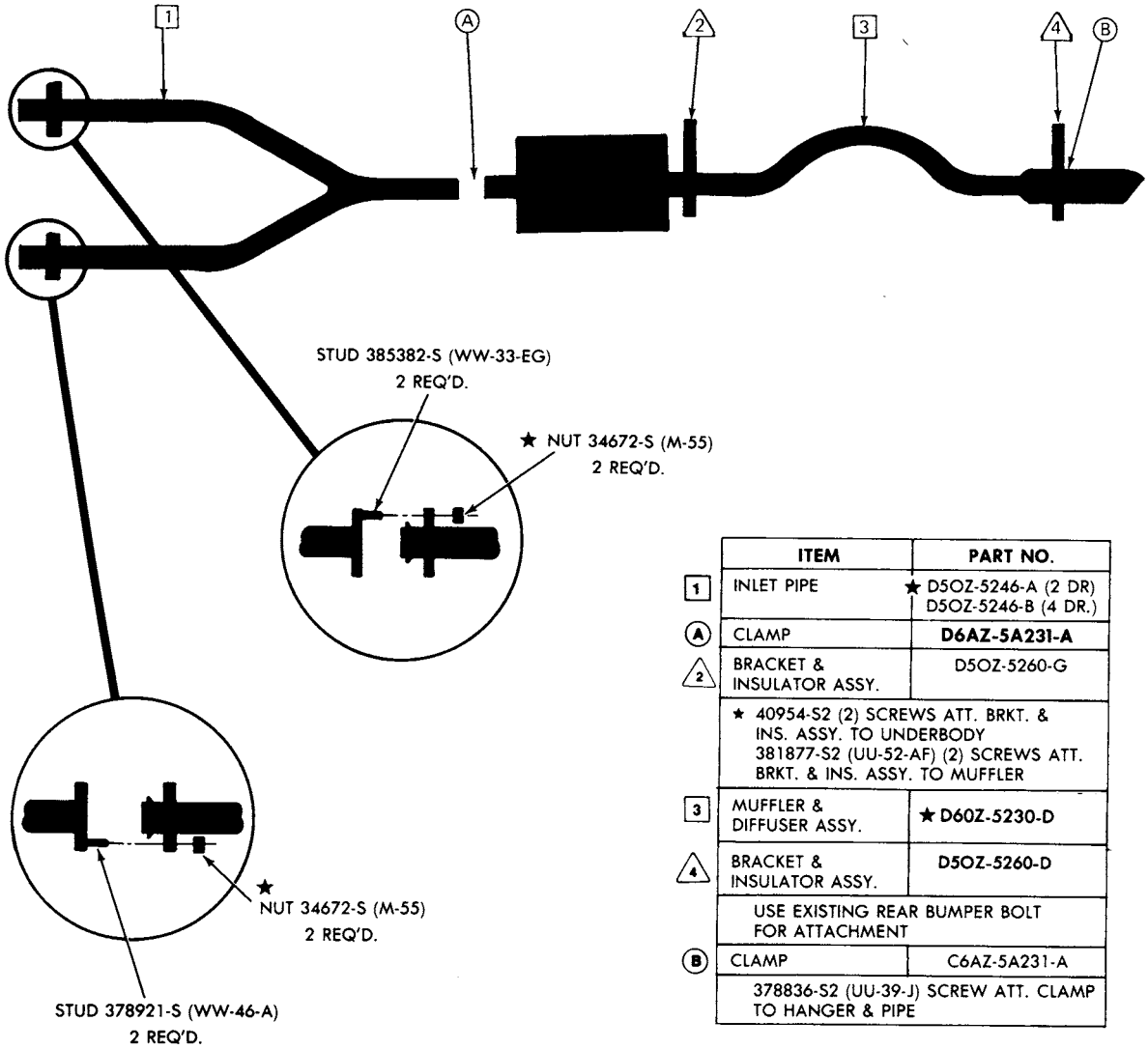

	ITEM	PART NO.
1	INLET PIPE	★ D5OZ-5246-A (2 DR) D5OZ-5246-B (4 DR.)
A	CLAMP	**D6AZ-5A231-A**
2	BRACKET & INSULATOR ASSY.	D5OZ-5260-G
	★ 40954-S2 (2) SCREWS ATT. BRKT. & INS. ASSY. TO UNDERBODY 381877-S2 (UU-52-AF) (2) SCREWS ATT. BRKT. & INS. ASSY. TO MUFFLER	
3	MUFFLER & DIFFUSER ASSY.	★ **D60Z-5230-D**
4	BRACKET & INSULATOR ASSY.	**D5OZ-5260-D**
	USE EXISTING REAR BUMPER BOLT FOR ATTACHMENT	
B	CLAMP	C6AZ-5A231-A
	378836-S2 (UU-39-J) SCREW ATT. CLAMP TO HANGER & PIPE	

ED-138

COPYRIGHT © 1986 — FORD MOTOR COMPANY — DEARBORN, MICHIGAN

1976 MONTEGO—8 CYL. 351M-2/B & 400-2/B STATION WAGON (TWO CONVERTER)

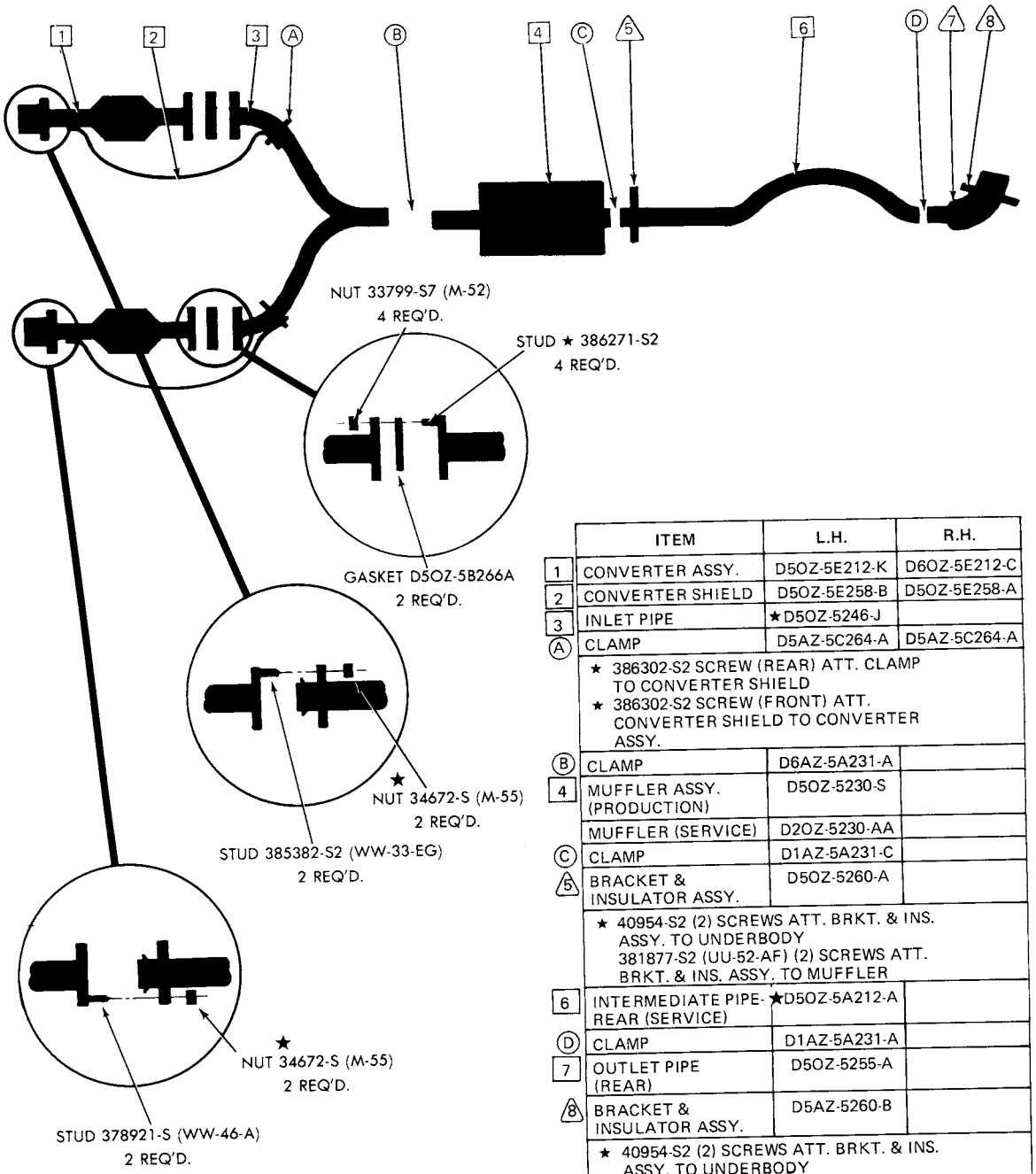

	ITEM	L.H.	R.H.
1	CONVERTER ASSY.	D5OZ-5E212-K	D6OZ-5E212-C
2	CONVERTER SHIELD	D5OZ-5E258-B	D5OZ-5E258-A
3	INLET PIPE	★D5OZ-5246-J	
A	CLAMP	D5AZ-5C264-A	D5AZ-5C264-A
	★ 386302-S2 SCREW (REAR) ATT. CLAMP TO CONVERTER SHIELD ★ 386302-S2 SCREW (FRONT) ATT. CONVERTER SHIELD TO CONVERTER ASSY.		
B	CLAMP	D6AZ-5A231-A	
4	MUFFLER ASSY. (PRODUCTION)	D5OZ-5230-S	
	MUFFLER (SERVICE)	D2OZ-5230-AA	
C	CLAMP	D1AZ-5A231-C	
5	BRACKET & INSULATOR ASSY.	D5OZ-5260-A	
	★ 40954-S2 (2) SCREWS ATT. BRKT. & INS. ASSY. TO UNDERBODY 381877-S2 (UU-52-AF) (2) SCREWS ATT. BRKT. & INS. ASSY. TO MUFFLER		
6	INTERMEDIATE PIPE-REAR (SERVICE)	★D5OZ-5A212-A	
D	CLAMP	D1AZ-5A231-A	
7	OUTLET PIPE (REAR)	D5OZ-5255-A	
8	BRACKET & INSULATOR ASSY.	D5AZ-5260-B	
	★ 40954-S2 (2) SCREWS ATT. BRKT. & INS. ASSY. TO UNDERBODY ★ 40975-S2 (2) SCREWS ATT. BRKT. & INS. ASSY. TO PIPE		

1976 MONTEGO —8 CYL. 351M-2/B & 400-2/B
STATION WAGON
(NON-CONVERTER)

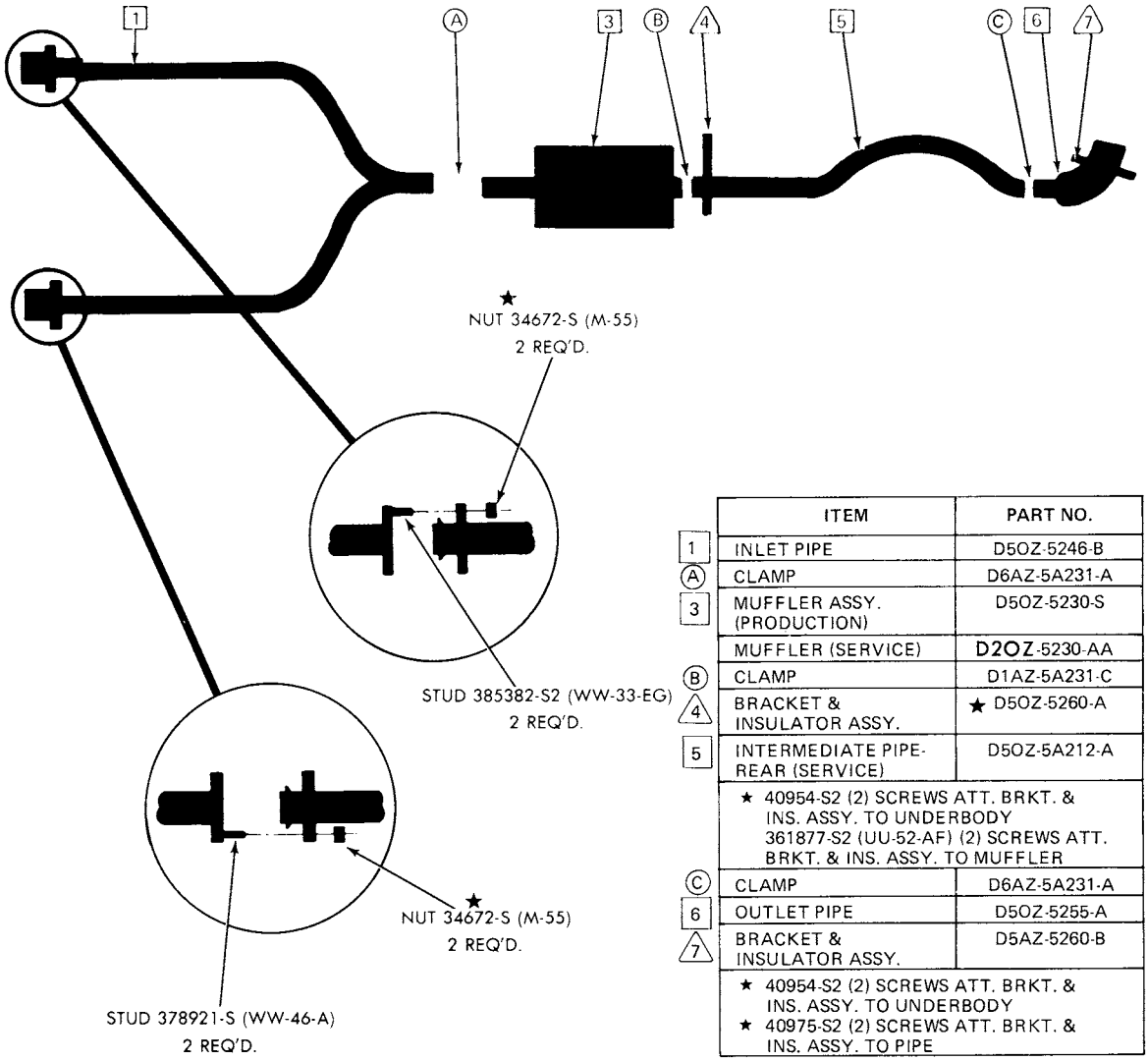

	ITEM	PART NO.
1	INLET PIPE	D5OZ-5246-B
A	CLAMP	D6AZ-5A231-A
3	MUFFLER ASSY. (PRODUCTION)	D5OZ-5230-S
	MUFFLER (SERVICE)	D2OZ-5230-AA
B	CLAMP	D1AZ-5A231-C
4	BRACKET & INSULATOR ASSY.	★ D5OZ-5260-A
5	INTERMEDIATE PIPE-REAR (SERVICE)	D5OZ-5A212-A
	★ 40954-S2 (2) SCREWS ATT. BRKT. & INS. ASSY. TO UNDERBODY 361877-S2 (UU-52-AF) (2) SCREWS ATT. BRKT. & INS. ASSY. TO MUFFLER	
C	CLAMP	D6AZ-5A231-A
6	OUTLET PIPE	D5OZ-5255-A
7	BRACKET & INSULATOR ASSY.	D5AZ-5260-B
	★ 40954-S2 (2) SCREWS ATT. BRKT. & INS. ASSY. TO UNDERBODY ★ 40975-S2 (2) SCREWS ATT. BRKT. & INS. ASSY. TO PIPE	

ED-140

COPYRIGHT © 1986 — FORD MOTOR COMPANY — DEARBORN, MICHIGAN

1976 MONTEGO—8 CYL. 460-P/C SEDAN (ONE CONVERTER)

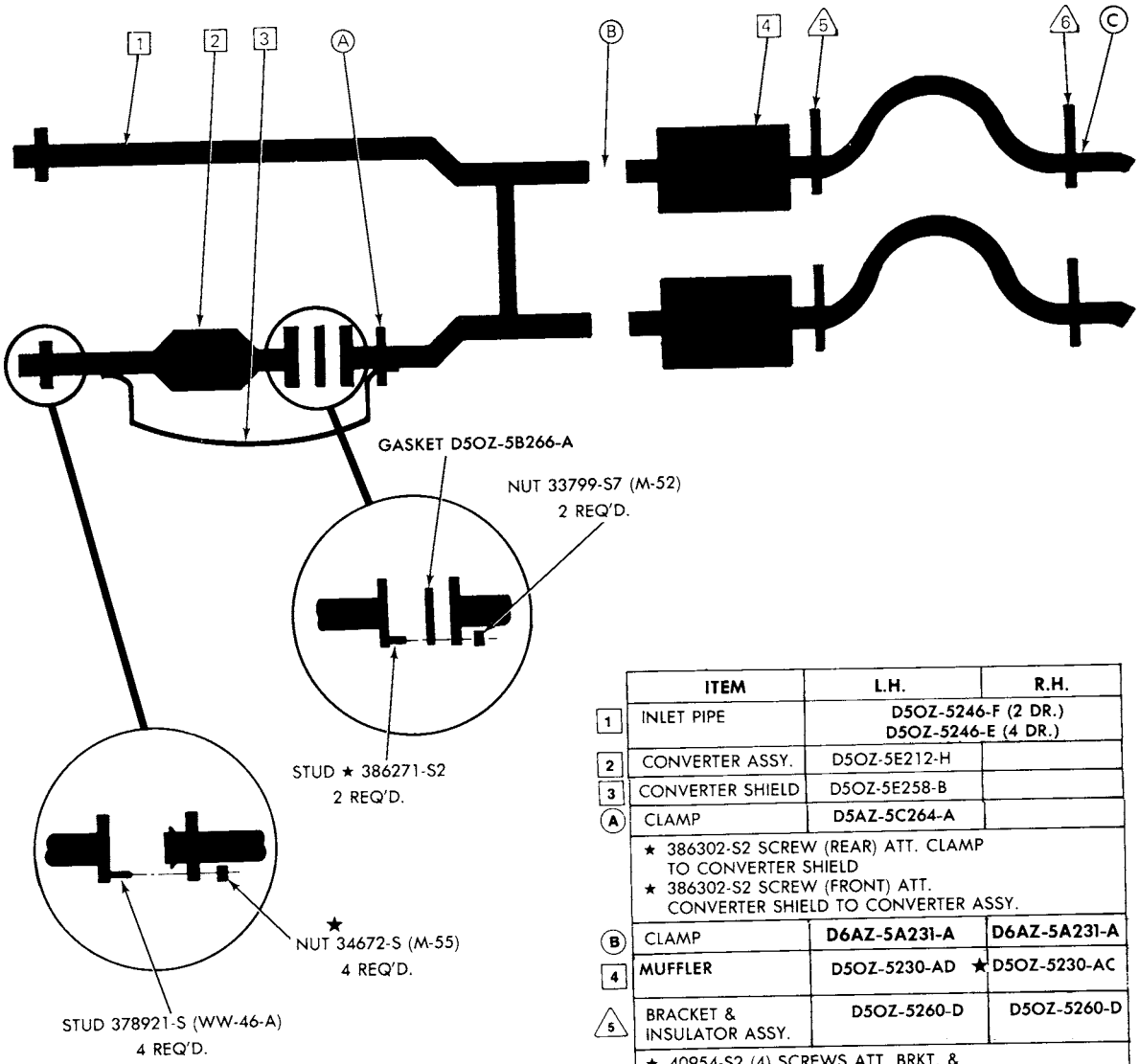

	ITEM	L.H.	R.H.
1	INLET PIPE	D5OZ-5246-F (2 DR.) D5OZ-5246-E (4 DR.)	
2	CONVERTER ASSY.	D5OZ-5E212-H	
3	CONVERTER SHIELD	D5OZ-5E258-B	
A	CLAMP	D5AZ-5C264-A	
	★ 386302-S2 SCREW (REAR) ATT. CLAMP TO CONVERTER SHIELD ★ 386302-S2 SCREW (FRONT) ATT. CONVERTER SHIELD TO CONVERTER ASSY.		
B	CLAMP	D6AZ-5A231-A	D6AZ-5A231-A
4	MUFFLER	D5OZ-5230-AD	★D5OZ-5230-AC
5	BRACKET & INSULATOR ASSY.	D5OZ-5260-D	D5OZ-5260-D
	★ 40954-S2 (4) SCREWS ATT. BRKT. & INS. ASSY. TO UNDERBODY 381877-S2 (UU-52-AF) (4) SCREWS ATT. BRKT. & INS. ASSY. TO MUFFLER		
6	BRACKET & INSULATOR ASSY.	D5OZ-5260-D	D5OZ-5260-D
	USE EXISTING REAR BUMPER BOLT FOR ATTACHMENT		
C	CLAMP	D1AZ-5A231-C	D1AZ-5A231-C

1976 MONTEGO—8 CYL. 460-4/B & 460 P/C SEDAN (TWO CONVERTER)

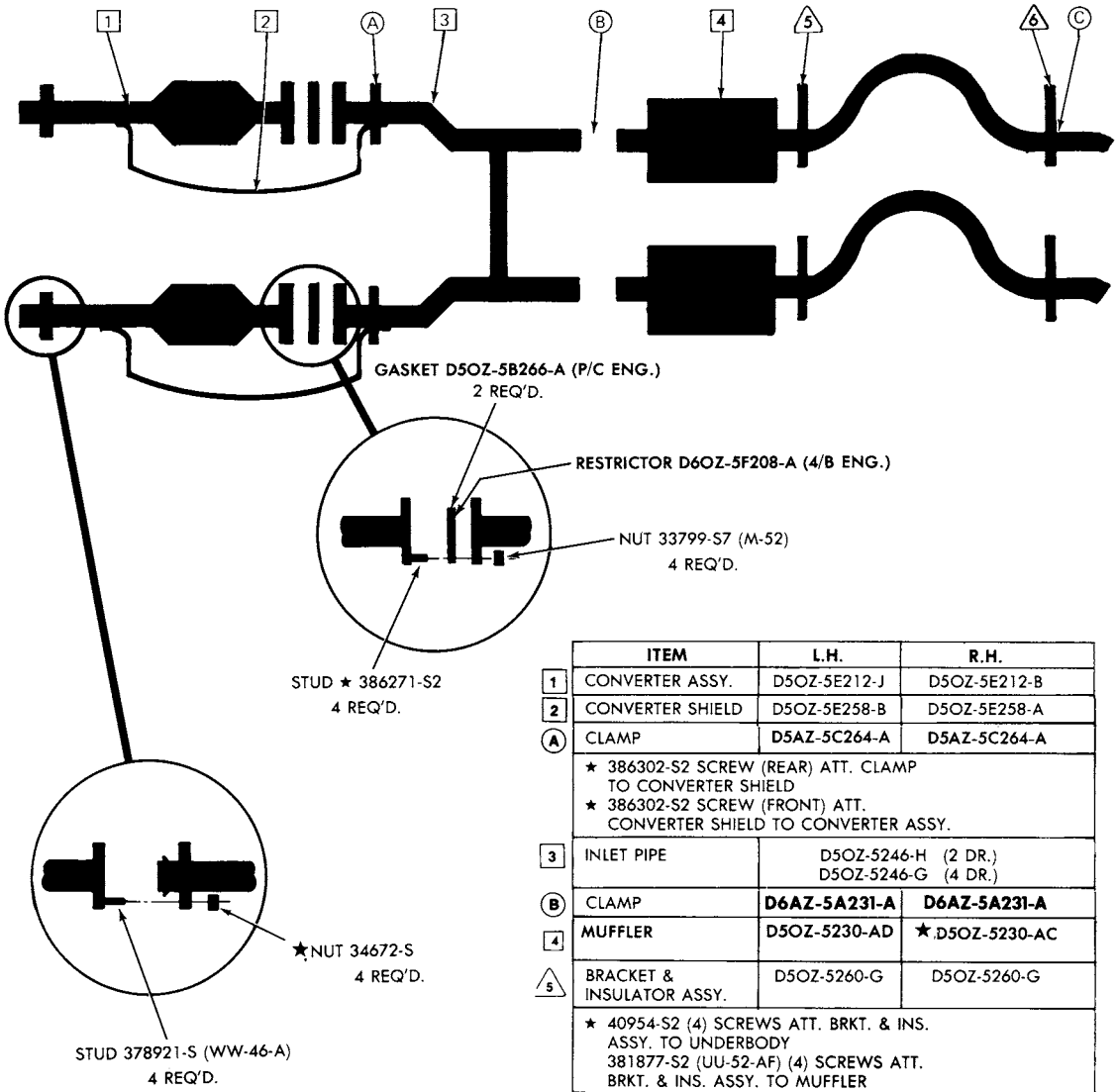

	ITEM	L.H.	R.H.
1	CONVERTER ASSY.	D5OZ-5E212-J	D5OZ-5E212-B
2	CONVERTER SHIELD	D5OZ-5E258-B	D5OZ-5E258-A
A	CLAMP	**D5AZ-5C264-A**	**D5AZ-5C264-A**
	★ 386302-S2 SCREW (REAR) ATT. CLAMP TO CONVERTER SHIELD ★ 386302-S2 SCREW (FRONT) ATT. CONVERTER SHIELD TO CONVERTER ASSY.		
3	INLET PIPE	D5OZ-5246-H (2 DR.) D5OZ-5246-G (4 DR.)	
B	CLAMP	**D6AZ-5A231-A**	**D6AZ-5A231-A**
4	MUFFLER	**D5OZ-5230-AD**	**★ D5OZ-5230-AC**
5	BRACKET & INSULATOR ASSY.	D5OZ-5260-G	D5OZ-5260-G
	★ 40954-S2 (4) SCREWS ATT. BRKT. & INS. ASSY. TO UNDERBODY 381877-S2 (UU-52-AF) (4) SCREWS ATT. BRKT. & INS. ASSY. TO MUFFLER		
6	BRACKET & INSULATOR ASSY.	**D5OZ-5260-D**	**D5OZ-5260-D**
	USE EXISTING REAR BUMPER BOLT FOR ATTACHMENT		
C	CLAMP	D1AZ-5A231-C	D1AZ-5A231-C

ED-144

COPYRIGHT © 1986 — FORD MOTOR COMPANY — DEARBORN, MICHIGAN

1976 MONTEGO—8 CYL. 460-4/B & 460-P/C SEDAN (NON-CONVERTER)

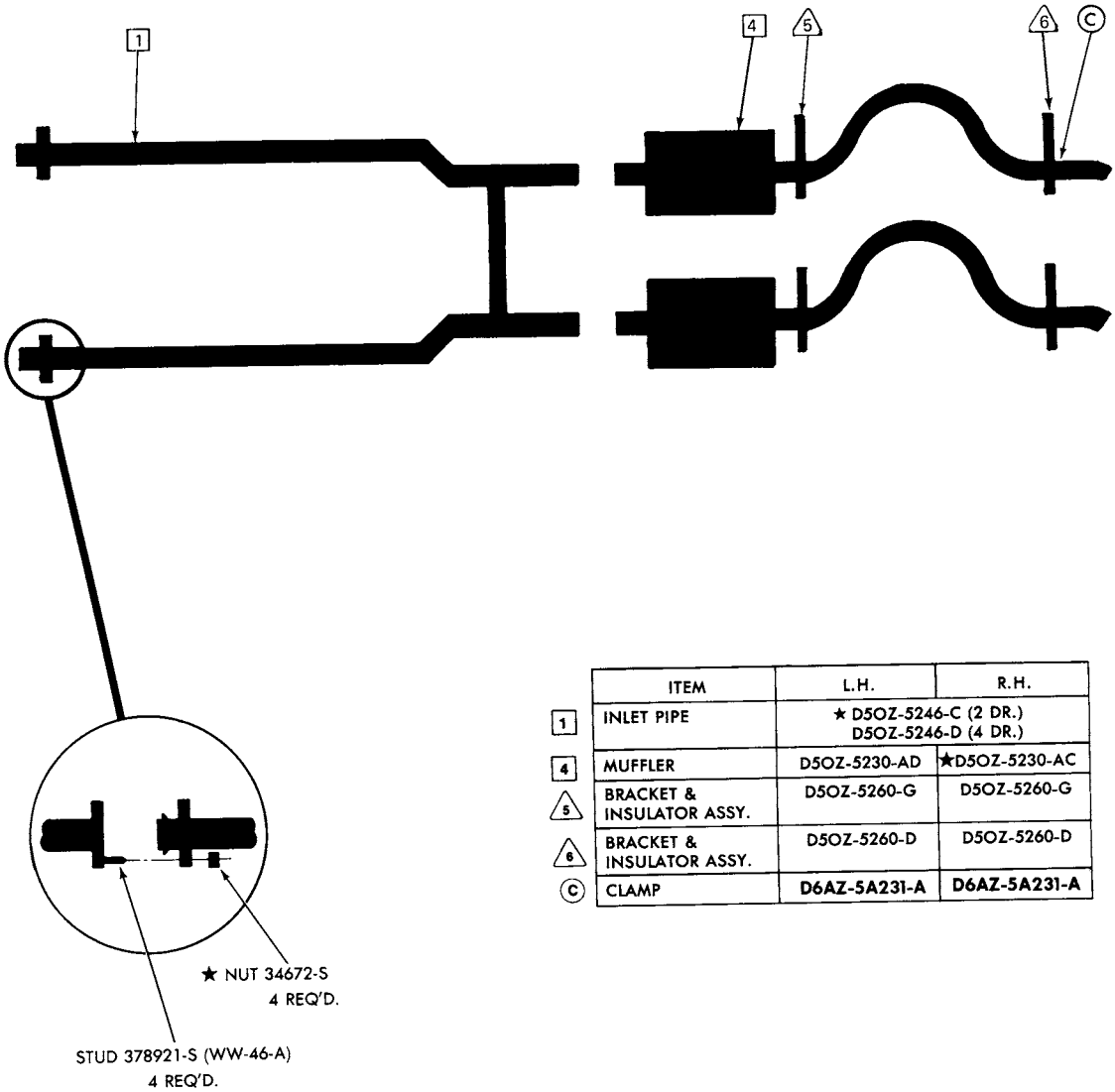

	ITEM	L.H.	R.H.
1	INLET PIPE	★ D5OZ-5246-C (2 DR.) D5OZ-5246-D (4 DR.)	
4	MUFFLER	D5OZ-5230-AD	★D5OZ-5230-AC
5	BRACKET & INSULATOR ASSY.	D5OZ-5260-G	D5OZ-5260-G
6	BRACKET & INSULATOR ASSY.	D5OZ-5260-D	D5OZ-5260-D
C	CLAMP	D6AZ-5A231-A	D6AZ-5A231-A

ED-143

1976 MONTEGO—8 CYL. 460-4/B STATION WAGON (TWO CONVERTER)

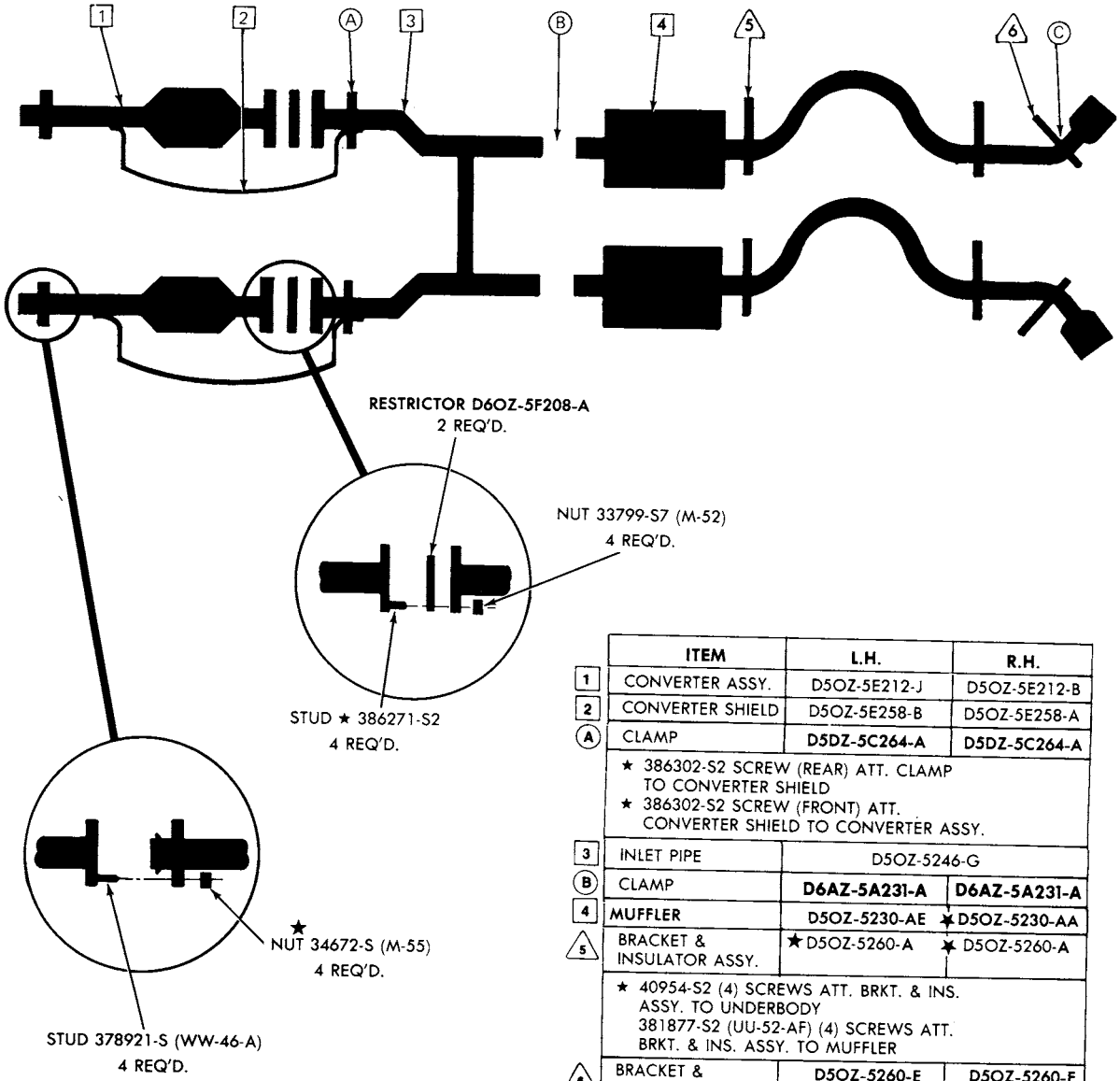

	ITEM	L.H.	R.H.
1	CONVERTER ASSY.	D5OZ-5E212-J	D5OZ-5E212-B
2	CONVERTER SHIELD	D5OZ-5E258-B	D5OZ-5E258-A
A	CLAMP	**D5DZ-5C264-A**	**D5DZ-5C264-A**
	★ 386302-S2 SCREW (REAR) ATT. CLAMP TO CONVERTER SHIELD ★ 386302-S2 SCREW (FRONT) ATT. CONVERTER SHIELD TO CONVERTER ASSY.		
3	INLET PIPE	D5OZ-5246-G	
B	CLAMP	**D6AZ-5A231-A**	**D6AZ-5A231-A**
4	MUFFLER	D5OZ-5230-AE	★ D5OZ-5230-AA
5	BRACKET & INSULATOR ASSY.	★ D5OZ-5260-A	★ D5OZ-5260-A
	★ 40954-S2 (4) SCREWS ATT. BRKT. & INS. ASSY. TO UNDERBODY 381877-S2 (UU-52-AF) (4) SCREWS ATT. BRKT. & INS. ASSY. TO MUFFLER		
6	BRACKET & INSULATOR ASSY.	**D5OZ-5260-E**	**D5OZ-5260-E**
	★ 40954-S2 (2) SCREWS ATT. BRKT. & INS. ASSY. TO UNDERBODY		
C	CLAMP	D1AZ-5A231-C	D1AZ-5A231-C

ED-146

COPYRIGHT © 1986 — FORD MOTOR COMPANY — DEARBORN, MICHIGAN

1976 MONTEGO—8 CYL. 460-4/B STATION WAGON (NON-CONVERTER)

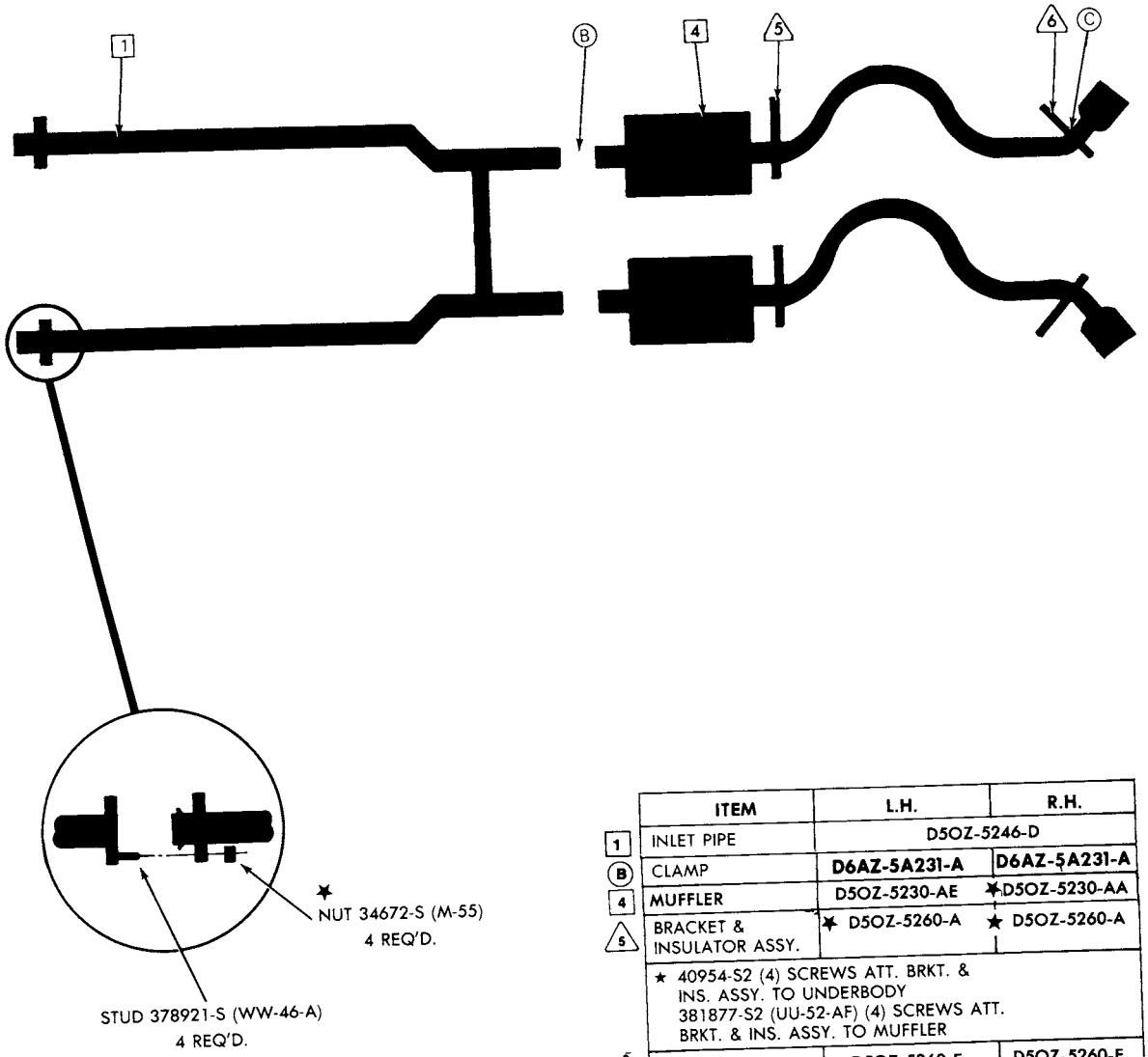

	ITEM	L.H.	R.H.
1	INLET PIPE	D5OZ-5246-D	
B	CLAMP	D6AZ-5A231-A	D6AZ-5A231-A
4	MUFFLER	D5OZ-5230-AE	★D5OZ-5230-AA
5	BRACKET & INSULATOR ASSY.	★ D5OZ-5260-A	★ D5OZ-5260-A
	★ 40954-S2 (4) SCREWS ATT. BRKT. & INS. ASSY. TO UNDERBODY 381877-S2 (UU-52-AF) (4) SCREWS ATT. BRKT. & INS. ASSY. TO MUFFLER		
6	BRACKET & INSULATOR ASSY.	D5OZ-5260-E	D5OZ-5260-E
	★ 40954-S2 (2) SCREWS ATT. BRKT. & INS. ASSY. TO UNDERBODY		
C	CLAMP	D1AZ-5A231-C	D1AZ-5A231-C

ED-145

1976 LINCOLN—8 CYL. 460-4/B
SINGLE EXHAUST
(TWO CONVERTER)

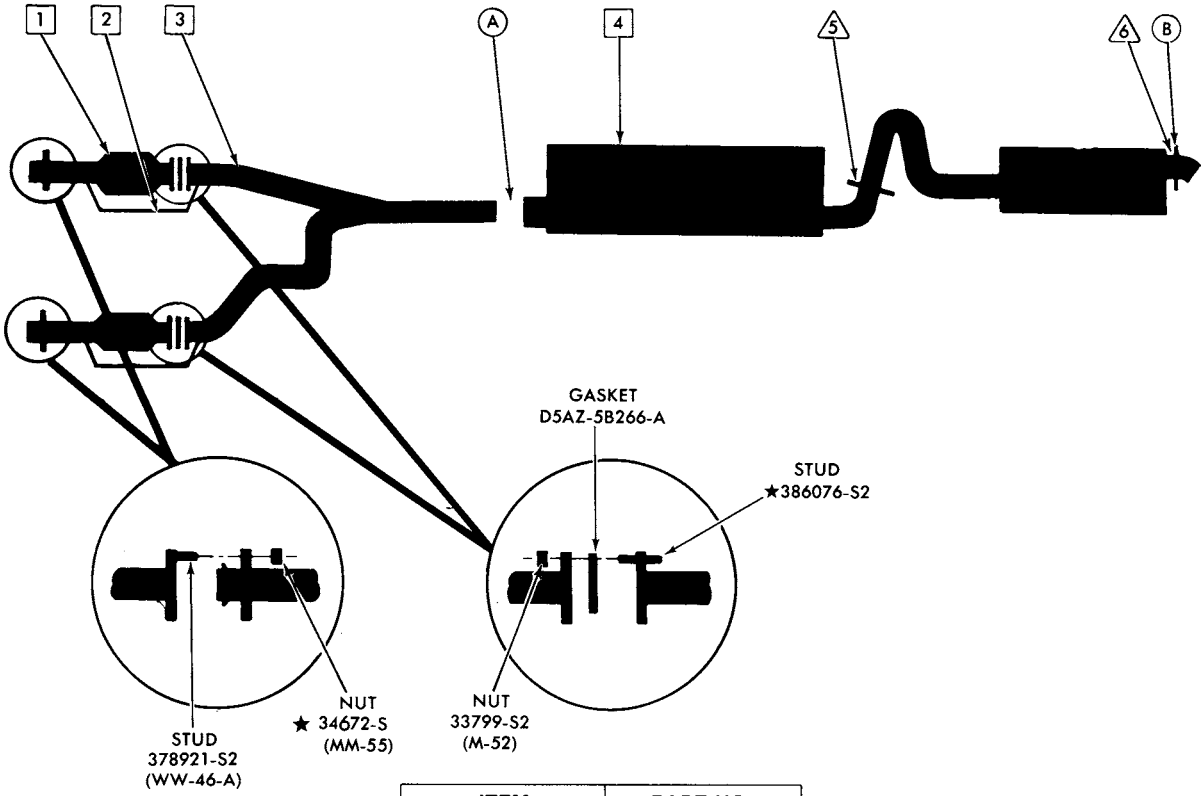

	ITEM	PART NO.
1	CONVERTER	D5AZ-5E212-A (R.H.) D5AZ-5E212-F (L.H.)
2	CONVERTER SHIELD	D5VY-5E258-A (R.H.) D5VY-5E258-B (L.H.)
3	INLET PIPE	D5VY-5246-G
A	CLAMP	**D6AZ-5A231-B**
4	MUFFLER & RESONATOR	D5VY-5230-H
5	BRACKET & INSULATOR ASSY.	D5VY-5260-F
6	BRACKET & INSULATOR ASSY.	D5VY-5260-D
B	CLAMP	C1TT-5A231-D

EJ-17

COPYRIGHT © 1986 — FORD MOTOR COMPANY — DEARBORN, MICHIGAN

1976 LINCOLN—8 CYL. 460-4/B
SINGLE EXHAUST
(NON CONVERTER)

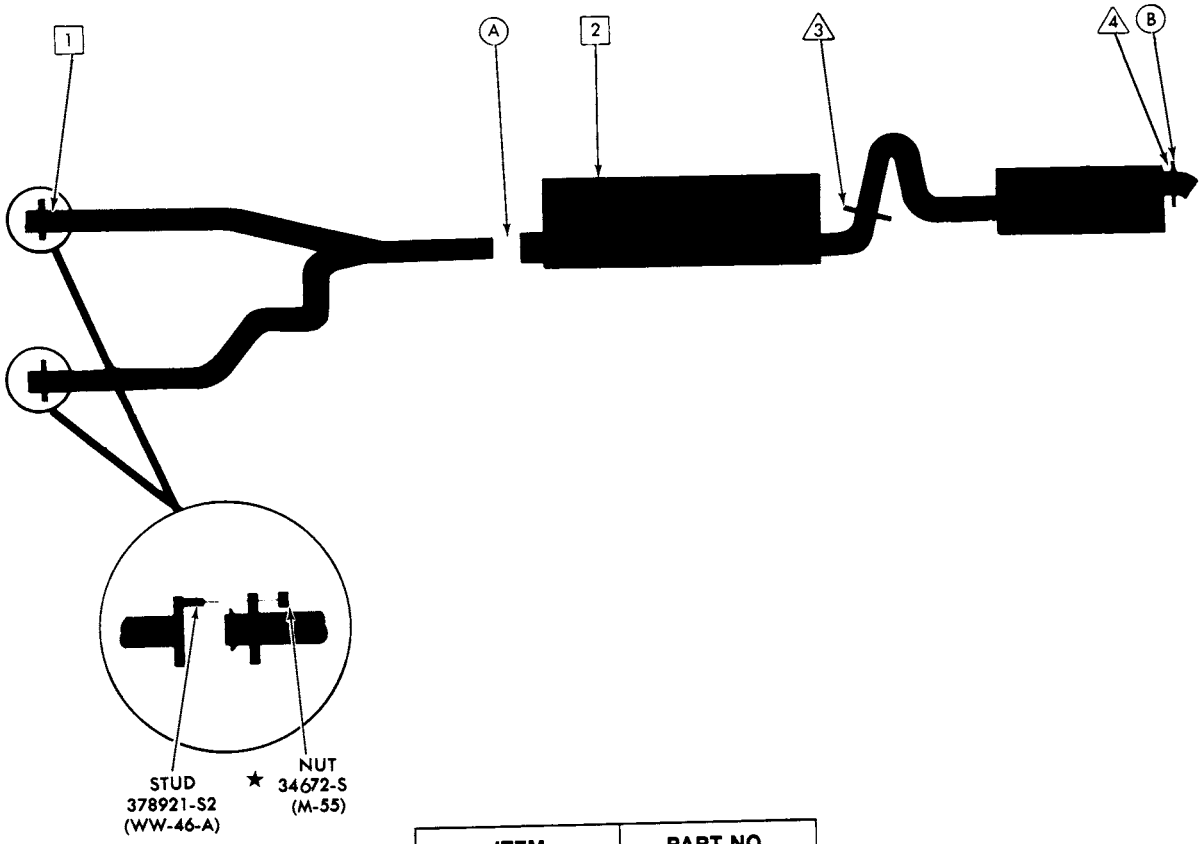

	ITEM	PART NO.
1	INLET PIPE	D5VY-5246-F
A	CLAMP	D6AZ-5A231-B
2	MUFFLER & RESONATOR	D5VY-5230-H
3	BRACKET & INSULATOR ASSY.	D5VY-5260-F
4	BRACKET & INSULATOR ASSY.	D5VY-5260-D
B	CLAMP	C1TT-5A231-D

1976 COUGAR — 8 CYL. 351W SEDAN (ONE CONVERTER)

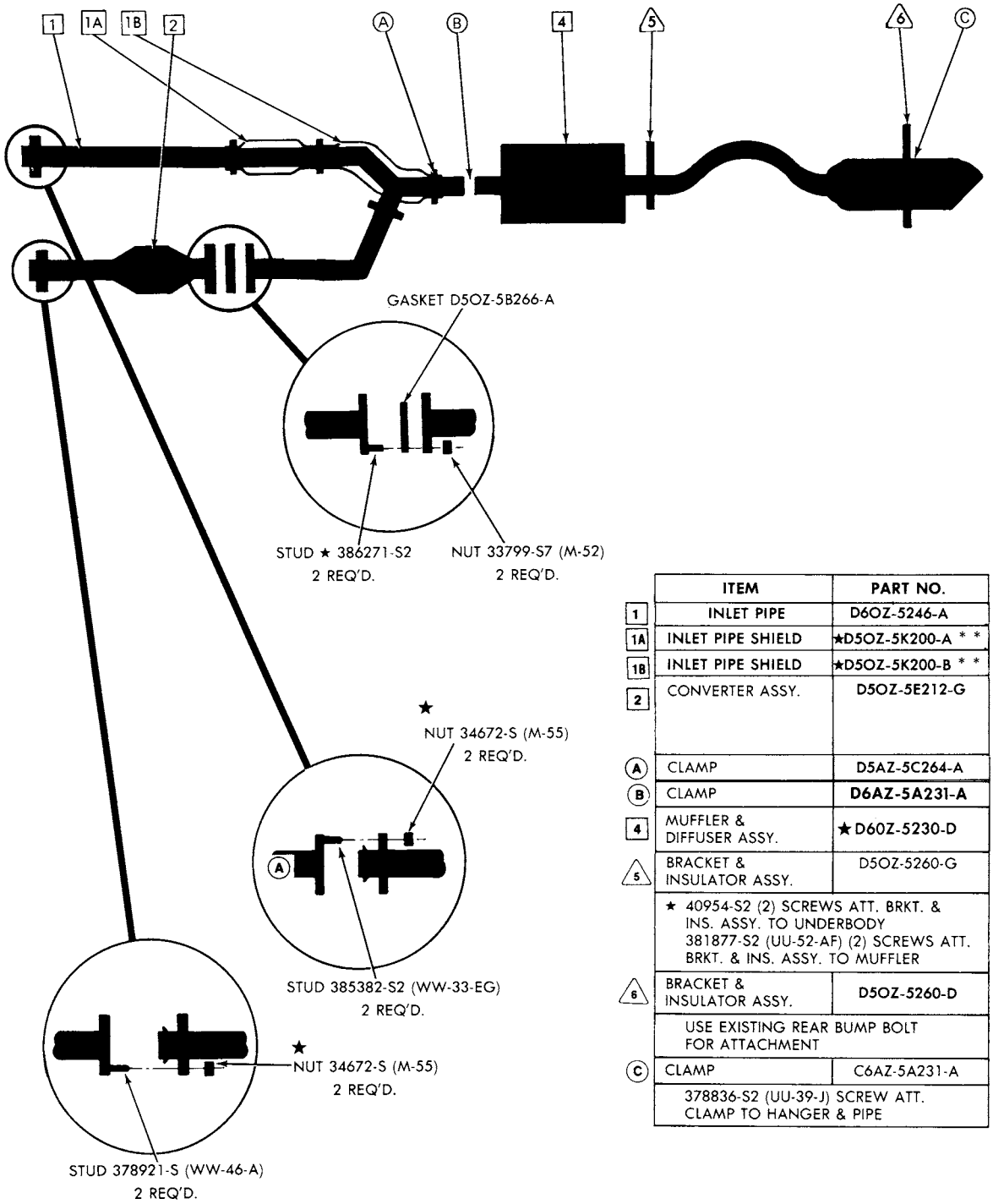

	ITEM	PART NO.
1	INLET PIPE	D6OZ-5246-A
1A	INLET PIPE SHIELD	★D5OZ-5K200-A * *
1B	INLET PIPE SHIELD	★D5OZ-5K200-B * *
2	CONVERTER ASSY.	D5OZ-5E212-G
A	CLAMP	D5AZ-5C264-A
B	CLAMP	D6AZ-5A231-A
4	MUFFLER & DIFFUSER ASSY.	★D60Z-5230-D
5	BRACKET & INSULATOR ASSY.	D5OZ-5260-G
	★ 40954-S2 (2) SCREWS ATT. BRKT. & INS. ASSY. TO UNDERBODY 381877-S2 (UU-52-AF) (2) SCREWS ATT. BRKT. & INS. ASSY. TO MUFFLER	
6	BRACKET & INSULATOR ASSY.	D5OZ-5260-D
	USE EXISTING REAR BUMP BOLT FOR ATTACHMENT	
C	CLAMP	C6AZ-5A231-A
	378836-S2 (UU-39-J) SCREW ATT. CLAMP TO HANGER & PIPE	

EB-35

* * REQUIRES (2) 2¼" CLAMP D5AZ-5A231-B

COPYRIGHT © 1986 — FORD MOTOR COMPANY — DEARBORN, MICHIGAN

1976 COUGAR—8 CYL. 351M-2/B & 400-2/B SEDAN (TWO CONVERTER)

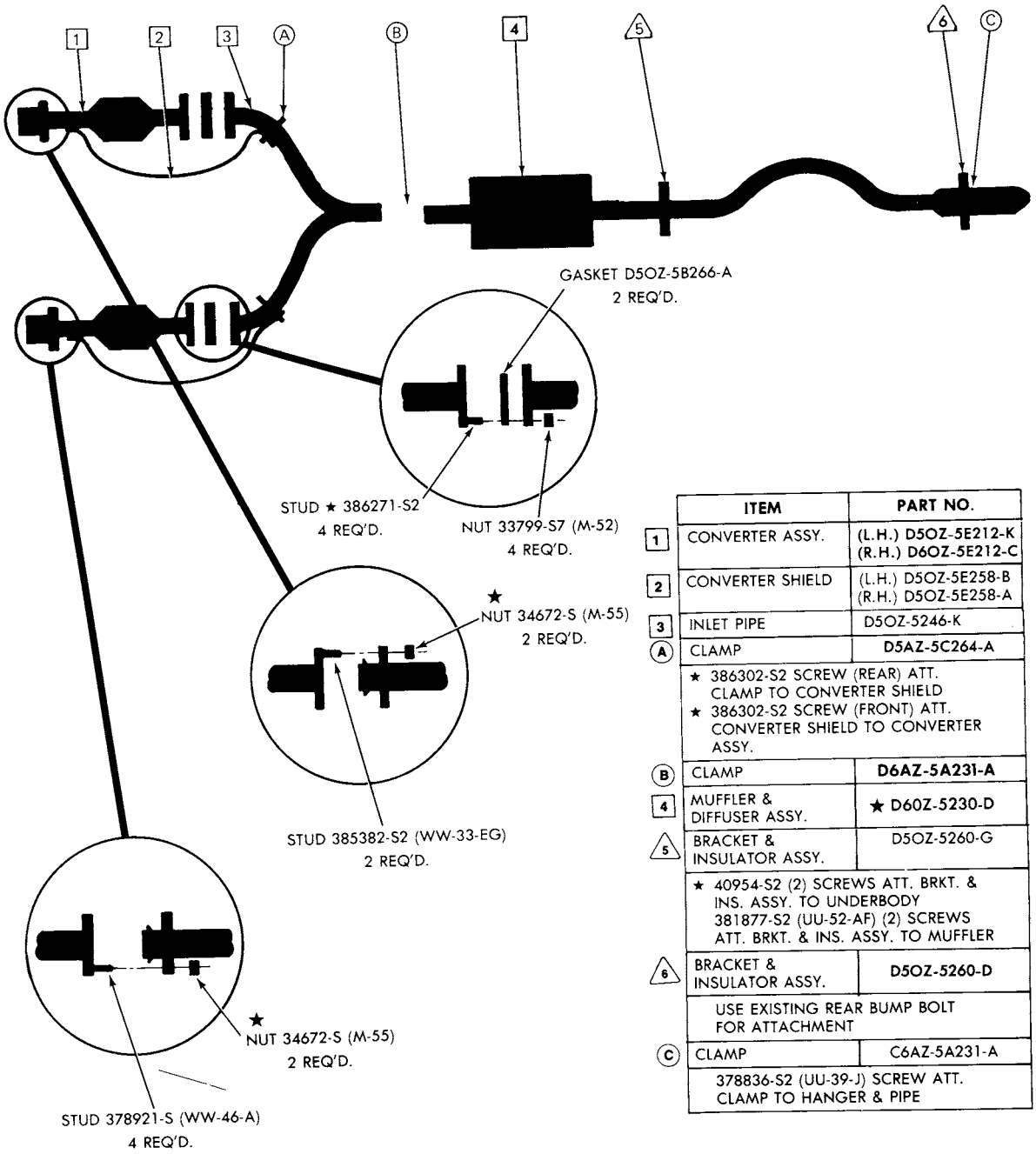

	ITEM	PART NO.
1	CONVERTER ASSY.	(L.H.) D5OZ-5E212-K (R.H.) D6OZ-5E212-C
2	CONVERTER SHIELD	(L.H.) D5OZ-5E258-B (R.H.) D5OZ-5E258-A
3	INLET PIPE	D5OZ-5246-K
A	CLAMP	D5AZ-5C264-A
	★ 386302-S2 SCREW (REAR) ATT. CLAMP TO CONVERTER SHIELD ★ 386302-S2 SCREW (FRONT) ATT. CONVERTER SHIELD TO CONVERTER ASSY.	
B	CLAMP	D6AZ-5A231-A
4	MUFFLER & DIFFUSER ASSY.	★ D60Z-5230-D
5	BRACKET & INSULATOR ASSY.	D5OZ-5260-G
	★ 40954-S2 (2) SCREWS ATT. BRKT. & INS. ASSY. TO UNDERBODY 381877-S2 (UU-52-AF) (2) SCREWS ATT. BRKT. & INS. ASSY. TO MUFFLER	
6	BRACKET & INSULATOR ASSY.	D5OZ-5260-D
	USE EXISTING REAR BUMP BOLT FOR ATTACHMENT	
C	CLAMP	C6AZ-5A231-A
	378836-S2 (UU-39-J) SCREW ATT. CLAMP TO HANGER & PIPE	

1976 COUGAR—8 CYL. 351M-2/B & 400-2/B SEDAN (NON-CONVERTER)

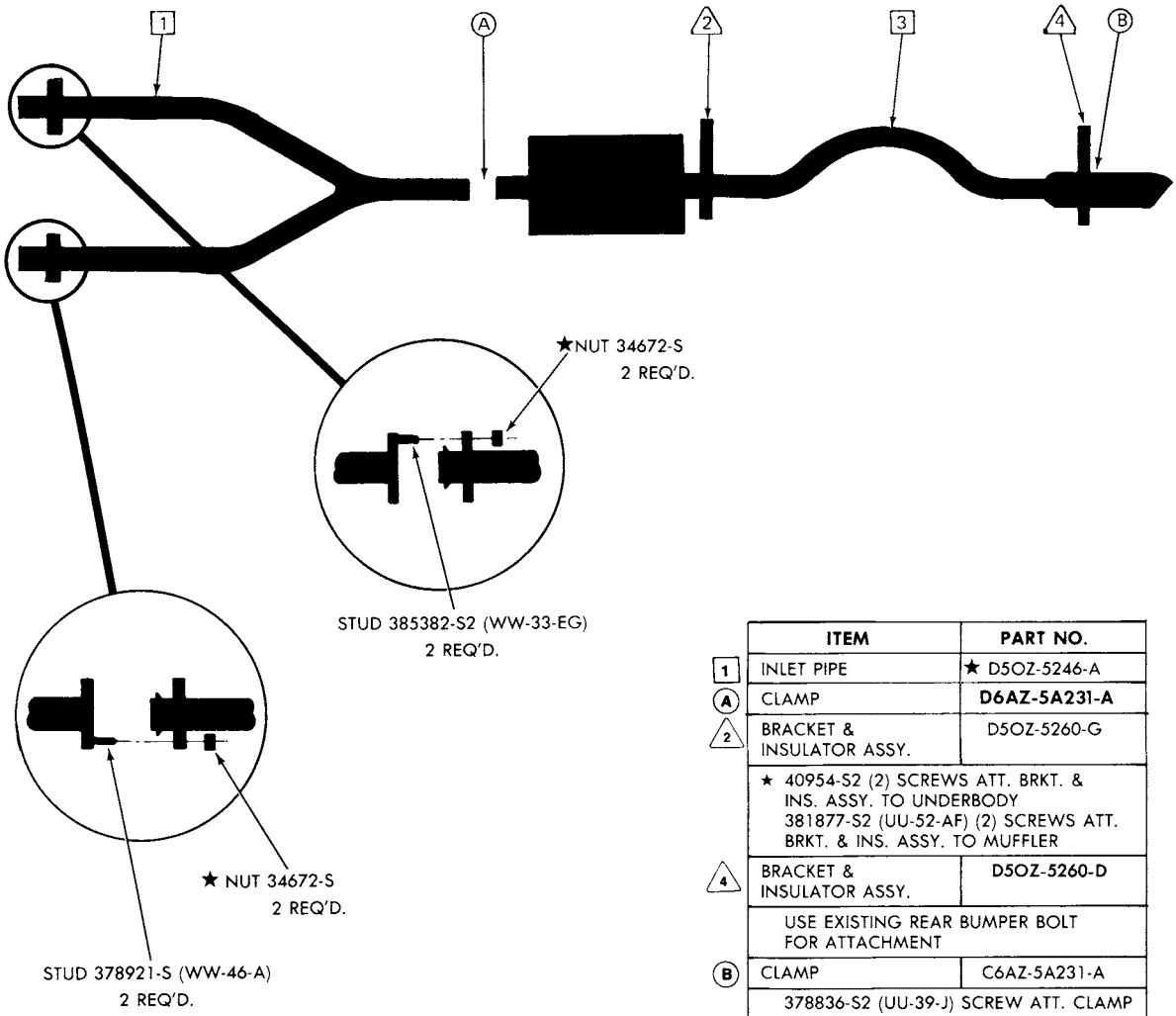

	ITEM	PART NO.
1	INLET PIPE	★ D5OZ-5246-A
A	CLAMP	**D6AZ-5A231-A**
2	BRACKET & INSULATOR ASSY.	D5OZ-5260-G
	★ 40954-S2 (2) SCREWS ATT. BRKT. & INS. ASSY. TO UNDERBODY 381877-S2 (UU-52-AF) (2) SCREWS ATT. BRKT. & INS. ASSY. TO MUFFLER	
4	BRACKET & INSULATOR ASSY.	**D5OZ-5260-D**
	USE EXISTING REAR BUMPER BOLT FOR ATTACHMENT	
B	CLAMP	C6AZ-5A231-A
	378836-S2 (UU-39-J) SCREW ATT. CLAMP TO HANGER & PIPE	
3	MUFFLER & DIFFUSER ASSY.	**D60Z-5230-D**

EB-37

COPYRIGHT © 1986 — FORD MOTOR COMPANY — DEARBORN, MICHIGAN

1976 COUGAR—8 CYL. 460-4/B SEDAN (TWO CONVERTER)

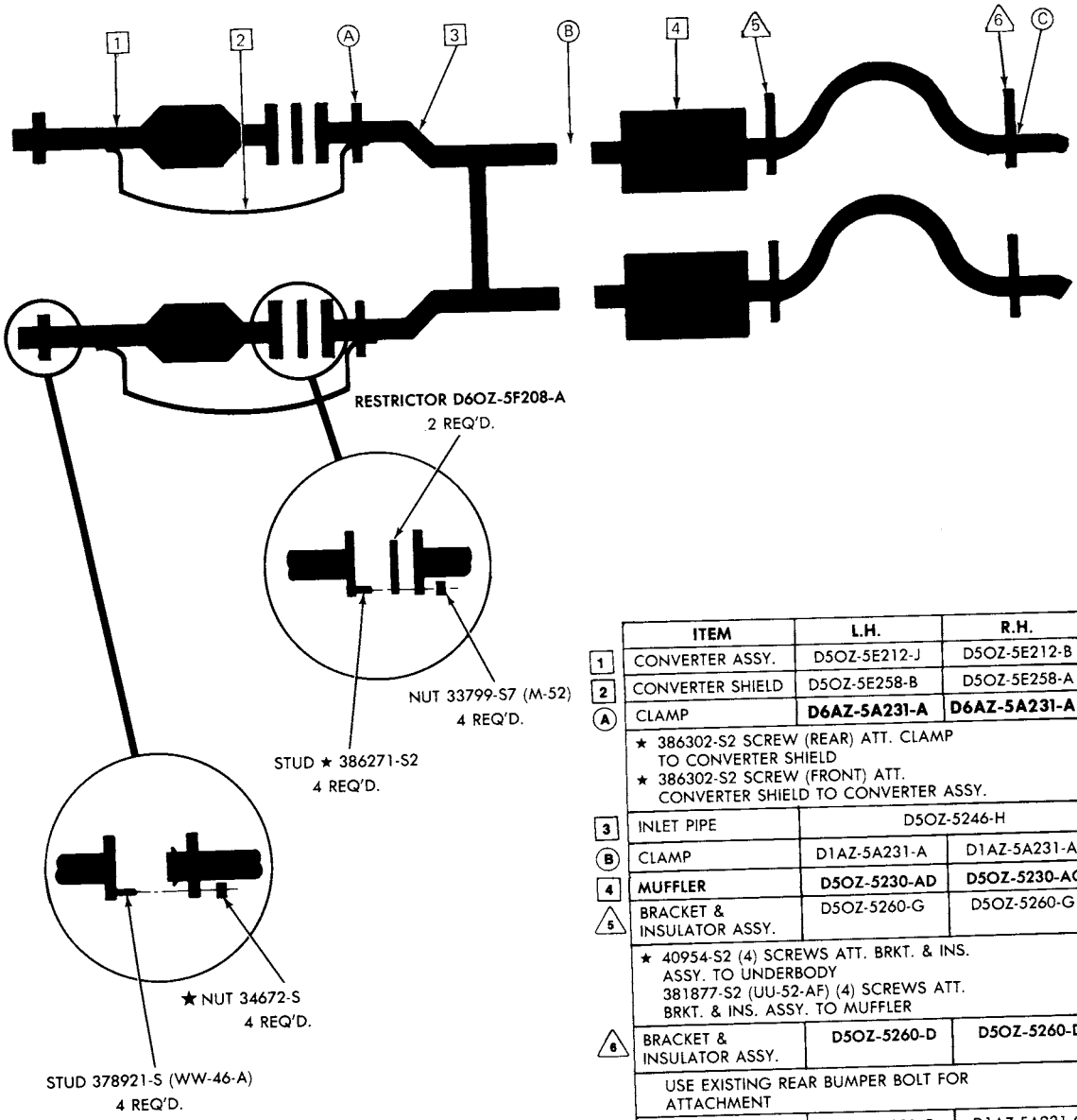

	ITEM	L.H.	R.H.
1	CONVERTER ASSY.	D5OZ-5E212-J	D5OZ-5E212-B
2	CONVERTER SHIELD	D5OZ-5E258-B	D5OZ-5E258-A
A	CLAMP	**D6AZ-5A231-A**	**D6AZ-5A231-A**
	★ 386302-S2 SCREW (REAR) ATT. CLAMP TO CONVERTER SHIELD ★ 386302-S2 SCREW (FRONT) ATT. CONVERTER SHIELD TO CONVERTER ASSY.		
3	INLET PIPE	D5OZ-5246-H	
B	CLAMP	D1AZ-5A231-A	D1AZ-5A231-A
4	**MUFFLER**	**D5OZ-5230-AD**	**D5OZ-5230-AC**
5	BRACKET & INSULATOR ASSY.	D5OZ-5260-G	D5OZ-5260-G
	★ 40954-S2 (4) SCREWS ATT. BRKT. & INS. ASSY. TO UNDERBODY 381877-S2 (UU-52-AF) (4) SCREWS ATT. BRKT. & INS. ASSY. TO MUFFLER		
6	BRACKET & INSULATOR ASSY.	**D5OZ-5260-D**	**D5OZ-5260-D**
	USE EXISTING REAR BUMPER BOLT FOR ATTACHMENT		
C	CLAMP	D1AZ-5A231-C	D1AZ-5A231-C

1976 COUGAR—8 CYL. 460-4/B SEDAN (NON-CONVERTER)

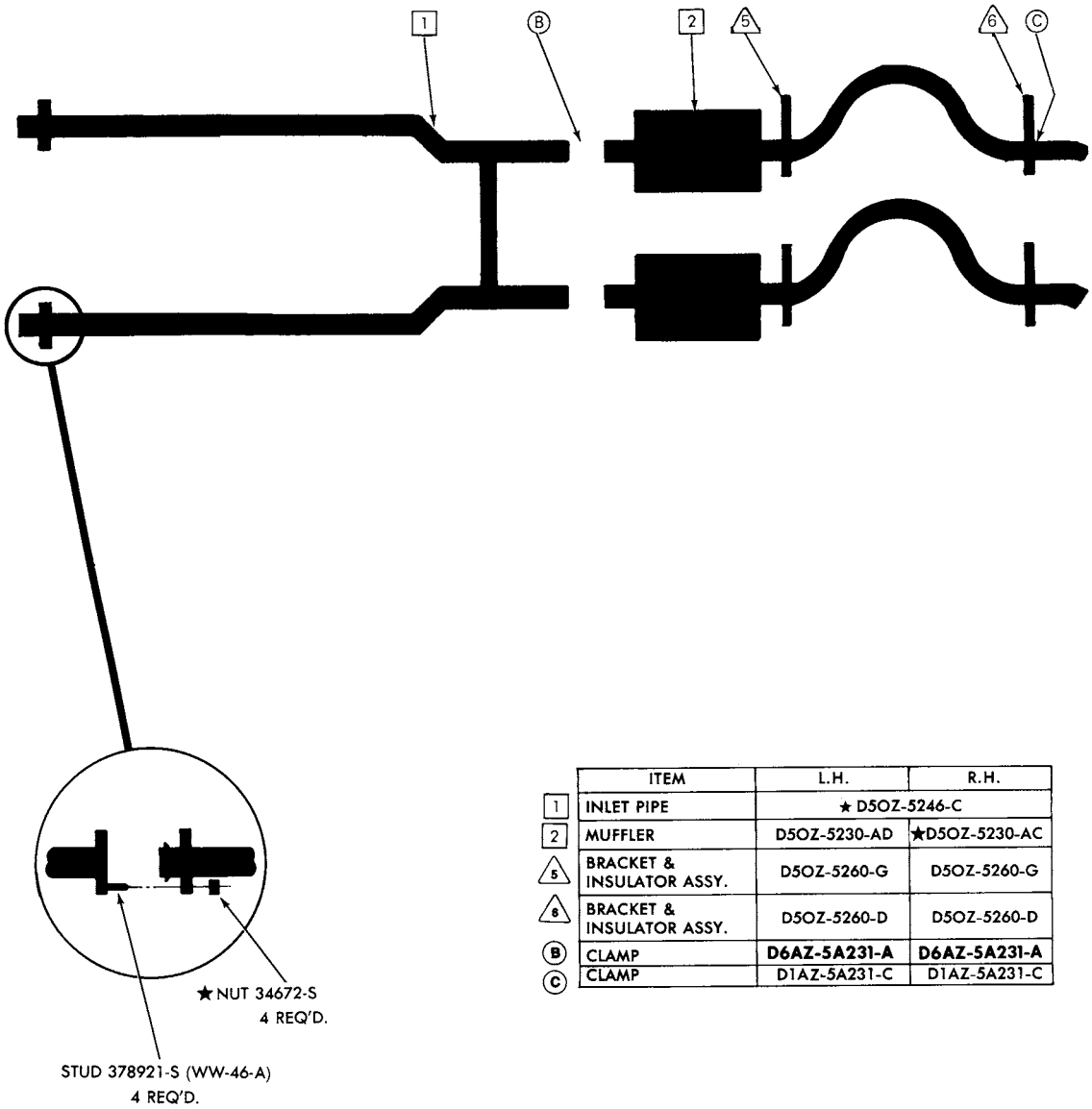

	ITEM	L.H.	R.H.
1	INLET PIPE	★ D5OZ-5246-C	
2	MUFFLER	D5OZ-5230-AD	★D5OZ-5230-AC
5	BRACKET & INSULATOR ASSY.	D5OZ-5260-G	D5OZ-5260-G
6	BRACKET & INSULATOR ASSY.	D5OZ-5260-D	D5OZ-5260-D
B	CLAMP	**D6AZ-5A231-A**	**D6AZ-5A231-A**
C	CLAMP	D1AZ-5A231-C	D1AZ-5A231-C

EB-39

COPYRIGHT © 1986 — FORD MOTOR COMPANY — DEARBORN, MICHIGAN

1976 MONARCH—6 CYL. 200-1/B & 250-1/B SEDAN (ALL—WITH CONVERTER)

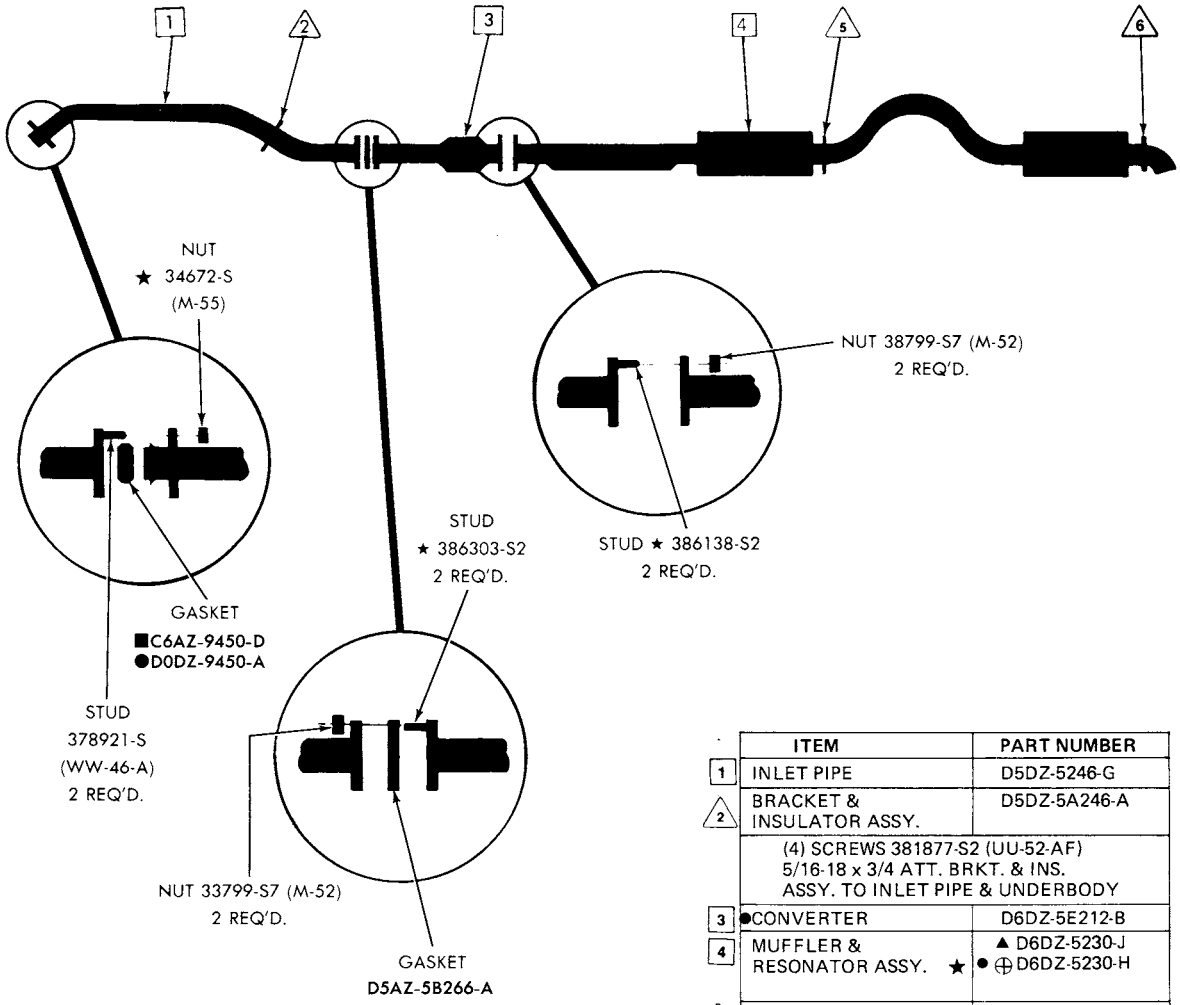

	ITEM	PART NUMBER
1	INLET PIPE	D5DZ-5246-G
2	BRACKET & INSULATOR ASSY.	D5DZ-5A246-A
	(4) SCREWS 381877-S2 (UU-52-AF) 5/16-18 x 3/4 ATT. BRKT. & INS. ASSY. TO INLET PIPE & UNDERBODY	
3	●CONVERTER	D6DZ-5E212-B
4	MUFFLER & RESONATOR ASSY. ★	▲ D6DZ-5230-J ● ⊕ D6DZ-5230-H
5	BRACKET & INSULATOR ASSY	D5DZ-5260-F
	(2) SCREWS 40967-S2 USED WITH PLATE D0DA-5299-A ATT. BRKT. & INS. ASSY. TO BODY PINION BUMPER. (2) SCREWS 381877-S2 (UU-52-AF) 5/16-18 x 3/4 ATT. BRKT. & INS. ASSY. TO RESONATOR.	
6	BRACKET & INSULATOR ASSY.	D5DZ-5260-C
	(4) SCREWS 381877-S2 (UU-52-AF) 5/16-18 x 3/4 ATT. BRKT. & INS. ASSY. TO MUFFLER & UNDERBODY	

●200 ENG.
■ 250 ENG.
▲ 250 ENG. - 2¼" OUTLET PIPE
⊕ 250 ENG. - 2" OUTLET PIPE
● CONVERTER SHELL LENGTH 7"

EV-8

COPYRIGHT © 1986 — FORD MOTOR COMPANY — DEARBORN, MICHIGAN

1976 MONARCH — 6 CYL. 250-1/B SEDAN (ALL—W/O CONVERTER)

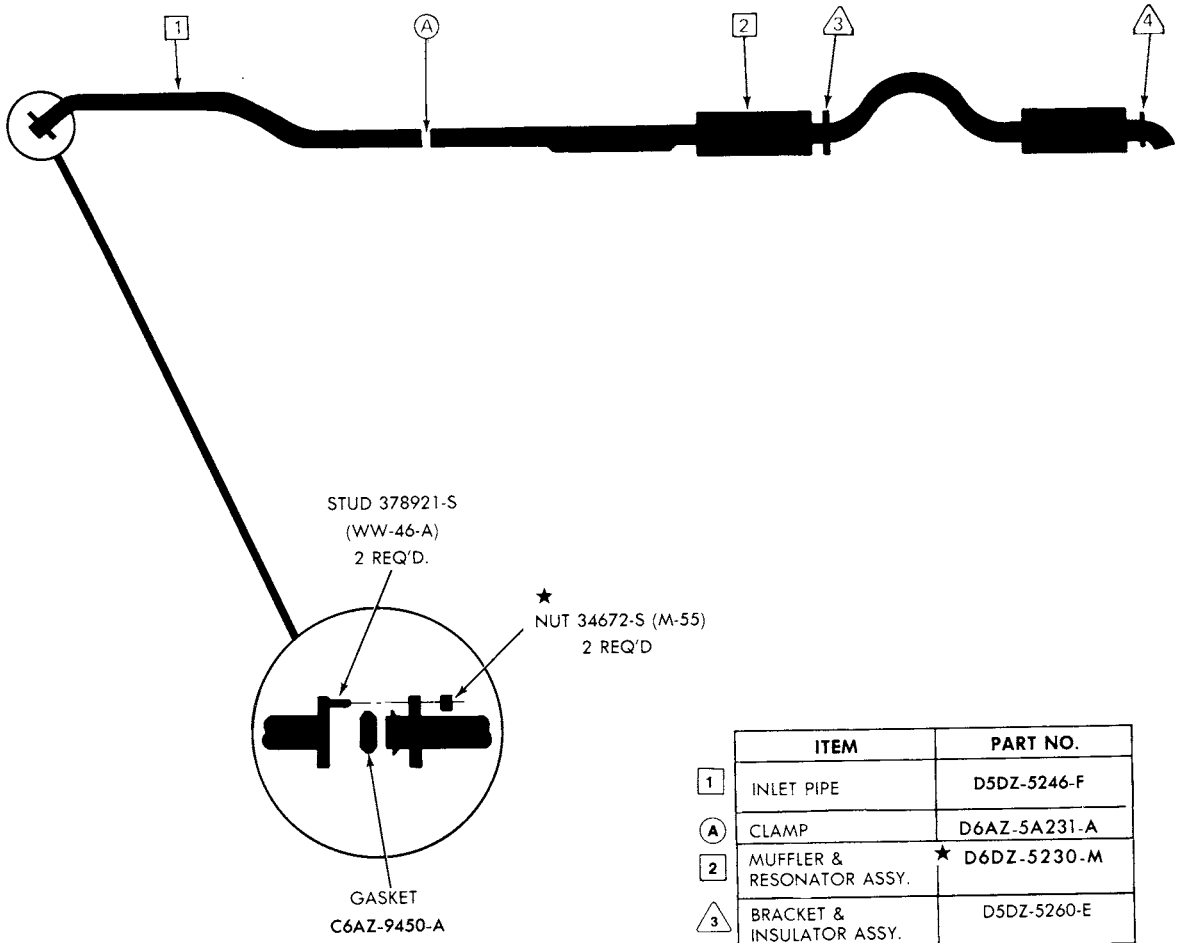

	ITEM	PART NO.
1	INLET PIPE	D5DZ-5246-F
A	CLAMP	D6AZ-5A231-A
2	MUFFLER & RESONATOR ASSY.	★ D6DZ-5230-M
3	BRACKET & INSULATOR ASSY.	D5DZ-5260-E
	(2) SCREWS 40967-S2 USED WITH PLATE D0DA-5299-A ATT. BRKT. & INS. ASSY. TO BODY PINION BUMPER. 2 SCREWS 381877-S2 (UU-52-AF) 5/16-18 x 3/4 ATT. BRKT. & INS. ASSY. TO RESONATOR.	
4	BRACKET & INSULATOR ASSY.	D5DZ-5260-C
	(4) SCREWS 381877-S2 (UU-52-AF) 5/16-18 x 3/4 ATT. BRKT. & INS. ASSY. TO MUFFLER & UNDERBODY.	

1976 MONARCH—8 CYL. 302-2/B SEDAN (ALL—WITH CONVERTER)

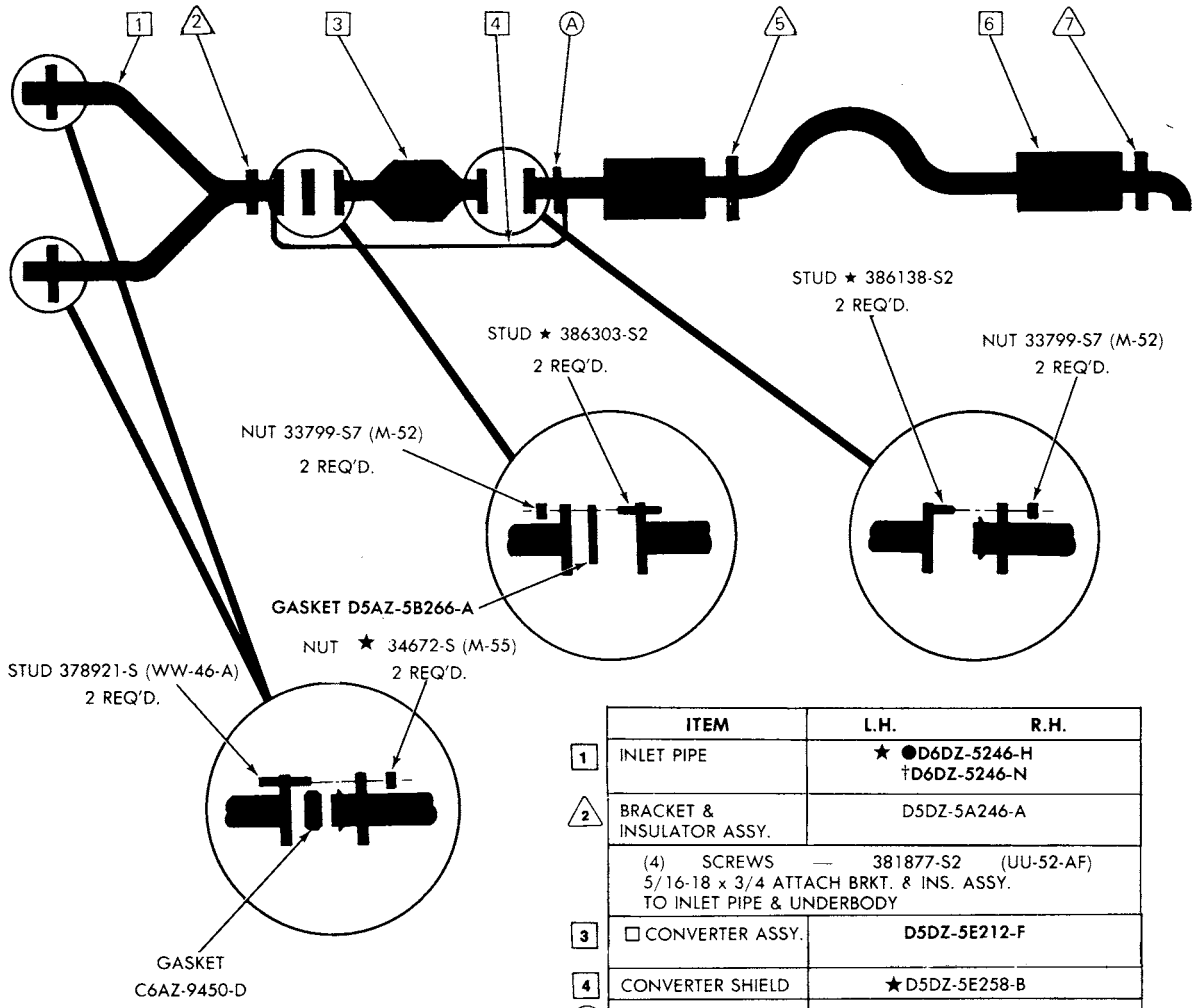

	ITEM	L.H. R.H.
1	INLET PIPE	★ ●D6DZ-5246-H †D6DZ-5246-N
2	BRACKET & INSULATOR ASSY.	D5DZ-5A246-A
	(4) SCREWS — 381877-S2 (UU-52-AF) 5/16-18 x 3/4 ATTACH BRKT. & INS. ASSY. TO INLET PIPE & UNDERBODY	
3	□ CONVERTER ASSY.	D5DZ-5E212-F
4	CONVERTER SHIELD	★D5DZ-5E258-B
A	CLAMP	D5DZ-5C264-B
	SCREW ★ 386302-S2 ATTACH CLAMP TO CONVERTER SHIELD & RESONATOR ASSY.	
5	BRACKET & INSULATOR ASSY.	D5DZ-5260-F
	(2) SCREWS ★ 40967-S2 — USED WITH PLATE D0DZ-5299-A ATT. BRKT. & INS. ASSY. TO BODY PINION BUMPER. (2) SCREWS 381877-S2 (UU-52-AF) 5/16-18 x 3/4 ATT. BRKT. & INS. ASSY. TO RESONATOR	
6	MUFFLER & RESONATOR ASSY.	▲D5DZ-5230-W ■ D6DZ-5230-J
7	BRACKET & INSULATOR ASSY.	D5DZ-5260-C
	4 SCREWS 381877-S2 (UU-52-AF) 5/16-18 x 3/4 ATT. BRKT. & INS. ASSY. TO MUFFLER & UNDERBODY	

●M/T—49 STATES-CANADA & A/T—CALIF.
†A/T — 49 STATES
▲"BEFORE 9/15/75"
■"FROM 9/15/75"
□ CONVERTER SHELL LENGTH 4"

EV-10

COPYRIGHT © 1986 — FORD MOTOR COMPANY — DEARBORN, MICHIGAN

1976 MONARCH—8 CYL. 302-2/B SEDAN (ALL—W/O CONVERTER)

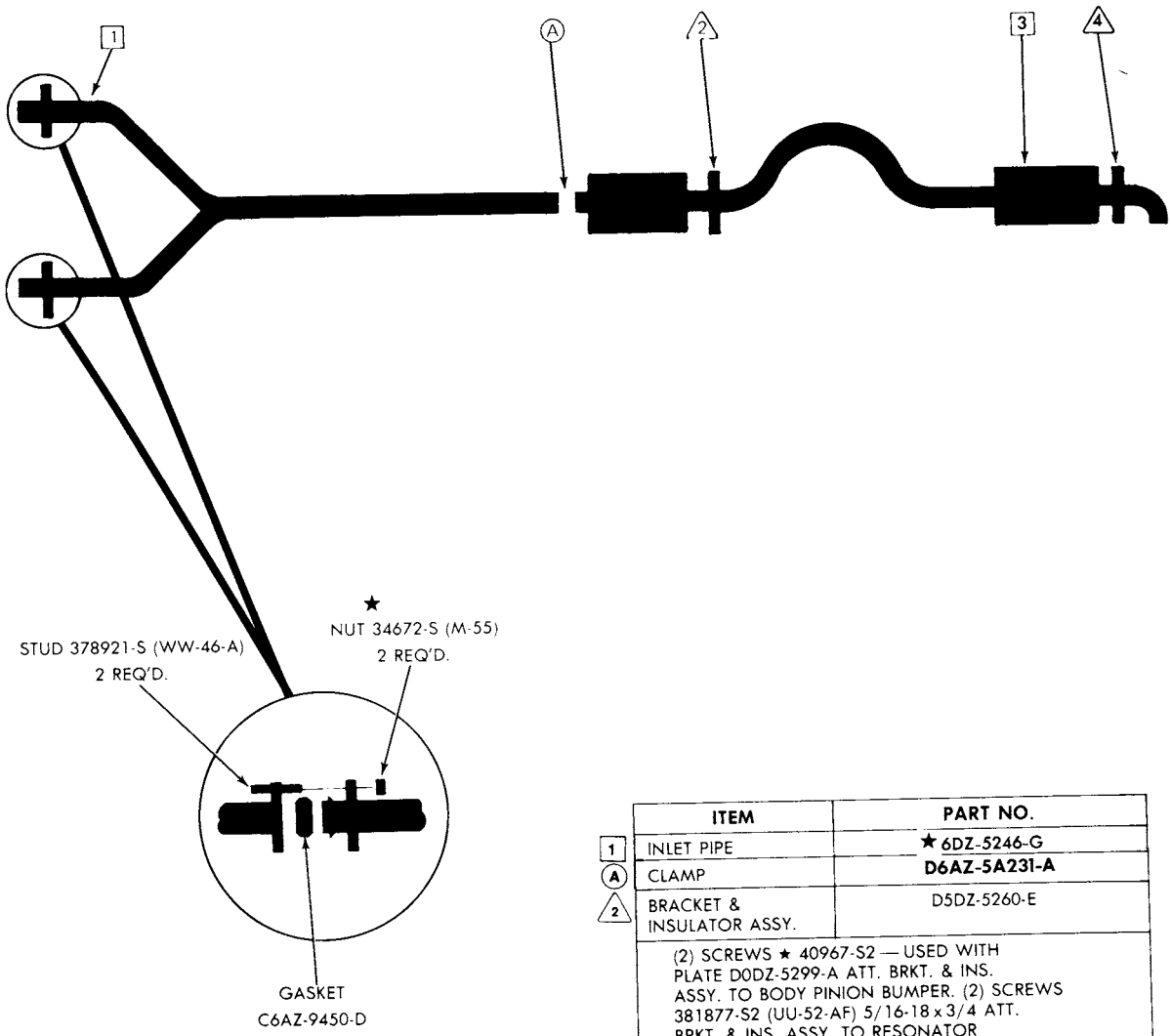

	ITEM	PART NO.
1	INLET PIPE	★ 6DZ-5246-G
A	CLAMP	D6AZ-5A231-A
2	BRACKET & INSULATOR ASSY.	D5DZ-5260-E
	(2) SCREWS ★ 40967-S2 — USED WITH PLATE D0DZ-5299-A ATT. BRKT. & INS. ASSY. TO BODY PINION BUMPER. (2) SCREWS 381877-S2 (UU-52-AF) 5/16-18 x 3/4 ATT. BRKT. & INS. ASSY. TO RESONATOR	
3	MUFFLER & RESONATOR ASSY.	★ ▲D5DZ-5230-Y ■D6DZ-5230-C
4	BRACKET & INSULATOR ASSY.	D5DZ-5260-C

▲"BEFORE 9/15/75"
■"FROM 9/15/75"

1976 MONARCH—8 CYL. 351-2/B SEDAN (ALL—WITH CONVERTER)

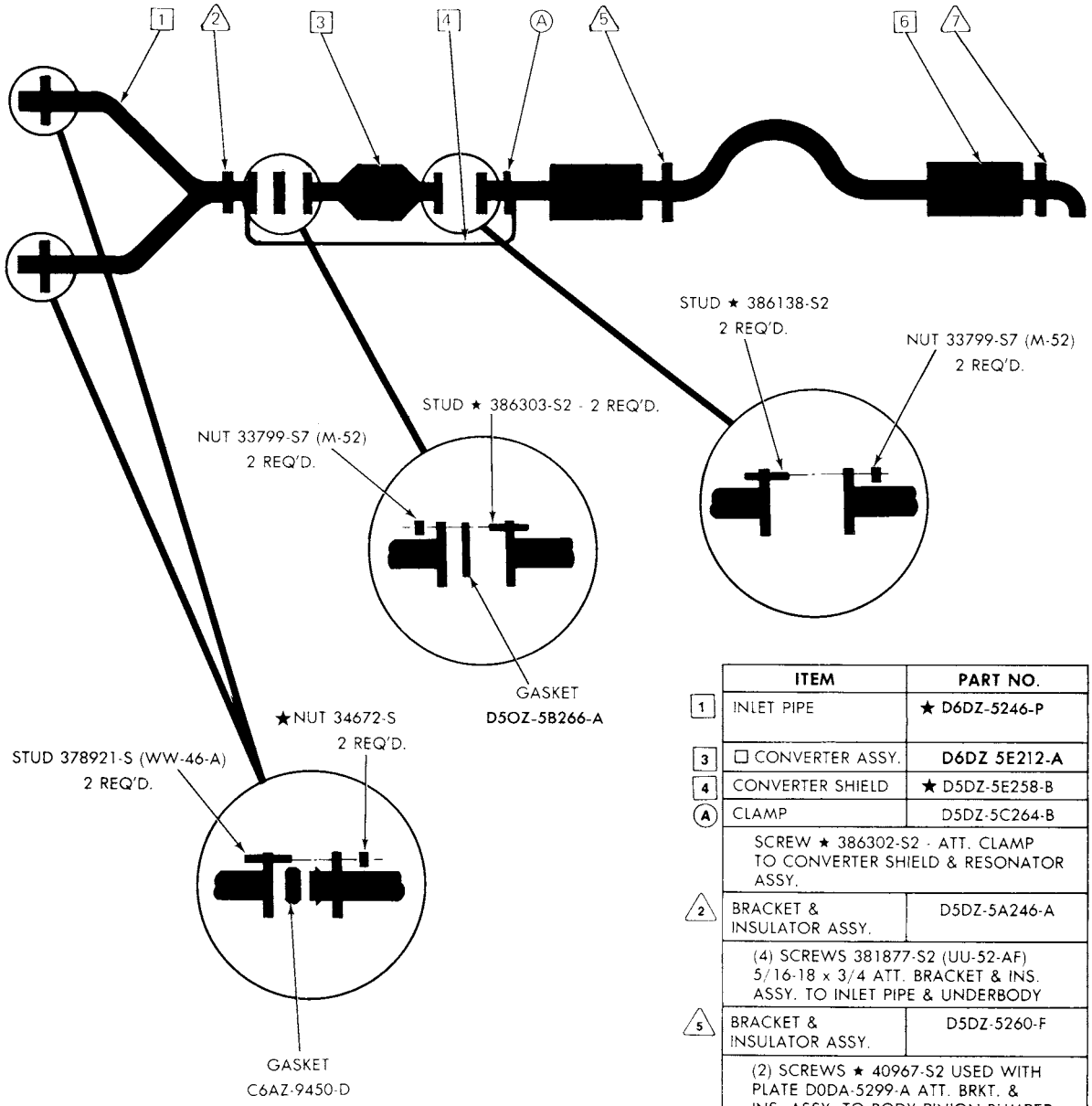

	ITEM	PART NO.
1	INLET PIPE	★ D6DZ-5246-P
3	☐ CONVERTER ASSY.	D6DZ 5E212-A
4	CONVERTER SHIELD	★ D5DZ-5E258-B
A	CLAMP	D5DZ-5C264-B
	SCREW ★ 386302-S2 - ATT. CLAMP TO CONVERTER SHIELD & RESONATOR ASSY.	
2	BRACKET & INSULATOR ASSY.	D5DZ-5A246-A
	(4) SCREWS 381877-S2 (UU-52-AF) 5/16-18 x 3/4 ATT. BRACKET & INS. ASSY. TO INLET PIPE & UNDERBODY	
5	BRACKET & INSULATOR ASSY.	D5DZ-5260-F
	(2) SCREWS ★ 40967-S2 USED WITH PLATE D0DA-5299-A ATT. BRKT. & INS. ASSY. TO BODY PINION BUMPER (2) SCREWS 381877-S2 (UU-52-AF) 5/16-18 x 3/4 ATT. BRKT. & INS. ASSY. TO RESONATOR	
7	BRACKET & INSULATOR ASSY.	D5DZ-5260-C
	(4) SCREWS 381877-S2 (UU-52-AF) 5/16-18 x 3/4 ATT. BRKT. & INS. ASSY. TO MUFFLER UNDERBODY	
6	MUFFLER & RESONATOR ASSY.	▲D5DZ-5230-W ★■D6DZ-5230-B

▲"BEFORE 9/15/75"
■"FROM 9/15/75"
☐ CONVERTER SHELL LENGTH 7"

EV-13

COPYRIGHT © 1986 — FORD MOTOR COMPANY — DEARBORN, MICHIGAN

1976 MONARCH—8 CYL. 351-2/B SEDAN
(ALL—W/O CONVERTER)

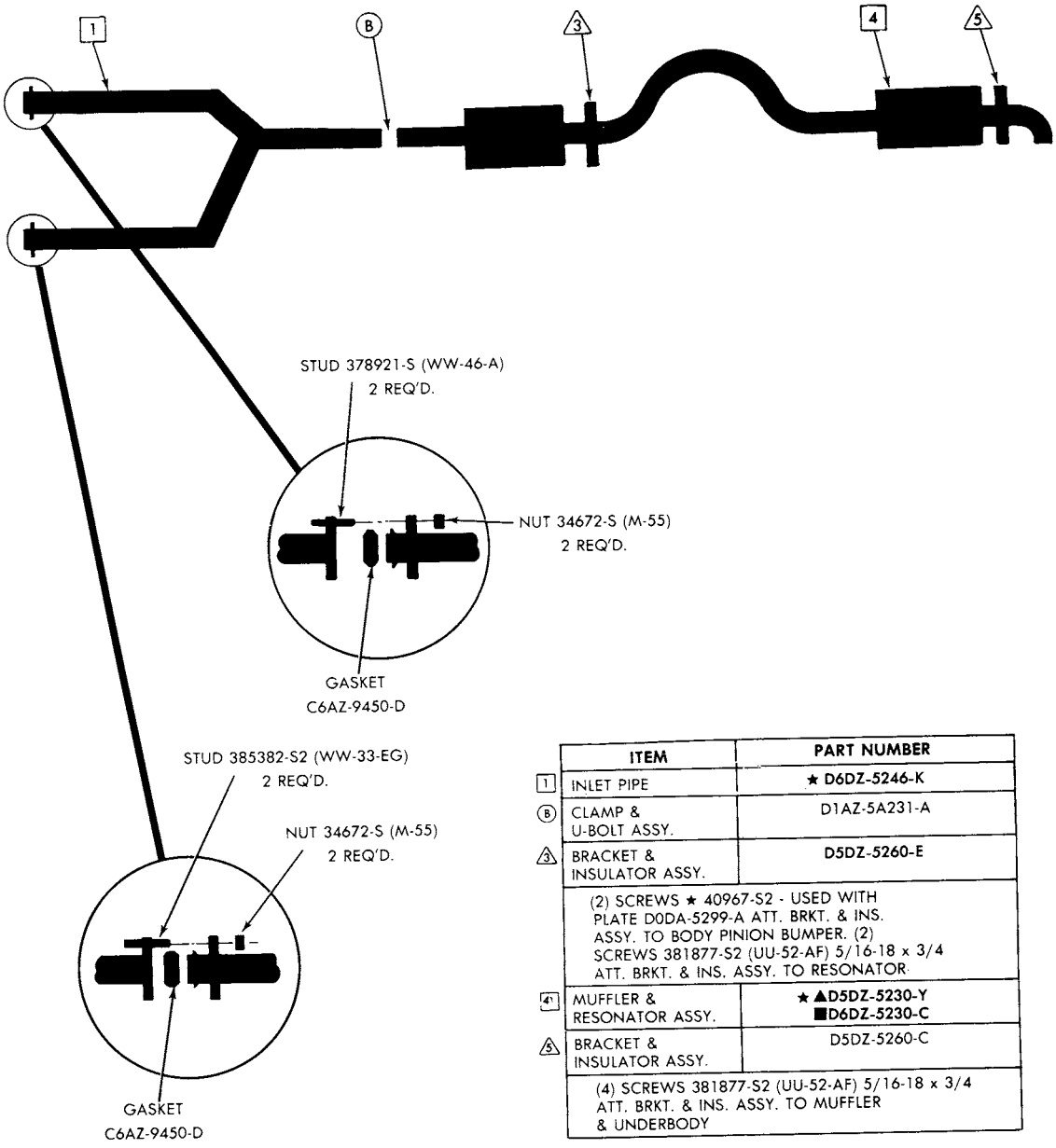

	ITEM	PART NUMBER
1	INLET PIPE	★ D6DZ-5246-K
B	CLAMP & U-BOLT ASSY.	D1AZ-5A231-A
3	BRACKET & INSULATOR ASSY.	D5DZ-5260-E
	(2) SCREWS ★ 40967-S2 - USED WITH PLATE D0DA-5299-A ATT. BRKT. & INS. ASSY. TO BODY PINION BUMPER. (2) SCREWS 381877-S2 (UU-52-AF) 5/16-18 x 3/4 ATT. BRKT. & INS. ASSY. TO RESONATOR	
4	MUFFLER & RESONATOR ASSY.	★ ▲D5DZ-5230-Y ■D6DZ-5230-C
5	BRACKET & INSULATOR ASSY.	D5DZ-5260-C
	(4) SCREWS 381877-S2 (UU-52-AF) 5/16-18 x 3/4 ATT. BRKT. & INS. ASSY. TO MUFFLER & UNDERBODY	

▲"BEFORE 9/15/75"
■"FROM 9/15/75"

EV-12

1976 CAPRI—4 CYL. 140-2/B (2300cc) (BEFORE "8/30/76")

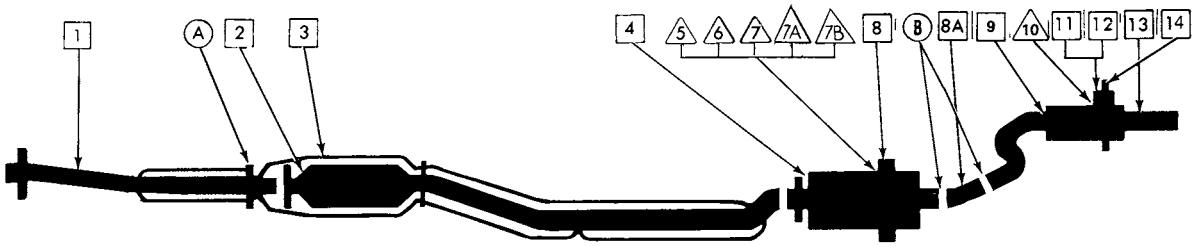

	ITEM	PART NUMBER
1	INLET PIPE	★ ▲D5RY-5246-D #75EB-5245-AB ● ■D5RY-5246-E #75EB-5245-BB ★† ■D6RY-5246-A # 75EB-5246-BC
	STUD E804442-S76 & NUT E820015-S72 ATT. INLET PIPE TO MANIFOLD	
2	CONVERTER	D5RY-5E212-A
3	CONVERTER SHIELD	★D5RY-5E258-B #75EB-5E258-BA †NOT REQ'D
A	CLAMP EXHAUST HEAT SHIELD	★D5RY-5C264-A #75EB-5C264-AA
4	MUFFLER — FRONT	■D5RY-5230-E #75EB-5230-AA ★▲D5RY-5230-L #74EB-5232-DA #75EB-5232-BA
5	CLAMP MUFFLER SUPPORT	D5RY-5A215-B (EXC. CALIF.) D5RY-5A215-C #71EB-5A215-B (CALIF. ONLY)
6	U-BOLT MUFFLER SUPPORT	▲D5RY-5C223-B #74EB-5C223-GA ■D5RY-5C223-C #71EB-5C223-DA
	SCREW E-600214-S72 & WASHER E-830218-S100 USED WITH 5C223	
7	BRACKET MUFFLER HANGER	★ D5RY-5A261-A #75EB-5A261-AA (AUTO. TRANS.) D5RY-5A261-B #75EB-5A261-BA (MAN. TRANS.)
7A	INSULATOR MUFFLER SUPPORT	D8RZ-5281-A

	ITEM	PART NUMBER
7B	BODY BRACKET FRONT MUFFLER	●D2RY-5277-G †D2RY-5277-F
	SCREW E-602187-S (AB-17) ATTACH 5277 TO FLOOR	
8	MUFFLER HEAT SHIELD	★D5RY-5E290-A
B	CLAMP	★●D1RY-5A231-G r/b E0RZ-5A231-B †D5RY-5A231-B
8A	SLEEVE — MUFFLER PIPE CONNECTER	●D5RY-5K256-B †D6RY-5K256-B
9	MUFFLER — REAR	■D5RY-5230-F #75EB-5K244-AB ▲D5RY-5230-G #74EB-5K273-BA
10	INSULATOR — MUFFLER SUPPORT	D5RY-5281-A
11	CLAMP MUFFLER SUPPORT	D5RY-5A215-D #74EB-5A215-CB
12	U-BOLT MUFFLER SUPPORT	D5RY-5C223-D #74EB-5C223-FA
	SCREW E-600214-S72 & WASHER E-830218-S100 USED WITH 5C223	
13	EXTENSION — OUTLET PIPE	D5RY-5263-A EXC. MODEL "S" ★D6RY-5263-B MODEL "S"
14	BODY BRACKET REAR MUFFLER.	D5RY-5K290-A

●"BEFORE 8/1/75"
†"FROM 8/1/75"
■W/CONVERTER — NOTE 1
▲W/O CONVERTER — NOTE 1
NOTE 1: ALL VEHICLES BUILT FROM 8/1/75 INCLUDE CONVERTER.

COPYRIGHT © 1986 — FORD MOTOR COMPANY — DEARBORN, MICHIGAN

1976 CAPRI - 4 CYL. 140-2/B (2300cc) ("FROM 8/30/76")

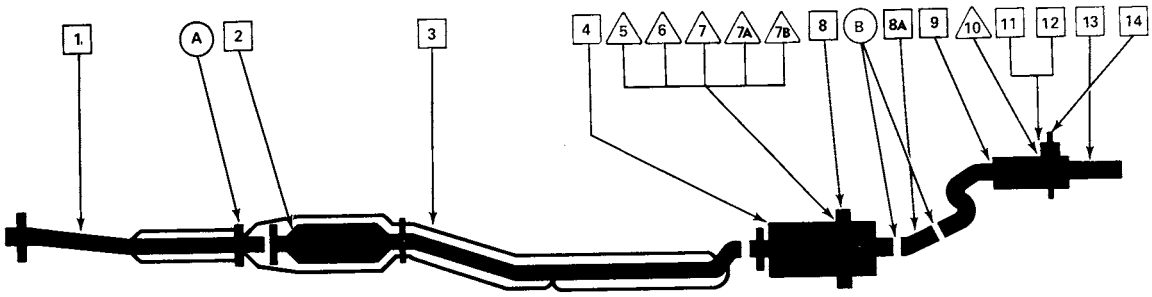

	ITEM	PART NUMBER
1	INLET PIPE	D7RY-5246-E # 77EB-5245-BA,BB # 77EB-5245-DA
	STUD E804442-S76 & NUT E820015-S72 ATT. INLET PIPE TO MANIFOLD	
2	CONVERTER	• D6RY-5E212-D # 77EB-5E211-CA,CC,GA † D6RY-5E212-E # 77EB-5E211-DA,DC,HA
3	CONVERTER SHIELD ★	• D6RY-5E258-A # 77EB-5E258-AA,AB †★D6RY-5E258-B # 77EB-5E258-BA,BB
A	CLAMP EXHAUST HEAT SHIELD	★ D5RY-5C264-A # 75EB-5C264-AA
4	MUFFLER – FRONT	D5RY-5230-E # 75EB-5230-AA # 75EB-5232-BA
5	CLAMP MUFFLER SUPPORT	D5RY-5A215-B (EXC. CALIF.) D5RY-5A215-C # 71EB-5A215-B (CALIF. ONLY)
6	U-BOLT MUFFLER SUPPORT	D5RY-5C223-C # 71EB-5C223-DA
	SCREW E-600214-S72 & WASHER E-830218-S100 USED WITH 5C233	
7	BRACKET MUFFLER HANGER	★ D5RY-5A261-A # 75EB-5A261-AA (AUTO. TRANS.) D5RY-5A261-B # 75EB-5A261-BA (MAN. TRANS.)
7A	INSULATOR MUFFLER SUPPORT	D8RZ-5281-A

	ITEM	PART NUMBER
7B	BODY BRACKET FRONT MUFFLER	D2RY-5277-F
	SCREW E-602187-S (AB-17) ATTACH 5277 TO FLOOR	
8	MUFFLER HEAT SHIELD	★D5RY-5E290-A
B	CLAMP	★D5RY-5A231-B
8A	SLEEVE – MUFFLER PIPE CONNECTOR	D6RY-5K256-B
9	MUFFLER – REAR	D5RY-5230-F # 75EB-5K244-AB
10	INSULATOR – MUFFLER SUPPORT	D5RY-5281-A
11	CLAMP MUFFLER SUPPORT	D5RY-5A215-D # 74EB-5A215-CB
12	U-BOLT MUFFLER SUPPORT	D5RY-5C233-D # 74EB-5C223-FA
	SCREW E-600214-S72 & WASHER E-830218-S100 USED WITH 5C223	
13	EXTENSION – OUTLET PIPE	D5RY-5263-A EXC. MODEL "S" ★ D6RY-5263-B MODEL "S"
14	BODY BRACKET REAR MUFFLER	D5RY-5K290-A

• CALIF.
† EXC. CALIF.

1973/79 LINCOLN-MERCURY CARS

SECTION 52.76
J (CAPRI)

1976 CAPRI—6 CYL. 171-2/B (2800cc) (BEFORE "8/30/76")

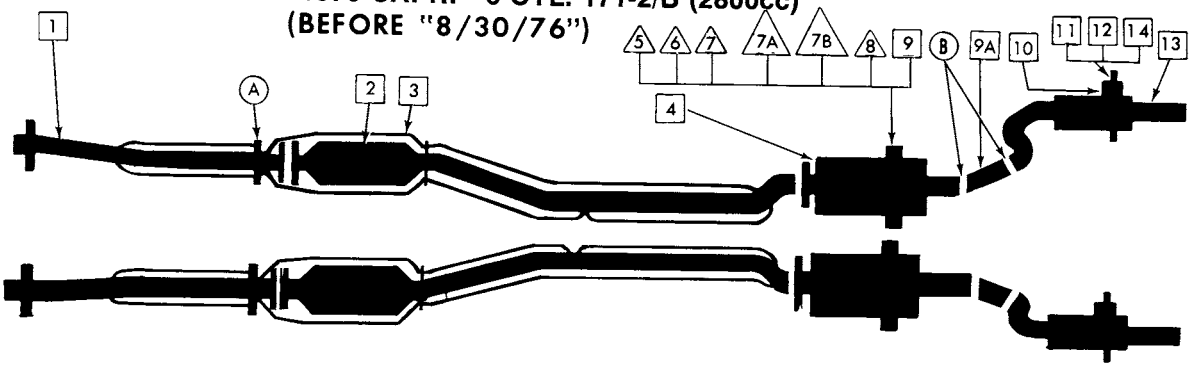

	ITEM	L.H.	R.H.
1	INLET PIPE	% D5RY-5246-C #75EB-5248-CA, DA ★ ▲ D6RY-5246-B # 76EB-5248-BA	★ D5RY-5246-B #75EB-5245-CA, DA
	STUD E804442-S76 & NUT E820015-S72 ATT. INLET PIPES TO MANIFOLD		
2	CONVERTER	D5RY-5E212-C	D5RY-5E212-B
3	CONVERTER SHIELD	★ D5RY-5E258-C #75EB-5E259-AA	★ D5RY-5E258-A #75EB-5E258-AA
A	CLAMP EXHAUST HEAT SHIELD	★ D5RY-5C264-A #75EB-5C264-AA ★ D5RY-5C264-B #75EB-5C264-BA	
4	MUFFLER — FRONT	★D5RY-5230-K #75EB-5232-AA, AB R/B D7RY-5230-A (6/78)	D5RY-5230-J #75EB-5230-BA, BB
5	CLAMP MUFFLER SUPPORT	D5RY-5A215-D #74EB-5A215-CB D5RY-5A215-B #71EB-5A215-BA	D5RY-5A215-C #71EB-5A215-HA
6	U-BOLT MUFFLER SUPPORT	D5RY-5C223-B #74EB-5C223-GA	D5RY-5C223-C #71EB-5C223-DA
	SCREW E600214-S72 & WASHER E-830218-S100 USED WITH 5C223		
7	BRACKET MUFFLER SUPPORT	★ † D5RY-5D250-A #75EB-5D250-AA ★ ■D5RY-5D250-B #75EB-5D250-BA	
7A	INSULATOR — MUFFLER SUPPORT	D8RZ-5281-A	

	ITEM	L.H.	R.H.
7B	BODY BRACKET — FRONT MUFFLER	D2RY-5277-G	D2RY-5277-F
8	BRACKET MUFFLER HANGER	D4RY-5A261-B #74EB-5A261-AB ★ ‡ D5RY-5A261-A #75EB-5A261-AA ‡ D5RY-5A261-B #75EB-5A261-BA	
9	MUFFLER HEAT SHIELD	★ D5RY-5E290-A	
B	CLAMP	★ D5RY-5A231-B	
9A	SLEEVE — MUFFLER PIPE CONNECTOR	**D6RY-5K256-A**	
10	MUFFLER — REAR	D5RY-5230-D #75EB-5K273-AB, AC	D5RY-5230-C #75EB-5K244-BB, BC
11	CLAMP MUFFLER SUPPORT	D5RY-5A215-D #74EB-5A215-CB	
12	U-BOLT MUFFLER SUPPORT	D5RY-5C223-D #74EB-5C223-FA	
	SCREW E-600214-S72 & WASHER E-830218-S100 USED WITH 5C223		
13	EXTENSION — OUTLET PIPE	★ D6RY-5263-A MODEL "S" D5RY-5263-B EXC. MODEL "S"	
14	BODY BRACKET REAR MUFFLER	D5RY-5K290-A	

% "BEFORE 8/1/75"
▲ "FROM 8/1/75"
■ MAN. TRANS.
† AUTO. TRANS.
‡ CALIF. ONLY

EM-15

COPYRIGHT © 1986 — FORD MOTOR COMPANY — DEARBORN, MICHIGAN

1976 CAPRI - 6 CYL. 171-2/B (2800cc) ("FROM 8/30/76")

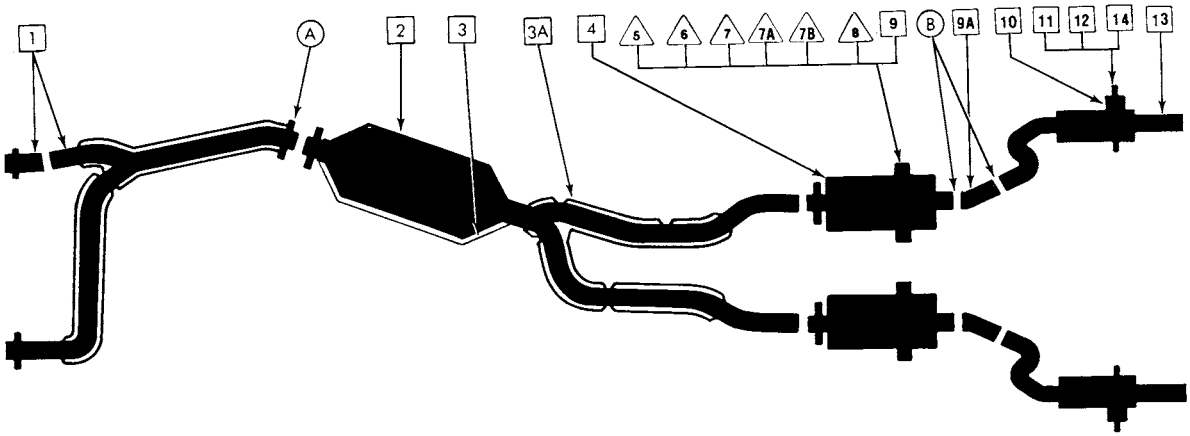

	ITEM	L.H.	R.H.
1	INLET PIPE	D7RY-5246-F # 77EB-5248-BA # 77EB-5248-AA,AB	D7RY-5246-D # 77EB-5245-CA # 77EB-5245-AA,AB
	STUD E-804442-S76 & NUT E-820015-S72 ATT INLET PIPE TO MANIFOLD		
2	CONVERTER	• D6RY-5E212-B # 77EB-5E211-AA,AC □ D6RY-5E212-C # 77EB-5E211-BA,BC,FA	
3	CONVERTER SHIELD	D6RY-5E258-A	
A	CLAMP EXHAUST HEAT SHIELD	★ D5RY-5C264-A # 75EB-5C264-AA ★ D5RY-5C264-B # 75EB-5C264-BA	
3A	PIPE SHIELD	★ D6RY-5K286-A # 77EB-5K286-AA	
4	MUFFLER – FRONT	D5RY-5230-K # 75EB-5232-AA,AB	D7RY-5230-B
5	CLAMP MUFFLER SUPPORT	D5RY-5A215-D # 74EB-5A215-CB D5RY-5A215-B # 71EB-5A215-BA	D5RY-5A215-C # 71EB-5A215-HA
6	U-BOLT MUFFLER SUPPORT	D5RY-5C223-B # 74EB-5C223-GA	D5RY-5C223-C # 71EB-5C223-DA
	SCREW E600214-S72 & WASHER E-830218-S100 USED WITH 5C223		
7	BRACKET MUFFLER SUPPORT	★ • D5RY-5D250-A # 75EB-5D250-AA ★ ▪ D5RY-5D250-B # 75EB-5D250-BA	
7A	INSULATOR – MUFFLER SUPPORT	D8RZ-5281-A	

	ITEM	L.H.	R.H.
7B	BODY BRACKET – FRONT MUFFLER	D2RY-5277-G	D2RY-5277-F
8	BRACKET MUFFLER HANGER	D4RY-5A261-B # 74EB-5A261-AB ★ D5RY-5A261-A # 75EB-5A261-AA D5RY-5A261-B # 75EB-5A261-BA	
9	MUFFLER HEAT SHIELD	★ D5RY-5E290-A	
B	CLAMP	D1RY-5A231-B	
9A	SLEEVE – MUFFLER PIPE CONNECTOR	D6RY-5K256-A	
10	MUFFLER – REAR	D5RY-5230-D # 75EB-5K273-AB,AC	D5RY-5230-C # 75EB-5K244-BB,BC
11	CLAMP MUFFLER SUPPORT	D5RY-5A215-D # 74EB-5A215-CB	
12	U-BOLT MUFFLER SUPPORT	D5RY-5C223-D # 74EB-5C223-FA	
	SCREW E-600214-S72 & WASHER E-830218-S100 USED WITH 5C223		
13	EXTENSION – OUTLET PIPE	★ D6RY-5263-A MODEL "S" D5RY-5263-B EXC. MODEL "S"	
14	BODY BRACKET REAR MUFFLER	D5RY-5K290-A	

• CALIF.
□ EXC. CALIF.
▪ MAN. TRANS.
• AUTO. TRANS.

1976 MARK IV—8 CYL. 460-4/B
(TWO CONVERTER)
SINGLE EXHAUST

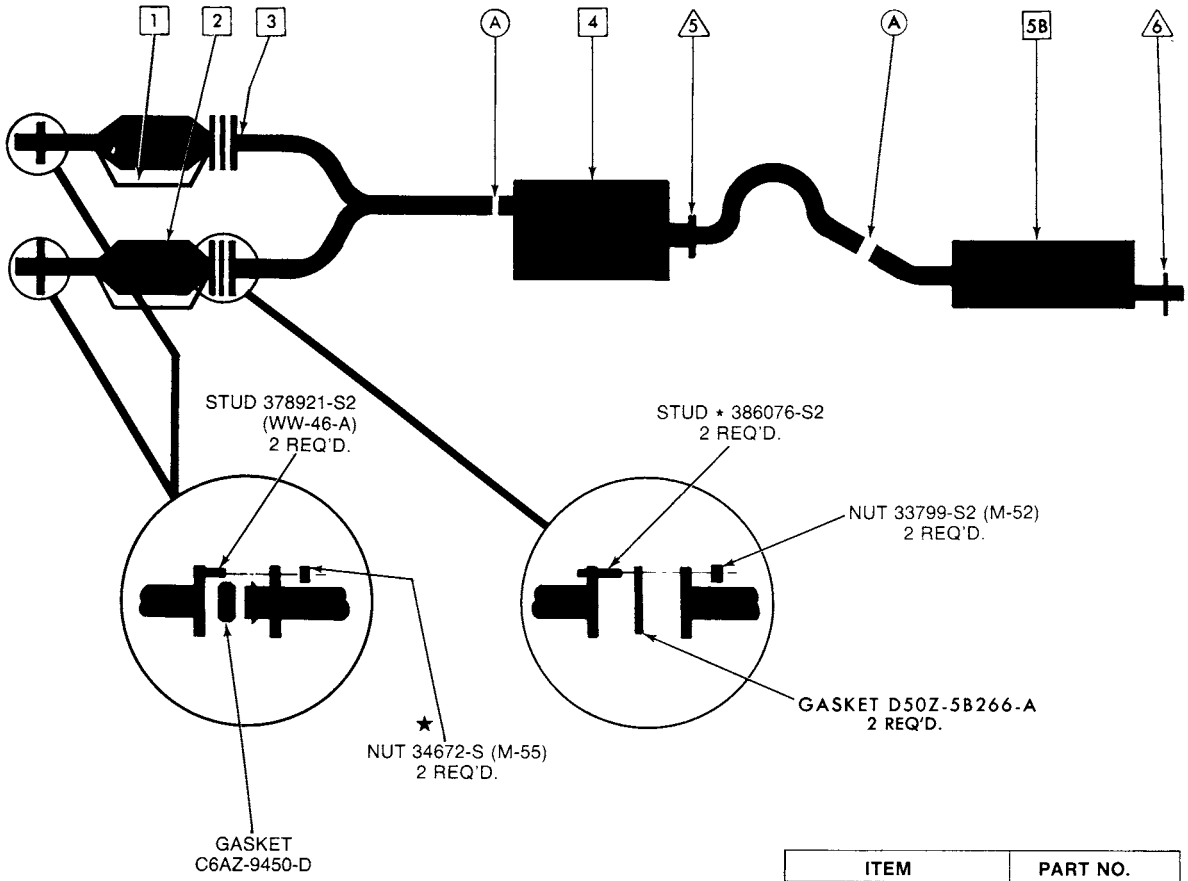

	ITEM	PART NO.
3	INLET PIPE	D6SZ-5246-A
2	CONVERTER	★(L.H.)D5SZ-5E212-B (R.H.) D5OZ-5E212-B
1	CONVERTER SHIELD	★D5SZ-5E258-A(RH) ★D5SZ-5E258-B(LH)
A	CLAMP	D6AZ-5A231-A
4	MUFFLER&RESONATOR ASSY-PRODUCTION	★ D5SZ-5230-D
	MUFFLER-SERVICE	D5SZ-5230-A
5B	RESONATOR-SERVICE	★ D5SZ-5A289-A
5	MUFFLER BRACKET & INSULATOR	★D5OZ-5260-A
6	RESONATOR BRACKET & INSULATOR	D6SZ-5260-A

EK-12

COPYRIGHT © 1986 — FORD MOTOR COMPANY — DEARBORN, MICHIGAN

1976 MARK IV—8 CYL. 460-4/B
(NON-CONVERTER)
SINGLE EXHAUST

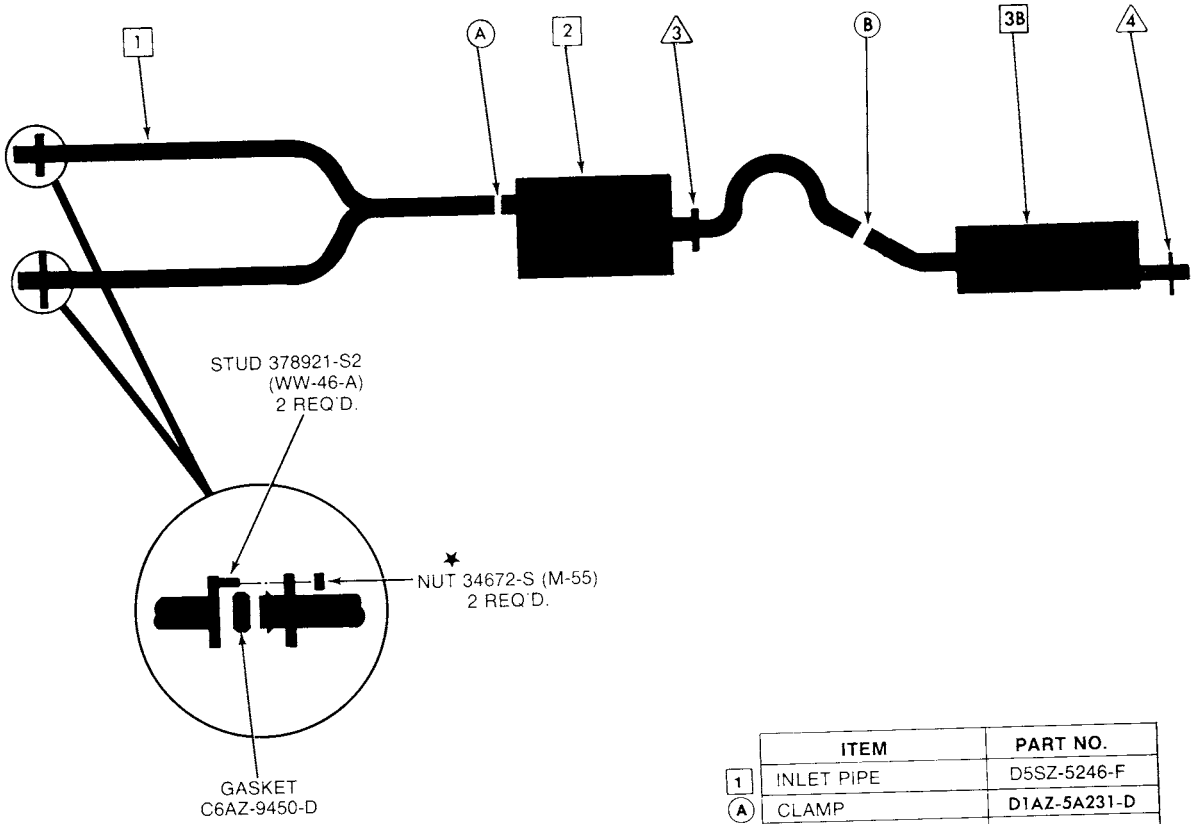

	ITEM	PART NO.
1	INLET PIPE	D5SZ-5246-F
A	CLAMP	D1AZ-5A231-D
2	MUFFLER & RESONATOR ASSY-PRODUCTION	★ D5SZ-5230-D
	MUFFLER-SERVICE	D5SZ-5230-A
3B	RESONATOR-SERVICE	★ D5SZ-5A289-A
B	CLAMP	D6AZ-5A231-A
3	MUFFLER BRACKET & INSULATOR	★ D5OZ-5260-A
4	RESONATOR BRACKET & INSULATOR	D6SZ-5260-A

1976 MARK IV—8 CYL. 460-4/B
(TWO CONVERTER)
DUAL EXHAUST

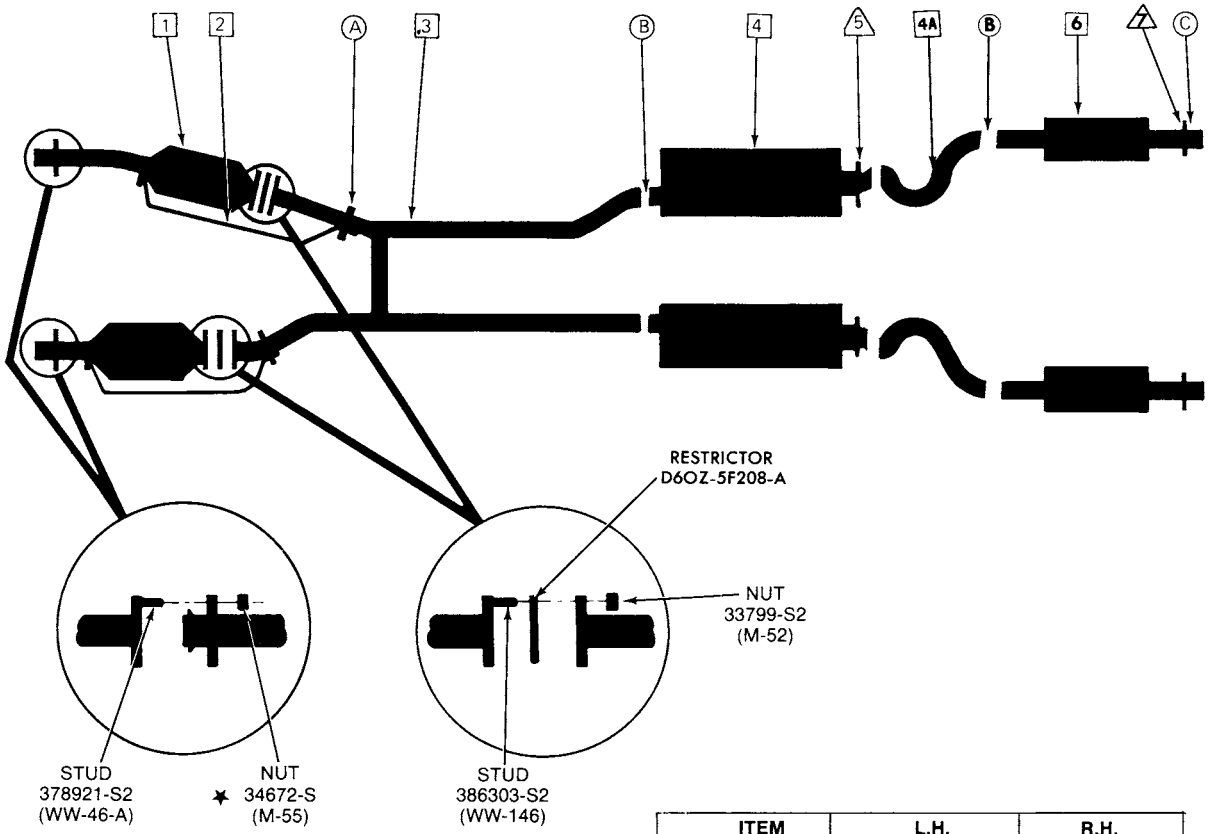

	ITEM	L.H.	R.H.
1	CONVERTER	D5SZ-5E212-B	D5OZ-5E212-B
2	CONVERTER SHIELD	★D5SZ-5E258-B	★D5SZ-5E258-A
A	CLAMP	**D5AZ-5C264-A**	**D5AZ-5C264-A**
3	INLET PIPE	D5SZ-5246-C	
B	CLAMP	**D6AZ-5A231-A**	**D6AZ-5A231-A**
4	**MUFFLER & RESONATOR ASSY-PRODUCTION**	★D5SZ-5230-F	★ D5SZ-5230-E
	MUFFLER-SERVICE	D5AZ-5230-AK	D5AZ-5230-AK
4A	INTERMEDIATE PIPE (SERVICE)	D5SZ-5A212-B	D5SZ-5A212-A
5	BRACKET & INSULATOR	✶ D5OZ-5260-A	✶ D5OZ-5260-A
6	**RESONATOR-SERVICE**	**D5SZ-5A289-E**	**D5SZ-5A289-B**
7	BRACKET & INSULATOR	D6SZ-5260-A	D6SZ-5260-A
C	CLAMP	D1AZ-5A231-D	D1AZ-5A231-D

EK-14

COPYRIGHT © 1986 — FORD MOTOR COMPANY — DEARBORN, MICHIGAN

1976 BOBCAT—4 CYL. 140-2/B (2300cc) SEDAN (ALL—WITH CONVERTER)

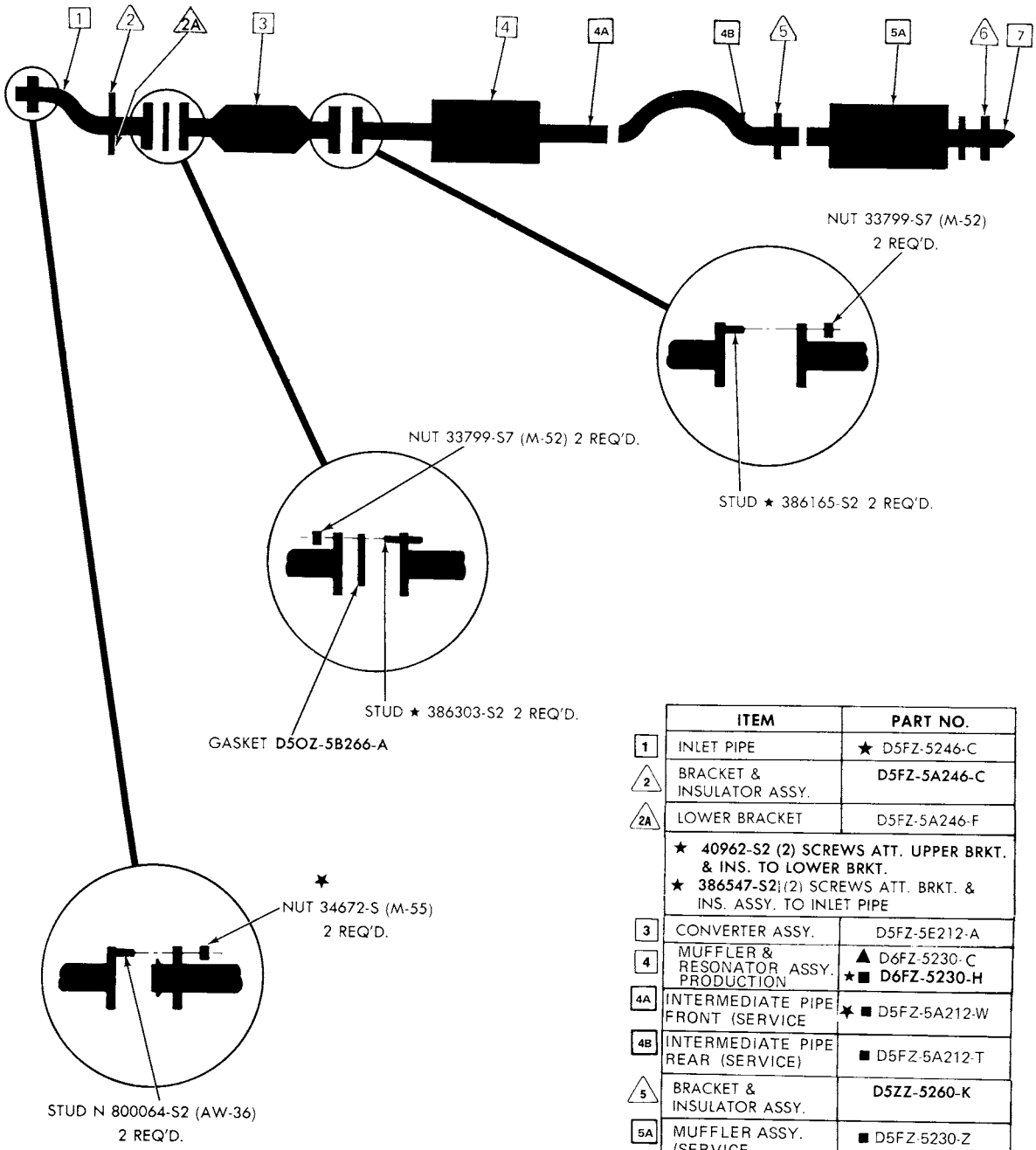

	ITEM	PART NO.
1	INLET PIPE	★ D5FZ-5246-C
2	BRACKET & INSULATOR ASSY.	**D5FZ-5A246-C**
2A	LOWER BRACKET	D5FZ-5A246-F
	★ **40962-S2 (2) SCREWS ATT. UPPER BRKT. & INS. TO LOWER BRKT.** ★ **386547-S2** (2) SCREWS ATT. BRKT. & INS. ASSY. TO INLET PIPE	
3	CONVERTER ASSY.	D5FZ-5E212-A
4	MUFFLER & RESONATOR ASSY. PRODUCTION	▲ D6FZ-5230-C ★■ **D6FZ-5230-H**
4A	INTERMEDIATE PIPE FRONT (SERVICE	★ ■ D5FZ-5A212-W
4B	INTERMEDIATE PIPE REAR (SERVICE)	■ D5FZ-5A212-T
5	BRACKET & INSULATOR ASSY.	**D5ZZ-5260-K**
5A	MUFFLER ASSY. (SERVICE	■ D5FZ-5230-Z
	★ 40962-S2 (4) SCREWS ATT. BRKT. & INS. ASSY. TO UNDERBODY & PIPE ASSY.	
6	BRACKET & INSULATOR ASSY.	D5FZ-5260-E
	★ 40962-S2 (2) SCREWS ATT. BRKT. & INS. ASSY. TO UNDERBODY 381877-S2 (UU-52-AF) (2) SCREWS ATT. BRKT. & INS. ASSY. TO MUFFLER	
7	OUTLET PIPE (SERVICE	■ D5FZ-5255-E

▲ **"BEFORE 4/1/76"**
■ **"FROM 4/1/76"**

ET-16

COPYRIGHT © 1986 — FORD MOTOR COMPANY — DEARBORN, MICHIGAN

1976 BOBCAT—4 CYL. 140-2/B (2300cc) SEDAN (ALL W/O CONVERTER)

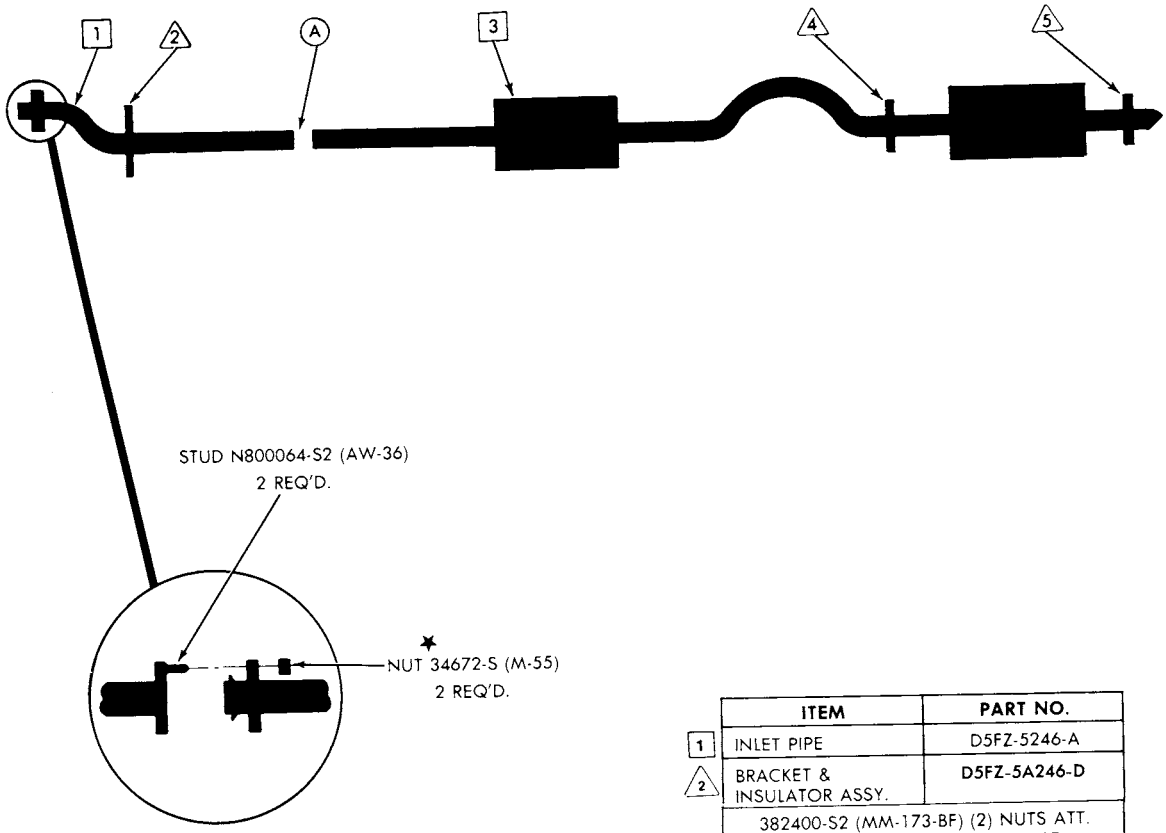

	ITEM	PART NO.
1	INLET PIPE	D5FZ-5246-A
2	BRACKET & INSULATOR ASSY.	D5FZ-5A246-D
	382400-S2 (MM-173-BF) (2) NUTS ATT. BRKT. & INS. ASSY. TO ENG. SUPT. ★ 40962-S2 (2) SCREWS ATT. BRKT. & INS. ASSY. TO INLET PIPE	
A	CLAMP	D1AZ-5A231-B
3	MUFFLER & RESONATOR ASSY.	▲ D5FZ-5230-H ■ D6FZ-5230-J
4	BRACKET & INSULATOR ASSY.	D8FZ-5260-A
	★ 40962-S2 (4) SCREWS ATT. BRKT. & INS. ASSY. TO UNDERBODY & PIPE ASSY.	
5	BRACKET & INSULATOR ASSY.	D8FZ-5260-A
	★ 40962-S2 (2) SCREWS ATT. BRKT. & INS. ASSY. TO UNDERBODY 381877-S2 (UU-52-AF) (2) SCREWS ATT. BRKT. & INS. ASSY. TO MUFFLER	

▲ "BEFORE 7/1/76"
■ "FROM 7/1/76"

1976 BOBCAT—4 CYL. 140-2/B (2300cc) STATION WAGON (ALL—WITH CONVERTER)

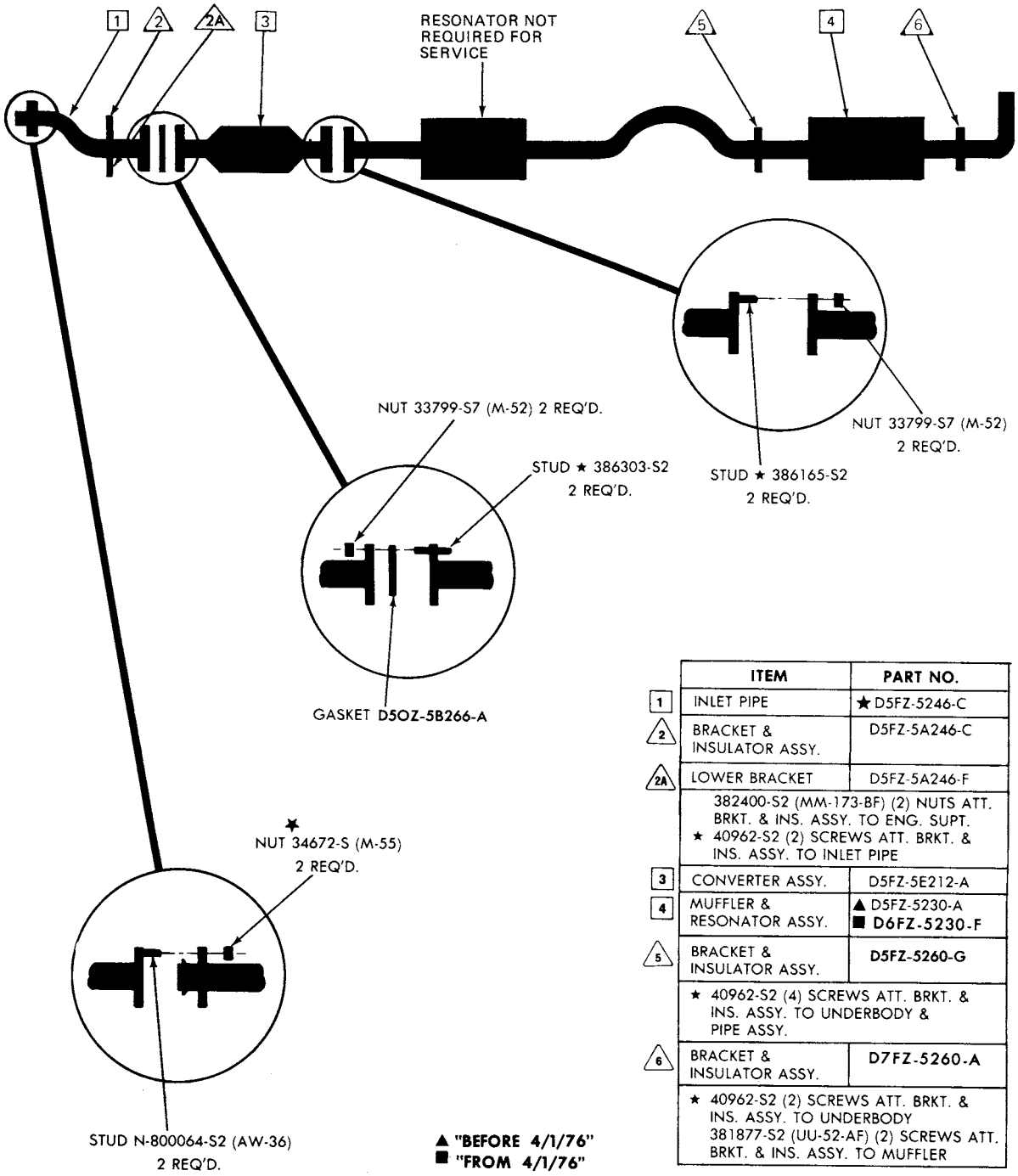

	ITEM	PART NO.
1	INLET PIPE	★ D5FZ-5246-C
2	BRACKET & INSULATOR ASSY.	D5FZ-5A246-C
2A	LOWER BRACKET	D5FZ-5A246-F
	382400-S2 (MM-173-BF) (2) NUTS ATT. BRKT. & INS. ASSY. TO ENG. SUPT. ★ 40962-S2 (2) SCREWS ATT. BRKT. & INS. ASSY. TO INLET PIPE	
3	CONVERTER ASSY.	D5FZ-5E212-A
4	MUFFLER & RESONATOR ASSY.	▲ D5FZ-5230-A ■ D6FZ-5230-F
5	BRACKET & INSULATOR ASSY.	D5FZ-5260-G
	★ 40962-S2 (4) SCREWS ATT. BRKT. & INS. ASSY. TO UNDERBODY & PIPE ASSY.	
6	BRACKET & INSULATOR ASSY.	D7FZ-5260-A
	★ 40962-S2 (2) SCREWS ATT. BRKT. & INS. ASSY. TO UNDERBODY 381877-S2 (UU-52-AF) (2) SCREWS ATT. BRKT. & INS. ASSY. TO MUFFLER	

▲ "BEFORE 4/1/76"
■ "FROM 4/1/76"

ET-18

COPYRIGHT © 1986 — FORD MOTOR COMPANY — DEARBORN, MICHIGAN

1976 BOBCAT—4 CYL. 140-2/B (2300cc) STATION WAGON (ALL—W/O CONVERTER)

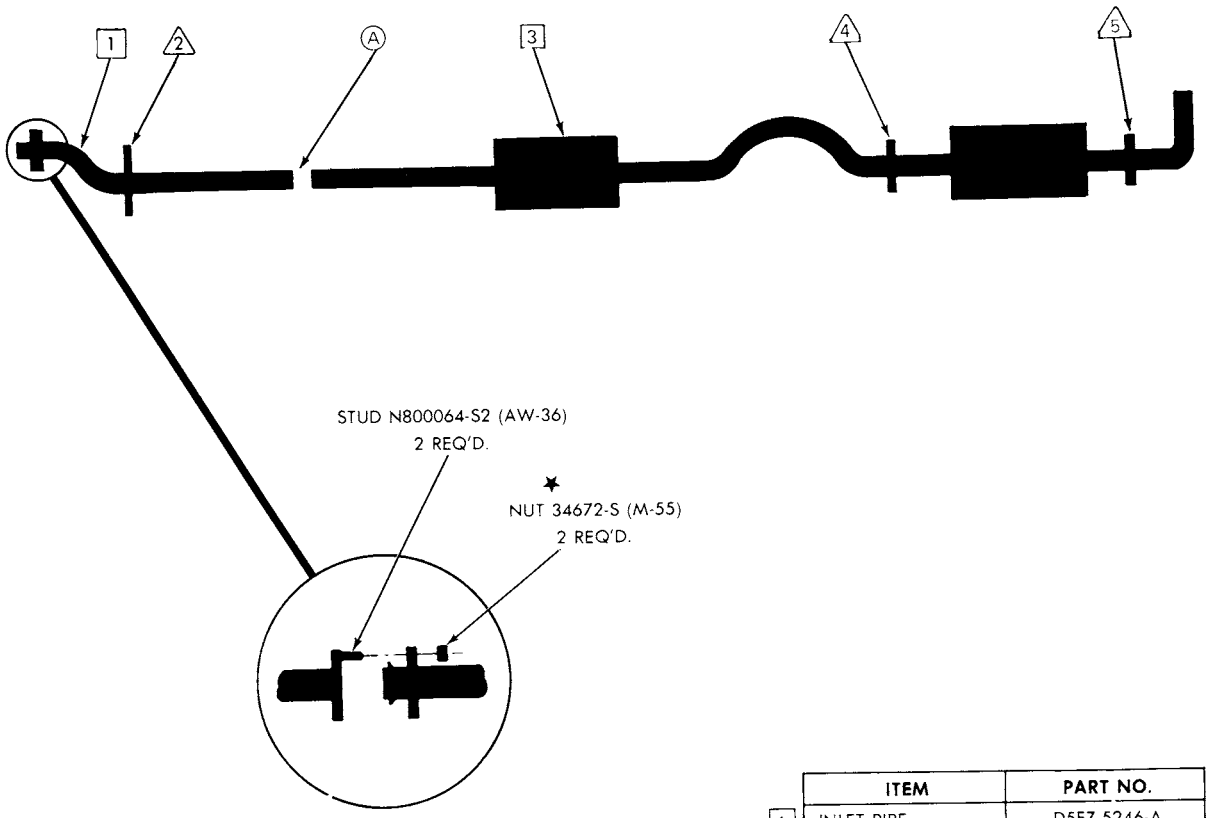

	ITEM	PART NO.
1	INLET PIPE	D5FZ-5246-A
2	BRACKET & INSULATOR ASSY.	D5FZ-5A246-D
	382400-S2 (MM-173-BF) (2) NUTS ATT. BRKT. & INS. ASSY. TO ENG. SUPT. ★ 40962-S2 (2) SCREWS ATT. BRKT. & INS. ASSY. TO INLET PIPE	
A	CLAMP	D1AZ-5A231-B
3	MUFFLER & RESONATOR ASSY.	▲ D5FZ-5230-G ★■ D6FZ-5230-G
4	BRACKET & INSULATOR ASSY.	D5FZ-5260-G
	★ 40962-S2 (4) SCREWS ATT. BRKT. & INS. ASSY. TO UNDERBODY & PIPE ASSY.	
5	BRACKET & INSULATOR ASSY.	D7FZ-5260-A
	★ 40962-S2 (2) SCREWS ATT. BRKT. & INS. ASSY. TO UNDERBODY 381877-S2 (UU-52-AF) (2) SCREWS ATT. BRKT. & INS. ASSY TO MUFFLER	

▲ "BEFORE 7/1/76"
■ "FROM 7/1/76"

1976 BOBCAT—6 CYL. 171-2/B (2800cc) SEDAN (TWO CONVERTER)

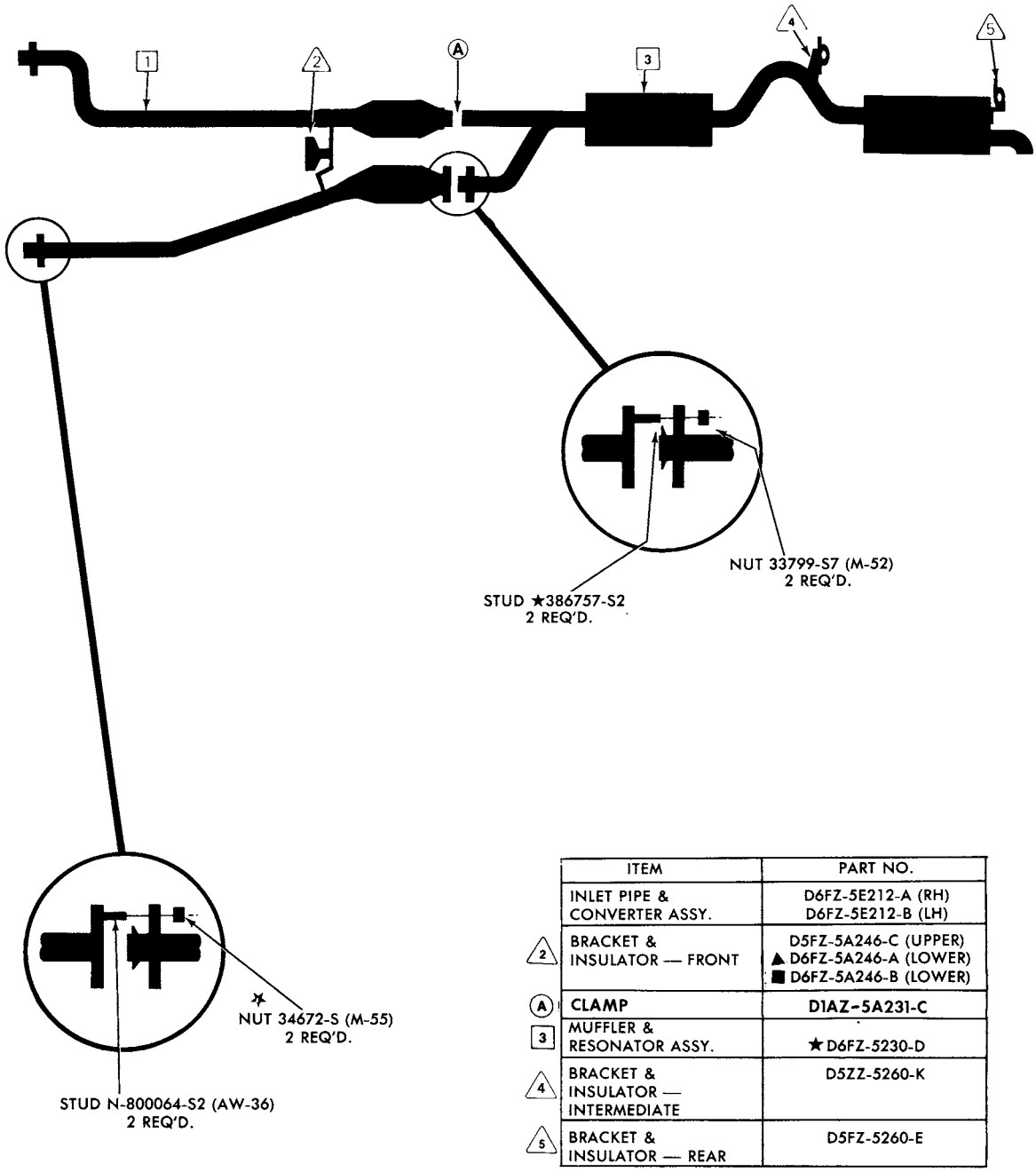

	ITEM	PART NO.
	INLET PIPE & CONVERTER ASSY.	D6FZ-5E212-A (RH) D6FZ-5E212-B (LH)
2	BRACKET & INSULATOR — FRONT	D5FZ-5A246-C (UPPER) ▲ D6FZ-5A246-A (LOWER) ■ D6FZ-5A246-B (LOWER)
A	CLAMP	D1AZ-5A231-C
3	MUFFLER & RESONATOR ASSY.	★ D6FZ-5230-D
4	BRACKET & INSULATOR — INTERMEDIATE	D5ZZ-5260-K
5	BRACKET & INSULATOR — REAR	D5FZ-5260-E

▲ W/O CONVERTER SHIELD BRKT.
■ W/CONVERTER SHIELD BRKT.

ET-20

COPYRIGHT © 1986 — FORD MOTOR COMPANY — DEARBORN, MICHIGAN

1976 BOBCAT — 6 CYL. 171-2/B (2800cc) SEDAN (WITH CONVERTER)

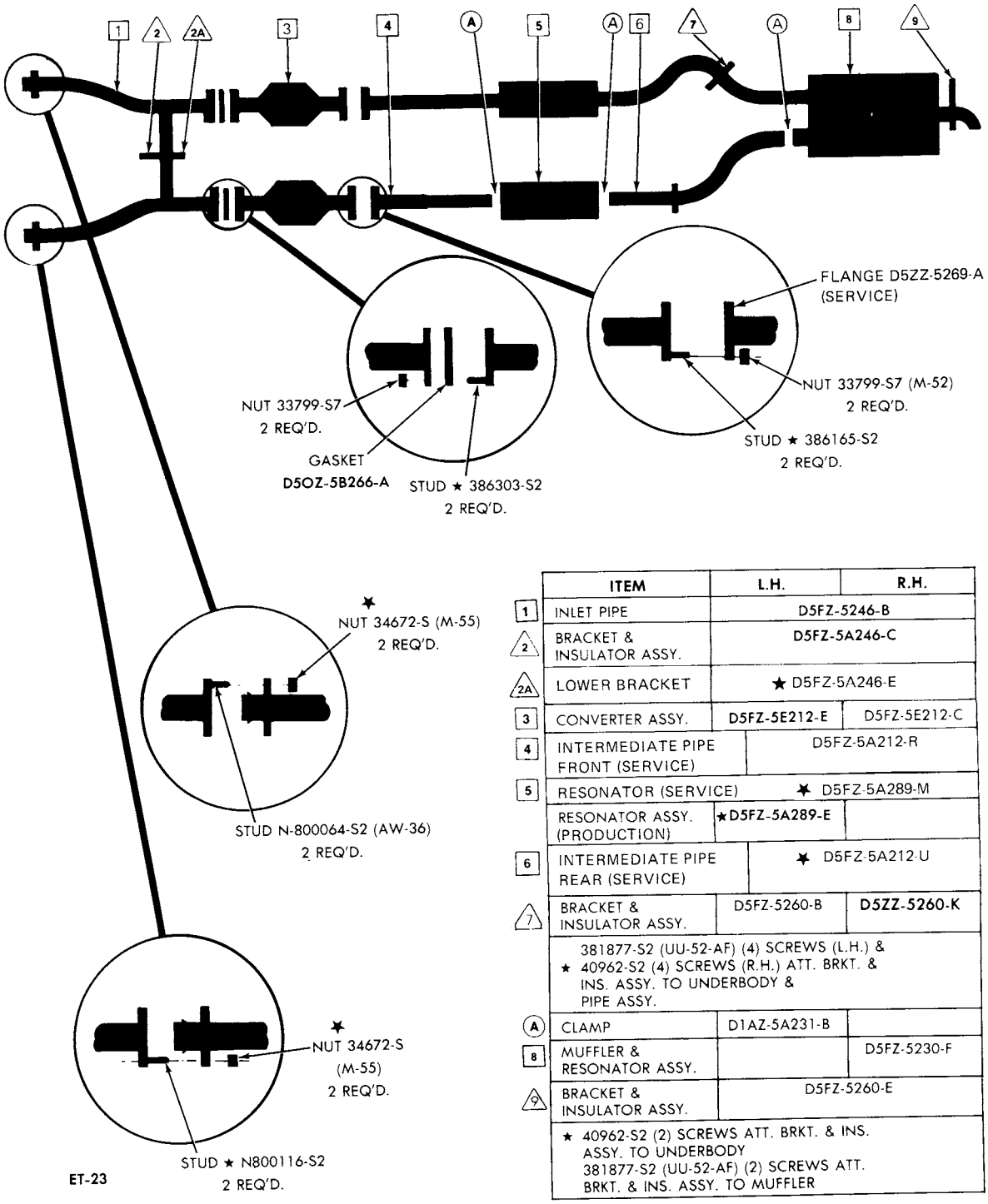

	ITEM	L.H.	R.H.
1	INLET PIPE	D5FZ-5246-B	
2	BRACKET & INSULATOR ASSY.	D5FZ-5A246-C	
2A	LOWER BRACKET	★ D5FZ-5A246-E	
3	CONVERTER ASSY.	D5FZ-5E212-E	D5FZ-5E212-C
4	INTERMEDIATE PIPE FRONT (SERVICE)	D5FZ-5A212-R	
5	RESONATOR (SERVICE)	✶ D5FZ-5A289-M	
	RESONATOR ASSY. (PRODUCTION)	★D5FZ-5A289-E	
6	INTERMEDIATE PIPE REAR (SERVICE)	✶ D5FZ-5A212-U	
7	BRACKET & INSULATOR ASSY.	D5FZ-5260-B	D5ZZ-5260-K
	381877-S2 (UU-52-AF) (4) SCREWS (L.H.) & ★ 40962-S2 (4) SCREWS (R.H.) ATT. BRKT. & INS. ASSY. TO UNDERBODY & PIPE ASSY.		
A	CLAMP	D1AZ-5A231-B	
8	MUFFLER & RESONATOR ASSY.		D5FZ-5230-F
9	BRACKET & INSULATOR ASSY.	D5FZ-5260-E	
	★ 40962-S2 (2) SCREWS ATT. BRKT. & INS. ASSY. TO UNDERBODY 381877-S2 (UU-52-AF) (2) SCREWS ATT. BRKT. & INS. ASSY. TO MUFFLER		

1976 BOBCAT—6 CYL. 171-2/B (2800cc) SEDAN (ALL—W/O CONVERTER)

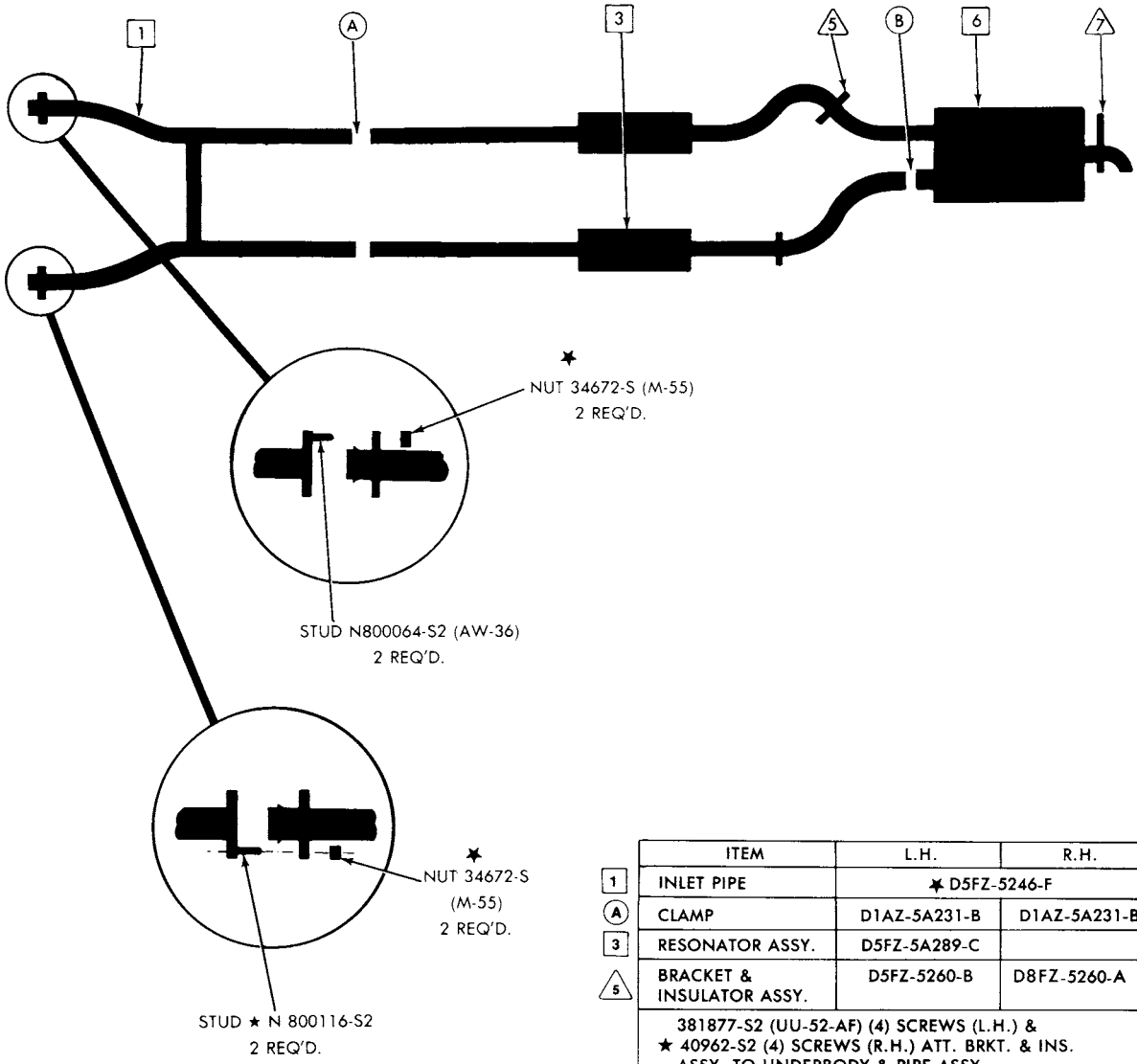

	ITEM	L.H.	R.H.
1	INLET PIPE	✶ D5FZ-5246-F	
A	CLAMP	D1AZ-5A231-B	D1AZ-5A231-B
3	RESONATOR ASSY.	D5FZ-5A289-C	
5	BRACKET & INSULATOR ASSY.	D5FZ-5260-B	D8FZ-5260-A
	381877-S2 (UU-52-AF) (4) SCREWS (L.H.) & ★ 40962-S2 (4) SCREWS (R.H.) ATT. BRKT. & INS. ASSY. TO UNDERBODY & PIPE ASSY.		
B	CLAMP	D1AZ-5A231-B	
6	MUFFLER & RESONATOR ASSY.		✶ D5FZ-5230-J
7	BRACKET & INSULATOR ASSY.	D5FZ-5260-E	
	★ 40962-S2 (2) SCREWS ATT. BRKT. & INS. ASSY. TO UNDERBODY 381877-S2 (UU-52-AF) (2) SCREWS ATT. BRKT. & INS. ASSY. TO MUFFLER.		

ET-19

COPYRIGHT © 1986 — FORD MOTOR COMPANY — DEARBORN, MICHIGAN

1976 BOBCAT—6 CYL. 171-2/B (2800cc) STATION WAGON (TWO CONVERTER)

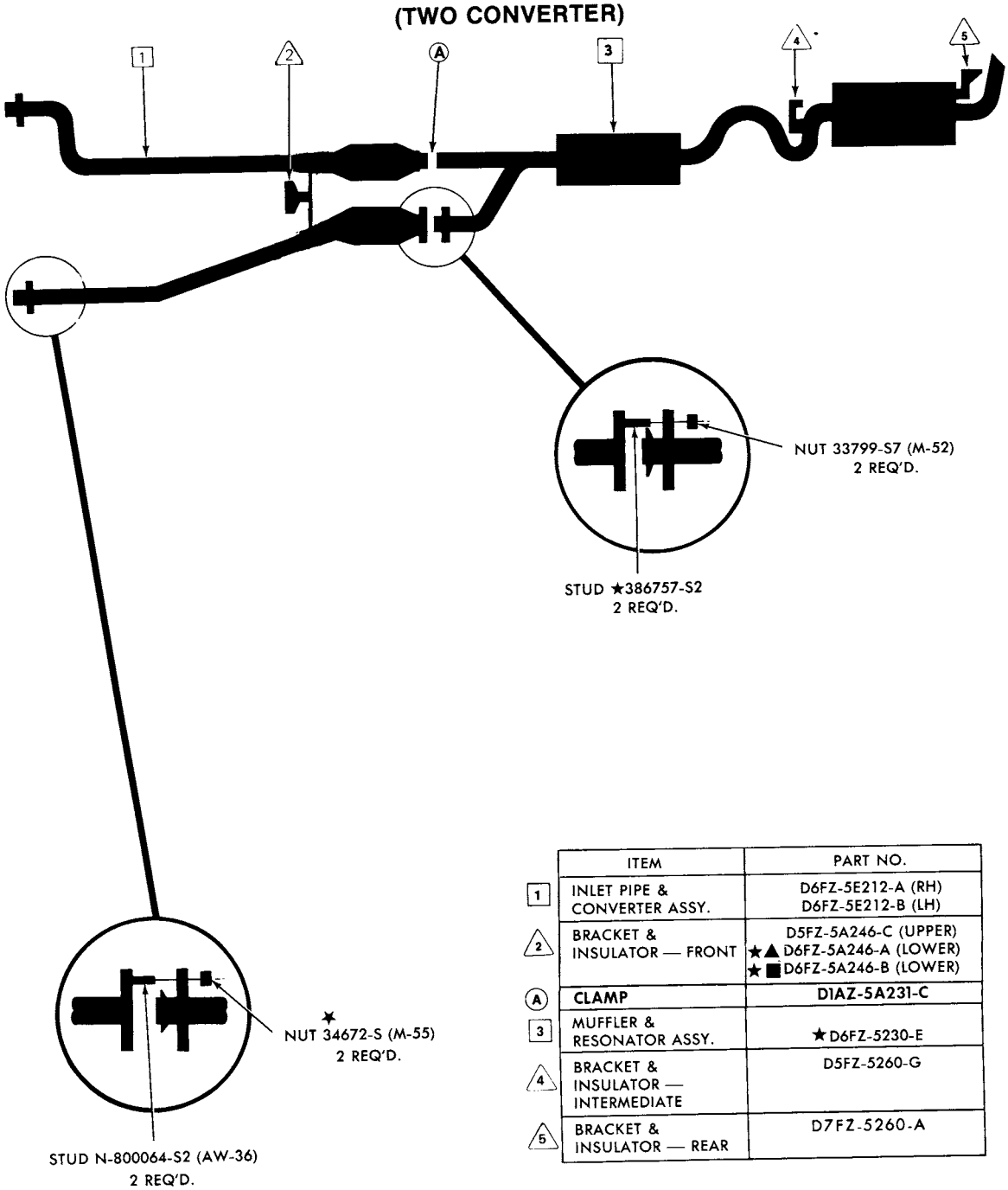

	ITEM	PART NO.
1	INLET PIPE & CONVERTER ASSY.	D6FZ-5E212-A (RH) D6FZ-5E212-B (LH)
2	BRACKET & INSULATOR — FRONT	D5FZ-5A246-C (UPPER) ★▲ D6FZ-5A246-A (LOWER) ★■ D6FZ-5A246-B (LOWER)
A	CLAMP	D1AZ-5A231-C
3	MUFFLER & RESONATOR ASSY.	★D6FZ-5230-E
4	BRACKET & INSULATOR — INTERMEDIATE	D5FZ-5260-G
5	BRACKET & INSULATOR — REAR	D7FZ-5260-A

▲ W/O CONVERTER SHIELD BRKT.
■ W/CONVERTER SHIELD BRKT.

ET-21

1976 BOBCAT — 6 CYL. 171-2/B (2800cc)
STATION WAGON
(WITH CONVERTER)

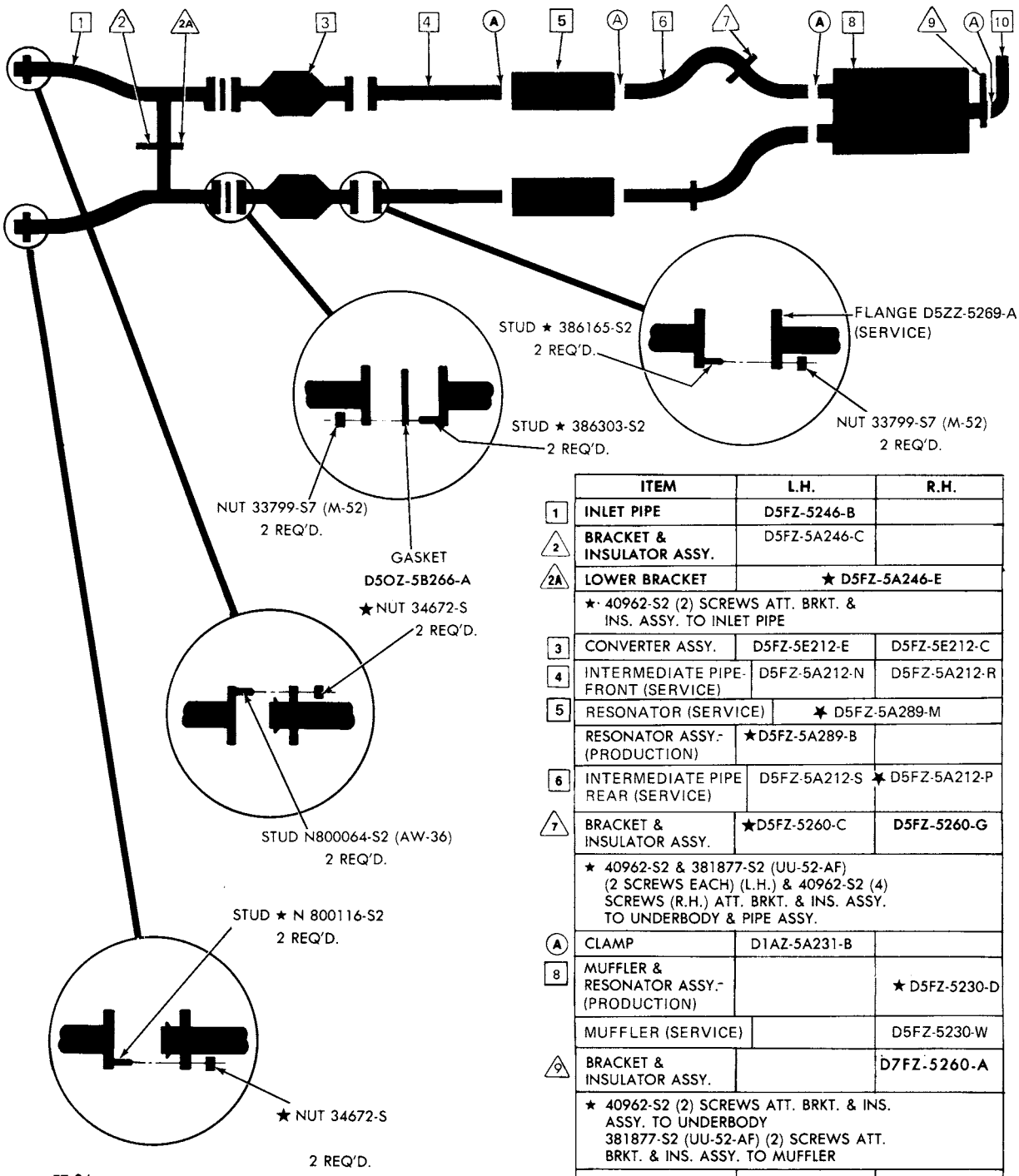

	ITEM	L.H.	R.H.
1	INLET PIPE	D5FZ-5246-B	
2	BRACKET & INSULATOR ASSY.	D5FZ-5A246-C	
2A	LOWER BRACKET	★ D5FZ-5A246-E	
	★ 40962-S2 (2) SCREWS ATT. BRKT. & INS. ASSY. TO INLET PIPE		
3	CONVERTER ASSY.	D5FZ-5E212-E	D5FZ-5E212-C
4	INTERMEDIATE PIPE-FRONT (SERVICE)	D5FZ-5A212-N	D5FZ-5A212-R
5	RESONATOR (SERVICE)	★ D5FZ-5A289-M	
	RESONATOR ASSY.-(PRODUCTION)	★D5FZ-5A289-B	
6	INTERMEDIATE PIPE REAR (SERVICE)	D5FZ-5A212-S	★ D5FZ-5A212-P
7	BRACKET & INSULATOR ASSY.	★D5FZ-5260-C	D5FZ-5260-G
	★ 40962-S2 & 381877-S2 (UU-52-AF) (2 SCREWS EACH) (L.H.) & 40962-S2 (4) SCREWS (R.H.) ATT. BRKT. & INS. ASSY. TO UNDERBODY & PIPE ASSY.		
A	CLAMP	D1AZ-5A231-B	
8	MUFFLER & RESONATOR ASSY.-(PRODUCTION)		★ D5FZ-5230-D
	MUFFLER (SERVICE)		D5FZ-5230-W
9	BRACKET & INSULATOR ASSY.		D7FZ-5260-A
	★ 40962-S2 (2) SCREWS ATT. BRKT. & INS. ASSY. TO UNDERBODY 381877-S2 (UU-52-AF) (2) SCREWS ATT. BRKT. & INS. ASSY. TO MUFFLER		
10	OUTLET PIPE-(SERVICE)		★D5FZ-5255-D

COPYRIGHT © 1986 — FORD MOTOR COMPANY — DEARBORN, MICHIGAN

1976 BOBCAT—6 CYL. 171-2/B (2800cc) STATION WAGON (NON CONVERTER)

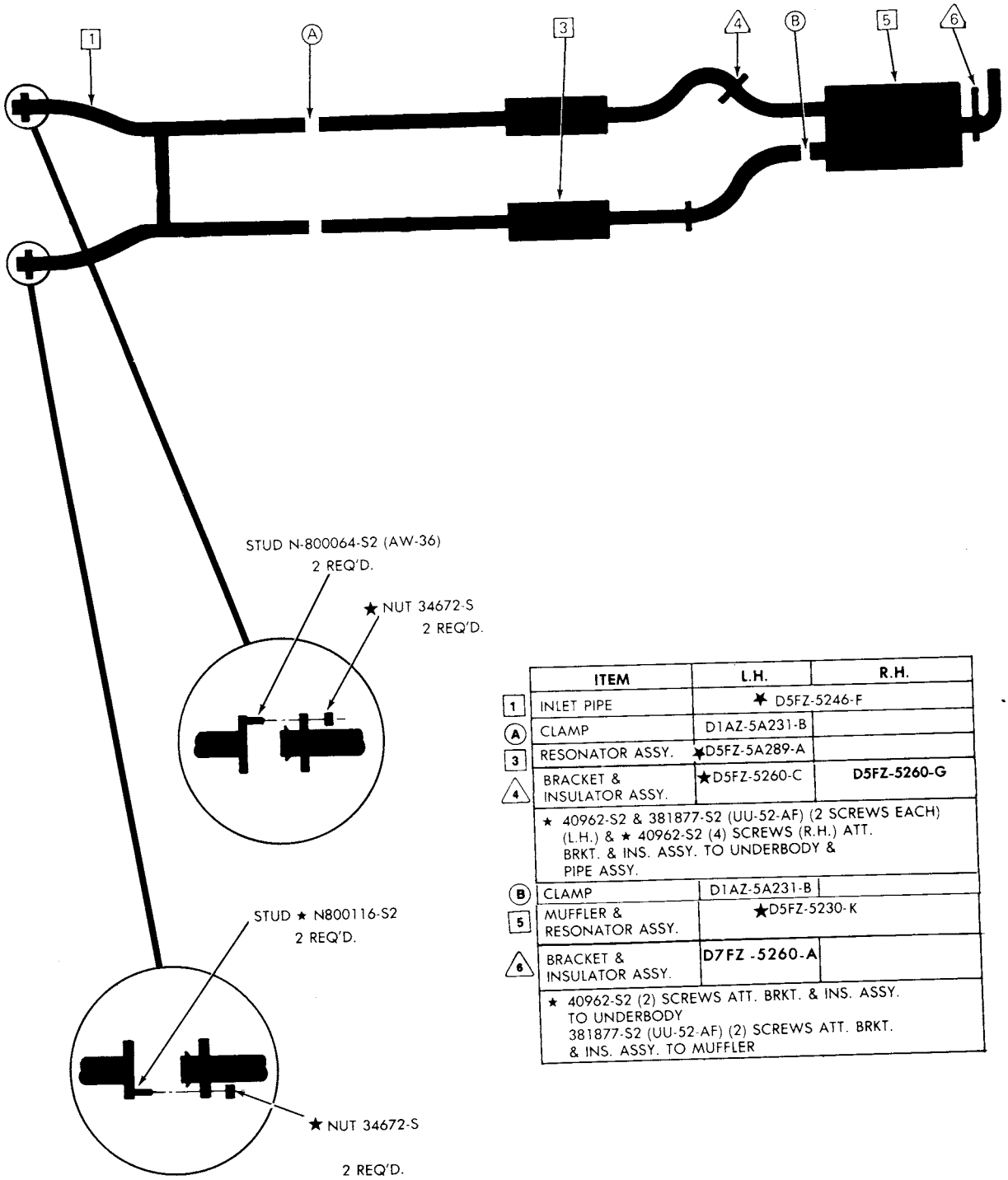

	ITEM	L.H.	R.H.
1	INLET PIPE	★ D5FZ-5246-F	
A	CLAMP	D1AZ-5A231-B	
3	RESONATOR ASSY.	★D5FZ-5A289-A	
4	BRACKET & INSULATOR ASSY.	★D5FZ-5260-C	**D5FZ-5260-G**
	★ 40962-S2 & 381877-S2 (UU-52-AF) (2 SCREWS EACH) (L.H.) & ★ 40962-S2 (4) SCREWS (R.H.) ATT. BRKT. & INS. ASSY. TO UNDERBODY & PIPE ASSY.		
B	CLAMP	D1AZ-5A231-B	
5	MUFFLER & RESONATOR ASSY.	★D5FZ-5230-K	
6	BRACKET & INSULATOR ASSY.	**D7FZ-5260-A**	
	★ 40962-S2 (2) SCREWS ATT. BRKT. & INS. ASSY. TO UNDERBODY 381877-S2 (UU-52-AF) (2) SCREWS ATT. BRKT. & INS. ASSY. TO MUFFLER		

ET-22

1976 COMET—6 CYL. 200-1/B & 250-1/B SEDAN (ALL—WITH CONVERTER)

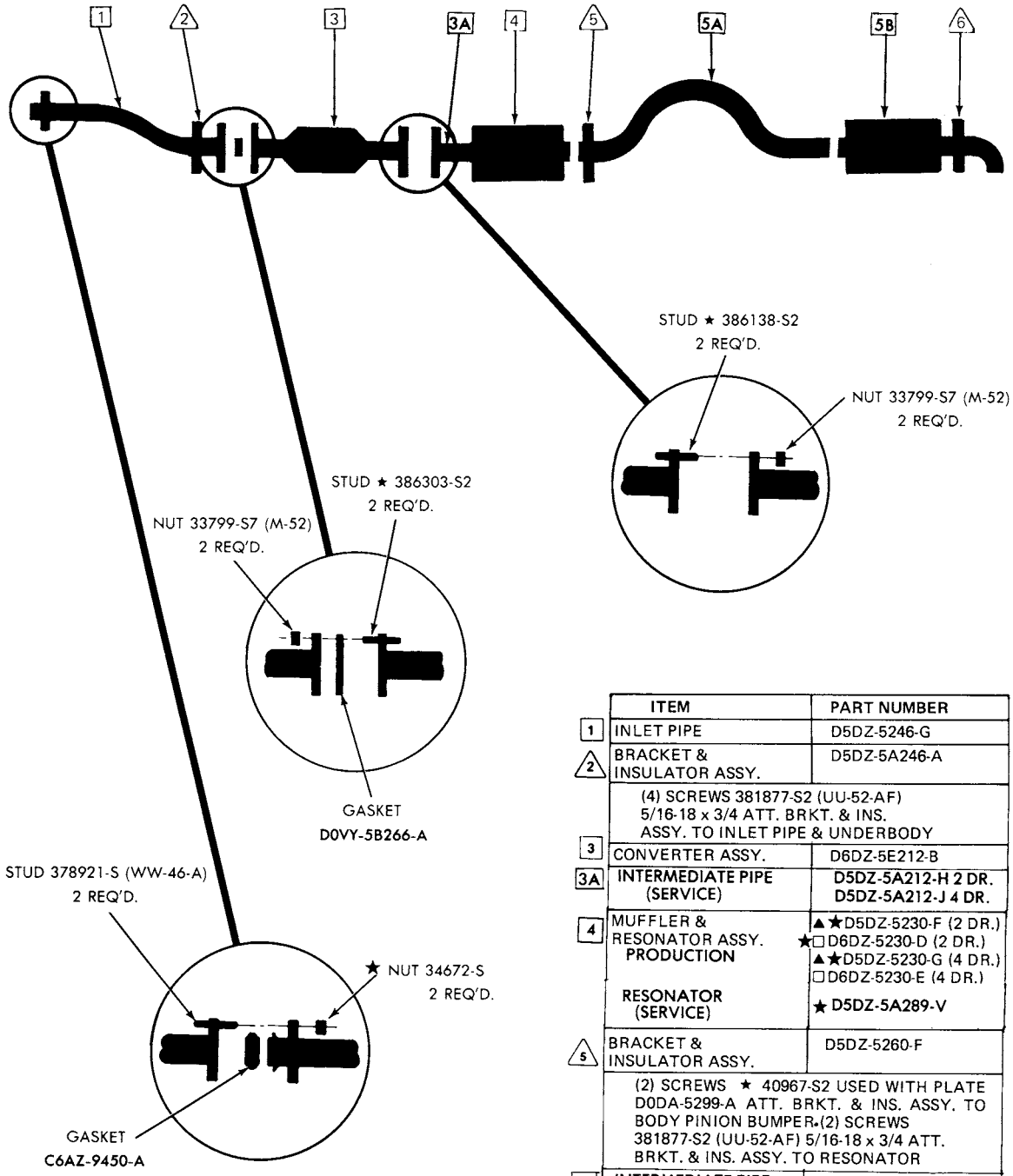

	ITEM	PART NUMBER
1	INLET PIPE	D5DZ-5246-G
2	BRACKET & INSULATOR ASSY.	D5DZ-5A246-A
	(4) SCREWS 381877-S2 (UU-52-AF) 5/16-18 x 3/4 ATT. BRKT. & INS. ASSY. TO INLET PIPE & UNDERBODY	
3	CONVERTER ASSY.	D6DZ-5E212-B
3A	INTERMEDIATE PIPE (SERVICE)	D5DZ-5A212-H 2 DR. D5DZ-5A212-J 4 DR.
4	MUFFLER & RESONATOR ASSY. PRODUCTION	▲★D5DZ-5230-F (2 DR.) ★□D6DZ-5230-D (2 DR.) ▲★D5DZ-5230-G (4 DR.) □D6DZ-5230-E (4 DR.)
	RESONATOR (SERVICE)	★ D5DZ-5A289-V
5	BRACKET & INSULATOR ASSY.	D5DZ-5260-F
	(2) SCREWS ★ 40967-S2 USED WITH PLATE D0DA-5299-A ATT. BRKT. & INS. ASSY. TO BODY PINION BUMPER. (2) SCREWS 381877-S2 (UU-52-AF) 5/16-18 x 3/4 ATT. BRKT. & INS. ASSY. TO RESONATOR	
5A	INTERMEDIATE PIPE (SERVICE)	D5DZ-5A212-F
5B	MUFFLER (SERVICE)	★ D5DZ-5230-AL
6	BRACKET & INSULATOR ASSY.	D5DZ-5260-C
	(4) SCREWS 381877-S2 (UU-52-AF) 5/16-18 x 3/4 ATT. BRKT. & INS. ASSY. TO MUFFLER & UNDERBODY	

▲ "BEFORE 5/3/76"
□ "FROM 5/3/76"

EP-26

COPYRIGHT © 1986 — FORD MOTOR COMPANY — DEARBORN, MICHIGAN

1976 COMET—6 CYL. 250-1/B SEDAN (ALL—W/O CONVERTER)

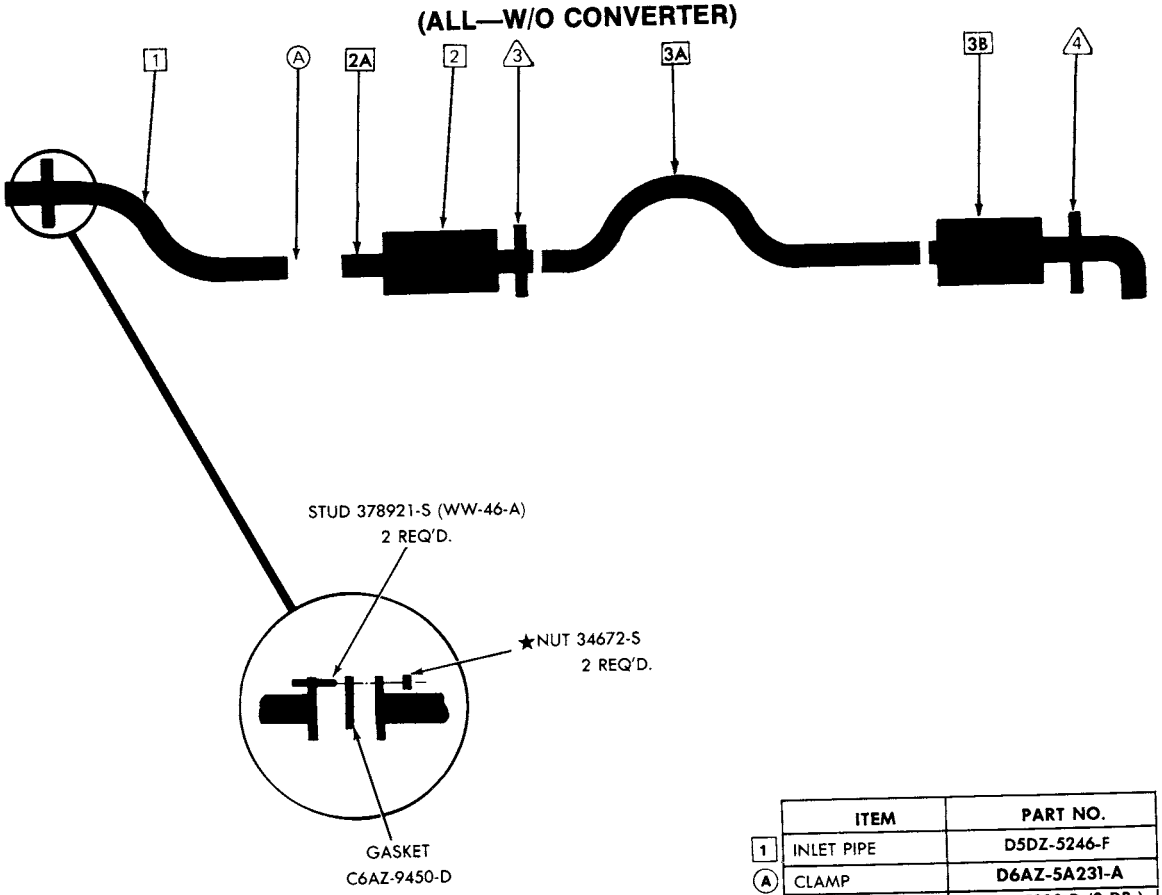

	ITEM	PART NO.
1	INLET PIPE	D5DZ-5246-F
A	CLAMP	D6AZ-5A231-A
2	MUFFLER & RESONATOR ASSY.	D5DZ-5230-D (2 DR.) D5DZ-5230-E (4 DR.)
	RESONATOR ASSY. (SERVICE)	D5DZ-5A289-U
2A	CONNECTING PIPE (SERVICE)	★ D5DZ-5A212-K 2 DR. D5DZ-5A212-L 4 DR.
3	BRACKET & INSULATOR ASSY.	D5DZ-5260-E
	(2) SCREWS ★ 40967-S2 USED WITH PLATE D0DA-5299-A ATT. BRKT. & INS. ASSY. TO BODY PINION BUMPER (2) SCREWS 381877-S2 (UU-52-AF) 5/16-18 x 3/4 ATT. BRKT. & INS. ASSY. TO RESONATOR	
3A	INTERMEDIATE PIPE (SERVICE)	D5DZ-5A212-F
3B	MUFFLER (SERVICE)	D5DZ-5230-AL
4	BRACKET & INSULATOR ASSY.	D5DZ-5260-C
	(4) SCREWS 381877-S2 (UU-52-AF) 5/16-18 x 3/4 ATT. BRKT. & INS. ASSY. TO MUFFLER & UNDERBODY	

1976 COMET — 8 CYL. 302-2/B SEDAN
(ALL — WITH CONVERTER)

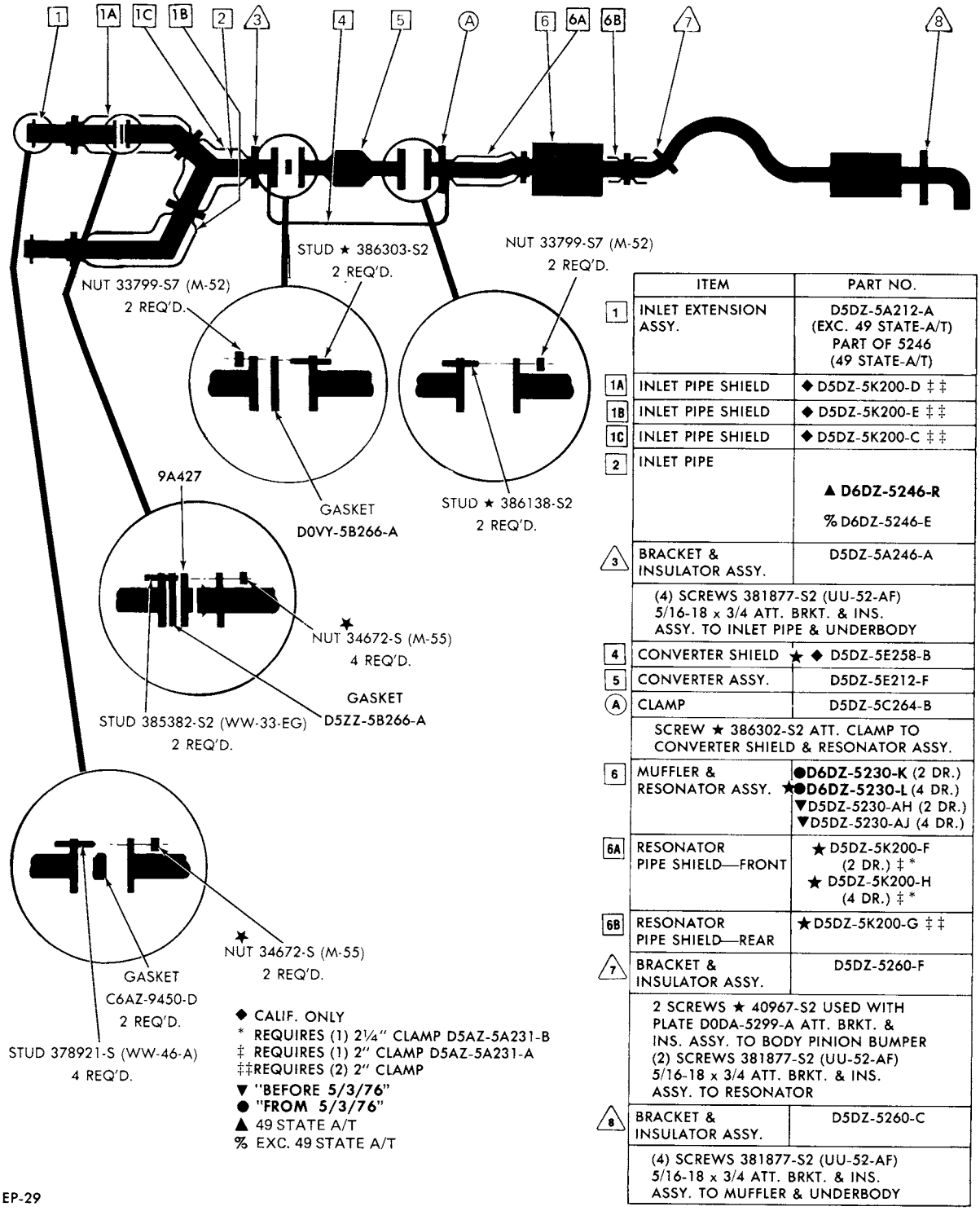

	ITEM	PART NO.
1	INLET EXTENSION ASSY.	D5DZ-5A212-A (EXC. 49 STATE-A/T) PART OF 5246 (49 STATE-A/T)
1A	INLET PIPE SHIELD	◆ D5DZ-5K200-D ‡ ‡
1B	INLET PIPE SHIELD	◆ D5DZ-5K200-E ‡ ‡
1C	INLET PIPE SHIELD	◆ D5DZ-5K200-C ‡ ‡
2	INLET PIPE	▲ **D6DZ-5246-R** % D6DZ-5246-E
3	BRACKET & INSULATOR ASSY.	D5DZ-5A246-A
	(4) SCREWS 381877-S2 (UU-52-AF) 5/16-18 x 3/4 ATT. BRKT. & INS. ASSY. TO INLET PIPE & UNDERBODY	
4	CONVERTER SHIELD	★ ◆ D5DZ-5E258-B
5	CONVERTER ASSY.	D5DZ-5E212-F
A	CLAMP	D5DZ-5C264-B
	SCREW ★ 386302-S2 ATT. CLAMP TO CONVERTER SHIELD & RESONATOR ASSY.	
6	MUFFLER & RESONATOR ASSY.	●**D6DZ-5230-K** (2 DR.) ★●**D6DZ-5230-L** (4 DR.) ▼D5DZ-5230-AH (2 DR.) ▼D5DZ-5230-AJ (4 DR.)
6A	RESONATOR PIPE SHIELD—FRONT	★ D5DZ-5K200-F (2 DR.) ‡ * ★ D5DZ-5K200-H (4 DR.) ‡ *
6B	RESONATOR PIPE SHIELD—REAR	★ D5DZ-5K200-G ‡ ‡
7	BRACKET & INSULATOR ASSY.	D5DZ-5260-F
	2 SCREWS ★ 40967-S2 USED WITH PLATE D0DA-5299-A ATT. BRKT. & INS. ASSY. TO BODY PINION BUMPER (2) SCREWS 381877-S2 (UU-52-AF) 5/16-18 x 3/4 ATT. BRKT. & INS. ASSY. TO RESONATOR	
8	BRACKET & INSULATOR ASSY.	D5DZ-5260-C
	(4) SCREWS 381877-S2 (UU-52-AF) 5/16-18 x 3/4 ATT. BRKT. & INS. ASSY. TO MUFFLER & UNDERBODY	

◆ CALIF. ONLY
* REQUIRES (1) 2¼" CLAMP D5AZ-5A231-B
‡ REQUIRES (1) 2" CLAMP D5AZ-5A231-A
‡‡REQUIRES (2) 2" CLAMP
▼ **"BEFORE 5/3/76"**
● **"FROM 5/3/76"**
▲ 49 STATE A/T
% EXC. 49 STATE A/T

EP-29

COPYRIGHT © 1986 — FORD MOTOR COMPANY — DEARBORN, MICHIGAN

1976 COMET—8 CYL. 302-2/B SEDAN (ALL—W/O CONVERTER)

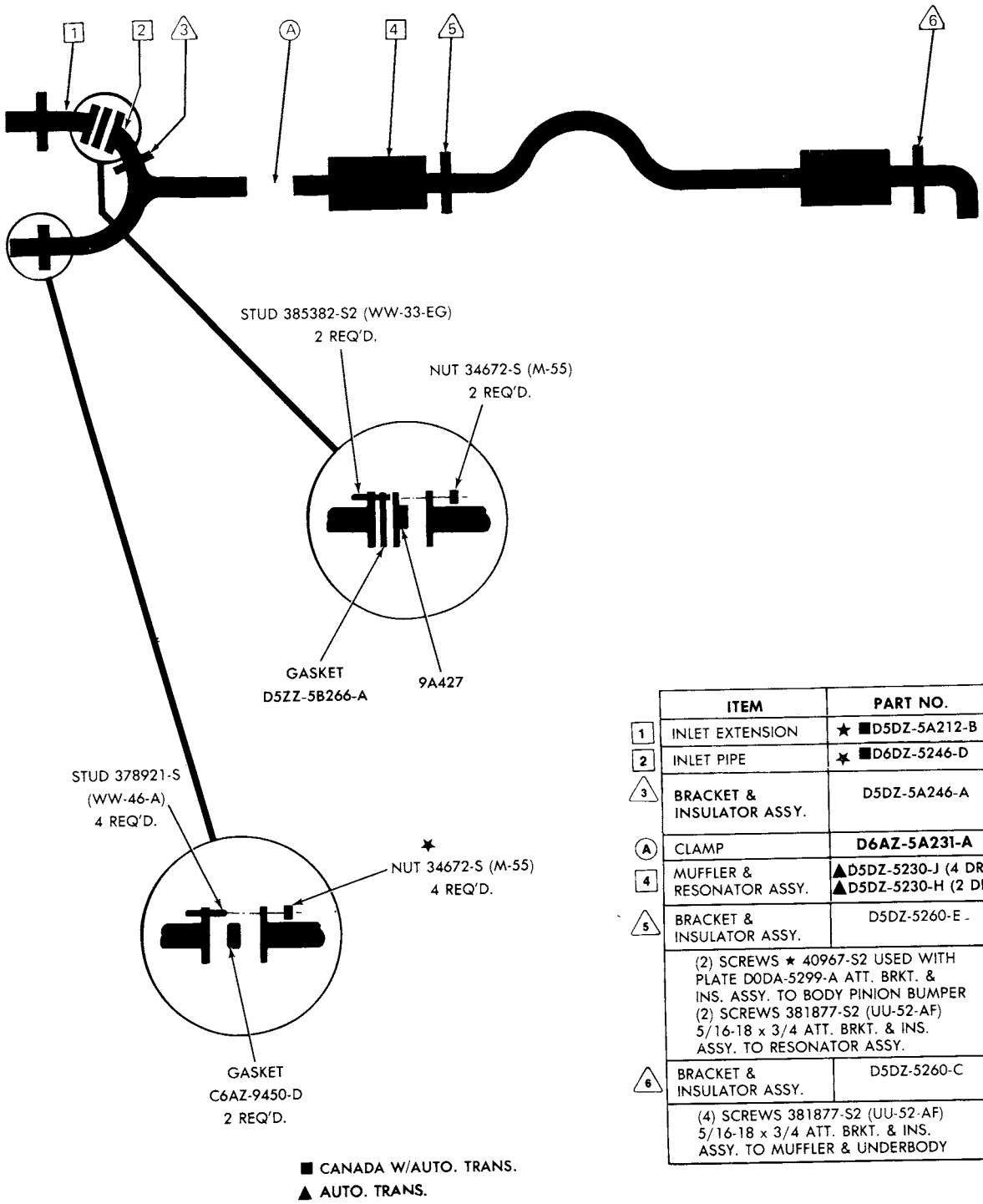

	ITEM	PART NO.
1	INLET EXTENSION	★ ■D5DZ-5A212-B
2	INLET PIPE	★ ■D6DZ-5246-D
3	BRACKET & INSULATOR ASSY.	D5DZ-5A246-A
A	CLAMP	**D6AZ-5A231-A**
4	MUFFLER & RESONATOR ASSY.	▲D5DZ-5230-J (4 DR) ▲D5DZ-5230-H (2 DR)
5	BRACKET & INSULATOR ASSY.	D5DZ-5260-E
	(2) SCREWS ★ 40967-S2 USED WITH PLATE D0DA-5299-A ATT. BRKT. & INS. ASSY. TO BODY PINION BUMPER (2) SCREWS 381877-S2 (UU-52-AF) 5/16-18 x 3/4 ATT. BRKT. & INS. ASSY. TO RESONATOR ASSY.	
6	BRACKET & INSULATOR ASSY.	D5DZ-5260-C
	(4) SCREWS 381877-S2 (UU-52-AF) 5/16-18 x 3/4 ATT. BRKT. & INS. ASSY. TO MUFFLER & UNDERBODY	

■ CANADA W/AUTO. TRANS.
▲ AUTO. TRANS.

EXHAUST PARTS MODEL INDEX

How to use this index -

1. Find the car model desired.
2. Find the line which lists the engine displacement needed.
3. Select the correct page and turn to that page.

For stamped number cross-reference information and for size information, refer to Section 50, page 3.

1977

CYL.	C.I.D.	MODEL	CONVERTER USAGE ■	TYPE ▲	SECTION	PAGE	ILLUS. NO. ♦
		A (MERCURY)					
8	351-M	(53,65)	TC	S	52.77	1	EG 100
		(53,65)	NC	S	52.77	2	EG 102
	400	(53,65)	TC	S	52.77	3	EG 104
		(53,65)	NC	S	52.77	2	EG 102
		(71)	TC	S	52.77	4	EG 101
		(71)	NC	S	52.77	5	EG 103
	460-4/B	(53,65)	TC	S	52.77	6	EG 105
		(71)	TC	S	52.77	7	EG 106
	460-P/C	(53,65)	TC	D	52.77	8	EG 107
		D (LINCOLN)					
8	400	All	TC	S	52.77	1	EJ 19
	460	All	TC	S	52.77	2	EJ 20
		F (COUGAR)					
8	302	(53,65)	TC	S	52.77	1	EB 45
	351-W	(53,65)	TC	S	52.77	2	EB 46
	351-M	(53,65)	TC	S	52.77	3	EB 41
		(53,65)	NC	S	52.77	4	EB 43
		(71)	TC	S	52.77	5	EB 42
		(71)	NC	S	52.77	6	EB 44
	400	(53,65)	TC	S	52.77	3	EB 41
		(53,65)	NC	S	52.77	4	EB 43
		(71)	TC	S	52.77	5	EB 42
		(71)	NC	S	52.77	6	EB 44
		G (MONARCH)					
6	200	All	OC	S	52.77	1	EV 14
	250	All	OC	S	52.77	2	EV 17
8	302	All	OC	S	52.77	3	EV 15
		All	NC	S	52.77	4	EV 16
	351-W	All	OC	S	52.77	5	EV 18
		J (CAPRI)					
4	140	All (2300cc)	OC	S	52.77	1	EM 18
6	171	All (2800cc)	OC	D	52.77	2	EM 19

COPYRIGHT © 1986 — FORD MOTOR COMPANY — DEARBORN, MICHIGAN

EXHAUST PARTS MODEL INDEX - cont'd.

1977

CYL	C.I.D.	MODEL	CONVERTER USAGE ■	TYPE ▲	SECTION	PAGE	ILLUS. NO. ♦
		K (MARK V)					
8	400	All	TC	S	52.77	1	EK 15
	460	All	TC	S	52.77	2	EK 17
		All	TC	D	52.77	3	EK 16
		L (BOBCAT)					
4	140	(62,64)	OC	S	52.77	1	ET 25
		(62,64)	NC	S	52.77	2	ET 29
		(73)	OC	S	52.77	3	ET 26
		(73)	NC	S	52.77	4	ET 30
6	171	(62,64)	OC	S	52.77	5	ET 27
		(73)	OC	S	52.77	6	ET 28
		P (COMET)					
6	200	All	OC	S	52.77	1	EP 30
	250	All	OC	S	52.77	2	EP 34
		All	NC	S	52.77	3	EP 32
8	302	All	OC	S	52.77	4	EP 31
		All	NC	S	52.77	5	EP 33
		V (VERSAILLES)					
8	302	All	OC	S	52.77	1	EW 1
	351	All	OC	S	52.77	2	EW 2

♦ For control purposes only ▲ S - Single D - Dual

■ OC - one converter TC - two converters NC - Non converter

1977 MERCURY — 8 CYL. 351M SEDAN (WITH CONVERTER)

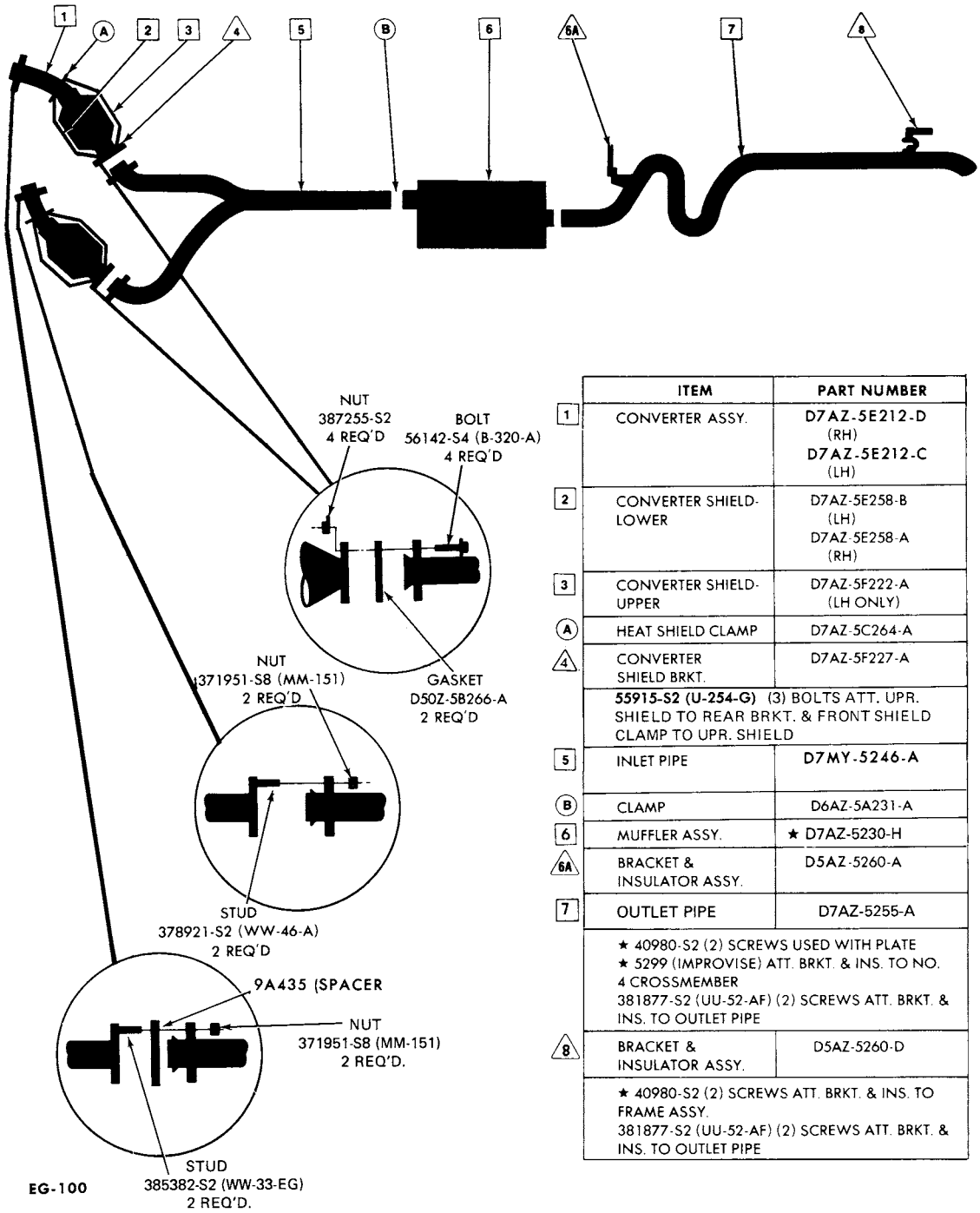

	ITEM	PART NUMBER
1	CONVERTER ASSY.	D7AZ-5E212-D (RH) D7AZ-5E212-C (LH)
2	CONVERTER SHIELD-LOWER	D7AZ-5E258-B (LH) D7AZ-5E258-A (RH)
3	CONVERTER SHIELD-UPPER	D7AZ-5F222-A (LH ONLY)
A	HEAT SHIELD CLAMP	D7AZ-5C264-A
4	CONVERTER SHIELD BRKT.	D7AZ-5F227-A
	55915-S2 (U-254-G) (3) BOLTS ATT. UPR. SHIELD TO REAR BRKT. & FRONT SHIELD CLAMP TO UPR. SHIELD	
5	INLET PIPE	D7MY-5246-A
B	CLAMP	D6AZ-5A231-A
6	MUFFLER ASSY.	★ D7AZ-5230-H
6A	BRACKET & INSULATOR ASSY.	D5AZ-5260-A
7	OUTLET PIPE	D7AZ-5255-A
	★ 40980-S2 (2) SCREWS USED WITH PLATE ★ 5299 (IMPROVISE) ATT. BRKT. & INS. TO NO. 4 CROSSMEMBER 381877-S2 (UU-52-AF) (2) SCREWS ATT. BRKT. & INS. TO OUTLET PIPE	
8	BRACKET & INSULATOR ASSY.	D5AZ-5260-D
	★ 40980-S2 (2) SCREWS ATT. BRKT. & INS. TO FRAME ASSY. 381877-S2 (UU-52-AF) (2) SCREWS ATT. BRKT. & INS. TO OUTLET PIPE	

COPYRIGHT © 1986 — FORD MOTOR COMPANY — DEARBORN, MICHIGAN

1977 MERCURY - 8 CYL. 351M-400 SEDAN (W/O CONVERTER)

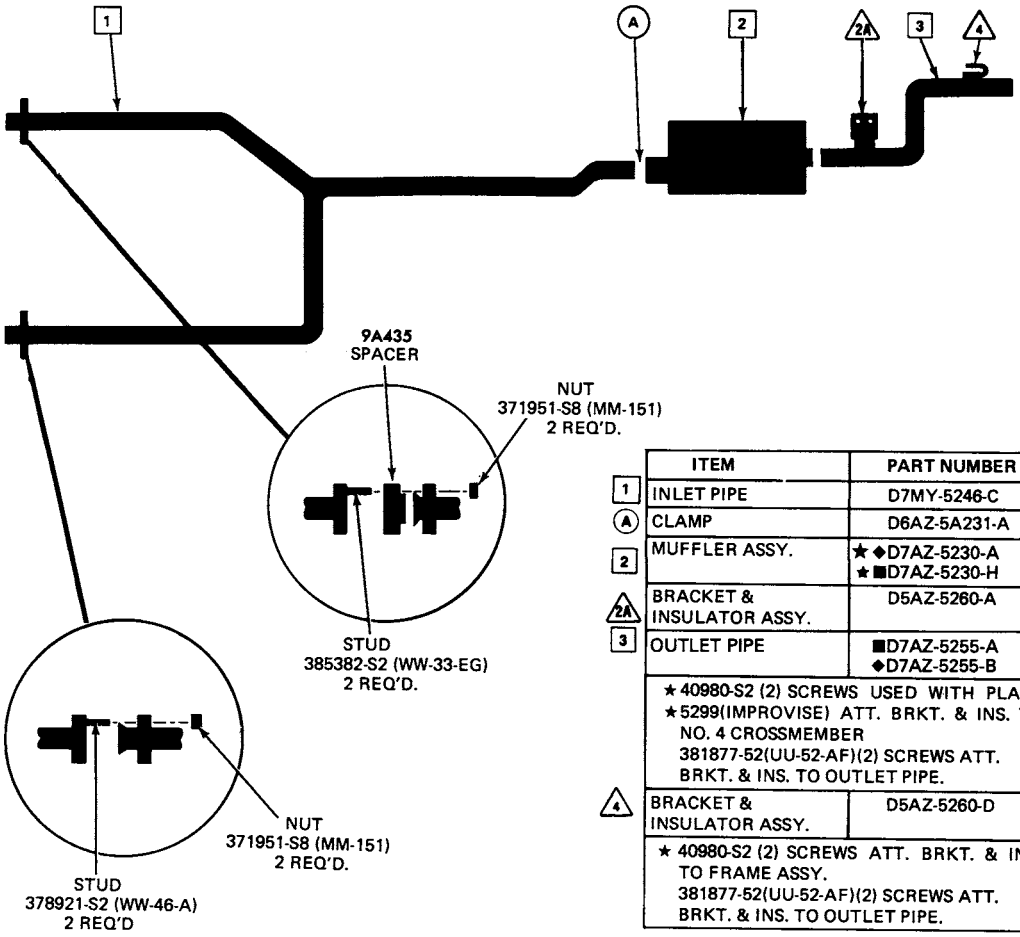

	ITEM	PART NUMBER
1	INLET PIPE	D7MY-5246-C
A	CLAMP	D6AZ-5A231-A
2	MUFFLER ASSY.	★ ◆D7AZ-5230-A ★ ■D7AZ-5230-H
2A	BRACKET & INSULATOR ASSY.	D5AZ-5260-A
3	OUTLET PIPE	■D7AZ-5255-A ◆D7AZ-5255-B
	★ 40980-S2 (2) SCREWS USED WITH PLATE ★5299(IMPROVISE) ATT. BRKT. & INS. TO NO. 4 CROSSMEMBER 381877-52(UU-52-AF)(2) SCREWS ATT. BRKT. & INS. TO OUTLET PIPE.	
4	BRACKET & INSULATOR ASSY.	D5AZ-5260-D
	★ 40980-S2 (2) SCREWS ATT. BRKT. & INS. TO FRAME ASSY. 381877-52(UU-52-AF)(2) SCREWS ATT. BRKT. & INS. TO OUTLET PIPE.	

■351M ENG.
◆400 ENG.

1977 MERCURY - 8 CYL. 400 SEDAN (WITH CONVERTER)

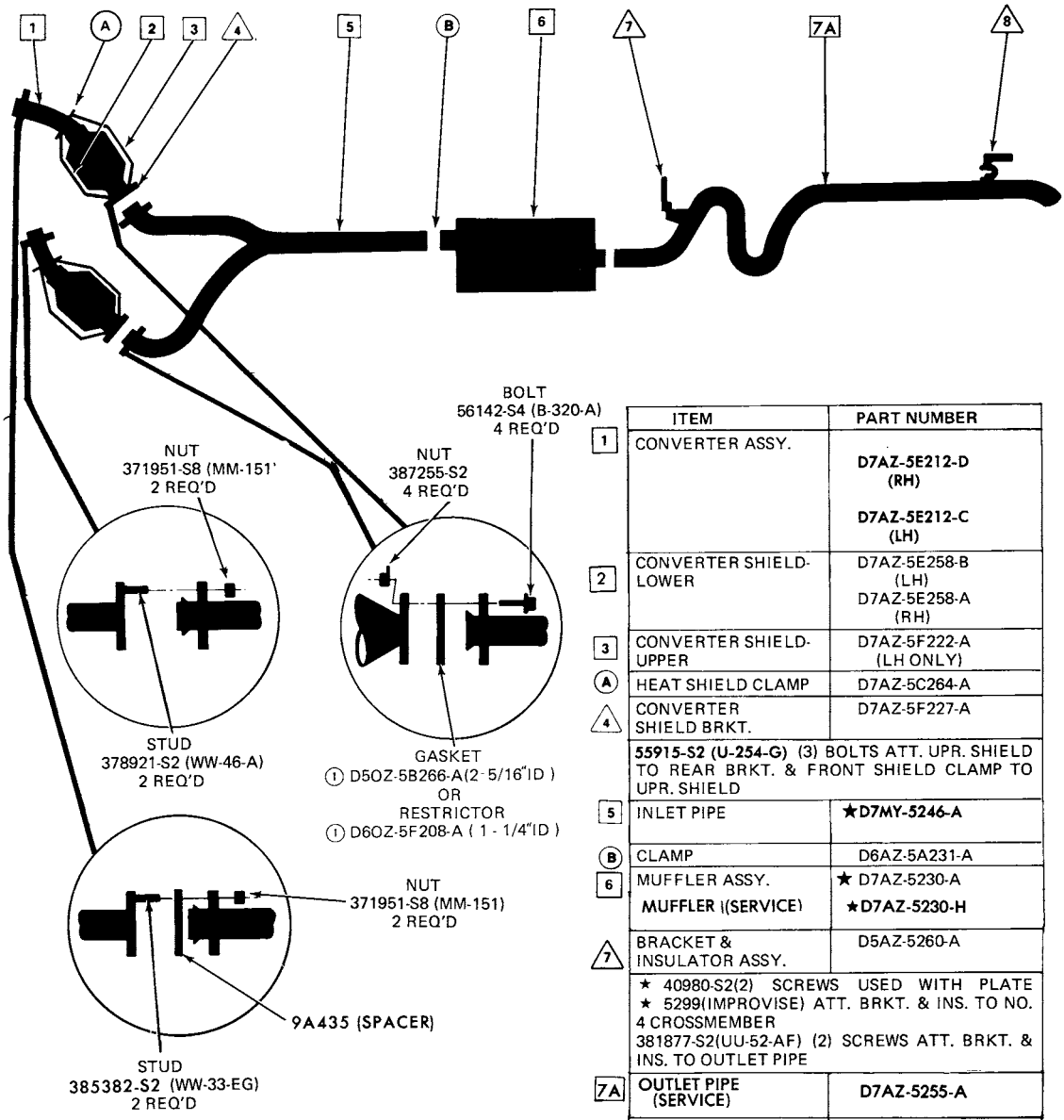

	ITEM	PART NUMBER
1	CONVERTER ASSY.	D7AZ-5E212-D (RH) D7AZ-5E212-C (LH)
2	CONVERTER SHIELD-LOWER	D7AZ-5E258-B (LH) D7AZ-5E258-A (RH)
3	CONVERTER SHIELD-UPPER	D7AZ-5F222-A (LH ONLY)
A	HEAT SHIELD CLAMP	D7AZ-5C264-A
4	CONVERTER SHIELD BRKT.	D7AZ-5F227-A
	55915-S2 (U-254-G) (3) BOLTS ATT. UPR. SHIELD TO REAR BRKT. & FRONT SHIELD CLAMP TO UPR. SHIELD	
5	INLET PIPE	★D7MY-5246-A
B	CLAMP	D6AZ-5A231-A
6	MUFFLER ASSY. MUFFLER (SERVICE)	★ D7AZ-5230-A ★D7AZ-5230-H
7	BRACKET & INSULATOR ASSY.	D5AZ-5260-A
	★ 40980-S2(2) SCREWS USED WITH PLATE ★ 5299(IMPROVISE) ATT. BRKT. & INS. TO NO. 4 CROSSMEMBER 381877-S2(UU-52-AF) (2) SCREWS ATT. BRKT. & INS. TO OUTLET PIPE	
7A	OUTLET PIPE (SERVICE)	D7AZ-5255-A
8	BRACKET & INSULATOR ASSY.	D5AZ-5260-D
	★ 40980-S2(2) SCREWS ATT. BRKT. & INS. TO FRAME ASSY. 381877-S2(UU-52-AF)(2) SCREWS ATT. BRKT. & INS. TO OUTLET PIPE	

① PART MUST BE PHYSICALLY IDENTIFIED TO DETERMINE CORRECT USAGE

COPYRIGHT © 1986 — FORD MOTOR COMPANY — DEARBORN, MICHIGAN

1977 MERCURY — 8 CYL. - 400 STATION WAGON (WITH CONVERTER)

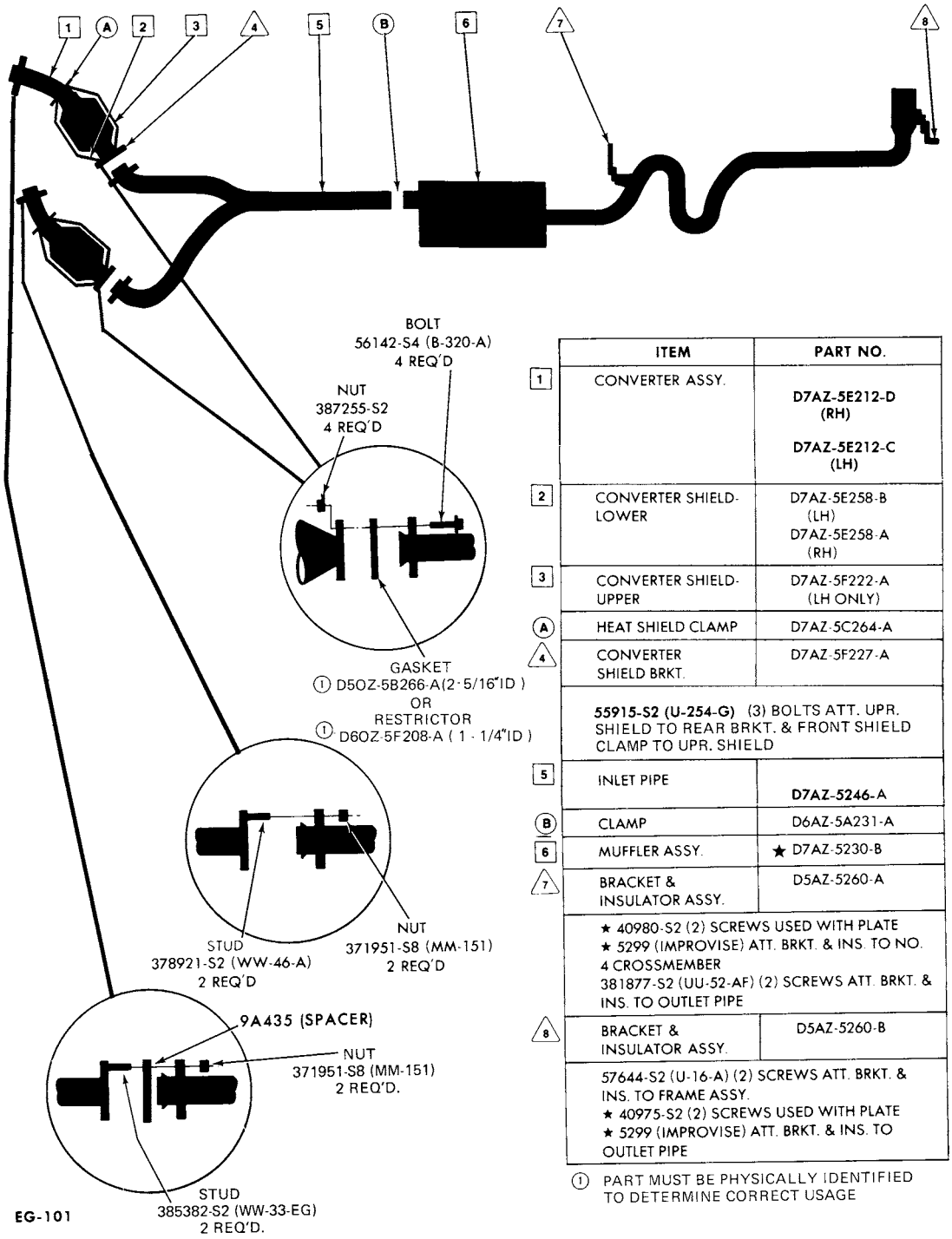

	ITEM	PART NO.
1	CONVERTER ASSY.	**D7AZ-5E212-D (RH)** **D7AZ-5E212-C (LH)**
2	CONVERTER SHIELD-LOWER	D7AZ-5E258-B (LH) D7AZ-5E258-A (RH)
3	CONVERTER SHIELD-UPPER	D7AZ-5F222-A (LH ONLY)
A	HEAT SHIELD CLAMP	D7AZ-5C264-A
4	CONVERTER SHIELD BRKT.	D7AZ-5F227-A
	55915-S2 (U-254-G) (3) BOLTS ATT. UPR. SHIELD TO REAR BRKT. & FRONT SHIELD CLAMP TO UPR. SHIELD	
5	INLET PIPE	**D7AZ-5246-A**
B	CLAMP	D6AZ-5A231-A
6	MUFFLER ASSY.	★ D7AZ-5230-B
7	BRACKET & INSULATOR ASSY.	D5AZ-5260-A
	★ 40980-S2 (2) SCREWS USED WITH PLATE ★ 5299 (IMPROVISE) ATT. BRKT. & INS. TO NO. 4 CROSSMEMBER 381877-S2 (UU-52-AF) (2) SCREWS ATT. BRKT. & INS. TO OUTLET PIPE	
8	BRACKET & INSULATOR ASSY.	D5AZ-5260-B
	57644-S2 (U-16-A) (2) SCREWS ATT. BRKT. & INS. TO FRAME ASSY. ★ 40975-S2 (2) SCREWS USED WITH PLATE ★ 5299 (IMPROVISE) ATT. BRKT. & INS. TO OUTLET PIPE	

① PART MUST BE PHYSICALLY IDENTIFIED TO DETERMINE CORRECT USAGE

1977 MERCURY - 8 CYL. 400 STATION WAGON (W/O CONVERTER)

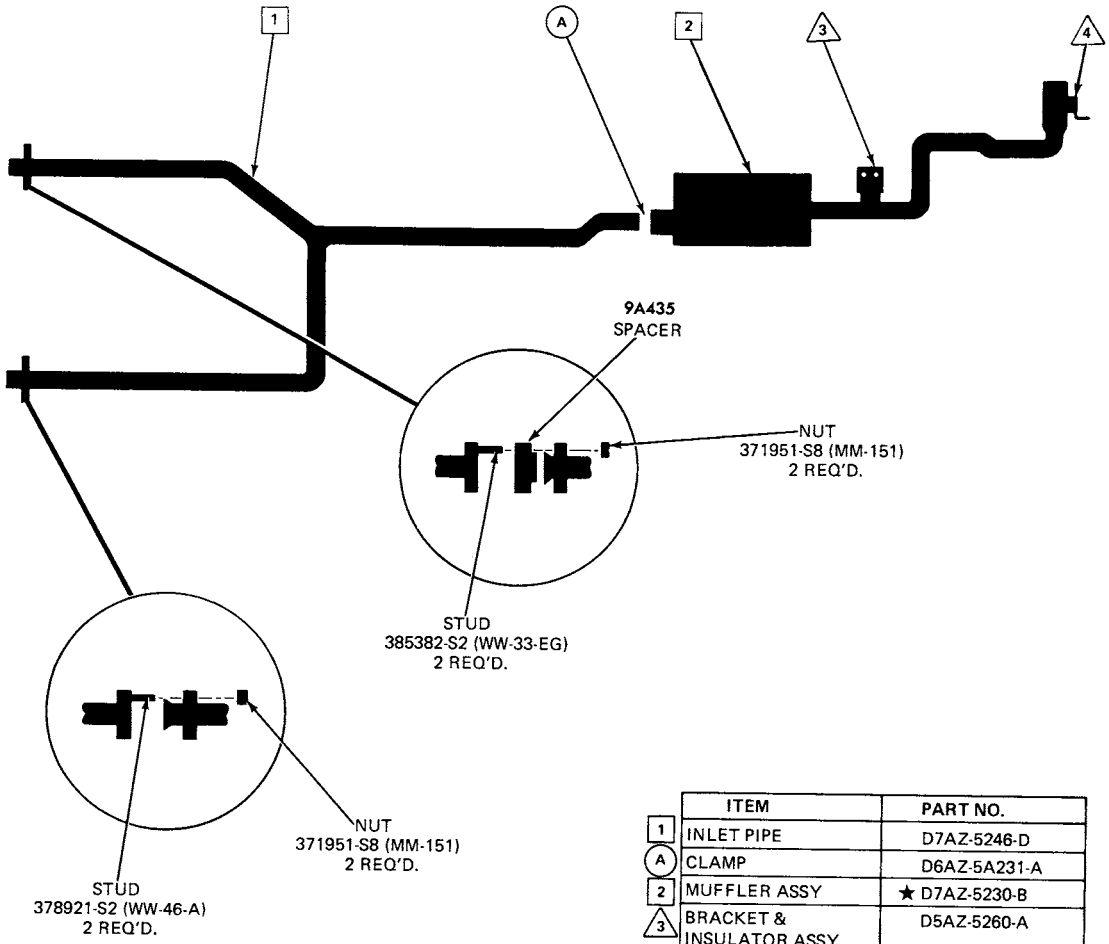

	ITEM	PART NO.
1	INLET PIPE	D7AZ-5246-D
A	CLAMP	D6AZ-5A231-A
2	MUFFLER ASSY	★ D7AZ-5230-B
3	BRACKET & INSULATOR ASSY.	D5AZ-5260-A
	★ 40980-S2(2) SCREWS USED WITH PLATE ★ 5299(IMPROVISE) ATT. BRKT. & INS. TO NO. 4 CROSSMEMBER 381877-52(UU-52-AF)(2) SCREWS ATT. BRKT. & INS. TO OUTLET PIPE.	
4	BRACKET & INSULATOR ASSY.	D5AZ-5260-B
	57644-S2(U-16-A)(2) SCREWS ATT. BRKT. INS. TO FRAME ASSY ★ 40975-S2(2) SCREWS USED WITH PLATE ★ 5299(IMPROVISE) ATT. BRKT. & INS. TO OUTLET PIPE.	

EG - 103

COPYRIGHT © 1986 — FORD MOTOR COMPANY — DEARBORN, MICHIGAN

1977 MERCURY - 8 CYL. 460 SEDAN (WITH CONVERTER)

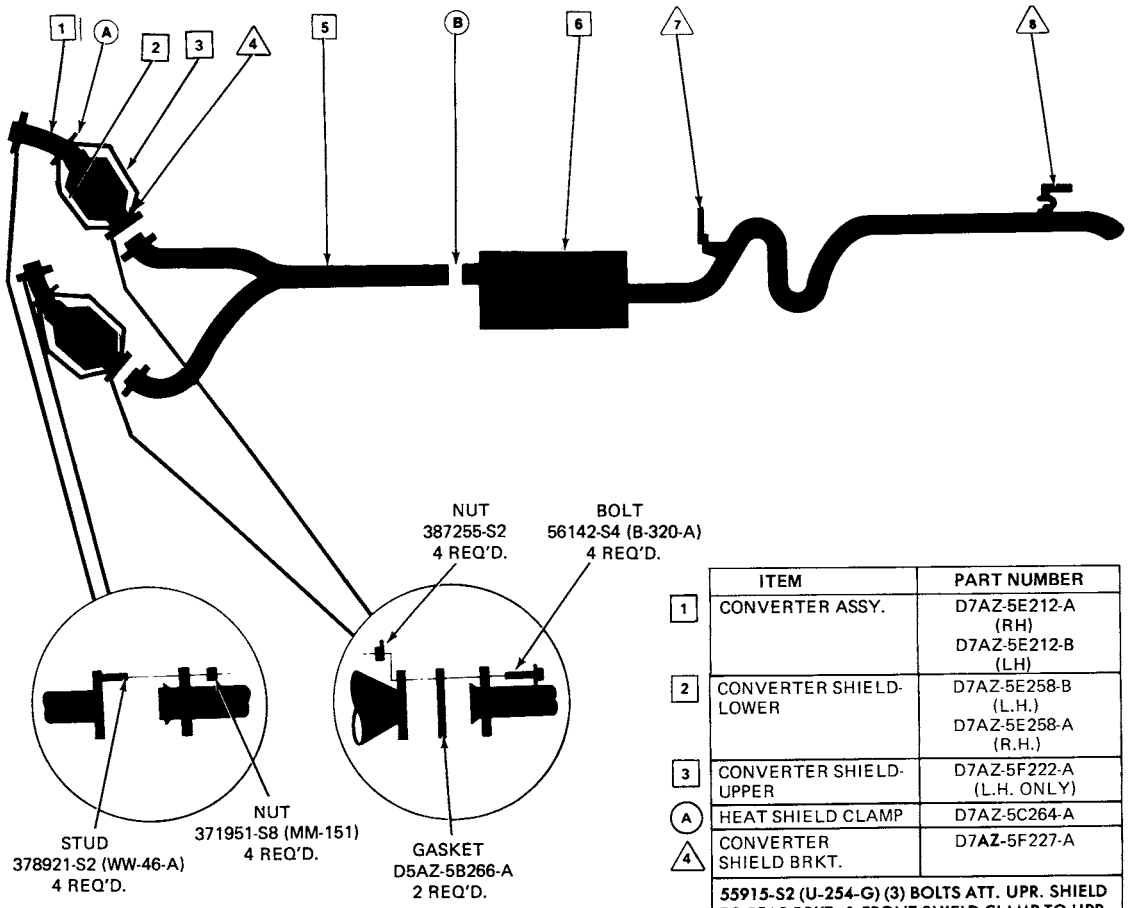

	ITEM	PART NUMBER
1	CONVERTER ASSY.	D7AZ-5E212-A (RH) D7AZ-5E212-B (LH)
2	CONVERTER SHIELD-LOWER	D7AZ-5E258-B (L.H.) D7AZ-5E258-A (R.H.)
3	CONVERTER SHIELD-UPPER	D7AZ-5F222-A (L.H. ONLY)
A	HEAT SHIELD CLAMP	D7AZ-5C264-A
4	CONVERTER SHIELD BRKT.	D7AZ-5F227-A
	55915-S2 (U-254-G) (3) BOLTS ATT. UPR. SHIELD TO REAR BRKT. & FRONT SHIELD CLAMP TO UPR. SHIELD	
5	INLET PIPE	D7MY-5246-B
B	CLAMP	D6AZ-5A231-A
6	MUFFLER ASSY.	★ D7AZ-5230-F
7	BRACKET & INSULATOR ASSY.	D5AZ-5260-A
	★ 40980-S2 (2) SCREWS USED WITH PLATE ★ 5299 (IMPROVISE) ATT. BRKT. & INS. TO NO. 4 CROSSMEMBER 381877-S2 (UU-52-AF) (2) SCREWS ATT. BRKT. & INS. TO OUTLET PIPE	
8	BRACKET & INSULATOR ASSY.	D5AZ-5260-D
	★ 40980-52 (2) SCREWS ATT. BRKT. & INS TO FRAME ASSY. 381877-S2 (UU-52-AF) (2) SCREWS ATT. BRKT. & INS. TO OUTLET PIPE	

EG-105

1977 MERCURY - 8 CYL. 460 STATION WAGON (WITH CONVERTER)

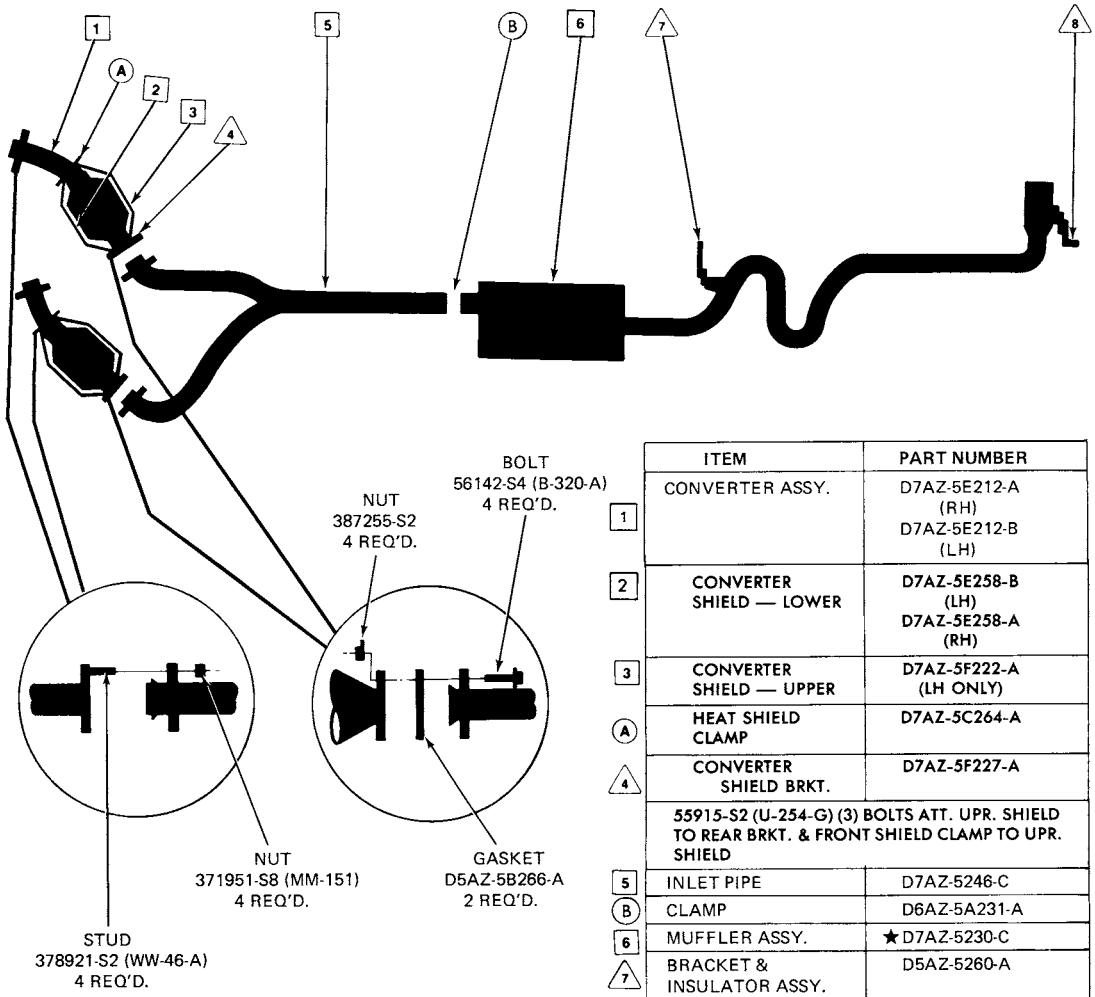

	ITEM	PART NUMBER
1	CONVERTER ASSY.	D7AZ-5E212-A (RH) D7AZ-5E212-B (LH)
2	CONVERTER SHIELD — LOWER	D7AZ-5E258-B (LH) D7AZ-5E258-A (RH)
3	CONVERTER SHIELD — UPPER	D7AZ-5F222-A (LH ONLY)
A	HEAT SHIELD CLAMP	D7AZ-5C264-A
4	CONVERTER SHIELD BRKT.	D7AZ-5F227-A
	55915-S2 (U-254-G) (3) BOLTS ATT. UPR. SHIELD TO REAR BRKT. & FRONT SHIELD CLAMP TO UPR. SHIELD	
5	INLET PIPE	D7AZ-5246-C
B	CLAMP	D6AZ-5A231-A
6	MUFFLER ASSY.	★D7AZ-5230-C
7	BRACKET & INSULATOR ASSY.	D5AZ-5260-A
	★ 40980-S2 (2) SCREWS USED WITH PLATE ★ 5299 (IMPROVISE) ATT. BRKT. & INS. TO NO. 4 CROSSMEMBER 381877-S2 (UU-52-AF)(2) SCREWS ATT. BRKT. & INS. TO OUTLET PIPE	
8	BRACKET & INSULATOR ASSY.	D5AZ-5260-B
	57644-S2 (U-16-A)(2) SCREWS ATT. BRKT. & INS. TO FRAME ASSY. ★ 40975-S2 (2) SCREWS USED WITH PLATE ★ 5299 (IMPROVISE) ATT. BRKT. & INS. TO OUTLET PIPE	

EG-106

COPYRIGHT © 1986 — FORD MOTOR COMPANY — DEARBORN, MICHIGAN

1977 MERCURY — 8 CYL. 460 P/C SEDAN
DUAL EXHAUST
(WITH CONVERTER)

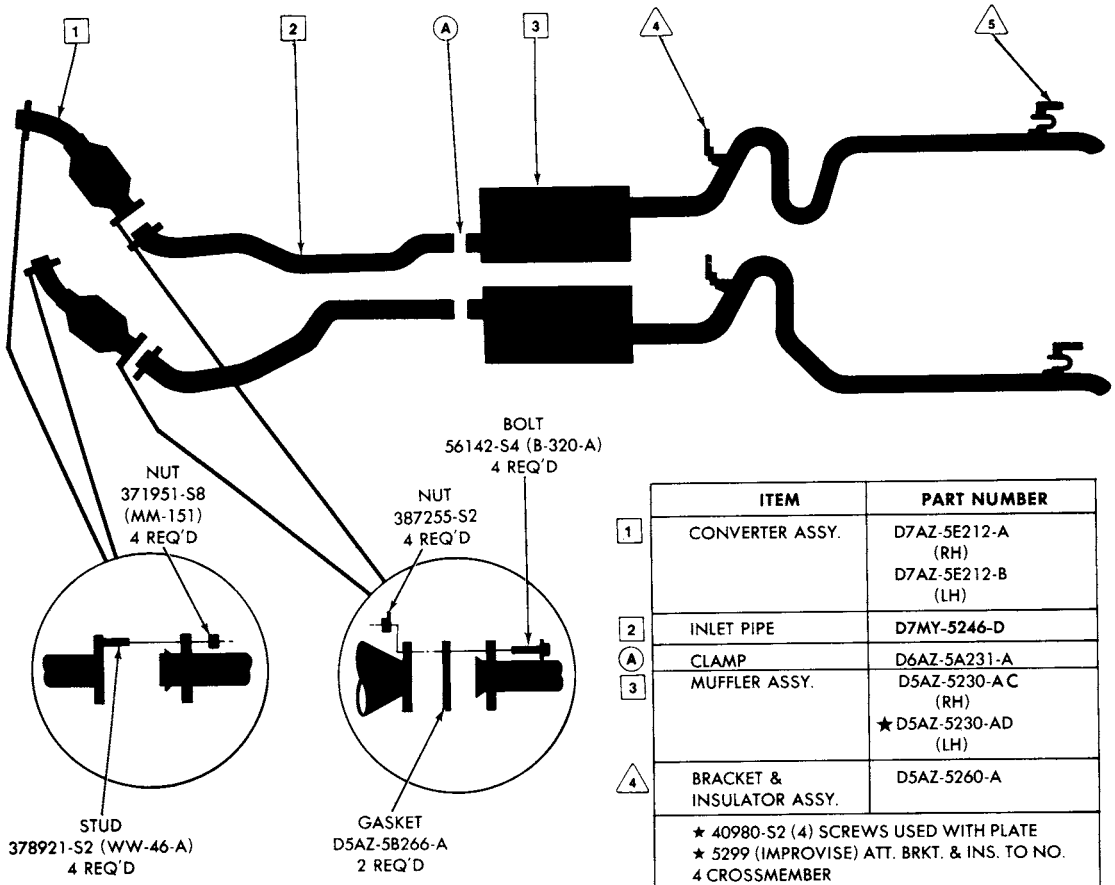

	ITEM	PART NUMBER
1	CONVERTER ASSY.	D7AZ-5E212-A (RH) D7AZ-5E212-B (LH)
2	INLET PIPE	D7MY-5246-D
A	CLAMP	D6AZ-5A231-A
3	MUFFLER ASSY.	D5AZ-5230-AC (RH) ★D5AZ-5230-AD (LH)
4	BRACKET & INSULATOR ASSY.	D5AZ-5260-A
	★ 40980-S2 (4) SCREWS USED WITH PLATE ★ 5299 (IMPROVISE) ATT. BRKT. & INS. TO NO. 4 CROSSMEMBER 381877-S2 (UU-52-AF) (4) SCREWS ATT. BRKT. & INS. TO OUTLET PIPE	
5	BRACKET & INSULATOR ASSY.	D5AZ-5260-D (RH) D5AZ-5260-E (LH)
	★ 40980-S2 (4) SCREWS ATT. BRKT. & INS. TO FRAME ASSY. 381877-S2 (UU-52-AF) (4) SCREWS ATT. BRKT. & INS. TO OUTLET PIPE	

1977 LINCOLN — 8 CYL. 400 (WITH CONVERTER)

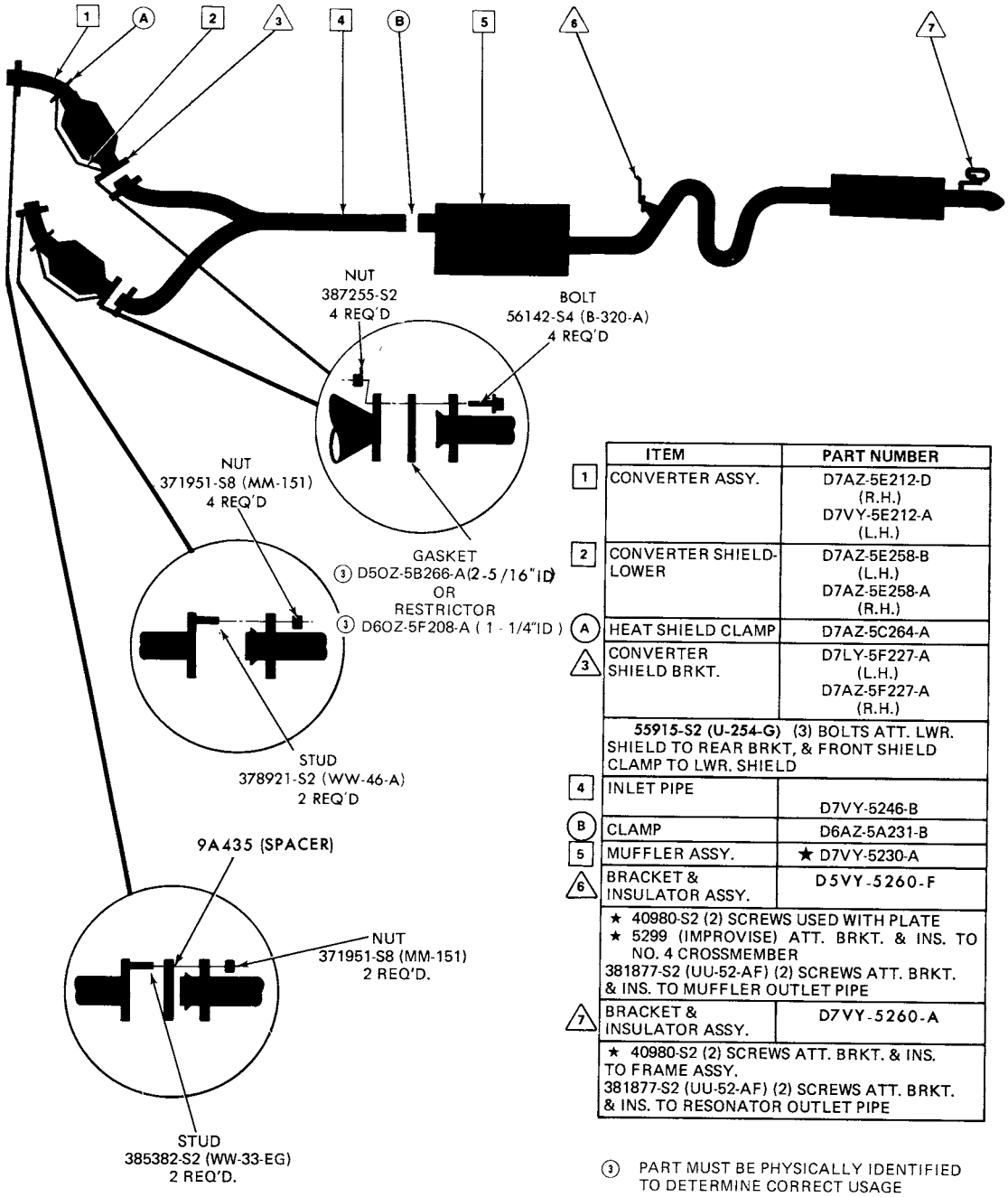

	ITEM	PART NUMBER
1	CONVERTER ASSY.	D7AZ-5E212-D (R.H.) D7VY-5E212-A (L.H.)
2	CONVERTER SHIELD-LOWER	D7AZ-5E258-B (L.H.) D7AZ-5E258-A (R.H.)
A	HEAT SHIELD CLAMP	D7AZ-5C264-A
3	CONVERTER SHIELD BRKT.	D7LY-5F227-A (L.H.) D7AZ-5F227-A (R.H.)
	55915-S2 (U-254-G) (3) BOLTS ATT. LWR. SHIELD TO REAR BRKT, & FRONT SHIELD CLAMP TO LWR. SHIELD	
4	INLET PIPE	D7VY-5246-B
B	CLAMP	D6AZ-5A231-B
5	MUFFLER ASSY.	★ D7VY-5230-A
6	BRACKET & INSULATOR ASSY.	D5VY-5260-F
	★ 40980-S2 (2) SCREWS USED WITH PLATE ★ 5299 (IMPROVISE) ATT. BRKT. & INS. TO NO. 4 CROSSMEMBER 381877-S2 (UU-52-AF) (2) SCREWS ATT. BRKT. & INS. TO MUFFLER OUTLET PIPE	
7	BRACKET & INSULATOR ASSY.	D7VY-5260-A
	★ 40980-S2 (2) SCREWS ATT. BRKT. & INS. TO FRAME ASSY. 381877-S2 (UU-52-AF) (2) SCREWS ATT. BRKT. & INS. TO RESONATOR OUTLET PIPE	

③ PART MUST BE PHYSICALLY IDENTIFIED TO DETERMINE CORRECT USAGE

EJ-19

COPYRIGHT © 1986 — FORD MOTOR COMPANY — DEARBORN, MICHIGAN

1977 LINCOLN - 8 CYL. 460 (WITH CONVERTER)

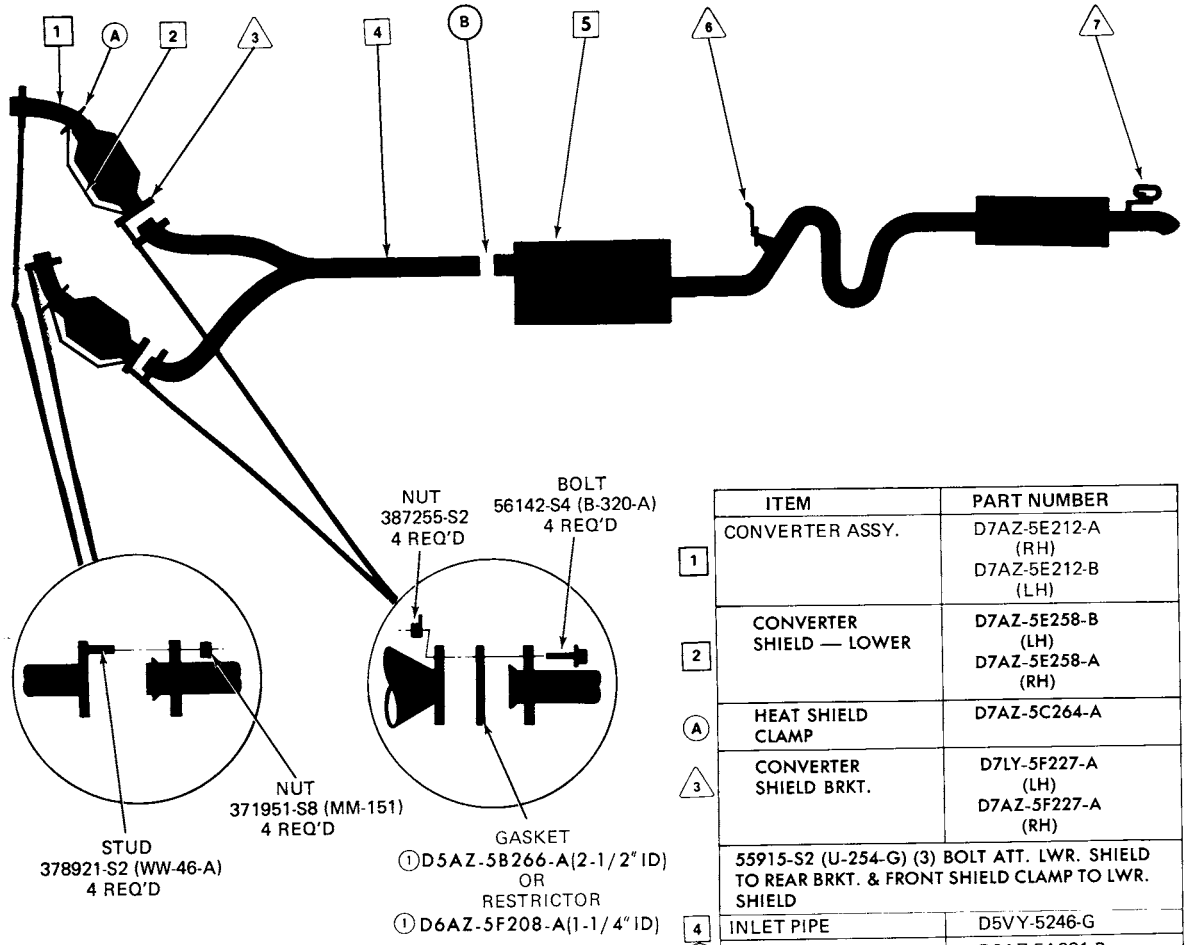

	ITEM	PART NUMBER
1	CONVERTER ASSY.	D7AZ-5E212-A (RH) D7AZ-5E212-B (LH)
2	CONVERTER SHIELD — LOWER	D7AZ-5E258-B (LH) D7AZ-5E258-A (RH)
A	HEAT SHIELD CLAMP	D7AZ-5C264-A
3	CONVERTER SHIELD BRKT.	D7LY-5F227-A (LH) D7AZ-5F227-A (RH)
	55915-S2 (U-254-G) (3) BOLT ATT. LWR. SHIELD TO REAR BRKT. & FRONT SHIELD CLAMP TO LWR. SHIELD	
4	INLET PIPE	D5VY-5246-G
B	CLAMP	D6AZ-5A231-B
5	MUFFLER ASSY.	★ D7VY-5230-B
6	BRACKET & INSULATOR ASSY.	D5VY-5260-F
	★ 40980-S2(2) SCREWS USED WITH PLATE ★ 5299 (IMPROVISE) ATT. BRKT. & INS. TO NO. 4 CROSSMEMBER 381877-S2(UU-52-AF)(2) SCREWS ATT. BRKT. & INS. TO MUFFLER OUTLET PIPE	
7	BRACKET & INSULATOR ASSY.	D5VY-5260-D
	★ 40980-S2(2) SCREWS ATT. BRKT. & INS. TO FRAME ASSY. 381877-S2(UU-52-AF)(2) SCREWS ATT. BRKT. & INS. TO RESONATOR OUTLET PIPE	

① PART MUST BE PHYSICALLY IDENTIFIED TO DETERMINE CORRECT USAGE

1977 COUGAR - CYL. 302 SEDAN (WITH CONVERTER)

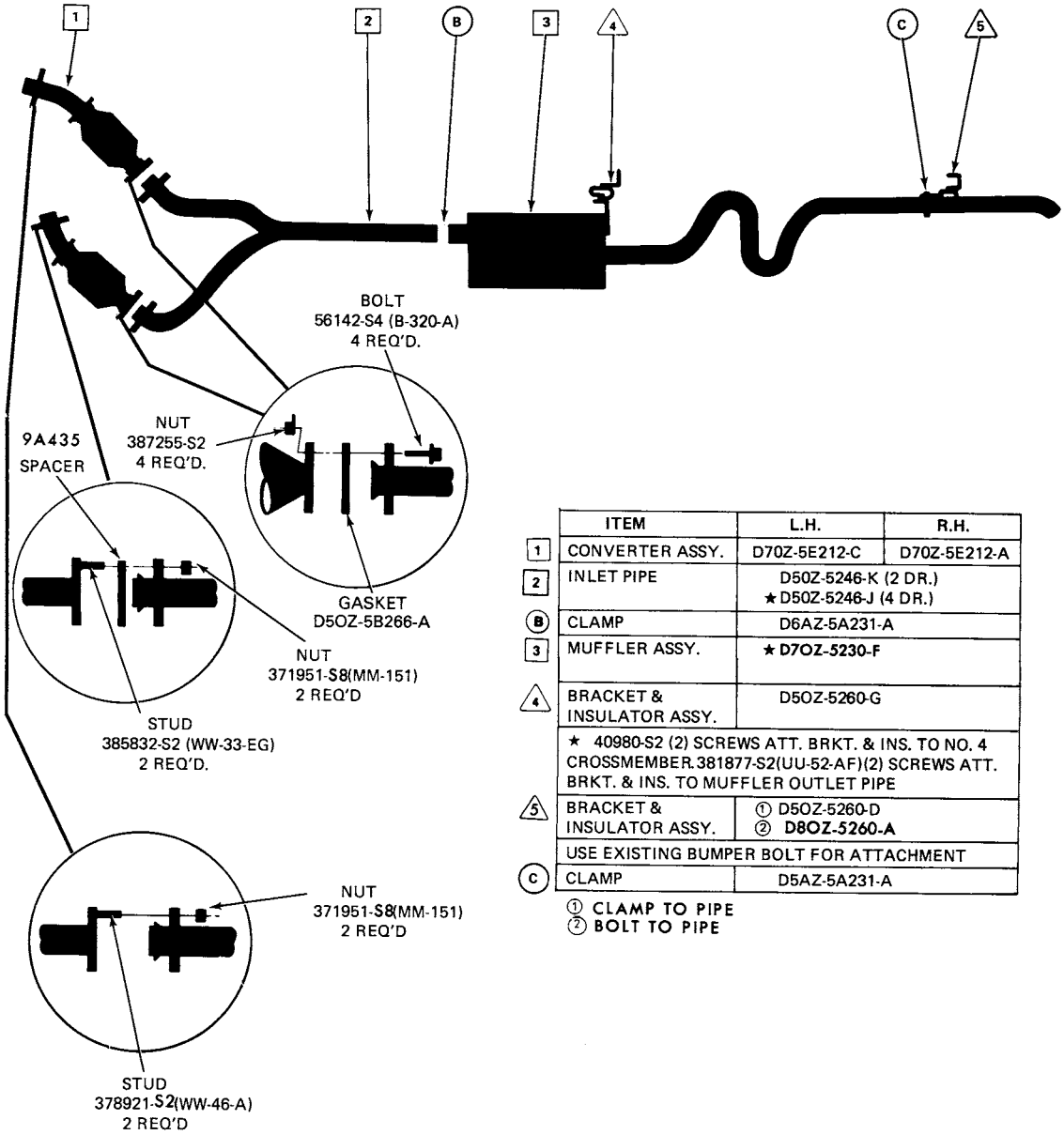

	ITEM	L.H.	R.H.
1	CONVERTER ASSY.	D70Z-5E212-C	D70Z-5E212-A
2	INLET PIPE	D50Z-5246-K (2 DR.) ★ D50Z-5246-J (4 DR.)	
B	CLAMP	D6AZ-5A231-A	
3	MUFFLER ASSY.	★ D7OZ-5230-F	
4	BRACKET & INSULATOR ASSY.	D5OZ-5260-G	
	★ 40980-S2 (2) SCREWS ATT. BRKT. & INS. TO NO. 4 CROSSMEMBER. 381877-S2(UU-52-AF)(2) SCREWS ATT. BRKT. & INS. TO MUFFLER OUTLET PIPE		
5	BRACKET & INSULATOR ASSY.	① D5OZ-5260-D ② D8OZ-5260-A	
	USE EXISTING BUMPER BOLT FOR ATTACHMENT		
C	CLAMP	D5AZ-5A231-A	

① CLAMP TO PIPE
② BOLT TO PIPE

EB-45

COPYRIGHT © 1986 — FORD MOTOR COMPANY — DEARBORN, MICHIGAN

1977 COUGAR - 8 CYL. 351W SEDAN (WITH CONVERTER)

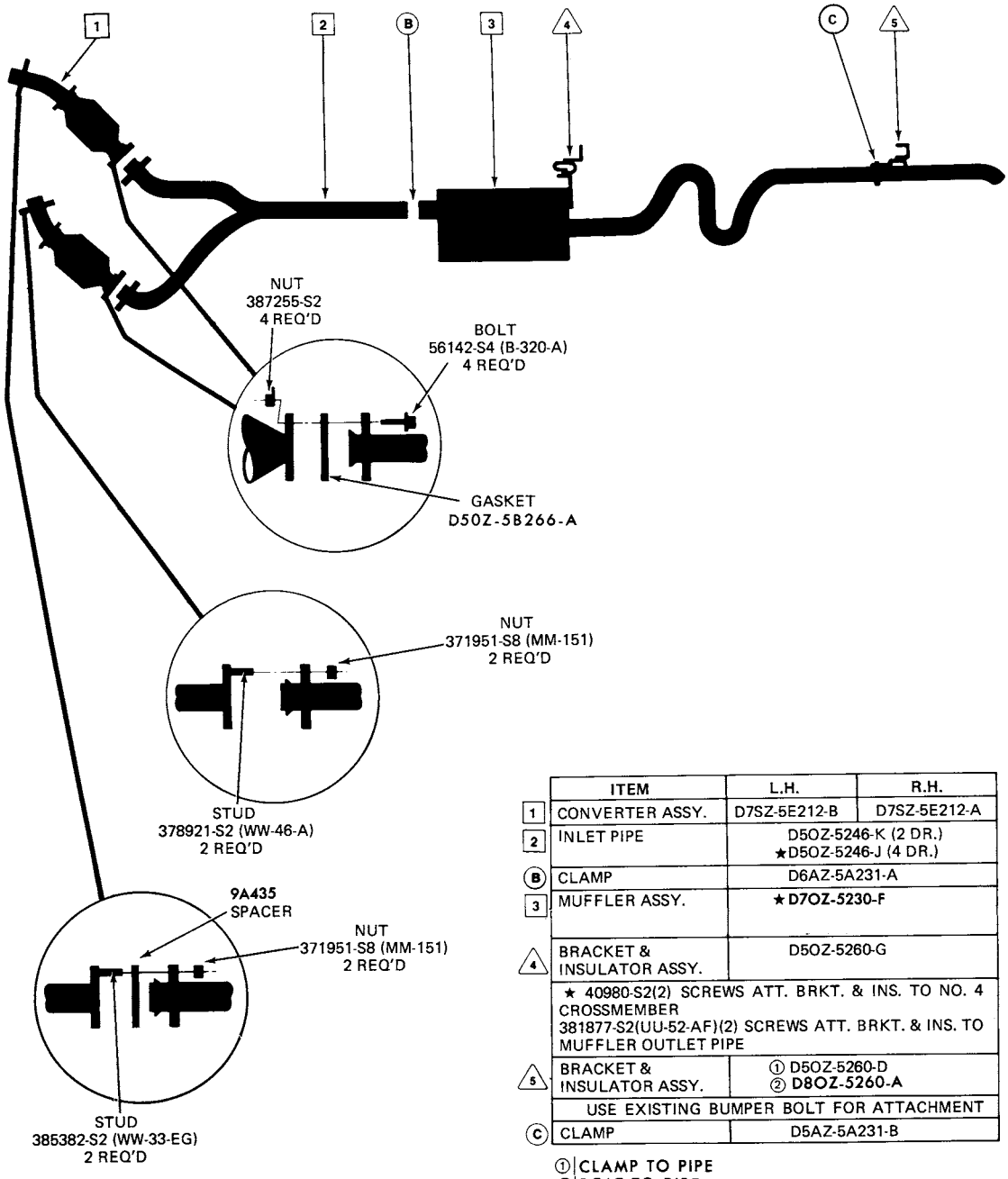

	ITEM	L.H.	R.H.
1	CONVERTER ASSY.	D7SZ-5E212-B	D7SZ-5E212-A
2	INLET PIPE	D5OZ-5246-K (2 DR.) ★D5OZ-5246-J (4 DR.)	
B	CLAMP	D6AZ-5A231-A	
3	MUFFLER ASSY.	★ D7OZ-5230-F	
4	BRACKET & INSULATOR ASSY.	D5OZ-5260-G	
	★ 40980-S2(2) SCREWS ATT. BRKT. & INS. TO NO. 4 CROSSMEMBER 381877-S2(UU-52-AF)(2) SCREWS ATT. BRKT. & INS. TO MUFFLER OUTLET PIPE		
5	BRACKET & INSULATOR ASSY.	① D5OZ-5260-D ② D8OZ-5260-A	
	USE EXISTING BUMPER BOLT FOR ATTACHMENT		
C	CLAMP	D5AZ-5A231-B	

① CLAMP TO PIPE
② BOLT TO PIPE

EB-46

1977 COUGAR — 8 CYL. 351M SEDAN (WITH CONVERTER)

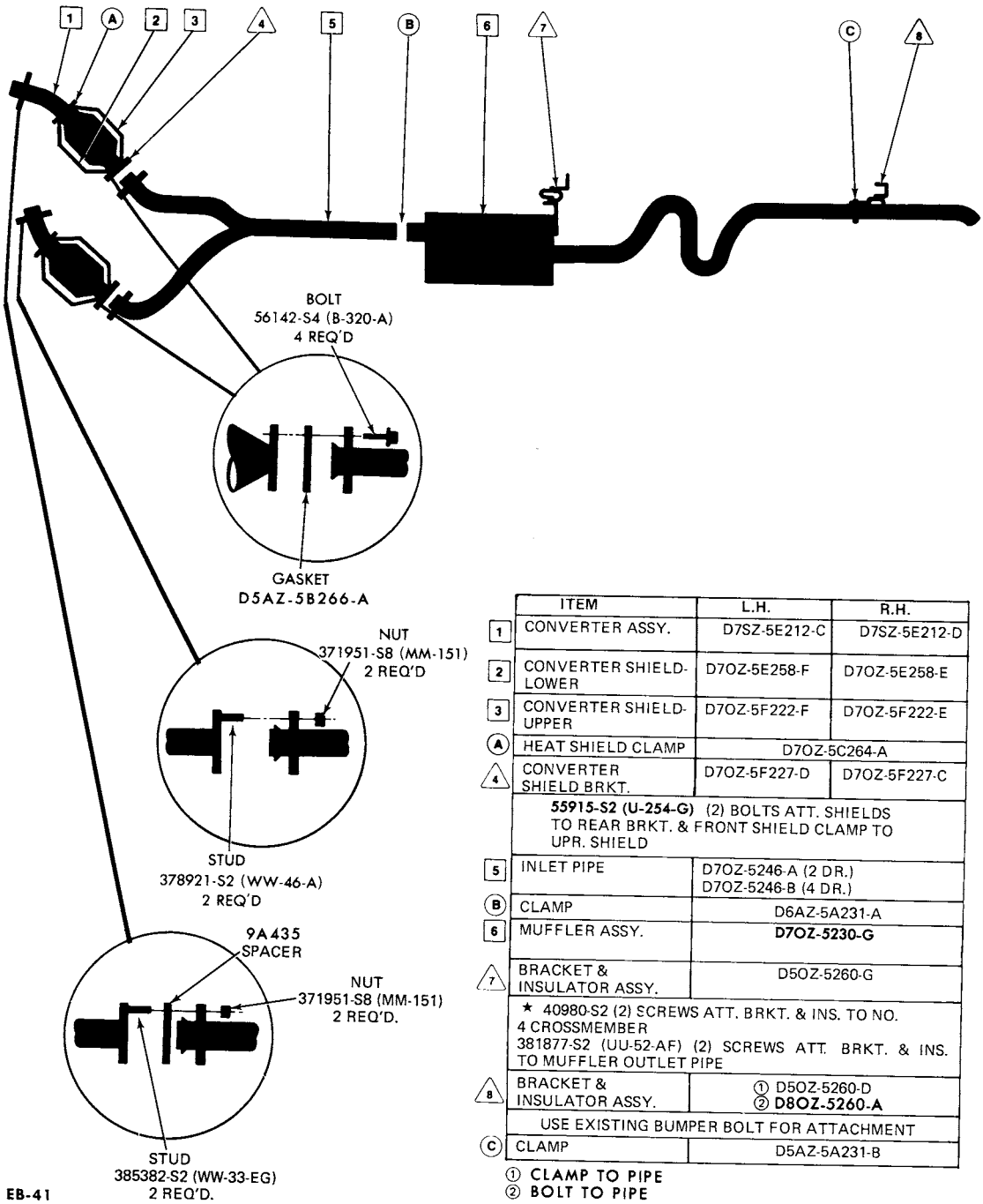

	ITEM	L.H.	R.H.
1	CONVERTER ASSY.	D7SZ-5E212-C	D7SZ-5E212-D
2	CONVERTER SHIELD-LOWER	D7OZ-5E258-F	D7OZ-5E258-E
3	CONVERTER SHIELD-UPPER	D7OZ-5F222-F	D7OZ-5F222-E
A	HEAT SHIELD CLAMP	D7OZ-5C264-A	
4	CONVERTER SHIELD BRKT.	D7OZ-5F227-D	D7OZ-5F227-C
	55915-S2 (U-254-G) (2) BOLTS ATT. SHIELDS TO REAR BRKT. & FRONT SHIELD CLAMP TO UPR. SHIELD		
5	INLET PIPE	D7OZ-5246-A (2 DR.) D7OZ-5246-B (4 DR.)	
B	CLAMP	D6AZ-5A231-A	
6	MUFFLER ASSY.	**D7OZ-5230-G**	
7	BRACKET & INSULATOR ASSY.	D5OZ-5260-G	
	★ 40980-S2 (2) SCREWS ATT. BRKT. & INS. TO NO. 4 CROSSMEMBER 381877-S2 (UU-52-AF) (2) SCREWS ATT. BRKT. & INS. TO MUFFLER OUTLET PIPE		
8	BRACKET & INSULATOR ASSY.	① D5OZ-5260-D ② **D8OZ-5260-A**	
	USE EXISTING BUMPER BOLT FOR ATTACHMENT		
C	CLAMP	D5AZ-5A231-B	

① CLAMP TO PIPE
② BOLT TO PIPE

COPYRIGHT © 1986 — FORD MOTOR COMPANY — DEARBORN, MICHIGAN

1973/79 LINCOLN-MERCURY CARS

SECTION 52.77

F (COUGAR)

1977 COUGAR - 8 CYL. 351M SEDAN (W/O CONVERTER)

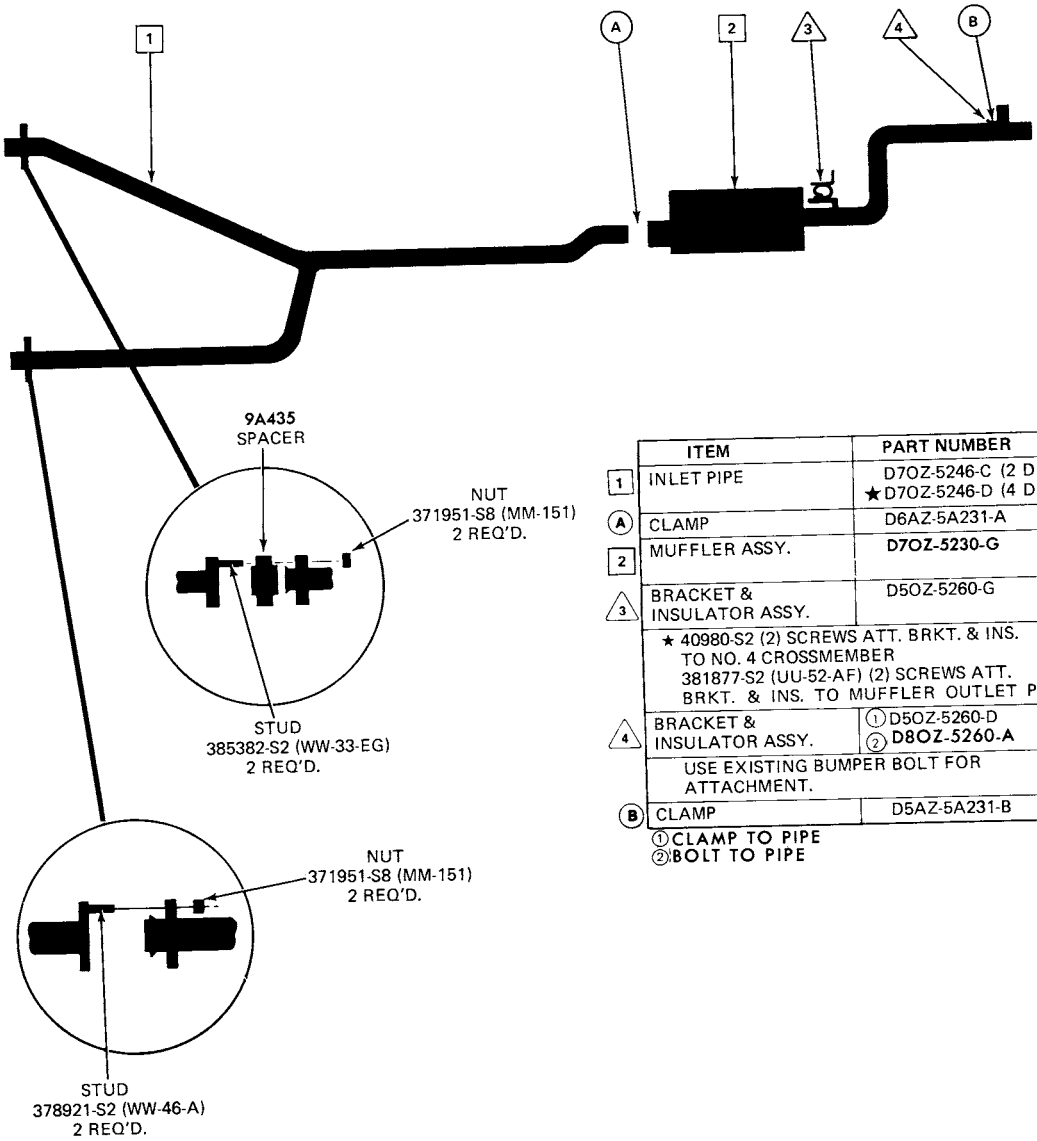

	ITEM	PART NUMBER
1	INLET PIPE	D7OZ-5246-C (2 DR.) ★D7OZ-5246-D (4 DR.)
A	CLAMP	D6AZ-5A231-A
2	MUFFLER ASSY.	D7OZ-5230-G
3	BRACKET & INSULATOR ASSY.	D5OZ-5260-G
	★ 40980-S2 (2) SCREWS ATT. BRKT. & INS. TO NO. 4 CROSSMEMBER 381877-S2 (UU-52-AF) (2) SCREWS ATT. BRKT. & INS. TO MUFFLER OUTLET PIPE	
4	BRACKET & INSULATOR ASSY.	① D5OZ-5260-D ② D8OZ-5260-A
	USE EXISTING BUMPER BOLT FOR ATTACHMENT.	
B	CLAMP	D5AZ-5A231-B

①CLAMP TO PIPE
②BOLT TO PIPE

1977 COUGAR — 8 CYL. 351M
STATION WAGON
(WITH CONVERTER)

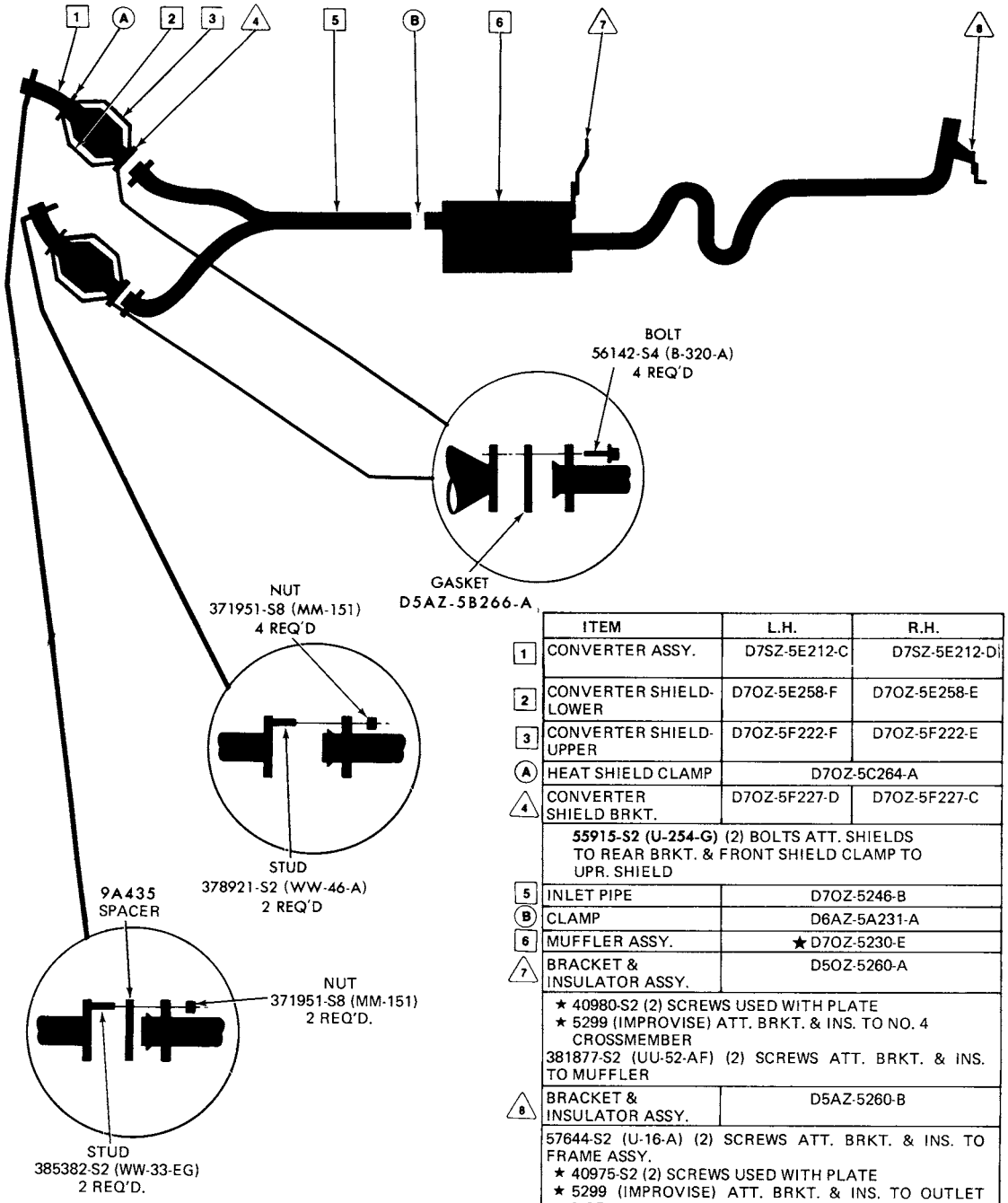

	ITEM	L.H.	R.H.
1	CONVERTER ASSY.	D7SZ-5E212-C	D7SZ-5E212-D
2	CONVERTER SHIELD-LOWER	D7OZ-5E258-F	D7OZ-5E258-E
3	CONVERTER SHIELD-UPPER	D7OZ-5F222-F	D7OZ-5F222-E
A	HEAT SHIELD CLAMP	D7OZ-5C264-A	
4	CONVERTER SHIELD BRKT.	D7OZ-5F227-D	D7OZ-5F227-C
	55915-S2 (U-254-G) (2) BOLTS ATT. SHIELDS TO REAR BRKT. & FRONT SHIELD CLAMP TO UPR. SHIELD		
5	INLET PIPE	D7OZ-5246-B	
B	CLAMP	D6AZ-5A231-A	
6	MUFFLER ASSY.	★ D7OZ-5230-E	
7	BRACKET & INSULATOR ASSY.	D5OZ-5260-A	
	★ 40980-S2 (2) SCREWS USED WITH PLATE ★ 5299 (IMPROVISE) ATT. BRKT. & INS. TO NO. 4 CROSSMEMBER 381877-S2 (UU-52-AF) (2) SCREWS ATT. BRKT. & INS. TO MUFFLER		
8	BRACKET & INSULATOR ASSY.	D5AZ-5260-B	
	57644-S2 (U-16-A) (2) SCREWS ATT. BRKT. & INS. TO FRAME ASSY. ★ 40975-S2 (2) SCREWS USED WITH PLATE ★ 5299 (IMPROVISE) ATT. BRKT. & INS. TO OUTLET PIPE		

EB-42

COPYRIGHT © 1986 — FORD MOTOR COMPANY — DEARBORN, MICHIGAN

1977 COUGAR - 8 CYL. 351M STATION WAGON (W/O CONVERTER)

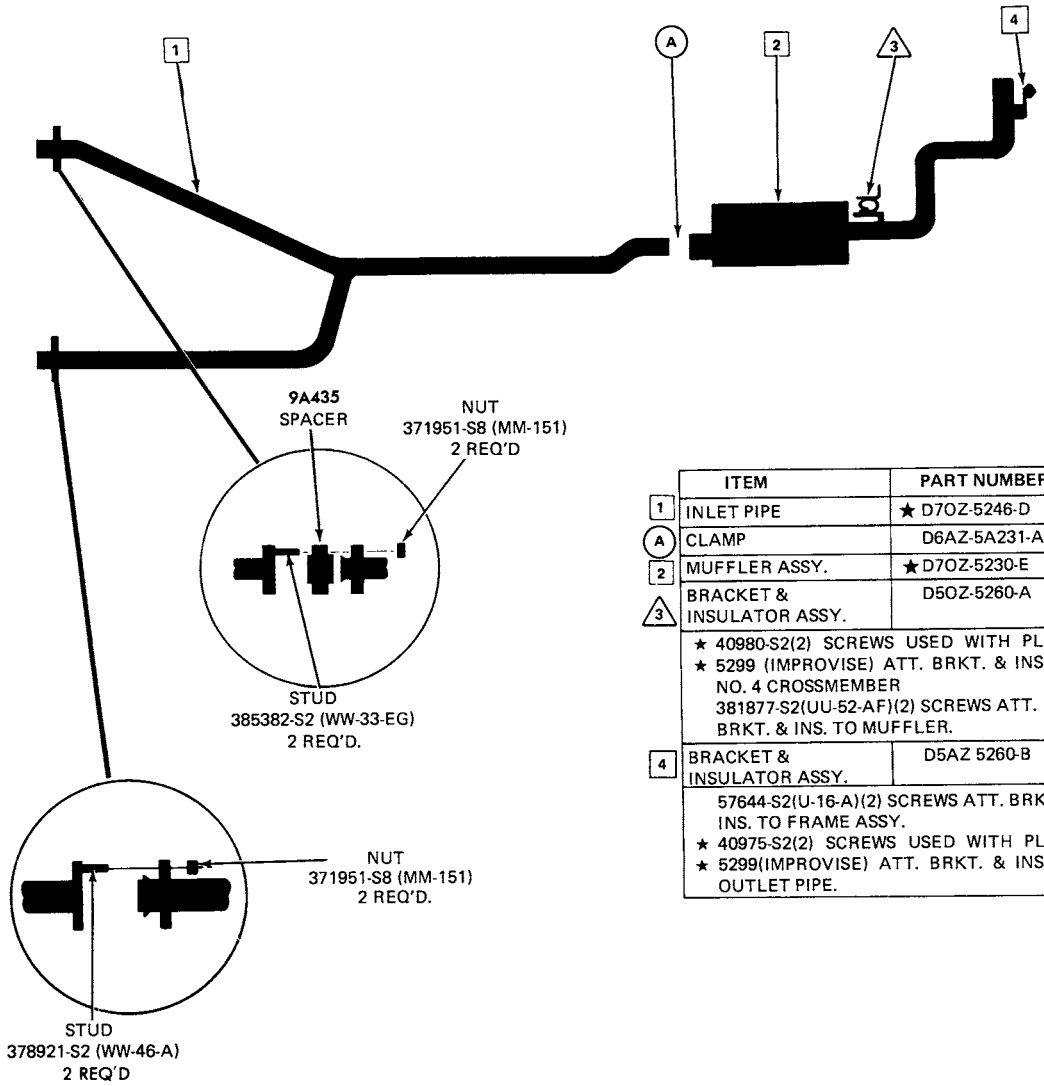

	ITEM	PART NUMBER
1	INLET PIPE	★ D7OZ-5246-D
A	CLAMP	D6AZ-5A231-A
2	MUFFLER ASSY.	★ D7OZ-5230-E
3	BRACKET & INSULATOR ASSY.	D5OZ-5260-A
	★ 40980-S2(2) SCREWS USED WITH PLATE ★ 5299 (IMPROVISE) ATT. BRKT. & INS. TO NO. 4 CROSSMEMBER 381877-S2(UU-52-AF)(2) SCREWS ATT. BRKT. & INS. TO MUFFLER.	
4	BRACKET & INSULATOR ASSY.	D5AZ 5260-B
	57644-S2(U-16-A)(2) SCREWS ATT. BRKT. & INS. TO FRAME ASSY. ★ 40975-S2(2) SCREWS USED WITH PLATE ★ 5299(IMPROVISE) ATT. BRKT. & INS TO OUTLET PIPE.	

1977 COUGAR — 8 CYL. -400 SEDAN (WITH CONVERTER)

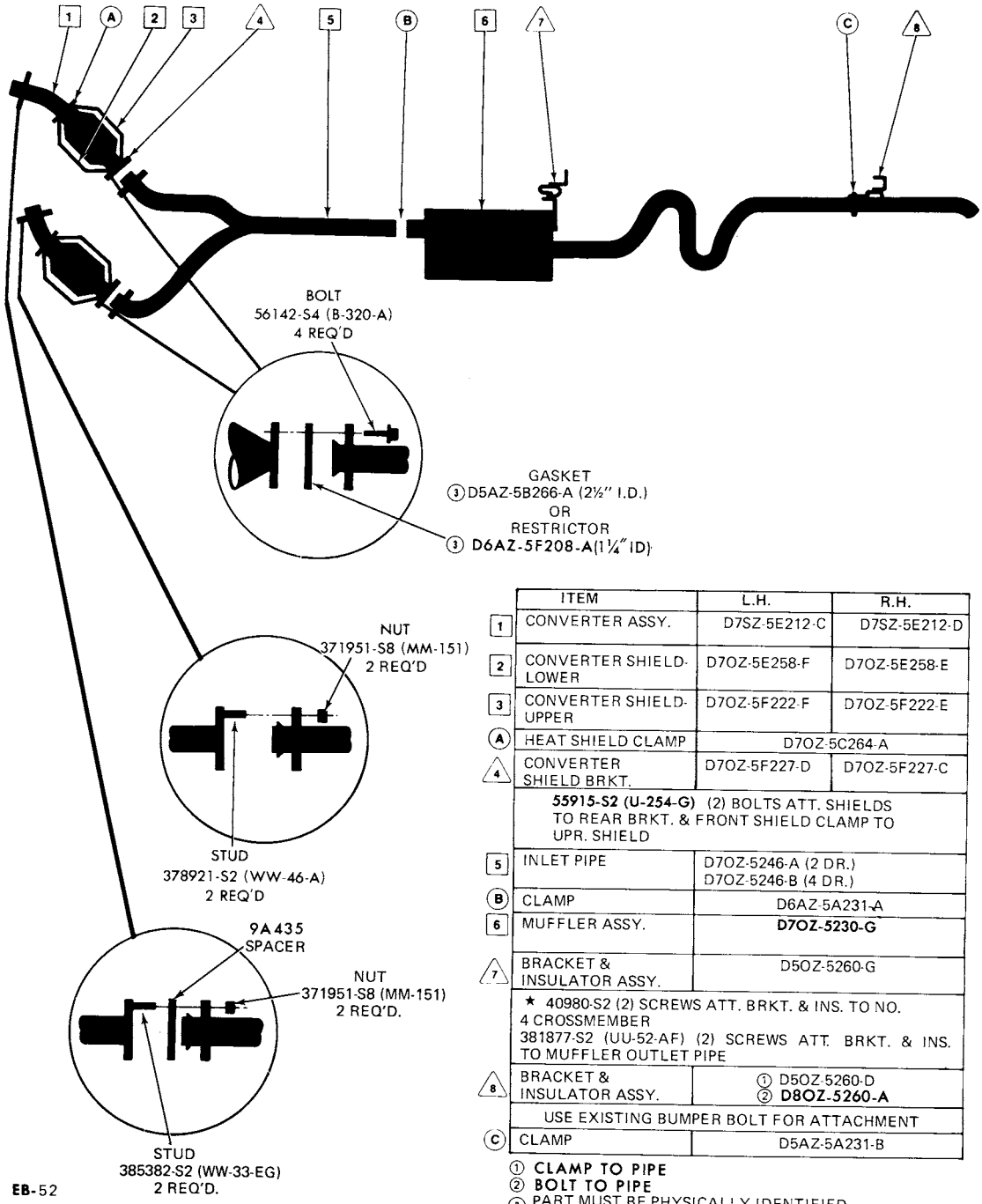

	ITEM	L.H.	R.H.
1	CONVERTER ASSY.	D7SZ-5E212-C	D7SZ-5E212-D
2	CONVERTER SHIELD-LOWER	D7OZ-5E258-F	D7OZ-5E258-E
3	CONVERTER SHIELD-UPPER	D7OZ-5F222-F	D7OZ-5F222-E
A	HEAT SHIELD CLAMP	D7OZ-5C264-A	
4	CONVERTER SHIELD BRKT.	D7OZ-5F227-D	D7OZ-5F227-C
	55915-S2 (U-254-G) (2) BOLTS ATT. SHIELDS TO REAR BRKT. & FRONT SHIELD CLAMP TO UPR. SHIELD		
5	INLET PIPE	D7OZ-5246-A (2 DR.) D7OZ-5246-B (4 DR.)	
B	CLAMP	D6AZ-5A231-A	
6	MUFFLER ASSY.	**D7OZ-5230-G**	
7	BRACKET & INSULATOR ASSY.	D5OZ-5260-G	
	★ 40980-S2 (2) SCREWS ATT. BRKT. & INS. TO NO. 4 CROSSMEMBER 381877-S2 (UU-52-AF) (2) SCREWS ATT. BRKT. & INS. TO MUFFLER OUTLET PIPE		
8	BRACKET & INSULATOR ASSY.	① D5OZ-5260-D ② **D8OZ-5260-A**	
	USE EXISTING BUMPER BOLT FOR ATTACHMENT		
C	CLAMP	D5AZ-5A231-B	

① **CLAMP TO PIPE**
② **BOLT TO PIPE**
③ PART MUST BE PHYSICALLY IDENTIFIED TO DETERMINE CORRECT USAGE

COPYRIGHT © 1986 — FORD MOTOR COMPANY — DEARBORN, MICHIGAN

1977 COUGAR - 8 CYL. 400 SEDAN (W/O CONVERTER)

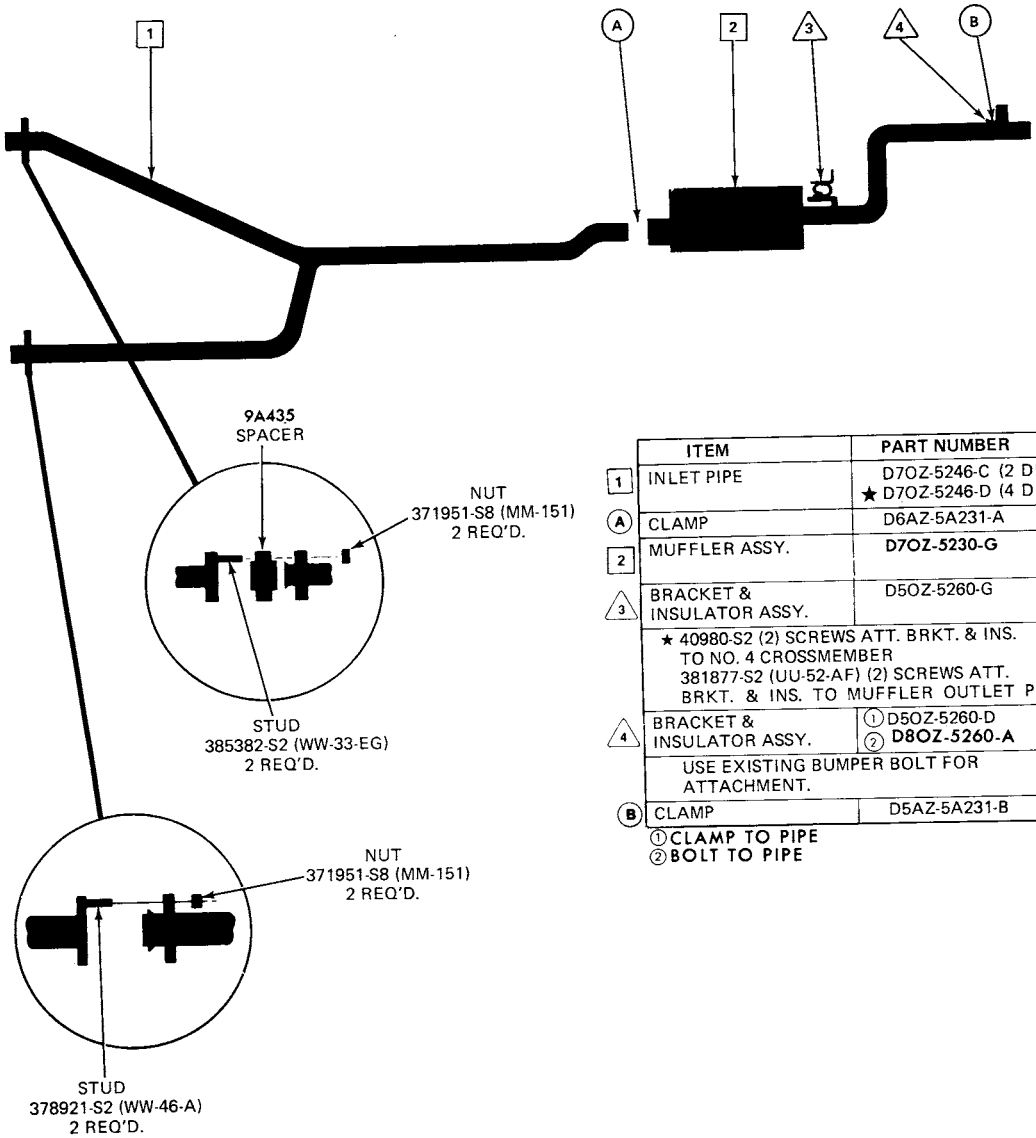

	ITEM	PART NUMBER
1	INLET PIPE	D7OZ-5246-C (2 DR.) ★ D7OZ-5246-D (4 DR.)
A	CLAMP	D6AZ-5A231-A
2	MUFFLER ASSY.	**D7OZ-5230-G**
3	BRACKET & INSULATOR ASSY.	D5OZ-5260-G
	★ 40980-S2 (2) SCREWS ATT. BRKT. & INS. TO NO. 4 CROSSMEMBER 381877-S2 (UU-52-AF) (2) SCREWS ATT. BRKT. & INS. TO MUFFLER OUTLET PIPE	
4	BRACKET & INSULATOR ASSY.	① D5OZ-5260-D ② **D8OZ-5260-A**
	USE EXISTING BUMPER BOLT FOR ATTACHMENT.	
B	CLAMP	D5AZ-5A231-B

①CLAMP TO PIPE
②BOLT TO PIPE

1977 COUGAR — 8 CYL. 400
STATION WAGON
(WITH CONVERTER)

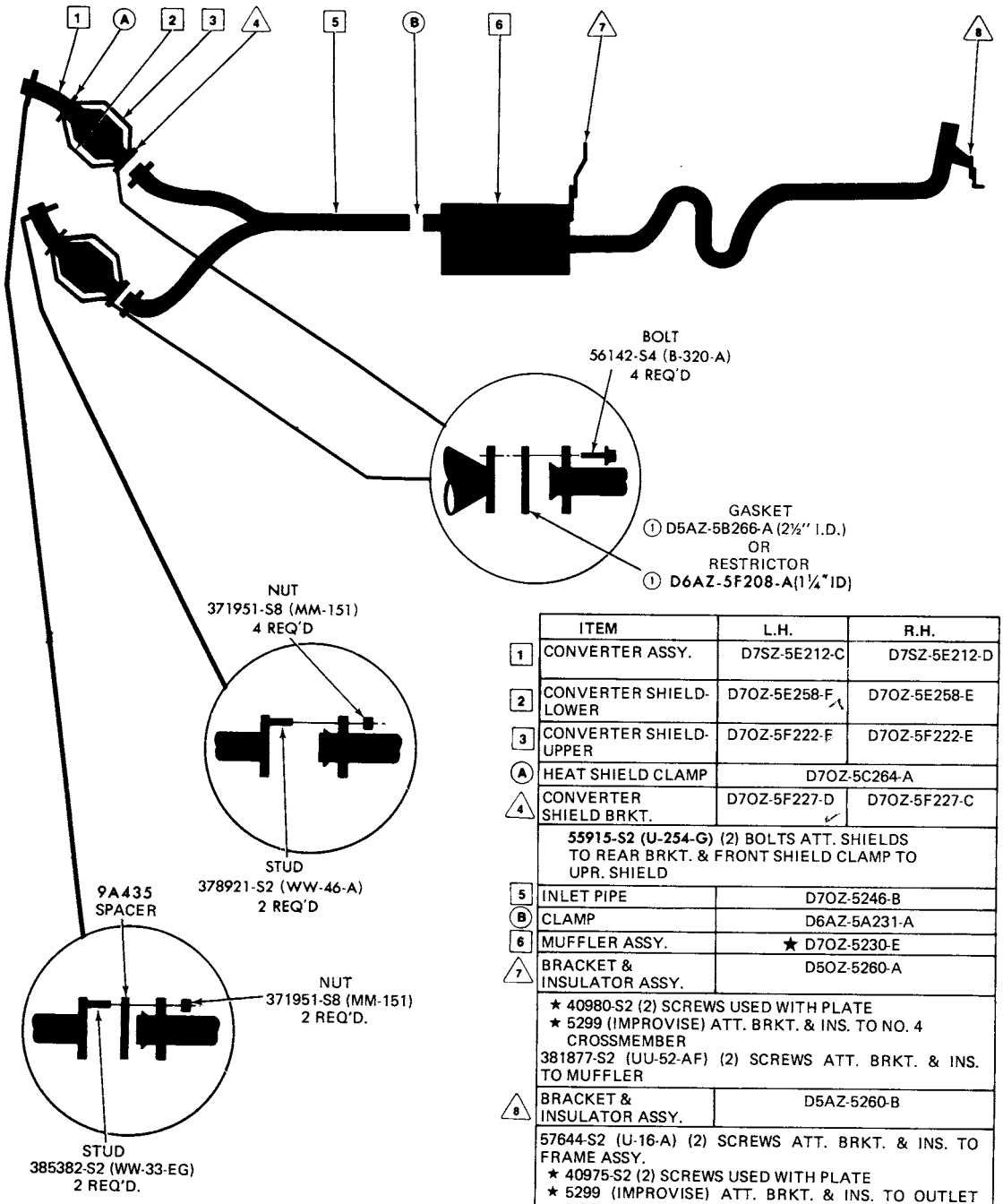

	ITEM	L.H.	R.H.
1	CONVERTER ASSY.	D7SZ-5E212-C	D7SZ-5E212-D
2	CONVERTER SHIELD-LOWER	D7OZ-5E258-F	D7OZ-5E258-E
3	CONVERTER SHIELD-UPPER	D7OZ-5F222-F	D7OZ-5F222-E
A	HEAT SHIELD CLAMP	D7OZ-5C264-A	
4	CONVERTER SHIELD BRKT.	D7OZ-5F227-D	D7OZ-5F227-C
	55915-S2 (U-254-G) (2) BOLTS ATT. SHIELDS TO REAR BRKT. & FRONT SHIELD CLAMP TO UPR. SHIELD		
5	INLET PIPE	D7OZ-5246-B	
B	CLAMP	D6AZ-5A231-A	
6	MUFFLER ASSY.	★ D7OZ-5230-E	
7	BRACKET & INSULATOR ASSY.	D5OZ-5260-A	
	★ 40980-S2 (2) SCREWS USED WITH PLATE ★ 5299 (IMPROVISE) ATT. BRKT. & INS. TO NO. 4 CROSSMEMBER 381877-S2 (UU-52-AF) (2) SCREWS ATT. BRKT. & INS. TO MUFFLER		
8	BRACKET & INSULATOR ASSY.	D5AZ-5260-B	
	57644-S2 (U-16-A) (2) SCREWS ATT. BRKT. & INS. TO FRAME ASSY. ★ 40975-S2 (2) SCREWS USED WITH PLATE ★ 5299 (IMPROVISE) ATT. BRKT. & INS. TO OUTLET PIPE		

① PART MUST BE PHYSICALLY IDENTIFIED TO DETERMINE CORRECT USAGE

COPYRIGHT © 1986 — FORD MOTOR COMPANY — DEARBORN, MICHIGAN

1977 COUGAR - 8 CYL. 400 STATION WAGON (W/O CONVERTER)

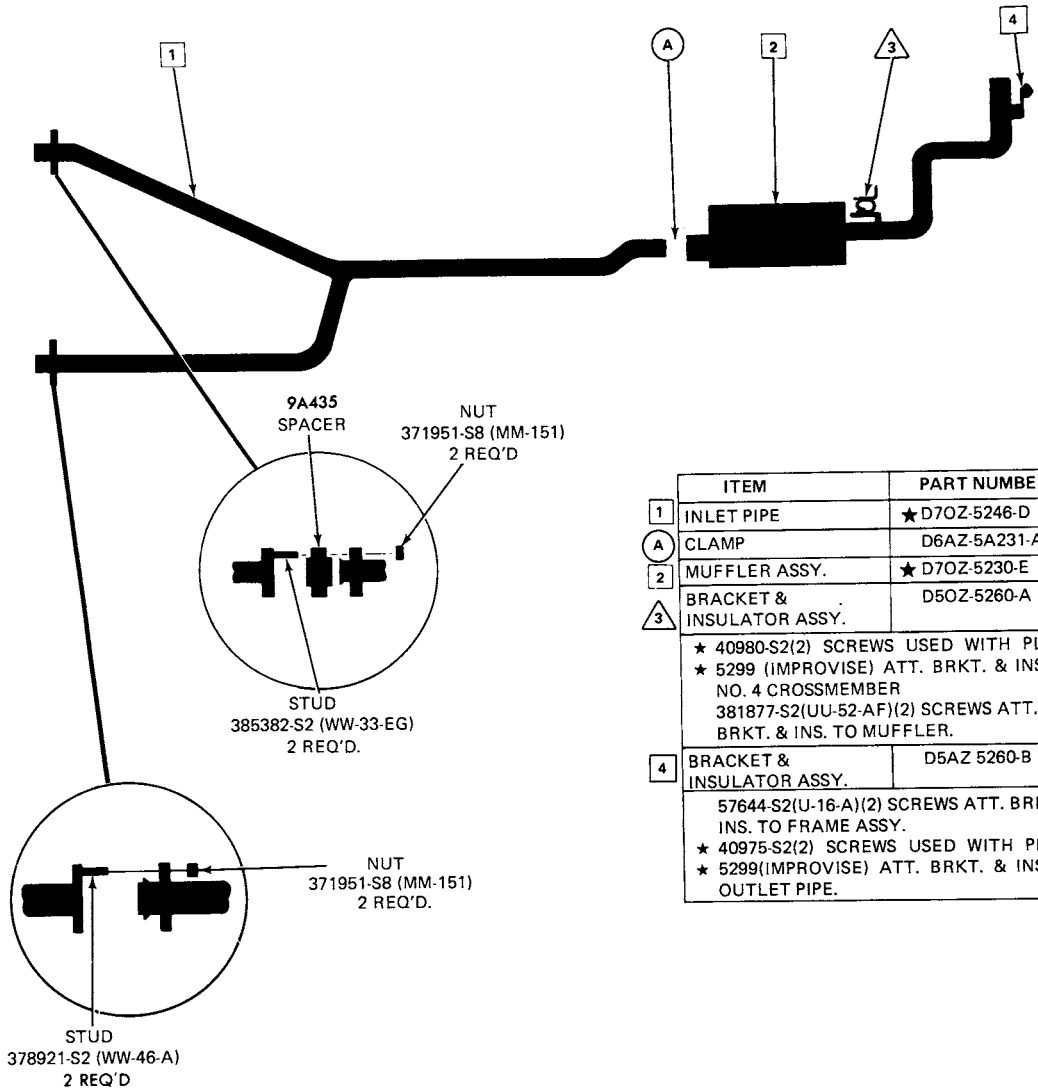

	ITEM	PART NUMBER
1	INLET PIPE	★D7OZ-5246-D
A	CLAMP	D6AZ-5A231-A
2	MUFFLER ASSY.	★D7OZ-5230-E
3	BRACKET & INSULATOR ASSY.	D5OZ-5260-A
	★ 40980-S2(2) SCREWS USED WITH PLATE ★ 5299 (IMPROVISE) ATT. BRKT. & INS. TO NO. 4 CROSSMEMBER 381877-S2(UU-52-AF)(2) SCREWS ATT. BRKT. & INS. TO MUFFLER.	
4	BRACKET & INSULATOR ASSY.	D5AZ 5260-B
	57644-S2(U-16-A)(2) SCREWS ATT. BRKT. & INS. TO FRAME ASSY. ★ 40975-S2(2) SCREWS USED WITH PLATE ★ 5299(IMPROVISE) ATT. BRKT. & INS TO OUTLET PIPE.	

1977 MONARCH — 6 CYL. 200 SEDAN (WITH CONVERTER)

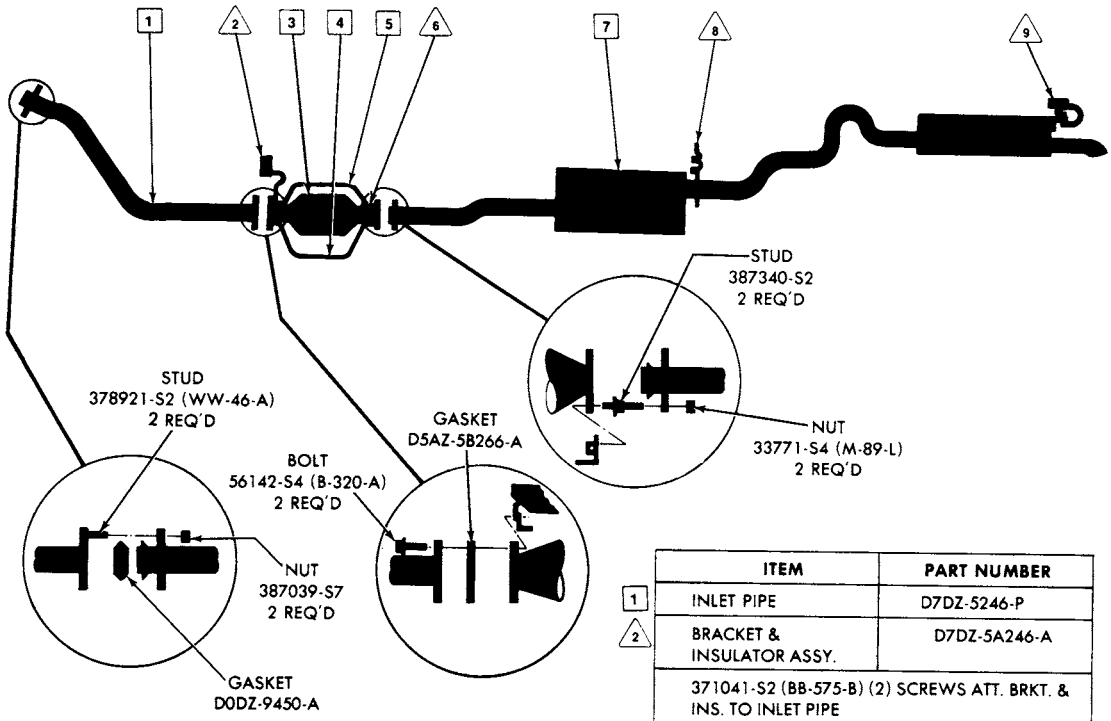

	ITEM	PART NUMBER
1	INLET PIPE	D7DZ-5246-P
2	BRACKET & INSULATOR ASSY.	D7DZ-5A246-A
	371041-S2 (BB-575-B) (2) SCREWS ATT. BRKT. & INS. TO INLET PIPE	
3	● CONVERTER ASSY.	D7DZ-5E212-A
4	CONVERTER SHIELD-LOWER	D7FZ-5E258-A
5	CONVERTER SHIELD-UPPER	D7FZ-5F222-D
6	CONVERTER SHIELD BRKT.	D7FZ-5F227-A
	55914-S2 (U-254-F) (6) SCREWS ATT. CONV. SHIELDS TO BRKT.	
7	MUFFLER ASSY.	D7DZ-5230-AM
8	BRACKET & INSULATOR ASSY.	D5DZ-5260-F
	381877-S2 (UU-52-AF) (2) SCREWS ATT. BRKT. & INS. TO FRT. MFLR. 382347-S2 (BB-905) (2) SCREWS ATT. BRKT. & INS. TO UNDERBODY	
9	BRACKET & INSULATOR ASSY.	D7DZ-5260-A
	381877-S2 (UU-52-AF) (4) SCREWS ATT. BRKT. & INS. TO RR. MFLR. & SIDE MEMBER	

● CONVERTER SHELL LENGTH 7¼"

COPYRIGHT © 1986 — FORD MOTOR COMPANY — DEARBORN, MICHIGAN

1977 MONARCH - 6 CYL. 250 SEDAN (WITH CONVERTER)

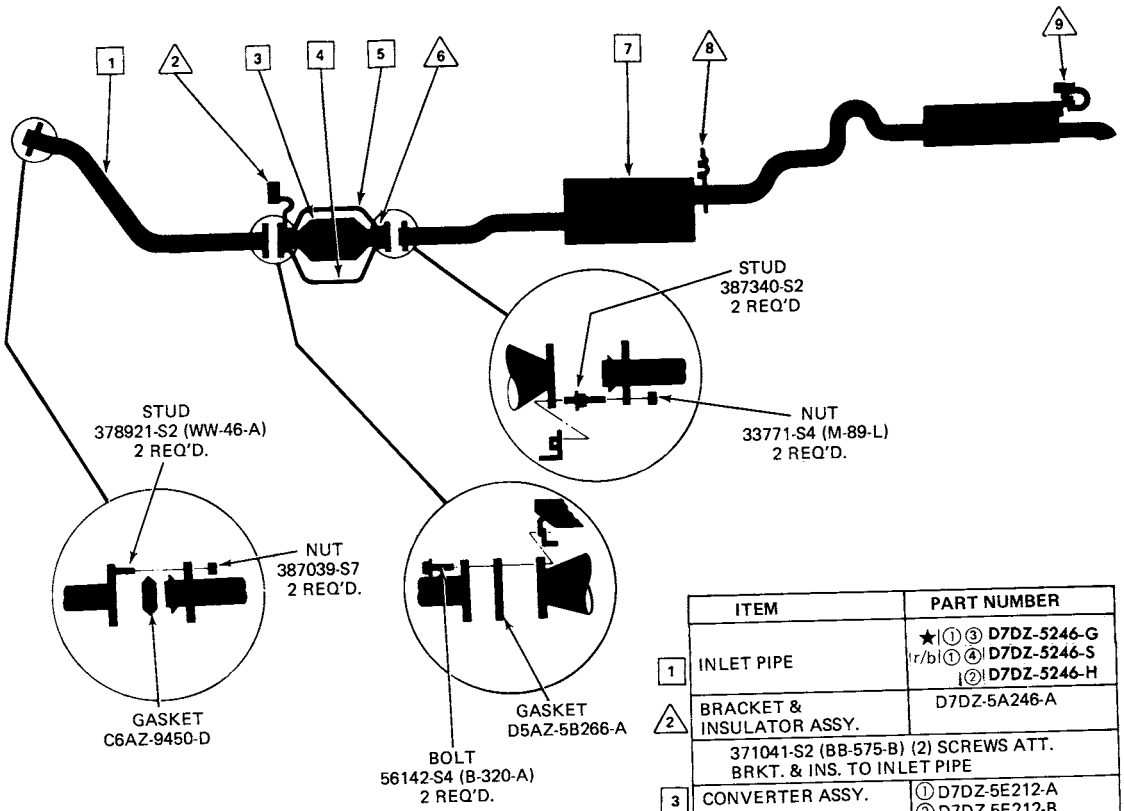

	ITEM	PART NUMBER
1	INLET PIPE	★ ① ③ D7DZ-5246-G r/b ① ④ D7DZ-5246-S ↓ ② D7DZ-5246-H
2	BRACKET & INSULATOR ASSY.	D7DZ-5A246-A
	371041-S2 (BB-575-B) (2) SCREWS ATT. BRKT. & INS. TO INLET PIPE	
3	CONVERTER ASSY.	① D7DZ-5E212-A ② D7DZ-5E212-B
4	CONVERTER SHIELD-LOWER	① D7FZ-5E258-A ② D7FZ-5E258-B
5	CONVERTER SHIELD-UPPER	① D7FZ-5F222-D ② D7FZ-5F222-E
6	CONVERTER SHIELD-BRKT.	D7FZ-5F227-A
	55914-S2 (U-254-F) (6) SCREWS ATT. CONV. SHIELDS TO BRKT.	
7	MUFFLER ASSY.	① D7DZ-5230-AM ★ ② D7DZ-5230-W
8	BRACKET & INSULATOR ASSY.	D5DZ-5260-F
	381877-S2 (UU-52-AF) (2) SCREWS ATT. BRKT. & INS. TO FRONT MUFFLER 382347-S2 (BB-905) (2) SCREWS ATT. BRKT. & INS. TO UNDERBODY	
9	BRACKET & INSULATOR ASSY.	D7DZ-5260-A
	381877-S2 (UU-52-AF) (4) SCREWS ATT. BRKT. & INS. TO RR. MFLR. & SIDEMEMBER	

① W/7¼" CAT. CONV.
② W/12" CAT. CONV. (SHELL LENGTH)
③ W/JATCO TRANS.
④ W/O JATCO TRANS.

1977 MONARCH-8 CYL. 302 SEDAN (WITH CONVERTER)

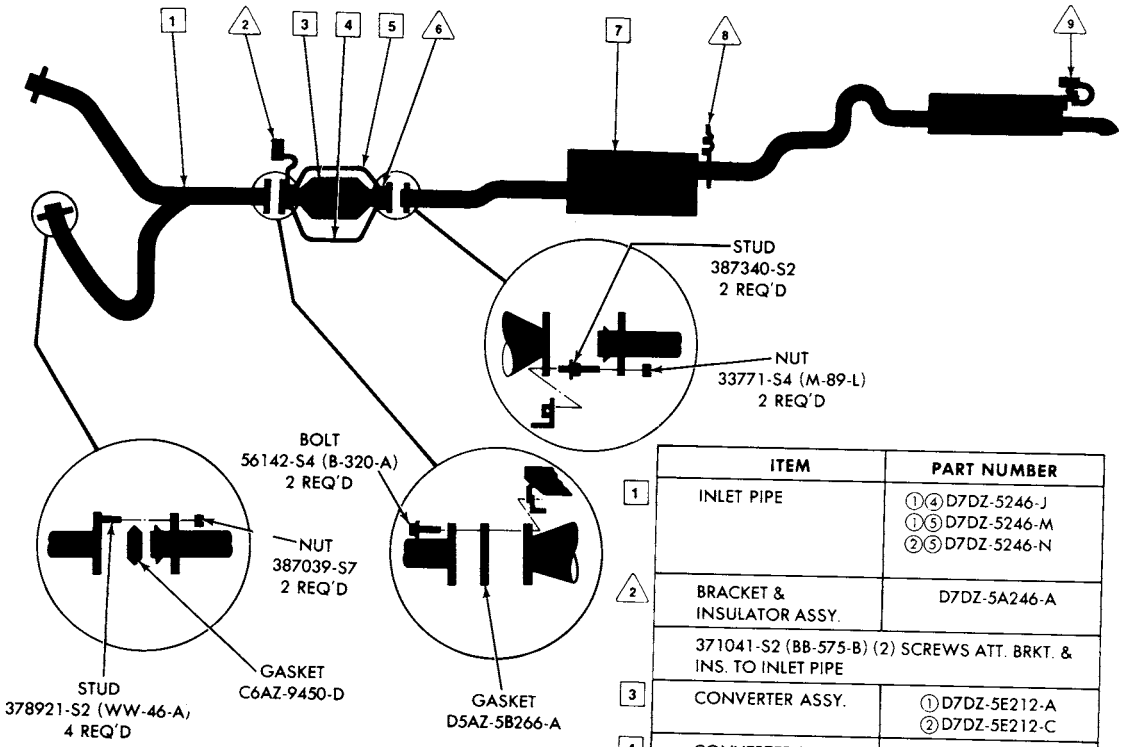

	ITEM	PART NUMBER
1	INLET PIPE	①④D7DZ-5246-J ①⑤D7DZ-5246-M ②⑤D7DZ-5246-N
2	BRACKET & INSULATOR ASSY.	D7DZ-5A246-A
	371041-S2 (BB-575-B) (2) SCREWS ATT. BRKT. & INS. TO INLET PIPE	
3	CONVERTER ASSY.	①D7DZ-5E212-A ②D7DZ-5E212-C
4	CONVERTER SHIELD-LOWER	①D7FZ-5E258-A ②D7FZ-5E258-B
5	CONVERTER SHIELD-UPPER	①D7FZ-5F222-D ②D7FZ-5F222-E
6	CONVERTER SHIELD BRKT.	D7FZ-5F227-A
	55914-S2 (U-254-F) (6) SCREWS ATT. CONV. SHIELDS TO BRKT.	
7	MUFFLER ASSY.	①D7DZ-5230-AM ★②D7DZ-5230-AN
8	BRACKET & INSULATOR ASSY.	D5DZ-5260-F
	381877-S2 (UU-52-AF) (2) SCREWS ATT. BRKT. & INS. TO FRT. MFLR. 382347-S2 (BB-905) (2) SCREWS ATT. BRKT. & INS. TO UNDERBODY	
9	BRACKET & INSULATOR ASSY.	D7DZ -5260-A
	381877-S2 (UU-52-AF) (4) SCREWS ATT. BRKT. & INS. TO RR. MFLR. & SIDE MEMBER	

①W/7 1/4" CAT. CONV.
②W/12" CAT. CONV. (SHELL LENGTH)
④MAN. TRANS.
⑤AUTO TRANS.

EV-15

COPYRIGHT © 1986 — FORD MOTOR COMPANY — DEARBORN, MICHIGAN

1977 MONARCH - 8 CYL. 302 SEDAN (W/O CONVERTER)

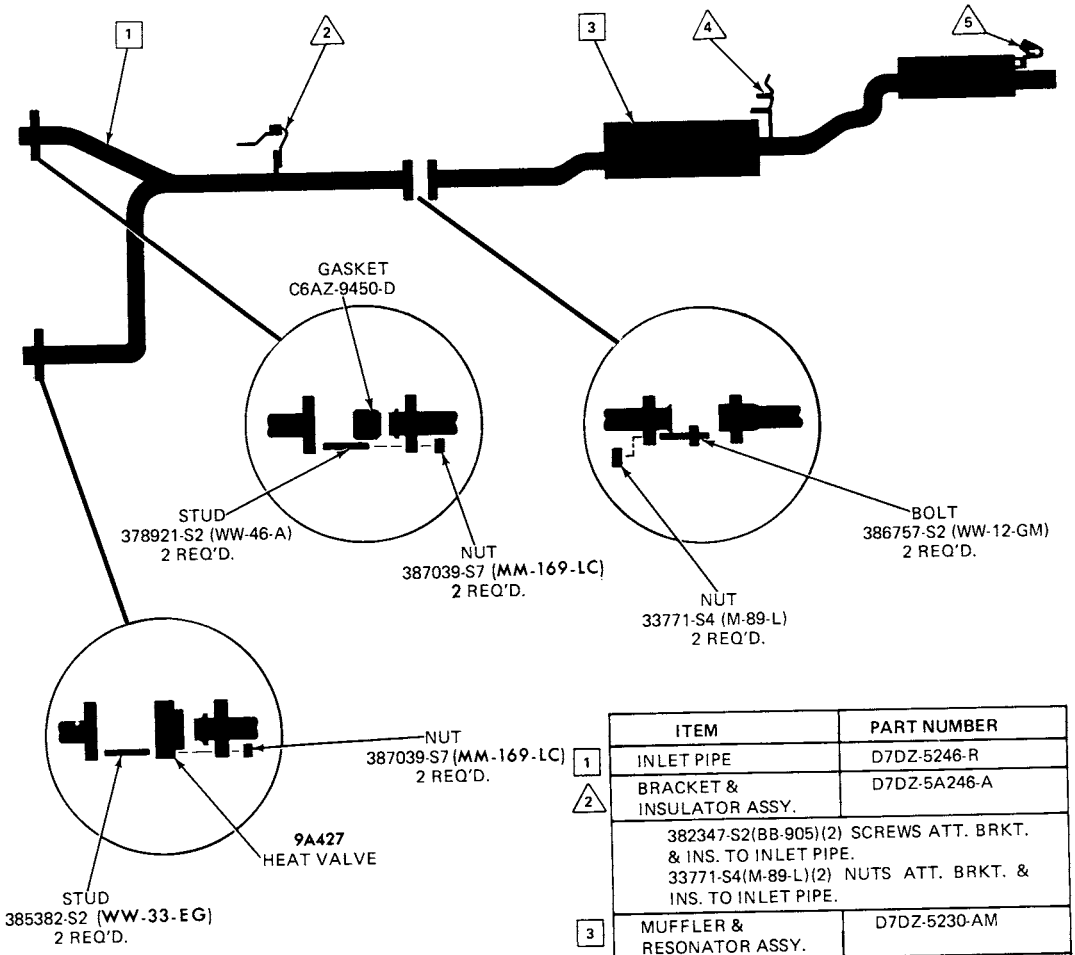

	ITEM	PART NUMBER
1	INLET PIPE	D7DZ-5246-R
2	BRACKET & INSULATOR ASSY.	D7DZ-5A246-A
	382347-S2(BB-905)(2) SCREWS ATT. BRKT. & INS. TO INLET PIPE. 33771-S4(M-89-L)(2) NUTS ATT. BRKT. & INS. TO INLET PIPE.	
3	MUFFLER & RESONATOR ASSY.	D7DZ-5230-AM
4	BRACKET & INSULATOR ASSY.	D5DZ-5260-F
	382347-S2(BB-905)(2) SCREWS ATT. BRKT. & INS. TO UNDERBODY. 381877-S2(UU-52-AF)(2) SCREWS ATT. BRKT. INS. TO FRT. MFLR.	
5	BRACKET & INSULATOR ASSY.	D7DZ-5260-A
	381877-S2(UU-52-AF)(4) SCREWS ATT. BRKT. & INS. TO RR MFLR. & TO SIDEMEMBER	

1977 MONARCH - 8 CYL. 351W SEDAN (WITH CONVERTER)

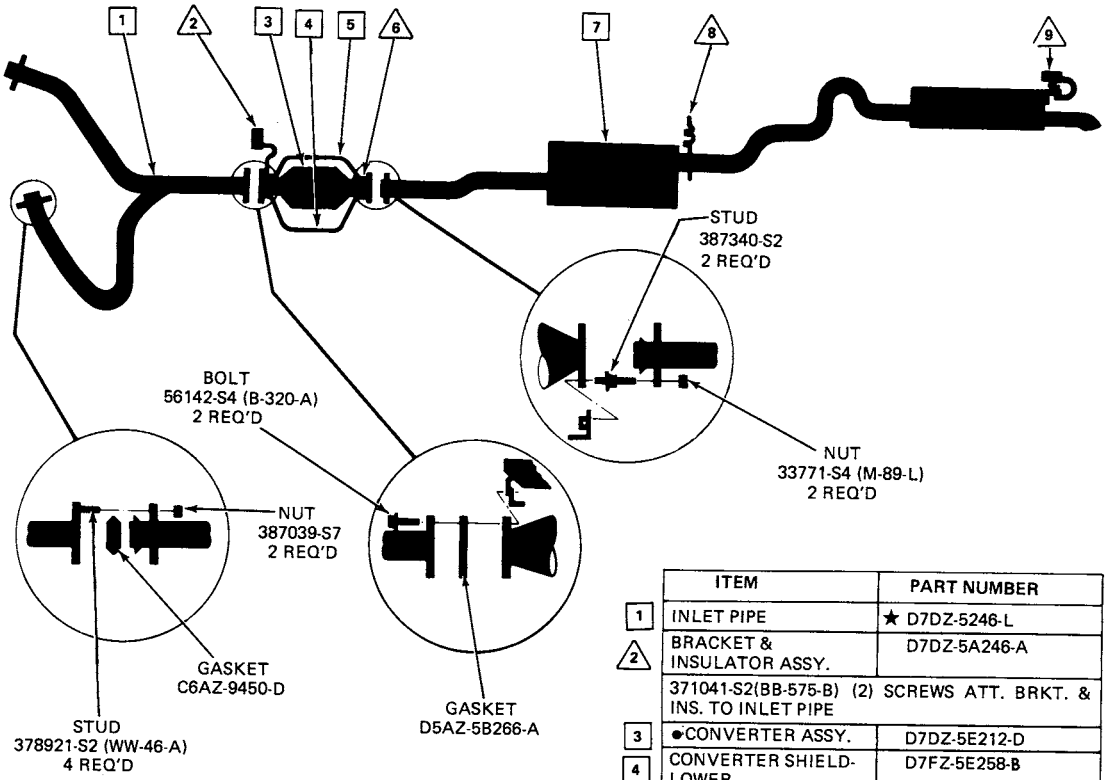

	ITEM	PART NUMBER
1	INLET PIPE	★ D7DZ-5246-L
2	BRACKET & INSULATOR ASSY.	D7DZ-5A246-A
	371041-S2(BB-575-B) (2) SCREWS ATT. BRKT. & INS. TO INLET PIPE	
3	•CONVERTER ASSY.	D7DZ-5E212-D
4	CONVERTER SHIELD-LOWER	D7FZ-5E258-B
5	CONVERTER SHIELD-UPPER	D7FZ-5F222-E
6	CONVERTER SHIELD BRKT.	D7FZ-5F227-A
	55914-S2(U-254-F) (6) SCREWS ATT. CONV. SHIELDS TO BRKT.	
7	MUFFLER ASSY.	★ D7DZ-5230-AN
8	BRACKET & INSULATOR ASSY.	D5DZ-5260-F
	381877-S2(UU-52-AF) (2) SCREWS ATT. BRKT. & INS TO FRT. MFLR. 382347-S2(BB-905) (2) SCREWS ATT. BRKT. & INS TO UNDERBODY	
9	BRACKET & INSULATOR ASSY.	D7DZ-5260-A
	381877-S2(UU-52-AF) (4) SCREWS ATT. BRKT. & INS. TO RR MFLR. & SIDE MEMBER	

• CONVERTER SHELL LENGTH 12"

EV 18

COPYRIGHT © 1986 — FORD MOTOR COMPANY — DEARBORN, MICHIGAN

1973/79 LINCOLN-MERCURY CARS

1977 CAPRI — 4 CYL. 140-2/B (2300cc)

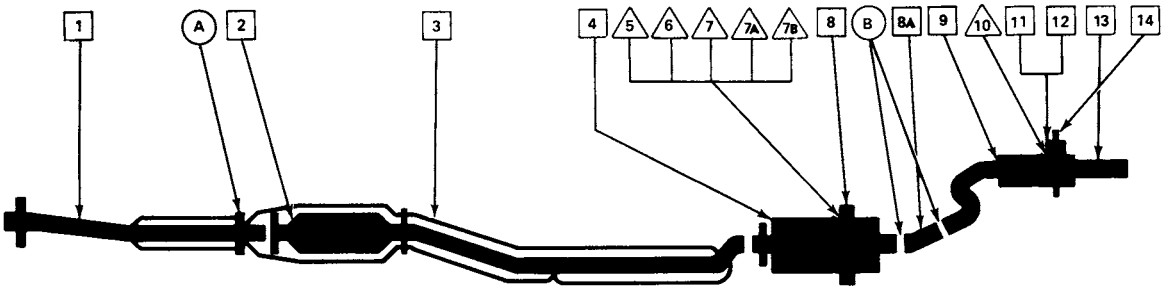

	ITEM	PART NUMBER
1	INLET PIPE	D7RY-5246-E #77EB-5245-DA
	STUD E804442-S76 & NUT E820015-S72 ATT. INLET PIPE TO MANIFOLD	
2	CONVERTER	● D6RY-5E212-D # 77EB-5E211-CA,CC † D6RY-5E212-E # 77EB-5E211-DA,DC
3	CONVERTER SHIELD	●D6RY-5E258-A #77EB-5E258-AA,AB †D6RY-5E258-B #77EB-5E258-BA,BB
A	CLAMP EXHAUST HEAT SHIELD	D5RY-5C264-A # 75EB-5C264-AA
4	MUFFLER – FRONT	D5RY-5230-E # 75EB-5230-AA # 75EB-5232-BA
5	CLAMP MUFFLER SUPPORT	D5RY-5A215-B (EXC. CALIF.) D5RY-5A215-C # 71EB-5A215-B (CALIF. ONLY)
6	U-BOLT MUFFLER SUPPORT	D5RY-5C223-C # 71EB-5C223-DA
	SCREW E-600214-S72 & WASHER E-830218-S100 USED WITH 5C233	
7	BRACKET MUFFLER HANGER	✱ D5RY-5A261-A # 75EB-5A261-AA (AUTO. TRANS.) D5RY-5A261-B ✱ 75EB-5A261-BA (MAN. TRANS.)
7A	INSULATOR MUFFLER SUPPORT	D8RZ-5281-A

	ITEM	PART NUMBER
7B	BODY BRACKET FRONT MUFFLER	D2RY-5277-F
	SCREW E-602187-S (AB-17) ATTACH 5277 TO FLOOR	
8	MUFFLER HEAT SHIELD	D5RY-5E290-A
B	CLAMP	D5RY-5A231-B
8A	SLEEVE – MUFFLER PIPE CONNECTER	D6RY-5K256-B
9	MUFFLER – REAR	D5RY-5230-F # 75EB-5K244-AB
10	INSULATOR – MUFFLER SUPPORT	D5RY-5281-A
11	CLAMP MUFFLER SUPPORT	D5RY-5A215-D # 74EB-5A215-CB
12	U-BOLT MUFFLER SUPPORT	D5RY-5C223-D # 74EB-5C223-FA
	SCREW E-600214-S72 & WASHER E-830218-S100 USED WITH 5C223	
13	EXTENSION – OUTLET PIPE	D5RY-5263-A EXC. MODEL "S" D6RY-5263-B MODEL "S"
14	BODY BRACKET REAR MUFFLER	D5RY-5K290-A

● CALIF.
† EXC. CALIF.

EM-18

COPYRIGHT © 1986 — FORD MOTOR COMPANY — DEARBORN, MICHIGAN

1973/79 LINCOLN-MERCURY CARS

1977 CAPRI — 6 CYL. 171-2/B (2800cc)

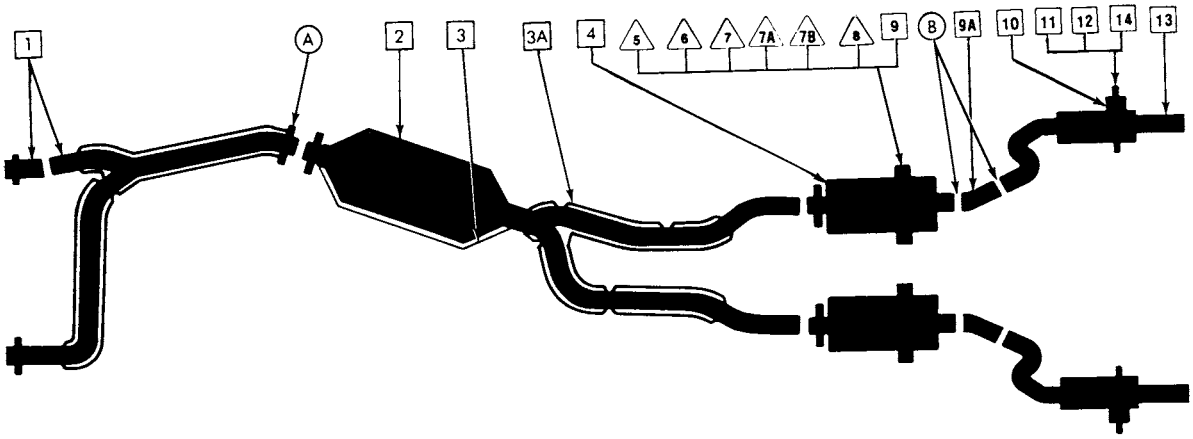

	ITEM	L.H.	R.H.
1	INLET PIPE	D7RY-5246-F #77EB-5248-BA	D7RY-5246-D #77EB-5245-CA
	STUD E-804442-S76 & NUT E-820015-S72 ATT. INLET PIPE TO MANIFOLD		
2	CONVERTER	● D7RY-5E212-E #77EB-5E211-EA □ D6RY-5E212-C # 77EB-5E211-BA, BC	
3	CONVERTER SHIELD	D6RY-5E258-A	
A	CLAMP EXHAUST HEAT SHIELD	D5RY-5C264-A # 75EB-5C264-AA ★ D5RY-5C264-B # 75EB-5C264-BA	
3A	PIPE SHIELD	D6RY-5K286-A # 77EB-5K286-AA	
4	MUFFLER – FRONT	D7RY-5230-A #77EB-5232-AA #75EB-5232-AA, AB	★ D5RY-5230-J # 75EB-5230-BA, BB r/b ★ D7RY-5230-B #77EB-5230-AA
5	CLAMP MUFFLER SUPPORT	D5RY-5A215-D # 74EB-5A215-CB D5RY-5A215-B # 71EB-5A215-BA	D5RY-5A215-C # 71EB-5A215-HA
6	U-BOLT MUFFLER SUPPORT	D5RY-5C223-B # 74EB-5C223-GA	D5RY-5C223-C # 71EB-5C223-DA
	SCREW E600214-S72 & WASHER E-830218-S100 USED WITH 5C223		
7	BRACKET MUFFLER SUPPORT	▲ D5RY-5D250-A # 75EB-5D250-AA ★ ■ D5RY-5D250-B # 75EB-5D250-BA	
7A	INSULATOR– MUFFLER SUPPORT	D8RZ-5281-A	

	ITEM	L.H.	R.H.
7B	BODY BRACKET – FRONT MUFFLER	D2RY-5277-G	D2RY-5277-F
8	BRACKET MUFFLER HANGER	D4RY-5A261-B # 74EB-5A261-AB ★ D5RY-5A261-A # 75EB-5A261-AA D5RY-5A261-B # 75EB-5A261-BA	
9	MUFFLER HEAT SHIELD	D5RY-5E290-A	
B	CLAMP	D1RY-5A231-B	
9A	SLEEVE – MUFFLER PIPE CONNECTOR	D6RY-5K256-A	
10	MUFFLER – REAR	D5RY-5230-D #75EB-5K273-AB,AC	D5RY-5230-C #75EB-5K244-BB,BC
11	CLAMP MUFFLER SUPPORT	D5RY-5A215-D # 74EB-5A215-CB	
12	U-BOLT MUFFLER SUPPORT	D5RY-5C223-D # 74EB-5C223-FA	
	SCREW E-600214-S72 & WASHER E-830218-S100 USED WITH 5C223		
13	EXTENSION – OUTLET PIPE	D6RY-5263-A MODEL "S" D5RY-5263-B EXC. MODEL "S"	
14	BODY BRACKET REAR MUFFLER	D5RY-5K290-A	

● CALIF.
□ EXC. CALIF.
■ MAN. TRANS.
▲ AUTO. TRANS.

1977 MARK V — 8 CYL. - 400
SINGLE EXHAUST
(WITH CONVERTER)

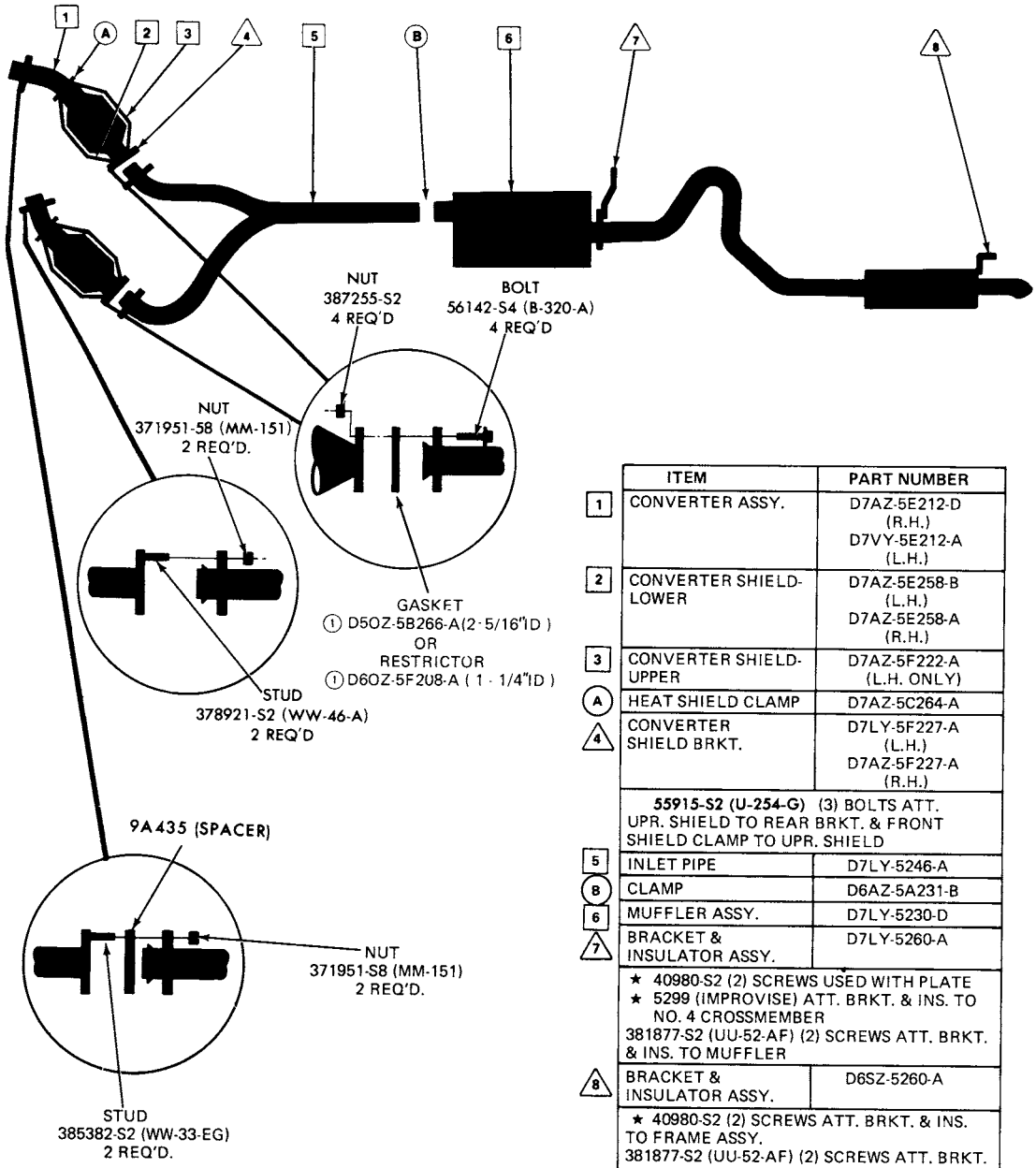

	ITEM	PART NUMBER
1	CONVERTER ASSY.	D7AZ-5E212-D (R.H.) D7VY-5E212-A (L.H.)
2	CONVERTER SHIELD-LOWER	D7AZ-5E258-B (L.H.) D7AZ-5E258-A (R.H.)
3	CONVERTER SHIELD-UPPER	D7AZ-5F222-A (L.H. ONLY)
A	HEAT SHIELD CLAMP	D7AZ-5C264-A
4	CONVERTER SHIELD BRKT.	D7LY-5F227-A (L.H.) D7AZ-5F227-A (R.H.)
	55915-S2 (U-254-G) (3) BOLTS ATT. UPR. SHIELD TO REAR BRKT. & FRONT SHIELD CLAMP TO UPR. SHIELD	
5	INLET PIPE	D7LY-5246-A
B	CLAMP	D6AZ-5A231-B
6	MUFFLER ASSY.	D7LY-5230-D
7	BRACKET & INSULATOR ASSY.	D7LY-5260-A
	★ 40980-S2 (2) SCREWS USED WITH PLATE ★ 5299 (IMPROVISE) ATT. BRKT. & INS. TO NO. 4 CROSSMEMBER 381877-S2 (UU-52-AF) (2) SCREWS ATT. BRKT. & INS. TO MUFFLER	
8	BRACKET & INSULATOR ASSY.	D6SZ-5260-A
	★ 40980-S2 (2) SCREWS ATT. BRKT. & INS. TO FRAME ASSY. 381877-S2 (UU-52-AF) (2) SCREWS ATT. BRKT. & INS. TO RESONATOR	

① PART MUST BE PHYSICALLY IDENTIFIED TO DETERMINE CORRECT USAGE

EK-15

COPYRIGHT © 1986 — FORD MOTOR COMPANY — DEARBORN, MICHIGAN

1977 MARK V - 8 CYL 460
SINGLE EXHAUST
(WITH CONVERTER)

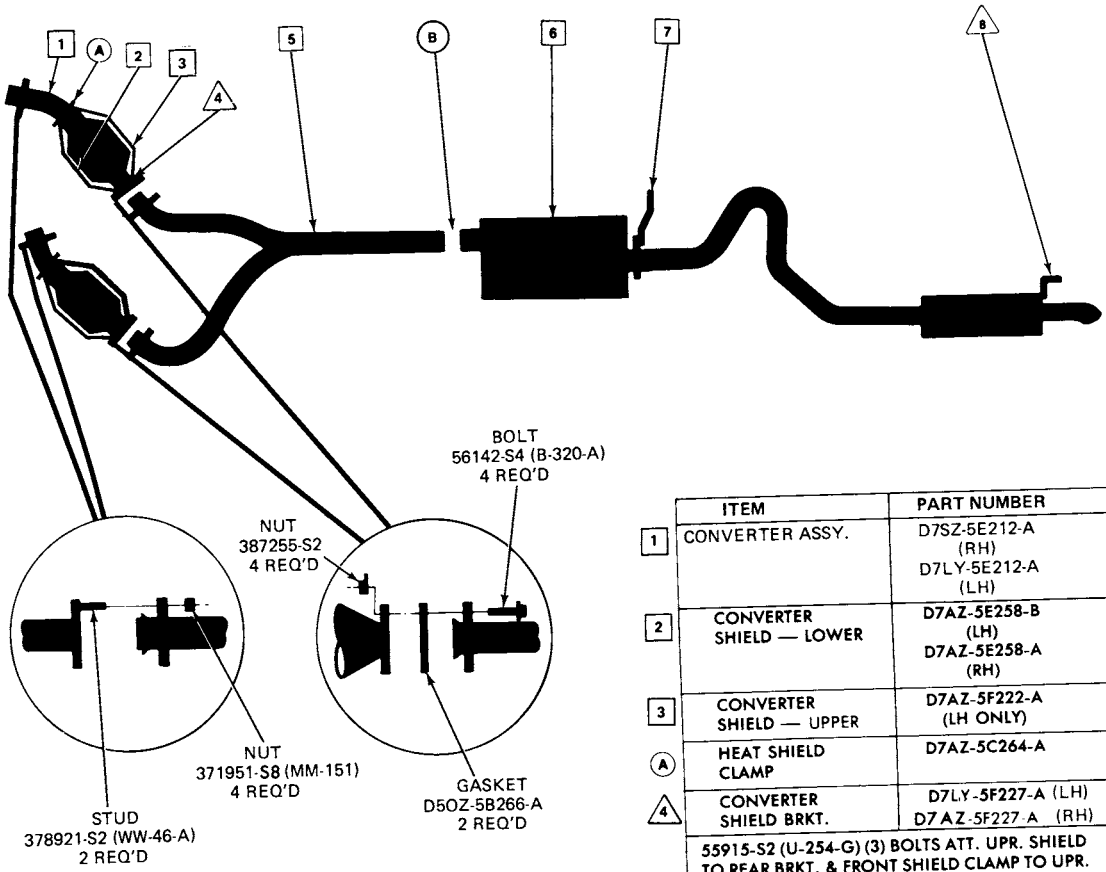

	ITEM	PART NUMBER
1	CONVERTER ASSY.	D7SZ-5E212-A (RH) D7LY-5E212-A (LH)
2	CONVERTER SHIELD — LOWER	D7AZ-5E258-B (LH) D7AZ-5E258-A (RH)
3	CONVERTER SHIELD — UPPER	D7AZ-5F222-A (LH ONLY)
A	HEAT SHIELD CLAMP	D7AZ-5C264-A
4	CONVERTER SHIELD BRKT.	D7LY-5F227-A (LH) D7AZ-5F227-A (RH)
	55915-S2 (U-254-G) (3) BOLTS ATT. UPR. SHIELD TO REAR BRKT. & FRONT SHIELD CLAMP TO UPR. SHIELD	
5	INLET PIPE	D6SZ-5246-A
B	CLAMP	D6AZ-5A231-B
6	MUFFLER ASSY.	D7LY-5230-C
7	BRACKET & INSULATOR ASSY.	D5OZ-5260-A
	★ 40980-S2(2) SCREWS USED WITH PLATE ★ 5299 (IMPROVISE) ATT. BRKT. & INS. TO NO. 4 CROSSMEMBER 381877-S2(UU-52-AF)(2) SCREWS ATT. BRKT. & INS. TO MUFFLER	
8	BRACKET & INSULATOR ASSY.	D6SZ-5260-A
	★ 40980-S2(2) SCREWS ATT. BRKT. & INS. TO FRAME ASSY. 381877-S2(UU-52-AF)(2) SCREWS ATT. BRKT. & INS. TO RESONATOR	

1977 MARK V — 8 CYL. - 460
DUAL EXHAUST
(WITH CONVERTER)

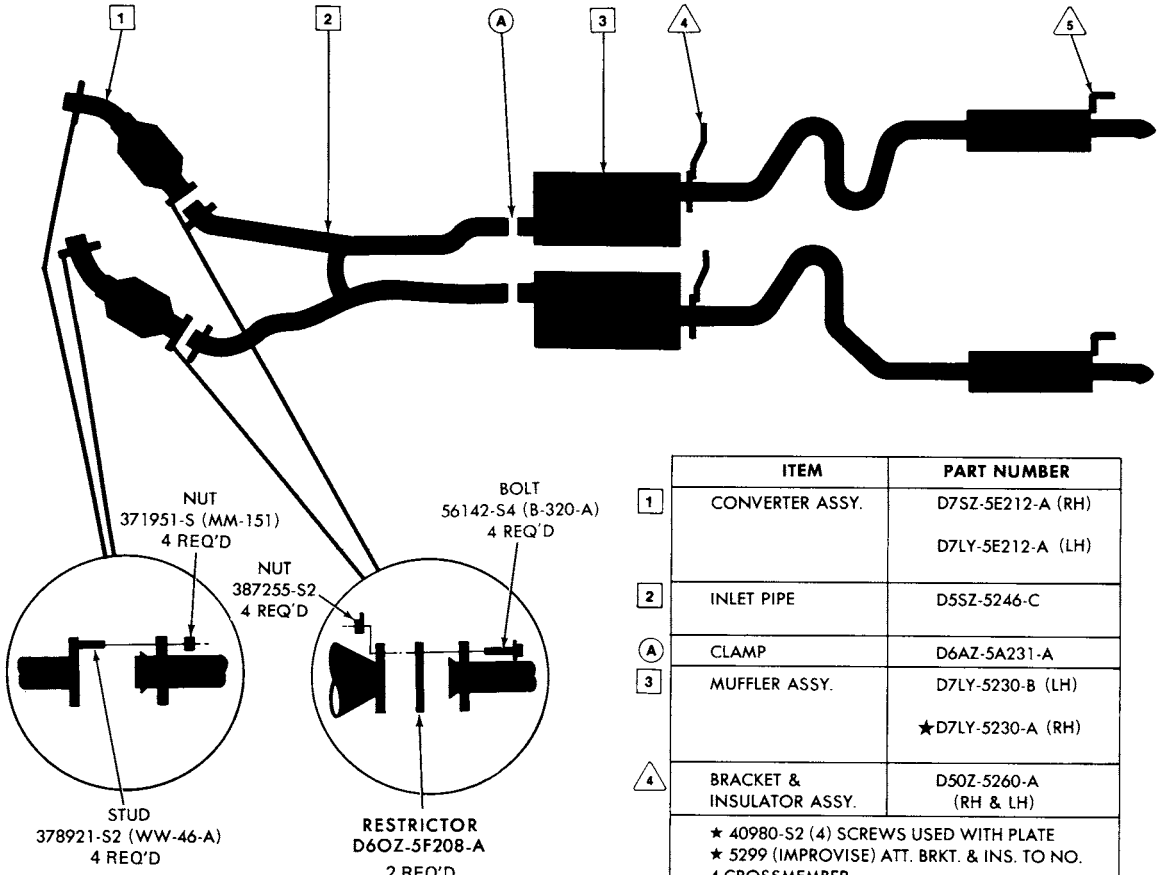

	ITEM	PART NUMBER
1	CONVERTER ASSY.	D7SZ-5E212-A (RH) D7LY-5E212-A (LH)
2	INLET PIPE	D5SZ-5246-C
A	CLAMP	D6AZ-5A231-A
3	MUFFLER ASSY.	D7LY-5230-B (LH) ★D7LY-5230-A (RH)
4	BRACKET & INSULATOR ASSY.	D50Z-5260-A (RH & LH)
	★ 40980-S2 (4) SCREWS USED WITH PLATE ★ 5299 (IMPROVISE) ATT. BRKT. & INS. TO NO. 4 CROSSMEMBER 381877-S2 (UU-52-AF) (4) SCREWS ATT. BRKT. & INS. TO MUFFLER	
5	BRACKET & INSULATOR ASSY.	D6SZ-5260-A (LH) ★ D6SZ-5260-B (RH)
	★ 40980-S2 (4) SCREWS ATT. BRKT. & INS. TO FRAME ASSY. 381877-S2 (UU-52-AF) (4) SCREWS ATT. BRKT. & INS. TO RESONATORS	

COPYRIGHT © 1986 — FORD MOTOR COMPANY — DEARBORN, MICHIGAN

1977 BOBCAT — 4 CYL. 140 (2300CC) SEDAN (WITH CONVERTER)

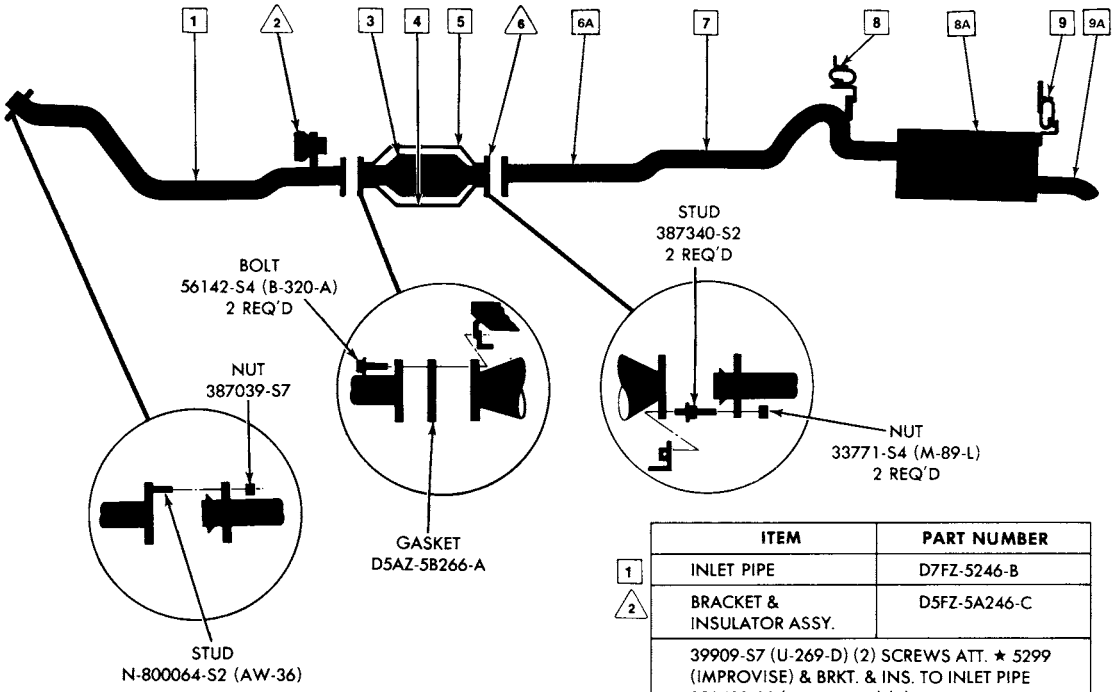

	ITEM	PART NUMBER
1	INLET PIPE	D7FZ-5246-B
2	BRACKET & INSULATOR ASSY.	D5FZ-5A246-C
	39909-S7 (U-269-D) (2) SCREWS ATT. ★ 5299 (IMPROVISE) & BRKT. & INS. TO INLET PIPE 382400-S2 (MM-173-BF) (2) NUTS ATT. BRKT. & INS. TO REAR ENG. MOUNT	
3	CONVERTER ASSY.	① D7DZ-5E212-A ② D7FZ-5E212-C ③ D7DZ-5E212-C
4	CONVERTER SHIELD-LOWER	①② D7FZ-5E258-A ③ D7FZ-5E258-B
5	CONVERTER SHIELD-UPPER	①② D7FZ-5F222-D ③ D7FZ-5F222-E
6	CONVERTER SHIELD BRKT.	D7FZ-5F227-A
6A	INTERMEDIATE PIPE	D5FZ-5A212-Z
	55914-S2 (U-254-F) (6) SCREWS ATT. CONV. SHIELDS TO BRKT.	
7	MUFFLER ASSY. (PRODUCTION) ★	①② D7FZ-5230-A ③ D7FZ-5230-C
8	BRACKET & INSULATOR ASSY.	D5ZZ-5260-K
8A	MUFFLER ASSY. (SERVICE)	D5FZ-5230-Z
	39909-S2 (U-269-D) (4) SCREWS ATT. BRKT. & INS. TO MUFFLER PIPE & TO PIPE SUPPORT BRKT.	
9	BRACKET & INSULATOR ASSY.	D5FZ-5260-E
	39909-S2 (U-269-D) (2) SCREWS ATT. BRKT. & INS. TO UNDERBODY 381877-S2 (UU-52-AF) (2) SCREWS ATT. BRKT. & INS. TO MUFFLER	
9A	OUTLET PIPE	D5FZ-5255-E

① 7 1/4" CAT. CONV. (SHELL LENGTH) - W/O HIGH ALTITUDE OPTION
49 STATES
② 7 1/4" CAT. CONV. (SHELL LENGTH) - W/HIGH ALTITUDE OPTION
49 STATES
③ 12" CAT. CONV.
CALIF.

ET-25

COPYRIGHT © 1986 — FORD MOTOR COMPANY — DEARBORN, MICHIGAN

1977 BOBCAT - 4 CYL. 140 (2300cc) SEDAN (W/O CONVERTER)

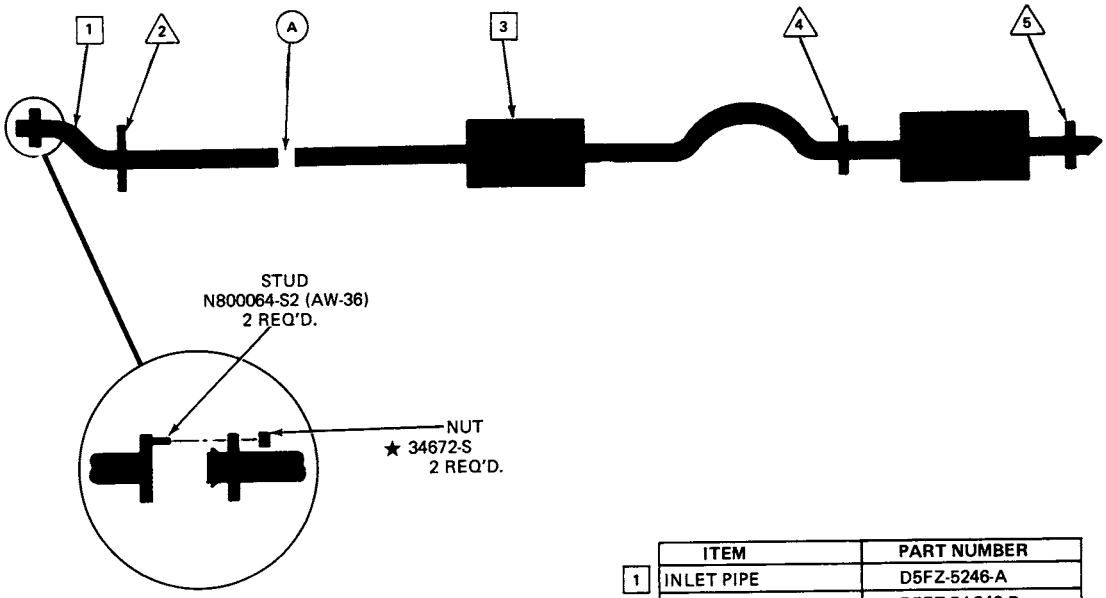

	ITEM	PART NUMBER
1	INLET PIPE	D5FZ-5246-A
2	BRACKET & INSULATOR ASSY.	D5FZ-5A246-D
	382400-S2 (MM-173-BF) (2) NUTS ATT. BRKT. & INS. ASSY. TO ENG. SUPT. 39909-S7 (U-269-D) (2) SCREWS ATT. BRKT. & INS. ASSY. TO INLET PIPE	
A	CLAMP	D1AZ-5A231-B
3	MUFFLER & RESONATOR ASSY.	D6FZ-5230-J
4	BRACKET & INSULATOR ASSY.	D8FZ-5260-A
	39909-S7 (U-269-D) (4) SCREWS ATT. BRKT. & INS. ASSY. TO UNDERBODY & PIPE ASSY.	
5	BRACKET & INSULATOR ASSY.	D5FZ-5260-E
	39909-S7 (U-269-D) (2) SCREWS ATT. BRKT. & INS. ASSY. TO UNDERBODY 381877-S2 (UU-52-AF) (2) SCREWS ATT. BRKT. & INS. ASSY. TO MUFFLER	

1977 BOBCAT — 4 CYL. 140 (2300CC) STATION WAGON (WITH CONVERTER)

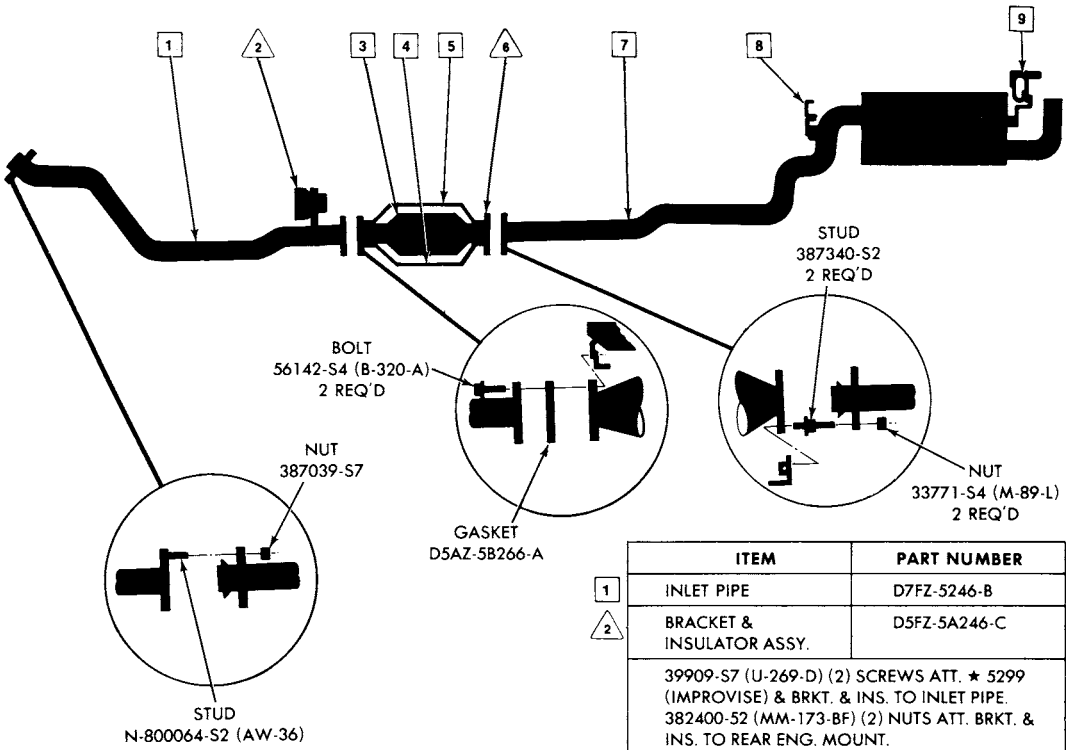

	ITEM	PART NUMBER
1	INLET PIPE	D7FZ-5246-B
2	BRACKET & INSULATOR ASSY.	D5FZ-5A246-C
	39909-S7 (U-269-D) (2) SCREWS ATT. ★ 5299 (IMPROVISE) & BRKT. & INS. TO INLET PIPE. 382400-52 (MM-173-BF) (2) NUTS ATT. BRKT. & INS. TO REAR ENG. MOUNT.	
3	CONVERTER ASSY.	① D7DZ-5E212-A ② D7FZ-5E212-C ③ D7DZ-5E212-C
4	CONVERTER SHIELD-LOWER	①② D7FZ-5E258-A ③ D7FZ-5E258-B
5	CONVERTER SHIELD-UPPER	①② D7FZ-5F222-D ③ D7FZ-5F222-E
6	CONVERTER SHIELD BRKT.	D7FZ-5F227-A
	55914-S2 (U-254-F),(6) SCREWS ATT. CONV. SHIELDS TO BRKT.	
7	MUFFLER ASSY.	①② D7FZ-5230-B ③ D7FZ-5230-D
8	BRACKET & INSULATOR ASSY.	D5FZ-5260-G
	39909-S2 (UU-269-D) (4) SCREWS ATT. BRKT. & INS. TO MUFFLER PIPE & TO CROSSMEMBER	
9	BRACKET & INSULATOR ASSY.	D8FZ- 5260 -C
	39909-S2 (UU-269-D) (2) SCREWS ATT. BRKT. & INS. TO UNDERBODY 381877-S2 (UU-52-AF) (2) SCREWS ATT. BRKT. & INS. TO MUFFLER	

①7 1/4" CAT. CONV. (SHELL LENGTH) - W/O HIGH ALTITUDE OPTION
②7 1/4" CAT. CONV. (SHELL LENGTH) - W/HIGH ALTITUDE OPTION
③12" CAT. CONV.

ET-26

COPYRIGHT © 1986 — FORD MOTOR COMPANY — DEARBORN, MICHIGAN

1977 BOBCAT - 4 CYL. 140 (2300cc) STATION WAGON (W/O CONVERTER)

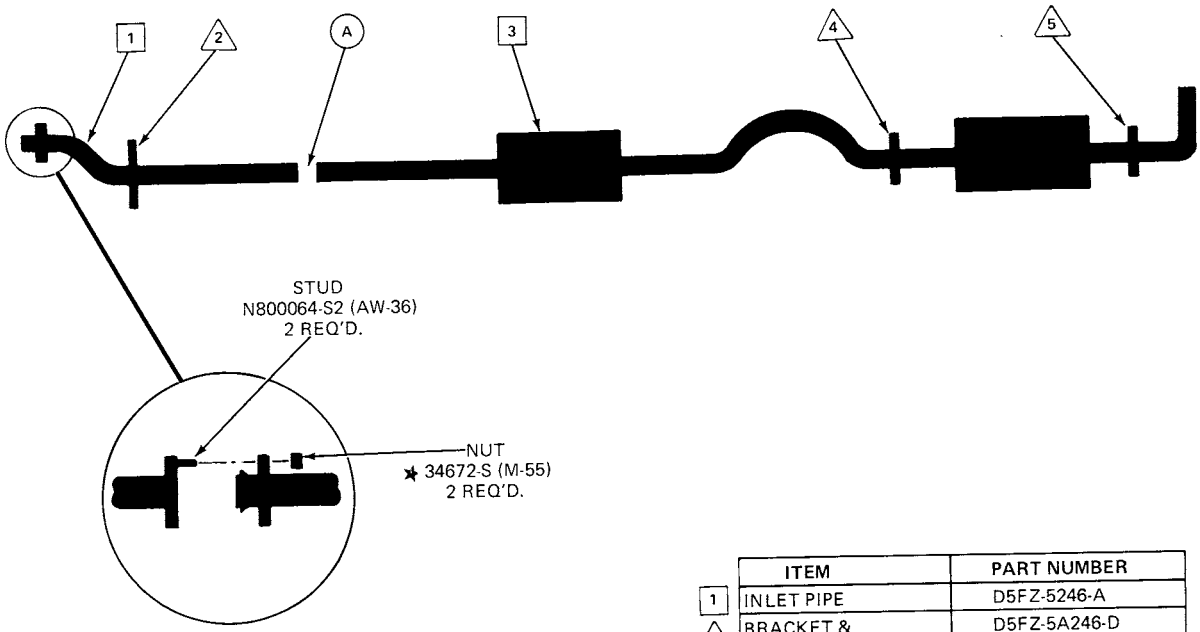

	ITEM	PART NUMBER
1	INLET PIPE	D5FZ-5246-A
2	BRACKET & INSULATOR ASSY.	D5FZ-5A246-D
	382400-S2 (MM-173-BF) (2) NUTS ATT. BRKT. & INS. ASSY. TO ENG. SUPT. 39909-S7 (U-269-D) (2) SCREWS ATT. BRKT. & INS. ASSY. TO INLET PIPE	
A	CLAMP	D1AZ-5A231-B
3	MUFFLER & RESONATOR ASSY.	D6FZ-5230-G
4	BRACKET & INSULATOR ASSY.	D4FZ-5260-C
	39909-S7 (U-269-D) (4) SCREWS ATT. BRKT. & INS. ASSY. TO UNDERBODY & PIPE ASSY.	
5	BRACKET & INSULATOR ASSY.	D8FZ-5260-C
	39909-S7 (U-269-D) (2) SCREWS ATT. BRKT. & INS. ASSY. TO UNDERBODY 381877-S2 (UU-52-AF) (2) SCREWS ATT. BRKT. & INS. ASSY. TO MUFFLER	

1977 BOBCAT - 6 CYL. 171 (2800CC) SEDAN (WITH CONVERTER)

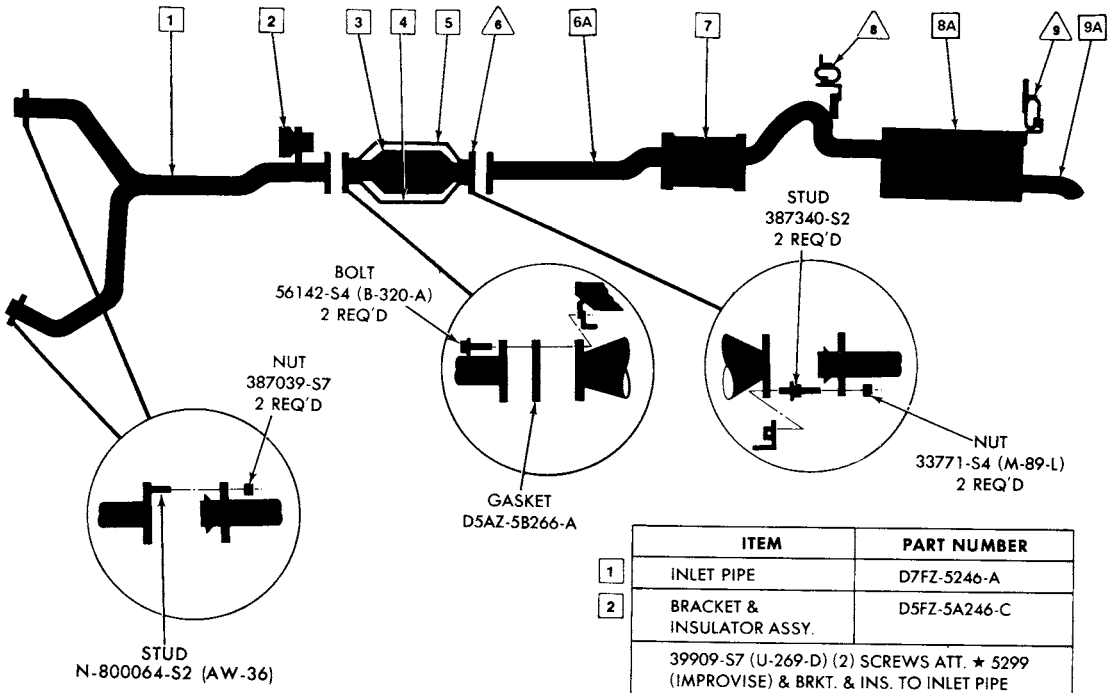

	ITEM	PART NUMBER
1	INLET PIPE	D7FZ-5246-A
2	BRACKET & INSULATOR ASSY.	D5FZ-5A246-C
	39909-S7 (U-269-D) (2) SCREWS ATT. ★ 5299 (IMPROVISE) & BRKT. & INS. TO INLET PIPE 382400-S2 (MM-173-BF) (2) NUTS ATT. BRKT. & INS. TO REAR ENG. MOUNT	
3	CONVERTER ASSY.	① D7DZ-5E212-A ② D7DZ-5E212-C
4	CONVERTER SHIELD-LOWER	① D7FZ-5E258-A ② D7FZ-5E258-B
5	CONVERTER SHIELD-UPPER	① D7FZ-5F222-D ② D7FZ-5F222-E
6	CONVERTER SHIELD BRKT.	D7FZ-5F227-A
6A	INTERMEDIATE PIPE	D5FZ-5A212-Z
	55914-S2 (U-254-F) (6) SCREWS ATT. CONV. SHIELDS TO BRKT.	
	MUFFLER ASSY. (PRODUCTION)	★ ① D7FZ-5230-A ② D7FZ-5230-C
8	BRACKET & INSULATOR ASSY.	D5ZZ-5260-K
8A	MUFFLER ASSY. (SERVICE)	D5FZ-5230-Z
	39909-S2 (UU-269-D) (4) SCREWS ATT. BRKT. & INS. TO MUFFLER PIPE & TO CROSSMEMBER	
9	BRACKET & INSULATOR ASSY.	D5FZ-5260-E
	39909-S2 (UU-269-D) (2) SCREWS ATT. BRKT. & INS. TO UNDERBODY 381877-S2 (UU-52-AF) (2) SCREWS ATT. BRKT. & INS. TO MUFFLER	
9A	OUTLET PIPE (SERVICE)	D5FZ-5255-E

① W/7 1/4" CAT. CONV.
② W/12" CAT. CONV.
(SHELL LENGTH)

ET-27

COPYRIGHT © 1986 — FORD MOTOR COMPANY — DEARBORN, MICHIGAN

1977 BOBCAT-6 CYL. 171 (2800CC) STATION WAGON (WITH CONVERTER)

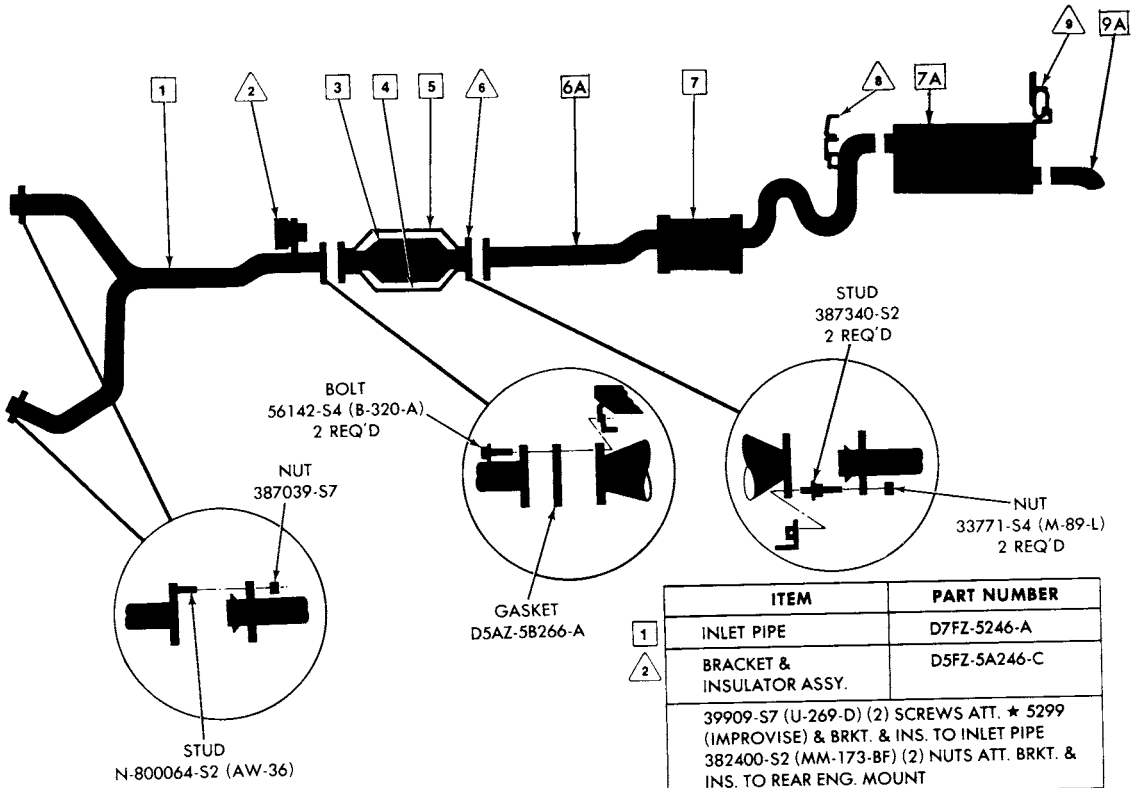

	ITEM	PART NUMBER
1	INLET PIPE	D7FZ-5246-A
2	BRACKET & INSULATOR ASSY.	D5FZ-5A246-C
	39909-S7 (U-269-D) (2) SCREWS ATT. ★ 5299 (IMPROVISE) & BRKT. & INS. TO INLET PIPE 382400-S2 (MM-173-BF) (2) NUTS ATT. BRKT. & INS. TO REAR ENG. MOUNT	
3	CONVERTER ASSY.	① D7DZ-5E212-A ② D7DZ-5E212-C
4	CONVERTER SHIELD-LOWER	① D7FZ-5E258-A ② D7FZ-5E258-B
5	CONVERTER SHIELD-UPPER	① D7FZ-5F222-D ② D7FZ-5F222-E
6	CONVERTER SHIELD BRKT.	D7FZ-5F227-A
	55914-S2 (U-254-F)(6) SCREWS ATT. CONV. SHIELDS TO BRKT.	
6A	INTERMEDIATE PIPE (SERVICE)	* D5FZ-5A212-AA
7	MUFFLER ASSY.	★① D7FZ-5230-B ② D7FZ-5230-D
7A	MUFFLER (SERVICE)	D5FZ-5230-Z
8	BRACKET & INSULATOR ASSY.	D5FZ-5260-G
	39909-S2 (UU-269-D) (4) SCREWS ATT. BRKT. & INS. TO MUFFLER PIPE & TO CROSSMEMBER	
9	BRACKET & INSULATOR ASSY.	D8FZ-5260-C
	39909-S2 (UU-269-D) (2) SCREWS ATT. BRKT. & INS. TO UNDERBODY 381877-S2 (UU-52-AF) (2) SCREWS ATT. BRKT. & INS. TO MUFFLER	
9A	OUTLET PIPE (SERVICE)	* D5FZ-5255-D

① W/7 1/4" CAT. CONV.
② W/12" CAT. CONV. (SHELL LENGTH)
*USE DIAZ-5A231-B CLAMP

ET-28

1977 COMET — 6 CYL. 200 (WITH CONVERTER)

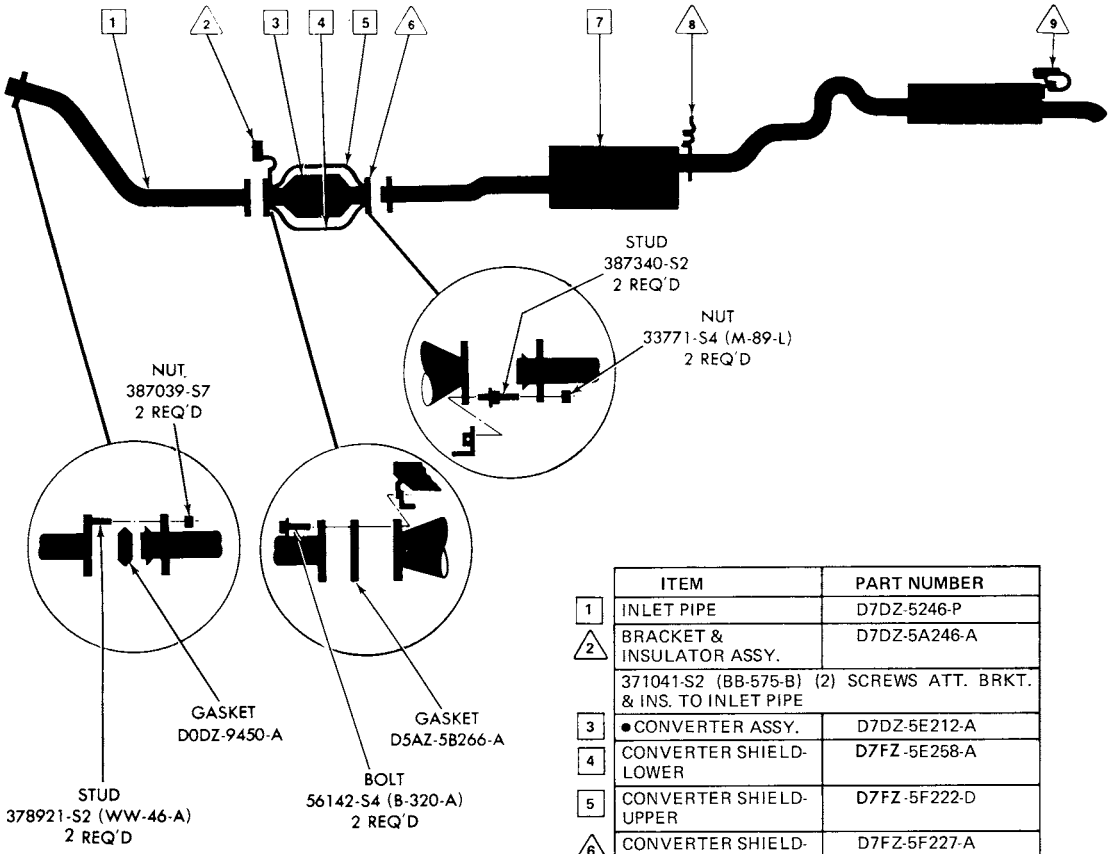

	ITEM	PART NUMBER
1	INLET PIPE	D7DZ-5246-P
2	BRACKET & INSULATOR ASSY.	D7DZ-5A246-A
	371041-S2 (BB-575-B) (2) SCREWS ATT. BRKT. & INS. TO INLET PIPE	
3	● CONVERTER ASSY.	D7DZ-5E212-A
4	CONVERTER SHIELD-LOWER	D7FZ-5E258-A
5	CONVERTER SHIELD-UPPER	D7FZ-5F222-D
6	CONVERTER SHIELD-BRACKET	D7FZ-5F227-A
	55914-S2 (U-254-F) (6) SCREWS ATT. CONV. SHIELDS TO BRKT.	
7	MUFFLER & RESONATOR ASSY.	★D7DZ-5230-AH (2 DR.) ★D7DZ-5230-AJ (4 DR.)
8	BRACKET & INSULATOR ASSY.	D5DZ-5260-F
	381877-S2 (UU-52-AF) (2) SCREWS ATT. BRKT. & INS. TO RESONATOR 382347-S2 (BB905) (2) SCREWS ATT. BRKT. & INS. TO UNDERBODY	
9	BRACKET & INSULATOR ASSY.	D7DZ-5260-A
	381877-S2 (UU-52-AF) (4) SCREWS ATT. BRKT. & INS. TO MFLR. & TO UNDERBODY	

● CONVERTER SHELL LENGTH 7¼"

COPYRIGHT © 1986 — FORD MOTOR COMPANY — DEARBORN, MICHIGAN

1977 COMET - 6 CYL. 250 (WITH CONVERTER)

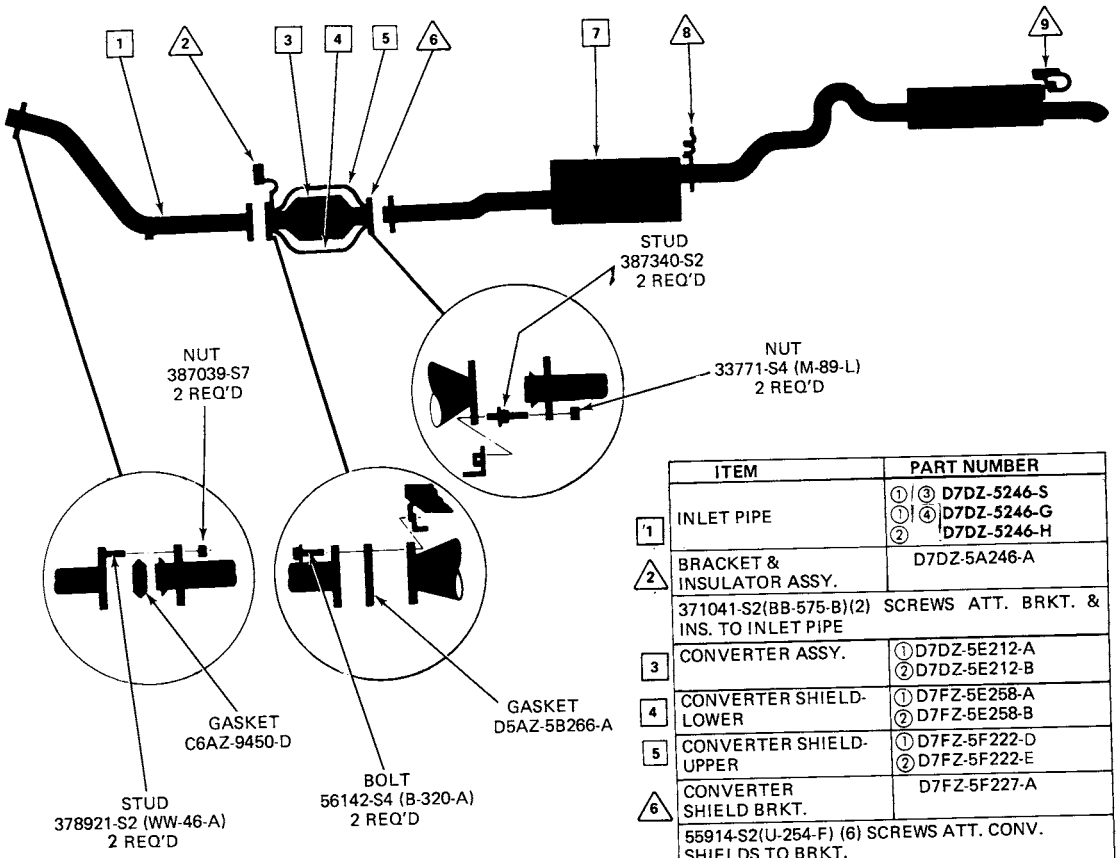

	ITEM	PART NUMBER
1	INLET PIPE	①③ **D7DZ-5246-S** ①④ **D7DZ-5246-G** ② **D7DZ-5246-H**
2	BRACKET & INSULATOR ASSY.	D7DZ-5A246-A
	371041-S2(BB-575-B)(2) SCREWS ATT. BRKT. & INS. TO INLET PIPE	
3	CONVERTER ASSY.	①D7DZ-5E212-A ②D7DZ-5E212-B
4	CONVERTER SHIELD-LOWER	①D7FZ-5E258-A ②D7FZ-5E258-B
5	CONVERTER SHIELD-UPPER	①D7FZ-5F222-D ②D7FZ-5F222-E
6	CONVERTER SHIELD BRKT.	D7FZ-5F227-A
	55914-S2(U-254-F) (6) SCREWS ATT. CONV. SHIELDS TO BRKT.	
7	MUFFLER & RESONATOR ASSY.	★①D7DZ-5230-AH (2 DR.) ★①D7DZ-5230-AJ (4 DR.) ★② **D7DZ-5230-AA (2 DR.)** ★② **D7DZ-5230-AB (4 DR.)**
8	BRACKET & INSULATOR ASSY.	D5DZ-5260-F
	381877-S2(UU-52-AF)(2) SCREWS ATT. BRKT. & INS. TO RESONATOR. 382347-S2(BB-905)(2) SCREWS ATT. BRKT. & INS. TO UNDERBODY	
9	BRACKET & INSULATOR ASSY.	D7DZ-5260-A
	381877-S2(UU-52-AF)(4) SCREWS ATT. BRKT. & INS. TO MFLR. & TO UNDERBODY	

① W/7 1/4" CAT. CONV. (SHELL LENGTH)
② W/12" CAT. CONV.
③ **W/JATCO TRANS.**
④ **W/O JATCO TRANS.**

1973/79
LINCOLN—MERCURY CARS

SECTION 52.77
P (COMET)

1977 COMET - 6 CYL. 250
(W/O CONVERTER)

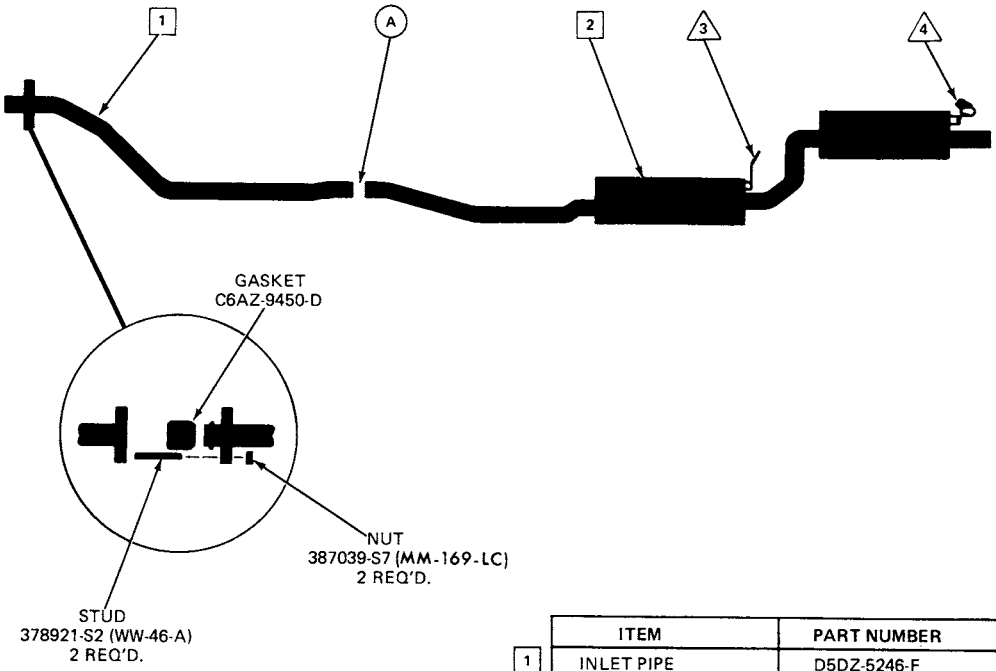

	ITEM	PART NUMBER
1	INLET PIPE	D5DZ-5246-F
A	CLAMP	D6AZ-5A231-A
2	MUFFLER & RESONATOR ASSY.	D7DZ-5230-AS (2 DR.) D7DZ-5230-AT (4 DR.)
3	BRACKET & INSULATOR ASSY.	D5DZ-5260-F
	381877-S2(UU-52-AF)(2) SCREWS ATT. BRKT. & INS. TO RESONATOR. 382347-S2(BB-905)(2) SCREWS ATT. BRKT. & INS. TO UNDERBODY.	
4	BRACKET & INSULATOR ASSY.	D7DZ-5260-A
	381877-S2(UU-52-AF)(4) SCREWS ATT. BRKT. & INS. TO MFLR. & TO UNDER-BODY.	

COPYRIGHT © 1986 — FORD MOTOR COMPANY — DEARBORN, MICHIGAN

1977 COMET — 8 CYL. 302
(WITH CONVERTER)

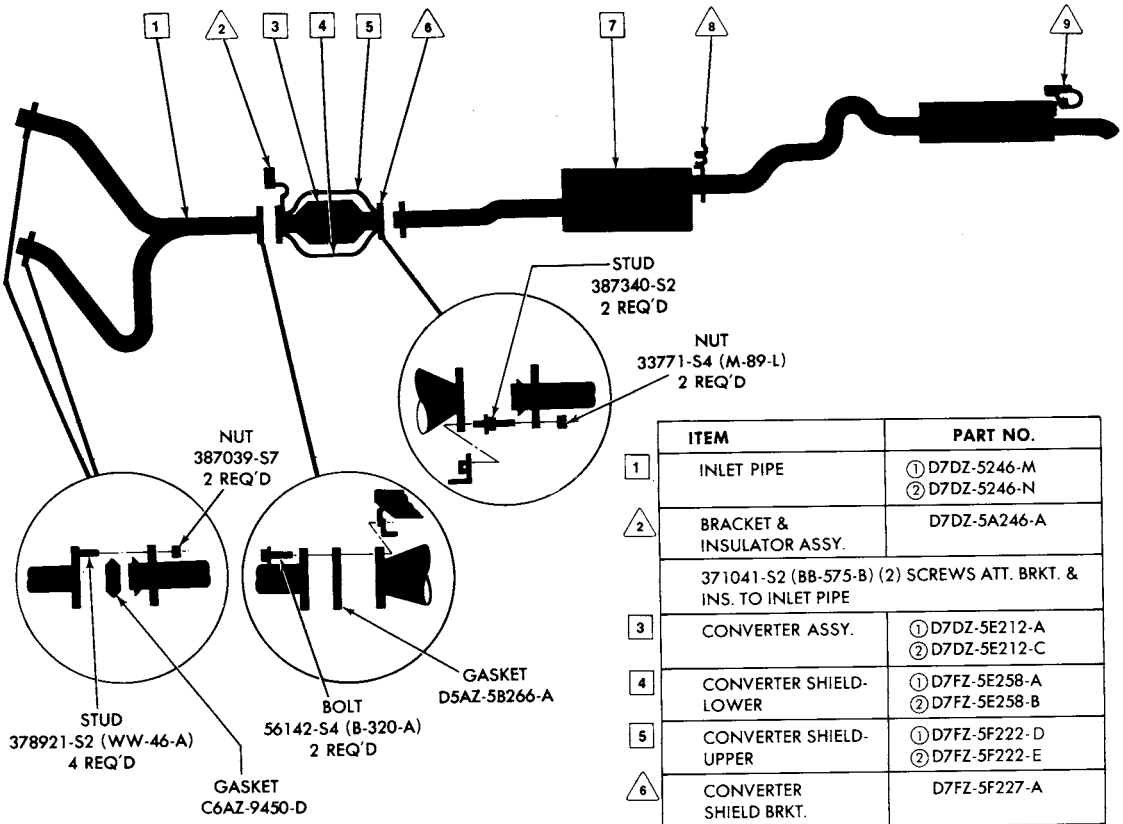

	ITEM	PART NO.
1	INLET PIPE	① D7DZ-5246-M ② D7DZ-5246-N
2	BRACKET & INSULATOR ASSY.	D7DZ-5A246-A
	371041-S2 (BB-575-B) (2) SCREWS ATT. BRKT. & INS. TO INLET PIPE	
3	CONVERTER ASSY.	① D7DZ-5E212-A ② D7DZ-5E212-C
4	CONVERTER SHIELD-LOWER	① D7FZ-5E258-A ② D7FZ-5E258-B
5	CONVERTER SHIELD-UPPER	① D7FZ-5F222-D ② D7FZ-5F222-E
6	CONVERTER SHIELD BRKT.	D7FZ-5F227-A
	55914-S2 (U-254-F) (6) SCREWS ATT. CONV. SHIELDS TO BRKT.	
7	MUFFLER & RESONATOR ASSY.	★① D7DZ-5230-AK (2 DR.) ★① D7DZ-5230-AL (4 DR.) ★② D7DZ-5230-AC (2 DR.) ② D7DZ-5230-AD (4 DR.)
8	BRACKET & INSULATOR ASSY.	D5DZ-5260-F
	381877-S2 (UU-52-AF) (2) SCREWS ATT. BRKT. & INS. TO RESONATOR 382347-S2 (BB-905) (2) SCREWS ATT. BRKT. & INS. TO UNDERBODY	
9	BRACKET & INSULATOR ASSY.	D7DZ-5260-A
	381877-S2 (UU-52-AF) (4) SCREWS ATT. BRKT. & INS. TO MFLR. & TO UNDERBODY	

① W/7 1/4" CAT. CONV. (SHELL LENGTH)
② W/12" CAT. CONV.

1973/79 LINCOLN-MERCURY CARS

SECTION 52.77
P (COMET)

1977 COMET - 8 CYL. 302 (W/O CONVERTER)

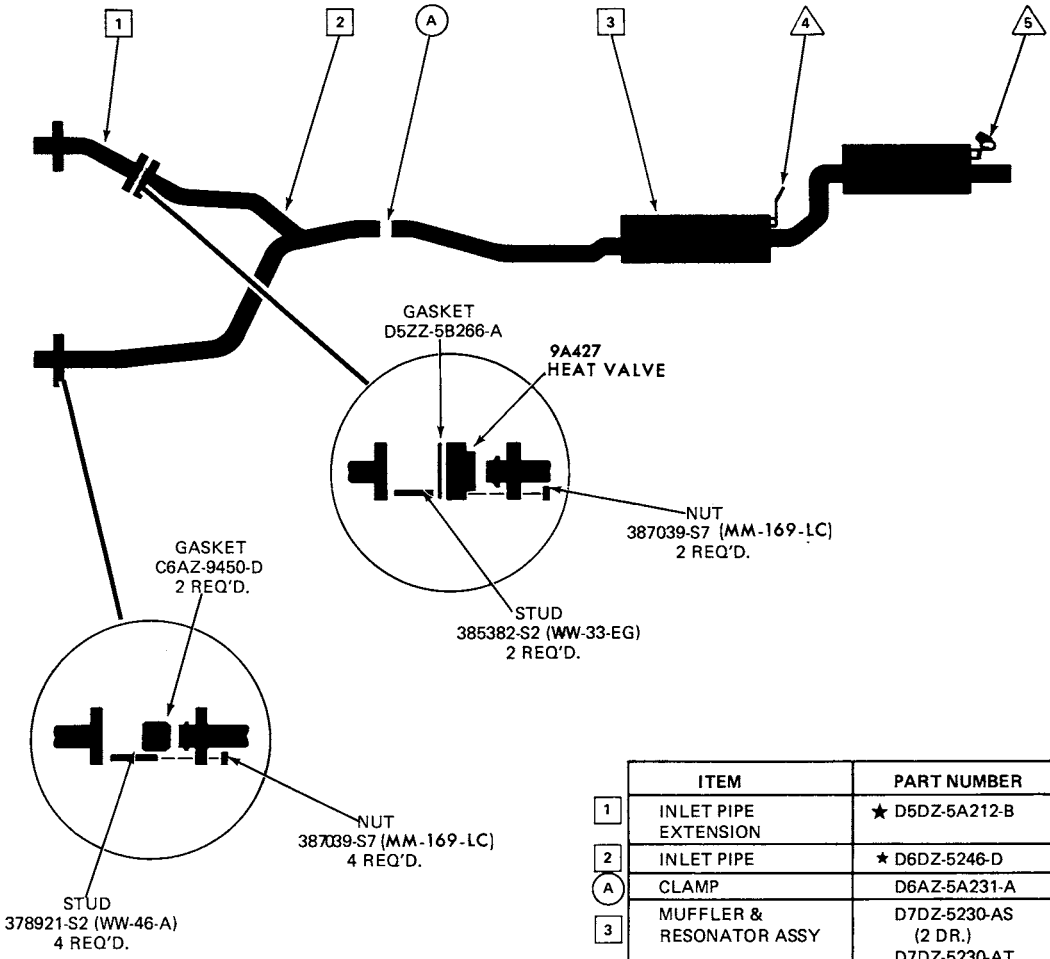

	ITEM	PART NUMBER
1	INLET PIPE EXTENSION	★ D5DZ-5A212-B
2	INLET PIPE	★ D6DZ-5246-D
A	CLAMP	D6AZ-5A231-A
3	MUFFLER & RESONATOR ASSY	D7DZ-5230-AS (2 DR.) D7DZ-5230-AT (4 DR.)
4	BRACKET & INSULATOR ASSY.	D5DZ-5260-F
	381877-S2(UU-52-AF)(2) SCREWS ATT. BRKT. & INS. TO RESONATOR. 382347-S2(BB-905)(2) SCREWS ATT. BRKT. & INS. TO UNDERBODY.	
5	BRACKET & INSULATOR ASSY.	D7DZ-5260-A
	381877-S2 (UU-52-AF)(4) SCREWS ATT. BRKT. & INS. TO MFLR. & TO UNDER-BODY.	

EP-33

COPYRIGHT © 1986 — FORD MOTOR COMPANY — DEARBORN, MICHIGAN

1977 VERSAILLES — 8 CYL. 302 SEDAN
(WITH CONVERTER)

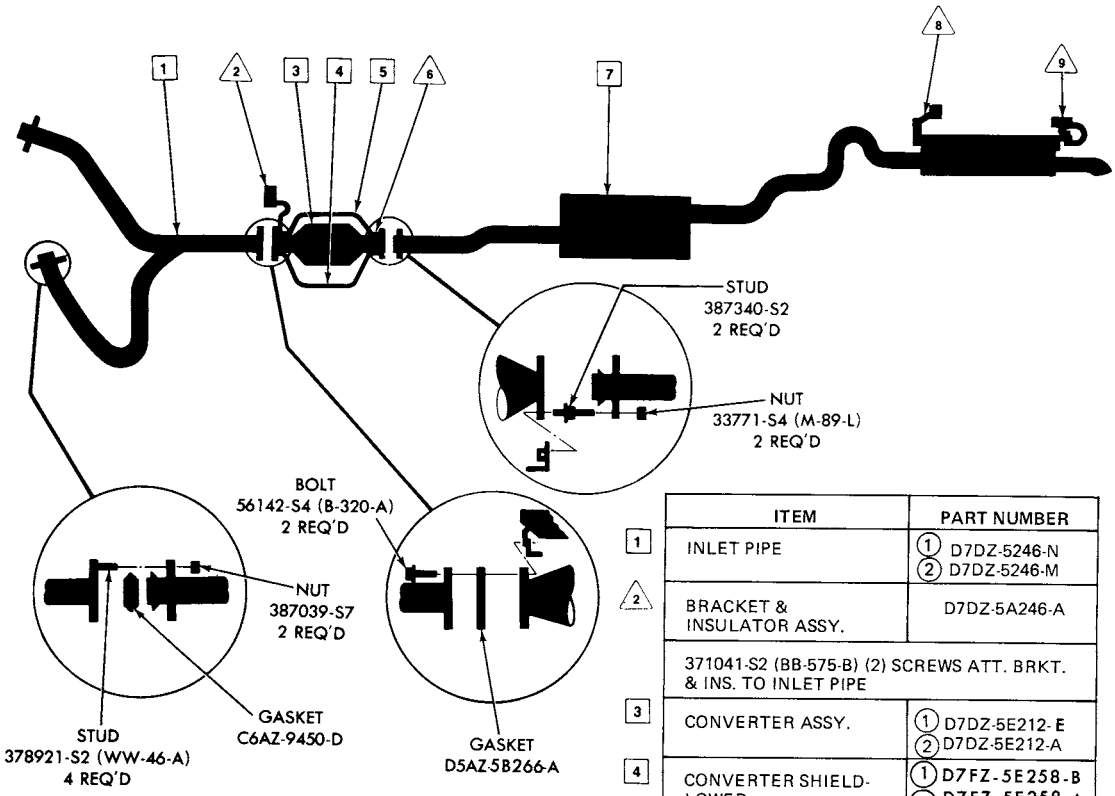

	ITEM	PART NUMBER
1	INLET PIPE	(1) D7DZ-5246-N (2) D7DZ-5246-M
2	BRACKET & INSULATOR ASSY.	D7DZ-5A246-A
	371041-S2 (BB-575-B) (2) SCREWS ATT. BRKT. & INS. TO INLET PIPE	
3	CONVERTER ASSY.	(1) D7DZ-5E212-E (2) D7DZ-5E212-A
4	CONVERTER SHIELD-LOWER	(1) D7FZ-5E258-B (2) D7FZ-5E258-A
5	CONVERTER SHIELD-UPPER	D7FZ-5F222-E D7FZ-5F222-D
6	CONVERTER SHIELD BRKT.	D7FZ-5F227-A
	55914-S2 (U-254-F) (6) SCREWS ATT. CONV. SHIELDS TO BRKT.	
7	MUFFLER ASSY.	★(1) D74Y-5230-C ★(2) D84Y-5230-A
8	BRACKET & INSULATOR ASSY.	★D74Y-5260-B
	381877-S2 (UU-52-AF) (2) SCREWS ATT. BRKT. & INS. TO REAR MFLR. 382347-S2 (BB-905) (2) SCREWS ATT. BRKT. & INS. TO UNDERBODY	
9	BRACKET & INSULATOR ASSY.	D7DZ-5260-A
	381877-S2 (UU-52-AF) (4) SCREWS ATT. BRKT. & INS. TO RR. MFLR. & SIDE MEMBER	

(1) W/12" CAT. CONV.
(2) W/7-1/4" CAT. CONV. (SHELL LENGTH)

EW-1

COPYRIGHT © 1986 — FORD MOTOR COMPANY — DEARBORN, MICHIGAN

1973/79 LINCOLN-MERCURY CARS

1977 VERSAILLES — 8 CYL. 351W SEDAN (WITH CONVERTER)

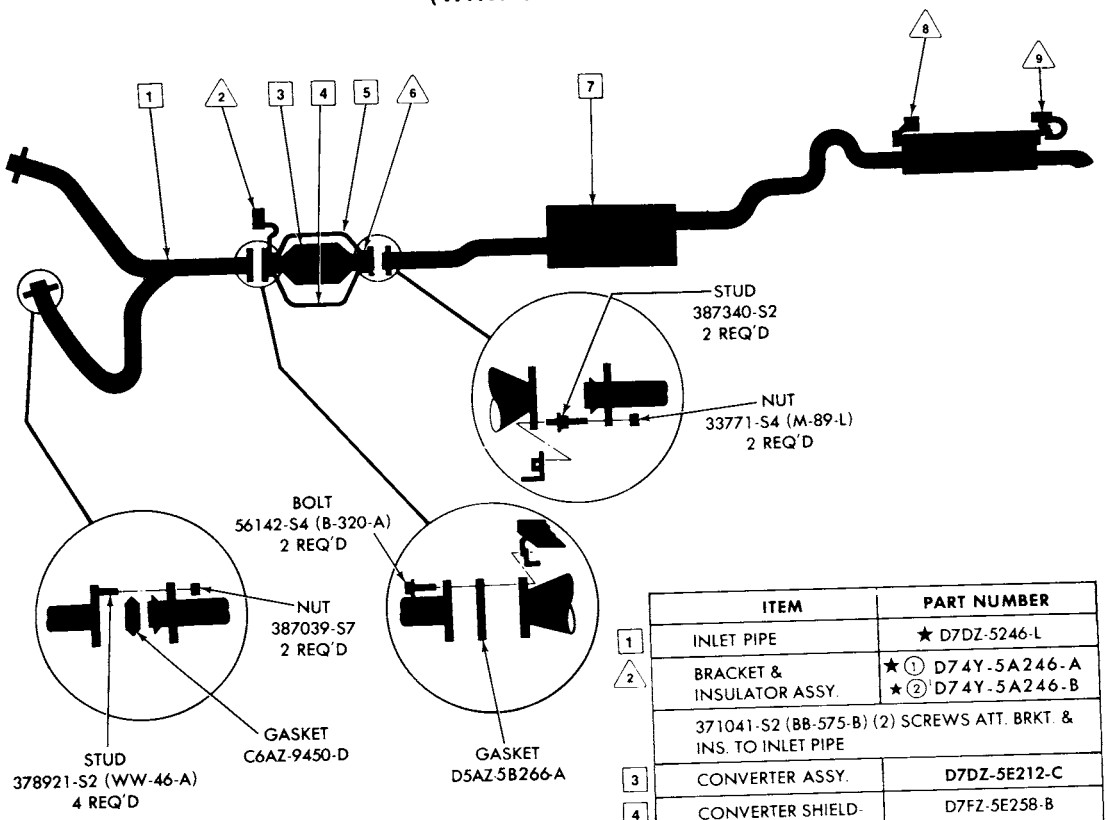

	ITEM	PART NUMBER
1	INLET PIPE	★ D7DZ-5246-L
2	BRACKET & INSULATOR ASSY.	★ ① D74Y-5A246-A ★ ② D74Y-5A246-B
	371041-S2 (BB-575-B) (2) SCREWS ATT. BRKT. & INS. TO INLET PIPE	
3	CONVERTER ASSY.	D7DZ-5E212-C
4	CONVERTER SHIELD-LOWER	D7FZ-5E258-B
5	CONVERTER SHIELD-UPPER	D7FZ-5F222-E
6	CONVERTER SHIELD BRKT.	D7FZ-5F227-A
	55914-S2 (U-254-F) (6) SCREWS ATT. CONV. SHIELDS TO BRKT.	
7	MUFFLER ASSY.	★ D74Y-5230-C
8	BRACKET & INSULATOR ASSY.	★ D74Y-5260-B
	381877-S2 (UU-52-AF) (2) SCREWS ATT. BRKT. & INS. TO REAR MFLR. 382347-S2 (BB-905) (2) SCREWS ATT. BRKT. & INS. TO UNDERBODY	
9	BRACKET & INSULATOR ASSY.	D7DZ-5260-A
	381877-S2 (UU-52-AF) (4) SCREWS ATT. BRKT. & INS. TO RR. MFLR. & SIDE MEMBER	

① W/O TRANS.VIBRATION DAMPER
② W/ TRANS.VIBRATION DAMPER

EXHAUST PARTS MODEL INDEX

How to use this index -

1. Find the car model desired.
2. Find the line which lists the engine displacement needed.
3. Select the correct page and turn to that page.

For stamped number cross-reference information and for size information, refer to Section 50, page 3.

1978

CYL	LITRE (C.I.D.)	MODEL	CONVERTER USAGE ■	TYPE ▲	SECTION	PAGE	ILLUS. NO. ♦
		A (MERCURY)					
8	5.8L (351)-M	(53,65)	TC	S	52.78	1	EG 108
		(53,65)	NC	S	52.78	2	EG 109
		(71)	TC	S	52.78	3	EG 111
	6.6L (400)	(53,65)	TC	S	52.78	4	EG 110
		(71)	TC	S	52.78	5	EG 115
	7.5L (460-4/B)	(53,65)--U.S.A.and Canada - 7 1/4" shell	TC	S	52.78	6	EG 112
		(53,65)-Canada - 5 1/2" shell	TC	S	52.78	7	EG 121
		(71)	TC	S	52.78	8	EG 113
	7.5L (460-P/C)	(53,65)	TC	D	52.78	9	EG 114
		D (LINCOLN)					
8	6.6L (400)	All	TC	S	52.78	1	EJ 21
	7.5L (460)	All--U.S.A. and Canada - 7 1/4 shell	TC	S	52.78	2	EJ 22
		All--Canada - 5 1/2" shell	TC	S	52.78	3	EJ 23
		F (COUGAR)					
8	5.0L (302)	(53,65)	TC	S	52.78	1	EB 48
	5.8L (351)-W	(53,65)	TC	S	52.78	2	EB 49
	5.8L (351)-M	(53,65)--"Before 10/3/77"	TC	S	53.78	3	EB 50
		(53,65)--"From 10/3/77"	TC	S	52.78	4	EB 57
		(53,65)	NC	S	52.78	5	EB 51
	6.6L (400)	(53,65)--"Before 10/3/77"	TC	S	52.78	6	EB 56
		(53,65)--"From 10/3/77"	TC	S	52.78	7	EB 60
		G (MONARCH)					
6	4.1L (250)	All	OC	S	52.78	1	EV 19
8	5.0L (302)	All	OC	S	52.78	2	EV 20

♦ For control purposes only ▲ S - Single D - Dual
■ OC - one converter TC - two converters NC - non converter

COPYRIGHT © 1986 — FORD MOTOR COMPANY — DEARBORN, MICHIGAN

EXHAUST PARTS MODEL INDEX - cont'd.

1978

CYL	LITRE (C.I.D.)	MODEL	CONVERTER USAGE ■	TYPE ▲	SECTION	PAGE	ILLUS. NO. ♦
		J (CAPRI)					
4	2.3L (140)	All (2300 cc)	OC	S	52.78	1	EM 20
6	2.8L (171)	All (2800 cc)	OC	D	52.78	2	EM 21
		K (MARK V)					
8	6.6L (400)	All	TC	S	52.78	1	EK 18
	7.5L (460)	All--U.S.A. and Canada - 7 1/4" shell	TC	S	52.78	2	EK 19
		All--Canada - 5 1/2" shell	TC	S	52.78	3	EK 22
		All--U.S.A. and Canada - 7 1/4" shell	TC	D	52.78	4	EK 20
		All--Canada - 5 1/2" shell	TC	D	52.78	5	EK 21
		L (BOBCAT)					
4	2.3L (140)	(62,64)--49 States & Canada	OC	S	52.78	1	ET 31
		(62,64)--Calif.	OC	S	52.78	2	ET 37
		(62,64)--Canada	NC	S	52.78	3	ET 32
		(73)--49 States & Canada	OC	S	52.78	4	ET 33
		(73)--Calif.	OC	S	52.78	5	ET 38
		(73)--Canada	NC	S	52.78	6	ET 34
6	2.8L (171)	(62,64)	OC	S	52.78	7	ET 35
		(73)	OC	S	52.78	8	ET 36
		P (ZEPHYR)					
4	2.3L (140)	(54,66)	OC	S	52.78	1	EZ 1
		(54,66)	NC	S	52.78	2	EZ 2
		(74)	NC	S	52.78	4	EZ 8
		(74)	OC	S	52.78	3	EZ 7
6	3.3L (200)	(54,66)--49 State-exc. high altitude	OC	S	52.78	5	EZ 3
		(54,66)--Calif. and high altitude	OC	S	52.78	6	EZ 4
		(74)--49 State only	OC	S	52.78	7	EZ 9
8	5.0L (302)	(54,66)	OC	S	52.78	8	EZ 5
		(74)	NC	S	52.78	9	EZ 6
		V (VERSAILLES)					
8	5.0L (302)	All	OC	S	52.78	1	EW 3

♦ For control purposes only
■ OC - one converter
TC - two converters
▲ S - Single D - Dual
NC - non converter

1978 MERCURY — 8 CYL. 5.8L (351 CID)-M SEDAN (WITH CONVERTER)

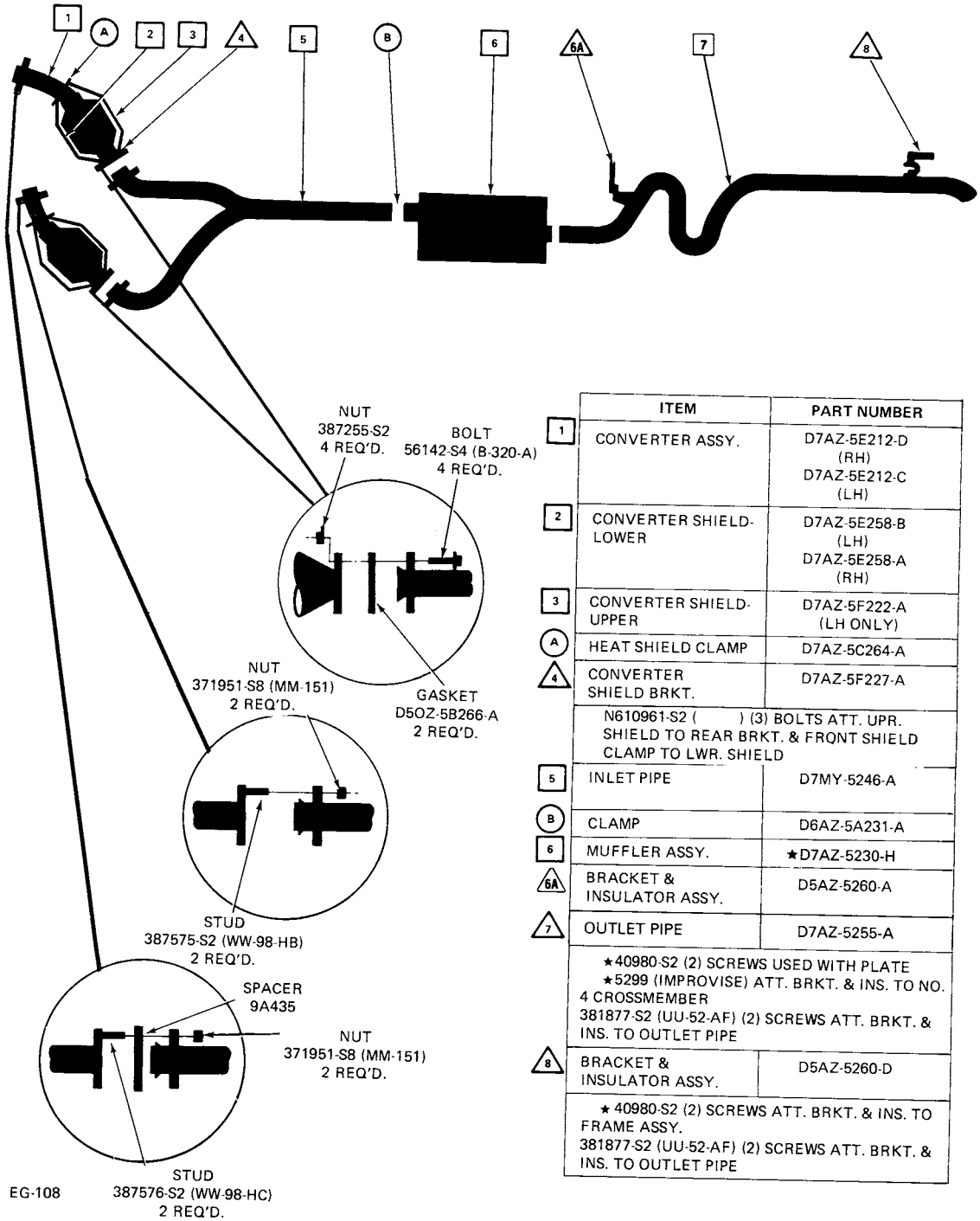

	ITEM	PART NUMBER
1	CONVERTER ASSY.	D7AZ-5E212-D (RH) D7AZ-5E212-C (LH)
2	CONVERTER SHIELD-LOWER	D7AZ-5E258-B (LH) D7AZ-5E258-A (RH)
3	CONVERTER SHIELD-UPPER	D7AZ-5F222-A (LH ONLY)
A	HEAT SHIELD CLAMP	D7AZ-5C264-A
4	CONVERTER SHIELD BRKT.	D7AZ-5F227-A
	N610961-S2 ( ) (3) BOLTS ATT. UPR. SHIELD TO REAR BRKT. & FRONT SHIELD CLAMP TO LWR. SHIELD	
5	INLET PIPE	D7MY-5246-A
B	CLAMP	D6AZ-5A231-A
6	MUFFLER ASSY.	★D7AZ-5230-H
6A	BRACKET & INSULATOR ASSY.	D5AZ-5260-A
7	OUTLET PIPE	D7AZ-5255-A
	★40980-S2 (2) SCREWS USED WITH PLATE ★5299 (IMPROVISE) ATT. BRKT. & INS. TO NO. 4 CROSSMEMBER 381877-S2 (UU-52-AF) (2) SCREWS ATT. BRKT. & INS. TO OUTLET PIPE	
8	BRACKET & INSULATOR ASSY.	D5AZ-5260-D
	★ 40980-S2 (2) SCREWS ATT. BRKT. & INS. TO FRAME ASSY. 381877-S2 (UU-52-AF) (2) SCREWS ATT. BRKT. & INS. TO OUTLET PIPE	

COPYRIGHT © 1986 — FORD MOTOR COMPANY — DEARBORN, MICHIGAN

1978 MERCURY — 8 CYL. 5.8L (351 CID)-M SEDAN (W/O CONVERTER)

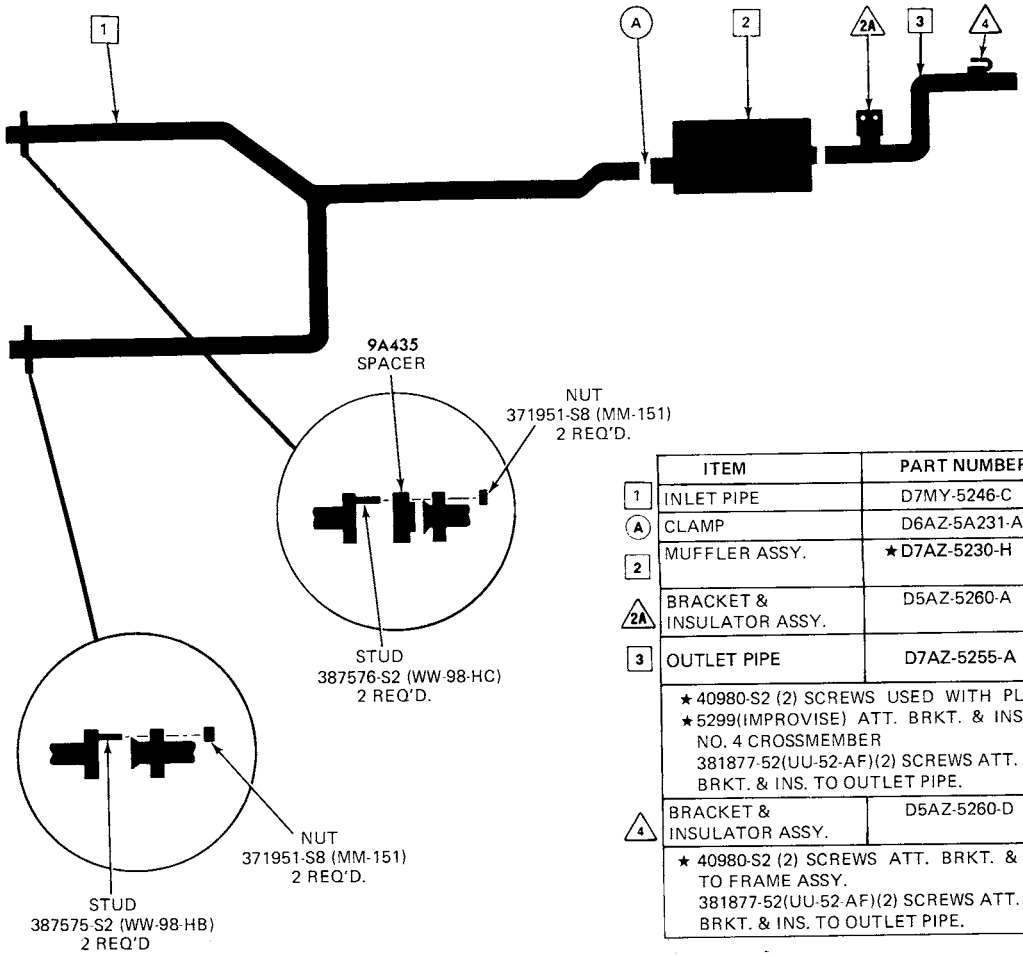

	ITEM	PART NUMBER
1	INLET PIPE	D7MY-5246-C
A	CLAMP	D6AZ-5A231-A
2	MUFFLER ASSY.	★D7AZ-5230-H
2A	BRACKET & INSULATOR ASSY.	D5AZ-5260-A
3	OUTLET PIPE	D7AZ-5255-A
	★40980-S2 (2) SCREWS USED WITH PLATE ★5299(IMPROVISE) ATT. BRKT. & INS. TO NO. 4 CROSSMEMBER 381877-52(UU-52-AF)(2) SCREWS ATT. BRKT. & INS. TO OUTLET PIPE.	
4	BRACKET & INSULATOR ASSY.	D5AZ-5260-D
	★ 40980-S2 (2) SCREWS ATT. BRKT. & INS. TO FRAME ASSY. 381877-52(UU-52-AF)(2) SCREWS ATT. BRKT. & INS. TO OUTLET PIPE.	

1978 MERCURY — 8 CYL. 5.8L (351 CID)-M STATION WAGON (WITH CONVERTER)

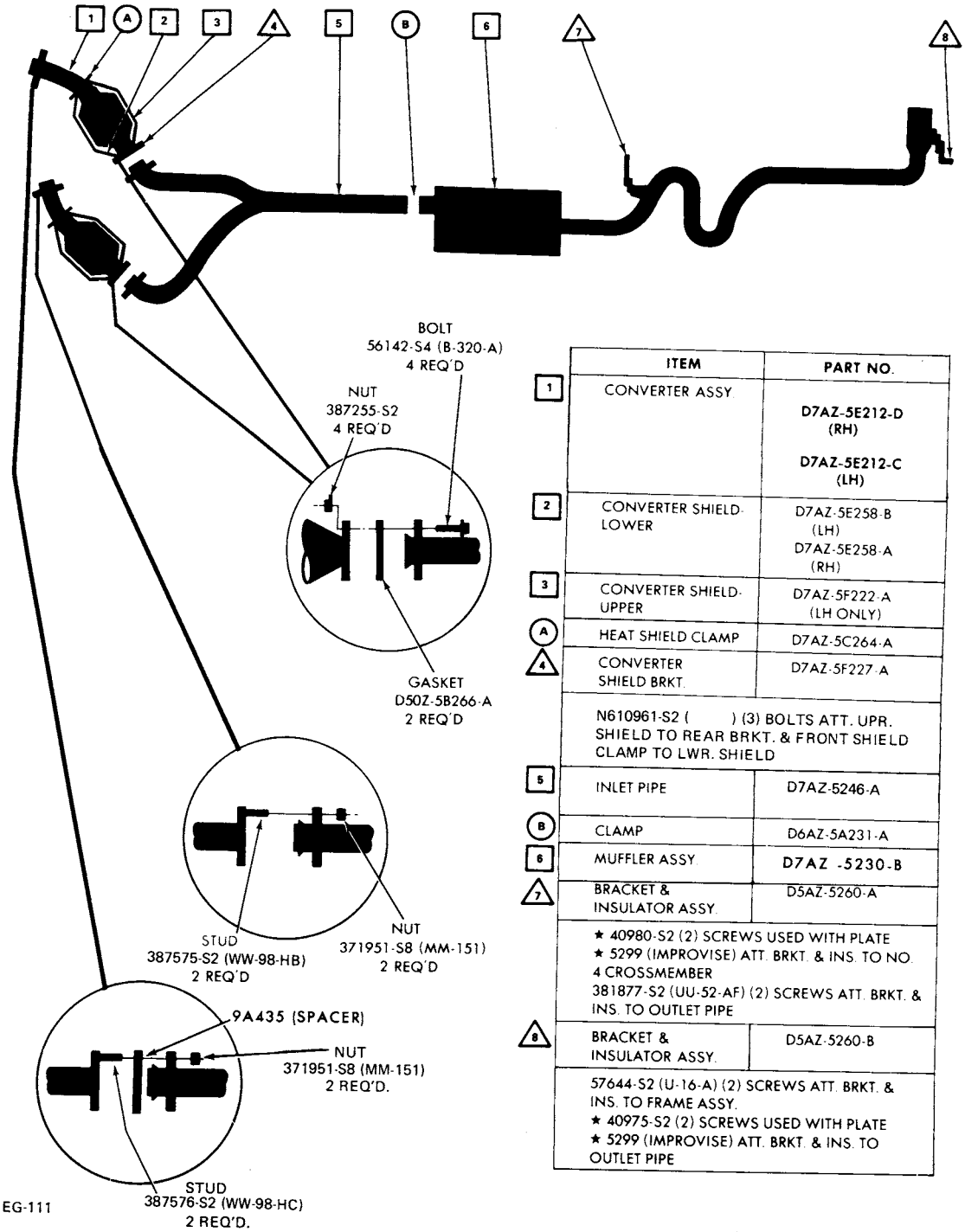

	ITEM	PART NO.
1	CONVERTER ASSY.	D7AZ-5E212-D (RH) D7AZ-5E212-C (LH)
2	CONVERTER SHIELD-LOWER	D7AZ-5E258-B (LH) D7AZ-5E258-A (RH)
3	CONVERTER SHIELD-UPPER	D7AZ-5F222-A (LH ONLY)
A	HEAT SHIELD CLAMP	D7AZ-5C264-A
4	CONVERTER SHIELD BRKT.	D7AZ-5F227-A
	N610961-S2 ( ) (3) BOLTS ATT. UPR. SHIELD TO REAR BRKT. & FRONT SHIELD CLAMP TO LWR. SHIELD	
5	INLET PIPE	D7AZ-5246-A
B	CLAMP	D6AZ-5A231-A
6	MUFFLER ASSY.	D7AZ -5230-B
7	BRACKET & INSULATOR ASSY.	D5AZ-5260-A
	★ 40980-S2 (2) SCREWS USED WITH PLATE ★ 5299 (IMPROVISE) ATT. BRKT. & INS. TO NO. 4 CROSSMEMBER 381877-S2 (UU-52-AF) (2) SCREWS ATT. BRKT. & INS. TO OUTLET PIPE	
8	BRACKET & INSULATOR ASSY.	D5AZ-5260-B
	57644-S2 (U-16-A) (2) SCREWS ATT. BRKT. & INS. TO FRAME ASSY. ★ 40975-S2 (2) SCREWS USED WITH PLATE ★ 5299 (IMPROVISE) ATT. BRKT. & INS. TO OUTLET PIPE	

COPYRIGHT © 1986 — FORD MOTOR COMPANY — DEARBORN, MICHIGAN

1978 MERCURY — 8 CYL. 6.6L (400 CID) SEDAN (WITH CONVERTER)

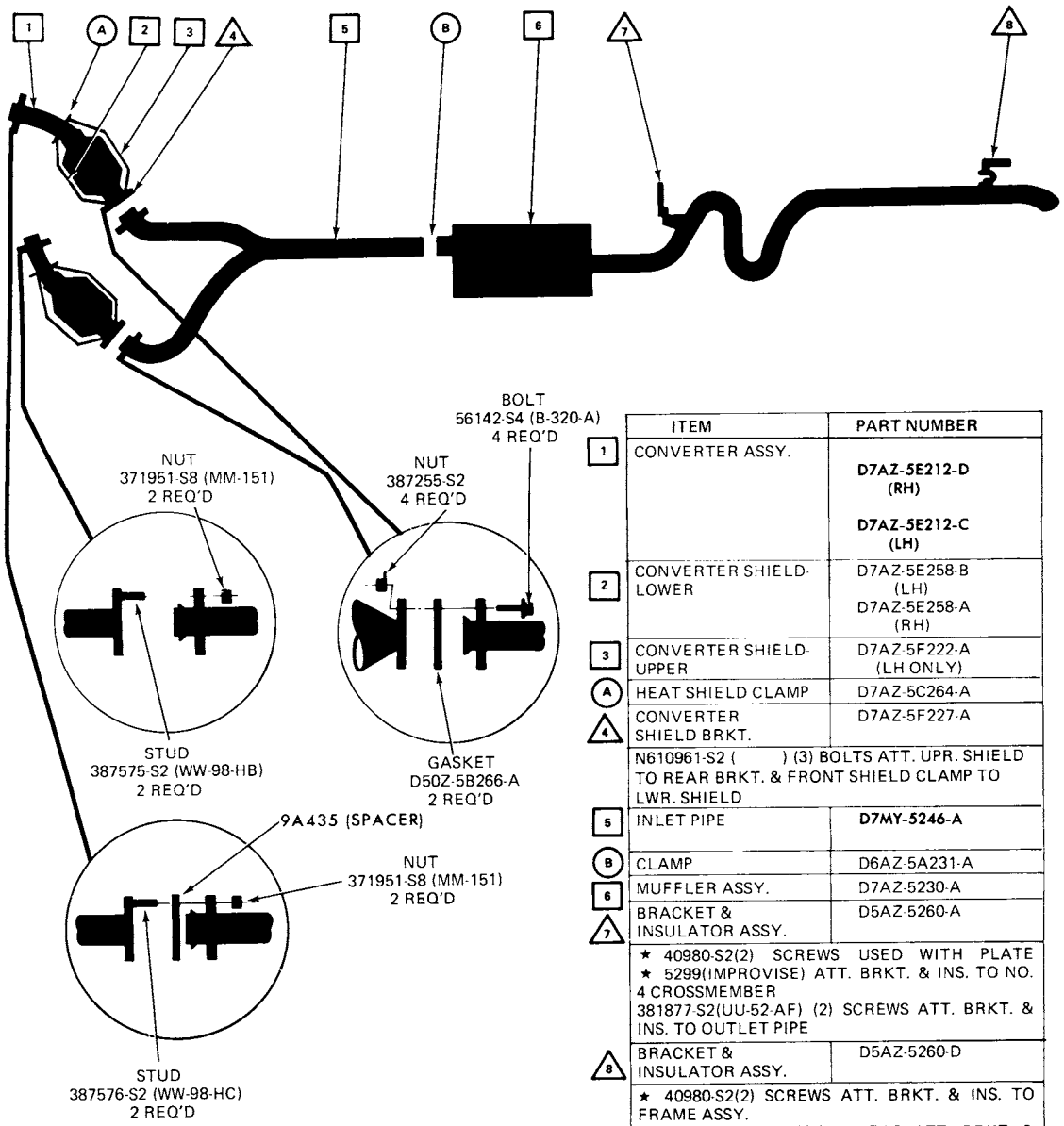

	ITEM	PART NUMBER
1	CONVERTER ASSY.	**D7AZ-5E212-D (RH)** **D7AZ-5E212-C (LH)**
2	CONVERTER SHIELD-LOWER	D7AZ-5E258-B (LH) D7AZ-5E258-A (RH)
3	CONVERTER SHIELD-UPPER	D7AZ-5F222-A (LH ONLY)
A	HEAT SHIELD CLAMP	D7AZ-5C264-A
4	CONVERTER SHIELD BRKT.	D7AZ-5F227-A
	N610961-S2 ( ) (3) BOLTS ATT. UPR. SHIELD TO REAR BRKT. & FRONT SHIELD CLAMP TO LWR. SHIELD	
5	INLET PIPE	**D7MY-5246-A**
B	CLAMP	D6AZ-5A231-A
6	MUFFLER ASSY.	D7AZ-5230-A
7	BRACKET & INSULATOR ASSY.	D5AZ-5260-A
	★ 40980-S2(2) SCREWS USED WITH PLATE ★ 5299(IMPROVISE) ATT. BRKT. & INS. TO NO. 4 CROSSMEMBER 381877-S2(UU-52-AF) (2) SCREWS ATT. BRKT. & INS. TO OUTLET PIPE	
8	BRACKET & INSULATOR ASSY.	D5AZ-5260-D
	★ 40980-S2(2) SCREWS ATT. BRKT. & INS. TO FRAME ASSY. 381877-S2(UU-52-AF)(2) SCREWS ATT. BRKT. & INS. TO OUTLET PIPE	

EG-110

1978 MERCURY — 8 CYL. 6.6L (400 CID) STATION WAGON (WITH CONVERTER)

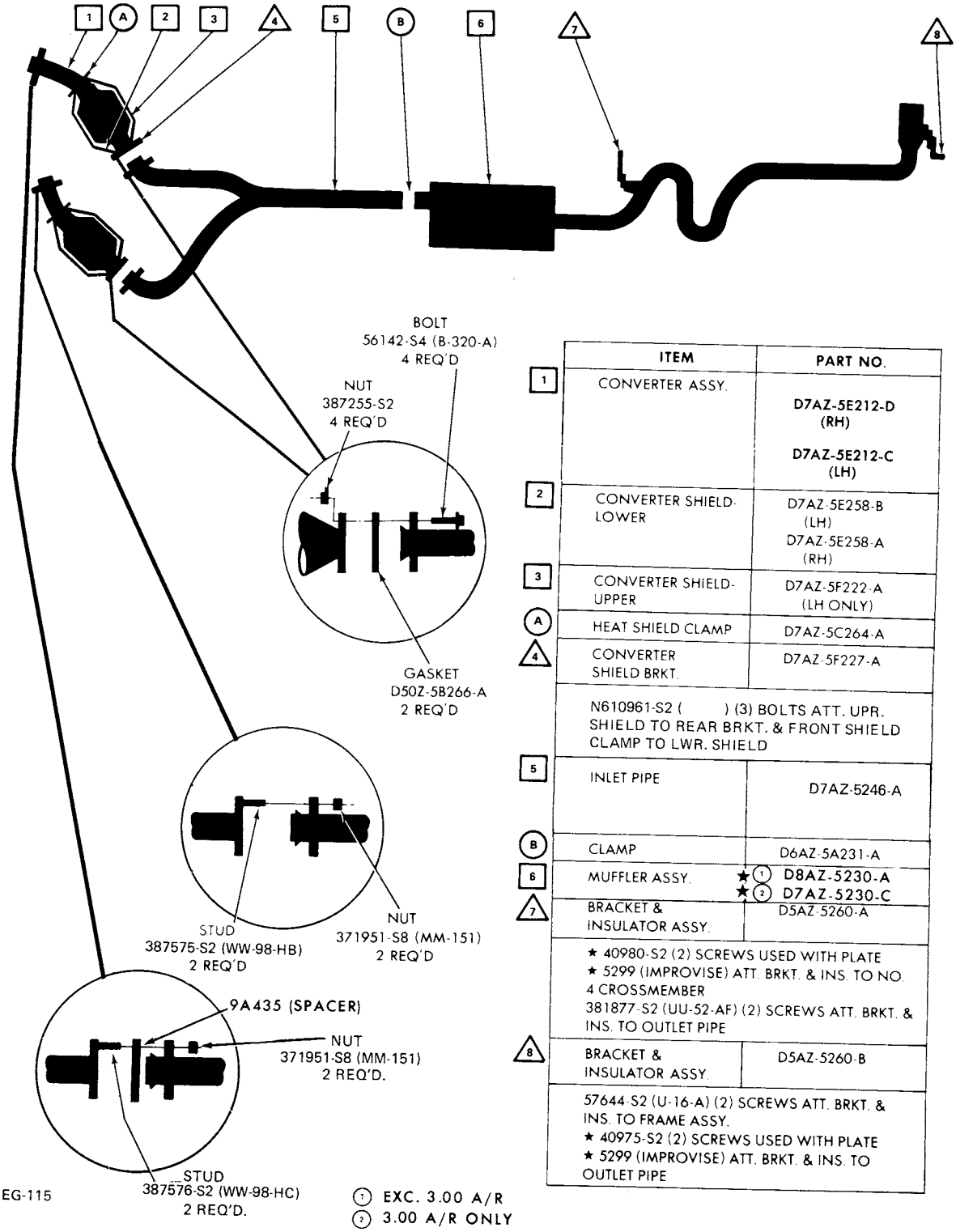

	ITEM	PART NO.
1	CONVERTER ASSY.	D7AZ-5E212-D (RH) D7AZ-5E212-C (LH)
2	CONVERTER SHIELD-LOWER	D7AZ-5E258-B (LH) D7AZ-5E258-A (RH)
3	CONVERTER SHIELD-UPPER	D7AZ-5F222-A (LH ONLY)
A	HEAT SHIELD CLAMP	D7AZ-5C264-A
4	CONVERTER SHIELD BRKT.	D7AZ-5F227-A
	N610961-S2 ( ) (3) BOLTS ATT. UPR. SHIELD TO REAR BRKT. & FRONT SHIELD CLAMP TO LWR. SHIELD	
5	INLET PIPE	D7AZ-5246-A
B	CLAMP	D6AZ-5A231-A
6	MUFFLER ASSY.	★ (1) D8AZ-5230-A ★ (2) D7AZ-5230-C
7	BRACKET & INSULATOR ASSY.	D5AZ-5260-A
	★ 40980-S2 (2) SCREWS USED WITH PLATE ★ 5299 (IMPROVISE) ATT. BRKT. & INS. TO NO. 4 CROSSMEMBER 381877-S2 (UU-52-AF) (2) SCREWS ATT. BRKT. & INS. TO OUTLET PIPE	
8	BRACKET & INSULATOR ASSY.	D5AZ-5260-B
	57644-S2 (U-16-A) (2) SCREWS ATT. BRKT. & INS. TO FRAME ASSY. ★ 40975-S2 (2) SCREWS USED WITH PLATE ★ 5299 (IMPROVISE) ATT. BRKT. & INS. TO OUTLET PIPE	

EG-115

(1) EXC. 3.00 A/R
(2) 3.00 A/R ONLY

COPYRIGHT © 1986 — FORD MOTOR COMPANY — DEARBORN, MICHIGAN

1978 MERCURY — 8 CYL. 7.5L (460 CID) SEDAN
(U.S.A. & CANADA)
(WITH 7¼ SHELL LENGTH CONVERTER)

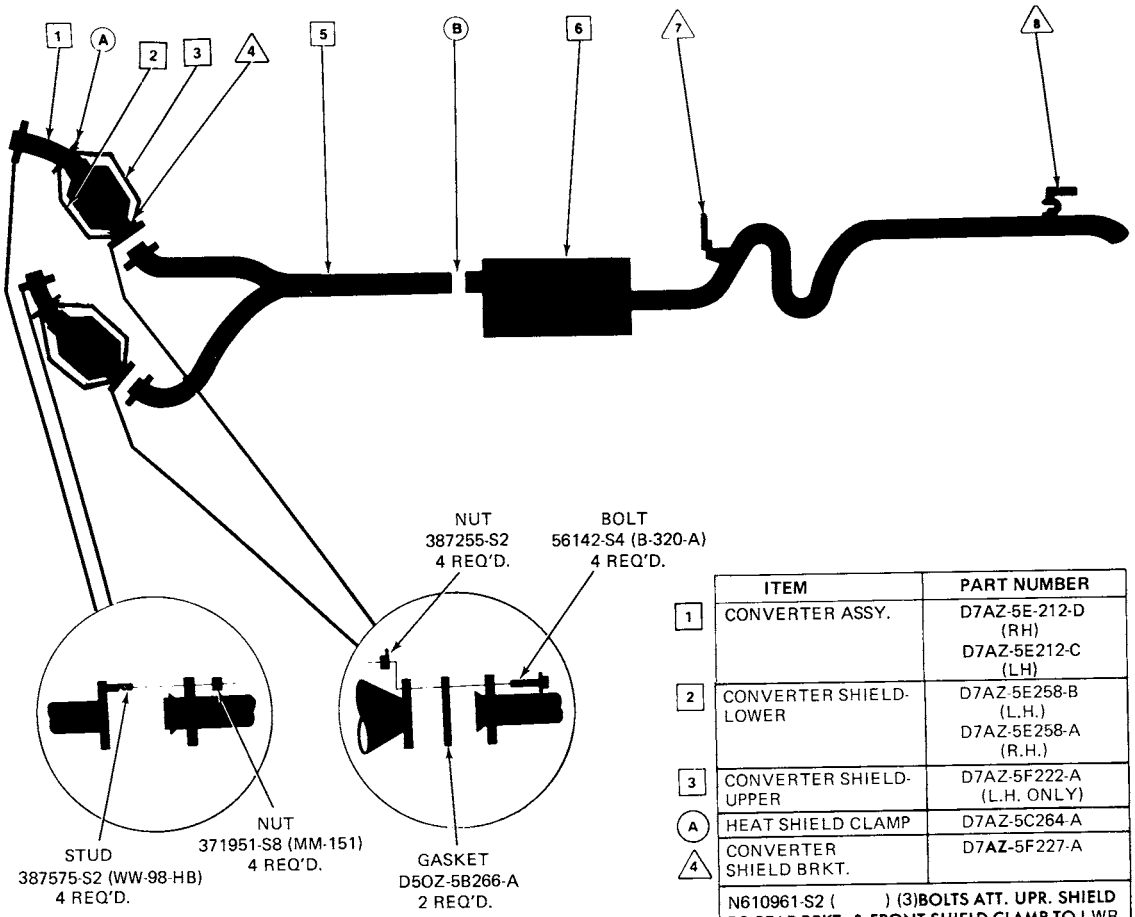

	ITEM	PART NUMBER
1	CONVERTER ASSY.	D7AZ-5E-212-D (RH) D7AZ-5E212-C (LH)
2	CONVERTER SHIELD-LOWER	D7AZ-5E258-B (L.H.) D7AZ-5E258-A (R.H.)
3	CONVERTER SHIELD-UPPER	D7AZ-5F222-A (L.H. ONLY)
A	HEAT SHIELD CLAMP	D7AZ-5C264-A
4	CONVERTER SHIELD BRKT.	D7AZ-5F227-A
	N610961-S2 ( ) (3)BOLTS ATT. UPR. SHIELD TO REAR BRKT. & FRONT SHIELD CLAMP TO LWR. SHIELD	
5	INLET PIPE	(1)D7MY-5246-A (2)D7AZ-5246-A
B	CLAMP	D6AZ-5A231-A
6	MUFFLER ASSY.	★ D7AZ-5230-F
7	BRACKET & INSULATOR ASSY.	D5AZ-5260-A
	★ 40980-S2 (2) SCREWS USED WITH PLATE ★ 5299 (IMPROVISE) ATT. BRKT. & INS. TO NO. 4 CROSSMEMBER 381877-S2 (UU-52-AF) (2) SCREWS ATT. BRKT. & INS. TO OUTLET PIPE	
8	BRACKET & INSULATOR ASSY.	D5AZ-5260-D
	★ 40980-52 (2) SCREWS ATT. BRKT. & INS TO FRAME ASSY. 381877-S2 (UU-52-AF) (2) SCREWS ATT. BRKT. & INS. TO OUTLET PIPE	

EG-112

(1) "BEFORE 5/1/78"
(2) "FROM 5/1/78 "

1978 MERCURY-8 CYL. 7.5 L (460 CID) SEDAN (CANADA ONLY) (WITH 5½ SHELL LENGTH CONVERTER)

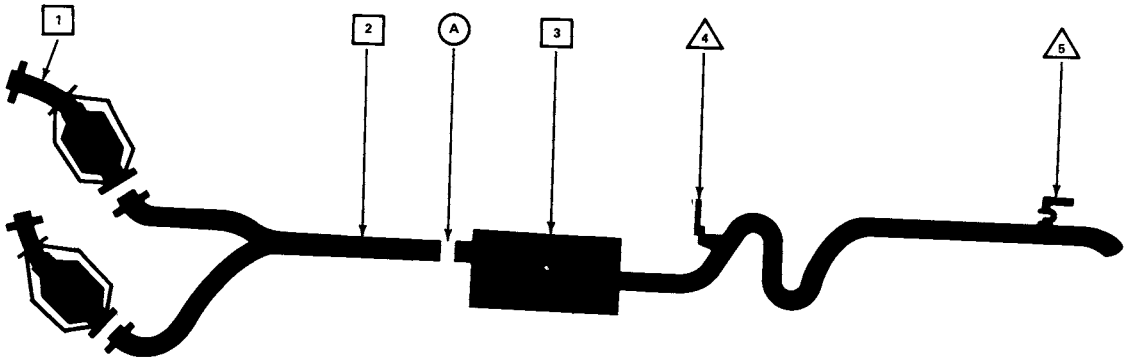

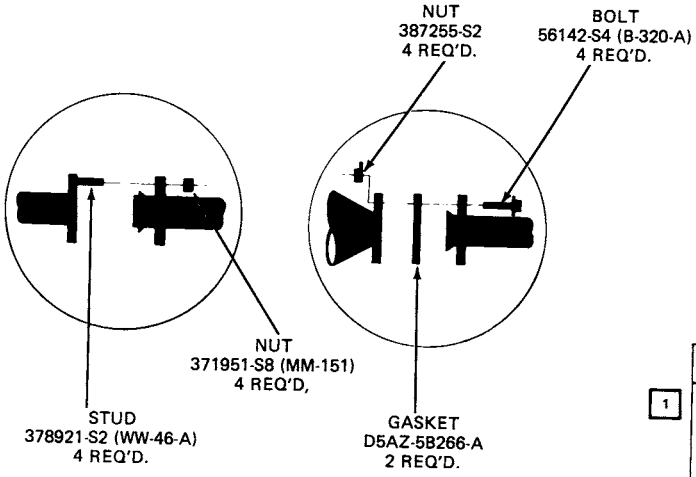

	ITEM	PART NUMBER
1	CONVERTER ASSY.	D7AZ-5E212-A (RH) D7AZ-5E212-B (LH)
2	INLET PIPE	D7MY-5246-B
A	CLAMP	D6AZ-5A231-A
3	MUFFLER ASSY.	★ D7AZ-5230-F
4	BRACKET & INSULATOR ASSY.	D5AZ-5260-A
	40980-S2 (2) SCREWS USED WITH PLATE 5299 (IMPROVISE) ATT. BRKT. & INS. TO NO. 4 CROSSMEMBER 381877-S2 (UU-52-AF) (2) SCREWS ATT. BRKT. & INS. TO OUTLET PIPE	
5	BRACKET & INSULATOR ASSY.	D5AZ-5260-D
	40980-52 (2) SCREWS ATT. BRKT. & INS. TO FRAME ASSY. 381877-S2 (UU-52-AF) (2) SCREWS ATT. BRKT. & INS. TO OUTLET PIPE	

EG-121

COPYRIGHT © 1986 — FORD MOTOR COMPANY — DEARBORN, MICHIGAN

1978 MERCURY — 8 CYL. 7.5L (460 CID) STATION WAGON

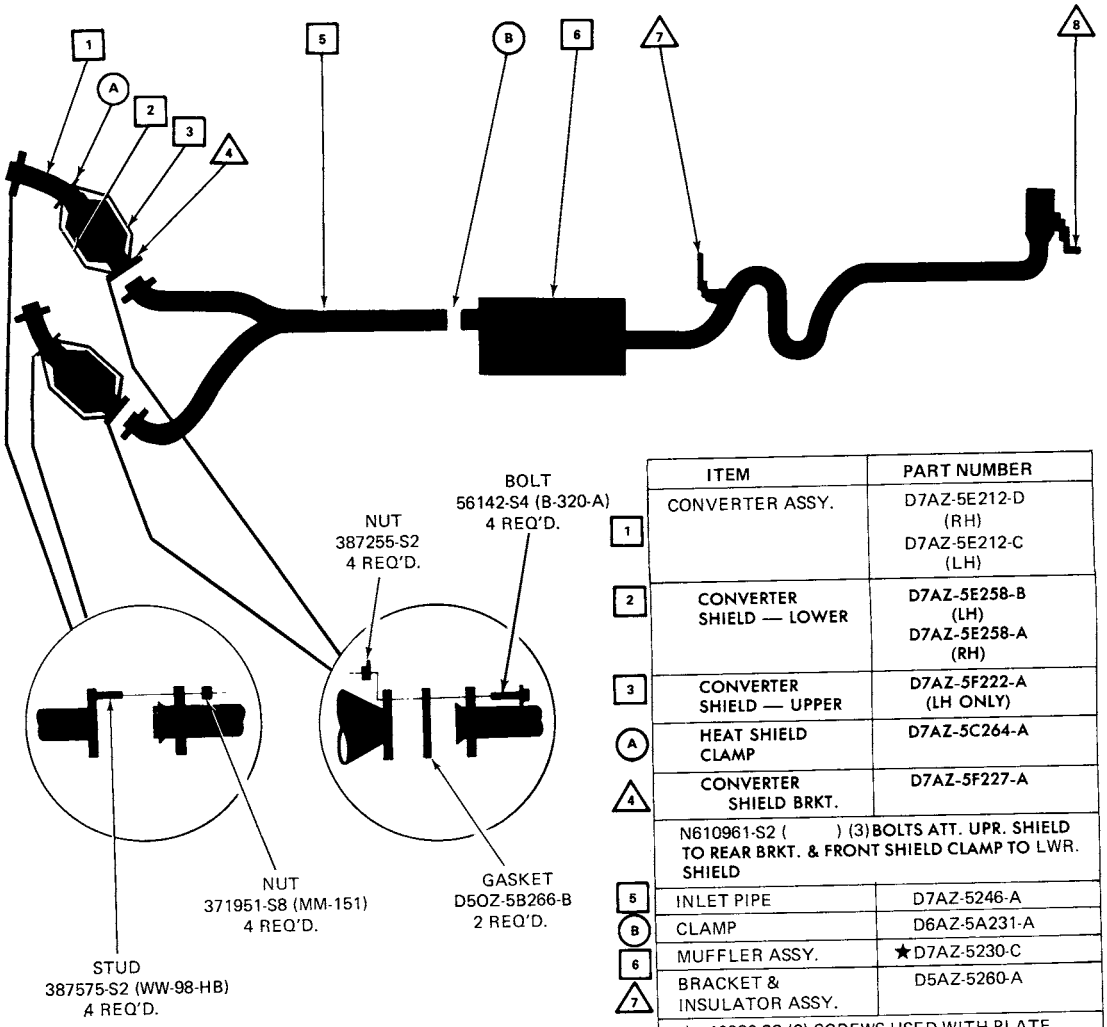

	ITEM	PART NUMBER
1	CONVERTER ASSY.	D7AZ-5E212-D (RH) D7AZ-5E212-C (LH)
2	CONVERTER SHIELD — LOWER	D7AZ-5E258-B (LH) D7AZ-5E258-A (RH)
3	CONVERTER SHIELD — UPPER	D7AZ-5F222-A (LH ONLY)
A	HEAT SHIELD CLAMP	D7AZ-5C264-A
4	CONVERTER SHIELD BRKT.	D7AZ-5F227-A
	N610961-S2 ( ) (3) BOLTS ATT. UPR. SHIELD TO REAR BRKT. & FRONT SHIELD CLAMP TO LWR. SHIELD	
5	INLET PIPE	D7AZ-5246-A
B	CLAMP	D6AZ-5A231-A
6	MUFFLER ASSY.	★D7AZ-5230-C
7	BRACKET & INSULATOR ASSY.	D5AZ-5260-A
	★ 40980-S2 (2) SCREWS USED WITH PLATE ★ 5299 (IMPROVISE) ATT. BRKT. & INS. TO NO. 4 CROSSMEMBER 381877-S2 (UU-52-AF)(2) SCREWS ATT. BRKT. & INS. TO OUTLET PIPE	
8	BRACKET & INSULATOR ASSY.	D5AZ-5260-B
	57644-S2 (U-16-A)(2) SCREWS ATT. BRKT. & INS. TO FRAME ASSY. ★ 40975-S2 (2) SCREWS USED WITH PLATE ★ 5299 (IMPROVISE) ATT. BRKT. & INS. TO OUTLET PIPE	

EG-113

1978 MERCURY — 8 CYL. 7.5L (460 CID)-P/C SEDAN DUAL EXHAUST (WITH CONVERTER)

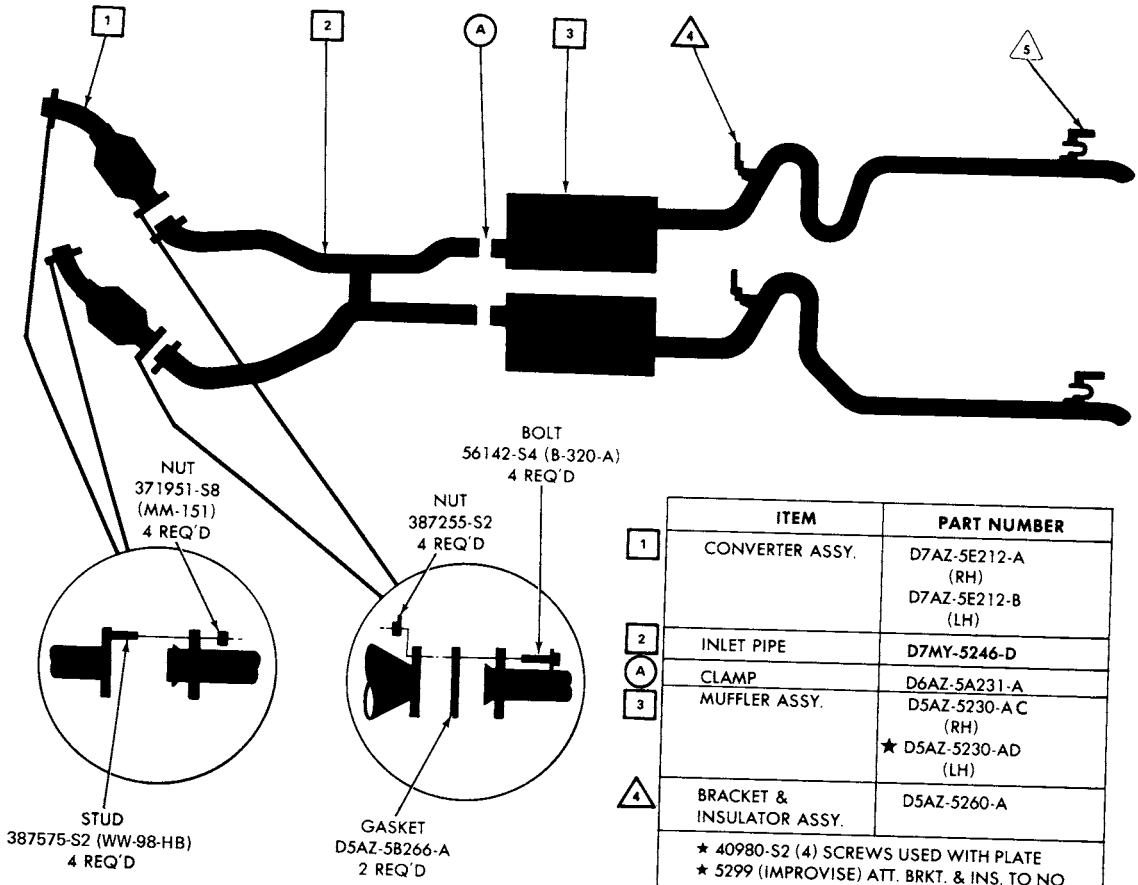

	ITEM	PART NUMBER
1	CONVERTER ASSY.	D7AZ-5E212-A (RH) D7AZ-5E212-B (LH)
2	INLET PIPE	D7MY-5246-D
A	CLAMP	D6AZ-5A231-A
3	MUFFLER ASSY.	D5AZ-5230-AC (RH) ★ D5AZ-5230-AD (LH)
4	BRACKET & INSULATOR ASSY.	D5AZ-5260-A
	★ 40980-S2 (4) SCREWS USED WITH PLATE ★ 5299 (IMPROVISE) ATT. BRKT. & INS. TO NO. 4 CROSSMEMBER 381877-S2 (UU-52-AF) (4) SCREWS ATT. BRKT. & INS. TO OUTLET PIPE	
5	BRACKET & INSULATOR ASSY.	D5AZ-5260-D (RH) D5AZ-5260-E (LH)
	★ 40980-S2 (4) SCREWS ATT. BRKT. & INS. TO FRAME ASSY. 381877-S2 (UU-52-AF) (4) SCREWS ATT. BRKT. & INS. TO OUTLET PIPE	

EG-114

COPYRIGHT © 1986 — FORD MOTOR COMPANY — DEARBORN, MICHIGAN

1978 LINCOLN — 8 CYL. 6.6L (400 CID) (WITH CONVERTER)

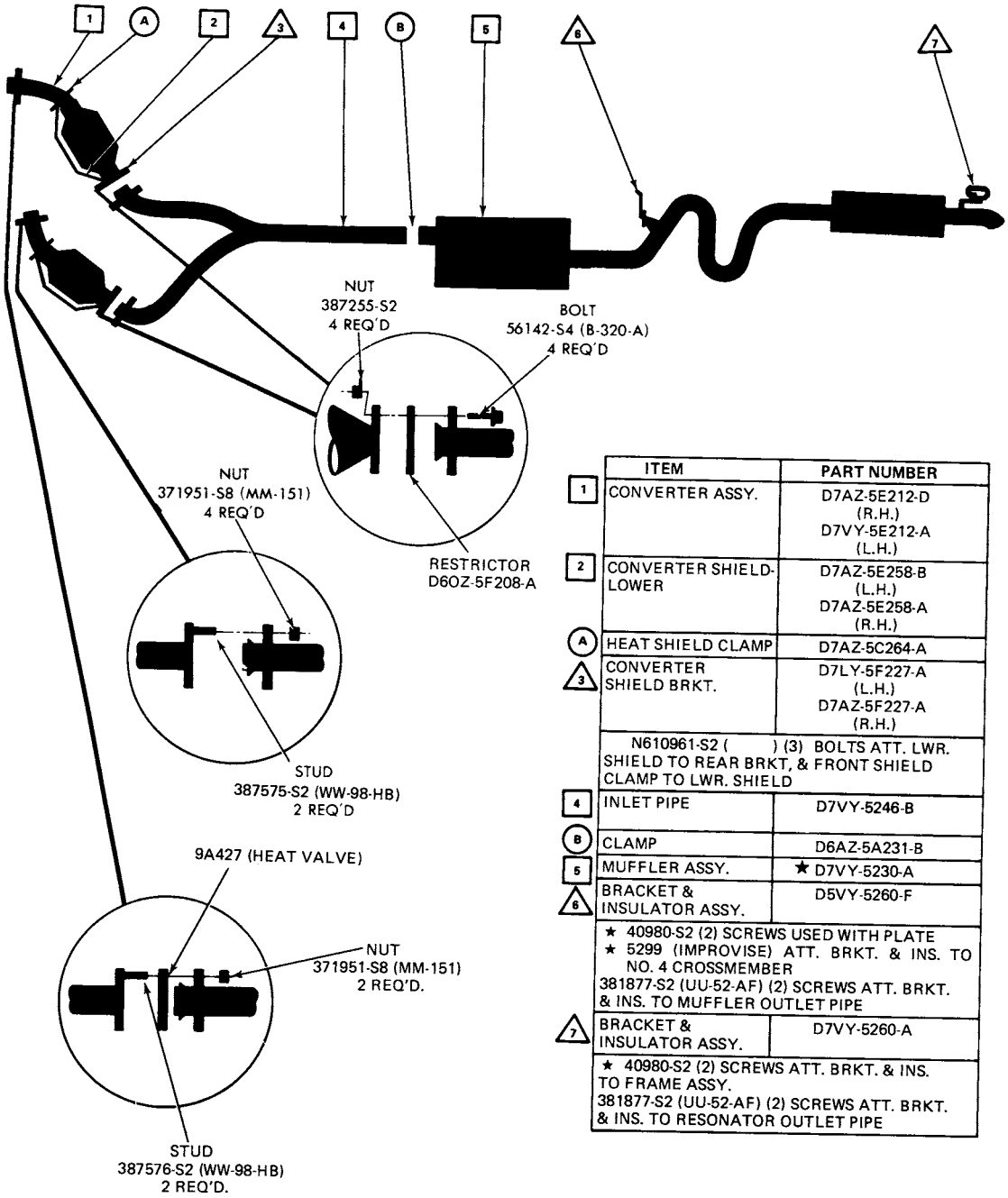

	ITEM	PART NUMBER
1	CONVERTER ASSY.	D7AZ-5E212-D (R.H.) D7VY-5E212-A (L.H.)
2	CONVERTER SHIELD-LOWER	D7AZ-5E258-B (L.H.) D7AZ-5E258-A (R.H.)
A	HEAT SHIELD CLAMP	D7AZ-5C264-A
3	CONVERTER SHIELD BRKT.	D7LY-5F227-A (L.H.) D7AZ-5F227-A (R.H.)
	N610961-S2 ( ) (3) BOLTS ATT. LWR. SHIELD TO REAR BRKT, & FRONT SHIELD CLAMP TO LWR. SHIELD	
4	INLET PIPE	D7VY-5246-B
B	CLAMP	D6AZ-5A231-B
5	MUFFLER ASSY.	★ D7VY-5230-A
6	BRACKET & INSULATOR ASSY.	D5VY-5260-F
	★ 40980-S2 (2) SCREWS USED WITH PLATE ★ 5299 (IMPROVISE) ATT. BRKT. & INS. TO NO. 4 CROSSMEMBER 381877-S2 (UU-52-AF) (2) SCREWS ATT. BRKT. & INS. TO MUFFLER OUTLET PIPE	
7	BRACKET & INSULATOR ASSY.	D7VY-5260-A
	★ 40980-S2 (2) SCREWS ATT. BRKT. & INS. TO FRAME ASSY. 381877-S2 (UU-52-AF) (2) SCREWS ATT. BRKT. & INS. TO RESONATOR OUTLET PIPE	

EJ-21

COPYRIGHT © 1986 — FORD MOTOR COMPANY — DEARBORN, MICHIGAN

1978 LINCOLN-8 CYL. 7.5 L (460 CID) (U.S.A. & CANADA) (WITH 7¼ SHELL LENGTH CONVERTER)

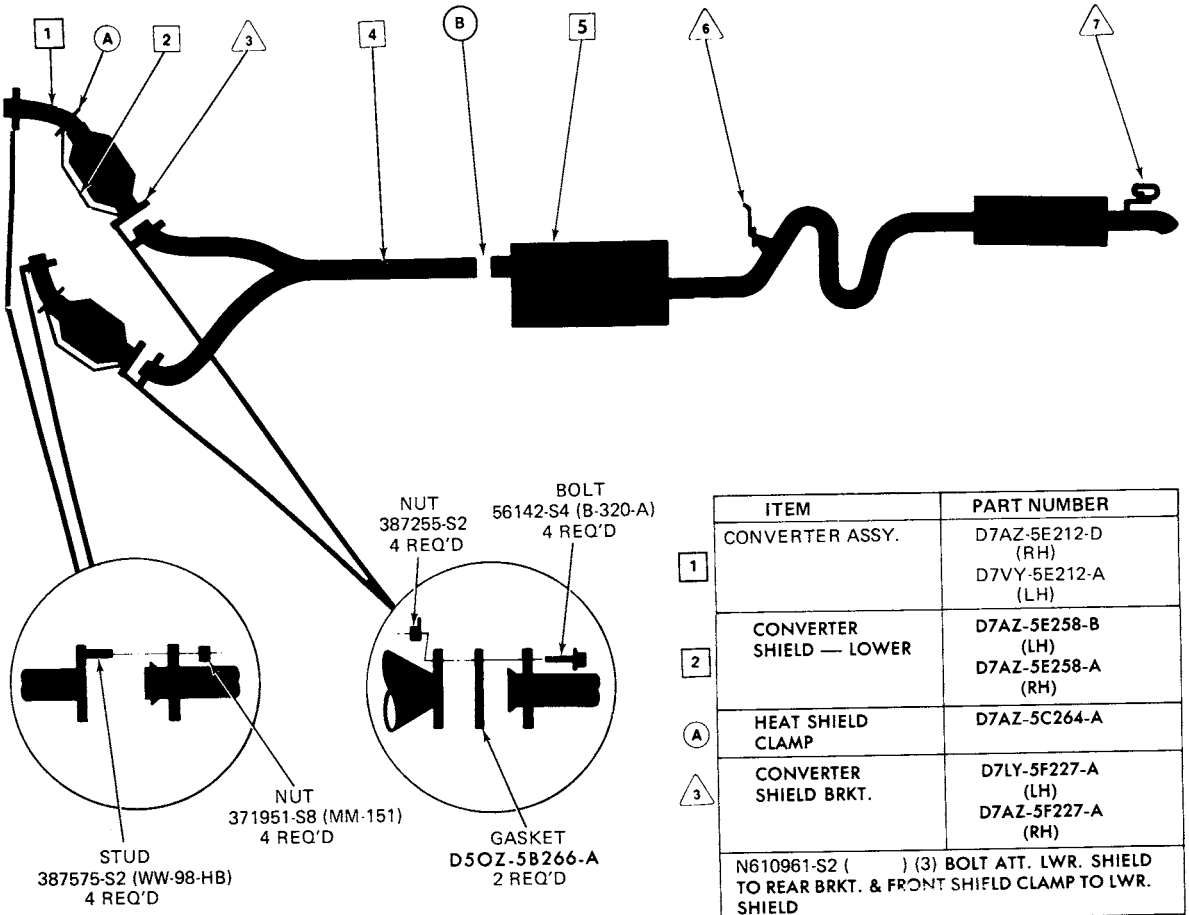

	ITEM	PART NUMBER
1	CONVERTER ASSY.	D7AZ-5E212-D (RH) D7VY-5E212-A (LH)
2	CONVERTER SHIELD — LOWER	D7AZ-5E258-B (LH) D7AZ-5E258-A (RH)
A	HEAT SHIELD CLAMP	D7AZ-5C264-A
3	CONVERTER SHIELD BRKT.	D7LY-5F227-A (LH) D7AZ-5F227-A (RH)
	N610961-S2 ( ) (3) BOLT ATT. LWR. SHIELD TO REAR BRKT. & FRONT SHIELD CLAMP TO LWR. SHIELD	
4	INLET PIPE	D7VY-5246-B
B	CLAMP	D6AZ-5A231-B
5	MUFFLER ASSY.	★ D7VY-5230-B
6	BRACKET & INSULATOR ASSY.	D5VY-5260-F
	★ 40980-S2(2) SCREWS USED WITH PLATE ★ 5299 (IMPROVISE) ATT. BRKT. & INS. TO NO. 4 CROSSMEMBER 381877-S2(UU-52-AF)(2) SCREWS ATT. BRKT. & INS. TO MUFFLER OUTLET PIPE	
7	BRACKET & INSULATOR ASSY.	D5VY-5260-D
	★ 40980-S2(2) SCREWS ATT. BRKT. & INS. TO FRAME ASSY. 381877-S2(UU-52-AF)(2) SCREWS ATT. BRKT. & INS. TO RESONATOR OUTLET PIPE	

1978 LINCOLN-8 CYL. 7.5 L (460 CID) (CANADA ONLY) (WITH 5½ SHELL LENGTH CONVERTER)

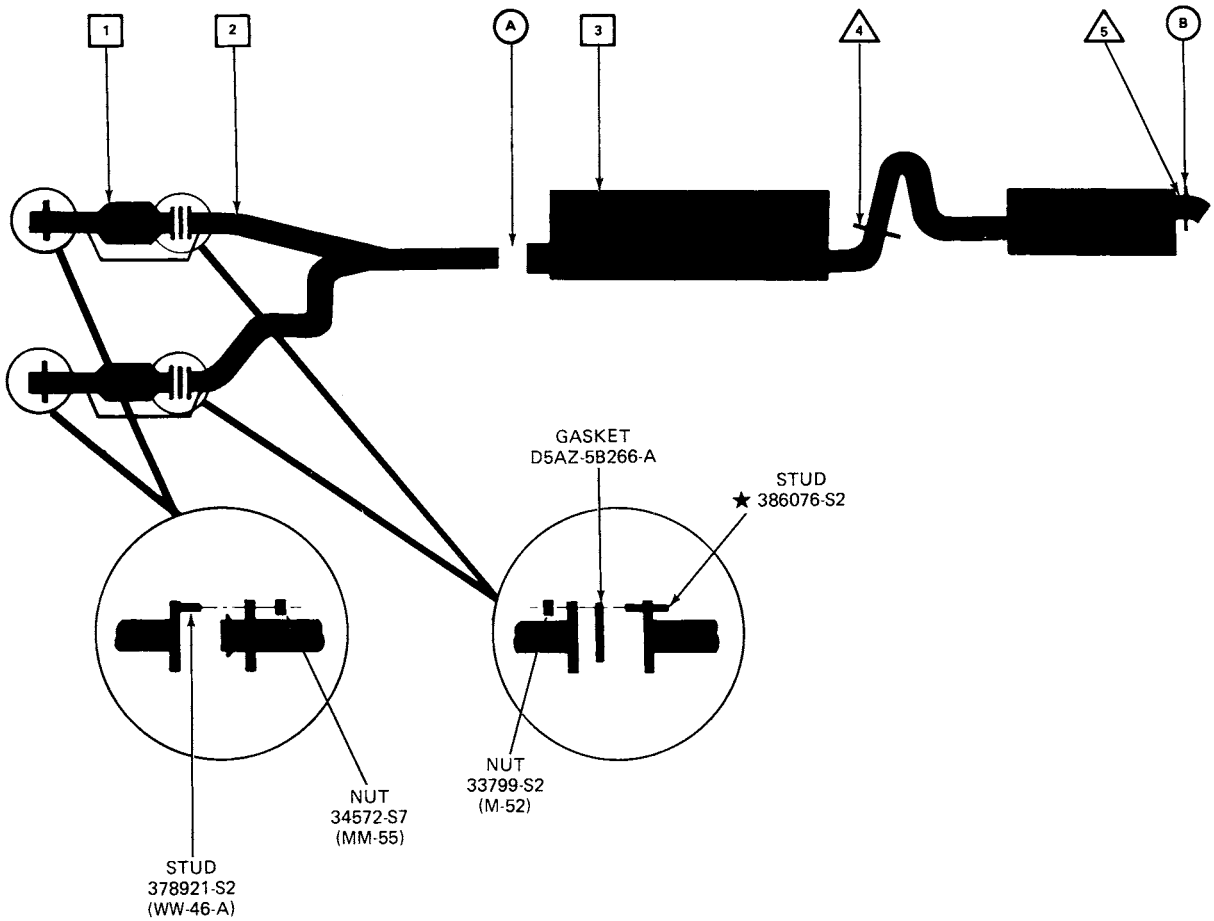

	ITEM	PART NUMBER
1	CONVERTER	D5AZ-5E212-A (R. H.) D5AZ-5E212-F (L. H.)
2	INLET PIPE	D5VY-5246-G
A	CLAMP	D6AZ-5A231-B
3	MUFFLER & RESONATOR	D5VY-5230-H
4	BRACKET & INSULATOR ASSY.	D5VY-5260-F
5	BRACKET & INSULATOR ASSY.	D5VY-5260-D
B	CLAMP	C1TT-5A231-D

EJ-23

COPYRIGHT © 1986 — FORD MOTOR COMPANY — DEARBORN, MICHIGAN

1978 COUGAR — 8 CYL. 5.0L (302 CID) SEDAN (WITH CONVERTER)

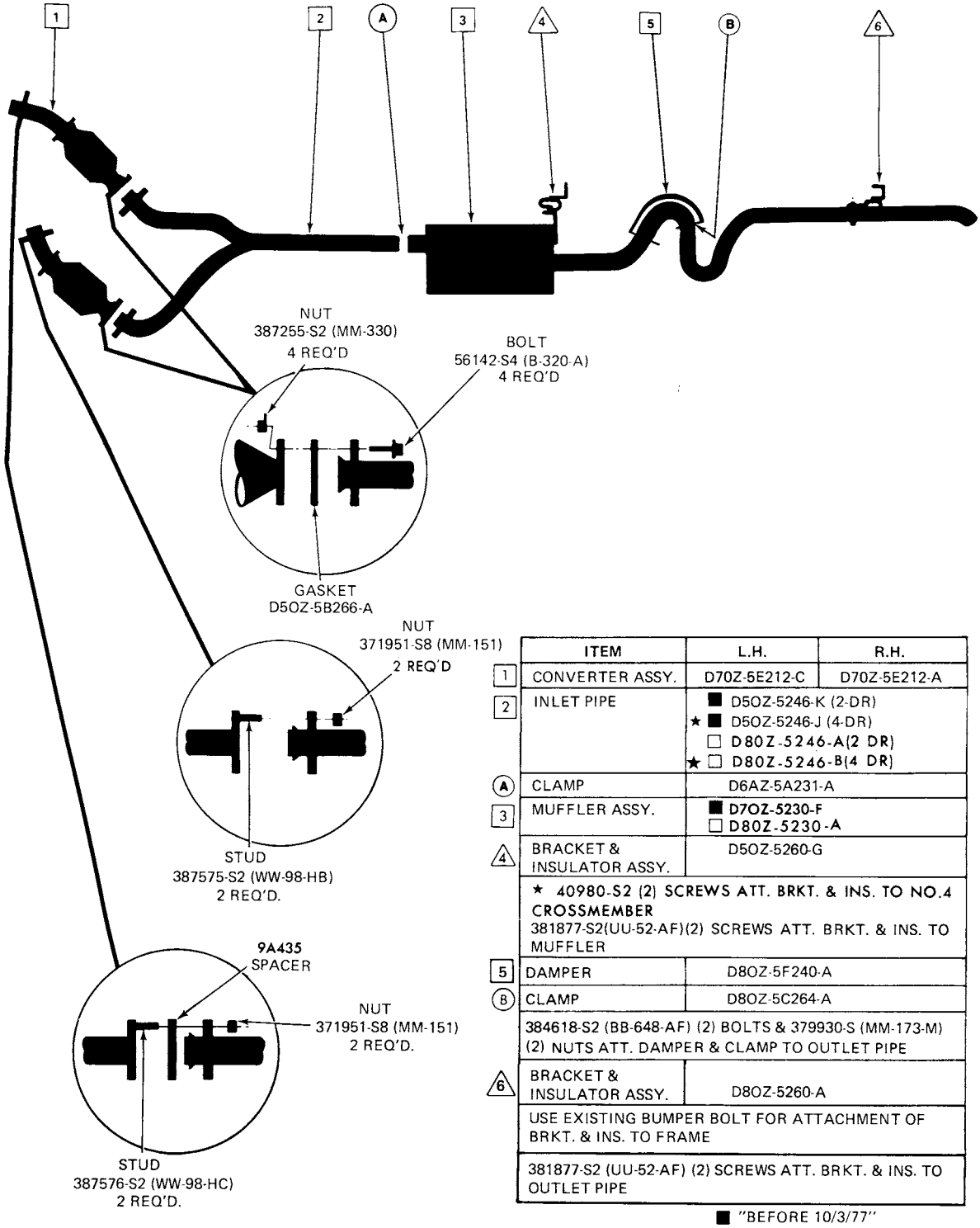

	ITEM	L.H.	R.H.
1	CONVERTER ASSY.	D70Z-5E212-C	D70Z-5E212-A
2	INLET PIPE	■ D5OZ-5246-K (2-DR) ★ ■ D5OZ-5246-J (4-DR) □ D80Z-5246-A(2 DR) ★ □ D80Z-5246-B(4 DR)	
A	CLAMP	D6AZ-5A231-A	
3	MUFFLER ASSY.	■ D7OZ-5230-F □ D80Z-5230-A	
4	BRACKET & INSULATOR ASSY.	D5OZ-5260-G	
	★ 40980-S2 (2) SCREWS ATT. BRKT. & INS. TO NO.4 CROSSMEMBER 381877-S2(UU-52-AF)(2) SCREWS ATT. BRKT. & INS. TO MUFFLER		
5	DAMPER	D8OZ-5F240-A	
B	CLAMP	D8OZ-5C264-A	
	384618-S2 (BB-648-AF) (2) BOLTS & 379930-S (MM-173-M) (2) NUTS ATT. DAMPER & CLAMP TO OUTLET PIPE		
6	BRACKET & INSULATOR ASSY.	D8OZ-5260-A	
	USE EXISTING BUMPER BOLT FOR ATTACHMENT OF BRKT. & INS. TO FRAME		
	381877-S2 (UU-52-AF) (2) SCREWS ATT. BRKT. & INS. TO OUTLET PIPE		

■ "BEFORE 10/3/77"
□ "FROM 10/3/77"

EB-48

COPYRIGHT © 1986 — FORD MOTOR COMPANY — DEARBORN, MICHIGAN

1978 COUGAR — 8 CYL. 5.8L (351 CID)-W SEDAN (WITH CONVERTER)

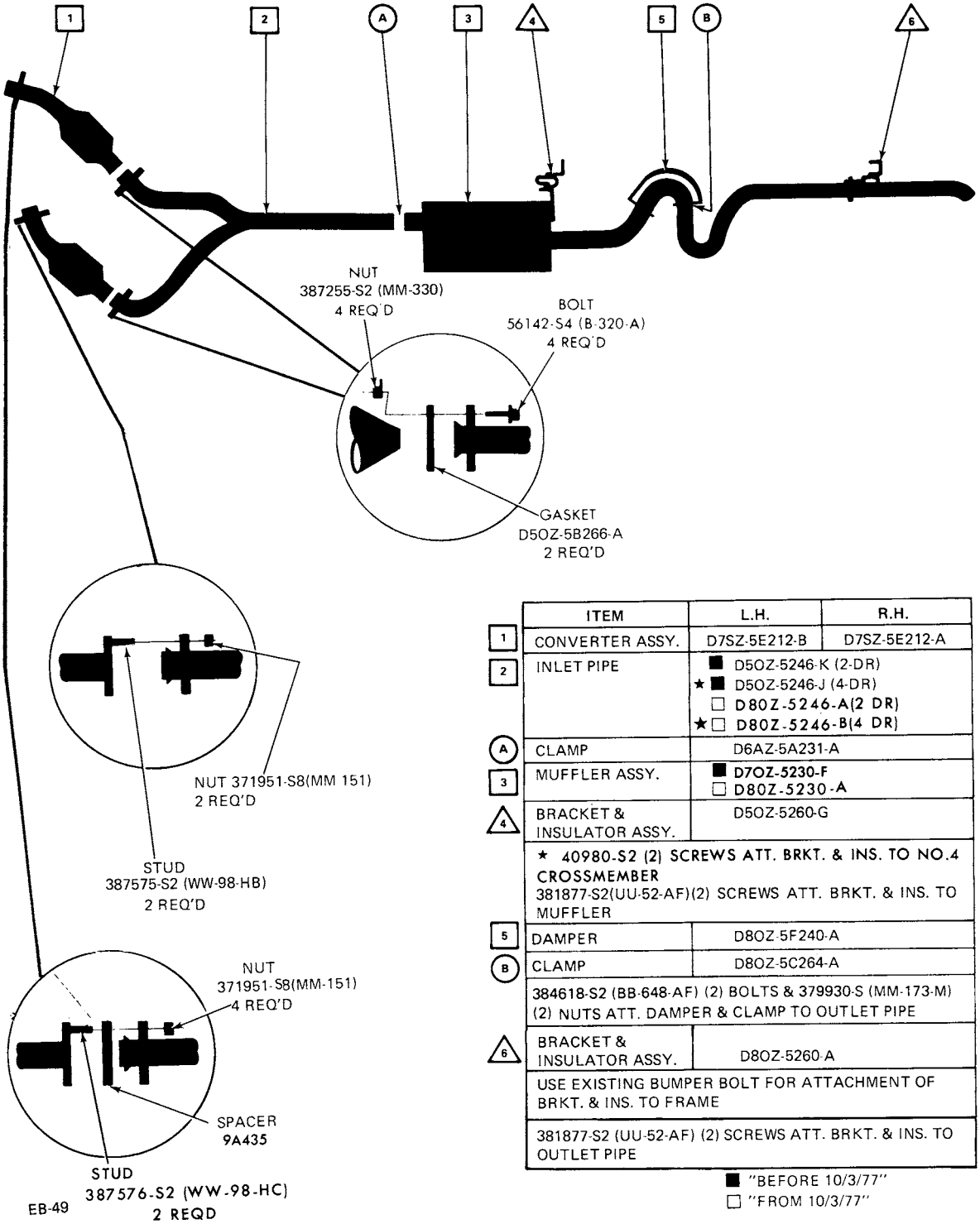

	ITEM	L.H.	R.H.
1	CONVERTER ASSY.	D7SZ-5E212-B	D7SZ-5E212-A
2	INLET PIPE	■ D5OZ-5246-K (2-DR) ★ ■ D5OZ-5246-J (4-DR) □ D80Z-5246-A(2 DR) ★ □ D80Z-5246-B(4 DR)	
A	CLAMP	D6AZ-5A231-A	
3	MUFFLER ASSY.	■ D7OZ-5230-F □ D80Z-5230-A	
4	BRACKET & INSULATOR ASSY.	D5OZ-5260-G	
	★ 40980-S2 (2) SCREWS ATT. BRKT. & INS. TO NO.4 CROSSMEMBER 381877-S2(UU-52-AF)(2) SCREWS ATT. BRKT. & INS. TO MUFFLER		
5	DAMPER	D8OZ-5F240-A	
B	CLAMP	D8OZ-5C264-A	
	384618-S2 (BB-648-AF) (2) BOLTS & 379930-S (MM-173-M) (2) NUTS ATT. DAMPER & CLAMP TO OUTLET PIPE		
6	BRACKET & INSULATOR ASSY.	D8OZ-5260-A	
	USE EXISTING BUMPER BOLT FOR ATTACHMENT OF BRKT. & INS. TO FRAME		
	381877-S2 (UU-52-AF) (2) SCREWS ATT. BRKT. & INS. TO OUTLET PIPE		

■ "BEFORE 10/3/77"
□ "FROM 10/3/77"

1978 COUGAR — 8 CYL. 5.8L (351 CID)-M SEDAN (WITH CONVERTER) (BEFORE 10/3/77)

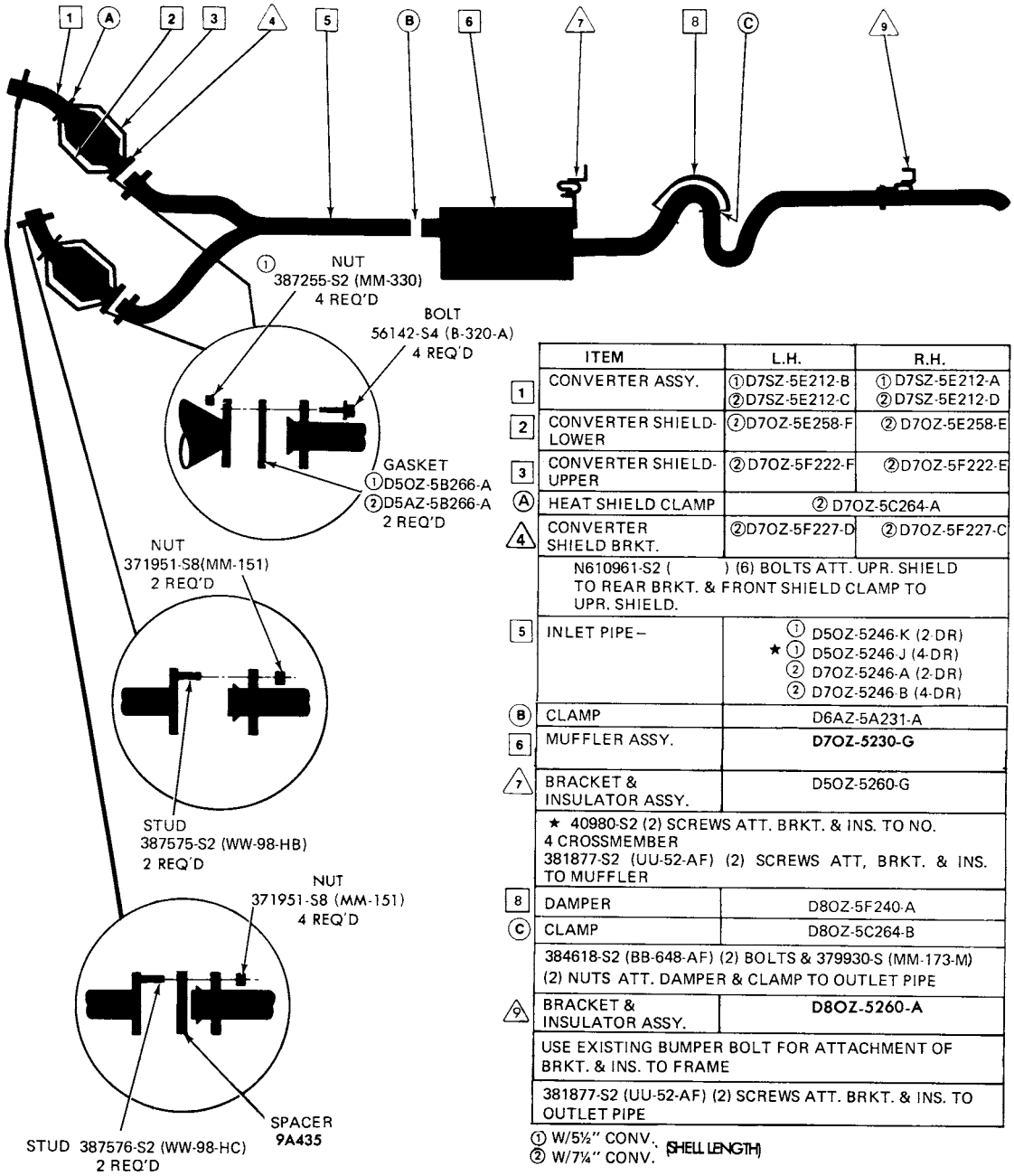

	ITEM	L.H.	R.H.
1	CONVERTER ASSY.	①D7SZ-5E212-B ②D7SZ-5E212-C	①D7SZ-5E212-A ②D7SZ-5E212-D
2	CONVERTER SHIELD-LOWER	②D7OZ-5E258-F	②D7OZ-5E258-E
3	CONVERTER SHIELD-UPPER	②D7OZ-5F222-F	②D7OZ-5F222-E
A	HEAT SHIELD CLAMP	② D7OZ-5C264-A	
4	CONVERTER SHIELD BRKT.	②D7OZ-5F227-D	②D7OZ-5F227-C
	N610961-S2 ( ) (6) BOLTS ATT. UPR. SHIELD TO REAR BRKT. & FRONT SHIELD CLAMP TO UPR. SHIELD.		
5	INLET PIPE–	① D5OZ-5246-K (2-DR) ★ ① D5OZ-5246-J (4-DR) ② D7OZ-5246-A (2-DR) ② D7OZ-5246-B (4-DR)	
B	CLAMP	D6AZ-5A231-A	
6	MUFFLER ASSY.	**D7OZ-5230-G**	
7	BRACKET & INSULATOR ASSY.	D5OZ-5260-G	
	★ 40980-S2 (2) SCREWS ATT. BRKT. & INS. TO NO. 4 CROSSMEMBER 381877-S2 (UU-52-AF) (2) SCREWS ATT, BRKT. & INS. TO MUFFLER		
8	DAMPER	D8OZ-5F240-A	
C	CLAMP	D8OZ-5C264-B	
	384618-S2 (BB-648-AF) (2) BOLTS & 379930-S (MM-173-M) (2) NUTS ATT. DAMPER & CLAMP TO OUTLET PIPE		
9	BRACKET & INSULATOR ASSY.	**D8OZ-5260-A**	
	USE EXISTING BUMPER BOLT FOR ATTACHMENT OF BRKT. & INS. TO FRAME		
	381877-S2 (UU-52-AF) (2) SCREWS ATT. BRKT. & INS. TO OUTLET PIPE		

① W/5½" CONV.
② W/7¼" CONV. (SHELL LENGTH)

EB-50

COPYRIGHT © 1986 — FORD MOTOR COMPANY — DEARBORN, MICHIGAN

1978 COUGAR-8 CYL. 5.8L (351 CID)-M SEDAN (WITH CONVERTER) (FROM 10/3/77)

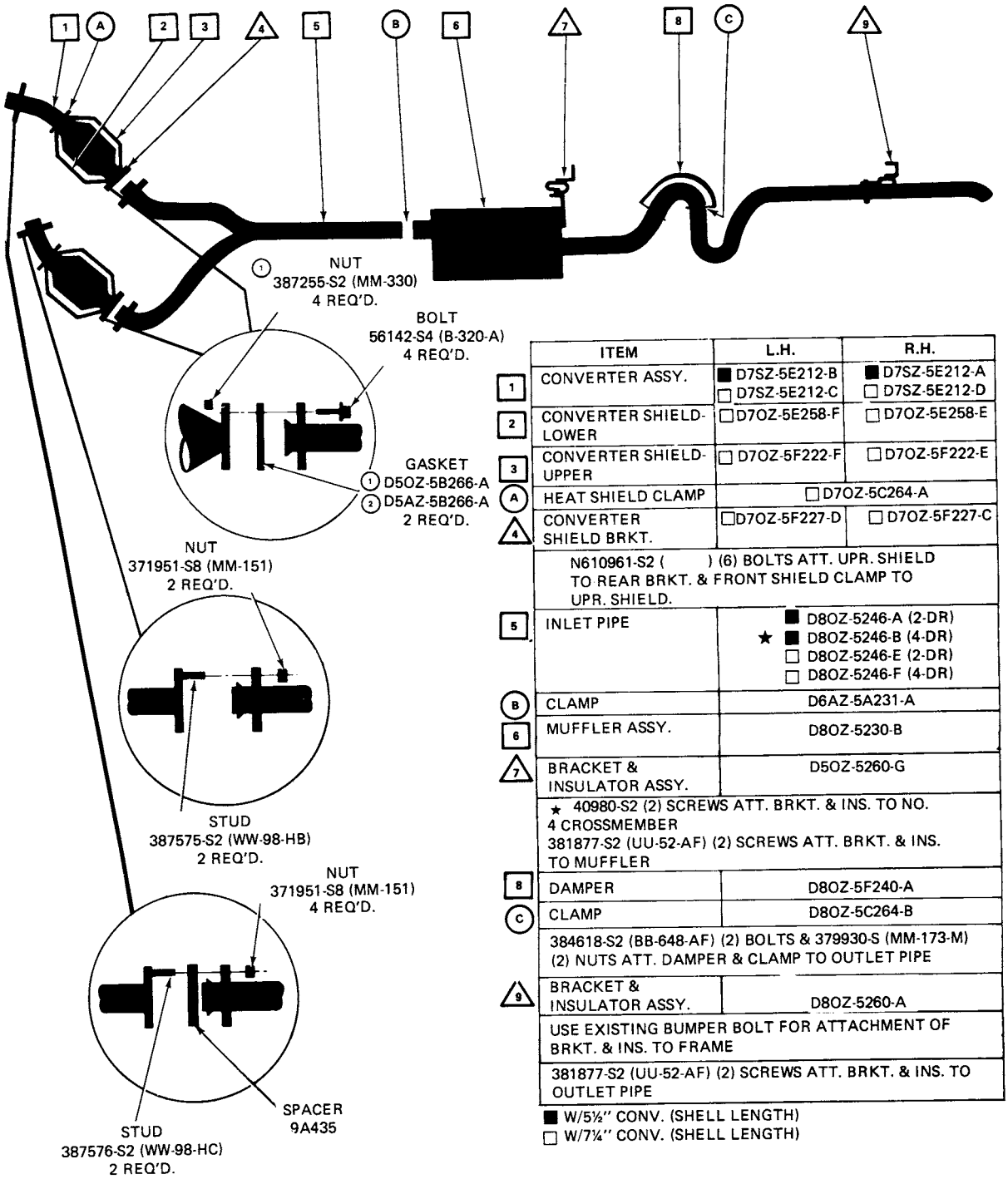

	ITEM	L.H.	R.H.
1	CONVERTER ASSY.	■ D7SZ-5E212-B □ D7SZ-5E212-C	■ D7SZ-5E212-A □ D7SZ-5E212-D
2	CONVERTER SHIELD-LOWER	□ D7OZ-5E258-F	□ D7OZ-5E258-E
3	CONVERTER SHIELD-UPPER	□ D7OZ-5F222-F	□ D7OZ-5F222-E
A	HEAT SHIELD CLAMP	□ D7OZ-5C264-A	
4	CONVERTER SHIELD BRKT.	□ D7OZ-5F227-D	□ D7OZ-5F227-C
	N610961-S2 ( ) (6) BOLTS ATT. UPR. SHIELD TO REAR BRKT. & FRONT SHIELD CLAMP TO UPR. SHIELD.		
5	INLET PIPE	■ D8OZ-5246-A (2-DR) ★ ■ D8OZ-5246-B (4-DR) □ D8OZ-5246-E (2-DR) □ D8OZ-5246-F (4-DR)	
B	CLAMP	D6AZ-5A231-A	
6	MUFFLER ASSY.	D8OZ-5230-B	
7	BRACKET & INSULATOR ASSY.	D5OZ-5260-G	
	★ 40980-S2 (2) SCREWS ATT. BRKT. & INS. TO NO. 4 CROSSMEMBER 381877-S2 (UU-52-AF) (2) SCREWS ATT. BRKT. & INS. TO MUFFLER		
8	DAMPER	D8OZ-5F240-A	
C	CLAMP	D8OZ-5C264-B	
	384618-S2 (BB-648-AF) (2) BOLTS & 379930-S (MM-173-M) (2) NUTS ATT. DAMPER & CLAMP TO OUTLET PIPE		
9	BRACKET & INSULATOR ASSY.	D8OZ-5260-A	
	USE EXISTING BUMPER BOLT FOR ATTACHMENT OF BRKT. & INS. TO FRAME		
	381877-S2 (UU-52-AF) (2) SCREWS ATT. BRKT. & INS. TO OUTLET PIPE		

■ W/5½" CONV. (SHELL LENGTH)
□ W/7¼" CONV. (SHELL LENGTH)

1978 COUGAR — 8 CYL. 5.8L (351 CID)-M SEDAN
(W/O CONVERTER)

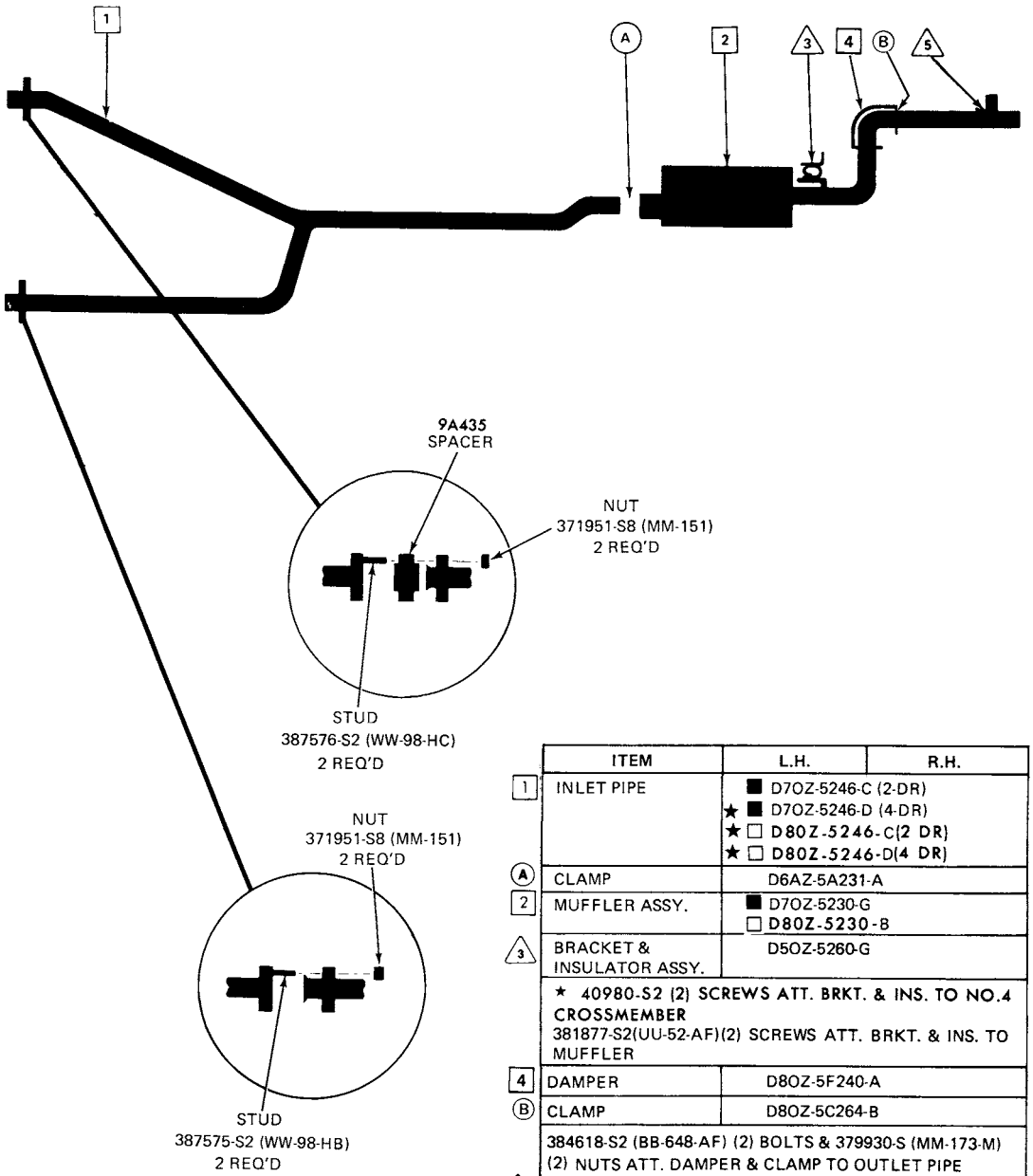

	ITEM	L.H.	R.H.
1	INLET PIPE	■ D7OZ-5246-C (2-DR) ★ ■ D7OZ-5246-D (4-DR) ★ □ D80Z-5246-C(2 DR) ★ □ D80Z-5246-D(4 DR)	
A	CLAMP	D6AZ-5A231-A	
2	MUFFLER ASSY.	■ D7OZ-5230-G □ D80Z-5230-B	
3	BRACKET & INSULATOR ASSY.	D5OZ-5260-G	
	★ 40980-S2 (2) SCREWS ATT. BRKT. & INS. TO NO.4 CROSSMEMBER 381877-S2(UU-52-AF)(2) SCREWS ATT. BRKT. & INS. TO MUFFLER		
4	DAMPER	D8OZ-5F240-A	
B	CLAMP	D8OZ-5C264-B	
	384618-S2 (BB-648-AF) (2) BOLTS & 379930-S (MM-173-M) (2) NUTS ATT. DAMPER & CLAMP TO OUTLET PIPE		
5	BRACKET & INSULATOR ASSY.	D8OZ-5260-A	
	USE EXISTING BUMPER BOLT FOR ATTACHMENT OF BRKT. & INS. TO FRAME		

■ "BEFORE 10/3/77"
□ "FROM 10/3/77"

EB-51

COPYRIGHT © 1986 — FORD MOTOR COMPANY — DEARBORN, MICHIGAN

1973/79 LINCOLN-MERCURY CARS

1978 COUGAR — 8 CYL. 6.6L (400 CID) SEDAN (WITH CONVERTER) (BEFORE 10/3/77)

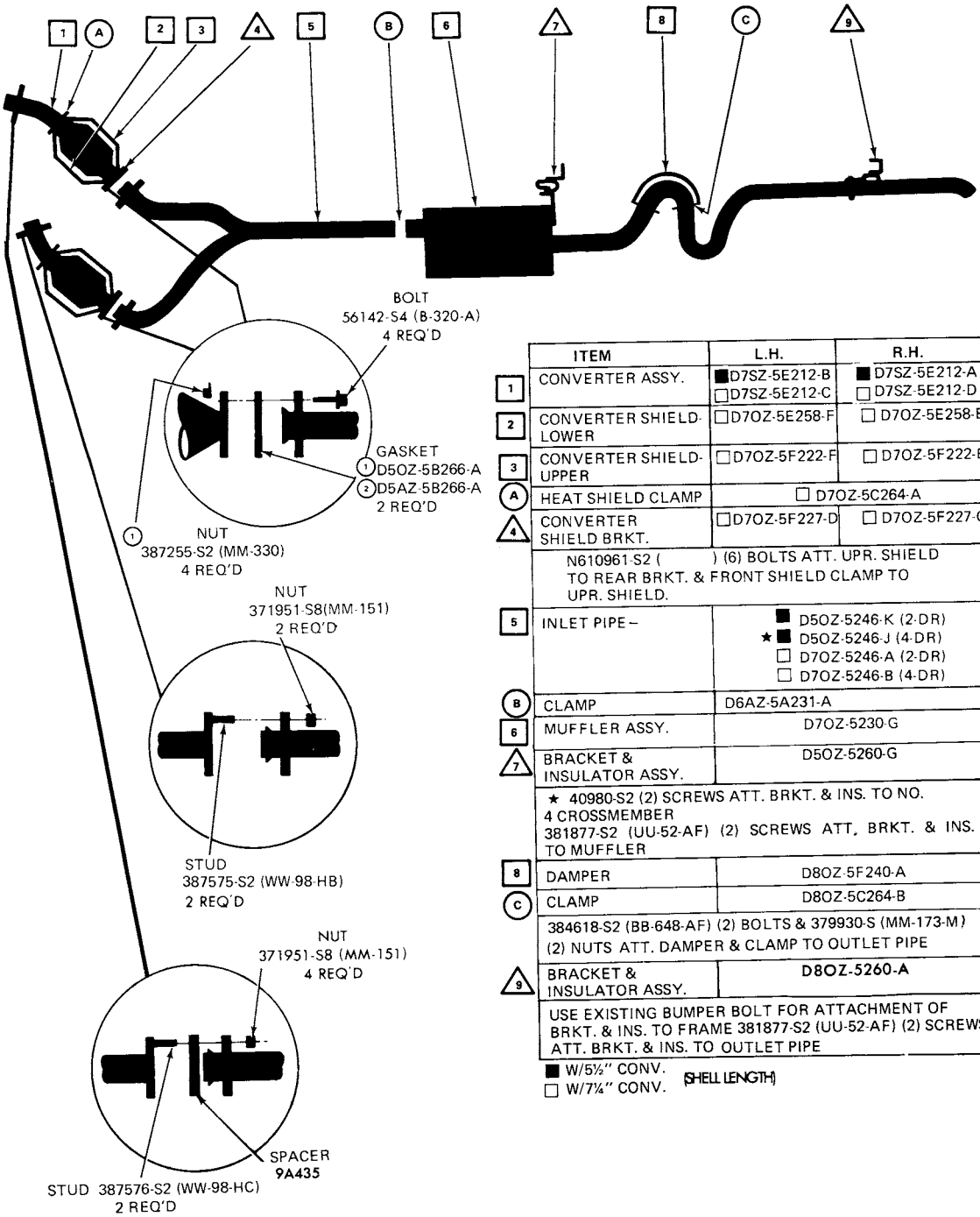

	ITEM	L.H.	R.H.
1	CONVERTER ASSY.	■ D7SZ-5E212-B □ D7SZ-5E212-C	■ D7SZ-5E212-A □ D7SZ-5E212-D
2	CONVERTER SHIELD-LOWER	□ D7OZ-5E258-F	□ D7OZ-5E258-E
3	CONVERTER SHIELD-UPPER	□ D7OZ-5F222-F	□ D7OZ-5F222-E
A	HEAT SHIELD CLAMP	□ D7OZ-5C264-A	
4	CONVERTER SHIELD BRKT.	□ D7OZ-5F227-D	□ D7OZ-5F227-C
	N610961-S2 ( ) (6) BOLTS ATT. UPR. SHIELD TO REAR BRKT. & FRONT SHIELD CLAMP TO UPR. SHIELD.		
5	INLET PIPE –	■ D5OZ-5246-K (2-DR) ★ ■ D5OZ-5246-J (4-DR) □ D7OZ-5246-A (2-DR) □ D7OZ-5246-B (4-DR)	
B	CLAMP	D6AZ-5A231-A	
6	MUFFLER ASSY.	D7OZ-5230-G	
7	BRACKET & INSULATOR ASSY.	D5OZ-5260-G	
	★ 40980-S2 (2) SCREWS ATT. BRKT. & INS. TO NO. 4 CROSSMEMBER 381877-S2 (UU-52-AF) (2) SCREWS ATT. BRKT. & INS. TO MUFFLER		
8	DAMPER	D8OZ-5F240-A	
C	CLAMP	D8OZ-5C264-B	
	384618-S2 (BB-648-AF) (2) BOLTS & 379930-S (MM-173-M) (2) NUTS ATT. DAMPER & CLAMP TO OUTLET PIPE		
9	BRACKET & INSULATOR ASSY.	D8OZ-5260-A	
	USE EXISTING BUMPER BOLT FOR ATTACHMENT OF BRKT. & INS. TO FRAME 381877-S2 (UU-52-AF) (2) SCREWS ATT. BRKT. & INS. TO OUTLET PIPE		

■ W/5½" CONV.
□ W/7¼" CONV. (SHELL LENGTH)

EB-56

1978 COUGAR-8 CYL. 6.6L (400 CID) SEDAN (WITH CONVERTER) (FROM 10/3/77)

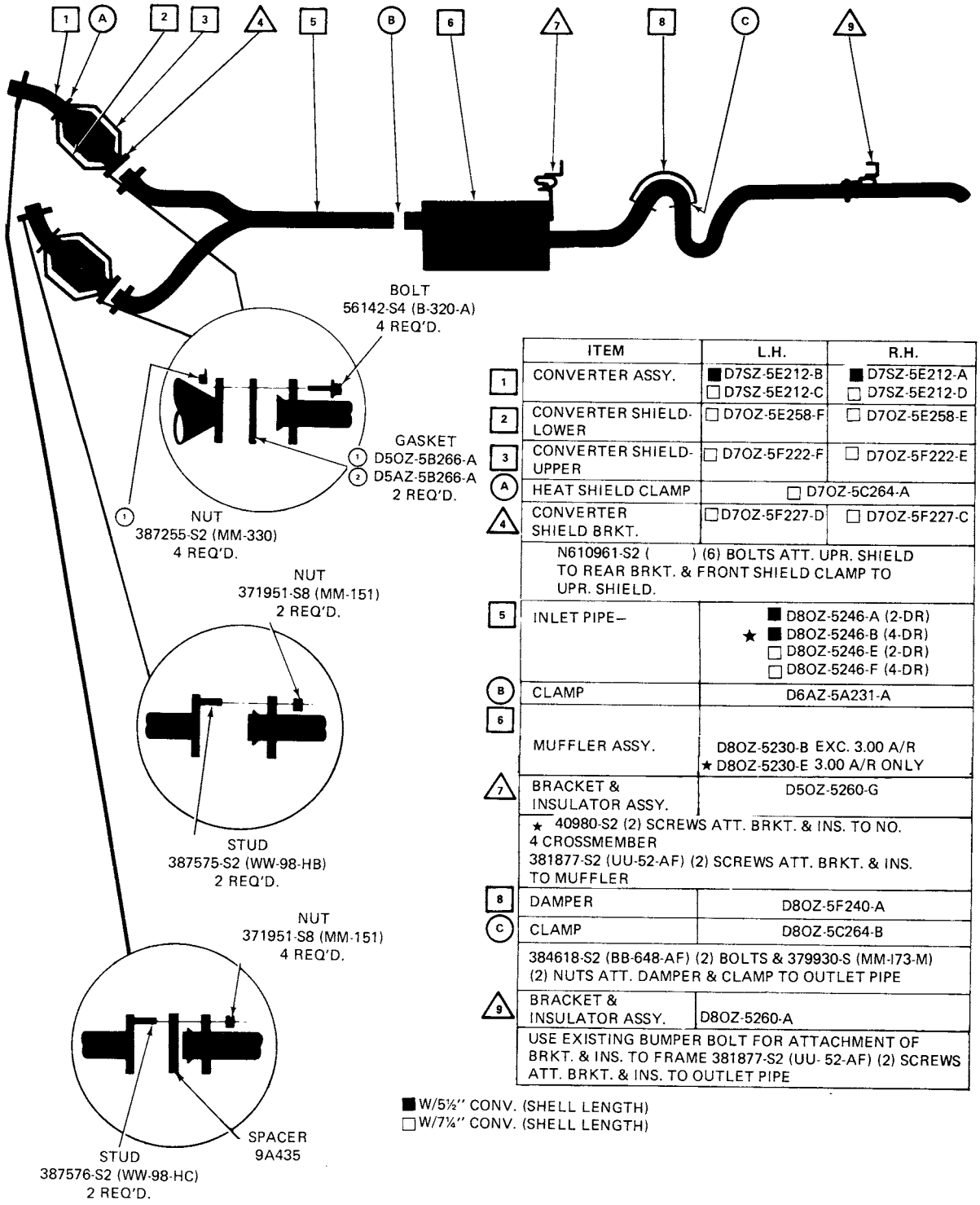

	ITEM	L.H.	R.H.
1	CONVERTER ASSY.	■ D7SZ-5E212-B □ D7SZ-5E212-C	■ D7SZ-5E212-A □ D7SZ-5E212-D
2	CONVERTER SHIELD-LOWER	□ D7OZ-5E258-F	□ D7OZ-5E258-E
3	CONVERTER SHIELD-UPPER	□ D7OZ-5F222-F	□ D7OZ-5F222-E
A	HEAT SHIELD CLAMP	□ D7OZ-5C264-A	
4	CONVERTER SHIELD BRKT.	□ D7OZ-5F227-D	□ D7OZ-5F227-C
	N610961-S2 ( ) (6) BOLTS ATT. UPR. SHIELD TO REAR BRKT. & FRONT SHIELD CLAMP TO UPR. SHIELD.		
5	INLET PIPE—	■ D8OZ-5246-A (2-DR) ★ ■ D8OZ-5246-B (4-DR) □ D8OZ-5246-E (2-DR) □ D8OZ-5246-F (4-DR)	
B	CLAMP	D6AZ-5A231-A	
6	MUFFLER ASSY.	D8OZ-5230-B EXC. 3.00 A/R ★ D8OZ-5230-E 3.00 A/R ONLY	
7	BRACKET & INSULATOR ASSY.	D5OZ-5260-G	
	★ 40980-S2 (2) SCREWS ATT. BRKT. & INS. TO NO. 4 CROSSMEMBER 381877-S2 (UU-52-AF) (2) SCREWS ATT. BRKT. & INS. TO MUFFLER		
8	DAMPER	D8OZ-5F240-A	
C	CLAMP	D8OZ-5C264-B	
	384618-S2 (BB-648-AF) (2) BOLTS & 379930-S (MM-173-M) (2) NUTS ATT. DAMPER & CLAMP TO OUTLET PIPE		
9	BRACKET & INSULATOR ASSY.	D8OZ-5260-A	
	USE EXISTING BUMPER BOLT FOR ATTACHMENT OF BRKT. & INS. TO FRAME 381877-S2 (UU-52-AF) (2) SCREWS ATT. BRKT. & INS. TO OUTLET PIPE		

■ W/5½" CONV. (SHELL LENGTH)
□ W/7¼" CONV. (SHELL LENGTH)

COPYRIGHT © 1986 — FORD MOTOR COMPANY — DEARBORN, MICHIGAN

1978 MONARCH — 6 CYL. 4.1L (250 CID) SEDAN (WITH CONVERTER)

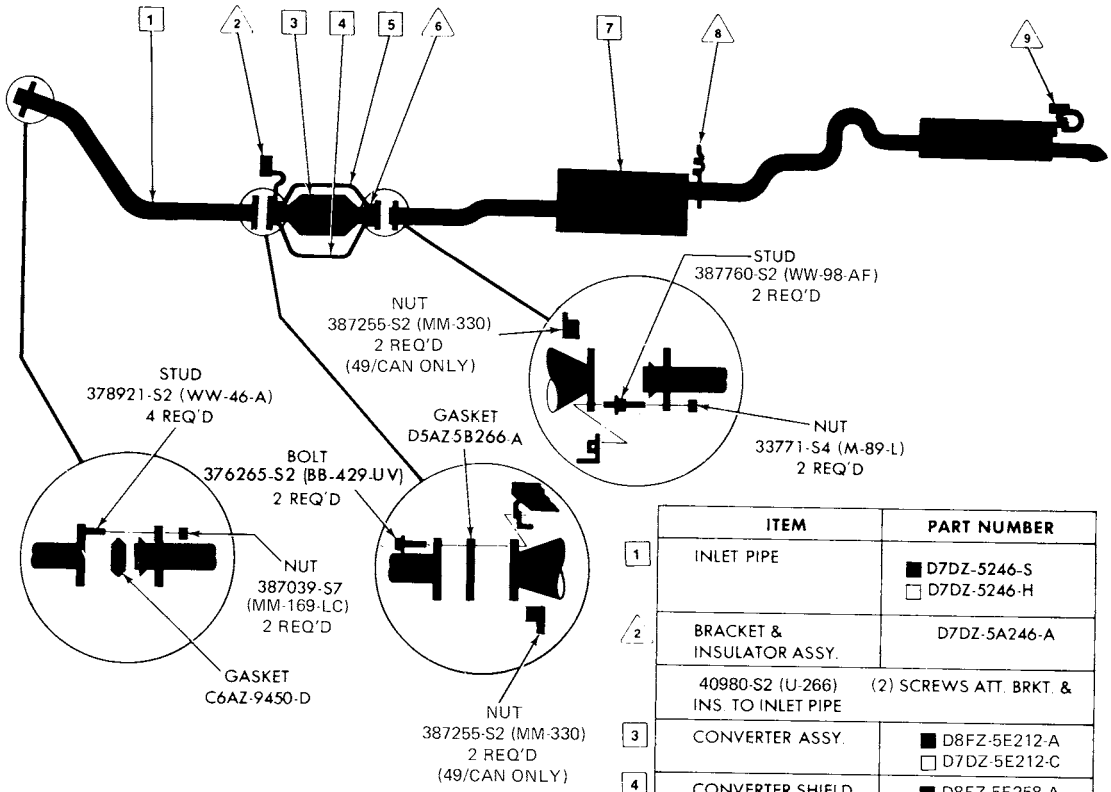

	ITEM	PART NUMBER
1	INLET PIPE	■ D7DZ-5246-S □ D7DZ-5246-H
2	BRACKET & INSULATOR ASSY.	D7DZ-5A246-A
	40980-S2 (U-266) (2) SCREWS ATT. BRKT. & INS. TO INLET PIPE	
3	CONVERTER ASSY.	■ D8FZ-5E212-A □ D7DZ-5E212-C
4	CONVERTER SHIELD-LOWER	■ D8FZ-5E258-A □ D7FZ-5E258-B
5	CONVERTER SHIELD-UPPER	■ D8FZ-5F222-A □ D7FZ-5F222-E
6	CONVERTER SHIELD BRKT.	■ NOT REQ'D □ D7FZ-5F227-A
	55914-S2 (U-254-F) (6) SCREWS ATT. CONV. SHIELDS TO BRKT. OR CONV. HSG.	
7	MUFFLER ASSY.	■ D8DZ-5230-F □ D8DZ-5230-E
8	BRACKET & INSULATOR ASSY.	● D8DZ-5260-B ▲ D9DZ-5260-A
	381877-S2 (UU-52-AF) (2) SCREWS ATT. BRKT. & INS. TO FRT. MFLR. 382347-S2 (BB-905) (2) SCREWS ATT. BRKT. & INS. TO UNDERBODY	
9	BRACKET & INSULATOR ASSY.	D7DZ-5260-A
	381877-S2 (UU-52-AF) (4) SCREWS ATT. BRKT. & INS. TO RR. MFLR. 39909-S7 (U-269-D) (2) SCREWS ATT. BRKT. & INS. TO SIDE MEMBER	

■ 7 1/4" CAT. CONV
□ 12" CAT. CONV
(SHELL LENGTH)
▲ FROM 5-7-79
● BEFORE 5-7-79

EV-19

COPYRIGHT © 1986 — FORD MOTOR COMPANY — DEARBORN, MICHIGAN

1978 MONARCH — 8 CYL. 5.0L (302 CID) SEDAN (WITH CONVERTER)

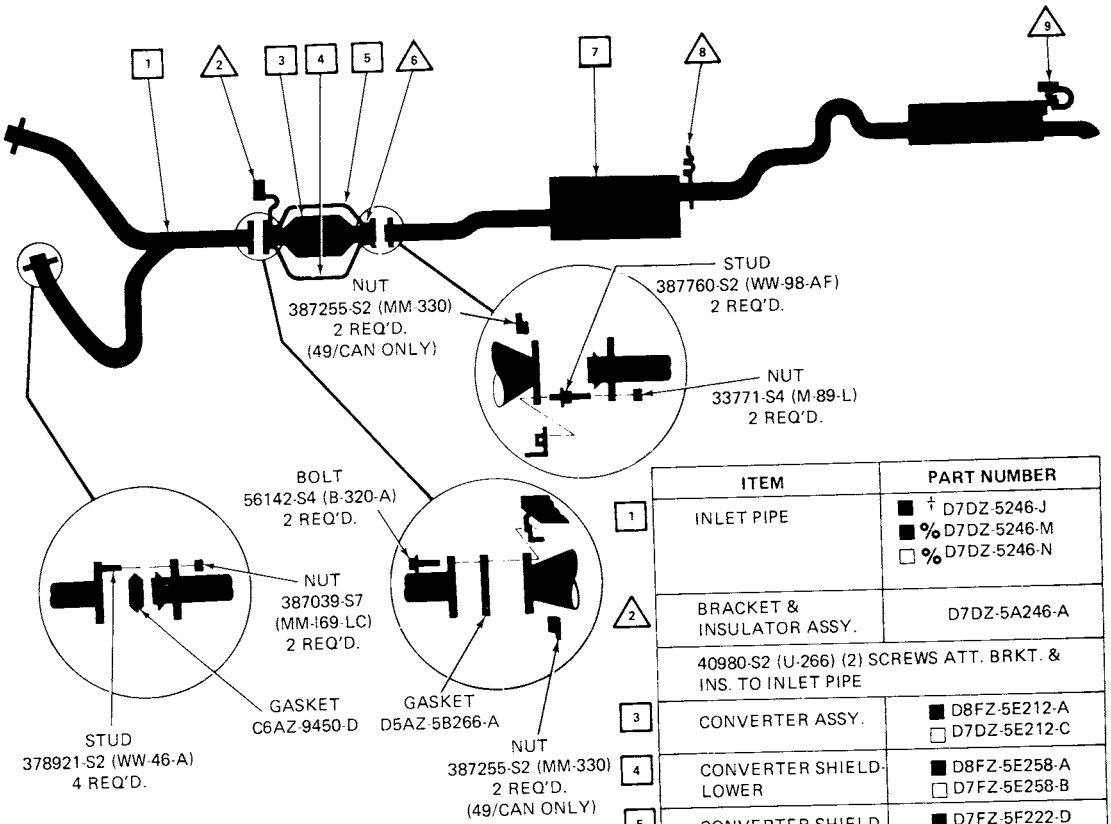

	ITEM	PART NUMBER
1	INLET PIPE	■ † D7DZ-5246-J ■ % D7DZ-5246-M □ % D7DZ-5246-N
2	BRACKET & INSULATOR ASSY.	D7DZ-5A246-A
	40980-S2 (U-266) (2) SCREWS ATT. BRKT. & INS. TO INLET PIPE	
3	CONVERTER ASSY.	■ D8FZ-5E212-A □ D7DZ-5E212-C
4	CONVERTER SHIELD-LOWER	■ D8FZ-5E258-A □ D7FZ-5E258-B
5	CONVERTER SHIELD-UPPER	■ D7FZ-5F222-D □ D7FZ-5F222-E
6	CONVERTER SHIELD BRKT.	■ NOT REQ'D. □ D7FZ-5F227-A
	55914-S2 (U-254-F) (6) SCREWS ATT. CONV. SHIELDS TO BRKT. OR CONV. HSG.	
7	MUFFLER ASSY.	★ ■ D8DZ-5230-D □ D8DZ-5230-C
8	BRACKET & INSULATOR ASSY.	D8DZ-5260-B
	381877-S2 (UU-52-AF) (2) SCREWS ATT. BRKT. & INS. TO FRT. MFLR. 382347-S2 (BB-905) (2) SCREWS ATT. BRKT. & INS. TO UNDERBODY	
9	BRACKET & INSULATOR ASSY.	D7DZ-5260-A
	381877-S2 (UU-52-AF) (4) SCREWS ATT. BRKT. & INS. TO RR. MFLR. & SIDE MEMBER 39909-S7 (U-269-D) (2) SCREWS ATT. BRKT. & INS. TO SIDE MEMBER	

■ W/7¼" CAT. CONV. (SHELL LENGTH)
□ W/12" CAT. CONV. (SHELL LENGTH)
† MAN. TRANS.
% AUTO TRANS.

1978 CAPRI — 4 CYL. 2.3L (140 CID)

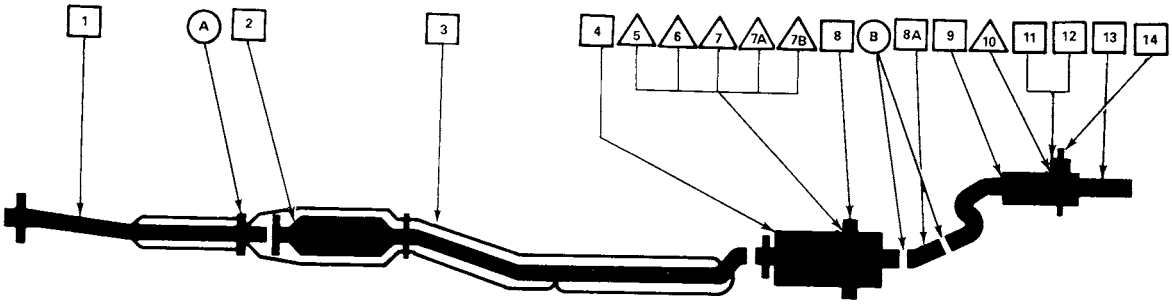

	ITEM	PART NUMBER
1	INLET PIPE	D7RY-5246-E # 77EB-5245-DA
	STUD D804442-S76 & NUT E820015-S72 ATT. INLET PIPE TO MANIFOLD	
2	CONVERTER	● D6RY-5E212-D # 77EB-5E211-CA, CC † D6RY-5E212-E # 77EB-5E211-DA, DC
3	CONVERTER SHIELD	● D6RY-5E258-A #77EB-5E258-AA,AB † D6RY-5E258-B #77EB-5E258-BA,BB
A	CLAMP EXHAUST HEAT SHIELD	D5RY-5C264-A # 75EB-5C264-AA
4	MUFFLER—FRONT	D5RY-5230-E # 75EB-5230-AA # 75EB-5232-BA
5	CLAMP MUFFLER SUPPORT	D5RY-5A215-B (EXC. CALIF.) D5RY-5A215-C # 71EB-5A215-B (CALIF. ONLY)
6	U-BOLT MUFFLER SUPPORT	D5RY-5C223-C # 71EB-5C223-DA
	SCREW E-600214-S72 & WASHER E-830218-S100 USED WITH 5C233	
7	BRACKET MUFFLER HANGER	★ D5RY-5A261-A # 75EB-5A261-AA (AUTO. TRANS.) D5RY-5A261-B # 75EB-5A261-BA (MAN. TRANS.)
7A	INSULATOR MUFFLER SUPPORT	D8RZ-5281-A

	ITEM	PART NUMBER
7B	BODY BRACKET FRONT MUFFLER	D2RY-5277-F
	SCREW E-602187-S(AB-17) ATTACH 5277 TO FLOOR	
8	MUFFLER HEAT SHIELD	D5RY-5E290-A
B	CLAMP	D5RY-5A231-B
8A	SLEEVE—MUFFLER PIPE CONNECTER	D6RY-5K256-B
9	MUFFLER—REAR	D5RY-5230-F # 75EB-5K244-AB
10	INSULATOR—MUFFLER SUPPORT	D5RY-5281-A
11	CLAMP MUFFLER SUPPORT	D5RY-5A215-D # 74EB-5A215-CB
12	U-BOLT MUFFLER SUPPORT	D5RY-5C233-D # 74EB-5C223-FA
	SCREW E-600214-S72 & WASHER E-830218-S100 USED WITH 5C223	
13	EXTENSION—OUTLET PIPE	D5RY-5263-A EXC. MODEL "S" D6RY-5263-B MODEL "S"
14	BODY BRACKET REAR MUFFLER	D5RY-5K290-A

● CALIF.
† EXC. CALIF.

EM-20

COPYRIGHT © 1986 — FORD MOTOR COMPANY — DEARBORN, MICHIGAN

1978 CAPRI — 6 CYL. 2.8L (171 CID)

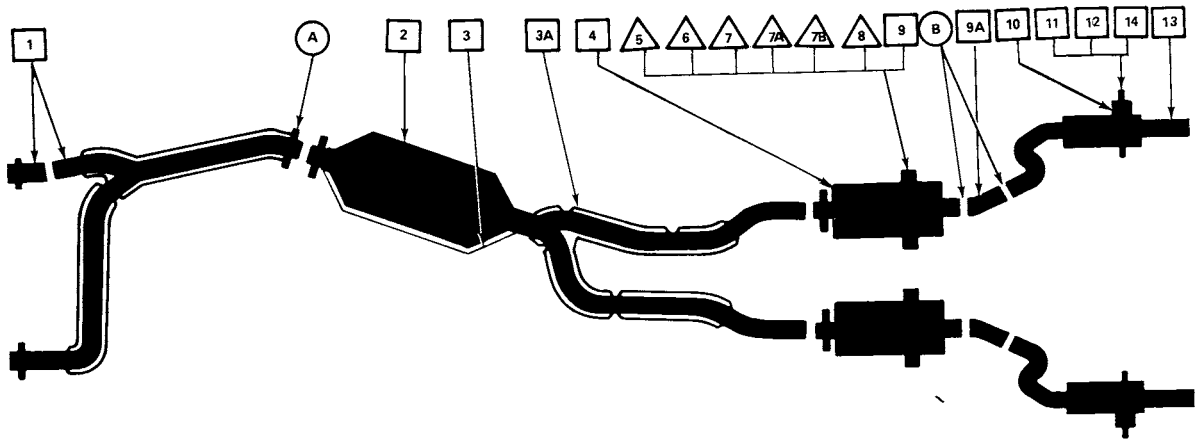

	ITEM	L.H.	R.H.
1	INLET PIPE	D7RY-5246-F #77EB-5248-BA	D7RY-5246-D #77EB-5245-CA
	STUD E-804442-S76 & NUT E-820015-S72 ATT. INLET PIPE TO MANIFOLD		
2	CONVERTER	● D7RY-5E212-E #77EB-5E211-EA □ D6RY-5E212-C # 77EB-5E211-BA, BC	
3	CONVERTER SHIELD	D6RY-5E258-A	
A	CLAMP EXHAUST HEAT SHIELD	D5RY-5C264-A # 75EB-5C264-AA D5RY-5C264-B # 75EB-5C264-BA	
3A	PIPE SHIELD	D6RY-5K286-A # 77EB-5K286-AA	
4	MUFFLER – FRONT	D5RY-5230-K #75EB-5232-AA, AB	★ D5RY-5230-J # 75EB-5230-BA, BB r/b D7RY-5230-B
5	CLAMP MUFFLER SUPPORT	D5RY-5A215-D # 74EB-5A215-CB D5RY-5A215-B # 71EB-5A215-BA	D5RY-5A215-C # 71EB-5A215-HA
6	U-BOLT MUFFLER SUPPORT	D5RY-5C223-B # 74EB-5C223-GA	D5RY-5C223-C # 71EB-5C223-DA
	SCREW E600214-S72 & WASHER E-830218-S100 USED WITH 5C223		
7	BRACKET MUFFLER SUPPORT	▲ D5RY-5D250-A # 75EB-5D250-AA ■ D5RY-5D250-B # 75EB-5D250-BA	
7A	INSULATOR– MUFFLER SUPPORT	D8RZ-5281-A	

	ITEM	L.H.	R.H.
7B	BODY BRACKET – FRONT MUFFLER	D2RY-5277-G	D2RY-5277-F
8	BRACKET MUFFLER HANGER	D4RY-5A261-B # 74EB-5A261-AB ★ D5RY-5A261-A # 75EB-5A261-AA D5RY-5A261-B # 75EB-5A261-BA	
9	MUFFLER HEAT SHIELD	D5RY-5E290-A	
B	CLAMP	D1RY-5A231-B	
9A	SLEEVE – MUFFLER PIPE CONNECTOR	D6RY-5K256-A	
10	MUFFLER – REAR	D5RY-5230-D #75EB-5K273-AB,AC	D5RY-5230-C #75EB-5K244-BB,BC
11	CLAMP MUFFLER SUPPORT	D5RY-5A215-D # 74EB-5A215-CB	
12	U-BOLT MUFFLER SUPPORT	D5RY-5C223-D # 74EB-5C223-FA	
	SCREW E-600214-S72 & WASHER E-830218-S100 USED WITH 5C223		
13	EXTENSION – OUTLET PIPE	D6RY-5263-A MODEL "S" D5RY-5263-B EXC. MODEL "S"	
14	BODY BRACKET REAR MUFFLER	D5RY-5K290-A	

● CALIF.
□ EXC. CALIF.
■ MAN. TRANS.
▲ AUTO. TRANS.

1978 MARK V — 8 CYL. 6.6L (400 CID) SINGLE EXHAUST (WITH CONVERTER)

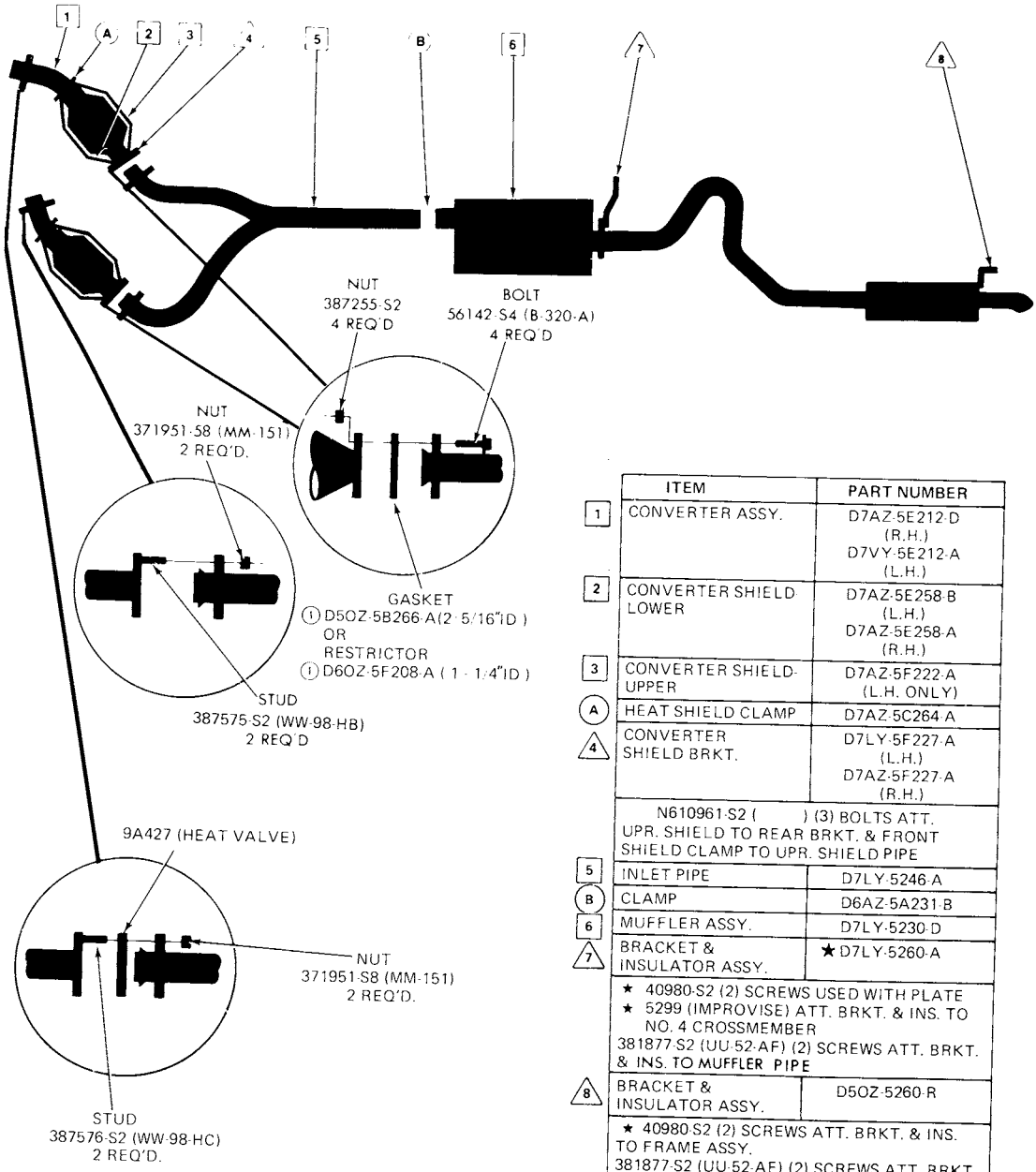

	ITEM	PART NUMBER
1	CONVERTER ASSY.	D7AZ-5E212-D (R.H.) D7VY-5E212-A (L.H.)
2	CONVERTER SHIELD LOWER	D7AZ-5E258-B (L.H.) D7AZ-5E258-A (R.H.)
3	CONVERTER SHIELD-UPPER	D7AZ-5F222-A (L.H. ONLY)
A	HEAT SHIELD CLAMP	D7AZ-5C264-A
4	CONVERTER SHIELD BRKT.	D7LY-5F227-A (L.H.) D7AZ-5F227-A (R.H.)
	N610961-S2 ( ) (3) BOLTS ATT. UPR. SHIELD TO REAR BRKT. & FRONT SHIELD CLAMP TO UPR. SHIELD PIPE	
5	INLET PIPE	D7LY-5246-A
B	CLAMP	D6AZ-5A231-B
6	MUFFLER ASSY.	D7LY-5230-D
7	BRACKET & INSULATOR ASSY.	★ D7LY-5260-A
	★ 40980-S2 (2) SCREWS USED WITH PLATE ★ 5299 (IMPROVISE) ATT. BRKT. & INS. TO NO. 4 CROSSMEMBER 381877-S2 (UU-52-AF) (2) SCREWS ATT. BRKT. & INS. TO MUFFLER PIPE	
8	BRACKET & INSULATOR ASSY.	D5OZ-5260-R
	★ 40980-S2 (2) SCREWS ATT. BRKT. & INS. TO FRAME ASSY. 381877-S2 (UU-52-AF) (2) SCREWS ATT. BRKT. & INS. TO RESONATOR	

① PART MUST BE PHYSICALLY IDENTIFIED TO DETERMINE CORRECT USAGE

EK 18

COPYRIGHT © 1986 — FORD MOTOR COMPANY — DEARBORN, MICHIGAN

1978 MARK V-8 CYL. 7.5 L (460 CID) (U.S.A. & CANADA) (WITH 7¼ SHELL LENGTH CONVERTER) SINGLE EXHAUST

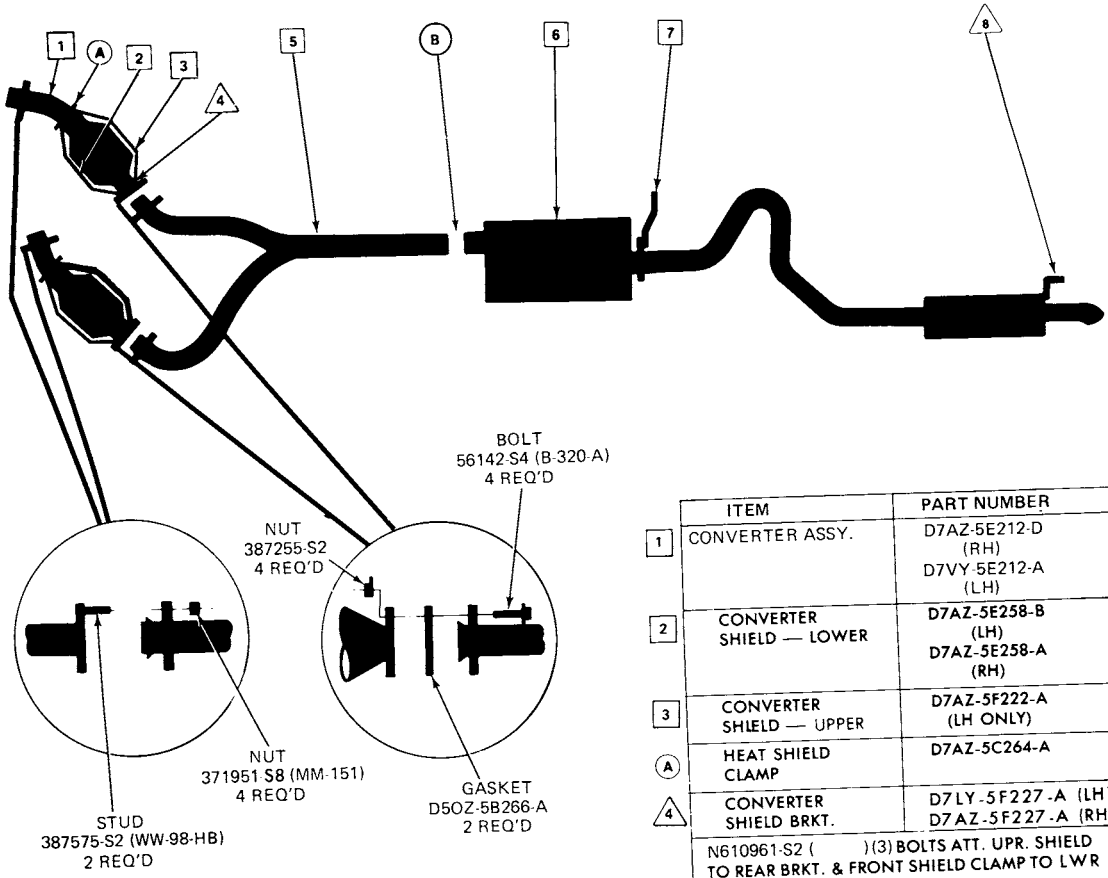

	ITEM	PART NUMBER
1	CONVERTER ASSY.	D7AZ-5E212-D (RH) D7VY-5E212-A (LH)
2	CONVERTER SHIELD — LOWER	D7AZ-5E258-B (LH) D7AZ-5E258-A (RH)
3	CONVERTER SHIELD — UPPER	D7AZ-5F222-A (LH ONLY)
A	HEAT SHIELD CLAMP	D7AZ-5C264-A
4	CONVERTER SHIELD BRKT.	D7LY-5F227-A (LH) D7AZ-5F227-A (RH)
	N610961-S2 ( )(3) BOLTS ATT. UPR. SHIELD TO REAR BRKT. & FRONT SHIELD CLAMP TO LWR. SHIELD	
5	INLET PIPE	D7LY-5246-A
B	CLAMP	D6AZ-5A231-B
6	MUFFLER ASSY.	D7LY-5230-C
7	BRACKET & INSULATOR ASSY.	D5OZ-5260-A
	★ 40980-S2(2) SCREWS USED WITH PLATE ★ 5299 (IMPROVISE) ATT. BRKT. & INS. TO NO. 4 CROSSMEMBER 381877-S2(UU-52-AF)(2) SCREWS ATT. BRKT. & INS. TO MUFFLER	
8	BRACKET & INSULATOR ASSY.	D6SZ-5260-A
	★ 40980-S2(2) SCREWS ATT. BRKT. & INS. TO FRAME ASSY. 381877-S2(UU-52-AF)(2) SCREWS ATT. BRKT. & INS. TO RESONATOR	

1978 MARK IV-8 CYL. 7.5 L (460 CID) (CANADA ONLY) (WITH 5½ SHELL CONVERTER) SINGLE EXHAUST

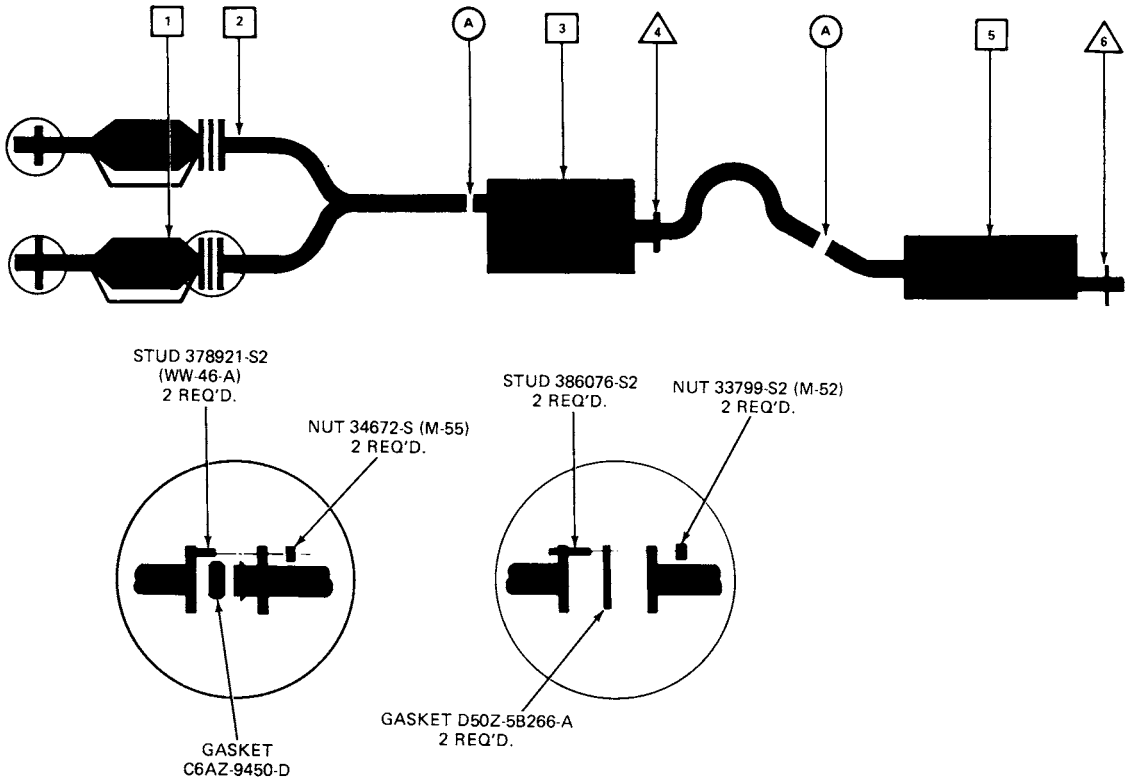

	ITEM	PART NUMBER
1	CONVERTER	(L. H.) D5SZ-5E212-B (R. H.) D5OZ-5E212-B
2	INLET PIPE	D6SZ-5246-A
	CLAMP	D6AZ-5A231-A
3	MUFFLER & RESONATOR ASSY. PRODUCTION	★D5SZ-5230-D
	MUFFLER-SERVICE	D5SZ-5230-A
4	MUFFLER BRACKET & INSULATOR	D5OZ-5260-A
5	RESONATOR-SERVICE	D5SZ-5A289-A
6	RESONATOR BRACKET & INSULATOR	D6SZ-5260-A

EK-22

COPYRIGHT © 1986 — FORD MOTOR COMPANY — DEARBORN, MICHIGAN

1973/79
LINCOLN-MERCURY CARS

1978 MARK V-8 CYL. 7.5 L (460 CID)
(U.S.A. & CANADA)
(WITH 7¼ SHELL LENGTH CONVERTER)
DUAL EXHAUST

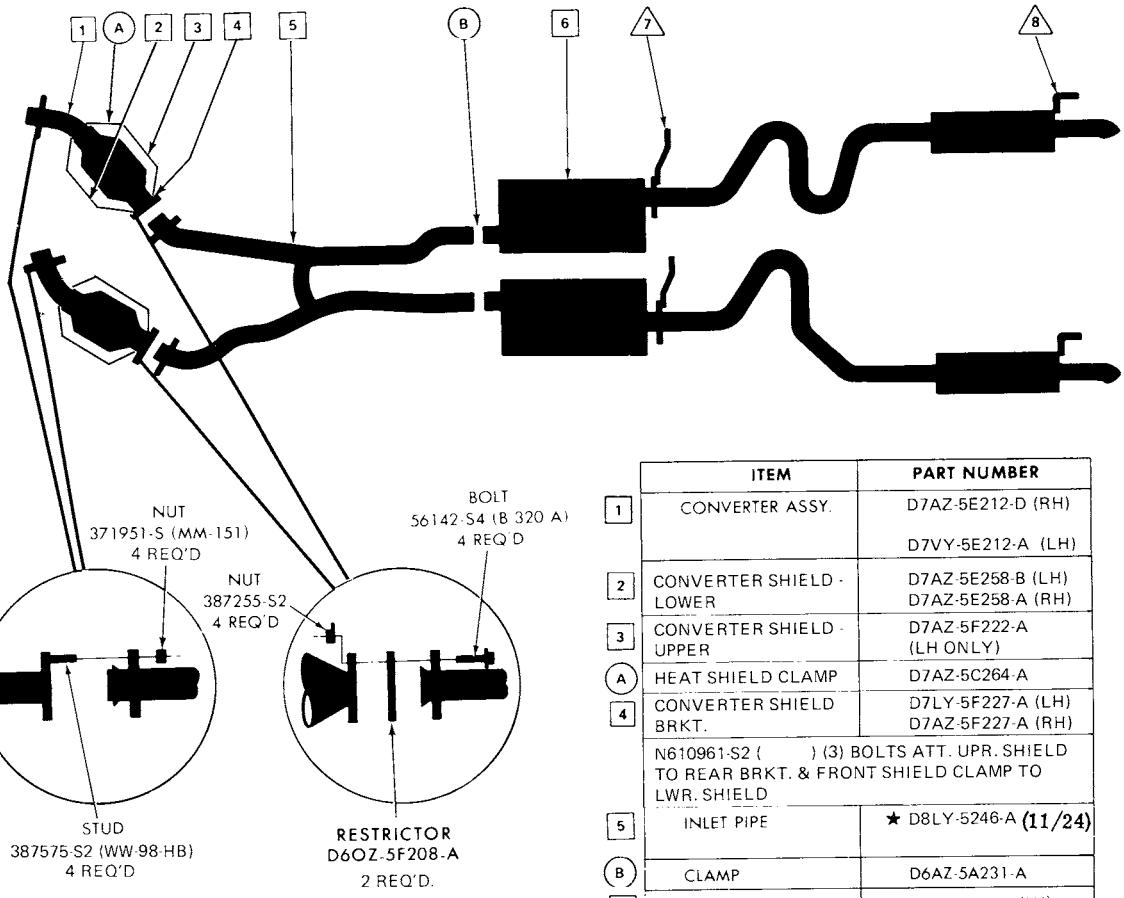

	ITEM	PART NUMBER
1	CONVERTER ASSY.	D7AZ-5E212-D (RH) D7VY-5E212-A (LH)
2	CONVERTER SHIELD - LOWER	D7AZ-5E258-B (LH) D7AZ-5E258-A (RH)
3	CONVERTER SHIELD - UPPER	D7AZ-5F222-A (LH ONLY)
A	HEAT SHIELD CLAMP	D7AZ-5C264-A
4	CONVERTER SHIELD BRKT.	D7LY-5F227-A (LH) D7AZ-5F227-A (RH)
	N610961-S2 ( ) (3) BOLTS ATT. UPR. SHIELD TO REAR BRKT. & FRONT SHIELD CLAMP TO LWR. SHIELD	
5	INLET PIPE	★ D8LY-5246-A (11/24)
B	CLAMP	D6AZ-5A231-A
6	MUFFLER ASSY.	D7LY-5230-B (LH) ★D7LY-5230-A (RH)
7	BRACKET & INSULATOR ASSY.	D50Z-5260-A (RH & LH)
	★ 40980-S2 (4) SCREWS USED WITH PLATE ★ 5299 (IMPROVISE) ATT. BRKT. & INS. TO NO. 4 CROSSMEMBER 381877-S2 (UU-52-AF) (4) SCREWS ATT. BRKT. & INS. TO MUFFLER	
8	BRACKET & INSULATOR ASSY.	D6SZ-5260-A (LH) ★ D6SZ-5260-B (RH)
	★ 40980-S2 (4) SCREWS ATT. BRKT. & INS. TO FRAME ASSY. 381877-S2 (UU-52-AF) (4) SCREWS ATT. BRKT. & INS. TO RESONATORS	

1978 MARK IV-8 CYL. 7.5 L (460 CID) (CANADA ONLY) (WITH 5½ SHELL LENGTH CONVERTER) DUAL EXHAUST

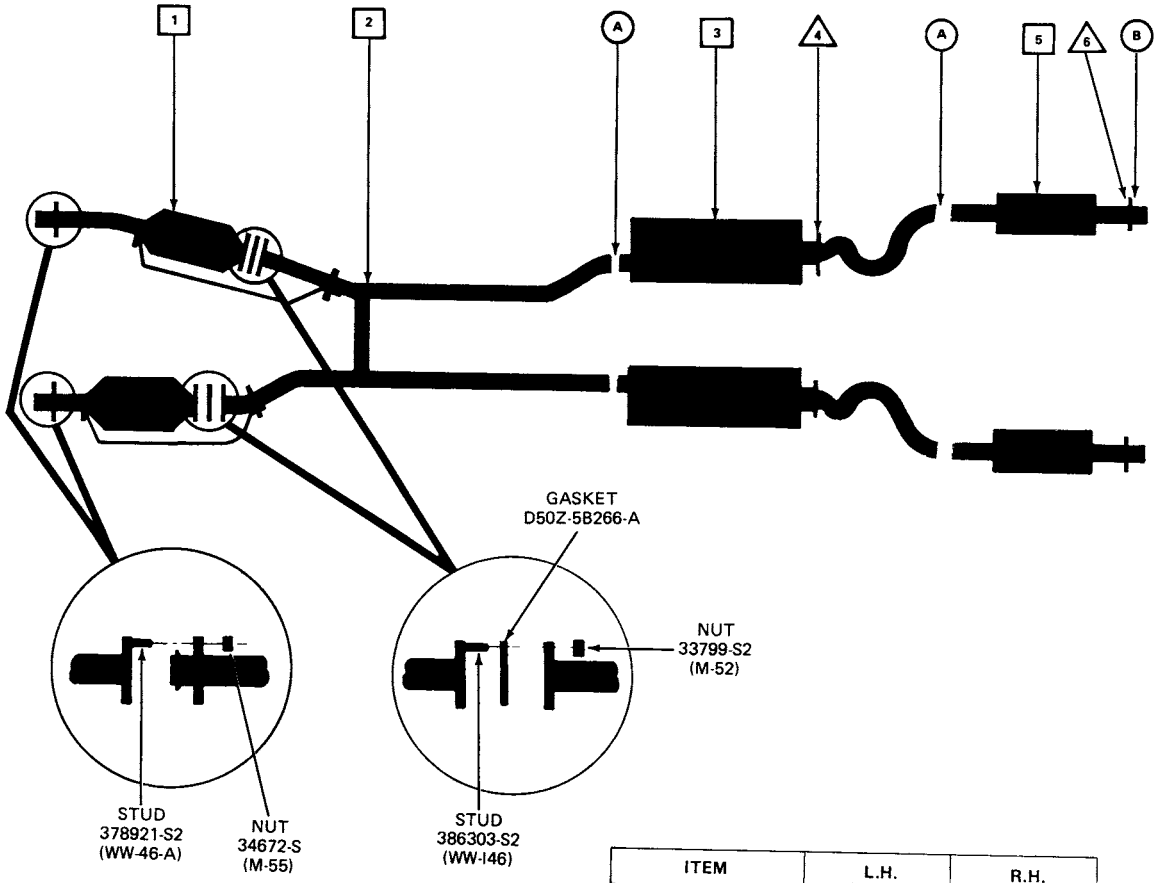

	ITEM	L.H.	R.H.
1	CONVERTER	D5SZ-5E212-B	D5OZ-5E212-B
2	INLET PIPE	D5SZ-5246-C	
A	CLAMP	D6AZ-5A231-A	D6AZ-5A231-A
3	MUFFLER & RESONATOR ASSY-PRODUCTION	★ D5SZ-5230-F	★ D5SZ-5230-E
	MUFFLER-SERVICE	D5SZ-5230-C	D5SZ-5230-B
4	BRACKET & INSULATOR	D50Z-5260-A	D50Z-5260-A
5	RESONATOR-SERVICE	D5SZ-5A289-E	D5SZ-5A289-B
6	BRACKET & INSULATOR	D6SZ-5260-A	■ D5SZ-5260-C ★ ● D6SZ-5260-B
B	CLAMP	D1AZ-5A231-D	D1AZ-5A231-D

■ "BEFORE 12/1/75"
● "FROM 12/1/75"

EK-21

COPYRIGHT © 1986 — FORD MOTOR COMPANY — DEARBORN, MICHIGAN

1978 BOBCAT — 4 CYL. 2.3L (140 CID) SEDAN (49 STATES AND CANADA-WITH CONVERTER)

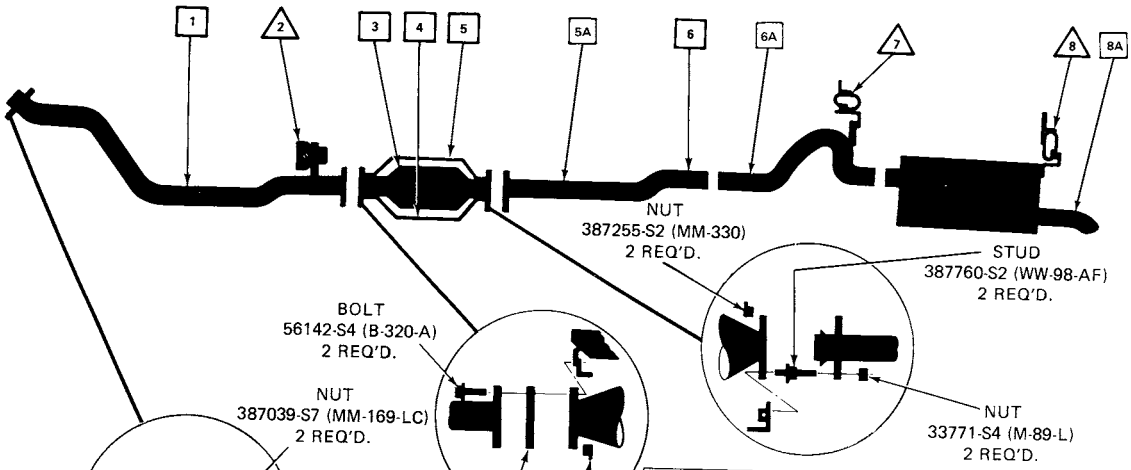

	ITEM	PART NUMBER
1	INLET PIPE	D7FZ-5246-B
2	BRACKET & INSULATOR ASSY.	D5FZ-5A246-C
	39909-S7 (U-269-D) (2) SCREWS ATT. 5299 (IMPROVISE) & BRKT. & INS. TO INLET PIPE 382400-S2 (MM-173-BF) (2) NUTS ATT. BRKT. & INS. TO REAR ENG. MOUNT	
3	CONVERTER ASSY.	D8FZ-5E212-A
4	CONVERTER SHIELD-LOWER	% D8FZ-5E258-A
5	CONVERTER SHIELD-UPPER	D8FZ-5F222-A
	55914-S2 (U-254-F) (6) SCREWS ATT. CONV. SHIELDS TO CONV. HSG.	
5A	INTERMEDIATE PIPE	D5FZ-5A212-Z
6	MUFFLER ASSY. (PRODUCTION)	★ D7FZ-5230-A
6A	MUFFLER ASSY. (SERVICE)	D5FZ-5230-Z
7	BRACKET & INSULATOR ASSY.	D8FZ-5260-A
	39909-S2 (U-269-D) (4) SCREWS ATT. BRKT. & INS. TO MUFFLER PIPE & TO PIPE SUPPORT BRKT.	
8	BRACKET & INSULATOR ASSY.	D8FZ-5260-B
	39909-S2 (U-269-D) (2) SCREWS ATT. BRKT. & INS. TO UNDERBODY 381877-S2 (UU-52-AF) (2) SCREWS ATT. BRKT. & INS. TO MUFFLER	
8A	OUTLET PIPE (SERVICE)	D5FZ-5255-E

ET-31

% (REQ'D. ONLY ON VEHICLES WITH A/C)

COPYRIGHT © 1986 — FORD MOTOR COMPANY — DEARBORN, MICHIGAN

1978 BOBCAT-4 CYL. 2.3L (140 CID) SEDAN (CALIFORNIA - WITH CONVERTER)

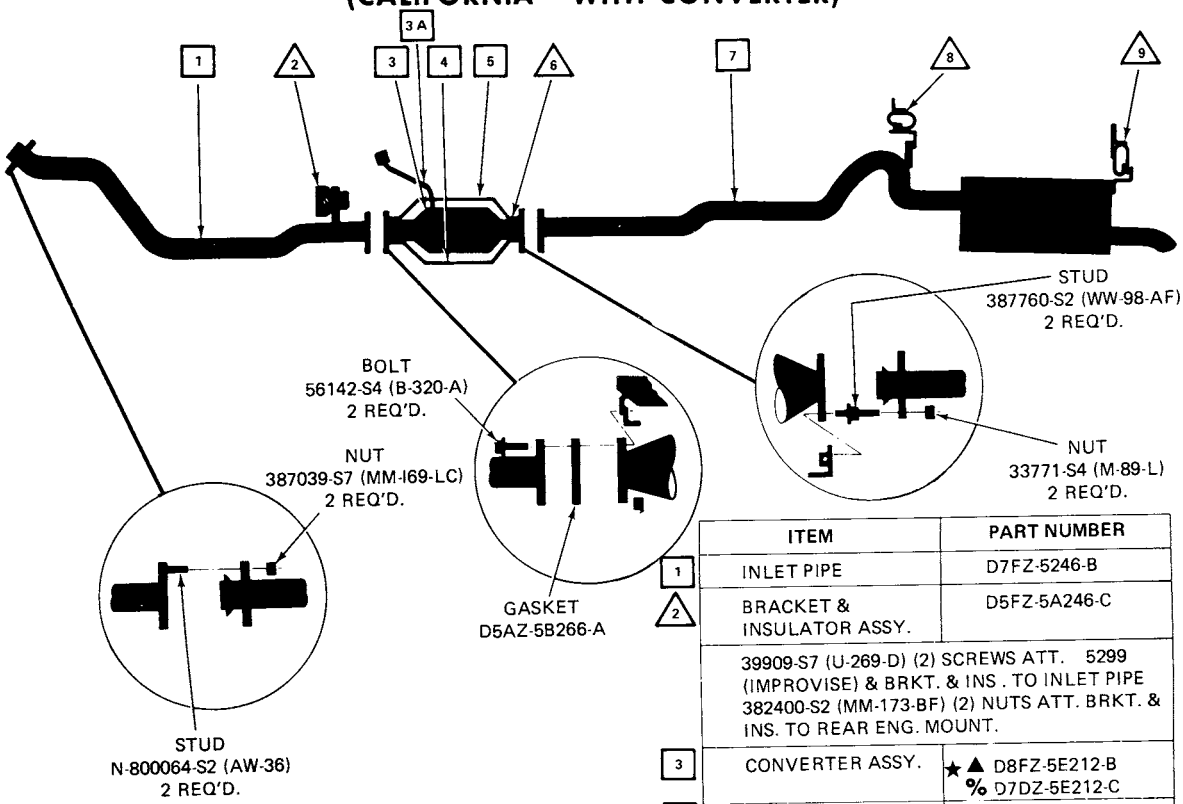

	ITEM	PART NUMBER
1	INLET PIPE	D7FZ-5246-B
2	BRACKET & INSULATOR ASSY.	D5FZ-5A246-C
	39909-S7 (U-269-D) (2) SCREWS ATT. 5299 (IMPROVISE) & BRKT. & INS. TO INLET PIPE 382400-S2 (MM-173-BF) (2) NUTS ATT. BRKT. & INS. TO REAR ENG. MOUNT.	
3	CONVERTER ASSY.	★ ▲ D8FZ-5E212-B % D7DZ-5E212-C
3A	TUBE-AIR INLET	D8FZ-5F235-C
	387700-S (EE-5-G) (1) CLAMP ATT. AIR INLET TUBE TO CONV.	
4	CONVERTER SHIELD-LOWER	▲ D8FZ-5E258-B % D7FZ-5E258-B
5	CONVERTER SHIELD-UPPER	▲ D8FZ-5F222-B % D7FZ-5F222-E
6	CONVERTER SHIELD BRKT.	D7FZ-5F227-A
	55914-S2 (U-254-F) (6) SCREWS ATT. CONV. SHIELDS TO BRKT. OR CONV. HSG.	
7	MUFFLER ASSY.	▲ D9FZ-5230-A ■ % D7FZ-5230-C ★ % □ D8FZ-5230-C
8	BRACKET & INSULATOR ASSY.	D8FZ-5260-A
	39909-S2 (U-269-D) (4) SCREWS ATT. BRKT. & INS. TO MUFFLER PIPE & TO PIPE SUPPORT BRKT.	
9	BRACKET & INSULATOR ASSY.	■ D8FZ-5260-B □ D8FZ-5260-D
	39909-S2 (U-269-D) (2) SCREWS ATT. BRKT. & INS. TO UNDERBODY 381877-S2 (UU-52-AF) (2) SCREWS ATT. BRKT. & INS. TO MUFFLER	

■ "BEFORE 1/16/78"
▲ W/CONV. AIR TUBE
% W/O CONV. AIR TUBE
□ "FROM 1/16/78"

1978 BOBCAT — 4 CYL. 2.3L (140 CID) SEDAN (CANADA-W/O CONVERTER)

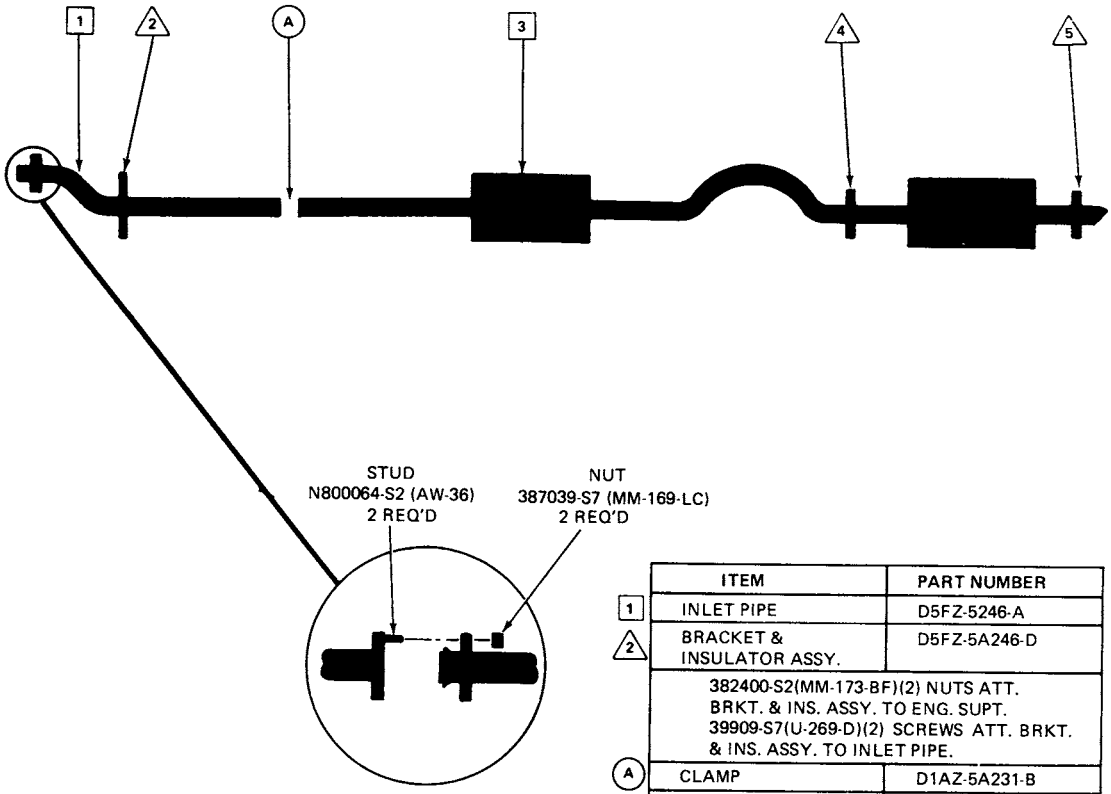

	ITEM	PART NUMBER
1	INLET PIPE	D5FZ-5246-A
2	BRACKET & INSULATOR ASSY.	D5FZ-5A246-D
	382400-S2(MM-173-BF)(2) NUTS ATT. BRKT. & INS. ASSY. TO ENG. SUPT. 39909-S7(U-269-D)(2) SCREWS ATT. BRKT. & INS. ASSY. TO INLET PIPE.	
A	CLAMP	D1AZ-5A231-B
3	MUFFLER & RESONATOR ASSY.	D6FZ-5230-J
4	BRACKET & INSULATOR ASSY.	D8FZ-5260-A
	39909-S7(U-269-D)(4) SCREWS ATT. BRKT. & INS. ASSY. TO UNDERBODY & PIPE ASSY.	
5	BRACKET & INSULATOR ASSY.	D8FZ-5260-B
	39909-S7(U-269-D)(2) SCREWS ATT. BRKT. & INS. ASSY. TO UNDERBODY 381877-S2(UU-52-AF)(2) SCREWS ATT. BRKT. & INS. ASSY. TO MUFFLER	

ET-32

COPYRIGHT © 1986 — FORD MOTOR COMPANY — DEARBORN, MICHIGAN

1978 BOBCAT — 4 CYL· 2.3L (140 CID) STATION WAGON (49 STATES AND CANADA - WITH CONVERTER)

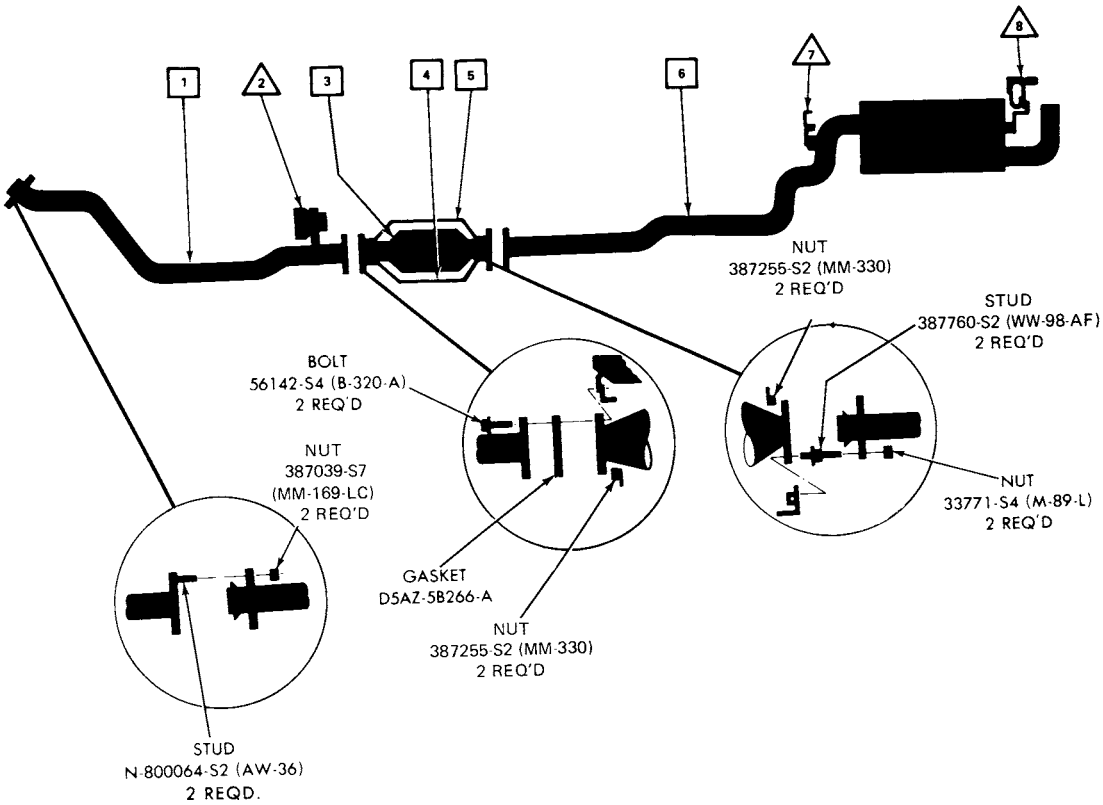

	ITEM	PART NUMBER
1	INLET PIPE	D7FZ-5246-B
2	BRACKET & INSULATOR ASSY.	D5FZ-5A246-C (M/T ONLY)
	39909-S7 (U-269-D) (2) SCREWS ATT. ★ 5299 (IMPROVISE) & BRKT. & INS. TO INLET PIPE. 382400-S2(MM-173-BF) (2) NUTS ATT. BRKT. & INS. TO REAR ENG. MOUNT.	
3	CONVERTER ASSY.	D8FZ-5E212-A
3A	TUBE - AIR INLET	D8FZ-5F235-C
	387700-S (EE-5-G) (1) CLAMP ATT. AIR INLET TUBE TO CONV.	
4	CONVERTER SHIELD-LOWER	⊕ D8FZ-5E258-A
5	CONVERTER SHIELD-UPPER	D8FZ-5F222-A

	ITEM	PART NUMBER
	55914-S2 (U-254-F) (6) SCREWS ATT. CONV. SHIELDS TO CONV. HSG.	
6	MUFFLER ASSY.	D7FZ-5230-B
7	BRACKET & INSULATOR ASSY.	D5FZ-5260-G
	39909-S2 (UU-269-D) (4) SCREWS ATT. BRKT. & INS. TO MUFFLER PIPE & TO CROSSMEMBER	
8	BRACKET & INSULATOR ASSY.	D8FZ-5260-C
	39909-S2 (UU-269-D) (2) SCREWS ATT. BRKT. & INS. TO UNDERBODY 381877-S2 (UU-52-AF) (2) SCREWS ATT. BRKT. & INS. TO MUFFLER	

⊕ (REQ'D ONLY ON VEHICLES WITH A/C)

1978 BOBCAT — 4 CYL· 2.3L (140 CID) STATION WAGON (CALIFORNIA-WITH CONVERTER)

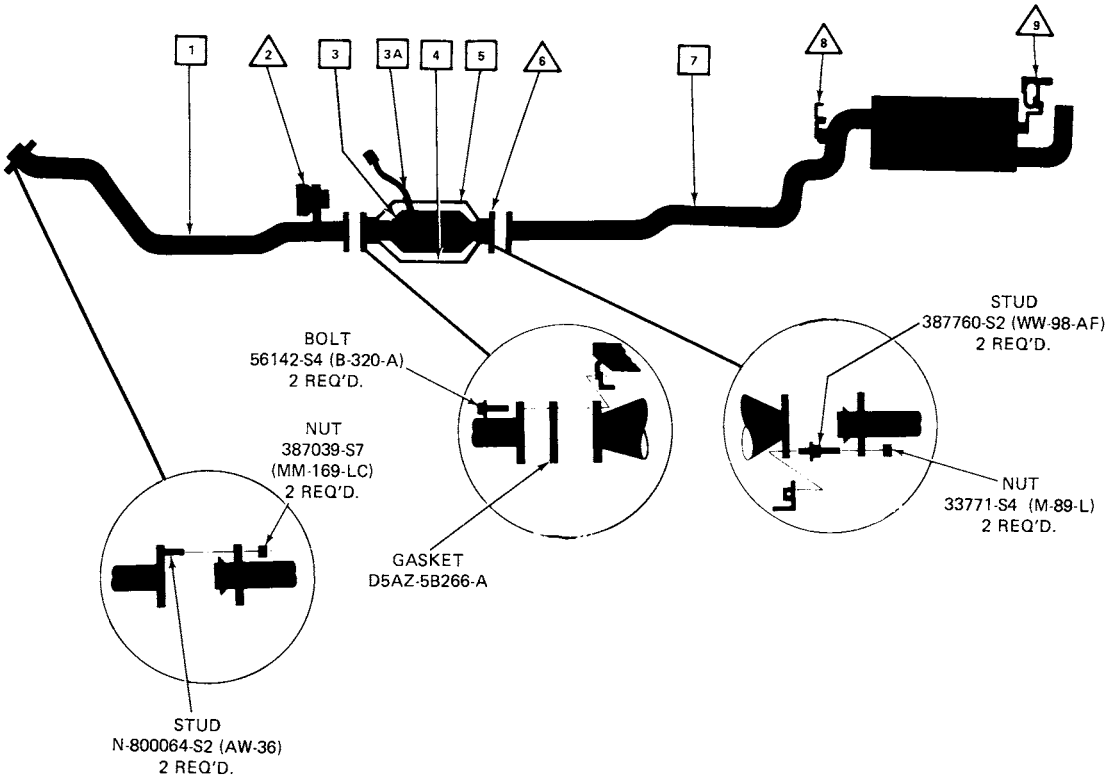

	ITEM	PART NUMBER
1	INLET PIPE	D7FZ-5246-B
2	BRACKET & INSULATOR ASSY.	D5FZ-5A246-C (M/T ONLY)
	39909-S7 (U-269-D) (2) SCREWS ATT. 5299 (IMPROVISE) & BRKT. & INS. TO INLET PIPE. 382400-S2 (MM-173-BF) (2) NUTS ATT. BRKT. & INS. TO REAR ENG. MOUNT.	
3	CONVERTER ASSY.	★ ◆D8FZ-5E212-B
3A	TUBE-AIR INLET	D8FZ-5F235-C
	387700-S (EE-5-G) (1) CLAMP ATT. AIR INLET TUBE TO CONV.	
4	CONVERTER SHIELD-LOWER	◆D8FZ-5E258-B ●D7FZ-5E258-B
5	CONVERTER SHIELD-UPPER	◆D8FZ-5F222-B ●D7FZ-5F222-E
6	CONVERTER SHIELD BRKT.	D7FZ-5F227-A

	ITEM	PART NUMBER
	55914-S2 (U-254-F) (6) SCREWS ATT. CONV. SHIELDS TO BRKT. OR CONV. HSG.	
7	MUFFLER ASSY.	● D7FZ-5230-D ◆D8FZ-5230-B
8	BRACKET & INSULATOR ASSY.	D5FZ-5260-G
	39909-S2 (UU-269-D) (4) SCREWS ATT. BRKT. & INS. TO MUFFLER PIPE & TO CROSSMEMBER	
9	BRACKET & INSULATOR ASSY.	D8FZ-5260-C
	39909-S2 (UU-269-D) (2) SCREWS ATT. BRKT. & INS. TO UNDERBODY 381877-S2 (UU-52-AF) (2) SCREWS ATT. BRKT. & INS. TO MUFFLER	

◆W/CONV. AIR TUBE
●W/O CONV. AIR TUBE

ET-38

COPYRIGHT © 1986 — FORD MOTOR COMPANY — DEARBORN, MICHIGAN

1978 BOBCAT — 4 CYL. 2.3L (140 CID) STATION WAGON (CANADA-W/O CONVERTER)

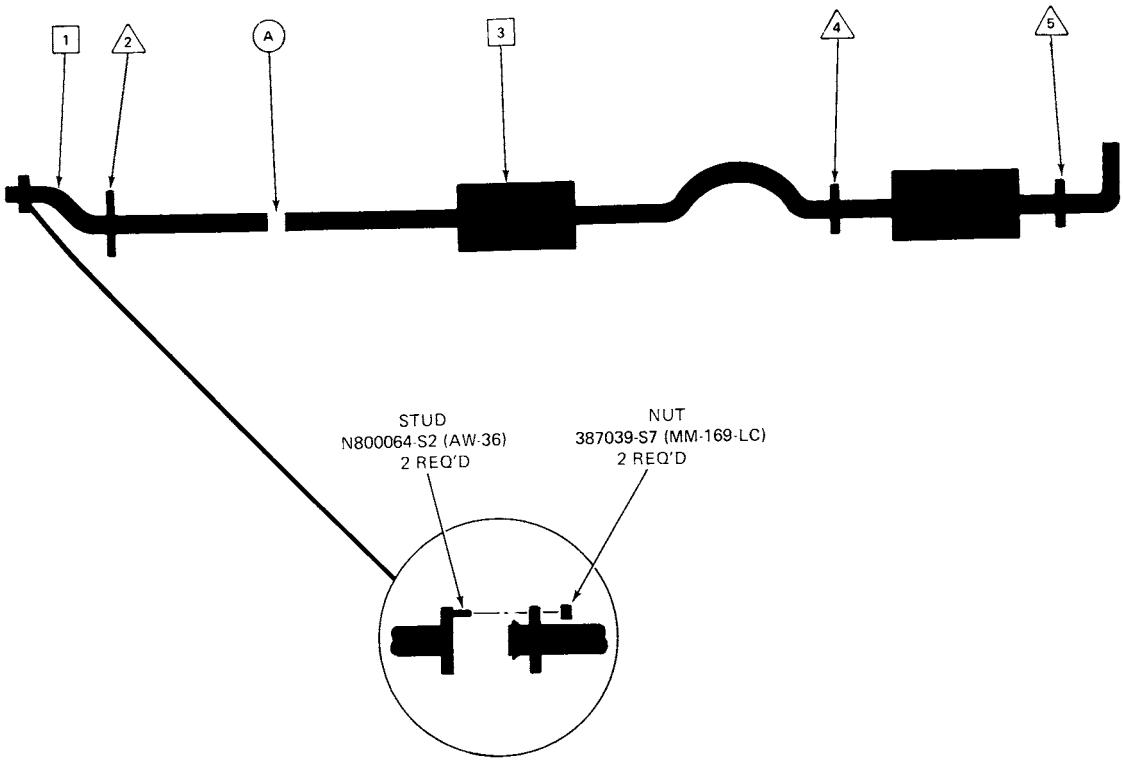

	ITEM	PART NUMBER
1	INLET PIPE	D5FZ-5246-A
2	BRACKET & INSULATOR ASSY.	D5FZ-5A246-D
	382400-S2(MM-173-BF) (2) NUTS ATT. BRKT. & INS. ASSY. TO ENG. SUPT. 39909-S7(U-269-D) (2) SCREWS ATT. BRKT. & INS. ASSY. TO INLET PIPE.	
A	CLAMP	D1AZ-5A231-B
3	MUFFLER & RESONATOR ASSY.	D6FZ-5230-G
4	BRACKET & INSULATOR ASSY.	D5FZ-5260-G
	39909-S7(U-269-D) (4) SCREWS ATT. BRKT. & INS. ASSY. TO UNDERBODY & PIPE ASSY.	
5	BRACKET & INSULATOR ASSY.	D8FZ-5260-C
	39909-S7(U-269-D) (2) SCREWS ATT. BRKT. & INS. ASSY. TO UNDERBODY 381877-S2 (UU-52-AF)(2) SCREWS ATT. BRKT. & INS. ASSY. TO MUFFLER.	

ET-34

1978 BOBCAT — 6 CYL. 2.8L (171 CID) SEDAN (WITH CONVERTER)

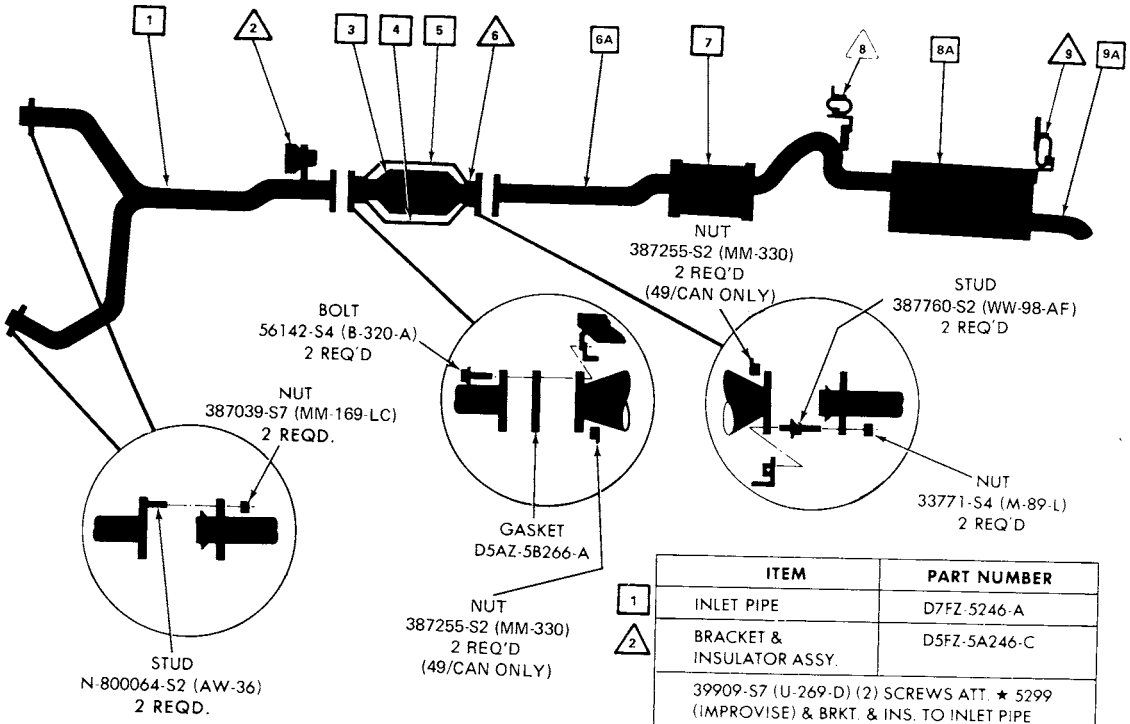

	ITEM	PART NUMBER
1	INLET PIPE	D7FZ-5246-A
2	BRACKET & INSULATOR ASSY.	D5FZ-5A246-C
	39909-S7 (U-269-D) (2) SCREWS ATT. ★ 5299 (IMPROVISE) & BRKT. & INS. TO INLET PIPE 382400-S2 (MM-173-BF) (2) NUTS ATT. BRKT. & INS. TO REAR ENG. MOUNT	
3	CONVERTER ASSY.	■ D8FZ-5E212-A □ D7DZ-5E212-C
4	CONVERTER SHIELD-LOWER	■ D8FZ-5E258-A □ D7FZ-5E258-B
5	CONVERTER SHIELD-UPPER	■ D8FZ-5F222-A □ D7FZ-5F222-E
6	CONVERTER SHIELD BRKT.	■ NOT REQ'D □ D7FZ-5F227-A
6A	INTERMEDIATE PIPE	D5FZ-5A212-Z
	55914-S2 (U-254-F) (6) SCREWS ATT. CONV. SHIELDS TO BRKT. OR CONV. HSG.	
7	MUFFLER ASSY. (PRODUCTION)	★ ■ D7FZ-5230-A □ D7FZ-5230-C
8	BRACKET & INSULATOR ASSY.	D8FZ-5260-A
8A	MUFFLER ASSY. (SERVICE)	D5FZ-5230-Z
	39909-S2 (UU-269-D) (4) SCREWS ATT. BRKT. & INS. TO MUFFLER PIPE & TO CROSSMEMBER	
9	BRACKET & INSULATOR ASSY.	D8FZ-5260-B
	39909-S2 (UU-269-D) (2) SCREWS ATT. BRKT. & INS. TO UNDERBODY 381877-S2 (UU-52-AF) (2) SCREWS ATT. BRKT. & INS. TO MUFFLER	
9A	OUTLET PIPE (SERVICE)	D5FZ-5255-E

ET-35

■ EXC. CALIF.
□ CALIF. ONLY

COPYRIGHT © 1986 — FORD MOTOR COMPANY — DEARBORN, MICHIGAN

1978 BOBCAT — 6 CYL. 2.8L (171 CID) STATION WAGON (WITH CONVERTER)

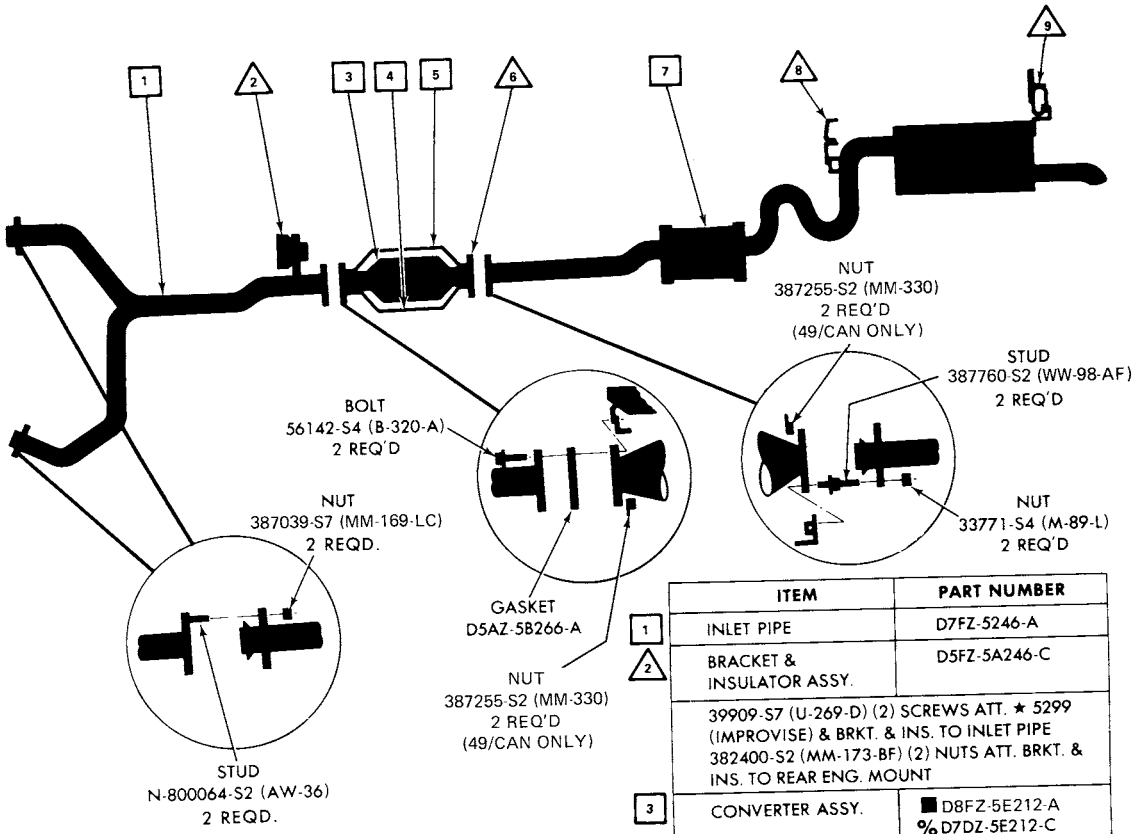

	ITEM	PART NUMBER
1	INLET PIPE	D7FZ-5246-A
2	BRACKET & INSULATOR ASSY.	D5FZ-5A246-C
	39909-S7 (U-269-D) (2) SCREWS ATT. ★ 5299 (IMPROVISE) & BRKT. & INS. TO INLET PIPE 382400-S2 (MM-173-BF) (2) NUTS ATT. BRKT. & INS. TO REAR ENG. MOUNT	
3	CONVERTER ASSY.	■ D8FZ-5E212-A % D7DZ-5E212-C
4	CONVERTER SHIELD-LOWER	■ D8FZ-5E258-A % D7FZ-5E258-B
5	CONVERTER SHIELD-UPPER	■ D8FZ-5F222-A % D7FZ-5F222-E
6	CONVERTER SHIELD BRKT.	% NOT REQ'D ■ D7FZ-5F227-A
	55914-S2 (U-254-F) (6) SCREWS ATT. CONV. SHIELDS TO BRKT. OR CONV. HSG.	
7	MUFFLER ASSY.	■ D7FZ-5230-B % D7FZ-5230-D
8	BRACKET & INSULATOR ASSY.	D5FZ-5260-G
	39909-S2 (UU-269-D) (4) SCREWS ATT. BRKT. & INS. TO MUFFLER PIPE & TO CROSSMEMBER	
9	BRACKET & INSULATOR ASSY.	D8FZ-5260-C
	39909-S2 (UU-269-D) (2) SCREWS ATT. BRKT. & INS. TO UNDERBODY 381877-S2 (UU-52-AF) (2) SCREWS ATT. BRKT. & INS. TO MUFFLER	

■ EXC. CALIF.
% CALIF. ONLY

1978 ZEPHYR — 4CYL. 2.3L (140CID) SEDAN (WITH CONVERTER)

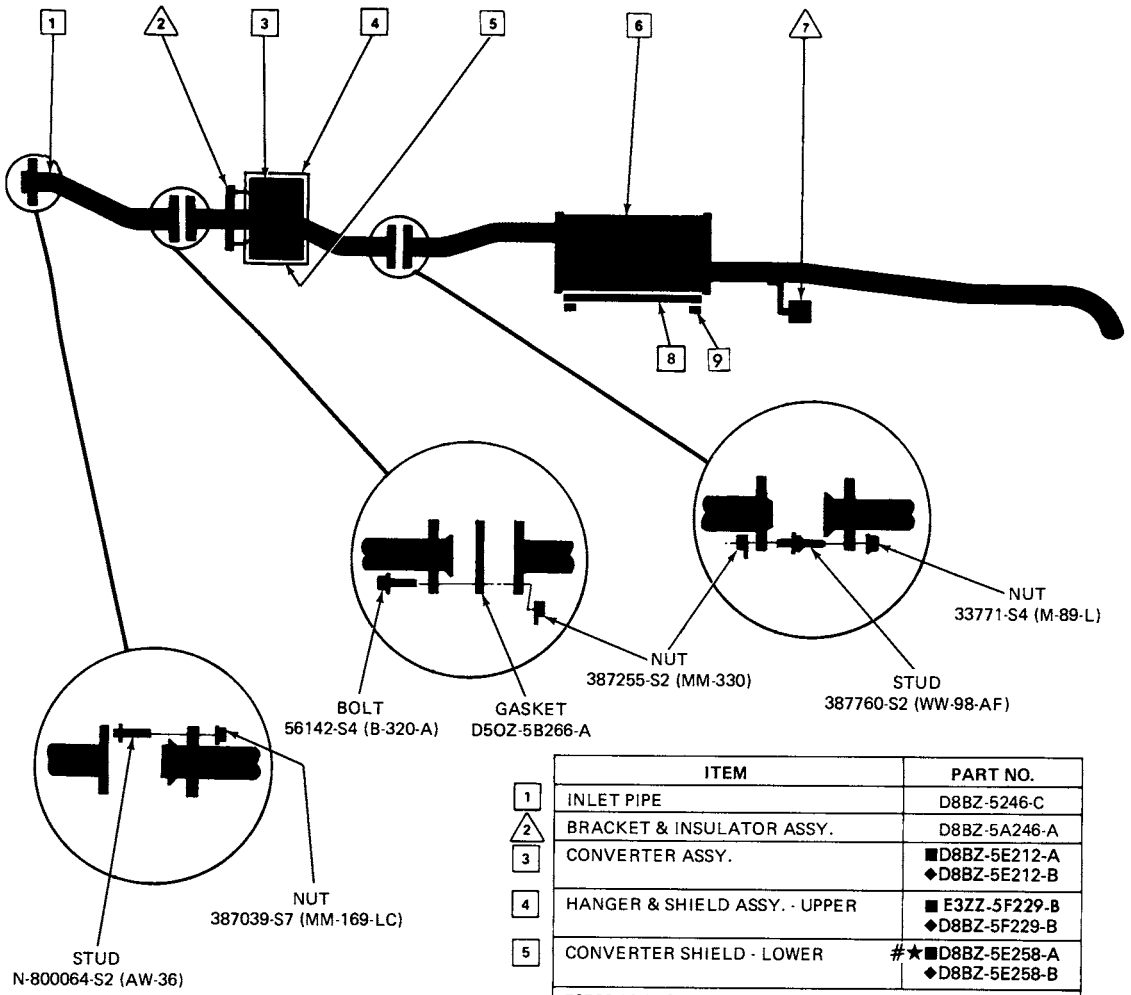

	ITEM	PART NO.
1	INLET PIPE	D8BZ-5246-C
2	BRACKET & INSULATOR ASSY.	D8BZ-5A246-A
3	CONVERTER ASSY.	■D8BZ-5E212-A ◆D8BZ-5E212-B
4	HANGER & SHIELD ASSY. - UPPER	■ E3ZZ-5F229-B ◆D8BZ-5F229-B
5	CONVERTER SHIELD - LOWER	#★■D8BZ-5E258-A ◆D8BZ-5E258-B
	56720-S2 (B-318-GD) (4) SCREWS ATT. LWR. CONV. SHIELD TO UPR. CONV. SHIELD	
6	MUFFLER ASSY.	■D8BZ-5230-A ◆D8BZ-5230-F
7	BRACKET & INSULATOR ASSY.	D8BZ-5260-C
	381877-S2 (UU-52-AF) (2) SCREWS ATT. BRKT. & INS. TO UNDERBODY	
	56722-S2 ( ) (2) BOLTS & 388288-S100 ( ) (2) NUTS ATT. BRKT. & INS. TO OUTLET PIPE	
8	KIT MUFFLER HEAT SHIELD	% E0BZ-5290-D
9	CLAMP MUFFLER HEAT SHIELD RETAINER	%E0AZ-5A277-B

■EXC. CALIF.
◆CALIF.
% POLICE
# r/b D9ZZ-5E258-A

EZ1

COPYRIGHT © 1986 — FORD MOTOR COMPANY — DEARBORN, MICHIGAN

1978 ZEPHYR — 4 CYL. 2.3L (140 CID) SEDAN (W/O CONVERTER)

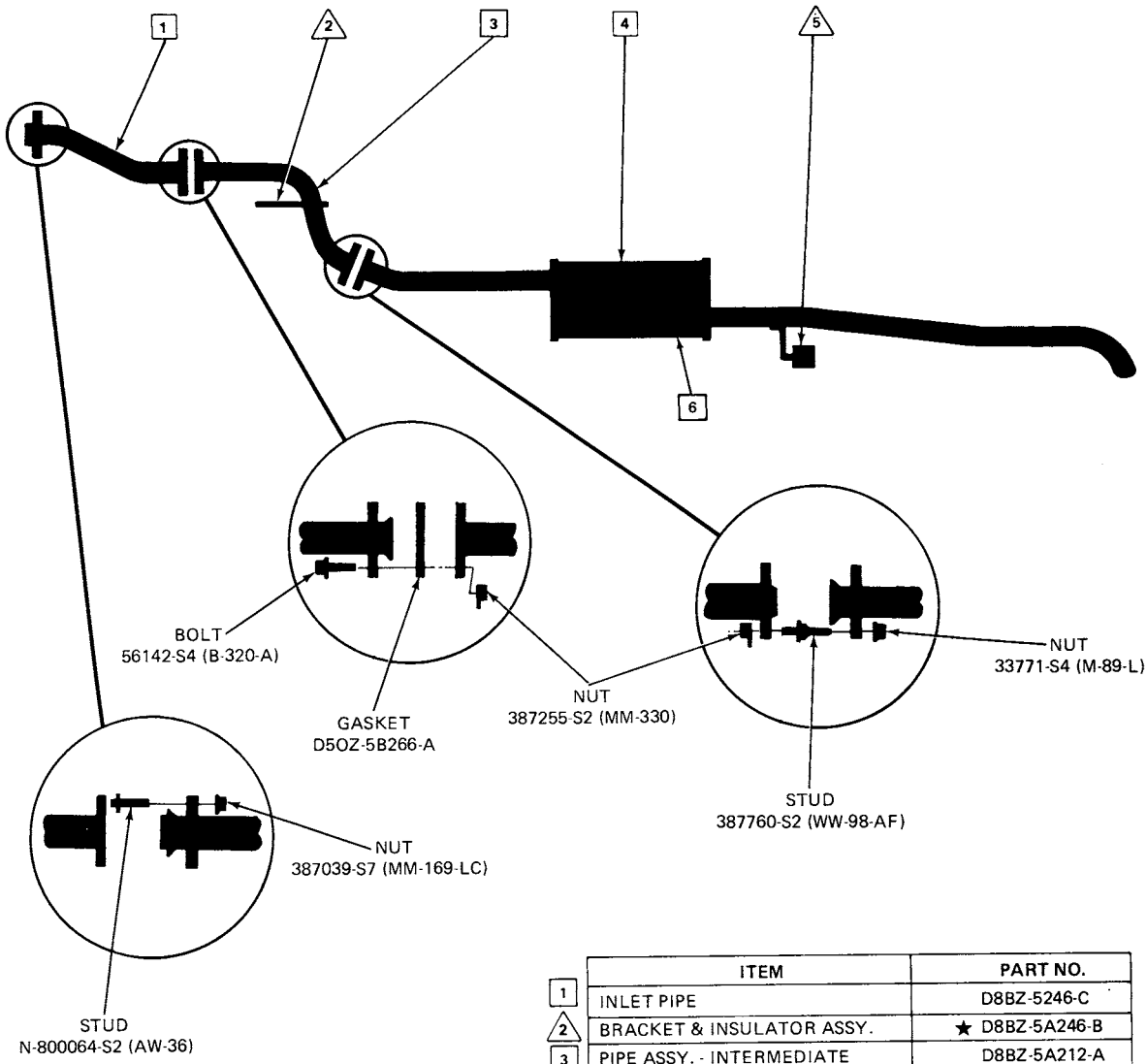

	ITEM	PART NO.
1	INLET PIPE	D8BZ-5246-C
2	BRACKET & INSULATOR ASSY.	★ D8BZ-5A246-B
3	PIPE ASSY. - INTERMEDIATE	D8BZ-5A212-A
4	MUFFLER ASSY.	★ D8BZ-5230-K
5	BRACKET & INSULATOR ASSY.	D8BZ-5260-C
	381877-S2 (UU-52-AF) (2) SCREWS ATT. BRKT. & INS. TO UNDERBODY	
	56722-S2 ( ) (2) BOLTS & 388288-S100 ( ) (2) NUTS ATT. BRKT. & INS. TO OUTLET PIPE	
6	KIT MUFFLER HEAT SHIELD	% E0BZ-5290-D
	CLAMP MUFFLER HEAT SHIELD RETAINER	% E0AZ-5A277-B

EZ2

% POLICE

1978 ZEPHYR — 4CYL. 2.3L (140CID) WAGON (WITH CONVERTER)

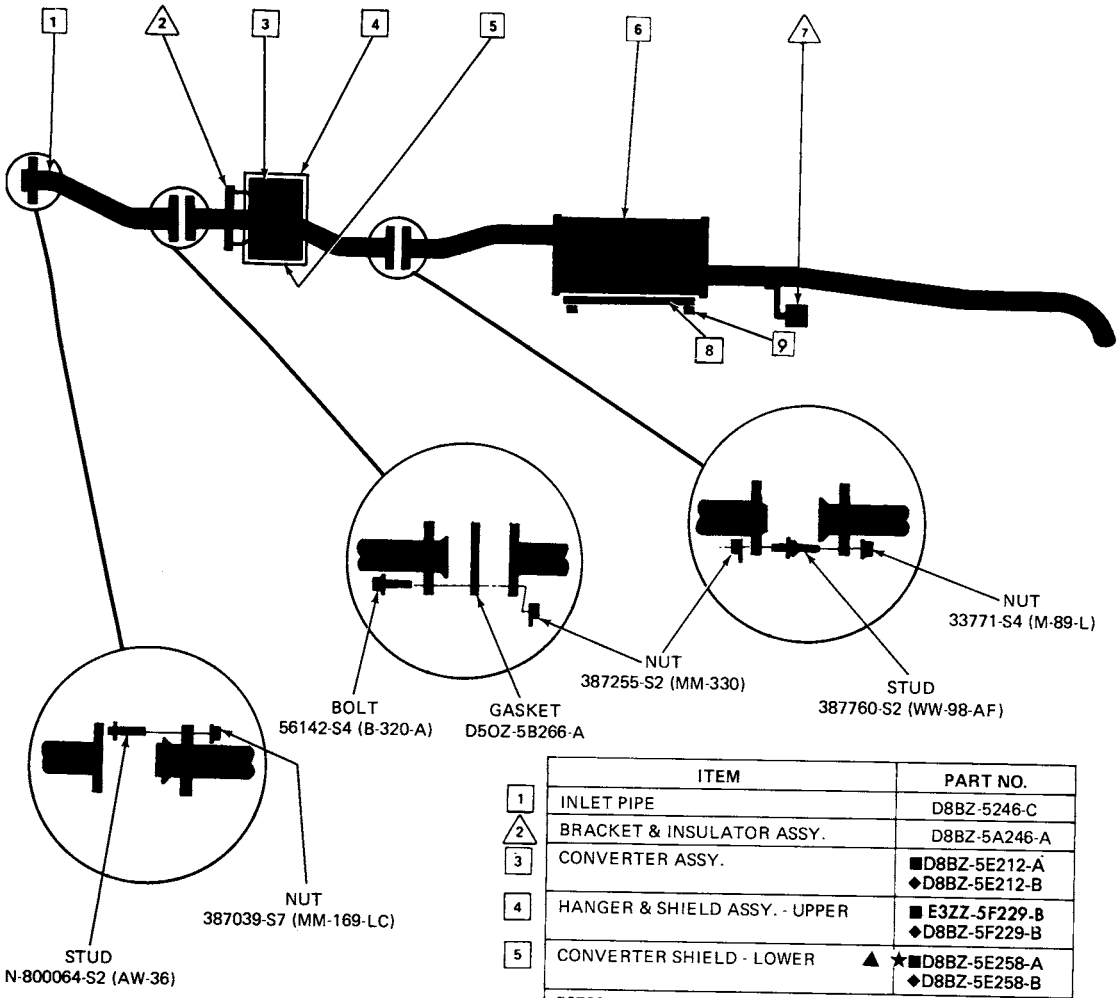

	ITEM	PART NO.
1	INLET PIPE	D8BZ-5246-C
2	BRACKET & INSULATOR ASSY.	D8BZ-5A246-A
3	CONVERTER ASSY.	■D8BZ-5E212-A ◆D8BZ-5E212-B
4	HANGER & SHIELD ASSY. - UPPER	■ E3ZZ-5F229-B ◆D8BZ-5F229-B
5	CONVERTER SHIELD - LOWER ▲	★■D8BZ-5E258-A ◆D8BZ-5E258-B
	56720-S2 (B-318-GD) (4) SCREWS ATT. LWR. CONV. SHIELD TO UPR. CONV. SHIELD	
6	MUFFLER ASSY.	■D8BZ-5230-A ◆D8BZ-5230-F
7	BRACKET & INSULATOR ASSY.	D8BZ-5260-C
	381877-S2 (UU-52-AF) (2) SCREWS ATT. BRKT. & INS. TO UNDERBODY	
	56722-S2 ( ) (2) BOLTS & 388288-S100 ( ) (2) NUTS ATT. BRKT. & INS. TO OUTLET PIPE	
8	KIT MUFFLER HEAT SHIELD	%E0BZ-5290-D
9	CLAMP MUFFLER HEAT SHIELD RETAINER	% E0AZ-5A277-B

■EXC. CALIF.
◆CALIF.
% POLICE
▲ r/b D9ZZ-5E258-A

EZ7

COPYRIGHT © 1986 — FORD MOTOR COMPANY — DEARBORN, MICHIGAN

1978 ZEPHYR — 4 CYL. 2.3L (140 CID) WAGON (W/O CONVERTER)

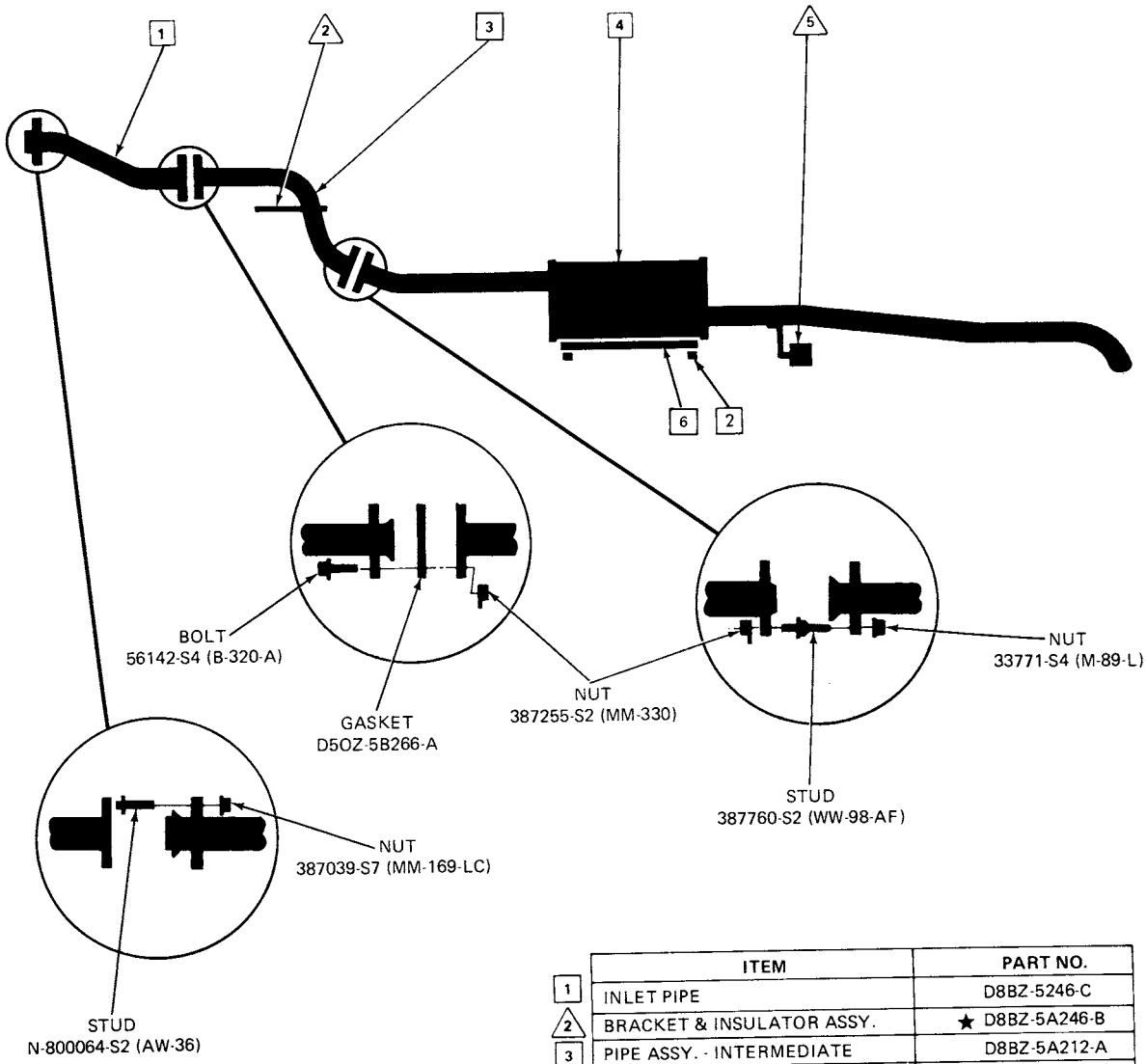

	ITEM	PART NO.
1	INLET PIPE	D8BZ-5246-C
2	BRACKET & INSULATOR ASSY.	★ D8BZ-5A246-B
3	PIPE ASSY. - INTERMEDIATE	D8BZ-5A212-A
4	MUFFLER ASSY.	★ D8BZ-5230-K
5	BRACKET & INSULATOR ASSY.	D8BZ-5260-C
	381877-S2 (UU-52-AF) (2) SCREWS ATT. BRKT. & INS. TO UNDERBODY	
	56722-S2 ( ) (2) BOLTS & 388288-S100 ( ) (2) NUTS ATT. BRKT. & INS. TO OUTLET PIPE	
6	KIT MUFFLER HEAT SHIELD	% E0BZ-5290-D
7	CLAMP MUFFLER HEAT SHIELD RETAINER	% E0AZ-5A277-B

EZ8 % POLICE

1978 ZEPHYR — 6 CYL. 3.3L (200CID) SEDAN
(49 STATE - EXC. HIGH ALTITUDE)
(CANADA — ALL)

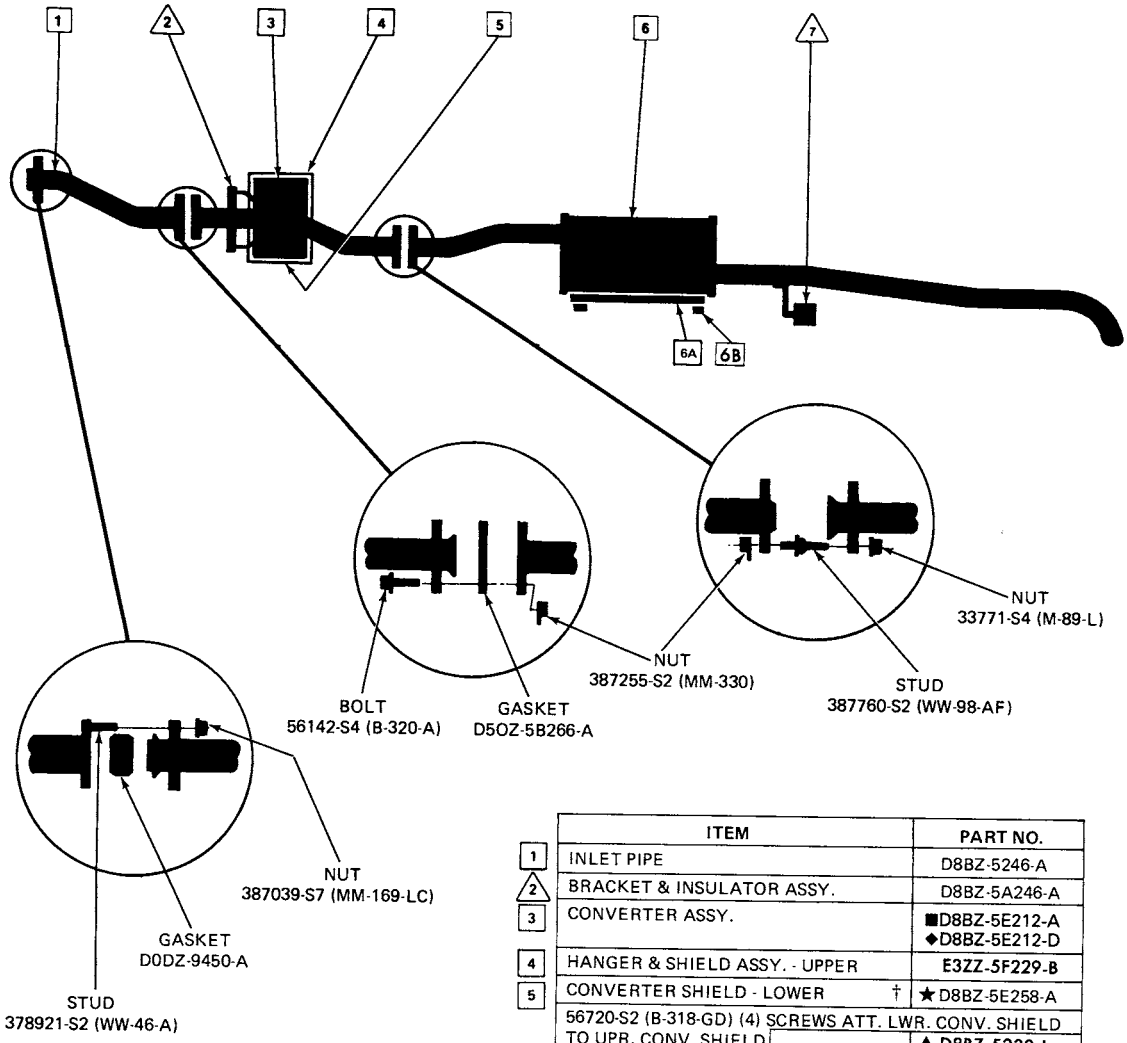

	ITEM	PART NO.
1	INLET PIPE	D8BZ-5246-A
2	BRACKET & INSULATOR ASSY.	D8BZ-5A246-A
3	CONVERTER ASSY.	■D8BZ-5E212-A ◆D8BZ-5E212-D
4	HANGER & SHIELD ASSY. - UPPER	E3ZZ-5F229-B
5	CONVERTER SHIELD - LOWER †	★D8BZ-5E258-A
	56720-S2 (B-318-GD) (4) SCREWS ATT. LWR. CONV. SHIELD TO UPR. CONV. SHIELD	
6	MUFFLER ASSY.	▲D8BZ-5230-L D8BZ-5230-B
6A	KIT MUFFLER HEAT SHIELD	% E0BZ-5290-D
6B	CLAMP MUFFLER HEAT SHIELD RETAINER	%E0AZ-5A277-B
7	BRACKET & INSULATOR ASSY.	D8BZ-5260-C
	381877-S2 (UU-52-AF) (2) SCREWS ATT. BRKT. & INS. TO UNDERBODY	
	56722-S2 ( ) (2) BOLTS & 388288-S100 ( ) (2) NUTS ATT. BRKT. & INS. TO OUTLET PIPE	

EZ3

■MANUAL TRANS.
◆AUTO. TRANS.
% POLICE
▲ w/ BRACKETS ON MUFFLER
† r/b D9ZZ-5E258-A

COPYRIGHT © 1986 — FORD MOTOR COMPANY — DEARBORN, MICHIGAN

1973/79 LINCOLN-MERCURY CARS

1978 ZEPHYR — 6 CYL. 3.3L (200CID) SEDAN (CALIFORNIA & HIGH ALTITUDE)

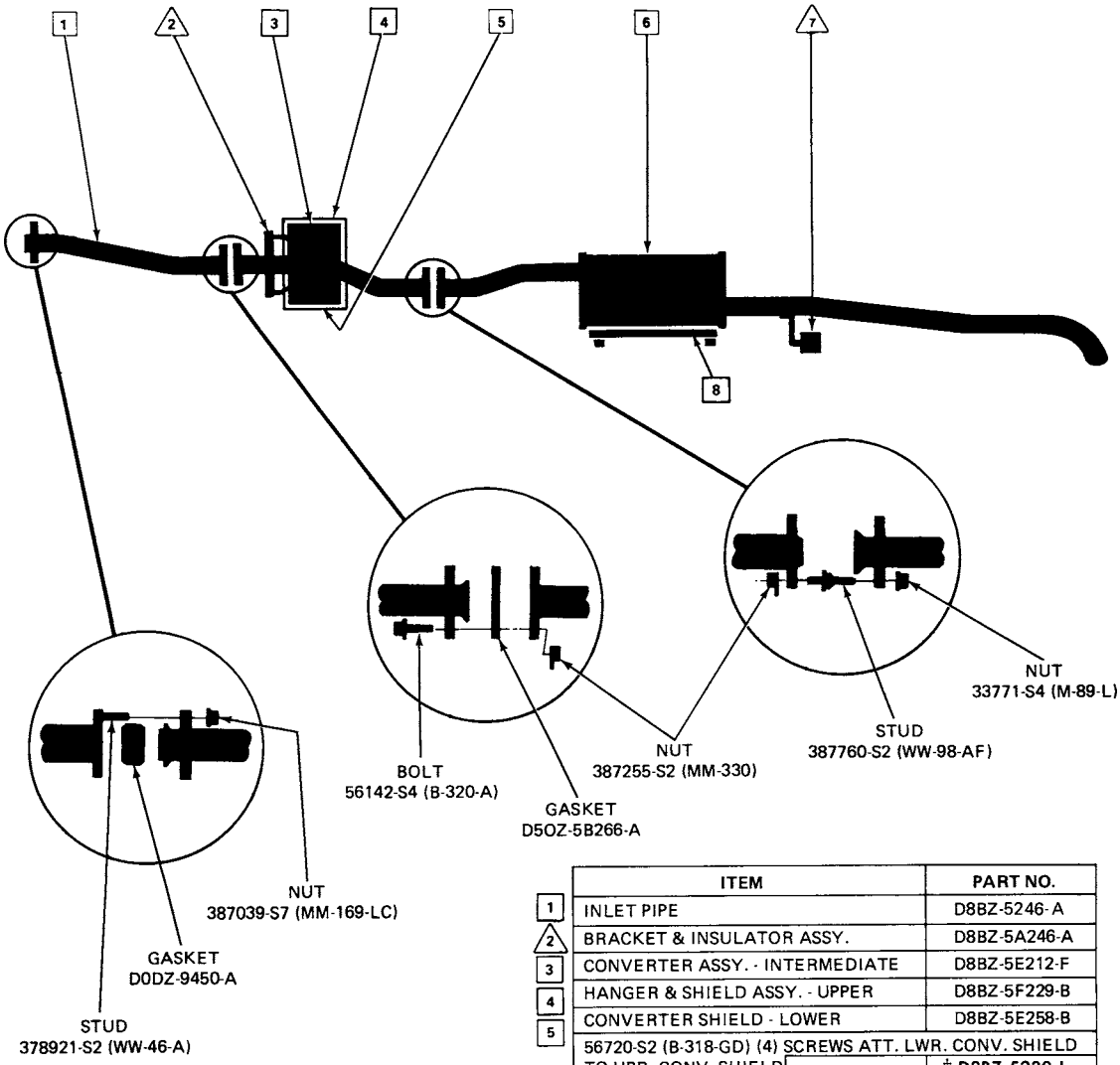

	ITEM	PART NO.
1	INLET PIPE	D8BZ-5246-A
2	BRACKET & INSULATOR ASSY.	D8BZ-5A246-A
3	CONVERTER ASSY. - INTERMEDIATE	D8BZ-5E212-F
4	HANGER & SHIELD ASSY. - UPPER	D8BZ-5F229-B
5	CONVERTER SHIELD - LOWER	D8BZ-5E258-B
	56720-S2 (B-318-GD) (4) SCREWS ATT. LWR. CONV. SHIELD TO UPR. CONV. SHIELD	† D8BZ-5230-L
6	MUFFLER ASSY.	D8BZ-5230-G
7	BRACKET & INSULATOR ASSY.	D8BZ-5260-C
	381877-S2 (UU-52-AF) (2) SCREWS ATT. BRKT. & INS. TO UNDERBODY	
	56722-S2 ( ) (2) BOLTS & 388288-S100 ( ) (2) NUTS ATT. BRKT. & INS. TO OUTLET PIPE	
8	KIT MUFFLER HEAT SHIELD	% E0BZ-5290-D
	CLAMP MUFFLER HEAT SHIELD RETAINER	% E0AZ-5A277-B

% POLICE
† w/ BRACKETS ON MUFFLER

EZ4

1978 ZEPHYR — 6 CYL. 3.3L (200CID) WAGON

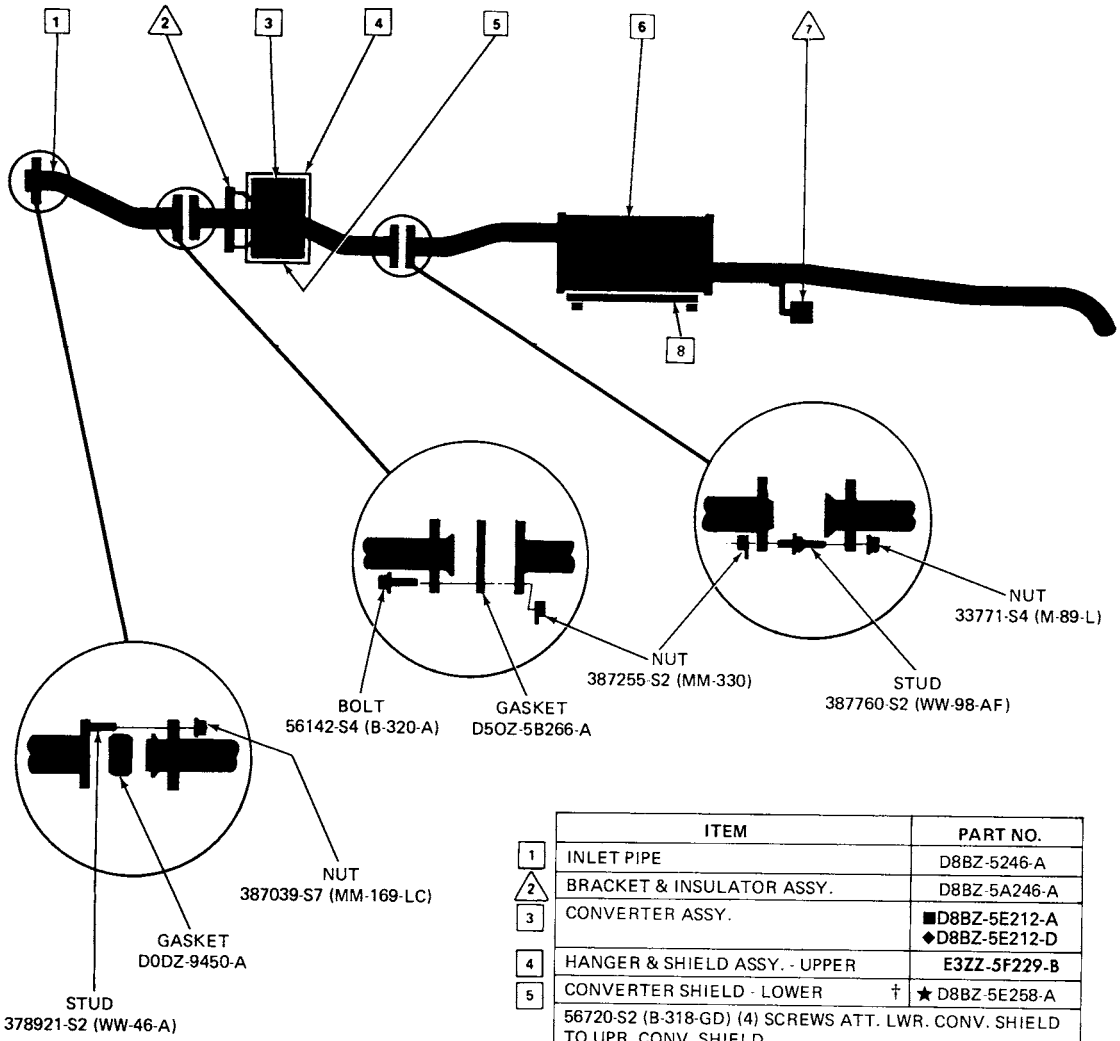

	ITEM	PART NO.
1	INLET PIPE	D8BZ-5246-A
2	BRACKET & INSULATOR ASSY.	D8BZ-5A246-A
3	CONVERTER ASSY.	■D8BZ-5E212-A ◆D8BZ-5E212-D
4	HANGER & SHIELD ASSY. - UPPER	E3ZZ-5F229-B
5	CONVERTER SHIELD - LOWER †	★ D8BZ-5E258-A
	56720-S2 (B-318-GD) (4) SCREWS ATT. LWR. CONV. SHIELD TO UPR. CONV. SHIELD	
6	MUFFLER ASSY.	D8BZ-5230-G
7	BRACKET & INSULATOR ASSY.	D8BZ-5260-C
	381877-S2 (UU-52-AF) (2) SCREWS ATT. BRKT. & INS. TO UNDERBODY	
	56722-S2 ( ) (2) BOLTS & 388288-S100 ( ) (2) NUTS ATT. BRKT. & INS. TO OUTLET PIPE	
8	KIT MUFFLER HEAT SHIELD	%E0BZ-5290-D
	CLAMP MUFFLER HEAT SHIELD RETAINER	% E0AZ-5A277-B

EZ9

■MANUAL TRANS.
◆AUTO. TRANS.
% POLICE
† r/b D9ZZ-5E258-A

COPYRIGHT © 1986 — FORD MOTOR COMPANY — DEARBORN, MICHIGAN

1978 ZEPHYR — 8CYL. 5.0L (302 CID) SEDAN (WITH CONVERTER)

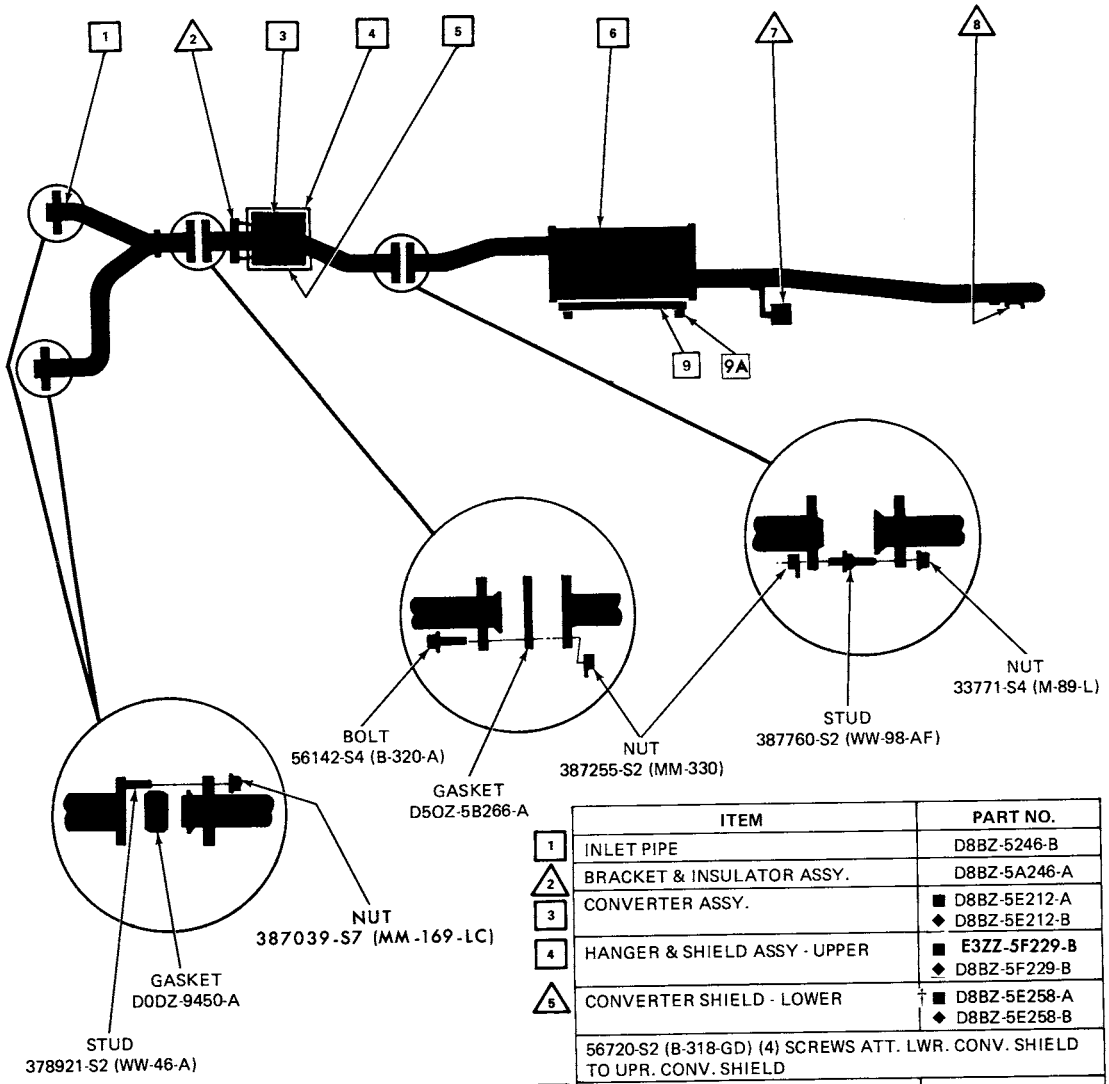

	ITEM	PART NO.
1	INLET PIPE	D8BZ-5246-B
2	BRACKET & INSULATOR ASSY.	D8BZ-5A246-A
3	CONVERTER ASSY.	■ D8BZ-5E212-A ◆ D8BZ-5E212-B
4	HANGER & SHIELD ASSY - UPPER	■ E3ZZ-5F229-B ◆ D8BZ-5F229-B
5	CONVERTER SHIELD - LOWER	† ■ D8BZ-5E258-A ◆ D8BZ-5E258-B
	56720-S2 (B-318-GD) (4) SCREWS ATT. LWR. CONV. SHIELD TO UPR. CONV. SHIELD	
6	MUFFLER ASSY.	■ D8BZ-5230-C ★◆ D8BZ-5230-H
7	BRACKET & INSULATOR ASSY.	D8BZ-5260-C
	381877-S2 (UU-52-AF) (4) SCREWS ATT. BRKT. & INS. TO UNDERBODY	
	56722-S2 ( ) (2) BOLTS & 388288-S100 ( ) (2) NUTS ATT. BRKT. & INS. TO OUTLET PIPE	
8	BRACKET & INSULATOR ASSY.	★ D8BZ-5260-A
	381877-S2 (UU-52-AF) (4) SCREWS ATT. BRKT. & INS. TO UNDERBODY	
	56722-S2 ( ) (2) BOLTS & 388288-S100 ( ) (2) NUTS ATT. BRKT. & INS. TO OUTLET PIPE	
9	KIT MUFFLER HEAT SHIELD	% E0BZ-5290-D
9A	CLAMP MUFFLER HEAT SHIELD RETAINER	% E0AZ-5A277-B

■ EXC. CALIF.
◆ CALIF.
% POLICE
† r/b D9ZZ-5E258-A

EZ5

1978 ZEPHYR - 8 CYL· 5.0L (302 CID) STATION WAGON (WITH CONVERTER)

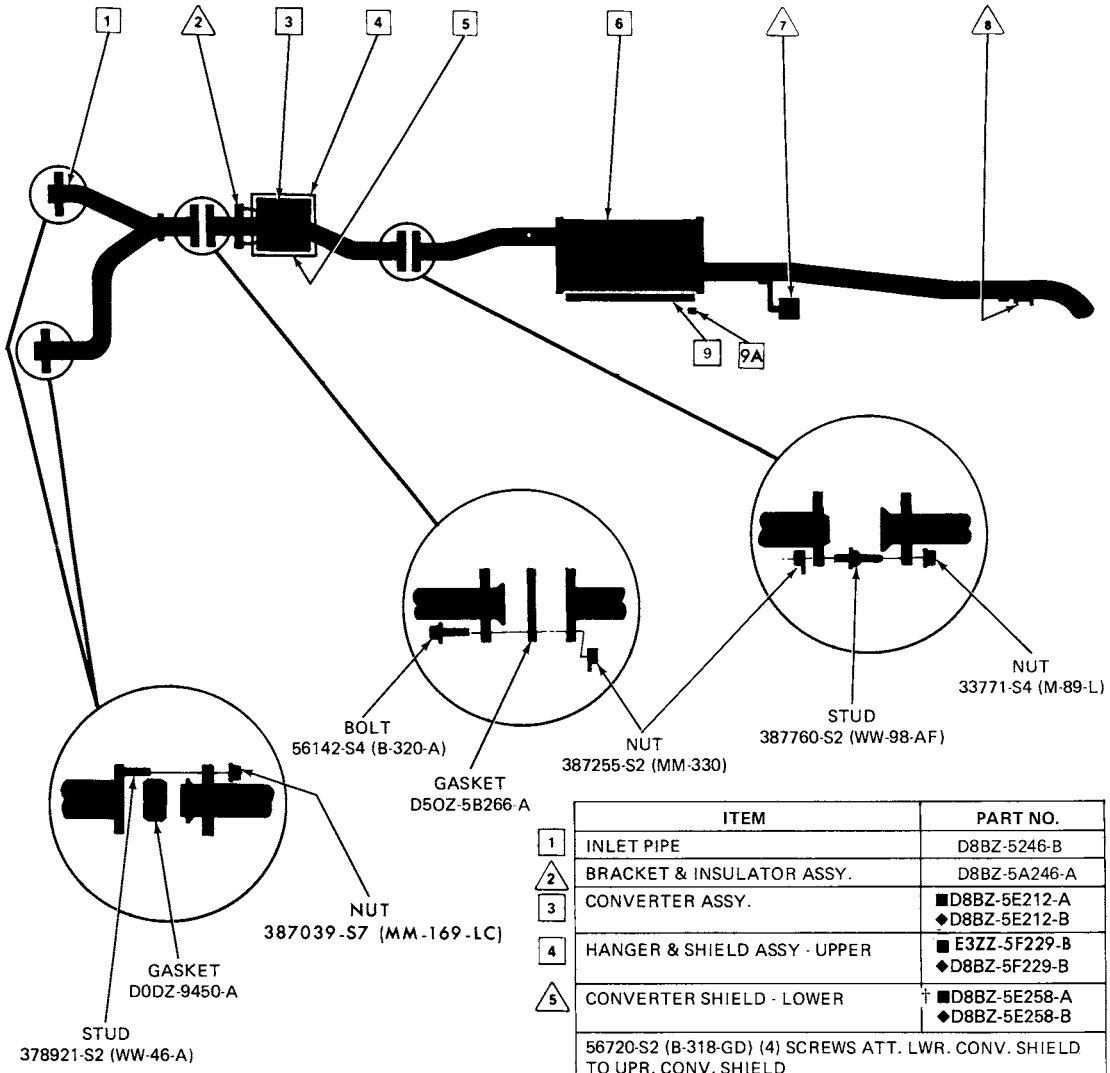

	ITEM	PART NO.
1	INLET PIPE	D8BZ-5246-B
2	BRACKET & INSULATOR ASSY.	D8BZ-5A246-A
3	CONVERTER ASSY.	■D8BZ-5E212-A ◆D8BZ-5E212-B
4	HANGER & SHIELD ASSY - UPPER	■ E3ZZ-5F229-B ◆D8BZ-5F229-B
5	CONVERTER SHIELD - LOWER	† ■D8BZ-5E258-A ◆D8BZ-5E258-B
	56720-S2 (B-318-GD) (4) SCREWS ATT. LWR. CONV. SHIELD TO UPR. CONV. SHIELD	
6	MUFFLER ASSY.	■D8BZ-5230-C ★ ◆D8BZ-5230-H
7	BRACKET & INSULATOR ASSY.	D8BZ-5260-C
	381877-S2 (UU-52-AF) (2) SCREWS ATT. BRKT. & INS. TO UNDERBODY	
	56722-S2 ( ) (2) BOLTS & 388288-S100 ( ) (2) NUTS ATT. BRKT. & INS. TO OUTLET PIPE	
8	BRACKET & INSULATOR ASSY.	★D8BZ-5260-A
	381877-S2 (UU-52-AF) (2) SCREWS ATT. BRKT. & INS. TO UNDERBODY	
	56722-S2 ( ) (2) BOLTS & 388288-S100 ( ) (2) NUTS ATT. BRKT. & INS. TO OUTLET PIPE	
9	KIT MUFFLER HEAT SHIELD	% E0BZ-5290-D
9A	CLAMP MUFFLER HEAT SHIELD RETAINER	% E0AZ-5A277-B

■EXC. CALIF.
◆CALIF.
% POLICE
† r/b D9ZZ-5E258-A

EZ6

COPYRIGHT © 1986 — FORD MOTOR COMPANY — DEARBORN, MICHIGAN

1978 VERSAILLES — 8 CYL. 5.0L (302 CID) SEDAN (WITH CONVERTER)

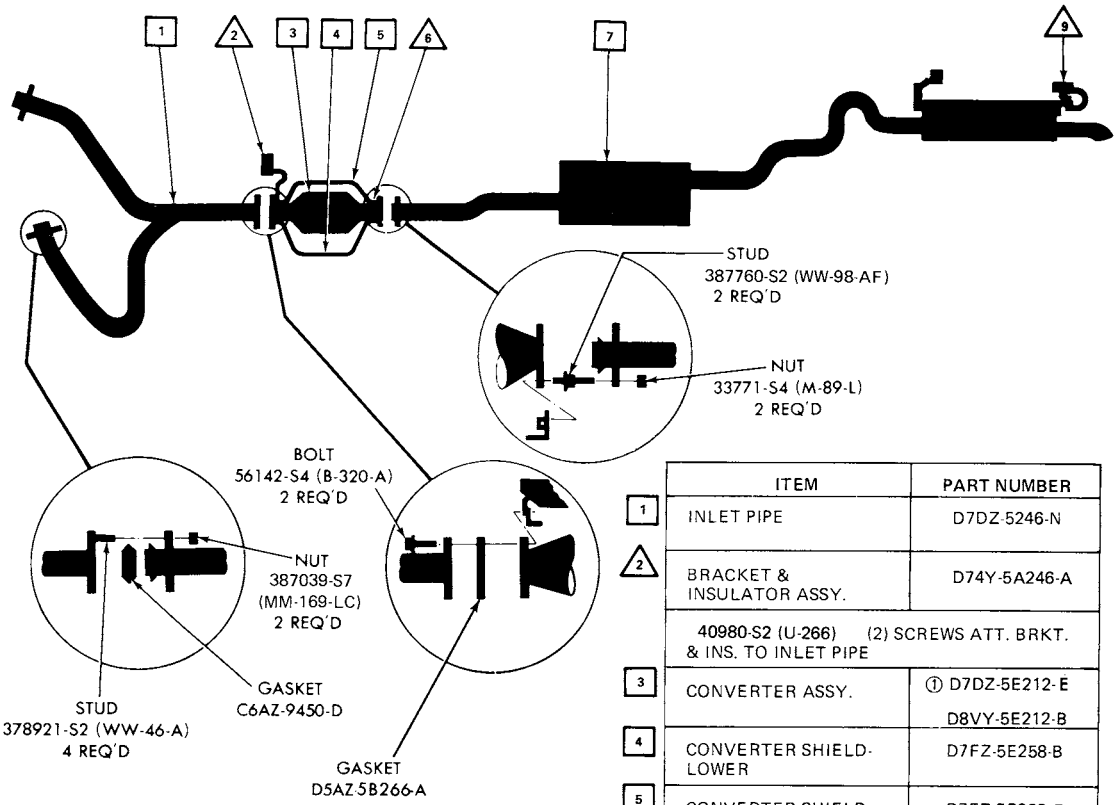

	ITEM	PART NUMBER
1	INLET PIPE	D7DZ-5246-N
2	BRACKET & INSULATOR ASSY.	D74Y-5A246-A
	40980-S2 (U-266) (2) SCREWS ATT. BRKT. & INS. TO INLET PIPE	
3	CONVERTER ASSY.	① D7DZ-5E212-E D8VY-5E212-B
4	CONVERTER SHIELD-LOWER	D7FZ-5E258-B
5	CONVERTER SHIELD-UPPER	D7FZ-5F222-E
6	CONVERTER SHIELD BRKT.	D7FZ-5F227-A
	55914-S2 (U-254-F) (6) SCREWS ATT. CONV. SHIELDS	
7	MUFFLER ASSY.	D8DZ-5230-C
8	BRACKET & INSULATOR ASSY.	D8DZ-5260-B ▲ D9DZ-5260-A
	381877-S2 (UU-52-AF) (2) SCREWS ATT. BRKT. & INS. TO REAR MFLR. 382347-S2 (BB-905) (2) SCREWS ATT. BRKT. & INS. TO UNDERBODY	
9	BRACKET & INSULATOR ASSY.	D7DZ-5260-A
	381877-S2 (UU-52-AF) (4) SCREWS ATT. BRKT. & INS. TO RR. MFLR. & SIDE MEMBER	

① CALIF. USAGE 12" CAT. CONV.
● BEFORE 5-7-79
▲ FROM 5-7-79

EW-3

COPYRIGHT © 1986 — FORD MOTOR COMPANY — DEARBORN, MICHIGAN

EXHAUST PARTS MODEL INDEX

How to use this index -

1. Find the car model desired.
2. Find the line which lists the engine displacement needed.
3. Select the correct page and turn to that page.

For stamped number cross-reference information and for size information, refer to Section 50, page 3.

1979

CYL.	LITRE (C.I.D.)	MODEL	CONVERTER USAGE ■	TYPE ▲	SECTION	PAGE	ILLUS. NO. ♠
		A (MERCURY)					
8	5.0L (302)	(53,65)	TC	S	52.79	1	EG 122
		(71)	TC	S	52.79	2	EG 123
	5.8L (351)-W	(53,65)	TC	S	52.79	3	EG 124
		(71)	TC	S	52.79	4	EG 125
		D (LINCOLN)					
8	6.6L (400)	All	TC	S	52.79	1	EJ 24
		F (COUGAR)					
8	5.0L (302)	(53,65)	TC	S	52.79	1	EB 51
	5.8L (351)-W	(53,65)	TC	S	52.79	2	EB 52
	5.8L (351)-M	(53,65)	TC	S	52.79	3	EB 53
		G (MONARCH)					
6	4.1L (250)	All	OC	S	52.79	1	EV 21
8	5.0L (302)	All	OC	S	52.79	2	EV 22
		J (CAPRI)					
4	2.3L (140)	With Turbocharge--California	OC	S	52.79	1	EM 20
		With Turbocharge--except California	OC	S	52.79	2	EM 21
		Without Turbocharge	OC	S	52.79	3	EM 22
6	2.8L (171)	All	OC	S	52.79	4	EM 23
6	3.3L (200)	All	OC	S	52.79	5	EM 25
8	5.0L (302)	All	OC	S	52.79	6	EM 24

♠ For control purposes only ▲ S - Single D - Dual
■ OC - One converter TC - Two converters NC - Non converter

COPYRIGHT © 1986 — FORD MOTOR COMPANY — DEARBORN, MICHIGAN

1973/79 LINCOLN-MERCURY CARS

EXHAUST PARTS MODEL INDEX - cont'd.

1979

CYL.	LITRE (C.I.D.)	MODEL	CONVERTER USAGE ■	TYPE ▲	SECTION	PAGE	ILLUS. NO. ♦
		K (MARK V)					
8	6.6L (400)	All	TC	S	52.79	1	EK 23
		L (BOBCAT)					
4	2.3L (140)	(62,64)--49 States & Canada	OC	S	52.79	1	ET 39
		(62,64)--California	OC	S	52.79	2	ET 40
		(73)--49 States & Canada	OC	S	52.79	3	ET 41
		(73)--California	OC	S	52.79	4	ET 42
6	2.8L (171)	(62,64)	OC	S	52.79	5	ET 43
		(73)	OC	S	52.79	6	ET 44
		P (ZEPHYR)					
4	2.3L (140)	(54,66)	OC	S	52.79	1	EZ 10
		(74)	OC	S	52.79	2	EZ 11
6	2.8L (200)	(74)	OC	S	52.79	3	EZ 12
		(54,66)--49 States & except high altitude	OC	S	52.79	4	EZ 13
		(54,66)--California & high altitude	OC	S	52.79	5	EZ 14
8	5.0L (302)	(54,66)	OC	S	52.79	6	EZ 15
		(74)	OC	S	52.79	7	EZ 16
		V (VERSAILLES)					
8	5.0L (302)	All	OC	S	52.79	1	EW 4

♦ For control purposes only
■ OC - One converter
▲ S - Single D - Dual
TC - Two converters NC - Non converter

1979 MERCURY – 8 CYL. 5.0L (302 CID) SEDAN (WITH CONVERTER)

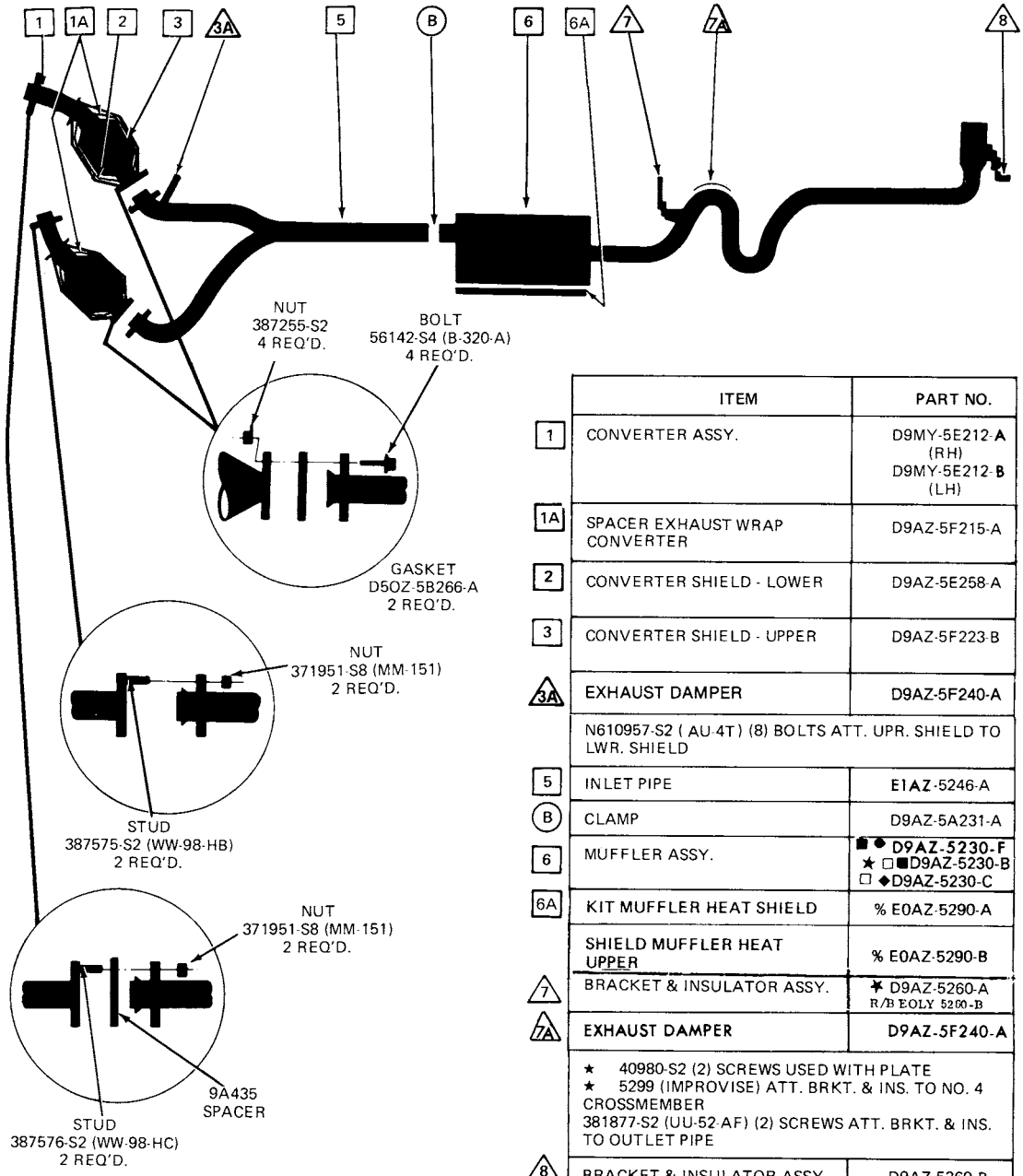

	ITEM	PART NO.
1	CONVERTER ASSY.	D9MY-5E212-A (RH) D9MY-5E212-B (LH)
1A	SPACER EXHAUST WRAP CONVERTER	D9AZ-5F215-A
2	CONVERTER SHIELD - LOWER	D9AZ-5E258-A
3	CONVERTER SHIELD - UPPER	D9AZ-5F223-B
3A	EXHAUST DAMPER	D9AZ-5F240-A
	N610957-S2 (AU-4T) (8) BOLTS ATT. UPR. SHIELD TO LWR. SHIELD	
5	INLET PIPE	E1AZ-5246-A
B	CLAMP	D9AZ-5A231-A
6	MUFFLER ASSY.	■● D9AZ-5230-F ★ □■D9AZ-5230-B □ ◆D9AZ-5230-C
6A	KIT MUFFLER HEAT SHIELD	% E0AZ-5290-A
	SHIELD MUFFLER HEAT UPPER	% E0AZ-5290-B
7	BRACKET & INSULATOR ASSY.	✱ D9AZ-5260-A R/B E0LY 5260-B
7A	EXHAUST DAMPER	D9AZ-5F240-A
	★ 40980-S2 (2) SCREWS USED WITH PLATE ★ 5299 (IMPROVISE) ATT. BRKT. & INS. TO NO. 4 CROSSMEMBER 381877-S2 (UU-52-AF) (2) SCREWS ATT. BRKT. & INS. TO OUTLET PIPE	
8	BRACKET & INSULATOR ASSY.	D9AZ-5260-B
	57644-S2 (U-16-A) (2) SCREWS ATT. BRKT. & INS. TO FRAME ASSY ★ 40975-S2 (2) SCREWS USED WITH PLATE ★ 5299 (IMPROVISE) ATT. BRKT. & INS. TO OUTLET PIPE	

■2.26 AXLE RATIO & 3.08 AXLE
◆2.73 AXLE RATIO
● CALIF. ONLY
□ EXCEPT CALIF.
% POLICE

COPYRIGHT © 1986 — FORD MOTOR COMPANY — DEARBORN, MICHIGAN

1973/79 LINCOLN-MERCURY CARS

1979 MERCURY – 8 CYL. 5.0L (302 CID) STATION WAGON (WITH CONVERTER)

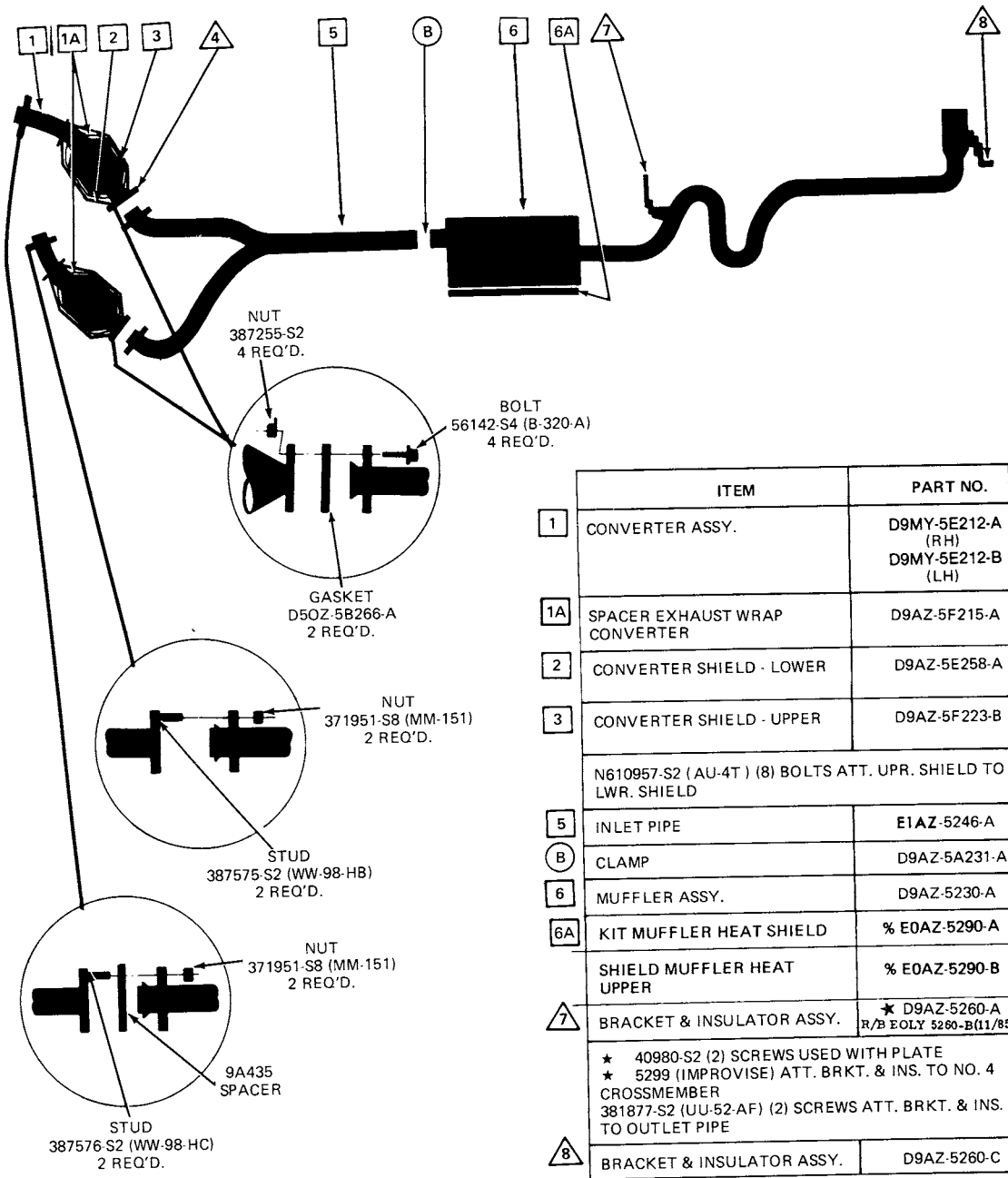

EG-123

% POLICE

	ITEM	PART NO.
1	CONVERTER ASSY.	D9MY-5E212-A (RH) D9MY-5E212-B (LH)
1A	SPACER EXHAUST WRAP CONVERTER	D9AZ-5F215-A
2	CONVERTER SHIELD - LOWER	D9AZ-5E258-A
3	CONVERTER SHIELD - UPPER	D9AZ-5F223-B
	N610957-S2 (AU-4T) (8) BOLTS ATT. UPR. SHIELD TO LWR. SHIELD	
5	INLET PIPE	E1AZ-5246-A
B	CLAMP	D9AZ-5A231-A
6	MUFFLER ASSY.	D9AZ-5230-A
6A	KIT MUFFLER HEAT SHIELD	% E0AZ-5290-A
	SHIELD MUFFLER HEAT UPPER	% E0AZ-5290-B
7	BRACKET & INSULATOR ASSY.	★ D9AZ-5260-A R/B EOLY 5260-B(11/85)
	★ 40980-S2 (2) SCREWS USED WITH PLATE ★ 5299 (IMPROVISE) ATT. BRKT. & INS. TO NO. 4 CROSSMEMBER 381877-S2 (UU-52-AF) (2) SCREWS ATT. BRKT. & INS. TO OUTLET PIPE	
8	BRACKET & INSULATOR ASSY.	D9AZ-5260-C
	57644-S2 (U-16-A) (2) SCREWS ATT. BRKT. & INS. TO FRAME ASSY. ★ 40975-S2 (2) SCREWS USED WITH PLATE ★ 5299 (IMPROVISE) ATT. BRKT. & INS. TO OUTLET PIPE	

1979 MERCURY – 8 CYL. 5.8L (351 CID)-W SEDAN (WITH CONVERTER)

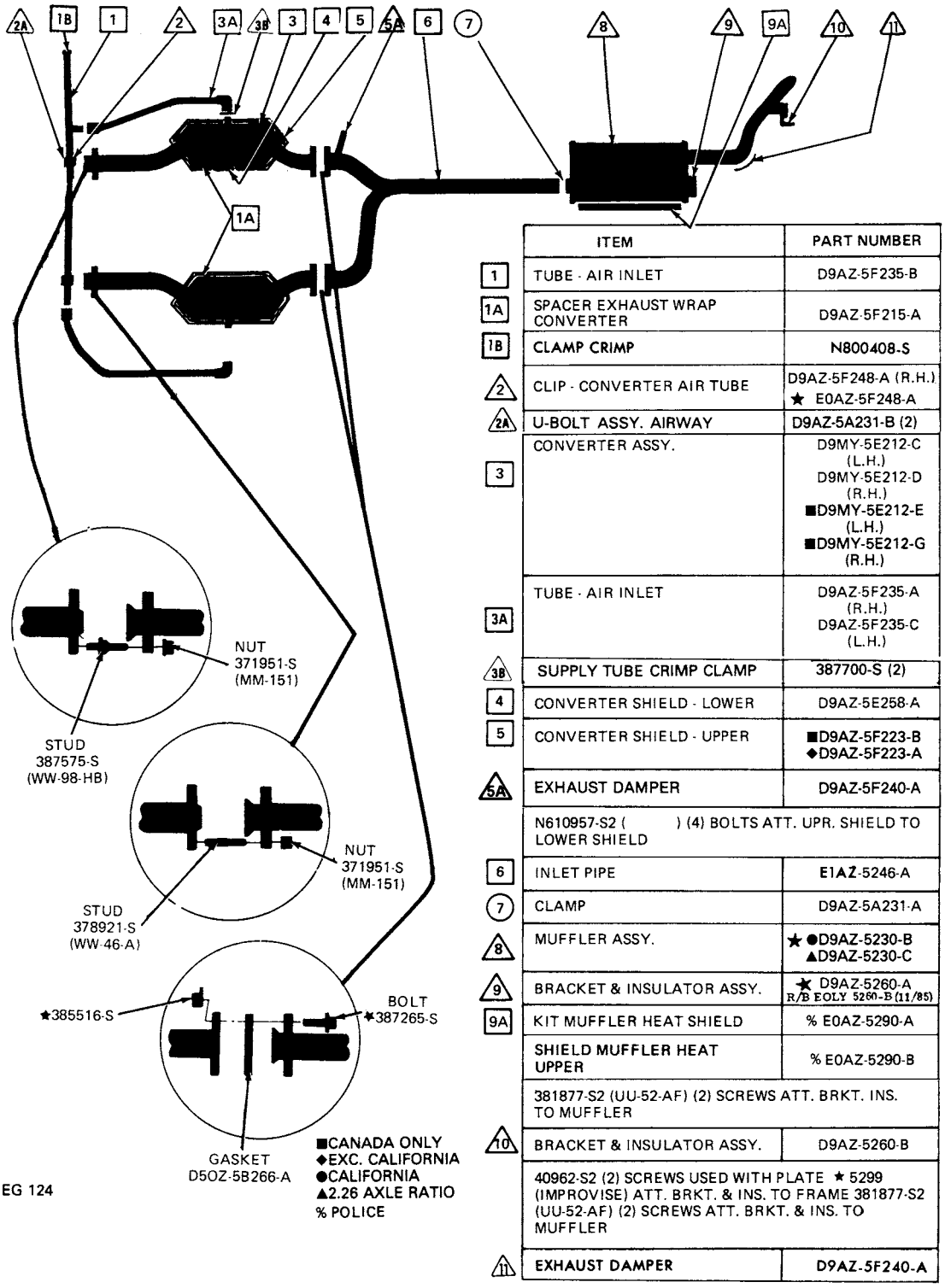

	ITEM	PART NUMBER
1	TUBE - AIR INLET	D9AZ-5F235-B
1A	SPACER EXHAUST WRAP CONVERTER	D9AZ-5F215-A
1B	CLAMP CRIMP	N800408-S
2	CLIP - CONVERTER AIR TUBE	D9AZ-5F248-A (R.H.) ★ E0AZ-5F248-A
2A	U-BOLT ASSY. AIRWAY	D9AZ-5A231-B (2)
3	CONVERTER ASSY.	D9MY-5E212-C (L.H.) D9MY-5E212-D (R.H.) ■D9MY-5E212-E (L.H.) ■D9MY-5E212-G (R.H.)
3A	TUBE - AIR INLET	D9AZ-5F235-A (R.H.) D9AZ-5F235-C (L.H.)
3B	SUPPLY TUBE CRIMP CLAMP	387700-S (2)
4	CONVERTER SHIELD - LOWER	D9AZ-5E258-A
5	CONVERTER SHIELD - UPPER	■D9AZ-5F223-B ◆D9AZ-5F223-A
5A	EXHAUST DAMPER	D9AZ-5F240-A
	N610957-S2 ( ) (4) BOLTS ATT. UPR. SHIELD TO LOWER SHIELD	
6	INLET PIPE	E1AZ-5246-A
7	CLAMP	D9AZ-5A231-A
8	MUFFLER ASSY.	★ ●D9AZ-5230-B ▲D9AZ-5230-C
9	BRACKET & INSULATOR ASSY.	★ D9AZ-5260-A R/B E0LY 5260-B (11/85)
9A	KIT MUFFLER HEAT SHIELD	% E0AZ-5290-A
	SHIELD MUFFLER HEAT UPPER	% E0AZ-5290-B
	381877-S2 (UU-52-AF) (2) SCREWS ATT. BRKT. INS. TO MUFFLER	
10	BRACKET & INSULATOR ASSY.	D9AZ-5260-B
	40962-S2 (2) SCREWS USED WITH PLATE ★ 5299 (IMPROVISE) ATT. BRKT. & INS. TO FRAME 381877-S2 (UU-52-AF) (2) SCREWS ATT. BRKT. & INS. TO MUFFLER	
11	EXHAUST DAMPER	D9AZ-5F240-A

COPYRIGHT © 1986 — FORD MOTOR COMPANY — DEARBORN, MICHIGAN

1979 MERCURY – 8 CYL. 5.8L (351 CID)-W STATION WAGON (WITH CONVERTER)

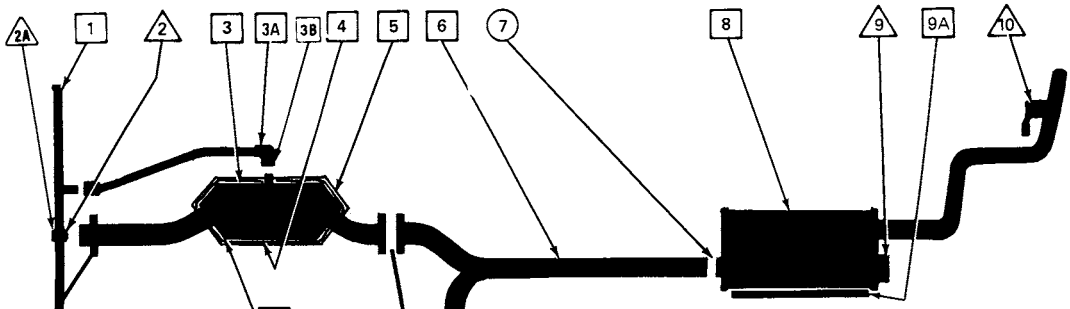

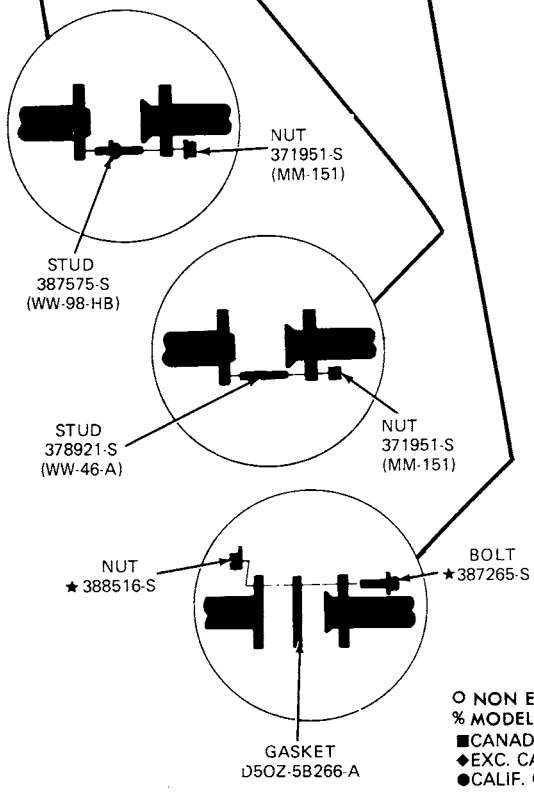

	ITEM	PART NUMBER
1	TUBE - AIR INLET	D9AZ-5F235-B
1A	SPACER EXHAUST WRAP-CONVERTER	D9AZ-5F215-A
2	CLIP - CONVERTER AIR TUBE	D9AZ-5F248-A (R.H.) E0AZ-5E248-A (L.H.)
	CONVERTER ASSY.	D9MY-5E212-C (L.H.) D9MY-5E212-D (R.H.) ■D9MY-5E212-E (L.H.) ■D9MY-5E212-G (R.H.)
2A	U-BOLT ASSY. AIRWAY	D9AZ-5A231-B(2)
3B	SUPPLY TUBE CRIMP CLAMP	387700-S (2)
3A	TUBE - AIR INLET	D9AZ-5F235-A (R.H.) D9AZ-5F235-C (L.H.)
4	CONVERTER SHIELD - LOWER	D9AZ-5E258-A
5	CONVERTER SHIELD - UPPER	◆D9AZ-5F223-B ●D9AZ-5F223-A
	N610957-S2 (AU-4T) (4) BOLTS ATT. UPR. SHIELD TO LWR. SHIELD	
6	INLET PIPE	E1AZ-5246-A
7	CLAMP	D9AZ-5A231-A
8	MUFFLER ASSY.	D9AZ-5230-A
	MUFFLER ASSY.	★%O E0AZ-5230-C
9	BRACKET & INSULATOR ASSY.	★ D9AZ-5260-A R/B E0LY 5260-B(11/85)
9A	KIT MUFFLER HEAT SHIELD	% E0AZ-5290-A
	SHIELD MUFFLER HEAT UPPER	% E0AZ-5290-B
	381877-S2 (UU-52-AF) (2) SCREWS ATT. BRKT. & INS. TO MUFFLER	
10	BRACKET & INSULATOR ASSY.	D9AZ-5260-C
	40962-S2 (2) SCREWS USED WITH PLATE ★ 5299 (IMPROVISE) ATT. BRKT. & INS. TO FRAME 381877-S2 (UU-52-AF) (2) SCREWS ATT. BRKT. & INS. TO MUFFLER	

O NON EEC
% MODEL 74
■CANADA ONLY
◆EXC. CALIF.
●CALIF. ONLY
% POLICE

EG-125

1979 LINCOLN – 8 CYL. 6.6L (400 CID) (WITH CONVERTER)

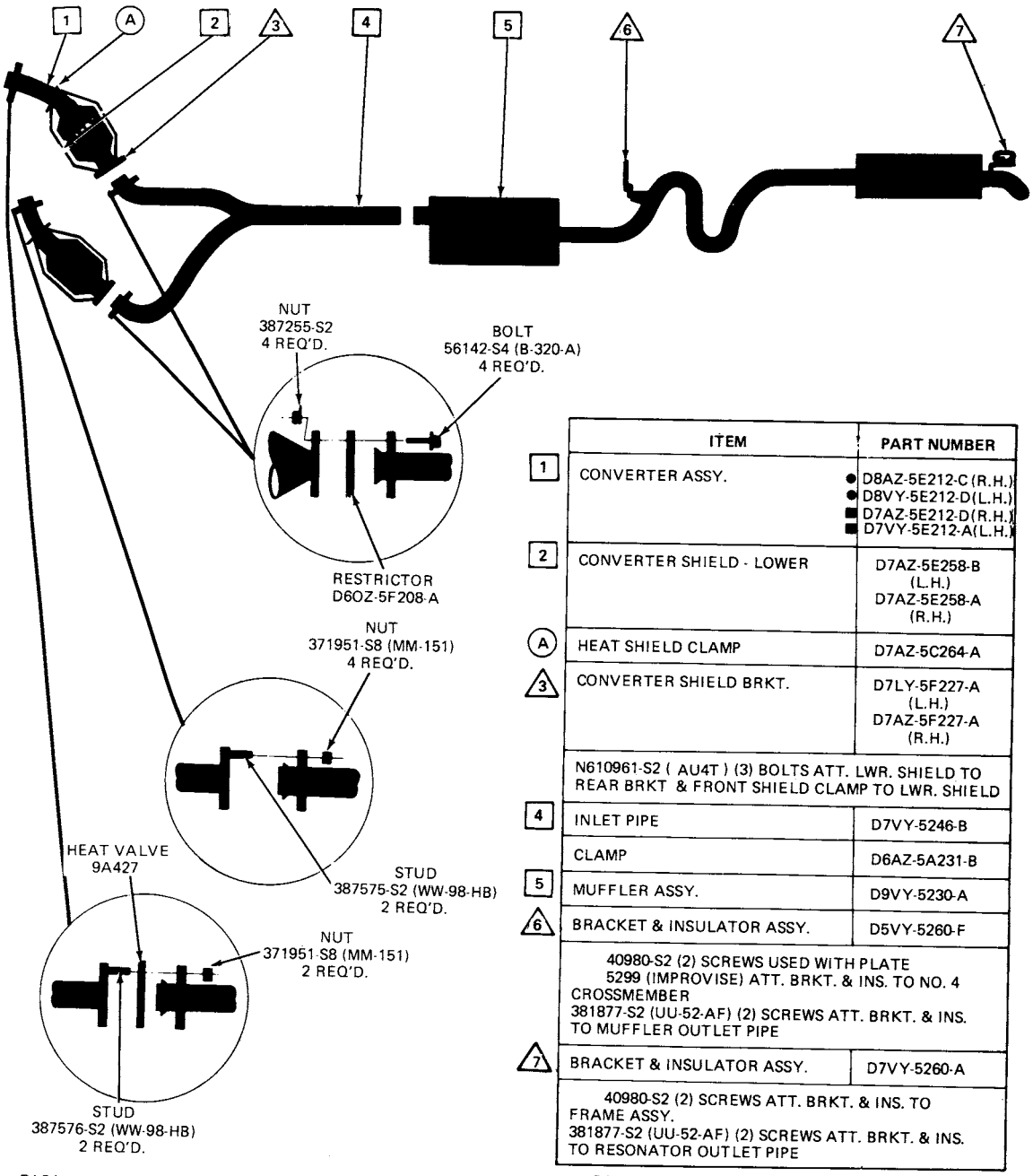

	ITEM	PART NUMBER
1	CONVERTER ASSY.	● D8AZ-5E212-C (R.H.) ● D8VY-5E212-D (L.H.) ■ D7AZ-5E212-D (R.H.) ■ D7VY-5E212-A (L.H.)
2	CONVERTER SHIELD - LOWER	D7AZ-5E258-B (L.H.) D7AZ-5E258-A (R.H.)
A	HEAT SHIELD CLAMP	D7AZ-5C264-A
3	CONVERTER SHIELD BRKT.	D7LY-5F227-A (L.H.) D7AZ-5F227-A (R.H.)
	N610961-S2 (AU4T) (3) BOLTS ATT. LWR. SHIELD TO REAR BRKT & FRONT SHIELD CLAMP TO LWR. SHIELD	
4	INLET PIPE	D7VY-5246-B
	CLAMP	D6AZ-5A231-B
5	MUFFLER ASSY.	D9VY-5230-A
6	BRACKET & INSULATOR ASSY.	D5VY-5260-F
	40980-S2 (2) SCREWS USED WITH PLATE 5299 (IMPROVISE) ATT. BRKT. & INS. TO NO. 4 CROSSMEMBER 381877-S2 (UU-52-AF) (2) SCREWS ATT. BRKT. & INS. TO MUFFLER OUTLET PIPE	
7	BRACKET & INSULATOR ASSY.	D7VY-5260-A
	40980-S2 (2) SCREWS ATT. BRKT. & INS. TO FRAME ASSY. 381877-S2 (UU-52-AF) (2) SCREWS ATT. BRKT. & INS. TO RESONATOR OUTLET PIPE	

● CALIF.
■ EXC. CALIF.

COPYRIGHT © 1986 — FORD MOTOR COMPANY — DEARBORN, MICHIGAN

1979 COUGAR – 8 CYL. 5.0L (302 CID) SEDAN (WITH CONVERTER)

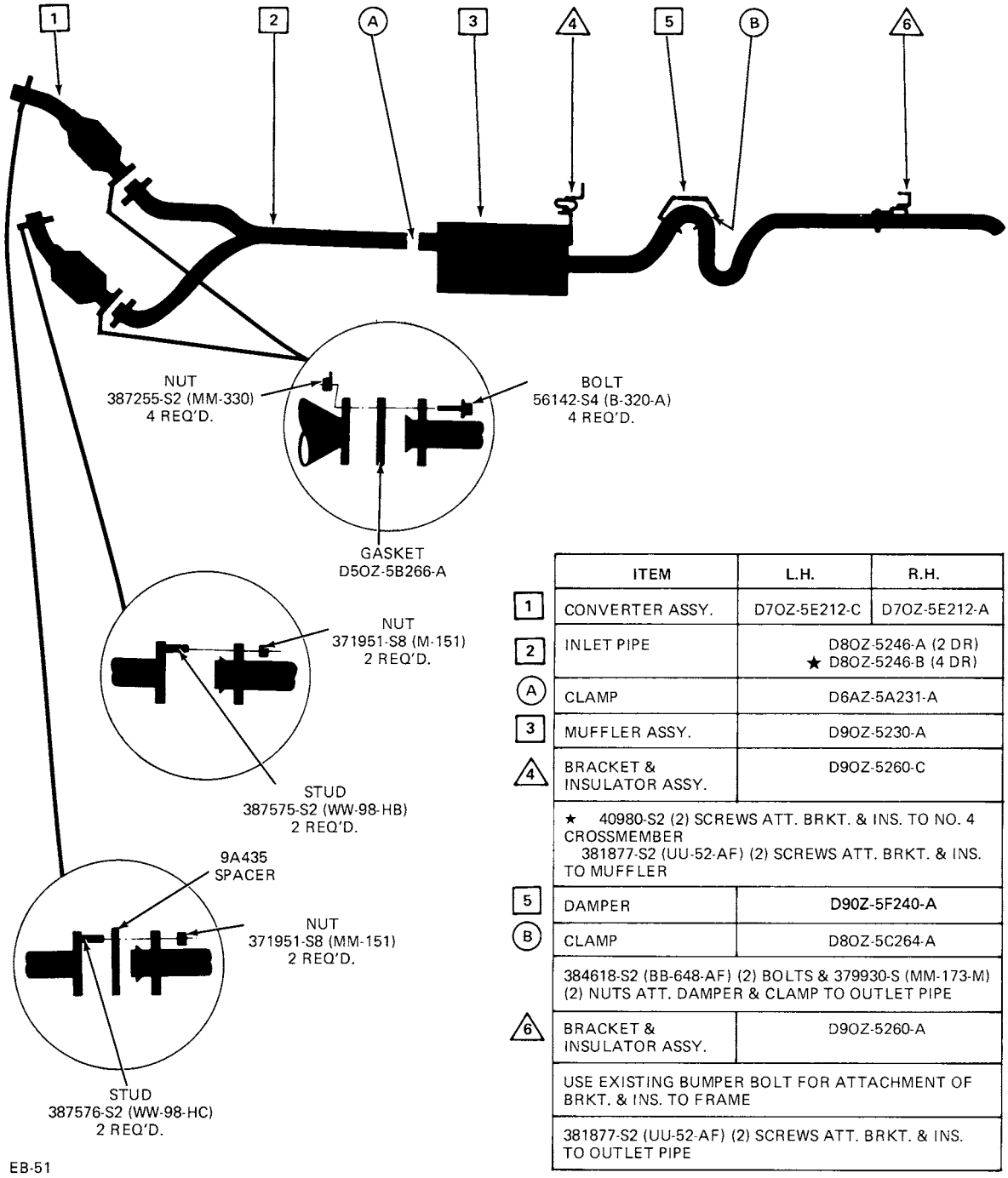

	ITEM	L.H.	R.H.
1	CONVERTER ASSY.	D7OZ-5E212-C	D7OZ-5E212-A
2	INLET PIPE	D8OZ-5246-A (2 DR) ★ D8OZ-5246-B (4 DR)	
A	CLAMP	D6AZ-5A231-A	
3	MUFFLER ASSY.	D9OZ-5230-A	
4	BRACKET & INSULATOR ASSY.	D9OZ-5260-C	
	★ 40980-S2 (2) SCREWS ATT. BRKT. & INS. TO NO. 4 CROSSMEMBER 381877-S2 (UU-52-AF) (2) SCREWS ATT. BRKT. & INS. TO MUFFLER		
5	DAMPER	D9OZ-5F240-A	
B	CLAMP	D8OZ-5C264-A	
	384618-S2 (BB-648-AF) (2) BOLTS & 379930-S (MM-173-M) (2) NUTS ATT. DAMPER & CLAMP TO OUTLET PIPE		
6	BRACKET & INSULATOR ASSY.	D9OZ-5260-A	
	USE EXISTING BUMPER BOLT FOR ATTACHMENT OF BRKT. & INS. TO FRAME		
	381877-S2 (UU-52-AF) (2) SCREWS ATT. BRKT. & INS. TO OUTLET PIPE		

COPYRIGHT © 1986 — FORD MOTOR COMPANY — DEARBORN, MICHIGAN

1979 COUGAR – 8 CYL. 5.8L (351 CID)-W SEDAN (WITH CONVERTER)

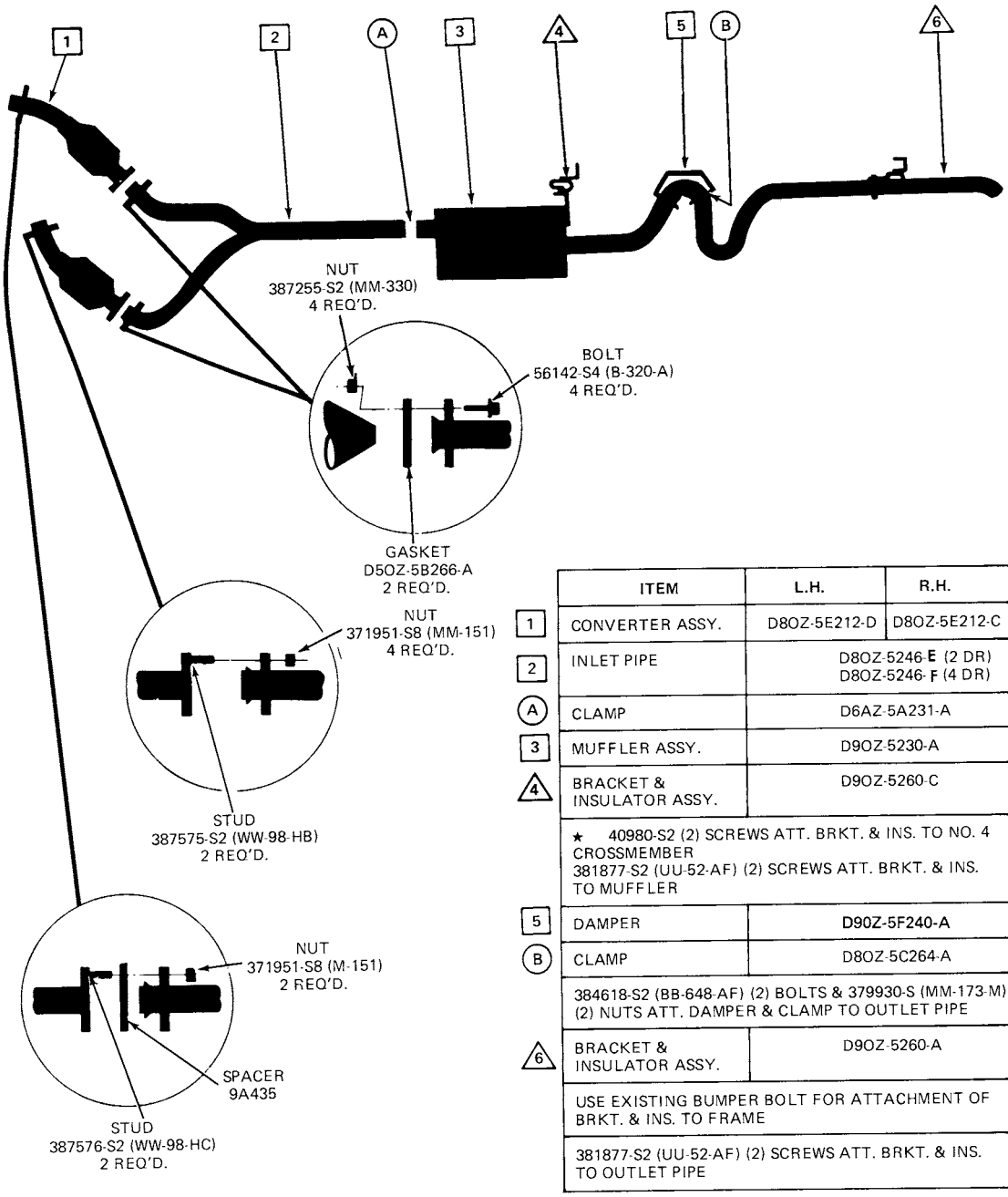

	ITEM	L.H.	R.H.
1	CONVERTER ASSY.	D8OZ-5E212-D	D8OZ-5E212-C
2	INLET PIPE	D8OZ-5246-E (2 DR) D8OZ-5246-F (4 DR)	
A	CLAMP	D6AZ-5A231-A	
3	MUFFLER ASSY.	D9OZ-5230-A	
4	BRACKET & INSULATOR ASSY.	D9OZ-5260-C	
	★ 40980-S2 (2) SCREWS ATT. BRKT. & INS. TO NO. 4 CROSSMEMBER 381877-S2 (UU-52-AF) (2) SCREWS ATT. BRKT. & INS. TO MUFFLER		
5	DAMPER	D90Z-5F240-A	
B	CLAMP	D8OZ-5C264-A	
	384618-S2 (BB-648-AF) (2) BOLTS & 379930-S (MM-173-M) (2) NUTS ATT. DAMPER & CLAMP TO OUTLET PIPE		
6	BRACKET & INSULATOR ASSY.	D9OZ-5260-A	
	USE EXISTING BUMPER BOLT FOR ATTACHMENT OF BRKT. & INS. TO FRAME		
	381877-S2 (UU-52-AF) (2) SCREWS ATT. BRKT. & INS. TO OUTLET PIPE		

EB-52

1979 COUGAR — 8 CYL. 5.8L (351 CID)-M SEDAN (WITH CONVERTER)

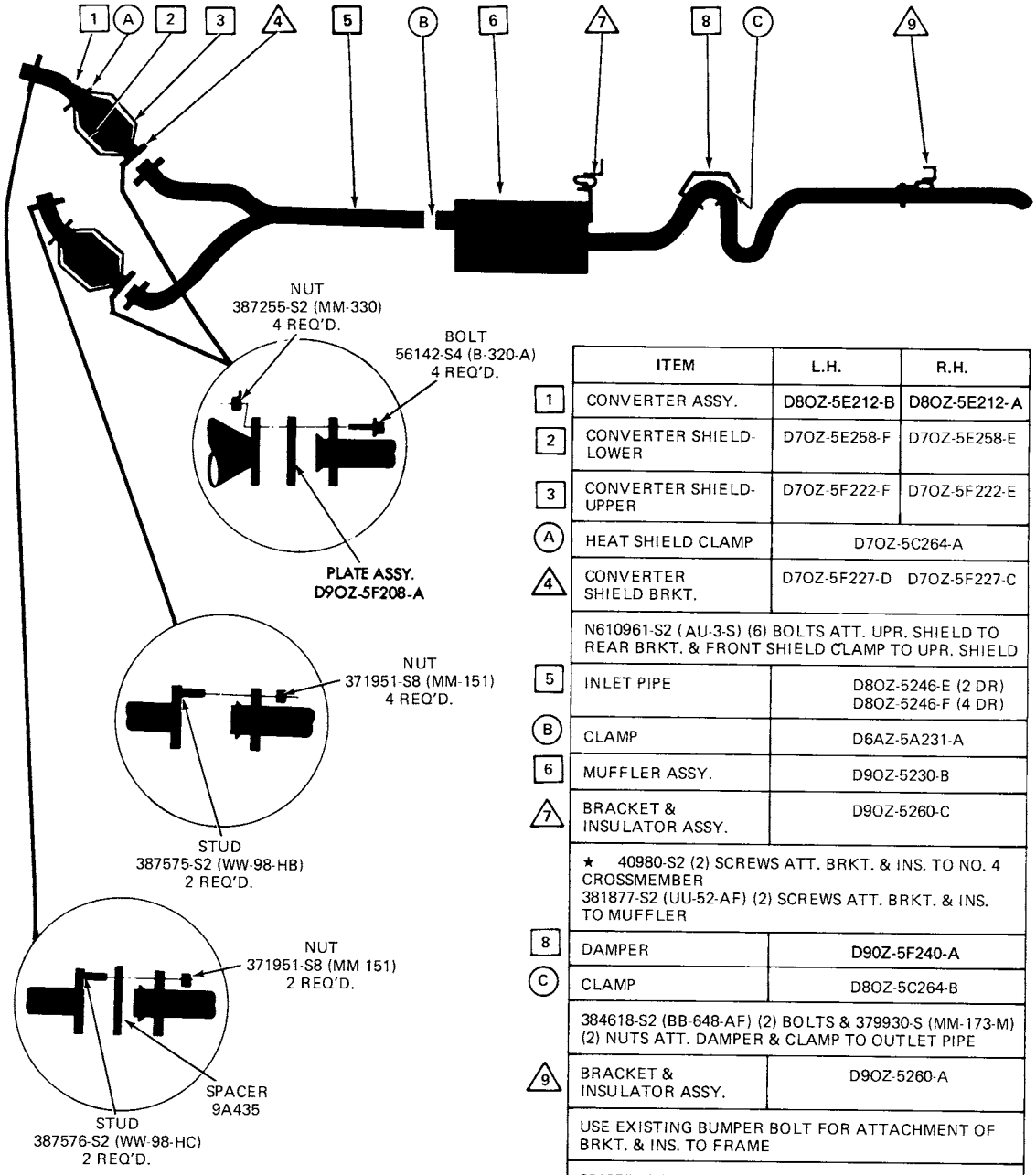

	ITEM	L.H.	R.H.
1	CONVERTER ASSY.	D8OZ-5E212-B	D8OZ-5E212-A
2	CONVERTER SHIELD-LOWER	D7OZ-5E258-F	D7OZ-5E258-E
3	CONVERTER SHIELD-UPPER	D7OZ-5F222-F	D7OZ-5F222-E
A	HEAT SHIELD CLAMP	D7OZ-5C264-A	
4	CONVERTER SHIELD BRKT.	D7OZ-5F227-D	D7OZ-5F227-C
	N610961-S2 (AU-3-S) (6) BOLTS ATT. UPR. SHIELD TO REAR BRKT. & FRONT SHIELD CLAMP TO UPR. SHIELD		
5	INLET PIPE	D8OZ-5246-E (2 DR) D8OZ-5246-F (4 DR)	
B	CLAMP	D6AZ-5A231-A	
6	MUFFLER ASSY.	D9OZ-5230-B	
7	BRACKET & INSULATOR ASSY.	D9OZ-5260-C	
	★ 40980-S2 (2) SCREWS ATT. BRKT. & INS. TO NO. 4 CROSSMEMBER 381877-S2 (UU-52-AF) (2) SCREWS ATT. BRKT. & INS. TO MUFFLER		
8	DAMPER	D90Z-5F240-A	
C	CLAMP	D8OZ-5C264-B	
	384618-S2 (BB-648-AF) (2) BOLTS & 379930-S (MM-173-M) (2) NUTS ATT. DAMPER & CLAMP TO OUTLET PIPE		
9	BRACKET & INSULATOR ASSY.	D9OZ-5260-A	
	USE EXISTING BUMPER BOLT FOR ATTACHMENT OF BRKT. & INS. TO FRAME		
	381877-S2 (UU-52-AF) (2) SCREWS ATT. BRKT. & INS. TO OUTLET PIPE		

COPYRIGHT © 1986 — FORD MOTOR COMPANY — DEARBORN, MICHIGAN

1979 MONARCH – 6 CYL. 4.1L (250 CID) SEDAN (WITH CONVERTER)

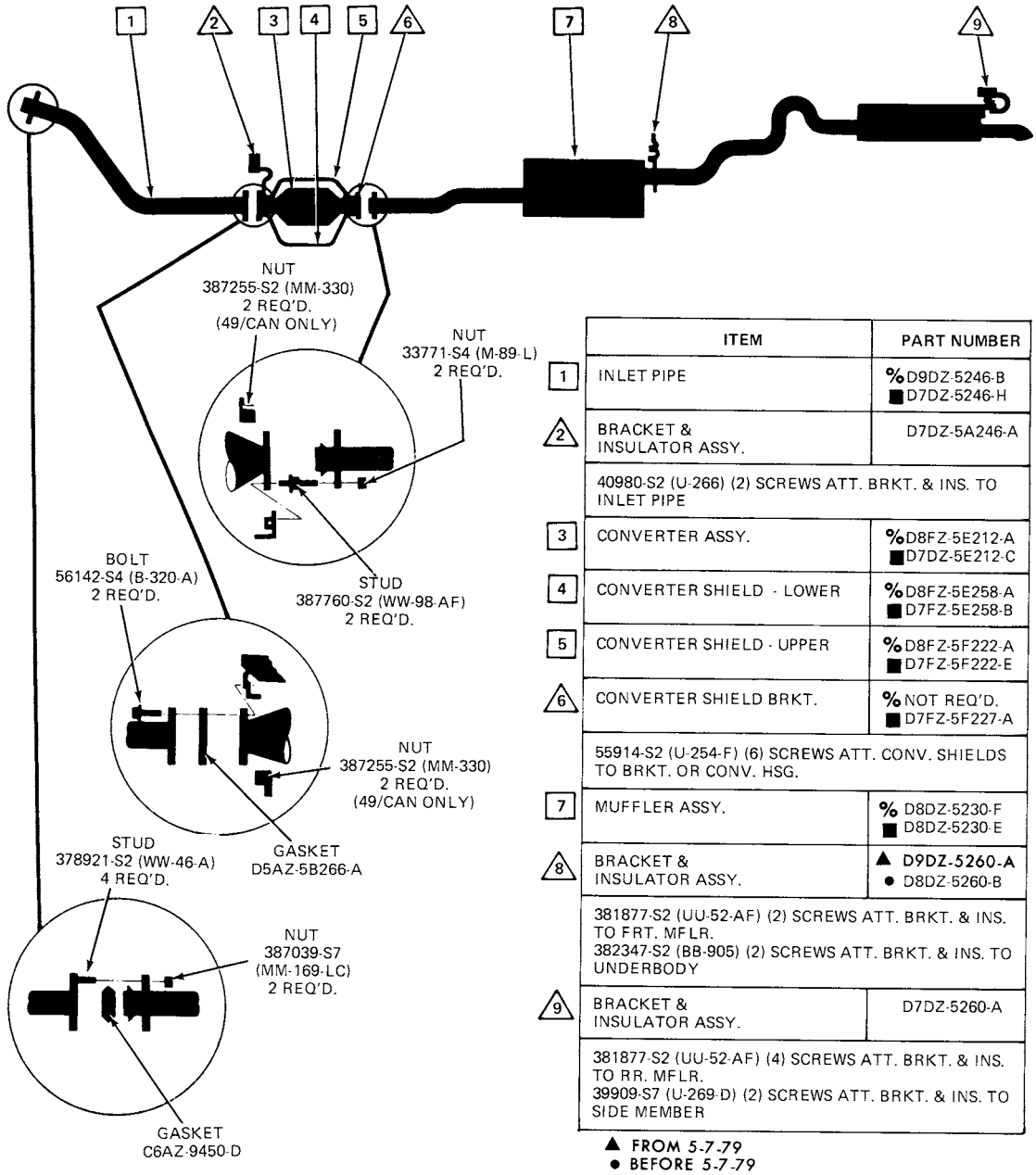

	ITEM	PART NUMBER
1	INLET PIPE	% D9DZ-5246-B ■ D7DZ-5246-H
2	BRACKET & INSULATOR ASSY.	D7DZ-5A246-A
	40980-S2 (U-266) (2) SCREWS ATT. BRKT. & INS. TO INLET PIPE	
3	CONVERTER ASSY.	% D8FZ-5E212-A ■ D7DZ-5E212-C
4	CONVERTER SHIELD - LOWER	% D8FZ-5E258-A ■ D7FZ-5E258-B
5	CONVERTER SHIELD - UPPER	% D8FZ-5F222-A ■ D7FZ-5F222-E
6	CONVERTER SHIELD BRKT.	% NOT REQ'D. ■ D7FZ-5F227-A
	55914-S2 (U-254-F) (6) SCREWS ATT. CONV. SHIELDS TO BRKT. OR CONV. HSG.	
7	MUFFLER ASSY.	% D8DZ-5230-F ■ D8DZ-5230-E
8	BRACKET & INSULATOR ASSY.	▲ D9DZ-5260-A ● D8DZ-5260-B
	381877-S2 (UU-52-AF) (2) SCREWS ATT. BRKT. & INS. TO FRT. MFLR. 382347-S2 (BB-905) (2) SCREWS ATT. BRKT. & INS. TO UNDERBODY	
9	BRACKET & INSULATOR ASSY.	D7DZ-5260-A
	381877-S2 (UU-52-AF) (4) SCREWS ATT. BRKT. & INS. TO RR. MFLR. 39909-S7 (U-269-D) (2) SCREWS ATT. BRKT. & INS. TO SIDE MEMBER	

▲ FROM 5-7-79
● BEFORE 5-7-79
% 7-1/4" CAT. CONV.
■ 12" CAT. CONV. (SHELL LENGTH)

EV-21

COPYRIGHT © 1986 — FORD MOTOR COMPANY — DEARBORN, MICHIGAN

1973/79 LINCOLN-MERCURY CARS

1979 MONARCH – 8 CYL. 5.0L (302 CID) SEDAN (WITH CONVERTER)

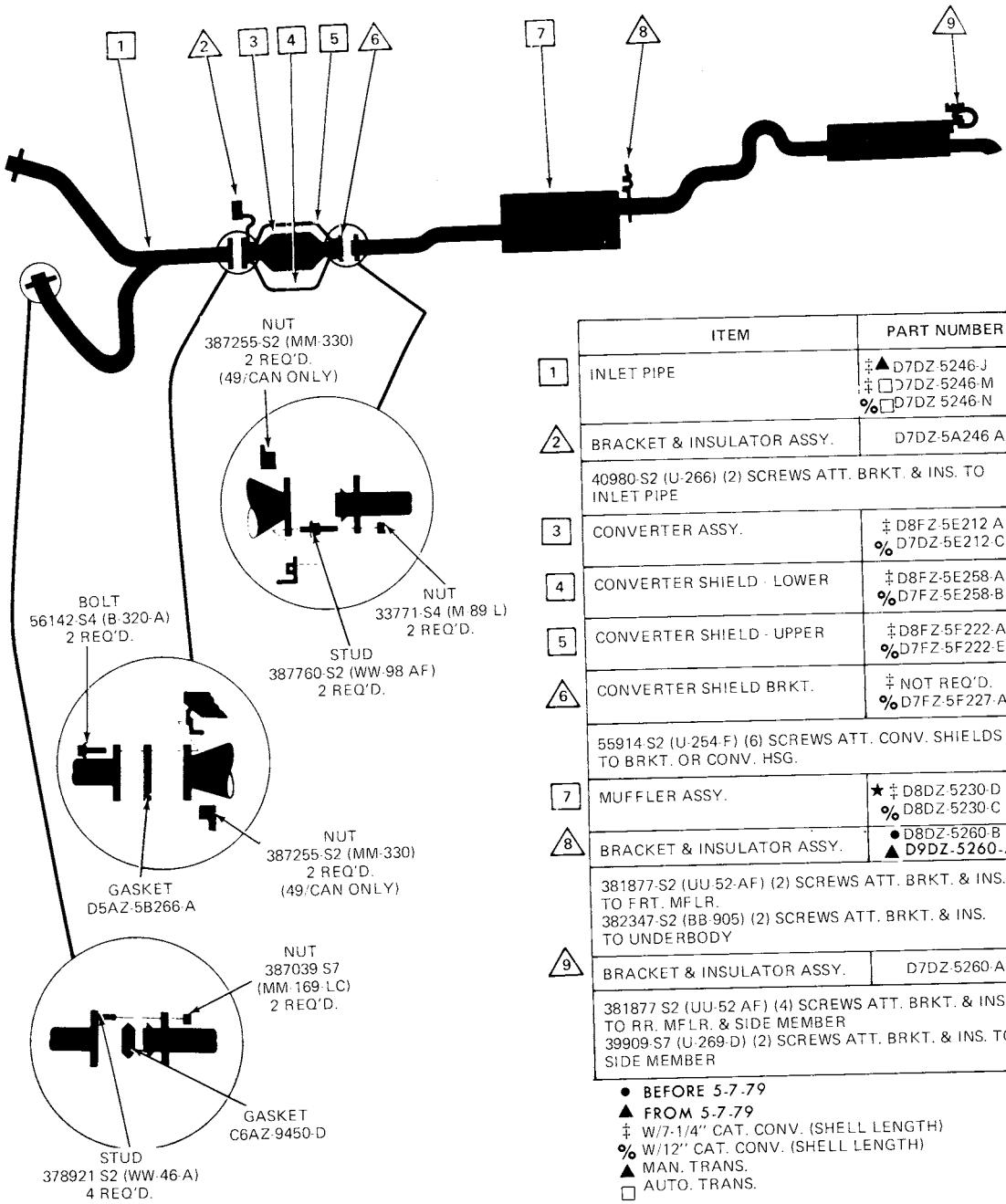

	ITEM	PART NUMBER
1	INLET PIPE	‡▲ D7DZ-5246-J ‡ □ D7DZ-5246-M % □ D7DZ-5246-N
2	BRACKET & INSULATOR ASSY.	D7DZ-5A246 A
	40980-S2 (U-266) (2) SCREWS ATT. BRKT. & INS. TO INLET PIPE	
3	CONVERTER ASSY.	‡ D8FZ-5E212 A % D7DZ-5E212-C
4	CONVERTER SHIELD - LOWER	‡ D8FZ-5E258-A % D7FZ-5E258-B
5	CONVERTER SHIELD - UPPER	‡ D8FZ-5F222-A % D7FZ-5F222-E
6	CONVERTER SHIELD BRKT.	‡ NOT REQ'D. % D7FZ-5F227-A
	55914-S2 (U-254-F) (6) SCREWS ATT. CONV. SHIELDS TO BRKT. OR CONV. HSG.	
7	MUFFLER ASSY.	★ ‡ D8DZ-5230-D % D8DZ-5230-C
8	BRACKET & INSULATOR ASSY.	● ~~D8DZ-5260-B~~ ▲ D9DZ-5260-A
	381877-S2 (UU-52-AF) (2) SCREWS ATT. BRKT. & INS. TO FRT. MFLR. 382347-S2 (BB-905) (2) SCREWS ATT. BRKT. & INS. TO UNDERBODY	
9	BRACKET & INSULATOR ASSY.	D7DZ-5260-A
	381877 S2 (UU-52 AF) (4) SCREWS ATT. BRKT. & INS. TO RR. MFLR. & SIDE MEMBER 39909-S7 (U-269-D) (2) SCREWS ATT. BRKT. & INS. TO SIDE MEMBER	

● BEFORE 5-7-79
▲ FROM 5-7-79
‡ W/7-1/4" CAT. CONV. (SHELL LENGTH)
% W/12" CAT. CONV. (SHELL LENGTH)
▲ MAN. TRANS.
□ AUTO. TRANS.

EV-22

1973/79
LINCOLN-MERCURY CARS

1979 CAPRI – 4 CYL. 2.3L (140 CID)
(WITH TURBOCHARGER)
(CALIFORNIA)

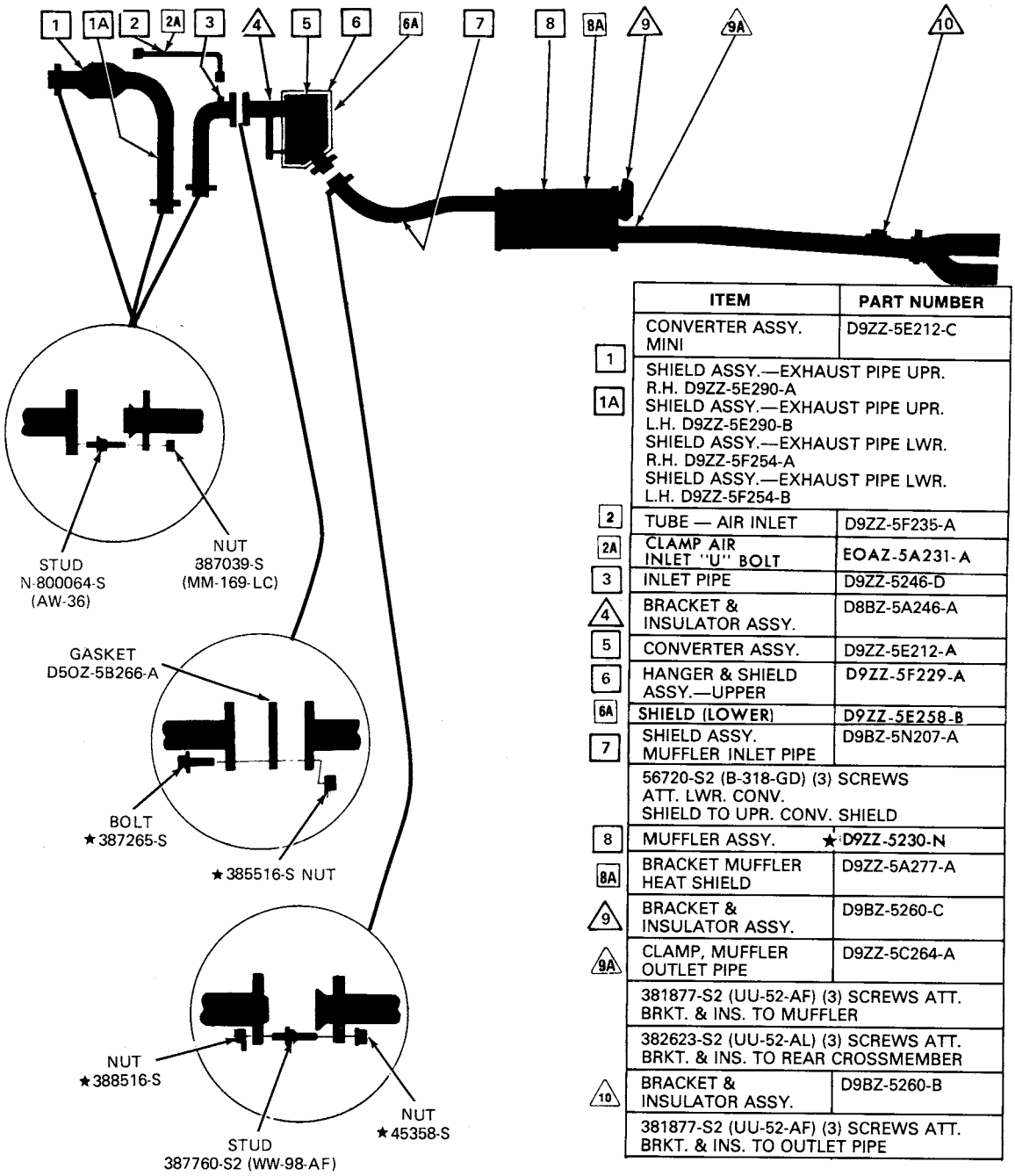

	ITEM	PART NUMBER
	CONVERTER ASSY. MINI	D9ZZ-5E212-C
1	SHIELD ASSY.—EXHAUST PIPE UPR. R.H. D9ZZ-5E290-A	
1A	SHIELD ASSY.—EXHAUST PIPE UPR. L.H. D9ZZ-5E290-B	
	SHIELD ASSY.—EXHAUST PIPE LWR. R.H. D9ZZ-5F254-A	
	SHIELD ASSY.—EXHAUST PIPE LWR. L.H. D9ZZ-5F254-B	
2	TUBE — AIR INLET	D9ZZ-5F235-A
2A	CLAMP AIR INLET "U" BOLT	EOAZ-5A231-A
3	INLET PIPE	D9ZZ-5246-D
4	BRACKET & INSULATOR ASSY.	D8BZ-5A246-A
5	CONVERTER ASSY.	D9ZZ-5E212-A
6	HANGER & SHIELD ASSY.—UPPER	D9ZZ-5F229-A
6A	SHIELD (LOWER)	D9ZZ-5E258-B
7	SHIELD ASSY. MUFFLER INLET PIPE	D9BZ-5N207-A
	56720-S2 (B-318-GD) (3) SCREWS ATT. LWR. CONV. SHIELD TO UPR. CONV. SHIELD	
8	MUFFLER ASSY.	★D9ZZ-5230-N
8A	BRACKET MUFFLER HEAT SHIELD	D9ZZ-5A277-A
9	BRACKET & INSULATOR ASSY.	D9BZ-5260-C
9A	CLAMP, MUFFLER OUTLET PIPE	D9ZZ-5C264-A
	381877-S2 (UU-52-AF) (3) SCREWS ATT. BRKT. & INS. TO MUFFLER	
	382623-S2 (UU-52-AL) (3) SCREWS ATT. BRKT. & INS. TO REAR CROSSMEMBER	
10	BRACKET & INSULATOR ASSY.	D9BZ-5260-B
	381877-S2 (UU-52-AF) (3) SCREWS ATT. BRKT. & INS. TO OUTLET PIPE	

EM-20

COPYRIGHT © 1986 — FORD MOTOR COMPANY — DEARBORN, MICHIGAN

1973/79 LINCOLN-MERCURY CARS

1979 CAPRI – 4 CYL. 2.3L (140 CID) (WITH TURBOCHARGER) (EXCEPT CALIFORNIA)

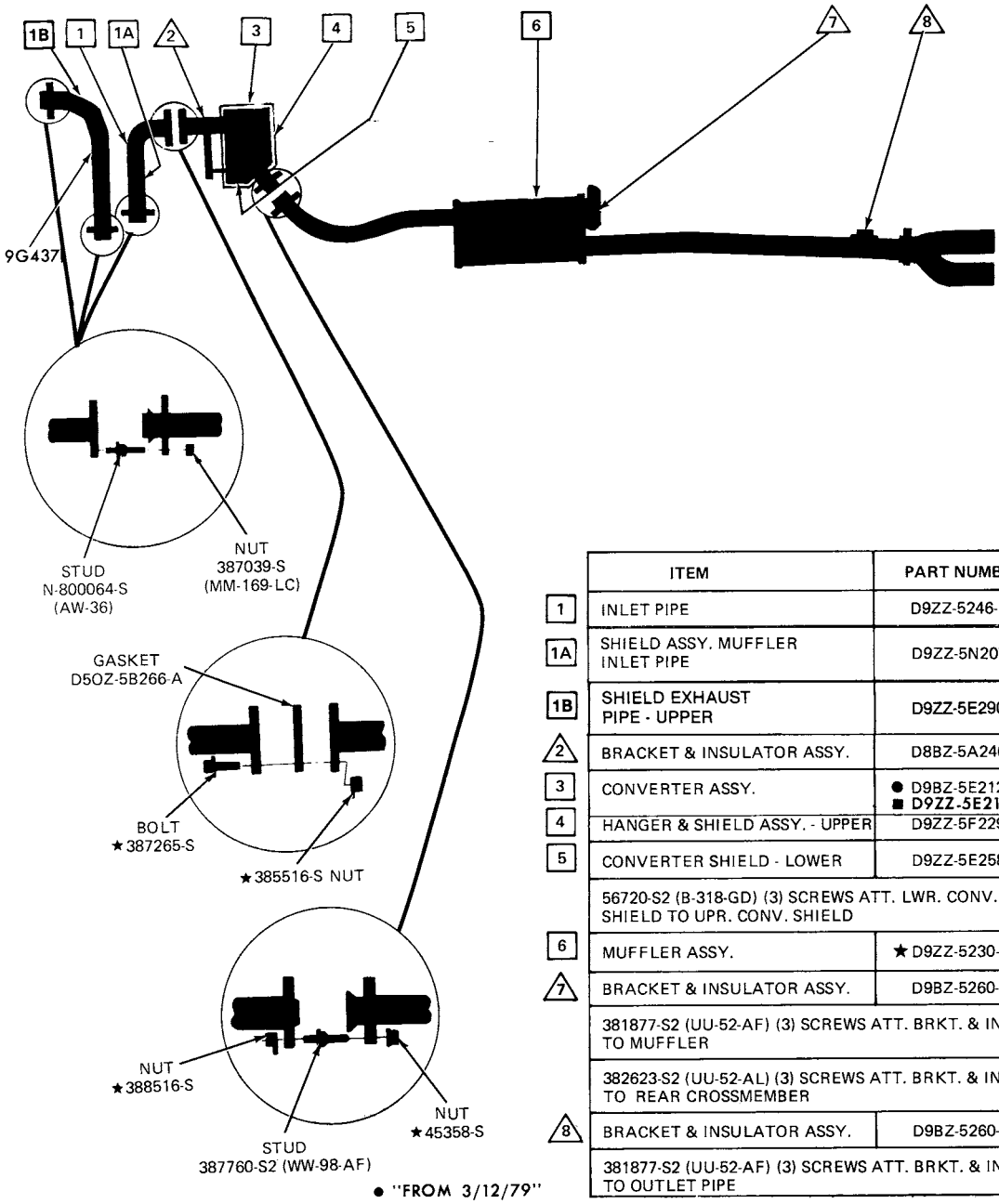

	ITEM	PART NUMBER
1	INLET PIPE	D9ZZ-5246-C
1A	SHIELD ASSY. MUFFLER INLET PIPE	D9ZZ-5N207-A
1B	SHIELD EXHAUST PIPE - UPPER	D9ZZ-5E290-C
2	BRACKET & INSULATOR ASSY.	D8BZ-5A246-A
3	CONVERTER ASSY.	● D9BZ-5E212-A ■ D9ZZ-5E212-D
4	HANGER & SHIELD ASSY. - UPPER	D9ZZ-5F229-A
5	CONVERTER SHIELD - LOWER	D9ZZ-5E258-A
	56720-S2 (B-318-GD) (3) SCREWS ATT. LWR. CONV. SHIELD TO UPR. CONV. SHIELD	
6	MUFFLER ASSY.	★ D9ZZ-5230-N
7	BRACKET & INSULATOR ASSY.	D9BZ-5260-C
	381877-S2 (UU-52-AF) (3) SCREWS ATT. BRKT. & INS. TO MUFFLER	
	382623-S2 (UU-52-AL) (3) SCREWS ATT. BRKT. & INS. TO REAR CROSSMEMBER	
8	BRACKET & INSULATOR ASSY.	D9BZ-5260-B
	381877-S2 (UU-52-AF) (3) SCREWS ATT. BRKT. & INS. TO OUTLET PIPE	

● "FROM 3/12/79"
■ "BEFORE 3/12/79"

EM-21

1973/79 LINCOLN-MERCURY CARS

1979 CAPRI — 4 CYL. 2.3L (140 CID) (WITHOUT TURBOCHARGER)

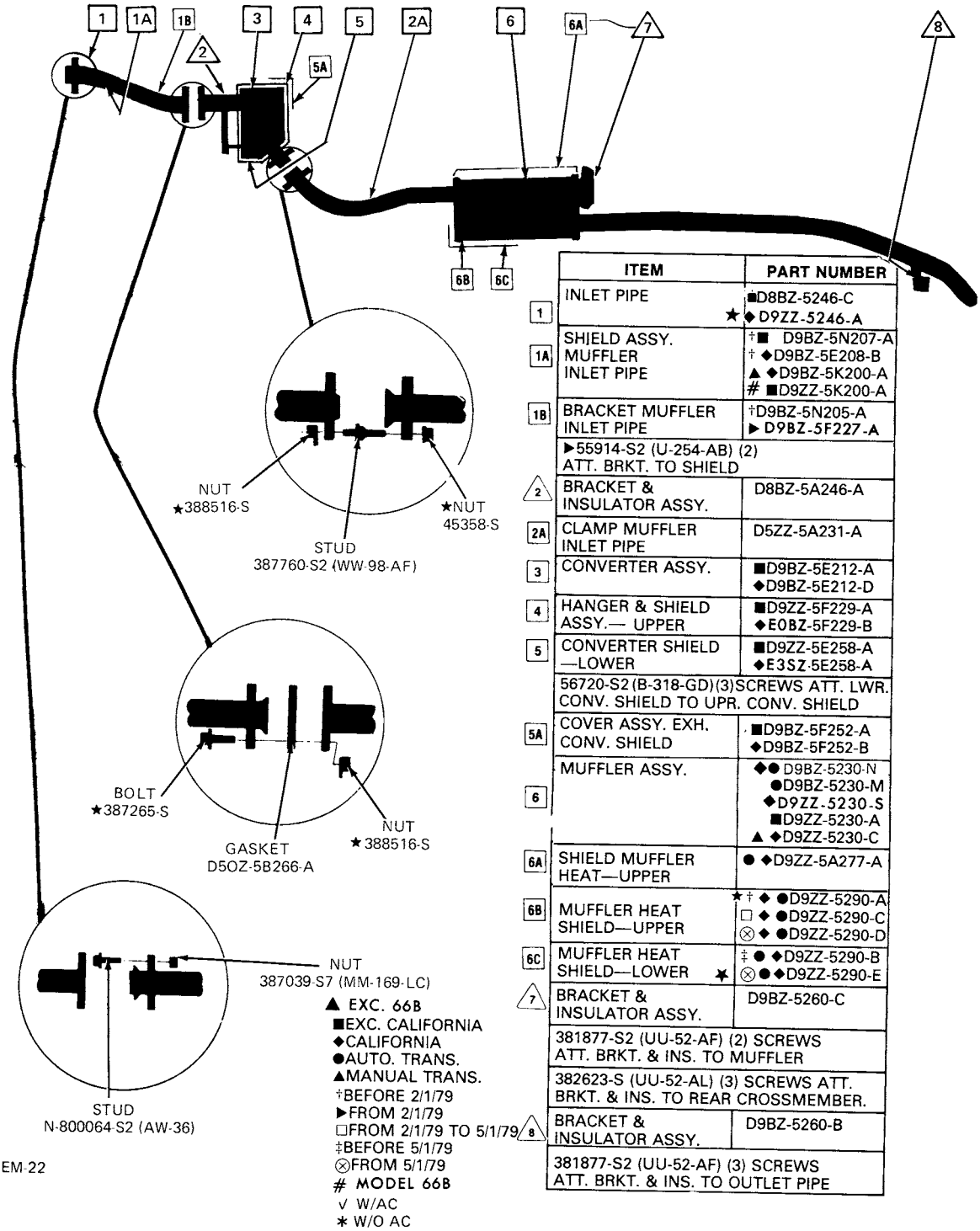

	ITEM	PART NUMBER
1	INLET PIPE	■D8BZ-5246-C ★◆D9ZZ-5246-A
1A	SHIELD ASSY. MUFFLER INLET PIPE	†■ D9BZ-5N207-A † ◆D9BZ-5E208-B ▲ ◆D9BZ-5K200-A # ■D9ZZ-5K200-A
1B	BRACKET MUFFLER INLET PIPE	†D9BZ-5N205-A ▶ D9BZ-5F227-A
	▶55914-S2 (U-254-AB) (2) ATT. BRKT. TO SHIELD	
2	BRACKET & INSULATOR ASSY.	D8BZ-5A246-A
2A	CLAMP MUFFLER INLET PIPE	D5ZZ-5A231-A
3	CONVERTER ASSY.	■D9BZ-5E212-A ◆D9BZ-5E212-D
4	HANGER & SHIELD ASSY.— UPPER	■D9ZZ-5F229-A ◆E0BZ-5F229-B
5	CONVERTER SHIELD —LOWER	■D9ZZ-5E258-A ◆E3SZ-5E258-A
	56720-S2 (B-318-GD) (3) SCREWS ATT. LWR. CONV. SHIELD TO UPR. CONV. SHIELD	
5A	COVER ASSY. EXH. CONV. SHIELD	■D9BZ-5F252-A ◆D9BZ-5F252-B
6	MUFFLER ASSY.	◆● D9BZ-5230-N ●D9BZ-5230-M ◆D9ZZ-5230-S ■D9ZZ-5230-A ▲ ◆D9ZZ-5230-C
6A	SHIELD MUFFLER HEAT—UPPER	● ◆D9ZZ-5A277-A
6B	MUFFLER HEAT SHIELD—UPPER	★† ◆ ●D9ZZ-5290-A □ ◆ ●D9ZZ-5290-C ⊗ ◆ ●D9ZZ-5290-D
6C	MUFFLER HEAT SHIELD—LOWER ✱	‡ ● ◆D9ZZ-5290-B ⊗ ● ◆D9ZZ-5290-E
7	BRACKET & INSULATOR ASSY.	D9BZ-5260-C
	381877-S2 (UU-52-AF) (2) SCREWS ATT. BRKT. & INS. TO MUFFLER	
	382623-S (UU-52-AL) (3) SCREWS ATT. BRKT. & INS. TO REAR CROSSMEMBER.	
8	BRACKET & INSULATOR ASSY.	D9BZ-5260-B
	381877-S2 (UU-52-AF) (3) SCREWS ATT. BRKT. & INS. TO OUTLET PIPE	

▲ EXC. 66B
■EXC. CALIFORNIA
◆CALIFORNIA
●AUTO. TRANS.
▲MANUAL TRANS.
†BEFORE 2/1/79
▶FROM 2/1/79
□FROM 2/1/79 TO 5/1/79
‡BEFORE 5/1/79
⊗FROM 5/1/79
MODEL 66B
√ W/AC
✱ W/O AC

COPYRIGHT © 1986 — FORD MOTOR COMPANY — DEARBORN, MICHIGAN

1973/79
LINCOLN-MERCURY CARS

1979 CAPRI – 6 CYL. 2.8L (171 CID)

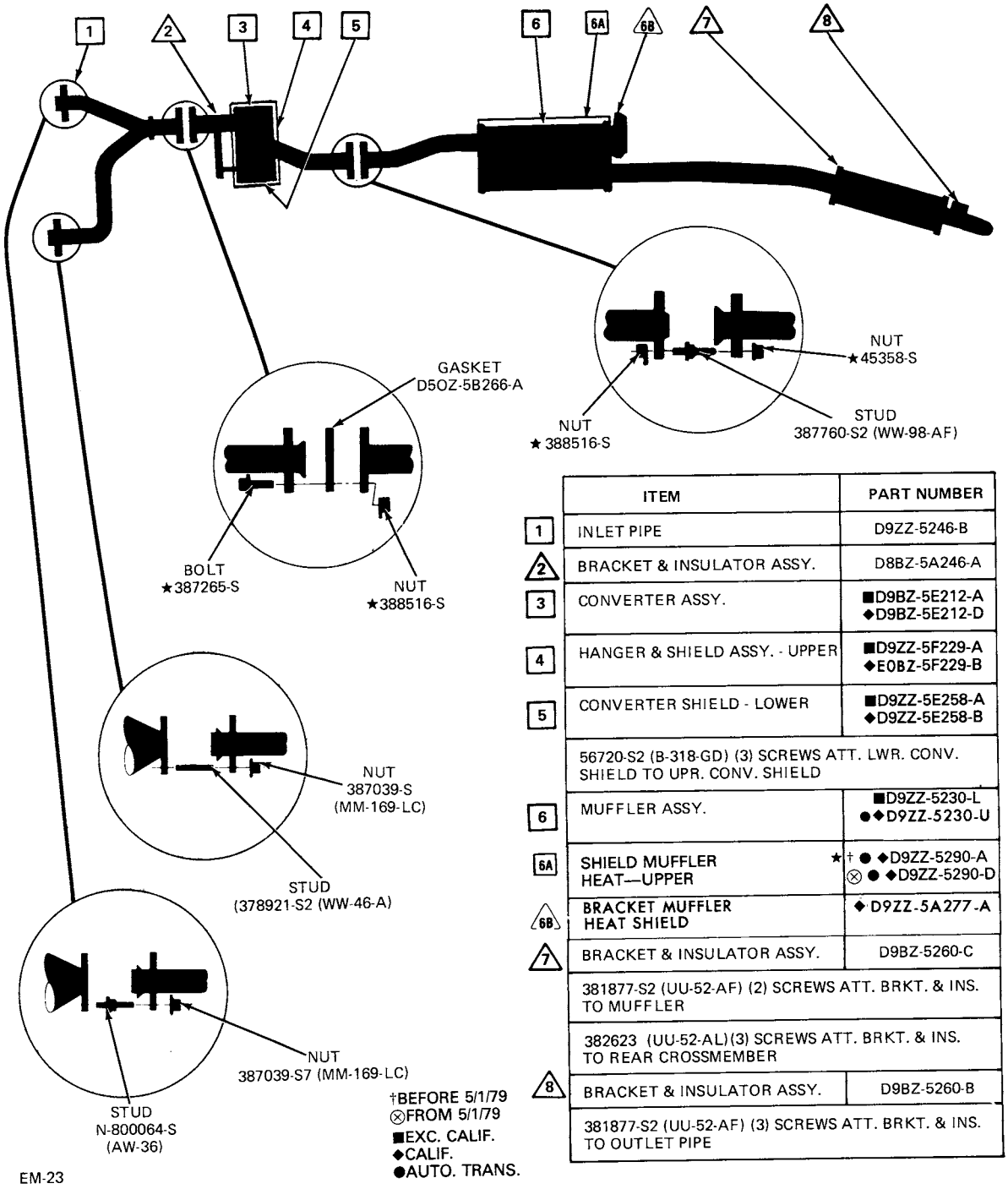

	ITEM	PART NUMBER
1	INLET PIPE	D9ZZ-5246-B
2	BRACKET & INSULATOR ASSY.	D8BZ-5A246-A
3	CONVERTER ASSY.	■D9BZ-5E212-A ◆D9BZ-5E212-D
4	HANGER & SHIELD ASSY. - UPPER	■D9ZZ-5F229-A ◆E0BZ-5F229-B
5	CONVERTER SHIELD - LOWER	■D9ZZ-5E258-A ◆D9ZZ-5E258-B
	56720-S2 (B-318-GD) (3) SCREWS ATT. LWR. CONV. SHIELD TO UPR. CONV. SHIELD	
6	MUFFLER ASSY.	■D9ZZ-5230-L ●◆D9ZZ-5230-U
6A	SHIELD MUFFLER HEAT—UPPER	★† ● ◆D9ZZ-5290-A ⊗ ● ◆D9ZZ-5290-D
6B	BRACKET MUFFLER HEAT SHIELD	◆D9ZZ-5A277-A
7	BRACKET & INSULATOR ASSY.	D9BZ-5260-C
	381877-S2 (UU-52-AF) (2) SCREWS ATT. BRKT. & INS. TO MUFFLER	
	382623 (UU-52-AL)(3) SCREWS ATT. BRKT. & INS. TO REAR CROSSMEMBER	
8	BRACKET & INSULATOR ASSY.	D9BZ-5260-B
	381877-S2 (UU-52-AF) (3) SCREWS ATT. BRKT. & INS. TO OUTLET PIPE	

†BEFORE 5/1/79
⊗FROM 5/1/79
■EXC. CALIF.
◆CALIF.
●AUTO. TRANS.

1973/79
LINCOLN-MERCURY CARS

1979 CAPRI
6 CYL. & 3.3L (200 CID)

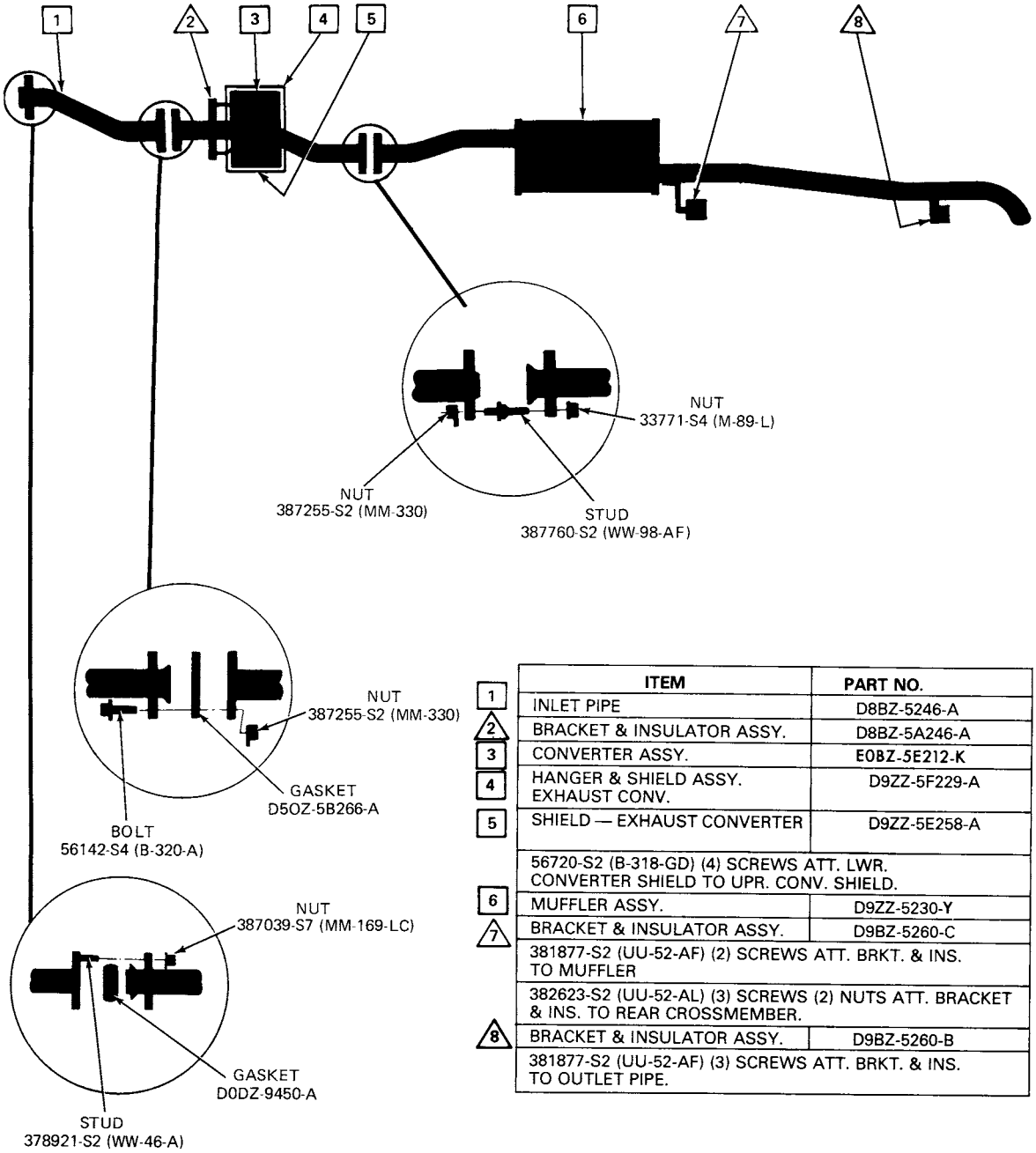

	ITEM	PART NO.
1	INLET PIPE	D8BZ-5246-A
2	BRACKET & INSULATOR ASSY.	D8BZ-5A246-A
3	CONVERTER ASSY.	E0BZ-5E212-K
4	HANGER & SHIELD ASSY. EXHAUST CONV.	D9ZZ-5F229-A
5	SHIELD — EXHAUST CONVERTER	D9ZZ-5E258-A
	56720-S2 (B-318-GD) (4) SCREWS ATT. LWR. CONVERTER SHIELD TO UPR. CONV. SHIELD.	
6	MUFFLER ASSY.	D9ZZ-5230-Y
7	BRACKET & INSULATOR ASSY.	D9BZ-5260-C
	381877-S2 (UU-52-AF) (2) SCREWS ATT. BRKT. & INS. TO MUFFLER	
	382623-S2 (UU-52-AL) (3) SCREWS (2) NUTS ATT. BRACKET & INS. TO REAR CROSSMEMBER.	
8	BRACKET & INSULATOR ASSY.	D9BZ-5260-B
	381877-S2 (UU-52-AF) (3) SCREWS ATT. BRKT. & INS. TO OUTLET PIPE.	

EM-25

COPYRIGHT © 1986 — FORD MOTOR COMPANY — DEARBORN, MICHIGAN

1979 CAPRI – 8 CYL. 5.0L (302 CID)

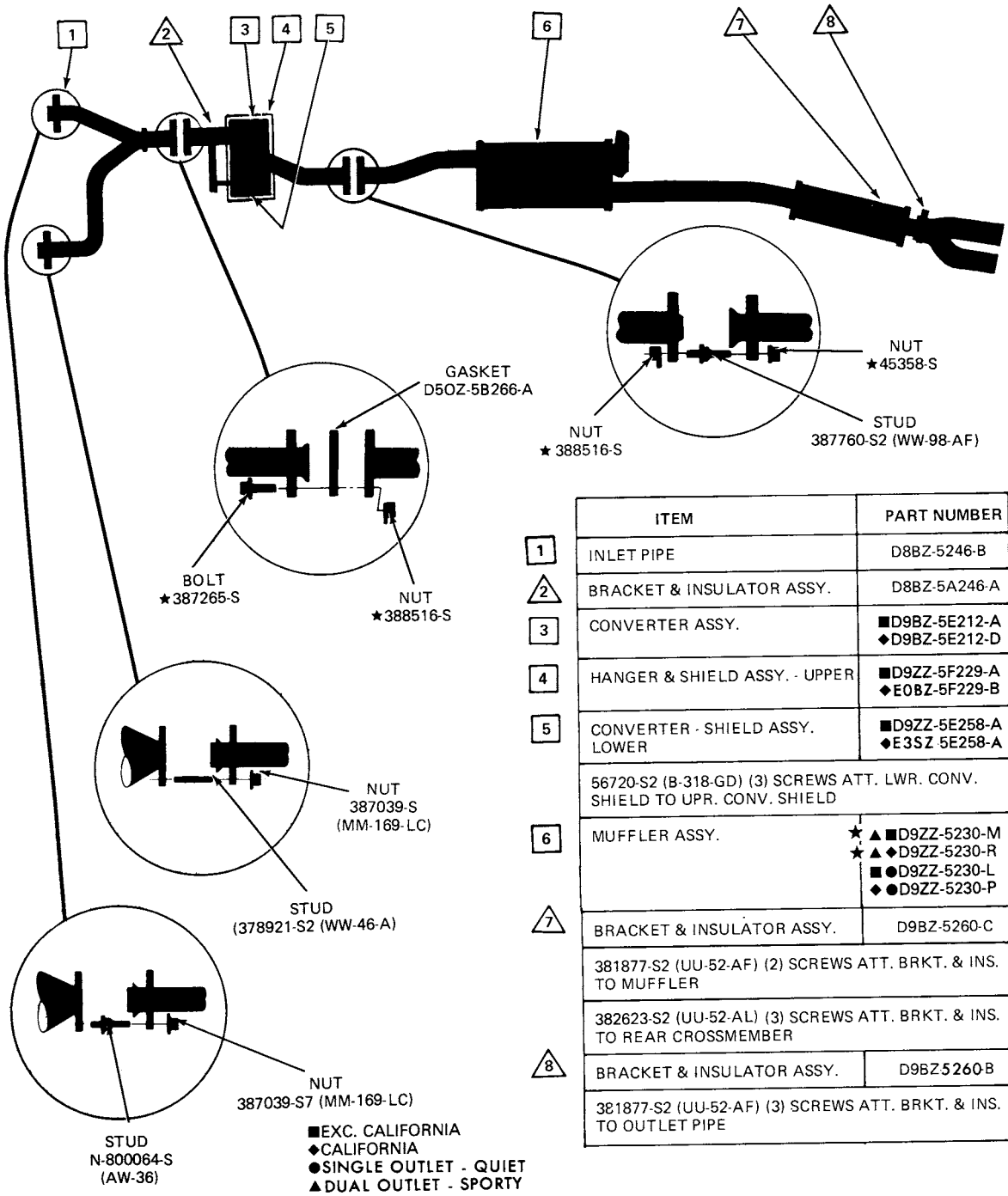

	ITEM	PART NUMBER
1	INLET PIPE	D8BZ-5246-B
2	BRACKET & INSULATOR ASSY.	D8BZ-5A246-A
3	CONVERTER ASSY.	■D9BZ-5E212-A ◆D9BZ-5E212-D
4	HANGER & SHIELD ASSY. - UPPER	■D9ZZ-5F229-A ◆E0BZ-5F229-B
5	CONVERTER - SHIELD ASSY. LOWER	■D9ZZ-5E258-A ◆E3SZ-5E258-A
	56720-S2 (B-318-GD) (3) SCREWS ATT. LWR. CONV. SHIELD TO UPR. CONV. SHIELD	
6	MUFFLER ASSY.	★▲■D9ZZ-5230-M ★▲◆D9ZZ-5230-R ■●D9ZZ-5230-L ◆●D9ZZ-5230-P
7	BRACKET & INSULATOR ASSY.	D9BZ-5260-C
	381877-S2 (UU-52-AF) (2) SCREWS ATT. BRKT. & INS. TO MUFFLER	
	382623-S2 (UU-52-AL) (3) SCREWS ATT. BRKT. & INS. TO REAR CROSSMEMBER	
8	BRACKET & INSULATOR ASSY.	D9BZ-5260-B
	381877-S2 (UU-52-AF) (3) SCREWS ATT. BRKT. & INS. TO OUTLET PIPE	

1973/79 LINCOLN-MERCURY CARS

1979 MARK V – 8 CYL. 6.6L (400 CID) SINGLE EXHAUST (WITH CONVERTER)

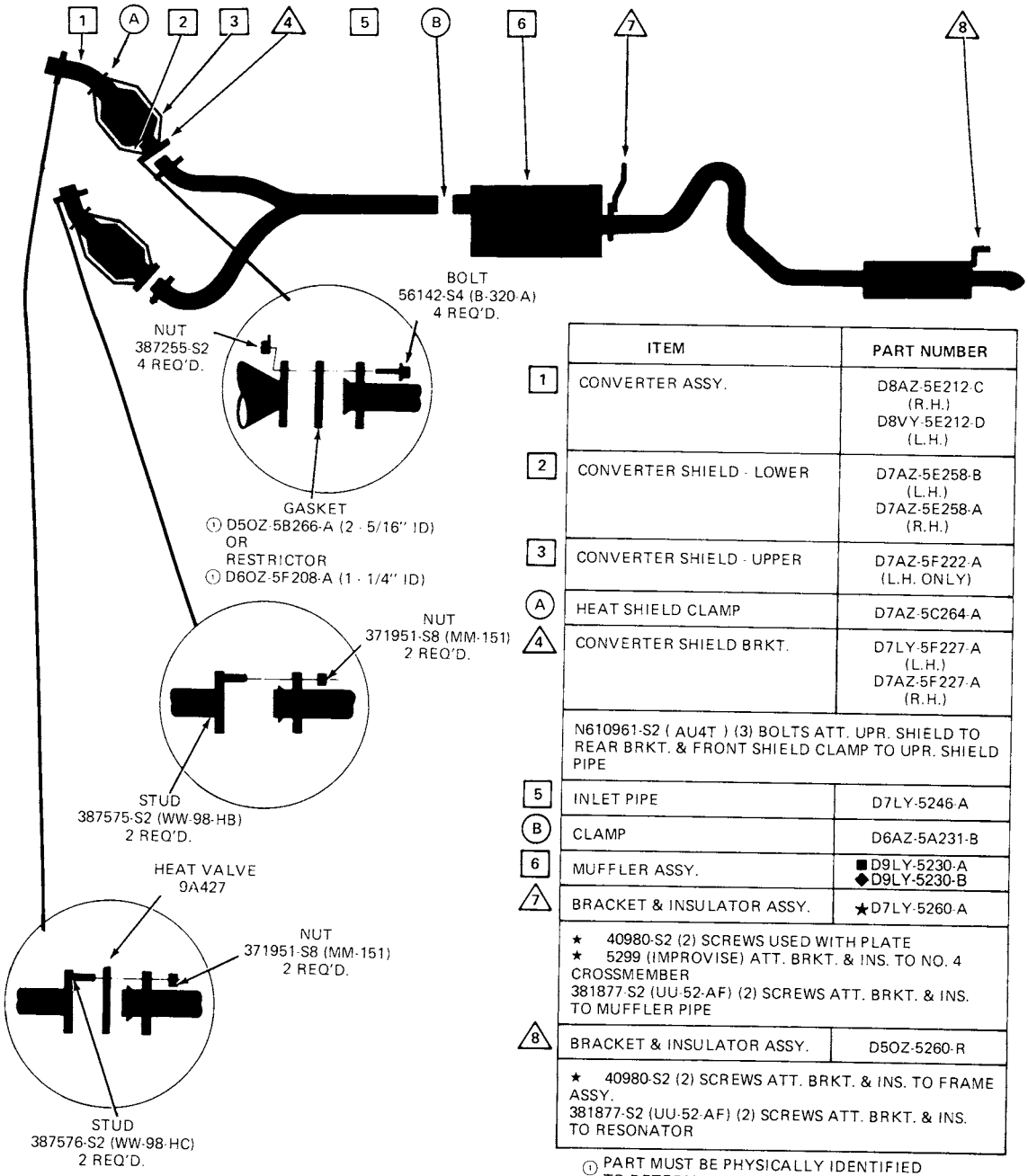

	ITEM	PART NUMBER
1	CONVERTER ASSY.	D8AZ-5E212-C (R.H.) D8VY-5E212-D (L.H.)
2	CONVERTER SHIELD - LOWER	D7AZ-5E258-B (L.H.) D7AZ-5E258-A (R.H.)
3	CONVERTER SHIELD - UPPER	D7AZ-5F222-A (L.H. ONLY)
A	HEAT SHIELD CLAMP	D7AZ-5C264-A
4	CONVERTER SHIELD BRKT.	D7LY-5F227-A (L.H.) D7AZ-5F227-A (R.H.)
	N610961-S2 (AU4T) (3) BOLTS ATT. UPR. SHIELD TO REAR BRKT. & FRONT SHIELD CLAMP TO UPR. SHIELD PIPE	
5	INLET PIPE	D7LY-5246-A
B	CLAMP	D6AZ-5A231-B
6	MUFFLER ASSY.	■D9LY-5230-A ◆D9LY-5230-B
7	BRACKET & INSULATOR ASSY.	★D7LY-5260-A
	★ 40980-S2 (2) SCREWS USED WITH PLATE ★ 5299 (IMPROVISE) ATT. BRKT. & INS. TO NO. 4 CROSSMEMBER 381877-S2 (UU-52-AF) (2) SCREWS ATT. BRKT. & INS. TO MUFFLER PIPE	
8	BRACKET & INSULATOR ASSY.	D5OZ-5260-R
	★ 40980-S2 (2) SCREWS ATT. BRKT. & INS. TO FRAME ASSY. 381877-S2 (UU-52-AF) (2) SCREWS ATT. BRKT. & INS. TO RESONATOR	

① PART MUST BE PHYSICALLY IDENTIFIED TO DETERMINE CORRECT USAGE

■ CALIF. & HIGH ALTITUDE
◆ EXC. CALIF.

COPYRIGHT © 1986 — FORD MOTOR COMPANY — DEARBORN, MICHIGAN

1973/79 LINCOLN-MERCURY CARS

1979 BOBCAT – 4 CYL. 2.3L (140 CID) SEDAN (49 STATES AND CANADA – WITH CONVERTER)

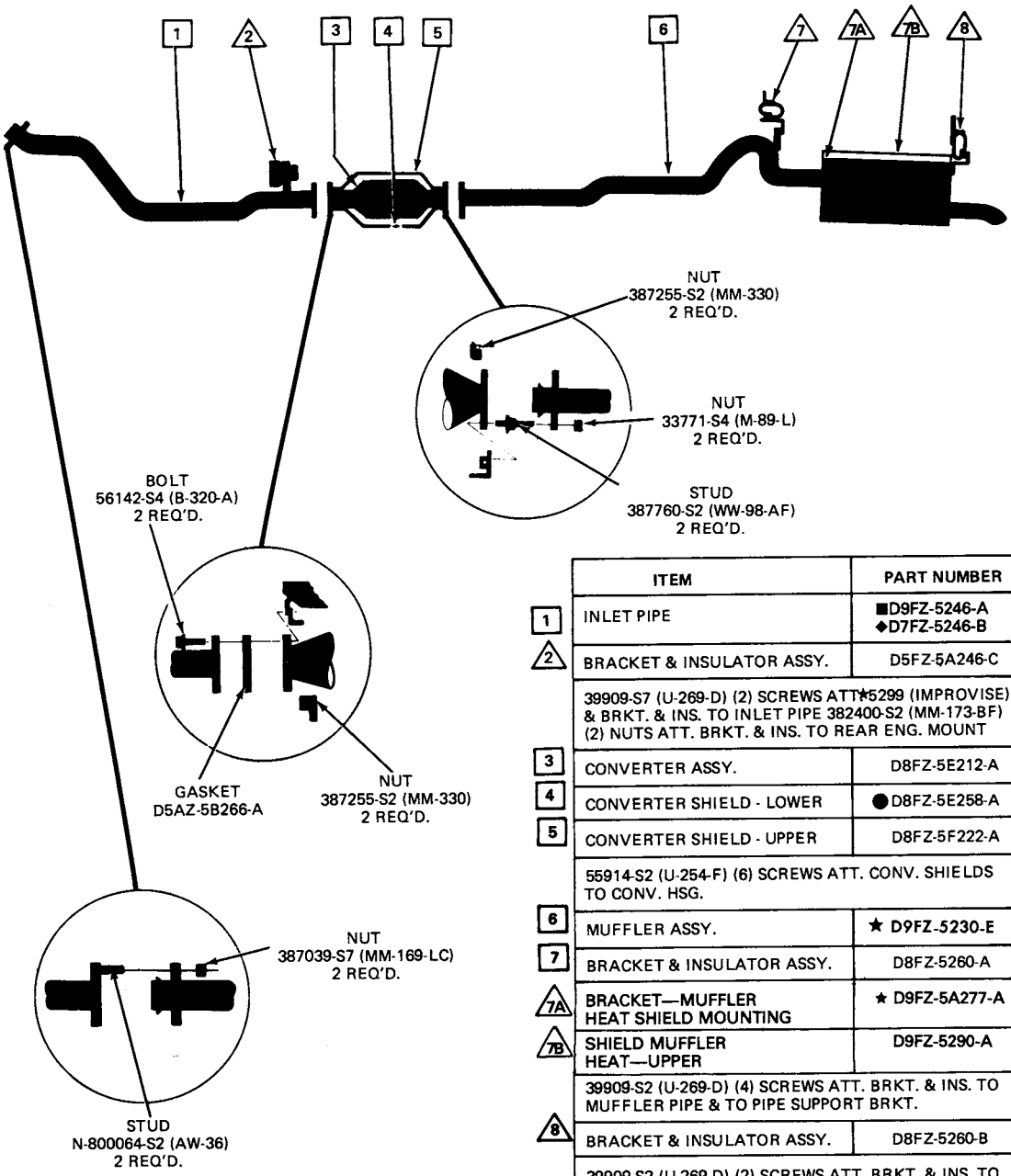

	ITEM	PART NUMBER
1	INLET PIPE	■D9FZ-5246-A ◆D7FZ-5246-B
2	BRACKET & INSULATOR ASSY.	D5FZ-5A246-C
	39909-S7 (U-269-D) (2) SCREWS ATT. 5299 (IMPROVISE) & BRKT. & INS. TO INLET PIPE 382400-S2 (MM-173-BF) (2) NUTS ATT. BRKT. & INS. TO REAR ENG. MOUNT	
3	CONVERTER ASSY.	D8FZ-5E212-A
4	CONVERTER SHIELD - LOWER	●D8FZ-5E258-A
5	CONVERTER SHIELD - UPPER	D8FZ-5F222-A
	55914-S2 (U-254-F) (6) SCREWS ATT. CONV. SHIELDS TO CONV. HSG.	
6	MUFFLER ASSY.	★ D9FZ-5230-E
7	BRACKET & INSULATOR ASSY.	D8FZ-5260-A
7A	BRACKET—MUFFLER HEAT SHIELD MOUNTING	★ D9FZ-5A277-A
7B	SHIELD MUFFLER HEAT—UPPER	D9FZ-5290-A
	39909-S2 (U-269-D) (4) SCREWS ATT. BRKT. & INS. TO MUFFLER PIPE & TO PIPE SUPPORT BRKT.	
8	BRACKET & INSULATOR ASSY.	D8FZ-5260-B
	39909-S2 (U-269-D) (2) SCREWS ATT. BRKT. & INS. TO UNDERBODY 381877-S2 (UU-52-AF) (2) SCREWS ATT. BRKT. & INS. TO MUFFLER	

● (REQ'D. ONLY ON VEHICLES WITH A/C)
■ SHIELDED
◆ NON-SHIELDED

COPYRIGHT © 1986 — FORD MOTOR COMPANY — DEARBORN, MICHIGAN

1979 BOBCAT – 4 CYL. 2.3L (140 CID) SEDAN (CALIFORNIA – WITH CONVERTER)

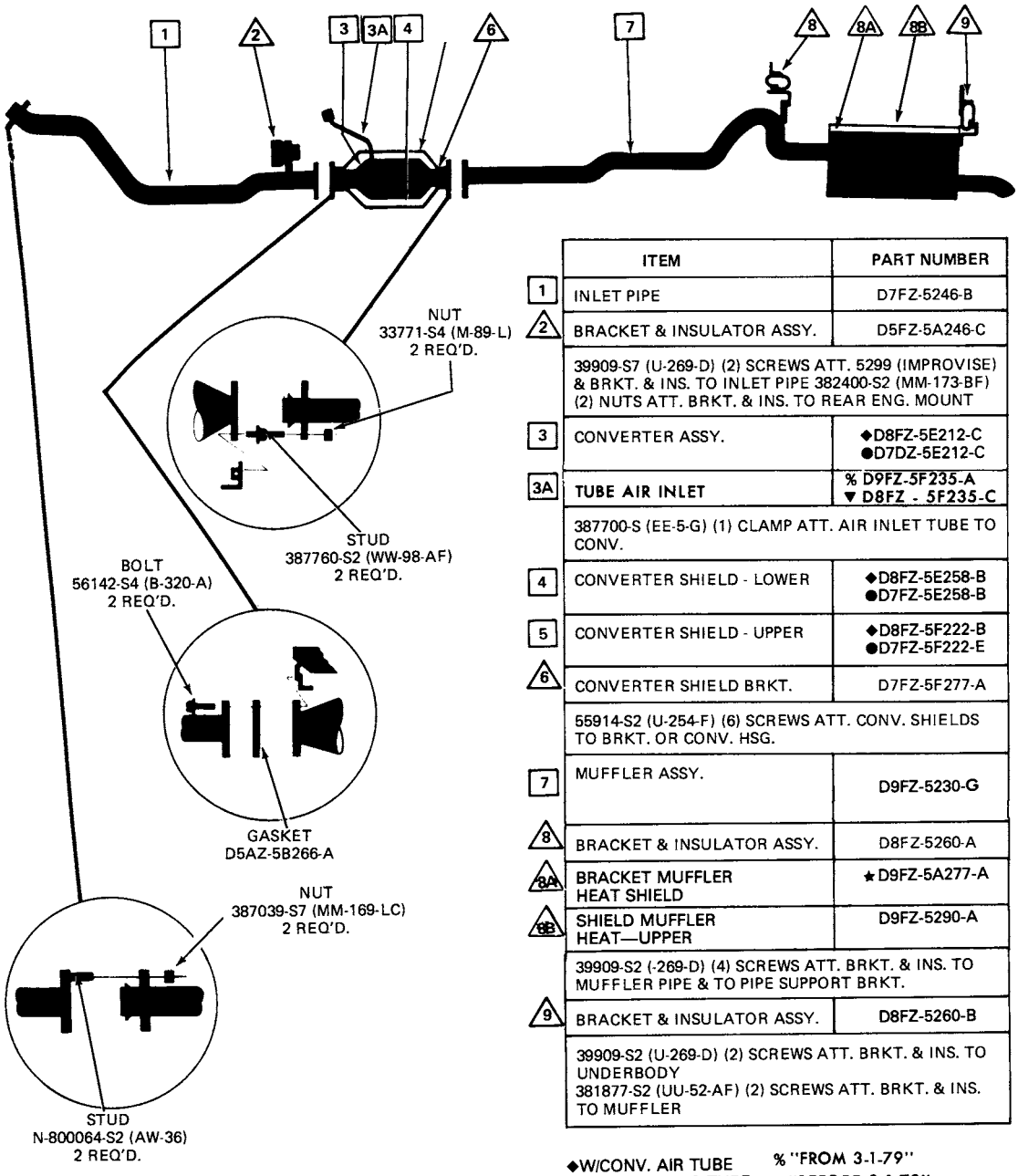

	ITEM	PART NUMBER
1	INLET PIPE	D7FZ-5246-B
2	BRACKET & INSULATOR ASSY.	D5FZ-5A246-C
	39909-S7 (U-269-D) (2) SCREWS ATT. 5299 (IMPROVISE) & BRKT. & INS. TO INLET PIPE 382400-S2 (MM-173-BF) (2) NUTS ATT. BRKT. & INS. TO REAR ENG. MOUNT	
3	CONVERTER ASSY.	◆D8FZ-5E212-C ●D7DZ-5E212-C
3A	TUBE AIR INLET	% D9FZ-5F235-A ▼ D8FZ - 5F235-C
	387700-S (EE-5-G) (1) CLAMP ATT. AIR INLET TUBE TO CONV.	
4	CONVERTER SHIELD - LOWER	◆D8FZ-5E258-B ●D7FZ-5E258-B
5	CONVERTER SHIELD - UPPER	◆D8FZ-5F222-B ●D7FZ-5F222-E
6	CONVERTER SHIELD BRKT.	D7FZ-5F277-A
	55914-S2 (U-254-F) (6) SCREWS ATT. CONV. SHIELDS TO BRKT. OR CONV. HSG.	
7	MUFFLER ASSY.	D9FZ-5230-G
8	BRACKET & INSULATOR ASSY.	D8FZ-5260-A
8A	BRACKET MUFFLER HEAT SHIELD	★D9FZ-5A277-A
8B	SHIELD MUFFLER HEAT—UPPER	D9FZ-5290-A
	39909-S2 (-269-D) (4) SCREWS ATT. BRKT. & INS. TO MUFFLER PIPE & TO PIPE SUPPORT BRKT.	
9	BRACKET & INSULATOR ASSY.	D8FZ-5260-B
	39909-S2 (U-269-D) (2) SCREWS ATT. BRKT. & INS. TO UNDERBODY 381877-S2 (UU-52-AF) (2) SCREWS ATT. BRKT. & INS. TO MUFFLER	

◆W/CONV. AIR TUBE
●W/O CONV. AIR TUBE
% "FROM 3-1-79"
▼ "BEFORE 3-1-79"

ET-40

1979 BOBCAT – 4 CYL. 2.3L (140 CID) STATION WAGON (49 STATES AND CANADA – WITH CONVERTER)

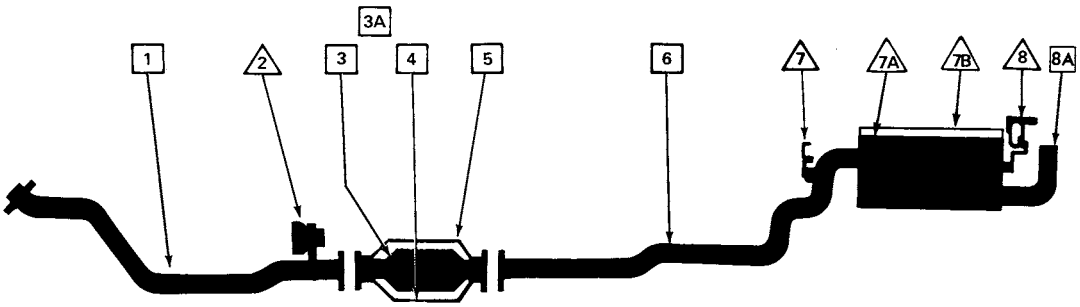

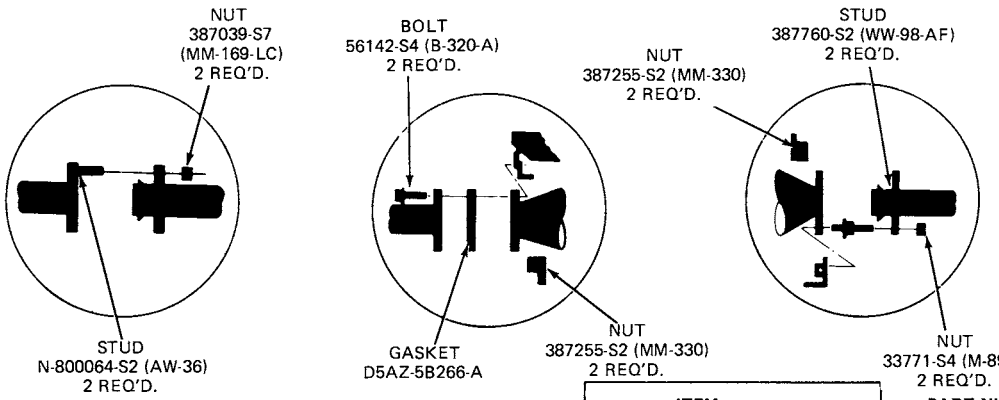

	ITEM	PART NUMBER
1	INLET PIPE	■D9FZ-5246-A ◆D7FZ-5246-B
2	BRACKET & INSULATOR ASSY.	D5FZ-5A246-C (M/T ONLY)
	39909-S7 (U-269-D) (2) SCREWS ATT. ★ 5299 (IMPROVISE) & BRKT. & INS. TO INLET PIPE 382400-S2 (MM-173-BF) (2) NUTS ATT. BRKT. & INS. TO REAR ENG. MOUNT	
3	CONVERTER ASSY.	D8FZ-5E212-A
3A	TUBE - AIR INLET	% D8FZ-5F235-C □ D9FZ-5F235-A
	387700-S (EE-5-G) (1) CLAMP ATT. AIR INLET TUBE TO CONV.	
4	CONVERTER SHIELD - LOWER	● D8FZ-5E258-A
5	CONVERTER SHIELD - UPPER	D8FZ-5F222-A

ET-41

□ "FROM 3-1-79"
% "BEFORE 3-1-79"

	ITEM	PART NUMBER
	55914-S2 (U-254-F) (6) SCREWS ATT. CONV. SHIELDS TO CONV. HSG.	
6	MUFFLER ASSY.	★ D7FZ-5230-B
6A	MUFFLER ASSY. (SERVICE)	D5FZ-5230-Z
6B	INTER. PIPE (SERVICE)	D5FZ-5A212-AA
7	BRACKET & INSULATOR ASSY.	D5FZ-5260-G
7A	BRACKET MUFFLER HEAT SHIELD —MOUNTING	D9FZ-5A277-A
7B	SHIELD MUFFLER HEAT—UPPER	D9FZ-5290-B
	39909-S2 (UU-269-D) (4) SCREWS ATT. BRKT. & INS. TO MUFFLER PIPE & TO CROSSMEMBER	
8	BRACKET & INSULATOR ASSY.	D8FZ-5260-C
	39909-S2 (UU-269-D) (2) SCREWS ATT. BRKT. & INS. TO UNDERBODY 381877-S2 (UU-52-AF) (2) SCREWS ATT. BRKT. & INS. TO MUFFLER	
8A	OUTLET PIPE (SERVICE)	D5FZ-5255-D

● (REQ'D. ONLY ON VEHICLES WITH A/C)
■SHIELDED
◆NON-SHIELDED

COPYRIGHT © 1986 — FORD MOTOR COMPANY — DEARBORN, MICHIGAN

1973/79 LINCOLN-MERCURY CARS

1979 BOBCAT – 4 CYL. 2.3L (140 CID) STATION WAGON (CALIFORNIA – WITH CONVERTER)

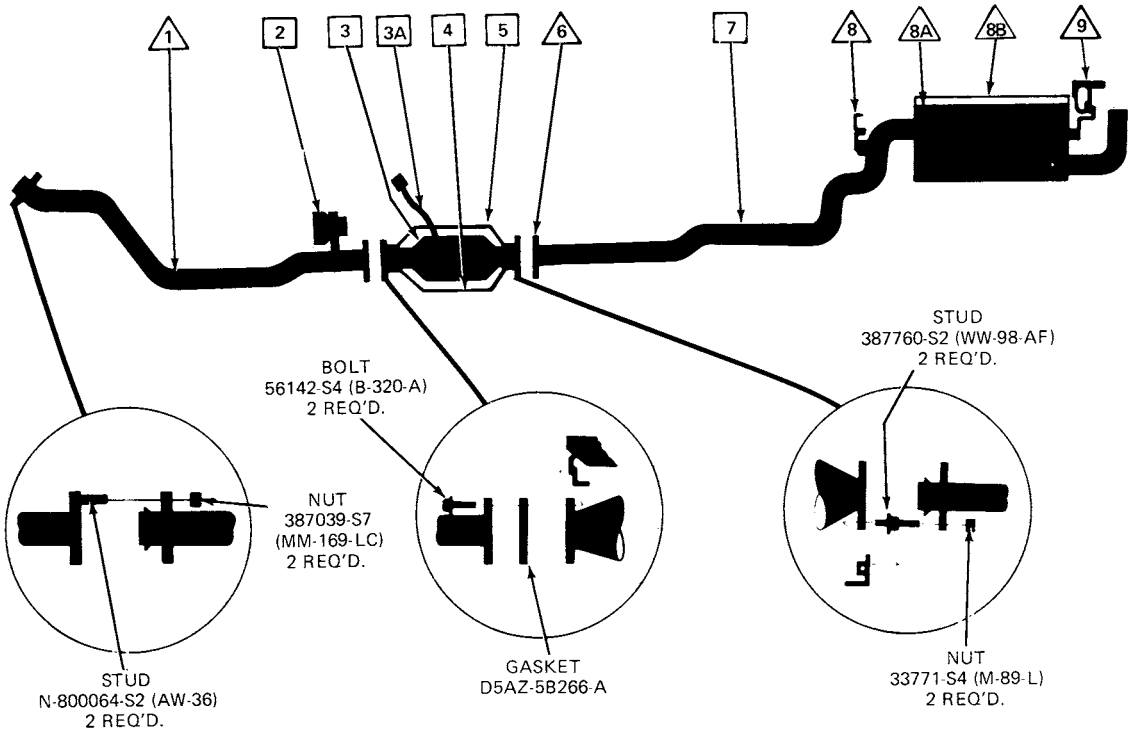

	ITEM	PART NUMBER
1	INLET PIPE	■D9FZ-5246-A ▲D7FZ-5246-B
2	BRACKET & INSULATOR ASSY.	D5FZ-5A246-C (M/T ONLY)
	39909-S7 (U-269-D) (2) SCREWS ATT. 5299 (IMPROVISE) & BRKT. & INS. TO INLET PIPE 382400-S2 (MM-173-BF) (2) NUTS ATT. BRKT. & INS. TO REAR ENG. MOUNT	
3	CONVERTER ASSY.	◆ D8FZ-5E212-C ● D7DZ-5E212-C
3A	TUBE AIR INLET	% D8FZ-5F235-C † D9FZ-5F235-A
	387700-S (EE-5-G) (1) CLAMP ATT. AIR INLET TUBE TO CONV.	
4	CONVERTER SHIELD - LOWER	D8FZ-5E258-B D7FZ-5E258-B
5	CONVERTER SHIELD - UPPER	D8FZ-5F222-B D7FZ-5F222-E
6	CONVERTER SHIELD BRKT.	D7FZ-5F227-A

	ITEM	PART NUMBER
7	55194-S2 (U-254-F) (6) SCREWS ATT. CONV. SHIELDS TO BRKT. OR CONV. HSG.	
	MUFFLER ASSY.	▼D9FZ-5230-F ◆D8FZ-5230-B ✱● EOFZ-5230-D
8	BRACKET & INSULATOR ASSY.	D5FZ-5260-G
8A	BRACKET MUFFLER HEAT SHIELD —MOUNTING	D9FZ-5A277-A
8B	SHIELD MUFFLER HEAT—UPPER	D9FZ-5290-B
	39909-S2 (UU-169-D) (4) SCREWS ATT. BRKT. & INS. TO MUFFLER PIPE & TO CROSSMEMBER	
9	BRACKET & INSULATOR ASSY.	D8FZ-5260-C
	39909-S2 (UU-269-D) (2) SCREWS ATT. BRKT. & INS. TO UNDERBODY 381877-S2 (UU-52-AF) (2) SCREWS ATT. BRKT. & INS. TO MUFFLER	

■SHIELDED
◆W/CONV. AIR TUBE
●W/O CONV. AIR TUBE
▲NON-SHIELDED
▼AUTO. TRANS.
% "BEFORE 3-1-79"
† "FROM 3-1-79"

ET-42

1973/79 LINCOLN-MERCURY CARS

1979 BOBCAT – 6 CYL. 2.8L (171 CID) SEDAN (WITH CONVERTER)

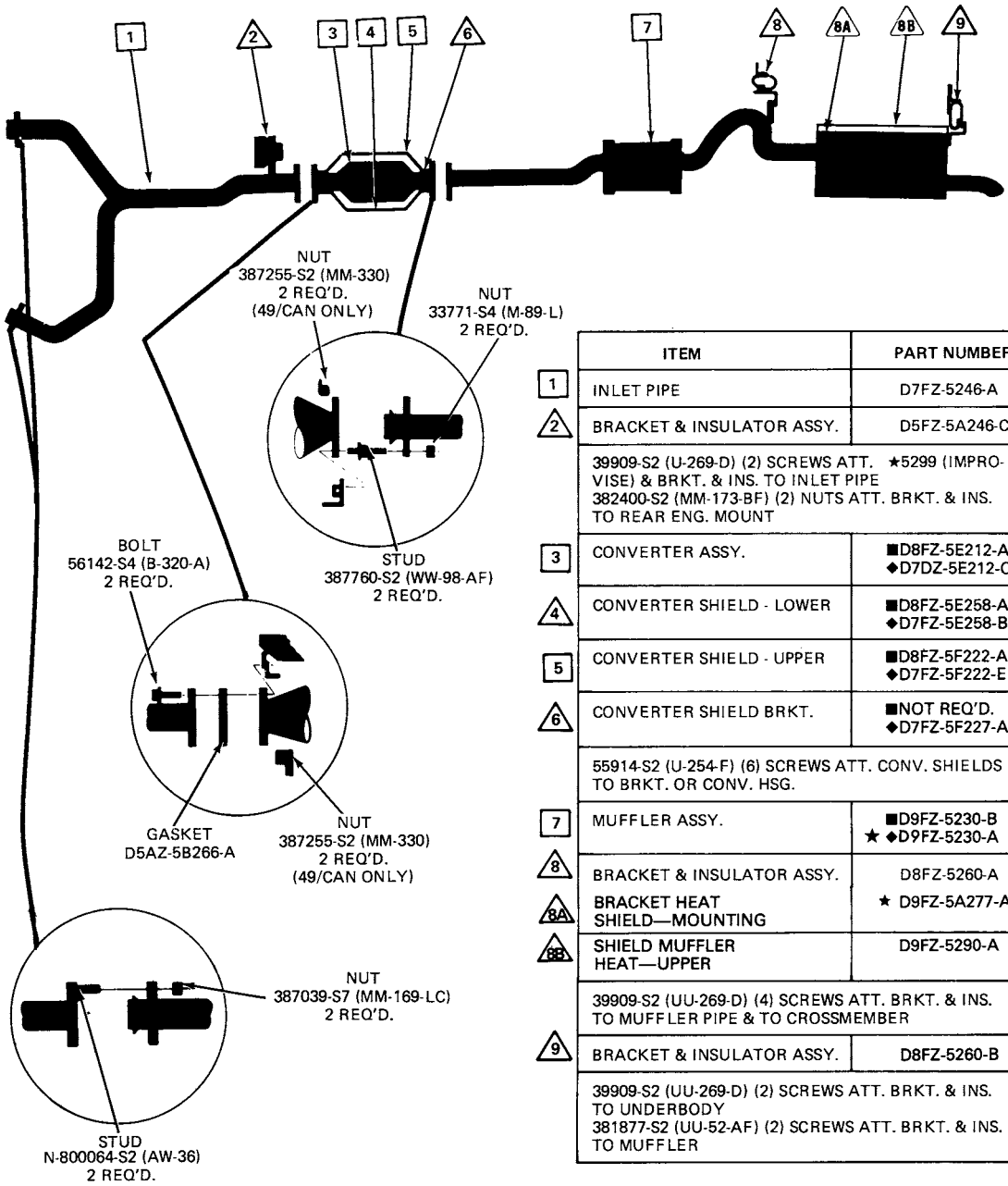

	ITEM	PART NUMBER
1	INLET PIPE	D7FZ-5246-A
2	BRACKET & INSULATOR ASSY.	D5FZ-5A246-C
	39909-S2 (U-269-D) (2) SCREWS ATT. ★5299 (IMPROVISE) & BRKT. & INS. TO INLET PIPE 382400-S2 (MM-173-BF) (2) NUTS ATT. BRKT. & INS. TO REAR ENG. MOUNT	
3	CONVERTER ASSY.	■D8FZ-5E212-A ◆D7DZ-5E212-C
4	CONVERTER SHIELD - LOWER	■D8FZ-5E258-A ◆D7FZ-5E258-B
5	CONVERTER SHIELD - UPPER	■D8FZ-5F222-A ◆D7FZ-5F222-E
6	CONVERTER SHIELD BRKT.	■NOT REQ'D. ◆D7FZ-5F227-A
	55914-S2 (U-254-F) (6) SCREWS ATT. CONV. SHIELDS TO BRKT. OR CONV. HSG.	
7	MUFFLER ASSY.	■D9FZ-5230-B ★ ◆D9FZ-5230-A
8	BRACKET & INSULATOR ASSY.	D8FZ-5260-A
8A	BRACKET HEAT SHIELD—MOUNTING	★ D9FZ-5A277-A
8B	SHIELD MUFFLER HEAT—UPPER	D9FZ-5290-A
	39909-S2 (UU-269-D) (4) SCREWS ATT. BRKT. & INS. TO MUFFLER PIPE & TO CROSSMEMBER	
9	BRACKET & INSULATOR ASSY.	D8FZ-5260-B
	39909-S2 (UU-269-D) (2) SCREWS ATT. BRKT. & INS. TO UNDERBODY 381877-S2 (UU-52-AF) (2) SCREWS ATT. BRKT. & INS. TO MUFFLER	

ET-43

■EXC. CALIF.
◆CALIF. ONLY

COPYRIGHT © 1986 — FORD MOTOR COMPANY — DEARBORN, MICHIGAN

1973/79
LINCOLN-MERCURY CARS

1979 BOBCAT – 6 CYL. 2.8L (171 CID) STATION WAGON (WITH CONVERTER)

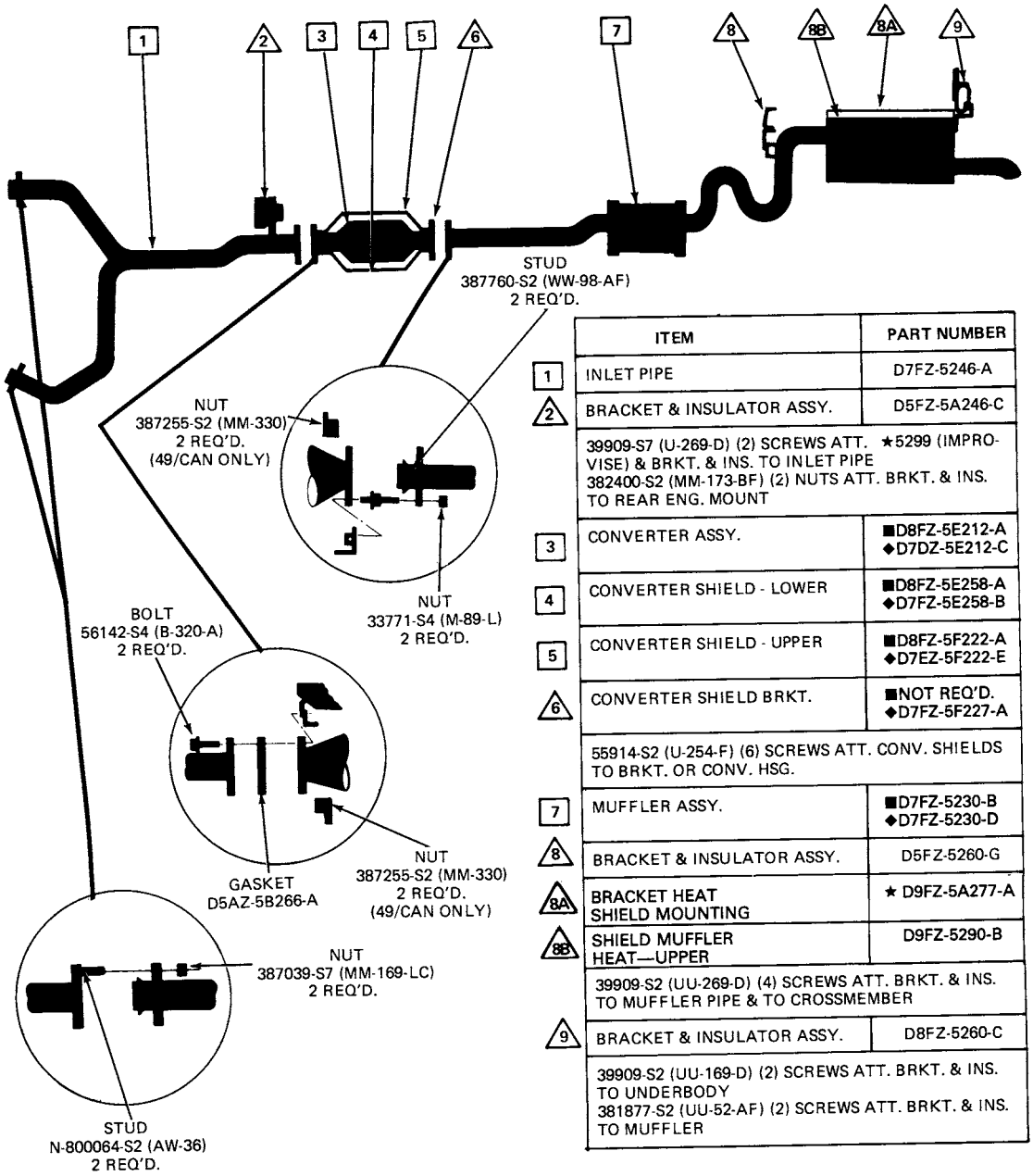

	ITEM	PART NUMBER
1	INLET PIPE	D7FZ-5246-A
2	BRACKET & INSULATOR ASSY.	D5FZ-5A246-C
	39909-S7 (U-269-D) (2) SCREWS ATT. ★5299 (IMPROVISE) & BRKT. & INS. TO INLET PIPE 382400-S2 (MM-173-BF) (2) NUTS ATT. BRKT. & INS. TO REAR ENG. MOUNT	
3	CONVERTER ASSY.	■D8FZ-5E212-A ◆D7DZ-5E212-C
4	CONVERTER SHIELD - LOWER	■D8FZ-5E258-A ◆D7FZ-5E258-B
5	CONVERTER SHIELD - UPPER	■D8FZ-5F222-A ◆D7EZ-5F222-E
6	CONVERTER SHIELD BRKT.	■NOT REQ'D. ◆D7FZ-5F227-A
	55914-S2 (U-254-F) (6) SCREWS ATT. CONV. SHIELDS TO BRKT. OR CONV. HSG.	
7	MUFFLER ASSY.	■D7FZ-5230-B ◆D7FZ-5230-D
8	BRACKET & INSULATOR ASSY.	D5FZ-5260-G
8A	BRACKET HEAT SHIELD MOUNTING	★ D9FZ-5A277-A
8B	SHIELD MUFFLER HEAT—UPPER	D9FZ-5290-B
	39909-S2 (UU-269-D) (4) SCREWS ATT. BRKT. & INS. TO MUFFLER PIPE & TO CROSSMEMBER	
9	BRACKET & INSULATOR ASSY.	D8FZ-5260-C
	39909-S2 (UU-169-D) (2) SCREWS ATT. BRKT. & INS. TO UNDERBODY 381877-S2 (UU-52-AF) (2) SCREWS ATT. BRKT. & INS. TO MUFFLER	

■ EXC. CALIF.
◆ CALIF. ONLY

ET-44

1973/79 LINCOLN-MERCURY CARS

1979 ZEPHYR – 4 CYL. 2.3L (140 CID) SEDAN (WITH CONVERTER)

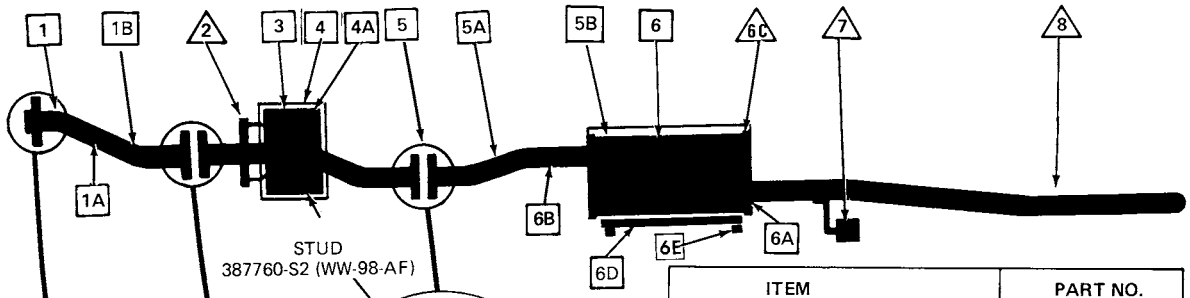

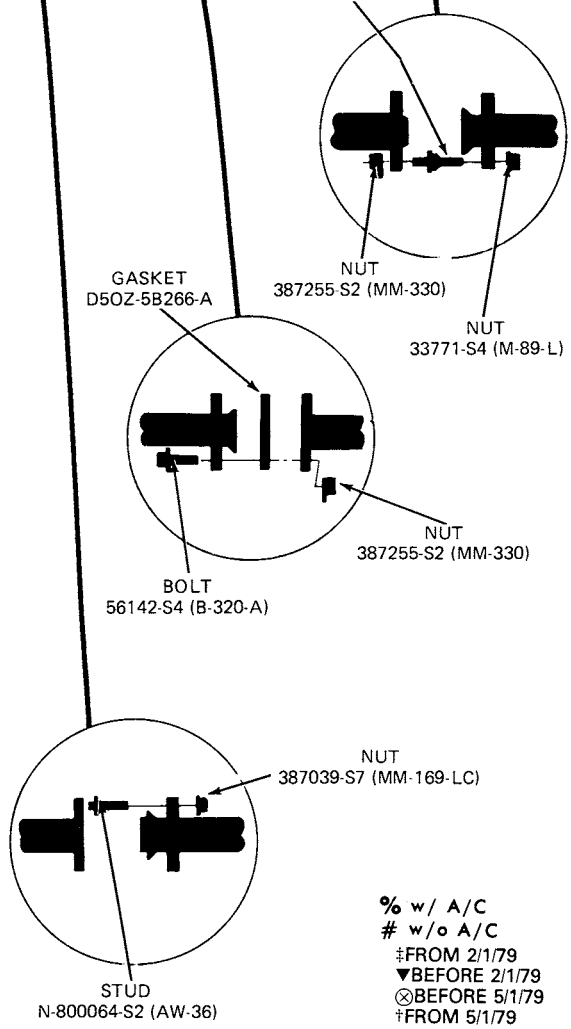

	ITEM	PART NO.
1	INLET PIPE	D8BZ-5246-C
1A	SHIELD ASSY. MUFFLER INLET PIPE - UPPER	▼D9BZ-5N207-A ‡D9BZ-5K200-A
1B	BRKT. ASSY. INLET PIPE SHIELD	‡D9BZ-5F227-A
	‡55914-S2 (U-254-AB) (2) ATT. SHIELD TO MUFFLER INLET PIPE	
2	BRACKET & INSULATOR ASSY.	D8BZ-5A246-A
3	CONVERTER ASSY.	■ E0BZ-5E212-H ◆D9BZ-5E212-D
4	HANGER & SHIELD ASSY. - UPPER	■D9ZZ-5F229-A ◆E0BZ-5F229-B
4A	COVER ASSY. EXHAUST CONVERTER SHIELD ★	■ ●D9BZ-5F252-A R/B E3ZZ5F229B ◆D9BZ-5F252-B
5	CONVERTER SHIELD - LOWER	■D8BZ-5E258-A ◆D8BZ-5E258-B
5A	CLAMP MUFFLER INLET PIPE	D5ZZ-5A231-A
	56720-S2 (B-318-GD) (4) SCREWS ATT. LWR. CONV. SHIELD TO UPR. CONV. SHIELD	
5B	SHIELD MUFFLER HEAT—UPPER	▲ ◆D9BZ-5290-C
6	MUFFLER ASSY.	■D9BZ-5230-A ●◆D9BZ-5230-E %◆ D9BZ-5230-M #◆ D9BZ- 5230-N
6A	SHIELD MUFFLER HEAT LOWER	◆ ▲D9BZ-5290-B
6B	SHIELD ASSY. MUFFLER INLET PIPE LOWER	● ■D9BZ-5N207-A ⊗ ◆D9BZ-5E208-B †D9ZZ-5A277-B
6C	BRACKET MUFFLER HEAT SHIELD	⊗ ◆D9BZ-5A277-A †◆▶D9BZ-5A277-A
6D	KIT MUFFLER HEAT SHIELD	% E0BZ-5290-D
6E	CLAMP MUFFLER HEAT SHIELD RETAINER	% E0AZ-5A277-B
7	BRACKET & INSULATOR ASSY.	D9BZ-5260-B
	381877-S2 (UU-52-AF) (2) SCREWS ATT. BRKT. & INS. TO MUFFLER	
	382623-S2 (UU-52-AL) (3) SCREWS ATT. BRKT. & INS. TO REAR CROSSMEMBER	
8	BRACKET & INSULATOR ASSY.	D9BZ-5260-B
	381877-S2 (UU-52-AF) (3) SCREWS ATT. BRKT. & INS. TO OUTLET PIPE	
	BRACKET MUFFLER OUTLET PIPE REAR	□▲ E2DZ-5277-C

% w/ A/C
# w/o A/C
‡FROM 2/1/79
▼BEFORE 2/1/79
⊗BEFORE 5/1/79
†FROM 5/1/79
■EXC. CALIF.
◆CALIF.
●MANUAL TRANS.
▲AUTO. TRANS.
% POLICE
SERVICE FIX

EZ-10

COPYRIGHT © 1986 — FORD MOTOR COMPANY — DEARBORN, MICHIGAN

1973/79 LINCOLN-MERCURY CARS

1979 ZEPHYR – 4 CYL. 2.3L (140 CID) WAGON (WITH CONVERTER)

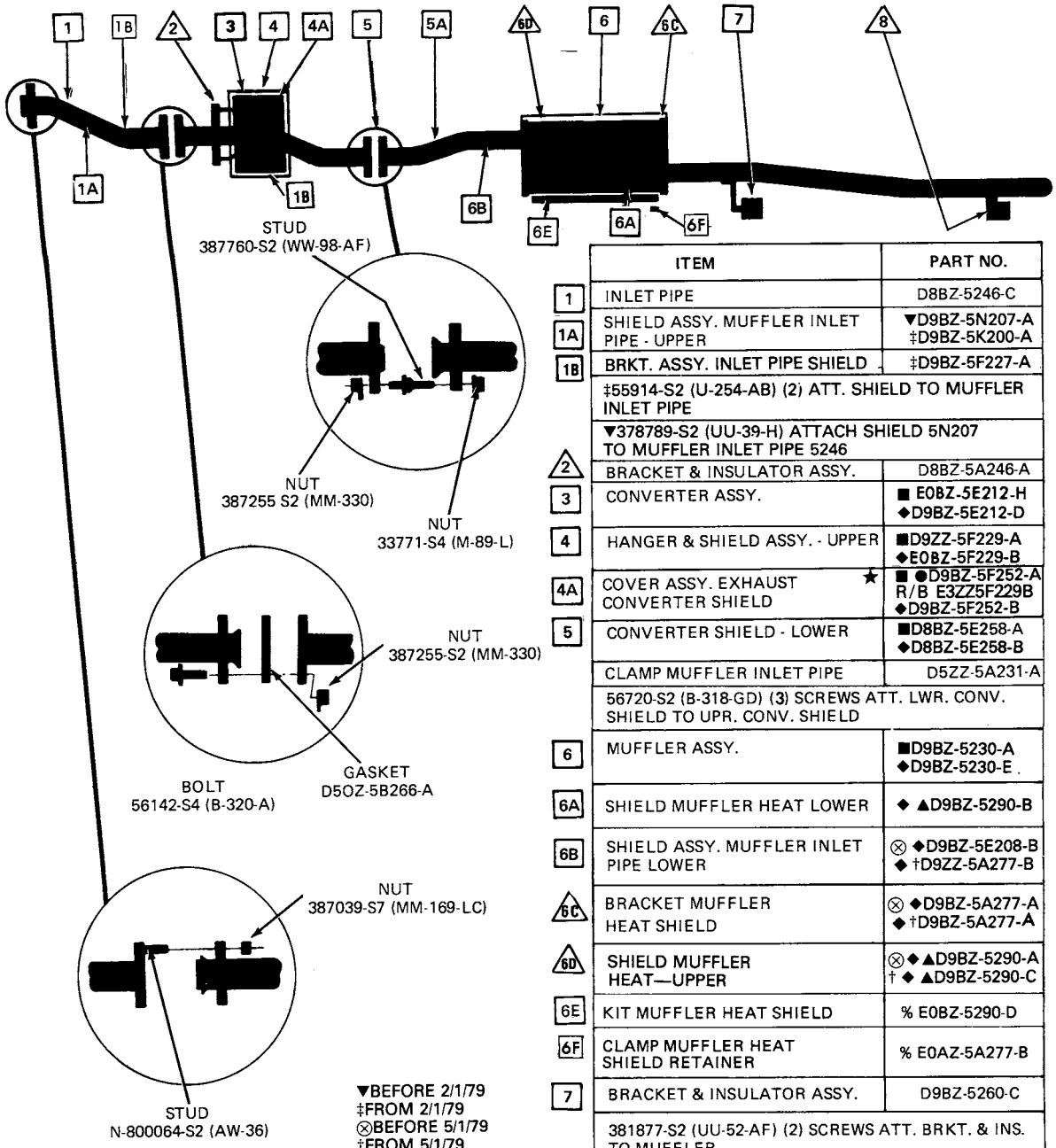

	ITEM	PART NO.
1	INLET PIPE	D8BZ-5246-C
1A	SHIELD ASSY. MUFFLER INLET PIPE - UPPER	▼D9BZ-5N207-A ‡D9BZ-5K200-A
1B	BRKT. ASSY. INLET PIPE SHIELD	‡D9BZ-5F227-A
	‡55914-S2 (U-254-AB) (2) ATT. SHIELD TO MUFFLER INLET PIPE	
	▼378789-S2 (UU-39-H) ATTACH SHIELD 5N207 TO MUFFLER INLET PIPE 5246	
2	BRACKET & INSULATOR ASSY.	D8BZ-5A246-A
3	CONVERTER ASSY.	■ E0BZ-5E212-H ◆D9BZ-5E212-D
4	HANGER & SHIELD ASSY. - UPPER	■D9ZZ-5F229-A ◆E0BZ-5F229-B
4A	COVER ASSY. EXHAUST CONVERTER SHIELD ★	■ ●D9BZ-5F252-A R/B E3ZZ5F229B ◆D9BZ-5F252-B
5	CONVERTER SHIELD - LOWER	■D8BZ-5E258-A ◆D8BZ-5E258-B
	CLAMP MUFFLER INLET PIPE	D5ZZ-5A231-A
	56720-S2 (B-318-GD) (3) SCREWS ATT. LWR. CONV. SHIELD TO UPR. CONV. SHIELD	
6	MUFFLER ASSY.	■D9BZ-5230-A ◆D9BZ-5230-E
6A	SHIELD MUFFLER HEAT LOWER	◆ ▲D9BZ-5290-B
6B	SHIELD ASSY. MUFFLER INLET PIPE LOWER	⊗ ◆D9BZ-5E208-B ◆ †D9ZZ-5A277-B
6C	BRACKET MUFFLER HEAT SHIELD	⊗ ◆D9BZ-5A277-A ◆ †D9BZ-5A277-A
6D	SHIELD MUFFLER HEAT—UPPER	⊗◆▲D9BZ-5290-A † ◆ ▲D9BZ-5290-C
6E	KIT MUFFLER HEAT SHIELD	% E0BZ-5290-D
6F	CLAMP MUFFLER HEAT SHIELD RETAINER	% E0AZ-5A277-B
7	BRACKET & INSULATOR ASSY.	D9BZ-5260-C
	381877-S2 (UU-52-AF) (2) SCREWS ATT. BRKT. & INS. TO MUFFLER	
	382623-S2 (UU-52-AL) (3) SCREWS ATT. BRKT. & INS. TO REAR CROSSMEMBER	
8	BRACKET & INSULATOR ASSY.	D9BZ-5260-B
	381877-S2 (UU-52-AF) (3) SCREWS ATT. BRKT. & INS. TO OUTLET PIPE	
	BRACKET MUFFLER OUTLET PIPE REAR	▲ # E2DZ-5277-C

▼BEFORE 2/1/79
‡FROM 2/1/79
⊗BEFORE 5/1/79
†FROM 5/1/79
■EXC. CALIF.
◆CALIF.
●MANUAL TRANS.
▲AUTO. TRANS.
% POLICE
# SERVICE FIX

EZ-11

1979 ZEPHYR – 6 CYL. 3.3L (200 CID) WAGON

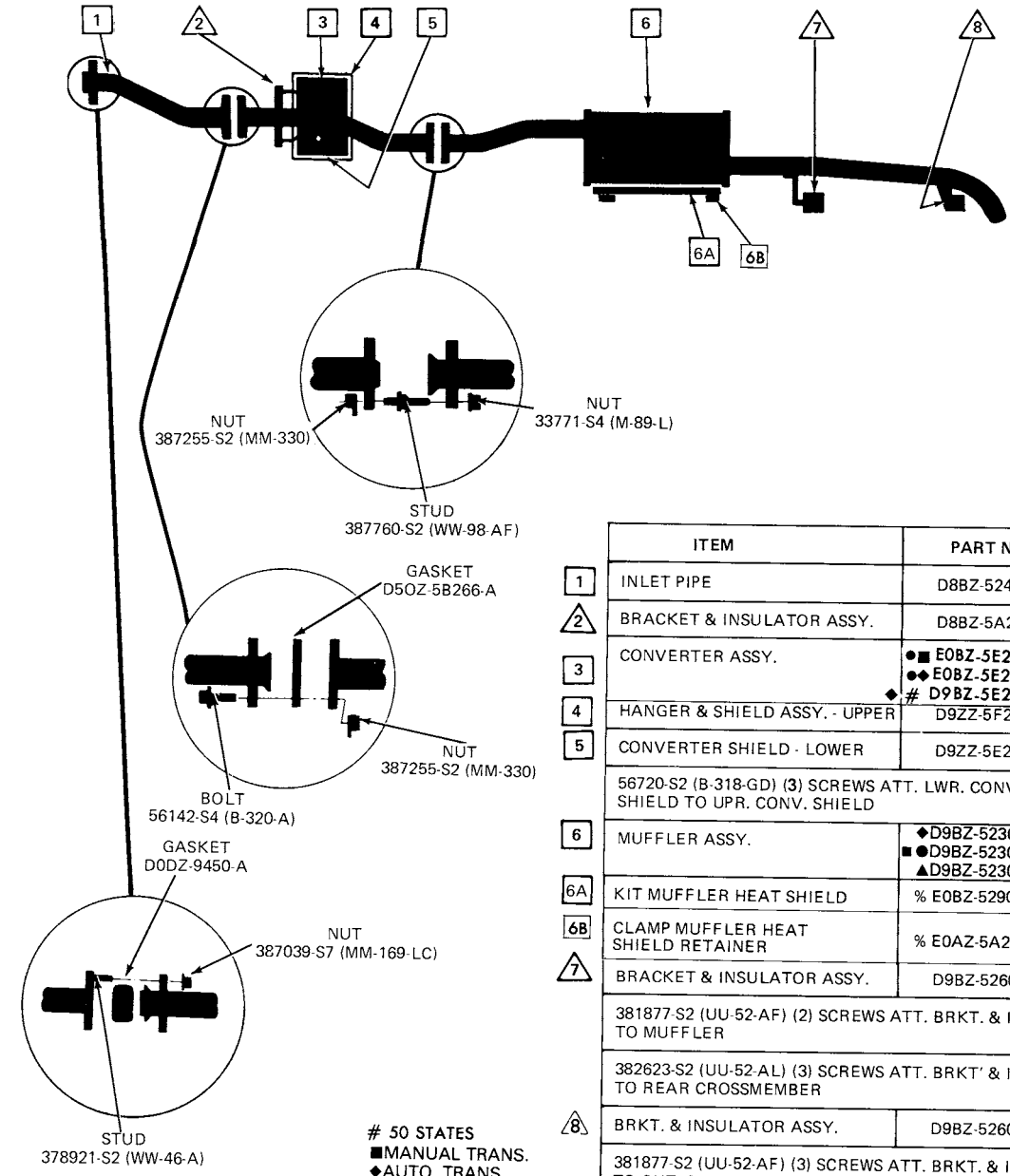

	ITEM	PART NO.
1	INLET PIPE	D8BZ-5246-A
2	BRACKET & INSULATOR ASSY.	D8BZ-5A246-A
3	CONVERTER ASSY.	●■ E0BZ-5E212-H ●◆ E0BZ-5E212-K ◆ # D9BZ-5E212-B
4	HANGER & SHIELD ASSY. - UPPER	D9ZZ-5F229-A
5	CONVERTER SHIELD - LOWER	D9ZZ-5E258-B
	56720-S2 (B-318-GD) (3) SCREWS ATT. LWR. CONV. SHIELD TO UPR. CONV. SHIELD	
6	MUFFLER ASSY.	◆D9BZ-5230-R ■●D9BZ-5230-B ▲D9BZ-5230-K
6A	KIT MUFFLER HEAT SHIELD	% E0BZ-5290-D
6B	CLAMP MUFFLER HEAT SHIELD RETAINER	% E0AZ-5A277-B
7	BRACKET & INSULATOR ASSY.	D9BZ-5260-C
	381877-S2 (UU-52-AF) (2) SCREWS ATT. BRKT. & INS. TO MUFFLER	
	382623-S2 (UU-52-AL) (3) SCREWS ATT. BRKT' & INS. TO REAR CROSSMEMBER	
8	BRKT. & INSULATOR ASSY.	D9BZ-5260-B
	381877-S2 (UU-52-AF) (3) SCREWS ATT. BRKT. & INS. TO OUTLET PIPE	

50 STATES
■MANUAL TRANS.
◆AUTO. TRANS.
●EXC. CALIF.
▲CALIF.
% POLICE

EZ-12

COPYRIGHT © 1986 — FORD MOTOR COMPANY — DEARBORN, MICHIGAN

1973/79 LINCOLN-MERCURY CARS

1979 ZEPHYR – 6 CYL. 3.3L (200 CID) SEDAN (49 STATE – EXC. HIGH ALTITUDE) (CANADA – ALL)

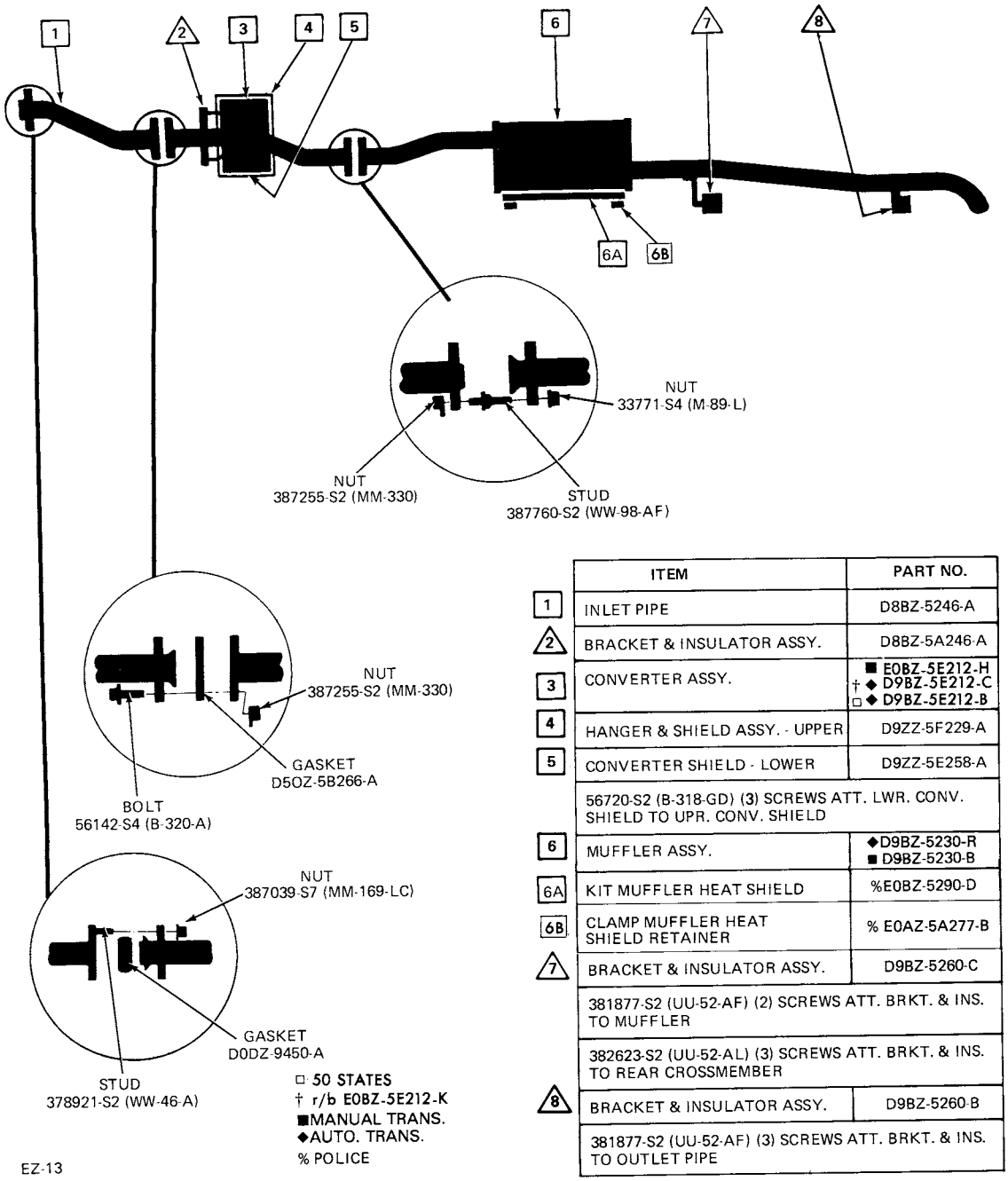

	ITEM	PART NO.
1	INLET PIPE	D8BZ-5246-A
2	BRACKET & INSULATOR ASSY.	D8BZ-5A246-A
3	CONVERTER ASSY.	■ E0BZ-5E212-H † ◆ D9BZ-5E212-C □ ◆ D9BZ-5E212-B
4	HANGER & SHIELD ASSY. - UPPER	D9ZZ-5F229-A
5	CONVERTER SHIELD - LOWER	D9ZZ-5E258-A
	56720-S2 (B-318-GD) (3) SCREWS ATT. LWR. CONV. SHIELD TO UPR. CONV. SHIELD	
6	MUFFLER ASSY.	◆D9BZ-5230-R ■ D9BZ-5230-B
6A	KIT MUFFLER HEAT SHIELD	%E0BZ-5290-D
6B	CLAMP MUFFLER HEAT SHIELD RETAINER	% E0AZ-5A277-B
7	BRACKET & INSULATOR ASSY.	D9BZ-5260-C
	381877-S2 (UU-52-AF) (2) SCREWS ATT. BRKT. & INS. TO MUFFLER	
	382623-S2 (UU-52-AL) (3) SCREWS ATT. BRKT. & INS. TO REAR CROSSMEMBER	
8	BRACKET & INSULATOR ASSY.	D9BZ-5260-B
	381877-S2 (UU-52-AF) (3) SCREWS ATT. BRKT. & INS. TO OUTLET PIPE	

1979 ZEPHYR — 6 CYL. 3.3L (200 CID) SEDAN (CALIFORNIA & HIGH ALTITUDE)

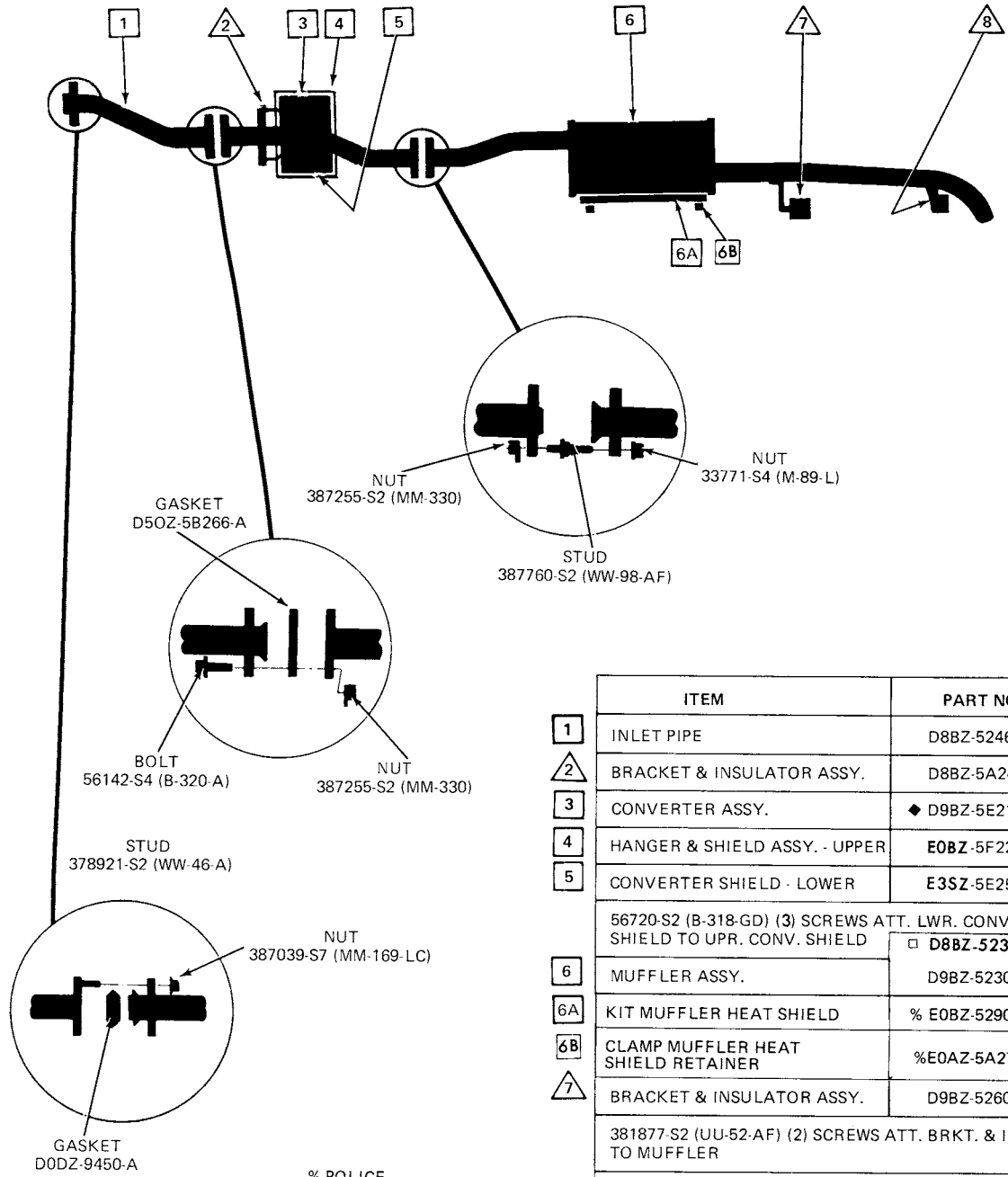

	ITEM	PART NO.
1	INLET PIPE	D8BZ-5246-A
2	BRACKET & INSULATOR ASSY.	D8BZ-5A246-A
3	CONVERTER ASSY.	◆ D9BZ-5E212-B
4	HANGER & SHIELD ASSY. - UPPER	E0BZ-5F229-B
5	CONVERTER SHIELD - LOWER	E3SZ-5E258-A
	56720-S2 (B-318-GD) (3) SCREWS ATT. LWR. CONV. SHIELD TO UPR. CONV. SHIELD	□ D8BZ-5230-L
6	MUFFLER ASSY.	D9BZ-5230-K
6A	KIT MUFFLER HEAT SHIELD	% E0BZ-5290-D
6B	CLAMP MUFFLER HEAT SHIELD RETAINER	%E0AZ-5A277-B
7	BRACKET & INSULATOR ASSY.	D9BZ-5260-C
	381877-S2 (UU-52-AF) (2) SCREWS ATT. BRKT. & INS. TO MUFFLER	
	382623-S2 (UU-52-AL) (3) SCREWS ATT. BRKT. & INS. TO REAR CROSSMEMBER	
8	BRACKET & INSULATOR ASSY.	D9BZ-5260-B
	381877 (UU-52-AF) (3) SCREWS ATT. BRKT. & INS. TO OUTLET PIPE	

% POLICE
◆ AUTO. TRANS.
□ w/ BRACKETS ON MUFFLER

COPYRIGHT © 1986 — FORD MOTOR COMPANY — DEARBORN, MICHIGAN

1973/79 LINCOLN-MERCURY CARS

1979 ZEPHYR – 8 CYL. 5.0L (302 CID) SEDAN (WITH CONVERTER)

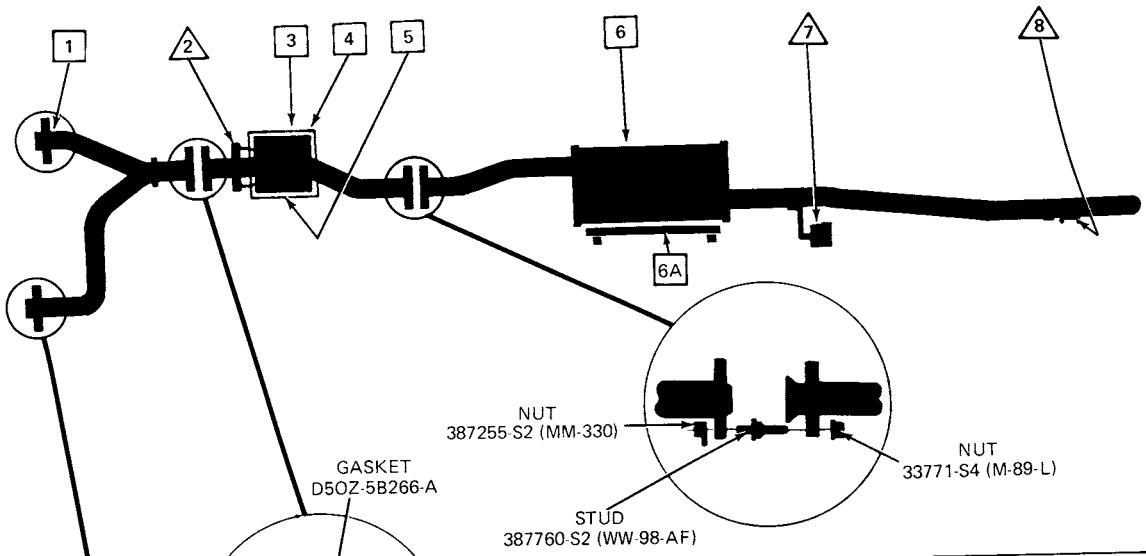

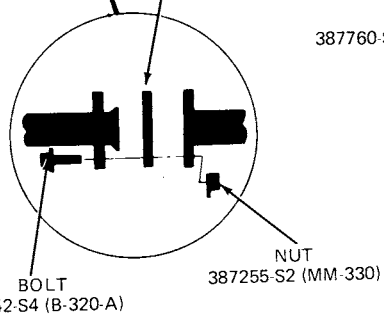

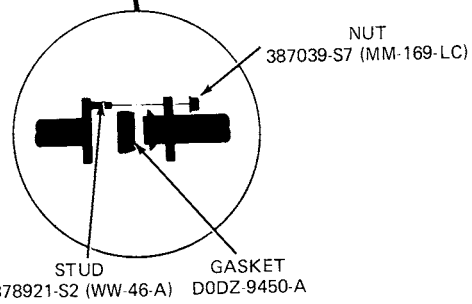

	ITEM	PART NO.
1	INLET PIPE	D8BZ-5246-B
2	BRACKET & INSULATOR ASSY.	D8BZ-5A246-A
3	CONVERTER ASSY.	① E0BZ-5E212-H ② D9BZ-5E212-D
4	HANGER & SHIELD ASSY. - UPPER	① D9ZZ-5F229-A ② E3SZ 5F229-A
5	CONVERTER SHIELD - LOWER	① D9ZZ-5E258-A ② D9ZZ-5E258-B
	56720-S2 (B-318-GD) (3) SCREWS ATT. LWR. CONV. SHIELD TO UPR. CONV. SHIELD	
6	MUFFLER ASSY.	① D9BZ-5230-J ★② D9BZ-5230-L
6A	KIT MUFFLER HEAT SHIELD	% E0BZ-5290-D
	CLAMP MUFFLER HEAT SHIELD RETAINER	% E0AZ-5A277-B
7	BRACKET & INSULATOR ASSY.	D9BZ-5260-C
	381877-S2 (UU-52-AF) (4) SCREWS ATT. BRKT. & INS. TO UNDERBODY	
	56772-S2 (B-318-GF) (2) BOLTS & 388288-S100 (MM-284-DB) (2) NUTS ATT. BRKT. & INS. TO OUTLET PIPE	
8	BRACKET & INSULATOR ASSY.	D9BZ-5260-B
	381877-S2 (UU-52-AF) (4) SCREWS ATT. BRKT. & INS. TO UNDERBODY	
	56722-S2 (B-318-GF) (2) BOLTS & 388288-S100 (MM-284-DB) (2) NUTS ATT. BRKT. & INS. TO OUTLET PIPE	

① EXC. CALIF.
② CALIF.
% POLICE

1979 ZEPHYR – 8 CYL. 5.0L (302 CID) STATION WAGON (WITH CONVERTER)

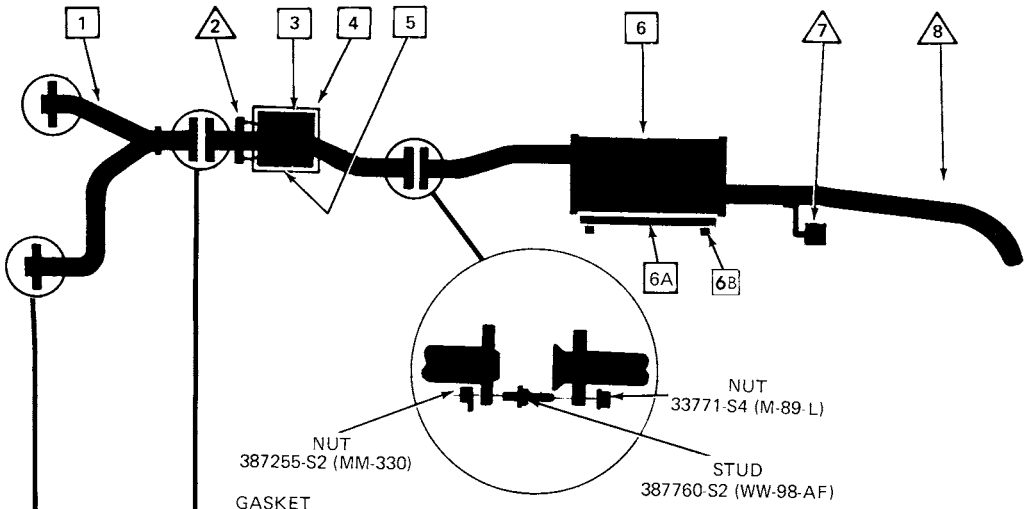

GASKET
D5OZ-5B266-A

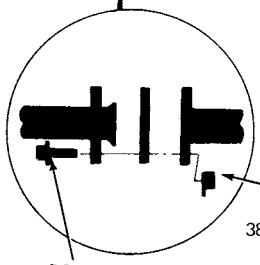

GASKET
D0DZ-9450-A

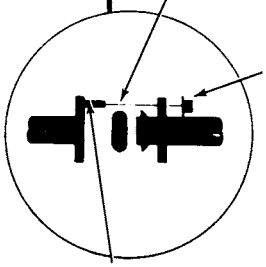

	ITEM	PART NO.
1	INLET PIPE	D8BZ-5246-B
2	BRACKET & INSULATOR ASSY.	D8BZ-5A246-A
3	CONVERTER ASSY.	① E0BZ-5E212-H ② D9BZ-5E212-D
4	HANGER & SHIELD ASSY. - UPPER	① D9ZZ-5F229-A ② E3SZ-5F229-A
5	CONVERTER SHIELD - LOWER	① D9ZZ-5E258-A ② D9ZZ-5E258-B
	56720-S2 (B-318-GD) (3) SCREWS ATT. LWR. CONV. SHIELD TO UPR. CONV. SHIELD	
6	MUFFLER ASSY.	① D9BZ-5230-J ★② D9BZ-5230-L
6A	KIT MUFFLER HEAT SHIELD	% E0BZ-5290-D
6B	CLAMP MUFFLER HEAT SHIELD RETAINER	% E0AZ-5A277-B
7	BRACKET & INSULATOR ASSY.	D9BZ-5260-C
	381877-S2 (UU-52-AF) (2) SCREWS ATT. BRKT. & INS. TO UNDERBODY	
	56722-S2 (B-318-GF) (2) BOLTS & 388288-S100 (MM-284-DB) (2) NUTS ATT. BRKT. & INS. TO OUTLET PIPE	
8	BRACKET & INSULATOR ASSY.	D9BZ-5260-B
	381877-S2 (UU-52-AF) (2) SCREWS ATT. BRKT. & INS. TO UNDERBODY	
	56722-S2 (B-318-GF) (2) BOLTS & 388288-S100 (MM-284-DB) (2) NUTS ATT. BRKT. & INS. TO OUTLET PIPE	

% POLICE
① EXC. CALIF.
② CALIF.

COPYRIGHT © 1986 — FORD MOTOR COMPANY — DEARBORN, MICHIGAN

1979 VERSAILLES – 8 CYL. 5.0L (302 CID) SEDAN (WITH CONVERTER)

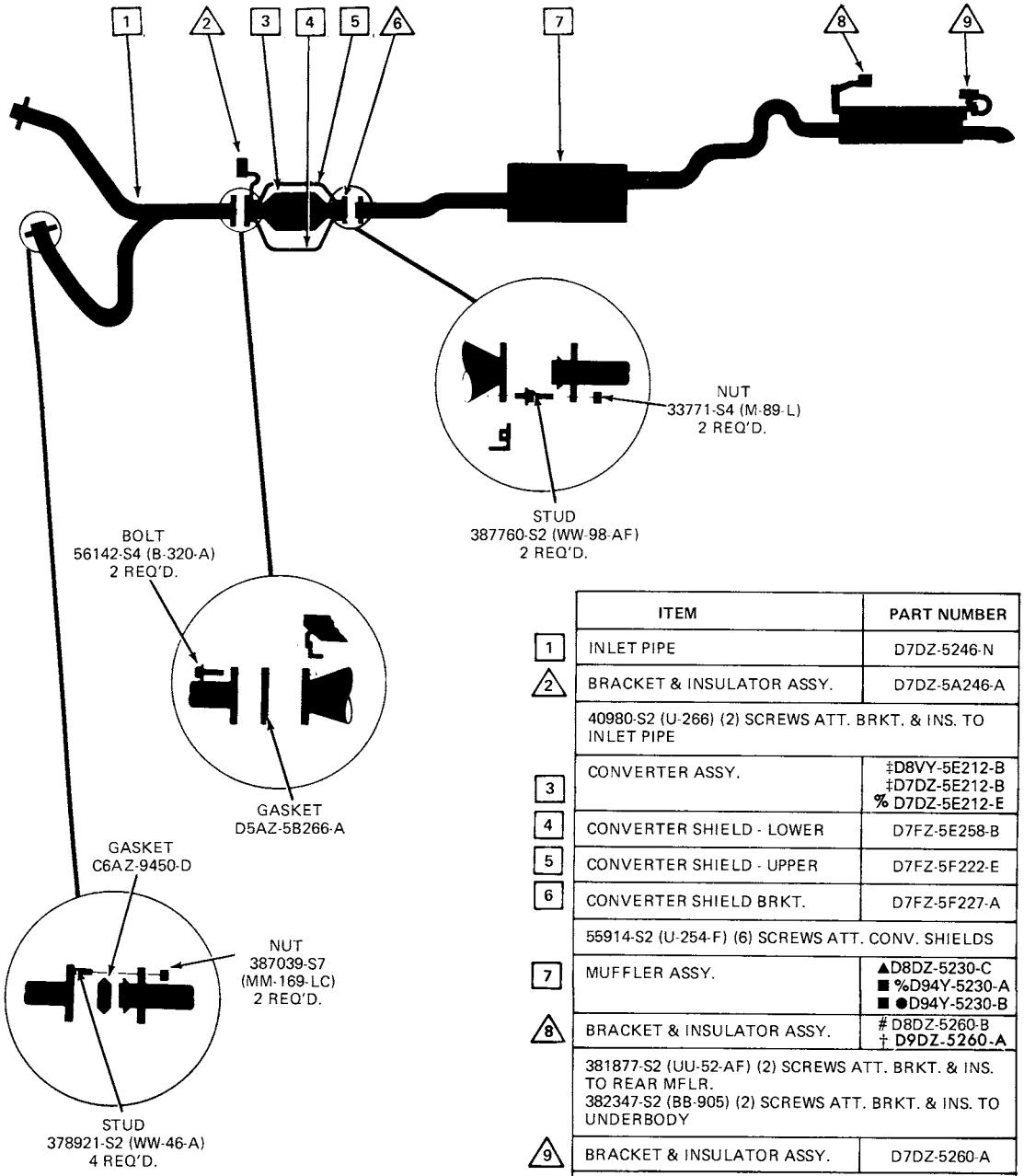

	ITEM	PART NUMBER
1	INLET PIPE	D7DZ-5246-N
2	BRACKET & INSULATOR ASSY.	D7DZ-5A246-A
	40980-S2 (U-266) (2) SCREWS ATT. BRKT. & INS. TO INLET PIPE	
3	CONVERTER ASSY.	‡D8VY-5E212-B ‡D7DZ-5E212-B % D7DZ-5E212-E
4	CONVERTER SHIELD - LOWER	D7FZ-5E258-B
5	CONVERTER SHIELD - UPPER	D7FZ-5F222-E
6	CONVERTER SHIELD BRKT.	D7FZ-5F227-A
	55914-S2 (U-254-F) (6) SCREWS ATT. CONV. SHIELDS	
7	MUFFLER ASSY.	▲D8DZ-5230-C ■ %D94Y-5230-A ■ ●D94Y-5230-B
8	BRACKET & INSULATOR ASSY.	# D8DZ-5260-B † D9DZ-5260-A
	381877-S2 (UU-52-AF) (2) SCREWS ATT. BRKT. & INS. TO REAR MFLR. 382347-S2 (BB-905) (2) SCREWS ATT. BRKT. & INS. TO UNDERBODY	
9	BRACKET & INSULATOR ASSY.	D7DZ-5260-A
	381877-S2 (UU-52-AF) (4) SCREWS ATT. BRKT. & INS. TO RR. MFLR. & SIDE MEMBER	

‡USE STAMPED I.D. TO DETERMINE CORRECT USAGE.
▲BEFORE 4/30/79
BEFORE 5-7-79
■FROM 4/30/79
%CALIF.
●EXC. CALIF.
† FROM 5-7-79

COPYRIGHT © 1986 — FORD MOTOR COMPANY — DEARBORN, MICHIGAN

1973/79
LINCOLN-MERCURY CARS

YEAR	MODEL/RESTRICTIONS	PART NUMBER	DESCRIPTION	QTY.
5L302	SLEEVE (FRONT SPRING INSULATOR)			
73/74	J "Before 6/1/74"	D3RY 5L302-A		4
74/	J "From 6/1/74"	★ D4RY 5L302-A		4
5A305	BUSHING (FRONT SPRING LOWER SEAT)			
73	C,F	C70Z 5A305-A		2
73/	P			2
75/	G,V			2

5310 SPRING (FRONT COIL)

REFER TO THE FOLLOWING SECTION FOR MODEL APPLICATION ON FRONT COIL SPRINGS:

YEAR	SECTION
1973	53.73
1974	53.74/
1975	53.74/
1976	53.74/
1977	53.74/
1978	53.74/
1979	53.74/

YEAR	MODEL/RESTRICTIONS	PART NUMBER	DESCRIPTION	QTY.
5A313	WEDGE (REAR AXLE ADJUSTING)			
73	F	★ D1ZZ 5A313-A	1° – not replaced	2
73	F	D1ZZ 5A313-B	1 1/2°	2
73	F	★ D1ZZ 5A313-C	2° – not replaced	2
73	F	C7WY 5A313-A	3°	2
75/77	G	★ D5DZ 5A313-A	1°-42′	2
78/	G	D8DZ 5A313-A	1°-42′	2
73/74	J – – A/T	D2RY 5A313-A		2
77/	V	★ D7DZ 5A313-A	4°-44′	2
73/74	J	E864283-S	Clip	1
5334	LINER (REAR SPRING CLAMP)			
73/	J	★ D3RY 5334-A		4
5355	SHIM (FRONT SPRING)			
74/75	A,C,D,F,K,Y	MB 5355-B		4
74/75	L	★ D4ZZ 5355-A	4 5/8″ O.D.-1/4″ thick	2
74/75	G,P	★ D4DZ 5355-A	5″ O.D.-15/16″ thick	2
5414-5	INSULATOR (FRONT SPRINGS)			
73/74	A,C,D,K,Y	C9AZ 5415-A		2
75	D,K			2
74	F			2
78/	A,D,F,K			2
75/76	A,C,F,Y	D5AZ 5415-A	#Orange–use to lower bumper height	AR
75/77	A,C,F,Y	★ D5AZ 5415-B r/bC9AZ 5415-A(12/77)	#White–use to raise bumper height	AR
73	F	C4DZ 5415-A	Upper	2
73/77	P			2
75/	G,V	D5DZ 5415-A		2
73/78	J	D3RY 5415-A	Upper	2
79/	J	D4ZZ 5415-A	Upper	2
79/	J,P	D4FZ 5414-A	Lower	2
74/76	L	D4FZ 5415-A	Upper	2
74/76	L	D4FZ 5414-A	Lower	2
77/	L	D4ZZ 5415-A	Upper	2
76	D,K	D5AZ 5415-A	#Orange–use to lower bumper height	AR
76/77	D,K	★ D5AZ 5415-B r/bC9AZ 5415-A(12/77)	#White–use to raise bumper height	AR
78/	P	D4FZ 5414-A	Lower	2

COPYRIGHT © 1986 — FORD MOTOR COMPANY — DEARBORN, MICHIGAN

1973/79 LINCOLN-MERCURY CARS

YEAR	CYL.	C.I.D. (C.C.D.)	MODEL	STABILIZER BAR ☆TYPE	DIA.	▲IDENT.	QTY.	PART NUMBER	INSULATOR QTY.	PART NUMBER
5482			BAR ASSY. (FRONT STABILIZER) S-Std. H/D-Heavy Duty ▲ Paint Code Ident. B-Blue G-Green OR-Orange P-Pink PU-Purple R-Red V-Violet W-White Y-Yellow							
Note 1:			Insulator serviced in 3078-9 Arm Assy. or 5A486 Kit							
			A (Mercury)							
73	8	351	A(53,57,65-exc. P/C)	S	3/4	1V-2Y	1	C9AZ 5482-E	2	C9AZ 5493-A
			A(53,57,65-exc. P/C)	H/D	13/16	1W-2Y	1	D0VY 5482-A	2	C9AZ 5493-B
			A(71)	S	13/16	1W-2Y	1	D0VY 5482-A	2	C9AZ 5493-B
			A(P/C) - - w/rear stabilizer bar	S	13/16	1W-2Y	1	D0VY 5482-A	2	C9AZ 5493-B
	8	400	A(53,57,65-exc. P/C)	S	3/4	1V-2Y	1	C9AZ 5482-E	2	C9AZ 5493-A
			A(53,57,65-exc. P/C)	H/D	13/16	1W-2Y	1	D0VY 5482-A	2	C9AZ 5493-B
			A(P/C) - - w/rear stabilizer bar	S	13/16	1W-2Y	1	D0VY 5482-A	2	C9AZ 5493-B
	8	429	A(53,57,65-exc. P/C)	S	3/4	1V-2Y	1	C9AZ 5482-E	2	C9AZ 5493-A
			A(53,57,65-exc. P/C)	H/D	13/16	1W-2Y	1	D0VY 5482-A	2	C9AZ 5493-B
			A(71)	S	13/16	1W-2Y	1	D0VY 5482-A	2	C9AZ 5493-B
			A(P/C) - - w/rear stabilizer bar	S	13/16	1W-2Y	1	D0VY 5482-A	2	C9AZ 5493-B
	8	460	A(53,57,65-exc. P/C)	S	3/4	1V-2Y	1	C9AZ 5482-E	2	C9AZ 5493-A
			A(53,57,65-exc. P/C)	H/D	13/16	1W-2Y	1	D0VY 5482-A	2	C9AZ 5493-B
			A(71)	S	13/16	1W-2Y	1	D0VY 5482-A	2	C9AZ 5493-B
			A(P/C) - - w/rear stabilizer bar	S	13/16	1W-2Y	1	D0VY 5482-A	2	C9AZ 5493-B
74	8	All	A(53,57,65-exc. P/C)	S	3/4	1V-2Y	1	C9AZ 5482-E	2	C9AZ 5493-A
			A(53,57,65-exc. P/C)	H/D	13/16	2P-2W	1	D0VY 5482-A	2	C9AZ 5493-B
			A(71-exc. P/C)	S	13/16	1G-2Y	1	★ C9AZ 5482-G	2	★ C9AZ 5493-C
			A(P/C)	S	1 1/8	3Y	1	★ D4AZ 5482-A	2	D20Z 5493-F
75	8	All	A(53,65-exc. P/C)	S	13/16	2P-2W	1	D0VY 5482-A	2	C9AZ 5493-B
			A(71-exc. P/C)	S	15/16	2W	1	D5AZ 5482-A	2	D20Z 5493-C
			A(P/C)	S	1 1/8	3Y	1	★ D4AZ 5482-A	2	D20Z 5493-F
76/78	8	All	A(53,65-exc. P/C)	S	3/4	1V-2Y	1	D0VY 5482-A	2	C9AZ 5493-B
	8	All	A(71-exc. P/C)	S	15/16	2W	1	D5AZ 5482-A	2	D20Z 5493-C
	8	351,400	A(P/C)	S	15/16	2W	1	D5AZ 5482-A	2	D20Z 5493-C
	8	460	A(P/C)	S	1 1/8	3Y	1	★ D4AZ 5482-A	2	D20Z 5493-F
79	8	All	A(54,66)-exc. police & trailer towing III	S	15/16	2Y-1W	1	D9AZ 5482-A	2	D9AZ 5493-C
	8	All	A(54,66)-and trailer towing III	H/D	1	2Y-1R	1	D9AZ 5482-B	2	D9AZ 5493-B
	8	All	A(74)-and police	H/D	1 1/8	2Y-1G	1	D9AZ 5482-C	2	D9AZ 5493-D

YEAR	CYL.	C.I.D. (C.C.D.)	MODEL	STABILIZER BAR ☆TYPE	DIA.	▲IDENT.	QTY.	PART NUMBER	INSULATOR QTY.	PART NUMBER
5482			BAR ASSY. (FRONT STABILIZER) — Cont'd S-Std. H/D-Heavy Duty ▲ Paint Code Ident. G-Green V-Violet W-White Y-Yellow R-Red V-Violet W-White Y-Yellow							
			C (Montego)							
73	6	250	C(53,63,65)	S	15/16	1W-1R	1	★ D20Z 5482-B	2	D20Z 5493-C
			C(71)	S	1	3W	1	★ D20Z 5482-E	2	C90Z 5493-A
	8	302	C(53,63,65)	S	15/16	1W-1R	1	★ D20Z 5482-B	2	D20Z 5493-C
			C(71)	S	1	3W	1	★ D20Z 5482-E	2	C90Z 5493-A
	8	351-2/B	C(53,63,65-exc. P/C) - - w/o trailer towing package	S	15/16	2W-1R	1	★ D20Z 5482-B	2	D20Z 5493-C
			C(53,63,65-P/C) - - w/competition handling package	S	1 1/8	1W-2R	1	D20Z 5482-F	2	D20Z 5493-F
			C(71) - - w/o trailer towing package	S	1	3W	1	★ D20Z 5482-E	2	C90Z 5493-A
			C - - w/trailer towing package	S	1 1/8	1W-2R	1	D20Z 5482-F	2	D20Z 5493-F
	8	351CJ	C(53,63,65-exc. P/C) - - w/o competition handling package and trailer towing package	S	15/16	2W-1R	1	★ D20Z 5482-B	2	D20Z 5493-C
			C(53,63,65-exc. P/C) - - w/competition handling package	H/D	1 1/8	1W-2R	1	D20Z 5482-F	2	D20Z 5493-F
			C(53,63,65-P/C) - - w/competition handling package	S	1 1/8	1W-2R	1	D20Z 5482-F	2	D20Z 5493-F
			C - - trailer towing package	S	1 1/8	1W-2R	1	D20Z 5482-F	2	D20Z 5493-F
	8	400	C(53,63,65-exc. P/C) - - w/o competition handling package and trailer towing package	S	15/16	2W-1R	1	★ D20Z 5482-B	2	D20Z 5493-C
			C(53,63,65-P/C) - - w/competition handling package	S	1 1/8	1W-2R	1	D20Z 5482-F	2	D20Z 5493-F
			C(71) - - w/o trailer towing package	S	1	3W	1	★ D20Z 5482-E	2	C90Z 5493-A
			C - - w/trailer towing package	S	1 1/8	1W-2R	1	D20Z 5482-F	2	D20Z 5493-F
	8	429	C(53,63,65-exc. P/C) - - w/o competition handling package and trailer towing package	S	15/16	2W-1R	1	★ D20Z 5482-B	2	D20Z 5493-C
			C(53,63,65-exc. P/C) - - w/competition handling package	H/D	1 1/8	1W-2R	1	D20Z 5482-F	2	D20Z 5493-F
			C(53,63,65-P/C) - - w/competition handling package	S	1 1/8	1W-2R	1	D20Z 5482-F	2	D20Z 5493-F
			C(71) - - w/o trailer towing package	S	1	3W	1	★ D20Z 5482-E	2	C90Z 5493-A
			C - - w/trailer towing package	S	1 1/8	1W-2R	1	D20Z 5482-F	2	D20Z 5493-F
	8	460	C(53,63,65-exc. P/C) - - w/o competition handling package and trailer towing package	S	15/16	2W-1R	1	★ D20Z 5482-B	2	D20Z 5493-C
			C(53,63,65-exc. P/C) - - w/competition handling package	H/D	1 1/8	1W-2R	1	D20Z 5482-F	2	D20Z 5493-F
			C(53,63,65-P/C) - - w/competition handling package	S	1 1/8	1W-2R	1	D20Z 5482-F	2	D20Z 5493-F
			C - - w/trailer towing package	S	1 1/8	1W-2R	1	D20Z 5482-F	2	D20Z 5493-F

COPYRIGHT © 1986 — FORD MOTOR COMPANY — DEARBORN, MICHIGAN

1973/79 LINCOLN-MERCURY CARS

YEAR	CYL.	C.I.D. (C.C.D.)	MODEL	STABILIZER BAR ☆TYPE	DIA.	▲IDENT.	QTY.	PART NUMBER	INSULATOR QTY.	PART NUMBER
5482			BAR ASSY. (FRONT STABILIZER) — Cont'd							
			S-Std. H/D-Heavy Duty ▲ Paint Code Ident. G-Green OR-Orange P-Pink PU-Purple R-Red V-Violet W-White Y-Yellow							
NOTE 1:			Insulator Serviced in 3078-9 Arm Assy. or 5A486 Kit.							
			C (Montego)							
74	8	All	C(53-exc. P/C)	S	15/16	3G	1	★ D40Z 5482-A	2	D20Z 5493-C
			C(53-exc. P/C)	H/D	1	3W	1	★ D20Z 5482-E	2	C90Z 5493-A
			C(65-exc. P/C)	S	15/16	2W-1R	1	★ D20Z 5482-B	2	D20Z 5493-C
			C(65-exc. P/C)	H/D	1	3W	1	★ D20Z 5482-E	2	C90Z 5493-A
			C(71-exc. P/C)	S	1	3W	1	★ D20Z 5482-E	2	C90Z 5493-A
			C(P/C)	S	1 1/16	3R	1	★ D40Z 5482-B	2	D40Z 5493-B
75/76	8	All	C(53-exc. P/C)	S	15/16	3G	1	★ D40Z 5482-A	2	D20Z 5493-C
			C(65-exc. P/C)	S	15/16	1W-1R	1	★ D20Z 5482-B	2	D20Z 5493-C
			C(53,65-exc. P/C)	H/D	1	3W	1	★ D20Z 5482-E	2	C90Z 5493-A
			C(53,65 P/C)	S	1 1/16	3R	1	★ D40Z 5482-B	2	D40Z 5493-B
			D (Lincoln)							
73/	8	460	D	S	13/16	2P-2W	1	D0VY 5482-A	2	C9AZ 5493-B
77/	8	400	D	S	3/4	IV-2Y	1	C9AZ 5482-E	2	C9AZ 5493-A
			F (Cougar)							
73	8	351-2/B	F	S	3/4	3Y,2Y-1R	1	★ D2ZZ 5482-A	2	C60Z 5493-B
	8	351-4/B	F - - w/o competition handling pkg.	S	3/4	3Y,2Y-1R	1	★ D2ZZ 5482-A	2	C60Z 5493-B
			F - - w/competition handling pkg.	S	7/8	2Y-1G	1	D1ZZ 5482-D	2	C60Z 5493-E
74/75	8	All	F	S	1	3W	1	★ D20Z 5482-E	2	C90Z 5493-A
76	8	All	F	S	15/16	3G	1	★ D40Z 5482-A	2	D20Z 5493-C
77/	8	All	F(53-exc. P/C)	S	15/16	3G	1	★ D40Z 5482-A	2	D20Z 5493-C
77/	8	All	F(65D,K-exc. P/C)	S	15/16	1R-2W	1	★ D20Z 5482-B	2	D20Z 5493-C
77	8	All	F(71)	S	1	3W	1	★ D20Z 5482-E	2	C90Z 5493-A
77/	8	All	F(53,65D,K-exc. P/C)	H/D	1	3W	1	★ D20Z 5482-E	2	C90Z 5493-A
77/	8	All	F(P/C-exc. L.A.P.D.)	S	1 1/16	3R	1	★ D40Z 5482-B	2	D40Z 5493-B
77/	8	All	F(65L, P/C-L.A.P.D.)	S	1 1/8	1W-2R	1	D20Z 5482-F	2	D20Z 5493-F
			G (Monarch)							
75/	6	All	G - - exc. A/C	S	11/16	2Y-1B	1	D5DZ 5482-D	2	C60Z 5493-B
75	6	All	G - - with A/C "Before 3/17/75"	S	31/32	1PU-1G	1	D5DZ 5482-E	2	D4ZZ 5493-B
75/	6	All	G - - with A/C "From 3/17/75"	S	31/32	1PU-1G	1	D5DZ 5482-E	2	D6DZ 5493-A
75	8	All	G "Before 3/17/75"	S	31/32	1PU-1G	1	D5DZ 5482-E	2	D4ZZ 5493-B
75/	8	All	G "From 3/17/75"	S	31/32	1PU-1G	1	D5DZ 5482-E	2	D6DZ 5493-A
			J (Capri)							
73/78	4,6	All	J	S			1	★ D1RY 5482-B		NOTE 1
79	4,6	All	J	HD	1	1G-1B	1	D9ZZ 5482-A	2	D9ZZ 5493-A
79	4,6	All	J	S	1 1/18	1B-20R	1	E1BZ 5482-E	2	E1BZ 5493-D
			K (Mark IV)							
73/76	8	460	K	S	7/8	2G	1	★ D2SZ 5482-A	2	D2SZ 5493-B
			K (Mark V)							
77/	8	400	K	S	3/4	2Y	1	★ D7LY 5482-A	2	D7LY 5493-A
	8	460	K	S	7/8	2G	1	★ D2SZ 5482-A	2	D2SZ 5493-B
			L (Bobcat)							
74	4	All	L(62,64)-w/handling susp. option	H/D	3/4	1R-1W	1	★ D4FZ 5482-A	2	D4FZ 5493-A
			L(73)	S	3/4	1R-1W	1	★ D4FZ 5482-A	2	D4FZ 5493-A
75	6	All	L(62,64)	S	13/16	2Y-10R	1	★ D5FZ 5482-B	2	D5FZ 5493-A
	4,6	All	L(73)	S	13/16	2Y-10R	1	★ D5FZ 5482-B	2	D5FZ 5493-A
	4,6	All	L(62,64)	H/D	7/8	2Y-1PU	1	★ D5FZ 5482-C	2	D5FZ 5493-B

YEAR	CYL.	C.I.D. (C.C.D.)	MODEL	STABILIZER BAR ☆TYPE	DIA.	▲IDENT.	QTY.	PART NUMBER	INSULATOR QTY.	PART NUMBER
5482			BAR ASSY. (FRONT STABILIZER) — Cont'd							
			S-Std. H/D-Heavy Duty ▲ Paint Code Ident. B-Blue G-Green OR-Orange P-Pink PU-Purple R-Red V-Violet W-White Y-Yellow							
			L (Bobcat)							
76	6	All	L(62,64)	S	3/4	1Y-20R	1	D6FZ 5482-C	2	D4FZ 5493-A
	4,6	All	L(73)	S	3/4	1Y-20R	1	D6FZ 5482-C	2	D4FZ 5493-A
	4,6	All	L(62,64)	H/D	13/16	2Y-1G	1	★ D6FZ 5482-A	2	D5FZ 5493-A
77/	6	All	L (62,64)	S	3/4	1Y-20R	1	D6FZ 5482-C	2	D4FZ 5493-A
	4,6	All	L (73)	S	3/4	1Y-20R	1	D6FZ 5482-C	2	D4FZ 5493-A
	6	All	L (62,64)	H/D	15/16	3Y	1	D7FZ 5482-A	2	D6DZ 5493-A
	4,6	All	L (73)	H/D	15/16	3Y	1	D7FZ 5482-A	2	D6DZ 5493-A
	4	All	L (62,64)	H/D	7/8	1P-2Y	1	D6FZ 5482-B	2	D5FZ 5493-B
			P (Comet)							
73/77	6,8	All	P	S	11/16	30R	1	D6DZ 5482-B	2	C60Z 5493-B
73/76	6,8	All	P "Before 2/2/76"	H/D	7/8	2G-20R	1	D0DZ 5482-B	2	C60Z 5493-E
76/77	6,8	All	P "From 2/2/76"	H/D	7/8	2B	1	D6DZ 5482-C	2	C60Z 5493-E
			P (Zephyr)							
78/	4	All	P(36,54,66) - - exc. A/C	S	7/8	1B-1W	1	E1BZ 5482-E	2	E1BZ 5493-C
	4	All	P(36,54,66) - - with A/C	S	15/16	1B-1R	1	E1BZ 5482-E	2	E1BZ 5493-A
	4	All	P(36,54,66)	H/D	1 1/16	2B	1	E1BZ 5482-D	2	E1BZ 5493-D
	6	All	P(36,54,66)	S	15/16	1B-1R	1	E1BZ 5482-E	2	E1BZ 5493-A
	6	All	P(36,54,66)	H/D	1 1/16	2B	1	E1BZ 5482-D	2	E1BZ 5493-D
	8	All	P(36,54,66) - - exc. P/C & TAXI	S	1 1/16	2B	1	E1BZ 5482-D	2	E1BZ 5493-D
	All	All	P(36,54,66) - - P/C & TAXI	S	1 1/8	1B-10R	1	E1BZ 5482-D	2	E1BZ 5493-D
	All	All	P(74)	S	1 1/16	2B	1	E1BZ 5482-D	2	E1BZ 5493-D
			V (Versailles)							
77/	8	All	V	S	31/32	1PU-1G	1	D5DZ 5482-E	2	D6DZ 5493-A
			Y (Meteor)							
73	8	351	Y (53,57,65-exc. P/C)	S	3/4	1V-2Y	1	C9AZ 5482-E	2	C90Z 5493-A
			Y (53,57,65-exc. P/C)	H/D	13/16	1W-2Y	1	D0VY 5482-A	2	C9AZ 5493-B
			Y (P/C) - - w/rear stabilizer bar	S	13/16	1W-2Y	1	D0VY 5482-A	2	C9AZ 5493-B
	8	400	Y (53,57,65-exc. P/C)	S	3/4	1V-2Y	1	C9AZ 5482-E	2	C9AZ 5493-A
			Y (53,57,65-exc. P/C)	H/D	13/16	1W-2Y	1	D0VY 5482-A	2	C9AZ 5493-B
			Y (71)	S	13/16	1W-2Y	1	D0VY 5482-A	2	C9AZ 5493-B
			Y (P/C) - - w/rear stabilizer bar	S	13/16	1W-2Y	1	D0VY 5482-A	2	C9AZ 5493-B
	8	429	Y (53,57,65-exc. P/C)	S	3/4	1V-2Y	1	C9AZ 5482-E	2	C9AZ 5493-A
			Y (53,57,65-exc. P/C)	H/D	13/16	1W-2Y	1	D0VY 5482-A	2	C9AZ 5493-B
			Y (71)	S	13/16	1W-2Y	1	D0VY 5482-A	2	C9AZ 5493-B
			Y (P/C) - - w/rear stabilizer bar	S	13/16	1W-2Y	1	D0VY 5482-A	2	C9AZ 5493-B
	8	460	Y (53,57,65-exc. P/C)	S	3/4	1V-2Y	1	C9AZ 5482-E	2	C9AZ 5493-A
			Y (53,57,65-exc. P/C)	H/D	13/16	1W-2Y	1	D0VY 5482-A	2	C9AZ 5493-B
			Y (71)	S	13/46	1W-2Y	1	D0VY 5482-A	2	C9AZ 5493-B
			Y (P/C) - - w/rear stabilizer bar	S	13/16	1W-2Y	1	D0VY 5482-A	2	C9AZ 5493-B
74	8	All	Y (53,57,65-exc. P/C)	S	3/4	1V-2Y	1	C9AZ 5482-E	2	C9AZ 5493-A
			Y (53,57,65-exc. P/C)	H/D	13/16	2P-2W	1	D0VY 5482-A	2	C9AZ 5493-B
			Y (71-exc. P/C)	S	13/16	1G-2Y	1	★ C9AZ 5482-G	2	★ C9AZ 5493-C
			Y (P/C)	S	1 1/8	3Y	1	★ D4AZ 5482-A	2	D20Z 5493-F
75/76	8	All	Y (53,65-EXC. P/C)	S	13/16	2P-2W	1	D0VY 5482-A	2	C9AZ 5493-B
			Y (71-exc. P/C)	S	12/46	2W	1	D5AZ 5482-A	2	D20Z 5493-C
			Y (P/C)	S	1 1/8	3Y	1	★ D4AZ 5482-A	2	D20Z 5493-F

YEAR	MODEL/RESTRICTIONS	PART NUMBER	DESCRIPTION	QTY.
5482	BAR ASSY. (FRONT STABILIZER) — Cont'd			
74	L (73)	★ 385727-S100	(BB-390-DJ)-bolt (bar to lower arm)-3/8"-16 x 1 11/16"-serrated	1

COPYRIGHT © 1986 — FORD MOTOR COMPANY — DEARBORN, MICHIGAN

1973/79 LINCOLN-MERCURY CARS

YEAR	MODEL/RESTRICTIONS	PART NUMBER	DESCRIPTION	QTY.
5C482	BRACKET (REAR STABILIZER BAR)			
76/	J	★ D6RY 5C482-A		1
5484	INSULATOR (STEERING GEAR RACK and PINION MOUNTING BRACKET)			
73/	J	(RH) D0RY 5484-B	(LH) D0RY 5484-A	1
5484	INSULATOR (STABILIZER BAR TO FRAME)			
73/74	J	★ 5484	Serviced only in 5486 Kit	
76	J	D5RY 5484-C		2
5K484	LINK ASSY. (STABILIZER BAR)			
73/ 74/	C,K F	★ D20Z 5K484-A r/bD40Z 5A486-A	Use on rear stabilizer bar	2 2
74/	L	D4FZ 5K484-A	Link-use on front stabilizer bar-incl. (3) 381877-S2 screw and (2) 34442-S7 nut	2
78/ 79	P J	★ D8BZ 5D485-A r/bD9ZZ 5D485-A	(LH)-bracket-use on front side member S/M Bar Bracket L.H.	1 1
		D9ZZ 5D485-B	S/M Bar Bracket R.H.	1
79	P	D9ZZ 5D485-A	Sleeve-fit stab bar	2
	P	★ D8BZ 5D485-B r/bD9ZZ 5D485-B	(RH)-bracket-use on front side member	1
5D485	Refer to group 5K484			
5K485	SLEEVE (FRONT STABILIZER BAR)			
79/	J	D9ZZ 5K485-A		2
78/	P	★ D8BZ 5K485-C r/bE1BZ 5493-C	7/8" stab. bar (#black)	2
		★ D8BZ 5K485-A r/bE1BZ 5493-A	15/16" stab. bar (#red)	2
		★ D8BZ 5K485-B r/bE1BZ 5493-B	1 1/16" stab. bar (#blue)	2
		★ D8BZ 5K485-D r/bE1BZ 5493-D	1/1/8" stab. bar (#orange)	2
5486	BRACKET (STABILIZER BAR)			
73/ 73/	A,D,K C,F,Y	C9AZ 5486-A	Use on 15/16" dia. and 1" dia. front stabilizer bar	2 2
73/76 74/ 74/76	C F A,Y	★ D20Z 5486-A r/bD20Z 5486-B	Use on 1 1/16" dia. and 1 1/8" dia. front stabilizer bars	2 2 1
73/76	C	D00Z 5486-B	Bracket-use on rear stabilizer bar	2
73/76	C,K	(RH) D20Z 5C489-C	(LH) D20Z 5C489-B — Upper clamp-use on rear stabilizer bar	1
73/76	C,K	★ D20Z 5C489-A	Lower clamp-use on rear stabilizer bar	2
73	F	D00Z 5486-A	Bracket-use on rear stabilizer bar	2
74/76	F	D00Z 5486-B	Bracket-use on rear stabilizer bar	2
74/76	F	(RH) D20Z 5C489-C	(LH) D20Z 5C489-B — Upper clamp-use on rear stabilizer bar	1
74/76	F	★ D20Z 5C489-A	Lower clamp-use on rear stabilizer bar	2
77/	F,K	D70Z 5486-A	Bracket-use on rear stabilizer bar	1
	F,K	D70Z 5C489-A	R.H.-lower clamp-use on rear stabilizer bar	1
	F,K	D70Z 5C489-B	L.H.-lower clamp-use on rear stabilizer bar	1
	F,K	D70Z 5C489-C	Upper U-bolt-use on rear stabilizer bar	2
75/	G - - 6 cyl. without A/C	D00Z 5486-A	Bracket-use on front stabilizer bar	2
75	G - - 6 cyl. with A/C G - - 8 cyl.	★ D4ZZ 5486-A	Bracket-use on front stabilizer bar	2 2
76/	G - - 6 cyl. with A/C G - - 8 cyl.	D6DZ 5486-A	Bracket-use on front stabilizer bar	2 2
73/74	J	(RH) D2RY 5486-C	(LH) D0RY 5486-D — Bracket-use on front stabilizer bar	1
76	J	(RH) D5RY 5486-G	(LH) D5RY 5486-H — Bracket stab mounting	1
73/74	J	D0RY 5486-E	Bracket repair kit-use on front stabilizer bar	2

Consists of

1-3014E 5484-B	Bushing	2-69AB 5488-AA	Clamp	2-110770-ES8	Bolt
2-113E 5K482	Plate				

YEAR	MODEL/RESTRICTIONS	PART NUMBER	DESCRIPTION	QTY.
5486	BRACKET (STABILIZER BAR) — Cont'd			
76/77	J	D6RY 5486-A	Bracket repair kit-use on front stabilizer bar	1
	Consists of			
	1-74EB 5K482-AA Lock Tab	1-69ZB 5488-AA	Clamp 2-E602068-S72 or	
	1-74EB 5484-AB Insulator		2-E602373-S72 Bolt	
76/78	J	D5RY 5486-A	R.H.-#74EB 5L482-AE-bracket used on front stabilizer bar	1
76/78	J	D5RY 5486-B	L.H.-#74EB 5L483-AE	1
73	J	★ D3RY 5486-A	Bracket-incl. bushing-use on rear stabilizer bar	2
74/76	J	D4RY 5486-B	Bracket-incl. bushing-use on rear stabilizer bar	2
73/	J	D4RY 5C489-A	Clamp-U-shape - - use on front or rear stabilizer bar	2
73/74	J	D3RY 5C489-B	U-bolt-secure bumper striker plate-incl. 4-E620433-S72 nuts	2
74/76	J	D4RY 5C489-C	Clamp stab bar attach bush	2
78	J	★ D6RY 5486-B	Kit-stabilizer repair	1
79	J	D8BZ 5486-A	Front BAR U-shape	2
74/	L	D00Z 5486-A	Clamp	2
73/77	P		use on front stabilizer bar less than 15/16" dia.	2
78/	P	D8BZ 5486-A		2
77/	L	D6DZ 5486-A	use on 15/16" dia. stabilizer bar	1
77	V	D6DZ 5486-A	Bracket-use on front stabilizer bar	2
73/76	C	384802-S2	(BB-444-T)-bolt (bracket to underbody)-3/16"-18 x 6 1/2"	2
73/76	C,K	385458-S2	(BB-647-HK)-bolt (clamp to axle)-carriage-3/8"-16 x 2"	2
73/74	J	120790-ES8	Washer	12
5486	BRACKET (STEERING GEAR RACK and PINION MOUNTING)			
73/	J	(RH) D0RY 5486-B	(LH) D0RY 5486-A	1
		304664-S2	Bolt-hex. hd.-5/16"-18 x 7/8"	4
		120761-ES2	Washer-special-11/32" dia.	4
5A486	END REPAIR KIT (STABILIZER BAR)			
NOTE:	▲ Refer to the end of group 5A486 for contents of kit			
73/74	A,Y	▲ D4AZ 5A486-A	Front	2
79	A	▲ D9AZ 5A486-A	Front	
75/	A,Y	▲ D5AZ 5A486-A	Front	2
73/76	C	▲ D4AZ 5A486-A	Front	2
	C	▲ D40Z 5A486-A	Rear	2
73/	D	▲ D4AZ 5A486-A	Front	2
73	F	▲ C20Z 5A486-A	Front	2
	F	▲ D0ZZ 5A486-A	Rear	2
74/	F	▲ D4AZ 5A486-A	Front	2
	F	▲ D40Z 5A486-A	Rear	2
75/	G	▲ D5DZ 5A486-A	Front	2
73/77	J	▲ D0RY 5A486-A	Front	2
79	J	▲ D8BZ 5A486-A	Front	2
73/	K	▲ D4AZ 5A486-A	Front	2
	K	▲ D40Z 5A486-A	Rear	2
74/	L	▲ D4FZ 5A486-A	Front	2
73/76	P "Before 2/2/76"	▲ C20Z 5A486-A	Front-use only with D0DZ 5482-A or B stab. bar	2
76/77	P "From 2/2/76"	▲ D5DZ 5A486-A	Front-use only with D6DZ 5482-B or C stab. bar	2
78/	P	▲ D8BZ 5A486-A	Front	2
77/	V	▲ D5DZ 5A486-A	Front	2

CONTENTS OF KIT

NOTE: ● Refer to group 5A486 above for model application

● C20Z 5A486-A

Consists of

1-C20Z 5490-A	Spacer	1-34442-S7	or	4-371169-S2	Washer
4-KC 55490-A	Insulator	1-55691-S7	Nut	1-384611-S2	Bolt

COPYRIGHT © 1986 — FORD MOTOR COMPANY — DEARBORN, MICHIGAN

1973/79 LINCOLN-MERCURY CARS

YEAR	MODEL/RESTRICTIONS	PART NUMBER	DESCRIPTION	QTY.
5A486	END REPAIR KIT (STABILIZER BAR) — Cont'd			
NOTE:	● Refer to group 5A486 above for model application			
		● D0RY 5A486-A		
	Consists of			
	2-3014E 3A275-B Washer	1-3014E 5493-D	Bushing	1-E642384-S71 Cotter pin
	1-3014E 5K485-B Spacer	1-33987-S18	Nut	
		● D0ZZ 5A486-A		
	Consists of			
	1-D0ZA 5490-A Spacer	1-34442-S2	Nut	1-384558-S2 Bolt
	4-KC 55490-A Insulator	4-371169-S2	Washer	
		● D4AZ 5A486-A		
	Consists of			
	1-C8AA 5490-A or	4-371169-S2	Washer	1-385026-S2 Bolt
	1-387667-S Spacer	4-KC 55490-A	Insulator	1-34442-S7 Nut
		● D4FZ 5A486-A		
	Consists of			
	1-D2FZ 5C491-A Nut	2-KC 55490-A	Insulator	1-371169-S2 Washer
		● D40Z 5A486-A		
	Consists of			
	1-D20Z 5K484-A Link	2-MG 18041-A	Retainer	1-56344-S2 Bolt
	1-D20Z 5C492-B Insulator	1-34442-S7	Nut	1-382802-S2 Nut
	1-D20Z 5K492-A Insulator			
		● D5AZ 5A486-A		
	Consists of			
	1-C8AA 5490-A or	1-34442-S7	Nut	1-385026-S2 Bolt
	1-387667-S Spacer	4-371169-S2	Washer	
	4-D5AW 5493-AA Insulator			
		● D5DZ 5A486-A		
	Consists of			
	1-D5DW 5490-A Spacer	1-34442-S7	Nut	1-386701-S2 Bolt
	4-KC 55490-A Insulator	4-371169-S2	Washer	
		● D8BZ 5A486-A		
	Consists of			
	4-D8BC 5493-AA Insulator	4-N800265-S2	Washer	1-N800280-S7 Nut
	1-N800264-S2 Spacer	1-N800277-S2	Bolt	
		● D9AZ 5A486-A		
	Consists of			
	1-N800495-S2 Bolt	4-D9AC 5493-AC	Insulator	
	4-N800498-S2 Washer	1-N800496-S	Spacer	
5B486	BUSHING (REAR STABILIZER BAR MOUNTING)			
73/76	C	D20Z 5B486-B		2
74/	F			2
73/	K			2
5B486	PLATE (REAR STABILIZER BAR LINK MOUNTING BRACKET)			
73/76	C	D20Z 5B486-A		2
74/	F		w/bolt on bracket	2
5C489	Refer to group 5486			
5-5490	INSULATOR (FRONT STABILIZER BAR TO LOWER SUSPENSION ARM LINK BOLT)			
73/74	A,C,D,F,K,P,Y	KC 55490-A	Also serviced in kit-group 5A486	8
74/	L(73)			AR
75/	A,D,G,K,P,V,Y			AR
		★ 371216-S	(XX-30-E)-washer (use as insulator retainer)-cup	8
5L490	BRACKET (REAR STABILIZER BAR TO LOWER ARM)			
78	P	D8BZ 5L490-A	H/D suspension – exc. P/C	2
	P	★ D8BZ 5L490-B r/bD9BZ 5L490-B	P/C suspension	2
79	J,P	D9BZ 5L490-A	2 Piece Design	2
5C491	NUT (FRONT STABILIZER BAR LINK)			
74/	L	D2FZ 5C491-A	Use to retain stabilizer bar to link-also serviced in kit-group 5A486	2

YEAR	MODEL/RESTRICTIONS	PART NUMBER	DESCRIPTION	QTY.
5C492	INSULATOR (REAR STABILIZER BAR LINK)			
73/	C,K	★ D20Z 5C492-A	Upper	2
74/	F	r/bD40Z 5A486-A		2
73/	C,K	★ D20Z 5C492-B	Lower	2
74/	F	r/bD40Z 5A486-A		2
5493	INSULATOR (STABILIZER BAR)-For Front Stabilizer Bar Insulator refer to group 5482 -For Rear Stabilizer Bar Insulator refer to group 5A772			
5493	BUSHING ASSY. (REAR SUSPENSION ARM-UPPER)			
74/	J	D4RY 5493-A	Use on rear stabilizer end	2
5500	ARM and BUSHING ASSY. (REAR SUSPENSION UPPER)			
73/78	A,D,Y	D4AZ 5500-A		2
74/79	D			2
79	A	D9AZ 5500-A		2
79/	A	D9AZ 5500-C	Service fix	2
79/	A,D,K	E0VY 5500-B	Service fix for drive line NVH	2
73/	C,K	★ 5500	Serviced only in kit-group 5A826	
74	F			
79	J-Standard	★ D9ZZ 5500-A	w/o rear stab. bar	2
		r/bD9BZ 5500-A		
	J-H/D	★ D9ZZ 5500-B	Rear stab. bar, w/o TRX tires	2
	J-E/H/D	★ D9ZZ 5500-D	Rear stab. bar & TRX tires	2
78/	P	★ D9ZZ 5500-A	Before 2/12/79	2
		r/bD9BZ 5500-A		
78/79	P exc. P/C & Taxi	D8BZ 5500-D	Service fix-TSB 148	2
79/	P	D9BZ 5500-A	Exc. Susp. & handling From 2/12/79	2
		D9BZ 5500-B	Suspension & handling From 2/12/79	2
73/	A,D,Y	380826-S100	(BB-817-AR)-bolt (to axle)-hex.-9/16"-12 x 4 1/4"	1
73/	A,D,Y	384929-S100	(BB-200-E)-bolt (to c/member)-hex.-9/16"-12 x 4 1/8"	1
73/	A,D,Y	385020-S100	(MM-170-FA)-nut (to c/member)-lock-9/16"-12	1
73/	A,D,Y	★ 382828-S100	(MM-11-AA)-nut (to axle)-9/16"-12	1
73/	A,D,Y	372520-S2	(XX-305-A)-washer (to axle)-9/16"	1
73/	J	55695-ES8A	Nut-hex.-7/16"-14	2
		114656-ES8	Nut-hex.-7/16"-14	2
		110978-ES8	Washer-flat-7/16"	2
		E830015-S71	Washer	2
5536	INSULATOR (REAR SPRING)			
73/78	A,D,K	C9AZ 5536-A		4
79	D,K			4
73/76	C,Y			2
74/	F			2
79	J	D8BZ 5536-A	Lower	2
		D9BZ 5536-A	Upper	2
79	A	D9AZ 5536-A	Upper	2
78/	P	D8BZ 5536-A	Lower	2
	P	D9BZ 5536-A	Upper	2
5A545	RETAINER (REAR SPRING INSULATOR)			
76/	D,K	D6SZ 5A545-A		4
79	A			4
76	C			4
77	MF (71)			4

5560 SPRING ASSY. (REAR)

STAMPED IDENTIFICATION (LEAF SPRING)

1973 IDENTIFICATION CHART

IDENTIFICATION	PART NUMBER	IDENTIFICATION	PART NUMBER
D1DA 5556-CC	D1DZ 5560-E	D3WA 5556-AA	★ D3WY 5560-A
D1DA 5556-HB	D1DZ 5560-D	D3WA 5556-AB	★ D3WY 5560-A
D2DA 5556-BA	★ D2DZ 5560-B	D3WA 5556-BB	★ D3WY 5560-A
D2DA 5556-DA	★ D2DZ 5560-A	D3WA 5556-CA	★ D3WY 5560-B
D3DA 5556-NA	D3DZ 5560-E	D3WA 5556-CB	★ D3WY 5560-B
D3DA 5556-RA	D3DZ 5560-E		

COPYRIGHT © 1986 — FORD MOTOR COMPANY — DEARBORN, MICHIGAN

5560 SPRING ASSY. (REAR) — Cont'd

STAMPED IDENTIFICATION (LEAF SPRING)

1973 IDENTIFICATION CHART

IDENTIFICATION	PART NUMBER	IDENTIFICATION	PART NUMBER
D3WA 5556-DB	★ D3WY 5560-B	D3WA 5560-AA	★ D3WY 5560-A
D3WA 5556-EA	★ D3WY 5560-C	D3WA 5560-AB	★ D3WY 5560-A
D3WA 5556-FA	★ D3WY 5560-C	D3WA 5560-BA	★ D3WY 5560-B
D3WA 5556-GA	★ D3WY 5560-D	D3WA 5560-BB	★ D3WY 5560-B
D3WA 5556-HA	★ D3WY 5560-D	D3WA 5560-CA	★ D3WY 5560-C
D3DA 5560-EA	D3DZ 5560-E	D3WA 5560-DA	★ D3WY 5560-D

COLOR IDENTIFICATION (COIL and LEAF SPRING)

1973 IDENTIFICATION CHART — Cont'd

IDENTIFICATION	PART NUMBER	IDENTIFICATION	PART NUMBER
1 Brown-1 Gray	D0LY 5560-C	1 Red	★ D1SZ 5560-A r/b D4AZ 5560-R
1 Brown-1 Yellow	★ D0AZ 5560-N r/b D4AZ 5560-AH	2 Red-1 Green	★ D2DZ 5560-A
1 Gray	D0AZ 5560-C	1 Red-1 Orange	★ D20Z 5560-N
1 Gray-1 Green	D0LY 5560-B	1 Red-1 Pink-1 Yellow	★ D3VY 5560-A r/b D4AZ 5560-AB
1 Gray-1 Red	★ D0SZ 5560-A r/b D4AZ 5560-R	1 Red-1 Yellow	★ D3AZ 5560-A ★ r/b D4AZ 5560-AM
1 Green	★ D1AZ 5560-C r/b D4AZ 5560-N	1 Silver	★ D0AZ 5560-K r/b D4AZ 5560-Y
1 Green-2 Orange	D2LY 5560-A	1 Silver-1 Brown	D0AZ 5560-L
1 Green-1 Red	D20Z 5560-R	1 Silver-1 Green	★ D0AZ 5560-AA r/b D4AZ 5560-Y
1 Green-2 Red	D3SZ 5560-C	1 Silver-2 Orange	★ D3AZ 5560-D r/b D0AZ 5560-D
1 Green-2 Yellow	★ D2AZ 5560-B r/b D4AZ 5560-AR	1 Silver-1 Pink	★ D0AZ 5560-U ★ r/b D4AZ 5560-AM
1 Orange-1 Gray	★ D0AZ 5560-T ★ D4AZ 5560-AJ	1 Silver-1 Red	★ D0AZ 5560-J r/b D0AZ 5560-K
1 Orange-1 Green	★ D20Z 5560-D	1 Silver-1 Yellow	★ D0VY 5560-D r/b D4AZ 5560-AV
1 Orange-2 Green	★ D3WY 5560-C	1 Violet-2 Orange	★ D3AZ 5560-E
1 Orange-2 Pink	D1DZ 5560-E	1 Violet-1 Red	★ D0AZ 5560-A ★ D0AZ 5560-B
2 Orange-2 Pink	D1DZ 5560-D	1 Violet-1 Yellow	★ D20Z 5560-B ★ r/b D20Z 5560-D
1 Orange-1 Yellow	★ D2AZ 5560-A r/b D4AZ 5560-AL	1 Violet-1 Yellow	★ D0AZ 5560-B
2 Pink	★ D3WY 5560-D	1 Yellow-1 Gray	★ D0AZ 5560-S
1 Pink-1 Brown	★ D0VY 5560-B r/b D5AZ 5560-W	1 Yellow-2 Green	★ D3WY 5560-A
1 Pink-1 Gray	★ D0AZ 5560-V r/b D4AZ 5560-AN	1 Yellow-2 Pink	★ D3WY 5560-B
1 Pink-1 Green	★ D0AZ 5560-D r/b D4AZ 5560-N	1 Yellow-2 Red	D20Z 5560-M
1 Pink-1 Yellow	★ D20Z 5560-G r/b D4AZ 5560-AE		
1 Pink-1 Yellow	D3DZ 5560-E		

1973 MODEL APPLICATION CHART

BODY TYPE	C.I.D. C.C.D.	▲TYPE SPRING	▲TYPE SUSP.	LOAD RATE	PART NUMBER	REMARKS	QTY.
▲ SPRING AND SUSPENSION TYPE: C-COIL, L-LEAF, S-STD., H/D-HEAVY DUTY							
5560 SPRING ASSY. (REAR) — Cont'd							
A (Mercury), Y (Meteor)							
53B, F(exc. P/C)	All	C	S	920	★ D1SZ 5560-A r/b D4AZ 5560-R	W/o air leveler system and trailer towing pkg. "Before 9/5/72"	2
53B, F(exc. P/C)	All	C	S	880	★ D1AZ 5560-C r/b D4AZ 5560-N	W/o air leveler system and trailer towing pkg. "From 9/5/72"	2

1973 MODEL APPLICATION CHART

BODY TYPE	C.I.D. C.C.D.	▲TYPE SPRING	▲TYPE SUSP.	LOAD RATE	PART NUMBER	REMARKS	QTY.
▲ SPRING AND SUSPENSION TYPE: C-COIL,L-LEAF,S-STD.,H/D-HEAVY DUTY							
5560	SPRING ASSY. (REAR) — Cont'd						
A (Mercury), Y (Meteor)							
53B, F(exc. P/C)	All	C	H/D	950	★ D0AZ 5560-K r/bD4AZ 5560-Y	W/o air leveler system and trailer towing pkg.	2
53B, F(exc. P/C)	All	C	S	800	★ D0AZ 5560-C	W/air leveler system w/o trailer towing pkg. "Before 9/5/72"	2
53B, F(exc. P/C)	All	C	S	760	★ D0AZ 5560-B	W/air leveler system w/o trailer towing pkg. "From 9/5/72"	2
53B, F(exc. P/C)	All	C	S	950	★ D0AZ 5560-K r/bD4AZ 5560-Y	W/trailer towing pkg. II w/o air leveler system	2
53B, F(exc. P/C)	All	C	S	800	★ D0AZ 5560-C	W/trailer towing pkg. II w/air leveler system "Before 9/5/72"	2
53B,F (exc. P/C)	All	C	S	760	★ D0AZ 5560-B	W/trailer towing pkg. II w/air leveler system "From 9/5/72"	2
53B,F (exc. P/C)	All	C	S	950	★ D0AZ 5560-K r/bD4AZ 5560-Y	W/trailer towing pkg. III	2
53B,F (P/C)	All	C	S	1120	★ D20Z 5560-G r/bD4AZ 5560-AE	"Before 9/5/72"	2
53B,F (P/C)	All	C	S	1020	★ D3AZ 5560-E	"From 9/5/72"	2
53H (exc. P/C)	All	C	S	960	★ D0SZ 5560-C r/bD4AZ 5560-R	W/o air leveler system and trailer towing pkg. "Before 9/5/72"	2
53H (exc. P/C)	All	C	S	920	★ D1SZ 5560-A r/bD4AZ 5560-R	W/o air leveler system and trailer towing pkg. "From 9/5/72"	2
53H (exc. P/C)	All	C	H/D	1000	★ D0AZ 5560-AA r/bD4AZ 5560-Y	W/o air leveler system and trailer towing pkg. "Before 9/5/72"	2
53H (exc. P/C)	All	C	H/D	950	★ D0AZ 5560-K r/bD4AZ 5560-Y	W/o air leveler system and trailer towing pkg. "From 9/5/72"	2
53H (exc. P/C)	All	C	S	840	★ D0AZ 5560-D r/bD4AZ 5560-N	W/air leveler system w/o trailer towing pkg. "Before 9/5/72"	2
53H (exc. P/C)	All	C	S	800	★ D0AZ 5560-C	W/air leveler system w/o trailer towing pkg. "From 9/5/72"	2
53H (exc. P/C)	All	C	S	1000	★ D0AZ 5560-AA r/bD4AZ 5560-Y	W/trailer towing pkg. II w/o air leveler system "Before 9/5/72"	2
53H (exc. P/C)	All	C	S	950	★ D0AZ 5560-K r/bD4AZ 5560-Y	W/trailer towing pkg. II w/o air leveler system "From 9/5/72"	2
53H (exc. P/C)	All	C	S	840	★ D0AZ 5560-D r/bD4AZ 5560-N	W/trailer towing pkg. II w/air leveler system "Before 9/5/72"	2
53H (exc. P/C)	All	C	S	800	★ D0AZ 5560-C	W/trailer towing pkg. II w/air leveler system "From 9/5/72"	2
53H (exc. P/C)	All	C	S	1000	★ D0AZ 5560-AA r/bD4AZ 5560-Y	W/trailer towing pkg. III- "Before 9/5/72"	2
53H (exc. P/C)	All	C	S	950	★ D0AZ 5560-K r/bD4AZ 5560-Y	W/trailer towing pkg. III- "From 9/5/72"	2
53H (P/C)	All	C	S	1120	★ D20Z 5560-G r/bD4AZ 5560-AE	"Before 9/5/72"	2
53H (P/C)	All	C	S	1020	★ D3AZ 5560-E	"From 9/5/72"	2
53K	All	C	S	960	★ D0SZ 5560-C r/bD4AZ 5560-R	W/o air leveler system and trailer towing pkg.	2
53K	All	C	H/D	1000	★ D0AZ 5560-AA r/bD4AZ 5560-Y	W/o air leveler system and trailer towing pkg.	2
53K	All	C	S	840	★ D0AZ 5560-D r/bD4AZ 5560-N	W/air leveler system w/o trailer towing pkg.	2
53K	All	C	S	1000	★ D0AZ 5560-AA r/bD4AZ 5560-Y	W/trailer towing pkg. II w/o air leveler system	2

COPYRIGHT © 1986 — FORD MOTOR COMPANY — DEARBORN, MICHIGAN

1973 MODEL APPLICATION CHART

▲ SPRING AND SUSPENSION TYPE: C-COIL,L-LEAF,S-STD.,H/D-HEAVY DUTY

5560 SPRING ASSY. (REAR) — Cont'd

A (Mercury), Y (Meteor)

BODY TYPE	C.I.D. C.C.D.	▲TYPE SPRING	▲TYPE SUSP.	LOAD RATE	PART NUMBER	REMARKS	QTY.
53K	All	C	S	840	★ D0AZ 5560-D r/bD4AZ 5560-N	W/trailer towing pkg. II w/air leveler system	2
53K	All	C	S	1000	★ D0AZ 5560-AA r/bD4AZ 5560-Y	W/trailer towing pkg. III	2
53X	All	C	S	960	★ D0SZ 5560-C r/bD4AZ 5560-R	W/o air leveler system and trailer towing pkg. "Before 9/5/72"	2
53X	All	C	S	920	★ D1SZ 5560-A r/bD4AZ 5560-R	W/o air leveler system and trailer towing pkg. "From 9/5/72"	2
53X	All	C	H/D	1000	★ D0AZ 5560-AA r/bD4AZ 5560-Y	W/o air leveler system and trailer towing pkg. "Before 9/5/72"	2
53X	All	C	H/D	950	★ D0AZ 5560-K r/bD4AZ 5560-Y	W/o air leveler system and trailer towing pkg. "From 9/5/72"	2
53X	All	C	S	840	★ D0AZ 5560-D r/bD4AZ 5560-N	W/air leveler system w/o trailer towing pkg. "Before 9/5/72"	2
53X	All	C	S	800	★ D0AZ 5560-C	W/air leveler system w/o trailer towing pkg. "From 9/5/72"	2
53X	All	C	S	1000	★ D0AZ 5560-AA r/bD4AZ 5560-Y	W/trailer towing pkg. II w/o air leveler system "Before 9/5/72"	2
53X	All	C	S	950	★ D0AZ 5560-K r/bD4AZ 5560-Y	W/trailer towing pkg. II w/o air leveler system "From 9/5/72"	2
53X	All	C	S	840	★ D0AZ 5560-D r/bD4AZ 5560-N	W/trailer towing pkg. II w/air leveler system "Before 9/5/72"	2
53X	All	C	S	800	★ D0AZ 5560-C	W/trailer towing pkg. II w/air leveler system "From 9/5/72"	2
53X	All	C	S	1000	★ D0AZ 5560-AA r/bD4AZ 5560-Y	W/trailer towing pkg. III- "Before 9/5/72"	2
53X	All	C	S	950	★ D0AZ 5560-K r/bD4AZ 5560-Y	W/trailer towing pkg. III- "From 9/5/72"	2
57H	All	C	S	960	★ D0SZ 5560-C r/bD4AZ 5560-R	W/o air leveler system and trailer towing pkg. "Before 9/5/72"	2
57H	All	C	S	920	★ D1SZ 5560-A r/bD4AZ 5560-R	W/o air leveler system and trailer towing pkg. "From 9/5/72"	2
57H	All	C	H/D	1000	★ D0AZ 5560-AA r/bD4AZ 5560-Y	W/o air leveler system and trailer towing pkg. "Before 9/5/72"	2
57H	All	C	H/D	950	★ D0AZ 5560-K r/bD4AZ 5560-Y	W/o air leveler system and trailer towing pkg. "From 9/5/72"	2
57H	All	C	S	840	★ D0AZ 5560-D r/bD4AZ 5560-N	W/air leveler system w/o trailer towing pkg. "Before 9/5/72"	2
57H	All	C	S	800	★ D0AZ 5560-C	W/air leveler system w/o trailer towing pkg. "From 9/5/72"	2
57H	All	C	S	1000	★ D0AZ 5560-AA r/bD4AZ 5560-Y	W/trailer towing pkg. II w/o air leveler system "Before 9/5/72"	2
57H	All	C	S	950	★ D0AZ 5560-K r/bD4AZ 5560-Y	W/trailer towing pkg. II w/o air leveler system "From 9/5/72"	2
57H	All	C	S	840	★ D0AZ 5560-D r/bD4AZ 5560-N	W/trailer towing pkg. II w/air leveler system "Before 9/5/72"	2
57H	All	C	S	800	★ D0AZ 5560-C	W/trailer towing pkg. II w/air leveler system "From 9/5/72"	2
57H	All	C	S	1000	★ D0AZ 5560-AA r/bD4AZ 5560-Y	W/trailer towing pkg. III- "Before 9/5/72"	2
57H	All	C	S	950	★ D0AZ 5560-K r/bD4AZ 5560-Y	W/trailer towing pkg. III- "From 9/5/72"	2

1973 MODEL APPLICATION CHART

BODY TYPE	C.I.D. C.C.D.	▲TYPE SPRING	▲TYPE SUSP.	LOAD RATE	PART NUMBER	REMARKS	QTY.
▲ SPRING AND SUSPENSION TYPE: C-COIL,L-LEAF,S-STD.,H/D-HEAVY DUTY							
5560	SPRING ASSY. (REAR) — Cont'd						
A (Mercury), Y (Meteor)							
57K	All	C	S	960	★ D0SZ 5560-C r/bD4AZ 5560-R	W/o air leveler system and trailer towing pkg.	2
57K	All	C	H/D	1000	★ D0AZ 5560-AA r/bD4AZ 5560-Y	W/o air leveler system and trailer towing pkg.	2
57K	All	C	S	840	★ D0AZ 5560-D r/bD4AZ 5560-N	W/air leveler system w/o trailer towing pkg.	2
57K	All	C	S	1000	★ D0AZ 5560-AA r/bD4AZ 5560-Y	W/trailer towing pkg. II w/o air leveler system	2
57K	All	C	S	840	★ D0AZ 5560-D r/bD4AZ 5560-N	W/trailer towing pkg. II w/air leveler system	2
57K	All	C	S	1000	★ D0AZ 5560-AA r/bD4AZ 5560-Y	W/trailer towing pkg. III	2
57X	All	C	S	800	D0AZ 5560-C	W/o air leveler system and trailer towing pkg. "Before 9/5/72"	2
57X	All	C	S	920	★ D1SZ 5560-A r/bD4AZ 5560-R	W/o air leveler system and trailer towing pkg. "From 9/5/72"	2
57X	All	C	H/D	1000	★ D0AZ 5560-AA r/bD4AZ 5560-Y	W/o air leveler system and trailer towing pkg. "Before 9/5/72"	2
57X	All	C	H/D	950	★ D0AZ 5560-K r/bD4AZ 5560-Y	W/o air leveler system and trailer towing pkg. "From 9/5/72"	2
57X	All	C	S	840	★ D0AZ 5560-D r/bD4AZ 5560-N	W/air leveler system w/o trailer towing pkg. "Before 9/5/72"	2
57X	All	C	S	800	★ D0AZ 5560-C	W/air leveler system w/o trailer towing pkg. "From 9/5/72"	2
57X	All	C	S	1000	★ D0AZ 5560-AA r/bD4AZ 5560-Y	W/trailer towing pkg. II w/o air leveler system "Before 9/5/72"	2
57X	All	C	S	950	★ D0AZ 5560-K r/bD4AZ 5560-Y	W/trailer towing pkg. II w/o air leveler system "From 9/5/72"	2
57X	All	C	S	840	★ D0AZ 5560-D r/bD4AZ 5560-N	W/trailer towing pkg. II w/air leveler system "Before 9/5/72"	2
57X	All	C	S	800	★ D0AZ 5560-C	W/trailer towing pkg. II w/air leveler system "From 9/5/72"	2
57X	All	C	S	1000	★ D0AZ 5560-AA r/bD4AZ 5560-Y	W/trailer towing pkg. III- "Before 9/5/72"	2
57X	All	C	S	950	★ D0AZ 5560-K r/bD4AZ 5560-Y	W/trailer towing pkg. III- "From 9/5/72"	2
65B (exc. P/C)	All	C	S	880	★ D1AZ 5560-C r/bD4AZ 5560-N	W/o air leveler system and trailer towing pkg. "Before 9/5/72"	2
65B (exc. P/C)	All	C	S	840	★ D0AZ 5560-D r/bD4AZ 5560-N	W/o air leveler system and trailer towing pkg. "From 9/5/72"	2
65B (exc. P/C)	All	C	H/D	950	★ D0AZ 5560-K r/bD4AZ 5560-Y	W/o air leveler system and trailer towing pkg. "Before 9/5/72"	2
65B (exc. P/C)	All	C	H/D	850	★ D0SZ 5560-A	W/o air leveler system and trailer towing pkg. "From 9/5/72"	2
65B (exc. P/C)	All	C	S	760	★ D0AZ 5560-B	W/air leveler system w/o trailer towing pkg.	2
65B (exc. P/C)	All	C	S	950	★ D0AZ 5560-K r/bD4AZ 5560-Y	W/trailer towing pkg. II w/o air leveler system "Before 9/5/72"	2
65B (exc. P/C)	All	C	S	850	★ D0SZ 5560-A	W/trailer towing pkg. II w/o air leveler system "From 9/5/72"	2
65B (exc. P/C)	All	C	S	760	★ D0AZ 5560-B	W/trailer towing pkg. II w/air leveler system	2

COPYRIGHT © 1986 — FORD MOTOR COMPANY — DEARBORN, MICHIGAN

1973 MODEL APPLICATION CHART

▲ SPRING AND SUSPENSION TYPE: C-COIL,L-LEAF,S-STD.,H/D-HEAVY DUTY

5560 SPRING ASSY. (REAR) — Cont'd

A (Mercury), Y (Meteor)

BODY TYPE	C.I.D. C.C.D.	▲TYPE SPRING	▲TYPE SUSP.	LOAD RATE	PART NUMBER	REMARKS	QTY.
65B (exc. P/C)	All	C	S	950	★D0AZ 5560-K r/bD4AZ 5560-Y	W/trailer towing pkg. III- "Before 9/5/72"	2
65B (exc. P/C)	All	C	S	850	D0SZ 5560-A	W/trailer towing pkg. III- "From 9/5/72"	2
65B (P/C)	All	C	S	1020	D3AZ 5560-E	"Before 9/5/72"	2
65B (P/C)	All	C	S	965	D0AZ 5560-L	"From 9/5/72"	2
65F (exc. P/C)	All	C	S	920	★D1SZ 5560-A r/bD4AZ 5560-R	W/o air leveler system and trailer towing pkg. "Before 9/5/72"	2
65F (exc. P/C)	All	C	S	840	★D0AZ 5560-D r/bD4AZ 5560-N	W/o air leveler system and trailer towing pkg. "From 9/5/72"	2
65F (exc. P/C)	All	C	H/D	950	★D0AZ 5560-K r/bD4AZ 5560-Y	W/o air leveler system and trailer towing pkg. "Before 9/5/72"	2
65F (exc. P/C)	All	C	H/D	950	★D0AZ 5560-K r/bD4AZ 5560-Y	W/o air leveler system and trailer towing pkg. "Before 9/5/72"	2
65F (exc. P/C)	All	C	H/D	850	★D0SZ 5560-A	W/o air leveler system and trailer towing pkg. "From 9/5/72"	2
65F (exc. P/C)	All	C	S	800	★D0AZ 5560-C	W/air leveler system w/o trailer towing pkg.	2
65F (exc. P/C)	All	C	S	950	★D0AZ 5560-K r/bD4AZ 5560-Y	W/trailer towing pkg. II w/o air leveler system "Before 9/5/72"	2
65F (exc. P/C)	All	C	S	850	★D0SZ 5560-A	W/trailer towing pkg. II w/o air leveler system "From 9/5/72"	2
65F (exc. P/C)	All	C	S	800	★D0AZ 5560-C	W/trailer towing pkg. II w/air leveler system	2
65F (exc. P/C)	All	C	S	950	★D0AZ 5560-K r/bD4AZ 5560-Y	W/trailer towing pkg. III- "Before 9/5/72"	2
65F (exc. P/C)	All	C	S	850	D0SZ 5560-A	W/trailer towing pkg. III- "From 9/5/72"	2
65F (P/C)	All	C	S	1020	★D3AZ 5560-E	"Before 9/5/72"	2
65F (P/C)	All	C	S	965	D0AZ 5560-L	"From 9/5/72"	2
65H (exc. P/C)	All	C	S	920	★D1SZ 5560-A r/bD4AZ 5560-R	W/o air leveler system and trailer towing pkg. "Before 9/5/72"	2
65H (exc. P/C)	All	C	S	880	★D1AZ 5560-C r/bD4AZ 5560-N	W/o air leveler system and trailer towing pkg.- "From 9/5/72"	2
65H (exc. P/C)	All	C	H/D	950	★D0AZ 5560-K r/bD4AZ 5560-Y	W/o air leveler system and trailer towing pkg.	2
65H (exc. P/C)	All	C	S	800	★D0AZ 5560-C	W/air leveler system w/o trailer towing pkg.- "Before 9/5/72"	2
65H (exc. P/C)	All	C	S	760	★D0AZ 5560-B	W/air leveler system w/o trailer towing pkg.- "From 9/5/72"	2
65H (exc. P/C)	All	C	S	950	★D0AZ 5560-K r/bD4AZ 5560-Y	W/trailer towing pkg. II w/o air leveler system	2
65H (exc. P/C)	All	C	S	800	★D0AZ 5560-C	W/trailer towing pkg. II w/air leveler system- "Before 9/5/72"	2
65H (exc. P/C)	All	C	S	760	★D0AZ 5560-B	W/trailer towing pkg. II w/air leveler system- "From 9/5/72"	2
65H (exc. P/C)	All	C	S	950	★D0AZ 5560-K r/bD4AZ 5560-Y	W/trailer towing pkg. III	2
65H (P/C)	All	C	S	1120	★D20Z 5560-G r/bD4AZ 5560-AE	"Before 9/5/72"	2
65H (P/C)	All	C	S	1020	★D3AZ 5560-E	"From 9/5/72"	2
65K	All	C	S	960	★D0SZ 5560-C r/bD4AZ 5560-R	W/o air leveler system and trailer towing pkg.- "Before 9/5/72"	2

1973 MODEL APPLICATION CHART

BODY TYPE	C.I.D. C.C.D.	▲TYPE SPRING	▲TYPE SUSP.	LOAD RATE	PART NUMBER	REMARKS	QTY.
▲ SPRING AND SUSPENSION TYPE: C-COIL,L-LEAF,S-STD.,H/D-HEAVY DUTY							
5560	SPRING ASSY. (REAR) — Cont'd						
A (Mercury), Y (Meteor)							
65K	All	C	S	920	★ D1SZ 5560-A r/b D4AZ 5560-R	W/o air leveler system and trailer towing pkg.– "From 9/5/72"	2
65K	All	C	H/D	1000	★ D0AZ 5560-AA r/b D4AZ 5560-Y	W/o air leveler system and trailer towing pkg.– "Before 9/5/72"	2
65K	All	C	H/D	950	★ D0AZ 5560-K r/b D4AZ 5560-Y	W/o air leveler system and trailer towing pkg.– "From 9/5/72"	2
65K	All	C	S	840	★ D0AZ 5560-D r/b D4AZ 5560-N	W/air leveler system w/o trailer towing pkg.– "Before 9/5/72"	2
65K	All	C	S	800	★ D0AZ 5560-C	W/air leveler system w/o trailer towing pkg.– "From 9/5/72"	2
65K	All	C	S	1000	★ D0AZ 5560-AA r/b D4AZ 5560-Y	W/trailer towing pkg. II w/o air leveler system– "Before 9/5/72"	2
65K	All	C	S	950	★ D0AZ 5560-K r/b D4AZ 5560-Y	W/trailer towing pkg. II w/o air leveler system– "From 9/5/72"	2
65K	All	C	S	840	★ D0AZ 5560-D r/b D4AZ 5560-N	W/trailer towing pkg. II w/air leveler system– "Before 9/5/72"	2
65K	All	C	S	800	★ D0AZ 5560-C	W/trailer towing pkg. II w/air leveler system– "From 9/5/72"	2
65K	All	C	S	1000	★ D0AZ 5560-AA r/b D4AZ 5560-Y	W/trailer towing pkg. III– "Before 9/5/72"	2
65K	All	C	S	950	★ D0AZ 5560-K r/b D4AZ 5560-Y	W/trailer towing pkg. III– "From 9/5/72"	2
65X	All	C	S	920	★ D1SZ 5560-A r/b D4AZ 5560-R	W/o air leveler system and trailer towing pkg. "Before 9/5/72"	2
65X	All	C	S	880	★ D1AZ 5560-C r/b D4AZ 5560-N	W/o air leveler system and trailer towing pkg. "From 9/5/72"	2
65X	All	C	H/D	950	★ D0AZ 5560-K r/b D4AZ 5560-Y	W/o air leveler system and trailer towing pkg.	2
65X	All	C	S	800	★ D0AZ 5560-C	W/air leveler system w/o trailer towing pkg. "Before 9/5/72"	2
65X	All	C	S	760	★ D0AZ 5560-B	W/air leveler system w/o trailer towing pkg. "From 9/5/72"	2
65X	All	C	S	950	★ D0AZ 5560-K r/b D4AZ 5560-Y	W/trailer towing pkg. II w/o air leveler system	2
65X	All	C	S	800	★ D0AZ 5560-C	W/trailer towing pkg. II w/air leveler system "Before 9/5/72"	2
65X	All	C	S	760	★ D0AZ 5560-B	W/trailer towing pkg. II w/air leveler system "From 9/5/72"	2
65X	All	C	S	950	★ D0AZ 5560-K r/b D4AZ 5560-Y	W/trailer towing pkg. III	2
71(exc. P/C)	All	C	S	1380	D4AZ 5560-AL	W/o 8 passenger rear seat, air leveler system and trailer towing pkg.– "Before 9/5/72"	2
71(exc. P/C)	All	C	S	1320	★ D0AZ 5560-U r/b D4AZ 5560-AK	W/o 8 passenger rear seat, air leveler system and trailer towing pkg.– "From 9/5/72"	2
71(exc. P/C)	All	C	S	1440	★ D3AZ 5560-A ★ r/b D4AZ 5560-AM	W/8 passenger rear seat w/o air leveler system and trailer towing pkg. "Before 9/5/72"	2

COPYRIGHT © 1986 — FORD MOTOR COMPANY — DEARBORN, MICHIGAN

1973 MODEL APPLICATION CHART

BODY TYPE	C.I.D. C.C.D.	▲TYPE SPRING	▲TYPE SUSP.	LOAD RATE	PART NUMBER	REMARKS	QTY.
▲ SPRING AND SUSPENSION TYPE: C-COIL,L-LEAF,S-STD.,H/D-HEAVY DUTY							
5560 SPRING ASSY. (REAR) — Cont'd							
A (Mercury), Y (Meteor)							
71(exc. P/C)	All	C	S	1380	D4AZ 5560-AL	W/8 passenger rear seat w/o air leveler system and trailer towing pkg.– "From 9/5/72"	2
71(exc. P/C)	All	C	H/D)	1500	★D2AZ 5560-B r/bD4AZ 5560-AR	W/o air leveler system and trailer towing pkg. "Before 9/5/72"	2
71(exc. P/C)	All	C	H/D	1425	D4AZ 5560-AN	W/o air leveler system and trailer towing pkg. "From 9/5/72" towing pkg. "Before 9/5/72	2
71(exc. P/C)	All	C	S	1150	D0LY 5560-C	W/air leveler system w/o trailer	2
71(exc. P/C)	All	C	S	1200	★D0VY 5560-B r/bD5AZ 5560-W	W/air leveler system w/o trailer towing pkg. "From 9/5/72"	2
71(exc. P/C)	All	C	H/D	1220	D4AZ 5560-AH	W/air leveler system w/o trailer towing pkg.	2
71(exc. P/C)	All	C	S	1500	★D2AZ 5560-B r/bD4AZ 5560-AR	W/trailer towing pkg. II w/o air leveler system "Before 9/5/72"	2
71(exc. P/C)	All	C	S	1425	D4AZ 5560-AN	W/trailer towing pkg. II w/o air leveler system "From 9/5/72"	2
71(exc. P/C)	All	C	S	1220	D4AZ 5560-AH	W/trailer towing pkg. II w/air leveler system leveler system "From 9/5/72"	2
71(exc. P/C)	All	C	S	1500	★D2AZ 5560-B r/bD4AZ 5560-AR	W/trailer towing pkg. III– "Before 9/5/72"	2
71(exc. P/C)	All	C	S	1425	D4AZ 5560-AN	W/trailer towing pkg. III– "From 9/5/72"	2
71(P/C)	All	C	S	1600	★D3AZ 5560-D r/bD0AZ 5560-S	"Before 9/5/72"	2
71(P/C)	All	C	S	1390	★D0AZ 5560-S	"From 9/5/72"	2
C (Montego)							
53B(exc. P/C)	250,302, 351-2/B	C	S	840	★D0AZ 5560-D r/bD4AZ 5560-M	W/o trailer towing pkg.	2
53B(exc. P/C)	250,302, 351-2/B	C	H/D	850	★D20Z 5560-B ★r/bD20Z 5560-D	W/o trailer towing pkg.	2
53B(exc. P/C)	351-2/B	C	S	850	★D20Z 5560-B ★r/bD20Z 5560-D	W/trailer towing pkg. II	2
53B(P/C)	250,302	C	S	920	★D20Z 5560-D		2
53B(P/C)	351	C	S	1000	★D0AZ 5560-AA r/bD4AZ 5560-Y		2
53B(exc. P/C)	400	C	S	880	★D1AZ 5560-C r/bD1AZ 5560-M	W/o trailer towing pkg.	2
53B(exc. P/C)	400	C	H/D	920	★D20Z 5560-D	W/o trailer towing pkg.	2
53B(exc. P/C)	400	C	S	920	★D20Z 5560-D	W/trailer towing pkg. II and III	2
53B(P/C)	400	C	S	1000	★D0AZ 5560-AA r/bD4AZ 5560-Y		2
53B(exc. P/C)	429	C	S	880	★D1AZ 5560-C r/bD4AZ 5560-M	W/o competition handling pkg. and trailer towing pkg. "Before 10/16/72"	2
53B(exc. P/C)	429	C	H/D	920	★D20Z 5560-D	W/o competition handling pkg. and trailer towing pkg. "Before 10/16/72"	2
53B(exc. P/C)	429	C	S	900	★D20Z 5560-R	W/competition handling pkg.– "Before 10/16/72"	2
53B(exc. P/C)	429	C	S	880	★D1AZ 5560-C r/bD4AZ 5560-M	W/o trailer towing pkg.– "From 10/16/72"	2
53B(exc. P/C)	429	C	H/D	920	★D20Z 5560-D	W/o trailer towing pkg.– "From 10/16/72"	2

1973 MODEL APPLICATION CHART

BODY TYPE	C.I.D. C.C.D.	▲TYPE SPRING	▲TYPE SUSP.	LOAD RATE	PART NUMBER	REMARKS	QTY.
▲ SPRING AND SUSPENSION TYPE: C-COIL,L-LEAF,S-STD.,H/D-HEAVY DUTY							
5560 SPRING ASSY. (REAR) — Cont'd							
C (Montego)							
53B(exc. P/C)	429	C	S	920	★D20Z 5560-D	W/trailer towing pkg. II and III	2
53B(P/C)	429,460	C	S	1000	★D0AZ 5560-AA r/bD4AZ 5560-Y		2
53D(exc. P/C)	250,302, 351-2/B	C	S	880	★D1AZ 5560-C r/bD4AZ 5560-M	W/o trailer towing pkg.	2
53D(exc. P/C)	250,302, 351-2/B	C	H/D	850	★D20Z 5560-B ★r/bD20Z 5560-D	W/o trailer towing pkg.	2
53D(exc. P/C)	351-2/B	C	S	850	★D20Z 5560-B ★r/bD20Z 5560-D	W/trailer towing pkg. II	2
53D(P/C)	250,302	C	S	920	★D20Z 5560-D		2
53D(P/C)	351	C	S	1000	★D0AZ 5560-AA r/bD4AZ 5560-Y		2
53D(exc. P/C)	400	C	S	880	★D1AZ 5560-C r/bD4AZ 5560-M	W/o trailer towing pkg.	2
53D(exc. P/C)	400	C	H/D	920	★D20Z 5560-D	W/o trailer towing pkg.	2
53D(exc. P/C)	400	C	S	920	★D20Z 5560-D	W/trailer towing pkg. II and III	2
53D(P/C)	400	C	S	1000	★D0AZ 5560-AA r/bD4AZ 5560-Y		2
53D(exc. P/C)	429	C	S	880	★D1AZ 5560-C r/bD4AZ 5560-M	W/o competition handling pkg. and trailer towing pkg. "Before 10/16/72"	2
53D(exc. P/C)	429	C	H/D	920	★D20Z 5560-D	W/o competition handling pkg. and trailer towing pkg. "Before 10/16/72"	2
53D(exc. P/C)	429	C	S	900	★D20Z 5560-R	W/competition handling pkg.– "Before 10/16/72"	2
53D(exc. P/C)	429	C	S	880	★D1AZ 5560-C r/bD4AZ 5560-M	W/o trailer towing pkg.– "From 10/16/72"	2
53D(exc. P/C)	429	C	H/D	920	★D20Z 5560-D	W/o trailer towing pkg.– "From 10/16/72"	2
53D(exc. P/C)	429	C	S	920	★D20Z 5560-D	W/trailer towing pkg. II and III	2
53D(P/C)	429,460	C	S	1000	★D0AZ 5560-AA r/bD4AZ 5560-Y		2
53K	250,302, 351-2/B	C	S	880	★D1AZ 5560-C r/bD4AZ 5560-M	W/o trailer towing pkg.	2
53K	250,302, 351-2/B	C	H/D	850	★D20Z 5560-B ★r/bD20Z 5560-D	W/o trailer towing pkg.	2
53K	351-2/B	C	S	850	★D20Z 5560-B ★r/bD20Z 5560-D	W/trailer towing pkg. II	2
53K	400,429	C	S	880	★D1AZ 5560-C r/bD4AZ 5560-M	W/o trailer towing pkg.	2
53K	400,429	C	H/D	920	★D20Z 5560-D	W/o trailer towing pkg.	2
53K	400,429	C	S	920	★D20Z 5560-D	W/trailer towing pkg. II and III	2
63D(exc. P/C)	250,302, 351-2/B	C	S	780	D20Z 5560-M	W/o trailer towing pkg.– "Before 10/16/72"	2
63D(exc. P/C)	250,302, 351-2/B	C	S	860	★D20Z 5560-N	W/o trailer towing pkg.– "From 10/16/72"	2
63D(exc. P/C)	250,302, 351-2/B	C	H/D	850	★D20Z 5560-B ★r/bD20Z 5560-D	W/o trailer towing pkg.– "Before 10/16/72"	2
63D(exc. P/C)	250,302, 351-2/B	C	H/D	920	★D20Z 5560-D	W/o trailer towing pkg.– "From 10/16/72"	2
63D(exc. P/C)	351-2/B	C	S	920	★D20Z 5560-D	W/trailer towing pkg. II	2

COPYRIGHT © 1986 — FORD MOTOR COMPANY — DEARBORN, MICHIGAN

1973 MODEL APPLICATION CHART

▲ SPRING AND SUSPENSION TYPE: C-COIL,L-LEAF,S-STD.,H/D-HEAVY DUTY

5560 SPRING ASSY. (REAR) — Cont'd

C (Montego)

BODY TYPE	C.I.D. C.C.D.	▲TYPE SPRING	▲TYPE SUSP.	LOAD RATE	PART NUMBER	REMARKS	QTY.
63D(P/C)	250,302	C	S	920	★D20Z 5560-D		2
63D(P/C)	351-2/B	C	S	1000	★D0AZ 5560-AA r/bD4AZ 5560-Y		2
63D(exc. P/C)	351-4/B	C	S	860	★D20Z 5560-N	W/o competition handling pkg.– "Before 10/16/72"	2
63D(exc. P/C)	351-4/B	C	H/D	920	★D20Z 5560-D	W/o competition handling pkg.– "Before 10/16/72"	2
63D(exc. P/C)	351-4/B	C	S	900	★D20Z 5560-R	W/competition handling pkg.– "Before 10/16/72"	2
63D(exc. P/C)	351-4/B	C	S	860	★D20Z 5560-N	W/o trailer towing pkg.– "From 10/16/72"	2
63D(exc. P/C)	351-4/B	C	H/D	920	★D20Z 5560-D	W/o trailer towing pkg.– "From 10/16/72"	2
63D(exc. P/C)	351-4/B	C	S	920	★D20Z 5560-D	W/trailer towing pkg. II	2
63D(P/C)	351-4/B	C	S	1000	★D0AZ 5560-AA r/bD4AZ 5560-Y		2
63D(exc. P/C)	400	C	S	860	★D20Z 5560-N	W/o trailer towing pkg.	2
63D(exc. P/C)	400	C	H/D	920	★D20Z 5560-D	W/o trailer towing pkg.	2
63D(exc. P/C)	400	C	S	920	★D20Z 5560-D	W/trailer towing pkg. II and III	2
63D(P/C)	400	C	S	1000	★D0AZ 5560-AA r/bD4AZ 5560-Y		2
63D(exc. P/C)	429	C	S	860	★D20Z 5560-N	W/o competition handling pkg. and trailer towing pkg. "Before 10/16/72"	2
63D(exc. P/C)	429	C	H/D	920	★D20Z 5560-D	W/o competition handling pkg. and trailer towing pkg. "Before 10/16/72"	2
63D(exc. P/C)	429	C	S	900	★D20Z 5560-R	W/competition handling pkg.– "Before 10/16/72"	2
63D(exc. P/C)	429	C	S	860	★D20Z 5560-N	W/o trailer towing pkg.– "From 10/16/72"	2
63D(exc. P/C)	429	C	H/D	920	★D20Z 5560-D	W/o trailer towing pkg.– "From 10/16/72"	2
63D(exc. P/C)	429	C	S	920	★D20Z 5560-D	W/trailer towing pkg. II and III	2
63D(P/C)	429,460	C	S	1000	★D0AZ 5560-AA r/bD4AZ 5560-Y		2
63R	302,351-2/B	C	S	780	D20Z 5560-M	W/o trailer towing pkg.– "Before 10/16/72"	2
63R	302,351-2/B	C	S	860	★D20Z 5560-N	W/o trailer towing pkg.– "From 10/16/72"	2
63R	302,351-2/B	C	H/D	850	★D20Z 5560-B r/bD20Z 5560-D	W/o trailer towing pkg.– "Before 10/16/72"	2
63R	302,351-2/B	C	H/D	920	★D20Z 5560-D	W/o trailer towing pkg.– "From 10/16/72"	2
63R	351-2/B	C	S	920	★D20Z 5560-D	W/trailer towing pkg. II	2
63R	351-4/B	C	S	860	★D20Z 5560-N	W/o competition handling pkg.– "Before 10/16/72"	2
63R	351-4/B	C	H/D	920	★D20Z 5560-D	W/o competition handling pkg.– "Before 10/16/72"	2
63R	351-4/B	C	S	900	★D20Z 5560-R	W/competition handling pkg.– "Before 10/16/72"	2
63R	351-4/B	C	S	860	★D20Z 5560-N	W/o trailer towing pkg.– "From 10/16/72"	2

1973 MODEL APPLICATION CHART

BODY TYPE	C.I.D. C.C.D.	▲TYPE SPRING	▲TYPE SUSP.	LOAD RATE	PART NUMBER	REMARKS	QTY.
▲ SPRING AND SUSPENSION TYPE: C-COIL,L-LEAF,S-STD.,H/D-HEAVY DUTY							
5560	SPRING ASSY. (REAR) — Cont'd						
C (Montego)							
63R	351-4/B	C	H/D	920	★D20Z 5560-D	W/o trailer towing pkg.- "From 10/16/72"	2
63R	351-4/B	C	S	920	★D20Z 5560-D	W/trailer towing pkg. II	2
63R	400	C	S	860	★D20Z 5560-N	W/o trailer towing pkg.	2
63R	400	C	H/D	920	★D20Z 5560-D	W/o trailer towing pkg.	2
63R	400	C	S	920	★D20Z 5560-D	W/trailer towing pkg. II and III	2
63R	429	C	S	860	★D20Z 5560-N	W/o competition handling pkg. and trailer towing pkg. "Before 10/16/72"	2
63R	429	C	H/D	920	★D20Z 5560-D	W/o competition handling pkg. and trailer towing pkg. "Before 10/16/72"	2
63R	429	C	S	900	★D20Z 5560-R	W/competition handling pkg.- "Before 10/16/72"	2
63R	429	C	S	860	★D20Z 5560-N	W/o trailer towing pkg.- "From 10/16/72"	2
63R	429	C	H/D	920	★D20Z 5560-D	W/o trailer towing pkg.- "From 10/16/72"	2
63R	429	C	S	920	★D20Z 5560-D	W/trailer towing pkg. II and III	2
65B(exc. P/C)	250,302, 351-2/B	C	S	780	D20Z 5560-M	W/o trailer towing pkg.- "Before 10/16/72"	2
65B(exc. P/C)	250,302, 351-2/B	C	S	860	★D20Z 5560-N	W/o trailer towing pkg.- "From 10/16/72"	2
65B(exc. P/C)	250,302, 351-2/B	C	H/D	850	★D20Z 5560-B ★r/bD20Z 5560-D	W/o trailer towing pkg.	2
65B(P/C)	250,302	C	S	920	★D20Z 5560-D		2
65B(exc. P/C)	351-2/B	C	S	850	★D20Z 5560-B ★r/bD20Z 5560-D	W/trailer towing pkg. II	2
65B(P/C)	351-2/B	C	S	950	★D0AZ 5560-K r/bD4AZ 5560-Y		2
65B(exc. P/C)	351-4/B	C	S	860	★D20Z 5560-N	W/o competition handling pkg.- "Before 10/16/72"	2
65B(exc. P/C)	351-4/B	C	H/D	850	★D20Z 5560-B ★r/bD20Z 5560-D	W/o competition handling pkg.- "Before 10/16/72"	2
65B(exc. P/C)	351-4/B	C	S	900	★D20Z 5560-R	W/competition handling pkg.- "Before 10/16/72"	2
65B(exc. P/C)	351-4/B	C	S	860	★D20Z 5560-N	W/o trailer towing pkg.- "From 10/16/72"	2
65B(exc. P/C)	351-4/B	C	H/D	920	★D20Z 5560-D	W/o trailer towing pkg.- "From 10/16/72"	2
65B(exc. P/C)	351-4/B	C	S	920	★D20Z 5560-D	W/trailer towing pkg. II	2
65B(P/C)	351-4/B	C	S	950	★D0AZ 5560-K r/bD4AZ 5560-Y		2
65B(exc. P/C)	400	C	S	860	★D20Z 5560-N	W/o trailer towing pkg.	2
65B(exc. P/C)	400	C	H/D	850	★D20Z 5560-B ★r/bD20Z 5560-D	W/o trailer towing pkg.- "Before 10/16/72"	2
65B(exc. P/C)	400	C	H/D	920	★D20Z 5560-D	W/o trailer towing pkg.- "From 10/16/72"	2
65B(exc. P/C)	400	C	S	850	★D20Z 5560-B ★r/bD20Z 5560-D	W/trailer towing pkg. II and III- "Before 10/16/72"	2

COPYRIGHT © 1986 — FORD MOTOR COMPANY — DEARBORN, MICHIGAN

1973 MODEL APPLICATION CHART

BODY TYPE	C.I.D. C.C.D.	▲TYPE SPRING	▲TYPE SUSP.	LOAD RATE	PART NUMBER	REMARKS	QTY.
▲ SPRING AND SUSPENSION TYPE: C-COIL,L-LEAF,S-STD.,H/D-HEAVY DUTY							
5560	SPRING ASSY. (REAR) — Cont'd						
					C (Montego)		
65B(exc. P/C)	400	C	S	920	★D20Z 5560-D	W/trailer towing pkg. II and III- "From 10/16/72"	2
65B(P/C)	400	C	S	950	★D0AZ 5560-K r/bD4AZ 5560-Y		2
65B(exc. P/C)	429	C	S	860	★D20Z 5560-N	W/o competition handling pkg. and trailer towing pkg. "Before 10/16/72"	2
65B(exc. P/C)	429	C	H/D	850	★D20Z 5560-B ★r/bD20Z 5560-D	W/o competition handling pkg. and trailer towing pkg. "Before 10/16/72"	2
65B(exc. P/C)	429	C	S	900	★D20Z 5560-R	W/competition handling pkg.- "Before 10/16/72"	2
65B(exc. P/C)	429	C	S	860	★D20Z 5560-N	W/o trailer towing pkg.- "From 10/16/72"	2
65B(exc. P/C)	429	C	H/D	920	★D20Z 5560-D	W/o trailer towing pkg.- "From 10/16/72"	2
65B(exc. P/C)	429	C	S	850	★D20Z 5560-B ★r/bD20Z 5560-D	W/trailer towing pkg. II and III- "Before 10/16/72"	2
65B(exc. P/C)	429	C	S	920	★D20Z 5560-D	W/trailer towing pkg. II and III- "From 10/16/72"	2
65B(P/C)	429	C	S	950	★D0AZ 5560-K r/bD4AZ 5560-Y		2
65B(P/C)	460	C	S	1000	★D0AZ 5560-AA r/bD4AZ 5560-Y		2
65D(exc. P/C)	250,302, 351-2/B	C	S	780	D20Z 5560-M	W/o trailer towing pkg.- "Before 10/16/72"	2
65D(exc. P/C)	250,302, 351-2/B	C	S	860	★D20Z 5560-N	W/o trailer towing pkg.- "From 10/16/72"	2
65D(exc. P/C)	250,302, 351-2/B	C	H/D	850	★D20Z 5560-B ★r/bD20Z 5560-D	W/o trailer towing pkg.	2
65D(exc. P/C)	351-2/B	C	S	850	★D20Z 5560-B ★r/bD20Z 5560-D	W/trailer towing pkg. II	2
65D(P/C)	250,302	C	S	920	★D20Z 5560-D		2
65D(P/C)	351-2/B	C	S	950	★D0AZ 5560-K		2
65D(exc. P/C)	351-4/B	C	S	860	★D20Z 5560-N	W/o competition handling pkg.- "Before 10/16/72"	2
65D(exc. P/C)	351-4/B	C	H/D	850	★D20Z 5560-B ★r/bD20Z 5560-D	W/o competition handling pkg.- "Before 10/16/72"	2
65D(exc. P/C)	351-4/B	C	S	900	★D20Z 5560-R	W/competition handling pkg.- "Before 10/16/72"	2
65D(exc. P/C)	351-4/B	C	S	860	★D20Z 5560-N	W/o trailer towing pkg.- "From 10/16/72"	2
65D(exc. P/C)	351-4/B	C	H/D	920	★D20Z 5560-D	W/o trailer towing pkg.- "From 10/16/72"	2
65D(exc. P/C)	351-4/B	C	S	920	★D20Z 5560-D	W/trailer towing pkg. II	2
65D(P/C)	351-4/B	C	S	950	★D0AZ 5560-K r/bD4AZ 5560-Y		2
65D(exc. P/C)	400	C	S	860	★D20Z 5560-N	W/o trailer towing pkg.	2
65D(exc. P/C)	400	C	H/D	850	★D20Z 5560-B ★r/bD20Z 5560-D	W/o trailer towing pkg.- "Before 10/16/72"	2

1973 MODEL APPLICATION CHART

BODY TYPE	C.I.D. C.C.D.	▲TYPE SPRING	▲TYPE SUSP.	LOAD RATE	PART NUMBER	REMARKS	QTY.
▲ SPRING AND SUSPENSION TYPE: C-COIL,L-LEAF,S-STD.,H/D-HEAVY DUTY							
5560	SPRING ASSY. (REAR) — Cont'd						
C (Montego)							
65D(exc. P/C)	400	C	H/D	920	★D20Z 5560-D	W/o trailer towing pkg.- "From 10/16/72"	2
65D(exc. P/C)	400	C	S	920	★D20Z 5560-D	W/trailer towing pkg. II and III	2
65D(P/C)	400	C	S	950	★D0AZ 5560-K r/bD4AZ 5560-Y		2
65D(exc. P/C)	429	C	S	860	★D20Z 5560-N	W/o competition handling pkg. and trailer towing pkg. "Before 10/16/72"	2
65D(exc. P/C)	429	C	H/D	850	★D20Z 5560-B ★r/bD20Z 5560-D	W/o competition handling pkg. and trailer towing pkg. "Before 10/16/72"	2
65D(exc. P/C)	429	C	S	900	★D20Z 5560-B	W/competition handling pkg.- "Before 10/16/72"	2
65D(exc. P/C)	429	C	S	860	★D20Z 5560-N	W/o trailer towing pkg.- "From 10/16/72"	2
65D(exc. P/C)	429	C	H/D	920	★D20Z 5560-D	W/o trailer towing pkg.- "From 10/16/72"	2
65D(exc. P/C)	429	C	S	920	★D20Z 5560-D	W/trailer towing pkg. II and III	2
65D(P/C)	429	C	S	950	★D0AZ 5560-K r/bD4AZ 5560-Y		2
65D(P/C)	460	C	S	1000	★D0AZ 5560-AA r/bD4AZ 5560-Y		2
65K	250,302, 351-2/B	C	S	780	D20Z 5560-M	W/o trailer towing pkg.- "Before 10/16/72"	2
65K	250,302, 351-2/B	C	S	860	★D20Z 5560-N	W/o trailer towing pkg.- "From 10/16/72"	2
65K	250,302, 351-2/B	C	H/D	850	★D20Z 5560-B ★r/bD20Z 5560-D	W/o trailer towing pkg.- "Before 10/16/72"	2
65K	250,302, 351-2/B	C	H/D	920	★D20Z 5560-D	W/o trailer towing pkg.- "From 10/16/72"	2
65K	351-2/B	C	S	920	★D20Z 5560-D	W/trailer towing pkg. II	2
65K	400,429	C	S	860	★D20Z 5560-N	W/o trailer towing pkg.	2
65K	400,429	C	H/D	920	★D20Z 5560-D	W/o trailer towing pkg.	2
65K	400,429	C	S	920	★D20Z 5560-D	W/trailer towing pkg. II and III	2
71	302,351-2/B	C	S	1000	★D0AZ 5560-AA r/bD4AZ 5560-Y	R.H.-w/o trailer towing pkg.	1
71	302,351-2/B	C	S	1200	★D0VY 5560-B r/bD5AZ 5560-W	L.H.-w/o trailer towing pkg.	1
71	302,351-2/B	C	H/D	1020	★D3AZ 5560-E	R.H.-w/o trailer towing pkg.	1
71	302,351-2/B	C	H/D	1220	D4AZ 5560-AH	L.H.-w/o trailer towing pkg.	1
71	351-2/B	C	S	1020	D3AZ 5560-E	R.H.-w/trailer towing pkg. II	1
71	351-2/B	C	S	1220	D4AZ 5560-AH	L.H.-w/trailer towing pkg. II	1
71	400,429	C	S	1000	★D0AZ 5560-AA r/bD4AZ 5560-Y	R.H.-w/o trailer towing pkg.	1
71	400,429	C	S	1200	★D0VY 5560-B r/bD5AZ 5560-W	L.H.-w/o trailer towing pkg.	1
71	400,429	C	H/D	1120	★D20Z 5560-G r/bD4AZ 5560-AE	R.H.-w/o trailer towing pkg.	1
71	400,429	C	H/D	1270	D0AZ 5560-T	L.H.-w/o trailer towing pkg.	1
71	400,429	C	S	1120	★D20Z 5560-G r/bD4AZ 5560-AE	R.H.-w/trailer towing pkg. II and III	1
71	400,429	C	S	1270	D0AZ 5560-T	L.H.-w/trailer towing pkg. II and III	1
D (Lincoln)							
53	460	C	S	1300	★D0VY 5560-D r/bD4AZ 5560-AV		2

COPYRIGHT © 1986 — FORD MOTOR COMPANY — DEARBORN, MICHIGAN

1973 MODEL APPLICATION CHART

BODY TYPE	C.I.D. C.C.D.	▲TYPE SPRING	▲TYPE SUSP.	LOAD RATE	PART NUMBER	REMARKS	QTY.
▲ SPRING AND SUSPENSION TYPE: C-COIL,L-LEAF,S-STD.,H/D-HEAVY DUTY							
5560	SPRING ASSY. (REAR) — Cont'd						
D (Lincoln)							
65	460	C	S	1150	D0LY 5560-C	"Before 1/15/73"	2
65	460	C	S	1150	★D3VY 5560-A r/bD4AZ 5560-AB	"From 1/15/73"	2
F (Cougar)							
65	351	4-L	S	720	★D3WY 5560-A	W/o competition handling pkg.	2
65	351	4-L	S	720	★D3WY 5560-C	W/competition handling pkg.	2
76D	351-2/B	4-L	S	720	★D3WY 5560-A	W/o competition handling pkg.	2
76D	351-2/B	4-L	S	720	★D3WY 5560-C	W/competition handling pkg.	2
76D	351-4/B	4-L	S	753	★D3WY 5560-B	W/o competition handling pkg.	2
76D	351-4/B	4-L	S	754	★D3WY 5560-D	W/competition handling pkg.	2
76F	351-2/B	4-L	S	753	★D3WY 5560-B	W/o competition handling pkg.	2
76F	351-2/B	4-L	S	754	★D3WY 5560-D	W/competition handling pkg.	2
76F	351-4/B	4-L	S	753	★D3WY 5560-B	W/o competition handling pkg.	2
76F	351-4/B	4-L	S	754	★D3WY 5560-D	W/competition handling pkg.	2
J (Capri)							
All	122 (2000 cc)	L	S		★D3RY 5560-A		2
All	159 (2600 cc)	L	S		★D3RY 5560-A		2
K (Mark IV)							
65	460	C	S	1080	★D2LY 5560-A	r/b D4AZ 5560-U	2
65	460	C	H/D	1100	D0LY 5560-B		2
P (Comet)							
54	All	3-L	S	660	★D2DZ 5560-A		2
54	All	4-L	H/D	708	D1DZ 5560-E		2
62	All	3-L	S	609	D3DZ 5560-E		2
62	All	3-L	H/D	595	D1DZ 5560-D		2
Y (Meteor) Refer to A (Mercury)							

YEAR	MODEL/RESTRICTIONS	PART NUMBER	DESCRIPTION	QTY.
73	J	110978-ES8	Washer-flat-7/16"	2
73	J	114656-ES8	Nut-hex.-7/16"-14	2

HOW TO FIND 1974/ REAR SPRING PART NUMBERS

1974/ cars with coil rear springs use a plastic identification tape on the second coil (from the top). 1974/ cars (except Capri) with leaf rear springs use a plastic identification tape, which is wrapped around the main leaf at the rear. Use the information from the identification tape to select the proper spring service part number. (See the illustration below).

Two aids are provided:

1. IDENTIFICATION CHART
Use the Identification Chart to translate the Identification Number which appears on the tape into a Service Part Number. This Chart starts on page 23.

2. CHECK LOAD CHART
Use the Check Load Chart for a summary of all springs for each car model. These springs are listed in order by model and check load (i.e., a higher check load indicates a stronger spring) to show
   1) the model on which they are used and
   2) which are the stronger springs.

1974/ Capri rear springs follow the Check Load Chart, and are listed by engine.

SPRING IDENTIFICATION TAPE

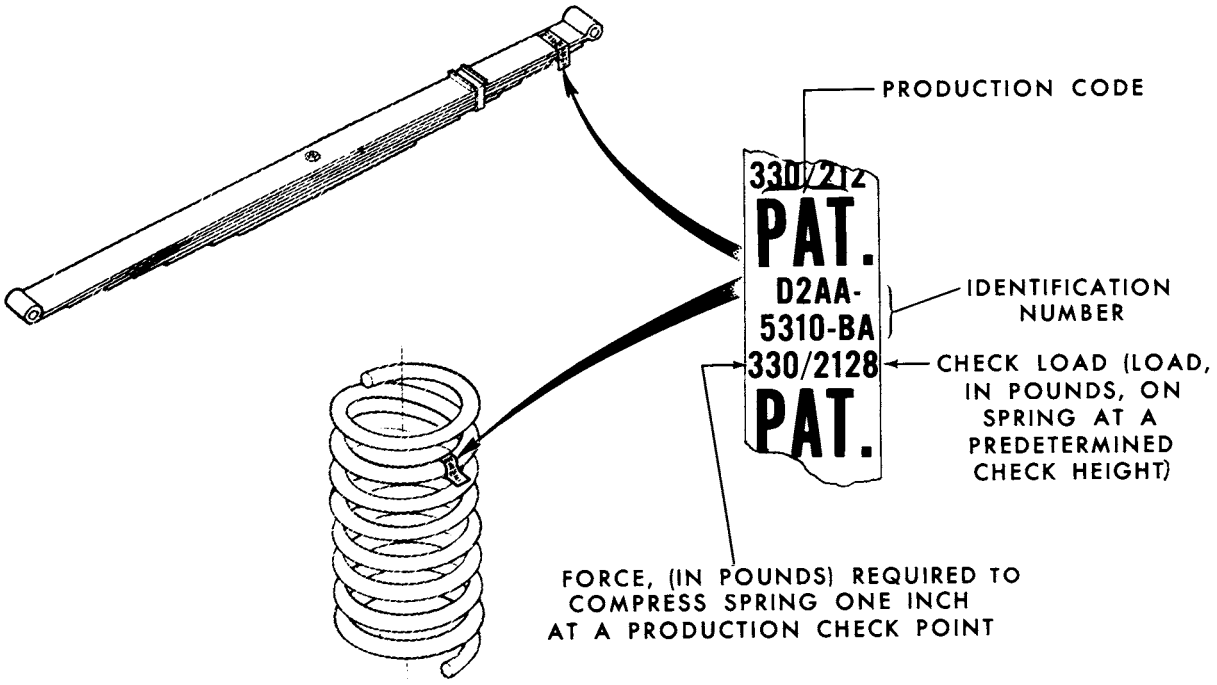

P-10952

COPYRIGHT © 1986 — FORD MOTOR COMPANY — DEARBORN, MICHIGAN

1974/ IDENTIFICATION CHART

IDENTIFICATION	PART NUMBER	IDENTIFICATION	PART NUMBER
5560 SPRING ASSY. (REAR) — Cont'd			
D4DW 5556-AA	★ D4DZ 5560-A	D5DW 5556-CA	★ D5DZ 5560-B
D4DW 5556-BA	★ D4DZ 5560-A	D5DW 5556-DA	★ D5DZ 5560-B
D4DW 5556-CA	★ D4DZ 5560-B	D5DW 5556-EA	★ D5DZ 5560-C
D4DW 5556-DA	★ D4DZ 5560-B	D5DW 5556-FA	★ D5DZ 5560-C
D4DW 5556-EA	★ D4DZ 5560-L	D5DW 5556-GA	★ D5DZ 5560-D
D4DW 5556-FA	★ D4DZ 5560-L	D5DW 5556-HA	★ D5DZ 5560-D
D4DW 5556-GA	★ D4DZ 5560-D	D5DW 5556-JA	D5DZ 5560-E
D4DW 5556-HA	★ D4DZ 5560-D	D5DW 5556-KA	D5DZ 5560-E
D4DW 5556-JA	★ D4DZ 5560-E	D5DW 5556-LA	D5DZ 5560-F
D4DW 5556-KA	★ D4DZ 5560-E	D5DW 5556-MA	D5DZ 5560-F
D4DW 5556-LA	★ D4DZ 5560-L	D5DW 5556-NA	D5DZ 5560-G
D4DW 5556-MA	★ D4DZ 5560-L	D5DW 5556-RA	D5DZ 5560-G
D42W 5556-AAA	★ D4FZ 5560-AD	D5DW 5556-SA	D5DZ 5560-H
D42W 5556-ABA	★ D4FZ 5560-AD	D5DW 5556-TA	D5DZ 5560-H
D42W 5556-ACA	★ D4FZ 5560-AD	D5DW 5556-UA	★ D5DZ 5560-J
D42W 5556-ADA	★ D4FZ 5560-AD	D5DW 5556-VA	★ D5DZ 5560-J
D42W 5556-AEA	★ D4FZ 5560-S	D5DW 5556-YA	D5DZ 5560-K
D42W 5556-AFA	★ D4FZ 5560-S	D5DW 5556-ZA	D5DZ 5560-K
D42W 5556-AGA	★ D4FZ 5560-T	D5DW 5556-AAA	D5DZ 5560-L
	r/b D4AZ 5560-U	D5DW 5556-ABA	D5DZ 5560-L
D42W 5556-AHA	★ D4FZ 5560-T	D5DW 5556-ACA	D5DZ 5560-M
	r/b D4AZ 5560-U	D5DW 5556-ADA	D5DZ 5560-M
D42W 5556-AJA	★ D4FZ 5560-AE	D5DW 5556-AEA	D5DZ 5560-N
D42W 5556-AKA	★ D4FZ 5560-AE	D5DW 5556-AFA	D5DZ 5560-N
D42W 5556-ALA	D4FZ 5560-L	D5DW 5556-ALA	★ D5DZ 5560-AA
D42W 5556-AMA	D4FZ 5560-L	D5DW 5556-AMA	★ D5DZ 5560-AA
D42W 5556-ANA	★ D4FZ 5560-AD	D5DW 5556-ANA	★ D5DZ 5560-AB
D42W 5556-ASA	★ D4FZ 5560-AD	D5DW 5556-ARA	★ D5DZ 5560-AB
D42W 5556-ATA	★ D4FZ 5560-AD	D5DW 5556-ASA	★ D5DZ 5560-AC
D42W 5556-AUA	★ D4FZ 5560-AE	D5DW 5556-ATA	★ D5DZ 5560-AC
D42W 5556-AVA	★ D4FZ 5560-AE	D5DW 5556-AUA	D5DZ 5560-AD
D42W 5556-AYA	★ D4FZ 5560-AF	D5DW 5556-AVA	D5DZ 5560-AD
D42W 5556-AZA	★ D4FZ 5560-AF	D5DW 5556-AYA	D5DZ 5560-AE
D42W 5556-BJA	★ D4FZ 5560-AB	D5DW 5556-AZA	D5DZ 5560-AE
D42W 5556-BKA	★ D4FZ 5560-AB	D52W 5556-AA	D5FZ 5560-A
D42W 5556-BLA	★ D4FZ 5560-AC	D52W 5556-EA	D5FZ 5560-C
D42W 5556-BMA	★ D4FZ 5560-AC	D52W 5556-GA	D5FZ 5560-D
D42W 5556-BNA	★ D4FZ 5560-AB	D52W 5556-JA	★ D5FZ 5560-E
D42W 5556-BRA	★ D4FZ 5560-AB	D52W 5556-KA	★ D5FZ 5560-E
D42W 5556-BSA	★ D4FZ 5560-AC	D52W 5556-LA	★ D5FZ 5560-F
D42W 5556-BTA	★ D4FZ 5560-AC	D52W 5556-MA	★ D5FZ 5560-F
D42W 5556-BUA	★ D4FZ 5560-AB	D52W 5556-AJA	D5FZ 5560-S
D42W 5556-BVA	★ D4FZ 5560-AB	D52W 5556-AKA	D5FZ 5560-S
D42W 5556-BYA	★ D4FZ 5560-AB	D52W 5556-ALA	★ D5FZ 5560-T
D42W 5556-BZA	★ D4FZ 5560-AB	D52W 5556-AMA	★ D5FZ 5560-T
D42W 5556-CAA	★ D4FZ 5560-AE	D52W 5556-ASA	D5FZ 5560-V
D42W 5556-CBA	★ D4FZ 5560-AE	D52W 5556-ATA	D5FZ 5560-V
D42W 5556-CCA	★ D4FZ 5560-AC	D52W 5556-AUA	★ D5FZ 5560-W
D42W 5556-CDA	★ D4FZ 5560-AC	D52W 5556-AVA	★ D5FZ 5560-W
D42W 5556-CEA	★ D4FZ 5560-AB	D52W 5556-AYA	★ D5FZ 5560-Y
D42W 5556-CFA	★ D4FZ 5560-AB	D52W 5556-AZA	★ D5FZ 5560-Y
D5DW 5556-AA	★ D5DZ 5560-A	D52W 5556-BAA	★ D5FZ 5560-Z
D5DW 5556-BA	★ D5DZ 5560-A	D52W 5556-BBA	★ D5FZ 5560-Z

1974/ IDENTIFICATION CHART

IDENTIFICATION	PART NUMBER	IDENTIFICATION	PART NUMBER
5560 SPRING ASSY. (REAR) — Cont'd			
D6BW 5556-AA	D6DZ 5560-Y	D4AW 5560-AAA	★ D4AZ 5560-M
D6BW 5556-BA	D6DZ 5560-Y	D4AW 5560-ABA	D4AZ 5560-N
D6BW 5556-CA	★ D6DZ 5560-Z	D4AW 5560-ACA	D4AZ 5560-R
D6BW 5556-DA	D6DZ 5560-Z	D4AW 5560-ADA	★ D4AZ 5560-S
D6BW 5556-EA	★ D6DZ 5560-AA		r/b D4AZ 5560-R
D6BW 5556-FA	★ D6DZ 5560-AA	D4AW 5560-AEA	★ D4AZ 5560-T
D6BW 5556-GA	D6DZ 5560-AB		★ r/b D4AZ 5560-U
D6BW 5556-HA	D6DZ 5560-AB	D4AW 5560-AFA	★ D4AZ 5560-U
D6BW 5556-JA	D6DZ 5560-AC	D4AW 5560-AHA	★ D4AZ 5560-W
D6BW 5556-KA	D6DZ 5560-AC		r/b D4AZ 5560-Y
D6BW 5556-LA	★ D6DZ 5560-AK	D4AW 5560-AJA	D4AZ 5560-Y
D6BW 5556-MA	★ D6DZ 5560-AL	D4AW 5560-AKA	★ D4AZ 5560-Z
D6DW 5556-ALA	D6DZ 5560-T		r/b D4AZ 5560-Y
D6DW 5556-AMA	D6DZ 5560-T	D4AW 5560-ALA	★ D4AZ 5560-AA
D6DW 5556-ANA	D6DZ 5560-U	D4AW 5560-AMA	★ D4AZ 5560-AA
D6DW 5556-ARA	D6DZ 5560-U		r/b D4AZ 5560-AB
D6DW 5556-BAA	D6DZ 5560-AD	D4AW 5560-ANA	★ D4AZ 5560-AC
D6DW 5556-BBA	D6DZ 5560-AD		r/b D4AZ 5560-AB
D6DW 5556-BCA	D6DZ 5560-AE	D4AW 5560-ASA	★ D4AZ 5560-AD
D6DW 5556-BDA	D6DZ 5560-AE	D4AW 5560-ATA	D4AZ 5560-AE
D6DW 5556-BEA	D6DZ 5560-AF	D4AW 5560-AUA	★ D4AZ 5560-AF
D6DW 5556-BFA	D6DZ 5560-AF	D4AW 5560-AVA	★ D4AZ 5560-AG
D6EW 5556-AA	★ D6FZ 5560-A	D4AW 5560-AYA	D4AZ 5560-AH
D6EW 5556-BA	★ D6FZ 5560-A	D4AW 5560-AZA	★ D4AZ 5560-AJ
D6EW 5556-CA	D6FZ 5560-B	D4AW 5560-BAA	★ D4AZ 5560-AK
D6EW 5556-DA	D6FZ 5560-B	D4AW 5560-BBA	★ D4AZ 5560-AL
D6EW 5556-GA	D6FZ 5560-D	D4AW 5560-BCA	★ D4AZ 5560-AM
D6EW 5556-HA	D6FZ 5560-D	D4AW 5560-BDA	D4AZ 5560-AN
D6EW 5556-JA	D6FZ 5560-E	D4AW 5560-BEA	★ D4AZ 5560-AR
D6EW 5556-KA	D6FZ 5560-E		r/b D5AZ 5560-Z
D6EW 5556-LA	★ D6FZ 5560-F	D4AW 5560-BFA	★ D4AZ 5560-AS
D6EW 5556-MA	★ D6FZ 5560-F	D4AW 5560-BGA	D4AZ 5560-AT
D7DC 5556-BA	D7DC 5560-B	D4AW 5560-BHA	★ D4AZ 5560-AU
ED D7DC 5556-BA	D7DZ 5560-B		r/b D4AZ 5560-AV
D7DC 5556-DA	★ D7DZ 5560-D	D4AW 5560-BJA	D4AZ 5560-AV
ED D7DC 5556-DA	★ D7DZ 5560-D	D4AW 5560-BKA	★ D4AZ 5560-AW
D7EA 5556-BA	D7FZ 5560-B		r/b D4AZ 5560-AV
D7EA 5556-DA	D7FZ 5560-D	D4AW 5560-BLA	★ D4AZ 5560-AY
D7EC 5556-GA	D7FZ 5560-G	D4AW 5560-BMA	★ D4AZ 5560-AZ
D7EC 5556-HA	D7FZ 5560-H	D4AW 5560-BNA	★ D4AZ 5560-BA
D7EC 5556-JA	D7FZ 5560-J		r/b D5AZ 5560-B
D7EC 5556-KA	D7FZ 5560-K	D4DW 5560-AA	D4DZ 5560-A
D7EC 5556-LA	★ D7FZ 5560-L	D4DW 5560-BA	★ D4DZ 5560-L
D7EC 5556-MA	★ D7FZ 5560-M	D4DW 5560-CA	D4DZ 5560-B
D7EC 5556-NA	D7FZ 5560-N	D4DW 5560-DA	D4DZ 5560-D
D7EC 5556-RA	D7FZ 5560-P	D4DW 5560-EA	D4DZ 5560-E
D8EC 5556-AA	D8FZ 5560-A	D4DW 5560-FA	★ D4DZ 5560-L
D8EC 5556-BA	D8FZ 5560-B	D4MW 5560-BA	D4MY 5560-A
D8EC 5556-CA	D8FZ 5560-C	D42W 5560-DE	★ D4FZ 5560-AB
D8EC 5556-DA	D8FZ 5560-D	D42W 5560-DF	★ D4FZ 5560-AB
D8EC 5556-EA	D8FZ 5560-E	D42W 5560-MA	D4FZ 5560-L
D8EC 5556-FA	D8FZ 5560-F	D42W 5560-MD	D4FZ 5560-AC
D4AW 5560-HA	★ D4AZ 5560-E	D42W 5560-ME	D4FZ 5560-AC
D4AW 5560-MA	★ D4AZ 5560-A	D5AW 5560-AA	D5AZ 5560-B
D4AW 5560-NA	★ D4AZ 5560-C	D5AW 5560-BA	★ D5AZ 5560-C
D4AW 5560-SA	★ D4AZ 5560-D		r/b D5AZ 5560-B
D4AW 5560-VA	D4AZ 5560-J		

COPYRIGHT © 1986 — FORD MOTOR COMPANY — DEARBORN, MICHIGAN

1974/ IDENTIFICATION CHART

IDENTIFICATION	PART NUMBER	IDENTIFICATION	PART NUMBER
5560 SPRING ASSY. (REAR) — Cont'd			
D5AW 5560-CA	D5AZ 5560-D	D8BC 5560-AHA	D8BZ 5560-AF
D5AW 5560-EA	★D5AZ 5560-E	D8BC 5560-AJA	D8BZ 5560-AG
D5AW 5560-FA	★D5AZ 5560-F	D8BC 5560-AKA	D8BZ 5560-AH
D5AW 5560-GA	D5AZ 5560-M	D8BC 5560-ALA	D8BZ 5560-AJ
D5AW 5560-HA	★D5AZ 5560-N	D8BC 5560-AMA	D8BZ 5560-AK
D5AW 5560-JA	D5AZ 5560-R	D9AC 5560-AA	★D9AZ 5560-A
D5AW 5560-KA	D5AZ 5560-S	D9AC 5560-BA	D9AZ 5560-B
D5AW 5560-LA	D5AZ 5560-T	D9AC 5560-CA	D9AZ 5560-C
D5AW 5560-MA	★D5AZ 5560-G	D9AC 5560-DA	D9AZ 5560-D
D5AW 5560-NA	★D5AZ 5560-H	D9AC 5560-EA	D9AZ 5500-E
D5AW 5560-RA	★D5AZ 5560-J	D9AC 5560-FA	D9AZ 5560-F
D5AW 5560-SA	r/bD5AZ 5560-K	D9AC 5560-JA	D9AZ 5560-J
D5AW 5560-TA	★D5AZ 5560-L	D9AC 5560-KA	D9AZ 5560-K
	r/bD5AZ 5560-K	D9AC 5560-LA	D9AZ 5560-L
D5AW 5560-UA	D5AZ 5560-U	D9AC 5560-MA	D9AZ 5560-M
D5AW 5560-VA	D5AZ 5560-V	D9AC 5560-NA	D9AZ 5560-N
D5AW 5560-YA	D5AZ 5560-W	D8AC 5560-AA	D9AZ 5560-P
D5AW 5560-ZA	D5AZ 5560-Z	D8AC 5560-BA	D9AZ 5560-R
D5AW 5560-AAA	★D5AZ 5560-AB	D8AC 5560-CA	D9AZ 5560-S
D5AW 5560-ABA	★D5AZ 5560-AA	D8AC 5560-DA	D9AZ 5560-T
D5AW 5560-ADA	★D5AZ 5560-AC	D9AC 5560-SA	D9AZ 5560-V
D5AW 5560-AEA	★D5AZ 5560-AD	D9AC 5560-TA	★D9AZ 5560-W
D5AW 5560-AFA	D5AZ 5560-AE	D9AC 5560-UA	D9AZ 5560-AA
D5AW 5560-AGA	D5AZ 5560-AJ	D9AC 5560-VA	D9AZ 5560-AB
D5AW 5560-AHA	★D5AZ 5560-AM	D9AC 5560-ZA	D9AZ 5560-AC
D5AW 5560-AJA	★D5AZ 5560-AN	D9AC 5560-AAA	D9AZ 5560-AD
D5AW 5560-AKA	★D5AZ 5560-AK	D9AC 5560-YA	D9AZ 5560-AE
D5AW 5560-ALA	★D5AZ 5560-AL	D9AC 5560-AF	D9AZ 5560-AF
D7AC 5560-AA	★D7AZ 5560-A	D9AC 5560-AGA	★D9AZ 5560-AG
D7AC 5560-BA	D7AZ 5560-B	D9AC 5560-AHA	D9AZ 5560-AH
D7AC 5560-CA	★D7AZ 5560-C	D9AC 5560-ACA	D9AZ 5560-AJ
	r/bD5AZ 5560-U	D9AC 5560-ADA	D9AZ 5560-AK
D8BC 5560-KA	D8BZ 5560-K	D9AC 5560-AEA	D9AZ 5560-AL
D8BC 5560-LA	D8BZ 5560-L	D9AC 5560-AFA	D9AZ 5560-AM
D8BC 5560-MA	D8BZ 5560-M	D9BC 5560-BA	D9AZ 5560-B
D8BC 5560-YA	★D8BZ 5560-V	D8BC 5560-EA	D9BZ 5560-E
	r/bD9BZ 5560-U	D9BC 5560-EA	D9BZ 5560-F
D8BC 5560-ZA	★D8BZ 5560-W	D9BC 5560-JA	D9BZ 5560-G
	r/bD9BZ 5560-V	D9BC 5560-KA	D9BZ 5560-H
D8BC 5560-AAA	★D8BZ 5560-Y	D9BC 5560-RA	D9BZ 5560-J
	r/bD9BZ 5560-V	D9BC 5560-FA	D9BZ 5560-K
D8BC 5560-ABA	D8BZ 5560-Z	D9BC 5560-GA	D9BZ 5560-L
D8BC 5560-ACA	D8BZ 5560-AA	D9BC 5560-HA	D9BZ 5560-M
D8BC 5560-ADA	D8BZ 5560-AB	D9BC 5560-LA	D9BZ 5560-N
D8BC 5560-AEA	D8BZ 5560-AC	D9BC 5560-MA	D9BZ 5560-P
D8BC 5560-AFA	D8BZ 5560-AD	D9BC 5560-NA	D9BZ 5560-R
D8BC 5560-AGA	D8BZ 5560-AE	D9DC 5560-AA	D9DZ 5560-A

1974 CHECK LOAD CHART

5560 SPRING ASSY. (REAR) — Cont'd

♦ When 2 springs have the same check load, it will be necessary to use the Identification Number (from the spring tape) and the chart on page 20 to select the correct service part number.

A (Mercury) and Y (Meteor)

CHECK LOAD (ON IDENT. TAPE)	SERVICE PART NUMBER	WIRE DIA. (INCHES)	NO. LEAVES	▲ TYPE SPRING
880	★ D4AZ 5560-M r/b D4AZ 5560-N	.585		C
920	D4AZ 5560-N	.585		C
950	★ D4AZ 5560-W r/b D4AZ 5560-Y	.610		C
960	D4AZ 5560-R	.585		C
1000	★♦ D4AZ 5560-S r/b D4AZ 5560-R	.595		C
1000	♦ D4AZ 5560-Y	.610		C
1025	★ D4AZ 5560-AZ	.625		C
1040	★ D4AZ 5560-T ★r/b D4AZ 5560-U	.595		C
1050	★ D4AZ 5560-Z r/b D4AZ 5560-Y	.615		C
1080	★ D4AZ 5560-U	.600		C
1085	★ D4AZ 5560-BA r/b D5AZ 5560-B	.652		C
1100	D4AZ 5560-AA	.625		C
1120	★ D4AZ 5560-A	.600		C
1150	D4AZ 5560-AB	.625		C
1200	D4AZ 5560-AC	.630		C
1270	★ D4AZ 5560-AJ	.655		C
1320	★ D4AZ 5560-AK ★r/b D4AZ 5560-AM	.655		C
1350	★ D4AZ 5560-AY	.695		C
1380	★ D4AZ 5560-AL ★r/b D4AZ 5560-AM	.655		C
1425	D4AZ 5560-AN	.695		C
1440	★ D4AZ 5560-AM	.660		C
1500	★♦ D4AZ 5560-J ★r/b D4AZ 5560-AM	.671		C
1500	♦ D4AZ 5560-AR	.695		C
1560	★ D4AZ 5560-D r/b D5AZ 5560-Z	.671		C
1575	★ D4AZ 5560-AS r/b D5AZ 5560-Z	.703		C

C (Montego)

CHECK LOAD (ON IDENT. TAPE)	SERVICE PART NUMBER	WIRE DIA. (INCHES)	NO. LEAVES	▲ TYPE SPRING
920	D4AZ 5560-N	.585		C
950	★ D4AZ 5560-W r/b D4AZ 5560-Y	.610		C
960	D4AZ 5560-R	.585		C
1000	★♦ D4AZ 5560-S r/b D4AZ 5560-R	.595		C
1000	♦ D4AZ 5560-Y	.610		C
1020	★ D4AZ 5560-AD r/b D4AZ 5560-AE	.640		C
1040	★ D4AZ 5560-T ★r/b D4AZ 5560-U	.595		C
1050	★ D4AZ 5560-Z r/b D4AZ 5560-Y	.615		C
1070	D4AZ 5560-AE	.640		C
1080	★ D4AZ 5560-U	.600		C
1100	D4AZ 5560-AA	.625		C
1120	★ D4AZ 5560-AF D5AZ 5560-Z	.640		C

C (Montego) — Cont'd

CHECK LOAD (ON IDENT. TAPE)	SERVICE PART NUMBER	WIRE DIA. (INCHES)	NO. LEAVES	▲ TYPE SPRING
1150	D4AZ 5560-AB	.625		C
1170	★ D4AZ 5560-AG	.645		C
1200	D4AZ 5560-AC	.630		C
1220	D4AZ 5560-AH	.645		C
1250	D4AZ 5560-AW	.630		C
1270	★ D4AZ 5560-AJ	.655		C
1170	★ D4AZ 5560-AG	.645		C
1320	D4AZ 5560-AK	.655		C
1350	D4AZ 5560-AU	.641		C
1380	★ D4AZ 5560-AL ★r/b D4AZ 5560-AM	.655		C
1400	D4AZ 5560-AT	.641		C
1440	★ D4AZ 5560-AM	.660		C

D (Lincoln)

CHECK LOAD (ON IDENT. TAPE)	SERVICE PART NUMBER	WIRE DIA. (INCHES)	NO. LEAVES	▲ TYPE SPRING
1440	D4AZ 5560-AM	.660		C

F (Cougar)

CHECK LOAD (ON IDENT. TAPE)	SERVICE PART NUMBER	WIRE DIA. (INCHES)	NO. LEAVES	▲ TYPE SPRING
950	★ D4AZ 5560-W r/b D4AZ 5560-Y	.610		C
960	D4AZ 5560-R	.585		C
1000	★♦ D4AZ 5560-S r/b D4AZ 5560-R	.595		C
1000	♦ D4AZ 5560-Y	.610		C
1040	★ D4AZ 5560-T ★r/b D4AZ 5560-U	.595		C
1050	★ D4AZ 5560-Z r/b D4AZ 5560-Y	.615		C
1080	★ D4AZ 5560-U	.600		C
1100	D4AZ 5560-AA	.625		C
1200	D4AZ 5560-AC	.630		C

L (Bobcat)

CHECK LOAD (ON IDENT. TAPE)	SERVICE PART NUMBER	WIRE DIA. (INCHES)	NO. LEAVES	▲ TYPE SPRING
505	★ D4FZ 5560-M r/b D4FZ 5560-AE		5	L
535	★ D4FZ 5560-N ★r/b D4FZ 5560-AD		5	L
545	★ D4FZ 5560-AE		5	L
559	♦ D4FZ 5560-AF		5	L
559	★♦ D4FZ 5560-T ★r/b D4AZ 5560-U		5	L
565	★ D4FZ 5560-R ★r/b D4FZ 5560-AD		5	L
565	★ D4FZ 5560-AD		5	L
730	♦ D4FZ 5560-L		6	L
730	♦★ D4FZ 5560-W r/b D4FZ 5560-AB		6	L
730	♦★ D4FZ 5560-AA r/b D4FZ 5560-AB		6	L
755	★♦ D4FZ 5560-S		5	L
755	♦★ D4FZ 5560-Y r/b D4FZ 5560-AB		6	L
755	♦★ D4FZ 5560-Z r/b D4FZ 5560-AB		6	L
798	★ D4FZ 5560-AC r/b D4FZ 5560-AB		6	L
823	D4FZ 5560-AB		6	L

COPYRIGHT © 1986 — FORD MOTOR COMPANY — DEARBORN, MICHIGAN

1974 CHECK LOAD CHART

5560 SPRING ASSY. (REAR) — Cont'd

♦ When 2 springs have the same check load, it will be necessary to use the Identification Number (from the spring tape) and the chart on page 20 to select the correct service part number.

K (Mark IV)

CHECK LOAD (ON IDENT. TAPE)	SERVICE PART NUMBER	WIRE DIA. (INCHES)	NO. LEAVES	▲ TYPE SPRING
1120	★ D4AZ 5560-A	.600		C
1150	D4AZ 5560-AB	.625		C
1160	★ D4AZ 5560-C	.606		C
1200	♦ D4MY 5560-A	.606		C
1200	♦ D4AZ 5560-AC	.630		C
1250	D4AZ 5560-AW	.630		C

P (Comet)

CHECK LOAD (ON IDENT. TAPE)	SERVICE PART NUMBER	WIRE DIA. (INCHES)	NO. LEAVES	▲ TYPE SPRING
634	★ D4DZ 5560-C r/bD4DZ 5560-L		3	L
662	★ D4DZ 5560-L r/bD5DZ 5560-K		3	L

P (Comet) — Cont'd

CHECK LOAD (ON IDENT. TAPE)	SERVICE PART NUMBER	WIRE DIA. (INCHES)	NO. LEAVES	▲ TYPE SPRING
688	★ D4DZ 5560-B r/bD5DZ 5560-K		3	L
709	★ D4DZ 5560-E r/bD5DZ 5560-K		4	L
715	★ D4DZ 5560-D r/bD5DZ 5560-M		4	L
781	★ D4DZ 5560-A r/bD5DZ 5560-N		4	L

Y (Meteor)

Refer to A (Mercury)

1974

CAPRI SERVICE SPRINGS

ENGINE C.I.D.	● TYPE SPRING	● TYPE SUSP.	LOAD RATE	PART NUMBER	REMARKS	QTY.
All	L	S	457	★ D4RY 5560-A	#1-Violet and 1-Yellow or 1-Violet and 1-Blue	2

YEAR	MODEL/RESTRICTIONS	PART NUMBER	DESCRIPTION	QTY.
74	J	130937-ES2	Bolt-hex. hd.-7/16"-14 x 6"	2
74	J	110978-ES8	Washer-flat-7/16"	2
74	J	114656-ES8	Nut-hex.-7/16"-14	2
74	P	385925-S100	(BB-817-XB)-bolt-hex. washer head (front of rear spring to hanger bracket)-1/2"-13 x 4 3/4"	2

1975 CHECK LOAD CHART

5560 SPRING ASSY. (REAR) — Cont'd

A (Mercury), Y (Meteor)

CHECK LOAD (ON IDENT. TAPE)	SERVICE PART NUMBER	WIRE DIA. (INCHES)	NO. LEAVES	▲ TYPE SPRING
880	D5AZ 5560-M	.591		C
930	★ D5AZ 5560-N	.600		C
970	★ D5AZ 5560-G	.631		C
980	D5AZ 5560-R	.600		C
1020	★ D5AZ 5560-H	.631		C
1025	★ D4AZ 5560-AZ	.625		C
1030	D5AZ 5560-S	.608		C
1070	D4AZ 5560-AE	.640		C
1080	D5AZ 5560-T	.608		C
1085	★ D4AZ 5560-BA r/bD5AZ 5560-B	.625		C
1120	★ D4AZ 5560-A	.600		C
1120	★ D4AZ 5560-AF	.640		C
1150	★ D5AZ 5560-E	.615		C
1145	D5AZ 5560-B	.660		C
1160	★ D4AZ 5560-C r/bD5AZ 5560-W	.606		C
1170	★ D4AZ 5560-AG	.645		C
1180	★ D5AZ 5560-F	.615		C

A (Mercury), Y (Meteor) — Cont'd

CHECK LOAD (ON IDENT. TAPE)	SERVICE PART NUMBER	WIRE DIA. (INCHES)	NO. LEAVES	▲ TYPE SPRING
1205	★ D5AZ 5560-C r/bD5AZ 5560-K	.660		C
1220	D4AZ 5560-AH	.645		C
1265	D5AZ 5560-D	.667		C
1270	★ D4AZ 5560-AJ	.655		C
1325	★ D5AZ 5560-AA	.667		C
1385	★ D5AZ 5560-J r/bD5AZ 5560-K	.675		C
1425	D4AZ 5560-AN	.695		C
1445	D5AZ 5560-K	.675		C
1500	D4AZ 5560-AR	.695		C
1505	★ D5AZ 5560-L r/bD5AZ 5560-K	.682		C
1560	★ D4AZ 5560-D r/bD5AZ 5560-Z	.671		C
1565	★ D5AZ 5560-AB r/bD5AZ 5560-L	.686		C
1575	★ D4AZ 5560-AS r/bD5AZ 5560-Z	.708		C

1975 CHECK LOAD CHART

5560 SPRING ASSY. (REAR) — Cont'd

A (Mercury), Y (Meteor) — Cont'd

CHECK LOAD (ON IDENT. TAPE)	SERVICE PART NUMBER	WIRE DIA. (INCHES)	NO. LEAVES	▲ TYPE SPRING
1575	D5AZ 5560-Z	.708		C
1650	★ D4AZ 5560-E r/b D5AZ 5560-Z	.708		C

C (Montego)

CHECK LOAD (ON IDENT. TAPE)	SERVICE PART NUMBER	WIRE DIA. (INCHES)	NO. LEAVES	▲ TYPE SPRING
880	D5AZ 5560-M	.591		C
920	D4AZ 5560-N	.585		C
930	★ D5AZ 5560-N	.600		C
950	★ D4AZ 5560-W r/b D4AZ 5560-Y	.610		C
960	D4AZ 5560-R	.585		C
980	D5AZ 5560-R	.600		C
1000	★ D4AZ 5560-S r/b D4AZ 5560-R	.595		C
1000	D4AZ 5560-Y	.610		C
1020	★ D5AZ 5560-H	.631		C
1025	★ D4AZ 5560-AZ	.625		C
1030	D5AZ 5560-S	.608		C
1040	★ D4AZ 5560-T ★ r/b D4AZ 5560-U	.595		C
1050	★ D4AZ 5560-Z r/b D4AZ 5560-Y	.615		C
1070	D4AZ 5560-AE	.640		C
1080	D5AZ 5560-T	.608		C
1085	★ D4AZ 5560-BA r/b D5AZ 5560-B	.625		C
1100	D4AZ 5560-AA	.625		C
1120	★ D4AZ 5560-AF	.640		C
1130	★ D5AZ 5560-E	.615		C
1145	D5AZ 5560-B	.660		C
1150	D4AZ 5560-AB	.625		C
1170	★ D4AZ 5560-AG	.645		C
1200	D4AZ 5560-AC	.630		C
1205	★ D5AZ 5560-C r/b D5AZ 5560-B	.660		C
1250	D4AZ 5560-AW	.630		C
1265	D5AZ 5560-D	.667		C
1300	D4AZ 5560-AV	.641		C
1325	★ D5AZ 5560-AA	.667		C
1350	D4AZ 5560-AU	.641		C
1385	★ D5AZ 5560-J r/b D5AZ 5560-K	.675		C
1400	D4AZ 5560-AT	.641		C
1445	D5AZ 5560-K	.675		C
1505	D5AZ 5560-L	.682		C

D (Lincoln)

CHECK LOAD (ON IDENT. TAPE)	SERVICE PART NUMBER	WIRE DIA. (INCHES)	NO. LEAVES	▲ TYPE SPRING
1380	★ D5AZ 5560-AL	.656		C
1430	★ D5AZ 5560-AK	.656		C
1500	★ D5AZ 5560-AJ	.648		C

F (Cougar)

CHECK LOAD (ON IDENT. TAPE)	SERVICE PART NUMBER	WIRE DIA. (INCHES)	NO. LEAVES	▲ TYPE SPRING
880	D5AZ 5560-M	.591		C
930	★ D5AZ 5560-N	.600		C
950	★ D4AZ 5560-W r/b D4AZ 5560-Y	.610		C
960	D4AZ 5560-R	.585		C
980	D5AZ 5560-R	.600		C
1000	D4AZ 5560-Y	.610		C
1000	★ D4AZ 5560-S r/b D4AZ 5560-R	.595		C
1030	D5AZ 5560-S	.608		C
1050	★ D4AZ 5560-Z r/b D4AZ 5560-Y	.615		C
1080	D5AZ 5560-T	.608		C
1100	D4AZ 5560-AA	.625		C

G (Monarch)

CHECK LOAD (ON IDENT. TAPE)	SERVICE PART NUMBER	WIRE DIA. (INCHES)	NO. LEAVES	▲ TYPE SPRING
727	★ D5DZ 5560-A		4	L
737	★ D5DZ 5560-E		4	L
761	★ D5DZ 5560-B		4	L
772	★ D5DZ 5560-H		4	L
774	★ D5DZ 5560-C		4	L
789	D5DZ 5560-G		4	L
799	★ D5DZ 5560-D		4	L
829	★ D5DZ 5560-F		4	L

K (Mark IV)

CHECK LOAD (ON IDENT. TAPE)	SERVICE PART NUMBER	WIRE DIA. (INCHES)	NO. LEAVES	▲ TYPE SPRING
1080	D5AZ 5560-U	.605		C
1120	D5AZ 5560-V	.605		C
1150	D4AZ 5560-AB	.625		C
1160	D5AZ 5560-W	.611		C
1200	D4MY 5560-A	.606		C
1200	★ D5AZ 5560-AD	.611		C
1200	D4AZ 5560-AC	.630		C
1250	D4AZ 5560-AW	.630		C

L (Bobcat)

CHECK LOAD (ON IDENT. TAPE)	SERVICE PART NUMBER	WIRE DIA. (INCHES)	NO. LEAVES	▲ TYPE SPRING
558	★ D5FZ 5560-V		5	L
588	★ D5FZ 5560-W		5	L
606	D5FZ 5560-Y		5	L
611	★ D5FZ 5560-S		5	L
781	★ D5FZ 5560-T r/b D6FZ 5560-E		6	L
812	★ D5FZ 5560-Z ★ D6FZ 5560-F		6	L
835	★ D5FZ 5560-E r/b D6FZ 5560-E		6	L
865	★ D5FZ 5560-F ★ D6FZ 5560-F		6	L

P (Comet)

CHECK LOAD (ON IDENT. TAPE)	SERVICE PART NUMBER	WIRE DIA. (INCHES)	NO. LEAVES	▲ TYPE SPRING
662	★ D4DZ 5560-L ★ r/b D5DZ 5560-K		3	L
677	★ D5DZ 5560-J ★ r/b D5DZ 5560-K		3	L

COPYRIGHT © 1986 — FORD MOTOR COMPANY — DEARBORN, MICHIGAN

1975 CHECK LOAD CHART

5560 SPRING ASSY. (REAR) — Cont'd

P (Comet) — Cont'd

CHECK LOAD (ON IDENT. TAPE)	SERVICE PART NUMBER	WIRE DIA. (INCHES)	NO. LEAVES	▲ TYPE SPRING
688	★ D4DZ 5560-B ★ r/bD5DZ 5560-K		3	L
689	★ D5DZ 5560-AA r/bD5DZ 5560-J		4	L
703	★ D5DZ 5560-K		3	L
709	★ D4DZ 5560-E r/bD5DZ 5560-L		4	L
715	★ D4DZ 5560-D r/bD5DZ 5560-M		4	L
715	★ D5DZ 5560-AB ★ r/bD5DZ 5560-K		4	L
730	★ D5DZ 5560-M		4	L
734	★ D5DZ 5560-L		3	L
742	★ D5DZ 5560-AD		4	L
746	★ D5DZ 5560-AC r/bD5DZ 5560-L		4	L
781	★ D4DZ 5560-A r/bD5DZ 5560-N		4	L
795	★ D5DZ 5560-N		4	L
807	★ D5DZ 5560-AE		4	L

Y (Meteor)–Refer to A (Mercury)

1976 CHECK LOAD CHART

5560 SPRING ASSY. (REAR) — Cont'd

A (Mercury) and Y (Meteor)

CHECK LOAD (ON IDENT. TAPE)	SERVICE PART NUMBER	WIRE DIA. (INCHES)	NO. LEAVES	▲ TYPE SPRING
880	D5AZ 5560-M	.591		C
930	★ D5AZ 5560-N	.600		C
970	★ D5AZ 5560-G	.631		C
980	D5AZ 5560-R	.600		C
1020	★ D5AZ 5560-H	.631		C
1025	★ D4AZ 5560-AZ	.625		C
1030	D5AZ 5560-S	.608		C
1070	D4AZ 5560-AE	.640		C
1085	★ D4AZ 5560-BA r/bD5AZ 5560-B	.625		C
1120	D4AZ 5560-AF	.640		C
1150	D5AZ 5560-E	.615		C
1145	D5AZ 5560-B	.660		C
1180	★ D5AZ 5560-F	.615		C
1205	★ D5AZ 5560-C r/bD5AZ 5560-B	.660		C
1220	D4AZ 5560-AH	.645		C
1325	★ D5AZ 5560-AA	.667		C
1385	★ D5AZ 5560-J r/bD5AZ 5560-K	.675		C
1425	D4AZ 5560-AN	.695		C
1445	D5AZ 5560-K	.675		C
1500	D4AZ 5560-AR	.695		C

C (Montego)

CHECK LOAD (ON IDENT. TAPE)	SERVICE PART NUMBER	WIRE DIA. (INCHES)	NO. LEAVES	▲ TYPE SPRING
880	D5AZ 5560-M	.591		C
930	★ D5AZ 5560-N	.600		C
950	★ D4AZ 5560-W r/bD4AZ 5560-Y	.610		C
980	D5AZ 5560-R	.600		C
1000	D4AZ 5560-Y	.610		C
1020	★ D5AZ 5560-H	.631		C
1025	★ D4AZ 5560-AZ	.625		C
1030	D5AZ 5560-S	.608		C
1050	★ D4AZ 5560-Z r/bD4AZ 5560-Y	.615		C

C (Montego) — Cont'd

CHECK LOAD (ON IDENT. TAPE)	SERVICE PART NUMBER	WIRE DIA. (INCHES)	NO. LEAVES	▲ TYPE SPRING
1070	D4AZ 5560-AE	.640		C
1080	D5AZ 5560-T	.608		C
1085	★ D4AZ 5560-BA r/bD5AZ 5560-B	.625		C
1100	D4AZ 5560-AA	.625		C
1120	★ D4AZ 5560-AF	.640		C
1145	D5AZ 5560-B	.660		C
1150	D4AZ 5560-AB	.625		C
1200	D4AZ 5560-AC	.630		C
1205	★ D5AZ 5560-C r/bD5AZ 5560-B	.660		C
1250	D4AZ 5560-AW	.630		C
1300	D4AZ 5560-AV	.641		C
1325	★ D5AZ 5560-AA	.667		C
1350	D4AZ 5560-AU	.641		C
1385	★ D5AZ 5560-J r/bD5AZ 5560-K	.675		C
1445	D5AZ 5560-K	.675		C

D (Lincoln)

CHECK LOAD (ON IDENT. TAPE)	SERVICE PART NUMBER	WIRE DIA. (INCHES)	NO. LEAVES	▲ TYPE SPRING
1400	D4AZ 5560-AT	.641		C

F (Cougar)

CHECK LOAD (ON IDENT. TAPE)	SERVICE PART NUMBER	WIRE DIA. (INCHES)	NO. LEAVES	▲ TYPE SPRING
880	D5AZ 5560-M	.591		C
930	★ D5AZ 5560-N	.600		C
950	★ D4AZ 5560-W r/bD4AZ 5560-Y	.610		C
980	D5AZ 5560-R	.600		C
1000	D4AZ 5560-Y	.610		C
1030	D5AZ 5560-S	.608		C
1050	★ D4AZ 5560-Z r/bD4AZ 5560-Y	.615		C
1080	D5AZ 5560-T	.608		C
1100	D4AZ 5560-AA	.625		C

1976 CHECK LOAD CHART

5560 SPRING ASSY. (REAR) — Cont'd

G (Monarch)

CHECK LOAD (ON IDENT. TAPE)	SERVICE PART NUMBER	WIRE DIA. (INCHES)	NO. LEAVES	▲ TYPE SPRING
787	D6DZ 5560-AD		4	L
829	D6DZ 5560-AE		4	L
859	D6DZ 5560-AF		4	L
927	D6DZ 5560-T		5	L
977	D6DZ 5560-U		5	L

K (Mark IV)

CHECK LOAD (ON IDENT. TAPE)	SERVICE PART NUMBER	WIRE DIA. (INCHES)	NO. LEAVES	▲ TYPE SPRING
1120	D5AZ 5560-V	.605		C
1150	D4AZ 5560-AB	.625		C
1160	D5AZ 5560-W	.611		C
1200	★ D5AZ 5560-AD	.611		C
1200	D4AZ 5560-AC	.630		C
1250	D4AZ 5560-AW	.630		C

L (Bobcat)

CHECK LOAD (ON IDENT. TAPE)	SERVICE PART NUMBER	WIRE DIA. (INCHES)	NO. LEAVES	▲ TYPE SPRING
588	D6FZ 5560-B		5	L
588	D6FZ 5560-B		5	L

L (Bobcat) — Cont'd

CHECK LOAD (ON IDENT. TAPE)	SERVICE PART NUMBER	WIRE DIA. (INCHES)	NO. LEAVES	▲ TYPE SPRING
611	D6FZ 5560-D		5	L
781	D6FZ 5560-E		6	L
812	★ D6FZ 5560-F		6	L

P (Comet)

CHECK LOAD (ON IDENT. TAPE)	SERVICE PART NUMBER	WIRE DIA. (INCHES)	NO. LEAVES	▲ TYPE SPRING
720	★ D6DZ 5560-Y		3	L
750	★ D6DZ 5560-Z		3	L
779	★ D6DZ 5560-AA		3	L
790	D6DZ 5560-AB		4	L
790	★ D6DZ 5560-AK		4	L
855	D6DZ 5560-AC		4	L
855	★ D6DZ 5560-AL		4	L

Y (Meteor)–Refer to A (Mercury)

5560 SPRING ASSY. (REAR) — Cont'd

1976

CAPRI SERVICE SPRINGS

ENGINE C.I.D.	● TYPE SPRING	● TYPE SUSP.	LOAD RATE	PART NUMBER	REMARKS	QTY.
All	L			D5RY 5560-D	#75EB 5560-GA,HA	2

1977 CHECK LOAD CHART

A (Mercury)

CHECK LOAD (ON IDENT. TAPE)	SERVICE PART NUMBER	WIRE DIA. (INCHES)	NO. LEAVES	▲ TYPE SPRING
980	D5AZ 5560-R	.600		C
1020	★ D5AZ 5560-H	.631		C
1025	★ D4AZ 5560-AZ	.625		C
1030	D5AZ 5560-S	.608		C
1070	D4AZ 5560-AE	.640		C
1080	D5AZ 5560-T	.608		C
1085	★ D4AZ 5560-BA r/b D5AZ 5560-B	.625		C
1120	D4AZ 5560-AF	.640		C
1145	D5AZ 5560-B	.660		C
1325	★ D5AZ 5560-AA	.667		C
1385	★ D5AZ 5560-J r/b D5AZ 5560-K	.675		C
1425	D4AZ 5560-AN	.695		C
1575	D5AZ 5560-Z	.708		C

D (Lincoln)

CHECK LOAD (ON IDENT. TAPE)	SERVICE PART NUMBER	WIRE DIA. (INCHES)	NO. LEAVES	▲ TYPE SPRING
1250	D4AZ 5560-AW	.630		C
1300	D4AZ 5560-AV	.641		C
1350	D4AZ 5560-AU	.641		C

F (Cougar)

CHECK LOAD (ON IDENT. TAPE)	SERVICE PART NUMBER	WIRE DIA. (INCHES)	NO. LEAVES	▲ TYPE SPRING
930	★ D5AZ 5560-N	.600		C
930	D5AZ 5560-M	.600		C
950	★ D4AZ 5560-W r/b D4AZ 5560-Y	.610		C
980	D5AZ 5560-R	.600		C
1000	D4AZ 5560-Y	.610		C
1020	★ D5AZ 5560-H	.631		C
1050	★ D4AZ 5560-Z r/b D4AZ 5560-Y	.615		C
1070	D4AZ 5560-AE	.640		C
1100	D4AZ 5560-AA	.625		C
1145	D5AZ 5560-B	.660		C
1150	D4AZ 5560-AB	.625		C
1205	★ D5AZ 5560-C r/b D5AZ 5560-B	.660		C
1250	D4AZ 5560-AW	.630		C
1300	D4AZ 5560-AV	.641		C
1325	★ D5AZ 5560-AA	.667		C
1385	★ D5AZ 5560-J r/b D5AZ 5560-K	.675		C

COPYRIGHT © 1986 — FORD MOTOR COMPANY — DEARBORN, MICHIGAN

1977 CHECK LOAD CHART

5560 SPRING ASSY. (REAR) — Cont'd

G (Monarch)

CHECK LOAD (ON IDENT. TAPE)	SERVICE PART NUMBER	WIRE DIA. (INCHES)	NO. LEAVES	▲ TYPE SPRING
787	D6DZ 5560-AD		4	L
829	D6DZ 5560-AE		4	L
859	D6DZ 5560-AF		4	L
927	D6DZ 5560-T		5	L
977	D6DZ 5560-U		5	L

K (Mark V)

CHECK LOAD (ON IDENT. TAPE)	SERVICE PART NUMBER	WIRE DIA. (INCHES)	NO. LEAVES	▲ TYPE SPRING
960	★ D7AZ 5560-C r/b D5AZ 5560-U	.598		C
1000	D4AZ 5560-Y	.610		C
1000	★ D7AZ 5560-A r/b D5AZ 5560-U	.598		C
1040	D7AZ 5560-B	.598		C
1050	★ D4AZ 5560-Z r/b D4AZ 5560-Y	.615		C
1080	D5AZ 5560-T	.608		C

L (Bobcat)

CHECK LOAD (ON IDENT. TAPE)	SERVICE PART NUMBER	WIRE DIA. (INCHES)	NO. LEAVES	▲ TYPE SPRING
529	D7FZ 5560-G		5	L
529	★ D7FZ 5560-H r/b D6FZ 5560-B		5 5	L L

L (Bobcat) — Cont'd

CHECK LOAD (ON IDENT. TAPE)	SERVICE PART NUMBER	WIRE DIA. (INCHES)	NO. LEAVES	▲ TYPE SPRING
578	D7FZ 5560-B		5	L
578	D7FZ 5560-D		5	L
705	★ D7FZ 5560-N r/b D7FZ 5560-J		6	L
745	D7FZ 5560-P		6	L
745	★ D7FZ 5560-J		6	L
786	★ D7FZ 5560-K		6	L

P (Comet)

CHECK LOAD (ON IDENT. TAPE)	SERVICE PART NUMBER	WIRE DIA. (INCHES)	NO. LEAVES	▲ TYPE SPRING
720	★ D6DZ 5560-Y		3	L
750	★ D6DZ 5560-Z		3	L
779	★ D6DZ 5560-AA		3	L
790	★ D6DZ 5560-AK		4	L
855	★ D6DZ 5560-AL		4	L

V (Versailles)

CHECK LOAD (ON IDENT. TAPE)	SERVICE PART NUMBER	WIRE DIA. (INCHES)	NO. LEAVES	▲ TYPE SPRING
869	★ D7DZ 5560-B		4	L
909	r/b D7DZ 5560-D		4	L

5560 SPRING ASSY. (REAR) — Cont'd

1977
CAPRI SERVICE SPRINGS

ENGINE C.I.D.	● TYPE SPRING	● TYPE SUSP.	LOAD RATE	PART NUMBER	REMARKS	QTY.
All	L			★ D5RY 5560-D	#75EB 5560-GA,HA	2

1978 CHECK LOAD CHART

A (Mercury)

CHECK LOAD (ON IDENT. TAPE)	SERVICE PART NUMBER	WIRE DIA. (INCHES)	NO. LEAVES	▲ TYPE SPRING
930	★ D5AZ 5560-N	.600		C
970	★ D5AZ 5560-G	.631		C
980	D5AZ 5560-R	.600		C
1020	★ D5AZ 5560-H	.631		C
1025	★ D4AZ 5560-AZ	.625		C
1030	D5AZ 5560-S	.608		C
1070	D4AZ 5560-AE	.640		C
1080	D5AZ 5560-T	.608		C
1085	★ D4AZ 5560-BA r/b D5AZ 5560-B	.625		C
1120	D4AZ 5560-AF	.640		C
1145	D5AZ 5560-B	.660		C
1170	D8AZ 5560-E	.640		C
1205	★ D5AZ 5560-C r/b D5AZ 5560-B	.660		C
1275	★ D8AZ 5560-G	.695		C
1325	★ D5AZ 5560-AA	.667		C

A (Mercury) — Cont'd

CHECK LOAD (ON IDENT. TAPE)	SERVICE PART NUMBER	WIRE DIA. (INCHES)	NO. LEAVES	▲ TYPE SPRING
1350	★ D4AZ 5560-AY	.695		C
1385	★ D5AZ 5560-J r/b D5AZ 5560-K	.675		C
1425	D4AZ 5560-AN	.695		C
1445	D5AZ 5560-K	.675		C
1500	D4AZ 5560-AR	.695		C

D (Lincoln)

CHECK LOAD (ON IDENT. TAPE)	SERVICE PART NUMBER	WIRE DIA. (INCHES)	NO. LEAVES	▲ TYPE SPRING
1250	D8AZ 5560-D	.641		C
1300	D4AZ 5560-AV	.641		C
1350	D4AZ 5560-AU	.641		C
1400	D4AZ 5560-AT	.641		C

F (Cougar)

CHECK LOAD (ON IDENT. TAPE)	SERVICE PART NUMBER	WIRE DIA. (INCHES)	NO. LEAVES	▲ TYPE SPRING
830	D8AZ 5560-B	.591		C
900	D8AZ 5560-C	.610		C
930	★ D5AZ 5560-N	.600		C

1978 CHECK LOAD CHART

5560 SPRING ASSY. (REAR) — Cont'd

F (Cougar) — Cont'd

CHECK LOAD (ON IDENT. TAPE)	SERVICE PART NUMBER	WIRE DIA. (INCHES)	NO. LEAVES	▲ TYPE SPRING
930	D5AZ 5560-M	.600		C
950	★ D4AZ 5560-W r/b D4AZ 5560-Y	.610		C
980	D5AZ 5560-R	.600		C
1000	D4AZ 5560-Y	.610		C
1030	D5AZ 5560-S	.608		C
1050	★ D4AZ 5560-Z r/b D4AZ 5560-Y	.615		C
1100	D4AZ 5560-AA	.625		C

G (Monarch)

CHECK LOAD (ON IDENT. TAPE)	SERVICE PART NUMBER	WIRE DIA. (INCHES)	NO. LEAVES	▲ TYPE SPRING
787	D6DZ 5560-AD		4	L
829	D6DZ 5560-AE		4	L
859	D6DZ 5560-AF		4	L
927	D6DZ 5560-T		5	L
977	D6DZ 5560-U		5	L

K (Mark V)

CHECK LOAD (ON IDENT. TAPE)	SERVICE PART NUMBER	WIRE DIA. (INCHES)	NO. LEAVES	▲ TYPE SPRING
1000	D8AZ 5560-A	.605		C
1040	★ D5AZ 5560-AC r/b D5AZ 5560-U	.605		C
1050	★ D4AZ 5560-Z r/b D4AZ 5560-Y	.615		C
1080	D5AZ 5560-U	.605		C
1100	D4AZ 5560-AA	.625		C
1120	D5AZ 5560-V	.605		C
1150	D4AZ 5560-AB	.625		C

L (Bobcat)

CHECK LOAD (ON IDENT. TAPE)	SERVICE PART NUMBER	WIRE DIA. (INCHES)	NO. LEAVES	▲ TYPE SPRING
529	D7FZ 5560-G		5	L
529	★ D7FZ 5560-H r/b D6FZ 5560-B		5	L
578	D7FZ 5560-B		5	L
578	D7FZ 5560-D		5	L
628	D8FZ 5560-A		5	L

L (Bobcat) — Cont'd

CHECK LOAD (ON IDENT. TAPE)	SERVICE PART NUMBER	WIRE DIA. (INCHES)	NO. LEAVES	▲ TYPE SPRING
628	D8FZ 5560-D		5	L
695	D8FZ 5560-B		6	L
695	D8FZ 5560-F		6	L
745	★ D7FZ 5560-J		6	L
786	★ D7FZ 5560-K		6	L
786	D8FZ 5560-E		6	L
840	D8FZ 5560-C		6	L

P (Zephyr)

CHECK LOAD (ON IDENT. TAPE)	SERVICE PART NUMBER	WIRE DIA. (INCHES)	NO. LEAVES	▲ TYPE SPRING
757	★ D8BZ 5560 V r/b D9BZ 5560-U	.539		C
760	D8BZ 5560-Z	.549		C
817	★ D8BZ 5560-W r/b D9BZ 5560-V	.539		C
824	★ D8BZ 5560-AA r/b E1BZ 5560-J	.549		C
824	D8BZ 5560-AJ	.585		C
850	D8BZ 5560-K	.575		C
877	★ D8BZ 5560-Y r/b D9BZ 5560-V	.539		C
888	★ D8BZ 5560-AB r/b E1BZ 5560-J	.549		C
930	D8BZ 5560-L	.575		C
1009	D8BZ 5560-M	.575		C
1014	D8BZ 5560-AC	.533		C
1014	D8BZ 5560-AF	.591		C
1094	D8BZ 5560-AD	.543		C
1094	D8BZ 5560-AG	.591		C
1094	D8BZ 5560-AK	.591		C
1174	D8BZ 5560-AE	.543		C
1174	D8BZ 5560-AH	.591		C

V (Versailles)

CHECK LOAD (ON IDENT. TAPE)	SERVICE PART NUMBER	WIRE DIA. (INCHES)	NO. LEAVES	▲ TYPE SPRING
869	★ D7DZ 5560-B		4	L
909	★ D7DZ 5560-D		4	L

COPYRIGHT © 1986 — FORD MOTOR COMPANY — DEARBORN, MICHIGAN

1979 cars will include vehicle spring identification codes on the vehicle certification label. Use this code to select the proper spring service part number from the application charts which are sequenced by spring code within each carline.

1979 CHECK LOAD CHART

SPRING CODE	SERVICE PART NUMBER	WIRE DIA. (INCHES)	NO LEAVES	CHECK LOAD	▲ TYPE SPRING	SPRING CODE	SERVICE PART NUMBER	WIRE DIA. (INCHES)	NO LEAVES	CHECK LOAD	▲ SPRING
5560	SPRING ASSY. (REAR)										
	A (Mercury)										
1	D9AZ 5560-A	.531		705	C	E	D9AZ 5560-E	.543		629	C
2	D9AZ 5560-AF	.530		755	C	F	D9AZ 5560-F	.553		667	C
3	D9AZ 5560-AJ	.621		644	C	J	D9AZ 5560-J	.606		847	C
4	D9AZ 5560-AR	.621		691	C	K	D9AZ 5560-K	.606		897	C
5	D9AZ 5560-AL	.621		739	C	L	D9AZ 5560-L	.606		946	C
6	★ D9AZ 5560-AM	.628		775	C	M	D9AZ 5560-M	.628		895	C
7	★ D9AZ 5560-AG	.554		743	C	N	D9AZ 5560-N	.628		954	C
	r/b E0AY 5560-C					S	D9AZ 5560-V	.529		725	C
8	D9AZ 5560-AH	.563		781	C	T	★ D9AZ 5560-W	.543		592	C
A	★ D9AZ 5560-A	.531		705	C	U	D9AZ 5560-AA	.553		705	C
B	D9AZ 5560-B	.522		633	C	V	★ D9AZ 5560-AB	.606		797	C
C	D9AZ 5560-C	.530		663	C	Y	D9AZ 5560-AE	.626		997	C
D	D9AZ 5560-D	.530		694	C	Z	D9AZ 5560-AC	.616		835	C
	D (Lincoln)										
F	D4AZ 5560-AU	.641		1350	C	Z	D4AZ 5560-AV	.641		1300	C
P	D4AZ 5560-AT	.641		1400	C						
	F (Cougar)										
1	D4AZ 5560-Y	.610		1000	C	A	D5AZ 5560-M	.600		930	C
5	★ D4AZ 5560-Z	.615		1050	C	B	D5AZ 5560-N	.600		930	C
	r/b D4AZ 5560-Y					C	D5AZ 5560-R	.600		980	C
6	D4AZ 5560-AA	.625		1100	C	D	D5AZ 5560-S	.608		1030	C
7	★ D4AZ 5560-W	.610		950	C						
	r/b D4AZ 5560-Y										
	G (Monarch)										
A	D9DZ 5560-A		4	909	L	R	D6DZ 5560-AF		4	859	L
K	★ D7DZ 5560-D		4	869	L	S	D6DZ 5560-T		5	927	L
P	D6DZ 5560-AD		4	787	L	T	D6DZ 5560-U		5	977	L
Q	D6DZ 5560-AE		4	829	L						
	J (Capri)										
E	D9BZ 5560-E	.547		719	C	K	D9BZ 5560-H	.521		630	C
F	D9BZ 5560-K	.512		626	C	L	D9BZ 5560-N	.521		675	C
G	D9BZ 5560-L	.512		715	C	M	D9BZ 5560-P	.521		718	C
H	D9BZ 5560-M	.512		759	C	N	D9BZ 5560-R	.521		762	C
J	D9BZ 5560-G	.512		800	C	R	D9BZ 5560-J	.521		806	C
	K (Mark V)										
5	★ D4AZ 5560-Z	.615		1050	C	J	D5AZ 5560-V	.605		1120	C
	r/b D4AZ 5560-Y					K	D5AZ 5560-U	.605		1080	C
6	D4AZ 5560-AA	.625		1100	C	R	D4AZ 5560-AB	.625		1150	C
7	★ D7AZ 5560-C	.605		1080	C						
	r/b D5AZ 5560-U										

1979 CHECK LOAD CHART

SPRING CODE	SERVICE PART NUMBER	WIRE DIA. (INCHES)	NO LEAVES	CHECK LOAD	▲ TYPE SPRING	SPRING CODE	SERVICE PART NUMBER	WIRE DIA. (INCHES)	NO LEAVES	CHECK LOAD	▲ SPRING
5560	SPRING ASSY. (REAR) — Cont'd										
L (Bobcat)											
A	D7FZ 5560-G		5	529	L	E	★ D7FZ 5560-J		6	745	L
B	D7FZ 5560-B		5	578	L	F	★ D7FZ 5560-K		6	786	L
C	★ D7FZ 5560-H r/b D6FZ 5560-B		5	529	L	J	D7FZ 5560-G		5	529	L
D	D7FZ 5560-D		5	578	L	K	D7FZ 5560-D		5	578	L
P (Zephyr)											
A	★ D8BZ 5560-Y r/b D9BZ 5560-V	.539		877	C	J	D8BZ 5560-AG	.591		1094	C
						K	D8BZ 5560-AH	.591		1174	C
B	D8BZ 5560-Z	.549		760	C	L	D8BZ 5560-AJ	.585		824	C
C	★ D8BZ 5560-AA r/b E1BZ 5560-J	.549		824	C	M	D8BZ 5560-AK	.591		1094	C
D	★ D8BZ 5560-AB r/b E1BZ 5560-J	.549		888	C	Y	★ D8BZ 5560-V r/b D9BZ 5560-U	.539		757	C
E	D8BZ 5560-AC	.533		1014	C	S	D9BZ 5560-S	.530		728	C
F	D8BZ 5560-AD	.543		1094	C	T	D9BZ 5560-T	.530		774	C
G	D8BZ 5560-AE	.543		1174	C	U	D9BZ 5560-U	.539		729	C
H	D8BZ 5560-AF	.591		1094	C	V	D9BZ 5560-V	.539		775	C
V (Versailles)											
A	★ D7DZ 5560-D		4	869	L	A	D9DZ 5560-A		4	909	L

COPYRIGHT © 1986 — FORD MOTOR COMPANY — DEARBORN, MICHIGAN

5564-5 LEAF (REAR SPRING)-Refer to group 5560 for Model Application. Determine applicable Spring Assy. part number. Find Spring Assy. part number below. Read across to find part number No. 1 or No. 2 leaf desired.

1973/ IDENTIFICATION CHART

SPRING ASSY.	LEAF NO. 1	LEAF NO.2	SPRING ASSY.	LEAF NO.1	LEAF NO.2
D1DZ 5560-D	★ D0DZ 5564-B	★ D1DZ 5565-D	D5FZ 5560-T	★ D5FZ 5564-A	★ D5FZ 5565-B
D1DZ 5560-E	★ D0DZ 5564-A	★ D1DZ 5565-C	D5FZ 5560-V	D5FZ 5564-B	★ D5FZ 5565-C
D2DZ 5560-A	★ D0DZ 5564-A	★ D1DZ 5565-D	D5FZ 5560-W	D5FZ 5564-B	★ D5FZ 5565-C
D2DZ 5560-B	D0DZ 5564-A	★ D1DZ 5565-A	D5FZ 5560-Y	D5FZ 5564-B	★ D5FZ 5565-C
D3RY 5560-A	★ D3RY 5564-A	None	D5FZ 5560-Z	★ D5FZ 5564-A	★ D5FZ 5565-B
D3WY 5560-A	D0WY 5564-A	D0WY 5565-A	D6DZ 5560-P	★ D5DZ 5564-A	★ D6DZ 5565-C
D3WY 5560-B	D0WY 5564-A	D0WY 5565-A	D6DZ 5560-R	★ D5DZ 5564-A	★ D6DZ 5565-C
D3WY 5560-C	★ D3WY 5564-A	★ D3WY 5565-B	D6DZ 5560-S	★ D5DZ 5564-A	★ D6DZ 5565-C
D3WY 5560-D	★ D3WY 5564-A	★ D3WY 5565-B	D8DZ 5560-A	D5FZ 5564-B	D6FZ 5565-A
D4DZ 5560-A	★ D4DZ 5564-A	★ D4DZ 5565-A	D6DZ 5560-T	★ D6DZ 5564-B	★ D6DZ 5565-E
D4DZ 5560-B	★ D0DZ 5564-A	D4DZ 5565-B	D6DZ 5560-U	★ D6DZ 5564-B	★ D6DZ 5565-E
D4DZ 5560-D	★ D4DZ 5564-B	D4DZ 5565-C	D6DZ 5560-Y	D5DZ 5564-C	★ D6DZ 5565-D
D4DZ 5560-E	★ D4DZ 5564-C	D4DZ 5565-D	D6DZ 5560-Z	D5DZ 5564-C	★ D6DZ 5565-D
D4DZ 5560-L	★ D0DZ 5564-A	D4DZ 5565-B	D6DZ 5560-AA	D5DZ 5564-C	★ D6DZ 5565-D
D4FZ 5560-L	★ D4FZ 5564-C	D4FZ 5565-C	D6DZ 5560-AB	★ D5DZ 5564-D	★ D6DZ 5565-A
D4FZ 5560-S	★ D4FZ 5564-C	D4FZ 5565-C	D6DZ 5560-AC	★ D5DZ 5564-D	★ D6DZ 5565-A
D4FZ 5560-T	★ D4FZ 5564-A	D4FZ 5565-A	D6DZ 5560-AD	★ D5DZ 5564-A	★ D6DZ 5565-C
D4FZ 5560-AB	★ D4FZ 5564-C	D4FZ 5565-C	D6DZ 5560-AE	★ D5DZ 5564-A	★ D6DZ 5565-C
★ D4FZ 5560-AC	★ D4FZ 5564-C	D4FZ 5565-C	D6DZ 5560-AF	★ D5DZ 5564-A	★ D6DZ 5565-C
D4FZ 5560-AD	★ D4FZ 5564-B	D4FZ 5565-B	D6DZ 5560-AK	★ D5DZ 5564-D	★ D6DZ 5565-A
D4FZ 5560-AE	★ D4FZ 5564-B	D4FZ 5565-B	D6DZ 5560-AL	★ D5DZ 5564-D	★ D6DZ 5565-A
D4FZ 5560-AF	★ D4FZ 5564-A	D4FZ 5565-A	D6FZ 5560-A	D5FZ 5564-B	★ D6FZ 5565-A
D4RY 5560-A	★ D4RY 5564-A		D6FZ 5560-B	D5FZ 5564-B	★ D6FZ 5565-A
D4RY 5560-B	★ D4RY 5564-B		D6FZ 5560-C	D5FZ 5564-B	★ D6FZ 5565-A
D5DZ 5560-A	★ D5DZ 5564-B	★ D5DZ 5565-B	D6FZ 5560-D	★ D5FZ 5564-C	★ D6FZ 5565-B
D5DZ 5560-B	★ D5DZ 5564-B	★ D5DZ 5565-B	★ D6FZ 5560-E	★ D5FZ 5564-A	★ D6FZ 5565-C
D5DZ 5560-C	★ D5DZ 5564-B	★ D5DZ 5565-B	D6FZ 5560-F	★ D5FZ 5564-A	★ D6FZ 5565-C
D5DZ 5560-D	★ D5DZ 5564-B	★ D5DZ 5565-B	D7DZ 5560-B	★ D7DZ 5564-A	★ D6DZ 5565-C
D5DZ 5560-E	★ D5DZ 5564-A	★ D5DZ 5565-A	★ D7DZ 5560-D	★ D7DZ 5564-A	★ D6DZ 5565-C
D5DZ 5560-F	★ D5DZ 5564-A	★ D5DZ 5565-A	D7FZ 5560-B	D5FZ 5564-B	★ D6FZ 5565-A
D5DZ 5560-G	★ D5DZ 5564-A	★ D5DZ 5565-A	D7FZ 5560-D	D5FZ 5564-B	D7FZ 5565-A
D5DZ 5560-H	★ D5DZ 5564-A	★ D5DZ 5565-A	D7FZ 5560-G	D5FZ 5564-B	★ D6FZ 5565-A
D5DZ 5560-J	★ D5DZ 5564-C	★ D5DZ 5565-C	★ D7FZ 5560-H	D5FZ 5564-B	D7FZ 5565-A
★ D5DZ 5560-K	★ D5DZ 5564-C	★ D5DZ 5565-C	D7FZ 5560-J	D7FZ 5564-A	D7FZ 5565-B
D5DZ 5560-L	★ D5DZ 5564-C	★ D5DZ 5565-C	D7FZ 5560-K	D7FZ 5564-A	D7FZ 5565-B
D5DZ 5560-M	★ D5DZ 5564-D	★ D5DZ 5565-D	D7FZ 5560-L	D5FZ 5564-B	★ D6FZ 5565-A
D5DZ 5560-N	★ D5DZ 5564-D	★ D5DZ 5565-D	D7FZ 5560-M	D5FZ 5564-B	D7FZ 5565-A
★ D5DZ 5560-AA	★ D5DZ 5564-E	★ D5DZ 5565-E	★ D7FZ 5560-N	★ D7FZ 5564-A	D7FZ 5565-B
★ D5DZ 5560-AB	★ D5DZ 5564-E	★ D5DZ 5565-E	D7FZ 5560-P	★ D7FZ 5564-A	D7FZ 5565-B
★ D5DZ 5560-AC	★ D5DZ 5564-E	★ D5DZ 5565-E	D8FZ 5560-A	D5FZ 5564-B	★ D6FZ 5565-A
D5DZ 5560-AD	★ D5DZ 5564-D	★ D5DZ 5565-F	D8FZ 5560-B	★ D7FZ 5564-A	D7FZ 5565-B
D5DZ 5560-AE	★ D5DZ 5564-D	★ D5DZ 5565-F	D8FZ 5560-C	★ D7FZ 5564-A	D7FZ 5565-B
D5FZ 5560-E	D4FZ 5564-C	D4FZ 5565-C	D8FZ 5560-D	D5FZ 5564-B	D7FZ 5565-A
D5FZ 5560-F	D4FZ 5564-C	D4FZ 5565-C	D8FZ 5560-E	★ D7FZ 5564-A	D7FZ 5565-B
D5FZ 5560-S	★ D5FZ 5564-C	★ D5FZ 5565-D	D8FZ 5560-F	★ D7FZ 5564-A	D7FZ 5565-B

YEAR	MODEL/RESTRICTIONS	PART NUMBER	DESCRIPTION	QTY.
73/74	J	130908-ES2	Bolt (No. 1 leaf)-round head-5/16"-18 x 1 15/64"	2
		33797-S7	(M-50)-nut (No. 1 leaf)-hex.-5/16"-18	2
5586	**ANTI-SQUEAK (REAR SPRING)**			
73	F	C0AA 5586-B		4
75	G "Before 5/1/75"			AR
73/75	L,P "Before 5/1/75"			4
75/	G,L,V "From 5/1/75"	D5DZ 5586-A		4
75/77	P "From 5/1/75"			4
73/78	J	D0RY 5586-A		4

YEAR	MODEL/RESTRICTIONS	ENGINE CYL.	ENGINE C.I.D. (C.C.D.)	PART NUMBER	DESCRIPTION	QTY.
5A589	**LEVELER KIT (AIR SPRING)**					
79	A,D,F,G,K			D9AZ 5A589-B	Remote control for aux. air spring kit	1
73/	C,D,K,	6&8	All	D9AZ 5A589-A	Air spring only	1
73/78	A					1
74/	F	8	All			1
73/	C,D,K	6&8	All	★ D3AZ 5A589-A	Rear-automatic fill	1
73/78	A					1
74/	F	8	All			1

YEAR	MODEL/RESTRICTIONS	PART NUMBER	DESCRIPTION	QTY.
5598	**SPACER (REAR SPRING)**			
74/75	L(62,64)	★ D4ZZ 5598-A	Not replaced	AR
74/75	L(73)	★ D4FZ 5598-A	Not replaced	AR
5624	**INSERT (REAR SPRING)**			
73/74	J	D3RY 5624-A		4
5627	**Refer to group 5630**			

5630 SHACKLE KIT (REAR SPRING)

73	F		D3ZZ 5630-B	Rear spring-front			2
Consists of							
1-D3ZZ 5781-B	Bushing	1-383577-S100	Nut	1-382486-S	Bolt		
73	F		D1ZZ 5630-A	Rear spring-rear			2
Consists of							
1-D1ZA 5627-AA	Bar	4-C6DZ 5781-A	Bushing	2-376918-S2	Nut		
1-D1ZA 5776-AA	Shackle assy.						
75/77	G		D5DZ 5630-D	Rear spring-rear-use on vehicles with "U" shaped shackle-4" stud to stud			2
Consists of							
1-D5DW 5627-BB	Bar	2-D4DZ 5781-A	Bushing	1-34988-S2	Nut		
1-D5DW 5776-BB	Shackle	2-D4ZZ 5781-A	Bushing	1-376918-S2	Nut		
76/	G		D6DZ 5630-A	Rear spring-rear-use on vehicle with "U" shaped shackle-3 1/2" stud to stud			2
Consists of							
1-D5DW 5627-AB	Bar	2-D4DZ 5781-A	Bushing	1-34988-S2	Nut		
1-D5DW 5776-AB	Shackle	2-D4ZZ 5781-A	Bushing	1-376918-S2	Nut		
75	L		D5FZ 5630-A	Rear spring-rear-use on vehicles with "L" shaped shackle - 3 1/16" stud to stud			2
Consists of							
2-D52W 5776-AA	Shackle assy.	4-D1DZ 5781-A	Bushing	2-376918-S2	Nut		

COPYRIGHT © 1986 — FORD MOTOR COMPANY — DEARBORN, MICHIGAN

1973/79 LINCOLN-MERCURY CARS

YEAR	MODEL/RESTRICTIONS	PART NUMBER	DESCRIPTION	QTY.
5630	SHACKLE KIT (REAR SPRING) — Cont'd			
75	L	★ D5FZ 5630-B Not replaced	Rear spring-rear-use on vehicles with "U" shaped shackle – 3" stud to stud	2
	Consists of 1-D52W 5627-BA Bar 1-D52W 5776-BA Shackle	2-D4DZ 5781-A Bushing 4-D4ZZ 5781-A Bushing	1-34988-S2 Nut 1-376918-S2 Nut	
74/	L	D4FZ 5630-C	Rear spring-front	2
	Consists of 1-C4DZ 5781-C Bushing	1-383577-S100 Nut	1-385775-S100 Bolt	
74/	L	D4FZ 5630-D	Rear spring-rear-use on vehicles with "L" shaped shackle – 2 1/2" stud to stud	2
	Consists of 2-D42W 5776-AC Shackle assy.	4-D4DZ 5781-A Bushing	2-376918-S2 Nut	
74/75	L	D4FZ 5630-B	Rear spring-rear-use on vehicles with "U" shaped shackle – 2 3/8" stud to stud	2
	Consists of 1-D42W 5627-AA Bar 2-D42W 5776-BA Shackle	2-D4DZ 5781-A Bushing 2-D4ZZ 5781-A Bushing	2-376918-S2 Nut	
73	P	C60Z 5630-B	Rear spring-front	2
	Consists of 1-C4DZ 5781-C Bushing	1-33773-S4 or 1-382636-S100 Nut	1-383168-S100 Bolt	
73	P	D10Z 5630-A	Rear spring-rear	2
	Consists of 1-D10A 5627-AA Bar 1-D10A 5776-AA Shackle assy.	4-D4DZ 5781-A Bushing	2-376918-S2 Nut	
74	P	★ D4DZ 5630-B	Rear spring-front	2
	Consists of 1-C4DZ 5781-C Bushing	1-383577-S100 Nut	1-382486-S100 or 1-385925-S100 Bolt	
74	P	D4DZ 5630-A	Rear spring-rear	2
	Consists of 1-D4DW 5627-BA Bar 1-D4DW 5776-BA Shackle assy.	4-D4DZ 5781-A Bushing	2-376918-S2 Nut	
75/77	P	D5DZ 5630-B	Rear spring-rear-use on vehicles with "U" shaped shackle – 3 1/2" stud to stud	2
	Consists of 1-D5BW 5627-AA Bar 1-D5BW 5776-AA Shackle	4-D4DZ 5781-A Bushing	2-376918-S2 Nut	
75/77	P	★ D5DZ 5630-A	Rear spring-rear-use on vehicles with "U" shaped shackle – 4" stud to stud	2
	Consists of 1-D5BW 5627-BA Bar 1-D5BW 5776-BA Shackle	4-D4DZ 5781-A Bushing	2-376918-S2 Nut	
77	V	D5DZ 5630-D	Rear spring-rear-use on vehicles with 'U' shaped shackle-4"stud to stud	2
	Consists of 1-D5DW 5627-BB Bar 1-D5DW 5776-BB Shackle	2-D4DZ 5781-A Bushing 2-D4ZZ 5781-A Bushing	1-34988-S2 Nut 1-376918-S2 Nut	

YEAR	MODEL/RESTRICTIONS	PART NUMBER	DESCRIPTION	QTY.
5630	SHACKLE KIT (REAR SPRING) — Cont'd			
77/	V	D6DZ 5630-A	Rear spring-rear-use on vehicle with 'U' shaped shackle-3 1/2" stud to stud	2

Consists of

1-D5DW 5627-AB	Bar	2-D4DZ 5781-A	Bushing	1-34988-S2	Nut
1-D5DW 5776-AB	Shackle	2-D4ZZ 5781-A	Bushing	1-376918-S2	Nut

5A637	CAM (REAR SUSPENSION ARM ADJUSTING)			
73/	A,D,Y	C5AZ 5A637-B		2
5A638	BUSHING ASSY. (REAR SUSPENSION UPPER ARM)			
79	A	★ D9AZ 5781-A	Service fix only	2
79	J,P exc. P/C & Taxi	E0BZ 5A638-A	Rear axle bushing only	2
	J,P P/C & Taxi	E0BZ 5A638-B	Rear axle bushing only	2
79	A	★ D9AZ 5781-A	Service fix	2
79	D,K	E0VY 5A638-B	Service fix kit	1
5A639	BAR and BUSHING ASSY. (REAR TRACK)			
73/78	A,Y	D3AZ 5A639-A		1
73/79	D	D3AZ 5A639-A		1
73/	A,Y	385059-S101	(WW-98-HH)-stud (bar to axle)-9/16"-12-12 x 3 15/16"	2
73/	A,D,Y	385234-S	(XX-338-G)-washer (bar to frame)-5/8" x 2"	2
73/	A,D,Y	385235-S	(VV-2-G)-spacer (bar to frame)-5/8" I.D. x 7/8" O.D. x 1 7/8"	2
5B640	BAR KIT (REAR TRACK MOUNTING)			
73/	A,Y	D2AZ 5B640-A		1
75/	D			1

Consists of

1-D0SA 5A782-A	Washer-outer	2-D2AA 5A784-AA	Bushing	1-33984-S2	Nut
1-D0SA 5A783-A	Washer-inner	1-D0SA 5A785-A	Ferrule-outer	1-72062-S2	Pin
		1-D2AA 5A786-AA	Ferrule-inner		

73/74	D	★ D0SZ 5B640-A		1

Consists of

1-D0SA 5A782-A	Washer-outer	2-D1VA 5A784-AA	Bushing	1-D0SA 5A787-A	Ferrule mtg.
1-D0SA 5A783-A	Washer-inner	1-D0SA 5A785-A	Ferrule-outer	1-33984-S2	Nut
		1-D0SA 5A786-A	Ferrule-inner	1-72062-S2	Pin

5A649	ARM ASSY. (REAR SUSPENSION LOWER)			
79	A P/C only	★ D9AZ 5A649-A	Blue stripe-r/b multiple	2
	(Exc. P/C) Mdl. 74	D9AZ 5A649-B	NONE	2
	A P/C only	D9AZ 5A649-C	LAPD rear lower (R.H.)	1
	A P/C only	D9AZ 5A649-D	LAPD rear lower (L.H.)	1
	A exc. 74 exc. P/C	D9AZ 5A649-E	Rear lower	2
73/78	A,Y(exc. P/C and Taxi)	C5AZ 5A649-B	#Orange stripe	2
73/78	A,Y(P/C and Taxi)	★ D2AZ 5A649-A r/bC5AZ 5A649-B	#White stripe	2
73/74	C,K	★5A649	Serviced only in kit-group 5A826	
73/	D	C5AZ 5A649-B	#Orange stripe	2
74	F	★5A649	Serviced only in kit-group 5A826	
79	J 4&6 cyl.	D9BZ 5A649-A	Purple stripe	2
	H/D 8 cyl.	D9BZ 5A649-B	Gold stripe	2
78	P	D8BZ 5A649-C	Std. susp.	2
	P	D8BZ 5A649-B	H/D susp. - exc. P/C	2
	P	D8BZ 5A649-D	P/C susp.	2
79	P (P/C & TAXI)	D9BZ 5A649-D	Purple stripe	2
	(Exc. P/C & TAXI)	D9BZ 5A649-B		2
73/	A,D,Y	384929-S100	(BB-200-E)-bolt (arm to axle and frame)-hex.-9/16"-12 x 4 1/8"	4
73/	A,D,Y	385020-S100	(MM-170-FA)-nut (arm to axle and frame)-lock-9/16"-12	4
75/	A,C,D,F,K,Y	385020-S101	(MM-170-FB)-nut (arm to frame)-hex.-lock-9/16"-12	2

COPYRIGHT © 1986 — FORD MOTOR COMPANY — DEARBORN, MICHIGAN

1973/79 LINCOLN-MERCURY CARS

YEAR	MODEL/RESTRICTIONS	PART NUMBER	DESCRIPTION	QTY.
5661	**BRACKET (REAR STABILIZER LINK TO CROSS MEMBER)**			
73/76	C	D20Z 5661-A		2
74/	F		w/bolt on bracket	2
73/	K	★ 5661	Improvise	2
5A666	**CYLINDER (AIR LEVELER)-Also serviced in kit-Group 5A589**			
73/74	A,C,D,K,Y	★ C7MY 5A666-A	Rear	2
75/	A,C,D,F,K	r/bD9AZ 5A666-A	Rear	2
5A667	**HOSE ASSY. (AIR LEVELER)**			
73/	A,C,D,K - - manual air leveler	★ C9AZ 5A667-C	Dealer installed-serviced only in 5A589 kit	
73	A,Y - - manual air leveler	C9MY 5A667-A	Production installation	1
73/74	A,Y - - automatic air leveler	★ D3AZ 5A667-A		1
75	A,Y - - automatic air leveler	★ D5AZ 5A667-B	Valve to shock	1
76	A,Y - - manual air leveler	★ D6AZ 5A667-A	Production installation	1
77/78	A - - manual air leveler	★ D7AZ 5A667-A	Production installation	1
79	A - - manual air leveler	D9AZ 5A667-A	Production Installation upper	1
79	A - - manual air leveler	D9AZ 5A667-B	Production installation lower	1
73/	A,Y	★ 384810-S	(I)-40-FB)-adapter to valve	1
5A668	**CLIP (AIR LEVELER HOSE)-Improvise**			
5A669	**DAMPER (REAR SPRING)**			
74/76	L	★ C6DZ 5A669-A		1
77/	L	★ D7FZ 5A669-A		1
76/	C,D,K	D6VY 5A669-A		AR
78/	P	D8BZ 5A669-A	Front spring	2
	P	D8BZ 5A669-C	Rear spring	2
5A680	**SPACER (AIR LEVELER HOSE)-Improvise from 7/32" thick steel**			
5A687	**GAUGE and VALVE ASSY. (AUTOMATIC AIR LEVELER)**			
73/	A,D,K - - w/dealer installed automactic air leveler kit	C9AZ 5A687-A		1
73/76	C,Y			1
74/	F			1
5A688	**BRACKET (AUTOMATIC AIR LEVELER VALVE MOUNTING)**			
73/74	D	★ D0VY 5A688-A		1
73/75	A,Y			1
5A689	**CONNECTOR (AUTOMATIC AIR LEVELER TUBE)**			
73/	A,C,K,Y - - w/dealer installed automatic air leveler kit	C9AZ 5A689-A		1
74/	F			1
5B689	**LEVER (AUTOMATIC AIR LEVELER VALVE ACTUATING)**			
73/75	A,Y	★ D3AZ 5B689-A	Not replaced	1
5A690	**LINK (AUTOMATIC AIR LEVELER VALVE ACTUATING)**			
73/75	A,Y	★ D3AZ 5A690-A	Not replaced	1
73/74	K	C8VY 5A690-A		1
5A694	**BRACKET ASSY. (AUTOMATIC AIR LEVELER COMPRESSOR)**			
73/75	A,Y - - w/production installed levelers	★ D3AZ 5A694-A	Not replaced	
73/74	A,C,K,Y - - w/dealer installed levelers	D0AZ 5A694-A		1
75/	A,C,D,F,K - - w/dealer installed levelers			1
5A700	**SUPPORT (AUTOMATIC AIR LEVELER VALVE and BRACKET)**			
73/75	A,Y	★ D3AZ 5A700-A	Not replaced	1

5705 U-BOLT (REAR SPRING)

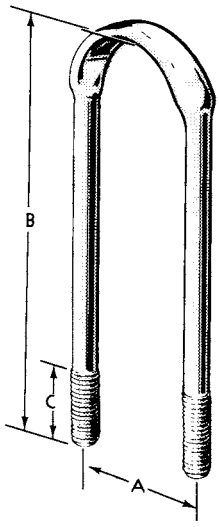

P-3242

SIZE CHART

YEAR	MODEL	PART NUMBER	SIZE (INCHES) A	B	C	THREAD	QTY.
73	F	★ D3WY 5705-A	3 1/4	7	1 5/8	7/16-20	4
75	G(54H,66H) - - rear drum brakes	D5DZ 5705-A	2 3/4	5 3/4	1 1/2	7/16-20	4
75/	G(54K,66K) - - rear drum brakes	D5DZ 5705-B	2 3/4	7	1 1/2	7/16-20	4
76/	G - - rear drum brakes-std. susp.		3 1/4				4
76/	G - - rear drum brakes-H/D susp.	D6DZ 5705-A	3 3/16	7 5/16	1 7/8	7/16-20	4
75/	G - - rear disc brakes	D5DZ 5705-C	3 3/8	7	1 7/8	7/16-20	4
76/	G - - rear disc brakes-std. susp.						4
76/	G - - rear disc brakes-H/D susp.	D6DZ 5705-B	3 3/8	7 5/16	1 7/8	7/16-20	4
73/74	J "Before 1/1/74"	★ D3RY 5705-A					2
		/bD5RY 5705-B					
74/76	J "From 1/1/74" #Green	D5RY 5705-B					4
74	L	D2FZ 5705-A	2 3/4	6 1/4	1 7/8	7/16-20	4
75/	L	D5FZ 5705-A	2 3/8	6 1/4	1 7/8	7/16-20	4
73/74	P	C9ZZ 5705-A	3 1/4	5 1/2	1 1/4	7/16-20	4
75/77	P	D5DZ 5705-A	2 3/4	5 3/4	1 1/2	7/16-20	4
77/	V	D5DZ 5705-C	3 3/8	7	1 7/8	7/16-20	4

YEAR	MODEL/RESTRICTIONS	PART NUMBER	DESCRIPTION	QTY.
73/78	J	N800078-S51	Nut-hex. flange lock-M12 x 1.75 (Metric fine)	8
75	J	N820015-S72		4

5A705 COVER (REAR TRACK BAR STUD)

73/	A,D,Y	C7AZ 5A705-A		1

5A712 VALVE and LEVER ASSY. (AUTOMATIC AIR LEVELER)

NOTE 1 When used with manual fill replace 383149-S connector on outlet side with 382493-S.

73/75	A,Y	★ D3AZ 5A712-A		1
73/74	K - - NOTE 1	C9AZ 5A712-A	Incl. 382493-S connector	1

5A713 COMPRESSOR and BRACKET ASSY. (AIR LEVELER)-Also refer to group 5A773

73/75	A,Y	★ D3AZ 5A713-A	Compressor and bracket only-for production-installed levelers	1
73/74	A,C,D,K,Y	★ D0AZ 5A713-A	Compressor and bracket kit-for dealer-installed levelers	1

Consists of

1-D0AJ 5A681-A	Compressor assy.	2-26483-S7	Screw	2-34825-S	Lockwasher
1-D0AZ 5A694-A	Bracket	2-33795-S7	Nut		

COPYRIGHT © 1986 — FORD MOTOR COMPANY — DEARBORN, MICHIGAN

1973/79 LINCOLN-MERCURY CARS

YEAR	MODEL/RESTRICTIONS	PART NUMBER	DESCRIPTION	QTY.
5A714	HOSE ASSY. (AUTOMATIC AIR LEVELER COMPRESSOR TO VALVE)			
73/74	K	★C9AZ 5A714-A	144" long-not replaced	1
5A718	TUBE (AUTOMATIC AIR LEVELER COMPRESSOR TO VALVE)-Improvise from 17543 bulk hose			
5724	CLAMP (REAR SPRING)			
73	F	C4DZ 5724-A	Clamp kit	AR
74/	L		Clamp kit-use with 2 1/2" springs	AR
77/	V		Clamp kit	AR
	Consists of			
	1-378800-S Retainer		1-378801-S Clamp	
	1-COLL 5334-A Insulator			
73/74	J	D3RY 5724-A	Clamp only	4
76/78	J	★D5RY 5724-B	Clamp only-2 1/4" wide, 1 5/8" wide	4
73/74	J	★60330-S	Rivet-3/16" x 3/8"	4
5736	RETAINER (REAR SPRING CENTER MOUNTING INSULATOR)			
73	F	★C60Z 5736-B	Not replaced	2
75	G(54K,66K) - - rear drum brakes	★D5DZ 5736-A	Not replaced	2
	G - - rear disc brakes	★D5DZ 5736-B	Not replaced	2
76/	G - - std. suspension	D6DZ 5736-E		2
	G - - H/D suspension	D6DZ 5736-F		2
73/74	J	★D2RY 5736-A		2
76/78	J	★D5RY 5736-A	#White-69BB 5A545-AA	2
74	L(62,64) - - w/std. suspension	D4FZ 5736-A	#A	2
74	L(62,64) - - with H/D suspension	D4FZ 5736-C	#B	2
75/76	L(62,64) - - w/std. suspension	★D5FZ 5736-A		2
77/	L (62,64)			2
75/76	L(62,64) - - with H/D suspension	★D5FZ 5736-D		2
74	L(73)	D4FZ 5736-B	#D	2
75/76	L(73) - - w/std. suspension	★D5FZ 5736-C		2
77/	L (73)			2
75/76	L(73) - - with H/D suspension	★D5FZ 5736-D		2
77/	V	D6DZ 5736-E		2
5A739	SLEEVE (AUTOMATIC AIR LEVELER VALVE)			
73/75	A,K,Y	★382215-S	(UU-137)-insert (to valve)-1/4" tube brass	2
5741	INSULATOR (REAR SPRING CENTER MOUNTING)			
73	F	C60Z 5741-A		4
75	G	★D5DZ 5741-A	Not replaced	4
76/	G - - std. suspension	D6DZ 5741-A		4
76/	G - - H/D suspension	D6DZ 5741-B	#Blue paint markings	4
73/78	J	D0RY 5741-B	Lower	2
73/74	J	D0RY 5741-A	Upper	2
76/78	J - - 6 cyl	D0RY 5741-A	Upper	2
74/	L	D4FZ 5741-A		4
77/	V	D6DZ 5741-A		4
5K751	CAM (REAR SUSPENSION ARM ADJUSTING)			
79	A	D9AZ 5K751-A	Cam only	
73	C,K	★D20Z 5K751-A	Cam only-also serviced in kit-group 5K751	4
73/	C,K	D20Z 5K751-B	Cam kit-also serviced in kit-group 5A826	1
	Consists of			
	2-D20Z 5K751-A Cam	2-385313-S100 Bolt	2-385314-S101 Nut	
78/	F,P	D8BZ 5K751-A		2
5K756	RESERVOIR (AUTOMATIC AIR LEVELER)			
73/74	A,Y	★D3AZ 5K756-A	Not replaced	1
75	A,Y	★5K756	Serviced only in assy.-group 5A847	

1973/79
LINCOLN-MERCURY CARS

5A772 BAR ASSY. (REAR STABILIZER)
☆S-Std. H/D-Heavy Duty ▲ Paint Code Ident. B-Blue G-Green Or-Orange T-Tan V-Violet W-White Y-Yellow
†Not required

A (Mercury)

YEAR	CYL.	C.I.D. (C.C.D.)	MODEL	STABILIZER BAR ☆TYPE	DIA.	▲IDENT.	QTY.	PART NUMBER	INSULATOR QTY.	PART NUMBER
73/74	8	All	A(P/C)	S	3/4	1G	1	★ C9AZ 5A772-B	2	†5493
75/78	8	All	A(P/C)	S	1 1/16	1Y	1	D5AZ 5A772-A	2	†5493
79	8	All	All	S	11/16	2Y-1G	1	D9AZ 5A772-A	0	†5493
79	All	All	P/C & TAXI	H/D	1 1/16	1B	1	D9AZ 5A772-C	0	†5493

C (Montego)

YEAR	CYL.	C.I.D. (C.C.D.)	MODEL	STABILIZER BAR ☆TYPE	DIA.	▲IDENT.	QTY.	PART NUMBER	INSULATOR QTY.	PART NUMBER
73	8	All	C - - exc. 8 cyl. 351-4/B w/competition handling package	S	7/8	1Y	1	★ D20Z 5A772-B	2	D20Z 5493-A
	8	351-4/B	C - - w/competition handling package	S	11/16	1V	1	★ D20Z 5A772-C	2	D20Z 5493-E
74	8	All	C(exc. P/C)	H/D	11/16	1V	1	★ D20Z 5A772-C	2	D20Z 5493-E
	8	302	C(P/C)	S	11/16	1V	1	★ D20Z 5A772-C	2	D20Z 5493-E
	8	351,400, 460	C(P/C)	S	7/8	1Y	1	★ D20Z 5A772-B	2	D20Z 5493-A
75/76	8	All	C(exc. P/C)	H/D	11/16	1V	1	★ D20Z 5A772-C	2	D20Z 5493-E
			C(P/C) - - w/o radial tire	S	1	1W	1	★ D40Z 5A772-C	2	D40Z 5493-A
			C(P/C) - - w/radial tire	S	1 1/16	1G	1	★ D50Z 5A772-A	2	D40Z 5493-A

F (Cougar)

YEAR	CYL.	C.I.D. (C.C.D.)	MODEL	STABILIZER BAR ☆TYPE	DIA.	▲IDENT.	QTY.	PART NUMBER	INSULATOR QTY.	PART NUMBER
73	8	351-4/B	F	S	1/2	1W	1	D1WY 5A772-A	2	D0ZZ 5493-B
74/76	8	All	F	S	11/16	1V	1	D20Z 5A772-C	2	D20Z 5493-E
77/	8	All	F (65L)	S	11/16	2B	1	D70Z 5A772-A	2	D70Z 5493-A
77/	8	All	F(53D,K-65D,K)	H/D	11/16	2B	1	D70Z 5A772-A	2	D70Z 5493-A
77	8	All	F (P/C) w/o radial tire-exc. L.A.P.D.	S	1	2W	1	★ D70Z 5A772-B	2	★ D70Z 5493-B
77	8	All	F (P/C) w/radial tire-exc. L.A.P.D.	S	1 1/16	2G	1	★ D70Z 5A772-C	2	★ D70Z 5493-B
77	8	All	F(P/C-L.A.P.D.)	S	1 1/8	20R	1	★ D70Z 5A772-D	2	D70Z 5493-C
78/	8	All	F (P/C)	S	1 1/8	20R	1	★ D70Z 5A772-D	2	D70Z 5493-C

J (Capri)

YEAR	CYL.	C.I.D. (C.C.D.)	MODEL	STABILIZER BAR ☆TYPE	DIA.	▲IDENT.	QTY.	PART NUMBER	INSULATOR QTY.	PART NUMBER
73/74	4,6	All	J	S	3/8		1	★ D5RY 5A772-A	2	D4RY 5493-B
76/78	4,6	All	J	S	3/8		1	★ D5RY 5A772-A	2	D4RY 5493-B
79	4,6, 8	All	All Exc. Turbo	S	5/8	1Y	1	D9ZZ 5A772-A	0	†5493
	4	2.3	Turbo only	H/D	11/16	1G	1	D9ZZ 5A772-B	0	†5493

K (Mark IV)

YEAR	CYL.	C.I.D. (C.C.D.)	MODEL	STABILIZER BAR ☆TYPE	DIA.	▲IDENT.	QTY.	PART NUMBER	INSULATOR QTY.	PART NUMBER
73	8	460	K	S	5/8	1G	1	D2SZ 5A772-A	2	D2SZ 5493-A
74	8	460	K	S	5/8	1G	1	D4SZ 5A772-A	2	D2SZ 5493-A
75/76	8	460	K	S	3/4	1T	1	★ D5SZ 5A772-A	2	D20Z 5493-E

K (Mark V)

YEAR	CYL.	C.I.D. (C.C.D.)	MODEL	STABILIZER BAR ☆TYPE	DIA.	▲IDENT.	QTY.	PART NUMBER	INSULATOR QTY.	PART NUMBER
77/	8	All	K	S	3/4	2T	1	D7LY 5A772-A	2	D7LY 5493-B

P (Zephyr)

YEAR	CYL.	C.I.D. (C.C.D.)	MODEL	STABILIZER BAR ☆TYPE	DIA.	▲IDENT.	QTY.	PART NUMBER	INSULATOR QTY.	PART NUMBER
78	4,6, 8	All	P(exc. P/C)	H/D	5/8	NONE	1	D8BZ 5A772-A	0	†5493
	4,6, 8	All	P(P/C)	S	11/16	NONE	1	D8BZ 5A772-B	0	†5493
79	4,6, 8	All	All Exc. 3.3 P/C	S	11/16	1B	1	D8BZ 5A772-B	0	†5493
	6	3.3	3.3 P/C only	H/D	5/8	1Y	1	D9ZZ 5A772-A	0	†5493

Y (Meteor)

YEAR	CYL.	C.I.D. (C.C.D.)	MODEL	STABILIZER BAR ☆TYPE	DIA.	▲IDENT.	QTY.	PART NUMBER	INSULATOR QTY.	PART NUMBER
73/74	8	All	Y(P/C)	S	3/4	1G	1	★ C9AZ 5A772-B	2	†5493
75/76	8	All	Y(P/C)	S	1 1/16	1Y	1	D5AZ 5A772-A	2	†5493

COPYRIGHT © 1986 — FORD MOTOR COMPANY — DEARBORN, MICHIGAN

1973/79 LINCOLN-MERCURY CARS

YEAR	MODEL/RESTRICTIONS	PART NUMBER	DESCRIPTION	QTY.
73/	A(P/C)	384559-S100	(WW-98-HE)-stud (attach bar to axle)-hex. shoulder 9/16"-12-12 x 3 7/8"	2
		★34978-S	Nut (bar to arm)-hex. lock-7/16"-14	4
73/74	J	E400010-S80	Bolt (attach bar to body)-7/16"-14 x 6 1/4"	2
5A773	**COMPRESSOR REPAIR KIT (AUTOMATIC AIR LEVELER)-Also refer to group 5A713**			
73/74	A,K,Y	★C7MY 5A773-A		1

Consists of
1-Check valve 1-Check valve spring 1- "O" ring 1-Adapter

5775	**HANGER (REAR SPRING)**				
74/	L(62,64)	(RH) ★D4FZ 5775-C	(LH) ★D4FZ 5775-A	Bracket-front	1
74/	L(62,64)	D4FZ 5775-G	Hanger-1" dia. eye		2
74/75	L(62,64)	★D4FZ 5775-J	Hanger-2" dia. eye		2
74/	L(73)	(RH) ★D4FZ 5775-B	(LH) ★D4FZ 5775-D	Bracket-front	1
74/	L(73)	D4FZ 5775-H	Hanger-1" dia. eye		2
74/75	L(73)	★D4FZ 5775-K	Hanger-2" dia. eye		2
73/77	P	(RH) ★D0DZ 5775-A	(LH) ★D0DZ 5775-B	Front	1
74/	L	386037-S100	(WW-95-EG)-stud (attach hanger to body)-7/16"-14 x 2 7/8"		AR
5A775	**PLATE (REAR STABILIZER BAR STUD MOUNTING)**				
73	F	★D0WY 5A775-A	Not replaced		2
5776	**SHACKLE ASSY. (REAR SPRING) REAR**				
73/78	J	D0RY 5776-A	Bolt portion fits into rear upper support bracket		2
	J	D0RY 5776-B	Bolt portion fits into rear spring eye		2
		55691-ES7	Nut-hex.-5/16"-18		4
		44722-S8	(X-19)-washer-flat-5/16"		4
74	L		Serviced only in kit-group 5630		
5781	**BUSHING (REAR SPRING)-Also serviced in kit-group 5630**				
79	A	★D9AZ 5781-A r/bE0AZ 5A638-A	Rear susp. arm		2
73	F	D3ZZ 5781-B	Rear spring-front #Silver paint daub		1
73	F	D4DZ 5781-A	Rear spring-rear		8
75/	G	C4DZ 5781-C	Rear spring-front #Tan paint daub		2
75/	G	D4DZ 5781-A	Rear spring-rear upper-1" dia. x 1 3/4" long		8
	G	D4ZZ 5781-A	Rear spring-rear upper-1 7/8" dia. x 1 11/16" long		AR
73/78	J	D0RY 5781-A	Rear spring-front		2
73/78	J	D0RY 5781-C	Rear spring-rear-(eye)		2
73/78	J	D0RY 5781-B	Rear spring-rear-(shackle)		4
79	J	★D8BZ 5781-B	Rear susp. arm #green		2
74/	L	C4DZ 5781-C	Rear spring-front #Tan paint daub		2
74/	L	D4DZ 5781-A	Rear spring-rear upper-1" dia. x 1 3/4" long		8
74/	L		Rear spring shackle-lower		4
74/	L	D4ZZ 5781-A	Rear spring-rear upper-1 7/8" dia. x 1 11/16" long		4
73/74	P	C4DZ 5781-C	Rear spring-front #Tan paint daub		1
73/74	P	D4DZ 5781-A	Rear spring-rear		8
78/	P - - Exc. P/C & Taxi	E0BZ 5A638-A	Axle end of rear susp. upr. arm (# green)		2
	P - - P/C & Taxi	★D8BZ 5781-F r/bE0BZ 5A638-B	Axle end of rear susp. upr. arm (# blue)		2
77/79	V	D7DZ 5781-B	Rear spring-front eye		AR
5783	**BUMPER (REAR AXLE)**				
73/74	J "Before 1/1/74"	D3RY 5783-A	To bumper striker plate		2
74	J "From 1/1/74"	★D4RY 5783-A	To bumper striker plate-not replaced		2
73/78	J	★D2RY 5783-B	Rear axle-center		1
76/78	J	★D5RY 5783-A	Rear axle		2
73/74	J	120648-ES8	Bolt		4
73/74	J	34806-S7	(X-64)-lockwasher-split ring-5/16"		4
73/74	J	44722-S8	(X-19)-washer-flat-5/16"		4
5796-8	**PLATE (REAR SPRING)**				
73	F - - 8 cyl. 351-2/B	(RH) D3WY 5796-A	(LH) D3WY 5796-B		1
	F - - 8 cyl. 351-4/B	(RH) D3WY 5796-A	(LH) D3WY 5796-D		1

YEAR	MODEL/RESTRICTIONS	PART NUMBER	DESCRIPTION		QTY.
5796-8	PLATE (REAR SPRING) — Cont'd				
75	G(54H,66H) - - rear drum brakes	(RH) ★ D5DZ 5796-A	(LH) ★ D5DZ 5796-B		1
	G(54K,66K) - - rear drum brakes	(RH) D5DZ 5796-D	(LH) D5DZ 5796-C		1
	G - - rear disc brakes	(RH) D5DZ 5796-E	(LH) D5DZ 5796-F		1
76/	G - - rear drum brakes-std. susp.	(RH) D5DZ 5796-D	(LH) D5DZ 5796-C		1
	G - - rear drum brakes-H/D susp.	(RH) D6DZ 5796-E	(LH) D6DZ 5796-F		1
	G - - rear disc brakes-std. susp.	(RH) D5DZ 5796-E	(LH) D5DZ 5795-F		1
	G - - rear disc brakes-H/D susp.	(RH) D6DZ 5796-G	(LH) D6DZ 5796-H		1
73/74	J	(RH) ★ D0RY 5798-A	(LH) ★ D0RY 5798-A		1
76/78	J - - 6 cyl.				1
74	L(62,64)	(RH) ★ D4FZ 5796-B	(LH) ★ D4FZ 5796-D		1
74	L(73)	(RH) D4FZ 5796-A	(LH) ★ D4FZ 5796-C		1
75/	L(62,64) - - rear axle w/6 3/4" ring gear	(RH) D5FZ 5796-A	(LH) ★ D5FZ 5796-C		1
75/	L(62,64) - - rear axle w/8" ring gear	(RH) ★ D5FZ 5796-E	(LH) ★ D5FZ 5796-F	Not replaced	1
75/	L(73)	(RH) D5FZ 5796-B	(LH) ★ D5FZ 5796-D		1
73/77	P	(RH) ★ D0DZ 5796-B	(LH) ★ D1DZ 5796-A		1
77/	V	(RH) D5DZ 5796-E	(LH) D5DZ 5796-F		1
5A826	ARM KIT (REAR SUSPENSION) ▲ "Before 1/18/74" △ "From 1/18/74"				
73/76	C(exc. P/C) - - w/o handling pkg.	D20Z 5A826-G	Upper arm		1
74/	F - - w/o handling pkg.				1

Consists of

1-D20A 5501-FA	Arm assy.-R.H.	2-384801-S100	Nut	2-388229-S100	Bolt
1-D20A 5A803-EA	Arm assy.-L.H.	2-385020-S101	Nut	1-Instruction sheet	
2-58682-S101	Bolt				

73/74	C(P/C)	★▲D20Z 5A826-F	Upper arm		1
	C - - w/handling pkg.	r/bD40Z 5A826-A			1
74/	F - - w/handling pkg.				1

Consists of

1-D20A 5501-DA	Arm assy.-R.H.	2-384801-S100	Nut	2-385020-S100	Nut
1-D20A 5A803-CA	Arm assy.-L.H.	2-384929-S100	Bolt	1-Instruction sheet	
2-58682-S100	Bolt				

74/76	C(P/C)	△ D40Z 5A826-A	Upper arm	1
74/76	C - - w/handling pkg.			
74/	F - - w/handling pkg.			

Consists of

1-D40W 5501-AA	Arm assy.	2-58682-S101	Bolt	2-385020-S101	Nut
1-D40W 5A803-AA	Arm assy.	2-384801-S101	Nut	2-388229-S100	Bolt

73/76	C	D30Z 5A826-D	Lower arm	1
74/	F			1

Consists of

2-D70C 5538-BA	Arm assy.	4-385313-S100	Bolt	1- Instruction sheet
4-D20A 5K751-AA	Cam	4-385314-S100	Nut	

73	K "Before 5/21/73"	★ D2SZ 5A826-F	Upper arm	1
		r/bD4SZ 5A826-A(3/81)		

Consists of

1-D2SA 5501-DA	Arm assy.-R.H.	2-384801-S100	Nut	2-385020-S100	Nut
1-D2SA 5A803-DA	Arm assy.-L.H.	2-384929-S100	Bolt	1-Instruction sheet	
2-58682-S100	Bolt				

73/	K "From 5/21/73"	★ D4SZ 5A826-A	Upper arm	1

Consists of

1-D4SW 5501-AA	Arm assy.-R.H.	2-384801-S101	Nut	2-385020-S101	Nut
1-D4SW 5A803-AA	Arm assy.-L.H.	2-384929-S100	Bolt	1-Instruction sheet	
2-58682-S101	Bolt				

COPYRIGHT © 1986 — FORD MOTOR COMPANY — DEARBORN, MICHIGAN

1973/79 LINCOLN-MERCURY CARS

YEAR	MODEL/RESTRICTIONS	PART NUMBER	DESCRIPTION	QTY.
5A826	ARM KIT (REAR SUSPENSION) — Cont'd			
73/	K	D6SZ 5A826-A	Lower arm	1

Consists of

2-D6SW 5538-AA	Arm assy.	1-D4SW 5A864-AA	Instruction Sheet	4-385314-S100	Nut
4-D20A 5K751-AA	Cam	4-385313-S100	Bolt		

5K842	PLATE (REAR AXLE BUMPER MOUNTING)			
73/74	J	D3RY 5K842-A		2
5K845	PLATE (REAR SUSPENSION BUMPER STRIKER)			
73/74	J	D3RY 5K845-A	R.H.	1
73/74	J	D3RY 5K845-B	L.H.	1
5A847	RESERVOIR & BRACKET ASSY. (AUTOMATIC AIR LEVELER)			
75	A,Y	★ D5AZ 5A847-A	Not replaced	1
5A848	BRACKET (AUTOMATIC AIR LEVELER RESERVOIR)			
73/74	A,Y	D3AZ 5A848-A		1
5A849	HOSE ASSY. (AUTOMATIC AIR LEVELER RESERVOIR TO COMPRESSOR)			
73/74	A,Y	★ D3AZ 5A849-A		1
75	A,Y	★ D5AZ 5A849-B		1
5A850	HOSE ASSY. (AUTOMATIC AIR LEVELER RESERVOIR TO VALVE)			
73/74	A,Y	★ D3AZ 5A850-A	Not replaced	1
75	A,Y	★ D5AZ 5A850-B	Not replaced	1
5A855	VALVE ASSY. (AUTOMATIC AIR LEVELER)			
73	A,Y	★ D3AZ 5A855-A		1
5A860	BRACE (REAR SPRING SEAT)			
74/	K	★ D4SZ 5A860-A		1

5310 SPRING (FRONT COIL)

1973

HOW TO FIND 1973 FRONT SPRING PART NUMBERS

1) To determine Front Spring Part Number you must know:

a) YEAR
b) CAR LINE
c) BODY TYPE
d) ENGINE
e) Whether SPRING required is STANDARD or HEAVY DUTY.
f) TRANSMISSION
g) Whether the car is equipped with Air Conditioning, Power Steering, or both.
(If the car has neither air conditioning nor power steering, refer to the column called BASE).

2) Using this information, refer to the listing on the following pages.

3) Locate the appropriate Front Spring Code Number.

4) Translate the Code Number into a Service Part Number by referring to the Cross Reference listing below.

Read down to locate correct Code Number.
Read across to locate Front Spring Part Number.
(Color Identification, Normal Load, Number of Coils, Wire Diameter and Free Length are also listed).

EXAMPLE:

a) YEAR	1973
b) Car Line	MERCURY
c) Body Type	53B (N3)
d) Engine	351C
e) Spring Type	STANDARD
f) Transmission	C/M (Cruise-O-Matic)
g) Additional Equipment	P/S (Power Steering) and A/C (Air Conditioning)

Front Spring Code Number listed is 4G.
Part Number shown for Code 4G is D3AZ 5310-A

1973 FRONT SPRING IDENTIFICATION and CROSS REFERENCE CHART

FRONT SPRING CODE NO.	PART NUMBER	IDENTIFICATION	NORMAL LOAD (POUNDS)	COILS	WIRE DIA. (INCHES)	FREE LENGTH (INCHES)
●	Recommended to be serviced in pairs only					
13	★C6AZ 5310-A r/b D40Z 5310-B	1 Green and 1 Yellow stripe	1800	10 1/2	.628	18 7/8
15	★●C6AZ 5310-C r/b D40Z 5310-B	1 Violet and 1 Yellow stripe	1950	10 1/4	.648	18 5/8
16	C6AZ 5310-D	1 Green and 1 Red stripe	2030	10 1/4	.648	18 7/8
17	★●C6AZ 5310-E r/b D40Z 5310-E	1 Red and 1 Violet stripe	2116	10 1/4	.666	18 3/8
18	★C6AZ 5310-F r/b C6AZ 5310-E	1 Orange and 1 Yellow stripe	2200	10 1/4	.666	18 5/8
19	★●C6AZ 5310-G r/b D4AZ 5310-M	1 Brown and 1 Yellow stripe	2290	10 1/4	.683	18 1/4
27	★C6AZ 5310-S r/b D4AZ 5310-D	1 Gold and 1 Pink stripe	2276	9 7/8	.699	17 1/2
28	★●C6AZ 5310-T r/b D4AZ 5310-E	1 Gold and 1 Gray stripe	2345	9 7/8	.717	17 3/8
29	★C6AZ 5310-U r/b D4AZ 5310-F	1 Orange and 1 Red stripe	2505	9 7/8	.717	17 5/8
62	★C60Z 5310-M	1 or 2 Lavender stripes	1865	9 3/4	.650	16 3/8
67	★C90Z 5310-F r/b D6DZ 5310-AP	1 Violet, 1 Gold and 1 Brown stripe	1832	9 1/2	.630	16 5/8
86	★C7ZZ 5310-AJ r/b C7ZZ 5310-C	1 Orange stripe	1580	9 1/2	.600	16 1/2
90	★C7ZZ 5310-AN r/b D4DZ 5310-F	1 Red and 1 Yellow stripe	1520	9 1/2	.600	16 1/4

COPYRIGHT © 1986 — FORD MOTOR COMPANY — DEARBORN, MICHIGAN

1973 FRONT SPRING IDENTIFICATION and CROSS REFERENCE CHART

FRONT SPRING CODE NO.	PART NUMBER	IDENTIFICATION	NORMAL LOAD (POUNDS)	COILS	WIRE DIA. (INCHES)	FREE LENGTH (INCHES)
●	Recommended to be serviced in pairs only — Cont'd					
1H	★C9AZ 5310-B	2 Green and 1 Yellow stripe	2380	8 3/4	.768	15 1/2
1P	★D0LY 5310-A r/b D4AZ 5310-U	1 Red and 1 Gray stripe	2620	9 7/8	.717	17 5/16
1R	D0VY 5310-B	2 Red stripes	2800	10	.722	18 1/4
2H	★D0DZ 5310-C	3 Orange stripes	1414	8 3/4	.569	15 7/8
2J	★D0DZ 5310-E r/b D6DZ 5310-B	2 Orange and 1 Tan stripe	1470	9 1/8	.577	16 1/8
2K	D0DZ 5310-F	2 Pink and 1 Gray stripe	1526	9 1/8	.577	16 3/8
2L	★D0DZ 5310-D r/b D4DZ 5310-D	2 Pink and 1 Red stripe	1582	9 1/8	.577	16 5/8
2N	D0DZ 5310-M	1 Blue and 1 Green stripe	1345	8 3/16	.593	14 5/16
2P	D0DZ 5310-G	2 Blue and 1 Brown stripe	1415	8 9/16	.602	14 9/16
2Q	D0DZ 5310-H	2 Blue and 1 Gray stripe	1485	8 9/16	.602	14 13/16
2R	★D0DZ 5310-J	1 Blue and 2 Orange stripes	1555	8 9/16	.602	15 1/16
2S	★D1DZ 5310-A	1 Blue and 2 Red stripes	1625			
2T	D1ZZ 5310-E	2 Pink and 1 Blue or 3 Blue Stripes	1765	9 1/2	.628	16 3/4
2W	★D20Z 5310-G	1 Green, 1 Gray and 1 Tan stripe	2089	9 1/8	.728	15 15/16
2X	★D20Z 5310-H	1 Green and 2 Brown stripes	2199	9 1/8	.728	16 1/8
2Z	★D1VY 5310-B r/b D4AZ 5310-Y	1 Red and 1 Green stripe	2970	10 1/4	.733	18 3/8
3K	★C7ZZ 5310-AU r/b D6DZ 5310-AC	1 Brown and 2 Blue stripes	1880	9 1/2	.628	16 1/2
3P	★D2LY 5310-C r/b D5AZ 5310-L	3 Orange stripes	2715	10 1/8	.710	18 9/16
3R	★D2AZ 5310-B r/b D4AZ 5310-M	1 Violet, 1 Pink and 1 Orange stripe	2327	10 1/4	.683	18 3/4
3S	D2MY 5310-A	1 Red and 2 Green stripes	2596	8 13/16	.768	15 7/8
3W	★D2AZ 5310-C r/b D5AZ 5310-L	1 Tan and 2 Green stripes	2776	9	.775	16 1/8
3X	★D20Z 5310-K	1 Green, 1 Gray and 1 Yellow stripe	2509	9 1/8	.728	16 3/8
3Y	★D20Z 5310-L	1 Green, 1 Gray and 1 Pink stripe	2419	9 5/16	.734	16 5/8
3Z	★D1DZ 5310-B					
4E	★D23Z 5310-B r/b D4AZ 5310-R	2 Yellow and 1 Green stripe	2500	10	.702	18 3/16
4F	D2SZ 5310-C	3 Yellow stripes	2598	10 1/8	.710	18 5/16
4G	★D3AZ 5310-A r/b D4AZ 5310-R	1 Pink and 2 Orange stripes	2387	10 1/8	.691	18 5/16
4H	★D3AZ 5310-B r/b D4AZ 5310-R	1 Pink and 2 Yellow stripes	2443	10 1/8	.691	18 1/2
4J	★D30Z 5310-A	1 Green, 1 Brown and 1 Gray stripe	2529	9 5/16	.734	16 13/16
4K	★D30Z 5310-B	1 Yellow and 1 Gray stripe	1838	10 5/16	.648	18 5/16
4L	★D3LY 5310-A r/b D6AZ 5310-D	1 Brown and 1 Violet stripe	2785	10 3/16	.725	18 5/15
4M	★D3VY 5310-B r/b D6AZ 5310-F	1 Gray stripe	3070	10 5/16	.735	18 9/16
4N	★D3ZZ 5310-A	1 Yellow and 1 Pink stripe	1980	9 3/4	.650	16 1/4
4P	★D3ZZ 5310-B	1 Yellow and 2 Violet stripes	2070	9 5/8	.630	17 3/16
4Q	★D3ZZ 5310-C r/b C80Z 5310-AB	1 Yellow and 1 Purple stripe	2130	9 3/4	.650	16 11/16
4R	D3RY 5310-A	Orange and Gray				
4S	D3RY 5310-B	Orange and Pink				
4T	★D3LY 5310-B r/b D5AZ 5310-L	1 Brown, 1 White and 1 Violet stripe	2785	10 3/16	.725	18 5/16
4U	★D3AZ 5310-E r/b D4AZ 5310-R	3 Pink stripes	2412	10 1/8	.691	18 7/16
4V	D3MY 5310-B	1 Pink and 2 Green stripes	2950	9	.775	16 7/16
4W	D3SZ 5310-A	1 Violet and 1 Brown stripe	2785	10 3/16	.725	18 5/16

BODY TYPE	TRANS.▶	3/S				4/S				C/M				C4				C6							
	OPTIONS▶	BASE	A/C	P/S	A/C & P/S	BASE	A/C	P/S	A/C & P/S	BASE	A/C	P/S	A/C & P/S	BASE	A/C	P/S	A/C & P/S	BASE	A/C	P/S	A/C & P/S	BASE	A/C	P/S	A/C & P/S
	ENGINE	FRONT SPRING CODE NUMBER (Refer to page 1, of this section to translate code number into service part number.)																							

5310 SPRING (FRONT COIL) — Cont'd

▲ Refer to page 1 of this section to translate code number into service part number
(N2) "From 10/16/72" (N3) "Before 9/5/72" (N5) "From 9/5/72 to 10/16/72" (N4) "From 9/5/72"
(N13) "From 9/5/72 to 11/1/72" (N14) "From 11/1/72"

1973 APPLICATION CHART

A (MERCURY–EXC. POLICE) and Y (METEOR–EXC. POLICE) – – STANDARD SPRINGS

53B (N3)	351C									19	4G	3R	4G												
53B (N5)	351C									4G	4G	4G	4H												
53B (N2)	351C									4U	4U	4U	4E												
53B (N3)	400																	3R	4G	3R	4H				
53B (N5)	400																	4G	4E	4G	4F				
53B (N2)	400																	4U	4E	4U	4F				
53B (N3)	429																	4G	4E	4G	4E				
53B (N5)	429																	4H	4F	4E	4F				
53B (N2)	429																	4E	4F	4E	4F				
53B (N3)	460																	4G	4E	4G	4E				
53B (N5)	460																	4H	4F	4E	4F				
53B (N2)	460																	4E	4F	4E	4F				
53F (N3)	400																	3R	4G	3R	4H				
53F (N5)	400																	4G	4E	4H	4F				
53F (N2)	400																	4U	4E	4U	4F				
53F (N3)	429																	4G	4E	4G	4E				
53F (N4)	429																	4E	4F	4F	3P				
53F (N3)	460																	4G	4E	4G	4E				
53F (N4)	460																	4E	4F	4F	3P				
53H (N3)	400																	4G	4E	4G	4E				
53H (N5)	400																	4H	4F	4E	4F				
53H (N2)	400																	4E	4F	4E	4F				
53H (N3)	429																	4H	4F	4E	3P				
53H (N4)	429																	4F	3P	4F	3P				
53H (N3)	460																	4H	3P	4E	3P				
53H (N4)	460																	4F	3P	4F	3P				
53K (N3)	429																	4E	3P	4E	3P				
53K (N4)	429																	4F	3P	3P	3P				
53K (N3)	460																	4E	3P	4E	3P				
53K (N4)	460																	4F	3P	3P	3P				
53X (N3)	400																	4G	4E	4G	4E				
53X (N13)	400																	4E	4F	4F	3P				
53X (N14)	400																	4U	4F	4E	4F				
53X (N3)	429																	4H	4F	4E	3P				
53X (N4)	429																	4F	3P	4F	3P				
53X (N3)	460																	4H	3P	4E	3P				
53X (N4)	460																	4F	3P	4F	3P				
57H (N3)	400																	4G	4E	4H	4F				
57H (N4)	400																	4E	4F	4F	3P				
57H (N3)	429																	4E	3P	4E	3P				
57H (N4)	429																	4F	3P	3P	3P				
57H (N3)	460																	4E	3P	4E	3P				
57H (N4)	460																	4F	3P	3P	4W				

COPYRIGHT © 1986 — FORD MOTOR COMPANY — DEARBORN, MICHIGAN

BODY TYPE	TRANS.♦	3/S				4/S				C/M				C4				C6							
	OPTIONS♦	BASE	A/C	P/S	A/C & P/S	BASE	A/C	P/S	A/C & P/S	BASE	A/C	P/S	A/C & P/S	BASE	A/C	P/S	A/C & P/S	BASE	A/C	P/S	A/C & P/S	BASE	A/C	P/S	A/C & P/S
	ENGINE	FRONT SPRING CODE NUMBER (Refer to page 1, of this section to translate code number into service part number.)																							

5310 SPRING (FRONT COIL) — Cont'd

▲ Refer to page 1 of this section to translate code number into service part number
(N2) "From 10/16/72" (N3) "Before 9/5/72" (N4) "From 9/5/72" (N5) "From 9/5/72 to 10/16/72"
(N13) "From 9/5/72 to 11/1/72" (N14) "From 11/1/72"

1973 APPLICATION CHART

A (MERCURY-EXC. POLICE) and Y (METEOR-EXC. POLICE) - - STANDARD SPRINGS — Cont'd

57K (N3)	429																	4E	3P	4F	3P				
57K (N4)	429																	4F	3P	3P	4W				
57K (N3)	460																	4E	3P	4F	3P				
57K (N4)	460																	4F	3P	3P	4W				
57X (N3)	400																	4G	4E	4H	4F				
57X (N13)	400																	4E	4F	4F	3P				
57X (N14)	400																	4E	4F	4E	4F				
57X (N3)	429																	4E	3P	4E	3P				
57X (N13)	429																	4F	3P	3P	3P				
57X (N14)	429																	4F	3P	4F	3P				
57X (N3)	460																	4E	3P	4E	3P				
57X (N13)	460																	4F	3P	3P	4W				
57X (N14)	460																	4F	3P	4F	3P				
65B (N3)	351C									19	4G	19	4G												
65B (N5)	351C									4G	4H	4G	4H												
65B (N2)	351C									4U	4U	4U	4E												
65B (N3)	400																	3R	4G	3R	4H				
65B (N5)	400																	4G	4E	4H	4F				
65B (N2)	400																	4U	4E	4U	4F				
65B (N3)	429																	4G	4G	4E	4E				
65B (N5)	429																	4H	4F	4E	3P				
65B (N2)	429																	4E	4F	4E	3P				
65B (N3)	460																	4G	4G	4E	4E				
65B (N4)	460																	4E	4F	4E	3P				
65F (N3)	400																	3R	4G	3R	4H				
65F (N5)	400																	4G	4E	4H	4F				
65F (N2)	400																	4U	4E	4U	4F				
65F (N3)	429																	4G	4E	4G	4E				
65F (N5)	429																	4H	4F	4E	3P				
65F (N2)	429																	4E	4F	4E	3P				
65F (N3)	460																	4G	4E	4G	4E				
65F (N4)	460																	4E	4F	4F	3P				
65H (N3)	400																	4G	4E	4G	4E				
65H (N5)	400																	4H	4F	4E	4F				
65H (N2)	400																	4E	4F	4E	4F				
65H (N3)	429																	4H	4F	4E	3P				
65H (N4)	429																	4F	3P	4F	3P				
65H (N3)	460																	4H	3P	4E	3P				
65H (N4)	460																	4F	3P	4F	3P				
65K (N3)	429																	4H	3P	4E	3P				
65K (N4)	429																	4F	3P	4F	3P				
65K (N3)	460																	4E	3P	4E	3P				
65K (N4)	460																	4F	3P	4F	3P				

BODY TYPE	TRANS.▶	3/S				4/S				C/M				C4				C6							
	OPTIONS▶	BASE	A/C	P/S	A/C & P/S	BASE	A/C	P/S	A/C & P/S	BASE	A/C	P/S	A/C & P/S	BASE	A/C	P/S	A/C & P/S	BASE	A/C	P/S	A/C & P/S	BASE	A/C	P/S	A/C & P/S
	ENGINE	FRONT SPRING CODE NUMBER (Refer to page 1, of this section to translate code number into service part number.)																							

5310 SPRING (FRONT COIL) — Cont'd

▲ Refer to page 1 of this section to translate code number into service part number
(N2) "From 10/16/72" (N3) "Before 9/5/72" (N4) "From 9/5/72" (N5) "From 9/5/72 to 10/16/72"
(N14) "From 11/1/72" (N15) "From 10/16/72 to 11/1/72"

1973 APPLICATION CHART

A (MERCURY-EXC. POLICE) and Y (METEOR-EXC. POLICE) - - STANDARD SPRINGS — Cont'd

65X (N3)	400																	4G	4E	4G	4E				
65X (N5)	400																	4H	4F	4E	3P				
65X (N15)	400																	4E	4F	4E	3P				
65X (N14)	400																	4E	4F	4E	4F				
65X (N3)	429																	4H	4F	4E	3P				
65X (N4)	429																	4F	3P	4F	3P				
65X (N3)	460																	4H	4F	4E	3P				
65X (N4)	460																	4F	3P	4F	3P				
71B (N3)	400																	19	3R	19	4G				
71B (N5)	400																	4G	4G	4G	4H				
71B (N2)	400																	4U	4U	4U	4E				
71B (N3)	429																	3R	4G	3R	4H				
71B (N5)	429																	4G	4E	4G	4F				
71B (N2)	429																	4U	4E	4U	4F				
71B (N3)	460																	3R	4G	4G	4H				
71B (N5)	460																	4G	4E	4H	4F				
71B (N2)	460																	4U	4E	4U	4F				
71H (N3)	400																	19	4G	3R	4G				
71H (N5)	400																	4G	4H	4F	4E				
71H (N2)	400																	4U	4E	4U	4E				
71H (N3)	429																	4G	4H	4G	4E				
71H (N5)	429																	4H	4F	4E	4F				
71H (N15)	429																	4H	4F	4E	4F				
71H (14)	429																	4U	4F	4E	4F				
71H (N3)	460																	4G	4H	4F	4E				
71H (N5)	460																	4H	4F	4E	4F				
71H (N2)	460																	4E	4F	4E	4F				
71K (N3)	400																	3R	4G	3R	4G				
71K (N5)	400																	4G	4H	4G	4E				
71K (N2)	400																	4U	4E	4U	4E				
71K (N3)	429																	4G	4H	4G	4E				
71K (N5)	429																	4H	4F	4E	4F				
71K (N2)	429																	4U	4F	4E	4F				
71K (N3)	460																	4G	4H	4G	4E				
71K (N5)	460																	4H	4F	4E	4F				
71K (N2)	460																	4E	4F	4E	4F				

A (MERCURY-EXC. POLICE) and Y (METEOR-EXC. POLICE) - - HEAVY DUTY SPRINGS

53B (N3)	351C									27	28	28	29												
53B (N5)	351C									29	29	29	29												
53B (N2)	351C									28	29	28	29												
53B (N3)	400																	28	29	28	29				
53B (N5)	400																	29	29	29	1P				
53B (N2)	400																	28	29	29	1P				
53B	429																	29	1P	29	1P				
53B (N3)	460																	29	1P	29	1P				
53B (N4)	460																	29	1P	1P	1P				

COPYRIGHT © 1986 — FORD MOTOR COMPANY — DEARBORN, MICHIGAN

BODY TYPE	TRANS.▲	3/S				4/S				C/M				C4				C6							
	OPTIONS▲	BASE	A/C	P/S	A/C & P/S	BASE	A/C	P/S	A/C & P/S	BASE	A/C	P/S	A/C & P/S	BASE	A/C	P/S	A/C & P/S	BASE	A/C	P/S	A/C & P/S	BASE	A/C	P/S	A/C & P/S
	ENGINE	FRONT SPRING CODE NUMBER (Refer to page 1, of this section to translate code number into service part number.)																							

5310 SPRING (FRONT COIL) — Cont'd

▲ Refer to page 1 of this section to translate code number into service part number
(N2) "From 10/16/72" (N3) "Before 9/5/72" (N4) "From 9/5/72" (N5) "From 9/5/72 to 10/16/72"
(N14) "From 11/1/72" (N15) "From 10/16/72 to 11/1/72"

1973 APPLICATION CHART

A (MERCURY-EXC. POLICE) and Y (METEOR-EXC. POLICE) - - HEAVY DUTY SPRINGS — Cont'd

53F (N3)	400																	28	29	28	29				
53F (N4)	400																	29	1P	29	1P				
53F (N3)	429																	29	1P	29	1P				
53F (N5)	429																	29	1P	1P	1P				
53F (N2)	429																	29	1P	1P	1R				
53F (N3)	460																	29	1P	29	1P				
53F (N5)	460																	29	1P	1P	1P				
53F (N2)	460																	29	1P	1P	1R				
53H (N3)	400																	29	1P	29	1P				
53H (N4)	400																	29	1P	1P	1P				
53H (N3)	429																	1P	1P	1P	1P				
53H (N5)	429																	1P	1P	1P	4W				
53H (N2)	429																	1P	1R	1P	1R				
53H (N3)	460																	1P	1P	1P	1P				
53H (N5)	460																	1P	1P	1P	4W				
53H (N2)	460																	1P	1R	1P	1R				
53K (N3)	429																	1P	1P	1P	1P				
53K (N5)	429																	1P	4W	1P	4W				
53K (N2)	429																	1P	1R	1R	1R				
53K (N3)	460																	1P	1P	1P	1P				
53K (N5)	460																	1P	4W	1P	4W				
53K (N2)	460																	1P	1R	1R	4W				
53X (N3)	400																	29	1P	29	1P				
53X (N5)	400																	29	1P	1P	1P				
53X (N15)	400																	29	1P	1P	1R				
53X (N14)	400																	29	1P	29	1P				
53X (N3)	429																	1P	1P	1P	1P				
53X (N5)	429																	1P	4W	1P	4W				
53X (N2)	429																	1P	1R	1P	1R				
53X (N3)	460																	1P	1P	1P	1P				
53X (N5)	460																	1P	4W	1P	4W				
53X (N2)	460																	1P	1R	1P	1R				
57H (N3)	400																	29	1P	29	1P				
57H (N5)	400																	1P	1P	1P	1P				
57H (N2)	400																	1P	1P	1P	1R				
57H (N3)	429																	1P	1P	1P	1P				
57H (N5)	429																	1P	4W	1P	4W				
57H (N2)	429																	1P	1R	1R	1R				
57H (N3)	460																	1P	1P	1P	1P				
57H (N5)	460																	1P	4W	1P	4W				
57H (N2)	460																	1P	1R	1R	4W				
57K (N3)	429																	1P	1P	1P	1P				
57K (N5)	429																	1P	4W	1P	4W				
57K (N2)	429																	1P	1R	1R	4W				
57K (N3)	460																	1P	1P	1P	1P				
57K (N5)	460																	1P	4W	1P	4W				
57K (N2)	460																	1P	1R	1R	4W				

BODY TYPE	TRANS.▶	3/S				4/S				C/M				C4				C6							
	OPTIONS▶	BASE	A/C	P/S	A/C & P/S	BASE	A/C	P/S	A/C & P/S	BASE	A/C	P/S	A/C & P/S	BASE	A/C	P/S	A/C & P/S	BASE	A/C	P/S	A/C & P/S	BASE	A/C	P/S	A/C & P/S
	ENGINE	FRONT SPRING CODE NUMBER (Refer to page 1, of this section to translate code number into service part number.)																							

5310 SPRING (FRONT COIL) — Cont'd

▲ Refer to page 1 of this section to translate code number into service part number
(N2) "From 10/16/72" (N3) "Before 9/5/72" (N4) "From 9/5/72" (N5) "From 9/5/72 to 10/16/72"
(N14) "From 11/1/72" (N15) "From 10/16/72 to 11/1/72"

1973 APPLICATION CHART

A (MERCURY-EXC. POLICE) and Y (METEOR-EXC. POLICE) - - HEAVY DUTY SPRINGS — Cont'd

57X (N3)	400																	29	1P	29	1P				
57X (N5)	400																	1P	1P	1P	1P				
57X (N15)	400																	1P	1P	1P	1R				
57X (N14)	400																	29	1P	29	1P				
57X (N3)	429																	1P	1P	1P	1P				
57X (N5)	429																	1P	4W	1P	4W				
57X (N15)	429																	1P	1R	1R	1R				
57X (N14)	429																	1P	1R	1P	1R				
57X (N3)	460																	1P	1P	1P	1P				
57X (N5)	460																	1P	4W	1P	4W				
57X (N15)	460																	1P	1R	1R	4W				
57X (N14)	460																	1P	1R	1P	1R				
65B (N3)	351C									27	28	28	29												
65B (N5)	351C									29	29	29	29												
65B (N2)	351C									28	29	28	29												
65B (N3)	400																	28	29	28	29				
65B (N4)	400																	29	1P	29	1P				
65B (N3)	429																	29	1P	29	1P				
65B (N5)	429																	29	1P	1P	1P				
65B (N2)	429																	29	1P	1P	1R				
65B (N3)	460																	29	1P	29	1P				
65B (N5)	460																	29	1P	1P	1P				
65B (N2)	460																	29	1P	1P	1R				
65F (N3)	400																	28	29	28	29				
65F (N4)	400																	29	1P	29	1P				
65F (N3)	429																	29	1P	29	1P				
65F (N5)	429																	29	1P	1P	1P				
65F (N2)	429																	29	1P	1P	1R				
65F (N3)	460																	29	1P	29	1P				
65F (N5)	460																	29	1P	1P	1P				
65F (N2)	460																	29	1P	1P	1R				
65H (N3)	400																	29	1P	29	1P				
65H (N4)	400																	29	1P	1P	1P				
65H (N3)	429																	1P	1P	1P	1P				
65H (N5)	429																	1P	1P	1P	4W				
65H (N2)	429																	1P	1R	1P	1R				
65H (N3)	460																	1P	1P	1P	1P				
65H (N5)	460																	1P	1P	1P	4W				
65H (N2)	460																	1P	1R	1P	1R				
65K (N3)	429																	1P	1P	1P	1P				
65K (N5)	429																	1P	4W	1P	4W				
65K (N2)	429																	1P	1R	1P	1R				
65K (N3)	460																	1P	1P	1P	1P				
65K (N5)	460																	1P	4W	1P	4W				
65K (N2)	460																	1P	1R	1P	1R				

COPYRIGHT © 1986 — FORD MOTOR COMPANY — DEARBORN, MICHIGAN

BODY TYPE	TRANS.▶	3/S				4/S				C/M				C4				C6							
	OPTIONS▶	BASE	A/C	P/S	A/C & P/S	BASE	A/C	P/S	A/C & P/S	BASE	A/C	P/S	A/C & P/S	BASE	A/C	P/S	A/C & P/S	BASE	A/C	P/S	A/C & P/S	BASE	A/C	P/S	A/C & P/S
	ENGINE	FRONT SPRING CODE NUMBER (Refer to page 1, of this section to translate code number into service part number.)																							

5310 SPRING (FRONT COIL) — Cont'd

▲ Refer to page 1 of this section to translate code number into service part number
(N1) "Before 10/16/72" (N2) "From 10/16/72" (N3) "Before 9/5/72" (N4) "From 9/5/72"
(N5) "From 9/5/72 to 10/16/72" (N14) "From 11/1/72" (N15) "From 10/16/72 to 11/1/72"

1973 APPLICATION CHART

A (MERCURY-EXC. POLICE) and Y (METEOR-EXC. POLICE) - - HEAVY DUTY SPRINGS — Cont'd

65X (N3)	400																	29	1P	29	1P				
65X (N5)	400																	29	1P	1P	1P				
65X (N15)	400																	29	1P	1P	1R				
65X (N14)	400																	29	1P	29	1P				
65X (N3)	429																	1P	1P	1P	1P				
65X (N5)	429																	1P	4W	1P	4W				
65X (N2)	429																	1P	1R	1P	1R				
65X (N3)	460																	1P	1P	1P	1P				
65X (N5)	460																	1P	4W	1P	4W				
65X (N2)	460																	1P	1R	1P	1R				
71B (N3)	400																	27	28	28	29				
71B (N5)	400																	29	29	29	29				
71B (N2)	400																	28	29	28	29				
71B (N3)	429																	28	29	28	29				
71B (N4)	429																	29	1P	29	1P				
71B (N3)	460																	28	29	28	1P				
71B (N4)	460																	29	1P	29	1P				
71H (N3)	400																	28	29	28	29				
71H (N5)	400																	29	29	29	1P				
71H (N2)	400																	28	29	29	1P				
71H (N3)	429																	28	29	29	1P				
71H (N4)	429																	29	1P	29	1P				
71H (N3)	460																	28	1P	29	1P				
71H (N4)	460																	29	1P	1P	1P				
71K (N3)	400																	28	29	28	29				
71K (N5)	400																	29	29	29	1P				
71K (N2)	400																	28	29	29	1P				
71K	429																	29	1P	29	1P				
71K (N3)	460																	29	1P	29	1P				
71K (N4)	460																	29	1P	1P	1P				

A (MERCURY-POLICE) and Y (METEOR-POLICE) - - STANDARD (HEAVY DUTY) SPRINGS

53B (N3)	351C									1H	3S	3S	3S												
53B (N4)	351C									3W	3W	3W	3W												
53B (N3)	400																	3S	3S	3S	3W				
53B (N5)	400																	3W	3W	3W	3W				
53B (N2)	400																	3W	4V	3W	4V				
53B (N3)	429																	3S	3W	3W	3W				
53B (N5)	429																	3W	3W	3W	3W				
53B (N2)	429																	3W	4V	4V	4V				
53B (N1)	460																	3W	3W	3W	3W				
53B (N2)	460																	4V	4V	4V	4V				

A (MERCURY-POLICE) and Y (METEOR-POLICE) - - HEAVY DUTY SPRINGS—refer to
A (MERCURY-POLICE) and Y (METEOR-POLICE) - - STANDARD (HEAVY DUTY) SPRINGS

BODY TYPE	TRANS.▶	3/S				4/S				C/M				C4				C6							
	OPTIONS▶	BASE	A/C	P/S	A/C & P/S	BASE	A/C	P/S	A/C & P/S	BASE	A/C	P/S	A/C & P/S	BASE	A/C	P/S	A/C & P/S	BASE	A/C	P/S	A/C & P/S	BASE	A/C	P/S	A/C & P/S
	ENGINE	FRONT SPRING CODE NUMBER (Refer to page 1, of this section to translate code number into service part number.)																							

5310 SPRING (FRONT COIL) — Cont'd

▲ Refer to page 1 of this section to translate code number into service part number
(N1) "Before 10/16/72" (N2) "From 10/16/72" (N3) "Before 9/5/72" (N4) "From 9/5/72"
(N5) "From 9/5/72 to 10/16/72"

1973 APPLICATION CHART

A (MERCURY-POLICE) and Y (METEOR-POLICE) - - STANDARD (HEAVY DUTY) SPRINGS — Cont'd

53F (N3)	400																	3S	3S	3S	3W				
53F (N5)	400																	3W	3W	3W	3W				
53F (N2)	400																	3W	4V	3W	4V				
53F (N3)	429																	3S	3W	3W	3W				
53F (N5)	429																	3W	3W	3W	3W				
53F (N2)	429																	4V	4V	4V	4V				
53F (N1)	460																	3W	3W	3W	3W				
53F (N2)	460																	4V	4V	4V	4V				
53H (N3)	400																	3S	3W	3W	3W				
53H (N5)	400																	3W	3W	3W	3W				
53H (N2)	400																	4V	4V	4V	4V				
53H (N1)	429																	3W	3W	3W	3W				
53H (N2)	429																	4V	4V	4V	4V				
65B (N3)	351C									1H	3S	3S	3S												
65B (N5)	351C									3W	3W	3W	3W												
65B (N2)	351C									3W	3W	3W	4V												
65B (N3)	400																	3S	3S	3S	3W				
65B (N5)	400																	3W	3W	3W	3W				
65B (N2)	400																	3W	4V	3W	4V				
65B (N3)	429																	3S	3W	3S	3W				
65B (N5)	429																	3W	3W	3W	3W				
65B (N2)	429																	4V	4V	4V	4V				
65B (N1)	460																	3W	3W	3W	3W				
65B (N2)	460																	4V	4V	4V	4V				
65F (N3)	400																	3S	3S	3S	3W				
65F (N5)	400																	3W	3W	3W	3W				
65F (N2)	400																	3W	4V	3W	4V				
65F (N3)	429																	3S	3W	3S	3W				
65F (N5)	429																	3W	3W	3W	3W				
65F (N2)	429																	4V	4V	4V	4V				
65F (N1)	460																	3W	3W	3W	3W				
65F (N2)	460																	4V	4V	4V	4V				
65H (N3)	400																	3S	3W	3W	3W				
65H (N5)	400																	3W	3W	3W	3W				
65H (N2)	400																	4V	4V	4V	4V				
65H (N1)	429																	3W	3W	3W	3W				
65H (N2)	429																	4V	4V	4V	4V				
71B (N3)	400																	1H	3S	1H	3S				
71B (N4)	400																	3W	3W	3W	3W				
71B (N3)	429																	3S	3S	3S	3W				
71B (N5)	429																	3W	3W	3W	3W				
71B (N2)	429																	3W	4V	3W	4V				
71B (N3)	460																	3S	3W	3S	3W				
71B (N5)	460																	3W	3W	3W	3W				
71B (N2)	460																	3W	4V	4V	4V				

COPYRIGHT © 1986 — FORD MOTOR COMPANY — DEARBORN, MICHIGAN

BODY TYPE	TRANS.♦	3/S				4/S				C/M				C4				C6							
	OPTIONS♦	BASE	A/C	P/S	A/C & P/S	BASE	A/C	P/S	A/C & P/S	BASE	A/C	P/S	A/C & P/S	BASE	A/C	P/S	A/C & P/S	BASE	A/C	P/S	A/C & P/S	BASE	A/C	P/S	A/C & P/S
	ENGINE	FRONT SPRING CODE NUMBER (Refer to page 1, of this section to translate code number into service part number.)																							

5310 SPRING (FRONT COIL) — Cont'd

▲ Refer to page 1 of this section to translate code number into service part number

♦ W/o competition suspension △ w/competition suspension

(N1) "Before 10/16/72" (N2) "From 10/16/72" (N3) "Before 9/5/72" (N5) "From 9/5/72 to 10/16/72"

1973 APPLICATION CHART

A (MERCURY-POLICE) and Y (METEOR-POLICE) - - STANDARD (HEAVY DUTY) SPRINGS — Cont'd

71H (N3) 400																	1H	3S	3S	3S					
71H (N5) 400																	3W	3W	3W	3W					
71H (N2) 400																	3W	4V	3W	4V					
71H (N3) 429																	3S	3W	3S	3W					
71H (N5) 429																	3W	3W	3W	3W					
71H (N2) 429																	3W	4V	4V	4V					

C (MONTEGO-EXC. POLICE) - - STANDARD SPRINGS

53B (N1) 250	4K	16	15	16									4K	16	15	16									
53B (N2) 250	15	16	15	17									15	16	15	17									
53B (N1) 302	15	17	16	17					16	17	16	17	15	17	16	17									
53B (N2) 302	16	17	16	17					16	17	17	18	16	17	16	17									
53B (N1) 351C									17	18	17	18	16	18	17	18	17	18	18	19					
53B (N2) 351C									17	19	18	19	17	18	17	19	17	19	18	19					
53B (N1) 351W									17	18	17	18	16	18	17	18	17	18	17	18					
53B (N2) 351W									17	18	18	19	17	18	17	19	17	18	18	19					
53B ♦ (N1) 351-4/B																	18	18	18	19					
53B △ (N1) 351-4/B				2W	2X	2X	3X										2W	2X	2X	3X					
53B (N2) 351-4/B																	18	19	18	19					
53B (N1) 400																	18	19	19	3R					
53B (N2) 400																	18	19	18	19					
53B ♦ (N1) 429																	19	3R	19	3R					
53B △ (N1) 429																	3X	3Y	3X	4J					
53B (N2) 429																	19	3R	19	3R					
53D (N1) 250	4K	16	15	16									4K	16	15	16									
53D (N2) 250	15	16	15	17									15	16	15	17									
53D (N1) 302	15	17	16	17					16	17	16	17	16	17	16	17									
53D (N2) 302	16	17	16	17					16	17	17	18	16	17	16	17									
53D (N1) 351C									17	18	17	19	17	18	17	18	17	18	18	19					
53D (N2) 351C									17	19	18	19	17	18	17	19	17	19	18	19					
53D (N1) 351W									17	18	17	19	17	18	17	18	17	18	17	19					
53D (N2) 351W									17	18	18	19	17	18	17	19	17	18	18	19					
53D ♦ (N1) 351-4/B																	18	19	18	19					
53D △ (N1) 351-4/B				2X	3X	2X	3X										2W	2X	2X	3X					
53D (N2) 351-4/B																	18	19	18	19					
53D (N1) 400																	18	19	19	3R					
53D (N2) 400																	18	19	18	19					
53D ♦ (N1) 429																	19	3R	3R	3R					
53D △ (N1) 429																	3X	3Y	3X	4J					
53D (N2) 429																	19	3R	19	3R					
53K (N1) 250	4K	16	15	16									4K	16	15	16									
53K (N2) 250	15	16	16	17									15	16	16	17									
53K (N1) 302	15	17	16	17					16	17	16	17	15	17	16	17									
53K (N2) 302	16	17	17	18					17	18	17	18	16	17	17	18									
53K (N1) 351C									17	18	17	19	17	18	17	18	17	18	18	19					
53K (N2) 351C									18	19	18	19	17	18	18	19	18	19	18	19					
53K (N1) 351W									17	18	17	18	17	18	17	18	17	18	17	19					
53K (N2) 351W									17	19	18	19	17	18	18	19	17	19	18	19					
53K 400																	18	19	19	3R					
53K (N1) 429																	19	3R	3R	3R					
53K (N2) 429																	19	3R	19	3R					

BODY TYPE	TRANS.♦	3/S				4/S				C/M				C4				C6							
	OPTIONS♦	BASE	A/C	P/S	A/C & P/S	BASE	A/C	P/S	A/C & P/S	BASE	A/C	P/S	A/C & P/S	BASE	A/C	P/S	A/C & P/S	BASE	A/C	P/S	A/C & P/S	BASE	A/C	P/S	A/C & P/S
	ENGINE	FRONT SPRING CODE NUMBER (Refer to page 1, of this section to translate code number into service part number.)																							

5310 SPRING (FRONT COIL) — Cont'd

▲ Refer to page 1 of this section to translate code number into service part number

♦ W/o competition suspension △ W/competition suspension

(N1) "Before 10/16/72" (N2) "From 10/16/72"

1973 APPLICATION CHART

C (MONTEGO—EXC. POLICE) — — STANDARD SPRINGS — Cont'd

63R (N1)	302	15	17	16	17					16	17	16	17	18	17	16	17								
63R (N2)	302	16	17	16	17					16	17	16	18	16	17	16	17								
63R (N1)	351C									17	18	17	19	16	18	17	18	17	18	17	19				
63R (N2)	351C									17	18	18	19	17	18	17	18	17	19	18	19				
63R (N1)	351W									17	18	17	18	16	18	17	18	17	18	17	18				
63R (N2)	351W									17	18	17	19	17	18	17	18	17	18	17	19				
63R♦ (N1)	351–4/B					17	18	18	19									17	18	18	19				
63R△ (N1)	351–4/B					2W	2X	2X	3X									2W	2X	2X	3X				
63R (N2)	351–4/B					18	19	18	19									17	19	18	19				
63R (N1)	400																	18	19	19	3R				
63R (N2)	400																	18	19	18	19				
63R♦ (N1)	429																	19	3R	19	3R				
63R△ (N1)	429																	3X	3Y	3X	4J				
63R (N2)	429																	19	3R	19	3R				
65B (N1)	250	13	15	4K	15									4K	15	4K	15								
65B (N2)	250	4K	15	4K	16									4K	15	4K	16								
65B (N1)	302	4K	16	15	16					15	16	15	17	15	16	15	16								
65B (N2)	302	15	16	16	17					16	17	16	17	15	16	16	17								
65B (N1)	351C									16	17	17	18	16	17	16	17	16	18	17	18				
65B (N2)	351C									17	18	17	18	16	17	17	18	17	18	17	18				
65B (N1)	351W									16	17	16	18	16	17	16	17	16	17	17	18				
65B (N2)	351W									17	18	17	18	16	17	17	18	17	18	17	18				
65B♦ (N1)	351–4/B					17	18	17	18									17	18	17	18				
65B△ (N1)	351–4/B					2W	2X	2W	2X									2W	2X	2W	2X				
65B (N2)	351–4/B					17	18	17	19									17	18	17	19				
65B (N1)	400																	18	19	18	19				
65B (N2)	400																	17	18	18	19				
65B♦ (N1)	429																	18	19	19	3R				
65B△ (N1)	429																	3X	3Y	3X	3Y				
65B (N2)	429																	18	19	18	3R				
65D (N1)	250	4K	15	4K	15									4K	15	4K	15								
65D (N2)	250	4K	15	15	16									4K	16	15	16								
65D (N1)	302	15	16	15	16					15	16	15	17	15	16	15	16								
65D (N2)	302	15	16	16	17					16	17	16	17	15	17	16	17								
65D (N1)	351C									16	17	17	18	16	17	16	17	16	18	17	18				
65D (N2)	351C									17	18	17	18	16	18	17	18	17	18	17	19				
65D (N1)	351W									16	17	17	18	16	17	16	17	16	17	17	18				
65D (N2)	351W									17	18	17	18	16	17	17	18	17	18	17	18				
65D♦ (N1)	351–4/B					17	18	17	18									17	18	17	18				
65D△ (N1)	351–4/B					2W	2X	2W	2X									2W	2X	2W	2X				
65D (N2)	351–4/B					17	18	18	19									17	18	17	19				
65D (N1)	400																	18	19	18	19				
65D (N2)	400																	17	19	18	19				
65D♦ (N1)	429																	18	3R	19	3R				
65D△ (N1)	429																	3X	3Y	3X	3Y				
65D (N2)	429																	18	19	19	3R				

COPYRIGHT © 1986 — FORD MOTOR COMPANY — DEARBORN, MICHIGAN

BODY TYPE	TRANS.▶	3/S				4/S				C/M				C4				C6							
	OPTIONS▶	BASE	A/C	P/S	A/C & P/S	BASE	A/C	P/S	A/C & P/S	BASE	A/C	P/S	A/C & P/S	BASE	A/C	P/S	A/C & P/S	BASE	A/C	P/S	A/C & P/S	BASE	A/C	P/S	A/C & P/S
	ENGINE	FRONT SPRING CODE NUMBER (Refer to page 1, of this section to translate code number into service part number.)																							

5310 SPRING (FRONT COIL) — Cont'd

▲ Refer to page 1 of this section to translate code number into service part number

(N1) "Before 10/16/72" (N2) "From 10/16/72"

1973 APPLICATION CHART

C (MONTEGO—EXC. POLICE) — — STANDARD SPRINGS — Cont'd

65K (N1)	250	4K	15	4K	16									4K	15	4K	16								
65K (N2)	250	4K	16	15	16									4K	16	15	16								
65K (N1)	302	15	16	15	17					15	16	16	17	15	16	15	17								
65K (N2)	302	15	17	16	17					16	17	16	17	15	17	16	17								
65K (N1)	351C									16	18	17	18	16	17	16	18	17	18	17	18				
65K (N2)	351C									17	18	17	19	17	18	17	18	17	18	17	19				
65K (N1)	351W									16	17	17	18	16	17	16	18	16	17	17	18				
65K (N2)	351W									17	18	17	18	16	18	17	18	17	18	17	18				
65K (N1)	351–4/B					17	18	17	18									17	18	17	18				
65K (N2)	351–4/B					17	19	18	19									17	18	18	19				
65K (N1)	400																	18	19	18	19				
65K (N2)	400																	17	19	18	19				
65K (N1)	429																	19	3R	19	3R				
65K (N2)	429																	18	19	19	3R				
71D (N1)	302	15	16	16	17					16	17	16	17	15	16	16	17								
71D (N2)	302	15	17	16	17					16	17	16	17	15	17	16	17								
71D (N1)	351C									17	18	17	18	16	17	17	18	17	18	17	18				
71D (N2)	351C									17	18	17	19	17	18	17	18	17	18	18	19				
71D (N1)	400																	18	19	18	3R				
71D (N2)	400																	18	19	18	19				
71D (N1)	429																	19	3R	19	3R				
71D (N2)	429																	18	19	19	3R				
71K (N1)	302	15	16	16	17					16	17	16	17	15	16	16	17								
71K (N2)	302	16	17	16	17					16	17	16	18	16	17	16	17								
71K (N1)	351C									17	18	17	18	16	17	17	18	17	18	17	18				
71K (N2)	351C									17	18	18	19	17	18	17	18	17	19	18	19				
71K (N1)	400																	18	19	18	3R				
71K (N2)	400																	18	19	18	19				
71K	429																	19	3R	19	3R				

C (MONTEGO—EXC. POLICE) — — HEAVY DUTY SPRINGS

53B (N1)	250	4K	16	15	16									4K	16	15	16								
53B (N2)	250	15	16	15	17									15	16	15	17								
53B (N1)	302	15	17	16	17					16	17	16	18	15	17	16	17								
53B (N2)	302	16	17	16	17					16	17	17	18	16	17	16	17								
53B (N1)	351C									18	18	18	19	18	18	18	18	18	18	18	19				
53B (N2)	351C									17	19	18	19	17	18	17	19	17	19	18	19				
53B (N1)	351W									17	18	17	18	17	18	17	18	18	18	18	19				
53B (N2)	351W									17	18	18	19	17	18	17	19	17	18	18	19				
53B	351–4/B																	18	19	18	19				
53B (N1)	400																	18	19	19	3R				
53B (N2)	400																	18	19	18	19				
53B	429																	19	3R	19	3R				

BODY TYPE	TRANS.▶	3/S				4/S				C/M				C4				C6							
	OPTIONS▶	BASE	A/C	P/S	A/C & P/S	BASE	A/C	P/S	A/C & P/S	BASE	A/C	P/S	A/C & P/S	BASE	A/C	P/S	A/C & P/S	BASE	A/C	P/S	A/C & P/S	BASE	A/C	P/S	A/C & P/S
	ENGINE	FRONT SPRING CODE NUMBER (Refer to page 1, of this section to translate code number into service part number.)																							

5310 SPRING (FRONT COIL) — Cont'd

▲ Refer to page 1 of this section to translate code number into service part number
(N1) "Before 10/16/72" (N2) "From 10/16/72"

1973 APPLICATION CHART

C (MONTEGO–EXC/POLICE) – – HEAVY DUTY SPRINGS — Cont'd

53D (N1)	250	15	16	15	16									15	16	15	16								
53D (N2)	250	15	16	15	17									15	16	15	17								
53D	302	16	17	16	17					16	17	17	18	16	17	16	17								
53D (N1)	351C									17	19	18	19	17	18	17	18	17	19	18	19				
53D (N2)	351C									17	19	18	19	17	18	17	19	17	19	18	19				
53D (N1)	351W									17	18	17	19	17	18	17	18	17	18	18	19				
53D (N2)	351W									17	18	18	19	17	18	17	19	17	18	18	19				
53D	351–4/B																	18	19	18	19				
53D (N1)	400																	19	3R	19	3R				
53D (N2)	400																	18	19	18	19				
53D (N1)	429																	19	3R	3R	3R				
53D (N2)	429																	19	3R	19	3R				
53K (N1)	250	15	16	15	16									15	16	15	16								
53K (N2)	250	15	16	16	17									15	16	16	17								
53K (N1)	302	16	17	16	17					16	17	16	18	16	17	16	17								
53K (N2)	302	16	17	17	18					17	18	17	18	16	17	17	18								
53K (N1)	351C									17	18	18	19	17	18	17	18	17	19	18	19				
53K (N2)	351C									18	19	18	19	17	18	18	19	18	19	18	19				
53K (N1)	351W									17	18	17	19	17	18	17	18	17	18	17	19				
53K (N2)	351W									17	19	18	19	17	18	18	19	17	19	18	19				
53K (N1)	400																	19	3R	19	3R				
53K (N2)	400																	18	19	19	3R				
53K (N1)	429																	19	3R	3R	3R				
53K (N2)	429																	19	3R	19	3R				
63R (N1)	302	15	17	16	17					16	17	16	17	15	17	16	17								
63R (N2)	302	16	17	16	17					16	17	16	18	16	17	16	17								
63R (N1)	351C									17	18	17	19	17	18	17	18	17	18	18	19				
63R (N2)	351C									17	18	18	19	17	18	17	18	17	19	18	19				
63R (N1)	351W									17	18	17	18	17	18	17	18	17	18	17	19				
63R (N2)	351W									17	18	17	19	17	18	17	18	17	18	17	19				
63R (N1)	351–4/B					17	19	18	19									17	19	18	19				
63R (N2)	351–4/B					18	19	18	19									17	19	18	19				
63R (N1)	400																	18	19	19	3R				
63R (N2)	400																	18	19	18	19				
63R (N1)	429																	19	3R	3R	3R				
63R (N2)	429																	19	3R	19	3R				
65B (N1)	250	4K	15	4K	16									4K	15	15	16								
65B (N2)	250	4K	15	4K	16									4K	15	4K	16								
65B	302	15	16	16	17					16	17	16	17	15	16	16	17								
65B	351C									17	18	17	18	16	17	17	18	17	18	17	18				
65B	351W									17	18	17	18	16	17	17	18	17	18	17	18				
65B (N1)	351–4/B					17	18	18	19									17	18	17	19				
65B (N2)	351–4/B					17	18	17	19									17	18	17	19				
65B (N1)	400																	18	19	18	3R				
65B (N2)	400																	17	18	18	19				
65B (N1)	429																	19	3R	19	3R				
65B (N2)	429																	18	19	18	3R				

COPYRIGHT © 1986 — FORD MOTOR COMPANY — DEARBORN, MICHIGAN

BODY TYPE	TRANS.▲	3/S				4/S				C/M				C4				C6							
	OPTIONS▲	BASE	A/C	P/S	A/C & P/S	BASE	A/C	P/S	A/C & P/S	BASE	A/C	P/S	A/C & P/S	BASE	A/C	P/S	A/C & P/S	BASE	A/C	P/S	A/C & P/S	BASE	A/C	P/S	A/C & P/S
	ENGINE	FRONT SPRING CODE NUMBER (Refer to page 1, of this section to translate code number into service part number.)																							

5310 SPRING (FRONT COIL) — Cont'd

▲ Refer to page 1 of this section to translate code number into service part number

(N1) "Before 10/16/72" (N2) "From 10/16/72"

1973 APPLICATION CHART

C (MONTEGO—EXC. POLICE) — — HEAVY DUTY SPRINGS — Cont'd

65D (N1)	250	4K	16	15	16									4K	16	15	16								
65D (N2)	250	4K	15	15	16									4K	16	15	16								
65D (N1)	302	15	17	16	17					16	17	16	17	15	17	16	17								
65D (N2)	302	15	16	16	17					16	17	16	17	15	17	16	17								
65D	351C									17	18	17	18	16	18	17	18	17	18	17	19				
65D (N1)	351W									17	18	17	18	16	18	17	18	17	18	17	18				
65D (N2)	351W									17	18	17	18	16	17	17	18	17	18	17	18				
65D	351–4/B					17	18	18	19									17	18	17	19				
65D (N1)	400																	18	19	19	3R				
65D (N2)	400																	17	19	18	19				
65D (N1)	429																	19	3R	19	3R				
65D (N2)	429																	18	19	19	3R				
65K	250	4K	16	15	16									4K	16	15	16								
65K	302	15	17	16	17					16	17	16	17	15	17	16	17								
65K	351C									17	18	17	19	17	18	17	18	17	18	17	19				
65K (N1)	351W									17	18	17	18	17	18	17	18	17	18	17	18				
65K (N2)	351W									17	18	17	18	16	18	17	18	17	18	17	18				
65K	351–4/B					17	19	18	19									17	18	18	19				
65K (N1)	400																	18	19	19	3R				
65K (N2)	400																	17	19	18	19				
65K (N1)	429																	19	3R	19	3R				
65K (N2)	429																	18	19	19	3R				
71D (N1)	302	16	17	16	17					16	17	17	18	16	17	16	17								
71D (N2)	302	16	18	17	18					17	18	17	18	16	18	17	18								
71D (N1)	351C									17	19	18	19	17	18	17	18	17	19	18	19				
71D (N2)	351C									18	19	18	19	17	19	18	19	18	19	18	3R				
71D (N1)	400																	19	3R	19	3R				
71D (N2)	400																	18	3R	19	3R				
71D (N1)	429																	19	3R	3R	3R				
71D (N2)	429																	19	3R	3R	4U				
71K (N1)	302	16	17	16	17					16	17	17	18	16	17	16	17								
71K (N2)	302	17	18	17	18					17	18	17	19	17	18	17	18								
71K (N1)	351C									17	19	18	19	17	18	17	18	17	19	18	19				
71K (N2)	351C									18	19	19	3R	18	19	18	19	18	19	19	3R				
71K	400																	19	3R	19	3R				
71K (N1)	429																	19	3R	3R	3R				
71K (N2)	429																	19	4U	3R	4U				

C (MONTEGO—POLICE) — — STANDARD (HEAVY DUTY) SPRINGS

53B (N1)	250													15	17	16	17								
53B (N2)	250													16	17	16	18								
53B (N1)	302	16	17	17	18									16	17	17	18								
53B (N2)	302	17	18	17	18					17	18	18	19	17	18	17	18								
53B (N1)	351C									2X	3X	3X	3Y	2X	3X	2X	3X	2X	3X	3X	3Y				
53B (N2)	351C									3X	3Y	3X	3Y	2X	3X	3X	3Y	3X	3Y	3X	3Y				
53B	351–4/B					3X	3Y	3X	3Y									3X	3Y	3X	3Y				
53B (N1)	400																	3X	4J	3Y	4J				
53B (N2)	400																	3X	3Y	3X	3Y				
53B (N1)	429																	4J	4J	4J	4J				
53B (N2)	429																	3Y	4J	3Y	4J				
53B	460																	3Y	4J	3Y	4J				

BODY TYPE	TRANS.▶	3/S				4/S				C/M				C4				C6							
	OPTIONS▶	BASE	A/C	P/S	A/C & P/S	BASE	A/C	P/S	A/C & P/S	BASE	A/C	P/S	A/C & P/S	BASE	A/C	P/S	A/C & P/S	BASE	A/C	P/S	A/C & P/S	BASE	A/C	P/S	A/C & P/S
	ENGINE	FRONT SPRING CODE NUMBER (Refer to page 1, of this section to translate code number into service part number.)																							
5310	SPRING (FRONT COIL) — Cont'd																								

▲ Refer to page 1 of this section to translate code number into service part number
(N1) "Before 10/16/72" (N2) "From 10/16/72" (N11) "Before 1/2/73" (N12) "From 1/2/73"

1973 APPLICATION CHART

C (MONTEGO–POLICE) – – STANDARD (HEAVY DUTY) SPRINGS — Cont'd

53D (N1)	250													16	17	16	17								
53D (N2)	250													16	17	16	18								
53D	302	17	18	17	18					17	18	18	19	17	18	17	18								
53D	351C									3X	3Y	3X	3Y	2X	3X	3X	3Y	3X	3Y	3X	3Y				
53D (N1)	351–4/B					3X	3Y	3X	4J									3X	3Y	3X	4J				
53D (N2)	351–4/B					3X	3Y	3X	3Y									3X	3Y	3X	3Y				
53D (N1)	400																	3Y	4J	3Y	4J				
53D (N2)	400																	3X	3Y	3X	3Y				
53D (N1)	429																	4J	4J	4J	4J				
53D (N2)	429																	3Y	4J	3Y	4J				
53D (N1)	460																	3Y	4J	4J	4J				
53D (N2)	460																	3Y	4J	3Y	4J				
65B (N1)	250													15	16	15	17								
65B (N2)	250													15	17	16	17								
65B (N1)	302	16	17	16	18									16	17	16	18								
65B (N2)	302	16	17	17	18					17	18	17	18	16	17	17	18								
65B (N1)	351C									2X	3X	2X	3X	2X	3X	2X	3X	2X	3X	3X	3Y				
65B (N2)	351C									2X	3X	3X	3Y	2X	3X	2X	3X	2X	3X	3X	3Y				
65B (N1)	351–4/B					2X	3X	3X	3Y									2X	3X	3X	3Y				
65B (N2)	351–4/B					3X	3Y	3X	3Y									2X	3X	3X	3Y				
65B (N1)	400																	3X	4J	3Y	4J				
65B (N2)	400																	3X	3Y	3X	3Y				
65B (N1)	429																	3Y	4J	4J	4J				
65B (N2)	429																	3X	3Y	3Y	4J				
65B (N1)	460																	3X	4J	3Y	4J				
65B (N2)	460																	3X	3Y	3Y	4J				
65D (N1)	250													15	16	16	17								
65D (N2)	250													15	17	16	17								
65D	302	16	17	17	18					17	18	17	18	16	17	17	18								
65D	351C									2X	3X	3X	3Y	2X	3X	2X	3X	2X	3X	3X	3Y				
65D (N1)	351–4/B					3X	3X	3X	3Y									2X	3X	3X	3Y				
65D (N2)	351–4/B					3X	3Y	3X	3Y									3X	3X	3X	3Y				
65D (N1)	400																	3X	4J	3Y	4J				
65D (N2)	400																	3X	3Y	3X	3Y				
65D (N1)	429																	3Y	4J	4J	4J				
65D (N2)	429																	3X	3Y	3Y	4J				
65D (N1)	460																	3X	4J	3Y	4J				
65D (N2)	460																	3X	3Y	3Y	4J				

C (MONTEGO–POLICE) – – HEAVY DUTY SPRINGS–refer to C (MONTEGO–POLICE) – – STANDARD (HEAVY DUTY) SPRINGS

D (LINCOLN)

53 – – R.H.	460																				4M				
53 – – L.H. (N11)	460																				2Z				
53 – – L.H. (N12)	460																				4M				
65 – – R.H.	460																				4M				
65 – – L.H. (N11)	460																				2Z				
65 – – L.H. (N12)	460																				4M				

COPYRIGHT © 1986 — FORD MOTOR COMPANY — DEARBORN, MICHIGAN

BODY TYPE	TRANS.♦	3/S				4/S				C/M				C4				C6							
	OPTIONS♦	BASE	A/C	P/S	A/C & P/S	BASE	A/C	P/S	A/C & P/S	BASE	A/C	P/S	A/C & P/S	BASE	A/C	P/S	A/C & P/S	BASE	A/C	P/S	A/C & P/S	BASE	A/C	P/S	A/C & P/S
	ENGINE	FRONT SPRING CODE NUMBER (Refer to page 1, of this section to translate code number into service part number.)																							

5310 SPRING (FRONT COIL) — Cont'd

▲ Refer to page 1 of this section to translate code number into service part number

♦ W/o competition suspension △ W/competition suspension

1973 APPLICATION CHART

F (COUGAR)

BODY TYPE	ENGINE	3/S BASE	3/S A/C	3/S P/S	3/S A/C & P/S	4/S BASE	4/S A/C	4/S P/S	4/S A/C & P/S	C/M BASE	C/M A/C	C/M P/S	C/M A/C & P/S	C4 BASE	C4 A/C	C4 P/S	C4 A/C & P/S	C6 BASE	C6 A/C	C6 P/S	C6 A/C & P/S	BASE	A/C	P/S	A/C & P/S
65D	351–2/B									3K	2T	3K	2T					3K	2T	3K	2T				
65D♦	351–4/B																	2T	67	2T	4P				
65D△	351–4/B					4N	4N	4N	62																
65F	351–2/B									3K	2T	3K	2T					3K	2T	3K	2T				
65F♦	351–4/B																	2T	67	2T	4P				
65F△	351–4/B					4N	62	4N	62																
65F	351–4/B																	2T	67	2T	4P				
76D	351–2/B									2T	67	2T	67					2T	67	2T	67				
76D♦	351–4/B																	67	4P	4P	4P				
76D△	351–4/B					4N	62	62	4Q																
76F	351–2/B									2T	67	2T	4P					2T	67	2T	4P				
76F♦	351–4/B																	67	4P	4P	4P				
76F△	351–4/B					62	4Q	62	4Q																

J (CAPRI)

BODY TYPE	ENGINE	3/S BASE	3/S A/C	3/S P/S	3/S A/C & P/S	4/S BASE	4/S A/C	4/S P/S	4/S A/C & P/S	C/M BASE	C/M A/C	C/M P/S	C/M A/C & P/S	C4 BASE	C4 A/C	C4 P/S	C4 A/C & P/S	C6 BASE	C6 A/C	C6 P/S	C6 A/C & P/S	BASE	A/C	P/S	A/C & P/S
All	122 (2000 cc)					4R	4R							4R	4R										
All	159 (2600 cc)					4S	4S							4S	4S										

K (MARK IV)

BODY TYPE	ENGINE	3/S BASE	3/S A/C	3/S P/S	3/S A/C & P/S	4/S BASE	4/S A/C	4/S P/S	4/S A/C & P/S	C/M BASE	C/M A/C	C/M P/S	C/M A/C & P/S	C4 BASE	C4 A/C	C4 P/S	C4 A/C & P/S	C6 BASE	C6 A/C	C6 P/S	C6 A/C & P/S	BASE	A/C	P/S	A/C & P/S
65 – – R.H.	460																				4T				
65 – – L.H.	460																				4L				

P (COMET) – – STANDARD SPRINGS

BODY TYPE	ENGINE	3/S BASE	3/S A/C	3/S P/S	3/S A/C & P/S	4/S BASE	4/S A/C	4/S P/S	4/S A/C & P/S	C/M BASE	C/M A/C	C/M P/S	C/M A/C & P/S	C4 BASE	C4 A/C	C4 P/S	C4 A/C & P/S	C6 BASE	C6 A/C	C6 P/S	C6 A/C & P/S	BASE	A/C	P/S	A/C & P/S
54B (N9)	200	2J	2K	2J	2L									2J	2K	2J	2L								
54B (N10)	200	2K	2L	2K	90									2J	2L	2K	90								
54B (N9)	250													2K	90	2K	90								
54B (N10)	250													2L	90	2L	90								
54B (N9)	302	2L	90	90	86									2L	90	90	86								
54B (N10)	302	90	86	90	86									90	86	90	3A								
62B	200	2H	2J	2H	2K									2H	2J	2H	2K								
62B	250													2J	2K	2J	2L								
62B	302	2K	90	2L	90									2K	90	2L	90								

P (COMET) – – HEAVY DUTY SPRINGS

BODY TYPE	ENGINE	3/S BASE	3/S A/C	3/S P/S	3/S A/C & P/S	4/S BASE	4/S A/C	4/S P/S	4/S A/C & P/S	C/M BASE	C/M A/C	C/M P/S	C/M A/C & P/S	C4 BASE	C4 A/C	C4 P/S	C4 A/C & P/S	C6 BASE	C6 A/C	C6 P/S	C6 A/C & P/S	BASE	A/C	P/S	A/C & P/S
54B (N9)	200	2P	2R	2Q	2R									2P	2R	2Q	2R								
54B (N10)	200	2Q	2R	2Q	2S									2Q	2R	2Q	2S								
54B (N9)	250													2Q	2S	2R	2S								
54B (N10)	250													2R	2S	2R	3Z								
54B (N9)	302	2R	3Z	2S	3Z									2R	3Z	2S	3Z								
54B (N10)	302	2S	3Z	2S	3Z									2S	3Z	3Z	3Z								
62B (N9)	200	2X	2Q	2P	2Q									2N	2Q	2P	2Q								
62B (N10)	200	2P	2Q	2P	2Q									2P	2Q	2P	2Q								
62B	250													2P	2R	2Q	2R								
62B	302	2Q	2S	2R	2S									2R	2S	2R	2S								

Y (METEOR)—refer to A (MERCURY)

5310 SPRING (FRONT COIL)

1974/

HOW TO FIND 1974/ FRONT SPRING PART NUMBERS

1974/ cars (except Capri) use a plastic identification tape on the second coil (from the top) to aid in identifying springs. Use the information from the identification tape to select the proper spring service part number. (See the illustration below).
1979 cars will include vehicle spring identification codes on the vehicle certification label. Use this code to select the proper spring service part number from the application charts which are sequenced by spring codes within each carline.

1. IDENTIFICATION CHART

Use the Identification Chart to translate the Identification Number which appears on the tape into a Service Part Number. This Chart starts on Page 2.

2. CHECK LOAD CHART

Use the Check Load Chart for a summary of all springs for each car model. These springs are listed in order by model and check load (i.e. a higher check load indicates a stronger spring) to show–

1) the model on which they are used and
2) which are the stronger springs.

1974/78Capri front springs follow the Check Load Chart, and are listed by engines.

SPRING IDENTIFICATION TAPE

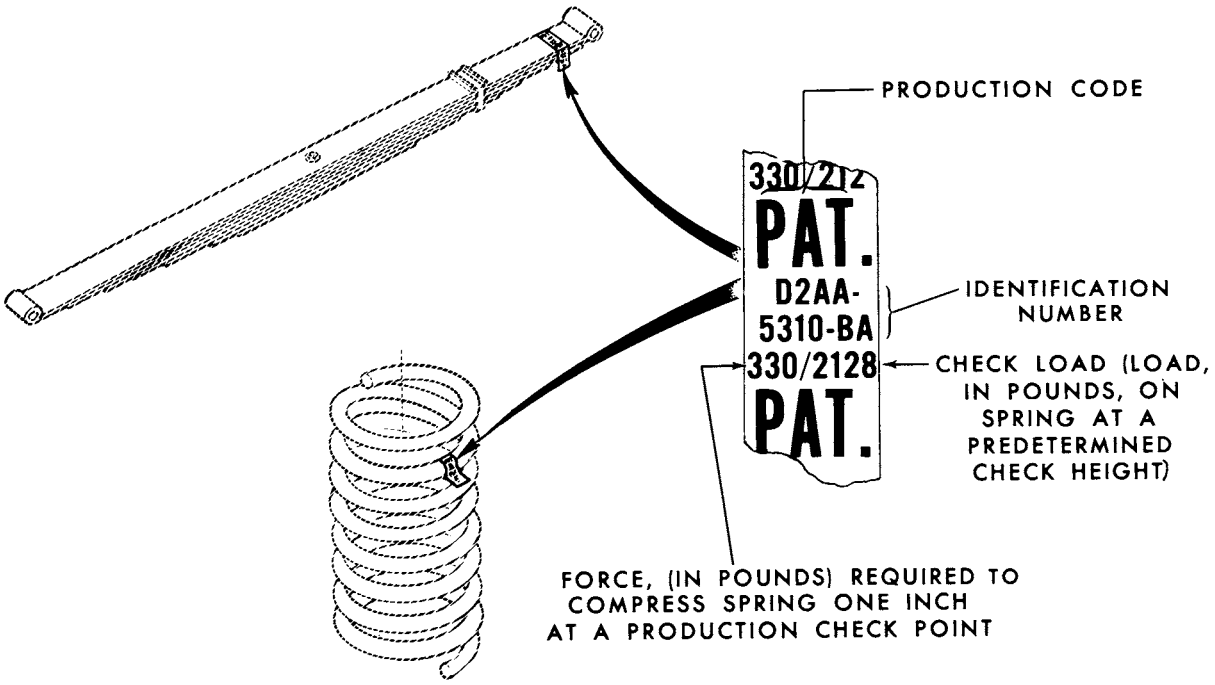

P-10952

COPYRIGHT © 1986 — FORD MOTOR COMPANY — DEARBORN, MICHIGAN

1974/ IDENTIFICATION CHART

IDENTIFICATION	PART NUMBER	IDENTIFICATION	PART NUMBER
5310 SPRING (FRONT COIL) — Cont'd			
D4AW 5310-AA	D4AZ 5310-A	D40W 5310-DA	D40Z 5310-D
D4AW 5310-CA	★ D4AZ 5310-C	D40W 5310-EA	D40Z 5310-E
D4AW 5310-DA	D4AZ 5310-D	D40W 5310-FA	D40Z 5310-F
D4AW 5310-EA	D4AZ 5310-E	D42W 5310-CA	★ D4FZ 5310-D
D4AW 5310-FA	★ D4AZ 5310-F	D42W 5310-DA	★ D4FZ 5310-D
D4AW 5310-GA	★ D4AZ 5310-G	D42W 5310-EA	★ D4FZ 5310-E
D4AW 5310-TA	r/b D5AZ 5310-L	D42W 5310-FA	★ D4FZ 5310-F
D4AW 5310-KA	★ D4AZ 5310-K	D42W 5310-AAA	D4FZ 5310-AA
D4AW 5310-MA	D4AZ 5310-M	D42W 5310-ABA	★ D4FZ 5310-D
D4AW 5310-NA	★ D4AZ 5310-N	D42W 5310-ACA	D4FZ 5310-AD
D4AW 5310-RA	D4AZ 5310-R	D42W 5310-ADA	D4FZ 5310-AD
D4AW 5310-SA	D4AZ 5310-S	D42W 5310-AGA	★ D4FZ 5310-AG
D4AW 5310-TA	D5AZ 5310-L	D42W 5310-AHA	★ D4FZ 5310-AH
D4AW 5310-UA	D4AZ 5310-U	D42W 5310-AJA	D4FZ 5310-AJ
D4AW 5310-VA	★ D4AZ 5310-V	D42W 5310-AKA	★ D4FZ 5310-D
D4AW 5310-YA	★ D4AZ 5310-Y	D42W 5310-ALA	D4FZ 5310-AK
D4AW 5310-ZA	★ D4AZ 5310-Z	D42W 5310-AMA	★ D4FZ 5310-AL
D4AW 5310-AAA	★ D4AZ 5310-AA	D42W 5310-ANA	★ D4FZ 5310-AT
D4AW 5310-ABA	★ D4AZ 5310-AB	D42W 5310-ARA	D4FZ 5310-AN
D4AW 5310-ACA	★ D4AZ 5310-AC	D42W 5310-ASA	D4FZ 5310-AR
D4AW 5310-ADA	★ D4AZ 5310-AD	D42W 5310-ATA	★ D4FZ 5310-AS
D4AW 5310-AEA	★ D4AZ 5310-AE	D42W 5310-AUA	D4FZ 5310-AM
D4AW 5310-AHA	★ D4AZ 5310-AG	D42W 5310-AYA	D4FZ 5310-BA
D4AW 5310-AJA	D4AZ 5310-AJ	D42W 5310-AZA	★ D4FZ 5310-AZ
D4AW 5310-AKA	★ D4AZ 5310-AK	D42W 5310-BAA	★ D4FZ 5310-AY
D4AW 5310-ALA	D4AZ 5310-AL	D6EW 5310-CA	r/b D6FZ 5310-C
D4AW 5310-AMA	★ D4AZ 5310-AM	D5AW 5310-AA	★ D5AZ 5310-A
D4AW 5310-ANA	★ D4AZ 5310-AN	D5AW 5310-BA	★ D5AZ 5310-B
D4AW 5310-ARA	★ D4AZ 5310-AH	D5AW 5310-CA	D5AZ 5310-C
D4AW 5310-ATA	D4AZ 5310-AR	D5AW 5310-FA	★ D5AZ 5310-F
D4AW 5310-AUA	★ D4AZ 5310-AS	D5AW 5310-GA	★ D5AZ 5310-G
D4AW 5310-AVA	★ D4AZ 5310-AT	D5AW 5310-HA	★ D5AZ 5310-H
D4AW 5310-AYA	D4AZ 5310-AU	D5AW 5310-JA	★ D5AZ 5310-N
D4AW 5310-AZA	★ D4AZ 5310-AV	★ D5AW 5310-LA	D5AZ 5310-R
D4AW 5310-BAA	★ D4AZ 5310-AZ	D5AW 5310-MA	★ D5AZ 5310-S
D4AW 5310-BBA	★ D4AZ 5310-AY	D5DW 5310-AA	D5DZ 5310-A
D4AW 5310-BCA	★ D4AZ 5310-AW	D5DW 5310-BA	D5DZ 5310-B
D4AW 5310-BDA	★ D4AZ 5310-BA	D5DW 5310-CA	D5DZ 5310-C
D4AW 5310-BEA	★ D4AZ 5310-BB	D5DW 5310-DA	D5DZ 5310-D
D4DW 5310-BA	★ D4DZ 5310-B	D5DW 5310-EA	★ D5DZ 5310-E
D4DW 5310-CA	★ D4DZ 5310-C	D5DW 5310-GA	★ D5DZ 5310-G
D4DW 5310-DA	D4DZ 5310-D	D5DW 5310-FA	D5DZ 5310-F
D4DW 5310-EA	★ D4DZ 5310-E	D5DW 5310-LA	D5DZ 5310-N
D4DW 5310-FA	D4DZ 5310-F	D5DW 5310-MA	★ D5DZ 5310-L
D4DW 5310-GA	D4DZ 5310-G	D5DW 5310-NA	★ D5DZ 5310-M
D4DW 5310-HA	★ D4DZ 5310-V	D5DW 5310-RA	★ D5DZ 5310-T
D4DW 5310-JA	D5DZ 5310-W	D5DW 5310-SA	★ D5DZ 5310-S
D4DW 5310-LA	D4DZ 5310-L	D5DW 5310-TA	D5DZ 5310-U
D4DW 5310-MA	D4DZ 5310-M	★ D5DW 5310-UA	★ D5DZ 5310-AG
D4DW 5310-NA	★ D4DZ 5310-N	D5DW 5310-VA	★ D5DZ 5310-AH
D4DW 5310-VA	D4DZ 5310-V	D5DW 5310-YA	★ D5DZ 5310-AJ
D4DW 5310-YA	★ D4DZ 5310-W	D5DW 5310-ZA	D5DZ 5310-AK
D4DW 5310-ZA	★ D4DZ 5310-Y	D5DW 5310-AAA	★ D5DZ 5310-AL
D4DW 5310-AAA	D4DZ 5310-Z	D5DW 5310-ABA	★ D5DZ 5310-AM
D40W 5310-AA	★ D40Z 5310-A	D6DW 5310-MA	r/b D6DZ 5310-AL
D40W 5310-BA	★ D40Z 5310-B	D5DW 5310-ACA	★ D5DZ 5310-AN
D40W 5310-CA	★ D40Z 5310-C	D5DW 5310-ADA	★ D5DZ 5310-AP
D40W 5310-DA	r/b D40Z 5310-D	D5DW 5310-AEA	★ D5DZ 5310-AR

1974/ IDENTIFICATION CHART

IDENTIFICATION	PART NUMBER	IDENTIFICATION	PART NUMBER
5310 SPRING (FRONT COIL) — Cont'd			
D52W 5310-FA	D5FZ 5310-F	D6EW 5310-AA	★ D6FZ 5310-A
D52W 5310-GA	D5FZ 5310-G	D6EW 5310-BA	★ D6FZ 5310-B
D52W 5310-HA	★ D5FZ 5310-H	D8BC 5310-BTA	D8BZ 5310-BM
D52W 5310-KA	D5FZ 5310-K	D6EW 5310-CA	★ D6FZ 5310-C
D52W 5310-LA	D5FZ 5310-L	D6EW 5310-DA	★ D6FZ 5310-D
D52W 5310-NA	D5FZ 5310-N	D6EW 5310-GA	r/b D6FZ 5310-G
D52W 5310-ZA	★ D5FZ 5310-U	D6EW 5310-EA	★ D6FZ 5310-E
D52W 5310-AHA	★ D5FZ 5310-AG		r/b D7FZ 5310-K
D52W 5310-AJA	D5FZ 5310-AH	D6EW 5310-FA	★ D6FZ 5310-F
D52W 5310-ANA	★ D5FZ 5310-AM		r/b D7FZ 5310-K
D6AW 5310-AA	D6AZ 5310-A	D6EW 5310-GA	★ D6FZ 5310-G
D6AW 5310-BA	D6AZ 5310-B		r/b D7FZ 5310-K
D6AW 5310-CA	★ D6AZ 5310-C	D6EW 5310-HA	D6FZ 5310-H
D4AW 5310-TA	r/b D5AZ 5310-L	D6EW 5310-JA	★ D6FZ 5310-J
D6AW 5310-DA	D6AZ 5310-D		r/b D9FZ 5310-A
D6AW 5310-EA	D6AZ 5310-E	D6EW 5310-KA	★ D6FZ 5310-K
D6AW 5310-FA	D6AZ 5310-F		r/b D7FZ 5310-K
D6AW 5310-GA	★ D6AZ 5310-G	D6EW 5310-LA	★ D6FZ 5310-L
D6DW 5310-AA	★ D6DZ 5310-A		r/b D7FZ 5310-K
D6DW 5310-BA	★ D6DZ 5310-B	D6EW 5310-MA	D6FZ 5310-M
D6DW 5310-CA	★ D6DZ 5310-C	D6EW 5310-RA	★ D6FZ 5310-P
D6DW 5310-DA	★ D6DZ 5310-D	D7AC 5310-AA	★ D7AZ 5310-H
D6DW 5310-EA	★ D6DZ 5310-AG	D7AC 5310-BA	D7AZ 5310-F
	r/b D6DZ 5310-H	D7AC 5310-CA	★ D7AZ 5310-G
D6DW 5310-FA	★ D6DZ 5310-AH	D7AC 5310-DA	★ D7AZ 5310-J
	r/b D6DZ 5310-H	D7AC 5310-EA	★ r/b D7AZ 5310-K
D6DW 5310-GA	★ D6DZ 5310-G	D7AC 5310-FA	★ D7AZ 5310-L
D6DW 5310-HA	r/b D6DZ 5310-H		r/b D7AZ 5310-D
D6DW 5310-JA	★ D6DZ 5310-J	D7AW 5310-AA	★ D7AZ 5310-A
	r/b D6DZ 5310-H	D7AW 5310-BA	★ D7AZ 5310-B
D6DW 5310-KA	★ D6DZ 5310-AJ	D7AW 5310-DA	D7AZ 5310-D
D6DW 5310-LA	r/b D6DZ 5310-AK	D7AW 5310-EA	D7AZ 5310-E
D6DW 5310-MA	★ D6DZ 5310-AL	D7EA 5310-AA	★ D7FZ 5310-G
	r/b D6DZ 5310-AK		r/b D9FZ 5310-A
D6DW 5310-NA	★ D6DZ 5310-AM	D7EA 5310-BA	★ D7FZ 5310-H
D6DW 5310-RA	r/b D6DZ 5310-AN		r/b D9FZ 5310-A
D6DW 5310-SA	D6DZ 5310-AP	D7EA 5310-CA	★ D7FZ 5310-J
D6DW 5310-TA	★ D6DZ 5310-S		r/b D7FZ 5310-K
★ D6DW 5310-UA	D6DZ 5310-T	D7EA 5310-DA	D7FZ 5310-K
D6DW 5310-VA	★ D6DZ 5310-U	D7EC 5310-EA	D7FZ 5310-L
D6DW 5310-YA	★ D6DZ 5310-V	D7EC 5310-FA	D7FZ 5310-M
	r/b D6DZ 5310-H	D7EC 5310-GA	★ D7FZ 5310-N
D6DW 5310-ZA	★ D6DZ 5310-W	D7EC 5310-GA	r/b D8FZ 5310-A
	r/b D6DZ 5310-H	D7EC 5310-HA	★ D7FZ 5310-P
D6DW 5310-AAA	★ D6DZ 5310-Y	D7EC 5310-HA	r/b D8FZ 5310-B
	r/b D6DZ 5310-H	D7EC 5310-JA	D7FZ 5310-R
D6DW 5310-ABA	D6DZ 5310-Z	D7EC 5310-KA	★ D7FZ 5310-S
D6DW 5310-ACA	★ D6DZ 5310-AA		r/b D6FZ 5310-S
D6DW 5310-ADA	r/b D6DZ 5310-AB	D7EW 5310-EA	D7FZ 5310-E
D6DW 5310-AEA	★ D6DZ 5310-AC	D8BC 5310-ARA	★ D8BZ 5310-AM
D6DW 5310-AFA	★ D6DZ 5310-AD	D8BC 5310-ASA	★ D8BZ 5310-AN
D6DW 5310-AGA	r/b D6DZ 5310-AE		r/b D9BZ 5310-B
D6DW 5310-AHA	★ D6DZ 5310-AF	D8BC 5310-ATA	★ D8BZ 5310-AP
	r/b D6DZ 5310-AE		r/b D9BZ 5310-B
D6DW 5310-AJA	D6DZ 5310-AS	D8BC 5310-AUA	★ D8BZ 5310-AR
D6DW 5310-AKA	D6DZ 5310-AR		r/b D9BZ 5310-B
D6DW 5310-ALA	D6DZ 5310-AT	D8BC 5310-AVA	D8BZ 5310-AS

COPYRIGHT © 1986— FORD MOTOR COMPANY —DEARBORN, MICHIGAN

1974/ IDENTIFICATION CHART

IDENTIFICATION	PART NUMBER
5310 SPRING (FRONT COIL) — Cont'd	
D8BC 5310-AYA	D8BZ 5310-AT
D8BC 5310-AZA	D8BZ 5310-AU
D8BC 5310-BAA	★ D8BZ 5310-AV r/b E1BZ 5310-A
D8BC 5310-BBA	★ D8BZ 5310-AW r/b E1BZ 5310-A
D8BC 5310-BCA	★ D8BZ 5310-AY r/b E0BZ 5310-H
D8BC 5310-BDA	★ D8BZ 5310-AZ r/b D8BZ 5310-AT
D8BC 5310-BEA	★ D8BZ 5310-BA r/b E1BZ 5310-B
D8BC 5310-BFA	★ D8BZ 5310-BB r/b E1BZ 5310-B
D8BC 5310-BGA	★ D8BZ 5310-BC r/b E0BZ 5310-N
D8BC 5310-BHA	★ D8BZ 5310-BD r/b E0BZ 5310-N
D8BC 5310-BJA	★ D8BZ 5310-BE
D8BC 5310-BKA	D8BZ 5310-BF
D8BC 5310-BLA	D8BZ 5310-BG
D8BC 5310-BMA	D8BZ 5310-BH
D8BC 5310-BNA	D8BZ 5310-BJ
D8BC 5310-BRA	D8BZ 5310-BK
D8BC 5310-BSA	★ D8BZ 5310-BL r/b E1BZ 5310-F
D8BC 5310-BTA	D8BZ 5310-BM
D8BC 5310-BUA	★ D8BZ 5310-BN r/b E1BZ 5310-A
D8BC 5310-BVA	★ D8BZ 5310-BP r/b E1BZ 5310-A
D8BC 5310-BYA	D8BZ 5310-BR
D8BC 5310-BZA	D8BZ 5310-BS
D8BC 5310-CAA	D8BZ 5310-BT
D8BC 5310-CBA	★ D8BZ 5310-BU r/b E0BZ 5310-H
D8BC 5310-CCA	D8BZ 5310-BV
D8BC 5310-CDA	D8BZ 5310-BW
D8BC 5310-CEA	★ D8BZ 5310-BY r/b E0BZ 5310-N
D8BC 5310-CFA	D8BZ 5310-BZ
D8BC 5310-CGA	D8BZ 5310-CA
D8BC 5310-CHA	D8BZ 5310-CB
D8BC 5310-CJA	★ D8BZ 5310-CC r/b E1BZ 5310-A
D9AC 5310-AA	D9AZ 5310-A
D9AC 5310-BA	D9AZ 5310-B
D9AC 5310-FA	D9AZ 5310-F
D9AC 5310-HA	D9AZ 5310-H
D9AC 5310-JA	D9AZ 5310-J
D9AC 5310-KA	D9AZ 5310-K
D9AC 5310-LA	D9AZ 5310-L
D9AC 5310-MA	D9AZ 5310-M
D9AC 5310-NA	D9AZ 5310-N
D9AC 5310-RA	D9AZ 5310-R
D9AC 5310-SA	D9AZ 5310-S
D9AC 5310-AAA	D9AZ 5310-AA
D9AC 5310-ABA	D9AZ 5310-AB
D9AC 5310-ACA	D9AZ 5310-AC
D9AC 5310-ADA	D9AZ 5310-AD
D9AC 5310-AEA	D9AZ 5310-AE
D9AC 5310-AFA	D9AZ 5310-AF
D9AC 5310-AGA	★ D9AZ 5310-AG
D9AC 5310-AHA	r/b D9AZ 5310-AH
D9AC 5310-AJA	D9AZ 5310-AJ
D9AC 5310-AKA	D9AZ 5310-AR
D9BC 5310-AA	★ D9BZ 5310-A
D9BC 5310-BA	r/b D9BZ 5310-B
D9BC 5310-CA	D9BZ 5310-C
D9BC 5310-EA	D9BZ 5310-E
D9BC 5310-FA	D9BZ 5310-F
D9BC 5310-GA	★ D9BZ 5310-G r/b E1BZ 5310-D
D9BC 5310-HA	D9BZ 5310-H
D9BC 5310-JA	★ D9BZ 5310-J r/b E1BZ 5310-A
D9BC 5310-KA	D9BZ 5310-K
D9BC 5310-LA	D9BZ 5310-L
D9BC 5310-MA	D9BZ 5310-M
D9BC 5310-NA	D9BZ 5310-N
D9BC 5310-RA	D9BZ 5310-R
D9BC 5310-SA	D9BZ 5310-S
D4BC 5310-TA	D9BZ 5310-T
D9EC 5310-AA	D9FZ 5310-A
D9EC 5310-BA	★ D9FZ 5310-B r/b D9FZ 5310-A

1974 CHECK LOAD CHART

5310 SPRING (FRONT COIL) — Cont'd

A (Mercury), Y (Meteor)

CHECK LOAD (ON IDENT. TAPE)	PART NUMBER	WIRE DIA. (INCHES)
1984	D40Z 5310-E	.663
2025	★ D4AZ 5310-C r/b D6AZ 5310-B	.694
2051	★ D40Z 5310-F	.683
2103	D4AZ 5310-D	.717
2119	★ D4AZ 5310-AW ★ D4AZ 5310-AY	.814
2128	D4AZ 5310-M	.683
2151	★ D4AZ 5310-AH r/b D6AZ 5310-G	.768
2193	D4AZ 5310-E	.717
2201	★ D4AZ 5310-N r/b D4AZ 5310-R	.691
2274	D4AZ 5310-R	.702
2283	★ D4AZ 5310-F r/b D4AZ 5310-AV	.717
2283	★ D4AZ 5310-K	.775
2283	★ D4AZ 5310-AY	.814
2368	D4AZ 5310-S	.710
2373	D4AZ 5310-U	.717
2415	★ D4AZ 5310-AE ★ D4AZ 5310-K	.775
2447	★ D4AZ 5310-AZ ★ D4AZ 5310-AY	.814
2450	D4AZ 5310-A	.710
2456	★ D4AZ 5310-G r/b D5AZ 5310-L	.725

C (Montego)

CHECK LOAD (ON IDENT. TAPE)	PART NUMBER	WIRE DIA. (INCHES)
1619	D4AZ 5310-AM	.646
1679	★ D4AZ 5310-AN	.646
1727	D4AZ 5310-AJ	.680
1739	★ D40Z 5310-A r/b D40Z 5310-B	.646
1767	★ D4AZ 5310-BA ★ r/b D4AZ 5310-BB	.768
1799	★ D40Z 5310-B	.646
1799	★ D4AZ 5310-AK r/b D4AZ 5310-AJ	.680
1859	★ D40Z 5310-C r/b D40Z 5310-D	.646
1871	D4AZ 5310-AL	.680
1898	★ D4AZ 5310-BB	.768
1913	★ D4AZ 5310-AA r/b D4AZ 5310-AT	.728
1919	D40Z 5310-D	.663
1943	★ D4AZ 5310-C r/b D6AZ 5310-B	.694
1984	D40Z 5310-E	.663
2023	★ D4AZ 5310-AB r/b D4AZ 5310-AT	.728
2025	★ D4AZ 5310-C r/b D6AZ 5310-B	.694

C (Montego) — Cont'd

CHECK LOAD (ON IDENT. TAPE)	PART NUMBER	WIRE DIA. (INCHES)
2029	★ D4AZ 5310-AT r/b D4AZ 5310-AH	.768
2051	★ D40Z 5310-F	.683
2103	D4AZ 5310-D	.717
2128	D4AZ 5310-M	.683
2133	★ D4AZ 5310-AC r/b D4AZ 5310-AH	.734
2151	★ D4AZ 5310-AH r/b D6AZ 5310-G	.768
2193	D4AZ 5310-E	.717
2201	★ D4AZ 5310-N r/b D4AZ 5310-R	.691
2243	★ D4AZ 5310-AD ★ D4AZ 5310-K	.734
2283	★ D4AZ 5310-F r/b D4AZ 5310-AV	.717
2283	D4AZ 5310-K	.775

D (Lincoln)

CHECK LOAD (ON IDENT. TAPE)	PART NUMBER	WIRE DIA. (INCHES)
2647	★ D4AZ 5310-Y r/b D5AZ 5310-H	.733
2747	★ D4AZ 5310-Z r/b D6AZ 5310-F	.735
2837	★ D4AZ 5310-AS r/b D6AZ 5310-F	.735

F (Cougar)

CHECK LOAD (ON IDENT. TAPE)	PART NUMBER	WIRE DIA. (INCHES)
1919	D40Z 5310-D	.663
1984	D40Z 5310-E	.663
2051	★ D40Z 5310-F	.683
2128	D4AZ 5310-M	.683
2201	★ D4AZ 5310-N r/b D4AZ 5310-R	.691

K (Mark IV)

CHECK LOAD (ON IDENT. TAPE)	PART NUMBER	WIRE DIA. (INCHES)
2373	D4AZ 5310-U	.717
2477	★ D4AZ 5310-AR r/b D5AZ 5310-L	.729
2567	★ D4AZ 5310-V r/b D4AZ 5310-Y	.729
2647	★ D4AZ 5310-Y r/b D5AZ 5310-H	.733

L (Bobcat)

CHECK LOAD (ON IDENT. TAPE)	PART NUMBER	WIRE DIA. (INCHES)
1102	★ D4FZ 5310-AB r/b D5FZ 5310-AG	.528
1156	★ D4FZ 5310-AU r/b D5FZ 5310-AG	.541
1156	★ D4FZ 5310-AC r/b D4FZ 5310-AD	.562
1156	★ D4FZ 5310-AN r/b D6DZ 5310-H	.573

COPYRIGHT © 1986— FORD MOTOR COMPANY —DEARBORN, MICHIGAN

1974 CHECK LOAD CHART

5310 SPRING (FRONT COIL) — Cont'd

L (Bobcat) — Cont'd

CHECK LOAD (ON IDENT. TAPE)	PART NUMBER	WIRE DIA. (INCHES)
1212	★ D4FZ 5310-BA r/b D7FZ 5310-K	.533
1212	★ D4FZ 5310-C r/b D5FZ 5310-AG	.541
1212	★ D4FZ 5310-AD r/b D7FZ 5310-K	.562
1212	★ D4FZ 5310-AR r/b D7FZ 5310-K	.573
1270	★ D4FZ 5310-D r/b D5FZ 5310-AG	.541
1270	★ D4FZ 5310-AK r/b D7FZ 5310-K	.562
1270	★ D4FZ 5310-AS r/b D9FZ 5310-A	.573
1332	★ D4FZ 5310-E r/b D5FZ 5310-AG	.552
1332	★ D4FZ 5310-AZ r/b D5FZ 5310-AG	.555
1332	★ D4FZ 5310-AL r/b D7FZ 5310-K	.562
1332	D5FZ 5310-F	.566
1400	★ D4FZ 5310-AY r/b D7FZ 5310-K	.555
1400	★ D4FZ 5310-F r/b D6FZ 5310-S	.562
1400	D4FZ 5310-AM	.574
1400	D4FZ 5310-AH	.585
1472	D5FZ 5310-K	.578
1473	D4FZ 5310-AA	.585
1620	★ D5FZ 5310-AM	.586
1625	★ D4FZ 5310-AT r/b D9FZ 5310-A	.585

P (Comet)

CHECK LOAD (ON IDENT. TAPE)	PART NUMBER	WIRE DIA. (INCHES)
1226	D4DZ 5310-Z	.577
1277	★ D4DZ 5310-B ★ D6DZ 5310-B	.577
1283	D4DZ 5310-L	.602
1328	★ D4DZ 5310-C ★ r/b D6DZ 5310-C	.577
1346	D4DZ 5310-M	.602
1379	D4DZ 5310-D	.577
1409	★ D4DZ 5310-N	.602
1430	★ D4DZ 5310-E r/b D6DZ 5310-E	.577
1472	★ D4DZ 5310-V r/b D6DZ 5310-V	.607
	★ D6DZ 5310-V r/b D6DZ 5310-H	
1485	D4DZ 5310-F	.596
1535	★ D4DZ 5310-W r/b D6DZ 5310-V	.607
	★ D6DZ 5310-V r/b D6DZ 5310-H	
1540	D4DZ 5310-G	.596
1595	★ D4DZ 5310-H Not replaced	.596
1600	★ D4DZ 5310-Y Not replaced	.620
1661	★ D4DZ 5310-J Not replaced	.620

Y (Meteor)

Refer to A (MERCURY)

CAPRI SERVICE SPRINGS

J (Capri)

YEAR	MODEL/RESTRICTIONS		ENGINE CYL.	ENGINE C.I.D. (C.C.D.)	PART NUMBER	DESCRIPTION	QTY.
74	J(exc. A/C)	"Before 11/1/73"	4	122 (2000cc)	★ D4RY 5310-C	# Red and Green	2
	J – – A/C	"From 11/1/73"	4	122 (2000cc)	D3RY 5310-A	# Orange and Gray	2
	J	"Before 11/1/73"	4	122 (2000cc)	★ D4RY 5310-F	# Yellow and Violet	2
	J	"From 11/1/73"	6	171 (2800cc)	★ D3RY 5310-B	# Orange and Pink	2

1975 CHECK LOAD CHART

5310 SPRING (FRONT COIL) — Cont'd

A (Mercury), Y (Meteor)

CHECK LOAD (ON IDENT. TAPE)	PART NUMBER	WIRE DIA. (INCHES)
2047	★ D5AZ 5310-A	.691
2119	★ D4AZ 5310-AW ★ D4AZ 5310-AY	.814
2124	★ D5AZ 5310-B	.691
2151	★ D4AZ 5310-AH r/b D6AZ 5310-G	.768
2192	D5AZ 5310-C	.702
2193	★ D5AZ 5310-G	.731
2201	★ D4AZ 5310-N r/b D4AZ 5310-R	.691
2274	D4AZ 5310-R	.702
2283	★ D4AZ 5310-AV r/b D4AZ 5310-AU	.731
2283	★ D4AZ 5310-K	.775
2283	D4AZ 5310-AY	.814
2368	D4AZ 5310-S	.710
2373	D4AZ 5310-AU	.731
2415	★ D5AZ 5310-R	.775
2447	★ D4AZ 5310-AZ ★ D4AZ 5310-AY	.814
2450	D4AZ 5310-A	.710
2463	★ D5AZ 5310-F	.731
2538	D5AZ 5310-L	.725
2611	★ D5AZ 5310-S	.814
2628	★ D5AZ 5310-H r/b D6AZ 5310-D	.725

C (Montego)

CHECK LOAD (ON IDENT. TAPE)	PART NUMBER	WIRE DIA. (INCHES)
1767	★ D4AZ 5310-BA r/b D4AZ 5310-BB	.768
1859	D40Z 5310-C	.646
1871	D4AZ 5310-AL	.680
1898	★ D4AZ 5310-BB	.768
1919	D40Z 5310-D	.663
2025	D4AZ 5310-C	.694
2029	★ D4AZ 5310-AT r/b D4AZ 5310-AH	.768
2051	★ D40Z 5310-F	.683
2103	D4AZ 5310-D	.717
2128	D4AZ 5310-M	.683
2151	★ D4AZ 5310-AH r/b D6AZ 5310-G	.768
2193	D4AZ 5310-E	.717
2201	★ D4AZ 5310-N r/b D4AZ 5310-R	.691
2274	D4AZ 5310-R	.702
2283	★ D4AZ 5310-F r/b D4AZ 5310-AV	.717
2283	★ D4AZ 5310-K	.775
2415	★ D5AZ 5310-R	.775

D (Lincoln)

CHECK LOAD (ON IDENT. TAPE)	PART NUMBER	WIRE DIA. (INCHES)
2837	★ D4AZ 5310-AS r/b D6AZ 5310-F	.735

F (Cougar)

CHECK LOAD (ON IDENT. TAPE)	PART NUMBER	WIRE DIA. (INCHES)
1919	D40Z 5310-D	.663
1984	D40Z 5310-E	.663
2051	★ D40Z 5310-F	.683
2128	D4AZ 5310-M	.683
2201	★ D4AZ 5310-N r/b D4AZ 5310-R	.691
2274	D4AZ 5310-R	.702

G (Monarch)

CHECK LOAD (ON IDENT. TAPE)	PART NUMBER	WIRE DIA. (INCHES)
1379	D5DZ 5310-A	.583
1420	★ D5DZ 5310-AG r/b D6DZ 5310-H	.573
1430	★ D5DZ 5310-B r/b D6DZ 5310-H	.583
1475	★ D5DZ 5310-AH r/b D6DZ 5310-H	.573
1536	★ D5DZ 5310-AJ r/b D6DZ 5310-H	.592
1540	★ D5DZ 5310-D r/b D6DZ 5310-H	.600
1595	★ D5DZ 5310-E r/b D6DZ 5310-AK	.600
1597	★ D5DZ 5310-AK r/b D6DZ 5310-AK	.592
1653	★ D5DZ 5310-F r/b D6DZ 5310-AK	.613
1658	★ D5DZ 5310-AL ★ D6DZ 5310-AR	.592
1712	★ D5DZ 5310-G r/b D6DZ 5310-N	.613
1724	★ D5DZ 5310-AM r/b D6DZ 5310-AK	.606
1778	★ D5DZ 5310-L D6DZ 5310-AN	.627
1790	★ D5DZ 5310-AN r/b D6DZ 5310-AM	.606
1840	★ D5DZ 5310-M r/b D6DZ 5310-AP	.627
1860	★ D5DZ 5310-AP r/b D6DZ 5310-AN	.617
1930	★ D5DZ 5310-AR r/b D6DZ 5310-AP	.628

K (Mark IV)

CHECK LOAD (ON IDENT. TAPE)	PART NUMBER	WIRE DIA. (INCHES)
2373	★ D5AZ 5310-N	.729
2477	D4AZ 5310-AR	.729
2567	★ D4AZ 5310-V r/b D4AZ 5310-Y	.729
2647	★ D4AZ 5310-Y r/b D5AZ 5310-H	.733

L (Bobcat)

CHECK LOAD (ON IDENT. TAPE)	PART NUMBER	WIRE DIA. (INCHES)
1260	★ D5FZ 5310-AG r/b D6FZ 5310-A	.552

COPYRIGHT © 1986 FORD MOTOR COMPANY DEARBORN, MICHIGAN

1975 CHECK LOAD CHART

5310 SPRING (FRONT COIL) — Cont'd

L (Bobcat) — Cont'd

CHECK LOAD (ON IDENT. TAPE)	PART NUMBER	WIRE DIA. (INCHES)
1270	★ D4FZ 5310-AS r/b D9FZ 5310-A	.573
1332	★ D4FZ 5310-E r/b D5FZ 5310-AG	.552
1332	★ D5FZ 5310-F r/b D7FZ 5310-K	.566
1400	D5FZ 5310-G	.566
1400	★ D4FZ 5310-AH r/b D6FZ 5310-K	.585
1416	★ D5FZ 5310-AH r/b D6FZ 5310-C	.559
1472	★ D5FZ 5310-H r/b D7FZ 5310-K	.566
1472	★ D5FZ 5310-K r/b D7FZ 5310-K	.578
1493	★ D5FZ 5310-N r/b D6FZ 5310-D	.559
1550	★ D5FZ 5310-L r/b D6FZ 5310-H	.578
1550	★ D4FZ 5310-AG r/b D6FZ 5310-P	.585
1632	★ D5FZ 5310-U r/b D6FZ 5310-S	.592 .592

P (Comet)

CHECK LOAD (ON IDENT. TAPE)	PART NUMBER	WIRE DIA. (INCHES)
1226	★ D4DZ 5310-Z ★ D6DZ 5310-B	.577
1277	★ D4DZ 5310-B ★ D6DZ 5310-B	.577
1283	★ D4DZ 5310-L r/b D6DZ 5310-S	.602

P (Comet) — Cont'd

CHECK LOAD (ON IDENT. TAPE)	PART NUMBER	WIRE DIA. (INCHES)
1328	★ D6DZ 5310-C	.577
1346	★ D4DZ 5310-M	.602
1379	D4DZ 5310-D	.577
1409	★ D4DZ 5310-N ★ r/b D6DZ 5310-U	.602
1430	★ D4DZ 5310-E r/b D6DZ 5310-E	.577
1472	★ D4DZ 5310-V r/b D6DZ 5310-V	.607
	★ D6DZ 5310-V r/b D6DZ 5310-H	
1485	D4DZ 5310-F	.596
1485	★ D5DZ 5310-C	.600
1535	★ D4DZ 5310-W r/b D6DZ 5310-V	.607
	★ D6DZ 5310-V r/b D6DZ 5310-H	
1540	★ D4DZ 5310-G r/b D6DZ 5310-J	.596
	★ D6DZ 5310-V r/b D6DZ 5310-H	
1595	★ D5DZ 5310-V	.596
1600	★ D5DZ 5310-N	.620
1655	★ D5DZ 5310-U	.609
1661	★ D5DZ 5310-W	.620
1715	★ D5DZ 5310-S r/b D6DZ 5310-AK	.609

Y (Meteor)

Refer to A (MERCURY)

1976 CHECK LOAD CHART

5310 SPRING (FRONT COIL) — Cont'd

A (Mercury), Y (Meteor)

CHECK LOAD (ON IDENT. TAPE)	PART NUMBER	WIRE DIA. (INCHES)
2025	★ D6AZ 5310-B r/b D6AZ 5310-A	.702
2104	D4AZ 5310-D	.717
2192	D5AZ 5310-C	.702
2193	D4AZ 5310-E	.717
2201	★ D4AZ 5310-N r/b D4AZ 5310-R	.691
2274	D4AZ 5310-R	.702
2283	★ D4AZ 5310-AV r/b D4AZ 5310-AU	.731
2283	★ D4AZ 5310-K	.775
2283	★ D4AZ 5310-AY	.814
2368	D4AZ 5310-S	.710
2373	D4AZ 5310-AU	.731
2415	★ D5AZ 5310-R	.775
2447	★ D4AZ 5310-AZ ★ D4AZ 5310-AY	.814

A (Mercury), Y (Meteor) — Cont'd

CHECK LOAD (ON IDENT. TAPE)	PART NUMBER	WIRE DIA. (INCHES)
2450	D4AZ 5310-A	.710
2468	★ D5AZ 5310-F	.731
2538	D5AZ 5310-L	.725
2611	★ D5AZ 5310-S	.814
2628	★ D5AZ 5310-H r/b D6AZ 5310-D	.725

C (Montego)

CHECK LOAD (ON IDENT. TAPE)	PART NUMBER	WIRE DIA. (INCHES)
1859	★ D40Z 5310-C r/b D40Z 5310-D	.646
1919	D40Z 5310-D	.663
1943	D6AZ 5310-A	.702
1984	D40Z 5310-E	.663
2025	★ D6AZ 5310-B r/b D6AZ 5310-A	.702

1976 CHECK LOAD CHART

5310 SPRING (FRONT COIL) — Cont'd

C (Montego) — Cont'd

CHECK LOAD (ON IDENT. TAPE)	PART NUMBER	WIRE DIA. (INCHES)
2051	★ D40Z 5310-F	.683
2103	D4AZ 5310-D	.717
2128	D4AZ 5310-M	.683
2151	★ D6AZ 5310-G	.775
2193	D4AZ 5310-E	.717
2274	D4AZ 5310-R	.702
2283	★ D4AZ 5310-F r/b D4AZ 5310-AV	.717
2283	★ D4AZ 5310-K	.775
2415	★ D5AZ 5310-R	.775

D (Lincoln)

CHECK LOAD (ON IDENT. TAPE)	PART NUMBER	WIRE DIA. (INCHES)
2837	★ D4AZ 5310-AS r/b D6AZ 5310-F	.735

F (Cougar)

CHECK LOAD (ON IDENT. TAPE)	PART NUMBER	WIRE DIA. (INCHES)
1859	★ D40Z 5310-C r/b D40Z 5310-D	.646
1919	D40Z 5310-D	.663
1984	D40Z 5310-E	.663
2051	★ D40Z 5310-F	.683
2128	D4AZ 5310-M	
2274	D4AZ 5310-R	.702

G (Monarch)

CHECK LOAD (ON IDENT. TAPE)	PART NUMBER	WIRE DIA. (INCHES)
1420 1420	★ D5DZ 5310-AG r/b D6DZ 5310-AG	.573 .583
1420	★ D6DZ 5310-G r/b D6DZ 5310-H	.596
1475 1475	★ D5DZ 5310-AH r/b D6DZ 5310-H	.573 .583
1475	D6DZ 5310-H	.586
1485	★ D6DZ 5310-Y r/b D6DZ 5310-H	.623
1536	★ D5DZ 5310-AJ r/b D6DZ 5310-J	.592
	★ D6DZ 5310-J r/b D6DZ 5310-H	
1545	D6DZ 5310-Z	.623
1597 1597	★ D5DZ 5310-AK r/b D6DZ 5310-AK	.592 .600
1605	★ D6DZ 5310-AA r/b D6DZ 5310-AB	.623
1658	★ D5DZ 5310-AL r/b D6DZ 5310-AK	.592
1658	D6DZ 5310-AK	.600

G (Monarch) — Cont'd

CHECK LOAD (ON IDENT. TAPE)	PART NUMBER	WIRE DIA. (INCHES)
1665	D6DZ 5310-AB	.623
1724	★ D5DZ 5310-AM r/b D6DZ 5310-AK	.606
1724	★ D6DZ 5310-AL r/b D6DZ 5310-AK	.616
1730	★ D6DZ 5310-AC r/b D6DZ 5310-AB	.637
1790	D7DZ 5310-AN	.606
1790	★ D6DZ 5310-AM r/b D6DZ 5310-AN	.616
1790 1855	★ D6DZ 5310-AD r/b D6DZ 5310-AE	.637 .651
1860 1860	★ D5DZ 5310-AP r/b D6DZ 5310-AN	.617 .627
1915	★ D6DZ 5310-AF r/b D6DZ 5310-AZ	.651
1930	★ D6DZ 5310-AP	.627
1930	★ D5DZ 5310-AR r/b D6DZ 5310-AP	.628

K (Mark IV)

CHECK LOAD (ON IDENT. TAPE)	PART NUMBER	WIRE DIA. (INCHES)
2477	★ D6AZ 5310-C r/b D5AZ 5310-L	.732
2567	D6AZ 5310-D	.732
2647	D6AZ 5310-E	.732
2747	D6AZ 5310-F	.732

L (Bobcat)

CHECK LOAD (ON IDENT. TAPE)	PART NUMBER	WIRE DIA. (INCHES)
1150	★ D6FZ 5310-A	.552
1168	★ D6FZ 5310-J r/b D9FZ 5310-A	.586
1220	★ D6FZ 5310-E r/b D7FZ 5310-K	.566
1256	★ D6FZ 5310-K r/b D7FZ 5310-K	.586
1290 1295	★ D6FZ 5310-C r/b D7FZ 5310-K	.559 .566
1344	★ D6FZ 5310-L r/b D7FZ 5310-K	.586
1364	★ D6FZ 5310-D r/b D7FZ 5310-K	.559
1364	★ D6FZ 5310-G r/b D7FZ 5310-K	.579
1364	★ D6FZ 5310-G r/b D7FZ 5310-K	.579
1432	D6FZ 5310-P	.586
1445	D6FZ 5310-H	.579

COPYRIGHT © 1986— FORD MOTOR COMPANY —DEARBORN, MICHIGAN

1976 CHECK LOAD CHART

5310 SPRING (FRONT COIL) — Cont'd

P (Comet)

CHECK LOAD (ON IDENT. TAPE)	PART NUMBER	WIRE DIA. (INCHES)
1145	★D6DZ 5310-AS	.569
1190	★D6DZ 5310-AT	.607
1200	★D6DZ 5310-AR	.569
1200	★D6DZ 5310-A r/bD6DZ 5310-AR	.577
1255	★D6DZ 5310-B	.577
1260	★D6DZ 5310-S	.607
1310	★D6DZ 5310-C	.577
1330	★r/bD6DZ 5310-T	.607
1365	★D6DZ 5310-D	.577
1400	★D6DZ 5310-U r/bD6DZ 5310-V	.607

P (Comet) — Cont'd

CHECK LOAD (ON IDENT. TAPE)	PART NUMBER	WIRE DIA. (INCHES)
	★D6DZ 5310-V r/bD6DZ 5310-H	
1420	★D6DZ 5310-G r/bD6DZ 5310-H	.596
1470 1475	★D6DZ 5310-V r/bD6DZ 5310-H	.607 .596
1536	★D6DZ 5310-J r/bD6DZ 5310-H	.596
1540	★D6DZ 5310-W r/bD6DZ 5310-Z	.617

Y (Meteor)

Refer to A (Mercury)

CAPRI SERVICE SPRINGS

J (Capri)

YEAR	MODEL/RESTRICTIONS	ENGINE CYL.	ENGINE C.I.D. (C.C.D.)	PART NUMBER	DESCRIPTION	QTY.
76	J – – without A/C	4	140 (2300cc)	★D5RY 5310-A	#75EB 5310-AA, green-yellow	2
	J	4	140 (2300cc)	★D5RY 5310-B	#75EB 5310-BA, green-violet	2
	J	6	171 (2800cc)			2
	J	4	140 (2300cc)	★D5RY 5310-C r/bD5RY 5310-D	#75EB 5310-CA, green-pink	2
	J	6	171 (2800cc)			2
	J	4	140 (2300cc)	D5RY 5310-D	#75EB 5310-DA, pink-violet	2
	J	6	171 (2800cc)			2
	J – – with A/C	4	140 (2300cc)	D5RY 5310-E	#75EB5310-EA, pink-white	2
	J – – All	6	171 (2800cc)			
	J – – without A/C	6	171 (2800cc)	D5RY 5310-F	#73EB 5310-UA, brown-violet	2

1977 CHECK LOAD CHART

5310 SPRING (FRONT COIL) — Cont'd

A (Mercury)

CHECK LOAD (ON IDENT. TAPE)	PART NUMBER	WIRE DIA. (INCHES)
1850	★ D7AZ 5310-A	.702
1919	D40Z 5310-D	.663
1943	D6AZ 5310-A	.702
1976	★ D4AZ 5310-AF	.683
2013	★ D5AZ 5310-E	.717
2029	★ D4AZ 5310-AT r/b D4AZ 5310-AH	.768
2047	★ D5AZ 5310-A	.691
2051	D40Z 5310-F	.683
2104	D4AZ 5310-D	.717
2124	★ D5AZ 5310-B	.691
2151	★ D6AZ 5310-G	.775
2192	D5AZ 5310-C	.702
2193	D4AZ 5310-E	.717
2274	D4AZ 5310-R	.702
2283	D4AZ 5310-F	.717
2283	★ D4AZ 5310-K	.775
2283	★ D4AZ 5310-AY	.814
2368	D4AZ 5310-S	.710
2373	D4AZ 5310-AU	.731
2415	★ D5AZ 5310-R	.775
2450	D4AZ 5310-A	.710
2468	★ D5AZ 5310-F	.731
2611	★ D5AZ 5310-S	.814

D (Lincoln)

CHECK LOAD (ON IDENT. TAPE)	PART NUMBER	WIRE DIA. (INCHES)
2477	★ D7AZ 5310-E	.725
2567	D6AZ 5310-D	.732
2647	D6AZ 5310-E	.732
2747	D6AZ 5310-F	.732
2747	★ D4AZ 5310-Z r/b D6AZ 5310-F	.735

F (Cougar)

CHECK LOAD (ON IDENT. TAPE)	PART NUMBER	WIRE DIA. (INCHES)
1679	D7AZ 5310-B	.646
1739	★ D40Z 5310-A r/b D40Z 5310-B	.646
1799	D7AZ 5310-F	.659
1799	★ D4AZ 5310-AK r/b D4AZ 5310-AJ	.680
1859	D7AZ 5310-G	.659
1871	D4AZ 5310-AL	.680
1898	★ D4AZ 5310-BB	.768
1919	D40Z 5310-D	.663
1943	D6AZ 5310-A	.702
1984	D40Z 5310-E	.663
2025	★ D6AZ 5310-B r/b D6AZ 5310-A	.702
2029	★ D4AZ 5310-AT r/b D4AZ 5310-AH	.768
2051	★ D40Z 5310-F	.683

F (Cougar) — Cont'd

CHECK LOAD (ON IDENT. TAPE)	PART NUMBER	WIRE DIA. (INCHES)
2104	D4AZ 5310-D	.717
2109	D7AZ 5310-H	.699
2128	D4AZ 5310-M	.683
2151	★ D6AZ 5310-G	.775
2193	D4AZ 5310-E	.717
2274	D4AZ 5310-R	.702
2283	★ D4AZ 5310-F r/b D4AZ 5310-AV	.717
2283	★ D4AZ 5310-K	.775
2415	★ D5AZ 5310-R	.775

G (Monarch)

CHECK LOAD (ON IDENT. TAPE)	PART NUMBER	WIRE DIA. (INCHES)
1420	★ D6DZ 5310-G r/b D6DZ 5310-H	.596
1420	★ D6DZ 5310-AG r/b D6DZ 5310-H	.583
1475	★ D6DZ 5310-AH r/b D6DZ 5310-H	.583
1475	D6DZ 5310-H	.586
1485	★ D6DZ 5310-Y r/b D6DZ 5310-Z	.623
1536	★ D6DZ 5310-J r/b D6DZ 5310-H	.596
1545	D6DZ 5310-Z	.623
1597	★ D6DZ 5310-AJ r/b D6DZ 5310-AK	.600
1605	★ D6DZ 5310-AA r/b D6DZ 5310-AB	.623
1658	D6DZ 5310-AK	.600
1665	D6DZ 5310-AB	.623
1724	★ D6DZ 5310-AL r/b D6DZ 5310-AK	.616
1730	★ D6DZ 5310-AC r/b D6DZ 5310-AB	.637
1790	★ D6DZ 5310-AM r/b D6DZ 5310-AN	.616
1790	★ D6DZ 5310-AD	.637
1855	r/b D6DZ 5310-AE	.651
1860	D6DZ 5310-AN	.627
1915	★ D6DZ 5310-AF r/b D6DZ 5310-AE	.651
1930	D6DZ 5310-R	.627

K (Mark V)

CHECK LOAD (ON IDENT. TAPE)	PART NUMBER	WIRE DIA. (INCHES)
2207	D7AZ 5310-K	.720
2247	D7AZ 5310-C	.725
2297	★ D7AZ 5310-L	.720
2387	r/b D7AZ 5310-D	.725
2477	★ D7AZ 5310-E	.725
2567	D6AZ 5310-D	.732
2647	D6AZ 5310-E	.732

COPYRIGHT © 1986— FORD MOTOR COMPANY —DEARBORN, MICHIGAN

1977 CHECK LOAD CHART

5310 SPRING (FRONT COIL) — Cont'd

L (Bobcat)

CHECK LOAD (ON IDENT. TAPE)	PART NUMBER	WIRE DIA. (INCHES)
910	★ D7FZ 5310-R	.573
958	★ D7FZ 5310-P r/b D8FZ 5310-B	.569
998	★ D7FZ 5310-E	.573
1010	★ D7FZ 5310-N r/b D8FZ 5310-A	.550
1039	★ D7FZ 5310-G r/b D9FZ 5310-A	.569
1080	D7FZ 5310-L	.550
1120	★ D7FZ 5310-H r/b D9FZ 5310-A	.569
1150	D7FZ 5310-M	.550
1150	★ D6FZ 5310-A	.552
1168	★ D6FZ 5310-J r/b D9FZ 5310-A	.586
1201	★ D7FZ 5310-J r/b D7FZ 5310-K	.569
1220	★ D6FZ 5310-E r/b D7FZ 5310-K	.566
1256	★ D6FZ 5310-K	.586
1283	r/b D7FZ 5310-K	.579
1295	★ D6FZ 5310-F r/b D7FZ 5310-K	.566
1344	★ D6FZ 5310-L r/b D7FZ 5310-K	.586
1364	★ D6FZ 5310-G r/b D7FZ 5310-K	.579
1432	★ D6FZ 5310-P	.586
1445	D6FZ 5310-N	.570
1445	D6FZ 5310-H	.579
1520	★ D7FZ 5310-S r/b D6FZ 5310-S	.590

P (Comet)

CHECK LOAD (ON IDENT. TAPE)	PART NUMBER	WIRE DIA. (INCHES)
1145	★ D6DZ 5310-AS	.569
1190	★ D6DZ 5310-AT	.607
1200	★ D6DZ 5310-AR	.569
1255	★ D6DZ 5310-B	.577
1260	★ D6DZ 5310-S	.607
1310	★ D6DZ 5310-C	.577
1330	★ r/b D6DZ 5310-T	.607

P (Comet) — Cont'd

CHECK LOAD (ON IDENT. TAPE)	PART NUMBER	WIRE DIA. (INCHES)
1365	★ D6DZ 5310-D	.577
1400	★ D6DZ 5310-U ★ r/b D6DZ 5310-V r/b D6DZ 5310-H	.607
1420	★ D6DZ 5310-G r/b D6DZ 5310-H	.596
1470	★ D6DZ 5310-V	.607
1475	r/b D6DZ 5310-H	.596

V (Versailles)

CHECK LOAD (ON IDENT. TAPE)	PART NUMBER	WIRE DIA. (INCHES)
1420	★ D6DZ 5310-G r/b D6DZ 5310-H	.596
1420	★ D6DZ 5310-AG r/b D6DZ 5310-H	.583
1475	★ D6DZ 5310-AH r/b D6DZ 5310-H	.583
1475	D6DZ 5310-H	.586
1485	★ D6DZ 5310-Y r/b D6DZ 5310-Z	.623
1536	★ D6DZ 5310-J r/b D6DZ 5310-H	.596
1545	D6DZ 5310-Z	.623
1597	★ D6DZ 5310-AJ r/b D6DZ 5310-AK	.600
1605	★ D6DZ 5310-AA r/b D6DZ 5310-AB	.623
1658	D6DZ 5310-AK	.600
1665	D6DZ 5310-AB	.623
1724	★ D6DZ 5310-AL r/b D6DZ 5310-AK	.616
1730	★ D6DZ 5310-AC r/b D6DZ 5310-AB	.637
1790	★ D6DZ 5310-AM r/b D6DZ 5310-AN	.616
1790	★ D6DZ 5310-AD	.637
1855	r/b D6DZ 5310-AE	.651
1860	D6DZ 5310-AN	.627
1915	★ D6DZ 5310-AF r/b D6DZ 5310-AE	.651
1930	D6DZ 5310-R	.627

CAPRI SERVICE SPRINGS

5310 SPRING (FRONT COIL) — Cont'd

J (Capri)

YEAR	MODEL/RESTRICTIONS	ENGINE CYL.	ENGINE C.I.D. (C.C.D.)	PART NUMBER	DESCRIPTION	QTY.
77	J – – without A/C	4	140 (2300cc)	★ D5RY 5310-A	#75EB 5310-AA, green-yellow	2
	J	4	140 (2300cc)	★ D5RY 5310-B	#75EB 5310-BA, green-violet	2
	J	6	171 (2800cc)			2
	J	4	140 (2300cc)	★ D5RY 5310-C r/b D5RY 5310-D	#75EB 5310-CA, green-pink	2
	J	6	171 (2800cc)			2
	J	4	140 (2300cc)	D5RY 5310-D	#75EB 5310-DA, pink-violet	2
	J	6	171 (2800cc)			2
	J – – with A/C	4	140 (2300cc)	D5RY 5310-E	#75EB 5310-EA, pink-white	2
	J – – All	6	171 (2800cc)			
	J – – without A/C	6	171 (2800cc)	D5RY 5310-F	#73EB 5310-UA, brown-violet	2

COPYRIGHT © 1986 — FORD MOTOR COMPANY — DEARBORN, MICHIGAN

1978 CHECK LOAD CHART

5310 SPRING (FRONT COIL) — Cont'd

A (Mercury)

CHECK LOAD (ON IDENT. TAPE)	PART NUMBER	WIRE DIA. (INCHES)
1859	★D7AZ 5310-G	.659
1898	★D4AZ 5310-BB	.768
1919	D40Z 5310-D	.663
1943	D6AZ 5310-A	.702
1976	D4AZ 5310-AF	.683
2013	D5AZ 5310-E	.717
2029	★D4AZ 5310-AT r/bD4AZ 5310-AH	.768
2047	D5AZ 5310-A	.691
2051	★D40Z 5310-F	.683
2104	D4AZ 5310-D	.717
2119	★D4AZ 5310-AW ★D4AZ 5310-AY	.814
2124	D5AZ 5310-B	.691
2151	★D6AZ 5310-G	.775
2193	D4AZ 5310-E	.717
2201	★D4AZ 5310-N r/bD4AZ 5310-R	.691
2274	D4AZ 5310-R	.702
2283	★D4AZ 5310-F r/bD4AZ 5310-AV	.717
2283	★D4AZ 5310-K	.775
2283	D4AZ 5310-AY	.814
2373	D4AZ 5310-AU	.731
2415	D5AZ 5310-R	.775
2468	D5AZ 5310-F	.731
2538	D5AZ 5310-L	.725
2560	D5AZ 5310-J	.730
2611	★D5AZ 5310-S	.814

D (Lincoln)

CHECK LOAD (ON IDENT. TAPE)	PART NUMBER	WIRE DIA. (INCHES)
2477	★D7AZ 5310-E	.725
2567	D6AZ 5310-D	.732
2647	D6AZ 5310-E	.732
2747	D6AZ 5310-F	.732

F (Cougar)

CHECK LOAD (ON IDENT. TAPE)	PART NUMBER	WIRE DIA. (INCHES)
1739	★D40Z 5310-A r/bD40Z 5310-B	.646
1799	D7AZ 5310-F	.659
1799	★D4AZ 5310-AK r/bD4AZ 5310-AJ	.680
1859	★D7AZ 5310-G	.659
1871	D4AZ 5310-AL	.680
1898	★D4AZ 5310-BB	.768
1919	D40Z 5310-D	.663
1943	D6AZ 5310-A	.702
1984	D40Z 5310-E	.663
2025	★D6AZ 5310-B r/bD6AZ 5310-A	.702
2029	★D4AZ 5310-AT r/bD4AZ 5310-AH	.768
2051	★D40Z 5310-F	.683
2104	D4AZ 5310-D	.717
2109	D7AZ 5310-H	.699

F (Cougar) — Cont'd

CHECK LOAD (ON IDENT. TAPE)	PART NUMBER	WIRE DIA. (INCHES)
2128	D4AZ 5310-M	.683
2151	★D6AZ 5310-G	.775
2193	D4AZ 5310-E	.717
2201	★D4AZ 5310-N r/bD4AZ 5310-R	.691
2274	D4AZ 5310-R	.702
2283	★D4AZ 5310-F r/bD4AZ 5310-AV	.717
2283	★D4AZ 5310-K	.775
2368	D4AZ 5310-S	.710
2373	D4AZ 5310-U	.717
2415	D5AZ 5310-R	.775
2450	D4AZ 5310-A	.710
2547	D4AZ 5310-L	.775

G (Monarch)

CHECK LOAD (ON IDENT. TAPE)	PART NUMBER	WIRE DIA. (INCHES)
1420	★D6DZ 5310-G r/bD6DZ 5310-H	.596
1420	★D6DZ 5310-AG r/bD6DZ 5310-H	.583
1475	★D6DZ 5310-AH r/bD6DZ 5310-H	.583
1475	D6DZ 5310-H	.586
1485	★D6DZ 5310-Y r/bD6DZ 5310-Z	.623
1536	★D6DZ 5310-J r/bD6DZ 5310-H	.596
1545	D6DZ 5310-Z	.623
1597	★D6DZ 5310-AJ r/bD6DZ 5310-AK	.600
1605	★D6DZ 5310-AA r/bD6DZ 5310-AB	.623
1658	D6DZ 5310-AK	.600
1665	D6DZ 5310-AB	.623
1724	★D6DZ 5310-AL r/bD6DZ 5310-AK	.616
1730	★D6DZ 5310-AC r/bD6DZ 5310-AB	.637
1790	★D6DZ 5310-AM r/bD6DZ 5310-AN	.616
1790	★D6DZ 5310-AD	.637
1855	r/bD6DZ 5310-AE	.651

K (Mark V)

CHECK LOAD (ON IDENT. TAPE)	PART NUMBER	WIRE DIA. (INCHES)
2207	D7AZ 5310-K	.720
2387	D7AZ 5310-D	.725
2477	★D7AZ 5310-E	.725
2567	D6AZ 5310-D	.732
2747	D6AZ 5310-F	.732

L (Bobcat)

CHECK LOAD (ON IDENT. TAPE)	PART NUMBER	WIRE DIA. (INCHES)
1039	★D7FZ 5310-G r/bD9FZ 5310-A	.569
1080	D7FZ 5310-L	.550

1978 CHECK LOAD CHART

5310 SPRING (FRONT COIL) — Cont'd

L (Bobcat) — Cont'd

CHECK LOAD (ON IDENT. TAPE)	PART NUMBER	WIRE DIA. (INCHES)
1120	★ D7FZ 5310-H r/b D9FZ 5310-A	.569
1150	D7FZ 5310-M	.550
1168	★ D6FZ 5310-J r/b D9FZ 5310-A	.586
1201	★ D7FZ 5310-J r/b D7FZ 5310-K	.569
1220	★ D6FZ 5310-E r/b D7FZ 5310-K	.566
1256	★ D6FZ 5310-K	.586
1283	r/b D7FZ 5310-K	.579
1295	★ D6FZ 5310-F r/b D7FZ 5310-K	.566
1344	★ D6FZ 5310-L r/b D7FZ 5310-K	.586
1364	★ D6FZ 5310-G r/b D7FZ 5310-K	.579
1432	★ D6FZ 5310-P r/b D7FZ 5310-K	.586
1445	★ D6FZ 5310-N r/b D6FZ 5310-H	.570
1445	D6FZ 5310-H	.579
1520	★ D7FZ 5310-S r/b D6FZ 5310-S	.590

P (Zephyr)

CHECK LOAD (ON IDENT. TAPE)	PART NUMBER	WIRE DIA. (INCHES)
1430	★ D8BZ 5310-AM	.606
1501	★ D8BZ 5310-AN r/b D9BZ 5310-B	.606
1549	★ D8BZ 5310-BN r/b E1BZ 5310-A	.638
1560	★ D8BZ 5310-AV r/b E1BZ 5310-A	.622
1570	★ D8BZ 5310-AP r/b D9BZ 5310-B	.606
1630	D8BZ 5310-BT	.646
1634	★ D8BZ 5310-BP r/b E1BZ 5310-A	.638
1637	★ D8BZ 5310-CC r/b E1BZ 5310-A	.622
1640	★ D8BZ 5310-AR r/b D9BZ 5310-B	.606
1640	★ D8BZ 5310-AW r/b E1BZ 5310-A	.622
1710	D8BZ 5310-AS	.622
1720	★ D8BZ 5310-AY r/b E0BZ 5310-H	.622
1720	★ D8BZ 5310-BR	.638
1720	★ D8BZ 5310-BU r/b E0BZ 5310-H	.646
1785	D8BZ 5310-AT	.622
1800	★ D8BZ 5310-AZ r/b D8BZ 5310-AT	.634
1805	D8BZ 5310-BS	.638

P (Zephyr) — Cont'd

CHECK LOAD (ON IDENT. TAPE)	PART NUMBER	WIRE DIA. (INCHES)
1810	★ D8BZ 5310-BV r/b D8BZ 5310-BW	.646
1835	D8BZ 5310-BF	.646
1860	D8BZ 5310-AU	.622
1880	★ D8BZ 5310-BA r/b E1BZ 5310-B	.634
1900	D8BZ 5310-BW	.646
1900	★ D8BZ 5310-BY r/b E0BZ 5310-N	.657
1920	D8BZ 5310-BG	.646
1960	★ D8BZ 5310-BB r/b E1BZ 5310-B	.634
1995	★ D8BZ 5310-BZ r/b D8BZ 5310-CA	.657
2005	D8BZ 5310-BH	.646
2040	★ D8BZ 5310-BC r/b E0BZ 5310-N	.642
2091	D8BZ 5310-BJ	.646
2091	D8BZ 5310-CA	.657
2130	★ D8BZ 5310-BD r/b E0BZ 5310-N	.642
2175	D8BZ 5310-BK	.654
2186	D8BZ 5310-CB	.657
2200	★ D8BZ 5310-BE	.642
2259	★ D8BZ 5310-BL r/b E1BZ 5310-F	.654

V (Versailles)

CHECK LOAD (ON IDENT. TAPE)	PART NUMBER	WIRE DIA. (INCHES)
1420	★ D6DZ 5310-G r/b D6DZ 5310-H	.596
1420	★ D6DZ 5310-AG r/b D6DZ 5310-H	.583
1475	★ D6DZ 5310-AH r/b D6DZ 5310-H	.583
1475	D6DZ 5310-H	.586
1485	★ D6DZ 5310-Y r/b D6DZ 5310-Z	.623
1536	★ D6DZ 5310-J r/b D6DZ 5310-H	.596
1545	D6DZ 5310-Z	.623
1597	★ D6DZ 5310-AJ r/b D6DZ 5310-AK	.600
1605	★ D6DZ 5310-AA r/b D6DZ 5310-AB	.623
1658	D6DZ 5310-AK	.600
1665	D6DZ 5310-AB	.623
1724	★ D6DZ 5310-AL r/b D6DZ 5310-AK	.616
1730	★ D6DZ 5310-AC r/b D6DZ 5310-AB	.637
1790	★ D6DZ 5310-AM r/b D6DZ 5310-AN	.616
1790	★ D6DZ 5310-AD	.637
1855	r/b D6DZ 5310-AE	.651

COPYRIGHT © 1986— FORD MOTOR COMPANY —DEARBORN, MICHIGAN

1979 CHECK LOAD CHART

5310 SPRING (FRONT COIL)

A (Mercury)

SPRING CODE	SERVICE PART NUMBER	WIRE DIA. (INCHES)	CHECK LOAD	SPRING CODE	SERVICE PART NUMBER	WIRE DIA. (INCHES)	CHECK LOAD
2	D9AZ 5310-AB	.781	1967	D	D9AZ 5310-AM	.808	2306
3	D9AZ 5310-AC	.781	2136	E	D9AZ 5310-AN	.808	2473
4	D9AZ 5310-AD	.781	2304	H	D9AZ 5310-H	.685	2279
5	D9AZ 5310-AE	.781	2473	J	D9AZ 5310-J	.685	2372
6	★ D9AZ 5310-AF	.675	1753	K	★ D9AZ 5310-K	.675	1848
7	★ D9AZ 5310-AG	.640	1940	L	D9AZ 5310-L	.675	1942
8	r/b D9AZ 5310-AH	.640	2040	M	D9AZ 5310-M	.675	2037
9	r/b D9AZ 5310-AJ	.640	2120	N	D9AZ 5310-N	.693	2138
A	D9AZ 5310-A	.638	1767	Q	D9AZ 5310-AR	.668	2191
B	D9AZ 5310-B	.638	1842	R	D9AZ 5310-R	.693	2239
C	D9AZ 5310-AL	.808	2140	S	D9AZ 5310-S	.693	2340

D (Lincoln)

E	★ D7AZ 5310-E	.725	2477	G	D6AZ 5310-E	.732	2647
F	D6AZ 5310-D	.732	2567	H	D6AZ 5310-F	.732	2747

F (Cougar)

4	D7AZ 5310-F	.659	1799	E	D4AZ 5310-R	.702	2274
5	D4AZ 5310-BB	.768	1898	M	D40Z 5310-D	.663	1919
6	D4AZ 5310-AT	.768	2029	O	D4AZ 5310-M	.683	2128
7	D40Z 5310-E	.663	1984	P	D4AZ 5310-K	.775	2283
9	D6AZ 5310-G	.775	2151	Q	D7AZ 5310-G	.659	1859
B	★ D40Z 5310-F	.683	2051	T	D40Z 5310-A	.646	1739
D	D4AZ 5310-N	.702	2274	W	D5AZ 5310-K	.775	2415

G (Monarch)

6	★ D6DZ 5310-AG r/b D6DZ 5310-H	.583	1420	E L	★ D6DZ 5310-AM r/b D6DZ 5310-AN	.616 .627	1790 1860
7	★ D6DZ 5310-AH r/b D6DZ 5310-H	.583	1475	P	D6DZ 5310-Z	.623	1545
A	★ D6DZ 5310-J r/b D6DZ 5310-H	.596	1536	Q R	★ D6DZ 5310-AA r/b D6DZ 5310-AB	.623 .623	1605 1665
B	★ D6DZ 5310-AJ	.600	1597	S	★ D6DZ 5310-AC r/b D6DZ 5310-AB	.637	1730
C	r/b D6DZ 5310-AK	.600	1658	T	★ D6DZ 5310-AD	.637	1790
D	★ D6DZ 5310-AL r/b D6DZ 5310-AK	.616	1724	U	r/b D6DZ 5310-AE	.651	1855

J (Capri)

2	D9BZ 5310-B	.614	1565	H	D9BZ 5310-T	.650	2141
3	D9BZ 5310-C	.614	1640	J	★ D9BZ 5310-A r/b D9BZ 5310-B	.614	1490
6	★ D8BZ 5310-BR	.638	1720				
7	D9BZ 5310-F	.634	2010	K	D8BZ 5310-BF	.646	1835
8	D9BZ 5310-G	.634	2086	L	★ D8BZ 5310-BG r/b E0BZ 5310-R	.646	1920
A	★ D9BZ 5310-J r/b E1BZ 5310-A	.632	1598	M	D8BZ 5310-BH	.646	2005
B	D9BZ 5310-K	.632	1675	N	D8BZ 5310-BJ	.646	2091
C	D9BZ 5310-L	.640	1753	O	D9BZ 5310-E	.634	1936
D	D9BZ 5310-M	.640	1831	R	★ D9BZ 5310-H	.632	1521
E	D9BZ 5310-N	.640	1908	V	D8BZ 5310-AS	.622	1710
F	D9BZ 5310-R	.650	1986	Y	D8BZ 5310-AT	.622	1785
G	D9BZ 5310-S	.650	2064	Z	D8BZ 5310-AU	.622	1860

1979 CHECK LOAD CHART

5310 SPRING (FRONT COIL) — Cont'd

K (Mark V)

SPRING CODE	SERVICE PART NUMBER	WIRE DIA. (INCHES)	CHECK LOAD
C	★ D7AZ 5310-L	.732	2297
D	r/b D7AZ 5310-D	.725	2387
E	★ D7AZ 5310-E	.725	2477
F	D6AZ 5310-D	.732	2567
G	D6AZ 5310-E	.732	2647
H	D6AZ 5310-F	.732	2747
J	★ D7AZ 5310-K	.720	2207

L (Bobcat)

SPRING CODE	SERVICE PART NUMBER	WIRE DIA. (INCHES)	CHECK LOAD
3	D7FZ 5310-L	.550	1080
4	D7FZ 5310-M	.550	1150
A	D9FZ 5310-A	.575	1080
B	★ D9FZ 5310-B r/b D9FZ 5310-A	.575	1168
E	★ D6FZ 5310-E r/b D7FZ 5310-K	.566	1220
F	★ D6FZ 5310-F r/b D7FZ 5310-K	.566	1295
G	★ D6FZ 5310-G r/b D7FZ 5310-K	.570	1370
J	★ D6FZ 5310-J r/b D9FZ 5310-A	.586	1168
K	★ D6FZ 5310-K r/b D7FZ 5310-K	.586	1256
L	★ D6FZ 5310-L r/b D7FZ 5310-K	.586	1344
V	★ D7FZ 5310-H r/b D9FZ 5310-A	.569	1120
W	★ D7FZ 5310-J	.569	1201
X	r/b D7FZ 5310-K	.579	1283

P (Zephyr)

SPRING CODE	SERVICE PART NUMBER	WIRE DIA. (INCHES)	CHECK LOAD
3	D9BZ 5310-C	.614	1640
4	★ D8BZ 5310-BN r/b E1BZ 5310-A	.638	1549
5	★ D8BZ 5310-BP r/b E1BZ 5310-A	.638	1634
6	★ D8BZ 5310-BR	.638	1720
9	★ D8BZ 5310-BU r/b E0BZ 5310-H	.638	1765
B	D9BZ 5310-K	.632	1675
C	D9BZ 5310-L	.640	1753
D	D9BZ 5310-M	.640	1831
E	D9BZ 5310-N	.640	1908
F	D9BZ 5310-R	.650	1986
G	D9BZ 5310-S	.650	2064
H	D9BZ 5310-T	.650	2141
K	D8BZ 5310-BF	.646	1835
L	★ D8BZ 5310-BG r/b E0BZ 5310-R	.646	1920
M	D8BZ 5310-BH	.646	2005
N	D8BZ 5310-BJ	.646	2091
O	D8BZ 5310-CB	.657	2186
P	★ D8BZ 5310-BV	.646	1810
Q	r/b D8BZ 5310-BW	.646	1900
S	★ D8BZ 5310-AN r/b D9BZ 5310-B	.606	1501
T	★ D8BZ 5310-AP r/b D9BZ 5310-B	.606	1570
U	★ D8BZ 5310-AR r/b D9BZ 5310-B	.606	1640
V	D8BZ 5310-AS	.622	1710
W	D8BZ 5310-BY	.657	1900
X	★ D8BZ 5310-BZ r/b D8BZ 5310-CA	.657	1995
Y	D8BZ 5310-AT	.622	1785
Z	D8BZ 5310-AU	.622	1860

V (Versailles)

SPRING CODE	SERVICE PART NUMBER	WIRE DIA. (INCHES)	CHECK LOAD
P	D6DZ 5310-Z	.623	1545
Q	★ D6DZ 5310-AA	.623	1605
R	D6DZ 5310-AB	.623	1665
S	★ D6DZ 5310-AC r/b D6DZ 5310-AB	.627	1730
T	★ D6DZ 5310-AD	.637	1790
U	r/b D6DZ 5310-AE	.651	1855
6	★ D6DZ 5310-AG r/b D6DZ 5310-H	.583	1420
7	★ D6DZ 5310-AH r/b D6DZ 5310-H	.583	1475
B	★ D6DZ 5310-AJ r/b D6DZ 5310-AK	.600	1597
C	D6DZ 5310-AK	.600	1658
D	★ D6DZ 5310-AL r/b D6DZ 5310-AK	.616	1724
E	★ D6DZ 5310-AM	.616	1790
L	r/b D6DZ 5310-AN	.627	1860

COPYRIGHT © 1986— FORD MOTOR COMPANY —DEARBORN, MICHIGAN

ENGINE IDENTIFICATION TAG

IN ALL INQUIRIES ALWAYS FURNISH THE COMPLETE TAG IDENTIFICATION INFORMATION

All engines for 1963/ include an engine identification tag. This tag describes C.I.D., model year, year and month of production, change level number & engine caliberation information. All engine code numbers consists of a basic number, a suffix, and in some cases a prefix. Generally the basic number is adequate for engine identification, if additional information is needed the prefix or suffix is included.

The catalog uses the change level number in the same manner as date restriction information is presently used. The change level number is advanced only when a replacing part of assembly being introduced and the old part or assembly it replaces are not completely interchangeable. These Engine Code Numbers and their designations are listed in the Engine Identification Chart which follows on Pages 3 thru 8.

1973 - "BEFORE 2/1/73"

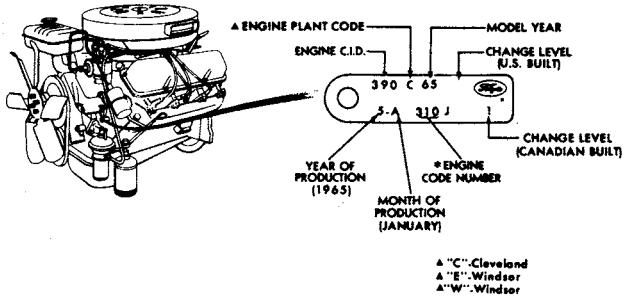

*Except when indicated in the chart below prefixes and suffixes are for Ford Motor Company use only and do not affect engine identification.

P-4469

P4469

1973 - "FROM 2/1/73"

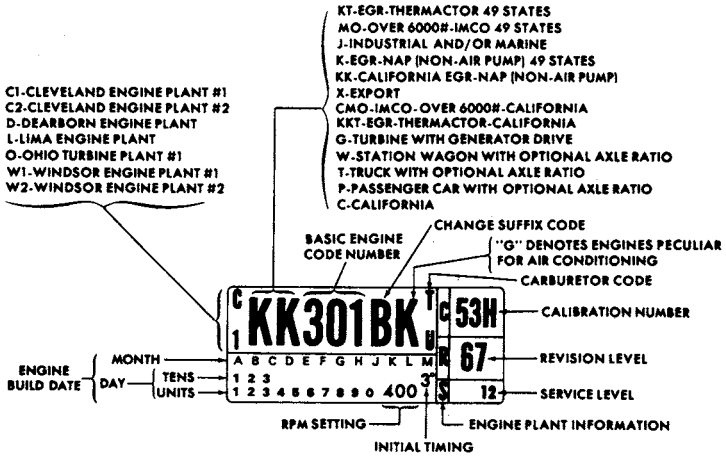

ENGINE LABEL LOCATION-NOTE 1

P-10885

P-10885

NOTE 1 —New label(decal)installations will be made as follows:

ENGINE TYPE	LOCATION
4 Cylinder 122(2000 cc)	Right Front Side of Rocker Cover
4 Cylinder 140 (2300 cc)	On Timing Belt Cover
6 Cylinder 171(2800 cc)	Front Side of Rocker Cover
6 Cylinder 200,250	Front of Rocker Cover
8 Cylinder 302,351,400,429,460	Front Side of Rocker Cover

COPYRIGHT © 1986 — FORD MOTOR COMPANY — DEARBORN, MICHIGAN

ENGINE IDENTIFICATION TAG—Cont'd

1974/76

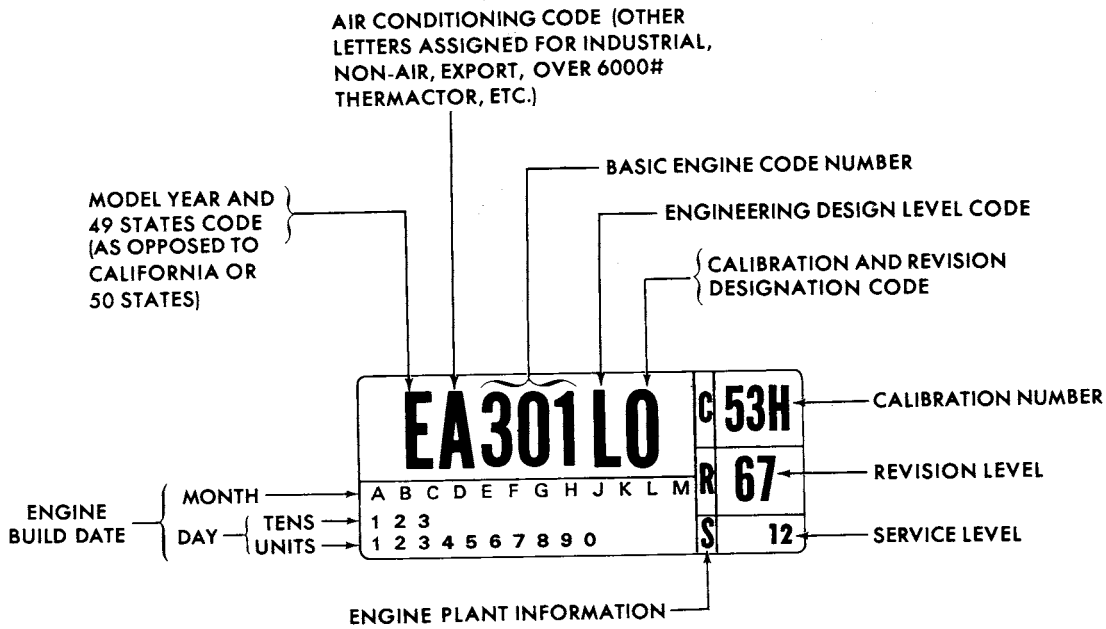

ENGINE LABEL LOCATION-NOTE 1 P-10886

ENGINE PARTS LISTS

Engine parts are cataloged in separate sections for each related family or group of engines as follows:

	ENGINE GROUP	PARTS LIST SECTION
4 CYL.	2.0L (2000cc) (122 C.I.D.)	60.1
	2.3L (2300 cc) (140 C.I.D.)	60.
6 CYL.	2.6L(2600 cc) (159 C.I.D.)	60.1A
	2.8L (2800 cc) (171 C.I.D.)	60.1A
	3.3L (200 C.I.D.)	60.2
	4.1L (250 C.I.D.)	
8 CYL.	5.0L (302 C.I.D.)	60.3
	5.8L (351M–2/B C.I.D.)	60.4
	5.8L (351C–2/B, 351W–2/B C.I.D.)	60.4
	5.8L (351C–4/B C.I.D.)	60.4
	6.6L (400 C.I.D.)	60.5
	6.9L (429 C.I.D.)	60.6
	7.5L (460,460P C.I.D.)	

NOTE 1 – New label(decal) installations will be made as follows:

ENGINE TYPE	LOCATION
4 Cylinder 122(2000cc)	Right Front Side or Rocker Cover
4 Cylinder 140 (2300cc)	On Timing Belt Cover
6 Cylinder 171 (2800cc)	Front of Rocker Cover
6 Cylinder 200,250	Front of Rocker Cover
8 Cylinder 302,351,400,429,460	Front of the Right Hand Rocker Cover

1977

YEAR	50 S	49 S	CANADA	CALIF
0	0	A	L	S
1	1	B	M	T
2	2	C	N	U
3	3	D	P	W
4	4	E	R	X
5	5	F	L	S
6	6	G	M	T
7	7	H	N	U
8	8	J	P	W
9	9	K	R	X

A – AIR/CONDITIONING
B – NON AIR/CONDITIONING
C – INDUSTRIAL & MARINE
D – EXPORT
E – OVER 6000 LBS./NON THERM
F – THERMACTOR WITHOUT A/C
G – A/C OR NON A/C ENGINES
H – POWER STEERING
J – THERMACTOR WITH A/C
K – THERMACTOR A/C OR NON A/C
L – OVER 6000 LBS./THERM

BASIC ENGINE CODE NUMBER (SEE BASIC ENGINE CODE CHART BELOW)

DESIGN LEVEL
A – USED TO INDICATE INITIAL RELEASE

CALIB & REVISION LEVEL
A – USED TO INDICATE INITIAL RELEASE

(PLANT OPTION)
DENOTES CARB & DIST USED ON ENGINE

CALIBRATION NUMBER

REVISION LEVEL

SERVICE LEVEL
(CONTROLLED BY INDIVIDUAL PLANTS)

MONTH
DAY — TENS
UNITS

ENGINE BUILD DATE

INITIAL TIMING (PLANT OPTION)

RPM SETTING (PLANT OPTION)

DENOTES PLANT SOURCED TO PRODUCE ENGINES

D – DEARBORN ENGINE PLANT
L – LIMA ENGINE PLANT
C1 – CLEVELAND ENGINE PLT 1
C2 – CLEVELAND ENGINE PLT 2
W1 – WINDSOR ENGINE PLT 1
W2 – WINDSOR ENGINE PLT 2

BASIC ENGINE CODE CHART

Engine Code Number Series Assigned	▲Engine Litre & CID
100-199	2.3L 140
200-220	3.3L 200
221-249	4.1L 250
300-380	5.0L 302
381-399	5.8L 351W
400-440	6.6L 400
441-525	7.5L 460
526-599	5.8L 351M

▲ SEE ENGINE PARTS LIST

ENGINE PARTS LISTS

Engine parts are cataloged in separate sections for each related family or group of engines as follows:

	ENGINE GROUP	PARTS LIST SECTION
4 CYL.	2.3L (2300 cc) (140 CID)	60.1
6 CYL.	2.8L (2800 cc) (171 CID)	60.1A
	3.3L (200 CID)	60.2
	4.1L (250 CID)	
8 CYL.	5.0L (302 CID)	60.3
	5.8L (351 W-2/B CID)	60.4
	5.8L (351 M-2/B CID)	60.4
	6.6L (400 CID)	60.5
	7.56 (460, 460 P/C CID)	60.6

NOTE 1 —New label (decal) installations will be made as follows:

ENGINE TYPE	LOCATION
4 Cylinder 140 (2300 cc)	To follow in Subsequent Change
6 Cylinder 171 (2800 cc)	To follow in Subsequent Change
6 Cylinder 200, 250	Front of Rocker Cover
8 Cylinder 302, 351, 400, 460	Front of the Right Hand Rocker Cover

COPYRIGHT © 1986 — FORD MOTOR COMPANY — DEARBORN, MICHIGAN

ENGINE IDENTIFICATION CHART & ENGINE CROSS REFERENCE GUIDE

See explanation under "How to Find Engine Parts" on page 1 of this section

NOTE: ▲ When the service identification is not available, the illustrations on pages 14, 15, 16 or 17 of Illustration Section 60 identifies the Windsor or Cleveland 351 engine.

IDENT. TAG CODE	CYL.	C.I.D.	CARB.	WARRANTY PLATE CODE	PARTS LIST NO.	IDENT. TAG CODE	CYL.	C.I.D.	CARB.	WARRANTY PLATE CODE	PARTS LIST NO.
EA 1 L1	4	140	HW–2	Y	60.1	K 46 B	6	250	C–1	L	60.2
EB 1 L1	4	140	HW–2	Y	60.1	KK 46 A	6	250	C–1	L	60.2
RF 1 M1	4	140	HW–2	Y	60.1	KK 46 B	6	250	C–1	L	60.2
RJ 1 M1	4	140	HW–2	Y	60.1	K 48 A	6	250	C–1	L	60.2
EA 2 L1	4	140	HW–2	Y	60.1	K 48 B	6	250	C–1	L	60.2
EB 2 L1	4	140	HW–2	Y	60.1	K 48 C	6	250	C–1	L	60.2
EA 8 M3	4	140	HW–2	Y	60.1	K 48 AG	6	250	C–1	L	60.2
EB 8 M3	4	140	HW–2	Y	60.1	K 48 BG	6	250	C–1	L	60.2
RA 10 M0	4	140	HW–2	Y	60.1	K 48 CG	6	250	C–1	L	60.2
RA 10 M3	4	140	HW–2	Y	60.1	KK 48 A	6	250	C–1	L	60.2
RB 10 M0	4	140	HW–2	Y	60.1	KK 48 B	6	250	C–1	L	60.2
RB 10 M3	4	140	HW–2	Y	60.1	KK 48 C	6	250	C–1	L	60.2
EBT 11 L0	4	122	HW–2	X	60.1	KK 48 AG	6	250	C–1	L	60.2
EGT 11 L0	4	122	HW–2	X	60.1	KK 48 BG	6	250	C–1	L	60.2
RBT 11 L0	4	122	HW–2	X	60.1	KK 48 CG	6	250	C–1	L	60.2
RGT 11 L0	4	122	HW–2	X	60.1	K 52 A	6	250	C–1	L	60.2
EBT 21 L0	4	122	HW–2	X	60.1	K 52 B	6	250	C–1	L	60.2
EGT 21 L0	4	122	HW–2	X	60.1	KK 52 B	6	250	C–1	L	60.2
RGT 21 L0	4	122	HW–2	X	60.1	KK 52 AG	6	250	C–1	L	60.2
K 25 A	6	200	C–1	T	60.2	KK 52 BG	6	250	C–1	L	60.2
K 25 B	6	200	C–1	T	60.2	EA 202 L0	6	200	C–1	T	60.2
K 25 C	6	200	C–1	T	60.2	EB 202 L0	6	200	C–1	T	60.2
K 25 AG	6	200	C–1	T	60.2	K 204 C	8	▲351W	F–2	H	60.4
K 25 BG	6	200	C–1	T	60.2	K 204 F	8	▲351W	F–2	H	60.4
K 25 CG	6	200	C–1	T	60.2	KK 204 C	8	▲351W	F–2	H	60.4
KK 25 A	6	200	C–1	T	60.2	KK 204 F	8	▲351W	F–2	H	60.4
KK 25 B	6	200	C–1	T	60.2	K 206 A	8	▲351W	F–2	H	60.4
KK 25 C	6	200	C–1	T	60.2	K 206 B	8	▲351W	F–2	H	60.4
KK 25 AG	6	200	C–1	T	60.2	K 206 C	8	▲351W	F–2	H	60.4
KK 25 BG	6	200	C–1	T	60.2	K 206 F	8	▲351W	F–2	H	60.4
KK 25 CG	6	200	C–1	T	60.2	K 206 AG	8	▲351W	F–2	H	60.4
K 26 A	6	200	C–1	T	60.2	KK 206 B	8	▲351W	F–2	H	60.4
K 26 B	6	200	C–1	T	60.2	KK 206 C	8	▲351W	F–2	H	60.4
K 26 AG	6	200	C–1	T	60.2	KK 206 F	8	▲351W	F–2	H	60.4
K 26 BG	6	200	C–1	T	60.2	EA 206 L0	6	200	C–1	T	60.2
K 26 CG	6	200	C–1	T	60.2	EA 206 L2	6	200	C–1	T	60.2
KK 26 A	6	200	C–1	T	60.2	EB 206 L0	6	200	C–1	T	60.2
KK 26 B	6	200	C–1	T	60.2	EB 206 L2	6	200	C–1	T	60.2
KK 26 C	6	200	C–1	T	60.2	K 208 A	8	▲351W	F–2	H	60.4
KK 26 AG	6	200	C–1	T	60.2	K 208 C	8	▲351W	F–2	H	60.4
KK 26 BG	6	200	C–1	T	60.2	K 208 F	8	▲351W	F–2	H	60.4
KK 26 CG	6	200	C–1	T	60.2	K 208 AG	8	▲351W	F–2	H	60.4
K 37 A	6	250	C–1	L	60.2	EA 208 L0	6	200	C–1	T	60.2
K 37 B	6	250	C–1	L	60.2	EA 208 L1	6	200	C–1	T	60.2
K 37 AG	6	250	C–1	L	60.2	EB 208 L0	6	200	C–1	T	60.2
K 37 BG	6	250	C–1	L	60.2	EB 208 L1	6	200	C–1	T	60.2
KK 37 A	6	250	C–1	L	60.2	K 210 C	8	▲351W	F–2	H	60.4
KK 37 B	6	250	C–1	L	60.2	KK 210 C	8	▲351W	F–2	H	60.4
KK 37 AG	6	250	C–1	L	60.2	K 211 A	8	▲351W	F–2	H	60.4
KK 37 BG	6	250	C–1	L	60.2	K 211 C	8	▲351W	F–2	H	60.4
KK 41 A	6	250	C–1	L	60.2	K 211 F	8	▲351W	F–2	H	60.4
KK 41 B	6	250	C–1	L	60.2	K 218 A	8	400	F–2	S	60.5
K 46 A	6	250	C–1	L	60.2	K 218 C	8	400	F–2	S	60.5

ENGINE IDENTIFICATION CHART & ENGINE CROSS REFERENCE GUIDE

See explanation under "How to Find Engine Parts" on page 1 of this section

▲ When the service identification is not available, the illustrations on pages 14, 15, 16 or 17 of Illustration Section 60 identifies the Windsor or Cleveland 351 engine. — Cont'd

IDENT. TAG CODE	CYL.	C.I.D.	CARB.	WARRANTY PLATE CODE	PARTS LIST NO.	IDENT. TAG CODE	CYL.	C.I.D.	CARB.	WARRANTY PLATE CODE	PARTS LIST NO.
K 218 D	8	400	F–2	S	60.5	K 261 A	8	302	F–2	F	60.3
KK 218 A	8	400	F–2	S	60.5	K 261 AG	8	302	F–2	F	60.3
K 220 A	8	400	F–2	S	60.5	K 262 A	8	302	F–2	F	60.3
K 220 AG	8	400	F–2	S	60.5	K 262 AG	8	302	F–2	F	60.3
KK 220 A	8	400	F–2	S	60.5	KK 262 A	8	302	F–2	F	60.3
KK 220 AG	8	400	F–2	S	60.5	KK 262 AG	8	302	F–2	F	60.3
KK 222 A	8	400	F–2	S	60.5	K 268 A	8	302	F–2	F	60.3
KK 222 C	8	400	F–2	S	60.5	K 268 AG	8	302	F–2	F	60.3
KK 222 D	8	400	F–2	S	60.5	KK 268 A	8	302	F–2	F	60.3
K 224 B	8	400	F–2	S	60.5	KK 268 AG	8	302	F–2	F	60.3
K 224 BG	8	400	F–2	S	60.5	K 273 A	8	302	F–2	F	60.3
KK 224 B	8	400	F–2	S	60.5	K 273 B	8	302	F–2	F	60.3
KK 224 BG	8	400	F–2	S	60.5	K 273 AG	8	302	F–2	F	60.3
K 225 A	8	400	F–2	S	60.5	K 273 BG	8	302	F–2	F	60.3
K 225 B	8	400	F–2	S	60.5	KK 273 B	8	302	F–2	F	60.3
K 225 C	8	400	F–2	S	60.5	KK 273 BG	8	302	F–2	F	60.3
K 225 D	8	400	F–2	S	60.5	K 274 A	8	302	F–2	F	60.3
KK 225 A	8	400	F–2	S	60.5	K 274 B	8	302	F–2	F	60.3
EG 225 L0	6	250	C–1	L	60.2	K 274 AG	8	302	F–2	F	60.3
K 226 A	8	400	F–2	S	60.5	K 274 BG	8	302	F–2	F	60.3
K 226 AG	8	400	F–2	S	60.5	KK 274 A	8	302	F–2	F	60.3
KK 226 A	8	400	F–2	S	60.5	KK 274 B	8	302	F–2	F	60.3
KK 226 AG	8	400	F–2	S	60.5	KK 274 AG	8	302	F–2	F	60.3
EA 226 L0	6	250	C–1	L	60.2	KK 274 BG	8	302	F–2	F	60.3
EA 226 L1	6	250	C–1	L	60.2	K 275 A	8	302	F–2	F	60.3
EB 226 L0	6	250	C–1	L	60.2	K 275 B	8	302	F–2	F	60.3
EB 226 L1	6	250	C–1	L	60.2	K 275 AG	8	302	F–2	F	60.3
K 227 C	8	400	F–2	S	60.5	K 275 BG	8	302	F–2	F	60.3
K 227 CG	8	400	F–2	S	60.5	K 276 B	8	302	F–2	F	60.3
KK 227 C	8	400	F–2	S	60.5	K 276 BG	8	302	F–2	F	60.3
KK 227 CG	8	400	F–2	S	60.5	KK 276 B	8	302	F–2	F	60.3
RA 227 L1	6	250	C–1	L	60.2	KK 276 BG	8	302	F–2	F	60.3
RA 227 L2	6	250	C–1	L	60.2	K 287 A	8	302	F–2	F	60.3
RB 227 L1	6	250	C–1	L	60.2	K 287 AG	8	302	F–2	F	60.3
RB 227 L2	6	250	C–1	L	60.2	KK 287 A	8	302	F–2	F	60.3
EA 228 L0	6	250	C–1	L	60.2	K 288 A	8	302	F–2	F	60.3
EA 228 L1	6	250	C–1	L	60.2	KK 288 A	8	302	F–2	F	60.3
EB 228 L0	6	250	C–1	L	60.2	EA 300 L0	8	302	F–2	F	60.3
EB 228 L1	6	250	C–1	L	60.2	EA 300 L2	8	302	F–2	F	60.3
RA 229 L0	6	250	C–1	L	60.2	EB 300 L0	8	302	F–2	F	60.3
RB 229 L0	6	250	C–1	L	60.2	EB 300 L2	8	302	F–2	F	60.3
K 232 A	8	400	F–2	S	60.5	EA 301 L0	8	302	F–2	F	60.3
KK 232 A	8	400	F–2	S	60.5	EB 301 L0	8	302	F–2	F	60.3
K 234 A	8	400	F–2	S	60.5	EK 302 L0	8	302	F–2	F	60.3
K 234 AG	8	400	F–2	S	60.5	EA 304 L0	8	302	F–2	F	60.3
KK 234 A	8	400	F–2	S	60.5	EA 304 L2	8	302	F–2	F	60.3
KK 234 AG	8	400	F–2	S	60.5	EB 304 L0	8	302	F–2	F	60.3
K 235 C	8	400	F–2	S	60.5	EB 304 L2	8	302	F–2	F	60.3
K 258 A	8	302	F–2	F	60.3	EK 306 L0	8	302	F–2	F	60.3
K 258 AG	8	302	F–2	F	60.3	EA 307 L0	8	302	F–2	F	60.3
KK 258 A	8	302	F–2	F	60.3	EB 307 L0	8	302	F–2	F	60.3
KK 258 AG	8	302	F–2	F	60.3	EG 315 L0	8	302	F–2	F	60.3

COPYRIGHT © 1986 — FORD MOTOR COMPANY — DEARBORN, MICHIGAN

ENGINE IDENTIFICATION CHART & ENGINE CROSS REFERENCE GUIDE

See explanation under "How to Find Engine Parts" on page 1 of this section

▲ When the service identification is not available, the illustrations on pages 14, 15, 16 or 17 of Illustration Section 60 identifies the Windsor or Cleveland 351 engine. — Cont'd

IDENT. TAG CODE	CYL.	C.I.D.	CARB.	WARRANTY PLATE CODE	PARTS LIST NO.	IDENT. TAG CODE	CYL.	C.I.D.	CARB.	WARRANTY PLATE CODE	PARTS LIST NO.
EG 316 L0	8	302	F–2	F	60.3	RK 560 M1	8	▲351C	F–2	H	60.4
RG 316 L0	8	302	F–2	F	60.3	EK 562 L0	8	▲351C	F–2	H	60.4
EG 318 L0	8	302	F–2	F	60.3	EG 570 L0	8	▲351CJ	F–4	Q	60.4
EG 382 L0	8	▲351W	F–2	H	60.4	EB 571 L0	8	▲351CJ	F–4	Q	60.4
EG 384 L0	8	▲351W	F–2	H	60.4	EG 572 L0	8	▲351CJ	F–4	Q	60.4
EG 386 L0	8	▲351W	F–2	H	60.4	K 600 A	8	▲351C	F–2	H	60.4
EG 388 L0	8	▲351W	F–2	H	60.4	K 600 C	8	▲351C	F–2	H	60.4
EG 402 L0	8	400	F–2	S	60.5	K 600 AG	8	▲351C	F–2	H	60.4
EG 403 L0	8	400	F–2	S	60.5	K 600 CG	8	▲351C	F–2	H	60.4
EG 404 L0	8	400	F–2	S	60.5	K 602 A	8	▲351C	F–2	H	60.4
EG 405 L0	8	400	F–2	S	60.5	K 602 AG	8	▲351C	F–2	H	60.4
RG 406 L0	8	400	F–2	S	60.5	KK 602 A	8	▲351C	F–2	H	60.4
RG 406 L1	8	400	F–2	S	60.5	KK 602 AG	8	▲351C	F–2	H	60.4
RG 407 L0	8	400	F–2	S	60.5	K 603 B	8	▲351C	F–2	H	60.4
RG 407 L1	8	400	F–2	S	60.5	K 603 BG	8	▲351C	F–2	H	60.4
RK 408 L1	8	400	F–2	S	60.5	KK 603 B	8	▲351C	F–2	H	60.4
RG 409 L0	8	400	F–2	S	60.5	KK 603 BG	8	▲351C	F–2	H	60.4
EG 461 L1	8	460	C–4	A	60.6	K 604 A	8	▲351C	F–2	H	60.4
EG 466 L0	8	460	C–4	A	60.6	K 604 AG	8	▲351C	F–2	H	60.4
RG 467 L0	8	460	C–4	A	60.6	KK 604 A	8	▲351C	F–2	H	60.4
EG 468 L0	8	460	C–4	A	60.6	KK 604 AG	8	▲351C	F–2	H	60.4
EG 468 L1	8	460	C–4	A	60.6	K 605 B	8	▲351C	F–2	H	60.4
EG 469 L0	8	460	C–4	A	60.6	K 605 C	8	▲351C	F–2	H	60.4
RG 470 L0	8	460	C–4	A	60.6	K 605 BG	8	▲351C	F–2	H	60.4
EG 472 L0	8	460	C–4	A	60.6	K 605 CG	8	▲351C	F–2	H	60.4
EG 473 L0	8	460	C–4	A	60.6	K 606 A	8	▲351C	F–2	H	60.4
RG 474 L0	8	460	C–4	A	60.6	K 606 AG	8	▲351C	F–2	H	60.4
EG 475 L0	8	460	C–4	A	60.6	K 608 A	8	▲351C	F–2	H	60.4
EG 475 L1	8	460	C–4	A	60.6	K 608 B	8	▲351C	F–2	H	60.4
EG 475 L2	8	460	C–4	A	60.6	K 608 AG	8	▲351C	F–2	H	60.4
RG 476 L0	8	460	C–4	A	60.6	K 608 BG	8	▲351C	F–2	H	60.4
EG 477 L0	8	460	C–4	A	60.6	KK 608 A	8	▲351C	F–2	H	60.4
EG 478 L0	8	460 P/C	F–4	C	60.6	KK 608 B	8	▲351C	F–2	H	60.4
EG 479 L0	8	460	C–4	A	60.6	KK 608 AG	8	▲351C	F–2	H	60.4
EG 479 L1	8	460	C–4	A	60.6	KK 608 BG	8	▲351C	F–2	H	60.4
EG 479 L2	8	460	C–4	A	60.6	K 610 A	8	▲351C	F–2	H	60.4
EG 481 L0	8	460	C–4	A	60.6	K 610 B	8	▲351C	F–2	H	60.4
RG 482 L0	8	460	C–4	A	60.6	K 610 AG	8	▲351C	F–2	H	60.4
EG 483 L0	8	460	C–4	A	60.6	K 610 BG	8	▲351C	F–2	H	60.4
EG 484 L0	8	460	C–4	A	60.6	K 612 A	8	▲351C	F–2	H	60.4
RG 485 L0	8	460	C–4	A	60.6	K 612 B	8	▲351C	F–2	H	60.4
EG 526 L0	8	▲351C	F–2	H	60.4	K 612 AG	8	▲351C	F–2	H	60.4
EK 526 L0	8	▲351C	F–2	H	60.4	K 612 BG	8	▲351C	F–2	H	60.4
EG 528 L0	8	▲351C	F–2	H	60.4	KK 612 A	8	▲351C	F–2	H	60.4
EK 528 L0	8	▲351C	F–2	H	60.4	KK 612 B	8	▲351C	F–2	H	60.4
RG 530 L0	8	▲351C	F–2	H	60.4	KK 612 C	8	▲351C	F–2	H	60.4
RK 530 L0	8	▲351C	F–2	H	60.4	KK 612 AG	8	▲351C	F–2	H	60.4
RK 530 L1	8	▲351C	F–2	H	60.4	KK 612 BG	8	▲351C	F–2	H	60.4
EK 532 L0	8	▲351C	F–2	H	60.4	KK 612 CG	8	▲351C	F–2	H	60.4
EK 534 L0	8	▲351C	F–2	H	60.4	K 613 C	8	▲351C	F–2	H	60.4
EG 560 L0	8	▲351C	F–2	H	60.4	K 613 CG	8	▲351C	F–2	H	60.4
EK 560 L0	8	▲351C	F–2	H	60.4	K 614 A	8	▲351C	F–2	H	60.4
RG 560 L0	8	▲351C	F–2	H	60.4	K 614 B	?	▲351C	F–2	H	60.4
RK 560 L0	8	▲351C	F–2	H	60.4						

ENGINE IDENTIFICATION CHART & ENGINE CROSS REFERENCE GUIDE

See explanation under "How to Find Engine Parts" on page 1 of this section

▲ When the service identification is not available, the illustrations on pages 14, 15, 16 or 17 of Illustration Section 60 identifies the Windsor or Cleveland 351 engine. — Cont'd

IDENT. TAG CODE	CYL.	C.I.D.	CARB.	WARRANTY PLATE CODE	PARTS LIST NO.	IDENT. TAG CODE	CYL.	C.I.D.	CARB.	WARRANTY PLATE CODE	PARTS LIST NO.
K 614 AG	8	▲ 351C	F–2	H	60.4	K 814 D	8	429	F–4	N	60.6
K 614 BG	8	▲ 351C	F–2	H	60.4	KK 814 C	8	429	F–4	N	60.6
KK 614 A	8	▲ 351C	F–2	H	60.4	KK 814 D	8	429	F–4	N	60.6
KK 614 B	8	▲ 351C	F–2	H	60.4						
KK 614 AG	8	▲ 351C	F–2	H	60.4	K 815 A	8	429	F–4	N	60.6
KK 614 BG	8	▲ 351C	F–2	H	60.4	K 815 C	8	429	F–4	N	60.6
K 616 A	8	▲ 351C	F–2	H	60.4	K 815 D	8	429	F–4	N	60.6
K 616 B	8	▲ 351C	F–2	H	60.4	KK 815 A	8	429	F–4	N	60.6
K 616 AG	8	▲ 351C	F–2	H	60.4	KK 815 C	8	429	F–4	N	60.6
K 616 BG	8	▲ 351C	F–2	H	60.4	KK 815 D	8	429	F–4	N	60.6
K 618 B	8	▲ 351C	F–2	H	60.4	K 816 A	8	429	F–4	N	60.6
KK 618 B	8	▲ 351C	F–2	H	60.4	K 816 C	8	429	F–4	N	60.6
K 620 A	8	▲ 351CJ	F–4	Q	60.4	KK 816 A	8	429	F–4	N	60.6
K 620 B	8	▲ 351CJ	F–4	Q	60.4	KK 816 C	8	429	F–4	N	60.6
K 620 AG	8	▲ 351CJ	F–4	Q	60.4	KK 816 D	8	429	F–4	N	60.6
K 620 BG	8	▲ 351CJ	F–4	Q	60.4	K 817 A	8	429	F–4	N	60.6
KK 620 A	8	▲ 351CJ	F–4	Q	60.4	K 817 B	8	429	F–4	N	60.6
KK 620 B	8	▲ 351CJ	F–4	Q	60.4	K 817 C	8	429	F–4	N	60.6
KK 620 AG	8	▲ 351CJ	F–4	Q	60.4	KK 817–A	8	429	F–4	N	60.6
KK 620 BG	8	▲ 351CJ	F–4	Q	60.4	KK 817 B	8	429	F–4	N	60.6
K 621 A	8	▲ 351CJ	F–4	Q	60.4	KK 817 C	8	429	F–4	N	60.6
K 621 B	8	▲ 351CJ	F–4	Q	60.4	K 819 A	8	429	F–4	N	60.6
K 621 AG	8	▲ 351CJ	F–4	Q	60.4	K 819 D	8	429	F–4	N	60.6
KK 621 A	8	▲ 351CJ	F–4	Q	60.4	KK 819 A	8	429	F–4	N	60.6
KK 621 AG	8	▲ 351CJ	F–4	Q	60.4	KK 819 D	8	429	F–4	N	60.6
K 622 B	8	▲ 351C	F–2	H	60.4	K 866 A	8	460	F–4	A	60.6
K 626 A	8	▲ 351CJ	F–4	Q	60.4	K 866 D	8	460	F–4	A	60.6
KK 626 A	8	▲ 351CJ	F–4	Q	60.4	KK 866 A	8	460	F–4	A	60.6
K 632 A	8	▲ 351C	F–2	H	60.4	KK 866 D	8	460	F–4	A	60.6
K 632 C	8	▲ 351C	F–2	H	60.4	KK 866 E	8	460	F–4	A	60.6
KK 632 A	8	▲ 351C	F–2	H	60.4	K 868 A	8	460	F–4	A	60.6
KK 632 B	8	▲ 351C	F–2	H	60.4	K 868 C	8	460	F–4	A	60.6
KK 632 C	8	▲ 351C	F–2	H	60.4	K 869 D	8	460	F–4	A	60.6
K 634 A	8	▲ 351C	F–2	H	60.4	K 869 E	8	460	F–4	A	60.6
K 634 B	8	▲ 351C	F–2	H	60.4	KK 869 D	8	460	F–4	A	60.6
KK 634 A	8	▲ 351C	F–2	H	60.4	K 870 A	8	460	F–4	A	60.6
KK 634 B	8	▲ 351C	F–2	H	60.4	K 870 D	8	460	F–4	A	60.6
K 636 A	8	▲ 351C	F–2	H	60.4	KK 870 A	8	460	F–4	A	60.6
KK 636 A	8	▲ 351C	F–2	H	60.4	KK 870 D	8	460	F–4	A	60.6
K 637 A	8	▲ 351C	F–2	H	60.4	KK 870 E	8	460	F–4	A	60.6
K 637 B	8	▲ 351C	F–2	H	60.4	K 871 A	8	460	F–4	A	60.6
KK 637 A	8	▲ 351C	F–2	H	60.4	KK 871 A	8	460	F–4	A	60.6
KK 637 B	8	▲ 351C	F–2	H	60.4	K 872 A	8	460	F–4	A	60.6
K 812 D	8	429	F–4	N	60.6	K 872 D	8	460	F–4	A	60.6
K 812 E	8	429	F–4	N	60.6	KK 872 A	8	460	F–4	A	60.6
KK 812 D	8	429	F–4	N	60.6	KK 872 D	8	460	F–4	A	60.6
KK 812 E	8	429	F–4	N	60.6	K 873 B	8	460	F–4	A	60.6
K 813 A	8	429	F–4	N	60.6	K 875 A	8	460	F–4	A	60.6
K 813 C	8	429	F–4	N	60.6	K 875 D	8	460	F–4	A	60.6
K 813 D	8	429	F–4	N	60.6	KK 875 A	8	460	F–4	A	60.6
KK 813 A	8	429	F–4	N	60.6	KK 875 D	8	460	F–4	A	60.6
KK 813 D	8	429	F–4	N	60.6	KK 875 E	8	460	F–4	A	60.6
KK 813 E	8	429	F–4	N	60.6	K 876 A	8	460	F–4	A	60.6
K 814 C	8	429	F–4	N	60.6	K 876 E	8	460	F–4	A	60.6

COPYRIGHT © 1986 — FORD MOTOR COMPANY — DEARBORN, MICHIGAN

ENGINE IDENTIFICATION CHART & ENGINE CROSS REFERENCE GUIDE

See explanation under "How to Find Engine Parts" on page 1 of this section

IDENT. TAG CODE	CYL.	DISP.	CARB.	WARRANTY PLATE CODE	PARTS LIST NO.	IDENT. TAG CODE	CYL.	DISP.	CARB.	WARRANTY PLATE CODE	PARTS LIST NO.
▲ When the service identification is not available, the illustrations on pages 14, 15, 16 or 17 of Illustration Section 60 identifies the Windsor or Cleveland 351 engine. — Cont'd											
KK 876 A	8	460	F-4	A	60.6	K 879 A	8	460 P/C	F-4	C	60.6
KK 876 E	8	460	F-4	A	60.6	K 879 D	8	460 P/C	F-4	C	60.6
K 878 A	8	460 P/C	F-4	C	60.6						

PULLEY IDENTIFICATION CHART

The purpose of this guide is to help determine service part numbers for crankshaft pulleys. Pulleys are identified with an engineering part number. Find the engineering number in the "Identification" column then order the number listed in the "Service Part Number" column. In some instances the service part number will have more sheaves than the original pulley, this is done to reduce the complexity of service parts.

PULLEY IDENTIFICATION CHART

IDENTIFICATION	PART NUMBER	IDENTIFICATION	PART NUMBER
172	D2AZ 6A312-D	C8AE 6312-C	C8AZ 6A312-C
181	C9RZ 6A312-A	C8AE 6312-D	C8AZ 6A312-D
190	D2AZ 6A312-C	C8AE 6312-E	D3TZ 6A312-C
217	D2DZ 6312-B	C80E 6312-A	C80Z 6A312-A
240	D5FZ 6A312-D	C80E 6312-B	C80Z 6A312-B
245	D4ZZ 6A312-B	C80E 6312-C	C80Z 6A312-C
501	D2TZ 6A312-A	C9AE 6312-B	C9AZ 6A312-B
503	D2AZ 6A312-E	C9AE 6312-D	D1TZ 6A312-B
515	D2AZ 6A312-E	C9AE 6312-E	C9ZZ 6A312-B
523	D4ZZ 6A312-B	C90E 6312-E	D4UZ 6A312-A
525	D5FZ 6A312-D	C90E 6312-G	D4UZ 6A312-A
526	D4TZ 6A312-A	C9SE 6312-B	C9SZ 6A312-A
529	D5RY 6A312-C	C9TE 6312-A	C9TZ 6A312-A
530	D2AZ 6A312-C	C9TE 6312-B	C8AZ 6A312-D
C4ME 6A301-A	C1AZ 6A312-D	C9ZE 6312-A	C9ZZ 6A312-A
70HM 6A301-BA	D1FZ 9A312-A	C9ZE 6312-B	C9ZZ 6A312-B
71HM 6A301-AA	D2FZ 6A312-B	D0AE 6312-A	D0AZ 6312-A
74HM 6A301-BA	D4FZ 6A312-D	D0AE 6312-B	D4AZ 6A312-A
74HM 6A301-CA	D4RY 6A312-A	D0AE 6312-C	D5DZ 6A312-A
74HM 6A301-DA	D4RY 6A312-C	D00E 6312-A	D0ZZ 6A312-A
C0DE 6312-A	C2DZ 6312-A	D00E 6312-B	D5DZ 6A312-A
C1AE 6312-A	C1AZ 6A312-C	D00E 6312-C	D4AZ 6A312-A
C20E 6312-A	C20Z 6312-A	D00E 6312-D	D00Z 6A312-C
C20E 6312-C	C20Z 6312-B	D00E 6312-E	D00Z 6A312-C
C3AE 6312-A	C3AZ 6312-E	D00E 6312-F	D00Z 6A312-H
C3AE 6312-C	C3AZ 6312-E	D00E 6312-G	D0AZ 6A312-A
C4AE 6312-B	C20Z 6312-A	D00E 6312-H	D00Z 6A312-H
C5AE 6312-A	C80Z 6A312-C	D00E 6312-J	D00Z 6A312-H
C5AE 6312-B	C80Z 6A312-B	D00E 6312-K	D0SZ 6A312-B
C50E 6312-A	C80Z 6A312-A	D00E 6312-L	D0SZ 6A312-B
C60E 6312-A	★C6TZ 6A312-B	D0SZ 6312-A	D0AZ 6A312-A
C6TE 6312-B	C4TZ 6A312-B	D0SE 6312-B	D0SZ 6A312-B
C6TE 6312-C	C6TZ 6A312-A	D0ZE 6312-B	D0ZZ 6A312-A
C6TE 6312-D	★C6TZ 6A312-B	D1TE 6312-AA	D1TZ 6A312-A
C7AE 6312-A	C5AZ 6312-E	D1TE 6312-AB	D1TZ 6A312-A
C7AE 6312-C	C7AZ 6A312-C	D1TE 6312-BA	D1TZ 6A312-B
C70E 6312-A	C80Z 6A312-C	D1VE 6312-AA	D1VY 6A312-A
C8AE 6312-A	C8AZ 6A312-D	D1ZE 6312-AA	D0ZZ 6A312-A
C8AE 6312-B	C8AZ 6A312-B	D1ZE 6312-CA	D20Z 6A312-A

PULLEY IDENTIFICATION CHART

IDENTIFICATION	PART NUMBER	IDENTIFICATION	PART NUMBER
D12J 6312-AA	D2FZ 6A312-B	C8HA 6A312-C	C8HZ 6A312-A
D20E 6312-AA	D20Z 6A312-A	C9RJ 6A312-A	C9RZ 6A312-A
D2SE 6312-AA	D2SZ 6A312-A	C9TE 6A312-C	D1TZ 6A312-A
D2VE 6312-AA	D1VY 6A312-A	D0HA 6A312-C	D0HZ 6A312-B
D3AE 6312-AA	D4AZ 6A312-A	D0HA 6A312-E	D0HZ 6A312-C
D3AE 6312-BA	D4TZ 6A312-B	D12J 6A312-AA	D1FZ 6312-C
D3AE 6312-CA	D4AZ 6A312-A	D3AE 6A312-BA	D0ZZ 6A312-A
D3DE 6312-AA	D5DZ 6A312-A	D4TE 6A312-AA	C8AZ 6A312-D
D3TE 6312-AA	D3TZ 6A312-A	D4ZE 6A312-CA	D4ZZ 6A312-A
D3TE 6312-AB	D3TZ 6A312-B	D5HA 6A312-AA	D6HZ 6A312-A
D3UE 6312-AA	D4UZ 6A312-A	D5TE 6A312-BA	D5TZ 6A312-A
D4SE 6312-AA	D4SZ 6A312-B	D5TE 6A312-DA	D5TZ 6312-A
D4SE 6312-BA	D4SZ 6A312-B	D5TE 6A312-EA	D5TZ 6312-B
D4ZE 6312-CB	D4ZZ 6A312-A	D5VE 6A312-AA	D5MY 6A312-A
D42E 6312-AD	D4FZ 6A312-AorB	D7HE 6A312-AA	D4HZ 6A312-AA
D42E 6312-BA	D4FZ 6A312-AorB	D7HT 6A312-AB	D8HZ 6A312-A
D42E 6312-BD	D4FZ 6A312-B	D8BE 6A312-AA	D8BZ 6A312-A
D42E 6312-CA	D4FZ 6A312-B	D9ZE 6A312-AB	D9ZZ 6A312-A
D42E 6312-CD	D4FZ 6A312-A	D9ZE 6A312-CA	D9ZZ 6312-B
D42E 6312-CD	D4FZ 6A312-A	70HM 6A312-EB	D1RY 6A312-A
D42E 6312-DA	D4FZ 6A312-A	70HM 6A312-GA	D2FZ 6A312-B
D5ME 6312-AA	D5MY 6A312-B	71HM 6A312-CA	D2FZ 6A312-D
D5TE 6312-BA	D5UZ 6A312-B	71HM 6A312-DA	D2FZ 6312-A
D5UE 6312-AA	D5UZ 6A312-A	71HM 6A312-EB	D2FZ 6A312-D
D5UE 6312-BA	D5UZ 6A312-B	71TM 6A312-AA	D2RY 6312-A
D5VE 6312-AA	D5MY 6A312-A	72HM 6A312-AA	D1RY 6A312-A
D5ZE 6312-AA	D5ZZ 6A312-A	74TF 6A312-AA	D4RY 6A312-B
D52E 6312-AA	D5FZ 6A312-B	74TF 6A312-BA	D4RY 6A312-B
D52E 6312-BA	D5FZ 6A312-C	75TF 6A312-AA	D5RY 6A312-A
D52E 6312-CA	D5FZ 6A312-A	75TF 6A312-BA	D5RY 6A312-B
D60E 6312-AA	D60Z 6A312-A	711M 6A312-AA	D1FZ 6312-D
D60E 6312-BA	D4AZ 6A312-A	711M 6A312-AB	D2FZ 6312-B
D7AE 6312-AA	D7AZ 6A312-A	801M 6A312-BA	D9RZ 6312-A
D7AE 6312-BA	D7AZ 6A312-A	B9TE 6316-B	C3TZ 6312-G
D7DE 6312-AA	D5UZ 6A312-A	B9TE 6316-C	C3TZ 6312-B
D8AE 6312-AA	D4AZ 6A312-A	★ C0AE 6316-A	C0AZ 6312-A N/R
D8BE 6312-AA	D8BZ 6A312-A	C0AE 6316-D	C3AZ 6312-E
D9AE 6312-BB	E0AZ 6A312-C	C1AE 6316-A	C3AZ 6312-E
D9AE 6312-CB	D9AZ 6A312-A	C2DE 6316-A	C2DZ 6312-A
D9ZE 6312-AA	D9ZZ 6A312-A	C2DE 6316-B	C2DZ 6312-A
D9ZE 6312-EA	D9ZZ 6312-B	C2TE 6316-B	C3TZ 6312-B
71HM 6312-AA	D1RY 6A312-A	C3AE 6316-B	C3AZ 6312-C
75HM 6312-AA	D4FZ 6A312-A	C3AE 6316-E	C3AZ 6312-C
76TM 6312-AA	D7ZZ 6312-A	C3AE 6316-F	C3AZ 6316-B
77BM 6312-BA	D8RZ 6312-B	C3AE 6316-G	C3AZ 6316-B
79HM 6312-AA	D1RY 6A312-A	C3TE 6316-A	C3TZ 6312-G
681F 6312-AA	D0RY 6312-A	C3TE 6316-B	C3TZ 6312-D
681F 6312-BA	D1FZ 6312-B	C3TE 6316-E	C3TZ 6312-C
681F 6312-CA	D1FZ 6312-A	C3TE 6316-F	C3TZ 6312-E
711M 6312-AA	D1FZ 6312-A	C3TE 6316-G	C3TZ 6312-E
771M 6312-AA	D8RZ 6312-A	C3VE 6316-A	C3VY 6312-A
C2DE 6A312-A	C2DZ 6A312-A	C4AE 6316-A	C3AZ 6312-E
C4TE 6A312-B	C4TZ 6A312-G	C4AE 6316-B	C3AZ 6312-E
C6AE 6A312-A	C6AZ 6A312-A	C4AE 6316-C	C3AZ 6316-B
C6TE 6A312-A	C6TZ 6A312-A	C4AE 6316-D	C3AZ 6316-B
C8AE 6A312-B	C8AZ 6A312-E	C4AE 6316-E	C3AZ 6312-F
C8DE 6A312-A	C8DZ 6A312-A	C4RA 6316-A	C5UZ 6312-A
C8HA 6A312-B	C8TZ 6A312-B		

COPYRIGHT © 1986 — FORD MOTOR COMPANY — DEARBORN, MICHIGAN

PULLEY IDENTIFICATION CHART

IDENTIFICATION	PART NUMBER	IDENTIFICATION	PART NUMBER
C4TE 6316–A	C4TZ 6312–A	D20E 6316–AA	D8TZ 6316–B
C4TE 6316–B	C4TZ 6312–C	D2TE 6316–AA	D5TZ 6316–D
C4TE 6316–C	C4TZ 6312–B	D2TE 6316–BA	D4TZ 6312–A
C4TE 6316–F	C4TZ 6312–E	D2TE 6316–CA	D2TZ 6316–B
C4TE 6316–G	C4TZ 6312–E	D2VE 6316–AA	D4VZ 6316–A
C4TE 6316–H	C4TZ 6312–F	D2ZX 6316–AA	D2ZZ 6316–A
C4TE 6316–J	C4TZ 6312–F	D3HE 6316–AA	D3HZ 6312–A
C5AE 6316–A	C80Z 6A312–C	D3HE 6316–BA	D3HZ 6312–B
C50E 6316–A	C50Z 6316–C	D3TE 6316–AA	D3TZ 6312–A
C5TE 6316–F	C5TZ 6312–J	D3UE 6316–AA	D3UZ 6316–A
C5TE 6316–G	C5TZ 6312–K	D4AE 6316–CA	D2AZ 6316–B
C5TE 6316–H	C5TZ 6312–L	D4AE 6316–DA	D2AZ 6316–B
C5TE 6316–J	C5TZ 6312–J	D4HE 6316–AA	D4HZ 6312–A
C6DE 6316–C	C2DZ 6312–A	D4TE 6316–AA	D4TZ 6312–A
C7AE 6316–C	C5AZ 6312–G	D4VE 6316–AA	D4VZ 6316–A
C7AE 6316–D	C5AZ 6312–G	D4VE 6316–AB	D4VZ 6316–B
C7ZE 6316–A	C50Z 6316–C	D5AE 6316–AA	D5AZ 6316–A
C8AE 6316–A	D5TZ 6316–D	D5AE 6316–BA	D5AZ 6316–A
C8AE 6316–B	C5AZ 6312–G	D5AE 6316–CA	D5AZ 6316–B
C8AE 6316–C	C8AZ 6316–C	D5AE 6316–DA	D5AZ 6316–B
C8DE 6316–A	D2DZ 6312–B	D5DE 6316–AA	D5DZ 6312–A
C80E 6316–A	C8AZ 6316–A	D5HE 6316–BA	D5HZ 6312–A
C8TE 6316–A	C5TZ 6312–J	D5TE 6316–CA	D5HZ 6312–C
C8TE 6316–B	C5TZ 6312–L	D5TE 6316–DA	D5TZ 6316–D
C8TE 6316–C	C5TZ 6312–K	D5ZE 6316–AA	D5ZZ 6316–A
C8TE 6316–D	D2TZ 6312–A	D5ZE 6316–BA	D5ZZ 6316–A
C8VE 6316–A	C8SZ 6312–B	D6DE 6316–AA	D6DZ 6312–A
C8ZE 6316–A	C50Z 6316–C	D6DE 6316–AB	D7DZ 6312–B
C8ZE 6316–B	C5AZ 6316–B	D6DE 6316–BA	D6DZ 6312–A
C9AE 6316–A	C9AZ 6312–A	D6ZE 6316–AA	D7ZZ 6316–A
C9DE 6316–A	D2DZ 6312–A	D7AE 6316–DA	D7SZ 6316–A
C90E 6316–D	D2TZ 6316–B	D7TE 6316–AA	D7TZ 6316–A
C90E 6316–E	C90Z 6316–A	D7TE 6316–BA	D7TZ 6316–A
C9TE 6316–A	D8TZ 6316–A	D8BE 6316–FA	D8BZ 6312–A
C9VE 6316–A	C8SZ 6312–B	D8BE 6316–GA	D8BZ 6312–A
C9ZE 6316–B	C9ZZ 6316–B	D8TE 6316–CA	D8TZ 6312–A
C9ZE 6316–C	C9ZZ 6316–B	D9AE 6316–BB	D9AZ 6312–C
D0AE 6316–A	D2AZ 6316–B	D9AE 6316–DA	D9AZ 6312–D
D00E 6316–A	D4VZ 6316–A	D9DE 6316–DA	D9DZ 6312–A
D00E 6316–B	D4VZ 6316–A	EAG 6316–E	B2TZ 6312–A
D00E 6316–C	D2AZ 6316–A	EAG 6316–F	B2TZ 6312–A
D0TE 6316–A	D0TZ 6312–A	EAM 6316–D	B2TZ 6312–B
D0TE 6316–B	D0TZ 6312–B	ECG 6316–A	B5AZ 6312–A
D0TE 6316–C	D0TZ 6312–C	ECG 6316–B	C3TZ 6312–E
D0ZE 6316–A	D8TZ 6316–A	ECJ 6316–B	ECJ 6316–B
D1AE 6316–AA	D2AZ 6316–C	ECR 6316–A	B6TZ 6312–C
D1DE 6316–AA	C2DZ 6312–A	ECR 6316–B	C3TZ 6312–C
D1TE 6316–AA	D3UZ 6316–A	ECU 6316–A	C1TZ 6312–B
D1TE 6316–AB	D3UZ 6316–A	74TM 6316–AA	D4ZZ 6312–A
D1ZE 6316–AA	D1ZZ 6316–A	C8SE 6B319–A	C9SZ 6A312–A
D1ZE 6316–AB	D1ZZ 6316–A	74TM 6B321–AA	D6ZZ 6312–A
D1ZX 6316–AA	D2ZZ 6316–A	76TM 6B321–AA	D6ZZ 6312–A
D2AE 6316–AA	D2AZ 6316–A	D0HA 6A358–A	D0HZ 6A312–A
D2AE 6316–BA	D2AZ 6316–B	D5TE 6A358–CA	D5HZ 6312–B
D2AE 6316–CA	D2AZ 6316–C	C4TE 6A359–A	C4TZ 6A312–A
D2DE 6316–AA	D2DZ 6312–A	C4TE 6A359–B	C4TZ 6A312–B
D2DE 6316–BA	D2DZ 6312–B	C5AE 6A359–A	C5AZ 6A312–A

PULLEY IDENTIFICATION CHART

IDENTIFICATION	PART NUMBER	IDENTIFICATION	PART NUMBER
C5AE 6A359–B	C5AZ 6A312–B	CE7 211991	EBV 6312–A
C5TE 6A359–C	C5TZ 6A312–B	ECY 66306–A	B8TZ 6312–C
C6TA 6A359–A	C6TZ 6A312–C	ECW 66319–A	B8TZ 6A312–D
D0TE 6A359–A	D0TZ 6A312–A		

COPYRIGHT © 1986 — FORD MOTOR COMPANY — DEARBORN, MICHIGAN

YEAR	MODEL/RESTRICTIONS	QUANTITY 122 ▲	QUANTITY 140 @			PART NUMBER		DESCRIPTION
	▲ 2000 cc @ 2300 cc							
							6007	ENGINE ASSY.–Current production engine assemblies may be ordered from the local parts distribution center by furnishing the engine code from the vehicle certification label or the identification tag number that is attached to the exterior of the engine assembly.
73/		★	★				★	Service details only
							6008	GASKET SET (COMPLETE OVERHAUL)– Also refer to 6E078 & 6079
73/74		1				D1FZ	6008–B	
	Consists of							
	1–D1FZ 6020–A	Gasket(cyl. front cover)					1–71HM 6710–A1A	Gasket(oil pan R.H.)
	1–D1FZ 6051–A	Gasket(cyl.head)					1–71HM 6711–A1A	Gasket(oil pan L.H.)
	2–D1FZ 6336–A	Seal(crankshaft rear main bearing cap)					2–D1FZ 6722–A	Seal(oil pan)
							1–D1FZ 8255–A	Gasket(water outlet)
	2–D1FZ 6570–A	Seal(rocker arm cover)					1–D1FZ 8507–A	Gasket(water pump)
	8–D1FZ 6571–B	Seal(intake valve stem)					1–D1FZ 8590–A	Gasket(thermostat)
							1–D2RY 9417–A	Gasket(fuel pump
	1–D2FZ 6584–A	Gasket(rocker cover)					1–D1FZ 9441–A	Gasket(intake manifold)
	1–D1FZ 6626–A	Gasket(oil pump inlet tube)					1–D1FZ 9447–E	Gasket(carb. to manifold)
	3–D1FZ 6700–A	Seal(cyl. front cover oil)					1–D1FZ 9448–A	Gasket(exhaust manifold–inner)
	1–D1FZ 6701–A	Packing(crankshaft rear)					3–D1FZ 9448–B	Gasket(exhaust manifold –outer)
74/			2			D4FZ	6A008–A	DOWEL (CYL. HEAD TO CYL. BLOCK)
76/			1			D6AZ	6D008–A	HEATER KIT (CYLINDER BLOCK)
	Consists of							
	1–D6AJ 6B018–AA	Wire assy.					4–D6AJ 14197–AA	Clip
	1–E0AZ 6A051–A	Heater assy.						
	1–D4AB 6A056–AA	Cap						
74/			1			E2ZZ	6E008–B	BOLT ASSY. (TENSIONER)–M8 x 6G(Metric
							6009	CYLINDER ASSY.
75/	Exc. T/C		1			★ E1BZ	6009–A	NR–use details
76/77	J		1					
79	J - - w/T/C		1			D9ZZ	6009–B	
							6010	BLOCK ASSY. (CYLINDER)
73/74		1				D1FZ	6010–A	
74/			1			D9FZ	6010–B	
76/			AR			87710–S		(P–16)–Plug timing hole in cyl. block– (Hex. sockets) – 3/8" – 18 x 15 32"
79			1			87837–S		(P–15)–Plug (cyl. blk.)–1/4–18 x .41 pipe
77/	"From 6/27/77"		1			352532–S		(PP–60)–plug (oil level indicator hole– frt. or rr.)–cup
74/75			1			D5FZ	6A017–A	SPACER–CYLINDER HEAD - - (use with D6FZ–6049–A,B or D7FZ 6010–A to lower compression ratio) See illustration P–12758 Sec.60 for installation
							6B018	WIRE ASSY. (BLOCK HEATER)
75/			1			D7TZ	6B018–A	

COPYRIGHT © 1986— FORD MOTOR COMPANY —DEARBORN, MICHIGAN

YEAR	MODEL/RESTRICTIONS	QUANTITY 122 ▲	QUANTITY 140 @			PART NUMBER	DESCRIPTION
	▲ 2000 cc @ 2300 cc						
						6019	COVER ASSY. (CYLINDER FRONT)-ref. 6019 kit
73/74		1				★ D1FZ 6019-D N/R (10/84)	Outer(front repair kit)-incl.(1)E800167-S bolt, (1)866103-S clip
73/74		1				★ D1FZ 6019-A	Upper-N.R.
73/74		1				D1FZ 6019-B	Lower
74/			1			E3TZ 6019-A	Lower-steel cover
74/			1			D4FZ 6019-B	Upper-steel cover (aux. shaft cover)
74/			1			D4FZ 6019-C	Inner-steel cover
74/			1			D8BZ 6019-D	Outer steel cover
77/78	L		1			★ D7FZ 6019-A	Inner plastic cover-r/b D7FZ 6019-B kit
78	P		1			★ D8BZ 6019-C	Outer plastic cover-r/b D7FZ 6019-B kit
73/74		2				E800172-S71	(AB-8-A)-bolt (cover to block)-hex. head-M6 x 35 (Metric coarse)
73/74		3				356184-S	(XX-113)-washer (cover to block)-flat-5/16"
73/74		3				E804127-S82	(AB-110)-bolt (cover to block)-hex. head-M6 x 16.3(Metric coarse)
74/	L		AR			N602529-S76	(AB-53)-bolt (cover to block)-M10 x 20(Metric coarse)
74/	w/steel covers		AR			N800034-S	(AB-150)-bolt (outer cover to inner cover)-M6 x 25(Metric coarse)
74/ 76/77	w/steel cvr. - - exc. J J		3			N800110-S	(AB-117-G)-Screw & washer (6019 to 6010) -M6-20 (hex hd.)
74/	w/steel covers		AR			N800035-S	(AB-116)-bolt (attach inner and outer covers)-M6 x 14 (Metric coarse)
77/78	w/plastic cvr.		3			N800136-S2	(AB-147-E)-bolt (attach inner & outer covers-M6 x 15.1-hex washer hd.
77/78	w/plastic cvr.		1			N800167-S2	(AB-325-E)- screw (attach outer cover to tension bolt)-M6 x 14.5-Pan hd Shoulder
74/			1			352284-S	(PP-4)-plug (hole in front cover)-button
						6019	REPAIR KIT (CYLINDER FRONT COVER)-used to convert from plastic cvrs. to steel cvrs.
77/78				1		D7FZ 6019-B	

Consists of			
1-D8BZ 6019-D	Outer cvr.	2-N800034-S	Bolt
1-D4FZ 6019-C	Inner cvr.	4-N800035-S	Bolt
2-D4FZ 6K291-A	Cvr. Spacer	1-D4FZ 6E008-A	Stud
1-D4FZ 6020-A	Outer Seal	1-377934-S	Plug
2-D42E 6E009-BB	Outer Seal	1-N800112-S2	Screw
1-D7FZ 6K282-A	Tensioner Bolt		

73/74		3				D2FZ 6C019-A	GROMMET (CYLINDER FRONT COVER)
						6020	GASKET (CYLINDER FRONT COVER)
73/74		1				★ D1FZ 6020-A	N.R.
74/			1			D4FZ 6020-A	Outer
74/			1			D4FZ 6020-B	Inner lower
						6023	POINTER (TIMING)
73/74	A/C-Calif.	1				★ D2FZ 6023-B	Not replaced
73/74		2				E602163-S82	(AB-5)-bolt(pointer and brkt. to block)- hex. head-M6 x 10(Metric coarse)
73/74		2				E630025-S71	(AX-10-A)-washer(pointer and brkt. to block) -flat-M6(Metric)

YEAR	MODEL/RESTRICTIONS	QUANTITY 122 ▲	QUANTITY 140 @			PART NUMBER	DESCRIPTION
	▲ 2000 cc @ 2300 cc						
						6A023	SUPPORT ASSY. (REAR)
73/74	J - - M/T	1				D1RY 6A023-C	
73/74	J - - A/T	1				★ D3RY 6A023-A	Not replaced
76/77	J - - M/T		1			★ D5RY 6A023-B	#75HF 6A092-CA-N.R.
76/77	J - - A/T		1			★ D5RY 6A023-C	#75HF 6A092-AA-not repl.
78	P		1			D8BZ 6A023-A	
74/	L	1	1			★ D1FZ 6A023-B	Rear Upper-N.R.
74/	L	1	1			D7FZ 6A023-A	Rear Lower
79	J,P		1			D9BZ 6A023-A	
73/76	J - - A/T		4			E400017-S76	Bolt(attach rr. suppt.)
						6026	PLUG (ENGINE)
73/74		1				★ D1FZ 6026-A	Front oil gallery hole-N.R.
73/74		2				D7AZ 6026-A	Standard-1 1/2" dia.(R.H. side of block) -cup type
		AR				D1FZ 6026-C	.065" O/S
73/74		1				D1FZ 6026-D	(Rear of block)-expansion type
73/74		1				D1FZ 6026-E	(Main oil gallery)-expansion type
73/74		1				★ D1FZ 6026-F Not repl.	(Block or front cover in unused oil level indicator hole)
		AR				87650-S	(P-12)(water temp. indicator hole blanking head)-pipe
73/		AR	AR			87710-S	(P-16)-water jacket side of block-pipe
74/			1			C5AZ 6026-J	(Hole in rear of block)-cup type-std.-2.072" O.D.
			AR			C5AZ 6026-H	.060" O/S
74/			4			D7AZ 6026-A	(Holes in block and head)-cup type-std. 1.50" O.D.
			AR			C8AZ 6026-D	.060" O/S
74/			AR			87837-S	(P-15)-plug(drain holes and oil gallery in block and head)-1/4"-18
76	J		1			87708-S	(P-14)-plug(drain holes in block)-1/8"-27
						6028-9	BRACKET (FRONT SUPPORT)
73/74	J	1				★ D4RY 6028-A	R.H.-N/R
		1				★ D4RY 6029-B	L.H.-N/R
74	L	1				★ D4FZ 6028-A	R.H.-N/R
		1				★ D4FZ 6029-A	L.H.-N/R
76/77	J		1			★ D5RY 6028-B	R.H.-N/R
			1			★ D5RY 6029-B	L.H.-N/R
74/	L		1			D7FZ 6028-A	R.H.
			1			D7FZ 6029-A	L.H.
						6030-1	BRACKET (FRONT SUPPORT)
74	L	1				★ D3FZ 6030-A	R.H.-N/R
		1				★ D4FZ 6031-A	L.H.-N/R
74/	L		1			D9FZ 6030-A	R.H.
			1			D7FZ 6031-B	L.H.
78/79	P		1			E1BZ 6030-B	R.H.
79	J		1			E1BZ 6031-B	L.H.
74/	L	6	6			N800003-S101	(AB-80)-screw and washer assy.(brackets to to block)-hex. head-M8 x 20(Metric coarse)
77/	L		1			N800168-S100	(AW-65-B)Stud (bracket & support to engine) hex. shoulder M10 x 1.5 - 7/16 - 14 x 46.0
78	P		4			38232-S2	(BB-551-AD)-Bolt (6030-1 to trans.)-7/16"-14 x 7/8"-hex hd.

COPYRIGHT © 1986— FORD MOTOR COMPANY —DEARBORN, MICHIGAN

YEAR	MODEL/RESTRICTIONS	QUANTITY 122 ▲	QUANTITY 140 @			PART NUMBER	DESCRIPTION
	▲ 2000 cc @ 2300 cc						
						6030-1	BRACKET (FRONT SUPPORT) — Cont'd
77/	L,P		2			382400-S2	(MM-173-BF)-nut (bracket to insulator)-hex-7/16"-14
						6038	INSULATOR (FRONT SUPPORT)
73/74	J	2				D1RY 6038-B	R.H. and L.H.
74	L	2				D3FZ 6038-C	R.H. and L.H.
76/77	J		2			D5RY 6038-B	R.H. and L.H.
79	J		1			D9ZZ 6038-A	R.H.
			1			E3DZ 6038-F	L.H.
74	L "Before 7/2/74"		1			★ D4FZ 6038-A	R.H.-r/b D4FZ 6030-B & D5FZ 6038-B (1/79)
			1			D4FZ 6038-B	L.H.
74/	L "From 7/2/74"		2			D5FZ 6038-B	R.H. and L.H.
78	P		1			★ E1BZ 6038-D	R.H.-r/b E3ZZ-H-discard 6030 brkt. & use old or appropriate brkt. for 2.3L
			1			E1BZ 6038-B	L.H.
79	P		1			E1DZ 6038-B	R.H.
			1			E1DZ 6038-E	L.H.
73/74	J	2				357235-S	(BB-136)-bolt (insulator to c/member)-hex. head-5/16"-18 x 7/8"
74/			AR			N602569-S100	Bolt (insulator to block)-hex. head-M10 x 20 (Metric coarse)
						6C038	SHIELD (MOTOR MOUNT HEAT)
74		1				★ D4RY 6C038-B	R.H.-N/R
		1				★ D4RY 6C038-C	L.H.-N/R
						6K040	BRACKET (CYLINDER BLOCK to CONVERTER or FLYWHEEL HOUSING)
73/74		1				★ D1RY 6K040-A	Stiffener-for cylinder block to converter housing-N/R
76/77	J - - M/T		1			★ D5RY 6K040-A	#75HF-AA-N/R
76/77	J - - A/T		1			★ D5RY 6K040-B	#75HF-BA-N/R
74	L	2				D1FZ 6A042-A	REINFORCEMENT (REAR SUPPORT)
						6049	HEAD (CYLINDER)
73/74		1				★ D1FZ 6049-A	Complete with valves-N/R
74/			1			E0ZZ 6049-A	Without valves-incl. D9ZZ 9G458-A plug
74/	Exc. T/C		1			D9FZ 6049-B	w/valves
79	With T/C		1			E0ZZ 6049-B	w/valves-incl. D9ZZ 9G458-A plug
77/78	L		2			87837-S	(P-15)-plug (frt. & rr. oil gallery in 6049)-hex. recessed-1/4"-18
79			2				
						6051	GASKET (CYLINDER HEAD)
73/74		1				D1FZ 6051-A	
74/	Exc. T/C		1			★ D5FZ 6051-A	R/b E5FZ 6051-A (6/85)
79	T/C		1			D9ZZ 6051-A	
74/			1			E0AZ 6A051-A	HEATER ASSY. (BLOCK)
73/74		2				★ D1FZ 6052-A r/b371485-S	PLUG (CYLINDER HEAD EXHAUST AIR SUPPLY)-pipe-3/4"-14
						6054	RETAINER (REAR SUPPORT)
73/74	M/T	1	1			★ D0RY 6054-C	N/R
75	L-M/T		1				
73/74	A/T	1	1			★ D3RY 6054-A	N/R
75	L - - A/T		1				
76/77	J - - A/T		1			★ D5RY 6054-A	N/R
76/77	J - - M/T		1			★ D5RY 6054-B	N/R
78/			1			D8BZ 6054-B	

YEAR	MODEL/RESTRICTIONS	QUANTITY 122 ▲	QUANTITY 140 @			PART NUMBER		DESCRIPTION
	▲ 2000 cc @ 2300 cc							
75/			1			★ D4AZ	6A056-A	CAP (CYLINDER BLOCK HEATER)-r/b CEH-117
							6065	BOLT (CYLINDER HEAD)
73/74		10				D1FZ	6065-A	Socket head-M12 x 95 (metric coarse)
74/			10			D4FZ	6065-A	
79	J,P		1			D9BZ	6A066-A	SPACER (FRONT SUPPORT INSULATOR)-R.H.
							6068	INSULATOR ASSY. (REAR SUPPORT)
73/74	J - - M/T or A/T-Borg Warner	1				D0RY	6068-A	Rubber and steel
73/74 76/77	J - - A/T-C4 J - - A/T-C3	1	 1			D3RY	6068-C	Rubber and Steel
73/74	J	1				★ D3RY Not repl.	6068-A	Steel-replaces insulator with muffler bracket-for muffler bracket use D1RY 5277-G and J-used with D0RY 6068-A or D3RY 6068-C
76/77	J - - A/T		1			D5RY	6068-A	
76/77	J-M/T		1			★ D5RY	6068-B	Not repl.
79	J		1			E0SZ	6068-A	
74/	L		1			D5FZ	6068-A	
78	P		1			E0SZ	6068-A	
							6A068	PLATE ASSY. (INSULATOR SUPPORT FRONT)
74	L	1				★ D4FZ	6A068-A	R.H.-NR
		1				★ D4FZ	6A068-B	L.H.-NR
73/		AR	AR			D6AZ	6E072-A	LABEL (BUILD CODE & INFORMATION)-Also refer to Service Bulletin #155
							6E078	GASKET SET (LOWER)
74/			1			E2PZ	6E078-A	

Consists of

2-D42E 6E009-BB	Seal (front cover)	1-E3ZE 6711-AA	Gasket (oil pan)
1-D4FZ 6020-A	Seal (front cover)	1-D42E 6722-AB	Seal (oil pan)
1-D4FZ 6020-B	Gasket (front cover)	1-D9EE 6723-AA	Seal (oil pan)
1-D4FZ 6626-A	Gasket (oil pump)	1-E5ZZ 6701-A	Seal (crankshaft rear)
2-D4FZ 6700-A	Seal (crankshaft front)	1-E0FZ 6734-AA	Seal (drain plug)
1-D4FZ 6701-A	Seal (crankshaft rear)	1-E4ZZ 8507-A	Gasket (fuel pump)
1-E3ZE 6710-AA	Gasket (oil pan)	1-D42E 9417-AA	Gasket (fuel pump)

							6079	GASKET SET (VALVE GRIND)
73/74		1				D1FZ	6079-B	

Consists of

1-D1FZ 6051-A	Gasket(cyl. head)	1-D1FZ 8255-A	Gasket(water outlet)
2-D1FZ 6570-A	Seal(rocker arm cover)	1-D1FZ 8590-A	Gasket(thermostat)
8-D1FZ 6571-B	Seal(intake valve stem)	1-D1FZ 9441-A	Gasket (intake manifold)
		1-D1FZ 9447-E	Gasket (carb. to manifold)
1-D2FZ 6584-A	Gasket(rocker cover)	1-D1FZ 9448-A	Gasket (exhaust manifold-inner)
1-D1FZ 6700-A	Seal(camshaft)	3-D1FZ 9448-B	Gasket (exhaust manifold-outer)

74/	Exc. TC		1			E5ZZ	6079-A	

Consists of

1-E5FZ 6051-A	Gasket (cyl. head)	1-E59Z 9439-A	Gasket (intake manifold)
8-D4FZ 6571-A	Seal (valve stem)	1-D8FZ 9E436-A	Gasket (intake manifold)
1-E2ZZ 6584-A	Gasket (rocker arm)	1-D4FZ 9441-A	Gasket (intake manifold)
1-D4FZ 6700-A	Seal (camshaft)	1-D9FZ 9447-A	Gasket (carburetor)
1-E4ZZ 8255-A	Gasket (water outlet)	1-E4ZZ 9447-C	Gasket (carburetor)
4-E43Z 6571-A	Seal (valve stem)	1-D9FZ 9448-B	Gasket (exhaust manifold)

COPYRIGHT © 1986— FORD MOTOR COMPANY —DEARBORN, MICHIGAN

YEAR	MODEL/RESTRICTIONS	QUANTITY 122 ▲	QUANTITY 140 @			PART NUMBER	DESCRIPTION
	▲ 2000cc @2300cc						
79	J - - W/T/C		1			E0ZZ 6079-A	
	Consists of						
	8-E0ZZ 6051-A	Gasket (cyl. head)				1-D8FZ 9E436-A	Gasket (intake manifold)
	8-D4FZ 6571-A	Seal (valve stem)				1-D4FZ 9441-A	Gasket (intake manifold)
	1-E1BZ 6584-A	Gasket (rocker cover)				1-D4FZ 9447-A	Gsket (carburetor)
	1-D4FZ 6700-A	Seal (camshaft)				1-D4FZ 9C477-A	Gasket (manifold spacer)
	1-D4FZ 8255-A	Gasket (water outlet)					
						6096	BRACKET (REAR SUPPORT)
74	L - - M/T	1	1			★ D3FZ 6096-A	N/R
75/	L - - M/T		1			★ D5FZ 6096-A	N/R
74/	L - - A/T	1	1			★ D3FZ 6096-B	N/R
76/77	J - - A/T "From 11/18/74"		1			★ D5RY 6096-A	N/R
76/77	J - - M/T "From 11/18/74"		1			★ D5RY 6096-B	N/R
74/	A/T	2	2			383222-S36	(BB-193)-bolt(bracket to trans.)-1/2"-13 x 1 1/4"
74/	A/T	2	2			34809-S8	(X-68)-washer-lock-1/2"
	▲ 2000 cc. @ 2300 cc △ Incl. piston pin						
						6108	PISTON ASSY.-Red and Blue pistons are optional for selective fit
73/74		4				△ D2FZ 6108-A	Standard-incl. pin and rings
		AR				△ D2FZ 6108-BB	.020" O/S
		AR				★△D2FZ 6108-C	.040" O/S-N.R
74/	Exc. T/C		4			△ D4FZ 6108-A	Standard(Red)
			AR			△ D4FZ 6108-B	Standard(Blue)
			AR			△ D4FZ 6108-C	.003" O/S
			AR			△ D4FZ 6108-D	.020" O/S
			AR			△ D4FZ 6108-EB	.030" O/S
			AR			△ D4FZ 6108-FB	.040" O/S
79	T/C		4			D9ZZ 6108-A	Std (Red)-(Incl. Pin)
			AR			D9ZZ 6108-B	Std. (Blue)-(Incl. Pin)
			AR			D9ZZ 6108-C	.003" O/S-(Incl. Pin)
			AR			D9ZZ 6108-D	.020" O/S-(Incl. Pin)
			AR			D9ZZ 6108-E	.030" O/S-(Incl. Pin)
			AR			D9ZZ 6108-F	.040" O/S-(Incl. Pin)
						6135	PIN (PISTON)
73/74		★				★ 6135	Incl. with piston
74/			4			B2AZ 6135-A	
						6148	RING SET (PISTON PARTIAL)-consists of the necessary rings to re-ring (2) pistons
74/	Exc. T/C		2			D4FZ 6148-A	Standard
			AR			D4FZ 6148-B	.020" O/S
			AR			D4FZ 6148-C	.030" O/S
			AR			D4FZ 6148-D	.040" O/S
79	T/C		2			D9ZZ 6148-A	Standard
			AR			D9ZZ 6148-B	.020" O/S
			AR			D9ZZ 6148-C	.030" O/S
			AR			D9ZZ 6148-D	.040" O/S
						6149	RING SET (PISTON COMPLETE)-consists of the necessary rings to re-ring (4) pistons
73/74		1				★ D1FZ 6149-C	Standard-N.R.
		1				★ D1FZ 6149-D	.020" O/S-N.R.
		1				★ D1FZ 6149-E	.040" O/S-N.R.
						6200	ROD ASSY. (CONNECTING)
73/74		4				D1FZ 6200-A	
74/			4			D7FZ 6200-A	

YEAR	MODEL/RESTRICTIONS	QUANTITY 122 ▲	QUANTITY 140 @			PART NUMBER	DESCRIPTION
	▲ 2000 cc @ 2300 cc						
						6211	BEARING (CONNECTING ROD)-Red and Blue size are optional for selective fit.
73		8				D4RY 6211-A	Standard(Red)-upper and lower-repl. std. blue size
		AR				D4RY 6211-B	.001" U/S
		AR				D4RY 6211-C	.002" U/S
		AR				D4RY 6211-D	.010" U/S
		AR				D4RY 6211-E	.020" U/S
		AR				D4RY 6211-F	.030" U/S
74		8				D4RY 6211-A	Standard-upper and lower
		AR				D4RY 6211-B	.001" U/S
		AR				D4RY 6211-C	.002" U/S
		AR				★ D4RY 6211-D	.010" U/S-N.R
		AR				D4RY 6211-E	.020" U/S
		AR				D4RY 6211-F	.030" U/S
		AR				★ D4RY 6211-G	.040" U/S-N/R (8/79)
74/	Exc. T/C		8			D7FZ 6211-A	Standard (Red)-upper & lower-w/oil hole
			AR			D7FZ 6211-B	Standard (Blue)
			AR			D7FZ 6211-C	.002" U/S
			AR			D7FZ 6211-D	.010" U/S
			AR			D7FZ 6211-E	.020" U/S
			AR			D7FZ 6211-F	.030" U/S
			AR			D7FZ 6211-G	.040" U/S
79	With T/C		8			D7FZ 6211-A	Std. (red)-upper & lower
			AR			D9ZZ 6211-B	Std. (blue)
			AR			D9ZZ 6211-C	.002" U/S
			AR			D7FZ 6211-D	.010" U/S
			AR			D9ZZ 6211-E	.020" U/S
			AR			D9ZZ 6211-F	.030" U/S
			AR			D7FZ 6211-G	.040" U/S
73/		8	8			D4FZ 6212-A	NUT (CONNECTING ROD)-hex.-M9 x 1 (Metric fine)
						6214	BOLT (CONNECTING ROD)
73/74		8				D1FZ 6214-A	Hex. head-M9 x 1 x 49 (Metric fine)
74/			8			D4FZ 6214-A	Oval head-M9 x 1 x 55 (Metric fine)
						6250	CAMSHAFT
73/74	A/T	1				D2RY 6250-B	
73/74	M/T	1				D4FZ 6250-B	
74/			1			E1ZZ 6250-A	Incl. plug
						6K254	TENSIONER ASSY. (TIMING BELT)
73/74		1				D1FZ 6K254-B	
74/			1			D4FZ 6K254-A	
73/		1	1			E804126-S76	(AB-112)-bolt(spring and tension pulley in place)-shoulder-M8 x 46.5(Metric coarse)
73/		1	1			E602187-S82	(AB-17)-bolt(adjusting bolt for tension pulley)-hex. head-M8-20(Metric coarse)
73/		1	1			E830256-S100	(AX-13-A)-washer(use with E602187-S82)-flat-M8(Metric)
75/	L		1			N800112-S2	(AB-75/-G)-screw & washer (tensioner to head)
74/77	J		1				Hex. Hd.-M8 x 20

COPYRIGHT © 1986 — FORD MOTOR COMPANY — DEARBORN, MICHIGAN

YEAR	MODEL/RESTRICTIONS	QUANTITY 122 ▲	140 @			PART NUMBER	DESCRIPTION
	▲ 2000 cc @ 2300 cc						
						6256	GEAR (CAMSHAFT)
73/74		2				D1FZ 6256-A	38 tooth (1) on camshaft and (1) on fuel pump, and dist. driveshaft
73/74		2				20371-GS	(AB-30)-bolt (1) gear to camshaft, (1) gear to fuel pump, oil pump and dist. driveshaft
						6256	SPROCKET (CAMSHAFT)
74/			2			D4FZ 6256-A	(1) req'd. auxiliary shaft
74/			2			373118-S	(NN-54)-pin(align sprockets on camshaft and auxiliary shaft)
74/			1			E601313-S72	Bolt(lower sprocket to aux. shaft)-M10 x 40(Metric coarse)
			1			N600414-S100	(AB-156-B)-bolt(upper sprocket and guide to camshaft)-hex. hd.-M12 x 45(Metric coarse)
74/			1			D4FZ 6B260-A	GUIDE (TIMING BELT CAMSHAFT)
						6261	BEARING (CAMSHAFT FRONT)
73/74		1				D1FZ 6261-A	Standard I.D. and O.D.
		1				D1FZ 6261-B	.015" U/S I.D.-standard O.D.
		1				★ D1FZ 6261-C	Std. I.D.-.015" O.D.-N/R
74/			1			D4FZ 6261-A	Standard I.D. and O.D.
			1			D4FZ 6261-B	.016" U/S I.D.-standard O.D.
						6261	BEARING (CAMSHAFT FRONT INTERMEDIATE)
74/			1			D4FZ 6261-A	Standard I.D. and O.D.
			1			D4FZ 6261-B	.016" U/S I.D.-standard O.D.
						6261	BEARING (CAMSHAFT REAR INTERMEDIATE)
74/			1			D4FZ 6261-A	Standard I.D. and O.D.
			1			D4FZ 6261-B	.016" U/S I.D.-standard O.D.
						6261	BEARING (CAMSHAFT REAR)
74/			1			D4FZ 6261-A	Standard I.D. and O.D.
			1			D4FZ 6261-B	.016" U/S I.D.- standard O.D.
						6262	BEARING (CAMSHAFT CENTER)
73/74		1				D1FZ 6262-A	Standard I.D. and O.D.
		1				D1FZ 6262-B	.015" U/S I.D.-standard O.D.
		1				★ D1FZ 6262-C	Std. I.D.-.015 O.D.-N/R
						6263	BEARING (CAMSHAFT REAR)
73/74		1				D1FZ 6263-A	Standard I.D. and O.D.
		1				★ D1FZ 6263-B	.015" U/S I.D.-standard O.D.-N/R
		1				★ D1FZ 6263-C	Std. I.D.-.015 O.D.-N/R
						6268	BELT (TIMING)
73/74		1				D1FZ 6268-A	
74/			1			D4FZ 6268-A	
						6269	PLATE (CAMSHAFT THRUST)
73/74		1				D1FZ 6269-A	Front
		1				D1FZ 6269-B	Rear
73/74		2				388294-GS40	(AB-50)-screw and washer(rear plate to head)-hex. head-M6 x 12(Metric coarse)
						6L273	SPRING (TENSIONER)
73/74		1				★ D1FZ 6L273-A	N/R
74/			1			D4FZ 6L273-A	
73/74		1				E840110-S	(AN-7)-spring(supports 6L273)-pin
						6278	WASHER (CAMSHAFT SPROCKET)
73/74		2				D4FZ 6278-B	Flat-(1) on camshaft and (1) on fuel pump, oil pump and dist. drive shaft
74/			1				Used on auxiliary driveshaft
74/			1			D4FZ 6278-A	Used on camshaft
						6K282	BOLT (TIMING BELT TENSIONER)
74/	w/steel frt cvrs.		1			D7FZ 6K282-A	

YEAR	MODEL/RESTRICTIONS	QUANTITY 122 ▲	QUANTITY 140 @			PART NUMBER		DESCRIPTION
	▲ 2000 cc @ 2300 cc							
							6K291	SPACER (TIMING BELT COVER)
73/74		2				D1FZ	6K291-A	
74/	w/steel frt. cvrs.		2			D4FZ	6K291-A	
							6K297	GUIDE (CRANKSHAFT TIMING BELT)
73/74		1				★ D1FZ	6K297-A	N/R
74/			1			★ D4FZ	6K297-A	R/b D4FZ 6K297-B (10/84)
							6303	CRANKSHAFT ASSY.
73/74		1				★ D4FZ	6303-B N.R.	Uses (1) D4FZ 6B316-B key-replaced crankshaft using (2) 6B316 keys
74/			1			E1BZ	6303-C	#ID
73/74		1				D1FZ	6306-A	GEAR (CRANKSHAFT)
							6306	SPROCKET (CRANKSHAFT)
74/			1			D9FZ	6306-A	
							6312	PULLEY ASSY. (CRANKSHAFT)-Also refer to group 6A312 & pulley I.D. chart Section 60
79	U - - TC w/A/C		1			D9ZZ	6312-B	Triple sheave #D9ZE 6312-EA, D9ZE-6A312-CA
							6A312	PULLEY ASSY. (CRANKSHAFT OUTER)-Also refer to pulley I.D. chart section 60
73/74	J - - without A/C	1				★ D2FZ	6A312-D	Single sheave
74	L - - without T/E or A/C	1				Not replaced		
73	J - - with A/C	1				D2FZ	6A312-B	Double Sheave
74	J - - without T/E-with A/C	1				★ D4RY	6A312-C	N/R
74	J - - T/E and A/C	1				★ D4RY	6A312-A	Double sheave-#74HM 6A301-CA-N/R
74	L - - with A/C	1				D2FZ	6A312-B	Double Sheave
74	L - - with T/E without A/C	1				★ D4FZ	6A312-D	Double Sheave-N/R
74/	J,L,P - - without A/C		1			D4FZ	6A312-A	Triple sheave- #D42E 6312-CC, CD or D42E 6A312-DA repls. D42E 6312-AD, D42E 6A312-BA 75TF 6A312-AA or 75HM 6312-AA
74/79	J,L,P - - A/C		1			D4FZ	6A312-B	Triple sheave-#D42E 6312-BA,BC,BD,D42E 6A312-CA
74/	with hang-on A/C		1			D5FZ	6A312-D	Triple sheave-#DP-240 or DP-525
							6B316	KEY
73		2				★ D1FZ Not repl.	6B316-A	(6306 gear to 6303 crankshaft)(6A312 pulley to 6303 crankshaft)-used w/crankshaft ident. 70HM 6303-AKA
74		1				D4FZ	6B316-B	(6306 to 6303)-used w/crankshaft ident. 72HM 6303-JA
74/			1			D4FZ	6B316-A	(6306 and 6A312 to 6303 crankshaft)
73/74		2				★ D1FZ Not repl.	6B317-A	KEY(6256 gear to 6250 camshaft)(6256 gear to 6A739 shaft)

COPYRIGHT © 1986— FORD MOTOR COMPANY —DEARBORN, MICHIGAN

ENGINE BEARING APPLICATION CHART

YEAR	SIZE O.D.	SIZE I.D.	UPPER	LOWER	PART NUMBER FRONT	FRONT INTERMEDIATE	CENTER	REAR INTERMEDIATE	REAR
6333	**BEARING (CRANKSHAFT MAIN)** In the size column of the chart below (R) designates RED size–(B) designates BLUE size. RED size and BLUE size are optional for selective fit.								
4 CYL. 122 C.I.D.									
73	Standard	Std.(Red)	x	x	D4RY 6333-A	D4RY 6333-A	D4RY 6333-A	D4RY 6333-A	D4RY 6333-A
	Standard	Std. (Blue)	x	x	NOT AVAIL.	NOT AVAIL.	NOT AVAIL.	NOT AVAIL.	NOT AVAIL.
	Standard	.001" U/S	x	x	D1FZ 6333-R	D1FZ 6333-R	D1FZ 6333-R	D1FZ 6333-R	D1FZ 6333-R
	Standard	.002" U/S	x	x	D1FZ 6333-N	D1FZ 6333-N	D1FZ 6333-N	D1FZ 6333-N	D1FZ 6333-N
	Standard	.010" U/S	x	x	★ D4RY 6333-D	★ D4RY 6333-D	★ D4RY 6333-D	★ D4RY 6333-D	★ D4RY 6333-D
	Standard	.020" U/S	x	x	★ D4RY 6333-E	★ D4RY 6333-E	★ D4RY 6333-E	★ D4RY 6333-E	★ D4RY 6333-E
	Standard	.030" U/S	x	x	★ D4RY 6333-F	★ D4RY 6333-F	★ D4RY 6333-F	★ D4RY 6333-F	★ D4RY 6333-F
73	.015" O/S	Std.(Red)	x	x	★ D1FZ 6333-G	★ D1FZ 6333-G	★ D1FZ 6333-G	★ D1FZ 6333-G	★ D1FZ 6333-G
	.015" O/S	Std.(Blue)	x	x	D1FZ 6333-H	D1FZ 6333-H	D1FZ 6333-H	D1FZ 6333-H	D1FZ 6333-H
	.015" O/S	.001" U/S	x	x	★ D1FZ 6333-S	★ D1FZ 6333-S	★ D1FZ 6333-S	★ D1FZ 6333-S	★ D1FZ 6333-S
	.015" O/S	.002" U/S	x	x	★ D1FZ 6333-T	★ D1FZ 6333-T	★ D1FZ 6333-T	★ D1FZ 6333-T	★ D1FZ 6333-T
	.015" O/S	.010" U/S	x	x	D1FZ 6333-J	D1FZ 6333-J	D1FZ 6333-J	D1FZ 6333-J	D1FZ 6333-J
	.015" O/S	.020" U/S	x	x	D1FZ 6333-K	D1FZ 6333-K	D1FZ 6333-K	D1FZ 6333-K	D1FZ 6333-K
	.015" O.S.	.030" U/S	x	x	D1FZ 6333-L	D1FZ 6333-L	D1FZ 6333-L	D1FZ 6333-L	D1FZ 6333-L
74	Standard	Std.	x	x	D4RY 6333-A	D4RY 6333-A	D4RY 6333-A	D4RY 6333-A	D4RY 6333-A
	Standard	.001" U/S	x	x	★ D4RY 6333-B	★ D4RY 6333-B	★ D4RY 6333-B	★ D4RY 6333-B	★ D4RY 6333-B
	Standard	.002" U/S	x	x	★ D4RY 6333-C	★ D4RY 6333-C	★ D4RY 6333-C	★ D4RY 6333-C	★ D4RY 6333-C
	Standard	.010" U/S	x	x	★ D4RY 6333-D	★ D4RY 6333-D	★ D4RY 6333-D	★ D4RY 6333-D	★ D4RY 6333-D
	Standard	.020" U/S	x	x	★ D4RY 6333-E	★ D4RY 6333-E	★ D4RY 6333-E	★ D4RY 6333-E	★ D4RY 6333-E
	Standard	.030" U/S	x	x	★ D4RY 6333-F	★ D4RY 6333-F	★ D4RY 6333-F	★ D4RY 6333-F	★ D4RY 6333-F
74	.015" O/S	Std.	x	x	★ D4RY 6333-H	★ D4RY 6333-H	★ D4RY 6333-H	★ D4RY 6333-H	★ D4RY 6333-H
	.015" O/S	.001" U/S	x	x	★ D1FZ 6333-S	★ D1FZ 6333-S	★ D1FZ 6333-S	★ D1FZ 6333-S	★ D1FZ 6333-S
	.015" O/S	.002" U/S	x	x	★ D1FZ 6333-T	★ D1FZ 6333-T	★ D1FZ 6333-T	★ D1FZ 6333-T	★ D1FZ 6333-T
	.015" O/S	.010" U/S	x	x	D1FZ 6333-J	D1FZ 6333-J	D1FZ 6333-J	D1FZ 6333-J	D1FZ 6333-J
	.015" O/S	.020" U/S	x	x	D1FZ 6333-K	D1FZ 6333-K	D1FZ 6333-K	D1FZ 6333-K	D1FZ 6333-K
	.015" O/S	.030" U/S	x	x	D1FZ 6333-L	D1FZ 6333-L	D1FZ 6333-L	D1FZ 6333-L	D1FZ 6333-L
4 CYL. 140 C.I.D. ENGINE									
74/ Exc. T/C	Standard	Std.(Red)	x		D4FZ 6333-A	D4FZ 6333-A	D4FZ 6337-A	D4FZ 6333-A	D4FZ 6333-A
	Standard	Std.(Blue)	x		D4FZ 6333-B	D4FZ 6333-B	D4FZ 6337-B	D4FZ 6333-B	D4FZ 6333-B
	Standard	.002" U/S	x		D4FZ 6333-C	D4FZ 6333-C	D4FZ 6337-C	D4FZ 6333-C	D4FZ 6333-C
	Standard	.010" U/S	x		D4FZ 6333-D	D4FZ 6333-D	D4FZ 6337-D	D4FZ 6333-D	D4FZ 6333-D
	Standard	.020" U/S	x		D4FZ 6333-E	D4FZ 6333-E	D4FZ 6337-E	D4FZ 6333-E	D4FZ 6333-E
	Standard	.030" U/S	x		D4FZ 6333-F	D4FZ 6333-F	D4FZ 6337-F	D4FZ 6333-F	D4FZ 6333-F
74/ Exc. T/C	Standard	Std.(Red)		x	D4FZ 6333-A	D4FZ 6333-A	D4FZ 6337-G	D4FZ 6333-A	D4FZ 6333-A
	Standard	Std.(Blue)		x	D4FZ 6333-B	D4FZ 6333-B	D4FZ 6337-H	D4FZ 6333-B	D4FZ 6333-B
	Standard	.002" U/S		x	D4FZ 6333-C	D4FZ 6333-C	D4FZ 6337-J	D4FZ 6333-C	D4FZ 6333-C
	Standard	.010" U/S		x	D4FZ 6333-D	D4FZ 6333-D	D4FZ 6337-K	D4FZ 6333-D	D4FZ 6333-D
	Standard	.020" U/S		x	D4FZ 6333-E	D4FZ 6333-E	D4FZ 6337-L	D4FZ 6333-E	D4FZ 6333-E
	Standard	.030" U/S		x	D4FZ 6333-F	D4FZ 6333-F	D4FZ 6337-M	D4FZ 6333-F	D4FZ 6333-F
79 T/C	Standard	Std. (Red)	X		D4FZ 6333-A	D4FZ 6333-A	D4FZ 6337-A	D4FZ 6333-A	D4FZ 6333-A
		Std. (Blue)	X		D9ZZ 6333-B	D9ZZ 6333-B	D4FZ 6337-B	D9ZZ 6333-B	D9ZZ 6333-B
		.002" U/S	X		D4FZ 6333-C	D4FZ 6333-C	D4FZ 6337-C	D4FZ 6333-C	D4FZ 6333-C
		.010" U/S	X		D4FZ 6333-D	D4FZ 6333-D	D9ZZ 6337-D	D4FZ 6333-D	D4FZ 6333-D
		.020" U/S	X		D4FZ 6333-E	D4FZ 6333-E	D9ZZ 6337-E	D4FZ 6333-E	D4FZ 6333-E
		.030" U/S	X		D4FZ 6333-F	D4FZ 6333-F	D9ZZ 6337-F	D4FZ 6333-F	D4FZ 6333-F

ENGINE BEARING APPLICATION CHART

YEAR	SIZE O.D.	SIZE I.D.	UPPER	LOWER	PART NUMBER FRONT	FRONT INTERMEDIATE	CENTER	REAR INTERMEDIATE	REAR
6333	BEARING (CRANKSHAFT MAIN)								
	In the size column of the chart below (R) designates RED size-(B) designates BLUE size. RED size and BLUE size are optional for selective fit.								
4 CYL. 140 C.I.D. ENGINE									
79 T/C	Standard	Std. (Red)		X	D4FZ 6333-A	D4FZ 6333-A	D4FZ 6337-G	D4FZ 6333-A	D4FZ 6333-A
		Std. (Blue)		X	D9ZZ 6333-B	D9ZZ 6333-B	D4FZ 6337-H	D9ZZ 6333-B	D9ZZ 6333-B
		.002" U/S		X	D4FZ 6333-C	D4FZ 6333-C	D4FZ 6337-J	D4FZ 6333-C	D4FZ 6333-C
		.010" U/S		X	D4FZ 6333-D	D4FZ 6333-D	D4FZ 6337-K	D4FZ 6333-D	D4FZ 6333-D
		.020" U/S		X	D9ZZ 6333-E	D9ZZ 6333-E	D4FZ 6337-L	D9ZZ 6333-E	D9ZZ 6333-E
		.030" U/S		X	D4FZ 6333-F	D4FZ 6333-F	D9ZZ 6337-M	D4FZ 6333-F	D4FZ 6333-F

YEAR	MODEL/RESTRICTIONS	QUANTITY 122 ▲	QUANTITY 140 @			PART NUMBER	DESCRIPTION
	▲ 2000 cc @ 2300 cc						
						6334	RING (CRANKSHAFT THRUST)
73/74		2				D1FZ 6334-A	#White-lower-std.
		AR				D1FZ 6334-B	.015" O/S
73/74		1				D1FZ 6334-C	Upper-std. use in rear position only
		AR				★ D1FZ 6334-D	.015" O/S-N/R
73/74		2				D1FZ 6336-A	SEAL (CRANKSHAFT REAR MAIN BEARING CAP)
						6A340	BOLT(CRANKSHAFT PULLEY)
73/74		1				★ D1FZ 6A340-A	Hex.-M12 x 35(Metric coarse)-r/b E1FZ-A (2/85)
74/	L		1			D4FZ 6A340-A	M14 x 1.5 x 40(Metric fine)
79	J		1				
76/77	J		1			★ D5RY 6A340-A	M14 x 1.5 x 42(Metric fine)-N/R
						6345	BOLT (CRANKSHAFT MAIN BEARING CAP)
73/74		10				D1FZ 6345-A	
74/78	L		10			D4FZ 6345-A	M12 x 1.75 x 80(Metric fine)
76/77	J		9				
78	P		9				
79			9				
78	P		1			E5ZZ 6345-A	Stud-M12-M10 x 108.5 (metric)
79			1				
76/77	J		1				
78/			1			356214-S8	(XX-162)-Washer (used w/6345 stud to secure mn. brg. cap)
						6A346	DOWEL (CRANKSHAFT MAIN BEARING CAP)
73/74		2				★ D1FZ 6A346-B	No. 3 bearing-N.R.
73/74		2				D1FZ 6A346-A	No. 5 bearing
						6A366	PLATE (FLYWHEEL REINFORCING)
73/74	A/T	1				★ D0RY 6A366-B	N.R.
74	L - - M/T		3			E1FZ 6A366-A	
74/78	L - - C3		1				
76/77	J - - C3		AR				
79							
74/	L - - C4		1			D4ZZ 6A366-A	
73/74	A/T	1				D1RY 6K372-A	SPACER (CONVERTER DRIVE PLATE)-used in front of flywheel
						6375	FLYWHEEL ASSY.
73/74	J - - M/T	1				★ D1RY 6375-A	135 tooth-N.R.
73/74	J - - w/Borg-Warner A/T	1				★ D1RY 6375-B	Flywheel only-N.R.
73/74	J - - C4	1				D1RY 6375-C	Flywheel only
74	L - - A/T	1				D1FZ 6375-A	Incl. ring gear
74	L - - M/T	1				★ D1FZ 6375-C	135 tooth-incl. ring gear-N.R.

COPYRIGHT © 1986— FORD MOTOR COMPANY —DEARBORN, MICHIGAN

YEAR	MODEL/RESTRICTIONS	QUANTITY 122 ▲	QUANTITY 140 @			PART NUMBER	DESCRIPTION
	▲ 2000cc @2300cc						
						6375	FLYWHEEL ASSY. Cont'd
76/77	J - - M/T		1			D5RY 6375-A	132 tooth
74/79	L - - M/T		1			E2ZZ 6375-C	132 tooth-incl. ring gear
79	J - - M/T w/T/C		1				
74/	L - - C4		1			D5FZ 6375-A	Incl. ring gear
74	L - - C3		1			D4FZ 6375-C	Incl. ring gear
75/	C3		1			D4ZZ 6375-D	Incl. ring gear
78/79	P - - M/T		1			E2ZZ 6375-B	132 tooth-incl. ring gear
79	J - - M/T w/o T/C		1				
74	A/T - - C3		3			N800118-S100	(AB-41-K)-bolt(flywheel to conv.)-M 10 x 1 x 14-(Metric fine)
76/	A/T - - C3		3			N800081-S51	(AB-159)-bolt(flywheel to conv.)-M10 x 14(Metric coarse)
						6378	WASHER (CRANKSHAFT PULLEY RETAINING)
73/74		1				★ D1FZ 6378-A	8.5(Metric)-N/R
74/	L		1			D4FZ 6378-A	M15-flat(Metric)
79	J		1				
76/77	J		1			★ D5RY 6378-A	M15-flat(Metric)-N/R
						6379	BOLT (FLYWHEEL TO CRANKSHAFT)
73/74	M/T	6				D4FZ 6379-A	(Flywheel to crankshaft)-M10 x 1 x 28.6 (Metric fine)
74/	M/T		6				
73/74	J - - w/Borg-Warner A/T	4				★ D1RY 6379-B	(Flywheel to-N/Rconverter)-M10 x 1 x 15(Metric fine)-N/R
73/74	J - - w/Borg-Warner A/T	6				★ D1RY 6379-A	(Flywheel to-N/Rcrankshaft)-M10 x 1 x 34(Metric fine)-N/R
73/74	J - - C4	6				★ D1RY 6379-D	(Flywheel to crankshaft)-M10 x 26 (Metric coarse) R/b N602207-S82 (8/79)
73/74	J - - C4	4				★ D2RY 6379-B	(Flywheel to converter)-M10 x 26 (metric coarse)-N/R
74	L - - A/T	6				D1FZ 6379-B	M10 x 22(Metric coarse)
74/	A/T		6			D4FZ 6379-B	M10 x 1 x 20(Metric fine)-also used to att. 9D475 E.G.R. valve
73/74	C4	1				★ D2RY 6381-A	ADAPTER (CRANKSHAFT TO CONVERTER)-N/R
						6384	GEAR (FLYWHEEL RING)
73/74	M/T	1				D1FZ 6384-A	135 tooth
73/74	W/Borg-Warner A/T	★				★6384	Ring gear serviced as part of converter 7902
73/74	C4	★				★6384	Ring gear-Refer to 7L142- Section A70.2
74/	M/T		1			D4FZ 6384-A	132 tooth
						6392	HOUSING ASSY. (FLYWHEEL)
74	L - - M/T	1	1			★ D4FZ 6392-B	N.R.
75/	L - - M/T		1			D5FZ 6392-B	
78	P - - M/T		1			★ D9BZ 6392-A	N.R.
79	J - - M/T		1			D9ZZ 6392-B	Use w/SR4 trans. (Borg Warner)
79	J,P - - M/T		1			D9BZ 6392-C	Use w/Hummer trans. (FOE)
74	M/T	2				382535-S100	(MM-173-MX)-nut(flywheel hsg. to block)-hex.-3/8"-16
74	M/T	2				370967-S	(BB-158)-screw and washer assy.(flywheel hsg. to block)-hex. hd.-3/8"-16 x 2"
74	M/T	2				382802-S2	(MM-173-JB)-nut(flywheel hsg. to block)-hex.-3/8"-16
74	M/T	2				N800012-S100	(AW-46)-stud(flywheel hsg. to block)-lock-M10 x 1.5 & 3/8"-16 x 2 3/4"
79	J - - M/T T/C		1				
76/77	J - - M/T		AR			E600312-S82	(AB-33)-bolt(hsg. to block)-M10 x 35(Metric coarse)
			AR			E630174-S71	(AX-32)-washer(hsg. to block)-M10(Metric)
77/78	L,P		6			N800013-S51	(AB-118)-Screw & washer (cover & plate to 6010)-M8-20
79			6				
79	J,P - - M/T		5/6			N800054-S51	(AB-120-F)-bolt (6392 to 6010)-M10 x 50mm
79	J - - M/T T/C					N800077-S51	(AM-5-VE)-Nut (att. 6392 at left 10 o'clock position to 6010)-M10 hex locking.

YEAR	MODEL/RESTRICTIONS	QUANTITY 122 ▲	QUANTITY 140 @			PART NUMBER		DESCRIPTION
	▲ 2000cc @2300cc							
							6392	HOUSING ASSY. (FLYWHEEL) — Cont'd
79	J - - M/T T/C					N800128-S51		(AW-57)-Stud (att. 6392 at left 10 o'clock position to 6010)-M10 x 70
							6397	DOWEL (CYLINDER BLOCK)
73/74	M/T	3				D1FZ	6397-B	Block to flywheel housing or clutch to flywheel
74/	M/T		3					
74	L	1	3			D1FZ	6397-A	3/8" long-1/2" O.D.-to locate starter motor
74	L	1				★ D4FZ	6397-B	Flywheel hsg. to block-N.R.
76	J		2			★ D5RY	6397-B	Flywheel hsg. to block-N.R.
74/	L,P		2			D7BZ	6397-A	Flywheel hsg. to block
73/		1	1			D2RY	6411-A	SEAL (FLYWHEEL HOUSING COVER PLATE)
							6500	TAPPET ASSY. (VALVE)
74/			8			D6FZ	6500-A	Standard
			AR			D6FZ	6500-B	.020" O/S
							6505	VALVE (EXHAUST)
73/74		4				D2FZ	6505-A	Standard
		AR				★ D2FZ	6505-B	.008" O/S-N.R.
		AR				D2FZ	6505-C	.016" O/S
		AR				★ D2FZ	6505-D	.024" O/S-NR
		AR				★ D2FZ	6505-E	.032" O/S-NR
74/75			4			D4FZ	6505-A	Standard
76	J - - "Before Chg./LY9/"		AR			★ D4FZ	6505-B	.003" O/S-N.R.
			AR			★ D4FZ	6505-C	.015" O/S-N.R.
			AR			★ D4FZ	6505-D	.030" O/S-N.R.
76/78	L		4			E43Z	6505-A	Standard
76/77	J - - "From Chg./LY9/"		AR			★ D6FZ	6505-B	.003" O/S-N.R.
79	Exc. T/C		AR			E43Z	6505-B	.015" O/S
			AR			E43Z	6505-C	.030" O/S
79	T/C		4			D9ZZ	6505-A	Std.
			AR			D9ZZ	6505-B	.015" O/S
			AR			D9ZZ	6505-C	.030" O/S
							6507	VALVE (INTAKE)
73/74		4				D1FZ	6507-A	Standard
		AR				★ D1FZ	6507-B	.008" O/S-N.R.
		AR				★ D1FZ	6507-C	.016" O/S-N.R.
		AR				★ D1FZ	6507-D	.024" O/S-N/R
		AR				★ D1FZ	6507-E	.032" O/S-NR
74/75			4			D4FZ	6507-A	Standard
76	J - - "Before Chg./LY9/"		AR			★ D4FZ	6507-B	.003" O/S-N.R.
			AR			D4FZ	6507-C	.015" O/S
			AR			★ D4FZ	6507-D	.030" O/S-N.R.
76/78	L,P		4			D9ZZ	6507-A	Standard
76/77	J - - "From Chg./LY9/"		AR			★ D6FZ	6507-B	.003"-N/R
79	Exc. T/C		AR			D9ZZ	6507-B	.015" O/S
			AR			D9ZZ	6507-C	.030" O/S
79	T/C		4			D9ZZ	6507-A	Std.
			AR			D9ZZ	6507-B	.015" O/S
			AR			D9ZZ	6507-C	.030" O/S
74/			AR			D4FZ	6510-A	BUSHING (VALVE GUIDE)-intake
							6513	SPRING (VALVE)
73/74		8				D2RY	6513-A	
74/			8			★ D8FZ	6513-A	R/b E4ZZ 6513-A (11/85)
							6514	RETAINER (VALVE SPRING)
73/74		8				D1FZ	6514-A	
74/			8			E43Z	6514-A	
74/			AR			B3Q	6515-A	SPACER (VALVE SPRING)-.030" thick 1" I.D.

COPYRIGHT © 1986— FORD MOTOR COMPANY —DEARBORN, MICHIGAN

YEAR	MODEL/RESTRICTIONS	QUANTITY 122 ▲	QUANTITY 140 @			PART NUMBER	DESCRIPTION
	▲ 2000 cc @ 2300 cc						
						6518	KEY (VALVE SPRING RETAINER)
73/74		16				D1FZ 6518-A	
74/			16			D0AZ 6518-A	
						6K524	SPRING (FOLLOWER ARM)
73/74		8				D1FZ 6K524-A	
73/74		8				D1FZ 6A527-A	STUD (VALVE ROCKER ARM SUPPORT)
73/74		8				D1FZ 6A529-A	NUT (VALVE ROCKER ARM STUD)
						6K532	CLIP (FOLLOWER ARM SPRING RETAINING)
73/74		8				D1FZ 6K532-A	
						6564	ARM (VALVE ROCKER)
73/74		8				D1FZ 6564-A	
74/			8			D8FZ 6564-A	
						6570	GROMMET
73/74		2				★ D1FZ 6570-A	Steel-used as rocker arm cover seal-N.R.
						6571	SEAL (VALVE STEM)
73/74		4				D1FZ 6571-B	Intake-incl.(1)valve seal cap
		4				D1FZ 6571-D	Exhaust-incl.(1)valve seal cap
74/			8			D4FZ 6571-A	Std.-.328" I.D.
			AR			D4FZ 6571-B	.015" O/S
			AR			D4FZ 6571-C	.030" O/S
73/74		1				D1FZ 6578-A	TUBE ASSY. (LUBRICATION VALVE DRIVE)
73/74		3				E800132-S82	(AB-15-A)-bolt(tube assy. to head)-hex. head-M6 x 9(Metric coarse)
73/74		3				E630025-S71	(AX-10-A)-washer(tube assy. to head)-flat-M6-(Metric)
						6582	COVER ASSY. (VALVE ROCKER ARM)-Also refer to 6E072
73/74	J	1				★ D1RY 6582-B	N/R
74	L	1				★ D2FZ 6582-A	N.R.
74/	Exc. T/C		1			E1BZ 6582-B	For 1978 & prior-also use D9AZ 6766-A
79	T/C		1			E1ZZ 6582-A	
73/74		10				E602165-S82	(AB-16)-bolt(valve cover to head)-hex. head-M6 x 14(Metric coarse)
73/74		10				34805-S8	(X-62)-washer(cover to head)-lock-5/16"
74/75			2			N800105-S2	(AB-116-E)-screw and washer(cover to head)-M6 x 19MM(Metric coarse)
74/			8			N800030-S	(AB-149-A)-screw & washer(cover to head)-hex. hd. M6 x 16(Metric coarse)
						6584	GASKET (VALVE ROCKER ARM COVER)
73/74		1				D2FZ 6584-A	
74/			1			E2ZZ 6584-A	
						6600	PUMP ASSY. (OIL)
73/74		1				★ D1FZ 6600-A	N.R.
76/77	J		1			★ D5RY 6600-A	N.R.
74/78	L,P		1			D5FZ 6600-A	Less screen & cover- has (4) bolt cover plate
79	Exc. T/C		1				
79	w/T/C		1			D9ZZ 6600-A	
73/74		1				E944100-S	(AN-10)-pin-spring rolled-M16 x 10(Metric)
74/			1			N800059-S	(AN-11)-dowel pin-M18.3 x 10(Metric)
						6608	ROTOR and SHAFT ASSY. (OIL PUMP DRIVE)
73/74		1				D1FZ 6608-A	

YEAR	MODEL/RESTRICTIONS	QUANTITY 122 ▲	QUANTITY 140 @			PART NUMBER	DESCRIPTION
	▲ 2000 cc @ 2300 cc						
						6613	PLATE (AUXILIARY SHAFT RETAINING)
73/74		1				★ D1FZ 6613-A	N.R.
74/			2			D4FZ 6613-A	(1) used on 6250 camshaft and (1) on 6A739 aux. shaft
73/74 74/		2	 4			N604465-S	(AB-153)-screw & washer (plate to cyl. head(2)-plate to cyl. block (2)-M6 x 12(Metric coarse)
						6616	PLATE (OIL PUMP BODY)
73/74		1				★ D1FZ 6616-A	N/R
76/77	J		1			★ D5RY 6616-A	N/R
73/74		3				E602529-S76	(AB-53)-screw and washer(cover to pump)-M6 x 20(Metric coarse)
74/ 76/77	L J		6 4			N800058-S	(AB-6)-bolt (plate to pump)-M6 x 20(Metric coarse)
						6A618	SHAFT ASSY. (OIL PUMP INTERMEDIATE)
73/74		1				D1FZ 6A618-A	
74/			1			D4FZ 6A618-A	
73/74		1				★ D1RY 6K621-B	TUBE ASSY. (OIL PUMP INLET)-N.R.
73/74		2				E602167-S71	(AB-7)-bolt(tube assy. to oil pump)-hex. head-M6 x 20(Metric coarse)
						6622	SCREEN, TUBE and COVER ASSY. (OIL PUMP)
76/77	J		1			E3ZZ 6622-A	
78 79	P J,P		1 1				
74/77 78/	 L		1 1			D5FZ 6622-A	
75/			1			N602434-S	(AM-12-H)-Nut (6622 to brg. CAP stud) -M10-17 hex locking
			2			N602551-S2	(AB-63)-Screw & Washer (6622 to 6600)-M8 x 30 hex. hd.
74			2			N602550-S82	(AB-62)-screw and washer(screen and cover to pump)-M8 x 25(Metric coarse)
76/77	J		1			D8BZ 6345-A	(AW-60)-stud(screen and cover to block)-M12 x M10 x 109(Metric coarse)
			1			356214-S8	(XX-162)-washer
						6626	GASKET (OIL PUMP INLET TUBE)
73/74		1				★ D1FZ 6626-A	N.R.
74/			1			D4FZ 6626-A	
						6629	RING (OIL PUMP INTERMEDIATE SHAFT RETAINING)
73/74		1				★ D2FZ 6629-A	N.R.
74/			1			C4TZ 6629-A	
						6A630	BAFFLE (CYLINDER BLOCK VENTILATION)
74/			1			E5ZZ 6A630-A	
						6638	BOLT and WASHER (OIL PUMP ATTACHING)
73/74		2				★ D1FZ 6638-A	N.R.
74/			2			D4FZ 6638-A	
						6A664	HOSE (CRANKCASE VENTILATION)
73/74		1				D1FZ 6A664-B	Oil filler cap to air cleaner-cut to fit
73/74		1				★ D1FZ 6A664-A	Intake manifold to (6A666) valve-N.R.
76/77	J		1			★ D5RY 6A664-C	Oil filler cap to air cleaner-N.R.
74/	L,J		1			D4FZ 6A664-A	Lower-6A666 valve to 6A785
74/ 74/77	L J - - w/or/w/o A/C		1 AR			D4FZ 6A664-G	Upper-manifold to 6A666 valve Upper-cut & fit
74/77			1			★ D4FZ 6A664-D	Approx. 6 1/2" long-oil filler cap to air cleaner-N.R.
77/ 78/	L - - A/C "From 6/27/77" P - - A/C		1			D8FZ 6A664-A	9B532 Hot idle compensator to carb. spcr.

COPYRIGHT © 1986— FORD MOTOR COMPANY —DEARBORN, MICHIGAN

YEAR	MODEL/RESTRICTIONS	QUANTITY 122 ▲	QUANTITY 140 @			PART NUMBER	DESCRIPTION
	▲ 2000 cc @ 2300 cc						
						6A664	HOSE (CRANKCASE VENTILATION) — Cont'd
77/78 78/	L - - A/C "From 6/27/77" P - - A/C		1			E1FZ 6A664-C	9B532 Hot idle compensator to P.C.V. vlv.
79	w/o A/C		1			D9FZ 6A664-A	PCV valve to carb. spacer
79	T/C		1			D9ZZ 6A664-A	Upper
74/			AR			383313-S	(YY-6)-strap(ventilation hose)-adj.-11" long
						6A665	ADAPTER (CRANKCASE VENTILATION)
73/74	J	1				★ D2RY 6A665-A	N/R (10/79)
74	L	1				★ D1FZ 6A665-A	Steel-N/R (8/79)
						6A666	VALVE (POSITIVE CRANKCASE VENTILATION)-(P.C.V.)
76	J - - "Before Chg./LY9/"		1			D5RY 6A666-A	*EV-83
79	All T/C		1			D9DZ 6A666-A	*EV-76-C
73/74 73/76 76/77 77/	 L J - - "From Chg./LY9/" All exc. T/C-ord. by M/C No.	1	 1 1 1			E1ZZ 6A666-A	*EV-82-D-repls. *EV-82, EV-82-A & EV-69-, EV-88 incl. connectors, elbows & I.S. 4590
77/	All exc. T/C-ord. by M/C No.		1			D9FZ 6A666-B	*EV-88-C-repls. *EV-88-A-incl. connectors, elbows & I.S. 4590
73/74	A/C	1				379573-S	(II-98-G)-tee(between P.C.V. valve and manifold)-brass-1/2" dia. x 1/8"-27
						6670	SPRING (OIL PUMP RELIEF VALVE)
73/74		1				D1FZ 6670-A	
						6674	PLUNGER (OIL PUMP RELIEF VALVE)
73/74		1				D1FZ 6674-A	
						6675	PAN ASSY. (OIL)
73/74	J	1				★ D2RY 6675-C	N.R.
74	L	1				D3FZ 6675-B	
76/77 78 79	J P J,P		1 1 1			D8BZ 6675-A	
74/	L		1			D7FZ 6675-A	
73/74		23				E602165-S82	(AB-16)-bolt (pan to block)-hex. head- M6 x 14 (Metric coarse)
73/74		23				34805-S8	(X-62)-washer (pan to block)-lock-1/4"
74/			18			N800030-S	(AB-149-A)-screw & washer (oil pan to block & cover)-hex. hd.-M6 x 16 (Metric coarse)
74/			4			N800031-S	(AB-149-B)-screw & washer (oil pan to block & cover)-hex. hd.-M8 x 20 (Metric coarse)

YEAR	MODEL/RESTRICTIONS	QUANTITY 122 ▲	QUANTITY 140 @			PART NUMBER		DESCRIPTION
	▲ 2000 cc @ 2300 cc							
							6700	SEAL (CYLINDER FRONT COVER OIL)
73/74		3				D1FZ	6700-A	(1) used in cyl. front cover upper (1) used in cyl. front cover lower (1) used in camshaft
74/			3			D4FZ	6700-A	(1) used on crankshaft (1) on camshaft (1) on aux. shaft
							6701	PACKING (CRANKCASE REAR)
73/74		1				D1FZ	6701-A	
74/			2			D4FZ	6701-A	
							6710-1	Supplied in 6781 gasket set only
							6722	Supplied in 6781 gasket set only
							6730	PLUG (OIL PAN DRAIN)
73/		1	1			E0FZ	6730-B	
							6731	ELEMENT ASSY. (OIL FILTER)
73/74 76/77	J J	1	 1			D4ZZ	6731-BDP	*FL-300-DP
74/79		1	1			D9AZ	6731-A	*FL-1-A
							6734	GASKET (OIL PAN DRAIN PLUG)
73/74 74/		1	 1			E0FZ	6734-A	
							6A738	BEARING (AUXILIARY DRIVE SHAFT REAR)
74/			1			D4FZ	6A738-A	Std.-1.658" I.D.
			AR			D4FZ	6A738-B	.015" U/S
							6A739	SHAFT ASSY. (FUEL PUMP, OIL PUMP and DISTRIBUTOR DRIVE)
73/74		1				★ D1FZ	6A739-A	Not replaced
74/			1			D4FZ	6A739-A	
							6750	INDICATOR (OIL LEVEL)
73/74		1				D4RY	6750-B	
76/77	J		1			D5RY	6750-A	
74/	L		1			E0FZ	6750-A	
78	P		1			D8BZ	6750-C	
79	J,P - - Exc. T/C		1			E2ZZ	6750-A	
79	T/C		1			★ D9ZZ	6750-A	#D9ZE-6750-CA-r/b E2ZZ 6750-B (10/85)
							6A753	BEARING (AUXILIARY DRIVE SHAFT FRONT)
74/			1			D4FZ	6A753-A	Std.-1.658" I.D.
			AR			D4FZ	6A753-B	.015" U/S
							6754	TUBE ASSY. (OIL LEVEL INDICATOR)
73/74	J	1				★ D1RY	6754-B	Not replaced
74	L	1				D4FZ	6754-B	
74/	L		1			★ D7FZ	6754-A	Repl. by D7FZ 6754-B
78	P		1			D8BZ	6754-C	
76/77	J		1			★ D58Y	6754-A	Not replaced
79	J,P - - Exc. T/C		1			D9BZ	6754-B	
79	T/C		1			D9ZZ	6754-A	

COPYRIGHT © 1986— FORD MOTOR COMPANY —DEARBORN, MICHIGAN

1973/79 LINCOLN-MERCURY CARS

4 CYL. 2.0L (2000 cc or 122 C.I.D.)
4 CYL. 2.3L (2300 cc or 140 C.I.D.)

YEAR	MODEL/RESTRICTIONS	QUANTITY 122 ▲	QUANTITY 140 @			PART NUMBER		DESCRIPTION
	▲ 2000 cc @ 2300 cc							
							6766	CAP ASSY. (OIL FILLER and BREATHER)
74		1				E5TZ	6766-E	*EC-716-incl. 6789 gasket
74/78			1			E3AZ	6766-A	*EC-682
79			1			D9AZ	6766-A	*EC-675-Cap only-use w/6768 filter
74/			1			C8AZ	6767-B	ELBOW (CRANKCASE VENTILATION HOSE)
							6768	FILTER ASSY. (CRANKCASE VENT)
79			1			D9FZ	6768-B	*FA-687-A (Att. to 6766)
							6775-6	SHIELD (SPLASH)
73/74	J	1				★ D3FZ	6775-A	N.R.
76/77	J		1			★ D5RY	6775-A	N/R
74/76	L	1	1			★ D4FZ	6775-A	N/R
78/79	J,P "Before 5/1/79"		2			E2BZ	6775-A	R.H. & L.H. - Reset pins when necessary for proper usage
79	J,P "From 5/1/79"		2			D9BZ	6775-B	R.H. & L.H.-Reset pins when necessary for proper usage
78	P		AR			383927-S		(NN-167)Pin-drive (secure 6775 shield)
79	J,P		AR					
73/74		4				120564-ES8		Screw-pan head-No. 10-12 x 1/2"
73/74		4				116174-ES7-8		Washer-flat-7/32"
73/74		4				120359-ES32		Clip
							6781	GASKET SET (OIL PAN)
73/74		1				D1FZ	6781-C	
	Consists of							
	2-D1FZ 6336-A	Seal(crankshaft rear main bearing cap)				1-71HM 6711-A1A or A2A		Gasket-L.H.
						2-D1FZ 6722-A		Seal(front and rear)
	1-D1FZ 6616-A	Gasket(oil pump inlet tube)				1-D9EE 6734-A		Gasket(drain plug)
	1-71HM 6710-A1A or A2A	Gasket-R.H.						
74/			1			E2ZZ	6781-A	
	Consists of							
	1-E3ZE 6710-AA	Gasket(R.H.)				1-D9EE 6723-AA		Seal(rear)
	1-E3ZE 6711-AA	Gasket(L.H.)				1-E0FZ 6734-A		Gasket(drain plug)
	1-D42E 6722-AB	Seal(front)						
							6A785	SEPARATOR ASSY. (CRANKCASE VENT OIL)
73/74		1				D1FZ	6A785-A	
74/79	Exc. T/C		1			D9FZ	6A785-A	
79	T/C		1			D9ZZ	6A785-A	
73/74		1				D3FZ	6789-A	GASKET (OIL FILLER CAP)
73/78			1			D94Y	6789-B	
75/			1			D5FZ	6K799-A	PIN (OIL PRESSURE RESTRICTOR)
							★6853	HOSE (CRANKCASE VENTILATION)-cut to fit from D1FZ 6A664-B
							6A875	BUSHING (AUXILIARY DRIVESHAFT FRONT)
73/74		1				D1FZ	6A875-A	Standard
		1				★ D1FZ	6A875-B	.015" U/S-N.R.
							6890	INSERT (OIL FILTER MOUNTING BOLT)
73		1				D1FZ	6890-A	
74/			1			D4FZ	6890-A	
							6A892	RETAINER (CRANKCASE VENTILATION)-grommet
73/76		1	1			E5TZ	6A892-B	P.C.V. valve to oil separator
74/			1			C8AZ	6A892-A	Elbow to oil fillercap
74/		1	1			★	6K948	BRACKET (SPLASH SHIELD)-improvise

♦ 2600 cc ⊕ 2800 cc ▲ Used with calibration code numbers beginning with 4 or 5
% Used with calibration code numbers beginning with 6

YEAR	MODEL/RESTRICTIONS	QUANTITY 159 ♦	QUANTITY 171 ⊕			PART NUMBER	DESCRIPTION
						6D000	GASKET SET (TIMING COVER)
74/79			1			E2ZZ 6D000-A	
	Consists of						
	1-D2RY 6020-A	Gasket (frt cvr)				1-E2EJ 6710-AA	Gasket (oil pan R.H.)
	2-D2RY 6C075-A	Seal (frt cvr)				1-E2EJ 6711-AA	Gasket (oil pan L.H.)
	1-D1FZ 6700-A	Seal (crankshaft frt)				1-D2RY 8507-A	Gasket (water pump)
	1-11543648	Seal (oil pan frt)				1-IS-5169	Instruction Sheet
	0-E4RJ 6722-BA	Alternate seal					
						6007	ENGINE ASSY.-Current production engine assemblies may be ordered from the local parts distribution center by furnishing the engine code from the vehicle certification label or the identification tag number that is attached to the exterior of the engine assembly.
73/	J	★	★			★6007	Service details only
75/	L		★			★6007	
						6008	GASKET SET (COMPLETE OVERHAUL)
73		1				★ D2RY 6008-A	N.R.
74/75	"Before 1/75"		1			★ D4ZZ 6008-A	R/b D9ZZ 6E078-A & D5ZZ 6079-A (9/79)
75/	"From 1/75"		1			★ D6ZZ 6008-A	R/b D9ZZ 6E078-A & D9ZZ 6079-B (9/81)
73/		4	4			D2RY 6A008-A	DOWEL (CYLINDER HEAD TO BLOCK)-16 Metric dia.
76/			1			★ D6ZZ 6D008-A	Heater kit (cylinder block)-N.R.
	Consists of						
	1-D6AJ 6B018-AA	Wire assy.				4-D6AJ 14197-AA	Clip
	1-D6ZJ 6A051-AA	Heater assy.					
	1-D4AB 6A056-AA	Cap					
						6009	CYLINDER ASSY.
73		1				★ D2RY 6009-A	N.R.
74/75	Low compression		1			★ D4ZZ 6009-A	With calibration code numbers beginning with 4 or 5-
76	J - - ▲low compression		1				Not repl.
76/	%medium compression		1			★ D6ZZ 6009-A	N.R.-use details
79			1			★ D9ZZ 6009-C	N.R.-use service details
						6010	BLOCK ASSY. (CYLINDER)
73		1				★ D3RY 6010-A	NR
74/			1			★ D4ZZ 6010-B	NR
						6B018	WIRE ASSY. (BLOCK HEATER)
74			1			★ D4ZZ 6B018-B	N.R.
75			1			D5ZZ 6B018-A	
76/78			1			D7TZ 6B018-A	
79			1			D9ZZ 6B018-A	
74/	J(Canada only)		1			★ CD5AZ 6B018-B	Standard vinyl conn.-5 ft. r/b CEH-102
						6019	COVER ASSY. (CYLINDER FRONT)
73		1				★ D2RY 6019-A	N.R.
74/			1			D4ZZ 6019-A	
73/		2	2			E601219-S72	(AB-20-E)-bolt(pump and cover to block)- M8 x 70(Metric coarse)
73		2				E602188-S72	(AB-20)-bolt(cover to block)-hex. hd.-M8 x 25- (Metric coarse)
						6020	GASKET (CYLINDER FRONT COVER)
73/		1	1			D2RY 6020-A	Cover to plate(6B070)
73/		1	1			D2RY 6020-B	Plate(6B070)to block
						6023	POINTER (TIMING)
73		1				★ D2RY 6023-A	Not repl.
74/	T/E		1			D4ZZ 6023-A	
73/		2	2			E630025-S71	(AX-10)-washer(pointer to block or cover)-flat- M6(Metric)
73/		2	2			E630172-S71	Lockwasher(pointer to block or cover)- M6(Metric)
73/		2	2			E602165-S82	(AB-16)-bolt(pointer to block or cover)-hex. hd.- M6 x 14(Metric coarse)

COPYRIGHT © 1986— FORD MOTOR COMPANY —DEARBORN, MICHIGAN

1973/79 LINCOLN-MERCURY CARS

6 CYL. 2.6L (2600 cc or 159 C.I.D.)
6 CYL. 2.8L (2800 cc or 171 C.I.D.)

YEAR	MODEL/RESTRICTIONS	QUANTITY 159 ♦	QUANTITY 171 ⊕			PART NUMBER	DESCRIPTION
						6A023	SUPPORT ASSY. (REAR)
73/74	J - - M/T	1	1			★ D1RY 6A023-C	Not repl.
76/77	J - - M/T		1			D5RY 6A023-B	#75HF-6A092-CA
73/74	J - - A/T	1	1			★ D3RY 6A023-A	Not replaced
76/77	J - - A/T		1			★ D5RY 6A023-A	Not replaced
79	J,P		1			D9BZ 6A023-A	Rear
75/	L		1			D1FZ 6A023-B	Upper
			1			D7FZ 6A023-A	Lower
73/	A/T	4	4			E400017-S76	Bolt(support to under body)-5/16" x 41
						6026	PLUG (ENGINE)
73/		1	1			★ D2RY 6026-A	36 x 1.5(Metric)-N.R.
73/		11	11			D7AZ 6026-B	Block & cylinder head-1 1/2" dia.-std.
		AR	AR			D1FZ 6026-C	.065" O/S
73/		1	1			87837-S	(P-15)-plug(oil channel)-hex. "C" sunk-1/4"-18
73/		2	2			87650-S	(P-12)-plug(water jacket)-hex. hd.-1/8"-27
						6028-9	BRACKET (FRONT SUPPORT)
73	"Before 4/2/73"	1				★ D2RY 6028-B	R.H.-N/R
		1				★ D2RY 6029-B	L.H.-N/R
74	J - - without A/C		1			★ D4RY 6028-A	R.H.-N/R
			1			★ D4RY 6029-A	L.H.-N/R
74	J - - with A/C		1			★ D4RY 6028-C	R.H.-N/R
			1			★ D4RY 6029-C	L.H.-N/R
76/77	J		1			★ D5RY 6028-C	R.H.-N/R
			1			★ D5RY 6029-C	L.H.-N/R
75/	L		1			★ D5FZ 6028-B	R.H.-N/R
			1			★ D5FZ 6029-B	L.H.-N/R
						6030-1	BRACKET (FRONT SUPPORT)
74	J		1			★ D4RY 6030-A	R.H.-Outer-N/R
			1			★ D4RY 6031-A	L.H.-Outer-N/R
74	J		1			★ D4RY 6030-B	R.H.-Inner-N/R
			1			★ D4RY 6031-B	L.H.-Inner-N/R
79	J		1			D9ZZ 6030-C	R.H.
			1			★ D9ZZ 6031-C	L.H.-N.R.
75/78			1			D4ZZ 6030-A	R.H.
79	L		1			D7ZZ 6031-A	L.H.
						6038	INSULATOR (FRONT SUPPORT)
73		2				D1RY 6038-B	R.H. and L.H.
74			2			★ D4RY 6038-B	R.H. and L.H.-N/R
76/77	J		2			D5RY 6038-B	R.H. and L.H.
79	J		1			D9ZZ 6038-G	R.H.
			1			D9ZZ 6038-H	L.H.
75/	L		2			D5FZ 6038-B	R.H. and L.H.
74	J		2			★ D4RY 6048-A	RETAINER (FRONT SUPPORT INSULATOR)-N.R.
						6049	HEAD (CYLINDER)
73		2				★ D2RY 6049-A	Complete with valves-N.R.
74			2			★ D4ZZ 6049-B	Complete with valves-N.R.
75/76			2			★ D5ZZ 6049-A	Complete with valves-N.R.
77/			2			D7ZZ 6049-A	Complete with valves
						6051	GASKET (CYLINDER HEAD)
73		1				D2RY 6051-A	R.H.
		1				D2RY 6051-B	L.H.
74/			1			E3TZ 6051-D	R.H.
			1			D4ZZ 6051-B	L.H.
74/			1			D4ZZ 6A051-A	HEATER ASSY. (BLOCK)
73/		4	4			D1FZ 6052-A	PLUG (CYLINDER HEAD EXHAUST AIR SUPPLY). 3/4"-14

YEAR	MODEL/RESTRICTIONS	QUANTITY 159 ♦	QUANTITY 171 ⊕			PART NUMBER	DESCRIPTION
						6054	RETAINER (REAR SUPPORT)
73/74	M/T	1	1			★ D0RY 6054-C	
73	A/T "Before 3/1/73"	1				Not repl.	
73/74	A/T "From 3/1/73"	1	1			D3RY 6054-A	
76/77	J		1			D5RY 6054-A	
79	J		1			D8BZ 6054-B	
75/	Canada only		1			★ D4AZ 6A056-A	CAP (BLOCK HEATER)-r/b CEH-117
						6065	Refer to group 6345
79	J		1			D9BZ 6A066-A	SPACER (FRONT SUPPORT INSULATOR)-R.H.

♦ 2600 cc ⊕ 2800 cc
▲ Used with calibration code numbers beginning with 4 or 5
% Used with calibration code numbers beginning with 6

						6068	INSULATOR ASSY. (REAR SUPPORT)
73/77	J - - M/T or A/T-w/Borg-Warner	1	1			D0RY 6068-A	Rubber and steel
73/77	J - - M/T or A/T-w/Borg-Warner	1	1			★ D2RY 6068-D Not repl.	Steel-used as adapter-trans. extension to insulator
73/74	J - - A/T-C4	1	1			D3RY 6068-C	Rubber and steel
73/77	J - - A/T-C3,C4	1	1			★ D2RY 6068-C	Steel-N/R
73/74 76/77	J - - A/T J - - M/T	1	1 1			★ D3RY 6068-B	Rubber bumper limiter "O" ring-N/R
76/77	J		1			D5RY 6068-A	
79	J		1			D9ZZ 6068-A	
75/	L		1			D5FZ 6068-B	
						6B070	PLATE (CYLINDER FRONT COVER)
73 74/		1	 1			D4ZZ 6B070-A	
73/		2	2			D2RY 6C075-A	SEAL (FRONT COVER TO BLOCK)
6E078	GASKET SET (LOWER)						
74/			1			D9ZZ 6E078-A	
						6079	GASKET SET (VALVE GRIND)
73		1				★ D2RY 6079-B	Not replaced
74/75	"Before 1/75"		1			D4ZZ 6079-A	
75/	"From 1/75"		1			D9ZZ 6079-B	
						6096	BRACKET (REAR SUPPORT)
75/	L - - M/T		1			★ D5FZ 6096-A	N/R
75/	L - - A/T		1			★ D3FZ 6096-B	N/R
76/77	J		1			★ D5RY 6096-A	N/R
						6100	PISTON ASSY. (Incl. Connecting Rod & Rings)
73		6				★ D2RY 6100-A	Standard-N.R.
		6				★ D2RY 6100-B	.020" O/S-N.R.
		6				★ D2RY 6100-C	.040" O/S-N.R.
74/75			6			★ D4ZZ 6100-A	Standard-N.R.
76	J - - ▲low compression		AR			★ D4ZZ 6100-B	.020" O/S-N.R.
			AR			★ D4ZZ 6100-C	.040" O/S-N.R.
76/	L		6			D6ZZ 6100-A	Standard
76/	J - - % medium compression		AR			D6ZZ 6100-B	.020" O/S
			AR			★ D6ZZ 6100-C	.040" O/S-N.R.
						6148	RING SET (PISTON PARTIAL)-consists of the necessary rings to re-ring(2)pistons
73		3				★ D2RY 6148-A	Standard-N/R
		AR				★ D2RY 6148-B	.020" O/S-N/R
		AR				★ D2RY 6148-C	.040" O/S-N/R
74/			3			D4ZZ 6148-A	Standard
			AR			D4ZZ 6148-B	.020" O/S
			AR			D4ZZ 6148-C	.040" O/S
73/		2	2			D2RY 6178-B	CONNECTION (WATER INLET TO BLOCK)
73/		★	★			★ 6200	ROD ASSY. (CONNECTING)-Serviced with piston assy. only

COPYRIGHT © 1986— FORD MOTOR COMPANY —DEARBORN, MICHIGAN

YEAR	MODEL/RESTRICTIONS	QUANTITY 159 ♦	QUANTITY 171 ⊕			PART NUMBER	DESCRIPTION
	♦ 2600 cc ⊕ 2800 cc						
						6211	BEARING (CONNECTING ROD)-Red, Blue & Yellow size are optional for selective fit
73/		12	12			D2RY 6211-A	Standard(Red)-upper & lower
		AR	AR			D2RY 6211-B	Standard(Blue or Yellow)
		AR	AR			D4RY 6211-H	.002" U/S
		AR	AR			D2RY 6211-C	.010" U/S
		AR	AR			D2RY 6211-D	.020" U/S
		AR	AR			D2RY 6211-E	.030" U/S
73/		12	12			E2FZ 6212-A	NUT (CONNECTING ROD)-M8 x 1(Metric fine)
						6214	BOLT (CONNECTING ROD)
74/		12	12			D4ZZ 6214-A	
						6250	CAMSHAFT
73/78		1	1			D4ZZ 6250-A	
79			1			★ D9ZZ 6250-A	N.R.
73/		1	1			D2RY 6256-A	GEAR (CAMSHAFT)
73/		1	1			375055-GS	Key(gear to camshaft)-woodruff
73/		1	1			20371-GS	(AB-30)-bolt(gear to camshaft)-hex. hd.-M10-1 x 28(Metric fine)
						6261	BEARING (CAMSHAFT FRONT)
73/		1	1			D4ZZ 6261-A	Standard I.D. and O.D.
		AR	AR			★ D4ZZ 6261-B	.015" U/S I.D.-standard O.D.-N.R.
						6262	BEARING (CAMSHAFT FRONT INTERMEDIATE)
73/		1	1			D4ZZ 6262-A	Standard I.D. and O.D.
		AR	AR			★ D4ZZ 6262-B	.015" U/S I.D.-standard O.D.-N.R.
						6263	BEARING (CAMSHAFT REAR)
73/		1	1			D4ZZ 6263-A	Standard I.D. and O.D.
		AR	AR			★ D4ZZ 6263-B	.015" U/S I.D.-standard O.D.-N.R.
						6266	PLUG (CAMSHAFT REAR BEARING)
73/		1	1			D1FZ 6266-A	Standard-2.011" O.D.
		1	1			★ D1FZ 6266-B	.060" O/S-N.R.
73/		1	1			D2RY 6269-A	PLATE (CAMSHAFT THRUST)-#Blue
73/		2	2			388379-GS	Bolt(plate to block)-hex. hd.-M8 x 15 (Metric coarse)
						6270	BEARING (CAMSHAFT REAR INTERMEDIATE)
73/		1	1			D4FZ 6270-A	Standard I.D. and O.D.
		AR	AR			★ D4ZZ 6270-B	.015" U/S I.D.-standard O.D.-N.R.
						6278	SPACER (CAMSHAFT GEAR)-Red and Blue are optional for selective fit
73/		1	1			D2RY 6278-B	Red
		1	1			D2RY 6278-A	Blue
73/		2	1			D4FZ 6278-B	WASHER (CAMSHAFT GEAR)-M10(Metric) Used as washer for crankshaft pulley bolt 159 C.I.D. only
74/			1			356474-S	(XX-183) whsr-use as whsr for crankshaft pulley bolt
						6303	CRANKSHAFT ASSY.
73		1				★ D2RY 6303-A	N.R.
74/			1			D8FZ 6303-A	
						6306	GEAR SET (CYLINDER TIMING)
73		1				★ D2RY 6306-A	Incl. 6306 and 6256 gears-not replaced
74/			1			D4ZZ 6306-A	Incl. 6256 and 6306 gears

YEAR	MODEL/RESTRICTIONS	QUANTITY 159 ♦	171 ⊕			PART NUMBER	DESCRIPTION
	♦ 2600cc ⊕ 2800cc						
						6312	PULLEY ASSY. (CRANKSHAFT)-Also refer to pulley I.D. chart section 60
73		1				★ D2RY 6312-A	N.R.
74/77	"Before 11/76"		1			D6ZZ 6312-A	Incl. hub, washer, locating pin & (4) bolts - - single sheave
77/	A/T "From 11/76"		1				with vibration damper
77/	M/T "From 11/76"		1			D7ZZ 6312-A	146.6M O.D.#76TM-6312-AA-w/o vibration damper
73/		1	1			375055-GS	Key(pulley to crankshaft)-woodruff
						6A312	PULLEY ASSY. (CRANKSHAFT OUTER)-Also refer to pulley I.D. chart section 60
73	Hang-on A/C	1				★ D2RY 6A312-A	Double sheave-N.R.
74	J - - with integral A/C		1			★ D4RY 6A312-B	Double sheave-N/R
75/	L - - with hang-on A/C		1			D4ZZ 6A312-B	
76/	J - - without A/C		1			★ D5RY 6A312-B	#75TF-BA-single sheave-N/R
76/	J - - with A/C		1			D5RY 6A312-A	#75TF-AA-double sheave
75/	L - - with A/C and P/S		1			D5FZ 6A312-A	#D52E 6312-CA- double sheave
75/	L - - with A/C without P/S		1			★ D5FZ 6A312-C	#D52E 6312-BA- single sheave-N/R
75/	L - - with P/S-without A/C		1			D4ZZ 6A312-B	Repls. #D52E 6312- AA-D4ZE 6312-AA
76/	J - - with hang-on A/C		1			★ D5RY 6A312-C	Not replaced
77	J		4			E800609-S72	(AB-153-AA)-Bolt(6A312 to 6312)- M8 X40 self locking hex hd.
77/			A/R			N800089-S100	(AB-17-K)-Bolt (6A312 to 6312)-M8 x 20-hex. hd.

ENGINE BEARING APPLICATION CHART

YEAR	SIZE O.D.	SIZE I.D.	UPPER	LOWER	PART NUMBER FRONT	FRONT INTERMEDIATE	† REAR INTERMEDIATE USED "From 5/1/74"	REAR INTERMEDIATE USED "Before 5/1/74"	REAR

6333-37 BEARING - (CRANKSHAFT MAIN)-

In the Size columns of the chart below (R) designates RED size - (B) designates BLUE size - (Y) designates YELLOW size. RED, BLUE and YELLOW sizes are optional for select fit.

6 CYLINDER ENGINES
4 MAIN BEARINGS

73/	Standard	Std. (Red)	x	x	D4ZZ 6333-A	D4ZZ 6333-A	D4ZZ 6333-A	D4ZZ 6337-A	D4ZZ 6333-A
	Standard	Standard(Y)	x	x	D2RY 6333-C	D2RY 6333-C	D2RY 6333-C	D2RY 6337-C	D2RY 6333-C
	Standard	.010 U/S	x	x	D2RY 6333-F	D2RY 6333-F	D2RY 633-F	D2RY 6337-F	D2RY 6333-F
	Standard	.020" U/S	x	x	D2RY 6333-G	D2RY 6333-G	D2RY 6333-G	D2RY 6337-G	D2RY 6333-G
	Standard	.030" U/S	x	x	D2RY 6333-H	D2RY 6333-H	D2RY 6333-H	D2RY 6337-H	D2RY 6333-H
	.015" O/S	Std.(Red and Blue)	x x	x x	D4ZZ 6333-B	D4ZZ 6333-B	D4ZZ 6333-B	E7RY 6337-A	D4ZZ 6333-B
	.015"O/S	.010" U/S	x	x	D2RY 6333-K	D2RY 6333-K	D2RY 6333-K	D2RY 6337-K	D2RY 6333-K
	.015" O/S	.020" U/S	x	x	D2RY 6333-L	D2RY 6333-L	D2RY 6333-L	D2RY 6337-L	D2RY 6333-L
	.015" O/S	.030" U/S	x	x	D2RY 6333-M	D2RY 6333-M	D2RY 6333-M	D2RY 6337-M	D2RY 6333-M

YEAR	MODEL/RESTRICTIONS	QUANTITY 159 ♦	171 ⊕			PART NUMBER	DESCRIPTION
	♦ 2600 cc ⊕ 2800 cc † Used with 6334 thrust rings						
						6334	RING (CRANKSHAFT THRUST)-select fit
74/		2	2			D4RY 6334-A	Upper-std.
		AR	AR			D4RY 6334-B	Upper-.016" O/S (0.40 mm)
		2	2			D4RY 6334-C	Lower-std.
		AR	AR			D4RY 6334-D	Lower-.016" O/S (0.40 mm)
73/		2	2			D1FZ 6336-A	SEAL (CRANKSHAFT REAR MAIN BEARING CAP)

COPYRIGHT © 1986— FORD MOTOR COMPANY —DEARBORN, MICHIGAN

1973/79 LINCOLN-MERCURY CARS

6 CYL. 2.6L (2600 cc or 159 C.I.D.)
6 CYL. 2.8L (2800 cc or 171 C.I.D.)

YEAR	MODEL/RESTRICTIONS	QUANTITY 159 ♦	QUANTITY 171 ⊕			PART NUMBER	DESCRIPTION
	♦ 2600 cc ⊕ 2800 cc						
						6A340	BOLT (PULLEY TO CRANKSHAFT)
73		1				★ D2RY 6A340-A	M10 x 1 x 40 (Metric fine)-N.R.
73	W/hang-on A/C	1				★ D3RY 6A340-A	M10 x 1 x 55 (Metric fine)-N.R.
74/			1			D4ZZ 6A340-A	M12 x 1.5 x 75 (Metric fine)
73/		8 16	8 16			D1FZ 6345-A	BOLT (CRANKSHAFT MAIN BEARING CAP) Cylinder head to block
						6375	FLYWHEEL ASSY.
73/	M/T	1	1			D2RY 6375-B	
75/	C4		1			D4ZZ 6375-C	Incl. ring gear
75/ 79	L - - C3 J - - C3		1 1			D5ZZ 6375-B	Incl. ring gear
73/74	C4	1	1			D2RY 6375-A	
76/77	J - - C3		1			D5RY 6375-B	
73/	A/T	4	4			379299-GS2	Nut (flywheel to converter)-hex.
75/		3	3			N800081-S51	(AB-159)-Bolt (flywheel to conv)-M10-14-Metric coarse
						6379	BOLT (FLYWHEEL TO CRANKSHAFT)
73/	M/T	6	6			D4FZ 6379-A	M10 x 1 x 28.6 (Metric fine)
73 74/	A/T J - - A/T	6	 6			★ D2RY 6379-A r/bE602207-S72 (12/79)	M10 x 1 x 22 (Metric fine)
75/	L - - A/T		6			D4FZ 6379-C	M10 x 41 (Metric fine)
73/	M/T	1	1			D2RY 6384-A	GEAR (FLYWHEEL RING)
75/	L - - M/T		1			D5FZ 6392-B	HOUSING ASSY. (FLYWHEEL)
79	J - - M/T		1			★ D9ZZ 6392-D	Not repl.
						6397	DOWEL (CYLINDER BLOCK)
73 74/	 M/T	3	 3			D1FZ 6397-B	Clutch to flywheel Clutch to flywheel
73/74	J	2	2			★ D2RY 6397-A	Block to flywheel hsg.-17/32" long-N.R.
76/77	J		2			D5RY 6397-A	Block to flywheel hsg.-21/32" long-N.R.
75/	L		AR			★ D4FZ 6397-A	Block to flywheel housing-N.R.
73/		1	1			D2RY 6411-A	SEAL (FLYWHEEL HOUSING COVER PLATE)
74/78 79	L - - A/T J,L - - A/T		1 1			D4ZZ 6434-A	SPACER (FLYWHEEL TO CRANKSHAFT)
74/77			1			★ D4RY 6436-A	SEAL (CONVERTER HOUSING)-N.R. (3/81)
73/		12	12			D2RY 6500-A	TAPPET ASSY. (VALVE)
						6505	VALVE (EXHAUST)
73		6				★ D3RY 6505-A	Standard-N.R.
		AR				★ D3RY 6505-B	.008" O/S-N.R.
		AR				★ D2RY 6505-C	.016" O/S-N/R
		AR				★ D2RY 6505-D	.024" O/S-N/R
74/			6			★ D4ZZ 6505-A	Standard-r/b E3TZ 6505-L (11/85)
			AR			D4ZZ 6505-B	.008" O/S
			AR			D4ZZ 6505-C	.016" O/S
			AR			★ D4ZZ 6505-D	.024" O/S-N.R.
			AR			★ D4ZZ 6505-E	.032" O/S-N.R.
						6507	VALVE (INTAKE)
73/		6	6			D2RY 6507-A	Standard
		AR	AR			D2RY 6507-B	.008" O/S
		AR	AR			★ D2RY 6507-C	.016" O/S-N.R.
		AR	AR			★ D2RY 6507-D	.024" O/S-N.R.
		AR	AR			★ D2RY 6507-E	.032" O/S-N.R.

YEAR	MODEL/RESTRICTIONS	QUANTITY 159 ♦	QUANTITY 171 ⊕			PART NUMBER	DESCRIPTION
	♦ 2600 cc ⊕ 2800 cc						
						6513	SPRING (VALVE)
73		12				★ D2RY 6513-B	N.R.
74/			12			★ D4ZZ 6513-A	#Yellow paint-N.R.
73/		12	12			D2RY 6514-B	RETAINER (VALVE SPRING)
73/		AR	AR			B3Q 6515-A	SPACER (VALVE SPRING)-.030" thick 1" I.D.
						6518	KEY (VALVE SPRING RETAINER)
73/		12	12			D2RY 6518-A	Intake
73/		12	12			D1FZ 6518-A	Exhaust
						6A523	REINFORCEMENT (VALVE ROCKER ARM COVER FLG)
73/		8	8			★ D2RY 6A523-A	Approx. 36mm long-N.R.
		6	6			★ D2RY 6A523-B	Approx. 38mm long-N.R.
73/		2	2			D4ZZ 6524-A	BAFFLE (VALVE ROCKER ARM OIL)
73/		6	6			D2RY 6A527-A	BOLT (VALVE ROCKER ARM SHAFT SUPPORT)-M10 x 65 (Metric coarse)
73/		6	6			D2RY 6A528-A	SEAT(VALVE ROCKER ARM FULCRUM)
73/		6	6			D2RY 6531-A	SUPPORT (VALVE ROCKER ARM SHAFT)
73/		12	12			D2RY 6549-A	SCREW (VALVE ROCKER ARM ADJUSTING)
73/		2	2			D2RY 6563-A	SHAFT (VALVE ROCKER ARM)-w/plugs
73/		12	12			D2RY 6564-A	ARM (VALVE ROCKER)
73/		12	12			D2RY 6565-A	ROD (VALVE PUSH)
						6571	SEAL (VALVE STEM)
73		12				D2RY 6571-A	
74/			12			D1FZ 6571-B	
73/		4	4			D2RY 6572-A	PLUG (VALVE ROCKER ARM SHAFT)
						6582	COVER ASSY. (VALVE ROCKER ARM)
73		1				★ D2RY 6582-A	R.H.-N/R
		1				★ D2RY 6582-B	L.H.-N/R
74			1			★ D4RY 6582-A	R.H.-N/R
			1			★ D4RY 6582-B	L.H.-N/R
76/77	J		1			★ D7RY 6582-A	R.H.-N.R.
			1			★ D5RY 6582-B	L.H.-N.R.
75/76	L		1			★ D5ZZ 6582-A	R.H.-N.R.
			1			D8ZZ 6582-B	L.H.
77/78	L		1			★ D7RY 6582-A	R.H.-N.R.
78	J		1			D8ZZ 6582-B	L.H.
79	L,J		1			D9ZZ 6582-B	R.H.
			1			D8ZZ 6582-B	L.H.
73/		14	14			E602164-S72	Bolt(cover to head)-M6 x 12(Metric coarse)
						6584	GASKET (VALVE ROCKER ARM COVER)
73/		2	2			D4ZZ 6584-A	
73/		4	4			D2RY 6587-A	SPRING (VALVE ROCKER ARM TO SHAFT LOCATING)
73/		4	4			D2RY 6598-A	WASHER (VALVE ROCKER ARM SHAFT)

COPYRIGHT © 1986— FORD MOTOR COMPANY —DEARBORN, MICHIGAN

YEAR	MODEL/RESTRICTIONS	QUANTITY 159 ♦	171 ⊕			PART NUMBER	DESCRIPTION
	♦ 2600 cc ⊕ 2800 cc						
						6600	PUMP ASSY. (OIL)
73/		1	1			D4ZZ 6600-A	
73/		7	7			E602188-S72	(AB-20)-bolt(pump to block)-hex. hd.-M8 x 25 (Metric coarse)
73/		1	1			D1FZ 6608-A	ROTOR and SHAFT ASSY. (OIL PUMP DRIVE)
73/		1	1			D2RY 6616-A	PLATE (OIL PUMP BODY)
73/		4	4			43414-GS	Bolt & lockwasher(plate to pump)-M6 x 18 (Metric coarse)
73/		1	1			D1FZ 6A616-A	PLUG (OIL PUMP RELIEF VALVE)
73/		1	1			D2RY 6A618-A	SHAFT ASSY. (OIL PUMP INTERMEDIATE)
						6K621	COVER and SCREEN (OIL PUMP)
73/77	J	1	1			★ D2RY 6K621-A	N.R.
75/	L		1			D4ZZ 6K621-A	
73/		2	2			43414-GS	Bolt & lockwasher(cover and screen to pump)-M6 x 18(Metric coarse)
79	J		1			D9ZZ 6622-A	SCREEN COVER & TUBE ASSY. (OIL PUMP)
73/		1	1			D2RY 6626-A	GASKET (OIL PUMP INLET TUBE)
73/		1	1			★ D2FZ 6629-A Not repl.	RING (OIL PUMP INTERMEDIATE SHAFT RETAINER)
75/	L		1			D5FZ 6A636-A	GASKET (OIL FILTER ADAPTER MOUNTING BOLT)-Copper
						6A664	HOSE (CRANKCASE VENTILATION)
73/74	J - - exc. Calif.	1	1			★ D2RY 6A664-D	(Cover to P.C.V. valve)-improvise
73/74	J - - Calif.	1	1			★ D2RY 6A664-A	(Cover to P.C.V. valve) & (cover to air cleaner)-imp.
74	J - - Calif.		1			★ D5RY 6A664-A	(Cover to P.C.V. valve)-improvise
73/74	J - - exc. Calif.	1	1			★ D2RY 6A664-B	(Cover to air cleaner)-improvise
76/76	J		1			★ D5RY 6A664-B	(Oil filler cap to air cleaner)-N.R.
77/	A/T		1			D4FZ 6A664-B	Upper - - Cut to fit
75/76	L		1			★ D5FZ 6A664-B	(Oil filler cap to air cleaner)-N.R.
77/	L		1			D7ZZ 6A664-A	(Oil filler cap to air cleaner)
						6A666	VALVE (POSITIVE CRANKCASE VENTILATION) (P.C.V.)
73/74		1	1			D2RY 6A666-A	*EV-66
75/76			1			E1ZZ 6A666-A	*EV-82-D
77/			1			E6DZ 6A666-A	*EV-94-C
73/		1	1			D1FZ 6670-A	SPRING (OIL PUMP RELIEF VALVE)
73/		1	1			D1FZ 6674-A	PLUNGER (OIL PUMP RELIEF VALVE)
						6675	PAN ASSY. (OIL)
73/77	J	1	1			★ D3RY 6675-A	Use with D3RY 6750-A-N.R.
75/	L		1			D4ZZ 6675-A	
79	J		1			D9ZZ 6675-A	
73		24				377091-GS	Bolt(pan to block)-M6 x 14(Metric coarse)
73		20				34805-S8	(X-62)-lockwasher(pan to block)-M6(Metric)

YEAR	MODEL/RESTRICTIONS	QUANTITY 159 ♦	QUANTITY 171 ⊕			PART NUMBER	DESCRIPTION
	♦ 2600cc ⊕ 2800cc						
						6700	SEAL (CYLINDER FRONT COVER OIL)
73		1				D2RY 6700-A	
74/			1			D1FZ 6700-A	
73/		1	1			D7RZ 6701-A	PACKING (CRANKSHAFT REAR)
73/		1	1			E0FZ 6730-B	PLUG (OIL PAN DRAIN)
						6731	ELEMENT ASSY. (OIL FILTER)
73		1				D9AZ 6731-A	*FL-1-A
74			1			D4ZZ 6731-BDP	*FL-300-DP
76/77	J		1				
75/	L		1			D27Z 6731-A	*FL-295 or E FL-091
79	J		1			D8PZ 6731-A	*FL-332
						6734	GASKET (OIL PAN DRAIN PLUG) - Also refer to group 6749
73/			1			E0FZ 6734-A	
75/	L		1			D5FZ 6749-A	SEAL (OIL FILTER MOUNTING BOLT)
						6750	INDICATOR (OIL LEVEL)
73	J "Before 4/1/73"	1				D2RY 6750-A	
73/77	J "From 4/1/73"	1	1			D3RY 6750-A	Use with D3RY 6675-A
75/79	L		1			D9FZ 6750-A	#D9EE 6750-AA
79	J		1			D9ZZ 6750-B	#D9ZE 6750-BA
						6754	TUBE ASSY. (OIL LEVEL INDICATOR)
73		1				★ D4RY 6754-B	NR
74/77	J		1			E3TZ 6754-K	
75/78	L		1			D4ZZ 6754-A	
79			1			D9ZZ 6754-B	
						6766	CAP ASSY. (OIL FILLER and BREATHER)
73/74	J	1	1			D2RY 6766-A	*EC-19
75/	L		1			E5TZ 6766-E	*EC-716-incl. 6789 gasket
76/	J		1				
						6781	GASKET SET (OIL PAN)
73/75	J "Before 1/75"	1	1			D2RY 6781-A	
75/78	"From 1/75"		1			D6ZZ 6781-A	
79	L		1				
79	J		1			D9ZZ 6781-A	
	Consists of						
	1-D9EE 6734-A	Gasket (drain plug)				1-11 543647	Gasket-L.H.
	1-11 405095	Seal (rear)				1-11 543648	Seal (front)
	1-11 543646	Gasket-R.H.					
75/	L - - exc. Calif.		1			D3FZ 6789-A	GASKET (OIL FILLER CAP)
75/			★			★6853	HOSE (CRANKCASE VENTILATION)- cut to fit from C9PZ 6A664-A bulk hose
73/		★	★			★6853	BRACKET (OIL LEVEL INDICATOR TUBE)- improvise
75/	L		1			D5ZZ 6881-A	ADAPTER ASSY. (OIL FILTER)
75/	L		1			87145-S91	Seal(oil filter adapter to block)
73/	Exc. L	1	1			D1FZ 6890-A	INSERT (OIL FILTER MOUNTING BOLT)
75/	L		1			★ D5ZZ 6890-A	N.R.
75/			1			E5TZ 6A892-B	GROMMET (P.C.V. VALVE TO COVER)
75/	L		1			D5FZ 6894-A	BOLT (OIL FILTER ADAPTER MOUNTING)

COPYRIGHT © 1986— FORD MOTOR COMPANY —DEARBORN, MICHIGAN

YEAR	MODEL/RESTRICTIONS	QUANTITY 200	250			PART NUMBER	DESCRIPTION
						6D000	GASKET SET (TIMING COVER)
73/79		1				E2DZ 6D000-A	
	Consists of						
	1-CODE 6020-B	Gasket (frt cvr)				1-E2DJ 6710-AA	Gasket (oil pan R.H.)
	1-CODE 6700-A	Seal (crankshaft frt)				1-E2DJ 6711-AA	Gasket (oil pan L.H.)
	1-D3DE 6722 AA	Seal (oil pan frt)				1-IS 5169	Instruction Sheet
73/79			1			E2DZ 6D000-B	
	Consists of						
	1-C9DZ 6020-A	Gasket (frt cvr)				1-E2DJ 6710-BA	Gasket (oil pan R.H.)
	1-C3AZ 6700-A	Seal (crankshaft frt)				1-E2DJ 6711-BA	Gasket (oil pan L.H.)
	1-D3DE 6722-BA	Seal (oil pan frt)				1-IS 5169	Instruction Sheet
						6007	ENGINE ASSY.-Current production engine assemblies may be ordered from the local parts distribution center by furnishing the engine code from the vehicle certification label or the identification tag number that is attached to the exterior of the engine assembly
						6008	GASKET SET (COMPLETE OVERHAUL)-refer to 6E078 and 6079
76/		1	1			D6BZ 6D008-A	HEATER KIT (CYLINDER BLOCK)
	Consists of						
	1-D6AJ 6B018-AA	Wire assy.				4-D6AJ 14197-AA	Clip
	1-D6AZ 6A051-B	Heater assy.					
	1-D4AB 6A056-AA	Cap					
						6009	CYLINDER ASSY.-Includes Cylinder Block with all Internal Parts of the Engine but does not include Cylinder Heads, Tappets, Oil Pan or Cylinder Front Cover unless indicated
73/74		1				★ D3DZ 6009-A	N/R
75/		1				E1DZ 6009-A	
73/74			1			★ D3DZ 6009-B	N/R
75	M/T		1				
75	A/T		1			D7DZ 6009-A	
76/			1				
						6010	△ BLOCK ASSY. (CYLINDER)
△	6015 is a casting number and generally cannot be cross referenced to a service number. It will be used as a means of identification only when casting number is unique to only one 6010 assembly.						
73/76		1				★ D3BZ 6010-A	N/R
77/		1				E1BZ 6010-B	
73/79			1			D9DZ 6010-B	Use w/C9DZ 6051-B gasket
78		1				352532-S	(PP-60)-plug (oil level indicator hole frt & rr)-cup
						6B018	WIRE ASSY. (BLOCK HEATER)
73/75		1				D2AZ 6B018-A	
74	C		1			★ D4ZZ 6B018-A	N.R.
76/78		1	1			D7TZ 6B018-A	
79			1				
79		1				D8BZ 6B018-A	
						6019	REPAIR KIT (CYLINDER FRONT COVER)
73/		1				D7DZ 6019-A	Consists of (1) CODE 6020-B gasket, (1) D8BE 6059-DA cover, (2) 55247-S bolts and (7) 377387-S bolts
73/			1			D2DZ 6019-B	
73/		2				20464-S7-8	(B-43-EA)-screw & washer(front cover to block)-hex. hd.-1/4"-20 x 1 3/8"
73/			3			56109-S	(B-319-G)-bolt(cover to block)-hex. washer hd.-1/4"-20 x 2"
73/			4			56505-S2	(B-319-D)-bolt(cover to block)-hex. washer hd.-1/4"-20 x 1"

COPYRIGHT © 1986— FORD MOTOR COMPANY —DEARBORN, MICHIGAN

YEAR	MODEL/RESTRICTIONS	QUANTITY 200	QUANTITY 250			PART NUMBER	DESCRIPTION
						6020	GASKET (CYLINDER FRONT COVER)
73/		1				C0DE 6020-B	
73/			1			C9DZ 6020-A	
						6023	POINTER (TIMING)
73/75	Calif.	1				★ D2DZ 6023-A	N/R
76	P - - A/C	1				C80Z 6023-A	
78/	P - - Calif.	1				D8BZ 6023-A	
78/	P - - Exc. Calif.	1				D8BZ 6023-B	
73/75	Exc. Calif.		1				
76/77	P - - Exc. Calif.		1				
76/77	G - - w/o a/c exc. Calif.		1				
75	Calif.		1			D8BZ 6023-B	
76/77	P - - Calif.		1				
76/77	G - - w/o a/c Calif.		1			D6DZ 6023-B	I.D. D5DE-6M025-AB
77	G - - Calif. with A/C		1			D7DZ 6023-A	I.D. D6ME-6M025-BA-w/o timing marks
73/74	Calif.		1			D20Z 6023-B	
76	G - - A/C		1			D6DZ 6023-A	I.D. D6ME - 6M025-AA
78/	w/A/C exc Calif.		1			D8DZ 6023-A	W/timing marks
78/	w/o A/C exc. Calif.		1			D8DZ 6023-B	W/timing marks
78/	w/o A/C Calif		1			D6DZ 6023-B	W/o timing marks
			1			D8DZ 6023-B	W/timing marks
78/	A/C Calif.		1			D7DZ 6023-A	W/o timing marks
			1			D8DZ 6023-A	W/timing marks
73/			2			56109-S	(B-319-G)-bolt(pointer and cover to block)-hex. washer hd.-1/4"-20 x 2"
						6A023	SUPPORT ASSY.
75/76	G,P	1	1			★ D6DZ 6A023-A	N.R.
73/74	P	1	1				
78/		1				D9BZ 6A023-A	
77		1	1			D7DZ 6A023-B	Rear lower
78/			1				
						6026	PLUG (ENGINE)
73/		6	6			D7AZ 6026-B	(Clean out holes in block and head)-1 3/4" std.
		AR	AR			C8AZ 6026-B	.060" O/S
73/		8	8			C8DZ 6026-A	(Cyl. head, block and intake manifold)-1 1/64" std.
		AR	AR			C8DZ 6026-B	.060" O/S
		AR	AR			C8DZ 6026-C	.125" O/S
73/		2	2			C5AZ 6026-J	(Camshaft bearing rear and core hole in block)
76/		AR	AR			D5HZ 6026-A	.480" O.D.-cup plug-(oil passage in 6010)
73/		1				376635-S	(PP-66-A)-plug(oil passage and front gallery in block)-cup type-29/64" O.D.
73/		3	5			87837-S	(P-15)-plug(oil passage in block and water drain)
						6028-9	BRACKET (FRONT SUPPORT)
73/77	P	1	1			D5BZ 6028-A	R.H.
		1	1			★ D5BZ 6029-A	L.H.-N.R.
75/	G	1	1			★ D5DZ 6028-B	R.H.-N.R.
		1	1			★ D5DZ 6029-B	L.H.-N.R.
78/	P	1				E2BZ 6028-A	R.H.
		1				E2BZ 6029-A	L.H.
79	J	1				E2BZ 6028-B	R.H.
		1				E2BZ 6029-B	L.H.
						6030-1	BRACKET (FRONT SUPPORT)
76/77	G	1				★ D6DZ 6030-B	R.H.-N.R.
		1				★ D6DZ 6031-B	L.H.-N.R.

YEAR	MODEL/RESTRICTIONS	QUANTITY 200	QUANTITY 250			PART NUMBER		DESCRIPTION
							6030-1	BRACKET (FRONT SUPPORT) — Cont'd
73/75	G,P		1			★ D3DZ	6030-A	R.H.-N.R.
76/77	P		1			★ D3DZ	6031-A	L.H.-N.R.
76/	G		1			★ D6DZ	6030-A	R.H.-N.R.
			1			★ D6DZ	6031-A	L.H.-N.R.
73/74	C		1			D20Z	6030-A	R.H.
			1			★ D20Z	6031-A	L.H.-NR (8/78)
							6038	INSULATOR (FRONT SUPPORT)
73/74	P	1				D5DZ	6038-C	R.H.
		1				D5DZ	6038-D	L.H.
75	G,P	1				D5DZ	6038-C	R.H.
76/77	P	1				D5DZ	6038-D	L.H.
78/	P	2				E1BZ	6038-A	R.H. & L.H.
79	J	1						
73/74	C		1			★ D40Z	6038-G	R.H.-N/R
			1			★ D40Z	6038-H	L.H.-N/R
73/75	G,P		2			D3DZ	6038-D	R.H. and L.H.
76/77	P		2					
76/	G	1	1			D6DZ	6038-C	R.H.
		1	1			D6DZ	6038-D	L.H.
							6A042	REINFORCEMENT (REAR SUPPORT)
73	C		1			D00Z	6A042-A	R.H.
			1			D00Z	6A042-C	L.H.
							6E046	SUPPORT (FRONT MOUNTING)
76/77	G	1				★ D6DZ	6E046-A	R.H.-N/R
		1				★ D6DZ	6E046-B	L.H.-N/R
79	J	1				E1BZ	6E046-A	R.H.
		1				E1BZ	6E046-B	L.H.
76/	G		1			★ D6DZ	6E046-C	R.H.-N.R.
			1			★ D6DZ	6E046-D	L.H.-N.R.
							6049	▲ HEAD (CYLINDER)
▲	6090 is a casting number and generally cannot be referenced to a service number. It will be used as a means of identification only when casting number is unique to one 6049 assy.							
73/76		1	1			★ D5DZ	6049-C	Without valves-r/b ord. mdl. mat 9039
77/		1	1			★ D8BZ	6049-A	Without valves-ref. Mult. repl. Mat. 9038
74/		1	1			★ D8BZ	6049-B	Complete w/valves-repl. by Mult. Mat. 80053
							6051	GASKET (CYLINDER HEAD)
73/		1	1			C9DZ	6051-B	
							6A051	HEATER ASSY. (BLOCK)
73/		1	1			D6AZ	6A051-B	600 watt
79	J	1				D8BZ	6054-B	RETAINER (RR SUPT.)
76/	P	1	1			★ D4AZ	6A056-A	CAP (CYLINDER BLOCK HEATER)-r/b CEH-117
							6065	BOLT (CYLINDER HEAD)
73/	Without A/C	14	14			C1DZ	6065-B	7/16"-14 x 3 5/32"
73/	With A/C	13	13					Exc. right front
73/			14					(Used for crankshaft main bearing cap)
73/	With A/C	1	1			C1DZ	6065-E	(Right front)-7/16"-14 x 4 3/8"
							6068	INSULATOR ASSY. (REAR SUPPORT)
73/74			1			D50Z	6068-A	
73/77	P - - M/T	1	1			D3DZ	6068-A	

COPYRIGHT © 1986— FORD MOTOR COMPANY —DEARBORN, MICHIGAN

YEAR	MODEL/RESTRICTIONS	QUANTITY 200	QUANTITY 250			PART NUMBER	DESCRIPTION
						6068	INSULATOR ASSY. (REAR SUPPORT) — Cont'd
73/77	P - - A/T	1	1			D3DZ 6068-B	
75	G	1	1				
79	J - - C4	1				E0SZ 6068-A	
76/	G	1	1			D6DZ 6068-A	
78	C4	1				E0SZ 6068-A	
79	C4 exc J	1					
78	C3 & M/T	1				D8BZ 6068-B	
79	C3 & MT exc J	1					
77/		2	2			387921-S2	(BB-416-BC)-bolt (6068 to trans. ext.) - hex. flange hd. - 1/2" x 13 x 1.37"
75/	G	2	2			★ D5DZ 6A068-A	PLATE ASSY. (INSULATOR SUPPORT FRONT)-N.R.
73/		AR	AR			D6AZ 6E072-A	LABEL (BUILD CODE & INFORMATION)-Also refer to Service Bulletin #155
						6E078	GASKET SET (LOWER)
73/		1				D5PZ 6E078-H	
	Consists of						
	1-C0DE 6020-B	Gasket(front cover)				1-D3DE 6722-AA	Seal(oil pan front)
	1-C0DZ 6626-A	Gasket(oil inlet tube)				1-D3DE 6723-AA	Seal(oil pan rear)
	1-C0DE 6700-A	Seal(front cover)				1-C20Z 6734-A	Gasket(oil pan drain plug)
	2-C90Z 6701-A	Seal(crankshaft rear)				1-C0DE 8507-A	Gasket(water pump)
	1-C9DE 6710-C	Gasket(oil pan R.H.)				1-A8TZ 9417-A	Gasket(fuel pump)
	1-C9DE 6711-C	Gasket(oil pan L.H.)					
73/			1			D5PZ 6E078-V	
	Consists of						
	1-C9DZ 6020-A	Gasket(front cover)				2-C3DE 6722-BA	Seal(oil pan front and rear)
	1-C9DZ 6626-A	Gasket(oil inlet tube)				1-C20Z 6734-A	Gasket(oil pan drain)
	1-C3AZ 6700-A	Seal(front cover)				1-C90Z 8507-A	Gasket(water pump)
	2-C90Z 6701-A	Seal(crankshaft rear)				1-A8TZ 9417-A	Gasket(fuel pump)
	1-C9DE 6710-D	Gasket(oil pan R.H.)					
	1-C9DE 6711-D	Gasket(oil pan L.H.)					
						6079	GASKET SET (VALVE GRIND)
73/		1	1			C90Z 6079-A	
	Consists of						
	1-C9DZ 6051-B	Gasket(cyl. head)				1-E3BZ 6584-A	Gasket(rocker arm cover)
	12-E3BZ 6571-A	Seal(valve stem)				1-C9AZ 8255-A	Gasket(water outlet)
						6108	PISTON ASSY. (Incl. Pin)-red and blue size are optional for select fit
73/		6	6			C9DZ 6108-A	Standard (red)
		AR	AR			C9DZ 6108-B	Standard (blue)
		AR	AR			C9DZ 6108-C	.003" O/S
		AR	AR			C9DZ 6108-DB	.020" O/S
		AR	AR			C9DZ 6108-EB	.030" O/S
		AR	AR			C9DZ 6108-FB	.040" O/S
						6135	PIN (PISTON)
73/		6	6			B2AZ 6135-A	#Green-.600" I.D. x 3" long x .9121" O.D.-std.
		AR	AR			B2AZ 6135-B	.001" O/S
						6148	RING SET (PISTON PARTIAL)-Consists of the necessary rings to re-ring (2) pistons
73/		3	3			C30Z 6148-E	Standard
		AR	AR			C30Z 6148-F	.020" O/S
		AR	AR			C30Z 6148-G	.030" O/S
		AR	AR			C30Z 6148-H	.040" O/S

YEAR	MODEL/RESTRICTIONS	QUANTITY 200	QUANTITY 250			PART NUMBER	DESCRIPTION
						6200	ROD ASSY. (CONNECTING)
73/		6				D8BZ 6200-A	
73/			6			D8DZ 6200-A	
						6211	BEARING (CONNECTING ROD)
73/		12	12			D7BZ 6211-A	Standard-upper & lower
		AR	AR			D7BZ 6211-C	.002" U/S
		AR	AR			D7BZ 6211-D	.010 U/S
		AR	AR			D7BZ 6211-E	.020 U/S
		AR	AR			D7BZ 6211-F	.030 U/S
73/		12	12			C3DZ 6212-A	NUT (CONNECTING ROD)-hex.-5/16"-24
73/		12	12			C3AZ 6214-A	BOLT (CONNECTING ROD)-hex. hd.-5/16"-24 x 2.08"
						6250	CAMSHAFT
73/74		1				★ D3DZ 6250-A	42 tooth-For 1" wide chain
73	C		1			Not repl.	
73	P - - A/T		1				
74			1				
75/76	M/T - - w/o Catalytic conv.		1				
75/		1				D5DZ 6250-B	
73	P - - M/T						
77/			1				
75/76	A/T		1				
75/76	M/T - - with Catalytic Conv.		1				
73/78		1	1			C9OZ 6A251-A	BEARING KIT (CAMSHAFT)-Standard
	Consists of						
	1-C5AZ 6026-G Plug					1-D9BZ 6261-B Front	1-D9BZ 6267-B Front(intermediate)
						1-D9BZ 6263-B Rear	1-D9BZ 6270-B Rear(intermediate)
						6256	SPROCKET (CAMSHAFT)
73/		1				D8BZ 6256-B	38 tooth-4.5" O.D.
73	C		1			D3DZ 6256-A	42 tooth
73	P - - A/T		1				
74/77			1				
78/			1			D7DZ 6256-A	42 tooth for .875" wide chain
73	P - - M/T		1			C9DZ 6256-A	42 tooth
73/		1	1			371643-S	(BB-296)-bolt(sprocket to camshaft)-hex. hd.-7/16"-14 x 1 1/8"
		1	1			34808-S8	(X-67)-lockwasher-7/16"
73/		1	1			373118-S	(NN-54)-pin(sprocket to camshaft)-dowel-1/4" x 5/16"
						6261	BEARING (CAMSHAFT FRONT)
73/		1	1			D9BZ 6261-A	Std. I.D. & O.D.
		AR	AR			D9BZ 6261-B	.015" U/S I.D. Std. O.D.

COPYRIGHT © 1986 — FORD MOTOR COMPANY — DEARBORN, MICHIGAN

YEAR	MODEL/RESTRICTIONS	QUANTITY 200	QUANTITY 250			PART NUMBER	DESCRIPTION
						6263	BEARING (CAMSHAFT REAR)
73/		1	1			D9BZ 6263-A	Std. I.D. & O.D.
		AR	AR			D9BZ 6263-B	.015" U/S I.D. Std. O.D.
73/		1	1			C0DZ 6265-A	SPACER (CAMSHAFT GEAR or SPROCKET)
						6267	BEARING (CAMSHAFT FRONT INTERMEDIATE)
73/		1	1			D9BZ 6267-A	Std. I.D. & O.D.
		AR	AR			D9BZ 6267-B	.015" U/S I.D. Std. O.D.
						6268	CHAIN (TIMING)
73/		1				C0DZ 6268-A	50 links
73/77			1			EAA 6268-B	1" wide
77/			1			D7DZ 6268-A	.875" wide
73/		1	1			C0DE 6269-A	PLATE (CAMSHAFT THRUST)
73/		2	2			34806-S7	(X-64)-lockwasher-5/16"
73/		2	2			20326-S7	(B-49)-bolt(plate to block)-hex. hd.-5/16" -18 x 5/8"
						6270	BEARING (CAMSHAFT REAR INTERMEDIATE)
73/		1	1			D9BZ 6270-A	Std. I.D. & O.D.
		AR	AR			D9BZ 6270-B	.015" U/S I.D. Std. O.D.
73/		1	1			C3AZ 6278-A	WASHER (CAMSHAFT SPROCKET)- 15/32" I.D. x 1 1/4" O.D. x 1/4" thick
73/			1			C9DZ 6284-A	DAMPER ASSY. (TIMING CHAIN VIBRATION)
73/		1	1			C0DZ 6A302-A	PIN (CRANKSHAFT REAR OIL SEAL)- 5/16" long x 3/32" O.D.
						6303	CRANKSHAFT ASSY.
73/		1				E1BZ 6303-A	
73/			1			★ C9DZ 6303-A	#2H-N.R.
						6306	SPROCKET (CRANKSHAFT)
73/		1				C0DZ 6306-A	19 tooth
73/77			1			C9DZ 6306-A	21 tooth-for 1" wide chain
77/			1			D7DZ 6306-A	21 tooth for .875" wide chain
73/		1				372854-S	(LL-11)-key(sprocket and pulley to crankshaft)- woodruff-7/32" x 1 3/4" x 3/16"
73/			1			379153-S	(LL-11-A)-key(sprocket and pulley to crankshaft)- woodruff-19/64" x 1 23/32" x 3/16"
73/			1			C9DZ 6310-A	SLINGER (CRANKSHAFT OIL)
						6312	PULLEY ASSY. (CRANKSHAFT)-Also refer to group 6A312 & pulley I.D. chart section 60
76/77	P - - exc. Calif.		1			D2DZ 6312-A	Double sheave
76/	G - - w/o A/C & exc. Calif.		1				
73/75			1				
73/75		1				D2DZ 6312-B	Double sheave
73/	W/dealer installed A/C	1					
76/77	G,P - - A/C-exc. Calif.	1					
73	P - - with or without P/S- without A/C	1				C2DZ 6312-A	Single sheave -incl. damper
76/77	G,P - - w/o A/C exc. Calif.	1					
78/	J,P	1				D8BZ 6312-A	#D8BE-6316-FA or GA-double sheave
76	G - - A/C with or without P/S		1			★ D6DZ 6312-A	#D6DE 6316-AA- triple sheave-N.R.

YEAR	MODEL/RESTRICTIONS	QUANTITY 200	QUANTITY 250			PART NUMBER	DESCRIPTION
						6312	PULLEY ASSY. (CRANKSHAFT)-Also refer to group 6A312 & pulley I.D. chart section 60
76/	G,P - - A/T without A/C-Calif.		1			D5DZ 6312-A	#D5DE 6316-AA-double sheave
76/77	P - - A/C-Calif.		1				
78	w/o A/C Calif.		1				
77/	G - - w/A/C		1			D7DZ 6312-A	#D6DE 6316-AB-BB-triple sheave-repl. D9DE-DA
79	Exc. Calif.		1				
						6A312	PULLEY ASSY. (CRANKSHAFT-OUTER)-Aso refer to group 6312 & pulley I.D. chart section 60
73/77	G,P - - P/S with or without A/C	1				C8DZ 6A312-A	Single sheave
78/	With P/S	1				D8BZ 6A312-A	#D8BE 6312-AA-single sheave
73/	P - - P/S with or without A/C		1			★C9ZZ 6A312-A	#C9ZE 6312-A-single sheave
75	G - - P/S with or without A/C		1			Not replaced	
76/	G - - P/S without A/C		1				

ENGINE BEARING APPLICATION CHART

YEAR	MODEL	C.I.D.	SIZE	UPPER	LOWER	FRONT (1)	FRONT INTERMEDIATE (2)	FRONT INTERMEDIATE (3)	CENTER (4)	REAR INTERMEDIATE (5)	REAR INTERMEDIATE (6)	REAR (7)
6333 and 6337 BEARING - (CRANKSHAFT MAIN)												
6 CYLINDER ENGINES 7 MAIN BEARINGS												
73/		200	Std.	x		D5DZ 6333-A	D5DZ 6333-A	D5DZ 6333-A	D5DZ 6333-A	D5DZ 6337-A	D5DZ 6333-A	D5DZ 6333-A
			.001"	x		D5DZ 6333-C	D5DZ 6333-C	D5DZ 6333-C	D5DZ 6333-C	D5DZ 6337-C	D5DZ 6333-C	D5DZ 6333-C
			.002"	x		D5DZ 6333-E	D5DZ 6333-E	D5DZ 6333-E	D5DZ 6333-E	D5DZ 6337-E	D5DZ 6333-E	D5DZ 6333-E
			.010"	x		D5DZ 6333-G	D5DZ 6333-G	D5DZ 6333-G	D5DZ 6333-G	D5DZ 6337-G	D5DZ 6333-G	D5DZ 6333-G
			.020"	x		D5DZ 6333-J	D5DZ 6333-J	D5DZ 6333-J	D5DZ 6333-J	D5DZ 6337-J	D5DZ 6333-J	D5DZ 6333-J
			.030"	x		D5DZ 6333-L	D5DZ 6333-L	D5DZ 6333-L	D5DZ 6333-L	D5DZ 6337-L	D5DZ 6333-L	D5DZ 6333-L
73/		200	Std.		x	D5DZ 6333-B	D5DZ 6333-B	D5DZ 6333-B	D5DZ 6333-B	D5DZ 6337-B	D5DZ 6333-B	D5DZ 6333-B
			.001"		x	D5DZ 6333-D	D5DZ 6333-D	D5DZ 6333-D	D5DZ 6333-D	D5DZ 6337-D	D5DZ 6333-D	D5DZ 6333-D
			.002"		x	D5DZ 6333-F	D5DZ 6333-F	D5DZ 6333-F	D5DZ 6333-F	D5DZ 6337-F	D5DZ 6333-F	D5DZ 6333-F
			.010"		x	D5DZ 6333-H	D5DZ 6333-H	D5DZ 6333-H	D5DZ 6333-H	D5DZ 6337-H	D5DZ 6333-H	D5DZ 6333-H
			.020"		x	D5DZ 6333-K	D5DZ 6333-K	D5DZ 6333-K	D5DZ 6333-K	D5DZ 6337-K	D5DZ 6333-K	D5DZ 6333-K
			.030"		x	D5DZ 6333-M	D5DZ 6333-M	D5DZ 6333-M	D5DZ 6333-M	D5DZ 6337-M	D5DZ 6333-M	D5DZ 6333-M

COPYRIGHT © 1986— FORD MOTOR COMPANY —DEARBORN, MICHIGAN

ENGINE BEARING APPLICATION CHART

YEAR	MODEL	C.I.D.	SIZE	UPPER	LOWER	FRONT (1)	FRONT INTERMEDIATE (2)	FRONT INTERMEDIATE (3)	CENTER (4)	REAR INTERMEDIATE (5)	REAR INTERMEDIATE (6)	REAR (7)
6333 and 6337 BEARING - (CRANKSHAFT MAIN) — Cont'd												
6 CYLINDER ENGINES												
7 MAIN BEARINGS												
73/		250	Std. .0952"	x		D4FZ 6333-A	D4FZ 6333-A	D4FZ 6333-A	D4FZ 6333-A	D4FZ 6337-A	D4FZ 6333-A	D4FZ 6333-A
			.001"	x		D4FZ 6333-B	D4FZ 6333-B	D4FZ 6333-B	D4FZ 6333-B	D0TZ 6337-D	D4FZ 6333-B	D4FZ 6333-B
			.002"	x		D4FZ 6333-C	D4FZ 6333-C	D4FZ 6333-C	D4FZ 6333-C	D0TZ 6337-E	D4FZ 6333-C	D4FZ 6333-C
			.010"	x		D4FZ 6333-D	D4FZ 6333-D	D4FZ 6333-D	D4FZ 6333-D	D4FZ 6337-D	D4FZ 6333-D	D4FZ 6333-D
			.020"	x		D4FZ 6333-E	D4FZ 6333-E	D4FZ 6333-E	D4FZ 6333-E	D0TZ 6337-G	D4FZ 6333-E	D4FZ 6333-E
			.030"	x		D4FZ 6333-F	D4FZ 6333-F	D4FZ 6333-F	D4FZ 6333-F	D0TZ 6337-H	D4FZ 6333-F	D4FZ 6333-F
73/		250	Std.		x	C5TZ 6333-AA	C5TZ 6333-AA	C5TZ 6333-AA	C5TZ 6333-AA	D4FZ 6337-G	C5TZ 6333-AA	C5TZ 6333-AA
			.001"		x	C5TZ 6333-AB	C5TZ 6333-AB	C5TZ 6333-AB	C5TZ 6333-AB	D4FZ 6337-H	C5TZ 6333-AB	C5TZ 6333-AB
			.002"		X	C5TZ 6333-AC	C5TZ 6333-AC	C5TZ 6333-AC	C5TZ 6333-AC	D9ZZ 6337-J	C5TZ 6333-AC	C5TZ 6333-AC
			.010"		x	C5TZ 6333-AD	C5TZ 6333-AD	C5TZ 6333-AD	C5TZ 6333-AD	D4FZ 6337-K	C5TZ 6333-AD	C5TZ 6333-AD
			.020"		x	C5TZ 6333-AE	C5TZ 6333-AE	C5TZ 6333-AE	C5TZ 6333-AE	D4FZ 6337-L	C5TZ 6333-AE	C5TZ 6333-AE
			.030"		x	C5TZ 6333-AF	C5TZ 6333-AF	C5TZ 6333-AF	C5TZ 6333-AF	D4FZ 6337-M	C5TZ 6333-AF	C5TZ 6333-AF

YEAR	MODEL/RESTRICTIONS	QUANTITY 200	QUANTITY 250			PART NUMBER	DESCRIPTION
73/		1	1			E2BZ 6A340-A	BOLT (CRANKSHAFT PULLEY)- hex. hd.-9/16"-18 x 1 1/2"
73/77 78/		14 13				D2DZ 6345-A	BOLT (CRANKSHAFT MAIN BEARING CAP)- hex. hd.-7/16"-14 x 2 3/4"-also refer to 6065
78/		1				C6TZ 6345-B	
			★			6345	Refer to group 6065
						6A366	PLATE (FLYWHEEL REINFORCING)
73/	A/T	1				E1FZ 6A366-A	
73	A/T		1			C20Z 6A366-A	
						6375	FLYWHEEL ASSY.
73/	M/T	1				C6DZ 6375-A	#C6DE 6380-A-incl. 136 tooth ring gear
73/	C4	1				C3DZ 6375-B	Does not incl. ring gear-Refer to group 7902
78/	C3	1				D8BZ 6375-B	Incl. ring year
73/	M/T		1			C9DZ 6375-A	#C9DE-A or B-incl. 157 tooth ring gear
73/77 78/	A/T w/Jatco A/T		1 1			C90Z 6375-A	Incl. 157 tooth ring gear
78/	C4		1			C5TZ 6375-T	Incl. 164 tooth ring gear
75/		3	3			N800081-S51	(AB-159)-Bolt (6375 to conv.)-M10-14-metric coarse
73/77 78		1	1 1			C0DZ 6378-A	WASHER (CRANKSHAFT PULLEY RETAINING)
						6379	BOLT (FLYWHEEL TO CRANKSHAFT)
73/		6	6			B8AZ 6379-A	7/16"-20 x 15/16"-used with 6A366 plate
73			6			D2AZ 6379-B	7/16"-20 x 3/4"-used without 6A366 plate

YEAR	MODEL/RESTRICTIONS	QUANTITY 200	QUANTITY 250			PART NUMBER	DESCRIPTION
						6384	GEAR (FLYWHEEL RING)
73/	M/T	1				C6DZ 6384-A	136 tooth
73/	M/T		1			C20Z 6384-B	157 tooth-repl. ring gear w/160 teeth
						6392	HOUSING ASSY. (FLYWHEEL)- Also refer to groups 7007,7505 and 7975
75/77	G - - M/T	1				★ D5DZ 6392-C	N.R.
73/74 75/77	M/T P - - M/T	1				★ D5BZ 6392-A Not replaced	#C7ZA 6394-A
78	M/T	1				★ D8BZ 6392-A	N.R.
79	M/T	1				D9BZ 6392-B	
73/74	M/T		1			★ D20Z 6392-A	Incl. (1) C80Z 7515-A lever-N.R.
75/	M/T		1			D5DZ 6392-A	
73/	M/T	4				34807-S8	(X-66)-lockwasher(housing to block)-7/16"
73/77	M/T	2				58642-S2	(B-94-Z)-bolt(housing to block)-hex. hd.- 3/8"-16 x 3"
73/	M/T	2				58639-S2	(B-90-A)-bolt(housing to block)-hex. hd.- 3/8"-16 x 2 1/4"
73/	M/T		2			20470-S8	(B-107)-bolt(housing to block)-7/16"-14 x 1 1/2"
73/	M/T		2			20546-S8	(B-114)-bolt(housing to block)-hex. hd.- 7/16"-14 x 2 1/2"
73/	M/T		6			34848-S8	(X-75)-washer-7/16"
73/	M/T		4			376275-S7-8	(BB-181-A)-bolt(housing to block)-7/16"-14 x 2 9/16"
78	M/T	2				58644-S2	(B-96-A)Bolt (6392 to 6010)-hex hd 3/8"-16 X 3.5"
78	M/T	2				371741-S	(BB-160)Bolt (6392 to 6010) hex hd 3/8"-16 X 2.25"
						6397	DOWEL (CYLINDER BLOCK)-To flywheel housing
73/			2			EAD 6397-A	1/2" x 1"
73/		2				385418-S	(NN-61-AA)-3/8" x 7/8"
73/		12	12			C8AZ 6500-A	TAPPET ASSY. (VALVE) - hydraulic-1.83" long
						6505	VALVE (EXHAUST)
73/77 73/74 78/	G,P C(exc. P/C & Taxi)	6	6 6			E1AZ 6505-A	Std.-stem dia.-.3101"
		AR	AR			★ D2DZ 6505-B	.003" O/S stem dia. NR
		AR	AR			E1AZ 6505-B	.015" O/S stem dia.
		AR	AR			E1AZ 6505-C	.030" O/S stem dia.
73/74	C(P/C & Taxi)		6			★ D2DZ 6505-E	Std.-stem dia.-.310"-N.R.
						6507	VALVE (INTAKE)
73/76 73/74	G,P C(exc. P/C & Taxi)	6	6 6			D2DZ 6507-A	Std.-stem dia.-.3101"
		AR	AR			★ D2DZ 6507-B	.003" O/S stem dia.-N.R.
		AR	AR			D2DZ 6507-C	.015" O/S stem dia.
		AR	AR			★ D2DZ 6507-D	.030" O/S stem dia.-N.R.
73/74	C(P/C & Taxi)		6			D2DZ 6507-E	Std.-stem dia.-.310"
			AR			★ D2DZ 6507-G	.015" O/S stem dia.-N.R.
			AR			★ D2DZ 6507-H	.030" O/S stem dia.-N.R.
77/		6	6			D7BZ 6507-A	Std. stem dia. - .3111"
		6	6			★ D7BZ 6507-B	.003" O/S stem dia. - N.R.
		6	6			D7BZ 6507-C	.015" O/S stem dia.
		6	6			D7BZ 6507-D	.030" O/S stem dia.

COPYRIGHT © 1986— FORD MOTOR COMPANY —DEARBORN, MICHIGAN

YEAR	MODEL/RESTRICTIONS	QUANTITY 200	QUANTITY 250			PART NUMBER	DESCRIPTION
						6510	BUSHING (VALVE GUIDE)
NOTE 1-	Bushing must be reamed to size of valve						
73/		AR	AR			D6DZ 6510-A NOTE 1	Intake and exhaust-.305" I.D. x 1.88" long x .438" O.D.
						6513	SPRING (VALVE)
73/75	M/T	6				C3DZ 6513-A	Intake-#Light Red-1" I.D. x 1 51/64" long
73/75	A/T	12					Intake and exhaust
76		12					Intake and exhaust
73	exc. Calif.		6				Intake
74	Without T/E		6				Intake
75/76			6				Intake
77/		12	12				Intake & exhaust
73/75	M/T	6				D2DZ 6513-A	Exhaust-#Green-1" I.D. x 1 51/64" long
73	exc. Calif.		6				Exhaust
73	Calif.		12				Intake and exhaust
74	Without T/E		6				Exhaust
74	T/E		12				Intake and exhaust
75/76			6				Exhaust
						6514	RETAINER (VALVE SPRING)
73/		12				D2DZ 6514-B	Intake and exhaust
77/			12				
73/76			6				Intake
73/76			6			D2DZ 6514-A	Exhaust
73/		AR	AR			B3Q 6515-A	SPACER (VALVE SPRING)-.130" thick 1" I.D.
73/		12				C0DE 6517-A	SLEEVE (VALVE SPRING RETAINER)
77/			12				
73/76			6				Intake only
73/		24	24			C0DE 6518-A	KEY (VALVE SPRING RETAINER)-#Green
73/		6	6			C1DZ 6A527-C	BOLT (VALVE ROCKER ARM SHAFT SUPPORT)-3/8"-16 x 2 31/32"
		6	6			370347-S	(XX-314)-washer-flat-3/8"
73/		6	6			C1DZ 6531-A	SUPPORT KIT (VALVE ROCKER ARM)
	Consists of 1-D2DE 6531-AA	Support				1-370347-S	Washer
73/		1	1			C3DZ 6563-A	SHAFT (VALVE ROCKER ARM)-incl. (2) EAA 6572-A plugs
73/		12	12			C4DZ 6564-A	ARM (VALVE ROCKER)
						6565	ROD (VALVE PUSH)
73/		12				C4DZ 6565-A	Standard-8 3/8" long
		12				C4DZ 6565-B	.060" O/S
		12				C4DZ 6565-C	.060" U/S
73/76			12			D2DZ 6565-A	9 3/8" long
77/			12			D7BZ 6565-A	9.345" long
			12			C9DZ 6565-A	.020 U/S
			12			C9DZ 6565-B	.040 O/S
						6571	SEAL (VALVE STEM)
73/		12	12			E3BZ 6571-A	Use with std. size valves
73/		12	12			D2DZ 6571-B	Use with O/S valves
73/		2	2			EAA 6572-A	PLUG (VALVE ROCKER ARM SHAFT)-cup type-.536" dia.
						6582	COVER ASSY. (VALVE ROCKER ARM)
73/74		1	1			D3DZ 6582-A	

YEAR	MODEL/RESTRICTIONS	QUANTITY 200	QUANTITY 250			PART NUMBER	DESCRIPTION
						6582	COVER ASSY. (VALVE ROCKER ARM) — Cont'd
75/		1	1			★ D9BZ 6582-A	R/b E2ZZ 6582-A (7/85)
73/ 73/ 73/	 M/T A/T	7	 7 6			356748-S	(BB-124)-bolt(cover to head)-hex. hd.-1/4"-20 x 5/8"
73/ 73	A/T M/T		1 2			383210-S	(WW-128-A)-stud & washer(solenoid vacuum valve to cover)-1/4"-20 x 1/4"-20 x 1 1/2"
73/		1	1			E3BZ 6584-A	GASKET (VALVE ROCKER ARM COVER)
73/		5	5			C0DE 6587-A	SPRING (VALVE ROCKER ARM TO SHAFT LOCATING)
73/		2	2			C0DE 6598-A	WASHER (VALVE ROCKER ARM SHAFT)-spring type
						6600	PUMP ASSY. (OIL)-Less screen, tube and cover
73/		1				C5DZ 6600-A	Incl. (1) C0DZ 6626-A gasket
73/			1			C9DZ 6600-A	Incl. (1) C9DZ 6626-A gasket
73/		2 AR	2 AR			20386-S8 34806-S7	(B-53)-bolt(pump to block)-hex. hd.-5/16"-18 x 1" (X-64)-lockwasher-5/16"
73/		1	1			378644-S	(NN-61-B)-pin(pump to block)-dowel-1/4" x 13/32"
						6608	ROTOR and SHAFT ASSY. (OIL PUMP DRIVE)
73/		1				★ C5DZ 6608-A	N/R
73/			1			C9DZ 6608-A	
						6616	PLATE (OIL PUMP BODY)
73/		1				C3DZ 6616-A	
73/			1			★ B8A 6616-C	N/R
73/		3				370519-S	(BB-125)-bolt(cover to pump)-hex. hd.-1/4"-20 x 7/8"
73/			4			42911-S	(B-41-A)-bolt(cover to pump)-hex. slotted hd.-1/4"-20 x 5/8"
						6A618	SHAFT ASSY. (OIL PUMP INTERMEDIATE)
73/		1				C5DZ 6A618-A	
73/			1			C9DZ 6A618-A	
						6622	SCREEN, TUBE and COVER ASSY. (OIL PUMP)
73/77		1				C5DZ 6622-A	
78/		1				E3BZ 6622-A	
73/			1			C9DZ 6622-A	
73/		1				358805-S7	(BB-561)-screw & washer (screen and cover to pump)-hex. hd.-5/16"-18 x 1 1/4"
73		1				371065-S	(BB-549)-bolt (screen and cover to pump)-hex. hd. 5/16"-18 x 5/8"
74		1				42789-S8	(U-10)-screw & washer (screw and cover to pump)-5/16"-18 x 3/4"
73/			2			20386-S8	(B-53)-bolt (screen and cover to pump)-hex. hd.-5/16"-18 x 1"
78		1				382802-S2	(MM-173-JB)-nut (att. 6622 to main bearing cap stud 6345)-3/8-16 hex washer hd.
						6626	GASKET (OIL PUMP INLET TUBE)
73/		1				C0DZ 6626-A	
73/			1			C9DZ 6626-A	
						6A664	HOSE (CRANKCASE VENTILATION)-Also refer to group 6853
73/		AR	AR			C9PZ 6A664-A	*KCV-1-15/32" I.D. x 25 ft. long-cut to fit
73/		AR	AR			C9PZ 6A664-B	*KCV-2-5/8" I.D. x 25 ft. long-cut to fit
73/		AR	AR			D3PZ 6A664-A	*KCV-3-3/8" I.D. x 25 ft. long-cut to fit

COPYRIGHT © 1986— FORD MOTOR COMPANY —DEARBORN, MICHIGAN

YEAR	MODEL/RESTRICTIONS	QUANTITY 200	QUANTITY 250			PART NUMBER	DESCRIPTION
						6A664	HOSE (CRANKCASE VENTILATION)- Also refer to group 6853 — Cont'd
73/74		1	1			D1DZ 6A664-A	1/2" and 3/8" I.D. x 15 1/2" long (P.C.V. valve to carburetor)
75		1	1			D5DZ 6A664-A	
76/	without A/C	1	1				
76	with A/C	1	1			★ D6BZ 6A664-A	5 3/4" long (valve to compensator)-not replaced
76/	A/C	1	1			D7BZ 6A664-A	9" long (compensator to spacer)
						6666	PLUG (OIL PUMP RELIEF VALVE)
73/		1				C2DZ 6666-A	Cup type-9/16" O.D.-13/64" height
73/			1			C5AZ 6666-A	
						6A666	VALVE (POSITIVE CRANKCASE VENTILATION)- (P.C.V.)
73		1	1			D8TZ 6A666-B	*EV-49-B
74	Without T/E		1				
75	exc. Calif.		1				
77		1	1			D9DZ 6A666-A	*EV-76-C
74	T/E		1				
74/75	G,P	1					
75	Calif.		1				
76			1				
78		1	1				
79			1				
79	Exc. P w/C4 Calif. & M/T exc. Calif.	1					
79	P - - C4 Calif.	1				E1DZ 6A666-A	*EV-118 repls. *EV-108
79	P - - M/T Exc. Calif.	1					
						6670	SPRING (OIL PUMP RELIEF VALVE)
73/		1				★ B8A 6670-A	N.R.
73/			1			★ C5AZ 6670-A	N.R.
						6674	PLUNGER (OIL PUMP RELIEF VALVE)
73/		1				★ B9AE 6674-B	N.R.
73/			1			★ C5AZ 6674-A	N.R.
						6675	PAN ASSY. (OIL)
73/77		1				D5DZ 6675-A	Incl. (1) D5DZ 6750-A & (1) C2DZ 6754-A
78/		1				D8BZ 6675-B	
73/			1			C9DZ 6675-A	
73/		20	24			356748-S	(BB-124)-bolt(pan to block and front cover)- hex. hd.-1/4"-20 x 5/8"
						6700	SEAL (CYLINDER FRONT COVER OIL)
73/		1				C0DE 6700-A	
73/			1			C3AZ 6700-A	
						6701	PACKING (CRANKSHAFT REAR)
◊	When using D4FZ 6701-A, remove pin from main bearing cap						
73/		2				C9AZ 6701-B	Split lip type
73/			2			△ D4FZ 6701-A	Split lip type
73/		2	2			C90Z 6701-A	Rope type
						6710-11	Supplied only in 6781 gasket set
						6722-23	Supplied only in 6781 gasket set
						6730	PLUG (OIL PAN DRAIN)
73/		1	1			D6TZ 6730-A	
						6731	ELEMENT ASSY. (OIL FILTER)
73/		1	1			D9AZ 6731-A	*FL-1-A

YEAR	MODEL/RESTRICTIONS	QUANTITY 200	QUANTITY 250			PART NUMBER		DESCRIPTION
73/		1	1			C20Z	6734-A	GASKET (OIL PAN DRAIN PLUG)-#nylon
							6750	INDICATOR (OIL LEVEL)
73/74		1				C2DZ	6750-B	
75/76		1				D5DZ	6750-A	
77		1				D7DZ	6750-A	
78/		1				E2BZ	6750-A	
73/			1			D2DZ	6750-A	
73/		1	1			C2DZ	6754-A	TUBE ASSY. (OIL LEVEL INDICATOR)
							6766	CAP ASSY. (OIL FILLER and BREATHER)
73/76		1	1			D1ZZ	6766-A	*EC-508-#chrome-optional with black cap
73/		1	1			E3AZ	6766-A	*EC-682
							6767	ELBOW (CRANKCASE VENTILATION HOSE)-Also refer to group 9600
73/		1	1			C8AZ	6767-B	90°-5/8" (filler cap to hose)
							6775-6	SHIELD (SPLASH)
78/79	P - - "Before 5/1/79"	1				E2BZ	6775-A	R.H. & L.H.-Reset pins when necessary for proper usage
79	P - - w/o A/C "From 5/1/79"	2				D9BZ	6775-B	R.H. & L.H.-Reset pins when necessary for proper usage
79	P - - w/A/C "From 5/1/79"	1				D9BZ	6775-B	L.H. only
		1				D9BZ	6775-C	R.H. only
78/	P	AR				383927-S		(NN-167)-Pin-drive (secure 6775 shield)
							6781	GASKET SET (OIL PAN)
73/		1				D0DZ	6781-A	
	Consists of							
	1-C9DE 6710-C	Gasket-R.H.					1-D3DE 6722-AA	Seal-front
	1-C9DE 6711-C	Gasket-L.H.					1-D3DE 6723-AA	Seal-rear
	1-C20Z 6734-A	Gasket (drain plug)						
73/			1			D0DZ	6781-B	
	Consists of							
	1-C9DE 6710-D	Gasket-R.H.					2-D3DE 6722-BA	Seal-front and rear
	1-C9DE 6711-D	Gasket-L.H.					1-C20Z 6734-A	Gasket (drain plug)
							6789	GASKET (OIL FILLER CAP)
73/		1	1			D94Y	6789-B	
		★	★			★	6853	HOSE (CRANKCASE VENTILATION)-Cut to fit from bulk hose 4090-also refer to group 6A664
73/		1	1			B8A	6890-A	INSERT (OIL FILTER MOUNTING BOLT)
							6A892	RETAINER (CRANKCASE VENTILATION)-Grommet
73/		1	1			E5TZ	6A892-B	P.C.V. to rocker arm cover
73/		1	1			C8AZ	6A892-A	Elbow to filler car

COPYRIGHT © 1986— FORD MOTOR COMPANY —DEARBORN, MICHIGAN

YEAR	MODEL/RESTRICTIONS	QUANTITY 302				PART NUMBER		DESCRIPTION
							6D000	GASKET SET (TIMING COVER)
73/78		1				E2AZ	6D000-A	
	Consists of							
	1-D9AZ 6020-A	Gasket (frt cvr)					1-D30E 6722-AA	Seal (oil pan)
	1-C3AZ 6700-A	Seal (crankshaft frt)					or D30E 6723-AA	
	1-E2AJ 6710-AA	Gasket (oil pan R.H.)					1-D9AZ 8507-A	Gasket (water pump)
	1-E2AJ 6711-AA	Gasket (oil pan L.H.)					1-C3AZ 9417-C	Gasket (fuel pump)
	1-IS 5169	Instruction Sheet						
79		1				E2AZ	6D000-B	
	Consists of							
	1-D9AZ 6020-A	Gasket (frt cvr)					1-D30E 6722-AA	Seal (oil pan)
	1-D0AZ 6700-A	Seal (crankshaft frt)					or D30E 6723-AA	
	1-E2AJ 6710-AA	Gasket (oil pan R.H.)					1-D9AZ 8507-A	Gasket (water pump)
	1-E2AJ 6711-AA	Gasket (oil pan L.H.)					1-C3AZ 9417-C	Gasket (fuel pump)
	1-IS 5169	Instruction Sheet						
							6007	ENGINE ASSY.-Current production engine assemblies may be ordered from the local parts distribution center by furnishing the engine code from the vehicle certification label or the identification tag number that is attached to the exterior of the engine assembly
							6008	GASKET SET (COMPLETE OVERHAUL)-refer to 6E078 and 6079
73/		4				C20Z	6A008-A	DOWEL (CYLINDER HEAD TO CYLINDER BLOCK)-split-9/16" I.D. x 11/16" O.D. x 7/16" height
76/		1				D6AZ	6D008-A	Heater kit (cylinder block)
	Consists of							
	1-D6AJ 6B018-AA	Wire assy.					4-D6AJ 14197-AA	Clip
	1-E0AZ 6A051-A	Heater assy.						
	1-D4AB 6A056-AA	Cap						
							6009	CYLINDER ASSY.-Incl. cyl. block w/all internal parts of the engine but does not incl. cyl. heads, tappets, oil pan or cyl. front cover unless indicated
73/74	M/T	1				★ D6ZZ	6009-B	N.R.-use details
73	A/T	1						
74	A/T - - without T/E	1						
74	A/T - - with T/E	1				★ D4TZ	6009-C	N.R.-use details
75/76		1				★ D6ZZ	6009-B	N.R.-use details
77		1				★ D9AZ	6009-B	N.R.-use details
78/	Exc. V - - w/EEC	1						
78/79	V - - w/EEC	1				★ D94Y	6009-A	N.R.-use details
							6010	BLOCK ASSY. (CYLINDER)
73		1				★ D1TZ	6010-B	Not replaced
74/79	w/o EEC	1				E0AZ	6010-A	
78/	V - - w/EEC	1				D94Y	6010-A	For 1978 Use (1) 388551-S2 & (1) 388552-S8
							6B018	WIRE ASSY. (BLOCK HEATER)
73/		1				D7TZ	6B018-A	
78/	P	1				E5SZ	6B018-A	
79	J	1						
							6019	COVER ASSY. (CYLINDER FRONT)
73/79		1				E0AZ	6019-B	Incl. 352532-S Plug-plug dipstick hole if not required-position sensor brkt. can be remvd. by grinding down to level of timing pointer att. brkt. holes

COPYRIGHT © 1986— FORD MOTOR COMPANY —DEARBORN, MICHIGAN

YEAR	MODEL/RESTRICTIONS	QUANTITY 302				PART NUMBER	DESCRIPTION
						6019	COVER ASSY. (CYLINDER FRONT) — Cont'd
73/		4				56526-S2	(B-319-M)-bolt (cover to block)-hex. hd.-5/16"-18 x 2"
73/		2				300958-S	(B-73-B)-bolt (cover and water pump to block)-hex. hd.-5/16"-18 x 5"
73/		3				56724-S2	(B-318-GH)-bolt (cover to block)-hex. washer hd.
73/		2				388192-S	(NN-124-E)-pin (frt. cvr. to block)-1/2" O.D.-7/16" I.D. x 9/16" long-split dowel
						6020	GASKET (CYLINDER FRONT COVER)
73/		1				E3AZ 6020-A	
						6023	POINTER (TIMING)
73/77	Exc. Calif. and/or w/ Hi-altitude carb. & A/T	1				C9TZ 6023-A	
78	F,G - - exc. Calif.	1					
77	M/T	1					
73/77	Calif. and/or w/o Hi-altitude carb.	1				D20Z 6023-A	
78	G - - Calif.	1					
78	V	1					
79	A,F,G	1					
78	P - - Calif.	1				★ D5ZZ 6023-A	Not replaced
78	P - - exc. Calif.	1				D5ZZ 6023-B	
79	J,P	1				D9ZZ 6023-A	
74/76		2				3840B9-S	(WW-135-B)-stud (pointer & front cover to block)-5/16"-18 x 3 1/8"
77/		2				387822-S	(WW-135-F)-stud (pointer & front cover to block)-5/16"-18-18 x 3.50
						6A023	SUPPORT ASSY. -Also refer to 5025
73	P	1				D1DZ 6A023-A	
74/77	G,P	1				★ D5BZ 6A023-A	
78	Exc. P					Not replaced	
79	G,V	1					
78/	J,P	1				D9BZ 6A023-A	
78	P	2				382802-S2	(MM-123-JB) Nut (6A023 to body) 3/8"-16 Hex LK.
						6026	PLUG (ENGINE)
73/		10				D7AZ 6026-A	Core holes in block and head-1 1/2" dia.
		AR				C8AZ 6026-D	.060" O/S
73/		1				376099-S	(PP-73-A)-plug (rear hole in block)-cup type-3/4"
73/		3				376301-S	(PP-67-A)-plug (front main oil gallery and oil passages)-cup type-1/2"
73/		5				87837-S	(P-15)-plug (drain holes and oil gallery in block)-pipe-1/4"-18
73/		6				371485-S	(PP-48-A)-plug (core cleanout holes)-pipe-3/4"-14
74/		2				351418-S	(UU-136)-insert (plug thermactor holes in hd.)-5/8"-11 x 7/16"-14 x 1 1/8"
						6028-9	BRACKET (FRONT SUPPORT)
73/77	P	1				★ D3DZ 6028-A	R.H.-N.R.
		1				★ D3DZ 6029-A	L.H.-N.R.
75	G	1				★ D5DZ 6028-A	R.H.-N.R.
		1				★ D5DZ 6029-A	L.H.-N/R
76/	G	1				D6DZ 6028-A	R.H.
		1				D6DZ 6029-B	L.H.
77/	V	1				★ D84Y 6028-A	R.H.-N.R.
		1				D6DZ 6029-B	L.H.
79	A	2				D9AZ 6028-B	R.H. & L.H.
						6030-1	BRACKET (FRONT SUPPORT)
78/	P	1				E1BZ 6030-A	R.H.
79	J	1				E1BZ 6031-A	L.H.

YEAR	MODEL/RESTRICTIONS	QUANTITY 302				PART NUMBER		DESCRIPTION
							6038	INSULATOR (FRONT SUPPORT)
79	A	1				D9AZ	6038-A	R.H.
		1				D9AZ	6038-B	L.H.
73/74	C	1				D70Z	6038-C	R.H.
		1				D70Z	6038-D	L.H.
75	G	1				★ D5DZ	6038-E	R.H.-N/R
		1				D5DZ	6038-F	L.H.
76/	G	1				D6DZ	6038-A	R.H.
		1				D6DZ	6038-B	L.H.
73/77	P	2				D5BZ	6038-A	R.H. and L.H.
78/	P	1				E3ZZ	6038-H	R.H.
79	J	1				E1BZ	6038-B	L.H.
77/	F	1				D70Z	6038-C	R.H.
		1				D70Z	6038-B	L.H.
77/	V	1				★ D74Y	6038-A	R.H.-r/b D6DZ-A (11/85)
		1				D74Y	6038-B	L.H.
							6C038	SHIELD (MOTOR MOUNT HEAT)
74	C - - T/E	1				★ D40Z	6C038-A	L.H.-not used on R.H. side-N/R
76/	G	1				★ D6DZ	6C038-A	L.H.-not used on R.H. side-N/R
73/77	P	1				★ D4DZ	6C038-A	L.H.-not used on R.H. side-N/R
77/	F	1				★ D70Z	6C038-A	L.H.-not used on R.H. side-N/R
							6049	△HEAD (CYLINDER)

△ 6090 is a casting number and generally cannot be cross-referenced to a service number. It will be used as a means of identification only when casting number is unique to one 6049 assembly.

73/74	Without T/E	2				★ D20Z	6049-B	Without valves-N/R
74	T/E	2				★ D4DZ	6049-A	Without valves-NR
75/77		2				★ D70Z	6049-A	Without valves-with vlv. r/arm stud-must be used
78	Exc. V	2					N.R.	w/D70Z 9433-A
78/	Exc. V	2				D84Y	6049-C	Without valves-w/vlv. r/arm bolt
78/	Exc. V	2				D8AZ	6049-D	Complete w/valves-with vlv. r/arm bolt
78	V - - T/E	2				★ D84Y	6049-A	Without valves-w/vlv. r/arm stud-N/R
78/	V	2				D84Y	6049-C	Without valves-w/vlv. r/arm bolt
78/	V	2				★ D84Y	6049-D	With valves-w/vlv. r/arm bolt-N/R
74/77		AR				351418-S		(UU-136)-insert (plug T/E hole in hd.)-
78/	Exc. V	AR						5/8"-11 x 7/16"-14 x 1 1/8"-Also refer to 6E086
							6051	GASKET (CYLINDER HEAD)
73/		2				D70Z	6051-C	
							6A051	HEATER ASSY. (BLOCK)
73/		1				E0AZ	6A051-A	
79	J	1				D8BZ	6054-B	RETAINER (SUPPORT REAR INSULATOR)
							6065	BOLT (CYLINDER HEAD)
73/		10				C20Z	6065-A	7/16"-15 x 2 5/16"
73/		10				C20Z	6065-B	7/16"-14 x 3 15/16"
79	J,P	1				D9BZ	6A066-A	SPACER (FRONT SUPPORT INSULATOR) R.H.

COPYRIGHT © 1986— FORD MOTOR COMPANY —DEARBORN, MICHIGAN

YEAR	MODEL/RESTRICTIONS	QUANTITY 302				PART NUMBER	DESCRIPTION
						6068	INSULATOR ASSY. (REAR SUPPORT)
79	A	1				D9AZ 6068-A	
73	C	1				D50Z 6068-A	
74	C - - M/T and C4	1					
74	C - - C/M	1				D50Z 6068-B	
77/	F	1				E0LZ 6068-A	
73/77	G,P - - M/T	1				D3DZ 6068-A	
75/	G - - A/T	1				D6DZ 6068-A	
78/	G - - M/T	1					
79	J	1				E03Z 6068-A	
73/77	P - - A/T	1				D3DZ 6068-B	
78/	P - - A/T & M/T	1				E03Z 6068-A	
77/	V	1				★ D74Y 6068-A	R/b D3DZ-B (11/85)
77/	G,V	2				387921-S2	(BB-416-BC)-bolt (6068 to trans. ext.) - hex. flange hd. - 1/2" x 13 x 1.37"
73/		AR				D6AZ 6E072-A	LABEL (BUILD CODE & INFORMATION) Also refer to Service Bulletin #155
						6E078	GASKET SET (LOWER)
73/	w/o EEC	1				D9AZ 6E078-E	

Consists of

1-E3AZ 6020-A	Gasket (front cover)	2-D30E 6722-AA	Seal (oil pan)
1-E0AZ 6626-A	Gasket (oil inlet tube)	or D30E 6723-AA	
1-E5TZ 6700-A	Seal (front cover)	2-C20Z 6734-A	Gasket (drain plug)
1-D0AZ 6700-A	Seal (front cover)		
1-D4FZ 6701-A	Seal (crankshaft rear)	1-E2ZZ 8507-A	Gasket (water pump)
1-E3AE 6710-AA	Gasket (oil pan R.H.)	1-E1AZ 8513-A	Gasket (water pump cover)
1-E3AE 6711-AA	Gasket (oil pan L.H.)	1-D7AZ 8513-A	Gasket (water pump cover)
		1-D9AZ 8513-A	Gasket (water pump cover)
		1-C3AZ 9417-C	Gasket (fuel pump)

79	w/EEC	1				D94Y 6E078-A	

Consists of

1-D9AZ 6020-A	Gasket (front cover)	2-D30E 6722-AA	Seal (oil pan)
1-B8TZ 6626-A	Gasket (oil inlet tube)	or D30E 6723-AA	
1-D0AZ 6700-A	Seal (front cover)	1-C20Z 6734-A	Gasket (drain plug)
2-D4FZ 6701-A	Seal (crankshaft rear)		
1-D9ZE 6710-B	Gasket (oil pan R.H.)	1-D9AZ 8507-A	Gasket (water pump)
1-D9ZE 6711-B	Gasket (oil pan L.H.)	1-D7AZ 8513-A	Gasket (water pump cover)
		1-C3AZ 9417-C	Gasket (fuel pump)

73/76		1				D1AZ 6079-B	GASKET SET (VALVE GRIND)

Consists of

2-D70Z 6051-C	Gasket (cyl. head)	▲1-E3AE 9A424-CA	Seal (intake manifold front)
16-C8SZ 6571-A	Seal (valve stem)	▲1-E3AE 9A425-CA	Seal (intake manifold rear)
2-E3AZ 6584-A	Gasket (rocker cover)	▲2-C80E 9439-A,B,C or D50E 9439-AA	Gasket (intake manifold)
1-C9AZ 8255-A	Gasket (water outlet)	▲ Also serviced in D1AZ 9443-B	

YEAR	MODEL/RESTRICTIONS	QUANTITY 302				PART NUMBER		DESCRIPTION
							6079	GASKET SET (VALVE GRIND)
77/		1				D9AZ	6079-A	
	Consists of							
	2-D70Z 6051-C	Gasket (cyl head)					1-▲E3AE 9A424-CA	Seal (intake manifold)
	16-C8SZ 6571-A	Seal (valve stem)					1-▲E3AE 9A425-CA	Seal (intake manifold)
	2-E3AZ	6584-A					Gasket (rocker cvr)	2-▲D8DE 9A39-AA
	1-C9AZ 8255-A	Gasket (water outlet)					▲Also serviced in D9AZ 9433-B	
78/	V	1				D84Y	6E086-A	INSERT (CYLINDER HEAD)-5/8"-18 x 7/16"-14 x 4.80
							6108	PISTON ASSY. (Incl. Pin)-Red and blue size are optional for select fit
73/76		8				D30Z	6108-A	Standard (red)
		AR				★ D30Z	6108-B	Standard (blue)-N.R.
		AR				★ D30Z	6108-C	.003" O/S-N.R.
		AR				D30Z	6108-DB	.020" O/S
		AR				D30Z	6108-E	.030" O/S
		AR				D30Z	6108-F	.040" O/S
77/78		8				D9AZ	6108-A	Standard (red)
		AR				★ D9AZ	6108-B	Standard (blue)-r/b E6TZ 6108-B (10/85)
		AR				D9AZ	6108-C	.003 O/S
		AR				D9AZ	6108-DB	.020 O/S
		AR				D7ZZ	6108-E	.030 O/S
		AR				D9AZ	6108-FB	.040 O/S
79		8				D9AZ	6108-A	Std. (red)
		AR				★ D9AZ	6108-B	Std. (blue)-r/b E6TZ 6108-B (10/85)
		AR				D9AZ	6108-C	.003 O/S
		AR				D9AZ	6108-DB	.020 O/S
		AR				D9AZ	6108-EB	.030 O/S
		AR				D9AZ	6108-FB	.040 O/S
							6135	PIN (PISTON)
73/		8				B2AZ	6135-A	#Green-.600" I.D. x .9121" O.D. x 3 15/64" long-std.
		AR				B2AZ	6135-B	.001" O/S
		AR				B2AZ	6135-C	.002" O/S
							6148	RING SET (PISTON PARTIAL)-consists of the necessary rings to re-ring (2) pistons
73/		4				C3AZ	6148-F	Standard
		AR				C3AZ	6148-G	.020" O/S
		AR				C3AZ	6148-H	.030" O/S
		AR				C3AZ	6148-J	.040" O/S
73/		8				D30Z	6200-A	ROD ASSY. (CONNECTING)
79	J	1				E2ZZ	6B209-A	TENSIONER ASSY. (DRIVE BELT)
							6211	BEARING (CONNECTING ROD)
73/		16				C20Z	6211-R	Standard-upper and lower
		AR				C20Z	6211-S	.001" U/S
		AR				C20Z	6211-T	.002" U/S
		AR				C20Z	6211-U	.010" U/S
		AR				C20Z	6211-V	.020" U/S
		AR				C20Z	6211-Y	.030" U/S
		AR				C20Z	6211-Z	.040" U/S

COPYRIGHT © 1986— FORD MOTOR COMPANY —DEARBORN, MICHIGAN

YEAR	MODEL/RESTRICTIONS	QUANTITY 302				PART NUMBER	DESCRIPTION
73/		16				C3DZ 6212-A	NUT (CONNECTING ROD)-hex.-5/16"-24
73/		16				C3AZ 6214-A	BOLT (CONNECTING ROD)-5/16"-24 x 2 5/64"
						6250	CAMSHAFT
73/74	M/T	1				C3AZ 6250-V	#UA-incl. 378189-S dowel pin
73/74	A/T	1				★ D30Z 6250-C	
75	U.S. only "Before 5/19/75"	1				Not replaced	
75/76	Canada only	1					
75/76	U.S. only "From 5/19/75"	1				D50Z 6250-A	
77/		1					
79	A - - w/Hang-on A/C w/o EEC	1				D9AZ 6B250-A	SPACER (ACCESSORY DRIVE)
73/		1				C20Z 6A251-A	BEARING KIT-CAMSHAFT-standard

Consists of

1-C20Z 6261-A	Front	1-C20Z 6263-A	Rear	1-C20Z 6270-A	Rear intermediate
1-C20Z 6262-A	Center	1-C20Z 6267-A	Front intermediate	1-C20Z 6266-A	Plug

73/		1				D3AZ 6256-B	SPROCKET (CAMSHAFT)
73/		1				378189-S	(NN-54-J)-pin (sprocket and eccentric to camshaft)-dowel-5/16" x 1 3/8"
						6261	BEARING (CAMSHAFT FRONT)
73/		1				C20Z 6261-A	Standard I.D. and O.D.
		AR				C20Z 6261-B	.015" U/S I.D.-Standard O.D.
						6262	BEARING (CAMSHAFT CENTER)
73/		1				C20Z 6262-A	Standard I.D. and O.D.
		AR				C20Z 6262-B	.015" U/S I.D.-Standard O.D.
						6263	BEARING (CAMSHAFT REAR)
73/		1				C20Z 6263-A	Standard I.D. and O.D.
		AR				C20Z 6263-B	.015" U/S I.D.-Standard O.D.
						6266	PLUG (CAMSHAFT REAR BEARING)
73/		1				C20Z 6266-A	Standard-2 5/32" O.D.-cup type
		1				C5AZ 6266-A	.060" O/S
						6267	BEARING (CAMSHAFT FRONT INTERMEDIATE)
73/		1				C20Z 6267-A	Standard I.D. and O.D.
		AR				C20Z 6267-B	.015" U/S I.D.-Standard O.D.
73/		1				C30Z 6268-A	CHAIN (TIMING)-58 links
						6269	PLATE (CAMSHAFT THRUST)
73/		1				C90Z 6269-A	Std.-.251" thick
		1				C90Z 6269-B	.002" O/S
		1				C90Z 6269-C	.004" O/S
73/		2				42911-S	(B-41-A)-bolt (plate to block)-hex. slotted hd.-1/4"-20 x 5/8"
						6270	BEARING (CAMSHAFT REAR INTERMEDIATE)
73/		1				C20Z 6270-A	Standard I.D. and O.D.
		AR				C20Z 6270-B	.015" U/S I.D.-Standard O.D.
73/		1				C20Z 6278-A	WASHER (CAMSHAFT SPROCKET)-13/32" I.D. x 11 3/64" O.D. x 7/32" thick
79	J	1				D9ZZ 6284-A	DAMPER ASSY. (TIMING CHAIN VIBRATION)
						6287	ECCENTRIC (CAMSHAFT FUEL PUMP DRIVE)
73/		1				D0AZ 6287-A	Outer
		1				D5AZ 6287-B	Inner
73/		1				43002-S	(B-257)-bolt (eccentric and sprocket to camshaft)-hex. slotted hd.
73/		1				C0DZ 6A302-A	PIN (CRANKSHAFT REAR OIL SEAL)
73/77		1				D9AZ 6303-A	CRANKSHAFT ASSY.-#2MA
78	Exc. V	1					
78	V	1				★ D84Y 6303-A	Incl. ignition pulse ring-N.R.
79	W/o EEC	1				D9AZ 6303-A	#2MAD
79	V - - w/EEC	1				D94Y 6303-A	#2MAC-Incl. ignition pulse ring

YEAR	MODEL/RESTRICTIONS	QUANTITY 302				PART NUMBER	DESCRIPTION
						6306	SPROCKET (CRANKSHAFT)
73/		1				D50Z 6306-A	21 tooth-slinger not req'd.
73/		1				388907-S	(LL-17-A)-key (sprocket to crankshaft) -woodruff-5/16" x 1 13/32" x 3/16"
73/74		1				C30Z 6310-B	SLINGER (CRANKSHAFT OIL)
						6A312	PULLEY ASSY. (CRANKSHAFT OUTER)-Also refer to pulley I.D. chart section 60
▲	Can be used to service single, double or triple sheave pulleys						
							SINGLE SHEAVE
79	J	1				D9ZZ 6A312-A	#D9ZE-6A312-AB or D9ZE 6312-AB
73/	With dealer installed A/C	1				D2AZ 6A312-E	
							▲ DOUBLE SHEAVE
75	G - - without P/S	1				D4TZ 6A312-B	Ident. D3AE 6312-BA
77	G - - M/T w/o A/C	1					
76	G - - w/o A/C or P/S	1					
74/75	P - - T/E without P/S or A/C	1					
76/	P,V - - without A/C or P/S	1					
79	A - - w/o A/C	1				E0AZ 6A312-C	#E0AE 6312-CA-repl. D9AE 6312-BB
							▲ TRIPLE SHEAVE
73/74	Without T/E,P/S, idler pulley or A/C	1				D0ZZ 6A312-A	#D0ZE 6312-B-also used to service pulley ident. D00E 6312-A or D1ZE 6312-AA
77	G - - A/T w/o A/C w/o P/S exc Calif.	1					
77	G - - A/T w/o A/C Calif.	1					
77/	V - - w/o T/E	1				D60Z 6A312-A	#D60E-AA replaces #D5UE 6312-AA or D7DE 6312-AA
77/	G - - A/T w/A/C exc. Calif.	1					
78	P - - P/S w/ w/o A/C	1				D5ZZ 6A312-A	#D5ZE 6312-AA-also used to service pulley ident. D5ZE 6312-BA
79	A - - A/C & P/S	1				E0AZ 6A312-D	#E0AE-BA repls. #D9AE-6312-CB
							▲FOUR SHEAVE
74	C - - T/E	1				D4AZ 6A312-A	#D3AE 6312-C1A,C2A-used to service pulleys ident. D3AE 6312-AA, EA or D60E 6312-BA
75	G - - with P/S	1					
74/75	P - - T/E with P/S-without A/C	1					
76/	P,F,G - - P/S & A/C	1					
77/	V - - A/C with or without P/S	1				D60Z 6A312-A	#D60E 6312-AA-Four sheave #D00E 6312-C-Also used to service pulleys indent. D0AE 6312-C or D00E 6312-B
76/	G - - A/C w/or w/o P/S	1					
77/	G - - A/T w/A/C Calif.	1					
74/77	P - - T/E with A/C-with or without P/S	1				D5DZ 6A312-A	#D3DE 6312-AA
73/74	without T/E-with P/S, idler pulley or A/C	1					
77	G - - A/T w/o A/C w/P/S exc. Calif.						
78/	V - - w/EEC	1				D84Y 6C315-A	SENSOR ASSY (CRANKSHAFT TIMING)
79	W/EEC exc. V	1				D9AZ 6C315-A	
78/	V - - w/EEC	1				387932-S	(BB-927-E)-screw & clamp (6C315 TO 6010)
73/77		1				D8TZ 6316-B	DAMPER ASSY. (CRANKSHAFT)-Also refer to pulley I.D. chart section 60
78	Exc. P						
79	Exc. J,P	1					
78	P - - exc. Calif.	1				D5ZZ 6316-A	
79	J,P - - Exc. Calif.						
78	P - - Calif.	1				D7ZZ 6316-A	
79	J,P - - Calif.						
73/		1				377850-S	(BB-273-A)-bolt (damper and washer to crankshaft)-hex. hd.-5/8"-18 x 2"

COPYRIGHT © 1986— FORD MOTOR COMPANY —DEARBORN, MICHIGAN

ENGINE BEARING APPLICATION CHART

YEAR	C.I.D.	SIZE	UPPER	LOWER	PART NUMBER FRONT	FRONT INTERMEDIATE	CENTER	REAR INTERMEDIATE	REAR
6333 and 6337 BEARING- (CRANKSHAFT MAIN) ◊ Full oil groove and (1) slot ϕ Plain									
73/	◊302	Std.	x		C3AZ 6333-P	C3AZ 6333-P	C3AZ 6337-P	C3AZ 6333-P	C3AZ 6333-P
		.001"	x		C3AZ 6333-R	C3AZ 6333-R	C3AZ 6337-R	C3AZ 6333-R	C3AZ 6333-R
		.002"	x		C3AZ 6333-S	C3AZ 6333-S	C3AZ 6337-S	C3AZ 6333-S	C3AZ 6333-S
		.010"	x		C3AZ 6333-T	C3AZ 6333-T	C3AZ 6337-T	C3AZ 6333-T	C3AZ 6333-T
		.020"	x		C3AZ 6333-U	C3AZ 6333-U	C3AZ 6337-U	C3AZ 6333-U	C3AZ 6333-U
		.030"	x		C3AZ 6333-V	C3AZ 6333-V	C3AZ 6337-V	C3AZ 6333-V	C3AZ 6333-V
73/	ϕ302	Std.		x	C3AZ 6333-AA	C3AZ 6333-AA	C3AZ 6337-AA	C3AZ 6333-AA	C3AZ 6333-AA
		.001"		x	C3AZ 6333-AB	C3AZ 6333-AB	C3AZ 6337-AB	C3AZ 6333-AB	C3AZ 6333-AB
		.002"		x	C3AZ 6333-AC	C3AZ 6333-AC	C3AZ 6337-AC	C3AZ 6333-AC	C3AZ 6333-AC
		.010"		x	C3AZ 6333-AD	C3AZ 6333-AD	C3AZ 6337-AD	C3AZ 6333-AD	C3AZ 6333-AD
		.020"		x	C3AZ 6333-AE	C3AZ 6333-AE	C3AZ 6337-AE	C3AZ 6333-AE	C3AZ 6333-AE
		.030"		x	C3AZ 6333-AF	C3AZ 6333-AF	C3AZ 6337-AF	C3AZ 6333-AF	C3AZ 6333-AF

YEAR	MODEL/RESTRICTIONS	QUANTITY 302				PART NUMBER	DESCRIPTION
						6345	BOLT (CRANKSHAFT MAIN BEARING CAP)
73/77 78/		10 9				C20Z 6345-A	Bolt-7/16"-14 x 3 5/32"
78/		1				C6TZ 6345-C	Stud-(att 6622 to brg cap)-3/8"-16-7/16-14 x 4 3/32"
73	A/T	1				C20Z 6A366-A	PLATE (FLYWHEEL REINFORCING)
						6375	FLYWHEEL ASSY.
73/74	C(exc. P/C and Taxi) - - M/T	1				E0TZ 6375-B	
73/74	C(P/C and Taxi) - - M/T	1				D7TZ 6375-C	
73/74	C - - C/M	1				D30Z 6375-A	164 tooth ring gear
73/74 75 76	C,P - - C4 G,P - - A/T A/T	1 1 1				C3AZ 6375-L	#C80P-C or D-157 tooth ring gear Use w/case fill trans.
73/	M/T	1				C3AZ 6375-J	#C7ZE-B-on eng. side-157 tooth ring gear
76 77/78 79	A/T A/T FMX,C4	1 1 1				E0AZ 6375-A	Use w/pan fill trans.
79	C6	1				D1ZZ 6375-A	
73/		1				B8A 6378-A	WASHER (CRANKSHAFT PULLEY RETAINING)-21/32" I.D. x 1 3/4" O.D. x 7/32" thick
						6379	BOLT (FLYWHEEL TO CRANKSHAFT)
73/		6				B8AZ 6379-A	7/16"-20 x 15/16"-used with 6A366 plate
73/		6				D2AZ 6379-B	7/16"-20 x 3/4"-used without 6A366 plate
						6384	GEAR (FLYWHEEL RING)
73/74	C - - M/T	1				C5AZ 6384-D	164 tooth
73/ 79	G,P - - M/T J - - M/T	1 1				C20Z 6384-B	157 tooth
						6392	HOUSING ASSY. (FLYWHEEL)
73/74	C - - M/T	1				★C5AZ 6392-D	#C5AA 6394-B-N.R.
73/74	P - - M/T	1				★D20Z 6392-A	N.R.
75/78 79	G,P - - M/T G - - M/T	1 1				D5DZ 6392-A	
79	J,P - - M/T	1				D9ZZ 6392-C	
73/	C,P - - M/T	2				20546-S8	(B-114)-bolt (housing to block)-7/16"-14 x 2 1/2"
73/74	C - - M/T	4				34848-S8	(X-75)-washer (housing to block)-lock-7/16" 3

YEAR	MODEL/RESTRICTIONS	QUANTITY 302				PART NUMBER	DESCRIPTION
						6392	HOUSING ASSY. (FLYWHEEL) — Cont'd
73/	C,G,P - - M/T	2				20470-S8	(B-1709-bolt (housing to block)-hex. hd.-7/16"-14 x 1 1/2"
73/ 73/74	G,P - - M/T C - - M/T	4 2				376275-S7-8	(BB-181-A)-bolt (housing to block)-hex. hd.-7/16"-14 x 2 9/16"
73/		2				EAD 6397-A	DOWEL (CYLINDER BLOCK)-To flywheel hsg.-1/2" x 1"
73/74	C - - M/T	1				C40Z 6424-A	SEAL (REAR COVER PLATE)-4 1/4" I.D. x 5 3/4" O.D.
73/		16				D9HZ 6500-A	TAPPET ASSY. (VALVE)-Hydraulic
						6505	VALVE (EXHAUST)-Also see 6550
73/	With vlv. r/arm bolt-repls.	8				D8TZ 6505-J	Standard-stem dia.-.3414-Past mdl. reqs. 6550 cap
	With vlv. r/arm stud	AR				★ D2TZ 6505-B	.003" O/S stem dia. NR
		AR				E2AZ 6505-B	.015" O/S stem dia.-Past mdl. reqs. 6550 cap
		AR				E2AZ 6505-C	.030" O/S stem dia.-Past mdl. reqs. 6550 cap
						6507	VALVE (INTAKE)
73/78	With vlv. r/arm stud	8				D2TZ 6507-A	Standard-stem dia.-.3414"
		AR				★ D2TZ 6507-B	.003" O/S stem dia. NR
		AR				D2TZ 6507-C	.015" O/S stem dia.
		AR				★ D2TZ 6507-D	.030" O/S stem dia.-N.R.
78/	With vlv. r/arm bolt	8				E3ZZ 6507-A	Standard-stem dia.-3418"
		AR				★ D5TZ 6507-B	.003" O/S stem dia.-NR
		AR				D5TZ 6507-C	.015" O/S stem dia.
		AR				E3ZZ 6507-B	.030" O/S stem dia.
						6510	BUSHING (VALVE GUIDE)
	NOTE 1 - Bushing must be reamed to size of valve						
73/		AR				D6AZ 6510-A NOTE 1	Intake and exaust-
						6513	SPRING (VALVE)
73/78	With vlv. r/arm stud	8				C90Z 6513-B	# Red-intake
73/		8				D50Z 6513-A	Exhaust
78/	With vlv. r/arm bolt	8				D8AZ 6513-B	Intake
						6514	RETAINER (VALVE SPRING)
73/		8				D4AZ 6514-A	Intake
73/		8				D30Z 6514-A	Exhaust
73/		AR				B3Q 6515-A	SPACER (VALVE SPRING)-.030" thick 1" I.D.
						6517	SLEEVE (VALVE SPRING RETAINER)
73/		16				D4AZ 6517-A	Intake & Exhaust
73/		32				7HA 6518-A	KEY (VALVE SPRING RETAINER)-# Green
						6524	BAFFLE (VALVE PUSH ROD VALLEY)
73 74 75/	 Without T/E W/o alum. manifold	1 1 1				C20Z 6524-A	
79	W/Alum. manifold	1				D9AZ 6524-A	
73/		2				381709-S	(UU-52-G)-screw (baffle to intake manifold)-hex. hd.-1/4"-20 x 3/8"
						6A527	STUD (VALVE ROCKER ARM SUPPORT)
73/78	With vlv. r/arm stud	16				C90Z 6A527-A	Standard-3/8" dia. x 2 3/4" long-5/16"-24 thread
		AR				C90Z 6A527-B	.006" O/S
		AR				★ C90Z 6A527-C	.010" O/S-N.R.
		AR				★ C90Z 6A527-D	.015" O/S-N.R.

COPYRIGHT © 1986— FORD MOTOR COMPANY —DEARBORN, MICHIGAN

YEAR	MODEL/RESTRICTIONS	QUANTITY 302				PART NUMBER	DESCRIPTION
						6A527	STUD (VALVE ROCKER ARM SUPPORT) — Cont'd
78	With vlv. r/arm bolt	16				D8AZ 6A527-A	Bolt-5/16"-18 x 1.40" hex. hd.
73/78	With vlv. r/arm stud	16				C20Z 6A528-C	SEAT (VALVE ROCKER ARM FULCRUM
78/	With vlv. r/arm bolt	16				E43Z 6A528-A	
73/78	With vlv. r/arm stud	16				D0AZ 6A529-A	NUT (VALVE ROCKER ARM STUD)-5/16"-24
73/		8				C90Z 6550-B	CAP (VALVE STEM EXHAUST)-not req'd. with D2TZ 6505-A,B,C or D valves
						6564	ARM (VALVE ROCKER)
73/78	With vlv. r/arm stud	16				C60Z 6564-B	
78/	With vlv. r/arm bolt	16				D8AZ 6564-A	
						6565	ROD (VALVE PUSH)
73/76		16				C90Z 6565-B	6.905" long-std.
78/	With vlv. r/arm bolt	AR				D00Z 6565-C	.060" U/S
		AR				D00Z 6565-D	.060" O/S
77/78	With vlv. r/arm stud	16				C80Z 6565-A	6.883" long-std.
						6571	SEAL (VALVE STEM)
73/		16				C8SZ 6571-A	
						6582	COVER ASSY. (VALVE ROCKER ARM)
73		1				D20Z 6582-D	R.H.
		1				D5DZ 6582-B	L.H.
74		1				★ D4DZ 6582-A	R.H.-N/R
		1				★ D4DZ 6582-B	L.H.-N/R
75/76	G,P - - M/T	1				D20Z 6582-D	R.H.
75/76 77	G,P - - A/T Calif.	1				D5DZ 6582-B	L.H.
75/76	G,P - - A/T exc. Calif.	1				★ D5DZ 6582-A	R.H.-N.R.
		1				D5DZ 6582-B	L.H.
78/		1				E3AZ 6582-A	R.H.
		1				D84Y 6582-A	L.H.
73/77 78		12 AR				356748-S	(BB-124)-screw & washer (cover to head)-hex. hd. -1/4"-20 x 5/8"
78		AR				387738-S36	(WW-160-C)-Stud (6582 to 6049)-hex shoulder-1/4"-20-20 x 1.42
78		AR				387883-S2	(WW-160-E)-Stud (6582 to 6049)-hex shoulder 1/4"-20 x 1.82
						6584	GASKET (VALVE ROCKER ARM COVER)
73/		2				E3AZ 6584-A	
78/	With vlv. r/arm bolt	8				E5TZ 6A588-A	GUIDE (VALVE ROCKER ARM FULCRUM)
73/		1				C20Z 6600-A	PUMP ASSY. (OIL)-Incl. (1) B8TZ 6626-A gasket
73/		2				42999-S	(B-253)-bolt (pump to block)-hex. slotted hd.-3/8"-16 x 1 1/8"
73/		2				34807-S8	(X-66)-washer-lock-3/8"
73/		1				376099-S	(PP-73-A)-Plug (oil pump body)-cup 3/4"
73/		1				★ B8A 6608-A	ROTOR and SHAFT ASSY. (OIL PUMP DRIVE)-N/R
73/		1				★ B8A 6616-C	PLATE (OIL PUMP BODY) N/R
73/		4				42911-S	(B-41-A)-bolt (plate to pump)-hex. slotted hd.-1/4"-20 x 5/8"

YEAR	MODEL/RESTRICTIONS	QUANTITY 302				PART NUMBER	DESCRIPTION
73/		1				C20Z 6A616-A	PLUG (OIL PUMP RELIEF VALVE)-Cup type-3/8" high x 41/64" and 21/32" O.D.
73/		1				D8AZ 6A618-A	SHAFT ASSY. (OIL PUMP INTERMEDIATE)-7 7/16" long-incl. retaining ring-
73/77		1				C30Z 6622-A	SCREEN, TUBE and COVER ASSY. (OIL PUMP)
78	Exc. P	1					
79	F,G,V	1					
78	P	1				E0SZ 6622-A	
79	A,J,P	1					
73/		2				357235-S	(BB-136)-bolt (screen, tube and cover to pump)-hex. hd.-5/16"-18 x 7/8"
73/		1				B8TZ 6626-A	GASKET (OIL PUMP INLET TUBE)
						6629	RING (OIL PUMP INTERMEDIATE SHAFT RETAINER)
73/		1				D8AZ 6629-A	
						★ 6659	GASKET (OIL PUMP TO BLOCK)-not req'd
						6A664	HOSE (CRANKCASE VENTILATION)-Also refer to groups 6N664 and 6853
73/		AR				C9PZ 6A664-A	*KCV-1-15/32" I.D. x 25 ft. long-cut to fit
73/		AR				C9PZ 6A664-B	*KCV-2-5/8" I.D. x 25 ft. long-cut to fit
73/		AR				D3PZ 6A664-A	*KCV-3-3/8" I.D. x 25 ft. long-cut to fit
76	P,G - - M/T	1				D6ZZ 6A664-A	P.C.V. valve to crankcase vent tube
79	A	1				D9AZ 6A664-B	90°-4.06" Dev. length
73/		1				★6A664	P.C.V. valve to crankcase vent tube-cut to fit from bulk hose (4090)
73/		1				★6N664	HOSE (CRANKCASE VENTILATION)-carburetor to crankcase vent tube-cut to fit from bulk hose (4090)
						6A666	VALVE (POSITIVE CRANKCASE VENTILATION) (P.C.V.)
77/	A/T - - (after 30,000 miles) Exc. Calif.	1				D7AZ 6A666-A	*EV-93- (highflow) - with white plastic collar
73/77	M/T - - Exc. Calif.	1				D90Z 6A666-A	*EV-68-C
	A/T - - (before 30,000 miles) Exc. Calif.	1					
	Calif.	1					
78		1					
79	Exc. A	1					
79	A	1				D9ZZ 6A666-A	*EV-98-B
						★ 6670	SPRING (OIL PUMP RELIEF VALVE)-not repl.
73/		1				★C20Z 6674-A	PLUNGER (OIL PUMP RELIEF VALVE)-N.R.
73/77		1				D00Z 6675-C	PAN ASSY. (OIL)
78	Exc. P	1					
79	F,G,V	1					
79	A	1				D9AZ 6675-A	w/6750 & 6754 in block
79	A,J,P	1				D9BZ 6675-A	w/6750 & 6754 in pan
78	P	1					
73/		4				42847-S7-8	(U-14)-screw and washer(pan to block and cover)-hex. hd.-5/16"-18 x 1"
73/		18				356748-S	(BB-124)-bolt(oil pan to front cover and block)-hex. hd.-1/4"-20 x 5/8"

COPYRIGHT © 1986 — FORD MOTOR COMPANY — DEARBORN, MICHIGAN

YEAR	MODEL/RESTRICTIONS	QUANTITY 302				PART NUMBER	DESCRIPTION
73/78		1				C3AZ 6700-A	SEAL (CYLINDER FRONT COVER OIL)
79		1				D0AZ 6700-A	
						6701	PACKING (CRANKSHAFT REAR)
	◊ When using D4FZ 6701-A, remove pin from main bearing cap						
73/		2				C90Z 6701-A	Rope type
73/		2				D4FZ 6701-A	Split lip type
						6730	PLUG (OIL PAN DRAIN)
73/		1				D6TZ 6730-A	Incl. C20Z 6734-A gasket
						6731	ELEMENT ASSY. (OIL FILTER)
73/		1				D9AZ 6731-A	*FL-1-A
						6734	GASKET (OIL PAN DRAIN PLUG)
73/		AR				C20Z 6734-A	#Nylon-1/2" I.D. x 13/16" O.D. x 5/64" thick
						6750	INDICATOR (OIL LEVEL)
73/75		1				D50Z 6750-B	#D50E-AA
76/77		1				E0DZ 6750-A	#E2FE-AA
78	Exc. P	1					
79	G,F,V	1					
78	P - - "Before 1/3/78"	1				D8BZ 6750-A	#D8BE 6750-AB
78	P - - "From 1/3/78"	1				D9BZ 6750-A	#D9BE 6750-DA-w/6754 in oil pan-repls. D8BE-AC
79	A,J,P	1					
79	A	1				D9AZ 6750-A	#D9BE-6750-BA-w/6754 in block
78	P	1				D8BZ 6751-A	BOSS (OIL LEVEL INDICATOR)
79	J,P	1					
78	P	1				D8BZ 6753-A	GASKET (OIL LEVEL INDICATOR BOSS)
79	J,P	1				D9BZ 6753-A	
73/77		1				D20Z 6754-B	TUBE ASSY. (OIL LEVEL INDICATOR)-Approx. 12 1/4" long
78	Exc. P	1					
79	F,G,V	1					
78	P - - "Before 1/3/78"	1				D8BZ 6754-A	
78	P - - "From 1/3/78"	1				D8BZ 6754-B	Screw - in type - to oil pan
79	A	1					
79	A	1				D9AZ 6754-A	Press - in type - to block
79	J,P	1				D9BZ 6754-A	Screw-in type to oil pan
						6758	TUBE (CRANKCASE VENTILATION)
77	W/compensator	1				★ D7ZZ 6758-B	Does not include 9B532 valve-N.R.
77	W/o compensator	1				★ D7FZ 6758-C	Not replaced
78	W/o compensator	1				D80Z 6758-A	
78	W/compensator	1				★ D8ZZ 6758-A	Does not include 9B532 valve-not replaced
79	F - - M/T Exc. Calif.	1				D9ZZ 6758-A	
79	V	1				D94Y 6758-A	
75/		1				★	Cut to fit from B7Q 2269-A
						6766	CAP ASSY. (OIL FILLER and BREATHER)
73/		1				E3AZ 6766-A	*EC-682
73/		1				C8AZ 6767-B	ELBOW (CRANKCASE VENTILATION HOSE)-90°-5/8"-also refer to group 9600 for air cleaner application

YEAR	MODEL/RESTRICTIONS	QUANTITY 302				PART NUMBER	DESCRIPTION
						6775-6	SHIELD (SPLASH)
78/79	J,P - - "Before 5/1/79"	1				E0BZ 6775-C	R.H. & L.H.-Reset pins when necessary for proper usage
79	J,P - - "From 5/1/79"	2				D9BZ 6775-B	R.H. & L.H.-Reset pins when necessary for proper usage
78 79	P J,P	AR AR				383927-S	(NN-167)-Pin-drive (secure 6775-shield)
						6781	GASKET SET (OIL PAN)
73/		1				D9AZ 6781-A	

Consists of

1-D9ZE 6710-AA	Gasket-R.H.	2-D30E 6723-AA or D30E 6722-AA	Seal (front & rear)
1-D9ZE 6711-AA	Gasket-L.H.	1-C20Z 6734-A	Gasket (oil drain plug)

						6786	BRACKET (OIL LEVEL INDICATOR TUBE)
79	A	1				E1AZ 6786-A	Used w/6754 in block
79	A	1				33924-S8	(M-28)-Nut (secure 6786)-3/8-16 hex.
73/74		1				★D1AZ 6788-A Not replaced	BRACKET (CRANKCASE VENT VALVE HOSE CLIP)
79	V	1				D94Y 6789-B	GASKET (OIL FILLER CAP)
						★6853	HOSE (CRANKCASE VENTILATION)-cut to fit from bulk hose(4090)-also refer to group 6A664
79	V	1				D94Y 6A868-A	ADAPTOR (OIL FILLER)
						6890	INSERT (OIL FILTER MOUNTING BOLT)
73/		1				D7AZ 6890-B	
						6A892	RETAINER (CRANKCASE VENTILATION) Grommet
73/		1				C8AZ 6A892-A	Elbow to rocker arm cover
73/		1				E5TZ 6A892-B	P.C.V. valve to filler cap

COPYRIGHT © 1986— FORD MOTOR COMPANY —DEARBORN, MICHIGAN

YEAR	MODEL/RESTRICTIONS	QUANTITY 351W 2/B	351C 2/B	351M 2/B	351C 4/B	PART NUMBER	DESCRIPTION
						6D000	GASKET SET (TIMING COVER)
73/78		1				E2AZ 6D000-A	
	Consists of						
	1-D9AZ 6020-A	Gasket (frt cvr)				1-D30E 6722-AA	Seal (oil pan)
	1-C3AZ 6700-A	Seal (crankshaft frt)				or D30E 6723-AA	
	1-E2AJ 6710-AA	Gasket (oil pan R.H.)				1-D9AZ 8507-A	Gasket (water pump)
	1-E2AJ 6711-AA	Gasket (oil pan L.H.)				1-C3AZ 9417-C	Gasket (fuel pump)
	1-IS 5169	Instruction Sheet					
79		1				E2AZ 6D000-B	
	Consists of						
	1-D9AZ 6020-A	Gasket (frt cvr)				1-D30E 6722-AA	Seal (oil pan)
	1-D0AZ 6700-A	Seal (crankshaft frt)				or D30E 6723-AA	
	1-E2AJ 6710-AA	Gasket (oil pan R.H.)				1-D9AZ 8507-A	Gasket (water pump)
	1-E2AJ 6711-AA	Gasket (oil pan L.H.)				1-C3AZ 9417-C	Gasket (fuel pump)
	1-IS 5169	Instrustion sheet					
75/79				1		E2AZ 6D000-C	
	Consists of						
	1-D6AZ 6020-A	Gasket (frt cvr)				1-D2SZ 8507-A	Gasket (water pump)
	1-D0AZ 6700-A	Seal (crankshaft frt)				1-D7AZ 8513-A	Gasket (water pump cvr)
	1-D0AE 6723-A	Seal (oil pan R.H.)				1-D0AZ 9417-A	Gasket (fuel pump)
	or D0AE 6723-B					1-IS 5169	Instruction sheet
						6007	ENGINE ASSY.Current production engine assemblies may be ordered from the local parts distribution center by furnishing the engine code from the vehicle certification label or the identification tag number that is attached to the exterior of the engine assembly
						6008	GASKET SET (COMPLETE OVERHAUL)- also see 6E078 and 6079
73/		4	4	4	4	C20Z 6A008-A	DOWEL (CYLINDER HEAD TO CYLINDER BLOCK)
76/		1		1		D6AZ 6D008-A	Heater kit (cylinder block)
	Consists of						
	1-D6AJ 6B018-AA	Wire assy.				4-D6AJ 14197-AA	Clip
	1-E0AZ 6A051-A	Heater assy.					
	1-D4AB 6A056-AA	Cap					
						6009	CYLINDER ASSY.-Incl. cylinder block with all internal parts of the engine but does not incl. cylinder heads, tappets, oil pan or cylinder front cover unless indicated
73/78		1				★ D70Z 6009-A	N.R.
79	A	1				D9AZ 6009-A	
79	F	1				D9SZ 6009-A	
73/74			1			★ D4AZ 6009-B	N/R-use details
75/78				1		D9TZ 6009-K	May req. D9TZ 8513-A
79	F - - Exc. Hi Alt.			1		D90Z 6009-A	
79	F - - Hi Alt.			1		D90Z 6009-B	
73/74					1	★ D3ZZ 6009-A	N/R-use details
74/		2				351418-S	(UU-136)-Reducer (for thermactor holes in head)-5/8"-11 x 7/16"-14 x 1 1/8"
74/		2				376301-S	(PD-67-A)-plug (cyl. head thermactor holes)-1/2" pipe

COPYRIGHT © 1986 — FORD MOTOR COMPANY — DEARBORN, MICHIGAN

YEAR	MODEL/RESTRICTIONS	QUANTITY 351W 2/B	351C 2/B	351M 2/B	351C 4/B	PART NUMBER	DESCRIPTION
						6010	△BLOCK ASSY. (CYLINDER)
△	6015 is a casting number and generally cannot be cross-referenced to a service number. It will be used as a means of identification only when casting number is unique to one 6010 assembly.						
73/78		1				★D50Z 6010-A	N.R.
79		1				D9UZ 6010-A	
73/74			1			★D0AZ 6010-C	2 bolt M.B. cap-can repl. 4 bolt M.B. cap block-N/R
73/74					1	★D1ZZ 6010-D Not repl.	4 bolt M. B. cap-use D0AZ-6010-C for 2 bolt M.B. cap block
75/				1		E0TZ 6010-B	
75/				1		D7TZ 6B018-A	WIRE ASSY. (BLOCK HEATER)
						6019	COVER ASSY. (CYLINDER FRONT)- Also refer to group 6B070
73/	W/o EEC	1				E0AZ 6019-B	For use on Past mdl., Position sensor brkt. must be rmvd. by grinding to level on timing pointer att. holes
79	W/EEC	1				E4AZ 6019-C	For use on Past mdl., Position sensor brkt. must be rmvd. by grinding to level on timing pointer att. holes Must also install E0AZ 6316-A Damper Assy. For Serv.
73/		4				56526-S2	(B-319-M)-bolt (cover and pointer to block)- hex. washer hd.-5/16"-18 x 2"
73/		2				376256-S	(BB-545-A)-bolt (cover to block)-hex washer hd.- 5/16"-18 x 7/8"
73/78		2				300958-S	(B-13-B)-bolt (front cover and pump to block)- 5/16"-25 x 5"
79/		2				388192-S	(NN-124-E)-pin (frt. cvr. to block)-1/2" O.D- 7/16" I.D. x 9/16" long-split dowel
						6020	GASKET (CYLINDER FRONT COVER)
73/		1				D9AZ 6020-A	
73/			1	1	1	D6AZ 6020-A	
						6023	POINTER (TIMING)
73/	A,C,F,G,	1				C9TZ 6023-A	
79	A	1				★D9AZ 6023-A	#D9OE-6M025-BA-Not repl.
73/74 75/77 78	Exc. Calif. Without A/C-Calif. Exc. Calif.		1	 1 1	1	D3AZ 6023-A	
73/74 75/76 77	Calif. Without A/C-exc. Calif. Exc. Calif.		1	 1 1	1	★D3AZ 6023-B	Not repl.
75/76	With A/C-exc. Calif.			1		★D5AZ 6023-A	Not replaced
75/76	With A/C-Calif.			1		★D5AZ 6023-B	Not replaced
77/	Calif.			1		D7AZ 6023-B	
74/76		2				384039-S	(WW-135-B)-stud (pointer to front cover)- 5/16"-18-18 x 3 1/8"
73 74/			3 1	 3	3 3	56121-S	(B-319-K)-bolt (pointer and cover to block)- hex. hd.-5/16"-18 x 1 1/4"
74/			2	2		377833-S	(WW-96)-stud (pointer and cover to block)- 5/16"-18 x 1 5/8"
77		2				387822-S	(WW-135-F)-stud (pointer & front cover to block)-5/16"-18-18 x 3.50"
73			2	2	2	385153-S36	(WW-155-D)-Stud (6023 & 6B070 to 6010) -5/16"-18 x 1.80"
						6A023	SUPPORT ASSY. (REAR)
75/77	G	1				★D5BZ 6A023-A	Not replaced
						6026	PLUG (ENGINE)
73/		10	6	6	6	D7AZ 6026-A	(cleanout holes in head and block)-1 1/2" O.D.
		AR	AR	AR	AR	C8AZ 6026-D	.060" O/S
73/			2	2	2	C8SZ 6026-A	(oil gallery in block)-5/8"-18
73/		3				87837-S	(P-15)-plug (drain holes and front oil gallery in block)-pipe-1/4"-18 x 27/64"

YEAR	MODEL/RESTRICTIONS	QUANTITY 351W 2/B	351C 2/B	351M 2/B	351C 4/B	PART NUMBER	DESCRIPTION
						6026	PLUG (ENGINE) — Cont'd
73/		4				353055-S7	(PP-29)-plug (main oil gallery and pressure holes) -pipe-1/4"-18 x 1/2"
73/		1				376099-S	(PP-73-A)-plug (rear hole in block)-cup type-3/4"
73/		2				376301-S	(PP-67-A)-plug (front main oil gallery) and (cyl. block oil passages)-cup type-1/2"
74/			2	2			Used to plug thermactor holes in head
73/		6	6	6	6	371485-S	(PP-48-A)-plug (core cleanout holes)-hex. C" sunk-3/4"-14 x 17/32"
73/			3	3	3	87710-S	(P-16)-plug (oil gallery holes)-pipe-hex. C" sunk-3/8"-18 x 15/32"
73	F		1		1	★ D3ZZ 6A027-A	SPACER (REAR SUPPORT INSULATOR)
						6028-9	BRACKET (FRONT SUPPORT)
73	A,Y		1			★ C9AZ 6028-D	R.H.-not replaced
			1			★ C9AZ 6029-D	L.H.-not replaced
75/	Y			1		D3AZ 6028-B	R.H.
78	A			1		D3AZ 6029-C	L.H.
75	G	1				★ D5DZ 6028-A	R.H.-not replaced
		1				★ D5DZ 6029-A	L.H.-not replaced
76/77	G	1				D6DZ 6028-A	R.H.
		1				D6DZ 6029-B	L.H.
77	V	1				D84Y 6028-A	R.H.
		1				D6DZ 6029-B	L.H.
79	A	1				D9AZ 6028-B	R.H. & L.H.
						6038	INSULATOR (FRONT SUPPORT)
73/74	A,Y		2	2		D7AZ 6038-A	R.H. & L.H.
79	A	1				D9AZ 6038-A	R.H.
79		1				D9AZ 6038-B	L.H.
73	F(65)		2		2	D3ZZ 6038-A	R.H. & L.H.
73	F(76)		2		2	★ D3ZZ 6038-B	R.H. & L.H.-N.R.
74/76	C,F	1	1		1	D70Z 6038-C	R.H.
73	C	1	1		1	D70Z 6038-D	L.H.
77/	F	1				D70Z 6038-C	R.H.
		1				D70Z 6038-D	L.H.
75/76	C,F			1		★ D70Z 6038-E	R.H.-r/b D8LY-A (11/85)
77/	F			1		D70Z 6038-F	L.H.
75	G	1				★ D5DZ 6038-E	R.H.-N/R
		1				D5DZ 6038-F	L.H.
76/77	G	1				D6DZ 6038-A	R.H.
		1				D6DZ 6038-B	L.H.
77	V	1				★ D74Y 6038-A	R.H.-r/b D8DZ-A (11/85)
		1				D74Y 6038-B	L.H.
75/76	Y			1		D5AZ 6038-C	R.H.
77/	A			1		D5AZ 6038-D	L.H.
						6C038	SHIELD (MOTOR MOUNT HEAT)
74/77	C,F "Before 10/1/76"	1	1	1	1	★ D40Z 6C038-A	L.H.-not used R.H. side-N.R.
77/	F - - "From 10/1/76"	1				★ D70Z 6C038-A	L.H.-not used on R.H. side-N.R.
75/	Y			1		★ D4AZ 6C038-B	L.H.-N.R.
78	A			1			
76	G	1				★ D6DZ 6C038-A	L.H.-N.R.
						6A042	REINFORCEMENT (REAR SUPPORT)
73	C		1		1	D00Z 6A042-A	R.H.
			1		1	D00Z 6A042-C	L.H.
73	C		2		2	★ D20Z 6047-A Not repl.	BOLT (FRONT SUPPORT INSULATOR)- (to No. 2 cross member)-hex. hd.-3/8"-16 x 5"

COPYRIGHT © 1986— FORD MOTOR COMPANY —DEARBORN, MICHIGAN

YEAR	MODEL/RESTRICTIONS	QUANTITY 351W 2/B	351C 2/B	351M 2/B	351C 4/B	PART NUMBER	DESCRIPTION
						6049	△HEAD (CYLINDER)
△	6090 is a casting number and generally cannot be cross referenced to a service number. It will be used as a means of identification only when casting number is unique to only one 6049 assembly.						
73/74		2				★ D10Z 6049-B	Without valves-N.R.
75/78		2				D70Z 6049-B	Without valves - w/cast iron 6564
75/78		2				★ D70Z 6049-D	W/valves-r/b details
78		2				E5TZ 6049-D	W/o valves - used w/stamped steel 6564
78		2				D9TZ 6049-B	W/valves - used w/stamped steel 6564
79		2				E5TZ 6049-D	w/o valves
79	A - - w/EEC	2				E5TZ 6049-J	Complete with valves
79	Exc. A w/EEC	2				D9TZ 6049-B	Complete with valves
73			2			★ D1AZ 6049-D	Complete with valves-N.R.-use details
75/ 73/74			2	2		D5AZ 6049-B	Without valves-incl. (2) 376301-S plugs
74			2			★ D5AZ 6049-C	Use w/(2) 376301-S
75/78				2		-NR	Complete with valves
79				2		★ D90Z 6049-A	Complete w/valves-N.R.
73/74					2	★ D3ZZ 6049-A	Without valves-N.R.
74/		2	2	2		376301-S	(PP-67-A)-plug(thermactor holes in head)-1/2" cup
74/		2	2	2		351418-S	(UU-136)-insert(plug thermactor holes in head)-5/8"-11 x 7/16"-14 x 1 1/8"
						6051	GASKET (CYLINDER HEAD)
73/		2				D70Z 6051-C	
73/			2	2		D4AZ 6051-A	
73/74					2	D3ZZ 6051-A	
						6A051	HEATER ASSY. (BLOCK)
75/		1		1		E0AZ 6A051-A	600 watt
73	A,Y		1			D7AZ 6054-A	RETAINER (REAR SUPPORT)
74/		1	1	1	1	★ D4AZ 6A056-A	CAP (CYLINDER BLOCK HEATER)-r/b CEH-117
						6065	BOLT (CYLINDER HEAD)
73/		10				C90Z 6065-A	1/2"-13 x 2 1/2"
73/		10				C90Z 6065-B	1/2"-13 x 4"
73/			20	20	20	D0AZ 6065-A	1/2"-13 x 4 5/16"
						6068	INSULATOR ASSY. (REAR SUPPORT)
73	A,Y		1			D4AZ 6068-B	
74	Y - - FMX						
75/	Y			1		D5AZ 6068-B	
78	A			1			
79	A	1				D9AZ 6068-A	
73	C - - M/T and C4	1	1			D50Z 6068-A	
74/76	C,F - - C4	1		1			
73	F - - C6,FMX		1		1	★ D3ZZ 6068-C	N.R.
73	F - - M/T				1	D3DZ 6068-A	
73	C - - C6,FMX	1	1		1	D50Z 6068-B	
74	C,F - - C6 & FMX	1	1		1		
75/76	C,F - - C6 & FMX	1		1			
75/77	G	1				D6DZ 6068-A	
77/	F	1		1		E0LZ 6068-A	
77	V	1				★ D74Y 6068-A	R/b D3DZ-B (11/85)
77	G	2				387921-S2	(BB-416-BC)-bolt (6068 to trans. ext.) - hex. flange hd. - 1/2" x 13 x 1.37
						6B070	PLATE (CYLINDER FRONT COVER)
73/			1	1	1	D6AZ 6B070-A	
73/			2	2	2	382127-S2	(UU-52-AE)-bolt & washer (plate to pump)-hex.hd -5/16"-18 x 1 1/4"
73			3		3	56121-S	(B-319-K)-bolt (cover and pointer to block)-
74/			1	3	3		hex. hd.-5/16"-18 x 7/8"

YEAR	MODEL/RESTRICTIONS	QUANTITY 351W 2/B	351C 2/B	351M 2/B	351C 4/B	PART NUMBER	DESCRIPTION
73/		1	1	1	1	D6AZ 6E072-A	LABEL (BUILD CODE & INFORMATION)- also refer to Serv. Bulletin #155
						6E078	GASKET SET (ENGINE LOWER)
73/77		1				★ D5PZ 6E078-P	R/b D5PZ 6E078-AD (11/85)

Consists of

1-C20Z 6020-A	Gasket (front cover)	1-D30E 6723-BA	Seal (oil pan rear)
1-B8TZ 6626-A	Gasket (oil inlet tube)	1-C20Z 6734-A	Gasket (drain plug)
1-C3AZ 6700-A	Seal (front cover)	2-C5AZ 8507-B	Gasket (water pump)
2-C90Z 6701-A	Seal (crankshaft rear)	1-C5AZ 8513-A	Gasket (water pump cover)
1-C90E 6710-C	Gasket (oil pan R.H.)	1-D0AZ 8513-A	Gasket (water pump cover)
1-C90E 6711-C	Gasket (oil pan L.H.)	1-C3AZ 9417-C	Gasket (intake manifold)
1-D30E 6722-AA	Seal (oil pan front)		

78		1				D5PZ 6E078-AD	

Consists of

1-C20Z 6020-A	Gasket (frt. cover)	1-D30E 6722-AA	Seal (oil pan frt.)
1-E0AZ 6626-A	Gasket (oil inlet tube)	1-D30E 6723-BA	Seal (oil pan rr)
1-C3AZ 6700-A	Seal (front cover	1-C20Z 6734-A	Gasket (drail plug)
2-D00Z 6701-A	Seal (crankshaft rear)	1-D9AZ 8507-A	Gasket (water pump)
1-C90E 6710-C	Gasket (oil pan RH)	1-D7AZ 8513-A	Gasket (water pump cvr.)
1-C90E 6711-C	Gasket (oil pan LH)	1-C5AZ 8513-A	Gasket (water pump cvr.)
		1-C3AZ 9417-C	Gasket (fuel pump)

79		1				D9AZ 6E078-D	

Consists of

1-E3AZ 6020-A	Gasket (front cover)	1-D30E 6723-BA	Seal (oil pan rear)
1-E0AZ 6626-A	Gasket (oil inlet tube)	2-C20Z 6734-A	Gasket (drain plug)
1-D0AZ 6700-A	Seal (front cover)	2-E2ZZ 8507-A	Gasket (water pump)
2-D00Z 6701-A	Seal (crankshaft rear)	1-D7AZ 8513-A	Gasket (water pump cover)
1-E3TE 6710-CA	Gasket (oil pan R.H.)	1-D9AZ 8513-A	Gasket (water pump cover)
1-E3TE 6711-CA	Gasket (oil pan L.H.)	1-C3AZ 9417-C	Gasket (intake manifold)
1-D30E-6722-AA	Seal (oil pan front)		

73/			1	1	1	D6PZ 6E078-E	

Consists of

1-D6AZ 6020-A	Gasket (front cover)	2-D0AE 6723-B	Seal (oil pan front)
1-D0AZ 6700-A	Seal (front cover)	1-C20Z 6734-A	Gasket (drain plug)
2-D00Z 6701-A	Seal (crankshaft rear)	1-D2SZ 8507-A	Gasket (water pump)
1-D0AE 6710-B	Gasket (oil pan R.H.)	1-D7AZ 8513-A	Gasket (water pump cover)
1-D0AE 6711-B	Gasket (oil pan L.H.)	1-D0AZ 9417-A	Gasket (fuel pump)

						6079	GASKET SET (VALVE GRIND)
73/74		1				D4AZ 6079-C	

Consists of

2-D70Z 6051-C	Gasket (cyl. head)	▲1-D10Z 9A424-B	Seal (intake manifold)
16-D60Z 6571-A	Seal (valve stem)	▲1-D10Z 9A425-B	Seal (intake manifold)
2-D0AZ 6584-B	Gasket (rocker cover)	▲2-C90E 9439-B	Gasket (intake manifold)
1-C9AZ 8255-A	Gasket (water outlet)		▲ Serviced in D1AZ 9433-C

75/ 79		1 1				D9AZ 6079-B	

Consists of

2-D70Z 6051-C	Gasket (cyl. head)	1-C9AZ 8255-A	Gasket (water outlet)
16-D60Z 6571-A	Seal (valve stem)	▲1-E3TE 9A424-AA	Seal (intake manifold)
2-E3AZ 6584-A	Gasket (rocker cover)	▲1-E3TE 9A425-AA	Seal (intake manifold)
		▲2-E4TE 9439-AA	Gasket (intake manifold)
			▲Also serviced in D9AZ-9433-A

COPYRIGHT © 1986— FORD MOTOR COMPANY —DEARBORN, MICHIGAN

YEAR	MODEL/RESTRICTIONS	QUANTITY 351W 2/B	351C 2/B	351M 2/B	351C 4/B	PART NUMBER	DESCRIPTION
						6079	GASKET SET (VALVE GRIND) — Cont'd
73/74			1			D00Z 6079-A	

Consists of
2-D4AZ 6051-A Gasket (cyl. head)
16-D0AZ 6571-A Seal (valve stem)
2-D00Z 6584-A Gasket (rocker cover)
1-C8SZ 8255-A Gasket (water outlet)
▲2-D0AE 9A424-C Seal (intake manifold)
▲1-D0AE 9D440-B Gasket and cover assy.
▲ Serviced in D0AZ 9433-B

75/				1		D7AZ 6079-A	

Consists of
2-D4AZ 6051-A Gasket (cyl. head)
6-D7AZ-6571-A Seal (valve stem)
2-D00Z 6584-A Gasket (rocker arm cover)
1-C8SZ 8255-A Gasket (water outlet)
▲ 2-D1AE 9A425-AA Seal (intake manifold)
▲ 1- D5AE 9C484-AC Gasket and cover assy.
▲ Also Serviced in D5AZ-9433-A

73/74					1	D40Z 6079-B	

Consists of
2-D3ZZ 6051-A Gasket (cyl. head)
16-E3TZ 6571-A Seal (valve stem)
2-D00Z 6584-A Gasket (rocker cover)
1-C8SZ 8255-A Gasket (water outlet)
▲2-D0AE 9A424-C Seal (intake manifold)
▲ Serviced in D0AZ 9433-A

						6108	PISTON ASSY. (incl. pin)-red and blue size are optional for select fit
73/78		8				D9AZ 6108-G	Standard (red)
		AR				D9AZ 6108-H	Std. (blue)
		AR				D9AZ 6108-J	.003 O/S
		AR				D9AZ 6108-KB	.020 O/S
		AR				D9AZ 6108-LB	.030 O/S
		AR				D9AZ 6108-MB	.040 O/S
79		8				D9AZ 6108-G	Std.(red)
		AR				D9AZ 6108-H	Std.(blue)
		AR				D9AZ 6108-J	.003 O/S
		AR				D9AZ 6108-KB	.020 O/S
		AR				D9AZ 6108-LB	.030 O/S
		AR				D9AZ 6108-MB	.040 O/S
73/74			8		8	★ D3AZ 6108-N	Standard(red)-N.R.
			AR		AR	★ D3AZ 6108-R	Standard(blue)-N/R
			AR		AR	★ D3AZ 6108-S	.003" O/S N/R
			AR		AR	★ D3AZ 6108-T	.020" O/S-N.R.
			AR		AR	D3AZ 6108-UB	.030" O/S
			AR		AR	★ D3AZ 6108-V	.040" O/S-N.R.

YEAR	MODEL/RESTRICTIONS	QUANTITY 351W 2/B	351C 2/B	351M 2/B	351C 4/B	PART NUMBER		DESCRIPTION
							6108	PISTON ASSY. (incl. pin)-red and blue size — Cont'd are optional for select fit
75/				8		D5AZ	6108-A	Standard (red)
				AR		★ D5AZ	6108-B	Standard (blue)-r/b D5AZ-BB (11/85)
				AR		D5AZ	6108-C	.003" O/S
				AR		D5AZ	6108-DB	.020" O/S
				AR		D5AZ	6108-EB	.030" O/S
				AR		D5AZ	6108-FB	.040" O/S
							6135	PIN (PISTON)
73/		8	8		8	B2AZ	6135-A	#Green-.600" I.D.
		8	8		8	B2AZ	6135-B	.001" O/S
75/				8		C6AZ	6135-A	
							6148	RING SET (PISTON PARTIAL)-consists of the necessary rings to re-ring (2) pistons
73/		4	4	4	4	C3AZ	6148-F	Standard
		AR	AR	AR	AR	C3AZ	6148-G	.020" O/S
		AR	AR	AR	AR	C3AZ	6148-H	.030" O/S
		AR	AR	AR	AR	C3AZ	6148-J	.040" O/S
							6200	ROD ASSY. (CONNECTING)
73/		8				D5UZ	6200-A	
73/74			8		8	D0AZ	6200-A	
75/				8		D1AZ	6200-A	
							6211	BEARING (CONNECTING ROD)
73/		16				C90Z	6211-A	Standard-upper and lower
		AR				C90Z	6211-B	.001" U/S
		AR				C90Z	6211-C	.002" U/S
		AR				C90Z	6211-D	.010" U/S
		AR				C90Z	6211-E	.020" U/S
		AR				C90Z	6211-F	.030" U/S
73/			16	16		D0AZ	6211-A	Standard-upper and lower
			AR	AR		D0AZ	6211-B	.001" U/S
			AR	AR		D0AZ	6211-C	.002" U/S
			AR	AR		D0AZ	6211-D	.010" U/S
			AR	AR		D0AZ	6211-E	.020" U/S
			AR	AR		D0AZ	6211-F	.030" U/S
73/74					16	D1ZZ	6211-A	Standard-upper and lower
					AR	★ D1ZZ	6211-B	.001" U/S-N.R.
					AR	★ D1ZZ	6211-C	.002" U/S-N.R.
					AR	★ D1ZZ	6211-D	.010" U/S-N.R.
					AR	★ D1ZZ	6211-E	.020" U/S-N.R.
					AR	★ D1ZZ	6211-F	.030" U/S-N.R.
73/		16	16	16	16	C9AZ	6212-B	NUT (CONNECTING ROD)-3/8"-24-hex.
							6214	BOLT (CONNECTING ROD)
73/74		16				C8SZ	6214-A	3/8"-24 x 2 3/16"
75/		16				C9AZ	6214-B	3/8"-24 x 2 3/16"
73/74			16		16	D0AZ	6214-A	3/8"-24 x 2 5/16"
75/				16		D1AZ	6214-A	3/8"-24 x 2 1/2"
							6250	CAMSHAFT
73/75		1				D30Z	6250-A	
76/		1				D60Z	6250-C	
73			1			★ D3AZ	6250-A	#CR-N.R.
79	F - - Exc. Hi Alt.			1		D4AZ	6250-A	#CW w/reverse C
74/78			1	1		D4AZ	6250-B	#CR w/reverse C
79	F - - Hi Alt.			1				
73/74					1	D2ZZ	6250-B	#BV
79	A - - w/Hang-on A/C w/o EEC	1				D9AZ	6B250-A	SPACER (ACCESSORY DRIVE)

COPYRIGHT © 1986— FORD MOTOR COMPANY —DEARBORN, MICHIGAN

YEAR	MODEL/RESTRICTIONS	QUANTITY 351W 2/B	351C 2/B	351M 2/B	351C 4/B	PART NUMBER	DESCRIPTION
						6A251	BEARING KIT (CAMSHAFT)
73/		1				C20Z 6A251–A	Standard size
	Consists of 1–C20Z 6261–A Front 1–C20Z 6262–A Center					1–C20Z 6263–A Rear 1–C20Z 6267–A Front intermediate	1–C20Z 6270–A Rear intermediate 1–C20Z 6266–A Plug
73/			1	1	1	D0AZ 6A251–A	Standard size
	Consists of 1–D0AZ 6261–E Front 1–C20Z 6262–A Center					1–C20Z 6263–A Rear 1–C20Z 6267–A Front intermediate	1–C20Z 6270–A Rear intermediate 1–C5AZ 6266–B Plug
						6256	SPROCKET (CAMSHAFT)
73/		1				D3AZ 6256–B	42 tooth
73/			1	1		D3AZ 6256–A	36 tooth
73/74					1	D0AZ 6256–A	36 tooth
73/		1				378189–S	(NN–54–J)–pin(sprocket and eccentric to camshaft)–dowel–5/16" x 1 3/8"
73/			1	1	1	73328–S	(N–87–B)–pin(sprocket and eccentric to camshaft)–dowel–5/16" x 1 1/8"
						6261	BEARING (CAMSHAFT FRONT)
73/		1				C20Z 6261–A	Standard I.D. and O.D.
		AR				C20Z 6261–B	.015" U/S I.D.–standard O.D.
73/			1	1	1	D0AZ 6261–E	Standard I.D. and O.D.
			AR	AR	AR	D0AZ 6261–F	.015"U/S I.D.–standard O.D.
						6262	BEARING (CAMSHAFT CENTER)
73/		1	1	1	1	C20Z 6262–A	Standard I.D. and O.D.
		AR	AR	AR	AR	C20Z 6262–B	.015"U/S I.D.–standard O.D.
						6263	BEARING (CAMSHAFT REAR)
73/		1	1	1	1	C20Z 6263–A	Standard I.D. and O.D.
		AR	AR	AR	AR	C20Z 6263–B	.015" U/S I.D.–standard O.D.
						6266	PLUG (CAMSHAFT REAR BEARING)
73/		1				C20Z 6266–A	Standard–2.156" O.D.–cup shaped
		1				C5AZ 6266–A	.060" O/S
73/			1	1	1	C5AZ 6266–B	
						6267	BEARING (CAMSHAFT FRONT INTERMEDIATE)
73/		1	1	1	1	C20Z 6267–A	Standard I.D. and O.D.
		AR	AR	AR	AR	C20Z 6267–B	.015" U/S I.D.–standard O.D.
						6268	CHAIN (TIMING)
73/		1				C30Z 6268–A	58 links
73/			1	1		D3AZ 6268–A	48 links
73/74					1	D0AZ 6268–A	48 links
						6269	PLATE (CAMSHAFT THRUST)
73/		1				C90Z 6269–A	Standard–.251" thick
		AR				C90Z 6269–B	.002" O/S
		AR				C90Z 6269–C	.004" O/S
73/			1	1	1	C8SZ 6269–A	
73/		2				42911–S	(B–41–A)–bolt(plate to block)–hex. slotted hd.–1/4"–20 x 5/8"
						6270	BEARING (CAMSHAFT REAR INTERMEDIATE)
73/		1	1	1	1	C20Z 6270–A	Standard I.D. and O.D.
		AR	AR	AR	AR	C20Z 6270–B	.015" U/S I.D.–standard O.D.
73/		1	1	1	1	C20Z 6278–A	WASHER (CAMSHAFT SPROCKET)–13/32" I.D. x 1 13/64" O.D. x 7/32" thick

YEAR	MODEL/RESTRICTIONS	QUANTITY 351W 2/B	351C 2/B	351M 2/B	351C 4/B	PART NUMBER	DESCRIPTION
						6287	ECCENTRIC (CAMSHAFT FUEL PUMP DRIVE)
73/		1				D0AZ 6287-A	Outer
		1				D5AZ 6287-B	Inner
73/			1	1	1	D0AZ 6287-A	Outer
			1	1	1	D0AZ 6287-B	Inner
73/		1				43002-S	(B-257)-bolt (eccentric and sprocket to camshaft)-hex. slotted hd.-3/8"-16 x 1/2"
73/			1	1	1	20522-S8	(B-89)-bolt (eccentric and sprocket to camshaft)-hex. hd.-3/8"-16 x 2"
73/		1	1	1	1	C0DZ 6A302-A	PIN (CRANKSHAFT REAR OIL SEAL)
						6303	CRANKSHAFT ASSY.
73/		1				D9AZ 6303-C	#7MA
73/74			1		1	★ D2AZ 6303-A	#4MA-N/R
75/				1		D7AZ 6303-A	Must be used w/1977 main brgs. (6333 & 6337)
						6306	SPROCKET (CRANKSHAFT)
73/		1				D50Z 6306-A	21 tooth-slinger not req'd.
73/			1	1		D5AZ 6306-A	Slinger not req'd.
73/74					1	C8SZ 6306-A	18 tooth
73/		1	1	1	1	372854-S	(LL-11)-key (sprocket to crankshaft)-7/32" x 1 3/4" x 3/16"
						6310	SLINGER (CRANKSHAFT OIL)
73/		1				C30Z 6310-B	
73/74			1	1	1	D0AZ 6310-A	
						6A312	PULLEY ASSY. (CRANKSHAFT OUTER)-Also refer to pulley I.D. chart section 60
	▲ Can be used to service single, double or triple sheave pulleys						
73/	With dealer installed A/C	1	1	1	1	D2AZ 6A312-E	Single Sheave
							▲DOUBLE SHEAVE
75/77	G - - without P/S and A/C	1				D4TZ 6A312-B	Ident. D3AE 6312-BA
79	A - - w/o A/C	1				E0AZ 6A312-C	#E0AE 6312-CA-repls. D9AE 6312-BB
							▲ TRIPLE SHEAVE
73/74	Without T/E-with P/S, idler pulley or A/C				1	★ D20Z 6A312-A N.R.	#D20E 6312- AA or BA-also used to service pulley ident. D1ZE 6312-CA
79	A - - w/A/C	1				E0AZ 6A312-D	#E0AE-BA repls. #E0AE 6312-CB
79	D,K			1			
							▲ FOUR SHEAVE
73/74	Without T/E,P/S, idler pulley or A/C	1	1		1	D5DZ 6A312-A	#D3DE 6312-AA-also used to service pulley ident. D0OE 6312B-C,D1ZE 6312-AA,B,C
77	With P/S	1					D0ZE 6312-B , D0AE 6312-C
77	A,F - - w/o T/E			1			
74	T/E		1			D4AZ 6A312-A	#D3AE 6312-C1A,C2A-used to service pulleys ident. D3AE 6312-AA,EA or D60E 6312-BA
75/76	C,F	1		1			
75/77	G - - with P/S without A/C	1					
77	A,F - - w/T/E	1					
78/	F - - A/C	1		1			
77/	A - - w/ or w/o A/C w/T/E			1		D7AZ 6A312-A	#D7AE 6312-AA-repl. D7AE-BA 3 sheave
76	G - - with A/C and P/S	1				D60Z 6A312-A	#D60E 6312-AA
77	G,V - - with A/C	1					
75/76	Y			1		D5MY 6A312-B	#D5ME 6312-AA
79		1				D9AZ 6C315-A	SENSOR ASSY. (CRANKSHAFT TIMING)
						6316	DAMPER ASSY. (CRANKSHAFT)-Also refer to pulley I.D. chart section 60
73/78		1				D2AZ 6316-A	
79	Exc. A	1					
79	A	1				D9AZ 6316-C	#D9AE 6316-BB-has 6.489" dia. pulse ring
79	A - - w/EEC	1				E0AZ 6316-A	#E0AE 6316-FA-has 6.289" dia. pulse ring
73/74			1			D2AZ 6316-B	

COPYRIGHT © 1986— FORD MOTOR COMPANY —DEARBORN, MICHIGAN

YEAR	MODEL/RESTRICTIONS	QUANTITY 351W 2/B	351C 2/B	351M 2/B	351C 4/B	PART NUMBER	DESCRIPTION
						6316	DAMPER ASSY. (CRANKSHAFT) — Cont'd Also refer to pulley I.D. chart section 60
75/77	C,F			1		D5AZ 6316-A	#D5AE 6316-AA, BA
75/77	Y - - w/or w/o integral A/C			1			
77/	A/T			1			
75/	Y - - w/hang-on A/C			1		D5AZ 6316-B	#D5AE 6316-CA,DA
78	M/T			1		D7TZ 6316-A	
73/74					1	D1ZZ 6316-A	
73/		1	1	1	1	377850-S	(BB-273-A)-bolt (damper and washer to crankshaft)-hex. hd.-5/8"-18 x 2"
73/		1	1	1	1	372854-S	(LL-11)-key (damper to crankshaft)-7/32" x 1 3/4" x 3/16"

ENGINE BEARING APPLICATION CHART

YEAR	C.I.D.	SIZE	UPPER	LOWER	PART NUMBER FRONT	FRONT INTERMEDIATE	CENTER	REAR INTERMEDIATE	REAR
6333 and 6337 BEARING (CRANKSHAFT MAIN)									
73/	351M 351W	Std.	X		D7AZ 6333-A	D7AZ 6333-A	E1TZ 6337-A	D7AZ 6333-A	D7AZ 6333-A
		.001" U/S	X		D7AZ 6333-B	D7AZ 6333-B	D1AZ 6337-B	D7AZ 6333-B	D7AZ 6333-B
		.002" U/S	X		D7AZ 6333-C	D7AZ 6333-C	D1AZ 6337-C	D7AZ 6333-C	D7AZ 6333-C
		.010" U/S	X		D7AZ 6333-D	D7AZ 6333-D	E1TZ 6337-B	D7AZ 6333-D	D7AZ 6333-D
		.020" U/S	X		D7AZ 6333-E	D7AZ 6333-E	D1AZ 6337-E	D7AZ 6333-E	D7AZ 6333-E
		.030" U/S	X		D7AZ 6333-F	D7AZ 6333-F	D1AZ 6337-F	D7AZ 6333-F	D7AZ 6333-F
73/	351M 351W	Std.		X	D7AZ 6333-G	D7AZ 6333-G	E1TZ 6337-A	D7AZ 6333-G	D7AZ 6333-G
		.001" U/S		X	D7AZ 6333-H	D7AZ 6333-H	D1AZ 6337-B	D7AZ 6333-H	D7AZ 6333-H
		.002" U/S		X	D7AZ 6333-J	D7AZ 6333-J	D1AZ 6337-C	D7AZ 6333-J	D7AZ 6333-J
		.010" U/S		X	D7AZ 6333-K	D7AZ 6333-K	E1TZ 6337-B	D7AZ 6333-K	D7AZ 6333-K
		.020" U/S		X	D7AZ 6333-L	D7AZ 6333-L	D1AZ 6337-E	D7AZ 6333-L	D7AZ 6333-L
		.030" U/S		X	D7AZ 6333-M	D7AZ 6333-M	D1AZ 6337-F	D7AZ 6333-M	D7AZ 6333-M
73/74	351C 2/B,4/B	Std.-	x	x	D1ZZ 6333-A	D1ZZ 6333-A	D1ZZ 6337-A	D1ZZ 6333-A	D1ZZ 6333-A
		.001"			★D1ZZ 6333-B	★D1ZZ 6333-B	★D1ZZ 6337-B	★D1ZZ 6333-B	★D1ZZ 6333-B
		.002"			★D1ZZ 6333-C	★D1ZZ 6333-C	★D1ZZ 6337-C	★D1ZZ 6333-C	★D1ZZ 6333-C
		.010"			D1ZZ 6333-D	D1ZZ 6333-D	★D1ZZ 6337-D	D1ZZ 6333-D	D1ZZ 6333-D
		.020"			D1ZZ 6333-E	D1ZZ 6333-E	★D1ZZ 6337-E	D1ZZ 6333-E	D1ZZ 6333-E
		.030"			★D1ZZ 6333-F	★D1ZZ 6333-F	★D1ZZ 6337-F	★D1ZZ 6333-F	★D1ZZ 6333-F

YEAR	MODEL/RESTRICTIONS	QUANTITY 351W 2/B	351C 2/B	351M 2/B	351C 4/B	PART NUMBER	DESCRIPTION
						6345	BOLT (CRANKSHAFT MAIN BEARING CAP)
73/		10				C1AE 6345-B	Hex. hd.-1/2"-13 x 3 1/2"
79	A	1				D6TZ 6345-A	Stud 3/8"-16-1/2"-13 x 4.70
73/			10	10	10	D0AZ 6345-B	Hex. hd.-1/2"-13 x 3 1/4
73/74					10	★C9AZ 6345-A	3/8"-16 x 1 3/4"-N.R.
73		1	1		1	C20Z 6A366-A	PLATE (FLYWHEEL REINFORCING)

YEAR	MODEL/RESTRICTIONS	QUANTITY 351W 2/B	351C 2/B	351M 2/B	351C 4/B	PART NUMBER	DESCRIPTION
						6375	FLYWHEEL ASSY.
73/74	C4 and C/M	1	1			E0AZ 6375-A	
75/	C4, C/M	1					
75/	C4, C/M			1		D3AZ 6375-A	
73/74	C6	1	1			D1ZZ 6375-A	
79	C6	1					
75/	C6			1		D1AZ 6375-A	
73/74	M/T				1	D7TZ 6375-C	#C7TE-A-on eng. side-164 tooth ring gear
73/74	A/T				1	D1ZZ 6375-C	
73/		1	1	1	1	B8A 6378-A	WASHER (CRANKSHAFT PULLEY RETAINING)-43/64" I.D. x 1 3/4" O.D. x 7/32" thick
						6379	BOLT (FLYWHEEL TO CRANKSHAFT)
73/74	M/T				6	B8AZ 6379-A	7/16"-20 x 15/16"
73/	A/T	6	6	6	6	D2AZ 6379-B	7/16"-20 x 3/4"-used without 6A366 plate
73/74	M/T				1	C5AZ 6384-D	GEAR (FLYWHEEL RING)-164 tooth
						6392	HOUSING ASSY. (FLYWHEEL)
73/74	M/T				1	D1TZ 6392-D	Incl. drilled hole at boss
73/74	M/T				2	20470-S8	(B-107)-bolt(housing to block)-7/16"-14 x 1 1/2"
73/74	M/T				6	34848-S8	(X-75)-washer(housing to block)-spring-7/16"
73/74	M/T				4	376275-S7-8	(BB-181-A)-bolt(housing to block)-hex. hd.-7/16"-14 x 2 3/8"
73/		2	2	2	2	EAD 6397-A	DOWEL (CYLINDER BLOCK)-to flywheel housing-1/2" x 1"
75/77				1		D1AZ 6411-A	SEAL (REAR COVER PLATE)
73/74	M/T				1	C40Z 6424-A	SEAL (REAR COVER PLATE)-4 1/4" I.D. x 5 3/4" O.D.
						6500	TAPPET ASSY. (VALVE)
73/		16	16	16	16	D9HZ 6500-A	Hydraulic
						6505	VALVE (EXHAUST)
73/74		8				D2AZ 6505-A	Standard-stem dia.-.3414"
		AR				★ D2AZ 6505-B	.003" O/S stem dia.-N/R
		AR				★ D2AZ 6505-C	.015" O/S stem dia.-N.R.
		AR				★ D2AZ 6505-D	.030" O/S stem dia.-N/R
75/76		8				D5TZ 6505-A	Standard-stem dia.-.342"
		AR				★ D5TZ 6505-B	.003" O/S stem dia.-not replaced (2/81)
		AR				★ D5TZ 6505-C	.015" O/S stem dia.-N.R.
		AR				★ D5TZ 6505-D	.030" O/S stem dia.-N/R
77/		8				D8TZ 6505-J	Std. stem dia. .3414"-used w/stamped steel 6564
		AR				E2AZ 6505-B	.015" O/S stem dia.-used w/stamped steel 6564
		AR				D8TZ 6505-L	.0300/S stem dia.-used w/stamped steel 6564
73/77			8	8		D5AZ 6505-A	Standard-stem dia.-3415"
			AR	AR		D5AZ 6505-C	.015" O/S stem dia.
			AR	AR		★ D5AZ 6505-D	.030" O/S stem dia.-N.R.
78/				8		D8TZ 6505-E	
				AR		D8TZ 6505-F	
				AR		D8TZ 6505-G	
				AR		D8TZ 6505-H	
73/74					8	★ D3AZ 6505-A	Standard-stem dia.-.3415"-N/R
					AR	★ D3AZ 6505-B	.003" O/S stem dia.-NR (11/79)
					AR	★ D3AZ 6505-C	.015" O/S stem dia.-N/R
					AR	D3AZ 6505-D	.030" O/S stem dia.

COPYRIGHT © 1986 — FORD MOTOR COMPANY — DEARBORN, MICHIGAN

YEAR	MODEL/RESTRICTIONS	QUANTITY 351W 2/B	351C 2/B	351M 2/B	351C 4/B	PART NUMBER	DESCRIPTION
						6507	VALVE (INTAKE)
73/74		8				D2AZ 6507-A	Standard-stem dia.-.3419"
		AR				★ D2AZ 6507-B	.003" O/S stem dia.-N.R.
		AR				★ D2AZ 6507-C	.015" O/S stem dia.-N.R.
		AR				★ D2AZ 6507-D	.030" O/S stem dia.-N.R.
75/		8				E3ZZ 6507-A	Standard-stem dia.-.342"
		AR				★ D5TZ 6507-B	.003" O/S stem dia.-N.R.
		AR				D5TZ 6507-C	.015"O/S stem dia.
		AR				D5TZ 6507-D	.030" O/S stem dia.
73/78			8	8		★ D0AZ 6507-E	Standard-stem dia.-.3420"-r/b Mult. repl. Mat. 8072
			AR	AR		★ D0AZ 6507-F	.003" O/S stem dia. - NR
			AR	AR		★ D0AZ 6507-G	.015" O/S stem dia.-r/b (1) D9TZ 6507-B, (2) 7HA 6518-A & (1) D00Z 6514-A
			AR	AR		★ D0AZ 6507-H	.030" O/S stem dia.-r/b (1) D9TZ 6507-C, (2) 7HA 6518-A & (1) D00Z 6514-A
79				8		D9TZ 6507-A	Std.-stem dia.-.3423"
				AR		D9TZ 6507-B	.015-O/S stem dia.
				AR		D9TZ 6507-C	.030 O/S stem dia.
73/74					8	★ D3AZ 6507-A	Standard-stem dia.-.3415"-N/R
					AR	★ D3AZ 6507-B	.003" O/S stem dia.-NR
					AR	★ D3AZ 6507-C	.015" O/S stem dia.-N/R
					AR	★ D3AZ 6507-D	.030" O/S stem dia. - NR
						6510	BUSHING (VALVE GUIDE)
NOTE 1-	Bushing must be reamed to size of valve						
73/		AR				D6AZ 6510-A NOTE 1	Intake and exhaust-.313" I.D. x 2 19/64" long x .501" O.D.
73/			AR	AR	AR		Exhaust
73/			AR	AR	AR	D6AZ 6510-B NOTE 1	Intake-.313" I.D. x 2 13/32" x .501" O.D.
						6513	SPRING (VALVE)
73/76		16				D00Z 6513-B	Intake
77/78		8				D00Z 6513-B	Intake - w/cast iron 6564
77/		8				D50Z 6513-A	Exhaust
78/		8				D8AZ 6513-B	Intake - w/stamped steel 6564
73/77			16	16		D1AZ 6513-A	
78/				8			Intake
78/				8		D8AZ 6513-A	Exhaust
73/74					16	C90Z 6513-E	
						6514	RETAINER (VALVE SPRING)
73/76		16				D4AZ 6514-A	Intake and exhaust
77/		8					Exhaust
77/		8				D30Z 6514-A	Intake
73/77			16	16	16	D9FZ 6514-A	Intake and exhaust
78				8			Intake
78/				8		D8AZ 6514-A	Exhaust
79				8		D00Z 6514-A	Intake
73/		AR	AR	AR	AR	B3Q 6515-A	SPACER (VALVE SPRING) -.030" thick 1" I.D.
73/		16				D4AZ 6517-A	SLEEVE (VALVE SPRING RETAINER)
						6518	KEY (VALVE SPRING RETAINER)
73/		32				7HA 6518-A	
78				16			Exhaust
79				32			
73/77			32	32	32	D0AZ 6518-A	
78				16			Intake
						6524	BAFFLE (VALVE PUSH ROD VALLEY)
73/78		1				D50Z 6524-A	
79	Exc. A	1					
79	A	1				D9AZ 6524-B	
73/			16	16	16	D1AZ 6524-A	BAFFLE (VALVE ROCKER ARM OIL)

YEAR	MODEL/RESTRICTIONS	QUANTITY 351W 2/B	351C 2/B	351M 2/B	351C 4/B	PART NUMBER		DESCRIPTION
							6A527	STUD (VALVE ROCKER ARM SUPPORT)
73/		16				C90Z	6A527-A	Standard-5/16"-24 x 2 3/4"
		AR				C90Z	6A527-B	.006" O/S
		AR				C90Z	6A527-D	.015" O/S
							6A527	BOLT (VALVE ROCKER ARM SUPPORT)
73/			16	16	16	D3AZ	6A527-A	Hex. hd.-5/16"-18 x 1 3/8"
78/		16				D8AZ	6A527-A	Hex. hd.-5/16"-18 x 1.40"-used w/stamped steel 6564
							6A528	SEAT (VALVE ROCKER ARM FULCRUM)
73/78		16				C20Z	6A528-C	W/cast iron 6564
73/76			16	16	16	E43Z	6A528-B	
77/				16				
78/		16						W/stamped steel 6564
73/		16				D0AZ	6A529-A	NUT (VALVE ROCKER ARM STUD)-hex.-5/16"-24
77/		8				C90Z	6550-B	CAP (VALVE STEM EXHAUST)
							6564	ARM (VALVE ROCKER)
73/78		16				C60Z	6564-B	Cast iron
78/		16				D8AZ	6564-A	Stamped steel
73/			16	16	16	D8AZ	6564-B	Stamped Steel
							6565	ROD (VALVE PUSH)
73/76		16				C90Z	6565-A	8.17" long-std.
		AR				C90Z	6565-C	.060" O/S
		AR				C90Z	6565-D	.060" U/S
77/78		16				D70Z	6565-A	8.18" long-used w/cast iron 6564
78/		16				D8AZ	6565-A	8.205" long-used w/stamped steel 6564
73/74			16		16	D0AZ	6565-A	8.43" long-std.
			AR		AR	D0AZ	6565-B	.062" U/S
			AR		AR	D0AZ	6565-C	.062" O/S
75/				16		D1AZ	6565-A	Standard-9.51" long
				AR		D1AZ	6565-B	.060" O/S
				AR		D1AZ	6565-C	.060" U/S
							6571	SEAL (VALVE STEM)-Intake and exhaust
73/		16				D60Z	6571-A	Use w/std. and .003" O/S valves
73/		16				C8SZ	6571-A	Use w/.015" and .030" O/S valves
73/74			16			D0AZ	6571-A	Use with all size valves
75/				16				Use with .015" O/S and .030" O/S valves only
75/79	'Before 5/2/79"			16		D7AZ	6571-A	Use w/std. and .003" O/S valves
79	'From 5/1/79"			8				Intake
79	'From 5/1/79"			8		D90Z	6571-A	Exhaust
73/74					16	D3TZ	6571-A	#D3TE-AA-11/16" high x 7/8" O.D.-std.
					AR	C8SZ	6571-A	.015" O/S & .0300/S
							6582	COVER ASSY. (VALVE ROCKER ARM)
73/74		1				D20Z	6582-D	R.H.
		1				D5DZ	6582-B	L.H.
75	"Before 1/13/75"	1				D20Z	6582-D	R.H.
		1				D5UZ	6582-B	L.H.
75/78	"From 1/13/75 to 11/1/77"	1				E3AZ	6582-A	R.H.-w/cast iron 6564
		1				D8UZ	6582-B	L.H.-w/cast iron 6564
78/79	"From 11/1/77"	1				E3AZ	6582-A	R.H.-w/stamped steel 6564
		1				D84Y	6582-A	L.H.-w/stamped steel 6564

COPYRIGHT © 1986— FORD MOTOR COMPANY —DEARBORN, MICHIGAN

YEAR	MODEL/RESTRICTIONS	QUANTITY 351W 2/B	351C 2/B	351M 2/B	351C 4/B	PART NUMBER	DESCRIPTION
						6582	COVER ASSY. (VALVE ROCKER ARM) — Cont'd
73/			1	1	1	D7AZ 6582-A	R.H.
			1	1	1	D7AZ 6582-B	L.H.
73 74/		11 12				356748-S	(BB-124)-bolt(cover to head)-hex. hd.-1/4"-20 x 5/8"
73 74/			15 16	16	16 16	373071-S7	(BB-554-M)-screw & washer(cover to head)-hex. hd.-1/4"-20 x 5/8"
73		1	1			383210-S	(WW-128-A)-stud & washer(distributor modulator valve and cover to head)-1/4"-20 x 1 1/2"
						6584	GASKET (VALVE ROCKER ARM COVER)
73/		2				E3AZ 6584-A	
73/			2	2	2	D00Z 6584-A	
78/		8				E5TZ 6A588-A	GUIDE (VALVE ROCKER ARM FULCRUM) - stamped steel
						6600	PUMP ASSY. (OIL)
73/		1				D9AZ 6600-A	
73/			1	1	1	D0AZ 6600-B	Less screen and cover
73/		2				20448-S2	(B-82)-bolt(pump to block)-hex. hd.-3/8"-16 x 1 1/4"
73/		2				34807-S8	(X-66)-washer-3/8 lock
73/			2	2	2	42999-S	(B-253)-bolt(pump to block)-hex. slotted hd.-3/8"-16 x 1 1/4"
73/		1	1	1	1	C8SZ 6608-A	ROTOR and SHAFT ASSY. (OIL PUMP DRIVE)
73/		1	1	1	1	★ B8A 6616-C	PLATE (OIL PUMP BODY)-N/R
73/		4	4	4	4	42911-S	(B-41-A)-bolt(cover plate to body)-hex. slotted hd. 1/4"-20 x 5/8"
						6A616	PLUG (OIL PUMP RELIEF VALVE)
73/		1				C90Z 6A616-A	
						6A618	SHAFT ASSY. (OIL PUMP INTERMEDIATE)
73/		1				D9AZ 6A618-A	
73/			1	1	1	D0AZ 6A618-A	8 7/16" long-incl retaining ring
						6622	SCREEN, TUBE and COVER ASSY. (OIL PUMP)
73/78 79	 F	1 1				D7AZ 6622-A	
79	A	1				D9AZ 6622-B	
73/			1	1	1	D1AZ 6622-A	
73/		2				357235-S	(BB-136)-bolt(screen, tube and cover to pump)-hex. hd.-5/16"-18 x 7/8"
73/		1				B8TZ 6626-A	GASKET (OIL PUMP INLET TUBE)
73/		1	1	1	1	C4TZ 6629-A	RING (OIL PUMP INTERMEDIATE SHAFT RETAINER)
						★6659	GASKET (OIL PUMP TO BLOCK)-not required
						6A664	HOSE (CRANKCASE VENTILATION)-Also refer to groups 6N664 and 6853
73/		AR	AR	AR	AR	C9PZ 6A664-A	*KCV-1-15/32" I.D. x 25 ft. long-cut to fit
73/		AR	AR	AR	AR	C9PZ 6A664-B	*KCV-2-5/8" I.D. x 25 ft. long-cut to fit
73/		AR	AR	AR	AR	D3PZ 6A664-A	*KCV-3 3/8" I.D. x 25 ft. long-cut to fit
79	A	1				D9AZ 6A664-C	
73/ 73/74 76/		 1 1	1	1	1	★6A664	(P.C.V. valve to crankcase vent tube)-cut to fit from bulk hose(4090)

YEAR	MODEL/RESTRICTIONS	QUANTITY 351W 2/B	351C 2/B	351M 2/B	351C 4/B	PART NUMBER	DESCRIPTION
						6A664	HOSE (CRANKCASE VENTILATION) — Cont'd also refer to groups 6N664 and 6853
75		1				D5DZ 6A664-A	P.C.V. valve to crankcase vent tube
73/74		1	1		1	★6N664	HOSE (CRANKCASE VENTILATION)- carburetor to crankcase vent tube-cut to fit from bulk hose (4090)
						6A666	VALVE (POSITIVE CRANKCASE VENTILATION) (P.C.V.)
74/76			1	1	1	D8TZ 6A666-A	*EV-77-B
77/78		1		1		D7AZ 6A666-A	*EV-93-High flow
73		1	1		1		
74/76		1					
77/78		1		1		D90Z 6A666-A	*EV-68-C
79				1			
79	A - - w/EEC	1					
79	A - - w/o EEC over 30,000 miles	1					
79	A - - w/o EEC	1				D9ZZ 6A666-A	*EV-98-B
79	F	1					
						6670	SPRING (OIL PUMP RELIEF VALVE)
73/		1				C90Z 6670-A	
73/			1	1	1	★C5AZ 6670-A	N/R
73/		1	1	1	1	★C5AZ 6674-A	PLUNGER (OIL PUMP RELIEF VALVE)-N/R
						6675	PAN ASSY. (OIL)
73/	Exc. A	1				D50Z 6675-A	
73/76			1	1		D7AZ 6675-A	
73/74					1		
77/				1			
79	A	1				D9AZ 6675-C	
73/		4				357235-S	(BB-136)-bolt (pan to front and block)-hex. hd.-5/16"-18 x 7/8"
73/		18				356748-S	(BB-124)-bolt (pan to front cover and block)-hex. hd.-1/4"-20 x 5/8"
73/			4	4	4	372995-S	(BB-545-AA)-bolt (pan to front cover and block)-hex. washer hd.-5/16"-18 x 3/4"
73/			16	16	16	373071-S7	(BB-554-M)-bolt (pan to block)-hex.hd. w/lockwasher-1/4"-20 x 5/8"
						6700	SEAL (CYLINDER FRONT COVER OIL)
73/78		1				C3AZ 6700-A	
73/			1	1	1	D0AZ 6700-A	
79		1					
						6701	PACKING (CRANKSHAFT REAR)
73/		2	2	2	2	C90Z 6701-A	Rope type
73/		2	2	2	2	D00Z 6701-A	Split-lip type
						6710-1	Supplied in 6781 gasket set only
						6723	Supplied in 6781 gasket set only
						6730	PLUG (OIL PAN DRAIN)
73/		1	1	1	1	D6TZ 6730-A	Incl. (1) C20Z 6734-A gaskets
						6731	ELEMENT ASSY. (OIL FILTER)
73/		1	1	1	1	C1AZ 6731-A	*FL-1-"spin-on"-3/4"-16 female threads
						6734	GASKET (OIL PAN DRAIN PLUG)
73/		1	1	1	1	C20Z 6734-A	#Nylon-1/2" I.D. x 13/16" O.D. x 5/64" thick
						6750	INDICATOR (OIL LEVEL)
73/75		1				D50Z 6750-B	

COPYRIGHT © 1986— FORD MOTOR COMPANY —DEARBORN, MICHIGAN

YEAR	MODEL/RESTRICTIONS	QUANTITY 351W 2/B	351C 2/B	351M 2/B	351C 4/B	PART NUMBER	DESCRIPTION
						6750	INDICATOR (OIL LEVEL) — Cont'd
76/	Exc. A	1				E0DZ 6750-A	
79	A	1				D9AZ 6750-B	#D9AE-6750-AB
75/				1		D5AZ 6750-B	20" top of shield to safe
73/75			1	1	1		20 19/32" top of shield to add 1
						6754	TUBE ASSY. (OIL LEVEL INDICATOR)
73/	Exc. A	1				D10Z 6754-B	Approx. 11 7/8" long-incl. bracket
79	A	1				D9AZ 6754-B	Incl. brkt. & fitting
73/74			1		1	D0AZ 6754-B	Approx. 18 1/4" long-incl. bracket
75/				1		D1AZ 6754-A	
73/		1				20314-S8	(B-98)-bolt (tube to alternator bracket)-hex. hd.-7/16"-14 x 1/2"
73/			1	1	1	87031-S91	(T-1-DA)-"O" ring (base of tube)-3/8" I.D.
						6758	TUBE (CRANKCASE VENTILATION)
73		1				D3AZ 6758-A	
74	Without T/E	1					
78		1				★D80Z 6758-B	Not replaced
74/	T/E	1				★	Cut to fit from B7Q 2269-A
73/74			1			★D3AZ 6758-B	N/R
75/				1		★	Cut to fit from B7Q 2269-A
						6766	CAP ASSY. (OIL FILLER and BREATHER)
73/75		1	1	1	1	D1ZZ 6766-A	*EC-508-Chrome-optional with Black cap
76/		1				E3AZ 6766-A	*EC-682-repls. *EC-672
73/75		1	1	1	1		
76/					1		
73/	C,F	1	1	1	1	C8AZ 6767-B	ELBOW (CRANKCASE VENTILATION HOSE)-90°-5/8"-also refer to group 9600
73/74	A,Y		1			D1TZ 6767-A	NIPPLE (CRANKCASE VENTILATION HOSE)
79		1		1			
						6781	GASKET SET (OIL PAN)
73/		1				•D0AZ 6781-C	

Consists of
1-C90E 6710-C Gasket-R.H.
1-C90E 6711-C Gasket-L.H.
1-D30E 6722-AA Seal (front)
1-E3AE 6723-BA Seal (rear)
1-C20Z 6734-A Gasket (drain plug)

73/			1	1	1	D0AZ 6781-D	

Consists of
1-D0AE 6710-B Gasket-L.H.
1-D0AE 6711-B Gasket-L.H.
2-D0AE 6723-A Seal (front & rear)
or
2-D0AE 6723-B
1-C20Z 6734-A Gasket (drain plug)

73/74		1	1		1	★D1AZ 6788-A	BRACKET (CRANKCASE VENT VALVE HOSE CLIP)
77/		1		1		Not replaced	
						6789	GASKET (OIL FILLER CAP)
73/		1	1	1	1	D94Y 6789-B	
						★6853	HOSE (CRANKCASE VENTILATION)-cut to fit from bulk hose (4090) -also refer to group 6A664
						6890	INSERT (OIL FILTER MOUNTING BOLT)
73/		1	1	1	1	D7AZ 6890-B	
						6A892	RETAINER (CRANKCASE VENTILATION)-Grommet
73/		1	1	1	1	E5TZ 6A892-B	(P.C.V. valve to oil filler cap)
73/		1	1	1	1	C8AZ 6A892-A	(Elbow to rocker arm cover)

YEAR	MODEL/RESTRICTIONS	QUANTITY 400				PART NUMBER	DESCRIPTION
						6D000	GASKET SET (TIMING COVER)
75/79		1				E2AZ 6D000-C	
	Consists of						
	1-D6AZ 6020-A	Gasket (frt cvr)				1-D2SZ 8507-A	Gasket (water pump)
	1-D0AZ 6700-A	Seal (crankshaft frt)				1-D7AZ 8513-A	Gasket (water pump cvr)
	1-D0AE 6723-A	Seal (oil pan R.H.)				1-D0AZ 9417-A	Gasket (fuel pump)
	or D0AE 6723-B					1-IS 5169	Instruction sheet
						6007	ENGINE ASSY.–Current production engine assemblies may be ordered from the local parts distribution center by furnishing the engine code from the vehicle certification label or the identification tag number that is attached to the exterior of the engine assembly
						6008	GASKET (COMPLETE OVERHAUL) – refer to 6E078 and 6079
73/		4				C20Z 6A008-A	DOWEL (CYLINDER HEAD TO CYLINDER BLOCK)
76/		1				D6AZ 6D008-A	Heater kit (cylinder block)
	Consists of						
	1-D6AJ 6B018-AA	Wire assy				4-D6AJ 14197-AA	Clip
	1-E0AZ 6A051-A	Heater assy.					
	1-D4AB 6A056-AA	Cap					
						6009	CYLINDER ASSY.–Incl. cylinder block with all internal parts of the engine but does not include cylinder heads, tappets, oil pan or cylinder front cover–unless indicated
73/		1				D9VY 6009-A	
						6010	BLOCK ASSY. (CYLINDER)
73/74		1				★ D1AZ 6010-A	N/R (8/79)
75/		1				E0TZ 6010-B	
75/		1				D7TZ 6B018-A	WIRE ASSY. (BLOCK HEATER)
						6020	GASKET (CYLINDER FRONT COVER)
73/		1				D6AZ 6020-A	
						6023	POINTER (TIMING)
73/74	Exc. Calif.	1				D3AZ 6023-A	
75/76	Without A/C–exc. Calif.	1					
77/	Exc. Calif.	1					
73/74	Calif.	1				★ D3AZ 6023-B	
75/76	Without A/C–Calif.	1				NR(12/78)	
75/76	With A/C–exc. Calif.	1				★ D5AZ 6023-A	N/R
75/76	With A/C–Calif.	1				★ D5AZ 6023-B	N/R
77/	Calif.	1				D7AZ 6023-B	
73		2				385153-S36	(WW-155-D)-Stud (6023 & 6B070 to 6010) 5/16"-18-5/16"-18 x 1.80
						6026	PLUG (ENGINE)
73/		6				D7AZ 6026-A	(Core holes in block or head)-1 1/2" O.D.-steel
		AR				C8AZ 6026-D	.060" O/S
73/		2				C8SZ 6026-A	(Oil gallery in front of block)-5/8"-18
73/		2				87837-S	(P-15)-plug(water drain holes)-pipe-hex. "C" sunk-1/4"-18 x 27/64"
73/		3				87710-S	(P-16)-plug(oil passages)-pipe-hex. "C" sunk-3/8"-18 x 15/32"
73/		6				371485-S	(PP-8-A)-plug(core holes in head)-hex. "C" sunk-3/4"-14 x 17/32"
74/	T/E	2				376301-S	(PP-67-A)-plug(cyl. head)-1/2"

COPYRIGHT © 1986 — FORD MOTOR COMPANY — DEARBORN, MICHIGAN

YEAR	MODEL/RESTRICTIONS	QUANTITY 400				PART NUMBER	DESCRIPTION
						6028-9	BRACKET (FRONT SUPPORT)
73/	A,Y	1				D3AZ 6028-B	R.H.
		1				D3AZ 6029-C	L.H.
77/	D	1				★ D7VY 6028-A	R.H.-N.R.
		1				★ D7VY 6029-A	L.H.-N.R.
						6038	INSULATOR (FRONT SUPPORT)
73/	A,Y	1				D5AZ 6038-C	R.H.
		1				D5AZ 6038-D	L.H.
77/79	K	1				D8LY 6038-A	R.H.
		1				D9LY 6038-B	L.H.
77/78	F	1				★ D70Z 6038-E	R.H.-r/b D8LY-A (11/85)
74/76	C,F	1				D70Z 6038-F	L.H.
73	C						
77/	D	1				D7VY 6038-A	R.H.
		1				D7VY 6038-B	L.H.
74/76	A - - T/E	1				D4AZ 6C038-B	SHIELD (MOTOR MOUNT HEAT)-L.H.
77/	A,D	1					
						6A042	REINFORCEMENT (REAR SUPPORT)
73	C	1				D00Z 6A042-A	R.H.
		1				D00Z 6A042-C	L.H.
73	C	2				★ D20Z 6047-A Not repl.	BOLT (FRONT SUPPORT INSULATOR)-to No. 2 c/member-hex.head-3/8"-16 x 5"
77/	D,F,K	2				D70Z 6047-A	
						6049	HEAD (CYLINDER)
75/		2				D5AZ 6049-B	Without valves
73/74		2					
73/78		2				★ D5AZ 6049-C	Complete with valves-NR-use details
79		2				D90Z 6049-A	Complete with valves
74/		2				351418-S	(UU-136)-insert(plug for thermactor holes in head)-5/8"-11 x 7/16"-14 x 1 1/8"
						6051	GASKET (CYLINDER HEAD)
73/		2				D4AZ 6051-A	
						6A051	HEATER ASSY. (BLOCK)
75/		1				E0AZ 6A051-A	
73/	A,Y	1				D7AZ 6054-A	RETAINER (REAR SUPPORT)
74/		1				★ D4AZ 6A056-A	CAP (CYLINDER BLOCK HEATER)-r/b CEH-117
73/		20				D0AZ 6065-A	BOLT (CYLINDER HEAD)-1/2"-13 x 4 5/16"
79	D		1			D9BZ 6A066-A	SPACER (FRONT SUPPORT INSULATOR)-R.H.
						6068	INSULATOR ASSY. (REAR SUPPORT)
73/	A,Y	1				D5AZ 6068-B	
73/76	C,F	1				D50Z 6068-B	
77/	F	1				E0LZ 6068-A	
77/	K	1				D6SZ 6068-A	
77/	D	2				D5VY 6068-A	
						6B070	PLATE (CYLINDER FRONT COVER)
73/		1				D6AZ 6B070-A	
73/		3				56121-S	(B-319-K)-bolt(plate to block)-hex.washer hd.-5/16"-18 x 7/8"
73		4				372995-S13	(BB-545-AA)-screw & washer(plate to block)-hex. head-5/16"-18 x 3/4"
74/		4				42789-S8	(U-10)-screw & washer(plate to block)-hex. hd.-5/16"-18 x 3/4"
73/		1				D6AZ 6E072-A	LABEL (BUILD CODE & INFORMATION)-also refer to Serv. Bulletin #155

YEAR	MODEL/RESTRICTIONS	QUANTITY 400				PART NUMBER	DESCRIPTION
						6E078	GASKET SET (ENGINE LOWER)
73/		1				D6PZ 6E078-E	
	Consists of						
	1-D6AZ 6020-A	Gasket (front cover)				2-D0AE 6723-B	Seal (oil pan front)
	1-D0AZ 6700-A	Seal (front cover)				1-C20Z 6734-A	Gasket (drain plug)
	2-D00Z 6701-A	Seal (crankshaft rear)				1-D2SE 8507-A	Gasket (water pump)
	1-D0AE 6710-B	Gasket (oil pan R.H.)				1-D7AZ 8513-A	Gasket (water pump cover)
	1-D0AE 6711-B	Gasket (oil pan L.H.)				1-D0AZ 9417-A	Gasket (fuel pump)
						6079	GASKET SET (VALVE GRIND)
73		1				D1AZ 6079-A	
	Consists of						
	2-D4AZ 6051-A	Gasket (cyl. head)				1-C8SZ 8255-A	Gasket (water outlet)
	16-D0AZ 6571-A	Seal (valve stem)				▲2-D1AE 9A425-AA	Seal (intake manifold)
	2-D00Z 6584-A	Gasket (rocker cover)				▲1-D1AE 9D440-AA	Gasket and cover assy.
						▲ Also serviced in D1AZ 9433-A	
74		1				★ D4AZ 6079-A	Not repl.
	Consists of						
	2-D4AZ 6051-A	Gasket (cyl. head)				1-C8SZ 8255-A	Gasket (water outlet)
	16-D0AZ 6571-A	Seal (valve stem)				▲2-D1AE 9A425-AA	Seal (intake manifold)
	2-D00Z 6584-A	Gasket (rocker cover)				▲1-D4AE 9C484-BB	Gasket and cover assy.
						▲ Also serviced in D4AZ 9433-B	
75/		1				D7AZ 6079-A	
	Consists of						
	2-D4AZ 6051-A	Gasket (cyl. head)				1-C8SZ 8255-A	Gasket (water outlet)
	6-D7AZ-6571-A	Seal (valve stem)				▲ 2-D1AE 9A425-AA	Seal (intake manifold)
	2-D00Z 6584-A	Gasket (rocker arm cover)				▲ 1- D5AE 9C484-AC	Gasket and cover assy.
							▲ Also Serviced in D5AZ-9433-A

COPYRIGHT © 1986— FORD MOTOR COMPANY —DEARBORN, MICHIGAN

YEAR	MODEL/RESTRICTIONS	QUANTITY 400				PART NUMBER		DESCRIPTION
							6108	PISTON ASSY. (Incl. pin)-red and blue size are optional for select fit
73/		8				D3AZ	6108-G	Standard(red)
		AR				D3AZ	6108-H	Standard(blue)
		AR				D3AZ	6108-J	.003" O/S
		AR				D3AZ	6108-KB	.020" O/S
		AR				D3AZ	6108-LB	.030" O/S
		AR				D3AZ	6108-MB	.040" O/S
73/		8				C6AZ	6135-A	PIN (PISTON)
							6148	RING SET (PISTON PARTIAL)-consists of the necessary rings to re-ring(2)pistons
73/		4				C3AZ	6148-F	Standard
		AR				C3AZ	6148-G	.020" O/S
		AR				C3AZ	6148-H	.030" O/S
		AR				C3AZ	6148-J	.040" O/S
73/		8				D1AZ	6200-A	ROD ASSY. (CONNECTING)
							6211	BEARING (CONNECTING ROD)
73/		16				D0AZ	6211-A	Standard-upper and lower
		AR				D0AZ	6211-B	.001" U/S
		AR				D0AZ	6211-C	.002" U/S
		AR				D0AZ	6211-D	.010" U/S
		AR				D0AZ	6211-E	.020" U/S
		AR				D0AZ	6211-F	.030" U/S
73/		16				C9AZ	6212-B	NUT (CONNECTING ROD)-hex.-3/8"-24 x 1/2"
73/		16				D1AZ	6214-A	BOLT (CONNECTING ROD)-3/8"-24 x 2 1/2"
							6250	CAMSHAFT
73/		1				D4AZ	6250-A	#CV or BU
73/		1				D0AZ	6A251-A	BEARING KIT (CAMSHAFT)-standard

Consists of

1-D0AZ 6261-E	Front	1-C20Z 6263-A	Rear	1-C20Z 6267-A	Front (intermediate)
1-C20Z 6262-A	Center	1-C5AZ 6266-B	Plug	1-C20Z 6270-A	Rear (intermediate)

73/		1				D3AZ	6256-A	SPROCKET(CAMSHAFT)-36 tooth
73/		1				73328-S		(N-87-B)-pin(sprocket & eccentric to camshaft)-dowel-5/16" x 1 1/8"
							6261	BEARING (CAMSHAFT FRONT)
73/		1				D0AZ	6261-E	Standard I.D. and O.D.
		AR				D0AZ	6261-F	.015" U/S I.D.-Standard O.D.
							6262	BEARING (CAMSHAFT CENTER)
73/		1				C20Z	6262-A	Standard I.D. and O.D.
		AR				C20Z	6262-B	.015" U/S I.D.-standard O.D.
							6263	BEARING (CAMSHAFT REAR)
73/		1				C20Z	6263-A	Standard I.D. and O.D.
		AR				C20Z	6263-B	.015" U/S I.D.-Standard O.D.
73/		1				C5AZ	6266-B	PLUG (CAMSHAFT REAR BEARING)-bearing hole in block-2 1/4"
							6267	BEARING (CAMSHAFT FRONT INTERMEDIATE)
73/		1				C20Z	6267-A	Standard I.D. and O.D.
		AR				C20Z	6267-B	.015" U/S I.D.-standard O.D.
73/		1				D3AZ	6268-A	CHAIN (TIMING)-48 links
73/		1				C8SZ	6269-A	PLATE (CAMSHAFT THRUST)
							6270	BEARING (CAMSHAFT REAR INTERMEDIATE)
73/		1				C20Z	6270-A	Standard I.D. and O.D.
		AR				C20Z	6270-B	.015" U/S I.D.-standard O.D.
73/		1				C20Z	6278-A	WASHER (CAMSHAFT SPROCKET)

YEAR	MODEL/RESTRICTIONS	QUANTITY 400				PART NUMBER	DESCRIPTION
						6287	ECCENTRIC (CAMSHAFT FUEL PUMP DRIVE)
73/		1				D0AZ 6287-A	Outer
		1				D0AZ 6287-B	Inner
73/		1				20522-S8	(B-89)-bolt(eccentric to camshaft)-hex. head-3/8"-16 x 2"
73/		1				C0DZ 6A302-A	PIN (CRANKSHAFT REAR OIL SEAL)
						6303	CRANKSHAFT ASSY.
73/		1				D7TZ 6303-A	Must use w/1977 Main Brgs. (6333 & 6337)
						6306	SPROCKET (CRANKSHAFT)
73/75	"Before 8/1/75"	1				D3AZ 6306-A	18 tooth
75/	"From 8/1/75"	1				D5AZ 6306-A	
73/		1				D0AZ 6310-A	SLINGER (CRANKSHAFT OIL)
						6A312	PULLEY ASSY. (CRANKSHAFT OUTER)-Also refer to pulley I.D. chart section 60
73/74 77/	Without T/E A,F - - w/o T/E	1				D5DZ 6A312-A	#D0OE 6312-C-also used to service pulleys D0AE 6312-C or D0OE 6312-B triple sheave
73/	With dealer installed A/C	1				D2AZ 6A312-E	
74 75/76 76 77/	T/E C,F A - - without A/C A,F - - w/T/E	1 1 1 1				D4AZ 6A312-A	#D3AE 6312-C1A,C2A-four sheaves-used to service pulleys ident. D3AE 6312-AA,BA, EA or or D60E 6312-BA
75/76	A,Y	1				D5MY 6A312-B	#D5ME 6312-AA-four sheaves
77/	A,D,K - - w/ or w/o A/C w/T/E	1				D7AZ 6A312-A	#D7AE 6312-AA-four sheaves-repl. D7AE-BA 3 sheaves
77/	A,D,K	1				42998-S8	(B-252-A)-Pulley to damper-(hex. hd.) 3/8" - 16 x 1"
						6316	DAMPER ASSY. (CRANKSHAFT)-Also refer to pulley I.D. chart section 60
73/74 75/76 75/76 77/	 A,Y - - without A/C C,F 	1 1 1 1				D2AZ 6316-C	
75/76 75/76	A,Y - - w/A/C-exc. Calif. A,Y - - w/A/C-Calif.	1 1				D5AZ 6316-B	#D5AE 6316-CA,DA
73/		1				377850-S	(BB-273-A)-bolt(damper to crank)-hex. hd.-5/8"-18 x 1 3/4"
73/		1				372854-S	(LL-11)-key(damper to crank)-3/16" x 1 3/4"

ENGINE BEARING APPLICATION CHART

YEAR	C.I.D	SIZE	UPPER	LOWER	PART NUMBER FRONT	FRONT INTERMEDIATE	CENTER	REAR INTERMEDIATE	REAR
6333 and 6337 BEARING (CRANKSHAFT MAIN)									
73/76	400	Std.	x		D7AZ 6333-A	D7AZ 6333-A	D1AZ 6337-A	D7AZ 6333-A	D7AZ 6333-A
				x	D7AZ 6333-G	D7AZ 6333-G	D1AZ 6337-A	D7AZ 6333-G	D7AZ 6333-G
		.001"	x	x	D1AZ 6333-B	D1AZ 6333-B	D1AZ 6337-B	D1AZ 6333-B	D1AZ 6333-B
		.002"	x	x	D1AZ 6333-C	D1AZ 6333-C	D1AZ 6337-C	D1AZ 6333-C	D1AZ 6333-C
		.010"	x		D7AZ 6333-D	D7AZ 6333-D	D1AZ 6337-D	D7AZ 6333-D	D7AZ 6333-D
				x	D7AZ 6333-K	D7AZ 6333-K	D1AZ 6337-D	D7AZ 6333-K	D7AZ 6333-K
		.020"	x	x	D1AZ 6333-E	D1AZ 6333-E	D1AZ 6337-E	D1AZ 6333-E	D1AZ 6333-E
		.030"	x		D7AZ 6333-F	D7AZ 6333-F	D1AZ 6337-F	D7AZ 6333-F	D7AZ 6333-F
				x	D7AZ 6333-M	D7AZ 6333-M	D1AZ 6337-F	D7AZ 6333-M	D7AZ 6333-M

COPYRIGHT © 1986 — FORD MOTOR COMPANY — DEARBORN, MICHIGAN

ENGINE BEARING APPLICATION CHART

YEAR	C.I.D	SIZE	UPPER	LOWER	PART NUMBER FRONT	FRONT INTERMEDIATE	CENTER	REAR INTERMEDIATE	REAR
6333 and 6337 BEARING (CRANKSHAFT MAIN) — Cont'd									
77/	400	Std.	X		D7AZ 6333-A	D7AZ 6333-A	D1AZ 6337-A	D7AZ 6333-A	D7AZ 6333-A
		.001" U/S	X		D7AZ 6333-B	D7AZ 6333-B	D1AZ 6337-B	D7AZ 6333-B	D7AZ 6333-B
		.002" U/S	X		D7AZ 6333-C	D7AZ 6333-C	D1AZ 6337-C	D7AZ 6333-C	D7AZ 6333-C
		.010" U/S	X		D7AZ 6333-D	D7AZ 6333-D	D1AZ 6337-D	D7AZ 6333-D	D7AZ 6333-D
		.020" U/S	X		D7AZ 6333-E	D7AZ 6333-E	D1AZ 6337-E	D7AZ 6333-E	D7AZ 6333-E
		.030" U/S	X		D7AZ 6333-F	D7AZ 6333-F	D1AZ 6337-F	D7AZ 6333-F	D7AZ 6333-F
77/	400	Std.		X	D7AZ 6333-G	D7AZ 6333-G	D1AZ 6337-A	D7AZ 6333-G	D7AZ 6333-G
		.001" U/S		X	D7AZ 6333-H	D7AZ 6333-H	D1AZ 6337-B	D7AZ 6333-H	D7AZ 6333-H
		.002" U/S		X	D7AZ 6333-J	D7AZ 6333-J	D1AZ 6337-C	D7AZ 6333-J	D7AZ 6333-J
		.010" U/S		X	D7AZ 6333-K	D7AZ 6333-K	D1AZ 6337-D	D7AZ 6333-K	D7AZ 6333-K
		.020" U/S		X	D7AZ 6333-L	D7AZ 6333-L	D1AZ 6337-E	D7AZ 6333-L	D7AZ 6333-L
		.030" U/S		X	D7AZ 6333-M	D7AZ 6333-M	D1AZ 6337-F	D7AZ 6333-M	D7AZ 6333-M

YEAR	MODEL/RESTRICTIONS	QUANTITY 400				PART NUMBER	DESCRIPTION
73/		10				D0AZ 6345-B	BOLT (CRANKSHAFT MAIN BEARING CAP)-also used to attach windage baffle to main bearing caps
						6375	FLYWHEEL ASSY.
73/	C6	1				D1AZ 6375-A	164 tooth
73/	C/M,B/W	1				D3AZ 6375-A	164 tooth
73/		1				B8A 6378-A	WASHER (CRANKSHAFT PULLEY RETAINING)
73/		6				D2AZ 6379-B	BOLT (FLYWHEEL TO CRANKSHAFT)-hex. hd.-7/16"-20 x 13/16"
73/		2				EAD 6397-A	DOWEL (CYLINDER BLOCK)-to flywheel housing-1/2" x 1"
73/		1				D1AZ 6411-A	SEAL (REAR COVER PLATE)
73/		16				D9HZ 6500-A	TAPPET ASSY. (VALVE)-hydraulic
						6505	VALVE (EXHAUST)
73/77		8				D5AZ 6505-A	Standard-stem dia.-.3415"
		AR				D5AZ 6505-B	.003" O/S stem dia.
		AR				D5AZ 6505-C	.015" O/S stem dia.
		AR				★D5AZ 6505-D	.030" O/S stem dia.-N.R.
78/		8				D8TZ 6505-E	Std. stem dia.-.3418"
		AR				D8TZ 6505-F	.003" O/S stem dia.
		AR				D8TZ 6505-G	.015" O/S stem dia.
		AR				D8TZ 6505-H	.030" O/S stem dia.
						6507	VALVE (INTAKE)
73/78		8				★D0AZ 6507-E	Standard-stem dia.-.3420"-r/b Mult. repl. Mat. 8072
		AR				★D0AZ 6507-F	.003" O/S stem dia. - NR(11/78)
		AR				★D0AZ 6507-G	.015" O/S stem dia.-r/b (1) D9TZ 6507-B, (2) 7HA 6518-A & (1) D00Z 6514-A
		AR				★D0AZ 6507-H	.030" O/S stem dia.-r/b (1) D9TZ 6507-C, (2) 7HA 6518-A & (1) D00Z 6514-A
79		8				D9TZ 6507-A	Standard-stem dia.-.3423"
		AR				D9TZ 6507-B	.015" O/S stem dia.
		AR				D9TZ 6507-C	.030" O/S stem dia.
						6510	BUSHING (VALVE GUIDE)-NOTE 1
73/		AR				D6AZ 6510-A	Intake and exhaust-.339" I.D. x 2.29" long x .501" O.D.
73/77 78/		16 8				D1AZ 6513-A	SPRING (VALVE) Intake
78/		8				D8AZ 6513-A	Exhaust

YEAR	MODEL/RESTRICTIONS	QUANTITY 400				PART NUMBER	DESCRIPTION
73/77		16				D9FZ 6514-A	RETAINER (VALVE SPRING)
78		8					Intake
78/		8				D8AZ 6514-A	Exhaust
79		8				D00Z 6514-A	Intake
73/		AR				B3Q 6515-A	SPACER (VALVE SPRING)-.030" thick 1" I.D.
73/		32				D0AZ 6518-A	KEY (VALVE SPRING RETAINER)
78		16					Intake
78		16				7HA 6518-A	Exhaust
73/		16				D1AZ 6524-A	BAFFLE (VALVE ROCKER ARM OIL)
						6A527	BOLT (VALVE ROCKER ARM SUPPORT)
73/		16				D3AZ 6A527-A	Hex hd.-5/16"-18 x 1 3/8"
						6A528	SEAT (VALVE ROCKER ARM FULCRUM)
73/		16				E43Z 6A528-B	
						6564	ARM (VALVE ROCKER)
73/		16				D8AZ 6564-B	
						6565	ROD (VALVE PUSH)
73/		16				D1AZ 6565-A	9.51" long-std.
		AR				D1AZ 6565-B	.060" O/S
		AR				D1AZ 6565-C	.060" U/S
						6571	SEAL (VALVE STEM)
73/74		16				D0AZ 6571-A	Use with all size valves
75/		16					Use with .015" O/S and .030" O/S valves only
75/79	"Before 5/1/79"	16				D7AZ 6571-A	Use with std. & .003" O/S valves only
79	"From 5/1/79"	8					Intake
79	"From 5/1/79"	8				D90Z 6571-A	Exhaust
						6582	COVER ASSY. (VALVE ROCKER ARM)
73/		1				D7AZ 6582-A	R.H.
		1				D7AZ 6582-B	L.H.
73		15				373071-S7	(BB-554-M)-screw & washer(cover to head)-
74/		16					1/4"-20 x 5/8"
73		2				383210-S	(WW-128-A)-stud & washer(cover and modulator
74/		1					valve to head)-1/4"-20 x 1/4"-20 x 1 1/2"
73/		2				D00Z 6584-A	GASKET (VALVE ROCKER ARM COVER)
73/		1				D0AZ 6600-B	PUMP ASSY. (OIL)-less screen and cover
73/		2				42999-S	(B-253)-bolt(pump to block)-hex. slotted hd.-
							3/8"-16 x 1 1/8"
73/		1				C8SZ 6608-A	ROTOR and SHAFT ASSY. (OIL PUMP DRIVE)
73/		1				★B8A 6616-C	PLATE (OIL PUMP BODY)-N/R
73/		4				42911-S	(B-41-A)-bolt(plate to body)-hex. slotted hd.-
							1/4"-20 x 5/8"
73/		1				D0AZ 6A618-A	SHAFT ASSY. (OIL PUMP INTERMEDIATE)-
							8 7/16" long-incl. retaining ring
73/		1				D1AZ 6622-A	SCREEN, TUBE and COVER ASSY.(OIL PUMP)
73/		1				C4TZ 6629-A	RING (OIL PUMP INTERMEDIATE SHAFT
							RETAINER)-9/16" O.D.-6 prongs
73/74		1				D0AZ 6659-A	GASKET (OIL PUMP TO BLOCK)
						6A664	HOSE (CRANKCASE VENTILATION)-also
							refer to groups 6N664 and 6853
73/		AR				C9PZ 6A664-B	*KCV-2-5/8" I.D. x 25 ft. long-cut to fit
73/		AR				D3PZ 6A664-A	*KCV-3-3/8" I.D. x 25 ft. long-cut to fit
73/		1				★6A664	(P.C.V. valve to crankcase vent tube)-cut to fit
							from bulk hose(4090)

COPYRIGHT © 1986— FORD MOTOR COMPANY —DEARBORN, MICHIGAN

YEAR	MODEL/RESTRICTIONS	QUANTITY 400				PART NUMBER	DESCRIPTION
73/74		1				★6N664	HOSE (CRANKCASE VENTILATION)-carburetor to crankcase vent tube-cut to fit from bulk hose (4090)
						6A666	VALVE (POSITIVE CRANKCASE VENTILATION)-(P.C.V.)
74/76		1				D8TZ 6A666-A	*EV-77-B
77/ 73		1 1				D90Z 6A666-A	
73/		1				★C5AZ 6670-A	SPRING (OIL PUMP RELIEF VALVE)-N/R
73/		1				★C5AZ 6674-A	PLUNGER (OIL PUMP RELIEF VALVE)-N/R
						6675	PAN ASSY. (OIL)
73/		1				D7AZ 6675-A	Service replacement pan may incl. Metric drain plug
73/		16				373071-S7	(BB-554-M)-screw & washer(pan to block)-hex. hd.-1/4"-20 x 5/8"
73/		4				372995-S13	(BB-545-AA)-bolt(pan to block and front cover)-hex. washer hd.-5/16"-18 x 3/4"
73/		1				D0AZ 6700-A	SEAL (CYLINDER FRONT COVER OIL)
						6701	PACKING (CRANKSHAFT REAR)
73/		2				C9OZ 6701-A	Rope type
73/		2				D00Z 6701-A	Split lip type
		★				6710-1	Supplied in 6781 gasket set only
		★				6723	Supplied in 6781 gasket set only
						6730	PLUG (OIL PAN DRAIN)
73/		1				D6TZ 6730-A	1/2-20
73/		1				E0FZ 6730-B	M14 (Metric)
						6731	ELEMENT ASSY. (FILTER)
73/		1				C1AZ 6731-A	*FL-1-has 3/4"-16 female threads
73/		1				C20Z 6734-A	GASKET (OIL PAN DRAIN PLUG)
						6750	INDICATOR (OIL LEVER)
73/		1				D5AZ 6750-B	I.D. D5AE 6750-AB also replaces D0AE 6750-A
77/	D	1				D7VY 6750-A	I.D. D7VE 6750-AA
73/		1				D1AZ 6754-A	TUBE ASSY. (OIL LEVEL INDICATOR)
73/		1				87031-S91	(T-1-DA)-"O" ring(at base of tube)-3/8" I.D.
73/75		1				★D3AZ 6758-B	TUBE (CRANKCASE VENTILATION)-N/R
						6766	CAP ASSY. (OIL FILLER and BREATHER)
73/78		1				E3AZ 6766-A	*EC-682-#Black-optional with chrome cap
73/		1				D1ZZ 6766-A	#Chrome-optional with Black cap
73/		1				C8AZ 6767-B	ELBOW (CRANKCASE VENTILATION HOSE)-used in valve cover-90°-5/8"
73/		1				D0AZ 6781-D	GASKET SET (OIL PAN)
	Consists of 1-D0AE 6710-B 1-D0AE 6711-B	Gasket(R.H.) Gasket(L.H.)				2-D0AE 6723-A or 2-D0AE 6723-B 1-C20Z 6734-A	Seal Gasket(drain plug)
73/74 77/		1 1				★D1AZ 6788-A Not replaced	BRACKET (CRANKCASE VENT VALVE HOSE CLIP)
						6789	GASKET (OIL FILLER CAP)
73/		1				D94Y 6789-B	
		★				★ 6853	HOSE (CRANKCASE VENTILATION)-also refer to group 6A664-cut to fit from bulk hose(4090)
73/		1				D7AZ 6890-B	INSERT (OIL FILTER MOUNTING BOLT)
						6A892	RETAINER (CRANKCASE VENTILATION)-grommet
73/77 78		1				C8AZ 6A892-A	Elbow to rocker arm cover Elbow to oil filler cap
73/77		1				E5TZ 6A892-B	P.C.V. to oil filler cap

YEAR	MODEL/RESTRICTIONS	QUANTITY 429	460	460 P/C		PART NUMBER		DESCRIPTION
							6D000	GASKET SET (TIMING COVER)
73/78		1	1	1		E2VZ	6D000-A	
	Consists of							
	1-C8SZ 6020-A	Gasket (frt cvr)					1-C8VZ 8507-A	Gasket (water pump)
	1-C3AZ 6700-A	Seal (crankshaft frt)					1-C8SZ 8513-A	Gasket (water pump cvr)
	1-E2VJ 6710-AA	Gasket (oil pan R.H.)					1-C3AZ 9417-C	Gasket (fuel pump)
	1-E2VJ 6711-AA	Gasket (oil pan L.H.)					1-IS-5169	Instruction sheet
	1-D5VE 6722-AA	Seal (oil pan frt)						
							6007	ENGINE ASSY.-Current production engine assemblies may be ordered from the local parts distribution center by furnishing the engine code from the vehicle certification label or the identification tag number that is attached to the exterior of the engine assembly
							6008	GASKET SET (COMPLETE OVERHAUL)-refer to group 6E078 and 6079
73/78		4	4	4		B9AE	6A008-A	DOWEL (CYLINDER HEAD TO CYLINDER BLOCK)
76/78			1	1		D6AZ	6D008-A	HEATER KIT (CYLINDER BLOCK)
	Consists of							
	1-D6AJ 6B018-AA	Wire assy.					4-D6AJ 14197-AA	Clip
	1-E0AZ 6A051-A	Heater assy.						
	1-D4AB 6A056-AA	Cap						
							6009	CYLINDER ASSY.-Incl. cyl. block with all internal parts of the eng. but does not incl. cyl. heads, tappets, oil pan or cyl. front cover (unless indicated).
73		1				★ D3SZ	6009-A	N.R.-use details
73/75	"Before 12/2/74"			1		★ D30Z	6009-F	N.R.-use details
73/76			1			★ D8AZ	6009-A	N.R.-use details
75/76	"From 12/2/74"			1				
77/78			1					
77/78				1		★ D8AZ	6009-B	N.R.-use details
							6010	BLOCK ASSY. (CYLINDER)
73/75	"Before 1/13/75"	1	1	1		★ D1VZ	6010-A	N.R.
75/78	"From 1/13/75"		1	1		★ D5TZ	6010-B	N.R.
74/78			1	1		D7TZ	6B018-A	WIRE ASSY. (BLOCK HEATER)
73/78		1	1	1		★ D2VZ	6019-A	COVER ASSY. (CYLINDER FRONT)-r/b E5TZ 6019-G and E6DZ 6700-A
73/78		1	1	1		376256-S		(BB-545-A)-bolt(front cover to block)-5/16"-18 x 7/8"
73/77		1	1	1		382129-S		(BB-545-BA)-bolt(front cover to block)-5/16"-18 x 2 3/8"
78			1	1		382010-S2		(BB-545-E)-bolt (front cover to block)-hex. washer hd.-5/16"-18 x 2.25"
73/78		2	2	2		56526-S2		(B-319-M)-bolt(front cover to block)-5/16"-18 x 2"
73/78		6	6	6		382134-S2		(BB-429-M)-bolt(cover and pump to block)-5/16"-18 x 4"
73/78		1	1	1		C8SZ	6020-A	GASKET (CYLINDER FRONT COVER)
							6023	POINTER (TIMING)
73	Exc. Calif.	1	1			D00Z	6023-A	
74	Without T/E		1					
73/74				1				
75/76	Exc. Calif.		1					
77/78			1					
73	Calif.	1	1			D2VZ	6023-A	
74	T/E		1			D4VZ	6023-A	
75/76	Calif.		1					
							6026	PLUG (ENGINE)
73/78		2	2	2		C8SZ	6026-A	(Oil gallery in block)-5/8"-18
73/78		6	6	6		D7AZ	6026-A	(Core holes in block or hd.)-1 1/2" O.D.
		AR	AR	AR		C8AZ	6026-D	.060 O/S

COPYRIGHT © 1986— FORD MOTOR COMPANY —DEARBORN, MICHIGAN

YEAR	MODEL/RESTRICTIONS	QUANTITY 429	460	460 P/C		PART NUMBER	DESCRIPTION
						6026	PLUG (ENGINE) — Cont'd
73/78		3	3	3		87710-S	(P-16)-plug(front oil gallery)-pipe-hex. countersunk-3/8"-18
73/78		4	4	4		87837-S	(P-15)-plug(drain holes in block and oil gallery)-pipe-hex. countersunk-1/4"-18
73/78		6	6	6		371485-S	(PP-48-A)-plug(clean out holes in hd.)-hex. countersunk hd.-3/4"
73/78	K - - with D3SZ 6068-A insulator and D2SZ 6A061-A rebound insulator		1			D2SZ 6A027-A	SPACER (REAR MOUNTING BOLT)-tubular-15/32" tube dia.-1 1/2" hd. dia.-1 5/8" long
						6028-9	BRACKET (FRONT SUPPORT)
73/74	A,Y	1	1	1		★ D3AZ 6028-C	R.H.-N.R.
		1	1	1		★ D5AZ 6029-A	L.H.-N.R.
75/78	A,Y		1	1		★ D3AZ 6028-C	R.H.-N.R.
			1	1		★ D5AZ 6029-A	L.H.-N.R.
						6030-1	BRACKET (FRONT SUPPORT)
73/78	C,F,K	1	1	1		D3LY 6030-A	R.H.
		1	1	1		D3LY 6031-A	L.H.
						6038	INSULATOR (FRONT SUPPORT)
73/78	A,Y	1	1	1		D5AZ 6038-A	R.H.
		1	1	1		D5AZ 6038-B	L.H.
73	C	1		1		D40Z 6038-J	R.H.
		1		1		D4SZ 6038-B	L.H.
74/76	C,F		1	1		D4SZ 6038-A	R.H.
			1	1		D4SZ 6038-B	L.H.
73/78	D		1			D7VY 6038-C	R.H.
			1			D7VY 6038-D	L.H.
73/78	K		1			D4SZ 6038-A	R.H.
			1			D4SZ 6038-B	L.H.
						6C038	SHIELD (MOTOR MOUNT HEAT)
74	A,Y		1	1		★ D5AZ 6C038-B	L.H.-N.R.
73/78	A,Y	1	1	1		★ D5AZ 6C038-A	R.H.-N.R.
		1	1	1		★ D5AZ 6C038-B	L.H.-N.R.
73/78	C,F,K	1	1	1		★ D3LZ 6C038-A	R.H.-N.R.
		1	1	1		★ D3LZ 6C038-B	L.H.-N.R.
73/78	D		1			★ D4VY 6C038-A	L.H.-none used on R.H. side-not repl.
						6A042	REINFORCEMENT (REAR SUPPORT)
73	C	1				D00Z 6A042-A	R.H.
		1				D00Z 6A042-C	L.H.
						6047	BOLT (FRONT SUPPORT INSULATOR)
73	C,K	2	2			★ D20Z 6047-A	To No. 2 c/member-hex. hd.-3/8"-16 x 5"
73	D "Before 1/15/73"		2			Not repl.	
73	D "From 1/15/73"		2			D3TZ 6047-A	7/16"-14 x 5"-hex. head
73	C,K	2	2			382802-S2	(MM-173-JB)-nut-3/8"-16 lock
73	D "Before 1/15/73"		2				
73	D "From 1/15/73"		2			382401-S	(MM-284-E)-nut-7/16"-14 lock
						6049	HEAD (CYLINDER)
73/74		2	2			D4VZ 6049-C	Without valves-w/o T/E also use D0ZZ 6026-A
75/78			2	2			
73/74				2		★ D3AZ 6049-F	Without valves-N/R
75/78			2	2		D6AZ 6049-B	Complete with valves
77/78			2				
73/74		2	2				Complete with valves-also use D0ZZ 6026-A w/o T/E
77/78				2		★ D7AZ 6049-B	Without valves-repl. by Part Comp. w/valves
						r/b ★ D7AZ 6049-E N.R.	
77/78				2		★ D7AZ 6049-C	Complete w/valves-N.R.-use details

YEAR	MODEL/RESTRICTIONS	QUANTITY 429	460	460 P/C		PART NUMBER	DESCRIPTION
						6049	HEAD (CYLINDER) — Cont'd
74/78	Without T/E		2	2		380393-S	(PP-72-F)-plug-cup (seal thermactor hole in head)-43/64" O.D.
						6051	GASKET (CYLINDER HEAD)
73/78			2	2		D4TZ 6051-A	
						6A051	HEATER ASSY. (BLOCK)
75/78			1			E0AZ 6A051-A	
						6054	RETAINER (REAR SUPPORT)
73/78		1	1	1		D7AZ 6054-A	
74/78			1	1		★ D4AZ 6A056-A	CAP (CYLINDER BLOCK HEATER)-r/b CEH-117
73/78	K - - with D3SZ 6068-A insulator and D2SZ 6A027-A spacer		1			D2SZ 6A061-A	INSULATOR (REAR SUPPORT REBOUND)-round-1/2" I.D.-1 5/8" O.D.-1" thick
						6065	BOLT (CYLINDER HEAD)
73/78		10	10	10		C8SZ 6065-B	9/16"-12 x 4 3/8"
		10	10	10		C8SZ 6065-A	9/16"-12 x 5 1/8"
						6068	INSULATOR ASSY. (REAR SUPPORT)
73/74	A,Y	1	1			D3AZ 6068-C	
73/74	A,Y			1		D3AZ 6068-B	
75/78	A,Y		1	1		D5AZ 6068-B	
73/76	C,F		1	1		D50Z 6068-B	
73/78	D		2			D5VY 6068-A	
76/78	K		1			D6SZ 6068-A	
73/75	K - - with D2SZ 6A027-A spacer and D2SZ 6A061-A insulator		1				
73/		1	1	1		D6AZ 6E072-A	LABEL (BUILD CODE & INFORMATION)-also refer to Serv. Bulletin #155
						6E078	GASKET SET (LOWER)
73/78			1	1		E0UZ 6E078-A	

Consists of

1-C8SZ 6020-A	Gasket (front cover)	2-D5VE 6722-AA	Seal (oil pan)
1-D1AZ 6411-A	Seal (rear cover)	1-C20Z 6734-A	Gasket (drain plug)
1-C3AZ 6700-A	Seal (front cover)	2-C8VZ 8507-A	Gasket (water pump)
2-C90Z 6701-A	Seal (crankshaft rear)	1-C8SZ 8513-A	Gasket (water pump cover)
1-E3TE 6710-DA	Gasket (oil pan R.H.)	1-C3AZ 9417-C	Gasket (fuel pump)
1-E3TE 6711-DA	Gasket (oil pan L.H.)		

						6079	GASKET SET (VALVE GRIND)
73/74		1	1			C9SZ 6079-A	

Consists of

2-D4TZ 6051-A	Gasket (cyl. head)	1-C8SZ 8255-A	Gasket (water outlet)
16-C8SZ 6571-A	Seal (valve stem)	▲2-C9SZ 9A425-A	Seal (intake manifold)
2-D0SZ 6584-A	Gasket (rocker cover)	▲2-C8SZ 9441-A	Gasket (intake manifold)
			▲ Also serviced in C9AZ 9433-A

73/74				1		D00Z 6079-C	

Consists of

2-D4TZ 6051-A	Gasket (cyl. head)	1-C8SZ 8255-A	Gasket (water outlet)
16-D00Z 6571-A	Seal (valve stem)	▲2-C8SZ 9A425-A	Seal (intake manifold)
2-D0SZ 6584-A	Gasket (rocker cover)	▲2-D00Z 9441-A	Gasket (intake manifold)
			▲ Also serviced in D00Z 9433-A

COPYRIGHT © 1986 — FORD MOTOR COMPANY — DEARBORN, MICHIGAN

YEAR	MODEL/RESTRICTIONS	QUANTITY 429	460	460 P/C		PART NUMBER		DESCRIPTION
							6079	GASKET SET (VALVE GRIND) — Cont'd
75/76			1	1		D5AZ	6079-D	
	Consists of							
	2-D4TZ 6051-A	Gasket (cylinder head)					1-C8SZ 8255-A	Gasket
	16-D4AZ 6571-A	Seal (valve stem)					▲2-D5VE 9A425-AA	Seal
	2-D0SZ 6584-A	Gasket (rocker cover)					▲1-D6VE 9C484-AA	Gasket
							▲ Also serviced in D5AZ 9433-C	
77/78			1	1		D7AZ	6079-C	
	Consists of							
	2-D4TZ 6051-A	Gasket (cylinder head)					1-C8SZ 8255-A	Gasket (water outlet)
	16-D4AZ 6571-A	Seal (valve stem)					▲2-D5VE 9A425-AA	Seal (intake manifold)
	2-E3TZ 6584-A	Gasket (rocker cover)					▲1-D6VE 9C484-AA	Gasket and cover assy.
								▲ Also serviced in D5AZ 9433-C
73/74				1		E0AY	6095-A	Cover (FUEL PUMP OPENING)
77/78	A			1		★ D7AZ	6096-A	BRACKET (REAR SUPPORT)-N/R
77/78	A			2		388732-S100		(MM-173-FC)-NUT-1/2"-13- att. 6096 to 6068
							6108	PISTON ASSY. (Incl. pin)-red and blue size are optional for select fit
73		8				★ D3SZ	6108-A	Standard (red)-N/R
		AR				★ D3SZ	6108-B	Standard (blue) NR
		AR				★ D3SZ	6108-C	.003" O/S NR
		AR				★ D3SZ	6108-D	.020" O/S NR
		AR				★ D3SZ	6108-E	.030" O/S-N/R
73/78	(Exc. 460 P/C)		8	8		D3VY	6108-A	Standard (red)
74/78	(460 P/C)		AR	AR		D3VY	6108-B	Standard (blue)
			AR	AR		D3VY	6108-C	.003" O/S
			AR	AR		D3VY	6108-DB	.020" O/S
			AR	AR		D3VY	6108-E	.030" O/S
			AR	AR		D3VY	6108-F	.040" O/S
73	P/C			8		D3AZ	6108-A	Standard (red)
				AR		★ D3AZ	6108-B	Standard (blue)
				AR		★ D3AZ	6108-C	.003" O/S-N/R
				AR		★ D3AZ	6108-D	.020" O/S-N.R.
				AR		D3AZ	6108-E	.030" O/S
				AR		D3AZ	6108-F	.040" O/S
							6135	PIN (PISTON)
73/78		8	8	8		C8SZ	6135-A	Std.
		AR	AR	AR		C8SZ	6135-B	.001 O/S
							6148	RING SET (PISTON PARTIAL)-consists of the necessary rings to re-ring (2) pistons
73/78		4	4	4		C8SZ	6148-A	Standard
		AR	AR	AR		C8SZ	6148-B	.020" O/S
		AR	AR	AR		C8SZ	6148-C	.030" O/S
		AR	AR	AR		C8SZ	6148-D	.040" O/S
							6200	ROD ASSY. (CONNECTING)
73/78		8	8	8		D9TZ	6200-A	
							6211	BEARING (CONNECTING ROD)
73/78		16	16	16		D9HZ	6211-A	Standard-upper and lower
		AR	AR	AR		D9HZ	6211-B	.001" U/S
		AR	AR	AR		D9HZ	6211-C	.002" U/S
		AR	AR	AR		D9HZ	6211-D	.010" U/S
		AR	AR	AR		D9HZ	6211-E	.020" U/S
		AR	AR	AR		D9HZ	6211-F	.030" U/S
		AR	AR	AR		C8SZ	6211-G	.040" U/S
73/78		16	16	16		C9AZ	6212-B	NUT (CONNECTING ROD)-hex.-3/8"-24
							6214	BOLT (CONNECTING ROD)
73/78		16	16			C8SZ	6214-A	
73/78				16		C9AZ	6214-B	

YEAR	MODEL/RESTRICTIONS	QUANTITY 429	460	460 P/C		PART NUMBER	DESCRIPTION
						6250	CAMSHAFT
73/78		1	1			C8SZ 6250-A	#BB
75/76				1			
73/74				1		★ D20Z 6250-A	N.R.
77/78				1			
						6256	SPROCKET (CAMSHAFT)
73/78		1	1	1		D0AZ 6256-A	36 teeth
73/78		1	1	1		73328-S	(N-87-B)-pin (sprocket to camshaft)-dowel-5/16" x 1 1/8"
						6261	BEARING (CAMSHAFT FRONT)
73/78		1	1	1		D9HZ 6261-A	
		AR	AR	AR		D9HZ 6261-B	
						6261	BEARING (CAMSHAFT FRONT INTERMEDIATE)
73/78		1	1	1		D9HZ 6261-A	
		AR	AR	AR		D9HZ 6261-B	
						6261	BEARING (CAMSHAFT CENTER)
73/78		1	1	1		D9HZ 6261-A	
		AR	AR	AR		D9HZ 6261-B	
						6261	BEARING (CAMSHAFT REAR INTERMEDIATE)
73/78		1	1	1		D9HZ 6261-A	
		AR	AR	AR		D9HZ 6261-B	
						6261	BEARING (CAMSHAFT REAR)
73/78		1	1	1		D9HZ 6261-A	
		AR	AR	AR		D9HZ 6261-B	
73/78				1		C8SZ 6265-A	SPACER (CAMSHAFT SPROCKET)
						6266	PLUG (CAMSHAFT BEARING)
73/78		1	1	1		C8SZ 6266-A	Std-2 33/64" O.D.
		1	1	1		C8SZ 6266-B	.060" O/S
73/78		1	1	1		C8SZ 6268-A	CHAIN (TIMING)-52 links
73/78		1	1	1		C8SZ 6269-A	PLATE (CAMSHAFT THRUST)-1 3/4" I.D.-2 19/32" O.D.
73/78		1	1	1		C20Z 6278-A	WASHER (CAMSHAFT SPROCKET)
						6287	ECCENTRIC (CAMSHAFT FUEL PUMP DRIVE)
73/78		1	1			D0AZ 6287-A	Outer
74				1			
73/78		1	1			D1AZ 6287-A	Inner
74				1			
73				1		C8SZ 6287-A	2 1/2" O.D.
75/77	W/o electric fuel pump			1			
73/78		1	1	1		43002-S	(B-257)-bolt(eccentric to sprocket and camshaft)-3/8"-16 x 1 1/2"
						6303	CRANKSHAFT
73		1				★ D20Z 6303-A	N.R.
73/75	"Before 12/2/74"			1		★ D3AZ 6303-A	N/R
75/78	"From 12/2/74"			1		★ D5VY 6303-A	#2YA,2YABC
73/78			1			Not repl.	
77/78				1		★ D8AZ 6303-A	#3Y-use w/Serv. Assy. D8AZ 6009-B only-N.R.
						6306	SPROCKET (CRANKSHAFT)
73/74		1	1			D2VY 6306-A	
75/78			1	1			
73/74				1		C8SZ 6306-A	18 teeth
77/78				1			
73/78		1	1	1		358985-S	(LL-12)-key(sprocket to crankshaft)-woodruff-1 3/4" x 3/16"
73/78		1	1	1		C8SZ 6310-A	SLINGER (CRANKSHAFT OIL)

COPYRIGHT © 1986— FORD MOTOR COMPANY —DEARBORN, MICHIGAN

YEAR	MODEL/RESTRICTIONS	QUANTITY 429	460	460 P/C		PART NUMBER	DESCRIPTION
						6A312	PULLEY ASSY. (CRANKSHAFT OUTER)- Also refer to pulley I.D. chart section 60
							DOUBLE SHEAVE
73/77	A,C,F,Y - - exc. P/C	1	1			D0AZ 6A312-A	#D0AE 6312-A
78	A - - w/o A/C		1				
							TRIPLE SHEAVE
73/74	A,C,F,Y - - exc. P/C	1	1			D0SZ 6A312-B	#D0SE 6312-B
75/77	A,Y - - P/C without A/C- "From 1/2/75"		1	1			
75/77	C,F - - exc. P/C		1				
78	A - - w/o A/C			1			
73/77	D,K - - without Sierracin System	1	1			★ D1VY 6A312-A Not replaced	#D1VE 6312-AA ,D2VE 6312-AA
75/77	A,Y - - exc. P/C		1				
75/77	A,Y - - P/C with A/C- "From 1/2/75"		1	1			
78	w/A/C		1	1			
75	A,Y - - P/C with A/C- "Before 1/2/75"		1	1		★ D5MY 6A312-A Not replaced	#D5VE 6312-AA
73/74	A,C,Y - - P/C	1	1	1		★ D00Z 6A312-C N.R.	#D00E 6312-D-repl. pulley ident. D00E 6312-E
75	A,Y - - P/C without A/C- "Before 1/2/75"		1	1			
75/76	C - - P/C		1	1			
73/78	With dealer installed A/C	1	1	1		★ D2AZ 6A312-C	N.R.
							FOUR SHEAVES
74/77	K - - with Sierracin System		1			★ D4SZ 6A312-B Not replaced	#D4SE 6312-BA-cast iron-use only with cast iron damper-use to repl. pulley ident. D4SE 6312-AA
75/77	D - - with Sierracin System		1				
						6316	DAMPER ASSY. (CRANKSHAFT)- Also refer to pulley I.D. chart section 60
73/78	Without Sierracin System	1	1	1		D4VZ 6316-A	Steel
74/78	With Sierracin System		1			★ D4VZ 6316-B	Cast iron-N.R.
73		1	1	1		46223-S2	(B-283)-bolt(damper to crank)-5/8" x 2"
73/78		1	1	1		74151-S	(L-13)-key(damper to crank)-1/4" x 7/8"
74/78			1	1		377850-S	(BB-273-A)-bolt(damper to crank)-5/8"-18 x 2

ENGINE BEARING APPLICATION CHART

YEAR	C.I.D.	SIZE	UPPER	LOWER	PART NUMBER FRONT	FRONT INTERMEDIATE	CENTER	REAR INTERMEDIATE	REAR
6333 and 6337 BEARING (CRANKSHAFT MAIN)									
73/77	460 All	Std.		x	D7AZ 6333-AA	D7AZ 6333-AA	D7AZ 6337-G	D7AZ 6333-AA	D7AZ 6333-AA
		.001"		x	D7AZ 6333-AB	D7AZ 6333-AB	D7AZ 6337-H	D7AZ 6333-AB	D7AZ 6333-AB
		.002"		x	D7AZ 6333-AC	D7AZ 6333-AC	D7AZ 6337-J	D7AZ 6333-AC	D7AZ 6333-AC
		.010"		x	D7AZ 6333-AD	D7AZ 6333-AD	D7AZ 6337-K	D7AZ 6333-AD	D7AZ 6333-AD
		.020"		x	D7AZ 6333-AE	D7AZ 6333-AE	D7AZ 6337-L	D7AZ 6333-AE	D7AZ 6333-AE
		.030"		x	D7AZ 6333-AF	D7AZ 6333-AF	D7AZ 6337-M	D7AZ 6333-AF	D7AZ 6333-AF
78	Std.	Std.		x	D7AZ 6333-AA	D7AZ 6333-AA	D7AZ 6337-N	D7AZ 6333-AA	D7AZ 6333-AA
		.001"		x	D7AZ 6333-AB	D7AZ 6333-AB	D7AZ 6337-P	D7AZ 6333-AB	D7AZ 6333-AB
		.002"		x	D7AZ 6333-AC	D7AZ 6333-AC	D7AZ 6337-R	D7AZ 6333-AC	D7AZ 6333-AC
		.010"		x	D7AZ 6333-AD	D7AZ 6333-AD	D7AZ 6337-S	D7AZ 6333-AD	D7AZ 6333-AD
		.020"		x	D7AZ 6333-AE	D7AZ 6333-AE	D7AZ 6337-T	D7AZ 6333-AE	D7AZ 6333-AE
		.030"		x	D7AZ 6333-AF	D7AZ 6333-AF	D7AZ 6337-U	D7AZ 6333-AF	D7AZ 6333-AF
73/78	Std.	Std.	x		D7AZ 6333-N	D7AZ 6333-N	D7AZ 6337-G	D7AZ 6333-N	D7AZ 6333-N
		.001"	x		D7AZ 6333-P	D7AZ 6333-P	D7AZ 6337-H	D7AZ 6333-P	D7AZ 6333-P
		.002"	x		D7AZ 6333-R	D7AZ 6333-R	D7AZ 6337-J	D7AZ 6333-R	D7AZ 6333-R
		.010"	x		D7AZ 6333-S	D7AZ 6333-S	D7AZ 6337-K	D7AZ 6333-S	D7AZ 6333-S
		.020"	x		D7AZ 6333-T	D7AZ 6333-T	D7AZ 6337-L	D7AZ 6333-T	D7AZ 6333-T
		.030"	x		D7AZ 6333-U	D7AZ 6333-U	D7AZ 6337-M	D7AZ 6333-U	D7AZ 6333-U

YEAR	MODEL/RESTRICTIONS	QUANTITY 429	460	460 P/C		PART NUMBER	DESCRIPTION
73/78		10	10	10		D5AZ 6345-A	BOLT (CRANKSHAFT MAIN BEARING CAP)
73/78		1	1	1		D00Z 6359-A	SPACER (CRANKSHAFT DAMPER)
73/78		1	1	1		D1SZ 6375-A	FLYWHEEL ASSY.-14 1/4" dia.
73/78		1	1	1		B8A 6378-A	WASHER (CRANKSHAFT PULLEY RETAINING)
73/78		6	6	6		D2AZ 6379-B	BOLT (FLYWHEEL TO CRANKSHAFT)-7/16"-20 x 3/4"
73/78		2	2	2		EAD 6397-A	DOWEL (CYLINDER BLOCK)-to flywheel housing-1/2" x 1"
73/77		1	1	1		D1AZ 6411-A	SEAL (REAR COVER PLATE)
						6500	TAPPET ASSY. (VALVE)
73/74 73/78		16	16 16	 16		D9HZ 6500-A	Hydraulic
NOTE 1-	Bushing must be reamed to size of valve						
						6505	VALVE (EXHAUST)
73/78	(Exc. 460 P/C)	8	8	8		D3VZ 6505-A	Standard-stem dia.-.3415"
75/76	(460 P/C)	AR	AR	AR		★ D3VZ 6505-B	.003" O/S stem dia.-NR
		AR	AR	AR		D3VZ 6505-C	.015" O/S stem dia.
		AR	AR	AR		D3VZ 6505-D	.030" O/S stem dia.
73/74	(460 P/C)			8		★ D20Z 6505-A	Standard-stem dia.-.3420"-N.R.
				AR		★ D20Z 6505-B	.003" O/S stem dia.-N/R
				AR		★ D20Z 6505-C	.015" O/S stem dia.-N.R.
				AR		★ D20Z 6505-D	.030" O/S stem dia.-N/R
77/78				8		★ D7AZ 6505-A	Standard-stem dia.-.3420"-N/R
				AR		★ D7AZ 6505-B	.003" O/S stem dia.-N/R
				AR		★ D7AZ 6505-C	.015" O/S stem dia.-N/R
				AR		★ D7AZ 6505-D	.030" O/S stem dia.-N/R
						6507	VALVE (INTAKE)
73/78	(Exc. 460 P/C)	8	8	8		D3VZ 6507-A	Standard-stem dia.- .3415"
75/76	(460 P/C)	AR	AR	AR		★ D3VZ 6507-B	.003" O/S stem dia. - N/R
		AR	AR	AR		D3VZ 6507-C	.015" O/S stem dia.
		AR	AR	AR		D3VZ 6507-D	.030" O/S stem dia.
73/74	(460 P/C)			8		★ D20Z 6507-A	Standard-stem dia.-.3420"-N/R
				AR		★ D20Z 6507-B	.003" O/S stem dia.-N.R.
				AR		★ D20Z 6507-C	.015" O/S stem dia.-N.R.
				AR		★ D20Z 6507-D	.030" O/S stem dia.-N.R.
77/78				8		★ D7AZ 6507-A	Standard-stem dia.-.3420"-N.R.
				AR		★ D7AZ 6507-B	.003" O/S stem dia.-N/R
				AR		★ D7AZ 6507-C	.015" O/S stem dia.-N/R
				AR		★ D7AZ 6507-D	.030" O/S stem dia.-N/R
73/78		AR	AR	AR		D6AZ 6510-B NOTE 1	BUSHING (VALVE GUIDE)-Exhaust and intake
						6513	SPRING (VALVE)
73/78 75/76		16	16	 16		C8SZ 6513-B	
73/74 77/78				16 16		D0ZZ 6513-A	#4 Dark blue stripes
						6514	RETAINER (VALVE SPRING)
73/78		16	16	16		D00Z 6514-A	7/16" high x 1 7/16" O.D.
						6515	SPACER(VALVE SPRING)
73/78		AR	AR			B3Q 6515-A	.030 thick-1" I.D.
73/78				AR		B8QH 6515-A	.030 thick-1.07 I.D.
73/78		32	32	32		7HA 6518-A	KEY (VALVE SPRING RETAINER)
73/78		16	16			D1AZ 6524-A	BAFFLE (VALVE ROCKER ARM OIL)
73		AR	AR			★ D1AZ 6A525-A NR	SHIM (ROCKER ARM STUD OR BOLT)-(use under rocker arm stud or bolt-also use with 3E717-steering column lock gear)-3/4" x 7/16" x 1/32"

COPYRIGHT © 1986— FORD MOTOR COMPANY —DEARBORN, MICHIGAN

YEAR	MODEL/RESTRICTIONS	QUANTITY 429	460	460 P/C		PART NUMBER		DESCRIPTION
							6A527	BOLT (VALVE ROCKER ARM SUPPORT)
73/78		16	16			D3AZ	6A527-A	5/16"-18 x 1 3/8"
75/78				16				
73/74				16		D00Z	6A527-B	STUD (VALVE ROCKER ARM SUPPORT)- 3/8"-24 and 7/16"-14 x 2 11/16" long
							6A528	SEAT (VALVE ROCKER ARM FULCRUM)
73/74		16	16			E43Z	6A528-A	
75/78				16				
75/78			16			D7AZ	6A528-B	
73/74				16		D00Z	6A528-B	
73/74				16		C9SZ	6A529-A	NUT (VALVE ROCKER ARM STUD)-3/8"-hex.
73/74				16		D00Z	6A536-A	SEAT (VALVE SPRING)- 1 1/2" I.D. x 1 23/32" O.D.
77/78								
							6564	ARM (VALVE ROCKER)
73/78		16	16	16		D8AZ	6564-B	
73/78				8		D00Z	6A564-B	GUIDE (VALVE PUSH ROD)
							6565	ROD (VALVE PUSH)
73/78	Exc. P/C	16	16	16		D20Z	6565-A	Std. 8 5/8" long
75/78	P/C	AR	AR	AR		C9VZ	6565-A	.060" O/S
		AR	AR	AR		D5VZ	6565-A	.060" U/S
73/74				16		D00Z	6565-B	Std. 8 1/2" long
				AR		D00Z	6565-E	.060" O/S
				AR		D00Z	6565-F	.060 U/S
							6571	SEAL (VALVE STEM)
73/74		16	16			C8SZ	6571-A	Intake and exhaust-47/64" high x 21/64" O.D.
73/74				16		D60Z	6571-A	Std. & .003 O/S
				AR		C8SZ	6571-A	.030" O/S.015" O/S & .030" O/S
75/78			16	16		D60Z	6571-A	#D4AE-AA-intake and exhaust-standard and .003" O/S
			AR	AR		C8SZ	6571-A	.015 & .030
							6582	COVER ASSY. (VALVE ROCKER ARM)
73/78		1	1			D8TZ	6582-E	R.H.
		1	1			D9TZ	6582-F	L.H.
73/74				1		D9TZ	6582-G	R.H.
				1		D00Z	6582-A	L.H.
75/78				1		D8TZ	6582-E	R.H.
				1		D9TZ	6582-F	L.H.
73/78		14	14	14		356748-S		(BB-124)-screw & washer (cover to hd.)-hex. hd.- 1/4"-20 x 5/8"
73/78		2	2	2		D0SZ	6584-A	GASKET (VALVE ROCKER ARM COVER)
							6600	PUMP ASSY. (OIL)
73/78	A,C,F,K,Y	1	1			D0AZ	6600-A	Incl. screen and cover
73/78	D		1			C8SZ	6600-B	Incl. screen and cover
73/76	A,C,Y			1		C9AZ	6600-A	Less screen and cover-incl. (1) B8TZ 6626-A gasket
77/78				1				
73/78		2	2	2		42999-S		(B-253)-screw & washer (pump to block)- 3/8"-16 x 1 1/4"
73/78		1	1	1		C8SZ	6608-A	ROTOR and SHAFT ASSY. (OIL PUMP DRIVE)
							6616	PLATE (OIL PUMP BODY)
73/78		1	1			★B8A	6616-C	N/R
73/78				1		★C9AZ	6616-A	N/R

YEAR	MODEL/RESTRICTIONS	QUANTITY 429	460	460 P/C		PART NUMBER	DESCRIPTION
						6616	PLATE (OIL PUMP BODY) — Cont'd
73/78		4	4			42911-S	(B-41-A)-bolt(plate to pump)-1/4"-20 x 5/8"
73/78				4		370519-S	(BB-125)-screw & washer(plate to pump)-1/4"-20 x 5/8"
73/78		1	1	1		C8SZ 6A618-A	SHAFT ASSY. (OIL PUMP INTERMEDIATE)
						6622	SCREEN, TUBE and COVER ASSY. (OIL PUMP)
73/78		★	★			★6622	Serviced in assy.-refer to group 6600
73/78				1		D00Z 6622-A	
73				2		372995-S3	(BB-545-AA)-bolt(screen and cover to pump)-5/16"-18 x 3/4"
74/78				2		42789-S8	(U-10)-screw & washer(screen and cover to pump)-5/16"-18 x 3/4"
73/78				1		B8TZ 6626-A	GASKET (OIL PUMP INLET TUBE)
73/78		1	1	1		C4TZ 6629-A	RING (OIL PUMP INTERMEDIATE SHAFT RETAINER)
						6B633	BRACKET (ENGINE OIL COOLER WATER HOSE)-Also refer to group 6B871
73/78	Without A/C			1		★ D3AZ 6B633-A	N.R.
73/78				1		20328-S8	(B-76)-bolt(clip to bracket)-hex. head-3/8"-16 x 5/8"
73/78				1		20388-S8	(B-80)-bolt(bracket and clip to water pump)-hex. head-3/8"-16 x 1"
73/78				1		34807-S8	(X-66)-washer-lock-3/8"
73/78				1		D1ZZ 6A636-A	GASKET (OIL FILTER ADAPTER)-use w/oil cooler
						6A642	COOLER ASSY. (CRANKCASE OIL)
73/74				1		★ D3AZ 6A642-A	#D3AE-BA
75/76	C			1		Not replaced	
75/78	A			1		★ D5AZ 6A642-A	Not replaced
73/78				2		33769-S2	(M-89-J)-nut(oil cooler to support strap)-lock-1/4"-20
73/74		1	1	1		★ C8SZ 6659-A	GASKET (OIL PUMP TO BLOCK)-N/R (1/79)
						6A664	HOSE (CRANKCASE VENTILATION)-Also refer to group 6N664 and 6853
73/78		AR	AR	AR		C9PZ 6A664-A	*KCV-1-15/32" I.D. x 25 ft. long- cut to fit
73/78		AR	AR	AR		C9PZ 6A664-B	*KCV-2-5/8" I.D. x 25 ft. long- cut to fit
73/78		AR	AR	AR		D3PZ 6A664-A	*KCV-3-3/8" I.D. x 25 ft. long- cut to fit
73/78		AR	AR			★ D3VY 6A664-A	(P.C.V. valve to crankcase vent tube)-improvise
73/78				AR		★6A664	(P.C.V. valve to crankcase vent tube)
73/78		1	1	1		★6N664	HOSE (CRANKCASE VENTILATION)-(carburetor to crankcase vent tube)-cut to fit from bulk hose 4090
73/78		1	1	1		C8SZ 6666-A	PLUG (OIL PUMP RELIEF VALVE)-7/8" O.D.-3/8" high
73/78		1	1	1		72070-S	(N-46)-pin(relief valve to pump)-cotter-3/32" x 1 1/2"

COPYRIGHT © 1986 — FORD MOTOR COMPANY — DEARBORN, MICHIGAN

YEAR	MODEL/RESTRICTIONS	QUANTITY 429	460	460 P/C		PART NUMBER	DESCRIPTION
						6A666	VALVE (POSITION CRANKCASE VENTILATION)-P.C.V.
73/78		1	1	1		D90Z 6A666-A	*EV-68-C
73/78		1	1	1		★C5AZ 6670-A	SPRING (OIL PUMP RELIEF VALVE)-N.R.
73/78		1	1	1		★C5AZ 6674-A	PLUNGER (OIL PUMP RELIEF VALVE)-N.R.
						6675	PAN ASSY. (OIL)
73/78	A,C,F,K,Y	1	1	1		★D00Z 6675-D	R/b C8SZ 6675-A (10/84)
73/78	D		1			C8SZ 6675-A	
73		4	4	4		372995-S3	(BB-545-M)-bolt(pan to cover and block)-5/16"-18 x 3/4"
74/78			4	4		42789-S8	(U-10)-screw & washer(pan to cover and block)-5/16"-18 x 3/4"
73/78		19	19	19		356748-S	(BB-124)-screw & washer(pan to block and cover)-1/4"-20 x 5/8"
73/78		1	1	1		C3AZ 6700-A	SEAL (CYLINDER FRONT COVER OIL)
						6701	PACKING (CRANKSHAFT REAR)
73/78		2	2	2		C90Z 6701-A	Rope type
73/78		2	2	2		C9AZ 6701-A	Split lip type
						6710-1	Serviced only in gasket set-group 6781
						6A715	HOSE ASSY. (OIL COOLER)
73/74				1		★D30Z 6A715-A	Inlet-N.R.
75/76	C			1		★D3AZ 6A715-A	Outlet-N.R.
75/78	A			1		★D5AZ 6A715-B	Inlet-N.R.
				1		★D5AZ 6A715-A	Outlet-N.R.
						6722	Supplied in 6781 gasket set only
						6730	PLUG (OIL PAN DRAIN)
73/78		1	1	1		D6TZ 6730-A	Incl. (4) C20Z 6734-A gaskets
73/78		1	1	1		D9AZ 6731-A	ELEMENT ASSY. (OIL FILTER)-*FL-1-A-"spin on"-has 3/4"-16 female threads
73/78		1	1	1		C20Z 6734-A	GASKET (OIL PAN DRAIN PLUG)-Nylon-1/2" I.D. x 13/16" O.D. x 5/64" thick
						6B743	SUPPORT (OIL COOLER FRONT)
73/78	A,Y			1		★D3AZ 6B743-A	N.R.
73/76	C			1		★D30Z 6B743-A	N.R.
73/78				3		57472-S40	(BB-339-V)-bolt(support to oil cooler and support to strap)-hex. head-1/4"-20 x 5/8"
73/78				1		33769-S2	(M-89-J)-nut(support to support strap)-lock-1/4"-20
						6748	FITTING (OIL COOLER)
73/78				1		★D3AZ 6748-A	#Red-90°-N.R.
73/78				1		★D3AZ 6748-B	#Blue-45°-N.R.
73/78				1		EAA 6749-A	GASKET (OIL FILTER CENTER BOLT COVER)
						6750	INDICATOR (OIL LEVEL)
73	A,K,Y	1	1			D5AZ 6750-C	
74	C,F		1			D4AZ 6750-B	
74/78				1			
73	C	1					
73	A,C,Y			1			

YEAR	MODEL/RESTRICTIONS	QUANTITY 429	460	460 P/C		PART NUMBER	DESCRIPTION
						6750	INDICATOR (OIL LEVEL) — Cont'd
73/78	D		1			D4VZ 6750-A	
75/78 74	A,C,F,K,Y A,K,Y		1			D5AZ 6750-C	
73/78		1	1	1		C8SZ 6754-B	TUBE ASSY. (OIL LEVEL INDICATOR)- 6 19/32" long
						6758	TUBE (CRANKCASE VENTILATION)
73 74	 Without T/E	1	1 1			★ D3VY 6758-A N/R	
73/74				1		★ D3AZ 6758-C	N/R
75			1	1		★ D5VZ 6758-A	N/R
76			1	1		★ D6VY 6758-A	N/R
						6766	CAP ASSY. (OIL FILLER AND BREATHER)
73/78		1	1	1		E3AZ 6766-A	*EC-682-A-Black-optional w/Chrome cap
73/78		1	1	1		D1ZZ 6766-A	*EC-508-Chrome-optional w/Black cap
73/78		1	1	1		C8AZ 6767-B	ELBOW (CRANKCASE VENTILATION HOSE)- 90°-5/8" x 5/8"-also refer to group 9600 for air cleaner application
						6781	GASKET SET (OIL PAN)
73/78		1	1	1		E0UZ 6781-A	
	Consists of 1-E3TE 6710-DA 1-E3TE 6711-DA	Gasket (R.H.) Gasket (L.H.)				2-D5VE 6722-A 1-C20Z 6734-A	Seal Gasket (drain plug)
73/78				1		★ D1AZ 6788-A Not replaced	BRACKET (CRANKCASE VENT VALVE HOSE CLIP)
						6789	GASKET (OIL FILLER CAP)
73/		1	1	1		D94Y 6789-B	
		★	★	★		★ 6853	HOSE (CRANKCASE VENTILATION)-Also refer to group 6A664-cut to fit from bulk hose 4090
						6B868-9	STRAP ASSY. (OIL COOLER SUPPORT)
73/78	A,Y			1		★ D3AZ 6B868-A	Front-N/R
73/76	C			1		★ D30Z 6B868-A	Front-N/R
73/78				1		★ D3AZ 6B869-A	Rear-N/R
73/78				2		52012-S8	(U-202)-screw(support strap to fender apron)- No. 8-15 x 1/2"
						6B871	BRACKET (OIL COOLER WATER HOSE)- Also refer to group 6B633
73/78	C - - A/C			1		★ D3AZ 6B871-A	N/R
73/78				1		44727-S8	(X-24)-washer-flat-3/8"
						6881	ADAPTER ASSY. (OIL FILTER)
73/78				1		D8AZ 6881-A	Must use w/87147-S91 "O" ring
73/78				1		87147-S91	(T-38)-"O" ring (6881 to 6010)
						6890	INSERT (OIL FILTER MOUNTING BOLT)
73/78		1	1	1		D7AZ 6890-B	Use w/spin on filter
73/78				1		EAA 6890-C	Use w/cartridge filter
						6A892	RETAINER (CRANKCASE VENTILATION)- grommet
73/78		1	1	1		E5TZ 6A892-B	(Valve to cover) (Valve to oil filler cap)
73/78		1	1	1		C8AZ 6A892-A	(Elbow to oil filler cap) (Elbow to cover)
73/78				1		C4GY 6894-A	BOLT (OIL FILTER ADAPTER MOUNTING)

COPYRIGHT © 1986— FORD MOTOR COMPANY —DEARBORN, MICHIGAN

HOW TO IDENTIFY MANUAL TRANSMISSIONS and RELATED PARTS

PARTS DIRECTLY RELATED TO THE OPERATION OF THE TRANSMISSION ASSY., SUCH AS CASE, GEARS, SHAFTS, EXTENSION, ETC., ARE LISTED IN PARTS LISTS SECTIONS FOR EACH BASIC TRANSMISSION TYPE AS INDICATED BELOW.

Description and Type	Catalog Identification	Parts List Section	Years
3 Speed–3.03	3.03	70.3	73/78
4 Speed–German	G/4/S	70.4	74/
4 Speed–Ford	F/4/S	70.5	73
4 Speed – Ford	F/4/s – w O/D	70.5	77/
4 Speed–Ford–(RAD) (BORG–WARNER built)	F/4/S	70.6	79
4 Speed–Capri	C/4/S	70.7	73/78

PARTS NOT DIRECTLY RELATED TO THE TRANSMISSION ASSY., SUCH AS GEARSHIFT OR CLUTCH MECHANISM, ARE LISTED IN SECTION 71.

Each transmission is identified by a number stamped on a metal tag or plate attached to the case. Refer to page 2 of this section for the locations of the identification numbers.

Each basic transmission type is identified by several numbers which reflect the different model years or the significant changes made within the same model year.

A guide listing the transmission identification numbers in numerical and alphabetical sequence appears on page 3 of this section. When the transmission identification number is known, simply refer to this guide for the appropriate transmission type, year, parts list section and illustration section and page number.

Manual transmissions and their related parts can also be identified by year, model, eng., etc. in the Transmission Application Chart starting on page 3 of this section.

Manual Transmission Illustrations are shown in Illustration Sections 70 thru 75 of the Illustrations Catalog, Form FP 8095–B

An Alphabetical Index cross–referencing part name to basic number appears at the beginning of this catalog.

COPYRIGHT © 1986 — FORD MOTOR COMPANY — DEARBORN, MICHIGAN

MANUAL TRANSMISSION IDENTIFICATION TAGS

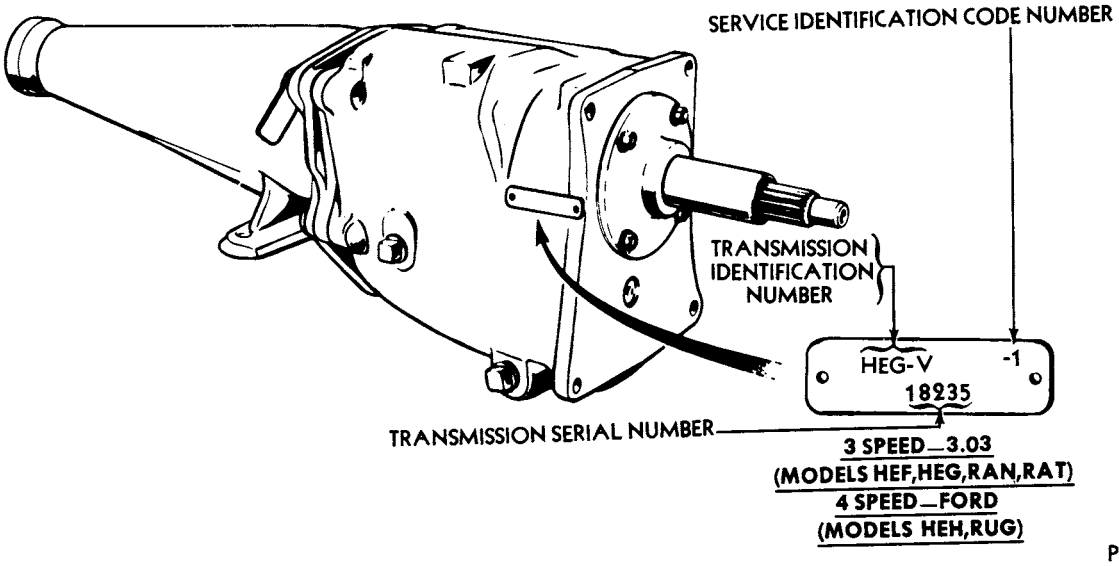

P-6171

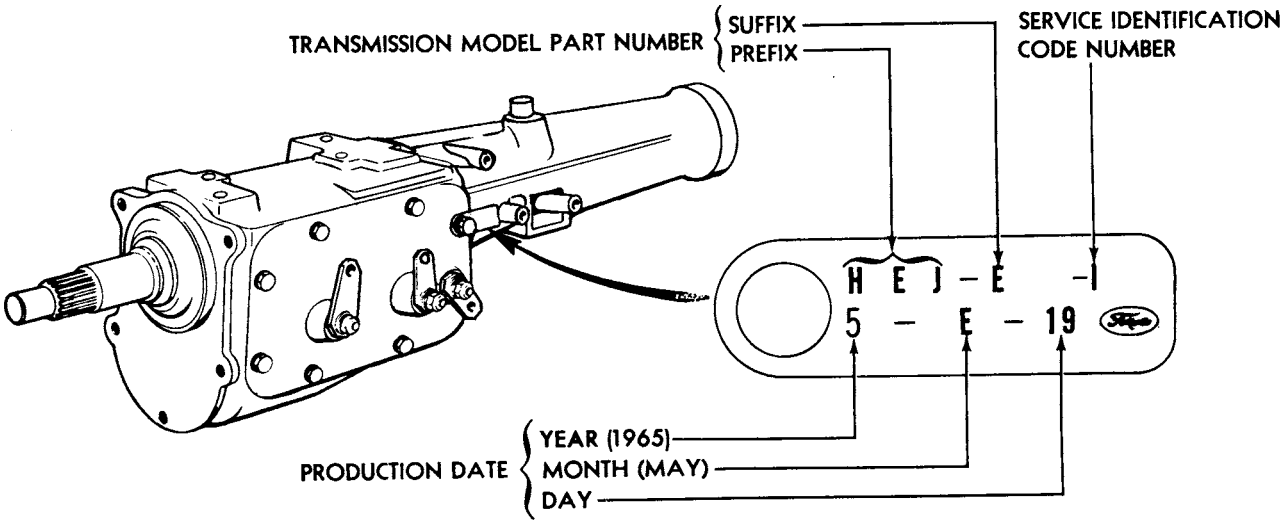

4 SPEED TRANSMISSION - DAGENHAM

P-5125

TRANSMISSION APPLICATION CHART

MODEL	ENGINE CYL.	ENGINE C.I.D. (C.C.D.)	TRANSMISSION IDENT.	TRANSMISSION TYPE	PARTS LIST	ILLUS. SECTION 70. PAGE	PART NUMBER	REPLACED BY
▲ 2000 cc ♦ 2600 cc ⊕ 2800 cc @ 2300 cc								
1973								
C	6	250	RAN-BU1	3.03	70.3	2	D20Z 7003-F	
C	8	302	RAN-BT1	3.03	70.3	2	D20Z 7003-E	
C – – w/28 spline output shaft	8	351	RUG-BF1	F/4/S	70.5	1	D20Z 7003-G	
C – – w/31 spline output shaft	8	351	RUG-BG2	F/4/S	70.5	1	★ D30Z 7003-A	Service details
F	8	351-4B	RUG-BJ1	F/4/S	70.5	1	D2ZZ 7003-H	
J	4	▲122	73 EG-AA	C/4/S	70.7	3&4	★ D3RY 7003-A	Service details
J	6	♦159	71EG-CB	C/4/S	70.7	3&4	D2RY 7003-B	
P – – column shift	6	200	RAN-BY1,2	3.03	70.3	2	D2DZ 7003-E	
P – – console shift	6	200,250	RAN-BW1	3.03	70.3	2	D2ZZ 7003-E	
P – – console shift	6	200	RAN-CG	3.03	70.3	2	D2ZZ 7003-E	
P – – column shift	6	250	RAN-CK	3.03	70.3	2	D2DZ 7003-E	
P – – column shift	8	302	RAN-BZ1	3.03	70.3	2	D2DZ 7003-F	
P – – console shift	8	302	RAN-CA1	3.03	70.3	2	D2ZZ 7003-F	
1974								
C	8	302	RAN-CN	3.03	70.3	2	★ D40Z 7003-A	Service details
J	4	▲122	73EG-AA	C/4/S	70.7	3&4	★ D3RY 7003-A	Service details
J	4	▲122	74ET-GA	C/4/S	70.7	3&4	★ D4RY 7003-B	Service details
J	6	⊕171	74ET-CA	C/4/S	70.7	3&4	★ D4RY 7003-A	Service details
L	4	▲122	72WG-AE	G/4/S	70.4	7	★ D2FZ 7003-D	Service details
L	4	@140	74WT-EA	G/4/S	70.4	7	★ D4FZ 7003-B	Service details
L	4	@140	74WT-FA	G/4/S	70.4	7	D4FZ 7003-A	
P – – column shift	6	200,250	RAN-CS, CX,DD	3.03	703.	2	★ D4DZ 7003-B	Service details
P – – floor shift	6	200,250	RAN-CR, CW	3.03	70.3	2	D4DZ 7003-A	
P – – column shift	8	302	RAN-CT	3.03	70.3	2	★ D4DZ 7003-C	Service details
P – – floor shift	8	302	RAN-CU	3.03	70.3	2	★ D4DZ 7003-D	Service details
@ 2300 cc $ For vehicles without interlock system discard 7E449 switch and install N800015-S plug								
1975								
G – – column shift	6	200,250	RAN-CZ	3.03	70.3	2	★ D5DR 7003-AA	Service details
G – – column shift	6	200,250	RAN-DG	3.03	70.3	2	★ D5DR 7003-EA	D5DR 7003-AA
G – – floor shift	6	200,250	RAN-DA	3.03	70.3	2	★ D5DR 7003-BA	Service details
G – – floor shift	8	302	RAN-DC	3.03	70.3	2	★ D5DR 7003-DA	Service details
L – – exc. S/W	4	@140	75WT-AA, AB	G/4/S	70.4	7	$★ D5FZ 7003-C	Service details
L – – S/W	4	@140	75WT-BA, BB	G/4/S	70.4	7	$★ D5FZ 7003-B	Service details
P – – floor shift	6	200,250	RAN-DA	3.03	70.3	2	★ D5DR 7003-BA	Service details
P – – column shift	6	200,250	RAN-CY	3.03	70.3	2	★ D5BR 7003-AA	Service details
P – – column shift	6	200,250	RAN-DF	3.03	70.3	2	★ D5BR 7003-BA	D5BR 7003-AA
P – – column shift	8	302	RAN-DB	3.03	70.3	2	★ D5DR 7003-CA	Service details
P – – column shift	8	302	RAN-DJ	3.03	70.3	2	★ D5BR 7003-GA	D5DR 7003-CA
P – – floor shift	8	302	RAN-DC	3.03	70.3	2	★ D5DR 7003-DA	Service details

COPYRIGHT © 1986 — FORD MOTOR COMPANY — DEARBORN, MICHIGAN

TRANSMISSION APPLICATION CHART

MODEL	ENGINE CYL.	ENGINE C.I.D. (C.C.D.)	TRANSMISSION IDENT.	TRANSMISSION TYPE	PARTS LIST	ILLUS. SECTION 70. PAGE	PART NUMBER	REPLACED BY
@ 2300 cc $ For vehicles without interlock system discard 7E449 switch and install N800015-S plug								
1976								
G - - column shift	6	200,250	RAN-CZ	3.03	70.3	2	★D5DR 7003-AB	Service details
G - - floor shift	6	200,250	RAN-DA	3.03	70.3	2	★D6DR 7003-BA	Service details
G - - floor shift	8	302	RAN-DC	3.03	70.3	2	★D6DR 7003-CA	Service details
J	4	140 (2300)	75FT-BA	C/4/S	70.7	7	D5RY 7003-D	
J	6	171 (2800)	75FT-AA	C/4/S	70.7	7	D5RY 7003-C	
L	4	140 (2300)	75WT-AB	G/4/S	70.4	7	★D5FZ 7003-C	Service details
L	4	140 (2300)	75WT-BB	G/4/S	70.4	7	★D5FZ 7003-B	Service details
P - - column shift	6	200,250	RAN-CY	3.03	70.3	2	★D5DR 7003-AB	Service details
P - - floor shift	6	200,250	RAN-DA	3.03	70.3	2	★D6DR 7003-BA	Service details
P - - column shift	8	302	RAN-DB	3.03	70.3	2	★D5DR 7003-CB	Service details
P - - floor shift	8	302	RAN-DC	3.03	70.3	2	★D6DR 7003-CA	Service details
1977								
G	6 6 8	200 250 302	RUG-BP	F/4/S O/D	70.5	1	★D7DR 7003-AA	Service details
J	4	140 (2300)	75FT-BA	C/4/S	70.7	7	D5RY 7003-D	
J	6	171 (2800)	75FT-AA	C/4/S	70.7	7	D5RY 7003-C	
L	4	140 (2300)	77ET-AA	G/4/S	70.4	7	★77ET 7003-AA	Service details
L	4	140 (2300)	77ET-CA	G/4/S	70.4	7	★77ET 7003-CA	Service details
P	6 6	200 250	RAN-DM	3.03	70.3	2	★D7BR 7003-BA	Service details
1978								
G	6 8	250 302	RUG-BP	F/4/S O/D	70.5	1	★D7DR 7003-AA	Service details
L	4	140 (2300)	78ET-CA	G/4/S	70.4	7	★78ET 7003-CA	80ET 7003-CA
P	6	200	RAN-DU	3.03	70.3	2	★D8BR 7003-DA	Service details
P	4	140 (2300)	78ET-BA	G/4/S	70.4	7	78ET 7003-BA	
1979								
G	8	302	RUG-CP	F/4/S O/D	70.5	9	★D9DR 7003-DA	
G	6	250	RUG-CY	F/4/S O/D	70.5	9	★D9DR 7003-EA	E0DR 7003-AA
J	4	140 (2300)	RAD-Y	F/4/S	70.6	10	★D9ZR 7003-EA	
J	4	140 (2300)	RAD-AA	F/4/S	70.6	10	★D9ZR 7003-FA	
J	8	302	RUG-CS	F/4/S O/D	70.5	9	★D9BR 7003-DA	Service details
J	6	171 (2800)	Rug-DA	F/4/S O/D	70.5	9	★D9ZR 7003-DA	Service details
J	4	140 (2300)	78ET-BA	G/4/S	70.4	7	★78ET 7003-BA	80ET 7003-BA

TRANSMISSION APPLICATION CHART

MODEL	ENGINE CYL.	ENGINE C.I.D. (C.C.D.)	TRANSMISSION IDENT.	TRANSMISSION TYPE	PARTS LIST	ILLUS. SECTION 70. PAGE	PART NUMBER	REPLACED BY
@ 2300 cc $ For vehicles without interlock system discard 7E449 switch and install N800015-S plug								
1979								
L	4	140 (2300)	78ET-CA	G/4/S	70.4	7	★78ET 7003-CA	80ET 7003-CA
P	8	302	RUG-CR	F/4/S O/D	70.5	9	★D9BR 7003-CA	Service details
P	8	302	RUG-CS	F/4/S O/D	70.5	9	★D9BR 7003-DA	Service details
P	6	200	RUG-CV	F/4/S O/D	70.5	9	★D9BR 7003-EA	Service details
P	6	200	RUG-CW	F/4/S O/D	70.5	9	★D9BR 7003-FA	Service details
P	4	140 (2300)	78ET-BA	G/4/S	70.4	7	★78ET 7003-BA	80ET 7003-BA

COPYRIGHT © 1986 — FORD MOTOR COMPANY — DEARBORN, MICHIGAN

YEAR	MODEL/RESTRICTIONS	ENGINE CYL.	ENGINE C.I.D. (C.C.D.)	QUANTITY RAN				PART NUMBER	DESCRIPTION
								7005	CASE ASSY.
73 73/78	C G,P	6	All	1				★ D20Z 7005-F Not replaced	Inc. (1) ea. C8AZ 7234-A and instruction sheet
73/74	C,P	8	All	1				★ D20Z 7005-G Not replaced	Incl. (1) ea. C7AZ 7234-A and instruction sheet
75/79	G,P	8	All	1				D9TZ 7005-A	Incl. (1) C8AZ 7234-A & (2) instr. sheets
73/78	C,G,P	6&8	All	1				358035-S	(PP-31)-plug- square head(case filler)-1/2"-14 pipe
				1				373719-S	(PP-54-D)-plug(case drain)-1/2"-14 magnetic
				1				74112-S	(P-1-A)-plug-expansion(to seal shifter rail hole in case)-11/16" dia.
				1				20430-S8	(B-104)-bolt(attach case to flywheel housing)-7/16"-14 x 1/4"
				1				34793-S2	(X-67-A)-lockwasher-7/16"
				1				38427-S	(BB-262-T)-bolt(to fill retarded spark hole in case)
73/76	C,G,P	6&8	All	1				C5AZ 7017-B	Shaft(input)-20-33 teeth, 10 splines 8 3/4"long
77	P	6	All	1				★ D7BZ 7017-A Not replaced(3/81)	18-33 teeth, 10 splines, 8 3/4 long
78	P	6	All	1				D8BZ 7017-A	18-33 teeth-10 splines- 9 27/64" long
								7025	BEARING
73/78	C,G,P	6&8	All	1				C3AZ 7025-C	Input shaft- 1 9/16" I.D. x 3 5/32" O.D.-11/16" wide
73/78	C,G,P	6&8	All	1				C3AZ 7025-B	Output shaft- 1 3/8" I.D. x 2 7/8" O.D.-11/16" wide-#207-L,LO
								7026	Refer to group 7064
73/78	C,G,P	6&8	All	2				C3AZ 7029-A	WASHER (REVERSE IDLER GEAR THRUST)-front and rear
								7A029	GEAR (LOW CONSTANT MESH)
73/78	C,G,P	6&8	All	1				D5TZ 7A029-A	32-35 teeth -4 5/16" dia.-1.89 width
73/78	C,G,P	6&8	All	1				B3TZ 7A034-A	BUSHING (EXTENSION HOUSING)-1 1/2" I.D. x 1 5/8" O.D. x 1 1/2" wide
								7A039	HOUSING (EXTENSION)
73/74 75/76	P - - column shift G,P - - column shift	6&8 6&8	All All	1 1				★ C30Z 7A039-E Not replaced(10/80)	#C30R 7A040-D or #C70R 7A040-B Use w/RAN-CY,CZ,DB trans.
73/76 75/76 75/76	P - - floor shift G - - floor shift G,P - - column shift	6&8 6&8 6&8	All All All	1 1 1				C5ZZ 7A039-B	#C4DR 7A040-B Use w/RAN -DF,DG,DJ trans.
77	P	6	All	1				★ D7BZ 7A039-A Not replaced(3/81)	#D7BR 7A040-AA
78	P	6	All	1				★ D8BZ 7A039-B Not replaced	#D8BR 7A040-CA
73/74	C	6&8	All	1				C5AZ 7A039-B	#C5AR 7A040-B
73/78	C,G,P	6&8	All	5				20430-S8	(B-104)-bolt (housing to case)-7/16"-14 x 1 1/4"
				5				34793-S2	(X-67-A)-lockwasher-7/16"
73/78	C,G,P	6&8	All	3				C3AZ 7A044-A	INSERT (SYNCHRONIZER HUB)-Intermediate and high gears-Low and reverse gears-refer to group 7109
								7050	RETAINER (INPUT SHAFT BEARING)
73/77 78	C,G,P P	All 6	All All	1 1				C5AZ 7050-E D8BZ 7050-A	#C5AR 7050-A #D8BR 7050-CA
				4				350673-S	(BB-544)-bolt(retainer to case)-5/16"-18 x 3/4"
73/78	C,G,P	6&8	All	1				C2AZ 7051-B	GASKET (INPUT SHAFT BEARING RETAINER)

COPYRIGHT © 1986 — FORD MOTOR COMPANY — DEARBORN, MICHIGAN

YEAR	MODEL/RESTRICTIONS	ENGINE CYL.	ENGINE C.I.D. (C.C.D.)	QUANTITY RAN				PART NUMBER	DESCRIPTION
73/78	C,G,P	6&8	All	1				D9BZ 7052-A	SEAL (EXTENSION HOUSING OIL)- 1 1/2" I.D. x 2 3/8" O.D. x 1/2" wide
								7061	SHAFT (OUTPUT)
73/74	C	6&8	All	1				D0AZ 7061-A	23 11/16" long-32-37-28-spline teeth- incl. D0AZ 7064-A and C3AZ 7071-D
75	G,P	All	All	1					Use with RAN-DF,DG, DJ trans.
73/74	P	6&8	All	1				D0DZ 7061-A	23 11/16" long-32-37-28 spline teeth- incl. D0AZ 7064-A and C3AZ 7071-D
75/77	G,P	All	All	1					Use with RAN-CY, CZ,DB,DC,DM trans.
78	P	6	All	1				★ D8BZ 7061-A Not replaced	23 11/16" long-32-37-28 spline teeth incl. D0AZ 7064-A and C3AZ 7071-D
								7064	SNAP RING-also refer to group 7071
73/78	C,G,P	6&8	All	1				B 7064	Input shaft bearing to shaft- 1 7/16" I.D.
				1				51A 7026	Input shaft bearing to case- 3" I.D. x 3 3/8" O.D. x 1/16" thick
				1				8A 7064	Output shaft bearing to shaft- 1 7/32" I.D.
				1				8A 7026	Output shaft bearing to case- 2 11/16" I.D. x 3 1/16" O.D. x 1/16" thick
				1				8A 7064	Second and third speed synchronizer hub to shaft
				AR				8A 7064	Speedometer drive gear to shaft- 2 11/16" I.D. x 3 1/16" O.D. x 1/16" thick
				1				D0AZ 7064-A	Washer to shaft
				1				377884-S	(QQ-67-D)-first and reverse speed synchronizer hub to shaft- 1 3/4" I.D. x 1 15/16" O.D.
73/78	C,G,P	6&8	All	1				C3AZ 7071-D	WASHER (CONSTANT MESH LOW GEAR THRUST)-1 5/8" I.D. x 2 1/16" O.D. x 3/32" thick-also refer to group 7064
73/78	C,G,P	6&8	All	1				E0BZ 7086-A	GASKET (EXTENSION HOUSING TO CASE)
								7102	GEAR and BUSHING ASSY. (INTERMEDIATE)
73/76	C,G,P	6&8	All	1				D5TZ 7102-A	
77/78	P	6	All	1				D7BZ 7102-A	24 helical-33 clutch teeth
73/78	C,G,P	6&8	All	2				C4AZ 7107-C	RING (SYNCHRONIZER BLOCKING)- intermediate and high gear
73/78	C,G,P	6&8	All	1				C4AZ 7107-D	Low and reverse gear
73/78	C,G,P	6&8	All	2				B8AZ 7109-B	SNAP RING (INTERMEDIATE and HIGH CLUTCH HUB INSERT)
73/78	C,G,P	6&8	All	1				C9AZ 7109-A	SPRING and INSERT KIT(LOW and REVERSE SYNCHRONIZER)- incl.(1)spring and(3)inserts
								7111	COUNTERSHAFT
73/76	C,G,P	8	All	1				C3AZ 7111-B	6 1/2" long
73/78	C,G,P	6	All	1				C7ZZ 7111-A	6 9/32" long
73/78	C,G,P	6&8	All	1				353647-S	(NN-114)-pin (retains shaft to case)
								7113	GEAR (COUNTERSHAFT CLUSTER)
73/74	C,P	6&8	All	1				C5AZ 7113-G	5 3/32" long -28,20,15 teeth
75/76	G,P	6&8	All	1				D5TZ 7113-A	28,20,15 teeth -5 3/32" long
77/78	P	6	All	1				★ D7BZ 7113-AA Not replaced	30,21,15 teeth-5 3/32" long
73/78	C,G,P	6&8	All	1set				C3AZ 7118-A	ROLLER (INPUT SHAFT PILOT BEARING)-#C417-Q(set consists of 15)

YEAR	MODEL/RESTRICTIONS	ENGINE CYL.	ENGINE C.I.D. (C.C.D.)	QUANTITY RAN				PART NUMBER	DESCRIPTION
73/78	C,G,P	6&8	All	2				C3AZ 7119-A	WASHER (COUNTERSHAFT GEAR THRUST)-front and rear
73/78	C,G,P	6&8	All	2sets				C3AZ 7121-A	ROLLER (COUNTERSHAFT PILOT BEARING)-#C1086-Q(set consists of 25-repairs both ends)
				2				354398-S	(XX-254)-washer(retains rollers in countershaft gear)-7/8"
NOTE 1-	When D50Z 7124-A is used to replace D30Z 7124-A, gear and bushing D5TZ 7102-A is req'd.								
								7124	SYNCHRONIZER ASSY.
73/78	C,G,P	6&8	All	1				C6AZ 7124-B	Low and reverse gear-4 13/16" sliding gear O.D.
73/74 75/78	C,P G,P	All All	All All	1 1				D50Z 7124-A	Interm. and high- NOTE 1
73/78	C,G,P	6&8	All	2				C3AZ 7C124-A	FINGER ASSY. (SHIFT CONTROL)
73/78	C,G,P	6&8	All	1				C3AZ 7140-A	SHAFT(REVERSE IDLER GEAR)
				1				305080-S	(NN-113)-pin-spring (retains shaft in case)-1/4" x 1"
73/78	C,G,P	6&8	All	1				C5AZ 7141-C	GEAR and BUSHING(REVERSE IDLER GEAR)-17 helical-19 spur teeth
								7149	Refer to group 7029
73/78	C,G,P	6&8	All	1				C3AZ 7153-F	GASKET and OIL SEAL KIT-incl.(1)ea. gaskets C2AZ 7051-B, E0BZ 7086-A, C3AZ 7223-A, B and C
								7D176	Refer to group 7109
73/78	C,G,P	6&8	All	1				C3AZ 7222-B	COVER (CASE ACCESS)
				2				20386-S8	(B-53)-bolt(cover to case)-5/16"-18 x 1"
				2				34906-S8	(X-98)-lockwasher-5/16"
				7				372110-S	(BB-547)-bolt & washer assy.-5/16"-18 x 5/8"
73/78	C,G,P	6&8	All	1				C3AZ 7223-B	GASKET (CASE ACCESS COVER)
73/78	C,G,P	6&8	All	1				C3AZ 7230-B	FORK (INTERMEDIATE and HIGH GEAR SHIFTER)-#C4AR 7230-C
				1				377886-S	(UU-26)-screw(attach fork to shift rail)-5/16"-24 x 7/8"
								7231	FORK (LOW and REVERSE GEAR SHIFTER)
73/77	C,G,P	All	All	1				C3AZ 7231-A	#C4AR 7231-C
78	P	6	All	1				D8BZ 7231-A	Incl. (1) 306301-S pin
				1				377886-S	(UU-26)-screw(attach fork to shift rail)-5/16"-24 x 7/8"
								7234	SPRING (GEAR SHIFTER FORK INTERLOCK)
73/78	C,G,P	6&8	All	1				C7AZ 7234-A	15/16" free length-10 coils-use with all models with suffix(1)or higher in trans. identification suffix
73/78	C,G,P	6&8	All	1				C8AZ 7234-A	1 13/16" free length
73/75	C,G,P	6&8	All	1				D0AZ 7235-B	PIN (GEARSHIFT INTERLOCK)-27/64" long-11/64" dia.
								7240	SHAFT (GEAR SHIFTER LOW and REVERSE)
73/77	C,G,P	All	All	1				D0AZ 7240-D	5 9/16" long
78	P	6	All	1				★ D8BZ 7240-A Not replaced	

COPYRIGHT © 1986 — FORD MOTOR COMPANY — DEARBORN, MICHIGAN

YEAR	MODEL/RESTRICTIONS	ENGINE CYL.	ENGINE C.I.D. (C.C.D.)	QUANTITY RAN				PART NUMBER	DESCRIPTION
73/78	C,G,P	6&8	All	1				★ D20Z 7241-A Not replaced	SHAFT (GEAR SHIFTER INTERMEDIATE and HIGH) 4 23/32" long
73/78	C,G,P	6&8	All	1				74112-S	(P-1-A)-plug (welsh type to seal shaft hole in case)-11/16" dia.
73/78	C,G,P	6&8	All	1				D8UZ 7A283-A	SEAL (INPUT SHAFT OIL)- 1 1/8" I.D. x 1 5/8" O.D. x 1/4" thick
								7285	LEVER (INTERMEDIATE and HIGH GEAR SHIFTER FORK)- incl. insulator (group 7341)
73/74	C	6&8	All	1				★ D20Z 7285-A Not replaced(10/78)	
73/77	P - - column shift	6&8	All	1				D5BZ 7285-A	
75/76	G - - column shift	6	All	1				★ D5DZ 7285-A Not replaced(10/80)	
73/76 78 75/76	P - - floor shift P - - floor shift G - - floor shift	6&8 6 6&8	All All All	1 1 1				★ D0ZZ 7285-B Not replaced	
73/78	C,G,P	6&8	All	1				33800-S8	(M-63)-nut(lever to finger assy.)- 3/8"-24
				1				44727-S8	(X-24)-washer-flat-3/8"
				1				34847-S8	(X-74)-lockwasher-3/8"
73/78	C,G,P	6&8	All	2				E0UZ 7288-A	SEAL(SHIFTER FORK LEVER SHAFT OIL)
								7290	LEVER (LOW and REVERSE GEAR SHIFTER FORK)-incl. insulator (group 7341)
73/74	C	6&8	All	1				★ D20Z 7290-A Not replaced(10/78)	
75/76	G - - column shift	6	All	1				★ D5DZ 7290-A Not replaced(10/80)	
73/77	P - - column shift	6&8	All	1				D5BZ 7290-B	
73/76	G,P - - floor shift	All	All	1				★ D5BZ 7290-A Not replaced(10/80)	
78	P - - floor shift	6	All					★ D8BZ 7290-A Not replaced	
73/78	C,G,P	6&8	All	1				33800-S8	(M-63)-nut(lever to finger assy.)- 3/8"-24
				1				44727-S8	(X-24)-washer-flat-3/8"
				1				34807-S8	(X-66)-lockwasher-3/8"
73/78	C,G,P	6&8	All	3				D0AZ 7C316-A	PIN (GEARSHIFT INTERLOCK ROD)- 15/32" x 5/16" dia.-pointed ends-use w/all shifter rails for models with(1) or higher number in trans. ident. suffix refer to 7240 kit for models w/o a number in trans. ident. suffix
73/78	C,G,P	6&8	All	1				377885-S	(UU-26-C)-screw -set(retains pin to shaft)-3/8"-16 x 7/8"
73/78	C,G,P	6&8	All	1				C3AZ 7B331-D	SMALL PARTS REPAIR KIT

Consists of SNAP RING	SNAP RING	WASHER	PIN	RETAINER
1-8A 7026	1-B 7064	2-C3AZ 7029-A	1-305080-S	1-377884-S
1-51A 7026	3-8A 7064	1-C3AZ 7071-D		
	1-D0AZ 7064-A	2-C3AZ 7119-A		

								7341	INSULATOR (GEARSHIFT LEVER and SELECTOR ARM)-Refer to Section 71 group 7341
73 73	C P	6 6	All 250	1 1				D20Z 7E440-A	SWITCH ASSY. (TRANSMISSION SPARK CONTROL)*SW-1110

YEAR	MODEL/RESTRICTIONS	ENGINE CYL.	ENGINE C.I.D. (C.C.D.)	QUANTITY RAN				PART NUMBER	DESCRIPTION
								7E449	SWITCH (SEAT BELT WARNING SYSTEM)
73	C,P	6&8	All	1				D20Z 7E449-A	#D2AR 7E449-BA
74/76	C,G,P	6&8	All	1				D4DZ 7E449-A	#D4DR 7E449-AA
73/76	C,G,P	6&8	All	1				★ D20Z 7E454-A Not replaced	PIN (SEAT BELT SWITCH ACTUATOR) -23/32" long-5/16" O.D.-incl.(1) D2AR 7E455-AA spring
73/76	C,G,P	6&8	All	1				★ D20Z 7E460-A Not replaced(10/80)	CLAMP (SEAT BELT WARNING SENSOR SWITCH)
73/76	C,G,P	6&8	All	1				1P 77868-A	SEAL (SENSOR SWITCH)-1/2" I.D.

COPYRIGHT © 1986 — FORD MOTOR COMPANY — DEARBORN, MICHIGAN

YEAR	MODEL/RESTRICTIONS	ENGINE CYL.	ENGINE C.I.D. (C.C.D.)	QUANTITY G/4/S				PART NUMBER	DESCRIPTION
	▲ 2000 cc @ 2300 cc								
								7K002–A	LEVER (REVERSE GEARSHIFT)
74/	J,L,P	4	All	1				D4FZ 7K002–A	
			All	1				68309–GS	(AX–25)–retaining ring
								7005	CASE ASSY.
74	L	4	▲122	1				D1FZ 7005–C	
74/	L,P	4	@140	1				D7FZ 7005–A	
79	J	4	All	1					
74/	L,P	4	All	4				★ 334524–S100	screw & washer assy.
79	J	4	All	4					(trans. case to flywheel housing)–
									7/16" x 13" x 1 1/4"–hex. head
				4				E450100–S	(AP–15)–plug(use as filler plug)–
									1/2" x 1/4"
				1				N800016–S51	(AP–13)–plug(threaded hole in case)–
									M18 x 1.5 x 9.9(Metric fine)
								7A011	Refer to group 7A283
								7017	SHAFT (INPUT)
74	L	4	▲122	1				D1FZ 7017–A	
74/77	L	4	@140	1				D4FZ 7017–A	#74WT–BA–23 splines –27 clutch
									teeth–18 helical teeth–use with
									74WT–EA and 75WT–AA,AB,77ET–LA trans
74/76	L	4	@140	1				★ D4FZ 7017–B	#74WT–CA–23 splines –27 clutch
								Not repl. (3/81)	teeth–19 helical teeth–use with
									74WT–FA and 75WT–BA,BB trans.
77/	L	4	@140	1				D7FZ 7017–A	#77ET–AA–23 splines –27 clutch teeth–17
									helical teeth–use w/77ET–AA,78ET–CA trans.
78/	J,P	4	All	1				D8BZ 7017–B	#78ET–AA
74/	L,P	4	All	1				D1FZ 7K024–A	PIN(REVERSE GEARSHIFT RELAY
79	J	4	All	1					LEVER)–3/8" shank dia. x 9/16" large
									dia. x 1 9/32" long
				1				115459–ES	(AP–5)–cup(expansion plug)–13/32" dia
74/	L,P	4	All	1				D1FZ 7025–A	BEARING ASSY.(MAIN DRIVE GEAR)–
79	J	4	All	1					1 3/8" I.D. x 2 27/32" O.D. x 11/16"
									wide–9 balls
74/	L,P	4	All	1				D1FZ 7026–A	SNAP RING(MAIN DRIVE GEAR
79	J	4	All	1					BEARING)–2 11/16" I.D. x 3 1/16" O.D.
									x 5/64" wide
								7030	SNAP RING (BEARING OUTER)–
									selective fit
74/	L,P	4	All	1				D1FZ 7030–A	#Copper–2 25/32" O.D. x .067" thick
79	J	4	All	1				D1FZ 7030–B	2 25/32" O.D. x .069" thick
				1				D1FZ 7030–C	2 25/32" O.D. x .070" thick
				1				D1FZ 7030–D	2 25/32" O.D. x .071" thick
				1				D1FZ 7030–E	2 25/32" O.D. x .072" thick
				1				D1FZ 7030–F	#Blue–2 25/32" O.D. x .073" thick
				1				D1FZ 7030–G	#Black–2 25/32" O.D. x .074" thick
				1				D1FZ 7030–H	2 25/32" O.D. x .075" thick
74/	L,P	4	All	1				D1FZ 7A034–A	BUSHING (EXTENSION) – #69EG 7A034–A
79	J	4	All	1					

COPYRIGHT © 1986 — FORD MOTOR COMPANY — DEARBORN, MICHIGAN

YEAR	MODEL/RESTRICTIONS	ENGINE CYL.	ENGINE C.I.D. (C.C.D.)	QUANTITY G/4/S				PART NUMBER	DESCRIPTION
	▲ 2000 cc @ 2300 cc								
								7A039	HOUSING ASSY. (EXTENSION)
74/	L	4	All	1				D5FZ 7A039–A	
78/	J,P	4	All	1				D8BZ 7A039–C	
74/	L,P	4	All	3				E600312–S82	(AB–33)–bolt (7A039 to case)–hex.
79	J	4	All	3					head–M10 x 35(Metric)
				1				N800015–S	(AP–13–A)–plug(to plug sensor switch hole)–hex. head–M16 x 1.5(Metric)
								7A044	INSERT (SYNCHRONIZER HUB)
74/	L,P	4	All	3				D1FZ 7A044–A	1st and 2nd speed– 1" long x 7/16"
79	J	4	All	3					high x 3/16" thick
				3				D1FZ 7A044–B	3rd and 4th speed–3/4" long x 3/16"
				3					high x 1/4" thick
								7050	RETAINER (MAIN DRIVE GEAR BEARING)
74/	L	4	All	1				D7FZ 7050–A	
78/	P	4	All	1				D8BZ 7050–B	#78/ET 7050–AA
79	J	4	All	1					
74/	L,P	4	All	4				E602529–S76	(AB–53) –screw & washer (retainer to
79	J	4	All	4					case)–hex.head
								7051	RETAINER (OIL SEAL)
74/	L,P	4	All	1				D1FZ 7051–A	3 13/32" dia.–rubber
79	J	4	All	1					
								7052	SEAL (EXTENSION OIL)
74/	L,P	4	All	1				E0ZZ 7052–A	#7SWT 7657–AA
79	J	4	All	1					
								7059	SNAP RING (SYNCHRONIZER HUB)
74/	L,P	4	All	1				D4FZ 7059–A	1" I.D.–1/16" thick
79	J	4	All	1					
								7061	SHAFT ASSY. (OUTPUT)
74/	L,P	4	@140	1				D4FZ 7061–A	Use w/74WT–BA,BB–75WT–BA,BB–77ET–AA–
79	J	4	All	1					78ET–BA,CA trans.
			@140	1				D4FZ 7061–B	Use with 74WT–EA and 75WT–AA,AB,77ET–CA
			▲ 122	1					trans.–use w/D2RY 7071–A
								7064	SNAP RING
									Input shaft brg. to shaft–selective fit
74/	L,P	4	All	1				D1FZ 7064–C	.087" thick
79	J	4	All	1				D1FZ 7064–D	#Copper–.090" thick
				1				D1FZ 7064–E	#Blue–.092" thick
				1				D1FZ 7064–F	#Black–.095" thick
				1				D1FZ 7064–G	#Brown–.098" thick
									Output shaft brg. to shaft–selective fit
74/	L,P	4	All	1				D1FZ 7064–H	.067" thick
79	J	4	All	1				D1FZ 7064–J	#Blue–.070" thick
				1				D1FZ 7064–K	#Black–.073" thick
				1				D1FZ 7064–L	#Brown–.075" thick
				1				D1FZ 7064–M	#Copper–.078" thick
								7064	SECOND SPEED GEAR RETAINING
74/	L,P	4	All	1				D1FZ 7064–A	Outer
79	J	4	All	1				D1FZ 7064–B	Inner–1 1/4" I.D.
74/	L,P	4	All	1				D1FZ 7065–A	BEARING ASSY. (OUTPUT SHAFT)–
79	J	4	All	1					2 11/16" dia. x 45/64" wide–7 balls
74/	L,P	4	All	1				D2RY 7071–A	WASHER (OUTPUT SHAFT FIRST
79	J	4	All	1					GEAR THRUST)–9 teeth–use with
									D2FZ 7061–A shaft
74/	L,P	4	All	1				D4FZ 7086–A	GASKET (EXTENSION TO HOUSING)
79	J	4	All	1					

YEAR	MODEL/RESTRICTIONS	ENGINE CYL.	ENGINE C.I.D. (C.C.D.)	QUANTITY G/4/S				PART NUMBER	DESCRIPTION
	▲ 2000 cc @ 2300 cc								
74/ 79	L,P J	4 4	All All	1 1				D4FZ 7100–A	GEAR (FIRST SPEED) –30 clutch, 29 helical teeth
								7102–3	GEAR (SECOND SPEED)
74/ 79	L,P J	All 4	All All	1 1				D6RY 7102–A	
74/ 79	L,P J	4 4	All All	1 1				★ D1FZ 7105–A r/b D1FZ 7124–A(6/79)	HUB (SYNCHRONIZER –THIRD and FOURTH SPEED)–2 11/32" dia. x 3/4" wide–27 teeth–also serviced in 7124 assy.
								7107	RING (SYNCHRONIZER BLOCKING)
74/ 79	L,P J	4 4	All All	2 2				D1FZ 7107–B	1st and 2nd speed –2 3/4" dia.–18 or 27 teeth
				2 2				D1FZ 7107–A	3rd and 4th speed–2 5/16" dia. –18 or 27 teeth
								7109	SPRING (SYNCHRONIZER BLOCKING)
74/ 79	L,P J	4 4	All All	2 2				D1FZ 7109–A	1st and 2nd speed – 2 11/32" I.D. x 2 1/2" O.D.
				2				D1FZ 7109–B	3rd and 4th speed–2 1/8" dia.
								7111	COUNTERSHAFT
74	L	4	▲122	1				D1FZ 7111–A	#1BBA on end – 11/16" dia. x 8 7/16" long
74/ 79	L,P J	4 4	@140 All	1 1				D2RY 7111–A	
74/ 79	L,P J	4 4	All All	2 2				119686–ES18	(AX–15)–flatwasher (to retain countershaft and needle brg.)– 7/8" I.D. x 11/16" O.D.
								7113	GEAR (COUNTERSHAFT CLUSTER)
74	L	4	▲122	1				D1FZ 7113–A	34–29–24– 16–15 teeth
74/77	L	4	@140	1				D2RY 7113–A	use w/74WT–EA,75WT–AA, AB, 77ET–CA trans. –34–29–24–16–15 teeth
74/76	L	4	@140	1				D4FZ 7113–A	use w/74WT–FA, 75WT–BA, BB trans. 33–29–24–16–15 teeth 78ET–BA,CA trans.
77/ 79	L,P J	4 4	@140 @140	1 1				D7FZ 7113–A	#77ET–7113–AA use w/77ET–AA, 35–29–24–16–15 teeth –7 11/64" long
74/ 79	L,P J	4 4	All All	1 1				D1FZ 7115–A	SPACER (TUBE)– 11/16" dia. x 4 7/8" long
								7119	WASHER (COUNTERSHAFT CLUSTER GEAR)
74	L	4	▲122	2				D1FZ 7119–A	Front–1 9/16" dia. x 1 1/16" thick– steel backed bronze
				1				D1FZ 7119–B	2nd gear–1 3/8" I.D. x 1 27/32" O.D. x 3/32" thick
74/ 79	L,P J	4 4	@140 All	2 1				D2RY 7119–A	Front and rear
								7120	BEARING (INPUT SHAFT PILOT)
74/	J,L,P	4	All	1				D1FZ 7120–B	1" dia. x 9/16" wide
								7121	BEARING (COUNTERSHAFT GEAR)
74/ 79	L,P J	4 4	▲122 @140	1 Set 2 Set				D1FZ 7121–A	1/8" dia. x 3/4" long–tapered–needle (set consists of 19)–21 required on 140 engine
74/ 79	L,P J	4 4	▲122 @140	1 Set 2 Set				D1FZ 7121–B	1/8" dia. x 1" long–tapered–needle– (set consists of 19)–21 required on 140 engine

COPYRIGHT © 1986 — FORD MOTOR COMPANY — DEARBORN, MICHIGAN

YEAR	MODEL/RESTRICTIONS	ENGINE CYL.	ENGINE C.I.D. (C.C.D.)	QUANTITY G/4/S				PART NUMBER	DESCRIPTION
								7124-5	SYNCHRONIZER ASSY.
	▲ 2000 cc @ 2300 cc								
74/	L,P	4	All	1				7124	1st and 2nd speed-serviced in 7061 assy.
79	J	4	All	1					
				1				D1FZ 7124-A	3rd and 4th speed-7107 not included
			@140	A/R				D2RY 7125-A	Spacer(countershaft)
74/	L,P	4	All	1				D1FZ 7140-A	SHAFT (REVERSE IDLER GEAR)
79	J	4	All	1					
								7141	GEAR ASSY. (REVERSE IDLER)
74	L	4	△122	1				D1FZ 7141-A	
74/77	L	4	@140	1					use w/74WT-EA, 75WT-AA, AB, 77ET-CA trans.
74/	L,P	4	@140	1				D4FZ 7141-A	use w/74WT-FA,75WT-BA, BB,77ET-AA,78ET-BA, CA
79	J	4	@140	1					trans.
74/	L,P	4	All	A/R				D1FZ 7149-A	SPACER (COUNTERSHAFT GEAR)-
79	J	4	All	A/R					15/16" dia. x 23/32" I.D. x 1/8" thick
				2				119686-ES18	(AX-15)-flatwasher-7/8" O.D. x 11/16" I.D.
74/	L,P	4	All	1				D1FZ 7153-A	SEAL and GASKET KIT
79	J	4	All	1					

Consists of

1-D1FZ 7A011-A	Seal-input shaft rear	1-D1FZ 7223-A	Gasket- case cover
1-D1FZ 7051-A	Retainer-"O" ring	1-D1FZ 7288-A	Seal-gearshift rail
1-D1FZ 7086-A	Gasket-extension to housing	1-DORY 17298-A	Oil seal-speedometer shaft

YEAR	MODEL/RESTRICTIONS	CYL.	C.I.D. (C.C.D.)	G/4/S				PART NUMBER	DESCRIPTION
74/	J,L,P	4	All	1				D1FZ 7K201-A	PLATE (GEAR SELECT INTERLOCK)
				1				71919-GS	(Metric coarse)
74/	L,P	4	All	1				D1FZ 7K205-A	SPRING (GEARSHIFT LEVER RETURN)
79	J	4	All	1					
74	L	4	All	1				D2FZ 7222-A	COVER (CASE)
75/	L,P	4	All	1				D5FZ 7222-A	
79	J	4	All	1					
74/	L,P	4	All	10				E800197-S72	(AB-151-A)-screw & washer(cover to
79	J	4	All	10					case)-hex. hd.-M6 x 12(Metric coarse)
74/	L,P	4	All	1				D1FZ 7223-A	GASKET (CASE COVER)- approx. 5" x 7"
79	J	4	All	1					
								7230-1	FORK GEAR SHIFTER
74	L	4	▲122	1				D1FZ 7230-A	1st and 2nd speed
				1				D1FZ 7230-D	3rd and 4th speed
				1				D1FZ 7231-A	Reverse
74/	L,P	4	@140	1				E1ZZ 7230-A	1st and 2nd speed
79	J	4	@140	1				D1FZ 7230-D	3rd and 4th speed
				1				D4FZ 7231-A	Reverse
74/	L,P	4	All	1				D1FZ 7233-A	PLUNGER (MESHLOCK)- 1 13/32"
79	J	4	All	1					overall length x 3/16" shank x 5/16"
									dia. bell end
74/	J,L,P	4	All	1				D2FZ 7234-A	SPRING (MESHLOCK)
								230001-ES	(AU-1)-set screw-headless
								7A283	SEAL (INPUT SHAFT OIL)
74/79	J,L,P	All	All	1				E0ZZ 7A283-A	
74/	L,P	4	All	1				E3FZ 7288-A	SEAL (GEARSHIFT RAIL)-
79	J	4	All	1					49/64" dia. x 19/64" thick
74/	J,L,P	4	All	1				D3FZ 7302-A	ARM ASSY. (GEARSHIFT SELECTOR)
								E646569-S	(AN-5-E) pin (att. 7302 & 7358)-M4 x 20 (Metric)

YEAR	MODEL/RESTRICTIONS	ENGINE CYL.	ENGINE C.I.D. (C.C.D.)	QUANTITY G/4/S				PART NUMBER	DESCRIPTION
								7B331	SMALL PARTS REPAIR KIT
74/	J,L,P	4	All	1				D3RY 7B331–B	
	Consists of SNAP RINGS 1–D1FZ 7026–A 1–D1FZ 7030–A thru H 1–D4FZ 7059–A 1–D1FZ 7064–A thru M		SPACERS 1–D1FZ 7071–A 1–D2RY 7071–A 2–D1FZ 7149–A 1–D2RY 7149–A 2–119686–ES–18					WASHERS 2–D1FZ 7119–A 1–D1FZ 7119–B 2–D2RY 7119–A	
								7B340	GEAR (THIRD SPEED)
74/76	L	4	All	1				D4RY 7B340–A	
77	L	4	All	1					use w/77ET–CA trans.
77/	L,P	4	All	1				D7FZ 7B340–A	use w/77ET–AA trans.–27 clutch
79	J	4	All	1					–20 helical teeth
74/	L,P	4	All	1				D1FZ 7341–A	BUSHING (EXTENSION HOUSING)–
79	J	4	All	1					3/4" large dia. x 13/16" long–6 slots
								7358	SHAFT (GEAR SHIFT)
74/	L	All	All	1				D3FZ 7358–B	
78/	P	All	All	1				D8BZ 7358–A	
79	J	4	All	1					
74/	L,P	4	All	1				D1FZ 7K381–B	PLUG (EXTENSION)–2 7/32" dia.
79	J	4	All	1					
74/	L,P	4	All	1				D1FZ 7E427–A	SEAL (CASE VENT CAP)
79	J	4	All	1					
74/	L,P	4	All	1				D1FZ 7E444–A	SPRING CLIP (SHIFT LEVER STOP)
79	J	4	All	1					
74/76	L	4	All	1				D4FZ 7E449–A	SWITCH ASSY. (SEAT BELT
									WARNING SENSOR)–#D42R 7E449–AA
								7K453	BUSHING (GEARSHIFT SHAFT)
74/	L,P	4	All	1				D2FZ 7K453–A	#Black
79	J	4	All	1					
74/	L,P	4	All	1				D4FZ 7482–A	SPACER (REVERSE IDLER GEAR)
79	J	4	All	1					

COPYRIGHT © 1986 — FORD MOTOR COMPANY — DEARBORN, MICHIGAN

YEAR	MODEL/RESTRICTIONS	ENGINE CYL.	ENGINE C.I.D. (C.C.D.)	PART NUMBER	DESCRIPTION	QTY.
				7K002	LEVER ASSY. (REVERSE GEARSHIFT)	
79	G,J,P	All	All	D9BZ 7K002-A		1
				7K003	STOP (REVERSE GEARSHIFT LEVER)	
79	G,J,P	All	All	D9BZ 7K003-A	1 7/64" long-6 teeth	1
				7005	CASE ASSY.	
73	C,F	8	All	★ D20Z 7005-H N/R (8/81)	Inc.(1) C8AZ 7234-A(2) instruction sheets	1
77/78	G	6&8	All	D7DZ 7005-A		1
79	G,J,P	All	All	D9BZ 7005-A	#D9BR 7006-AA,AB	1
				358035-S	(PP-3-plug (case fuller)-sq. hd.- 1/2" pipe	1
				20430-S8	(B-104)-bolt(case to flywheel housing)-7/16"-14 x 1 1/4"	4
				34793-S2	(X-67-A)-lockwasher-7/16"	
				74112-S	(P-1-A)-plug(to seal shift rail hole in case)-expansion-11/16"	1
				384751-S	(BB-266-U)-bolt(to fill retarded spark hole in case)-5/8"-18 x 3/8"	1
				7017	SHAFT (INPUT)	
73	C,F	8	All	★ C4DZ 7017-A Not replaced(3/82)	23-36 teeth, 10 splines, 8 15/16" long	1
77/78	G	6&8	All	D7DZ 7017-A	24-36 teeth, 10 splines, 8 7/8" long	1
79	P	6	200	D9BZ 7017-A	24-36 teeth, 10 splines, 9 9/16" long-use w/RUG-CV,CW trans.	1
79	J,P	8	302	D9BZ 7017-B	25-36 teeth, 10 splines, 9 9/16" long use w/RUG-CR,CS trans.	1
79	G	6	250	D9DZ 7017-A	24-36 teeth, 10 splines, 8 7/8" long use w/RUG-CY trans.	1
79	G	8	302	D9DZ 7017-B	25-36 teeth, 10 splines, 8 7/8" long use w/RUG-CP trans.	1
79	J	6	171	D9ZZ 7017-A	24-36 teeth, 10 splines, 11 3/64" long use w/RUG-DA trans.	1
				7F018	LEVER ASSY. (GEARSHIFT OFFSET)	
79	G,J,P	All	All	★ D9BZ 7F018-A	1/2" dia. hole for 7358 shaft-use w/D9BZ 7358-A,B,C & D9DZ 7358-A shafts only	1
79	G,J,P	All	All	★ D9BZ 7F018-B	7/16" dia. hole for 7358 shaft-use w/D9BZ 7358-D,E,F & D9DZ 7358-B shaft only	1
				67557-S	(N-101-E) pin (lever to shaft) 3/16" x 3/4"	1
				7K024	PIN (REVERSE GEAR SELECTOR PIVOT)	
79	G,J,P	All	All	D4ZZ 7K024-A	2" long	1
				371197-S	(XX-16-FE) retaining ring-7/16" dia.	1
				7025	BEARING	
73	C,F	8	All	E1ZZ 7025-A	Input shaft-1 3/4" I.D. x 3 3/8" O.D.-#209-L	1
77/	G,J,P	All	All	E1ZZ 7065-A	Output shaft-1 3/8" I.D. X 3 9/64" O.D.-#307-L	1
				7026	Refer to group 7064	
				7A029	GEAR (FIRST SPEED)	
73	C,F	8	All	D7DZ 7A029-A	32 helical, 36 clutch teeth	1
77/78	G	All	All			1
79	G,J,P	All	All	D9BZ 7A029-B	32 helical, 36 clutch teeth	1
				7A034	BUSHING (EXTENSION HOUSING)	
73	C	8	351	C6AZ 7A034-A	1 1/2" I.D. x 1 7/8" O.D. x 1 1/4" long-use with RUG-BG trans.	1
73	C,F	8	All	B3TZ 7A034-A	1 1/2" I.D. x 1 5/8" O.D. x 1 1/2" long-u/with RUG-BF,BG trans.	1
77/	G,J,P	All	All			1
				7A039	HOUSING ASSY. (EXTENSION)	
73	C	8	351	★ C60Z 7A039-C Not replaced(10/80)	#RF-C70R 7A040-A-use with RUG-BF trans.	1
73	C	8	351	★ C90Z 7A039-A Not replaced(10/80)	Use with RUG-BG trans.	1

COPYRIGHT © 1986 — FORD MOTOR COMPANY — DEARBORN, MICHIGAN

YEAR	MODEL/RESTRICTIONS	ENGINE CYL.	ENGINE C.I.D. (C.C.D.)	PART NUMBER	DESCRIPTION	QTY.
				7A039	HOUSING ASSY. (EXTENSION) — Cont'd	
73	F	8	351	C5ZZ 7A039-D	#RF-C4ZR 7A040-A	1
77/78	G	6&8	All	★ D7DZ 7A039-A Not replaced(3/82)		1
79	G,J,P	All	All	D9BZ 7A039-A	#D9BR 7A040-AC	1
				20430-S8	(B-104)-bolt (housing to case)-7/16"-14 x 1 1/8"	5
				34793-S2	(X-67-A)-lockwasher	5
				7A044	INSERT (SYNCHRONIZER HUB)	
73	C,F	8	All	C4AZ 7A044-A	1st & 2nd speed	3
77/	G,J,P	All	All			3
73	C,F	8	All	C3AZ 7A044-A	3rd & 4th speed	3
77/	G,J,P	All	All			3
				7050	RETAINER (INPUT SHAFT BEARING)	
73/78	C,F,G	6&8	All	C5AZ 7050-J	#RF-C6AR-7050-F-3 13/16" long x 4 7/8" Flange O.D.	1
79	J	8	All	D9BZ 7050-A	use w/RUG-CS trans. 4 31/64" long X 4 27/32"	1
79	P	All	All		flange O.D.	1
79	G	All	All	D9DZ 7050-A	3 51/64" long x 4 27/32" flange O.D.	1
79	J	6	All	D9ZZ 7050-A	use w/RUG-DA trans.-4 11/16" long x 4 27/32" flange O.D.	1
73/78	C,F,G	All	All	350673-S	(BB-544) bolt (retainer to case) 5/16"-18 x 3/4"	4
79	G,J,P	All	All	387501-S	(BB-520-E) bolt (retainer to case) 5/16"-18 x 15/16"	4
73	C,F	8	All	C4AZ 7051-A	GASKET (INPUT SHAFT BEARING	1
77/	G,J,P	All	All		RETAINER)	1
				7052	SEAL (EXTENSION HOUSING OIL)	
73	C	8	351	B5AZ 7052-A	1 5-8" I.D. x 2 1/2" O.D. x 5/8" wide-use with RUG-BG trans.	1
73	C,F	8	351	D9BZ 7052-A	1 1/2" I.D. x 2 3/8" O.D. x 1/2" wide-use with RUG-BF or BJ trans	1
77/79	G,J,P	6&8	All			1
				7061	SHAFT (OUTPUT)	
73	C	8	351	★ C8AZ 7061-A Not replaced(10/80)	27 7/32" long, 32-37-31 splines -use with RUG-BG trans.	1
73	C,F	8	351	C5ZZ 7061-C	23 13/16" long, 32-37-28 splines, drilled hole for C3AZ 7071-D washer-use with RUG-BF or BJ trans.	1
77/78	G	6&8	All	★ D7DZ 7061-A Not replaced(3/82)	23 11/32"long, 32-37-28 teeth	1
79	G,J,P	All	All	D9BZ 7061-A	23 11/32" long, 32-37-28 teeth	1
				7064	SNAP RING	
73	C,F	8	All	C4AZ 7026-A	Input shaft bearing retaining-	1
77/	G,J,P	All	All		3 3/16" I.D. X 3 1/2"O.D. X 1/16" thick	
				C4AZ 7064-A	Input shaft bearing to shaft- 1 1/2" I.D. x 2" O.D. x 3/32" thick	1
				51A 7026	Output shaft bearing retaining- 3" I.D. x 3 3/8" O.D. x 1/16" thick	1
				8A 7064	Output shaft bearing to shaft- 1 7/32" I.D. x 1 9/16" O.D. x 3/32" thick	1
					Third and fourth speed synchronizer to shaft	1
					Speedometer gear(17285)to shaft	1
				C4AZ 7064-B	First and second speed synchronizer to shaft-1 11/16" I.D. x 2" O.D. x 3/32" thick	1
				7065	Refer to group 7025	
73	C,F	8	All	C3AZ 7071-D	WASHER (CONSTANT MESH LOW GEAR	1
77/	G,J,P	All	All		THRUST)-1 11/16" I.D. x 2" O.D. x 3/32" thick	1

YEAR	MODEL/RESTRICTIONS	ENGINE CYL.	ENGINE C.I.D. (C.C.D.)	PART NUMBER	DESCRIPTION	QTY.
73	C,F	8	All	E0BZ 7086-A	GASKET (EXTENSION HOUSING)	1
77/	G,J,P	All	All			1
				7102	GEAR (SECOND SPEED)	
73	C,F	8	All	C4DZ 7102-A	31 helical-36 clutch teeth -4 3/32"dia.	1
77/78	G	6&8	All	D7DZ 7102-A	31helical- 36 clutch teeth-3 25/32"dia.	1
79	G,J,P	All	All	D9BZ 7102-A	31 helical-36 clutch teeth	1
				★379233-S	snap ring (gear to output shaft) 1 1/2" I.D. x 1 13/16" O.D.	1
				7107	RING (SYNCHRONIZER BLOCKING)	
73/78	C,F,G	All	All	C4AZ 7107-D	36 teeth-3 1/4" dia.-7/16" wide	4
79	G,J,P	All	All	D9BZ 7107-A	36 teeth-3 1/4" dia.-13/32" wide	4
73	C,F	8	All	C3AZ 7109-D	SNAP RING (SYNCHRONIZER HUB INSERT	4
77/	G,J,P	All	All		RETAINING)	4
73	C,F	8	All	C4AZ 7111-A	COUNTERSHAFT-7/8" dia. x 10 1/8" long	1
77/	G,J,P	All	All			1
				305080-S	(NN-113)-pin(retain shaft in case)- 1/4" x 1"	1
				7113	GEAR (COUNTERSHAFT CLUSTER)	
73	C,F	8	All	★ C4DZ 7113-B Not replaced(3/82)	30-24-21-15 teeth- 8 7/8" long	1
77/78	G	6&8	All	★ D7DZ 7113-A Not replaced(3/82)	37-40-26-15 teeth- 8 7/8" long	1
79	G,J,P	6	All	D9BZ 7113-A	37-40-26-15 teeth-8 7/8" long	1
79	G,J,P	8	All	D9BZ 7113-B	36-41-26-15 teeth-8 7/8" long	1
73	C,F	8	All	C3AZ 7118-A	ROLLER(INPUT SHAFT PILOT BEARING) -	1set
77/	G,J,P	All	All		#C417-Q-(set consists of 15)	1set
73	C,F	8	All	C4AZ 7119-A	WASHER(COUNTERSHAFT GEAR THRUST) -	2
77/	G,J,P	All	All		front and rear-1 15/16" dia. x 1/16" thick	2
				7121	ROLLER (COUNTERSHAFT PILOT BEARING)	
73	C,F	8	All	C4AZ 7121-A	Use w/countershaft gear (7113)-5/32" dia. x	1set
77/	G,J,P	All	All		7/8" long(set consists of 42-repairs both ends)	
				C0DZ 7121-A	Use w/reverse idler gear(7141)-#C407-Q (set consists of 44-repairs both ends)	1set
				378559-S	(XX-242-C)-washer(retain roller in 7113 gear)-flat-7/8"	2
				351529-S	(XX-240)-washer(retain roller in 7141 gear)-flat-3/4"	2
				7124	SYNCHRONIZER ASSY.	
73	C,F	8	All	D0AZ 7124-B	1st & 2nd speed	1
77/78	G	All	All	E0TZ 7124-A	1st & 2nd speed	1
79	G,J,P	All	All	D9BZ 7124-A	1st & 2nd speed	1
73	C,F	8	All	D7DZ 7124-B	3rd & 4th speed	1
77/78	G	All	All			1
79	G,J,P	All	All	D9BZ 7124-B	3rd & 4th speed	1
				7C124	FINGER ASSY. (SHIFT CONTROL)	
73	C,F	8	All	C3AZ 7C124-A	1st,2nd,3rd,4th speed	2
77/78	G	6&8	All			2
73	C,F	8	All	C4AZ 7C124-A	Reverse	1
77/78	G	6&8	All			1
73	C,F	8	All	C4AZ 7140-A	SHAFT (REVERSE IDLER GEAR)-	1
77/	G,J,P	All	All		3/4" dia. x 5 1/4" long	1
				305080-S	(NN-113)-pin(retain shaft in case)-1/4" x 1"	1
				7141	GEAR & BUSHING ASSY. (REVERSE IDLER)	
73	C,F		All	★ C4AZ 7141-A	16 teeth-25 splines-3 13/16" long -NR (3/79)	1
77/	G,J,P	All	All	D7DZ 7141-A	16 teeth-25 splines-3 17/32" long	1
				7149	WASHER (REVERSE IDLER GEAR THRUST)	
73	C,F	8	All	C4AZ 7149-A	Front & rear	2
77/	G,J,P	All	All	D7DZ 7149-A	Front & rear	2

COPYRIGHT © 1986 — FORD MOTOR COMPANY — DEARBORN, MICHIGAN

YEAR	MODEL/RESTRICTIONS	ENGINE CYL.	ENGINE C.I.D. (C.C.D.)	PART NUMBER	DESCRIPTION	QTY.
73	C,F	8	All	C4AZ 7153-B	GASKET KIT	1
77/	G,J,P	All	All			1
	Consists of 1-E0BZ 7051-A Gasket			1-E0BZ 7086-A Gasket	1-E0BZ 7223-B Gasket	
				7K201	PLATE (GEARSHIFT SELECTOR INTERLOCK)	
79	G,J,P	All	All	D9BZ 7K201-A		1
				7222	COVER (CASE ACCESS)	
73	C,F	8	All	C4AZ 7222-A	9" X 6 1/2"	1
77/	G,J,P	All	All			1
73	C,F	8	All	20386-S8	(B-53)-bolt (cover to case) -5/6"-18 X1"	2
				34906-S8	(X-98)-lockwasher - 5/16"	2
73	C,F	8	All	372110-S	(BB-547)-bolt & washer assy. 5/16"-18x5/8"	8
77/78	G	6&8	All			10
79	G,J,P	All	All	384658-S	(BB-543-H) bolt (cover to case) 5/16"-18 x 5/8"	8
				384659-S	(BB-575-D) screw (cover to case) 5/16"-18 x 1"	2
73	C,F	8	All	C4AZ 7223-B	GASKET (CASE ACCESS COVER)-	1
77/	G,J,P	All	All		12 holes on gasket	1
				7D223	GEAR (REVERSE IDLER SLIDING)	
73/79	C,F,G,J,P	All	All	D9BZ 7D223-A	2 11/16" dia.-19 teeth-25 internal splines	1
				7230	FORK (GEAR SHIFTER)	
73	C,F	8	All	C4AZ 7230-B	#C4AR 7C114-A-1st&2nd speed	1
77/78	G	6&8	All			1
79	G,J,P	All	All	★ D9BZ 7230-A /bE1TZ 7230-A	1st & 2nd speed-two piece design-when replacing by E1TZ 7230-A must discard D9BZ 7N232-A plate	1
79	G,J,P	All	All	E1TZ 7230-A	1st & 2nd speed-one piece design-when replacing D9BZ 7230-A must discard D9BZ 7N232-A plate	1
73	C,F	8	All	C4AZ 7230-A	3rd & 4th speed	1
77/78	G	6&8	All			1
79	G,J,P	All	All	E1ZZ 7230-C	3rd & 4th speed-incl.(1) E1ZZ 7230-B fork & (1)-E1ZZ 7F310-A link	1
73	C,F	8	All	C4AZ 7231-B	FORK (LOW and REVERSE GEAR SHIFTER)-	1
77/78	G	6&8	All		#C5AR 7230-B	1
79	G,J,P	All	All	D9BZ 7231-A	#D9BR 7231-BA-reverse	1
				7N232	PLATE (GEARSHIFT SELECTOR ARM)	
79	G,J,P	All	All	D9BZ 7N232-A	Use w/D9BZ 7230-A fork	1
				7233	PLUNGER (MESHLOCK))	
79	G,J,P	All	All	E0BZ 7233-A	Non-step plunger- 1 11/32" long	1
79	G,J,P	All	All	D9BZ 7233-B	Step plunger	1
				7234	SPRING (SHIFTER INTERLOCK)	
73	C,F	8	All	C7AZ 7234-A	1st & 2nd-3rd & 4th & reverse	3
77/78	G	6&8	All		3rd & 4th & reverse	2
79	G,J,P	All	All			1
77/78	G	6&8	All	C8AZ 7234-A	1st & 2nd	1
73/78	C,F,G	All	All	377886-S	(UU-26) screw (retains spring to rail) 5/16"-24 X 59/64"	3
79	G,J,P	All	All	378206-S	(BB-539-L) bolt (spring pressure) hex. hd. 3/8"-16 x 3/8"	1
73	C,F	8	All	D0AZ 7235-B	PIN (GEAR SHIFTER INTERLOCK)-	2
77/78	G	6&8	All		11/64" dia. x 27/64" long	1
				7240	RAIL (GEAR SHIFTER)	
73	C,F	8	All	★ D20Z 7240-A Not replaced (10/78)	1st & 2nd speed-6 15/32" long	1
77/78	G	6&8	All	D0AZ 7240-F	1st & 2nd speed	1
73/78	C,F,G	8	All	D0AZ 7240-K	reverse-6 51/64" long	1
				7241	RAIL (3rd&4th speed shifter)	
73	C,F	8	All	★ D2AZ 7241-B Not replaced (3/81)	4 31/32" long	1
77/78	G	6&8	All	D7DZ 7241-A	4 31/32" long	1

YEAR	MODEL/RESTRICTIONS	ENGINE CYL.	ENGINE C.I.D. (C.C.D.)	PART NUMBER	DESCRIPTION	QTY.
				7241	RAIL (3rd & 4th speed shifter) — Cont'd	
79	G,J,P	All	All	D9BZ 7241-A		1
73/78	C,F,G	All	All	378260-S	(BB-539-L)-bolt (retains rail to case) hex. hd. -3/8"-16 x 3/8"	1
79	G,J,P	All	All	67557-S	(N-101-E) pin (rail to fork) 3/16" x 3/4"	1
				7242	RAIL (REVERSE GEAR SHIFTER)	
79	G,J,P	All	All	D9BZ 7242-A	5 43/64" long	1
				67557-S	(N-101-E) pin (rail to fork) 3/16" x 3/4"	1
73	F	8	All	★ C9AZ 7246-A Not replaced(10/80)	INSULATOR (GEARSHIFT LEVER)- 3/8" I.D. x 11/16" O.D. x 1/2" long	3
73 77/	C,F G,J,P	8 All	351 All	D8UZ 7A283-A	SEAL (INPUT SHAFT OIL)- 1 1/8" I.D. x 1 5/8" O.D.-1/4" thick	1 1
				7285	LEVER (GEARSHIFT)	
73	C	8	All	★ D00Z 7285-A Not replaced(9/78)	First and second speed-incl. 7246 insulator Third and fourth speed-incl. 7246 insulator	1 1
				★ D20Z 7290-B Not replaced(10/78)	Reverse	1
73	F	8	All	D0ZZ 7290-A	First and second speed-incl. 7246 insulator	1
				★ D0ZZ 7285-A Not replaced (3/79)	Third and forth speed-incl. 7246 insulator	1
				★ D0ZZ 7290-C Not replaced (3/79)	Reverse-incl. 7246 and 7351 insulators	1
77/78	G	6&8	All	★ D7DZ 7290-A Not replaced	#7DR-90-AB-1st & 2nd speed	1
				★ D7DZ 7285-A Not replaced	#7DR-85-AB-3rd&4th speed	1
				★ D7DZ 7290-B Not replaced	#7DR-65-AB-reverse	1
73 77/78	C,F G	8 6&8	All All	33800-S8	(M-63)-nut(lever to finger assy. 7C124)- hex.-3/8"-24	3 3
				34807-S8	(X-66)-lockwasher-3/8"	3
				44727-S8	(X-24)-washer-flat-3/8"	3
				7288	SEAL (SHIFTER SHAFT OIL)	
73/78	C,F,G	All	All	E0UZ 7288-A		3
79	G,J,P	All	All	E0ZZ 7288-A		1
				7290	Refer to Group 7285	
				7302	ARM ASSY. (CONTROL SELECTOR)	
79	G,J,P	All	All	E1TZ 7302-A		1
				67557-S	(N-101-E) pin (arm to shaft) 3/16" x 3/4"	1
				7F304	PAWL (OVERDRIVE SHIFT)	
79	G,J,P	All	All	D9BZ 7F304-A		1
				7F305	TURRET ASSY. (SHIFTER)	
79	G,J,P	All	All	D9BZ 7F305-A	#D9BR 7F306-BB	1
				N800289-S2	(AB-113-H) bolt (turret to ext.) hex. hd. M8 x 1.25 x metric	2
				E630319-S71	(AX-35) washer (turret to ext.) external tooth	2
				7F307	COVER ASSY. (TURRET SHIFTER)	
79	G,J,P	All	All	E0BZ 7F307-A		1
				N660250-S2	(AQ-3-R) snap ring (retains cover in turret)	1
				7F310	LINK ASSY. (OVERDRIVE SHIFT CONTROL)	
79	G,J,P	All	All	D9BZ 7F310-A		1
				376301-S	(PP-67-A) Plug (link to case) 1/2" exp.	1
73 77/78	C,F G	8 6&8	All All	D0AZ 7C316-A	PIN (GEARSHIFT INTERLOCK ROD) - 15/32"-5/16" dia.-pointed ends-use w/all shifter rails for all models with(1) or higher number in trans. ident. suffix	5 5
				377885-S	(UU-26-C)-screw(interlock pin)-set- 3/8"-16 x 7/8"	1

COPYRIGHT © 1986 — FORD MOTOR COMPANY — DEARBORN, MICHIGAN

YEAR	MODEL/RESTRICTIONS	ENGINE CYL.	ENGINE C.I.D. (C.C.D.)	PART NUMBER	DESCRIPTION	QTY.
73	C,F	8	All	C4MY 7B331-B	SMALL PARTS REPAIR KIT	1
77/	G,J,P	All	All			1

Consists of

1-C4AZ 7026-A	Snap ring	3-8A 7064	Snap ring	2-C4AZ 7149-A	Washer
1-51A 7026	Snap ring	1-C3AZ 7071-D	Washer	2-379233-S	Retaining ring
1-C4AZ 7064-A	Snap ring	2-C4AZ 7119-A	Washer	1-305080-S	Pin
1-C4AZ 7064-B	Snap ring				

				7B340	GEAR (THIRD SPEED OR OVERDRIVE)	
73	C,F	8	All	★ C4DZ 7B340-B Not replaced(1/82)	25 helical-36 clutch teeth - 3 7/32" O.D.	1
77/78	G	6&8	All	★ D7DZ 7B340-A Not replaced(1/82)	21 helical-36 clutch teeth	1
79	G,J,P	6	All	D9BZ 7B340-A	21 helical-36 clutch teeth-2 33/64" O.D. helical teeth	1
79	G,J,P	8	All	D9BZ 7B340-B	20 helical-36 clutch teeth-2 13/32" O.D. helical teeth	1
73	C,F	8	All	C7SZ 7341-A	INSULATOR (REVERSE GEARSHIFT LEVER)-5/16" I.D. x 11/32" long-use with 7246 insulator	1
				7358	SHAFT (GEARSHIFT)	

Note 1- 1/2" shaft dia. at 7F018 lever end-use w/D9BZ 7F018-A lever only
Note 2- 7/16" shaft dia. at 7F018 lever end-use w/D9BZ 7F018-B lever only

79	P	Note 1	6	200	D9BZ 7358-A	12 31/32" long-use w/RUG-CV trans.	1
79	P	Note 1	8	302	D9BZ 7358-C	13 29/32" long-use w/RUG-CR trans.	1
79	G,J,P	Note 1	6&8	171,302	D9DZ 7358-A	17 3/32" long-use w/RUG-CP,CS,DA trans.	1
79	P	Note 2	6	200	D9BZ 7358-D	12 31/32" long-use w/RUG-CV trans.	1
79	P	Note 2	8	302	D9BZ 7358-F	13 29/32" long-use w/RUG-CR trans.	1
79	G,J,P	Note 2	6&8	171,302	★ D9DZ 7358-B r/b D9DZ 7358-C	17 3/32" long-use w/RUG-CP,CS,DA trans.	1
					7358	SHAFT & OFFSET LEVER ASSY. (GEARSHIFT)	
79	P		6	200	E0BZ 7358-A	15 5/16" long-incl. 7F018 lever-use w/ RUG-DV trans.	1
79	G,P		6	200,250	E0BZ 7358-B	18 1/2" long-incl. 7F018 lever-use w/ RUG-CW, CY trans.	1
79	P		8	302	D9BZ 7358-G	16 1/4" long-incl. 7F018 lever-use w/ RUG-CR trans.	1
79	G,J,P		6&8	171,302	D9DZ 7358-C	19 29/64" long-incl. 7F018 lever-use w/ RUG-CP,CS,DA trans.	1
79	G,J,P		All	All	67557-S	(N-101-E)pin (shaft to lever) 3/16" x 3/4"	1
73	C,F		8	All	C4AZ 7A385-A	WASHER (OUTPUT SHAFT THRUST)-	1
77/	G,J,P		All	All		1 3/8" I.D. x 2 5/16" O.D. x 3/16" thick	1
					7K424	SLEEVE (GEARSHIFT SHAFT)	
79	P		6	200	D9BZ 7K424-A	55/64" long-use w/RUG-CV trans.	1
79	G,J,P		6&8	171,250	D9BZ 7K424-B	4 63/64" long-use w/RUG-CH,CP,CS, CW,DA trans.	1
79	G,P		6&8	200,250, 302	D9BZ 7K424-C	4 3/64" long-use w/RUG-CY trans.	1
79	P		8	302	D9BZ 7K424-D	1 25/32" long-use w/RUG-CR trans	1
73	C,F		8	All	D20Z 7E449-A	SWITCH (SEAT BELT WARNING SENSOR) - #D2AR 7E449-BA	1
					7K453	BUSHING (GEARSHIFT DAMPENER)	
79	G,J,P		All	All	D9BZ 7K453-A		1
73	C,F		8	All	★ D20Z 7E454-B Not replaced(10/78)	PIN (SEAT BELT SWITCH ACTUATOR) - 1 13/32" long x 5/16" O.D.-incl.(1) D2AR 7E455-BB spring	1
73	C,F		8	All	D20Z 7E460-B	CLAMP (SEAT BELT WARNING SENSOR SWITCH)	1
					7482	SPACER (REVERSE FORK)	
79	G,J,P		All	All	E0BZ 7482-A	19/32" I.D. x 3/4" O.D. x 9/16" thick	1
73	C,F		8	All	1P 77868-A	SEAL (SENSOR SWITCH) -1/2" I.D.	1

YEAR	MODEL/RESTRICTIONS	ENGINE CYL.	ENGINE C.I.D. (C.C.D.)	PART NUMBER		DESCRIPTION	QTY.
79	J	All	All	D4ZZ	7K002–A	LEVER ASSY. (REVERSE GEARSHIFT)	1
					7005	CASE ASSY.	
79	J	All	All	D5ZZ	7005–A		1
79	J	All	All		358035–S	(PP–31)–plug–1/2"	1
					7017	SHAFT (INPUT)	
79	J	All	All	D9ZZ	7017–B	9 1/2" long	1
79	J	All	All	D4ZZ	7F018–A	LEVER ASSY. (GEARSHIFT OFFSET)	1
79	J	All	All		34806–S	(X–64)–washer–spring lock	1
					N620013–S	(AM–11E) nut (lever offset to gearshift shaft)–hex. M8 (Metric coarse)	1
79	J	All	All	D4ZZ	7K024–A	PIN (REVERSE GEAR SELECTOR PIVOT)–2" long	1
					371197–S	(XX–16FE) retaining ring–7/16" dia.	1
					7025	BEARING	
79	J	All	All	C3AZ	7025–B	Input or output shaft	AR
					7026	Refer to group 7064	
					7A034	BUSHING (EXTENSION HOUSING)	
79	J	All	All	B3TZ	7A034–A		1
					7A039	HOUSING ASSY. (EXTENSION)	
79	J	All	All	D9ZZ	7A039–A	#D9ZR 7A040–AA	1
79	J	All	All		N800038–S2	(AB–31–C) screw and washer assy. (ext. to case hex. hd.–M10 x 30 (Metric coarse)	5
					7A044	INSERT (SYNCHRONIZER HUB)	
79	J	All	All	D4ZZ	7A044–B	First and second speed	3
				D4ZZ	7A044–A	Third and fourth speed	3
					7050	RETAINER (INPUT SHAFT BEARING)	
79	J	All	All	D9ZZ	7050–B	#D9ZR 7050–BA	1
79	J	All	All		N602187–S100	(AB–36–H) bolt (retainer to case) hex. hd.–M8 x 20 (Metric coarse)	4
79	J	All	All	C2AZ	7051–B	GASKET (INPUT SHAFT BEARING RETAINER)	1
					7052	SEAL (EXTENSION HOUSING OIL)	
79	J	All	All	D6ZZ	7052–A	1 1/2" I.D. x 2 3/8" O.D. x 1/2" wide	1
					7061	SHAFT (OUTPUT)	
79	J	All	All	D6ZZ	7061–A	Incl. D4ZZ 7107–B, first and second clutch hub and reverse sliding gear	1
79	J	All	All		353351–S	(AA–9)–ball–1/4" dia.	1
					305019–S	(NN–99E) pin 1/8" x 3/8"	1
					7064	SNAP RING	
79	J	All	All	D4ZZ	7064–A	Second speed gear retaining 1 5/16" I.D. x 1 1/2" O.D.	1
		All	All	D4ZZ	7064–B	Third speed gear retaining	1
		All	All	8A	7064	Output shaft brg. to shaft–or speedo. drive gear to shaft–1 1/4" I.D. x 1 9/16 O.D. x 3/32 thick	AR
79	J	All	All	8A	7064	Input shaft brg. to shaft	1
79	J	All	All	8A	7026	Input shaft or output shaft	AR

COPYRIGHT © 1986 — FORD MOTOR COMPANY — DEARBORN, MICHIGAN

YEAR	MODEL/RESTRICTIONS	ENGINE CYL.	ENGINE C.I.D. (C.C.D.)	PART NUMBER	DESCRIPTION	QTY.
79	J	All	All	D4ZZ 7071–A	SPACER (MAIN SHAFT FIRST GEAR THRUST)–1 3/8" I.D. x 1 3/4" O.D.	1
				7L082	INSERT (GEAR SHIFT FORK)	
79	J	All	All	D8ZZ 7L082–A	#Bright blue–1st & 2nd–3rd & 4th	4
79	J	All	All	D4ZZ 7086–A	GASKET (EXTENSION HOUSING)	1
79	J	All	All	D4ZZ 7100–A	GEAR (FIRST SPEED)–33 helical, 30 clutch teeth	1
				7102	GEAR (SECOND SPEED)	
79	J	All	All	D4ZZ 7102–A	32 helical, 30 clutch teeth	1
				7107	RING (SYNCHRONIZER BLOCKING)	
79	J	All	All	D4ZZ 7107–A	First and second speed–18 or 30 teeth–2 3/4" O.D.	2
				D4ZZ 7107–B	Third and fourth speed–27 teeth–2 11/32" O.D.	2
				7109	SPRING (SYNCHRONIZER BLOCKING)	
79	J	All	All	D4ZZ 7109–B	First and second–2 19–32" O.D.	2
				D4ZZ 7109–A	Third and fourth–2 1/8" O.D.	2
79	J	All	All	D4ZZ 7111–A	COUNTERSHAFT–7/8" O.D. x 9 1/8" long	1
				305080–S	(NN–113)–pin–spring–1/4" x 1"	1
				7113	GEAR (COUNTERSHAFT CLUSTER)	
79	J	All	All	D5ZZ 7113–A	37–29–23–15–15–teeth–7 15/16" long	1
79	J	All	All	C3AZ 7118–A	ROLLER (INPUT SHAFT PILOT BEARING)–#C417–Q (Set consists of 15)	1 set
79	J	All	All	D4ZZ 7119–A	WASHER (SECOND GEAR)–1 1/2" I.D. x 1 15/16" O.D.	1
79	J	All	All	C3AZ 7119–A	WASHER (COUNTERSHAFT GEAR THRUST)–front and rear	2
79	J	All	All	C3AZ 7121–A	ROLLER (COUNTERSHAFT PILOT BEARING) (set consists of 25–repairs both ends)	2 sets
				354398–S	(XX–254)–washer (countershaft gear thrust)–front and rear	2
				7124	SYNCHRONIZER ASSY.	
79	J	All	All	7124	First and second speed – service in 7061 assy.	1
79	J	All	All	D5ZZ 7124–A	third and fourth speed	1
79	J	All	All	D4ZZ 7140–A	SHAFT (REVERSE IDLER GEAR)	1
				305080–S	(NN–113)–pin–spring–1/4" x 1"	1
79	J	All	All	D4ZZ 7141–A	GEAR and BUSHING ASSY. (REVERSE IDLER)	1
79	J	All	All	★ 7153	Order (1) C2AZ 7051–B gasket, (1) D4ZZ 7086–A gasket and (1) D4ZZ 7223–A gasket	
79	J	All	All	D4ZZ 7K201–A	PLATE (GEARSHIFT SELECTOR INTERLOCK)	1
				7222	COVER (CASE)	
79	J	All	All	D9ZZ 7222–A	#D9ZR 7222–A	1
				74113–S	(P–2)–plug–3/4"	1
				87038–S91	(T–1–DA)–"O" ring shifter shaft–13/16" I.D.	1
				E602167–S71	(AB–7)–screw–hex. hd.–M6 x 20 (Metric coarse)	8
79	J	All	All	D4ZZ 7223–A	GASKET (CASE COVER)	1
				7230–1	FORD GEAR SHIFTER	
79	J	All	All	D8ZZ 7230–A	1st & 2nd incl. (2) D8ZZ 7L082–A inserts	1
79	J	All	All	D6ZZ 7230–A	Third & fourth speed incl. (2) D6ZZ 7L082–A or (2) D8ZZ 7L082–A inserts	1
79	J	All	All	D4ZZ 7231–A	Reverse	1

YEAR	MODEL/RESTRICTIONS	ENGINE CYL.	ENGINE C.I.D. (C.C.D.)	PART NUMBER	DESCRIPTION	QTY.
79	J	All	All	D5ZZ 7N232–A	PLATE (GEAR SHIFT SELECTOR ARM)	2
79	J	All	All	D4ZZ 7233–A	PLUNGER (MESHLOCK)–1 7/16" long	1
79	J	All	All	D4ZZ 7234–A	SPRING (SHIFTER INTERLOCK)– 5/16" O.D. x 1 5/16" long	1
				N800090–S51	(AB–148G) screw (spring to cover) M12 x 10 (Metric coarse)	1
79	J	All	All	D8UZ 7A283–A	SEAL (INPUT SHAFT OIL)	1
				7288	SEAL (SHIFTER SHAFT)	
79	J	All	All	E0ZZ 7288–A		1
79	J	All	All	D4ZZ 7302–A	ARM ASSY. (CONTROL SELECTOR)	1
				357479–S5	(NN–108)–pin–3/16" dia.	1
79	J	All	All	D4ZZ 7B331–A	SMALL PARTS REPAIR KIT	1

Consists of

2–8A 7026	Snap ring	1–305019–S	pin
1–51A 7026	Snap ring		
1–B 7064	Snap ring		
3–8A 7064	Snap ring	2–305080–S	pin
1–D4ZZ 7064–A	Snap ring	1–353351–S	ball
1–D4ZZ 7064–B	Snap ring	2–354398–S	washer
2–C3AZ 7119–A	Washer	1–371197–S	ring
1–D4ZZ 7119–A	Washer		

				7B340	GEAR (THIRD SPEED)	
79	J	All	All	D4ZZ 7B340–A	26 helical, 27 clutch teeth	1
				7358	SHAFT (GEARSHIFT)	
79	J	All	All	D9ZZ 7358–A	17 9/16" long	1
79	J	All	All	D4ZZ 7K381–A	PLUG (EXTENSION HOUSING)	1
				7C382	GEAR (REVERSE SLIDING)	
79	J	All	All	D7ZZ 7C382–A	32 teeth–30 splines–3 29/32" O.D.	1
79	J	All	All	D4ZZ 7K453–A	BUSHING (GEARSHIFT DAMPENER)	1

COPYRIGHT © 1986 — FORD MOTOR COMPANY — DEARBORN, MICHIGAN

YEAR	MODEL/RESTRICTIONS	ENGINE CYL.	ENGINE C.I.D. (C.C.D.)	PART NUMBER	DESCRIPTION	QTY.
	▲ 2000 cc @ 2300cc ♦ 2600 cc ⊕ 2800 cc					
				7005	CASE ASSY.	
73/78	J	4	All	★ D3RY 7005–A	Not replaced (3/82)	1
73/78	J	6	All	D4RY 7005–A		1
73/78	J	4&6	All	E450100–S76	Plug–1/2"–14(Metric coarse)	2
				7A011	SEAL (INPUT SHAFT)	
73/74	J	All	All	E0ZZ 7A283–A		1
76/78	J	4&6	All	D5RY 7A011–A		1
				7017	SHAFT (INPUT)	
73/78	J	4	All	D1FZ 7017–A		1
73	J	6	♦159	D2RY 7017–A		1
74/78	J	6	⊕171	D4RY 7017–A		1
				7025	BEARING (MAIN DRIVE)–Also refer to Group 7065	
73/78	J	4&6	All	D1FZ 7025–A	Input shaft	1
73/74	J	4	▲122	D1RY 7025–A	Output shaft	1
73/78	J	4&6	All	D1FZ 7026–A	SNAP RING(INPUT SHAFT BEARING)	1
				7030	SNAP RING (BEARING)	
73/74	J	4	▲122	★ D1RY 7030–A	1.7375"–selective fit–not replaced(10/80)	1
		4	▲122	★ D1RY 7030–B	1.7625"–selective fit–not replaced(10/80)	1
		4	▲122	★ D1RY 7030–C	1.7875"–selective fit–not replaced(10/80)	1
		4	▲122	★ D1RY 7030–D	1.8125"–selective fit–not replaced(10/80)	1
		4	▲122	★ D1RY 7030–E	1.8375"–selective fit–not replaced(10/80)	1
		4	▲122	★ D1RY 7030–F	1.8625"–selective fit–not replaced(10/80)	1
		4	▲122	★ D1RY 7030–G	1.8875"–selective fit–not replaced(10/80)	1
		4	▲122	★ D1RY 7030–H	1.9125"–selective fit–not replaced(10/80)	1
73/78	J	6 4	All @140	D1FZ 7030–A	#Copper–2 25/32" O.D.–.067" thick	1 1
		6 4	All @140	D1FZ 7030–B	–.069" thick	1 1
		6 4	All @140	D1FZ 7030–C	–.070" thick	1 1
		6 4	All @140	D1FZ 7030–D	–.071" thick	1 1
		6 4	All @140	D1FZ 7030–E	–.072" thick	1 1
		6 4	All @140	D1FZ 7030–F	#Blue–2 25/32" O.D.–.073" thick	1 1
		6 4	All @140	D1FZ 7030–G	#Black–2 25/32" O.D.–.074" thick	1 1
		6 4	All @140	D1FZ 7030–H	–.075" thick	1 1
73/78	J	4/8	All	01A 7034	VENT(EXTENSION HOUSING)	1
				7A034	BUSHING (EXTENSION HOUSING)	
73/74	J	4	▲122	D1RY 7A034–A		1
73/78	J	6 4	All @140	D1FZ 7A034–A		1 1
				7A039–A	HOUSING (EXTENSION)	
73/74	J	4	▲122	D3RY 7A039–A		1
76/78	J	4	@140	★ D6RY 7A039–A Not replaced (2/79)		1
73/78	J	6	All	D2RY 7A039–A		1
		4&6	All	388143–GS2	Screw & lockwasher–7/16" –14 x 5/16"	4
				7A044	INSERT (SYNCHRONIZER HUB)	
73/78	J	4&6	All	D1FZ 7A044–A	First and second speed synchronizer	3
				D1FZ 7A044–B	Third and fourth speed synchronizer	1
				7D049	SPRING (RETRACTING)	
73/74	J	4	▲122	★ D1RY 7D049–A	Not replaced(10/80)	1

COPYRIGHT © 1986 — FORD MOTOR COMPANY — DEARBORN, MICHIGAN

▲ 2000 cc @ 2300cc ♦ 2600 cc ⊕ 2800 cc

YEAR	MODEL/RESTRICTIONS	ENGINE CYL.	ENGINE C.I.D. (C.C.D.)	PART NUMBER	DESCRIPTION	QTY.
				7D049	SPRING (RETRACTING) — Cont'd	
73/78	J	6	All	★ D2RY 7D049-A	Not replaced (3/82)	1
76/78	J	4	@140			1
73/78	J	4&6	All	D1RY 7050-B	RETAINER (INPUT SHAFT BEARING)	1
		4&6	All	42846-S13	(U-13)-screw & lockwasher(retainer to 7003)-hex. head-5/16"-18 x 7/8"	1
				7051	GASKET (INPUT SHAFT BEARING RETAINER)	
73/74	J	4&6	All	D1RY 7051-A		1
76/78	J	4&6	All	D5RY 7051-A		1
				7052	OIL SEAL (EXTENSION HOUSING)	
73/74	J	4	▲122	D1RY 7052-A		1
73/74	J	6	All	E0ZZ 7052-A		1
76/78	J	4&6	All	D5RY 7052-A		1
				7059	SNAP RING (SYNCHRONIZER-THIRD SPEED)	
73/78	J	4&6	All	D4FZ 7059-A		1
				7061	SHAFT (OUTPUT)	
73/74	J	4	▲122	D2RY 7061-C	10 splines-23" long-incl.(1)D2RY 7071-B spacer	1
73/78	J	6	All	D4RY 7061-B		1
74/78		4	@140			1
				7064	SNAP RING	
					INPUT SHAFT BEARING TO SHAFT-SELECTIVE FIT	
73/78	J	4&6	All	D1FZ 7064-C	.087"	1
				D1FZ 7064-D	#Copper-.090"	1
				D1FZ 7064-E	#Blue-.092"	1
				D1FZ 7064-F	#Black-.095"	1
				D1FZ 7064-G	#Brown-.098"	1
					OUTPUT SHAFT BEARING TO SHAFT-SELECTIVE FIT	
73/74	J	4	▲122	★ D1RY 7064-A	1.724"-not replaced(10/80)	1
		4	▲122	★ D1RY 7064-B	1.788"-not replaced(10/80)	1
		4	▲122	★ D1RY 7064-C	1.852"-not replaced(10/80)	1
		4	▲122	★ D1RY 7064-D	1.918"-not replaced(10/80)	1
		4	▲122	★ D1RY 7064-E	1.983"-not replaced(10/80)	1
73/78	J	6	All	D1FZ 7064-H	.067" thick	1
		4	@140			1
		6	All	D1FZ 7064-J	#Blue-.070" thick	1
		4	@140			1
		6	All	D1FZ 7064-K	#Black-.073" thick	1
		4	@140			1
		6	All	D1FZ 7064-L	#Brown-.075" thick	1
		4	@140			1
		6	All	D1FZ 7064-M	#Copper-.078" thick	1
		4	@140			1
					SECOND SPEED GEAR RETAINING	
		4&6	All	D1FZ 7064-A	Outer	1
		4&6	All	D1FZ 7064-B	Inner	1
73/78	J	6	♦159, ⊕171	D1FZ 7065-A	BEARING (OUTPUT SHAFT)- 2 11/16" dia. x 45/64" wide-7 balls	1
76/78	J	4	@140			1
				7071	WASHER (LOW GEAR THRUST)	
73/74	J	4	▲122	★ D2RY 7071-B Not replaced (3/79)	Use w/D2RY 7061-C shaft only	1
73/78	J	6	All	D2RY 7071-A	Use w/D2RY 7061-B or D4RY 7061-B	1
		4	@140		Shaft only	1
73/74	J	4&6	All	D1RY 7086-B	GASKET (EXTENSION TO HOUSING)	1

YEAR	MODEL/RESTRICTIONS	ENGINE CYL.	ENGINE C.I.D. (C.C.D.)	PART NUMBER	DESCRIPTION	QTY.
▲ 2000 cc @ 2300cc ♦ 2600 cc ⊕ 2800 cc						
76/78	J	4&6	All	D5RY 7086-A		1
				7100	GEAR (FIRST SPEED)	
73/78	J	4	All	D1FZ 7100-A		1
73/78	J	6	All	D4FZ 7100-A		1
				7102-3	GEAR (SECOND SPEED)	
73/78	J	All	All	D6RY 7102-A		1
				7107	RING (SYNCHRONIZER BLOCKING)	
73/78	J	4&6	All	D1FZ 7107-B	First and second speed -18 or 30 teeth	2
				D1FZ 7107-A	Third and fourth speed-18 or 30 teeth	2
				7109	SPRING (SYNCHRONIZER)	
73/78	J	4&6	All	D1FZ 7109-A	First and second speed	2
				D1FZ 7109-B	Third and fourth speed	2
				7111	COUNTERSHAFT	
73/78	J	4	All	D1RY 7111-A		1
73/78	J	6	All	D2RY 7111-A		1
73/78	J	4&6	All	D1RY 7E112-A	BRACKET (RETRACTING SPRING)	1
				7113	GEAR (COUNTERSHAFT CLUSTER)	
73/78	J	4	All	D1FZ 7113-A	34,29,24,16,15 teeth	1
73	J	6	♦159	D2RY 7113-A	34,29,24,16,15 teeth	1
74/78	J	6	⊕171	D4FZ 7113-A	33,29,24,16,15 teeth-7 5/32" long	1
73/78	J	4	All	D1FZ 7115-A	SPACER TUBE	1
				7119	WASHER (THRUST)	
73/78	J	4	All	D1FZ 7119-A	Countershaft gear(front and rear)-steel backed bronze-1 9/16" dia. x 1/16" thick	2
73/78	J	4&6	All	D1FZ 7119-B	Second gear-1 3/8" I.D. x 1 27/32" O.D. 3/32" thick	1
		6	All	D2RY 7119-A	Countershaft gear(front and rear)	2
				7120	BEARING (MAIN SHAFT PILOT)	
73/78	J	4	All	D1FZ 7120-B		1
73/78	J	6	All			1
74	J	6	All	D4ZZ 7120-B	Clutch pilot bearing	1
				7121	ROLLER (COUNTERSHAFT GEAR PILOT BEARING)	
73/78	J	4&6	All	D1FZ 7121-A	Front(set consists of 19)	1set
				D1FZ 7121-B	Rear(set consists of 19)	1set
				7124	SYNCHRONIZER ASSY.	
73/77	J "Before 3/10/77"	All	All	D1FZ 7124-A	3rd. & 4th. speed-15/16" thick-7107 not included	1
77/78	J "From 3/10/77"	All	All	D7RY 7124-A	3rd. & 4th. speed-1 1/32" thick-7107 not included	1
73/78	J	All	All	7124	1st. & 2nd. speed-serviced in 7061 only	1
73/78	J	6	♦159, ⊕171	D2RY 7125-A	SPACER(COUNTERSHAFT)- retains 7121 rollers	4
				7140	SHAFT (REVERSE IDLER GEAR)	
73/78	J	4	All	D1RY 7140-A		1
73/78	J	6	All	★ D2RY 7140-A	Not replaced (3/82)	1
73/78	J	4&6	All	D1RY 7141-A	GEAR and BUSHING ASSY. (REVERSE IDLER)	1
				7149	SPACER (COUNTERSHAFT GEAR)	
73/78	J	4	All	D1FZ 7149-A		2
73/78	J	4	All	119686-ES18		2
73/78	J	4&6	All	D2RY 7149-A	WASHER (REVERSE IDLER GEAR THRUST)	1

COPYRIGHT © 1986 — FORD MOTOR COMPANY — DEARBORN, MICHIGAN

YEAR	MODEL/RESTRICTIONS	ENGINE CYL.	ENGINE C.I.D. (C.C.D.)	PART NUMBER	DESCRIPTION	QTY.
	▲ 2000 cc @ 2300cc ♦ 2600 cc ⊕ 2800 cc					
73/78	J	4&6	All	D1RY 7153–A	SEAL and GASKET KIT	1

Consists of

1–D1FZ 7A011–A	Seal(input shaft rear)	1–D1RY 7223–C	Gasket (case to cover)
1–D1RY 7051–A	Gasket(input shaft brg. retainer)	1–DORY 17298–A	Seal(speedometer shaft)
1–D1RY 7086–B	Gasket(extension to housing)		

YEAR	MODEL/RESTRICTIONS	CYL.	C.I.D. (C.C.D.)	PART NUMBER	DESCRIPTION	QTY.
				7222	HOUSING ASSY. (GEARSHIFT)	
73/74	J	4&6	ALL	D3RY 7222–B	Incl.(1)E850100–S71 plug and(1)E853109–S seal	
76/78	J	4&6	All	D5RY 7222–A		1
73/78	J	4&6	All	42789–S8	(U–10)–screw & lockwasher(housing to case)– hex. head–5/16"–18 x 3/4"	AR
		6	All	20466–S8	(B–61)–bolt(housing to case)– hex. head–5/16"–18 x 1 1/2"	2
		6	All	42846–S13	(U–13)–screw & lockwasher(housing to case)– hex. head–5/16"–18 x 7/8"	1
				7223	GASKET (CASE TO COVER)	
73/74	J	4	▲122	★ D1RY 7223–C Not replaced (1/81)		1
76/78	J	4&6	All	D5RY 7223–B		1
				7230–1	FORK (GEAR SHIFTER)	
73/78	J	4&6	All	D1RY 7230–A	First and second speed	1
				D1RY 7230–B	Third and fourth speed	1
				D1RY 7231–A	Reverse	1
				7A283	Refer to group 7A011	
				7B331	SMALL PARTS REPAIR KIT	
73/74	J	4	▲122	D3RY 7B331–A		1

Consists of

1–D1FZ 7026–A	Snap rlng	1–D2RY 7071–B	Spacer
1–D1RY 7030–A,B,C, D,E,F,G,H	Snap ring	2–D1FZ 7119–A	Washer
1–D4FZ 7059–A	Snap ring	1–D1FZ 7119–B	Washer
1–D1FZ 7064–A,B,C, D,E,F,G,	Snap ring	2–D1FZ 7149–A	Spacer
1–D1RY 7064–A,B,C, D,E	Snap ring	2–119686–ES 18	Spacer
1–D1RY 7071–A	Spacer		

YEAR	MODEL/RESTRICTIONS	CYL.	C.I.D. (C.C.D.)	PART NUMBER	DESCRIPTION	QTY.
73/78	J	6 4	All @140	D3RY 7B331–B		1 1

Consists of

1–D1FZ 7071–A	Spacer	2–119686–ES 18	Spacer
1–D2RY 7071–A	Spacer	1–D1FZ 7026–A	Snap ring
1–D1FZ 7119–B	Washer	1–D1FZ 7030–A,B,C, D,E,F,G,H	Snap ring
2–D1FZ 7119–A	Washer		
2–D2RY 7119–A	Washer	1–D4FZ 7059–A	Snap ring
2–D1FZ 7149–A	Spacer		
1–D2RY 7149–A	Spacer	1–D1FZ 7064–A,B,C D,E,F,G,H,J,K,L,M	Snap ring

YEAR	MODEL/RESTRICTIONS	CYL.	C.I.D. (C.C.D.)	PART NUMBER	DESCRIPTION	QTY.
				7B340	GEAR (THIRD SPEED)	
73/78	J	All	All	D4RY 7B340–A		1
				7E449	Refer to Group 10B924	

YEAR	MODEL/RESTRICTIONS	ENGINE CYL.	ENGINE (C.I.D.) (C.C.D.)	TRANS. TYPE	QTY.	PART NUMBER	DESCRIPTION
7007	PLATE (TRANSMISSION ENGINE REAR COVER) ▲ 2000cc ♦ 2600cc ⊕ 2800cc @ 2300cc						
74	L	4	▲122	All	1	★ D4FZ 7007-C	Not replaced
74/79	L	4	@140	All	1	E3TZ 7007-A	
78/79	P	4	@140	All	1		
79	J	4	@140	All	1		
75/	L	6	⊕171	All	1	D4ZZ 7007-A	
73/74	J	4	▲122	All	1	D1RY 7007-B	
76/78	J	4	@140	All	1		
73/78	J	6	♦159, ⊕171	All	1	D2RY 7007-A	May req. 6411 gasket
73/77	G,P	6	200	All	1	C6DZ 7007-B	
78/	J,P	6	200	All	1	D8BZ 7007-B	
73/77	C,G,P	6	250	All 3/S	1	C9DZ 7007-A	
73/77	P	8	302	All	1		
78/	G	6&8	250,302	All	1	D8DZ 7007-B	
79	J,P	8	302	All	1	D9ZZ 7007-A	
73/74	C	8	302,351	All	1	★ D0AZ 7007-A	r/b D0AZ 7007-C (8/78)
73/	C,G,P	6	All	All	2	20326-S7	(B-49)-bolt-5/16"-18 x 5/8" hex. hd. (plate to flywheel housing)
73/74	C	8	All	All	2	20346-S8	(B-50)-bolt-5/16"-18 x 3/4"(plate to flywheel housing)
					AR	34806-S7	(X-64)-lockwasher-5/16"
73	J	6	♦159	All	2	388379-GS	Bolt(plate to eng.)-M8 x 15 (Metric coarse)
74/78	L	4	All	All	1	★ 379376-S	(BB-562-X)-bolt(plate to flywheel housing)-hex.washer hd.-3/8"-16 x 3/4" - not repl.
7L028	BRACKET (TRANSMISSION BACK-UP LAMP SWITCH)						
73	J	4&6	All	All	1	★ D2RY 7L028-A Not replaced(10/80)	Attaches to transmission lever
7F032	BRACKET (GEARSHIFT LEVER COVER BEZEL)						
76/78	J	4&6	All	C/4/S	1	★ D5RY 7F032-A	Not replaced
7E046	PLATE (TRANSMISSION SHIFT CONTROL MOUNTING)						
73	C	8	All	F/4/S	1	D20Z 7E046-A	
73	F	8	351	F/4/S	1	★ D1ZZ 7E046-B	#D1ZA 7E046-BA-Not repl.
73/76	P	6 & 8	All	All	1	D1DZ 7E046-A	
75/76	G	6&8	All	All	1		
73	F	8	351	F/4/S	5	42789-S8	(U-10)-screw & lockwasher-hex. head-5/16"-18 x 3/4"
					1	379630-S2	(BB-116)-screw-flat head-5/16"-18 x 3/4"
7K065	MEMBER (TRANSMISSION SUPPORT)						
78/	P	All	All	All	1	D8BZ 7K065-A	R.H.-#D8BB 7K065-AB
79	J	All	All	All	1	E1ZZ 7K065-A	L.H.-#D9ZB 7F157-AA-repl. D8BB-AD
7E097	SPACER (TRANS. GEARSHIFT LEVER)						
79	J,P	6&8	All	All	1	D9BZ 7E097-A	
7B100	COVER (TRANSMISSION CONTROL SELECTOR INDICATOR OPENING)						
75/76	G "Before 10/1/75"	All	All	All	1	★ D5DZ 7B100-A Not replaced(10/80)	5 1/8" long x 7/8" wide
76/	G "From 10/1/75"	All	All	All	1	D6DZ 7B100-A	Burled walnut
77/	G "From 9/13/76" Canada only	All	All	All	1	★ D7DZ 7B100-A Not replaced(3/83)	Black
78/	P	All	All	All	1	D8BZ 7B100-A	
7C101	SPRING (TRANSMISSION GEARSHIFT TUBE)						
73/74	C	6&8	All	All 3/S	1	★ D20Z 7C101-A	Not replaced
7C102	SEAL (TRANSMISSION CONTROL SELECTOR TUBE)						
73	C	6&8	All	All	1	C9AZ 7C102-A	1 5/8" I.D. x 2 1/4" O.D. x 1" thick
73/77	F,P	6&8	All	All	1		

COPYRIGHT © 1986 — FORD MOTOR COMPANY — DEARBORN, MICHIGAN

YEAR	MODEL/RESTRICTIONS	ENGINE CYL.	ENGINE (C.I.D.) (C.C.D.)	TRANS. TYPE	QTY.	PART NUMBER	DESCRIPTION
7A111	PIN (TRANSMISSION GEARSHIFT LEVER)						
73/78	J	4&6	All	C/4/S	1	D1RY 7A111-A	
7B112	Refer to group 7326						
7120	Refer to group 7600						
7B125	RETAINER (TRANSMISSION GEARSHIFT LEVER SPRING)						
73/78	J	4&6	All	C/4/S	1	D5RY 7B125-A	
7E132	WASHER (TRANSMISSION GEARSHIFT SHAFT) - Refer to group 7246						
7E138	BOOT (TRANSMISSION FLOOR MOUNTED GEARSHIFT CONTROL LINKAGE LOWER)-Also refer to group 7277						
73/75	G,P	6&8	All	All 3/S	1	★ D1DZ 7E138-A	Not replaced
76	G	6&8	All	All 3/S	1	★ D6DZ 7E138-A	Not replaced
76	P	6&8	All	All 3/S	1		
77/	G	6&8	All	F/4/S	1	D7DZ 7E138-A	
78	P - - floor shift without Luxury Decor group	6	200	All 3/S	1	★ D8BZ 7E138-A	Not replaced
7A185	BELLCRANK ASSY. (TRANSMISSION COLUMN SHIFT SELECTOR)						
75/76	G	6	All	All	1	D5DZ 7A185-A	
7C206	PLATE (STOP-TRANSMISSION GEAR SHIFT)						
73/74	J	4&6	All	All 4/S	1	★ D2RY 7C206-A	Not replaced
76/78	J	4&6	All	C/4/S	1	★ D5RY 7C206-A	Not replaced
7210	LEVER (TRANSMISSION COLUMN MOUNTED GEARSHIFT) - Incl. knob, insulator and impact sleeve						
75/76	G	6&8	All	All 3/S	1	D5DZ 7210-C	
73/74	C	6&8	All	All 3/S	1		
73/77	P	6&8	All	All	1		
7210	LEVER (TRANSMISSION FLOOR OR CONSOLE MOUNTED GEARSHIFT)						
73	C	8	All	F/4/S	1	D20Z 7210-D	Less ball (7213)
73	F	8	All	F/4/S	1	★ D2ZZ 7210-A	Less ball-not replaced
75	G	6&8	All	All	1	★ D5DZ 7210-A	Not replaced (3/81)
76	G - - console shift	All	All	All 3/S	1	★ D6DZ 7210-B Not replaced(10/80)	M10 x 1.5 thread
76	G - - floor shift	All	All	All 3/S	1	★ D6DZ 7210-C Not replaced(10/80)	M10 x 1.5 thread
77/78	G - - w/console	6&8	All	F/4/S	1	★ D7DZ 7210-A	Chrome lever-not replaced
77/78	G - - w/o console	6&8	All	F/4/S	1	★ D7DZ 7210-B	Chrome lever-not replaced
79	G - - w/o Bucket St. or Cnsl.	6&8	All	4/S	1	D9DZ 7210-D	
79	G - - w/Bucket St. w/o Cnsl.	6&8	All	4/S	1	D9DZ 7210-E	
79	G - - w/Bucket St. & Cnsl.	6&8	All	4/S	1	D9DZ 7210-F	
73/78	J	4&6	All	C/4/S	1	★ D1RY 7210-C	R/b D1RY 7210-D(10/80)
79	J	6&8	All	All	1	D9BZ 7210-A	
79	J	4	All	All	1	D6ZZ 7210-A	
74/	L	4&6	All	All	1	D7FZ 7210-A	Black-incl. 97415-S2 clip some veh. reg. 97413-S2 ring
73/77	P	6&8	All	All 4/S	1	D1DZ 7210-B	Chrome plated-20 thread for knob-7/16"
76	P	All	All	All 3/S	1	★ D6BZ 7210-A	7/16"-20 thread-not repl. (3/81)
78	P	4	All	4/S	1	D8BZ 7210-D	# Black
78	P	6	All	3/S	1	★ D8BZ 7210-C	# Chrome-not replaced
79	P	4	All	4/S	1	D6ZZ 7210-A	
79	P - - w/Bucket Seats	6&8	All	All	1	D9BZ 7210-A	
79	P - - w/o Bucket Seats	6&8	All	All	1	D9BZ 7210-B	
73/78	J	4&6	All	C/4/S	1	391310-GS	Pin-retain shift lever
7210	LEVER (TRANSMISSION FLOOR MOUNTED GEARSHIFT)						
73/75	G,P	6&8	All	All 3/S	1	★ C9OZ 7210-B	U-shaped-not replaced
76	G,P	All	All	All 3/S	1	★ D6DZ 7210-A	"L" shape-not replaced
78	P	6	All	3/S	1		

YEAR	MODEL/RESTRICTIONS	ENGINE CYL.	ENGINE (C.I.D.) (C.C.D.)	TRANS. TYPE	QTY.	PART NUMBER	DESCRIPTION
7212	TUBE (TRANSMISSION COLUMN MOUNTED GEARSHIFT)						
73/74	C	6&8	All	All 3/S	1	★ D20Z 7212-D Not replaced (12/80)	5" long-incl. pin, guide and insulator as part of assy.-short shaft
73/74	C	6&8	All	All 3/S	1	★ D20Z 7212-E Not replaced (12/80)	20 1/8" long-incl. 7302 as part of assy.
75/76	G	6&8	All	All	1	D5DZ 7212-A	
73	P "Before 7/15/73"	6&8	All	All 3/S	1	D2DZ 7212-B	25 1/4" long
73/77	P "From 7/15/73"	6&8	All	All	1	D4DZ 7212-A	25 11/16" long
7212	TUBE ASSY. (STEERING COLUMN INNER) - FLOOR SHIFT TRANSMISSION						
73	C - - floor shift	8	All	F/4/S	1	★ D00Z 7212-C Not replaced(12/80)	27 1/8" long
73	F - - fixed wheel	8	351	F/4/S	1	D1ZZ 7212-A	27 1/16" long
73	F - - tilt wheel	8	351	F/4/S	1	D1ZZ 7212-B	26 1/16" long
73/76	P - - floor shift	6&8	All	All	1	D1DZ 7212-A	24 15/16" long
7213	KNOB ASSY. (TRANSMISSION GEARSHIFT LEVER) - Also refer to group 7C404						
73/76	C, - - column shift	6&8	All	All 3/S	1	D30Z 7213-A	#Aluminum-chrome finish
73/77	P - - column shift	6&8	All	All	1		
73/76	P - - floor shift	6&8	All	All 3/S	1	C80Z 7213-G	Walnut wood grain-7/16" x 20 thread
78/	P - - floor shift	4	All	4/S	1	D8BZ 7213-A	
79	P - - floor shift	6&8	All	4/S O/D	1	D9BZ 7213-A	
78	P - - floor shift	6	All	3/S	1	★ D8BZ 7213-B	Not replaced
73	C,F - - floor shift	8	All	F/4/S	1	★ D20Z 7213-A	Black w/white letters-not repl.(10/80)
75/76	G	6&8	All	All	1	★ D5DZ 7213-A	Not replaced
77	G - - floor shift- "Before 5/2/77"	6&8	All	F/4/S	1	★ D7DZ 7213-A	Not replaced
77/79	G - - floor shift- "From 5/2/77 to 1/22/79"	6 & 8	All	F/4/S	1	D7DZ 7213-B	
79	G - - floor shift "From 1/22/79"	6&8	All	All 4/S	1	D9BZ 7213-A	
73/74	J - - floor shift	4&6	All	C/4/S	1	D1RY 7213-A	Incl. leather cover
76/78	J - - base models	4&6	All	C/4/S	1	D5RY 7213-A	Black-ball type
76/78	J - - decor & Ghia models	4&6	All	C/4/S	1	D5RY 7213-D	Black
					1	★ D5RY 7213-C Not replaced (12/80)	Cloud
					1	D5RY 7213-B	Tan
79	J - - floor shift	4	All	4/S	1	D8BZ 7213-A	
79	J - - floor shift	6&8	All	4/S O/D	1	D9BZ 7213-A	
74/	L	4&6	All	All	1	D4ZZ 7213-B	Burled walnut
74/	L	4&6	All	All	1	D1FZ 7213-A	4 speed pattern on ball
74/76	L	4&6	All	All	1	D2FZ 7213-A	Wood grain and pony emblem on ball
73	C,P	6&8	All	All 3/S	1	★382644-S13	(MM-121-ZD)-nut- 7/16"-20 threads-N.R.
7E218	DETENT (TRANSMISSION GEARSHIFT LEVER)						
73/77	P - - column shift	6&8	All	All 3/S	1	★ D0AZ 7E218-A Not replaced (12/80)	
7227	SPRING (TRANSMISSION GEARSHIFT LEVER SUPPORT SHAFT)-Also serviced in 7400 assy.						
73/77	G	6&8	All	All 3/S	1	C90Z 7227-A	13/16" free length - 2 coils
73/76	P	6&8	All	All 3/S	1		
78	P	6	All	3/S	1		
73/77	G				1	371681-S8	(XX-252)-washer-flat-7/8" I.D.
73/76	P	6&8	All	All 3/S	1		
78	P	6	All	3/S	1		
7227	SPRING (TRANSMISSION GEARSHIFT TUBE RETRACTING)						
73/78	J	4&6	All	C/4/S	1	D0RY 7227-A	Shift shaft
					1	D0RY 7227-B	Retainer - shift shaft
7228	SOCKET (TRANSMISSION GEARSHIFT LEVER)						
73/74	C	6&8	All	All 3/S	1	D6DZ 7228-A	Incl. 7335 bushing
75/76	G	All	All	All 3/S	1		
76/77	P "From 4/19/76"	6&8	All	All 3/S	1		
73/76	P "Before 4/19/76"	All	All	All 3/S	1	D6BZ 7228-A	Incl. 7335 bushings

COPYRIGHT © 1986 — FORD MOTOR COMPANY — DEARBORN, MICHIGAN

YEAR	MODEL/RESTRICTIONS	ENGINE CYL.	ENGINE (C.I.D.) (C.C.D.)	TRANS. TYPE	QTY.	PART NUMBER	DESCRIPTION
7C228	SPRING (TRANSMISSION GEARSHIFT)						
73/78	C,G,P	6&8	All	All 3/S	1	C20Z 7C228-A	
7B233	PLATE (TRANSMISSION FLOOR PAN GEARSHIFT LEVER OPENING COVER)- Also refer to Body Section group 04567						
73	C	8	All	F/4/S	1	D40Z 7B233-A	
73/78	J	4&6	All	C/4/S	1	D2RY 7C309-A	
73/78	J	4&6	All	C/4/S	3	112198-ES8	Bolt (attach plate to trans.)
					3	44719-S8	(X-17)-washer (attach plate to trans.)
7E235	BRACE (CASE TO CYLINDER BLOCK)						
79	J	4	@140	All	1	D7ZZ 7E235-A	L.H.
7246	INSULATOR (TRANSMISSION GEARSHIFT LEVER)						
73/78	C,G,P	6&8	All	All 3/S	1	C20Z 7246-A	1" long 3/4" O.D.
73/77	C,P	6&8	All	All 3/S	1	D2DZ 7246-A	4 13/16" long-1/4" wide
73/74	C	6&8	All	All 3/S	1	★ D20Z 7246-A Not replaced	Repair kit for short shaft (7212)- consists of (1) D20A 7E406-AB guide, (1) D20A 7246-AB insulator, (1) D20A 7D439-AB pin
73/78	J	4&6	All	C/4/S	1	D5RY 7246-C	Oblong shaped
76/78	J	4&6	All	C/4/S	1	D5RY 7246-A	
73/74	J	4&6	All	C/4/S	1		
7262	RETAINER (TRANSMISSION GEARSHIFT LEVER BOOT)- Also refer to group 7E391						
73	C - - Floor shift	8	All	4/S	1	C9ZZ 7262-A	6 5/8" x 4 3/4"
73/78	J	4&6	All	All	1	D0RY 7262-A	
74/	L	4	All	All	1	D1FZ 7262-A	
73/76	P - - floor shift	6&8	All	All 3/S	1	★ D1DZ 7262-A Not replaced (3/81)	7 7/8" x 13/32"
78	P	4	All	4/S	1	★ D8BZ 7262-A	Not replaced
7277	BOOT (TRANSMISSION GEARSHIFT LEVER)- Also refer to group 7E138						
73	C	8	All	F/4/S	1	D20Z 7277-A	
73	F	8	351	F/4/S	1	D2ZZ 7277-A	
75	G	6&8	All	All	1	D5DZ 7277-A	Upper
76/78	G - - w/o console	6&8	All	All	1		
76/78	G - - w/console	6&8	All	All	1	D6DZ 7277-A	Upper
77/78	G	6&8	All	All	1	D7DZ 7277-A	Inner lower
79	G - - w/o Bucket Seats	6&8	All	4/S O/D	1	D9DZ 7277-A	
79	G - - w/Bkt. Seat w/o cnsl.	6&8	All	4/S O/D	1	D9DZ 7277-C	
79	G - - w/Bkt. Seat & cnsl.	6&8	All	4/S O/D	1	D9DZ 7277-B	
73/75	J	4&6	All	All 4/S	1	D2RY 7277-B	Black
73/74	J	4&6	All	C/4/S	1	D0RY 7277-A	Black-outer (square base design)
					1	D0RY 7277-D	Dark blue-outer (square base design)
					1	★ D0RY 7277-E	Beechnut-outer (square base design)-use D0RY 7277-A
					1	★ D0RY 7277-F r/bD0RY 7277-A(10/80)	Cherry-outer (square base design)
					1	★ D1RY 7277-C Not replaced(10/80)	Light blue-outer (square base design)
					1	D1RY 7277-D	Dark tan-outer (square base design)
74	J - - GT	4&6	All	C/4/S	1	★ D4RY 7277-A	Medium tan-not replaced
74	J - - GT	4&6	All	C/4/S	1	★ D4RY 7277-B	Saddle brown-not replaced
76/78	J - - Base models	4&6	All	C/4/S	1	D5RY 7277-A	Black
					1	★ D5RY 7277-B	Dark tan "Before 7/28/75"-not replaced
					1	★ D5RY 7277-C r/bD5RY 7277-A(10/80)	Saddle brown "Before 7/28/75"
76/78	J - - Base models	4&6	All	C/4/S	1	★ D6RY 7277-A r/bD5RY 7277-A(10/80)	Chocolate "From 7/28/75 to 8/31/76"
					1	★ D6RY 7277-G r/bD5RY 7277-A(10/80)	Tan "From 7/28/75 to 8/31/76"

YEAR	MODEL/RESTRICTIONS	ENGINE CYL.	ENGINE (C.I.D.) (C.C.D.)	TRANS. TYPE	QTY.	PART NUMBER	DESCRIPTION
7277	BOOT (TRANSMISSION GEARSHIFT LEVER)- Also refer to group 7E138 — Cont'd						
76/78	J - - Decor Models	4&6	All	C/4/S	1	D5RY 7277-D	Black
76/78	J - - Ghia models	4&6	All	C/4/S	1	D5RY 7277-G	Black-replaces tan
					1	★ D5RY 7277-H	Cloud-not replaced
					1	★ D5RY 7277-J	Dark tan-not replaced
79	J - - w/o sports appearance	4	All	G/4/S	1	E1BZ 7277-A	Upper
79	J	4	All	G/4/S	1	★ D9BZ 7277-E	Lower-r/b E1BZ 7277-B(3/81)
79	J - - w/o Sport appearance	4	All	F/4/S	1	D9ZZ 7277-A	Upper
79	J	4	All	F/4/S	1	D9ZZ 7277-B	Lower
79	J - - w/o Sport appearance	6&8	All	4/S O/D	1	D9BZ 7277-A	Upper
79	J	6&8	All	4/S O/D	1	D9BZ 7277-D	Lower
79	J(61D) - - Sport appearance option	4	140 (2300)	All	1	E1BZ 7277-C	
79	J(61D) - - Sport appearance option	8	302	All	1	E0ZZ 7277-B	
74/ 76/	L - - w/luxury decor L - - w/console "From 5/3/76"	4&6	All	All	1	D4FZ 7277-A	
73/76	P	6&8	All	All 3/S	1	D1DZ 7277-A	
78	P	4	All	4/S	1	D8BZ 7277-A	
78	P	6	All	3/S	1	D8BZ 7277-B	
79	P	4	All	4/S	1	E1BZ 7277-A	Upper
79	P	4	All	4/S	1	★ D9BZ 7277-E	Lower-r/b E1BZ 7277-B(3/81)
79	P - - w/o Bucket Seats	6&8	All	4/S O/D	1	D9BZ 7277-C	Upper
79	P - - w/Bucket Seats	6&8	All	4/S O/D	1	D9BZ 7277-A	Upper
79	P	6&8	All	4/S O/D	1	D9BZ 7277-D	Lower
7302-3	ARM ASSY. (TRANSMISSION GEARSHIFT SELECTOR)						
75/76	G	6&8	All	All	1	D5DZ 7302-A	Intermediate and high
		6&8	All	All	1	D5DZ 7303-A	Low and reverse
73	P "Before 7/15/73"	6&8	All	All 3/S	1	D2DZ 7303-A	Intermediate and high
					1	D2DZ 7302-A	Low and reverse
73/77	P "From 7/15/73"	6&8	All	All	1	D4DZ 7302-A	Intermediate and high
					1	D4DZ 7303-A	Low and reverse
7C309	Refer to group 7B233						
7C312-3	LEVER (TRANSMISSION GEARSHIFT CONTROL)-Also serviced in 7400 assy.						
73/76	P - - console shift	6&8	All	All 3/S	2	C9OZ 7C312-A	Forward and reverse
75/76	G	All	All	All	2		
78	P - - floor shift	6	All	3/S	1		low & reverse
78	P - - floor shift	6	All	3/S	1	★ D8BZ 7C312-A	High & intermediate-not replaced
73/74	J	4&6	All	C/4/S	1	D2RY 7315-A	First and second
					1	★ D2RY 7C313-A	Third and fourth-r/b D1RY 7C313-B(10/80)
					1	★ D2RY 7C312-A	Reverse-r/b D0RY 7C312-A (10/78)
7315	Refer to group 7C312						

COPYRIGHT © 1986 — FORD MOTOR COMPANY — DEARBORN, MICHIGAN

YEAR	MODEL/RESTRICTIONS	ENGINE CYL.	ENGINE (C.I.D.) (C.C.D.)	TRANS. TYPE	QTY.	PART NUMBER	DESCRIPTION
7317	BRACKET (TRANSMISSION GEARSHIFT TUBE STEERING COLUMN)						
73/74	C	6&8	All	All 3/S	1	★ D20Z 7317-A	Not repl.
7C318	INTERLOCK (TRANSMISSION GEARSHIFT CONTROL LEVER)						
73	C,F	8	All	F/4/S	1	C5ZZ 7C318-A	
7326	ROD (TRANSMISSION GEARSHIFT CONNECTING)						
73/74	C	6&8	All	All 3/S	1	★ D20Z 7328-B	Low and reverse-16" long-Not repl.
					1	★ D20Z 7326-B	Intermediate and high-14" long-not repl.
73	C	8	All	F/4/S	1	D20Z 7328-A	First and second-13 1/2" long
					1	★ D20Z 7326-A	Third and fourth-21" long-not repl.
					1	★ D20Z 7B112-A	Reverse-17" long-Not repl.
73	F	8	All	F/4/S	1	D1ZZ 7328-A	First and second-12" long
					1	D2ZZ 7326-B	Third and fourth-18 5/32" long
					1	★ D1ZZ 7B112-A	Reverse-16" long-not repl.
75/76	G - - column shift	6	250	All	1	D5DZ 7326-A	Intermediate and high
		6	250	All	1	★ D5DZ 7328-A	low and reverse-not repl.
75/76	G - - floor shift	6&8	250,302	All	1	D1DZ 7326-A	Intermediate and high
		6&8	250,302	All	1	★ D1DZ 7328-A	low and reverse-not replaced
77/78	G - - floor shift	6&8	All	F/4S	1	D7DZ 7326-A	Third and Fourth - 15 17/64" long
					1	D7DZ 7328-A	First and Second - 11 23/32" long
					1	D7DZ 7B112-A	Reverse - 14 9/16" long
73/78	J	All	All	C/4/S	1	D1RY 7328-A	First and second
73/74	J	All	All	C/4/S	1	D5RY 7326-B	Third and fourth
76/78	J	All	All	C/4/S	1	D5RY 7326-B	Third and Fourth
73/78	J	All	All	C/4/S	1	D1RY 7B112-B	Reverse
73/77	P - - column shift	6	All	All 3/S	1	D3DZ 7328-A	Low and reverse-16" long
					1	D3DZ 7326-A	Intermediate and high-13 1/2" long
		8	All	All 3/S	1	★ D0DZ 7328-C	Low and reverse-14 3/8" long-not repl.
					1	D0DZ 7326-B	Intermediate and high-13 1/2" long
73/76	P - - floor shift	6&8	All	All 3/S	1	★ D1DZ 7328-A	Low and reverse-14 3/8" long-not repl.
					1	D1DZ 7326-A	Intermediate and high-20" long
78	P - - floor shift	6	200	3/S	1	★ D8BZ 7328-A	Low and reverse-10.62" long-not repl.
					1	★ D8BZ 7326-C	Intermediate and high -not repl.
							Attaching parts for 3/S trans. gearshift connecting rod
73/76	C,P	6&8	All	All 3/S	2	351341-S7	(XX-351)-washer-spring-5/16"
					2	44722-S8	(X-19)-washer-flat-5/16"
73/76	C,P	6&8	All	All 3/S	2	352358-S	(NN-127)-pin-self locking
73/76	C,P	6&8	All	All 3/S	2	★ 382384-S4	(MM-169-U)-nut(rod to 7353 sleeve)-5/16"-24-Not repl.
							Attaching parts for 4/S trans. gearshift connecting rod
73	C,F	6&8	All	All 4/S	3	351467-S	(XX-352)-washer(rod to transmission gear lever)-spring-3/8"
					3	44727-S8	(X-24)-washer-flat-3/8"
					3	352358-S100	(NN-127)-pin-locking
					3	376970-S2	(MM-173-K)-nut(rod to 7353 sleeve)-5/16"-24
					3	★ 382384-S4	(MM-169-U)-nut(rod to 7353 sleeve)-5/16" x 24-Not repl.
73/74	J	4	All	C/4/S	3	354016-GS	Pin-locking
7328	Refer to group 7326						

YEAR	MODEL/RESTRICTIONS	ENGINE CYL.	ENGINE (C.I.D.) (C.C.D.)	TRANS. TYPE	QTY.	PART NUMBER	DESCRIPTION
7E330	ROD (TRANSMISSION LOCK CONTROL)						
73	C	8	All	F/4/S	1	★ D00Z 7E330–D	#Yellow paint–#D00A 7E330–D–16" long–Not repl.
73	F	8	All	F/4/S	1	★ D1ZZ 7E330–E	#Purple–12" long–Not repl.
				All 4/S	1	D1ZZ 7E330–D	#Green–11" long
73	P	6	All	All	1	★ D1DZ 7E330–B	#Orange–15" long–Not repl.
74/76	P	6	All	All	1	★ D3DZ 7E330–A Not replaced	
73/76	P	8	All	All	1	★ D1DZ 7E330–A Not replaced	#Purple–15" long
7335	BUSHING (TRANSMISSION GEARSHIFT LEVER SOCKET)						
73/77	C,G,P	6&8	All	All 3/S	1	C8AZ 7335–A	Upper–1 1/4" I.D. x 1 9/16" O.D.
78	G	All	All	3/S	1		
73/75	G,P	6&8	All	All 3/S	1	C9AZ 7335–A	Lower–1 13/16" I.D. x 7/16" wide
76/77	G,P	All	All	All 3/S	1	D6DZ 7335–A	Lower
78	G	All	All	3/S	1		
75/76	G	6&8	All	All	1	D5DZ 7335–A	lower tube–internal
73/74	C	6&8	All	All 3/S	1	C4AZ 7335–B	Intermediate–1 1/2"I.D. x 1 9/16" O.D.
73/74	C	6&8	All	All 3/S	1	D20Z 7335–A	Lower–1 5/8" I.D. x 1 57/64" flange diameter x 1/2" wide
73/74	J	4&6	All	C/4/S	1	★ D2RY 7335–A	R.H.–r/b D5RY 7335–A (10/78)
					1	D5RY 7335–B	L.H.
76/78	J	4&6	All	C/4/S	1	D5RY 7335–A	R.H.
					1	D5RY 7335–B	L.H.
7335	SLEEVE (TRANSMISSION GEARSHIFT LEVER IMPACT)						
73/77	C,G,P	6&8	All	All 3/S	1	D2AZ 7335–A	13/64" I.D. x 3/8" O.D. x 7/16" wide
7336	SPACER (TRANSMISSION GEARSHIFT LEVER HUB)						
75/76	G	6&8	All	All	1	D5DZ 7336–A	
7341	INSULATOR (TRANSMISSION GEARSHIFT SELECTOR ARM)						
73	F – – floor shift– "Before 7/5/73"	6&8	All	All	1	D0ZZ 7341–A	5/16" I.D. x 15/32" long
73/74	P – – floor shift – "From 7/5/73"	6&8	All	All	2	D4DZ 7341–A	5/16" I.D. x 15/32" long
75/77	G,P	6&8	All	All	2	D5DZ 7341–A	Used in 7302–3
75/	G – – floor shift	6&8	All	RAN–DA,DC	AR	E0BZ 7341–A	#Brown–used in 7285 and 7290
73/76	P – – floor shift	6&8	All	RAN–DA,DC	1		
78/	P – – column shift	All	All	All	1		Used in 7212 assy.
73/77	C,G – – column shift	6&8	All	RAN–CY,	AR	E0SZ 7341–A	#Natural–used in 7285 and 7290
73/77	P – – column shift	6&8	All	CZ,DB	AR		
75/76	G	6	250	RAN–CZ,DA	2		Used in 7A185
73/78	J	4&6	All	C/4/S	3	D0RY 7341–A	1 piece each used for 7C312, 7C313 and 7315 rods
73/78	J	4&6	All	C/4/S	6	D0RY 7341–B	2 pieces each used for 7B112, 7326 and 7328 rods
7E341	PAWL (GEARSHIFT CROSSOVER)						
73/77	G	6&8	All	All 3/S	1	D0ZZ 7E341–A	2 1/16" x 1 1/4" x 3/4"
73/76	P	6&8	All	All 3/S	1		
78	P	6	All	3/S	1		
7347	BEARING (STEERING COLUMN TUBE)– Used with group 3514						
73/74	C	6&8	All	All 3/S	1	D20Z 7347–E	
73	F – – floor shift	6&8	All	All	1	C9AZ 7347–E	Upper– 2 1/8" diameter
73/76	P – – floor shift	6&8	All	All	1		
75/76	G – – column shift	6&8	All	All	1	D5DZ 7347–A	
73/77	P	6	All	All	1	D1AZ 7347–A	Lower–1 5/16" I.D. x 1 5/8" flange O.D. x 1 5/8" long
73/77	P – – column shift	6&8	All	All	1	C9AZ 7347–C	Upper–2 3/16" diameter

COPYRIGHT © 1986 — FORD MOTOR COMPANY — DEARBORN, MICHIGAN

YEAR	MODEL/RESTRICTIONS	ENGINE CYL.	ENGINE (C.I.D.) (C.C.D.)	TRANS. TYPE	QTY.	PART NUMBER	DESCRIPTION
7347	BEARING (TRANSMISSION GEARSHIFT TUBE)- Used with group 7212						
73/77	P	6&8	All	All 3/S	1	D2AZ 7347-A	3 key slots
7348	Serviced in 7400 assy.						
7353	SLEEVE (TRANSMISSION GEARSHIFT CONNECTING ROD ADJUSTMENT)						
73	C,F,P	6&8	All	F/4/S	3	D10Z 7353-A	
73/77	C,P - - column shift	6&8	All	All 3/S	3		
75/77	G - - column shift	6&8	All	All	AR		
73/78	J	4&6	All	C/4/S	3	D0RY 7353-A	
73/78	J	4&6	All	C/4/S	3	354016-GS	Pin (to attach sleeve with 7B112, 7326 and 7328 rods)-self locking
73/76	P - - floor shift	6&8	All	All 3/S	1	C2AZ 7353-A	1 1/4" long-7/16" long-threaded area
75/	G - - floor shift	6&8	All	All	2		
78	P	6	All	3/S	1		
73	C,F	6&8	All	All	AR	44727-S8	(X-24)-washer-flat-3/8' '
73/76	P				AR	351467-S	(XX-352)-washer-spring-3/8"
75/	G				AR	72034-S	(N-45)-cotter pin-1"
					AR	354299-S2	(MM-156)-nut-hex.-5/16"-24
					AR	376970-S2	(MM-173-K)-nut-hex.-1/2"-20
					AR	★34804-S8	(X-61)-lockwasher-1/2"-Not repl.
7354	CLIP(TRANSMISSION GEARSHIFT ROD RETAINER)						
73/78	J	4&6	All	C/4/S	3	D0RY 7354-A	
7D358	Refer to Body Section group 04567						
7E362	INSERT (TRANSMISSION CONTROL SELECTOR HOUSING)						
73/77	P	6&8	All	All 3/S	1	★ D0AZ 7E362-A	Not repl.(2/81)
7C370	GASKET (TRANSMISSION GEARSHIFT TO FLOOR PAN)						
73/78	J	4&6	All	C/4/S	1	★ D1RY 7C370-A Not replaced(10/80)	
7378	SHAFT (TRANSMISSION GEARSHIFT LEVER SUPPORT)						
73	F	6&8	All	All 3/S	1	C90Z 7378-A	2 3/8" long-3/8"-16 thread at one end-
73/76	G	6&8	All	All	1		5/16" hex. head at the other-
73/76	P				1		also serviced in 7400 assy.
78	P	All	All	All	1		
73/78	J	4&6	All	C/4/S	1	D0RY 7378-A	
73/78	J	4&6	All	C/4/S	1	391310-GS	Pin-outer groove
7C383	SPACER (TRANSMISSION GEARSHIFT LEVER SUPPORT)-Also serviced in 7400 assy.						
73/76	C,G	6&8	All	All 3/S	1	C90Z 7C383-A	2" long-1/2" diameter tube
73/76	P	6&8	All	All 3/S	1		
78	P	All	All	All	1		cut to fit 1.22"
73	F	6&8	All	All 3/S	1		
7E391	BEZEL (TRANSMISSION GEARSHIFT LEVER BOOT)- Also refer to group 7262						
73	C - - console shift	8	all	F/4/S	1	★ D20Z 7E391-A	8" x 6 1/2"-Not repl.
73	F	8	351	F/4/S	1	★ D1ZZ 7E391-A Not replaced(10/80)	8 3/8" x 6 7/16"
75/78	G	All	All	All	1	D5DZ 7E391-A	
79	G	6&8	All	All	1	D9DZ 7E391-A	
76/78	J	All	All	C/4/S	1	★ D5RY 7E391-A	#Black-not replaced
74/78	J	All	All	C/4/S	1	★ D5RY 7E391-B	#Medium tan-not replaced
74/78	J	All	All	C/4/S	1	★ D5RY 7E391-C	#Saddle brown-not replaced
78	P - - floor shift	4	All	4/S	1	D8BZ 7E391-A	
		6	All	3/S	1	★ D8BZ 7E391-B	Not replaced
7D395	Refer to group 7341						

YEAR	MODEL/RESTRICTIONS	ENGINE CYL.	ENGINE (C.I.D.) (C.C.D.)	TRANS. TYPE	QTY.	PART NUMBER	DESCRIPTION
7E397	SEAL (TRANSMISSION SHIFT ROD)						
74/	L	4	All	All	1	D1FZ 7E397-A	11/16" I.D. x 13/16" O.D. x 5/32" thick
78/	P	4	All	4/S	1		
7400	CONTROL ASSY. (TRANSMISSION FLOOR MOUNTED GEARSHIFT)						
73	C	8	All	All 4/S	1	★ D20Z 7400-A	Not repl.
73	F	8	All	All 4/S	1	★ D1ZZ 7400-B	#Blue daub of paint-not repl.
73/75	G,P	6&8	All	All 3/S	1	★ D1DZ 7400-A	Not replaced
76	G	6&8	All	All 3/S	1	★ D6DZ 7400-A Not replaced(10/80)	
76	P	6&8	All	All 3/S	1		
77/78	G	6&8	All	4/S	1	D7DZ 7400-A	
78	P - - floor shift	6	All	3/S	1	★ D8BZ 7400-A	Not replaced
7E403	REINFORCEMENT (TRANSMISSION SHIFT SHAFT)						
73/74	C	6&8	All	All 3/S	1	★ D20Z 7E403-A Not replaced(10/80)	
					3	384688-S2	(MM-227-E)-nut(reinforcement to dash) 5/16"-18
7C404	NUT (TRANSMISSION GEARSHIFT LEVER BALL LOCK)						
73/78	J - - exc. GHIA model	4&6	All	C/4/S	1	D0RY 7C404-A	
76/78	J - - GHIA model	4&6	All	C/4/S	1	★ D5RY 7C404-A	Not replaced
74/	L - - w/o Squire and luxury decor	4	All	All	1	E1TZ 7C404-A	3/4" dia. x 5/16" thick
74/	L - - w/Squire and luxury decor	4	All	All	1	D2FZ 7C404-A	
75/79	G "Before 1/22/79"	6&8	All	All	1		
73/76	P	6&8	All	All 3/S	1	C80Z 7C404-B	7/16"-20 threads-floor shift
73	F	8	All	F/4/S	1		
78/	P - - floor shift	4	All	4/S	1	D8BZ 7C404-B	
79	G "From 1/22/79"	6&8	All	All 4/S	1		
79	J	8	All	All 4/S	1		
78	P - - floor shift	6	All	3/S	1	★ D8BZ 7C404-A	Not replaced
7E404	REINFORCEMENT (TRANSMISSION SHIFTER SHAFT DASH PANEL OPENING)						
75/76	G	6	All	All	1	★ D5DZ 7E404-A	Not repl.
7E405	COVER (TRANSMISSION GEARSHIFT SLEEVE)						
73/74	C	6&8	All	All 3/S	1	★ D20Z 7E405-A	Not repl.
7E409	EXTENSION (TRANSMISSION GEARSHIFT ARM)						
73/74	C	6&8	All	All 3/S	1	★ D20Z 7E409-A	Not repl.
7B415	STUD (TRANSMISSION GEARSHIFT CONNECTING ROD ADJUSTMENT)						
73/76	C,P	6&8	All	All	AR	D00Z 7B415-A	1 1/4" long-5/16"-18 threads at one end-5/16" diameter ball at other end
73	F	6&8	All	All	AR		
7416	SUPPORT (TRANSMISSION GEARSHIFT LEVER)						
73/76	P	8	All	All 3/S	1	D0ZZ 7416-A	
75/76	G	6&8	All	All	1		
78	P - - floor shift	6	All	3/S	1	★ D8BZ 7416-A	Not replaced
7E417	PLATE (TRANSMISSION GEARSHIFT TUBE BRACKET)						
73/74	C	6&8	All	All 3/S	1	D20Z 7E417-A	2 19/64" long x 59/64" wide x 1/16" thick
75/77	G	6&8	All	All	1		
7K423	SHAFT (TRANSMISSION GEARSHIFT)						
73	C	6&8	All	All 3/S	1	★ D20Z 7K423-B	Incl. 7302-7303 arms and bushings-Not repl.
74	C	6&8	All	All 3/S	1	★ D40Z 7K423-A	Not repl.
7D439	PIN (TRANSMISSION GEARSHIFT LEVER PILOT)						
73/78	C,G,P	6&8	All	All 3/S	1	C8AZ 7D439-A	Also serviced in 7210
73/78	J	4&6	All	All 4/S	1	★ D2RY 7D439-A	Not replaced
7E440	SWITCH ASSY. (TRANSMISSION SPARK CONTROL)						
73	C,F	8	All	All 4/S	1	D2ZZ 7E440-A	*SW-1111
73	C	6	All	All 3/S	1	D20Z 7E440-A	*SW-1110
73	P	6	200	All 3/S	1		
73/78	J	4&6	All	All 4/S	1	D2FZ 7E440-A	
74	L	4	All	All	1	D2ZZ 7E440-A	*SW-1111

COPYRIGHT © 1986 — FORD MOTOR COMPANY — DEARBORN, MICHIGAN

YEAR	MODEL/RESTRICTIONS	ENGINE CYL.	ENGINE (C.I.D.) (C.C.D.)	TRANS. TYPE	QTY.	PART NUMBER	DESCRIPTION
7K444	COVER (TRANSMISSION GEARSHIFT HOUSING LOWER)						
73/74	C	6&8	All	All 3/S	1	★ D20Z 7K444-A	3 23/64" long(attaches to 7K423 shaft assy.)-Not repl.
					AR	45037-S32	(M-117)-spring nut
73/78	J	4&6	All	C/4/S	1	D2RY 7K444-B	
7E464	WIRING ASSY. (TRANSMISSION SEAT BELT WARNING SENSOR SWITCH)						
73	C,F	8	351-4B	All 4/S	1	D30Z 7E464-A	22" long-18 gauge wire
73	C	8	302	All	1	★ D3DZ 7E464-A	Not repl.
73	P	6&8	All	All	1		
74	C	8	302	All	1	D4DZ 7E464-A	
74/77	P	6&8	All	All	1		
75/77	G - - column shift	6&8	All	All	1		
75/76	G - - floor shift	6&8	All	All	1	D5DZ 7E464-AA	
7505	HOUSING (CLUTCH)-Also refer to group 6392						
73/78	J	4	All	All	1	D1RY 7505-A	
73/78	J	6	All	All	1	D2RY 7505-A	
73/78	J	4 6	▲122, ♦159	All	4	20390-S8	Screw and lockwasher(clutch hsg. to 7005 case)-7/16"-14 x 1"
7507	MOUNTING (CLUTCH RELEASE EQUALIZER BAR)						
73	C	6&8	250,302	All	1	D1ZZ 7A572-A	Inner(engine side)
73	C,F	8	351	All	1		
74	C	8	302	All	1		
					1	★ 7507	Outer(frame side)-serviced in 7528 only
75/	G	6&8	All	All	1	D5DZ 7507-A	Outer
		6	All	All	1	★7A531	Inner-serviced in 7528 assy. only
		8	All	All	1	D5DZ 7A531-A	Inner
73/77	P	6	200	All	1	C60Z 7A531-B	Inner (engine side)
73/74	P	6	200	All	1	★ C20Z 7507-A	Outer (frame side)-r/b D5BZ 7507-A (9/78)
75/77	P	6	200	All	1	D5BZ 7507-A	Outer (frame side)
73	P "Before 5/14/73"	6	250	All	1	C60Z 7A531-B	Inner
73/77	P "From 5/14/73"	6	250	All	1	D3DZ 7A531-A	Inner
73	P "Before 5/14/73"	6	250	All	1	D3DZ 7507-A	Outer
73/74	P "From 5/14/73"	6	250	All	1	★ D3DZ 7507-B	Outer-not replaced
75/77	P	6	250	All	1	D5DZ 7507-B	Outer
73/77	P	8	All	All	1	D1DZ 7A531-A	Inner (engine side)
					1	D1DZ 7507-A	Outer (frame side)
73/74	C	6&8	All	All			Attaching parts for mounting to frame
73	F				2	20348-S2	(B-77)-bolt-3/8"-16 x 3/4
					2	304684-S2	(B-80-A)-bolt-3/8"-16 x 1"
					2	372158-S2	(BB-572-F)-bolt and washer assy.-3/8"-16 x 1 1/8"
					2	381649-S2	(BB-563-AH)-bolt and washer assy.-
					2	375750-S8	(MM-120)-nut-3/8"-16 x 13/16"
					AR	34807-S8	(X-66)-lockwasher-3/8"
					AR	44727-S8	(X-24)-lockwasher-3/8"
73/74	C	6&8	All	All			Attaching parts for mountings to engine or flywheel housing
73	F				2	20346-S8	(B-50)-bolt-5/16"-18 x 3/4"
					2	20342-S2	(B-77)-bolt-3/2"-16 x 3/4"
					2	304684-S2	(B-80-A)-bolt-3/8"-16 x 1"
					1	20448-S2	(BB-83)-bolt-3/8"-16 x 1 1/4"
					1	20538-S2	(B-125)-bolt-1/2"-13 x 2 1/4"
					AR	34806-S7	(X-64)-lockwasher-5/16"
					AR	358979-S	(X-224)-washer-felt-11/16"

YEAR	MODEL/RESTRICTIONS	ENGINE CYL.	ENGINE (C.I.D.) (C.C.D.)	TRANS. TYPE	QTY.	PART NUMBER	DESCRIPTION
7C510	BOOT (CLUTCH RELEASE RETRACTING SPRING)						
78	P	4	All	4/S	1	★ D8BZ 7C510-A	Not replaced
7C510	BOOT (CLUTCH RELEASE LEVER DUST COVER)						
79	J,P	8	302	All	1	D9ZZ 7C510-A	
7C511	INSULATOR (CLUTCH RELEASE CABLE)						
78	P	4&6	All	All	1	D8BZ 7C511-A	
7512	WASHER (CLUTCH and BRAKE PEDAL TO SHAFT SPRING)						
73/78	J	4&6	All	All	2	D0RY 7512-A	
7513	SHIELD (CLUTCH RELEASE LEVER DUST)						
73	F	8	All	All	1	C5AZ 7513-A	
74/	L	4	All	All	1	D1FZ 7513-B	
73/77	G,P	6	200	All	1	C6GY 7513-A	
78/	G	6&8	250,302	All	1	C60Z 7513-C	
78	P	4	All	4/S	1	D8BZ 7513-A	
78/	P	6	All	All	1	D8BZ 7513-B	
79	P	4	All	All	1	D9BZ 7513-A	
79	P	8	302	All	1	D9ZZ 7513-A	Incl. 7C510 boot
73/78	J	4	All	All	1	D1RY 7K632-A	
73/78	J	6	All	All	1	D2RY 7K632-A	
79	J	4	All	G/4/S	1	D9BZ 7513-A	
79	J	4	All	F/4/S	1	D9ZZ 7513-B	
79	J	6	171 (2800)	All	1	D9ZZ 7513-C	
79	J	6	200	All	1	D8BZ 7513-B	
79	J	8	302	All	1	D9ZZ 7513-A	Incl. 7C510 boot
7515	LEVER ASSY. (CLUTCH RELEASE)						
73/74	C	6&8	All	All	1	C8AZ 7515-B	#C8AA 7515-B or green paint-
73	F	6&8	All	All	1		12 5/16" long
73/78	J	4	All	All	1	D1RY 7515-A	
73/78	J	6	All	All	1	D2RY 7515-B	
		4&6	All	All	1	116480-ES7	Pin
79	J	4&6	140,200	All	1	D9ZZ 7515-C	
79	J	6	171 (2800)	All	1	D9ZZ 7515-D	
79	J	8	All	All	1	D9ZZ 7515-B	
74	L	4	All	All	1	D1FZ 7515-A	11 21/32" long
75/	L	4	All	All	1	D5FZ 7515-A	
73/77	G,P	6	200	All	1	D0DZ 7515-A	
73	P "Before 5/14/73"	6	250	All	1	D0DZ 7515-B	
73/74	P "From 5/14/73"	6	250	All	1	D3DZ 7515-A	
75/	G	6&8	250,302	All	1	D5DZ 7515-A	
73/77	P	6&8	250,302	All	1		
78	P	4&8	All	All	1	D8BZ 7515-A	
78	P "Before 7/7/78"	6	All	All	1		
79	P	4&6	All	All	1	D9ZZ 7515-C	
78	P "From 7/7/78"	6	All	All	1		
79	P	8	All	All	1	D9ZZ 7515-B	
7517	SOCKET (CLUTCH SHAFT BALL)						
75/	G	All	All	All	1	D5DZ 7517-A	
7B517	PLATE ASSY. (CLUTCH RELEASE)						
75/	G	All	All	All	1	D8DZ 7B517-A	
75	L	4	All	All	1	D5FZ 7B517-A	

COPYRIGHT © 1986 — FORD MOTOR COMPANY — DEARBORN, MICHIGAN

YEAR	MODEL/RESTRICTIONS	ENGINE CYL.	ENGINE (C.I.D.) (C.C.D.)	TRANS. TYPE	QTY.	PART NUMBER	DESCRIPTION
7519	**PEDAL (CLUTCH)**						
73/74	C	6&8	All	All	1	★ D20Z 7519-A	Not replaced
73	F	8	351	F/4/S	1	★ D1ZZ 7519-B	Not replaced
75/	G	6&8	All	All	1	D5DZ 7519-A	
73/74	J	4	All	All	1	★ D3RY 7519-B	Not replaced
73/74	J	6	All	All	1	★ D3RY 7519-A	Not replaced
76/78	J	4&6	All	C/4/S	1	★ D5RY 7519-A	Not replaced
79	J	All	All	All	1	D9BZ 7519-A	
74	L	4	All	All	1	D1FZ 7519-B	
75/	L	4	All	All	1	D5FZ 7519-A	
73/77	P	6&8	All	All	1	★ D0DZ 7519-B	Not replaced
78/79	P	All	All	All	1	D9BZ 7519-A	
73/	C,F,P	6&8	All	All	1	358981-S	(XX-364)-washer-spring -5/8"
					2	74279-S	(R-5)-retainer-spring-9/16"
					2	44727-S8	(X-24)-washer-flat-3/8"
					2	380699-S2	(NN-128-F)-pin-self-locking
7521	**ROD (CLUTCH PEDAL TO EQUALIZER BAR)**						
73/74	C	6&8	All	All	1	★ D20Z 7521-A	14"long-not replaced
73	F	8	351	F/4/S	1	D1ZZ 7521-B	
75/	G	6&8	All	All	1	D5DZ 7521-A	
73/77	P	6&8	200,302	All	1	D0DZ 7521-B	12" long
		6	250	All	1	D3DZ 7521-A	12 1/2" long
73/74	C	6&8	All	All	2	33800-S8	(M-63)-nut-3/8"-24
73/	G,P	6&8	All	All	2	356573-S2	(XX-357)-washer-spring
73	F				2	34682-S8	(M-23)-nut-7/16"-20
					2	356383-S2	(XX-362)-washer-spring
					AR	352358-S	(NN-127)-pin-self-locking-round head
					AR	381619-S2	(NN-128-J)-pin-self-locking-straight
7521	**ROD (EQUALIZER BAR TO CLUTCH RELEASE LEVER)**						
73/74	C	6&8	All	All	1	C8AZ 7521-B	5" long-incl. (2) 33799-S adjusting nut
73	F	6&8	All	All	1		
75	G "Before 12/16/74"	8	302	All	1	★ D5DZ 7521-B	Not replaced
77	P	8	302	All	1	D7DZ 7521-A	8 1/4" long - Black daub
75/	G "From 12/16/74"	8	302	All	1		
74/75	P "Before 12/16/74"	6	200	All	1	D3DZ 7521-B	8 1/4" long
73/75	G,P "Before 12/16/74"	6	250	All	1		
74/75	P "Before 12/16/74"	8	302	All	1		
75/76	G "From 12/16/74"	6	200	All	1	D7DZ 7521-B	6 19/64" long - Black daub
75/76	G "From 12/16/74"	6	250	All	1		
75/76	P "From 12/16/74"	6&8	All	All	1		
77	G,P	6	200,250	All	1		
78/	G	6	250	All	1		
73	P	6&8	200,302	All	1	C80Z 7521-B	
7522	**BRACKET (CLUTCH RELEASE LEVER)**						
73/74	C	6&8	All	All	1	C8AZ 7522-A	"L" shaped-1" x 1 1/8" x 2 1/16" wide
73	F	6&8	All	All	1		
73/77	P	8	All	All	1		
73/77	P	6	All	All	1	C80Z 7522-A	"L" shaped-7/8" x 1 1/16" x 15/16" wide
75/77	G	6	200	All	1		
73/77	C,P	6&8	All	All	2	62316-S8	(S-8)-rivet-1/4" x 15/16"
73	F				2	62329-S	(S-9)-rivet-5/16" x 1"
7523	**SPRING (CLUTCH RELEASE LEVER ROD RETRACTING)**						
73/74	J	4	All	All	1	D0RY 7523-A	
73/78	J	6	All	All	1	D2RY 7523-A	
73/77	P	6&8	All	All	1	D0DZ 7523-B	3 3/8" long-15 coils
78	P	4	All	4/S	1	D8BZ 7523-A	approx. 11.94" long-54 coils
79	J,P	All	All	All	1	E0BZ 7523-A	

YEAR	MODEL/RESTRICTIONS	ENGINE CYL.	ENGINE (C.I.D.) (C.C.D.)	TRANS. TYPE	QTY.	PART NUMBER	DESCRIPTION
7526	BUSHING (CLUTCH RELEASE IDLER LEVER ROD)						
73/77	C,F,G,P	6&8	All	All	AR	C0AZ 7526-A	Nylon-3/8" I.D.
7528	BAR ASSY. (CLUTCH RELEASE EQUALIZER)						
73/74	C	6&8	All	All	1	D20Z 7528-A	Incl. 7507 bracket
73	F	8	351	F/4/S	1	D1ZZ 7528-C	Incl. 7507 bracket and nylon bushing
75/77	G	6	200	All	1	★ D6DZ 7528-C	Incl. 7A528 swivel assy.-not repl.
75	G "Before 12/16/74"	6	250	All	1	★ D5DZ 7528-A	R/b D6DZ 7528-A & D1DZ 7A528-A
75/76	G "From 12/16/74 to 1/5/76"	6	250	All	1	D5DZ 7528-E	For prior usage install D1DZ 7A528-A
76/	G "From 1/5/76"	6	250	All	1	D6DZ 7528-A	Incl. 7A528 swivel assy.
75	G "Before 12/16/74"	8	302	All	1	★ D5DZ 7528-B	R/b D7DZ 7528-A & D1DZ 7A528-A
75/76	G "From 12/16/74 to 4/1/76"	8	302	All	1	D5DZ 7528-F	For prior usage install D1DZ 7A528-A
76/	G "From 4/1/76"	8	302	All	1	★ D7DZ 7528-A	Incl. 7A528 swivel assy.-not repl.
73/75	P "Before 12/16/74"	6	200	All	1	D0DZ 7528-C	
75/76	P "From 12/16/74 to 1/5/76"	6	200	All	1	D5BZ 7528-B	For prior usage install C80Z 7A528-A
76/77	P "From 1/5/76 to 1/17/77"	6	200	All	1	★ D6BZ 7528-B	Incl. 7A528 swivel assy.-not repl.
73	P "Before 5/14/73"	6	250	All	1	★ D3DZ 7528-A	Not repl.
73/74	P "From 5/14/73"	6	250	All	1	★ D3DZ 7528-B	Not repl.
75/77	P	6	250	All	1	D6BZ 7528-C	Before 12/16/74 mdl use D1DZ 7A528-A
73/76	P	8	302	All	1	D1DZ 7528-A	Outer(frame side)
73/75	P "Before 12/16/74"	8	302	All	1	D1DZ 7528-B	Inner(engine side)
75/77	P "From 12/16/74"	8	302	All	1	D6BZ 7528-A	Incl. 7A528 swivel assy.
73/74	C	6&8	All	All	2	56740-S2	(B-323)-bolt-3/8"-16 x 1 5/32"
73/77 73	C,P F	6&8	All	All	AR	371613-S7-8	(XX-202)-washer (bar to mountings)-5/8" I.D. x 1/8" thick
73/	C,F,P	6&8	All	All	AR	351517-S	(XX-206)-washer-felt -5/8" I.D. x 3/8" thick
					AR	356488-S	(XX-226)-washer-11/16" I.D. x 1 1/16" thick
					AR	358979-S	(XX-224)-washer-3/4" I.D. x 1/4" thick
					1	87907-S8	(I-3)-fitting (bar hub)-straight-1/4"-28
73/77	P	8	All	All	1	56760-S2	(B-317-U)-bolt (to attach 2 piece bar)-7/16"-14 x 1"
7A528	SWIVEL (CLUTCH RELEASE IDLER LEVER ADJUSTMENT)						
73/74	C	6&8	All	All	1	D1DZ 7A528-A	1 5/16" long-3/8" dia. shank
73	F	8	All	F/4/S	1		
73/75	G,P "Before 12/16/74"	6	200	All	1		
73/75	G,P "Before 12/16/74"	6&8	250,302	All	1		
75/76	G,P "From 12/16/74 to 1/5/76"	6&8	All	All	1	D5DZ 7A528-A	For vehicle built after 1/5/76 swivel is riveted to 7528 Bar Assy.
7L529	CLIP (CLUTCH PEDAL TO CLUTCH RELEASE CABLE)						
73/78	J	4	All	All	1	D5RY 7L529-B	
73/74	J	6	All	All	1		
76/78	J	6	⊕171	C/4/S	1	D5RY 7L529-A	# Natural
7K530	SEAL (CLUTCH EQUALIZER BAR)						
73/74	C	6&8	All	All	1	D0ZZ 7K530-A	Outer-1 1/16" O.D. x 1/4" wide - rubber
73	F	6&8	All	All	1		
75/	G	All	All	All	1		
73/77	P	6	250	All	1		
73/76	P	8	All	All	1		
73/76	P	8	All	All	1	D1DZ 7K530-A	Inner-1" I.D. x 1 3/8" O.D. x 1/2" - rubber
7A531	Refer to group 7507						

COPYRIGHT © 1986 — FORD MOTOR COMPANY — DEARBORN, MICHIGAN

YEAR	MODEL/RESTRICTIONS	ENGINE CYL.	ENGINE (C.I.D.) (C.C.D.)	TRANS. TYPE	QTY.	PART NUMBER	DESCRIPTION
7A533	SEAL (CLUTCH PEDAL ROD)						
73/74	C	6&8	All	All	1	★ D20Z 7A533-A	3 19/64" long-4 1/2" coils-not repl.
73	F	6&8	All	All	1	C60Z 7A533-C	
73/77	P	8	All	All	1		
75/	G	6&8	All	All	1	D5DZ 7A533-A	
7534	SPRING (CLUTCH PEDAL LEVER RETRACTING)						
73/74	J	4	▲122	All	1	D1RY 7534-B	
76/78	J	6	⊕171	All	1		
7534	SPRING ASSY. (CLUTCH PEDAL LEVER ASSIST)						
73/74	C	6&8	250,302, 351	All	1	C80Z 7534-A	#Green-3 1/2" long-6 1/2 coils
73	F	8	351	F/4/S	1	★ C9AZ 7534-A	Not repl.
75/	G	6&8	All	All	1	C80Z 7534-B	
73/77	P	6&8	All	All	1	D0DZ 7534-A	1 3/4" dia. x 3 1/2" long- incl. rollers
7535	BRACKET (CLUTCH PEDAL LEVER ASSIST SPRING)						
73/74	C	6&8	All	All	1	★ D20Z 7535-A Not replaced(10/80)	
73	F	8	351	F/4/S	1	★ D1ZZ 7535-B	Not repl.
73/77	P	6&8	All	All	1	★ D0DZ 7535-B	Not replaced
7543	BALL (CLUTCH RELEASE EQUALIZER SHAFT)						
73/	C,F,L	All	All	All	1	C1AA 7543-A	5/8" I.D. x 1" O.D. x 1/2" thick
73/77	P	8	All	All	1		
73/77	P "From 5/14/73"	6	250	All	1		
75/	G	6&8	All	All	1		
73/77	P	6	200	All	1	C1DD 7543-A	7/16" I.D. x 3/4" O.D. x 1/2" thick
73	P "Before 5/14/73"	6	250	All	1		
7543	SOCKET (CLUTCH SHAFT BALL)						
73/77	C,P	6&8	All	All	2	C5AZ 7543-C	1" O.D. x 15/16" thick
73	F	6&8	All	All	2		
7B544	COVER (CLUTCH PEDAL PAD)						
73	F - - w/luxury trim	8	351	F/4/S	1	C5ZZ 7B544-A	
73	F - - w/o luxury trim	8	351	F/4/S	1	C9ZZ 7B544-A	
7B545	RETAINER (CLUTCH RELEASE EQUALIZER BAR)						
73/77	C,F,G,P	8	All	All	1	C5AZ 7B545-A	
7L547	LEVER ASSY. (CLUTCH RELAY)						
78/79	P	All	All	All	1	D9ZZ 7L547-A	
79	J	All	All	All	1		
7548	HUB and BEARING (CLUTCH RELEASE)						
73/74	C,P	6&8	All	All	1	D20Z 7548-A	
73	F	8	351	F/4/S	1		
75/77	G,P	6	200	All	1		
75/77	G,P	6&8	250,302	All	1	★ D4ZZ 7548-A	
78/	G	6&8	250,302	All	1	r/b D9ZZ 7548-A	
78	P	6	200	3/S	1	(8/79)	
73/78	J	4&6	All	All	1	D4RY 7548-A	
74/	L	4	All	All	1	★ D1FZ 7548-A	R/b D9ZZ 7548-B (4/79)
78	P	4	All	4/S	1		
79	J	4	All	G/4/S	1	D9ZZ 7548-B	
79	P	4	All	All	1		
79	J	4	All	F/4/S	1	D9ZZ 7548-A	
79	J,P	6&8	All	All	1		

DISC AND PRESSURE PLATE APPLICATION CHART

YEAR	MODEL	ENGINE CYL.	ENGINE C.I.D. (C.C.D.)	TRANS.	DISC †SPRINGS	DISC SPLINES	DISC DIAMETER (INCHES)	MATCHING DISC	MATCHING PLATE
NOTE:	† L–LARGE, S–SMALL								
7550	DISC (CLUTCH)								
NOTE:	Supplied only as a remanufactured item † Large or small								
73	C	6	250	All	6L–Orange 4S–Orange	10	10	D20Z 7550–A	D20Z 7563–A
73/74	C	8	302	All	6L–Pink 6S–Orange	10	10	D20Z 7550–B	D20Z 7563–A
73/74	C	8	302	H/D	6L–Pink 6S–Orange	10	11	D20Z 7550–D	C90Z 7563–A
73	C	8	351	F/4/S	6L–Purple 6S–Green	10	11	D20Z 7550–C	D1ZZ 7563–C
73	F	8	351–2/B	F/4/S	6L–Orange 3S–Green	10	11	D10Z 7550–A	C90Z 7563–A
73	F	8	351–4/B	F/4/S	6L–Purple 6S–Green	10	11	D20Z 7550–C	D1ZZ 7563–C
73/77	G,P	6	200	All	6–Pink	10	9	C70Z 7550–C	C6DZ 7563–C
74/77 78/	G,P G	6 6	250 250	All All	4S–Orange			D20Z 7550–A	D7DZ 7563–A
73/76	G,P	8	302	All	6L–6S	10	10	C60Z 7550–G	★ C20Z 7563–F r/b D7DZ 7563–A
77/ 77	G P	8 8	302 302	All All	5L–Blue 5S–Yellow	10	10	D7DZ 7550–A	★ C20Z 7563–F r/b D7DZ 7563–A
78	P	4	140 (2300)	4/S	4–Plain 2–Orange	23	8 1/2	D8BZ 7550–B	D8BZ 7563–B
79	P	4	All	All	4	23	8 1/2	D9BZ 7550–C	D8BZ 7563–B
78	P	6	200	3/S	6–Dk Blue	10	9	D8BZ 7550–A	D8BZ 7563–A
79	P	6	All	All	6	10	9	D9BZ 7550–A	D8BZ 7563–A
79	P	8	All	All	6	10	10	D9BZ 7550–B	D9ZZ 7563–A
73/76	J	4	▲122, @140	C/4/S				D4RY 7550–A	★ D1RY 7563–A r/b D7RY 7563–A
77/78	J	4	@140	C/4/S				D4RY 7550–A	D7RY 7563–A
79	J – – w/o Turbo charger	4	All	G/4/S	4	23	8 1/2	D9BZ 7550–C	D8BZ 7563–B
79	J – – w/o Turbo charger	4	140 (2300)	F/4/S	Yellow	10	8 1/2	D5ZZ 7550–B	D8BZ 7563–B
79	J – – w/Turbo charger	4	All	F/4/S	6	10	8 1/2	D9ZZ 7550–B	D9ZZ 7563–B
73/74	J	6	♦159, ⊕171	C/4/S			9 1/2	D3RY 7550–B	D2RY 7563–A
76/78	J	6	⊕171	C/4/S				★ D5RY 7550–A r/b D5RY 7550–B	D2RY 7563–A
79	J	6	⊕171	All		10	9 1/2	D5ZZ 7550–A	★ D9ZZ 7563–C r/b D6ZZ 7563–B
79	J	6	200	All	6	10	9	D9BZ 7550–A	D8BZ 7563–A
79	J	8	All	All	6	10	10	D9ZZ 7550–C	D9ZZ 7563–A
74	L	4	▲122	G/4/S	4–White 2–Green	23	8 1/2	D4FZ 7550–B	D1FZ 7563–A
74	L	4	@140	G/4/S		23	8 1/2	D5FZ 7550–A	D1FZ 7563–A
75/78	L	4	All	All	Pink	23	8 1/2	D5FZ 7550–A	D1FZ 7563–A
79	L	4	All	All	Pink	23	8 1/2	D5FZ 7550–A	D8BZ 7563–B
73	P	6	250	All	6L–Orange	10	10	D20Z 7550–A	D20Z 7563–A
79	J,P – – to be used in conjunction w/TSB #81–13 only	6	200	F/4/S	6	10	9	E1ZZ 7550–A	D8BZ 7563–A

COPYRIGHT © 1986 — FORD MOTOR COMPANY — DEARBORN, MICHIGAN

YEAR	MODEL/RESTRICTIONS	ENGINE CYL.	ENGINE (C.I.D.) (C.C.D.)	TRANS. TYPE	QTY.	PART NUMBER	DESCRIPTION
							Attaching parts for clutch assy.
73/	C,F,G,P	6&8	All	All	6	357235-S	(BB-136)-bolt (pressure plate to flywheel)-5/16"-18 x 7/8"
73/	C,F,G,P	6&8	All	All	6	34806-S7	(X-64)-lockwasher
73/78	J	4&6	All	C/4/S	6	E602186-S72	Bolt (pressure plate to flywheel)
74/	L	4	All	All	6	N800013-S51	Bolt (pressure plate to flywheel) -8M-20 x 1 1/4"-(Metric coarse)
7K553	CABLE ASSY. (CLUTCH RELEASE) — Also refer to group 7K581						
73/74	J	4	▲122	All	1	D1RY 7K553-D	
76/78	J	4	@140	C/4/S	1	D5RY 7K553-C	
79	J - - w/o speed cntl. or Turbo charger	4	@140	G/4/S	1	D9ZZ 7K553-C	approx. 40.94" long
79	J - - w/o speed control w/o Turbo charger	4	@140	F/4/S	1	D9BZ 7K553-F	
79	J - - w/speed cntl. w/o Turbo charger	4	@140	G/4/S	1	D9BZ 7K553-B	
79	J - - w/ speed control w/o Turbo charger	4	@140	F/4/S	1	D9BZ 7K553-E	
79	J - - w/o speed cntl. w/ Turbo charger	4	@140	F/4/S	1	D9ZZ 7K553-D	approx. 47.44" long
79	J - - w/speed cntl. & Turbo charger	4	@140	F/4/S	1	D9ZZ 7K553-E	
73	J	6	♦159	All	1	D2RY 7K553-B	Incl. (1) 840030-S pin
74/78	J	6	⊕171	All	1	D7RY 7K553-A	Repl. D4RY 7K553-A
79	J - - w/o speed control	6	All	All	1	D9ZZ 7K553-G	
79	J - - w/speed control	6	All	All	1	D9ZZ 7K553-F	
79	J - - w/o speed control	8	302	All	1	D9ZZ 7K553-B	approx. 56.04" long
79	J - - w/speed control	8	302	All	1	D9BZ 7K553-D	
78	P	4	All	4/S	1	D8BZ 7K553-B	
		6	All	3/S	1	D8BZ 7K553-A	
79	P - - w/o speed control "Before 2/1/79"	4	All	All	1	D9ZZ 7K553-C	approx. 40.94" long
79	P - - w/o speed control "From 2/1/79"	4	All	All	1	D9BZ 7K553-F	
79	P - - w/speed control "Before 2/1/79"	4	All	All	1	D9BZ 7K553-B	
79	P - - w/speed control "From 2/1/79"	4	All	All	1	D9BZ 7K553-E	
79	P - - w/o speed control	6	All	All	1	D9BZ 7K553-A	
79	P - - w/speed control	6	All	All	1	D9BZ 7K553-C	
79	P - - w/o speed control	8	All	All	1	D9ZZ 7K553-B	approx. 56.04" long
79	P - - w/speed control	8	All	All	1	D9BZ 7K553-D	
75/	L	4	All	All	1	D5FZ 7K553-A	
73/78	J	4&6	All	All	1	E840030-S	Pin-attach cable to 7519
7563	Refer to group 7550						
7A572	Refer to group 7507						
7K581	CABLE (CLUTCH) — Also refer to group 7K553						
74	L	4	All	All	1	D1FZ 7K581-C	Incl. 7K582 retainer
					1	97413-S2	Retaining ring(cable to housing)
7583	BUMPER (CLUTCH and BRAKE PEDAL)- Also refer to group 7A530						
73/	C,L	All	All	All	1	D0ZZ 7583-B	# Red or black rubber-also serviced in assy.-group 7519
78/	J,P	All	All	All	1		
75/	G	6&8	All	All	1		
73	F	8	351	F/4/S	1	★ D1ZZ 7583-B	Not replaced
73/77	P	6&8	All	All	1	C80Z 7583-A	# Black-7/16" long

YEAR	MODEL/RESTRICTIONS	ENGINE CYL.	ENGINE (C.I.D.) (C.C.D.)	TRANS. TYPE	QTY.	PART NUMBER	DESCRIPTION
7B588	PLATE (CLUTCH RELEASE EQUALIZER BRACKET MOUNTING)						
75/	G	6&8	All	All	1	D5DZ 7B588-A	
7591	SPRING (CLUTCH RELEASE LEVER RETRACTING)						
73/74	C	6&8	All	All	1	C9AZ 7591-A	2 1/2" free length-19 coils
73	F	6&8	All	All	1		
75/	G	8	302	All	1	D5DZ 7591-A	
73/78	J	4&6	All	All	1	D0RY 7591-A	
73/77	P	6&8	All	All	1	C70Z 7591-A	3 5/8" long-40 coils
75/	G	6	200,250	All	1		
7K593	CLIP (CLUTCH RELEASE PIN RETAINING)						
73/78	J	4&6	All	All	1	D0RY 7K593-A	
7A595	SPACER (CLUTCH PEDAL)						
73/78	J	4	All	All	1	D0RY 7A595-A	
73/78	J	6	All	All	1		
7600	BEARING (CLUTCH PILOT)						
73/74	C "Before 5/1/74"	6&8	All		1	★ C8AZ 7600-A	43/64" I.D. x 1 3/8" O.D.
73	F	6&8	All		1	★/bD8TZ 7600-A (2/79)	
73/74	P "Before 5/1/74"	6&8	250,302		1		
74/	C,G,P "From 5/1/74"	6&8	All		1	D4DZ 7600-A	43/64" I.D. x 1 3/8" O.D.
73/74	P "Before 5/1/74"	6	200	All	1		
79	J	6&8	200,302	All	1		
73	J	6	♦159	All	1	D2RY 7600-A	
74/78	J	6	⊕171	All	1	D4ZZ 7120-B	
73/74	J,L	4	▲122	All	1	D1FZ 7600-B	
76/78	J	4	@140	All	1		
79	J	6	⊕171	All	1		
74/	L	4	@140	All	1	D4ZZ 7600-A	
78/	P	4	All	All	1		
79	J	4	All	All	1		
7B602	STUD (CLUTCH RELEASE LEVER)						
75/77	G,P	6&8	All	All	1	D5DZ 7B602-A	
78/	G	6	250	All	1		
74	L	4	All	All	1	★ D1FZ 7B602-A Not replaced	2 5/16" long-5/16" ball end- 3/4" hex. drive-1/2"-13 other end
75/	L	4	All	All	1	D5FZ 7B602-A	
78/	P	6&8	All	All	1		
79	J	6	All	All	1		
79	J	8	All	All	1		
78	P	4	All	4/S	1	★ D6ZZ 7B602-A	2 3/8" long-1/2-13 thread-not repl.
79	J,P	4	All	All	1	D9BZ 7B602-A	
7B605	BUSHING (CLUTCH PEDAL CLEVIS)						
74	L	4	All	All	1	★ D1FZ 7B605-A Not repl.	3/8" I.D. x 11/16" flange O.D. x 3/8" long
7A624	PAD (CLUTCH PEDAL PLATE)- Also refer to group 2457						
73/77	C,G,P	6&8	All	All	1	C5ZZ 7A624-B	
78/	G	6&8	All	All	1		
73	F	8	351	F/4/S	1	C9ZZ 7A624-A	#C9ZA 7A624-A
7A629	RETAINER (CLUTCH RELEASE EQUALIZER SHAFT BEARING)						
73/77	P	6	All	All	2	C1DD 7A629-A	"C" type
7K632	Refer to group 7513						
7K647	BUSHING (CLUTCH HOUSING CABLE GUIDE)						
73/78	J	4	All	All	1	D1RY 7K647-A	
73/78	J	6	All	All	1	D5RY 7K647-A	

COPYRIGHT © 1986 — FORD MOTOR COMPANY — DEARBORN, MICHIGAN

HOW TO IDENTIFY AUTOMATIC TRANSMISSION PARTS

A. USE THE TRANSMISSION IDENTIFICATION TAG

1. Each transmission is identified by a number stamped on a metal tag or plate attached to the case.

2. Refer to page 2 of this section for the illustration showing the location of the identification tag.

3. Each basic transmission type is identified by several numbers which reflect the different model years or the significant changes made within the same model years.

4. Seven basic types of automatic transmissions are used as optional equipment for the 1973/ model year.

DESCRIPTION AND TYPE	CATALOG IDENTIFICATION	PARTS LISTS SECTION
Cruise–O–Matic 3 speed–Model	C/M(FMX)	A70.1
Automatic 3 speed	C4	A70.2
Automatic 3 speed	C6	A70.3
Automatic 3 speed	C3	A70.5
Borg–Warner(Capri)	B/W	A70.4
Borg–Warner(Mercury)	B/W	A70.6
Jacto Automatic	PLA	A70.7

5. How transmission tag information is listed in the catalog.
   a. If the same part is used on all PJD transmissions(PJD–E, PJD–F, PJD–G), the description area of the catalog will show "use with PJD transmission".
   If a different part is used on PJD–E transmission than on PJD–F transmission, the description area of the catalog will restrict each part, i.e. "use with PJD–E transmission", "use with PJD–F transmission" etc.
   b. If the same part is used on PJD–E2 and PJD–E3 transmissions, the description area of the catalog will show "use with PJD–E transmission".
   If a different part is used on PJD–E2 transmission than on PJD–E3 transmission, the description area will restrict each part, i.e. "use with PJD–E2 transmission", "use with PJD–E3 transmission".
   c. If a different part is used on a PJD–E transmission than on the PJD–E2 transmission, the description area of the catalog on the PJD–E part will alert the reader of the existence of the other part, i.e. "use with PJD–E transmission(also see D0AZ 7153–A for PJD–E2 transmission).

B. USE THE APPLICATION CHART

Automatic transmissions and their related parts can also be identified by year, model, engine, etc., in the Transmission Application Chart on page 3 of this section.

C. USE AVAILABLE ILLUSTRATIONS

Automatic transmission illustrations are shown in several sections of the Illustration Catalog, Form FP–8095–B as indicated below.

	ILLUSTRATION SECTION
Transmission assemblies	A70.1 thru A70.6
Transmission oil cooling system and vacuum advance system	A71
Shift control mechanism	A72
Steering column with shift mechanism	A72
Steering column without shift mechanism	35
Transmission kickdown and accelerator linkage mechanisms	97
Console mounted parts related to shift control mechanisms	042

D. HOW TRANSMISSION PARTS ARE CATALOGED

1. Parts directly related to the operation of the transmission assembly, such as, case, extension housing, gear train, etc., are listed in parts lists sections A70.1, A70.2, A70.3, A70.4 and A70.5.
2. Parts not directly, but functionally related to the operation of the transmission assembly, such as, control selector mechanisms, oil cooling systems, etc., are listed in section A71.

COPYRIGHT © 1986 — FORD MOTOR COMPANY — DEARBORN, MICHIGAN

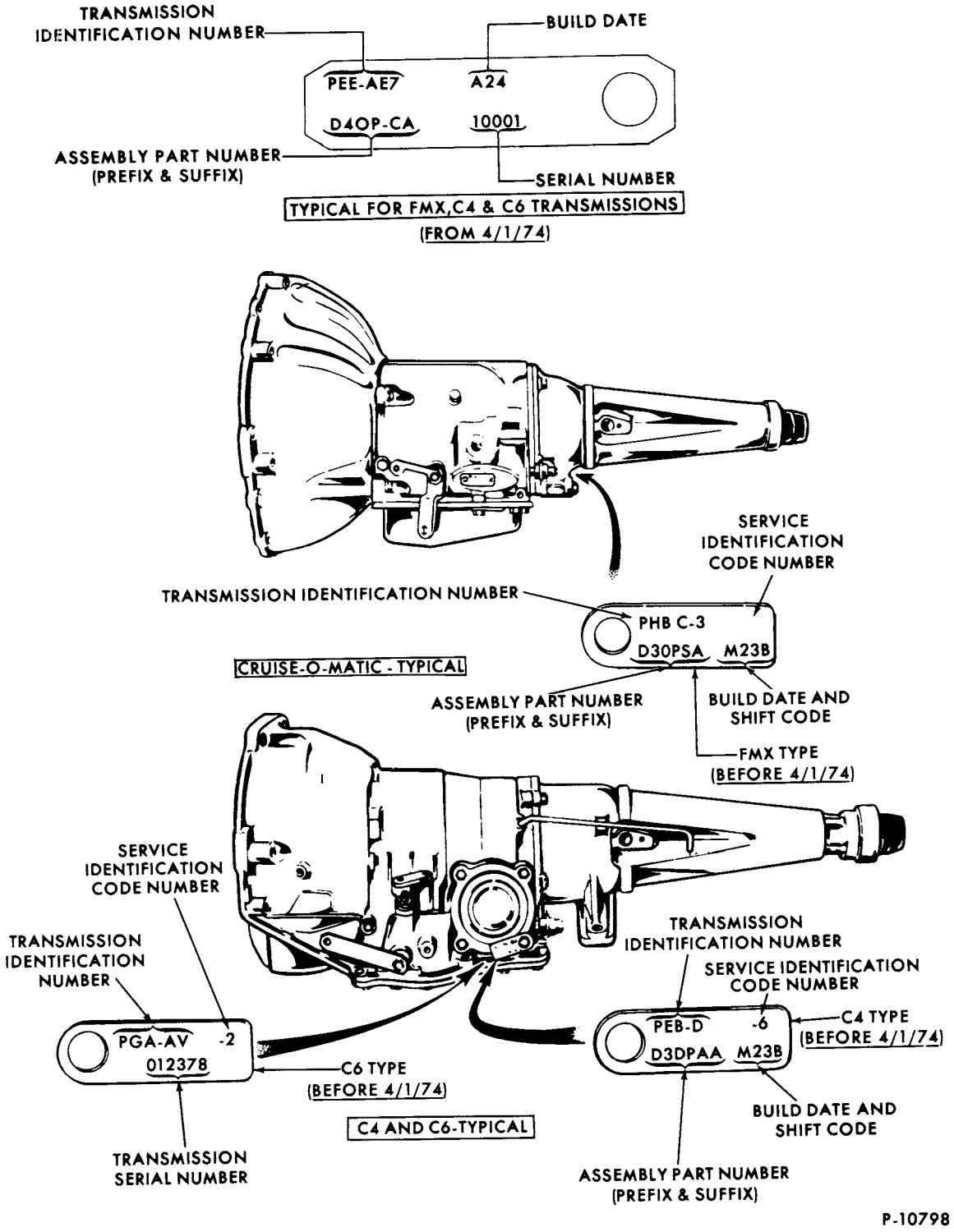

AUTOMATIC TRANSMISSION IDENTIFICATION TAGS

TRANSMISSION APPLICATION CHART

MODEL	ENGINE CYL.	ENGINE C.I.D. (C.C.D.)	TRANSMISSION IDENT.	TRANSMISSION TYPE	PARTS LIST	ILLUS. SEC.	TRANSMISSION ASSEMBLY INCLUDES CONVERTER	TRANSMISSION ASSEMBLY LESS %CONVERTER
1973								
A (MERCURY) Y (METEOR)								
A,Y	8	351C	PHB–AA	FMX	A70.1	A70.1	★ D3AP 7000–HA	★ D4AP 7003–AA
A,Y	8	351	PHB–L6	FMX	A70.1	A70.1	★ D3AP 7000–EA	★ D3AP 7003–EA
A,Y	8	400	PJA–C3	C6	A70.3	A70.3	★ D3AP 7000–AA	★ D3AP 7003–AA
A,Y	8	400	PJA–C4, K2,K3	C6	A70.3	A70.3	★ D3AP 7000–AB	★ D3AP 7003–AB
Y(fleet) – – column shift	8	400	PJB–K2	C6	A70.3	A70.3	★ D3AP 7000–BA	★ D3AP 7003–BA
A,Y	8	429	PJB–C1, C2,F1	C6	A70.3	A70.3	★ D3AP 7000–FA	★ D3AP 7003–FA
A	8	460P/C	PJC–H5	C6	A70.3	A70.3	★ D3AP 7000–CA	★ D3AP 7003–CA
A,Y	8	460	PJD–G1, G2	C6	A70.3	A70.3	★ D3MP 7000–AA	★ D3MP 7003–AA
C (MONTEGO)								
C – – column shift	6	250	PEE–AE6	C4	A70.2	A70.2	★ D30P 7000–HA	★ D30P 7003–HA
C – – floor shift	6	250	PEE–AF6	C4	A70.2	A70.2	★ D30P 7000–JA	★ D30P 7003–JA
C – – column shift	8	302	PEE–V6	C4	A70.2	A70.2	★ D30P 7000–LA	★ D30P 7003–LA
C – – floor shift	8	302	PEE–M6	C4	A70.2	A70.2	★ D30P 7000–KA	★ D30P 7003–KA
C – – column shift	8	302	PHA–J2	FMX	A70.1	A70.1	★ D30P 7000–UA	★ D40P 7003–AA
C – – column shift	8	351C&W	PHB–Z4	FMX	A70.1	A70.1	★ D30P 7000–TA	★ D40P 7003–BA
C – – column shift	8	351W	PHB–C3	FMX	A70.1	A70.1		★ D30P 7003–SA
C – – column shift	8	351	PEF–D5	C4	A70.2	A70.2	★ D30P 7000–MA	★ D30P 7003–MA
C – – column shift	8	351C	PGA–AW1	C6	A70.3	A70.3	★ D30P 7000–CA	★ D30P 7003–CA
C – – column shift	8	351–4/B	PGA–AF2	C6	A70.3	A70.3	★ D30P 7000–AA	★ D30P 7003–AA
C – – floor shift	8	351	PEF–E5	C4	A70.2	A70.2	★ D30P 7000–NA	★ D30P 7003–NA
C – – floor shift	8	351C	PGA–AY1	C6	A70.3	A70.3	★ D30P 7000–DA	★ D30P 7003–DA
C – – floor shift	8	351–4/B	PGA–AG2	C6	A70.3	A70.3	★ D30P 7000–BA	★ D30P 7003–BA
C – – column shift	8	400	PJA–G1	C6	A70.3	A70.3	★ D30P 7000–EA	★ D30P 7000–EA
C – – column shift	8	400	PJA–G2	C6	A70.3	A70.3	★ D30P 7000–EB	★ D30P 7003–EB
C – – floor shift	8	400	PJA–H1	C6	A70.3	A70.3	★ D30P 7000–FA	★ D30P 7003–FA
C – – floor shift	8	400	PJA–H2	C6	A70.3	A70.3	★ D30P 7000–FB	★ D30P 7003–FB
C – – column shift	8	429	PJB–A1, A2	C6	A70.3	A70.3	★ D30P 7000–VA	★ D30P 7003–VA
C – – floor shift	8	429	PJB–B1, B2	C6	A70.3	A70.3	★ D30P 7000–YA	★ D30P 7003–YA
C – – column shift	8	460P/C	PJC–J1	C6	A70.3	A70.3	★ D30P 7000–GA	★ D30P 7003–GA
D (LINCOLN)								
D	8	460	PJD–F2, F3	C6	A70.3	A70.3	★ D3VP 7000–AA	★ D3VP 7003–AA
F (COUGAR)								
F – – floor shift	8	351–2/B	PHB–E7, E8	FMX	A70.1	A70.1	★ D3ZP 7000–FB	★ D3ZP 7003–FB
F – – floor shift	8	351–2/B	PGA–AV2	C6	A70.3	A70.3	★ D3ZP 7000–BA	★ D3ZP 7003–BA
F – – floor shift	8	351–4/B	PGA–AU3	C6	A70.3	A70.3	★ D3ZP 7000–AA	★ D3ZP 7003–AA
J (CAPRI)								
J	4	▲122		B/W	A70.4	A70.4	★ D1RY 7000–A	★ D1RY 7003–C
J	4	▲122	PED–E	C4	A70.2	A70.2	★ D2FP 7000–UA	★ D2FP 7003–UA
J	4	▲122	PED–E1	C4	A70.2	A70.2	★	★ D3FP 7003–GA
J	4	▲122	PED–E,1,2	C4	A70.2	A70.2	★	★ D3FP 7003–GB
J	6	♦159	PED–L	C4	A70.2	A70.2	★ D2FP 7000–ABA	★ D2FP 7003–ABA
J	6	♦159	PED–L1	C4	A70.2	A70.2	★	★ D3FP 7003–RA

COPYRIGHT © 1986 — FORD MOTOR COMPANY — DEARBORN, MICHIGAN

TRANSMISSION APPLICATION CHART

MODEL	ENGINE CYL.	ENGINE C.I.D. (C.C.D.)	TRANSMISSION IDENT.	TRANSMISSION TYPE	PARTS LIST	ILLUS. SEC.	TRANSMISSION ASSEMBLY INCLUDES CONVERTER	TRANSMISSION ASSEMBLY LESS %CONVERTER
1973								
J (CAPRI)								
J	6	♦159	PED–Y1	C4	A70.2	A70.2	★	★ D3FP 7003–VB
K (MARK IV)								
K	8	460	PJD–E2, E3	C6	A70.3	A70.3	★ D3LP 7000–AA	★ D3LP 7003–AA
P (COMET)								
P – – column shift	6	200	PEB–D6	C4	A70.2	A70.2	★ D3DP 7000–AB	★ D3DP 7003–AB
P – – floor shift	6	200	PEB–H5	C4	A70.2	A70.2	★ D3DP 7000–BB	★ D3DP 7003–BB
P – – column shift	6	250	PEE–AK4	C4	A70.2	A70.2	★ D3DP 7000–DB	★ D3DP 7003–DB
P – – floor shift	6	250	PEE–AM4	C4	A70.2	A70.2	★ D3DP 7000–FB	★ D3DP 7003–FB
P – – column shift	8	302	PEE–AH4	C4	A70.2	A70.2	★ D3DP 7000–CB	★ D3DP 7003–CB
P – – floor shift	8	302	PEE–AL4	C4	A70.2	A70.2	★ D3DP 7000–EB	★ D3DP 7003–EB
Y	Refer to "A" model for application							
1974								
A (MERCURY) Y (METEOR)								
A,Y	8	351	PHB–AA1	FMX	A70.1	A70.1	★ D4AP 7000–AA	★ D4AP 7003–AA
A,Y	8	400	PHE–A1	BW–12	A70.6	A70.6	★ D4AP 7000–UA	★
A,Y(exc. P/C and fleet)	8	400	PJA–C5	C6	A70.3	A70.3	★ D4AP 7000–DA	★ D4AP 7003–DA
A,Y	8	400	PHB–AC1	FMX	A70.1	A70.1	★ D4AP 7000–SA	★ D4AP 7003–SA
A,Y – – exc. Calif.	8	460P/C	PJC–H6	C6	A70.3	A70.3	★ D4AP 7000–HA	★ D4AP 7003–HA
A,Y	8	460– exc. P/C	PJD–G3	C6	A70.3	A70.3	★ D4AP 7000–JA	★ D4AP 7003–JA
C (MONTEGO)								
C – – exc. Calif.	6	250	PEE–AE8	C4	A70.2	A70.2	★	★ D40P 7003–AHA
C – – exc. Calif.	8	302	PHA–J3	FMX	A70.1	A70.1	★ D40P 7000–AA	★ D40P 7003–AA
C	8	302	PEE–V7	C4	A70.2	A70.2	★ D40P 7000–EA	★ D40P 7003–EA
C	8	351–2/B	PHB–Z5	FMX	A70.1	A70.1	★ D40P 7000–BA	★ D40P 7003–BA
C – – exc. Calif.	8	351–2/B	PEF–D6	C4	A70.2	A70.2	★ D40P 7000–FA	★ D40P 7003–FA
C	8	351–2/B	PGA–AW2	C6	A70.3	A70.3	★ D40P 7000–KA	★ D40P 7003–KA
C	8	351–4/B	PGA–AF3	C6	A70.3	A70.3	★ D40P 7000–HA	★ D40P 7003–HA
C	8	400	PJA–G3	C6	A70.3	A70.3	★ D40P 7000–MA	★ D40P 7003–MA
C – – exc. Calif.	8	460P/C	PJC–J2	C6	A70.3	A70.3	★ D40P 7000 –SA	★ D40P 7003–SA
C	8	460– exc. P/C	PJD–R	C6	A70.3	A70.3	★ D40P 7000–ACA	★ D40P 7003–ACA
D (LINCOLN)								
D	8	460	PJD–F4	C6	A70.3	A70.3	★ D4VP 7000–AA	★ D4VP 7003–AA
F (COUGAR)								
F	8	351–2/B	PHB–Z5	FMX	A70.1	A70.1	★ D40P 7000–BA	★ D40P 7003–BA
F – – column shift	8	351–2/B	PEF–D6	C4	A70.2	A70.2	★ D40P 7000–FA	★ D40P 7003–FA
F – – column shift	8	351–2/B	PGA–AW2	C6	A70.3	A70.3	★ D40P 7000–KA	★ D40P 7003–KA
F – – column shift	8	351–4/B	PGA–AF3	C6	A70.3	A70.3	★ D40P 7000–HA	★ D40P 7003–HA
F – – floor shift	8	351–2/B	PEF–E6	C4	A70.2	A70.2	★ D40P 7000–GA	★ D40P 7003–GA
F – – floor shift	8	351–2/B	PEF–E7	C4	A70.2	A70.2	★ D40P 7000–GB	★ D40P 7003–GB
F – – floor shift	8	351–2/B	PGA–AY2	C6	A70.3	A70.3	★ D40P 7000–LA	★ D40P 7003–LA
F – – floor shift–exc. Calif.	8	351–2/B	PGA–AY3	C6	A70.3	A70.3	★ D40P 7000–LB	★ D40P 7003–LB

TRANSMISSION APPLICATION CHART

MODEL	ENGINE CYL.	ENGINE C.I.D. (C.C.D.)	TRANSMISSION IDENT.	TRANSMISSION TYPE	PARTS LIST	ILLUS. SEC.	TRANSMISSION ASSEMBLY INCLUDES CONVERTER	TRANSMISSION ASSEMBLY LESS %CONVERTER
1974								
F (COUGAR)								
F – – floor shift	8	351-4/B	PGA–AG3	C6	A70.3	A70.3	★D40P 7000–JA	★D40P 7003–JA
F – – floor shift	8	351-4/B	PGA–AG4	C6	A70.3	A70.3	★D40P 7000–JB	★D40P 7003–JB
F – – column shift	8	400	PJA–G3	C6	A70.3	A70.3	★D40P 7000–MA	★D40P 7003–MA
F – – floor shift–exc. Calif.	8	400	PJA–H3	C6	A70.3	A70.3	★D40P 7000–NA	★D40P 7003–NA
F – – floor shift	8	400	PJA–H4	C6	A70.3	A70.3	★D40P 7000–NB	★D40P 7003–NB
F – – column shift	8	460	PJD–R	C6	A70.3	A70.3	★D40P 7000–ACA	★D40P 7003–ACA
F – – floor shift	8	460	PJD–S	C6	A70.3	A70.3	★D40P 7000–ADA	★D40P 7003–ADA
F – – floor shift	8	460	PJD–S1	C6	A70.3	A70.3	★D40P 7000–ADB	★D40P 7003–ADB
J (CAPRI)								
J	4	▲122		B/W	A70.4	A70.4	★D1RY 7000–A	★D1RY 7003–C
J	4	▲122	PED–E1	C4	A70.2	A70.2	★	★D3FP 7003–GA
J	4	▲122	PED–E2	C4	A70.2	A70.2	★	★D3FP 7003–GB
J	4	▲122	PED–BB	C4	A70.2	A70.2	★	★D4FP 7003–ATB
J	4	▲122	PED–BB1	C4	A70.2	A70.2	★	★D4FP 7003–ATC
J	6	⊕171	PED–L1	C4	A70.2	A70.2	★	★D3FP 7003–RA
J	6	⊕171	PED–Y1	C4	A70.2	A70.2	★	★D3FP 7003–VA
J	6	⊕171	PED–BC	C4	A70.2	A70.2	★	★D4FP 7003–AUD
J	6	⊕171	PED–BC1	C4	A70.2	A70.2	★	★D4FP 7003–AUE
K (MARK IV)								
K	8	460	PJD–E4	C6	A70.3	A70.3	★D4LP 7000–AA	★D4LP 7003–AA
L (BOBCAT)								
L – – exc. Calif.	4	▲122	PEJ–B6	C4	A70.2	A70.2	★D42P 7000–AA	★D42P 7003–AA
L	4	@140	PEJ–C,G	C4	A70.2	A70.2	★D42P 7000–DA	★D42P 7003–DA
L	4	@140	74DT–BNA	C3	A70.5	A70.5	★D4FZ 7000–A	★D4FZ 7003–C
P (COMET)								
P – – column shift	6	200	PEB–D7	C4	A70.2	A70.2	★D4DP 7000–AA	★D4DP 7003–AA
P – – floor shift	6	200	PEB–H6	C4	A70.2	A70.2	★D4DP 7000–BA	★D4DP 7003–BA
P – – column shift	6	250	PEE–AK5	C4	A70.2	A70.2	★D4DP 7000–DA	★D4DP 7003–DA
P – – floor shift	6	250	PEE–AM5	C4	A70.2	A70.2	★D4DP 7000–FA	★D4DP 7003–FA
P – – column shift–exc. Calif.	8	302	PEE–AH5	C4	A70.2	A70.2	★D4DP 7000–CA	★D4DP 7003–CA
P – – floor shift–exc. Calif.	8	302	PEE–AL5	C4	A70.2	A70.2	★D4DP 7000–EA	★D4DP 7003–EA
P – – column shift–Calif.	8	302	PEE–BH	C4	A70.2	A70.2	★D4DP 7000–PA	★D4DP 7003–PA
P – – floor shift–Calif.	8	302	PEE–BJ	C4	A70.2	A70.2	★D4DP 7000–RA	★D4DP 7003–RA
Y	Refer to "A" model for application							
1975								
A (MERCURY) Y (METEOR)								
Y	8	351M	PHB–AN	FMX	A70.1	A70.1	★D5AP 7000–JA	★D5AP 7003–JA
A,Y – – exc. Calif.	8	351M	PHB–AR	FMX	A70.1	A70.1	★D5AP 7000–NA	★D5AP 7003–NA
A,Y – – exc. Calif.	8	400	PHB–AC3	FMX	A70.1	A70.1	★D5AP 7000–LB	★D5AP 7003–LB
A,Y – – exc. Calif.	8	400	PHB–AC2	FMX	A70.1	A70.1	★D5AP 7000–LA	★D5AP 7003–LA
A – – Calif.	8	400	PHB–AK	FMX	A70.1	A70.1	★D5AP 7000–MA	★D5AP 7003–MA
A,Y(P/C and Fleet)	8	400	PJA–C6,7	C6	A70.3	A70.3	★D5AP 7000–GA	★D5AP 7003–GA
A,Y(P/C and Fleet)	8	400	PJA–P1	C6	A70.3	A70.3	★D5AP 7000–HA	★D5AP 7003–HA
A,Y – – exc. Calif.	8	460P/C	PJC–H7,8,9	C6	A70.3	A70.3	★D5AP 7000–CA	★D5AP 7003–CA

COPYRIGHT © 1986 — FORD MOTOR COMPANY — DEARBORN, MICHIGAN

TRANSMISSION APPLICATION CHART

MODEL	ENGINE CYL.	ENGINE C.I.D. (C.C.D.)	TRANSMISSION IDENT.	TRANSMISSION TYPE	PARTS LIST	ILLUS. SEC.	TRANSMISSION ASSEMBLY INCLUDES CONVERTER	TRANSMISSION ASSEMBLY LESS %CONVERTER
1975								
A (MERCURY) Y (METEOR)								
A – – Calif.	8	460P/C	PJC–K,K1, K2	C6	A70.3	A70.3	★D5AP 7000–DA	★D5AP 7003–DA
A,Y – – exc. Calif.	8	460–Exc.P/C	PJD–G4,5	C6	A70.3	A70.3	★D5AP 7000–EA	★D5AP 7003–EA
A – – Calif.	8	460–Exc.P/C	PJD–P,P1,2	C6	A70.3	A70.3	★D5AP 7000–FA	★D5AP 7003–FA
C (MONTEGO)								
C	8	351W	PHB–Z,Z6	FMX	A70.1	A70.1	★D50P 7000–ABA	★D50P 7003–ABA
C	8	351M	PHB–AP	FMX	A70.1	A70.1	★D50P 7000–LA	★D50P 7003–LA
C	8	351M	PHB–AJ	FMX	A70.1	A70.1	★D50P 7000–MA	★D50P 7003–MA
C – – exc. Calif.	8	351M	PHB–AS	FMX	A70.1	A70.1	★D50P 7000–AJA	★D50P 7003–AJA
C – – exc. Calif.	8	400	PHB–AL	FMX	A70.1	A70.1	★D50P 7000–NA	★D50P 7003–NA
C – – exc. Calif.	8	400	PHB–AL1	FMX	A70.1	A70.1	★D50P 7000–NB	★D50P 7003–NB
C – – Calif.	8	400	PHB–AM	FMX	A70.1	A70.1	★D50P 7000–PA	★D50P 7003–PA
C	8	351W	PEF–D7	C4	A70.2	A70.2	★D50P 7000–RA	★D50P 7003–RA
C	8	351W	PEF–T	C4	A70.2	A70.2	★D50P 7000–TA	★D50P 7003–TA
C – – exc. Calif.–column shift	8	351M	PEF–AA	C4	A70.2	A70.2	★D50P 7000–AKB	★D50P 7003–AKB
C – – column shift	8	351M	PEF–S	C4	A70.2	A70.2	★D50P 7000–SA	★D50P 7003–SA
C – – column shift	8	351M	PJA–V,V1	C6	A70.3	A70.3	★D50P 7000–ZA	★D50P 7003–ZA
C	8	400	PJA–G4,5	C6	A70.3	A70.3	★D50P 7000–AA	★D50P 7003–AA
C	8	400	PJA–R1	C6	A70.3	A70.3	★D50P 7000–BA	★D50P 7003–BA
C – – exc. Calif.–column shift	8	460P/C	PJC–J3	C6	A70.3	A70.3	★D50P 7000–AGA	★D50P 7003–AGA
C – – Calif.–column shift	8	460P/C	PJC–L	C6	A70.3	A70.3	★D50P 7000–AHA	★D50P 7003–AHA
C – – exc. Calif.	8	460	PJD–R1,2	C6	A70.3	A70.3	★D50P 7000– GA	★D50P 7003–GA
C – – Calif.	8	460	PJD–T1,2	C6	A70.3	A70.3	★D50P 7000–HA	★D50P 7003–HA
D (LINCOLN)								
D – – exc. Calif.	8	460	PJD–F5,6	C6	A70.3	A70.3	★D5VP 7000–AA	★D5VP 7003–AA
D – – Calif.	8	460	PJD–N,N1,2	C6	A70.3	A70.3	★D5VP 7000–BA	★D5VP 7003–BA
F (COUGAR)								
F	8	351W	PHB–Z	FMX	A70.1	A70.1	★D50P 7000–ABA	★D50P 7003–ABA
F	8	351M	PHB–AP	FMX	A70.1	A70.1	★D50P 7000–LA	★D50P 7003–LA
F	8	351M	PHB–AJ	FMX	A70.1	A70.1	★D50P 7000–MA	★D50P 7003–MA
F – –exc. Calif.	8	351M	PHB–AS	FMX	A70.1	A70.1	★D50P 7000–AJA	★D50P 7003–AJA
F – – exc. Calif.	8	400	PHB–AL	FMX	A70.1	A70.1	★D50P 7000–NA	★D50P 7003–NA
F – – Calif.	8	400	PHB–AM	FMX	A70.1	A70.1	★D50P 7000–PA	★D50P 7003–PA
F	8	351W	PEF–D7	C4	A70.2	A70.2	★D50P 7000–RA	★D50P 7003–RA
F – – floor shift	8	351W	PEF–E8	C4	A70.2	A70.2	★D50P 7000–UA	★D50P 7003–UA
F – – floor shift	8	351W	PEF–U	C4	A70.2	A70.2	★D50P 7000–VA	★D50P 7003–VA
F	8	351M	PEF–S	C4	A70.2	A70.2	★D50P 7000–SA	★D50P 7003–SA
F – – exc. Calif.–column shift	8	351M	PEF–AA	C4	A70.2	A70.2	★D50P 7000–AKB	★D50P 7003–AKB
F – – exc. Calif.–floor shift	8	351M	PEF–AB	C4	A70.2	A70.2	★D50P 7000–ALB	★D50P 7003–ALB
F – – column shift	8	351M	PJA–V,V1	C6	A70.3	A70.3	★D50P 7000–ZA	★D50P 7003–ZA
F – – floor shift	8	351M	PJA–W,W1	C6	A70.3	A70.3	★D50P 7000–AAA	★D50P 7003–AAA
F – – column shift	8	400	PJA–G4,5	C6	A70.3	A70.3	★D50P 7000–AA	★D50P 7003–AA
F – – column shift	8	400	PJA–R1	C6	A70.3	A70.3	★D50P 7003–BA	★D50P 7003–BA
F – – floor shift	8	400	PJA–H5,6	C6	A70.3	A70.3	★D50P 7000–CA	★D50P 7003–CA
F – – floor shift	8	400	PJA–S1	C6	A70.3	A70.3	★D50P 7000–DA	★D50P 7003–DA
F – – column shift–exc. Calif.	8	460	PJD–R1,2	C6	A70.3	A70.3	★D50P 7000–GA	★D50P 7003–GA

TRANSMISSION APPLICATION CHART

MODEL	ENGINE CYL.	ENGINE C.I.D. (C.C.D.)	TRANSMISSION IDENT.	TRANSMISSION TYPE	PARTS LIST	ILLUS. SEC.	TRANSMISSION ASSEMBLY INCLUDES CONVERTER	TRANSMISSION ASSEMBLY LESS %CONVERTER
1975								
F (COUGAR)								
F – – column shift–Calif.	8	460	PJD–T1,2	C6	A70.3	A70.3	★ D50P 7000–HA	★ D50P 7003–HA
F – – floor shift–exc. Calif.	8	460	PJD–S2,3	C6	A70.3	A70.3	★ D50P 7000–JA	★ D50P 7003–JA
F – – floor shift–Calif.	8	460	PJD–U1,2	C6	A70.3	A70.3	★ D50P 7000–KA	★ D50P 7003–KA
G (MONARCH)								
G – – column shift	6	250	PEE–BT	C4	A70.2	A70.2	★ D5DP 7000–AA	★ D5DP 7003–AA
G – – column shift	6	250	PEE–CK	C4	A70.2	A70.2	★ D5DP 7000–PA	★ D5DP 7003–PA
G – – floor shift	6	250	PEE–AM6	C4	A70.2	A70.2	★ D5BP 7000–DA	★ D5BP 7003–DA
G – – floor shift	6	250	PEE–BU	C4	A70.2	A70.2	★ D5DP 7000–BA	★ D5DP 7003–BA
G – – floor shift	6	250	PEE–CH	C4	A70.2	A70.2	★ D5BP 7000–KA	★ D5BP 7003–KA
G – – column shift–exc. Calif.	8	302	PEE–CA	C4	A70.2	A70.2	★ D5DP 7000–GA	★ D5DP 7003–GA
G – – column shift–exc. Calif.	8	302	PEE–CA1	C4	A70.2	A70.2	★ D5DP 7000–GC	★ D5DP 7003–GC
G – – column shift–Calif.	8	302	PEE–BV	C4	A70.2	A70.2	★ D5DP 7000–CA	★ D5DP 7003–CA
G – – floor shift–exc. Calif.	8	302	PEE–AL6	C4	A70.2	A70.2	★ D5BP 7000–CA	★ D5BP 7003–CA
G – – floor shift–exc. Calif.	8	302	PEE–AL7	C4	A70.2	A70.2	★ D5BP 7000–CC	★ D5BP 7003–CC
G – – floor shift –Calif.	8	302	PEE–BJ1	C4	A70.2	A70.2	★ D5BP 7000–FA	★ D5BP 7003–FA
G – – column shift–exc. Calif.	8	351	PEF–Y	C4	A70.2	A70.2	★ D5DP 7000–JA	★ D5DP 7003–JA
G – – column shift–Calif.	8	351	PEF–Q	C4	A70.2	A70.2	★ D5DP 7000–EA	★ D5DP 7003–EA
G – – floor shift–exc. Calif.	8	351	PEF–Z	C4	A70.2	A70.2	★ D5DP 7000–KA	★ D5DP 7003–KA
G – – floor shift–Calif.	8	351	PEF–R	C4	A70.2	A70.2	★ D5DP 7000–FA	★ D5DP 7003–FA
K (MARK IV)								
K – – exc. Calif.	8	460	PJD–E5,6	C6	A70.3	A70.3	★ D5LP 7000–AA	★ D5LP 7003–AA
K – – Calif.	8	460	PJD–M,M1,2	C6	A70.3	A70.3	★ D5LP 7000–BA	★ D5LP 7003–BA
L (BOBCAT)								
L	4	140 (2300)	PEJ–G2	C4	A70.2	A70.2	★ D52P 7000–CA	★ D52P 7003–CA
L	6	171 (2800)	PEJ–J1	C4	A70.2	A70.2	★ D5ZP 7000–BA	★ D5ZP 7003–BA
L	4	140 (2300)	75DT–BB, BC,BD,BE	C3	A70.5	A70.5	★ D5FZ 7000–A	★ D5FZ 7003–A
L – – exc. Calif.	6	171 (2800)	75DT–FA	C3	A70.5	A70.5	★ D5FZ 7000–C	★ D5FZ 7003–E
L – – Calif.	6	171 (2800)	75DT–EA, EB	C3	A70.5	A70.5	★ D5FZ 7000–B	D5FZ 7003–D
P (COMET)								
P – – column shift	6	200	PEB–D8	C4	A70.2	A70.2	★ D5BP 7000–GA	★ D5BP 7003–GA
P – – column shift	6	200	PEB–D9	C4	A70.2	A70.2	★ D5BP 7000–GB	★ D5BP 7003–GB
P – – floor shift	6	200	PEB–H7	C4	A70.2	A70.2	★ D5BP 7000–HA	★ D5BP 7003–HA
P – – floor shift	6	200	PEB–H8	C4	A70.2	A70.2	★ D5BP 7000–HB	★ D5BP 7003–HB
P – – column shift	6	250	PEE–AK6	C4	A70.2	A70.2	★ D5BP 7000–BA	★ D5BP 7003–BA
P – – column shift	6	250	PEE–CJ	C4	A70.2	A70.2	★ D5BP 7000–PA	★ D5BP 7003–PA
P – – floor shift	6	250	PEE–AM6	C4	A70.2	A70.2	★ D5BP 7000–DA	★ D5BP 7003–DA
P – – floor shift	6	250	PEE–CH	C4	A70.2	A70.2	★ D5BP 7000–KA	★ D5BP 7003–KA
P – – column–shift–exc. Calif.	8	302	PEE–AH6	C4	A70.2	A70.2	★ D5BP 7000–AA	★ D5BP 7003–AA
P – – column shift–exc. Calif.	8	302	PEE–AH7	C4	A70.2	A70.2	★ D5BP 7000–AC	★ D5BP 7003–AC
P – – column shift–Calif.	8	302	PEE–BH1	C4	A70.2	A70.2	★ D5BP 7000–EA	★ D5BP 7003–EA
P – – floor shift – exc. Calif.	8	302	PEE–AL6	C4	A70.2	A70.2	★ D5BP 7000–CA	★ D5BP 7003–CA
P – – floor shift–exc. Calif.	8	302	PEE–AL7	C4	A70.2	A70.2	★ D5BP 7000–CC	★ D5BP 7003–CC

COPYRIGHT © 1986 — FORD MOTOR COMPANY — DEARBORN, MICHIGAN

TRANSMISSION APPLICATION CHART

MODEL	ENGINE CYL.	ENGINE C.I.D. (C.C.D.)	TRANSMISSION IDENT.	TRANSMISSION TYPE	PARTS LIST	ILLUS. SEC.	TRANSMISSION ASSEMBLY INCLUDES CONVERTER	TRANSMISSION ASSEMBLY LESS %CONVERTER
1975								
P (COMET)								
P – – floor shift–Calif.	8	302	PEE–BJ1	C4	A70.2	A70.2	★ D5BP 7000–FA	★ D5BP 7003–FA
Y	Refer to "A" model for application							
1976								
A (MERCURY) Y (METEOR)								
A,Y	8	351M	PHB–AR	FMX	A70.1	A70.1	★ D5AP 7000–NA	★ D5AP 7003–NA
A,Y	8	351M	PHB–AR1	FMX	A70.1	A70.1	★ D6AP 7000–JA	★ D6AP 7003–JA
A,Y – – exc. Calif.	8	400	PHB–AC3	FMX	A70.1	A70.1	★ D5AP 7000–LB	★ D5AP 7003–LB
A,Y – – exc. Calif.	8	400	PJA–C7, C8,C9	C6	A70.3	A70.3	★ D5AP 7000–GA	★ D5AP 7003–GA
A,Y – – Calif.	8	400	PJA–P,1	C6	A70.3	A70.3	★ D6AP 7000–GA	D6AP 7003–GA
A,Y	8	460P/C	PJC–H9,10	C6	A70.3	A70.3	★ D5AP 7000–CA	★ D5AP 7003–CA
A,Y	8	460	PJD–G5,6	C6	A70.3	A70.3	★ D5AP 7000–EA	★ D5AP 7003–EA
A,Y	8	460	PJD–AH	C6	A70.3	A70.3	★ D6AP 7000–HA	★ D6AP 7003–HA
C (MONTEGO)								
C	8	351W	PHB–Z7	FMX	A70.1	A70.1	★ D60P 7000–RA	★ D60P 7003–RA
C – – exc. Calif.	8	351M	PHB–AT	FMX	A70.1	A70.1	★ D60P 7000–ALA	★ D60P 7003–ALA
C – – Calif.	8	351M	PHB–AP1	FMX	A70.1	A70.1	★ D60P 7000–PA	★ D60P 7003–PA
C	8	351M	PEF–S	C4	A70.2	A70.2	★ D50P 7000–SA	★ D50P 7003–SA
C – – exc. Calif.	8	351M	PEF–AA1	C4	A70.2	A70.2	★ D60P 7000–AGA	★ D60P 7003–AGA
C – – Calif.	8	351M	PEF–AG	C4	A70.2	A70.2	★ D60P 7000–ABA	★ D60P 7003–ABA
C – – exc. Calif.	8	351W	PEF–D8	C4	A70.2	A70.2	★ D60P 7000–AA	★ D60P 7003–AA
C – – exc. Calif.	8	351M	PJA–V3,4	C6	A70.3	A70.3	★ D60P 7000–AJA	★ D60P 7003–AJA
C – – exc. Calif.	8	400	PHB–AL1	FMX	A70.1	A70.1	★ D50P 7000–NB	★ D50P 7003–NB
C – – exc. Calif.	8	400	PJA–G5,6,7	C6	A70.3	A70.3	★ D50P 7000–AA	★ D50P 7003–AA
C – – Calif.	8	400	PJA–R,1	C6	A70.3	A70.3	D60P 7000–ZA	★ D60P 7003–ZA
C	8	460	PJD–R2,3	C6	A70.3	A70.3	★ D50P 7000–GA	★ D50P 7003–GA
C	8	460	PJD–AJ	C6	A70.3	A70.3	★ D60P 7000–AEA	★ D60P 7003–AEA
C	8	460P/C	PJC–J3,4	C6	A70.3	A70.3	★ D50P 7000–AGA	★ D50P 7003–AGA
D (LINCOLN)								
D	8	460	PJD–F6,7	C6	A70.3	A70.3	★ D5VP 7000–AA	★ D5VP 7003–AA
D	8	460	PJD–AG	C6	A70.3	A70.3	★ D6VP 7000–BA	★ D6VP 7003–BA
F (COUGAR)								
F – – Calif.	8	351M	PHB–AP1	FMX	A70.1	A70.1	★ D60P 7000–PA	★ D60P 7003–PA
F – – exc. Calif.	8	351M	PHB–AT	FMX	A70.1	A70.1	★ D60P 7000–ALA	★ D60P 7003–ALA
F (COUGAR)								
F	8	351M	PEF–S	C4	A70.2	A70.2	★ D50P 7000–SA	★ D50P 7003–SA
F	8	351M	PEF–V	C4	A70.2	A70.2	★ D50P 7000–WA	★ D50P 7003–WA
F – – exc. Calif.	8	351M	PEF–AA1	C4	A70.2	A70.2	★ D60P 7000–AGA	★ D60P 7003–AGA
F – – exc. Calif.	8	351M	PEF–AB1	C4	A70.2	A70.2	★ D60P 7000–AHA	★ D60P 7003–AHA
F – – Calif.	8	351M	PEF–AG	C4	A70.2	A70.2	★ D60P 7000–ABA	★ D60P 7003–ABA
F – – exc. Calif.	8	351M	PJA–V3,4	C6	A70.3	A70.3	★ D60P 7000–AJA	★ D60P 7003–AJA
F – – exc. Calif.	8	351M	PJA–W3,4	C6	A70.3	A70.3	★ D60P 7000–AKA	★ D60P 7003–AKA
F	8	351W	PEF–D8	C4	A70.2	A70.2	★ D60P 7000–AA	★ D60P 7003–AA
F	8	351W	PEF–E9	C4	A70.2	A70.2	★ D60P 7000–BA	★ D60P 7003–BA
F – – exc. Calif.	8	400	PJA–G5,6,7	C6	A70.3	A70.3	★ D50P 7000–AA	★ D50P 7003–AA

TRANSMISSION APPLICATION CHART

MODEL	ENGINE CYL.	ENGINE C.I.D. (C.C.D.)	TRANSMISSION IDENT.	TRANSMISSION TYPE	PARTS LIST	ILLUS. SEC.	TRANSMISSION ASSEMBLY INCLUDES CONVERTER	TRANSMISSION ASSEMBLY LESS %CONVERTER
1976								
F (COUGAR)								
F – – exc. Calif.	8	400	PJA–H6,7, 8	C6	A70.3	A70.3	★D50P 7000–CA	★D50P 7003–CA
F – – Calif.	8	400	PJA–R,1	C6	A70.3	A70.3	★D60P 7000–ZA	★D60P 7003–ZA
F – – Calif.	8	400	PJA–S,1	C6	A70.3	A70.3	★D60P 7000–AAA	★D60P 7003–AAA
F	8	460	PJD–R2,3	C6	A70.3	A70.3	★D50P 7000–GA	★D50P 7003–GA
F	8	460	PJD–S3,4	C6	A70.3	A70.3	★D50P 7000–JA	★D50P 7003–JA
F	8	460	PJD–AJ	C6	A70.3	A70.3	★D60P 7000–AEA	★D60P 7003–AEA
F	8	460	PJD–AK	C6	A70.3	A70.3	★D60P 7000–AFA	★D60P 7003–AFA
G (MONARCH)								
G	6	250	PEE–CH1	C4	A70.2	A70.2	★D6BP 7000–MA	★D6BP 7003–MA
G	6	250	PEE–CK1	C4	A70.2	A70.2	★D6DP 7000–KA	★D6DP 7003–KA
G – – Calif.	6	250	PEE–DB	C4	A70.2	A70.2	★D6BP 7000–RA	★D6BP 7003–RA
G – – Calif.	6	250	PEE–DD	C4	A70.2	A70.2	★D6DP 7000–AAA	★D6DP 7003–AAA
G – – Calif.	8	302	PEE–BV1	C4	A70.2	A70.2	★D6DP 7000–BA	★D6DP 7003–BA
G – – Calif.	8	302	PEE–CB	C4	A70.2	A70.2	★D6DP 7000–HA	★D6DP 7003–HA
G – – exc. Calif.	8	302	PEE–CA2	C4	A70.2	A70.2	★D6DP 7000–CA	★D6DP 7003–CA
G – – exc. Calif.	8	302	PEE–CE	C4	A70.2	A70.2	★D6DP 7000–JA	★D6DP 7003–JA
G – – exc. Calif.	8	302	PEE–CA3	C4	A70.2	A70.2	★D6DP 7000–SA	★D6DP 7003–SA
G – – exc. Calif.	8	302	PEE–CE1	C4	A70.2	A70.2	★D6DP 7000–UA	★D6DP 7003–UA
G – – exc. Calif.	8	302	PEE–DE	C4	A70.2	A70.2	★D6DP 7000–ABA	★D6DP 7003–ABA
G – – exc. Calif.	8	302	PEE–DF	C4	A70.2	A70.2	★D6DP 7000–ACA	★D6DP 7003–ACA
G	8	351W	PEF–AE	C4	A70.2	A70.2	★D6DP 7000–LA	★D6DP 7003–LA
G	8	351W	PEF–AF	C4	A70.2	A70.2	★D6DP 7000–MA	★D6DP 7003–MA
J (CAPRI)								
J	4	140 (2300)	75DT–CA, CC 76DT–HA, ACA	C3	A70.5	A70.5	★	★D5RY 7003–A
J	6	171 (2800)	75DT–DA, DC 76DT–JA, ADA	C3	A70.5	A70.5	★	★D5RY 7003–B
K (MARK IV)								
K	8	460	PJD–E6,7	C6	A70.3	A70.3	★D5LP 7000–AA	★D5LP 7003–AA
K	8	460	PJD–AF	C6	A70.3	A70.3	★D6LP 7000–BA	★D6LP 7003–BA
L (BOBCAT)								
L	4	140 (2300)	76DT–AA	C3	A70.5	A70.5	D6FZ 7000–A	★D6FZ 7003–A
L	4	140 (2300)	76DT–AB	C3	A70.5	A70.5	★76DT 7000 AB	★
L – – exc. Calif.	6	171 (2800)	76DT–EA	C3	A70.5	A70.5	★D6FZ 7000–B	★D6FZ 7003–B
L – – exc. Calif.	6	171 (2800)	76DT–FA	C3	A70.5	A70.5	★D6FZ 7000–C	D6FZ 7003–C
L	6	171 (2800)	76DT–EB	C3	A70.5	A70.5	★76DT 7000–EB	★

COPYRIGHT © 1986 — FORD MOTOR COMPANY — DEARBORN, MICHIGAN

TRANSMISSION APPLICATION CHART

MODEL	ENGINE CYL.	ENGINE C.I.D. (C.C.D.)	TRANSMISSION IDENT.	TRANSMISSION TYPE	PARTS LIST	ILLUS. SEC.	TRANSMISSION ASSEMBLY INCLUDES CONVERTER	TRANSMISSION ASSEMBLY LESS %CONVERTER
1976								
L (BOBCAT)								
L	6	171 (2800)	76DT–FB	C3	A70.5	A70.5	★76DT 7000–FB	★
L – – exc. Calif.	4	140 (2300)	PEJ–G3	C4	A70.2	A70.2	★D52P 7000–CB	★D52P 7003–CB
L – – exc. Calif.	6	171 (2800)	PEJ–N	C4	A70.2	A70.2	★D52P 7000–EA	★D52P 7003–EA
L	6	171 (2800)	PEJ–M1	C4	A70.2	A70.2	★D6ZP 7000–BA	★D6ZP 7003–BA
P (COMET)								
P – – exc. Calif.	6	200	PEB–N	C4	A70.2	A70.2	★D6BP 7000–JA	★D6BP 7003–JA
P – – exc. Calif.	6	200	PEB–P	C4	A70.2	A70.2	★D6BP 7000–KA	★D6BP 7003–KA
P	6	250	PEE–CH1	C4	A70.2	A70.2	★D6BP 7000–MA	★D6BP 7003–MA
P	6	250	PEE–CJ1	C4	A70.2	A70.2	★D6BP 7000–LA	★D6BP 7003–LA
P – – Calif.	6	250	PEE–DB	C4	A70.2	A70.2	★D6BP 7000–RA	★D6BP 7003–RA
P – – Calif.	6	250	PEE DC	C4	A70.2	A70.2	★D6BP 7000–SA	★D6BP 7003–SA
P	8	302	PEE–AH7	C4	A70.2	A70.2	★D5BP 7000–AC	★D5BP 7003–AC
P	8	302	PEE–AL7	C4	A70.2	A70.2	★D5BP 7000–CC	★D5BP 7003–CC
P	8	302	PEE–CS	C4	A70.2	A70.2	★D6BP 7000–NA	★D6BP 7003–NA
P	8	302	PEE–CT	C4	A70.2	A70.2	★D6BP 7000–PA	★D6BP 7003–PA
NOTE: C6 Type transmissions listed below are 1977 Design used in 1976 Vehicles								
A (MERCURY) Y (METEOR)								
A,Y	8	400	PJA–C10, 11,12	C6	A70.3	A70.3	★D5AP 7000–GA	★D5AP 7003–GA
A,Y	8	400	PJA–P2, 3,4	C6	A70.3	A70.3	★D6AP 7000–GA	★D6AP 7003–GA
A,Y	8	460 P/C	PJC–H11, 12	C6	A70.3	A70.3	★D5AP 7000–CA	★D5AP 7003–CA
A,Y	8	460	PJD–G7, 8	C6	A70.3	A70.3	★D5AP 7000–EA	★D5AP 7003–EA
A,Y	8	460	PJD–AH1	C6	A70.3	A70.3	★D6AP 7000–HA	★D6AP 7003–HA
C (MONTEGO)								
C	8	351M	PJA–V5	C6	A70.3	A70.3	★D60P 7000–AJA	★D60P 7003–AJA
C	8	400	PJA–G8, 9,10	C6	A70.3	A70.3	★D50P 7000–AA	★D50P 7000–AA
C	8	400	PJA–R2, 3	C6	A70.3	A70.3	★D60P 7000–ZA	★D60P 7000–ZA
C	8	460 P/C	PJC–J5	C6	A70.3	A70.3	★D50P 7000–AGA	★D50P 7003–AGA
C	8	460	PJD–R4, 5,6	C6	A70.3	A70.3	★D50P 7000–GA	★D50P 7003–GA
C	8	460	PJD–AJ1	C6	A70.3	A70.3	★D60P 7000–AEA	★D60P 7003–AEA
D (LINCOLN)								
D	8	460	PJD–F8,9, 10	C6	A70.3	A70.3	★D5VP 7000–AA	★D5VP 7003–AA
D	8	460	PJD–AG1	C6	A70.3	A70.3	★D6VP 7000–BA	★D6VP 7003–BA

TRANSMISSION APPLICATION CHART

MODEL	ENGINE CYL.	ENGINE C.I.D. (C.C.D.)	TRANSMISSION IDENT.	TRANSMISSION TYPE	PARTS LIST	ILLUS. SEC.	TRANSMISSION ASSEMBLY INCLUDES CONVERTER	TRANSMISSION ASSEMBLY LESS %CONVERTER
NOTE: C6 Type transmissions listed below are 1977 Design used in 1976 Vehicles								
1976								
F (COUGAR)								
F	8	351M	PJA–V5	C6	A70.3	A70.3	★D60P 7000–AJA	★D60P 7003–AJA
F	8	351M	PJA–W5	C6	A70.3	A70.3	★D60P 7000–AKA	★D60P 7003–AKA
F	8	400	PJA–G8,9, 10	C6	A70.3	A70.3	★D50P 7000–AA	★D50P 7003–AA
F	8	400	PJA–H9,10, 11	C6	A70.3	A70.3	★D50P 7000–CA	★D50P 7003–CA
F	8	400	PJA–R2,3	C6	A70.3	A70.3	★D60P 7000–ZA	★D60P 7003–ZA
F	8	400	PJA–S2,3	C6	A70.3	A70.3	★D60P 7000–AAA	★D60P 7003–AAA
F	8	460	PJD–R4,5, 6	C6	A70.3	A70.3	★D50P 7000–GA	★D50P 7003–GA
F	8	460	PJD–S5,6	C6	A70.3	A70.3	★D50P 7000–JA	★D50P 7003–JA
F	8	460	PJD–AJ1	C6	A70.3	A70.3	★D60P 7000–AEA	★D60P 7003–AEA
F	8	460	PJD–AK1	C6	A70.3	A70.3	★D60P 7000–AFA	★D60P 7003–AFA
K (MARK IV)								
K	8	460	PJD–E8,9, 10	C6	A70.3	A70.3	★D5LP 7000–AA	★D5LP 7003–AA
K	8	460	PJD–AF1	C6	A70.3	A70.3	★D6LP 7000–BA	★D6LP 7003–BA
1977								
A (MERCURY)								
A	8	351M 400	PHB–AW	FMX	A70.1	A70.1	★D7AP 7000–NA r/bD7AP 7000–NB	★D7AP 7003–NA r/bD7AP 7003–NB
A	8	351M 400	PHB–AW1	FMX	A70.1	A70.1	★D7AP 7000–NB	★D7AP 7003–NB
A	8	400	PHB–AC4	FMX	A70.1	A70.1	★D7AP 7000–KA	★D7AP 7003–KA
A	8	351M	PJA–BU,1	C6	A70.3	A70.3	★D7AP 7000–RA,RB	★D7AP 7003–RA,RB
A	8	400	PJA–C13, C14,15	C6	A70.3	A70.3	★D7AP 7000–CA,CB	★D7AP 7003–CA,CB
A	8	400	PJA–BH,1	C6	A70.3	A70.3	★D7AP 700–LA,LB	★D7AP 7003–LA,LB
A	8	400	PJA–BV,1	C6	A70.3	A70.3	★D7AP 7000–TA	★D7AP 7003–TA
A	8	460	PJC–H13, 14	C6	A70.3	A70.3	★D7AP 7000–GA,GB	★D7AP 7003–GA,GB
A	8	460	PJC–M,1	C6	A70.3	A70.3	★D7MP 7000–AA,AB	★D7MP 7003–AA,AB
A	8	460	PJD–G10, G11,12	C6	A70.3	A70.3	★D7AP 7000–SA	★D7AP 7003–SA
A	8	460	PJD–AH2, 3	C6	A70.3	A70.3	★D7AP 7000–HA,HB	★D7AP 7003–HA,HB
A	8	460	PJD–AP,1	C6	A70.3	A70.3	★D7AP 7000–UA,UB	★D7AP 7003–UA,UB
A	8	460	PJD–AR,1	C6	A70.3	A70.3	★D7AP 7000–JA	★D7AP 7003–JA
D (LINCOLN)								
D	8	400	PJA–BL,1 2	C6	A70.3	A70.3	★D7VP 7000–DA	★D7VP 7003–DA
D	8	400	PJA–CA,1	C6	A70.3	A70.3	★D7VP 7000–GA	★D7VP 7003–GA
D	8	460	PJD–F12, F13,14	C6	A70.3	A70.3	★D7VP 7000–EA	★D7VP 7003–EA
D	8	460	PJD–AG2, 3	C6	A70.3	A70.3	★D7VP 7000–BA,BB	★D7VP 7003–BA,BB
D	8	460	PJD–AN,1	C6	A70.3	A70.3	★D7VP 7000–FA,FB	★D7VP 7003–FA,FB

COPYRIGHT © 1986 — FORD MOTOR COMPANY — DEARBORN, MICHIGAN

TRANSMISSION APPLICATION CHART

MODEL	ENGINE CYL.	ENGINE C.I.D. (C.C.D.)	TRANSMISSION IDENT.	TRANSMISSION TYPE	PARTS LIST	ILLUS. SEC.	TRANSMISSION ASSEMBLY INCLUDES CONVERTER	TRANSMISSION ASSEMBLY LESS %CONVERTER
1977								
F (COUGAR)								
F	8	351W	PHB-Z8	FMX	A70.1	A70.1	★ D70P 7000-AHA	★ D70P 7003-AHA
F	8	351M	PHB-AT1	FMX	A70.1	A70.1	★ D70P 7000-AUA	★ D70P 7003-AUA
F	8	351M	PHB-AY	FMX	A70.1	A70.1	★ D70P 7000-AKA	★ D70P 7003-AKA
F	8	351 400	PHB-AL2	FMX	A70.1	A70.1	★ D70P 7000-ALA r/b D70P 7000-ALB	★ D70P 7003-ALA r/b D70P 7003-ALB
F	8	351 400	PHB-AL3	FMX	A70.1	A70.1	★ D70P 7000-ALB	★ D70P 7003-ALB
F	8	302	PEE-V8	C4	A70.2	A70.2	★ D70P 7000-BA	★ D70P 7003-BA
F	8	351M	PEF-AA2,3	C4	A70.2	A70.2	★ D70P 7000-NA	★ D70P 7003-NA
F	8	351M	PEF-AB,23	C4	A70.2	A70.2	★ D70P 7000-RA	★ D70P 7003-RA
F	8	351W	PEF-K,1	C4	A70.2	A70.2	★ D70P 7000-FA	★ D70P 7003-FA
F	8	351M	PJA-AT	C6	A70.3	A70.3	★ D70P 7000-ABA	★ D70P 7003-ABA
F	8	351M	PJA-AU,1	C6	A70.3	A70.3	★ D70P 7000-ACA,ACB	★ D70P 7003-ACA,ACB
F	8	400	PJA-G11,G12,13	C6	A70.3	A70.3	★ D70P 7000-UA,UB	★ D70P 7003-UA,UB
F	8	400	PJA-H12,H13,14	C6	A70.3	A70.3	★ D70P 7000-AFA,AFB	★ D70P 7003-AFA,AFB
F	8	400	PJA-R4,5,6	C6	A70.3	A70.3	★ D70P 7000-YA	★ D70P 7003-YA
F	8	400	PJA-S4,5,6	C6	A70.3	A70.3	★ D70P 7000-ZA	★ D70P 7003-ZA
F	8	400	PJA-BJ,1	C6	A70.3	A70.3	★ D70P 7000-AGA,AGB	★ D70P 7003-AGA,AGB
G (MONARCH)								
G	6	250	PEE-BU	C4	A70.2	A70.2	★ D7DP 7000-CA	★ D7DP 7003-CA
G	6	250	PEE-CDI	C4	A70.2	A70.2	★ D7DP 7000-NA	★ D7DP 7003-NA
G	6	250	PEE-CK2	C4	A70.2	A70.2	★ D7DP 7000-AA	★ D7DP 7003-AA
G	6	250	PEE-CPI	C4	A70.2	A70.2	★ D7DP 7000-PA	★ D7DP 7003-PA
G	8	302	PEE-CA4	C4	A70.2	A70.2	★ D7DP 7000-EA	★ D7DP 7003-EA
G	8	302	PEE-CB2	C4	A70.2	A70.2	★ D7DP 7000-MA	★ D7DP 7003-MA
G	8	302	PEE-CE2	C4	A70.2	A70.2	★ D7DP 7000-GA	★ D7DP 7003-GA
G	8	302	PEE-CW	C4	A70.2	A70.2	★ D7DP 7000-FA	★ D7DP 7003-FA
G	8	302	PEE-DN	C4	A70.2	A70.2	★ D7DP 7000-LA	★ D7DP 7003-LA
G	8	351W	PEF-AE1	C4	A70.2	A70.2	★ D7DP 7000-JA	★ D7DP 7003-JA
G	8	351W	PEF-AE2	C4	A70.2	A70.2	★ D7DP 7000-JB	★ D7DP 7003-JB
G	8	351W	PEF-AF1	C4	A70.2	A70.2	★ D7DP 7000-KA	★ D7DP 7003-KA
G	8	351W	PEF-AF2	C4	A70.2	A70.2	★ D7DP 7000-KB	★ D7DP 7003-KB
G	6	250	PLA-A	JATCO	A70.7	A70.7	★ D7DP 7000-RA	★
J (CAPRI)								
J	4	140 (2300)	77DT-AFA	C3	A70.5	A70.5	★	★ D7RY 7003-A
J	6	171 (2800)	77DT-AGA	C3	A70.5	A70.5	★	★ D7RY 7003-B
K (MARK V)								
K	8	400	PJA-BK,1,2	C6	A70.3	A70.3	★ D7LP 7000-EA	★ D7LP 7003-EA
K	8	400	PJA-BW,1	C6	A70.3	A70.3	★ D7LP 7000-GA,GB	★ D7LP 7003-GA,GB

TRANSMISSION APPLICATION CHART

MODEL	ENGINE CYL.	ENGINE C.I.D. (C.C.D.)	TRANSMISSION IDENT.	TRANSMISSION TYPE	PARTS LIST	ILLUS. SEC.	TRANSMISSION ASSEMBLY INCLUDES CONVERTER	TRANSMISSION ASSEMBLY LESS %CONVERTER
1977								
K (MARK V)								
K	8	460	PJD-E12, E13,14	C6	A70.3	A70.3	★ D7LP 7000-FA	★ D7LP 7003-FA
K	8	460	PJD-AF2, 3	C6	A70.3	A70.3	★ D7LP 7000-BA,BB	★ D7LP 7003-BA,BB
K	8	460	PJD-AM, 1	C6	A70.3	A70.3	★ D7LP 7000-HA,HB	★ D7LP 7003-HA,HB
L (BOBCAT)								
L	4	140 (2300)	77DT-BA	C3	A70.5	A70.5	★ 77DT 7000-BA	★
L	4	140 (2300)	77DT-CA	C3	A70.5	A70.5	★ 77DT 7000-CA	★
L	6	171 (2800)	77DT-FA	C3	A70.5	A70.5	★ 77DT 7000-FA	★
L	6	171 (2800)	77DT-GA	C3	A70.5	A70.5	★ 77DT 7000-GA	★
L	4	140 (2300)	PEJ-P	C4	A70.2	A70.2	★ D7EP 7000-BA	★ D7EP 7003-BA
L	6	171 (2800)	PEJ-L	C4	A70.2	A70.2	★ D7EP 7000-CA	★ D7EP 7003-CA
L	6	171 (2800)	PEJ-M2	C4	A70.2	A70.2	★ D7ZP 7000-EA	★ D7ZP 7003-EA
P (COMET)								
P	6	200	PEB-N1	C4	A70.2	A70.2	★ D7BP 7000-EA	★ D7BP 7003-EA
P	6	250	PEE-CJ2	C4	A70.2	A70.2	★ D7BP 7000-HA	★ D7BP 7003-HA
P	8	302	PEE-CS1	C4	A70.2	A70.2	★ D7BP 7000-AA	★ D7BP 7003-AA
P	8	302	PEE-CZ	C4	A70.2	A70.2	★ D7BP 7000-BA	★ D7BP 7003-BA
P	6	250	PEE-DK	C4	A70.2	A70.2	★ D7BP 7000-KA	★ D7BP 7003-KA
P	8	302	PEE-DP	C4	A70.2	A70.2	★ D7BP 7000-LA	★ D7BP 7003-LA
V (VERSAILLES)								
V	8	302	PEE-DH	C4	A70.2	A70.2	★ D74P 7000-AB	★ D74P 7003-AB
V	8	302	PEE-DH1	C4	A70.2	A70.2	★ D74P 7000-AD	★ D74P 7003-AD
V	8	302	PEE-DJ	C4	A70.2	A70.2	★ D74P 7000-BB	★ D74P 7003-BB
V	8	302	PEE-DJ1	C4	A70.2	A70.2	★ D74P 7000-BD	★ D74P 7003-BD
V	8	351W	PEF-AM	C4	A70.2	A70.2	★ D74P 7000-CC	★ D74P 7003-CC
V	8	351W	PEF-AN	C4	A70.2	A70.2	★ D74P 7000-DC	★ D74P 7003-DC
V	8	302	PEE-DV	C4	A70.2	A70.2	★ D74P 7000-EA	★ D74P 7003-EA
V	8	302	PEE-DW	C4	A70.2	A70.2	★ D74P 7003-FA	★ D74P 7003-FA
1978								
A (MERCURY)								
A	8	351M	PHB-BB	FMX	A70.1	A70.1	★ D7AP 7000-ZA	★ D7AP 7003-ZA
A	8	400	PHB-BC,1	FMX	A70.1	A70.1	★ D8AP 7000-GA	★ D8AP 7003-GA
A	8	351M	PJA-BU3, 4	C6	A70.3	A70.3	★ D8AP 7000-BA	★ D8AP 7003-BA
A	8	400	PJA-C17, 18	C6	A70.3	A70.3	★ D8AP 7000-DA	★ D8AP 7003-DA
A	8	400	PJA-BH3, 4	C6	A70.3	A70.3	★ D8AP 7000-AA	★ D8AP 7003-AA

COPYRIGHT © 1986 — FORD MOTOR COMPANY — DEARBORN, MICHIGAN

TRANSMISSION APPLICATION CHART

MODEL	ENGINE CYL.	ENGINE C.I.D. (C.C.D.)	TRANSMISSION IDENT.	TRANSMISSION TYPE	PARTS LIST	ILLUS. SEC.	TRANSMISSION ASSEMBLY INCLUDES CONVERTER	TRANSMISSION ASSEMBLY LESS %CONVERTER
1978								
A (MERCURY)								
A	8	460	PJC–M3, 4	C6	A70.3	A70.3	★ D8MP 7000–AA	★ D8MP 7003–AA
A	8	460	PJD–AP3, 4	C6	A70.3	A70.3	★ D8AP 7000–FB	★ D8AP 7003–FB
D (LINCOLN)								
D	8	400	PJA–CA3, 4	C6	A70.3	A70.3	★ D8VP 7000–BA	★ D8VP 7003–BA
D	8	400	PJA–CC, 1	C6	A70.3	A70.3	★ D8VP 7000–CA	★ D8VP 7003–CA
D	8	400	PJA–CZ	C6	A70.3	A70.3	★ D8VP 7000–FA	★ D8VP 7003–FA
D	8	460	PJD–AN3 4	C6	A70.3,	A70.3	★ D8VP 7000–DB	★ D8VP 7003–DB
F (COUGAR)								
F	8	302	PEE–M12	C4	A70.2	A70.2	★ D80P 7000–KB r/b D80P 7000–KD	★ D80P 7003–KB r/b D80P 7003–KD
F	8	302	PEE–M13	C4	A70.2	A70.2	★ D80P 7000–KD	★ D80P 7003–KD
F	8	302	PEE–M11	C4	A70.2	A70.2	★ D80P 7000–KC r/b D80P 7000–KB	★ D80P 7003–KC r/b D80P 7003–KB
F	8	302	PEE– V11	C4	A70.2	A70.2	★ D80P 7000–LB r/b D80P 7000–LD	★ D80P 7003–LB r/b D80P 7003–LD
F	8	302	PEE–V12	C4	A70.2	A70.2	★ D80P 7000–LD	★ D80P 7003–LD
F	8	302	PEE–V10	C4	A70.2	A70.2	★ D80P 7000–LC r/b D80P 7000–LB	★ D80P 7003–LC r/b D80P 7003–LB
F	8	302	PEE–DY	C4	A70.2	A70.2	★ D80P 7000–JC r/b D80P 7000–JD	★ D80P 7003–JC r/b D80P 7003–JD
F	8	302	PEE–DY1	C4	A70.2	A70.2	★ D80P 7000–JD	★ D80P 7003–JD
F	8	351W	PEF–K3	C4	A70.2	A70.2	★ D80P 7000–UA r/b D80P 7000–UB	★ D80P 7003–UA r/b D80P 7003–UB
F	8	351W	PEF–K4	C4	A70.2	A70.2	★ D80P 7000–UB	★ D80P 7003–UB
F	8	351M	PEF–AA5	C4	A70.2	A70.2	★ D80P 7000–YA r/b D80P 7000–YB	★ D80P 7003–YA r/b D80P 7003–YB
F	8	351M	PEF–AA5	C4	A70.2	A70.2	★ D80P 7000–YB	★ D80P 7003–YB
F	8	351M	PEF–AB5	C4	A70.2	A70.2	★ D80P 7000–ZA r/b D80P 7000–ZB	★ D80P 7003–ZA r/b D80P 7003–ZB
F	8	351M	PEF–AB6	C4	A70.2	A70.2	★ D80P 7000–ZB	★ D80P 7003–ZB
F	8	302	PHB–BG	FMX	A70.1	A70.1	D90P 7000–GA	D90P 7003–GA
F	8	351W	PHB–Z9	FMX	A70.1	A70.1	D80P 7000–AA	D80P 7003–AA
F	8	351M	PHB–AT2	FMX	A70.1	A70.1	★ D70P 7000–AUB	★ D70P 7003–AUB
F	8	400	PHB–BD	FMX	A70.1	A70.1	★ D80P 7000–TA	★ D80P 7003–TA
F	8	400	PHB–BE	FMX	A70.1	A70.1	★ D80P 7000–VA	★ D80P 7003–VA
F	8 8	351 400	PJA–BJ3, 4	C6	A70.3	A70.3	★ D80P 7000–DA	★ D80P 7003–DA
F	8	400	PJA–G15, 16	C6	A70.3	A70.3	★ D80P 7000–EA	★ D80P 7003–EA
F	8	400	PJA–H16, 17	C6	A70.3	A70.3	★ D80P 7000–FA	★ D80P 7003–FA

TRANSMISSION APPLICATION CHART

MODEL	ENGINE CYL.	ENGINE C.I.D. (C.C.D.)	TRANSMISSION IDENT.	TRANSMISSION TYPE	PARTS LIST	ILLUS. SEC.	TRANSMISSION ASSEMBLY INCLUDES CONVERTER	TRANSMISSION ASSEMBLY LESS %CONVERTER
1978								
G (MONARCH)								
G	6	250	PEE–CD3, 4	C4	A70.2	A70.2	★ D8DP 7000–BA	★ D8DP 7003–BA
G	6	250	PEE–CP3, 4	C4	A70.2	A70.2	★ D8DP 7000–DA	★ D8DP 7003–DA
G	8	302	PEE–CA6, 7	C4	A70.2	A70.2	★ D8DP 7000–FA	★ D8DP 7003–FA
G	8	302	PEE–CE4, 5	C4	A70.2	A70.2	★ D8DP 7000–EA	★ D8DP 7003–EA
G	8	302	PEE–CW2, 3	C4	A70.2	A70.2	★ D8DP 7000–GB	★ D8DP 7003–GB
G	6	250	PLA–A1	JATCO	A70.7	A70.7	D8DP 7000–HA	★
K (MARK V)								
K	8	400	PJA–BW3, 4	C6	A70.3	A70.3	★ D8LP 7000–BA	★ D8LP 7003–BA
K	8	400	PJA–CY	C6	A70.3	A70.3	★ D8LP 7000–FA	★ D8LP 7003–FA
K	8	400	PJA–CB,1	C6	A70.3	A70.3	★ D8LP 7000–CA	★ D8LP 7003–CA
K	8	460	PJD–AM3, 4	C6	A70.3	A70.3	★ D8LP 7000–DB	★ D8LP 7003–DB
L (BOBCAT)								
L	4	140 (2300)	78DT–ACA	C3	A70.5	A70.5	★ 78DT 7000–ACA	★
L	4	140 (2300)	78DT–ADA	C3	A70.5	A70.5	★ 78DT 7000–ADA	★
L	6	171 (2800)	78DT–AGA	C3	A70.5	A70.5	★ 78DT 7000–AGA	★
L	4	140 (2300)	PEJ–P2,3	C4	A70.2	A70.2	★ D8ZP 7000–DB	★ D8ZP 7003–DB
L	6	171 (2800)	PEJ–M4,5	C4	A70.2	A70.2	★ D8ZP 7000–AB	★ D8ZP 7003–AB
P (ZEPHYR)								
P	4	140 (2300)	78DT–SA	C3	A70.5	A70.5	★ 78DT 7000–SA	★
P	6	200	78DT–BAA	C3	A70.5	A70.5	★ 78DT 7000–BAA	★
P	6	200	78DT–BCA	C3	A70.5	A70.5	★ 78DT 7000–BCA	★
P – – Police & taxi	6	200	78DT–BJA	C3	A70.5	A70.5	★ 78DT 7000–BJA	★
P	6	200	PEB–N3	C4	A70.2	A70.2	★ D8BP 7000–AF r/b D8BP 7000–AG	★ D8BP 7003–AF r/b D8BP 7003–AG
P	6	200	PEB–N4	C4	A70.2	A70.2	★ D8BP 7000–AG r/b D8BP 7000–AH	★ D8BP 7003–AG r/b D8BP 7003–AH
P	6	200	PEB–N4	C4	A70.2	A70.2	★ D8BP 7000–AH	★ D8BP 7003–AH
P	6	200	PEB–P1	C4	A70.2	A70.2	★ D8BP 7000–BF r/b D8BP 7000–BG	★ D8BP 7003–BF r/b D8BP 7003–BG
P	6	200	PEB–P2	C4	A70.2	A70.2	★ D8BP 7000–BG	★ D8BP 7003–BG
P	6	200	PEB–R	C4	A70.2	A70.2	★ D8BP 7000–CE r/b D8BP 7000–CF	★ D8BP 7003–CE r/b D8BP 7003–CF
P	6	200	PEB–R1	C4	A70.2	A70.2	★ D8BP 7000–CF r/b D8BP 7000–CG	★ D8BP 7003–CF r/b D8BP 7003–CG
P	6	200	PEB–R1	C4	A70.2	A70.2	★ D8BP 7000–CG	★ D8BP 7003–CG
P – – Police & taxi	6	200	PEB–S	C4	A70.2	A870.2	★ D8BP 7000–LA r/b D8BP 7000–LB	★ D8BP 7003–LA r/b D8BP 7003–LB

COPYRIGHT © 1986 — FORD MOTOR COMPANY — DEARBORN, MICHIGAN

TRANSMISSION APPLICATION CHART

MODEL	ENGINE CYL.	ENGINE C.I.D. (C.C.D.)	TRANSMISSION IDENT.	TRANSMISSION TYPE	PARTS LIST	ILLUS. SEC.	TRANSMISSION ASSEMBLY INCLUDES CONVERTER	TRANSMISSION ASSEMBLY LESS %CONVERTER
1978								
P (ZEPHYR)								
P – – Police & taxi	6	200	PEB-S1	C4	A70.2	A70.2	★ D8BP 7000-LB r/b D8BP 7000-LC	★ D8BP 7003-LB r/b D8BP 7003-LC
P – – Police & taxi	6	200	PEB-S1	C4	A70.2	A70.2	★ D8BP 7000-LC	★ D8BP 7003-LC
P	8	302	PEE-CS3	C4	A70.2	A70.2	★ D8BP 7000-DF	★ D8BP 7003-DF
P	8	302	PEE-CS4	C4	A70.2	A70.2	★ D8BP 7000-DE r/b D8BP 7000-DG	★ D8BP 7003-DE r/b D8BP 7003-DG
P	8	302	PEE-CS5	C4	A70.2	A70.2	★ D8BP 7000-DG r/b D8BP 7000-DH	★ D8BP 7003-DG r/b D8BP 7003-DH
P	8	302	PEE-CS5	C4	A70.2	A70.2	★ D8BP 7000-DH	★ D8BP 7003-DH
P	8	302	PEE-CT1	C4	A70.2	A70.2	★ D8BP 7000-EF	★ D8BP 7003-EF
P	8	302	PEE-CT2	C4	A70.2	A70.2	★ D8BP 7000-EE r/b D8BP 7000-EG	★ D8BP 7003-EE r/b D8BP 7003-EG
P	8	302	PEE-CT3	C4	A70.2	A70.2	★ D8BP 7000-EG	★ D8BP 7003-EG
P	8	302	PEE-DA	C4	A70.2	A70.2	★ D8BP 7000-HE r/b D8BP 7000-HF	★ D8BP 7003-HE r/b D8BP 7003-HF
P	8	302	PEE-DA1	C4	A70.2	A70.2	★ D8BP 7000-HF r/b D8BP 7000-HG	★ D8BP 7003-HF r/b D8BP 7003-HG
P	8	302	PEE-DA1	C4	A70.2	A70.2	★ D8BP 7000-HG	★ D8BP 7003-H3
P – – Police & taxi	8	302	PEE-ED	C4	A70.2	A70.2	★ D8BP 7000-MA r/b D8BP 7000-MB	★ D8BP 7003-MA r/b D8BP 7003-MB
P	8	302	PEE-ED1	C4	A70.2	A70.2	★ D8BP 7000-MB r/b D8BP 7000-MC	★ D8BP 7003-BB r/b D8BP 7003-MC
P	8	302	PEE-ED1	C4	A70.2	A70.2	★ D8BP 7000-MC	★ D8BP 7003-MC
V (VERSAILLES)								
V	8	302	PEE-DH3, 4	C4	A70.2	A70.2	★ D84P 7000-AA	★ D84P 7003-AA
V	8	302	PEE-DJ3, 4	C4	A70.2	A70.2	★ D84P 7000-BA	★ D84P 7003-BA
V	8	302	PEE-EF,1	C4	A70.2	A70.2	★ D84P 7000-EA	★ D84P 7003-EA
V	8	302	PEE-EG,1	C4	A70.2	A70.2	★ D84P 7000-FA	★ D84P 7003-FA
V	8	302	PEE-EH	C4	A70.2	A70.2	★ D84P 7000-GA	★ D84P 7003-GA
V	8	302	PEE-EJ	C4	A70.2	A70.2	★ D84P 7000-HA	★ D84P 7003-HA
1979								
A (MERCURY)								
A	8	302	PEE-DZ	C4	A70.2	A70.2	★ D9AP 7000-DB	★ D9AP 7003-DB
A	8	302	PEE-DZ1, 2	C4	A70.2	A70.2	★ D9AP 7000-DA	★ D9AP 7003-DA
A	8	302	PEE-EA	C4	A70.2	A70.2	★ D9AP 7000-EB r/b D9AP 7000-EC	★ D9AP 7003-EB r/b D9AP 7003-EC
A	8	302	PEE-EA1, 2	C4	A70.2	A70.2	★ D9AP 7000-EC	★ D9AP 7003-EC
A	8	302	PEE-EM1, 2	C4	A70.2	A70.2	★ D9AP 7000-JA	★ D9AP 7003-JA
A	8	302	PEE-EM	C4	A70.2	A70.2	★ D9AP 7000-JB	★ D9AP 7003-JB
A	8	302	PEE-FB	C4	A70.2	A70.2	★ D9AP 7000-SB r/b D9AP 7000-SC	★ D9AP 7003-SB r/b D9AP 7003-SC
A	8	302	PEE-FB1, 2	C4	A70.2	A70.2	★ D9AP 7000-SC	★ D9AP 7003-SC
A	8	302	PEE-FC	C4	A70.2	A70.2	★ D9AP 7000-TC	★ D9AP 7003-TC
A	8	302	PEE-FE	C4	A70.2	A70.2	★ D9AP 7000-YA	★ D9AP 7003-YA
A	8	302	PEE-FJ	C4	A70.2	A70.2	★ D9AP 7000-ACA	★ D9AP 7003-ACA

TRANSMISSION APPLICATION CHART

MODEL	ENGINE CYL.	ENGINE C.I.D. (C.C.D.)	TRANSMISSION IDENT.	TRANSMISSION TYPE	PARTS LIST	ILLUS. SEC.	TRANSMISSION ASSEMBLY INCLUDES CONVERTER	TRANSMISSION ASSEMBLY LESS %CONVERTER
1979								
A (MERCURY)								
A	8	351	PEF-AT	C4	A70.2	A70.2	★ D9AP 7000-MA r/b D9AP 7000-MB	★ D9AP 7003-MA r/b D9AP 7003-MB
A	8	351	PEF-AT1, 2	C4	A70.2	A70.2	★ D9AP 7000-MB	★ D9AP 7003-MB
A	8	351	PEF-AU	C4	A70.2	A70.2	★ D9AP 7000-NA r/b D9AP 7000-NB	★ D9AP 7003-NA r/b D9AP 7003-NB
A	8	351	PEF-AU1, 2	C4	A70.2	A70.2	★ D9AP 7000-NB	★ D9AP 7003-NB
A	8	351	PEF-AZ	C4	A70.2	A70.2	★ D9AP 7000-VA r/b D9AP 7000-VB	★ D9AP 7003-VA r/b D9AP 7003-VB
A	8	351	PEF-AZ1, 2	C4	A70.2	A70.2	★ D9AP 7000-VB	★ D9AP 7003-VB
A	8	302	PHB-BH,1	FMX	A70.1	A70.1	★ D9AP 7000-LA	★ D9AP 7003-LA
A	8	351	PGD-BH,1	C6	A70.3	A70.3	★ D9AP 7000-GB	★ D9AP 7003-GB
A	8	351	PGD-BZ,1	C6	A70.3	A70.3	★ D9AP 7000-HA	★ D9AP 7003-HA
A	8	351	PGD-CF,1, 2	C6	A70.3	A70.3	★ D9AP 7000-KA	★ D9AP 7003-KA
A	8	351	PGD-CH,1	C6	A70.3	A70.3	★ D9AP 7000-PA	★ D9AP 7003-PA
A	8	351	PGD-CR,1	C6	A70.3	A70.3	★ D9AP 7000-UA	★ D9AP 7003-UA
A	8	351	PGD-CT	C6	A70.3	A70.3	★ D9AP 7000-ZA	★ D9AP 7003-ZA
A	8	351	PGD-CU,1	C6	A70.3	A70.3	★ D9AP 7000-AAA	★ D9AP 7003-AAA
D (LINCOLN)								
D	8	400	PJA-CA6,7	C6	A70.3	A70.3	★ D9VP 7000-AA	★ D9VP 7003-AA
D	8	400	PJA-DB,1	C6	A70.3	A70.3	★ D9VP 7000-BA	★ D9VP 7003-BA
D	8	400	PJA-DD,1	C6	A70.3	A70.3	★ D9VP 7000-CA	★ D9VP 7003-CA
F (COUGAR)								
F	8	302	PEE-M14	C4	A70.2	A70.2	★ D90P 7000-DA	★ D90P 7003-DA
F	8	302	PEE-V13	C4	A70.2	A70.2	★ D90P 7000-EA	★ D90P 7003-EA
F	8	351M	PEF-AA7	C4	A70.2	A70.2	★ D90P 7000-KA	★ D90P 7003-KA
F	8	351M	PEF-AB7	C4	A70.2	A70.2	★ D90P 7000-HA	★ D90P 7003-HA
F	8	302	PHB-BG	FMX	A70.1	A70.1	★ D90P 7000-GA	★ D90P 7003-GA
F	8	302	PHB-BG1,2	FMX	A70.1	A70.1	★ D90P 7000-GC	★ D90P 7003-GC
F	8	351M	PHB-AT2	FMX	A70.1	A70.1	★ D70P 7000-AUB r/b D90P 7000-NA	★ D70P 7003-AUB r/b D90P 7003-NA
F	8	351M	PHB-AT3, 4	FMX	A70.1	A70.1	★ D90P 7000-NA	★ D90P 7003-NA
F	8	351W	PHB-Z9, 10	FMX	A70.1	A70.1	★ D80P 7000-AA	★ D80P 7003-AA
F	8	351M	PJA-DK,1	C6	A70.3	A70.3	★ D90P 7000-MA	★ D90P 7003-MA
G (MONARCH)								
G	6	250	PEE-CD5	C4	A70.2	A70.2	★ D9DP 7000-BA	★ D9DP 7003-BA
G	6	250	PEE-CP5	C4	A70.2	A70.2	★ D9DP 7000-DA	★ D9DP 7003-DA
G	8	302	PEE-CA8	C4	A70.2	A70.2	★ D9DP 7000-AA	★ D9DP 7003-AA
G	8	302	PEE-CE6	C4	A70.2	A70.2	★ D9DP 7000-CA	★ D9DP 7003-CA
G	8	302	PEE-CW4	C4	A70.2	A70.2	★ D9DP 7000-FA	★ D9DP 7003-FA
G	6	250	PLA-A2	JATCO	A70.7	A70.7	D9DP 7000-EA	★
J (CAPRI)								
J	4	140 (2300)	79DT-EA	C3	A70.5	A70.5	★ 79DT 7000-EA	★

COPYRIGHT © 1986 — FORD MOTOR COMPANY — DEARBORN, MICHIGAN

TRANSMISSION APPLICATION CHART

MODEL	ENGINE CYL.	ENGINE C.I.D. (C.C.D.)	TRANSMISSION IDENT.	TRANSMISSION TYPE	PARTS LIST	ILLUS. SEC.	TRANSMISSION ASSEMBLY INCLUDES CONVERTER	TRANSMISSION ASSEMBLY LESS %CONVERTER
1979								
J (CAPRI)								
J	4	140 (2300)	79DT-GA	C3	A70.5	A70.5	★ 79DT 7000-GA	★
J	6	171 (2800)	79DT-HA	C3	A70.5	A70.5	★ 79DT 7000-HA	★
J	6	171 (2800)	PEJ-S	C4	A70.2	A70.2	★ D9ZP 7000-AA	★ D9ZP 7003-AA
J	6	171 (2800)	PEJ-S1	C4	A70.2	A70.2	★ D9ZP 7000-AB	★ D9ZP 7003-AB
J	6	171 (2800)	PEJ-W	C4	A70.2	A70.2	★ D9ZP 7000-EA	★ D9ZP 7003-EA
J		171 (2800)	PEJ-W1	C4	A70.2	A70.2	★ D9ZP 7000-EB	★ D9ZP 7003-EB
J	6	200	PEB-P	C4	A70.2	A70.2	★ D9BP 7000-FA	★ D9BP 7003-FA
J	8	302	PEE-BY4	C4	A70.2	A70.2	★ D9ZP 7000-DA	★ D9ZP 7003-DA
K (MARK V)								
K	8	400	PJA-BW6, 7	C6	A70.3	A70.3	★ D9LP 7000-AA	★ D9LP 7003-AA
K	8	400	PJA-DA,1	C6	A70.3	A70.3	★ D9LP 7000-BA	★ D9LP 7003-BA
K	8	400	PJA-DC,1	C6	A70.3	A70.3	★ D9LP 7000-CA	★ D9LP 7003-CA
L (BOBCAT)								
L	4	140 (2300)	79DT-AA	C3	A70.5	A70.5	★ 79DT 7000-AA	★
L	6	171 (2800)	79DT-DA	C3	A70.5	A70.5	★ 79DT 7000-DA	★
L	4	140 (2300)	PEJ-Y	C4	A70.2	A70.2	★ D9EP 7000-CB	★ D9EP 7003-CB
L	6	171 (2800)	PEJ-M6	C4	A70.2	A70.2	★ D9EP 7000-AA	★ D9EP 7003-AA
L	6	171 (2800)	PEJ-V	C4	A70.2	A70.2	★ D9EP 7000-BA	★ D9EP 7003-BA
P (ZEPHYR)								
P	4	140 (2300)	79DT-KA	C3	A70.5	A70.5	★ 79DT 7000-KA	★
P	4	140 (2300)	79DT-MA	C3	A70.5	A70.5	★ 79DT 7000-MA	★
P	6	200	79DT-NA	C3	A70.5	A70.5	★ 79DT 7000-NA	★
P	6	200	PEB-N5	C4	A70.2	A70.2	★ D9BP 7000-EA	★ D9BP 7003-EA
P	6	200	PEB-P3	C4	A70.2	A70.2	★ D9BP 7000-FA	★ D9BP 7003-FA
P	6	200	PEB-R2	C4	A70.2	A70.2	★ D9BP 7000-RA	★ D9BP 7003-RA
P	6	200	PEB-S2	C4	A70.2	A70.2	★ D9BP 7000-GA	★ D9BP 7003-GA
P	6	200	PEB-T	C4	A70.2	A70.2	★ D9BP 7000-MA	★ D9BP 7003-MA
P	8	302	PEE-CS6	C4	A70.2	A70.2	★ D9BP 7000-CA	★ D9BP 7003-CA
P	8	302	PEE-CT4	C4	A70.2	A70.2	★ D9BP 7000-DA	★ D9BP 7003-DA
P	8	302	PEE-DA2	C4	A70.2	A70.2	★ D9BP 7000-PA	★ D9BP 7003-PA
P	8	302	PEE-ED2	C4	A70.2	A70.2	★ D9BP 7000-HA	★ D9BP 7003-HA
P	8	302	PEE-ES	C4	A70.2	A70.2	★ D9BP 7000-JA	★ D9BP 7003-JA
P	8	302	PEE-ET	C4	A70.2	A70.2	★ D9BP 7000-KA	★ D9BP 7003-KA
P	8	302	PEE-EU	C4	A70.2	A70.2	★ D9BP 7000-LA	★ D9BP 7003-LA
P	8	302	PEE-EV	C4	A70.2	A70.2	★ D9BP 7000-NA	★ D9BP 7003-NA
P	8	302	PEE-FD	C4	A70.2	A70.2	★ D9BP 7000-SA	★ D9BP 7003-SA

TRANSMISSION APPLICATION CHART

MODEL	ENGINE CYL.	ENGINE C.I.D. (C.C.D.)	TRANSMISSION IDENT.	TRANSMISSION TYPE	PARTS LIST	ILLUS. SEC.	TRANSMISSION ASSEMBLY INCLUDES CONVERTER	TRANSMISSION ASSEMBLY LESS %CONVERTER
1979								
V (VERSAILLES)								
V	8	302	PEE–DH5	C4	A70.2	A70.2	★ D94P 7000–AA	★ D94P 7003–AA
V	8	302	PEE–DJ5	C4	A70.2	A70.2	★ D94P 7000–BA	★ D94P 7003–BA
V	8	302	PEE–EW	C4	A70.2	A70.2	★ D94P 7000–FA	★ D94P 7003–FA
V	8	302	PEE–EW1	C4	A70.2	A70.2	★ D94P 7000–FB	★ D94P 7003–FB
V	8	302	PEE–EY	C4	A70.2	A70.2	★ D94P 7000–EA	★ D94P 7003–EA
V	8	302	PEE–EY1	C4	A70.2	A70.2	★ D94P 7000–EB	★ D94P 7003–EB
V	8	302	PEE–EZ	C4	A70.2	A70.2	★ D94P 7000–CA	★ D94P 7003–CA
V	8	302	PEE–FA	C4	A70.2	A70.2	★ D94P 7000–DA	★ D94P 7003–DA

COPYRIGHT © 1986 — FORD MOTOR COMPANY — DEARBORN, MICHIGAN

YEAR	MODEL/RESTRICTIONS	ENGINE CYL.	ENGINE C.I.D. (C.C.D.)	PART NUMBER	DESCRIPTION	QTY.
				7A003	SPRING (FRONT BAND SERVO PISTON RETRACTING)	
73/78	C,F	8	302,351	C9AZ 7A003-B	7/8" dia. x 2 1/4" free length #Yellow dye	1
79	F	8	351			1
74	A,Y	8	400			1
79	A	8	302			1
73/78	A,Y	8	351	B5AZ 7A003-A	#Blue dye	1
75/78	A,C,Y	8	400			1
79	F	8	302	D9AZ 7A003-A	#White dye	1
				7005	CASE ASSY.	
73/	A,C,F,Y - - console shift	8	All	D6AZ 7005-A	incl. (1) D2AZ 7019-A washer, (1) D5AZ 7B498-A seal, (2) 359324-S connector, (1) 359409-S plug, (2) 376649-S plug, (1) 387267-S connector, (1) I.S.-4252	1
73/78	A,C,F,Y - - column shift	8	All	D80Z 7005-A	incl. (1) D2AZ 7019-A washer, (1) D5AZ 7B498-A seal, (2) 359324-S connector, (1) 359409-S plug, (2) 376649-S plug, (1) 387267-S connector, (1) I.S.-4252	1
79	A,F - - column shift	All	All	E0AZ 7005-B	incl. (1) D2AZ 7019-A washer, (1) D5AZ 7B498-A seal, (2) 359324-S conn., (1) 359409-S plug, (2) 376649-S plug, (1) 387267-S conn., (1) I.S.-4252	1
73/	A,C,F,Y	8	All	★357221-S	Plug (to plug servo hole in case)-5/16" dia. x 5/16" long	AR
				353055-S7	(PP-29)-plug (case drain)-extended head-1 3/16" long-1/4"-18 thd.	AR
				357916-S	(PP-35)-plug (case drain)-1/8"-27 dry seal taper thd.-hex. head x 5/8" long	AR
				★358530-S	Plug-11/32" x 5/16"	AR
				★356220-S	Pin dowel (case locating)-3/8" x 5/8"	AR
				359409-S	(PP-59)-plug (to plug rear support oil tube hole in case)-cup-5/16" dia.	AR
				7A008	PLATE (MAIN CONTROL VALVE BODY SEPARATING)	
73	A,C,F,Y	8	351,400	★ D2AZ 7A008-A	#VVV notched	1
74/	A,C,F,Y	8	351	Not replaced (10/78)		1
73/74	C	8	302	★ D2ZZ 7A008-A	#V notched and 3 half circles	1
74/	A,C,F,Y	8	400	Not replaced		1
73/	A,C,F,Y	8	All	374067-S	(BB-637-D)-screw (plate to body)-No. 10-14 x 7/16"	AR
				34805-S7	(X-62)-lockwasher-1/4"	AR
73/	A,C,F,Y	8	All	C0AZ 7015-C	SHAFT (INPUT)-7 21/32" long-54 teeth-29 splines	1
73/	A,C,F,Y	8	All	D2AZ 7019-A	WASHER (INPUT SHAFT THRUST)-1 9/64" I.D. x 2 3/4" O.D.	1
73/	A,C,F,Y	8	All	C6AZ 7D019-A	SEAL (OIL DISTRIBUTOR SLEEVE)	4
				7A020	INDICATOR (OIL LEVEL)	
73/74	C,F	8	All	C9AZ 7A020-C		1
73/74	A,Y	8	351			1
74	A,Y	8	400	★ D3AZ 7A020-E Not replaced	27 13/16" long	1
75/78	A,Y	8	All	D5AZ 7A020-A	#D5AP-A1A,A2A	1
79	A	8	All	D9AZ 7A020-D	#D9AP 7A020-DA	1
75/76	C,F	8	All	D50Z 7A020-A	#D50P-A1A,A2A	1
77/	F	8	All	D70Z 7A020-C	#D70P 7A020-BA	1
73/	A,C,F,Y	8	All	B5A 7025-A	BUSHING (CASE)-7/8" long x 1 1/2" O.D.	1
73/	A,C,F,Y	8	All	★ C0AZ 7B025-B Not replaced(10/80)	VALVE KIT (OIL PRESSURE REGULATOR) Consists of (1) D3AP 7A270-BA spring and (1) B5A 77462-A retainer	1

COPYRIGHT © 1986 — FORD MOTOR COMPANY — DEARBORN, MICHIGAN

YEAR	MODEL/RESTRICTIONS	ENGINE CYL.	ENGINE C.I.D. (C.C.D.)	PART NUMBER	DESCRIPTION	QTY.
				7A033	Refer to group 7A383	
				7A034	BUSHING (EXTENSION HOUSING)	
73/	A,C,F,Y	8	All	B5AZ 7A034-A	1 13/16" O.D. x 2 1/8" long	1
				7D038	Refer to Group 7A175	
				7A039	HOUSING ASSY. (EXTENSION)	
73/74	A,Y	8	All	D2AZ 7A039-A	#D2AP 7A040-AA-16 3/8" long	1
75/78	A,Y	8	All	D5AZ 7A039-A	16 3/16" long	1
73/	C,F	8	All	D50Z 7A039-A	12 3/4" long	1
79	A	All	All			1
73/	A,C,F,Y	8	All	356684-S8	(BB-169)-bolt-hex. head-3/8"-16 x 3 1/4"	AR
				356682-S8	(BB-170)-bolt-hex. head-3/8"-16 x 4 1/4"	AR
				359266-S8	(BB-157)-bolt-hex. head-3/8"-16 x 1 1/4"	AR
				34847-S8	(X-74)-lockwasher-3/8"	AR
				351487-S	(XX-291)-lockwasher-external tooth-3/8"	AR
				7A040	Refer to group 7A039	
				7C050	OIL SEAL (FRONT BAND SERVO PISTON GUIDE)-also refer to 7A294	
73/	A,C,F,Y	8	All	B1AZ 7C050-B	1 7/8" I.D. x 2 3/8" O.D.-also serviced in 7153 kit	1
				7C051	SEAL (REAR CLUTCH PISTON OUTER)-OIL	
73/	A,C,F,Y	8	All	C8AZ 7C051-A	5 1/4" O.D. x 4 3/4" I.D.	1
				7052	SEAL (EXTENSION HOUSING OIL)	
73/	A,C,F,Y	8	All	D5AZ 7052-A		1
				7C053	GOVERNOR ASSY. (W/COUNTERWEIGHT)	
73/77	C,F,Y	8	All	D3AZ 7C053-A	Use w/PHB-BE trans.	1
73/76	A	8	All			1
77	A	8	351			1
78	A	8	400			1
78	F	8	400			1
78/	A,F	8	302, 351W			1
77	A	8	400	D3TZ 7C053-A	Use w/PHB-BD trans.	1
78	A	8	351			1
78/	F	8	351-M			1
78	F	8	400			1
				353351-S	(AA-9)-ball (governor to shaft)	1
				7060	SHAFT ASSY. (OUTPUT)	
73/76	A,Y	8	All	D1AZ 7060-A	18 13/16" long-8 tooth speedo. gear	1
73/76	C,F	8	All	D10Z 7060-A	15 7/32" long-8 tooth speedo. gear	1
77/78	A "Before 7/5/78"	8	All	★ D7AZ 7060-A Not replaced	18 13/16" long-9 tooth speedo. gear	1
78	A "From 7/5/78"	8	All	★ D8AZ 7060-A Not replaced	18 13/16" long-9 tooth speedo. gear	1
79	A	8	All	D80Z 7060-A	15 7/32" long-9 tooth speedo. gear	1
77/79	F	8	All			1

YEAR	MODEL/RESTRICTIONS	ENGINE CYL.	ENGINE C.I.D. (C.C.D.)	PART NUMBER	DESCRIPTION	QTY.
73/	A,C,F,Y	8	All	C1VP 7C062–A	SEAT(OIL PRESSURE REGULATOR VALVE SPRING)	1
				7C063	BODY (GOVERNOR)	
73/77	C,F,Y	8	All	D3AZ 7C063–B		1
73/76	A	8	All			1
77	A	8	351			1
78	A	8	400			1
78	F	8	400		Use w/PHB–BE trans.	1
78/	A,F	8	302, 351W			1
77	A	8	400	D3TZ 7C063–C		1
78	A	8	351			1
78/	F	8	351–M			1
78	F	8	400		Use w/PHB–BD trans.	1
73/	A,C,F,Y	8	All	26579–S7,8	(U–172–C)–bolt–fill.head–1/4"–20 x 1/2"	2
				34805–S8	(X–62)–lockwasher–1/4"	2
				7B066	PLATE (CLUTCH PRESSURE)	
73/78	A,C,Y	8	All	C8AZ 7B066–B	Front clutch–54 teeth–5" dia.–1/4" thick	1
73/	F	8	351,400			1
78/	A,F	8	302	C8AZ 7B066–A	Front clutch	1
73/	A,C,F,Y	All	All	B8SZ 7B437–A	Rear clutch–54 teeth–3 7/8" I.D.	1
				7B067	HUB (FRONT CLUTCH)	
73/	A,C,F,Y	8	All	C8AZ 7B067–A	#C8AP 7B067–A–45 external–20 internal teeth	1
73/	A,C,F,Y	8	All	C0AP 7B070–A	SPRING(FRONT CLUTCH PISTON DISC)–#7 or 8 levers–5 5/16" O.D.	1
73/	A,C,F,Y	8	All	D0AZ 7E085–A	SPRING (REAR CLUTCH PRESSURE)	1
73/	A,C,F,Y	8	All	D2AZ 7086–A	GASKET (EXTENSION HOUSING)–Also serviced in kit–group 7153	1
73/	A,C,F,Y	8	All	C3AZ 7A089–A	CLUTCH ASSY. (PLANETARY GEARS)–roller type	1
73/	A,C,F,Y	8	All	D0AZ 7A094–A	BODY (FRONT BAND SERVO)–#D0AP 7A094–A	1
				359266–S8	(BB–157)–bolt(servo body to case)–3/8"–16 x 1 1/4"	AR
				34807–S7	(X–66)	AR
				7C096	BEARING (PRIMARY SUN GEAR THRUST)	
73/	A,C,F,Y	8	All	D3AZ 7C096–A	Includes race	1
				7A097	CLIP (OIL SCREEN)	
73/77	A,C,F,Y	8	All	C8AZ 7A097–A	Retaining–5 1/2" long	1
75/77	G	648	250,351			1
73/77	A,C,F,Y	8	All	C8AZ 7A097–B	Support	1
78/	A,F	8	All	C8AZ 7A097–E	Retaining	1
78/	A,F	8	All	C8AZ 7A097–F	Support	1
				7A098	SCREEN (OIL PAN)	
73/77	A,C,F,Y	8	All	D0AZ 7A098–A	*FT–39 w/o gasket–incl.(4) clips–use only plastic clips	1
78/	A,C,F,Y	8	All	D8AZ 7A098–B	*FT–54–incl. (1) ea. C8AZ 7A097–E & F clips, (1) D5AZ 7A191–B gasket–refer to T.S.B. 160	1

COPYRIGHT © 1986 — FORD MOTOR COMPANY — DEARBORN, MICHIGAN

YEAR	MODEL/RESTRICTIONS	ENGINE CYL.	ENGINE C.I.D. (C.C.D.)	PART NUMBER	DESCRIPTION	QTY.
				7C098	Refer to group 7C050	
				7C099	Refer to group 7E212	
				7A100	CONTROL ASSY. (MAIN)	

MAIN CONTROL IDENTIFICATION CHART

An identification number is stamped at the lower end of the main control assembly. The following chart will provide quick identification of the service part number when the identification number is known. The main control assembly may also be selected by model, year and description under group 7A100 which follows the chart.

MAIN CONTROL BODY IDENTIFICATION	SERVICE PART NUMBER	MAIN CONTROL BODY IDENTIFICATION	SERVICE PART NUMBER
#A9	D3AZ 7A100-C	#25	D30Z 7A100-H
#C9	D3AZ 7A100-A	#26	D3AZ 7A100-J
#J9	D3ZZ 7A100-A	#27	D3AZ 7A100-H
#P9	D3ZZ 7A100-D	#32	D5AZ 7A100-B
#S8	D3ZZ 7A100-A	#34	D50Z 7A100-A
#S9	D30Z 7A100-G	#35	D50Z 7A100-A
#U8	D30Z 7A100-G	#36	D5AZ 7A100-D
#U9	D30Z 7A100-H	#37	D6AZ 7A100-A
#W8	D3AZ 7A100-A	#38	D5AZ 7A100-E
#W9	D3AZ 7A100-J	#39	D60Z 7A100-C
#Y8	D30Z 7A100-B	#40	D60Z 7A100-D
#Z8	D30Z 7A100-H	#41	D7AZ 7A100-B
#02	D3AZ 7A100-H	#43	D70Z 7A100-A
#08	D30Z 7A100-H	#48	D70Z 7A100-E
#09	D3AZ 7A100-J	#49	D70Z 7A100-H
#13	D3AZ 7A100-H	#50	D7AZ 7A100-E
#14	D3ZZ 7A100-D	#51	D80Z 7A100-B
#15	D30Z 7A100-G	#52	D80Z 7A100-H
#17	D30Z 7A100-H	#53	D80Z 7A100-G
#18	D3AZ 7A100-J	#54,56	D9AZ 7A100-C
#23	D30Z 7A100-G	#55	D90Z 7A100-B
#24	D3AZ 7A100-G	#57	D90Z 7A100-C

YEAR	MODEL/RESTRICTIONS	ENGINE CYL.	ENGINE C.I.D. (C.C.D.)	PART NUMBER	DESCRIPTION	QTY.
7A100	CONTROL ASSY. (MAIN)					
73/74	A,Y	8	351	D3AZ 7A100-J	#A9,W9,09,18,26	1
75	A,Y	8	351M	★ D5AZ 7A100-D Not replaced (3/79)	#36	1
75/76	A,Y	8	351M	★ D5AZ 7A100-E Not replaced (1/81)	#38	1
74/75	A,Y	8	400	★ D3AZ 7A100-H Not replaced(10/80)	#02,13,27	1
75	A,Y "Before 6/2/75"	8	400	★ D5AZ 7A100-B Not replaced (3/79)	#32	1
75/76	A,Y "From 6/2/75"	8	400	★ D6AZ 7A100-A Not replaced(10/80)	#37	1
73/74	C	8	302	★ D30Z 7A100-G Not replaced (3/79)	#S9,U8,06,15,23	1
73/74	C	8	351	D30Z 7A100-H	#08,Z8,17,25	1
75	C	8	351	★ D50Z 7A100-A Not replaced (1/81)	#34,35	1
76	C	8	351M	★ D60Z 7A100-C Not replaced(10/80)	#39	1
76	C	8	351W	★ D60Z 7A100-D Not replaced(10/80)	#40	1
75	C	8	400	★ D3AZ 7A100-H Not replaced(10/80)	#02,13,27	1
75	C "Before 6/2/75"	8	400	★ D5AZ 7A100-B Not replaced (3/79)	#32	1

YEAR	MODEL/RESTRICTIONS	ENGINE CYL.	ENGINE C.I.D. (C.C.D.)	PART NUMBER	DESCRIPTION	QTY.
7A100	CONTROL ASSY. (MAIN) — Cont'd					
75/76	C "From 6/2/75"	8	400	★ D6AZ 7A100-A Not replaced(10/80)	#37	1
73	F "From 6/1/73"	8	351	★ D3ZZ 7A100-D Not replaced (10/78)	#J9,P9,S8,14	1
74	F	8	351	D30Z 7A100-H	#08,Z8,17,25	1
75	F	8	351	D50Z 7A100-A	#34,35	1
76	F	8	351M	★ D60Z 7A100-C Not replaced(10/80)	#39	1
75	F	8	400	★ D3AZ 7A100-H Not replaced(10/80)	#02,13,27	1
75	F	8	400	★ D5AZ 7A100-B Not replaced (3/79)	#32	1
77/78	A	8	All	D7AZ 7A100-B	#41	1
77/78	A	8	All	D7AZ 7A100-E	#50	1
78	A	8	All	D70Z 7A100-H	#49	1
79	A	8	302	D9AZ 7A100-C	#54,56	1
77	F	8	351	D70Z 7A100-A	#43	1
77/78	F	8	351,400	D70Z 7A100-E	#48	1
79	F	8	351M			1
77	F	8	351 400	D70Z 7A100-H	#49	1
78	F	8	400	★ D7AZ 7A100-E	#50-Not replaced (4/83)	1
78/	F	8	351W	D80Z 7A100-B	#51	1
78/	F	8	302	D80Z 7A100-G	#53	1
78	F (Canada only)	8	All	★ D80Z 7A100-H Not replaced (1/81)	#52	1
79	F	8	351M	D90Z 7A100-B	#55	1
79	F	8	302	D90Z 7A100-C	#57	1
73/	A,C,F,Y	8	All	371454-S	(BB-145)-bolt-hex.head(pump to case)-5/16"-18 x 2"	AR
				357913-S	(BB-127)-bolt(valve body to case)-1/4"-20 x 1 5/8"	3
				34805-S	(X-62)-washer-1/4"	3
73/	A,C,F,Y	8	All	C8AZ 7A103-A	PUMP ASSY. (FRONT OIL)	1
				371454-S	(BB-145)-bolt-hex.head(pump to case)-5/16"-18 x 2"	AR
73/	A,C,F,Y	8	All	C8AZ 7A108-A	SUPPORT (CONVERTER STATOR)	1
				54086-S	(U-107-G)-screw(support to pump)-No. 10-24 x 5/8"	AR
73/	A,C,F,Y	8	All	C3AZ 7A115-A	LEVER (MANUAL CONTROL VALVE DETENT)	1
73/	A,C,F,Y	8	All	377330-S	(MM-169-K)-nut(detent lever to manual lever)-9/16"-18	1
				7A117	LEVER (PARK PAWL TOGGLE OPERATING)	
73/79	A,C,F,Y	All	All	★ C3AZ 7A117-C r/bD9AZ 7A232-A		1
73/	A,C,F,Y	8	All	C3AZ 7A119-A	PIN (PARKING PAWL TOGGLE)	1
				374979-S	(XX-15-D)-washer(pin to lever-retaining-5/16" DIA.	1
				354861-S	(XX-137)-washer-flat-3/8"	1
				7120	BUSHING (INPUT SHAFT)	
73/	A,C,F,Y	8	All	B1AZ 7120-A	Steel backed bronze-7/8" I.D. x 3/4" long	1
73/	A,C,F,Y	8	All	B1AZ 7A121-A	LEVER(PARKING PAWL TOGGLE)	1
				7C122	SNAP RING (OUTPUT SHAFT RING GEAR RETAINING)SELECTIVE FIT	
73/	A,C,F,Y	8	All	B1AZ 7C122-A	.005" thick-5 13/32" O.D.	AR
				B1AZ 7C122-B	.057" thick	AR
				B1AZ 7C122-C	.059" thick	AR
				B1AZ 7C122-D	.064" thick	AR
				B1AZ 7C122-E	.069" thick	AR

COPYRIGHT © 1986 — FORD MOTOR COMPANY — DEARBORN, MICHIGAN

YEAR	MODEL/RESTRICTIONS	ENGINE CYL.	ENGINE C.I.D. (C.C.D.)	PART NUMBER	DESCRIPTION	QTY.
73/	A,C,F,Y	8	All	C3AZ 7A130-B	SUPPORT ASSY. (PLANETARY GEARS)	1
73/	A,C,F,Y	8	All	C4AZ 7A132-A	BUSHING(PLANETARY GEAR SUPPORT)	1
73/	A,C,F,Y	8	All	B1AZ 7A136-A	GASKET (FRONT OIL PUMP TO CASE)-5 9/16" I.D. x 5 15/16" O.D.	1
				7A139	REGULATOR (OIL PRESSURE)	
73/77	A,C,F,Y	8	All	C8AZ 7A139-B		1
78/	A,F	8	All	D8AZ 7A139-A		1
				357235-S	(BB-136)-bolt(regulator to case)-5/16"-18 X 7/8"	2
				34806-S7	(X-64)-lockwasher-5/16"	2
73/	A,C,F,Y	8	All	C8AZ 7A141-A	COVER (OIL PRESSURE REGULATOR BODY)	1
73/	A,C,F,Y	8	All	C3AZ 7A142-A	PLATE (OIL PRESSURE REGULATOR BODY SEPARATING)	1
				7153	GASKET and OIL SEAL KIT	

▲ Kit does not include the primary sun gear and shaft oil seals groups 7C169, 77542 and 77543. If they need to be replaced, use cast iron seals in place of teflon seals.

73/	A,C,F,Y	8	All	▲ D6AZ 7153-C		1

Consists of

OIL SEALS	OIL SEALS	GASKETS	"O" RINGS
1-B1AZ 7C050-B	1-B9AZ 7A294-E	1-D2AZ 7086-A	1-C8AZ 7A293-A
1-C1AZ 7C050-A	1-C1AZ 7A294-D	1-B1AZ 7A136-A	1-C8MY 7A293-A
1-C7AZ 7C050-C	1-C9AZ 7A294-A	1-B5AZ 7A191-B	1-B1AZ 7C328-B
1 C8AZ 7C050-A	1-D5AZ 7B498-A	1-C8AZ 7A222-A	1-C8AZ-7423-A
1-C8AZ 7C051-A	1-D1AZ 7A548-A	1-C1AP-7B426-A	1-87034-S94
1-B7AZ 7C098-B	1-386078-S		
1-C8AZ 7E212-A	INSULATOR	1-INSTRUCTION SHEET	
1-B1AZ 7A294-C	1-D5AZ 7341-A		
1-B8AZ 7A294-D			

73/	A,C,F,Y	8	All	D1AZ 7A153-A	GEAR (OUTPUT SHAFT RING)-72 internal-39 external teeth-6" O.D. x 1 5/8" wide	1
73/	A,C,F,Y	8	All	D0ZZ 7D157-A	PISTON ASSY. (REAR CLUTCH)-#D0ZP 7D158-A-incl. D0AZ 7E085-A spring	1
				7A158	STRUT (FRONT BAND ACTUATING)	

@ Use by stainless steel flex band only (D2AZ 7A162-A)

73/	A,C,F,Y	8	All	C9AZ 7A158-A	@Actuating-use w/PHB trans. -1 3/4" long-11/16" wide	1
73/	A,C,F,Y	8	All	D2AZ 7E243-A	Anchor-1" long-23/32" wide-incl. pin	1
				7D158	Refer to group 7D157	
73/	A,C,F,Y	8	All	C3AZ 7D160-B	SPRING (OIL PRESSURE REGULATOR VALVE)-19 coils-approx. 3 1/8" free length	1
				7A162	BAND ASSY. (FRONT SERVO)	
73/	A,C,F,Y	8	All	D7AZ 7A162-A	Incl. (1) D1AZ 7A178-A screw	1
				7A164	PISTON and PIN ASSY. (FRONT BAND SERVO)	
73/74	A,C,F,Y	8	All	C9AZ 7A164-A	#1P 77359-A	1
75/	C,F,	8	351			1
77/	A	8	400			1

YEAR	MODEL/RESTRICTIONS	ENGINE CYL.	ENGINE C.I.D. (C.C.D.)	PART NUMBER	DESCRIPTION	QTY.
				7A164	PISTON and PIN ASSY. (FRONT BAND SERVO) — Cont'd	
75/	C,F,Y	8	400	B1AZ 7A164–A		1
78	F	8	302			1
75/76	A	8	400			1
77/	A	8	351			1
				7B164	PLATE (CLUTCH INTERNAL and EXTERNAL SPLINE)	
●	Use for selective fit for clutch assy. free pack clearance.					
					FRONT CLUTCH	
73/	A,C,F,Y	8	All	C9AZ 7B164–A	Internal–friction(std.)–incl. 5 plates–1/16" thick	1
				● C9AZ 7B164–C	Internal–friction(.015" O/S)–incl. 4 plates–1/16" thick, 1 plate–5/64" thick	1
				● C9AZ 7B164–D	Internal–friction(.030" O/S)–incl. 4 plates–1/16" thick, 1 plate–3/32" thick	1
				C8AZ 7B442–A	External steel	3 or 4
					REAR CLUTCH	
73/	A,C,F,Y	8	All	C8AZ 7B164–G	Internal–friction	4
				C8AZ 7B442–A	External–steel	4
73/	A,C,F,Y	8	All	B7AZ 7A165–A	SHAFT (FRONT BAND SERVO ACTUATING LEVER)–3 grooves one end–7/16" O.D. x 1 11/16" long	1
73/	A,C,F,Y	8	All	B1AZ 7A166–A	WASHER (REAR CLUTCH SUN GEAR THRUST)–1 1/2" I.D. x 2 5/16" O.D. x 1/16" thick	1
				7A169	LEVER (REAR BAND SERVO ACTUATING)	
73/	A,C,F,Y	8	All	C6AZ 7A169–A	Needle bearings are not required	1
				7C169	SEAL (PRIMARY SUN GEAR OIL)	
⊕	Teflon oil seals are not serviced					
73/	A,C,F,Y	8	All	⊕ 1P 77542–A	Front–cast iron–1 1/16" O.D. x 3/32" thick	1 or 2
				⊕ C0AZ 7C169–A	Intermediate–cast iron–1 1/8" O.D. x 3/32" thick	1 or 2
				⊕ 1P 77543–B	Rear–cast iron–15/16" O.D. x 3/32" thick	2
				7A170	TUBE (CLUTCH and GOVERNOR OIL DISTRIBUTOR)	
73/	A,C,F,Y	8	All	C8AZ 7A170–A	Intermediate	1
				C8AZ 7A173–A	Front	1
				C8AZ 7A174–A	Rear	1
73/	A,C,F,Y	8	All	B8AZ 7A171–A	SHAFT (REAR BAND SERVO ACTUATING LEVER)–1/2" dia. x 1 15/16" long	1
73/	A,C,F,Y	8	All	C1AZ 7A172–A	STRUT (REAR BAND ACTUATING)	1
				7B172	BODY (REAR BAND SERVO)	
73/	A,C,F,Y	8	All	C8AZ 7B172–B	#C8AP 7B173–B	1
				376095–S7	(BB–178–A)–bolt(servo body to case)–7/16"–14 x 1 7/8"	1
				B7A 77420–A	Bolt(special)–w/pilot end(servo body to case)–7/16"–14 x 2 1/2"	1
				34793–S2	(X–67–A)–lockwasher–7/16"	2
				7A173–4	Refer to group 7A170	
				7B173	Refer to group 7B172	
73/	A,C,F,Y	8	All	C3AZ 7D174–A	VALVE (LUBE)–inverted flare for 5/16" dia. tube seat–1/2"–20	1
73/	A,C,F,Y	8	All	B6AZ 7A175–A	STRUT (REAR BAND ANCHOR)–#C9AP 7D038–A–1 1/4" long x 1/2" and 1 1/4" wide	1

COPYRIGHT © 1986 — FORD MOTOR COMPANY — DEARBORN, MICHIGAN

YEAR	MODEL/RESTRICTIONS	ENGINE CYL.	ENGINE C.I.D. (C.C.D.)	PART NUMBER	DESCRIPTION	QTY.
73/	A,C,F,Y	8	All	B5SZ 7A176-B	BAND (REAR)-#61-1 5/8" wide	1
73/	A,C,F,Y	8	All	D1AZ 7A178-A	SCREW (FRONT BAND ADJUSTING)-3/8"-16 x 1 19/32"	1
				33924-S	(M-28)-nut(front band adj.) jam-16-3/8"	1
73/	A,C,F,Y	8	All	C9ZZ 7A178-A	SCREW (REAR BAND ADJUSTING)-hex. socket head-use w/internal type band adj.-1/2"-20 x 2" x 7/32"	1
				33943-S8	(M-36)-nut(rear band adj.) jam-10-1/2"	1
73/	A,C,F,Y	8	All	B5AZ 7A191-B	GASKET (OIL PAN TO CASE)	1
73/	A,C,F,Y	8	All	C1AZ 7194-A	RETAINER (THIRD-SECOND COASTING ORIFICE CONTROL VALVE SPRING)	1
73/	A,C,F,Y	8	All	C8AZ 7A194-A	PAN (OIL)	1
				378782-S	(BB-543-D)-bolt(oil pan to case)-5/16"-18 X 9/16"	14
				34806-S7	(X-64)-lockwasher-5/16"	AR
73/	A,C,F,Y	8	All	B5AZ 7A206-A	TUBE (COMPENSATOR PRESSURE OIL)	1
73/	A,C,F,Y	8	All	C8AZ 7A208-A	TUBE (OIL PRESSURE REGULATOR)	1
				7E212	SEAL (CLUTCH CYLINDER-OIL)	
73/	A,C,F,Y	8	All	B1AZ 7C328-B	Front-inner-1 5/16" I.D.-square cut lip	1
73/	A,C,F,Y	8	All	C8AZ 7E212-A	Rear-piston-1 7/16" I.D.-square cut lip	1
73/	A,C,F,Y	8	All	C8AZ 7A222-A	GASKET (REAR OIL PUMP TO CASE)	1
				7A228	TUBE (OIL FILLER)	
73/74	A,Y	8	All	D30Z 7A228-A	#Light blue-19 3/4" long	1
75/78	A,Y	8	351,400	D5AZ 7A228-A	#Blue paint	1
79	A	8	All	D9AZ 7A228-D	#Blue paint	1
73/74	C	8	All	D30Z 7A228-D	#Blue-19 11/16" long	1
75/76	C	8	351W	D50Z 7A228-E	#Blue paint	1
73/74	F	8	All	D3ZZ 7A228-B	#Blue-19 29/32" long	1
75/76	C,F	8	351M,400	D50Z 7A228-A	#Blue paint	1
77/	F	8	351M	D70Z 7A228-B	#Blue paint	1
77/	F	8	351W, 302	D70Z 7A228-F	#Blue paint	1
				7A232	ROD ASSY. (PARK PAWL TOGGLE)	
73/79	A,C,F,Y	All	All	D9AZ 7A232-A	incl. 7A117 lever	1
				★72003-S	Pin-cotter(to retain rod)-1/16" x 1/2"	AR
73	A,C,F,Y	8	All	★C4AZ 7D236-B	RACE (PRIMARY SUN GEAR THRUST)-also refer to group 7C096-r/b D3AZ 7C096-A(10-74)	1
73/	A,C,F,Y	8	All	D1AZ 7E242-A	SCREEN ASSY. (GOVERNOR)	1
				7E243	Refer to group 7A158	
73/	A,C,F,Y	8	All	B9AP 7A244-A	PIN (PARKING PAWL TOGGLE LEVER)-1 5/8" long	1
				72474-S	(R-3)-retainer(pin to lever)-1/4"	1
73/74	A,C,F,Y	8	All	D3AZ 7D245-A	KIT (CONTROL OIL PRESSURE COMPENSATOR)-Consists of(1)D3FP 7351-AA inner spring (1)D3FP 7A324-AA outer spring	1
73/	A,C,F,Y	8	All	C5AZ 7A246-A	TUBE (BREATHER)-TUBING-5/16" DIA.	1
				★372989-S	Nut(tube to case)-5/16"	1
				372985-S	(GG-258)-clip	1
73/	A,C,F,Y	8	All	C2AZ 7A248-A	SEAL (FRONT OIL PUMP)-1 15/16" I.D. x 2 3/4" O.D. x 3/8" thick	1
73/	A,C,F,Y	8	All	C8AZ 7E253-A	SNAP RING (GOVERNOR RETAINING)-1 9/16" free dia. x 1/8" thick	1
				7A256	LEVER ASSY. (MANUAL CONTROL)	
73	A,Y	8	All	★D0AZ 7A256-B Not replaced(10/80)		1
74	A,Y	8	All	★D4AZ 7A256-B Not replaced(10/80)	Exc. PHB-AC1 trans.	1
74	A,Y	8	All	★D4AZ 7A256-C Not replaced(10/80)	Use w/PHB-AC1 trans.	1

YEAR	MODEL/RESTRICTIONS	ENGINE CYL.	ENGINE C.I.D. (C.C.D.)	PART NUMBER	DESCRIPTION	QTY.
				7A256	LEVER ASSY. (MANUAL CONTROL) — Cont'd	
75/78	A,Y	8	All	D5AZ 7A256–A		1
79	A	8	All	D9AZ 7A256–C	#D9AP–CA	1
73/74	C	8	All	D50Z 7A256–A		1
75/	C,F	8	All			1
73/74	F	8	All	★ D1ZZ 7A256–A Not replaced (2/81)		1
73/	A,C,F,Y	8	All	B5AZ 7B256–A	BUSHING (PLANETARY GEAR DRUM SUPPORT FLANGE–OUTER)–1 1/2" I.D. x 7/8" long	1
73/	A,C,F,Y	8	All	B1AZ 7B257–B	BUSHING (PLANETARY GEAR DRUM SUPPORT FLANGE–INNER)–1" I.D. x 3/4" long	1
				7A258	Refer to group 7A262	
73/	A,C,F,Y	8	All	C6AZ 7B258–A	BUSHING (FRONT OIL PUMP)–2" I.D. x	1
73/	A,C,F,Y	8	All	C1AZ 7B259–A	BUSHING (FRONT OIL PUMP DRIVE GEAR)–1 13/16" I.D. x 1 15/16" O.D. x 3/8" wide	1
				7A260	PISTON, GUIDE, RELEASE PISTON and SEALS (FRONT BAND SERVO)	

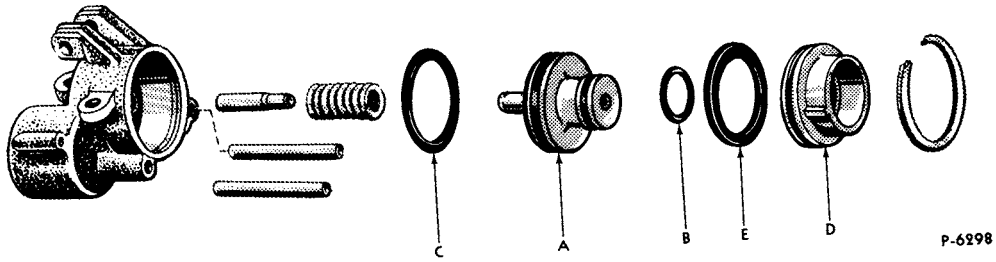

TRANSLATE CODES SHOWN BELOW INTO SERVICE PART NUMBERS BY USING THE CODE CROSS–REFERENCE CHART

YEAR	MODEL	TYPE OF TRANS.	ENGINE CYL.	ENGINE C.I.D.	TRANSMISSION MODEL USAGE	A PISTON	B PISTON SEAL SMALL	C PISTON SEAL LARGE	D GUIDE	E GUIDE SEAL	QTY.
73/	A,C,F,Y	FMX	8	All		14A	40	36A	30B	2	1

CODE CROSS–REFERENCE CHART

CODE NO.	PART NUMBER	DESCRIPTION	CODE NO.	PART NUMBER	DESCRIPTION
A	B1AZ 7A164–A		D	C9AZ 7A269–A	#C9AP 7A269–A–exc. PHB–AN, AR,BG trans.
A	C9AZ 7A164–A	#1P 77359–A			
B	C9AZ 7A294–A	1" I.D.	D	B1AZ 7A269–A	Use w/PHB–AN,AR,BG trans.
C	B9AZ 7A294–E	2 7/64" I.D.	E	B1AZ 7C050–B	1 57/64" I.D.–2 25/64" O.D.

COPYRIGHT © 1986 — FORD MOTOR COMPANY — DEARBORN, MICHIGAN

YEAR	MODEL/RESTRICTIONS	ENGINE CYL.	ENGINE C.I.D. (C.C.D.)	PART NUMBER	DESCRIPTION	QTY.
				7A260	PISTON (FRONT BAND SERVO) — Cont'd	
					Attaching parts for servo release piston	
73/	A,C,F,Y	8	All	44713–S	(X–13)–washer–1/2" dia.	1
				★50804–S8	Screw and washer assy.– No. 10–32 x 3/8"	1
73/	A,C,F,Y	8	All	B5AZ 7B260–A	BUSHING(REAR OIL PUMP BODY)– 2 1/16" I.D. x 2 3/8" O.D.–3/4" long	1
73/	A,C,F,Y	8	All	B8AZ 7A261–A	SPRING (MANUAL CONTROL VALVE DETENT LEVER)–23 coils–5/16" dia. x 1 3/4" free length	1
73/	A,C,F,Y	8	All	C8AZ 7B261–A	BUSHING (CONVERTER STATOR SUPPORT)– 15/16" I.D. x 1 1/16" O.D. x 9/16" long	1
				7D261	LEVER (DOWNSHIFT DETENT)	
79	A	All	All	D9AZ 7D261–A		1
73/	A,C,F,Y	8	All	D1AZ 7A262–A	PISTON (FRONT CLUTCH)– #DOAP 7A258–C–36° chamfer–5/32" long on I.D. x 4 1/2" O.D.	1
				7B264	RETAINER (REAR BAND SERVO SPRING)	
73	A,C,F,Y "Before 6/1/73"	8	All	B8AZ 7B264–C	3 1/4" O.D.	1
73/	A,C,F,Y "From 6/1/73"	8	All	D3AZ 7B264–B		1
				7A266	PISTON (REAR BAND SERVO)	
73	A,C,F,Y "Before 6/1/73"	8	All	★ C9AZ 7A266–A Not replaced(10/80)		1
73/	A,C,F,Y "From 6/1/73"	8	All	D3AZ 7A266–B	Used w/o accumulator piston	1
73	A,C,F,Y	8	All	★ B8AZ 7A266–A Not replaced (10/78)	VALVE (REAR BAND SERVO PISTON WITH ACCUMULATOR PISTON)–1 7/16" O.D. x 1 7/8" overall length	1
				7A269	GUIDE (FRONT BAND SERVO PISTON)	
73/78	A,C,Y	8	All	C9AZ 7A269–A	#C9AP 7A269–A	1
73/	F	8	351,400			1
78/	A,F	8	302	B1AZ 7A269–A		1
				7D273	CONNECTOR (OIL COOLER TUBE)	
77/	A,F	All	All	D7AZ 7D273–A		2
73/	A,C,F,Y	8	All	7E284	STOP (REAR BAND ADJUSTMENT INNER)– not required–band adjustment is external	
73/	A,C,F,Y	8	All	B1AZ 7A291–A	BOLT (PLANETARY GEAR SUPPORT TO CASE)–3/8"–16 x 29/32" pilot end	2
				351487–S	(XX–291)–lockwasher(to locate planetary support)–3/8"	2
				7A294	SEAL (REAR BAND SERVO PISTON OIL)	
73/	A,C,F,Y	8	All	B9AZ 7A294–E	Large–front band–2 7/64" I.D.	1
73/76	C	8	302,351	C9AZ 7A294–A	Small–front band–1" I.D.	1
73/	F	8	351			1
73/78	A,C,F,Y	8	400			1
73/	A,C,F,Y	8	All	C8AZ 7423–A	Rear band–3 1/8" O.D.	1
73/78	A,Y	8	351	C8AZ 7C050–A	Small–front band–1 3/16" I.D.	1
78	F	8	351			1
78/	A,F	8	302			1
73/	A,C,F,Y	All	All	B1AZ 7C050–B	Retainer oil seal–2 25/64" O.D.	1
73/	A,C,F,Y	8	All	B1AZ 7A295–A	PIN(PARKING PAWL TOGGLE LEVER)– 3/8" dia. x 1 3/4" long	1
				7C328	Refer to groups 7E212 and 7A294	
73/	A,C,F,Y	8	All	C8AZ 7330–A	LEVER (FRONT BAND SERVO ACTUATING)	1
		8	All	33799–S2	(M–52)–Locknut–3/8"	1
73/	A,C,F,Y	8	All	D2AZ 7A360–C	CYLINDER (FRONT CLUTCH)	1
				7B368	BEARING (OUTPUT SHAFT THRUST REAR)	
73/	A,C,F,Y	8	All	D8AZ 7B368–A	One piece brg. assy. incl. race–replaces two piece brg.	1

YEAR	MODEL/RESTRICTIONS	ENGINE CYL.	ENGINE C.I.D. (C.C.D.)	PART NUMBER	DESCRIPTION	QTY.
				7A377	DIAPHRAGM ASSY. (VACUUM THROTTLE VALVE)	
	$ DAD-dual area diaphragm † SAD-single area diaphragm					
73/75	A,C,F,Y	8	All exc. 400	D3AZ 7A377-A	*TM-18-#black band-$ DAD-exc.PHB-AR,AS trans.	1
76	A,Y	8	351		Use w/PHB-AR1 trans.	1
73/75	A,C,F,Y	8	400	C1AZ 7A377-B	*TM-1-#yellow or light blue band-†SAD-use w/all PHB W/400 eng.	1
76	A,C,F,Y	8	351,400		Use w/PHB-AC,AL,AT trans.	1
78/	,F	8	302			1
78	F	8	400		Use w/PHB-BE trans.	1
75	A,C,F,Y	8	351	D5AZ 7A377-C	*TM-36-#light green band-†SAD-use w/PHB-AR,AS trans.	1
77	A,F	8	All			1
76	A,C,F,Y	8	351		Use w/PHB-Z,AP,AR trans.	1
78/	A	8	All			1
78/	F	8	All		Exc. PHB-BE trans.	1
73/	A,C,F,Y	8	All	386078-S	(KK-95)-"O" ring-all with push-in type	1
73/	A,C,F,Y	8	All	C2AZ 7A380-A	ROD (THROTTLE CONTROL VALVE)-1/8" dia. x 2 7/8" long	1
73/	A,C,F,Y	8	All	C8AZ 7A383-B	SUPPORT (REAR)-#C8AP 7A033-B-incl. 352532-S cup-plug and instruction sheet	1
				352532-S	(PP-60)-cup-plug-5/16" dia.	1
				7A385	WASHER (OUTPUT SHAFT FRONT THRUST)	
73/	A,C,F,Y	8	All	C5AZ 7A385-E	.061" thick-1 5/8" I.D. x 2 7/8" O.D.	AR
				C5AZ 7A385-F	.068" thick	AR
				C5AZ 7A385-G	.075" thick	AR
				C5AZ 7A385-H	.082" thick	AR
				7A387	RACE (OUTPUT SHAFT REAR THRUST BRG.)	
73/78	A,C,F,Y	8	All	★ C8AZ 7A387-A /bD8AZ 7B368-A(10/78)	Two piece brg. -replaced by one piece brg.	1
73/	A,C,F,Y	8	All	C7AZ 7C389-A	VALVE (MAIN VALVE BODY MANUAL CONTROL)	1
				7C391	OVERHAUL KIT	
73/	A,C,F,Y	8	All	D6AZ 7C391-C		1

Consists of

OIL SEALS
4-C6AZ 7D019-A
1-D5AZ 7052-A
2-C0AZ 7C169-A
1-C2AZ 7A248-A
2-1P 77542-A
2-1P 77543-B

PLATES
4-C8AZ 7B164-G
5-C9AZ 7B164-A
1-C9AP 7E311-B
1-C9AP 7E311-C
9 C8AZ 7B442-A

GASKET KIT
1-D6AZ 7153-C

1-INSTRUCTION SHEET

73/	A,C,F,Y	8	All	C1SP 7A393-A	PLATE (MAIN CONTROL UPPER VALVE BODY-REAR)	1
				7A394	LEVER ASSY. (DOWNSHIFT CONTROL)	
73/74	A,Y	8	All	★ D0AZ 7A394-B Not replaced		1
75/78	A,Y	8	All	D3AZ 7A394-A		1
79	A	8	All	D9AZ 7A394-B	#D9AP-DA	1
73/74	C,F,	8	All	★ D00Z 7A394-A Not replaced		1
75/	C,F	8	All	D50Z 7A394-A		1
79	A	All	All	33798-S8	(M-62) nut-downshift lever (7A394) to detent lever (7D261)-5/16"-24	1
				34806-S7	(X-64) washer-5/16"	1
73/	A,C,F,Y	8	All	C1AP 7A396-A	PLATE (MAIN CONTROL UPPER VALVE BODY-FRONT)	1
				374067-S	(BB-637-D)-screw (plate to valve body)-No. 10-24 x 7/16"	2
				34803-S	(X-60)-washer-No. 10	2

COPYRIGHT © 1986 — FORD MOTOR COMPANY — DEARBORN, MICHIGAN

YEAR	MODEL/RESTRICTIONS	ENGINE CYL.	ENGINE C.I.D. (C.C.D.)	PART NUMBER	DESCRIPTION	QTY.
73/	A,C,F,Y	8	All	D1AZ 7A398–B	DRUM and PLANETARY GEARS ASSY.–(REAR BRAKE)	1
				7A399	GEAR ASSY. (PRIMARY SUN)	
73/	A,C,F,Y	8	All	D8AZ 7A399–A	#Blue dye at long end of shaft	1
73/	A,C,F,Y	8	All	D1AZ 7E415–A	PIN (PARKING PAWL TOGGLE LINK TO PAWL)	1
73/	A,C,F,Y	8	All	D1AZ 7E416–A	SPRING (PARKING PAWLTOGGLE RETURN)	1
				7423	Refer to group 7A294	
73/	A,C,F,Y	8	All	C1AP 7B426–A	GASKET (THROTTLE VALVE DIAPHRAGM)	1
				7B437	Refer to group 7B066	
73/	A,C,F,Y	8	All	B4AZ 7A441–A	PAWL (PARKING)	1
				7B442	Refer to group 7B164	
				7C458	ROLLER (REAR CLUTCH DRUM BRAKE and SUN GEAR FRONT BEARING)	
73/	A,C,F,Y	8	All	C2AZ 7C458–A	Pointed ends–13/32" long	34
				B1A 77507–E	Blunt ends–13/32" long	34
				7D469	TUBES (FRONT SERVO BAND)	
73/	A,C,F,Y	8	All	C8AZ 7D469–A	Bent tube–5/16" O.D.–developed length approx. 11 7/16"	1
73/	A,C,F,Y	8	All	B5A 77379–A	Straight tube–3 11/16" long–5/16" O.D.	1
73/	A,C,F,Y	8	All	B5A 7470–A	SPACER (OIL PRESSURE REGULATOR VALVE)–9/16" O.D. x 13/16" long	1
				7D474	SPRING (REAR BAND SERVO PISTON)	
73	A,C,F,Y	8	All	★ C90Z 7D474–A Not replaced (3/79)	3 3/16" large dia. x 1 3/4" small dia. x 2 3/4" free length–with accum. piston	1
73/	A,C,F,Y	8	All	D3AZ 7D474–B	Without accum. piston	1
73/	A,C,F,Y	8	All	B1AZ 7A480–A	SPRING (REAR CLUTCH PISTON)–2 9/16" I.D. x 2 3/8" free length	1
73/	A,C,F,Y	8	All	C8AZ 7D480–A	BEARING ASSY.(REAR CLUTCH BRAKE DRUM and SUN GEAR FRONT)–incl. 39 rollers –1 5/16" O.D. x 1/2" long	1 1
				7D483	SNAP RING (REAR CLUTCH PRESSURE PLATE RETAINER)	
73/	A,C,F,Y	8	All	C8AZ 7D483–C	.060" thick–selective fit–5 9/16" O.D.	1
				C7AZ 7D483–A	.078" thick	1
				C8AZ 7D483–B	.090" thick	1
				C8AZ 7D483–A	.104" thick	1
73/	A,C,F,Y	8	All	D0AZ 7D484–A	WASHER (FRONT CLUTCH SUN GEAR THRUST)–1 1/4" I.D. x 1 27/32" O.D.	1
				7B498	SEAL (MANUAL CONTROL LEVER OIL)	
73/	A,C,F,Y	8	All	D5AZ 7B498–A		1
73/	A,C,F,Y	8	All	D1AZ 7A548–A	SEAL (FRONT CLUTCH PISTON OIL)–4 3/16" I.D. x 4 5/8" O.D.	1
73/	A,C,F,Y	8	All	C8AZ 7A626–A	DRUM and SECONDARY SUN GEAR(REAR CLUTCH BRAKE)–Incl. 7B262 bushing and 7D480 bearing assy.–27 drum–36 sun gear teeth	1
				7729	PLATE (MAIN CONTROL LOWER VALVE BODY)	
73/	A,C,F,Y	8	All	B8A 7729–A	#2 holes	1
				B8S 77739–A	#4 holes	1
73/	A,C,F,Y	8	All	C7AZ 7734–D	PLATE (MAIN CONTROL COVER and LOWER VALVE BODY SEPARATING)	1
				7902	CONVERTER ASSY.	
73/	A,C,F,Y	8	351,400	E0AZ 7902–C	#49,54,56,82,84,85	1
73/74	C	8	302	★ D30Z 7902–A	#CC,CM,CX,77,81–not replaced (3/81)	1
78/	A,F	8	302	D80Z 7902–A	#92,93	1

YEAR	MODEL/RESTRICTIONS	ENGINE CYL.	ENGINE C.I.D. (C.C.D.)	PART NUMBER	DESCRIPTION	QTY.
				7976	HOUSING (CONVERTER)	
73/74	A,C,F,Y	8	302,351	D9AZ 7976-A		1
75/	C,F	8	351W			1
78/79	A,F	8	302			1
74	A,Y	8	400	D3AZ 7976-A		1
75/78	A,C,F,Y	8	400			1
75/	C,F,Y	8	351M			1
73/	A,C,F,Y	8	All	20450-S	(B-106)-bolt-hex. head-7/16"-14 x 1 3/8"	AR
				20546-S8	(B-114)-bolt-7/16"-14 x 2 1/2"	AR
				34793-S2	(X-67-A)-lockwasher-7/16"	AR
				7986	COVER (CONVERTER)	
73/74	A,C,F,Y	8	All	C5AZ 7986-A		1
75/	C,F	8	351W			1
78/	F	8	302			1
75/	C,F,Y	8	351M	C8SZ 7986-A		1
75/	A,C,F,Y	8	400			1
79	A	8	302	E2AZ 7986-A		1
73/	A,C,F,Y	8	All	42789-S8	(U-10)-screw and washer assy.-hex. head-(cover to housing)-5/16"-18 x 3/4"	AR
73/	A,C,F,Y	8	All	B8A 77014-A	PLATE (CONTROL VALVE LOWER BODY END)	1
				34803-S	(X-60)-lockwasher-No. 10	AR
				374067-S	(BB-637-D)-screw-fill. head-No. 10-24 x 7/16"	AR
73/	A,C,F,Y	8	All	386078-S	SEAL (THROTTLE CONTROL LEVER OIL)	1
73/	A,C,F,Y	8	All	B5A 77283-A	LEVER (THROTTLE CONTROL INNER)	1
				33798-S8	(M-62)-nut-5/16"-29	1
				34806-S7	(X-64)-washer-5/16"	1
73/	A,C,F,Y	8	All	1P 77312-A	PIN (PARKING PAWL)-1/2" dia. x 2" long	1
73/	A,C,F,Y	8	All	1P 77316-A	LINK (PARKING PAWL TOGGLE)	1
73/	A,C,F,Y	8	All	B8A 77323-A	RETAINER (PARKING PAWL TOGGLE RETURN SPRING)	1
73/	A,C,F,Y	8	All	1P 77326-A	RETAINER (PARKING PAWL TOGGLE LEVER PIN)-9/16" O.D.	1
73/	A,C,F,Y	8	All	1P 77356-A	PIN (REAR BAND ACTUATING LEVER SHAFT)	1
				77359	Refer to group 7A163	
73/	A,C,F,Y	8	All	1P 77366-A	SNAP RING (FRONT BAND SERVO PISTON GUIDE)-2 1/2" free dia. x 3/64" thick	1
				77379	Refer to group 7D469	
73/	A,C,F,Y	8	All	B8A 77417-A	SNAP RING (REAR BAND SERVO PISTON RETAINER)	1
				77420	Refer to group 7B172	
73/	A,C,F,Y	8	All	B5A 77469-A	TUBE (MAIN PRESSURE OIL)-5 9/16" overall length	1
				77507	Refer to group 7C458	
73/	A,C,F,Y	8	All	1P 77516-B	SEAT (REAR CLUTCH PISTON SPRING)-1 11/16" I.D. x 2 7/8" O.D. x 5/16" wide	1
73/	A,C,F,Y	8	All	1P 77517-A	SNAP RING (REAR CLUTCH PISTON SPRING RETAINING)-1 1/2" I.D.	1
73/	A,C,F,Y	8	All	1P 77524-A	WASHER (REAR CLUTCH SUN GEAR THRUST)-1 11/16" I.D. x 2 3/8" O.D. x 1/8" thick	1

COPYRIGHT © 1986 — FORD MOTOR COMPANY — DEARBORN, MICHIGAN

YEAR	MODEL/RESTRICTIONS	ENGINE CYL.	ENGINE C.I.D. (C.C.D.)	PART NUMBER	DESCRIPTION	QTY.
				77542-3	Refer to group 7C169	
				77549	Refer to group 7C096	
73/	A,C,F,Y	8	All	B5A 77563-A	RING (FRONT CLUTCH PISTON DISC SPRING RETAINER)-3 1/16" free length	1
73/	A,C,F,Y	8	All	1P 77567-A	SNAP RING (FRONT CLUTCH DISC SPRING RETAINING)-front clutch disc spring-input shaft to front clutch cyl.-5 19/32" dia.	1
73/	A,C,F,Y	8	All	B5S 77577-B	WASHER (FRONT CLUTCH HUB TO INPUT SHAFT-THRUST)-7/8" I.D. x 1 11/16" O.D.	1
73/	A,C,F,Y	8	All	B8A 77607-A	PLUNGER (MANUAL CONTROL VALVE DETENT)-5/16" O.D. x 11/16" long	1
				77739	Refer to group 7729	

YEAR	MODEL/RESTRICTIONS	ENGINE CYL.	ENGINE C.I.D. (C.C.D.)	PART NUMBER	DESCRIPTION	QTY.
				7D000	TUBE (OIL DISTRIBUTOR)	
73/	A,C,F,G,J,L,P,V	All	All	C4AZ 7D000-A	3 3/4" long	1
				C4AZ 7D000-B	4 1/2" long	1
73/	A,C,F,G,J,L,P,V	All	All	C4AZ 7D001-A	BUSHING (REVERSE BRAKE DRUM)-	1
				7D002	SLEEVE (MAIN OIL PRESSURE BOOSTER)	
73/76	C,F,G,J,L,P	All	All	★ D50Z 7D002-A Not replaced (3/81)	Incl. (1)D4AP-7E335-BA retainer	1
77/	A,F,G,J,L,P,V	All	All	D70Z 7D002-A		1
				7005	CASE ASSY.	
73/	A,C,F,G,V	All	All	E1TZ 7005-C	use w/PEF trans. (case does not have filler tube hole)-incl. (1) D8BZ 7A117-A lever & (1) D8BZ 7F286-A spacer	1
73/79	A,C,F,G,J,L,P,V	All	All	E1AZ 7005-A	Use w/PEB,PEE,PEJ trans (case has filler tube hole) incl. (1) E0AZ 7D072-A & (2) E0AZ 7C096-B washers, (1) D8BZ 7A117-A lever, (1) D8BZ 7F286-A spacer	1
73/	A,C,F,G,J,L,P,V	All	All	87650-S	(P-12)-plug(servo pressure hole)-dryseal	1
				7D006	PLANET ASSY. (REVERSE)	
76/	A,C,F,G,J,L,P	All	All	D20Z 7D006-A		1
77/	V	All	All	D74Y 7D006-A		1
				7F006	CLIP (VACUUM DIAPHRAGM)	
73/	A,C,F,G,J,L,P,V	All	All	D2AZ 7F006-A		1
77/	A,F,G,L,V	All	All	D7FZ 7F006-A	use w/altitude compensating diaph.	1
77	P	All	All			1
78/	P	All	All	D8BZ 7F006-A	Use w/altitude compensating diaph.	1
79	J	All	All			1
				7A008	PLATE (MAIN CONTROL SEPARATING)	
	▲ 2000 cc @ 2300 cc ♦ 2600 cc ⊕ 2800 cc					
73/74	P "Before 3/4/74"	6	200	D1AZ 7A008-A	Use with PEB trans.	1
73	J	6	♦159		Use with PED-L,L1,Y1 trans.	1
73	J	4	▲122	★ D2FZ 7A008-A	Use with PED-E,E1,E2 trans.	1
73/74	C,P "Before 3/4/74"	6&8	250,302	★ D3AZ 7A008-A	Use with PEE trans. R/B D4DZ 7A008-A	1
74/77	C,P "From 3/4/74"	6&8	200,250, 302	★ D4DZ 7A008-A	Use with PEB & PEE trans.	1
75	G	6&8	250,302		Use with PEE trans.	1
75	C,F	8	351		Use with PEF-T,W trans.	1
73/74	C,F "Before 3/4/74"	8	351	★ D30Z 7A008-A	Use with PEF trans. R/B D40Z 7A008-A	1
74	C,F "From 3/4/74"	8	351	★ D40Z 7A008-A	Use with PEF trans.	1
75	C,F	8	351		Use with PEF-D,S,V trans.	1
75	G	8	351	★ D5DZ 7A008-A	Use with PEF trans.	1
74	L "Before 3/4/74"	4	@140	★ D4FZ 7A008-B	Use with PEJ-C,G trans. R/B D4FZ 7A008-B	1
74	L "From 3/4/74"	4	@140	D4FZ 7A008-D	Use with PEJ-C, G trans.	1
75	L				Use with PEJ trans.	1
74	L "Before 3/4/74"	4	▲122	★ D4FZ 7A008-A	Use with PEJ-B6 trans.	1
74	J "Before 3/4/74"	4&6	▲122 ⊕171		use with PED trans. R/B D4FZ 7A008-C	1
74	J "From 3/4/74"	4&6	▲122, ⊕171	★ D4FZ 7A008-C	Use with PED trans.	1
74	L "From 3/4/74"	4	▲122		Use with PEJ-B6 trans.	1
73/	A,C,F,G,J,L,P,V	All	All	C4AZ 7D011-A	RING (GOVERNOR HOUSING SEAL)	3

COPYRIGHT © 1986 — FORD MOTOR COMPANY — DEARBORN, MICHIGAN

YEAR	MODEL/RESTRICTIONS	ENGINE CYL.	ENGINE C.I.D. (C.C.D.)	PART NUMBER	DESCRIPTION	QTY.
				7D014	WASHER (FRONT PUMP SUPPORT THRUST)- selective fit-also refer to group 7D024	
73/	A,C,F,G,J,L,P,V	All	All		1 7/8" I.D. x 2 3/4" O.D.	1
				D0AZ 7D014-E	#Red-.005" thick	1
				D0AZ 7D014-A	#Green-.072" thick	1
				D0AZ 7D014-B	#Natural-.089" thick	1
				★ D0AZ 7D014-C	#Black-.106" thick Refer to T.S.B. 117	
				★ D0AZ 7D014-D	#Yellow-.123" thick Refer to T.S.B. 117	
73/	A,C,F,G,J,L,P,V	All	All	D1AZ 7017-A	SHAFT (INPUT)-24 and 26 splines- 9 3/4" long	1
73/	A,C,F,G,J,L,P,V	All	All	★ D0AZ 7D018-A Not replaced(6/82)	BUSHING (FRONT PUMP SUPPORT REAR)- also serviced in assy.-group 7A108	1
				7D019	SEAL (FORWARD CLUTCH CYLINDER)	
73/77	C,F,G,J,L,P,V "Before 6/24/77"	All	All	D0AZ 7D019-A	#Green stripe-3/32" thick-1 3/4" dia.- use w/D0AZ 7A103-A pump & D0AZ 7A108-A support	2
77/	A,F,G,J,L,P,V "From 6/24/77"	All	All	D7AZ 7D019-A	#Yellow stripe-1/8" thick- 1 3/4" dia. use w/D7AZ 7A103-A pump & D7AZ 7A108-A support-replaces teflon seal	2
				7A020	INDICATOR (OIL LEVEL)	
79	A	8	302	D9AZ 7A020-A	#D9AP 7A020-AA-case filled filler tube	1
79	A	8	302,351W	D9AZ 7A020-B	#D9AP 7A020-BA-pan fill-filler tube	1
73/74	C	6&8	250,302	D20Z 7A020-A		1
73/74	C	8	351	D20Z 7A020-B		1
74	F	8	All			1
75/76	C	8	351W	D50Z 7A020-B	#D50P-BA	1
75/76	C,F	8	351M	D50Z 7A020-C	#D50P-CA	1
77	F	8	302	D5BZ 7A020-A	#D5BP 7A020-A1A,A2A	1
77/	F	8	351	D70Z 7A020-B	#D70P 7A020-D1A,D2A, D8BP 7A020-CA	1
78	P	6&8	200,302			1
79	J	6&8	200,302			1
79	P	6&8	All			1
78	F	8	302	D8DZ 7A020-A	#D8DP 7A020-AA	1
78	G	6&8	250,302			1
73/74	J	4	All	D1FZ 7A020-B		1
		6	All	D2RY 7A020-A		1
79	J	6	⊕171	D9ZZ 7A020-A	#D9ZP 7A020-AA	1
74	L	4	All	D4FZ 7A020-A	#D42P 7A020-A1C,A2C	1
75/	L	4	2.3L	E0BZ 7A020-A	#E0BP-AA repl. D5BP-CA	1
75/	L	6	All	D5ZZ 7A020-C	#D5ZP-C1A, C2A	1
73/74	P	6	All	D0DZ 7A020-A		1
		8	All	D10Z 7A020-B		1
75/77	P	6	250	D5BZ 7A020-A	#D5BP-A1A,A2A	1
75	P	8	302			1
76	P - - All "Before 1/12/76"	8	302			1
76	P - - Calif. "From 1/12/76"	8	302			1
77	P	8	302	D7BZ 7A020-A	#D7BP 7A020-AA	1
76	P - - Except Calif. "From 1/12/76"	8	302	D6DZ 7A020-A	#D50P 7A020-BB	1
75/77	P	6	200	D5DZ 7A020-B	#D5DP-A1B,A2B,B1B,B2B	1
79	F	8	302			1
75	G	8	302			1
75/77	G	6&8	250,351			1
76	G - - All "Before 11/3/75"	8	302			1
76	G - - Calif. "From 11/3/75"	8	302			1
79	G	6&8	250,302			1
77	V	8	351			1
77	G	8	302	D7DZ 7A020-A	#D7DP 7A020-AA	1
76	G - - Except Calif. "From 11/3/75"	8	302	D6DZ 7A020-A	#D50P 7A020-BB	1
77/	V	8	302	D74Y 7A020-A	#D74P 7A020-AA	1

YEAR	MODEL/RESTRICTIONS	ENGINE CYL.	ENGINE C.I.D. (C.C.D.)	PART NUMBER	DESCRIPTION	QTY.
				7D020	SEAL (REVERSE CLUTCH CYLINDER)	
73/	A,C,F,G,J,L,P,V	All	All	D0AZ 7D020-A	Hooked ends-1 13/16" dia. x 3/32" thick	2
				7D022	PISTON (INTERMEDIATE BAND SERVO)	
73/76	C	8	351	D0AZ 7D022-A	#R	1
74/76	F	8	351			1
75/77	G "Before 12/15/76"	8	351			1
77/	A,F	8	351	C8ZZ 7D022-A	#H	1
78/	A,F,P - - Police & taxi	8	302			1
77	G "From 12/15/76"	8	351			1
73/76	C,G,P	8	302	E1AZ 7D022-B	#A	1
77/	A,F,G,J,P - - exc. police & taxi	8	302			1
78/	P - - police & taxi	6	200			1
77/	V	All	All			1
73/77	C,P	6	250	E1AZ 7D022-A	#B	1
77	P	6	200			1
75/	G	6	250			1
77/	L "From 6/27/77"	4&6	All			1
78	F,P - - exc. police & taxi	8	302			1
78/	P - - exc. police & taxi	6	200			1
79	J	6	All			1
73/77	J,L "Before 6/27/77"	4&6	All	C50Z 7D022-A	#Z	1
75/76	P	6	200			1
73/74	P	6	200	★ D2DZ 7D022-A	#K	1
73/74	J	6	All	Not replaced		1
73/	A,C,F,G,J,L,P,V	All	All	D3AZ 7D023-A	ROD (INTERMEDIATE BAND SERVO PISTON)	1
				97515-S	(Q-1-D)-ring (rod to piston)-3/8" dia.	1
				7D024	SEAL (INTERMEDIATE BAND SERVO PISTON)-also serviced in kit-group 7153	
73/	C,G,P	6&8	250,302	D5TZ 7D024-A	#1 orange & 1 blue stripe-replaces-4	1
77/	A,F,V	8	All		white stripe-3 5/16" I.D. x 3 13/16" O.D.	1
77	G "From 12/15/76"	8	351			1
79	J	6&8	200,302			1
77/	P	6	200			1
77/	L "From 6/27/77"	4&6	All			1
73/76	C	8	351	D0AZ 7D024-A	#4 orange stripes-2 7/8" I.D. x 3 5/16" O.D.	1
74/76	F	8	351			1
75/77	G "Before 12/15/76"	8	351			1
73/74	J	4&6	All	D9AZ 7D024-A	#4 blue stripes-2 7/8" I.D. x 3 3/8" O.D.	1
74/77	L "Before 6/27/77"	4&6	All			1
75/76	P	6	200			1
73/74	P	6	200	★ D2DZ 7D024-A Not replaced (3/81)	#4 orange stripes-2 57/64" I.D. x 3 3/8" O.D.	1
73/	A,C,F,G,J,L,P,V	All	All	C4AZ 7025-A	BUSHING (CASE)	1
				7D025	SEAL (INTERMEDIATE BAND SERVO PISTON OIL)-also serviced in kit-group 7153	
73/76	C	8	351	C4AZ 7D025-B	#4 white stripes-2 3/8" I.D. x 2 7/8" O.D.	1
73/77	C,P	8	302			1
74/76	F	8	All			1
75/76	G	8	302,351			1
77/	F,G	8	302			1
77/	A,F,P - - exc. police & taxi	8	302			1
77	G "Before 12/15/76"	8	351			1
77/	V	8	All			1
78/	P - - police & taxi	6	200			1

COPYRIGHT © 1986 — FORD MOTOR COMPANY — DEARBORN, MICHIGAN

YEAR	MODEL/RESTRICTIONS	ENGINE CYL.	ENGINE C.I.D. (C.C.D.)	PART NUMBER	DESCRIPTION	QTY.
				7D025	SEAL (INTERMEDIATE BAND SERVO — Cont'd PISTON OIL)–also serviced in kit–group 7153	
73/77	C,P	6	250	D9FZ 7D025–A	#4 green stripes–2 1/4" I.D. x 2 3/4" O.D.	1
75/	G	6	250			1
77	P	6	200			1
77/	L "From 6/27/77"	4&6	All			1
78	F,P – – exc. police & taxi	8	302			1
78/	J,P – – exc. police & taxi	6	200			1
73/74	P	6	200	★ C5DZ 7D025–A Not replaced (3/81)	#4 blue stripes–1 15/16" I.D. x 2 3/8" O.D.	1
73/77	J,L "Before 6/27/77"	All	All	C4DZ 7D025–A	#4 orange stripes–2 1/16" I.D. x 2 7/8" O.D.	1
75/76	P	6	200			1
77/	A,F	8	351	D5TZ 7D025–A	# (1) Blue & (1) yellow stripe–2 1/2"I.D x 2 15/16" O.D	1
77	G "From 12/15/76"	8	351			1
78/	A,F,P – – Police & taxi	8	302			1
73/	A,C,F,G,J,L,P,V	All	All	C4AZ 7D026–C	GASKET (INTERMEDIATE BAND SERVO)– also serviced in kit–group 7153	1
				7D027	COVER (INTERMEDIATE BAND SERVO)	
73/76	C	8	351	D0AZ 7D027–A	#R and RF–D0AP 7D027–A	1
74/76	F	8	351			1
75/77	G "Before 12/15/76"	8	351			1
73/76	C,G,P	8	302	C4AZ 7D027–F	#A and C4OP 7D027–A or C6AP 7D027–C	1
77/	A,F,G,J,P – – exc. police & taxi	8	302			1
78/	P – – police & taxi	6	200			1
77/	V	All	All			1
73/77	C,P	6	250	C4OZ 7D027–E	#B and C6AP 7D027–B	1
77	P	6	200			1
77/	L "From 6/27/77"	4&6	All			1
75/	G	6	250			1
78	F,P – – exc. police & taxi	8	302			1
78/	P – – exc. police & taxi	6	200			1
79	J	6	All			1
77/	A,F	8	351	C8ZZ 7D027–A	#H	1
78/	A,F,P – – police & taxi	8	302			1
77	G "From 12/15/76"	8	351			1
73/77	J,L "Before 6/27/77"	4	All	C4AZ 7D027–G	#Z and C6DP 7D027–B–incl. (4) 374193–S bolts	1
77	L	6	All			1
75/76	P	6	200			1
73/74	P	6	200	★ D2DZ 7D027–A Not replaced (3/81)	#K	1
73/74	J	6	All			1
				7D028	SPRING (INTERMEDIATE BAND SERVO PISTON)	
73/	A,C,F,G,L,V	All	All	C4AZ 7D028–A		1
73/74	J	4	All			1
73/	P	6&8	250,302			1
75/	P	6	200			1
79	J	All	All			1
73/74	P	6	200	★ C5DZ 7D028–A Not replaced(10/80)	#Blue stripe–2 3/4" long	1
73/74	J	6	All			1
				7D029	STRUT (INTERMEDIATE BAND)	
73/	A,C,F,G,J,L,P,V	All	All	D3AZ 7D029–B	Anchor	1
73/79	A,C,F,G,J,L,P,V	All	All	D9AZ 7D029–A	Actuating	1
				7D029	STRUT (REVERSE BAND)	
73/	A,C,F,G,J,L,P,V	All	All	C4AZ 7D029–A	Actuating	1
		All	All	D0AZ 7A175–A	Anchor	1
73/	A,C,F,G,J,L,P,V	All	All	D0AZ 7D031–A	SPRING (REVERSE BAND SERVO)– 6 coils–1 5/16" dia.	1
				7034	VENT ASSY.	
73/	A,C,F,G,J,L,P,V	All	All	D0AZ 7034–B		1

YEAR	MODEL/RESTRICTIONS	ENGINE CYL.	ENGINE C.I.D. (C.C.D.)	PART NUMBER	DESCRIPTION	QTY.
73/	A,C,F,G,J,L,P,V	All	All	B3TZ 7A034–A	BUSHING (EXTENSION HOUSING)– 1 1/2" I.D. x 1 5/8" O.D. x 1 1/2" long	1
				7D034	BAND KIT (INTERMEDIATE SERVO)	
73/79	A,C,F,G,J,L,P,V	All	All	D9AZ 7D034–C		1
	Consists of (1) D9AZ 7D029–A Strut (1) D9AP 7D034–AA Band (1) D9AZ 7D376–A Valve (1) Instruction Sheet					
73/	A,C,F,G,J,L,P,V	All	All	D0DZ 7D036–A	COVER (REVERSE BAND SERVO)	1
				57633–S2	(U–10–A)–bolt (cover to base)–5/16"–18 x 5/8"	4
				7A039	HOUSING (EXTENSION)	
73/	A,C,F,G,J,L,P,V	All	All	E2SZ 7A039–B		1
73/	A,C,F,G,J,L,P,V	All	All	371186–S	(BB–441)–bolt (shoulder hex. head)– 3/8"–16 x 1 1/8"	1
				351487–S	(XX–291)–washer (extension to case)–3/8"	6
73/	A,C,F,G,J,L,P,V	All	All	D0AZ 7D040–A	SEAL (REVERSE BAND SERVO piston COVER)–3 17/32" I.D. x 3/32" thick	1
				7D044	DRUM ASSY. (INTERMEDIATE BRAKE)	
73/	A,C,F,G,V	All	All	D0AZ 7D044–A	No grooves on lugs	1
73/	P	6&8	250,302			1
79	J	8	302			1
73/	P	6	200	D0DZ 7D044–A	#(1) groove on lugs	1
73/74	J	6	All			1
79	J	6	All			1
74/	L	4&6	All			1
73/74	J	4	All	★ D1FZ 7D044–A Not replaced (3/81)	#(2) grooves on lugs	1
74	L	4	122			1
				7D046	BUSHING (INTER BRAKE DRUM)– serviced only in assy.–group 7D044	
73/74	J	6	All	★ D2RY 7E050–A Not replaced(3/81)	SEAL (OIL LEVEL INDICATOR)	1
				7052	SEAL (EXTENSION HOUSING OIL)	
73/	A,C,F,G,J,L,P,V	All	All	E2DZ 7052–A		1
				7C053	Refer to groups 7C063 and 7D220	
				7C054	VALVE (GOVERNOR PRIMARY)	
73/	A,C,F,G,J,L,P,V	All	All	D7OZ 7C054–A	T.S.B. #130	1
73/	A,C,F,G,J,L,P,V	All	All	C6AZ 7E059–A	BUSHING (FORWARD CLUTCH HUB)– 1 3/4" I.D. x 1 7/8" O.D. x 5/8 long	1
				7060	SHAFT (OUTPUT)	
73/76	C,P	6&8	All	E2DZ 7060–A	34–37–39 spline–19 15/16" long–8 tooth	1
74/77	F	8	All		speedo. gear	1
79	A,F	8	All			1
75/	G,V	All	All			1
78/	P	All	All			1
79	J	6&8	All			1
77/	A,F	8	302,351	E1AZ 7060–B	34–37–39 teeth–19 59/64" long–9 tooth	1
79	P	8	302		speedo. gear	1
73/74	J	4&6	All	E3TZ 7060–A	34–37–39 teeth–19 59/64" long–6 tooth	1
74/76	L	All	All		speedo. gear	1
77	L,P	All	All	E1ZZ 7060–A	34–37–39 teeth–19 59/64" long–7 tooth	1
78/	J,L	4&6	All		speedo. gear	1
74/	L,V	All	All	D3BZ 7E062–A	GASKET (TRANSMISSION OIL PAN SCREEN)	1
				7C063	GOVERNOR ASSY. (LESS COUNTERWEIGHT)	
73/75	C,P	6	All	D30Z 7C063–B	#Pink paint	1
75	G	6&8	250,351			1
76	G	8	351			1

COPYRIGHT © 1986 — FORD MOTOR COMPANY — DEARBORN, MICHIGAN

YEAR	MODEL/RESTRICTIONS	ENGINE CYL.	ENGINE C.I.D. (C.C.D.)	PART NUMBER	DESCRIPTION	QTY.
				7C063	GOVERNOR ASSY. (LESS COUNTERWEIGHT) — Cont'd	
74/76	L	All	All	D7ZZ 7C063-B	#Brown paint-replaces 1974/75 gov. #	1
77/	L	4	All		yellow paint	1
73/76	C,F,G,P,Y	8	302,351	D7ZZ 7C063-C	#Orange paint-replaces 1973/74 gov.#	1
73/74	J	4&6	All		gray paint	1
77	L	6	171			1
79	J,L	6	171			1
76	G	6	250	D6BZ 7C063-B	#Light blue paint	1
76	P	6	200,250			1
77/	A,F	8	351	D7DZ 7C063-A	#Purple paint	1
77	G	6&8	250,351			1
77	P	6	200,250			1
77	V	8	351			1
76	C,F	8	351	D7DZ 7C063-C	#Dark green paint-replaces 1975/76 gov. #	1
75/76	G,P	6&8	250,302		light green or purple paint	1
77/78	G,P,V	8	302			1
77	L	6	171			1
77	G	6	250	D70Z 7C063-A	#Yellow paint	1
79	A	8	302			1
77	G,F,V	8	302	D70Z 7C063-B	#Light green or white paint	1
78/	A,F	8	302			1
78/	G	6	250			1
77/	V	8	302	D74Y 7C063-A	#Gray paint	1
78/	G	8	302			1
79	A	8	302,351			1
79	P	6&8	200,302			1
78	P	6	200			1
78/	G,P,V	8	302	D7TZ 7C063-A	#Black paint	1
79	J	6&8	171,302			1
77/	L "From 6/27/77"	6	All			1
78/	J,P	6	200	D84Y 7C063-A	#Purple & yellow paint	1
78/	V	8	302			1
73/	A,C,F,G,L,P,V	All	All	97533-S	(Q-1)-snap ring-1 5/32" I.D.	1
73/	A,C,F,G,J,L,P,V	All	All	E1AZ 7D063-A	GEAR ASSY. (SUN)-32 teeth- 2 13/32" long	1
73/	A,C,F,G,J,L,P,V	All	All	D20Z 7D064-A	SHELL (INPUT)-cup shaped-5 1/4" O.D. x 3 1/8" wide	1
73/	A,C,F,G,J,L,P,V			378254-S	(QQ-83)-retaining ring(shell to gear assy.)- 1 3/16" dia.	1
73/	A,C,F,G,J,L,P,V	All	All	C4AZ 7D065-A	BUSHING (SUN GEAR)-1 7/32" O.D. x 5/8" long	2
				7B066	PLATE (CLUTCH PRESSURE)	
73/	A,C,F,G,J,L,P,V	All	All	C4AZ 7B066-A	Reverse-7/32" thick	1
				C8AZ 7B066-C	Forward clutch-front-9/32" thick	1
				C4AZ 7B066-A	Forward clutch-rear-7/32" thick	1
73/	A,C,F,G,J,L,P,V	All	All	C4AZ 7D066-B	WASHER (INPUT SHELL THRUST)- 32 internal teeth-3 5/16" dia.	1

YEAR	MODEL/RESTRICTIONS	ENGINE CYL.	ENGINE C.I.D. (C.C.D.)	PART NUMBER	DESCRIPTION	QTY.
73/	A,C,F,G,J,L,P,V	All	All	C5AZ 7B067-B	HUB (FORWARD CLUTCH)- incl. 7E059 bushing	1
73/	A,C,F,G,J,L,P,V	All	All	E1AZ 7B070-A	SPRING (FRONT CLUTCH PISTON DISC)- 2 5/8" I.D. x 4 11/16" O.D.	1
73/	A,C,F,G,J,L,P,V	All	All	C4AZ 7D070-A	SPRING (PARKING PAWL RETURN)- 2 1/2 coils-15/16" free length	1
73/	A,C,F,G,J,L,P,V	All	All	C4AZ 7D071-B	SHAFT (PARKING PAWL)-1/2" dia. x 1 9/16" long-use w/C4AZ 7A441-C pawl	1
				7D072	WASHER (REVERSE BRAKE DRUM THRUST)	
73/	A,C,F,G,J,L,P,V	All	All	E0AZ 7D072-A		1
73/	A,C,F,G,J,L,P,V	All	All	D5AZ 7D080-B	VALVE (THROTTLE CONTROL)	1
73/	A,C,F,G,J,L,P,V	All	All	C4AZ 7086-C	GASKET (EXTENSION HOUSING)-	1
73/	A,C,F,G,J,L,P,V	All	All	D0AZ 7D090-A	WASHER (FORWARD CLUTCH HUB THRUST)-3 tabs-1 1/8" I.D. x 2 5/16" O.D.	1
				7D091	WASHER (REVERSE CLUTCH HUB THRUST)	
73/	A,C,F,G,J,L,P,V	All	All	★ D0AZ 7D091-A Not replaced	#1-.042" thick Refer to T.S.B. 117	1
				D0AZ 7D091-B	#2-.057" thick	1
				D0AZ 7D091-C	#3-.074" thick	1
				D0AZ 7D091-F	-.033" thick (spacer)	1
					For .091" thickness use D0AZ 7D091-B and F	
					For .108" thickness use D0AZ 7D091-C and F	
73/	A,C,F,G,J,L,P,V	All	All	D0AZ 7D095-A	BAND ASSY. (REVERSE CLUTCH)- #62-5 1/8" I.D. x 2 7/32" wide	1
73/	A,C,F,G,J,L,P,V	All	All	C4AZ 7C096-A	WASHER (REVERSE DRUM THRUST)- 2" I.D. x 3 1/8" O.D. x .063" thick	2
				7A098	SCREEN ASSY. (OIL PAN)	
73/	A,C,F,G,J,P	All	All	D0DZ 7A098-C	*FT-40-A-incl. (1) D0DZ 7A191-B gasket	1
74/	L,V	All	All	D4FZ 7A098-B	*FT-42-A-incl. (1) D0DZ 7A191-B gasket	1

COPYRIGHT © 1986 — FORD MOTOR COMPANY — DEARBORN, MICHIGAN

7A100 MAIN CONTROL VALVE BODY ASSY.

MAIN CONTROL IDENTIFICATION CHART

An identification number appears on a metal tag at the lower end of the main control assembly. The following chart will provide quick identification of the service part number when the identification number is known. Also the main control assembly may be selected by model, year and description under group no. 7A100 which follows the chart.

NOTE 1 For A-(Mercury) vehl. with main control #C90-use #HH9 control for service

MAIN CONTROL BODY IDENTIFICATION	SERVICE PART NUMBER	MAIN CONTROL BODY IDENTIFICATION	SERVICE PART NUMBER
#6N	D20Z 7A100-B	#T3	D70Z 7A100-B
#7G	★D2RY 7A100-A	#T4	D70Z 7A100-C
#7J	D20Z 7A100-C	#T7	D7DZ 7A100-A
#7L	D20Z 7A100-C	#T9	D6BZ 7A100-C
#7M	D20Z 7A100-B	#U5	D7BZ 7A100-A
#7N	D20Z 7A100-B	#U6	D7FZ 7A100-A
#7R	★D2FZ 7A100-B	#U7	D70Z 7A100-D
#8G	D3RY 7A100-A	#U8	★D7FZ 7A100-B
#8H	D30Z 7A100-F	#U9	D7BZ 7A100-C
#8J	D3FZ 7A100-A	#W1	D7DZ 7A100-B
#8L,1	D40Z 7A100-C	#W3	D7BZ 7A100-B
#8P	D3DZ 7A100-A	#W4	D7DZ 7A100-C
#8S	D3TZ 7A100-B	#W6	D7BZ 7A100-D
#8T	★D3RY 7A100-C	#Y2	★D7DZ 7A100-E
#8U	★D4RY 7A100-A	#Y3	D74Y 7A100-B
#8W	D4FZ 7A100-A	#Y4	D70Z 7A100-G
#8Y	★D3RY 7A100-B	#Y5	D70Z 7A100-F
#9A	D3RY 7A100-C	#Y7	D74Y 7A100-C
#9P	D4ZZ 7A100-D	#Y8	D74Y 7A100-A
#9T	D3RY 7A100-B	#Y9	★D74Y 7A100-D
#9W	★D4RY 7A100-B	#C80	D8DZ 7A100-E
#F7	★D4DZ 7A100-A	#E80	D84Y 7A100-A
#F8	D4RY 7A100-A	#M80	D8DZ 7A100-C
#F9	D3RY 7A100-B	#S80	D80Z 7A100-D
#G2	D40Z 7A100-D	#T80	D8ZZ 7A100-D
#G3	D3RY 7A100-C	#W80, MM8	D8DZ 7A100-A
#H2	D40Z 7A100-C	#Y80	D80Z 7A100-E
#H7	D5FZ 7A100-A	#Z80	D8BZ 7A100-C
#H8	D5ZZ 7A100-A	#AA8,L80	D80Z 7A100-C
#J3	D5DZ 7A100-B	#AA9	D94Y 7A100-B
#J5	★D50Z 7A100-C	#BB8	D8DZ 7A100-B
#J6	D5DZ 7A100-C	#CC8,H80	D8BZ 7A100-B
#J7	D40Z 7A100-C	#BB9,EE9	D9AZ 7A100-K
#J8	D50Z 7A100-D	#X80,C90,HH9	D9AZ 7A100-L
#J9,J9-4	D5BZ 7A100-A	#H90,CC9,KK9	D9AZ 7A100-J
#L8	★D5BZ 7A100-B	#ZZ9	D9FZ 7A100-B
#N5	★D5BZ 7A100-C	#B90	D9ZZ 7A100-D
#N6	★D6DZ 7A100-B	#C90	★D9BZ 7A100-B-Note 1
#P1	D6BZ 7A100-B	#D90	D94Y 7A100-A
#P2	D6DZ 7A100-A	#E90	D9AZ 7A100-E
#P5	D60Z 7A100-A	#K90	D9DZ 7A100-A
#P7	D50Z 7A100-E	#L90	D9BZ 7A100-C
#P8	★D60Z 7A100-E	#N90	D9FZ 7A100-A
#P9	★D60Z 7A100-F	#U90	D90Z 7A100-A
#S1	★D6FZ 7A100-A	#Z90,LL9	D9AZ 7A100-F

YEAR	MODEL/RESTRICTIONS	ENGINE CYL.	ENGINE C.I.D. (C.C.D.)	PART NUMBER	DESCRIPTION	QTY.
				7A100	MAIN CONTROL VALVE BODY ASSY. — Cont'd	
	▲ 2000 cc @ 2300 cc ⊕ 2800 cc					
73/74 73/75 75	C P G	6&8 6&8 6&8	250,302 250/302 250/302	D40Z 7A100-C	#H2,8L,I,J7	1 1 1
73/74	C,F	8	351	★ D40Z 7A100-D Not replaced	#G2,8H	1
75	C,F	8	351	★ D50Z 7A100-C Not replaced (1/81)	#J5-with PEF-T,U,W trans.	1
75	C,F	8	351	D50Z 7A100-D	#J8	1
75	C,F	8	351M	D50Z 7A100-E	#P7	1
76	C	8	351W	★ D60Z 7A100-A Not replaced	#P5	1
76	C,F	8	351M	★ D50Z 7A100-D Not replaced	#J8	1
76	C,F	8	351M	★ D60Z 7A100-E Not replaced(10/80)	#P8	1
76	C,F	8	351M	★ D60Z 7A100-F Not replaced(10/80)	#P9	1
77	F	8	302	D70Z 7A100-D	#U7	1
77	F	8	351	D70Z 7A100-B	#T3	1
77	F	8	351	D70Z 7A100-C	#T4	1
77	F	8	351	D70Z 7A100-F	#Y5	1
77	F	8	351	D70Z 7A100-G	#Y4	1
75	G,P	8	302	★ D5DZ 7A100-B Not replaced (3/79)	#J3	1
75/76	G,P	8	302	★ D5BZ 7A100-B Not replaced	#J9,J9-4,-L8	1
75/76	G	8	302	★ D6DZ 7A100-B Not replaced (1/81)	#N6	1
75	G,P	6	250	★ D5BZ 7A100-C Not replaced (3/79)	#N5	1
75/76	G	8	351	★ D6DZ 7A100-A Not replaced	#J6,P2	1
76 76	G P	6 6	250 200,250	★ D6BZ 7A100-B Not replaced	#P1	1 1
76	G,P	6	250	D6BZ 7A100-C	#T9	1
77	G	6	250	D7BZ 7A100-A	#U5	1
77	G	6	250	D7DZ 7A100-C	#W4	1
77	G	8	302	D7BZ 7A100-B	#W3	1
77	G	8	302	★ D7DZ 7A100-B	#W1-Not replaced (11/82)	1
77	G	8	351	D7DZ 7A100-A	#T7	1
77	G	8	351	★ D7DZ 7A100-E	#Y2-Not replaced (1/84)	1
73	J	6	All	★ D2RY 7A100-A Not replaced(10/80)	#7G-with PED-L trans.	1
		4	All	★ D2FZ 7A100-B Not replaced(10/80)	#7R-with PED-E trans.	1
73	J	4	All	★ D3RY 7A100-C Not replaced (3/79)	#9A,#G3,#8T-with PED-E1,E2	1
74	J	4	▲122	★ D4RY 7A100-C Not replaced (3/79)	#G4,#9W	1
73	J	6	All	★ D3RY 7A100-B Not replaced(10/80)	#8G,8Y,F9-with PED-Y trans.	1
74	J	6	All	★ D4RY 7A100-A Not replaced (3/79)	#8U,F8-with PED-BC trans.	1
74	L	4	▲122	★ D4FZ 7A100-C Not replaced (3/79)	#G8,8W	1
74	L	4	@140	★ D4FZ 7A100-D Not replaced (1/81)	#D8,G9,H6,9P	1
75	L	4	@140	★ D5FZ 7A100-A Not replaced (3/79)	#H7	1
75	L	6	⊕171	★ D5ZZ 7A100-A Not replaced (1/81)	#H8	1
76	L	4&6	@140, ⊕171	D5ZZ 7A100-A	#H8	1

COPYRIGHT © 1986 — FORD MOTOR COMPANY — DEARBORN, MICHIGAN

YEAR	MODEL/RESTRICTIONS	ENGINE CYL.	ENGINE C.I.D. (C.C.D.)	PART NUMBER	DESCRIPTION	QTY.
				7A100	MAIN CONTROL VALVE BODY ASSY. — Cont'd	
76	L	6	⊕171	★ D6FZ 7A100-A Not replaced (1/81)	#S1	1
77	L	4&6	@140 ⊕171	D7FZ 7A100-A	#U6	1
77	L	6	⊕171	★ D7FZ 7A100-B	#U8-Not replaced	1
73/75	P	6	200	★ D4DZ 7A100-A Not replaced (12/79)	#F7,8P	1
77	P	6	200	D7BZ 7A100-D	#W6	1
77	P	6	250	D7BZ 7A100-A	#U5	1
77	P	8	302	D7BZ 7A100-B	#W3	1
77	P	8	302	D7BZ 7A100-C	#U9	1
77	V	8	302	D74Y 7A100-A	#Y8	1
77	V	8	351	D74Y 7A100-B	#Y3	1
77	V	8	302	D74Y 7A100-C	#Y7	1
77	V	8	302	★ D74Y 7A100-D	#Y9-Not replaced	
78	F	8	302	D80Z 7A100-C	#L80,AA8	1
78	F	8	351W	D80Z 7A100-D	#S80	1
78	F	8	351M	D80Z 7A100-E	#Y80	1
77/78	L	4&6	All	D8ZZ 7A100-D	#T80	1
78	G	6	250	D8DZ 7A100-A	#W80, MM8	1
78	G	8	302	D8DZ 7A100-B	#BB8	1
78	G	8	302	D8DZ 7A100-E	#C80	1
78	G	8	302	D8DZ 7A100-C	#M80	1
78	P	6	200	D8BZ 7A100-C	#Z80	1
78	P	8	302	D8BZ 7A100-B	#CC8,H80	1
78	V	8	302	D84Y 7A100-A	#E80	1
79	A	8	351	D9AZ 7A100-J	#H90,CC9,KK9	1
79	A	8	302	D9AZ 7A100-E	#E90	1
79	A	8	302	D9AZ 7A100-F	#Z90,LL9	1
79	A	8	302	D9AZ 7A100-K	#BB9,EE9	1
79	A	8	302	D9AZ 7A100-L	#X80,C90,HH9	1
78/79	P	6	200			1
79	F	8	302	D80Z 7A100-C	#L80,AA8	1
79	F	8	351	D90Z 7A100-A	#U90	1
79	G	8	302	D8BZ 7A100-C	#Z80	1
79	G	8	302	D8DZ 7A100-C	#M80	1
79	G	6	250	D9DZ 7A100-A	#K90	1
79	J	8	302	D8DZ 7A100-C	#M80	1
79	J	6	171	D9ZZ 7A100-D	#B90	1
79	L	4&6	140,171	D9FZ 7A100-A	#N90	1
79	L	4	140	D9FZ 7A100-B	#ZZ9	1
79	J,P	6	200	D8BZ 7A100-C	#Z80	1
79	P	8	302	D8DZ 7A100-C	#M80	1
79	P	8	302	D9BZ 7A100-C	#L90	1
79	V	8	302	D84Y 7A100-A	#E80	1
79	V	8	302	D94Y 7A100-A	#D90	1
79	V	8	302	D94Y 7A100-B	#AA9	1
73/	A,C,F,G,J,L,P,V	6&8	All	375051-S	Bolt (body to case)-1/4"-20 x 1"	7
				20464-S7,8	(B-43-EA)-bolt-1/4"-20 x 1 1/4"	1
				7D100	GASKET (VALVE BODY SEPARATOR PLATE)	
79	A	8	302	D9AZ 7D100-B	Use w/7A100 assy. ident. C90,BB9,CC9,EE9,KK9	1
75/77	G	All	All			
79	J	6	200			1
73/79	P	All	All			1
77/79	V	All	All			1
77/79	A,F	8	351			1
73/76	C,F	All	All			1
78/79	G,J	8	302			1

YEAR	MODEL/RESTRICTIONS	ENGINE CYL.	ENGINE C.I.D. (C.C.D.)	PART NUMBER	DESCRIPTION	QTY.
				7D100	GASKET (VALVE BODY SEPARATOR PLATE) — Cont'd	
73	J	4	All	D9AZ 7D100-A		1
74/75	J	4&6	All			1
79	J	6	All			1
74/79	L	4&6	All			1
77/79	F	8	302			1
78/79	G	6	250			1
79	A	8	302		Use w/7A100 #E90,Z90,LL9	1
				7A103	PUMP ASSY. (FRONT OIL)	
73/	A,C,F,G,J,L,P,V	All	All	D7AZ 7A103-A	7D019 seal groove .125"-.128" wide	1
73/	A,C,F,G,J,L,P,V	All	All	379296-S	(BB—545-K)-bolt (pump to housing 3/8"-16 x 1 3/8"	7
				7A108	SUPPORT ASSY. (CONVERTER STATOR)	
73/	A,C,F,G,J,L,P,V	All	All	D7AZ 7A108-A	7D019 seal groove .125"-.128" wide incl. (2) D7AZ 7D019-A seals	1
				20326-S	(B-49)-support to pump-5/16"-18 x 5/8"	5
				7A115	LEVER ASSY. (MANUAL CONTROL VALVE DETENT)	
73/	A,C,F,G,J,L,P,V	All	All	D20Z 7A115-A	Incl. (1) D20Z 7E433-A roller	1
73/	A,C,F,G,J,L,P,V	All	All	377330-S	(MM-169-K)-nut (lever to manual control lever)-9/16"-15	1
				7A117	LEVER ASSY. (PARKING PAWL)	
73/78	C,F,G,J,L,P,V "Before 5/1/78"	All	All	D60Z 7A117-A		1
78/	A,F,G,J,L,P,V "From 5/1/78"	All	All	D8BZ 7A117-A	Use with D8BZ 7F286-A spacer	1
73/	A,C,F,G,J,L,P,V	All	All	97409-S8	(Q-5-A)-ring (lever to rod) - 1/4" retaining	1
				97411-S2	(Q-5-C)-ring (lever to case)-3/8" retaining	1
				33848-S7	(M-70)-nut (lever to shifter)- hex-9/16"-18	1
				356403-S8	(XX-126)-washer (lever to pin) - flat-3/8"	1
73/	A,C,F,J,L,P	All	All	E1AZ 7A136-A	GASKET (FRONT OIL PUMP TO CASE)	1
75/	G,V	All	All			1
73/74	J	4	All	D2RY 7L142-A	RING (CONVERTER INERTIA)	1

COPYRIGHT © 1986 — FORD MOTOR COMPANY — DEARBORN, MICHIGAN

YEAR	MODEL/RESTRICTIONS	ENGINE CYL.	ENGINE C.I.D. (C.C.D.)	PART NUMBER	DESCRIPTION	QTY.
				7153	GASKET and OIL SEAL KIT	
73/	A,C,F,G,J,L,P,V	All	All	E0AZ 7153–B		1
	Consists of					
	OIL SEALS				VALVE	
	3–C4AZ 7D011–A				1–D9AZ 7D376–A	
	2–D0AZ 7D019–A				GASKETS	
	2–D7AZ 7D019–A				1–C4AZ 7086–C	
	2–D0AZ 7D020–A				1–D7FZ 7D100–A	
	1–C4AZ 7D024–B				1–D70Z 7D100–A	
	1–D0AZ 7D024–A				1–E1AZ 7A136–A	
	1–D5TZ 7D024–A				1–D60Z 7A191–A	
	1–C4AZ 7D025–B				1–C1AP 7B426–A	
	1–C4DZ 7D025–A				"0" RINGS	
	1–C40Z 7D025–A				1–87034–S94	
	1–C5DZ 7D025–A				3–380892–S94	
	1–D5TZ 7D025–A				1–386078–S	
	1–C4AZ 7D026–C				INSTRUCTION SHEET	
		OIL SEALS				
		1–D0AZ 7D040–A				
		1–C2AZ 7A248–A				
		2–D0AZ 7A294–A				
		1–D0AZ 7D404–A				
		1–D5AZ 7B498–A				
		1–C4AZ 7A548–C				
		1–C8AZ 7A548–B				
		1–D80Z 7A548–A				
		BALL				
		3–C7AZ 7E195–A				
		INSULATOR				
		1–D5AZ 7341–A				
73/	A,C,F,G,J,L,P,V	All	All	C4AZ 7A153–C	GEAR (OUTPUT SHAFT RING)–	1
					Use as output shaft hub ring gear	1
					Use as front clutch hub ring gear	1
				97532–S	(Q–1–C)–snap ring (gear to output shaft)– 1 3/16" dia.	1
				378874–S	(QQ–94)–snap ring (gear to hub)–4 1/2" dia.	1
				7B164	PLATE ASSY. (CLUTCH INTERNAL and EXTERNAL SPLINE)	

FRONT CLUTCH

73/	A,C,F,J,P,V	8	All	C8AZ 7B164–D	Internal–friction	5
73/77	C,P	6	250			5
75/	G	6&8	All			5
73/	J,L	4&6	All			3
73/74	P	6	200			4
75/76	P	6	200			3
77/	P	6	200			4
73/	A,C,F,J,P,V	8	All	C4AZ 7B442–B	External–steel	4
73/77	C,P	6	250			4
75/	G	6&8	All			4
73/	J,L	4&6	All			2
73/74	P	6	200			3
75/76	P	6	200			2
77/	P	6	200			3

YEAR	MODEL/RESTRICTIONS	ENGINE CYL.	ENGINE C.I.D. (C.C.D.)	PART NUMBER	DESCRIPTION	QTY.
				7B164	PLATE ASSY. (CLUTCH INTERNAL and EXTERNAL SPLINE) — Cont'd	
					REAR CLUTCH	
73/	A,C,F,G	6&8	All	C5AZ 7B164–B	Internal–friction	AR
73/	J,L	4&6	All			3
73/	P	6	200			3
73/	P	6	250			3
73/	J,P,V	8	All			4
73/	A,C,F,G	6&8	All	C4AZ 7B442–B	External–steel	AR
73/	J,L	4&6	All			3
73/	P	6	200			3
73/	P	6	250			4
73/	J,P,V	8	All			4
73/	A,C,F,G,J,L,P,V	All	All	C4AZ 7D164–A	HUB (OUTPUT SHAFT)–70 helical–37 spline teeth–1 1/4" long	1
73/	A,C,F,G,J,L,P,V	All	All	97532–S2	(Q–1C)–retainer(hub to drum)	1
73/	A,C,F,G,J,L,P,V	All	All	C4AZ 7D167–B	BOLT (OVERRUNING CLUTCH TO CASE)	6
				7D171	RACE (OVERRUNNING CLUTCH INNER)	
73/	A,C,F,G,J,L,P,V	All	All	D4FZ 7D171–A		1
				7A175	Refer to group 7D029	
73/	A,C,F,G,J,L,P,V	All	All	D1AZ 7D189–A	PISTON and SEAL ASSY.(REVERSE BAND SERVO)–one piece design–incl. piston seal, rod and spacer	1
73/	A,C,F,G,J,L,P,V	All	All	C4AZ 7190–B	ROLLER (OVERRUNING CLUTCH)–7/8" long x 5/16" dia.	AR
				7A191	GASKET (OIL PAN)	
73/	A,C,F,G,J,L,P,V	All	All	D60Z 7A191–A		1
				7D191	RETAINER (OVERRUNNING CLUTCH SPRING)	
73/79	A,C,F,G,J,L,P,V	All	All	D80Z 7D191–A		1
				7A194	PAN ASSY. (TRANSMISSION OIL)	
73/	A,C,F,G,V	8	351	D0AZ 7A194–A	w/filler tube fitting	1
79	A	8	302			1
76	G,P	8	302			1
73/	A,C,G,P	6&8	All	D0DZ 7A194–B	w/o filler tube fitting	1
73/	J	All	All			1
74/	L	4&6	All	D4FZ 7A194–A		1
77/	V	8	302			1
73/	A,C,F,G,J,L,P,V	All	All	378782–S	(BB–543–D)–bolt and washer assy.–5/16"–18 X 9/16"	12
79	A,F	8	302,351	388810–S	(TT–50–E) Seal (filler tube nut) "O" ring 47/64" I.D.	1
73/	A,C,F,G,J,L,P,V	All	All	C7AZ 7E195–A	BALL (COASTING BOOSTER VALVE SHUTTLE)	2
73/	A,C,F,G,J,L,P,V	All	All	C4AZ 7D218–B	RETAINER (GOVERNOR SECONDARY VALVE SPRING)–1" x 7/8"	1
73/	A,C,F,G,J,L,P,V	All	All	C4AZ 7D220–B	BODY (GOVERNOR OIL COLLECTOR)–incl.(1)C7AZ 7E242–A screen and instruction sheet	1
73/	A,C,F,G,J,L,P,V	All	All	C4AZ 7D227–A	SPACER (THROTTLE PRESSURE VALVE–SECONDARY)	1
				7A228	TUBE (OIL FILLER)	
	@ 2300 cc ⊕ 2800 cc					
79	A	8	302	D9AZ 7A228–A	# Brown paint–(case filled)	1
79	A	8	302,351	D9AZ 7A228–B	# Dark green paint–(pan filled)	1
73/74	C	6	250	★ D20Z 7A228–E Not replaced (3/79)		1
		8	302	D20Z 7A228–A		1
73	C	8	351	★ D20Z 7A228–B		1
74	F	8	All	Not replaced(3/81)		1

COPYRIGHT © 1986 — FORD MOTOR COMPANY — DEARBORN, MICHIGAN

YEAR	MODEL/RESTRICTIONS	ENGINE CYL.	ENGINE C.I.D. (C.C.D.)	PART NUMBER	DESCRIPTION	QTY.
				7A228	TUBE (OIL FILLER) — Cont'd	
	@ 2300 cc ⊕ 2800 cc					
74	C	8	351	★ D40Z 7A228-A Not replaced(10/80)	Approx. 23 7/8" long	1
75/76	C,F	8	351W	D50Z 7A228-B		1
75/76	C,F	8	351M	D50Z 7A228-C	#Gold paint	1
77	F	8	302	D70Z 7A228-C	#Green paint-(case filled)	1
77/78	F	8	351W	D70Z 7A228-D	#Black paint-(pan filled)	1
77/	F	8	351M	D70Z 7A228-E	#Gold paint-(pan filled)	1
78	F	8	302	D8DZ 7A228-A	#Orange paint-(case filled)	1
79	F	8	302	D9DZ 7A228-A	#Orange paint-(case filled)	1
79	G	6&8	250,302			1
75/77	G	6	250	D5DZ 7A228-A	#White paint-(case filled)	1
75/76	G	8	302	D5DZ 7A228-B	#Blue & white paint-(case filled)	1
75/76	G	8	302	D6BZ 7A228-A	#Blue & white paint-(pan filled)	1
77	G	8	302	D7DZ 7A228-A	#Blue & white paint-(case filled)	1
75/77	G	8	351W	D5DZ 7A228-C	#White paint-(pan filled)	1
78	G	6&8	All	D8DZ 7A228-A	#Orange paint-(case filled)	1
73	J "Before 12/4/72"	4	All	★ D2RY 7A228-D Not replaced (10/78)		1
				392303-GS	Seal(attaches filler tube)(Metric)	1
73/74	J "From 12/4/72"	4	All	★ D3RY 7A228-A Not replaced(3/81)		1
73/74	J	6	All	★ D2RY 7A228-C Not replaced(10/80)		1
				E620012-S72	Attaches tube(Metric)	1
74	L	4	All	D4FZ 7A228-A	#Dark green paint-16 5/8" long	1
75/	L	4	2.3L	E0ZZ 7A228-A		1
79	J	6	171	D9ZZ 7A228-A	#Pink paint-(case filled)	1
75/	L	6	⊕171	D5ZZ 7A228-C	#Pink paint	1
73/74	P	6	200	★ D0DZ 7A228-B Not replaced		1
73/74	P	6	250	D0DZ 7A228-C		1
73/74	P	8	302	D10Z 7A228-B	Approx. 19 1/4" long	1
75/77	P	6	200	★ D5BZ 7A228-C Not replaced	#Blue paint-(case filled)	1
75/77	P	6	250	D5BZ 7A228-A	#No color-(case filled)	1
75/76	P	8	302	★ D5BZ 7A228-B Not replaced	#No color-(case filled)	1
76	P	8	302	D6BZ 7A228-A	#Blue & white paint-(pan filled)	1
77	P	8	302	★ D7BZ 7A228-A Not replaced(3/81)	#White paint-(case filled)	1
78	P	8	302	D8BZ 7A228-C	#No color-(case filled)	1
79	P	6&8	250,302			1
79	J	8	302			1
78/	J,P	6	200	D8BZ 7A228-D	#Purple paint-(case filled)	1
77	V	8	351	D5DZ 7A228-C	#White paint - (pan filled)	1
77/	V	8	302	D74Y 7A228-A	#Brown paint - (case filled)	1
73/	A,C,F,G,J,L,P,V	All	All	87034-S94	(T-1-A)-seal(tube to case)	1
73/	A,C,F,G,J,L,P,V	All	All	C4AZ 7A232-C	ROD ASSY. (PARKING LEVER ACTUATING)	1
				97409-S8	(Q-5-A)-ring(road to link)-retaining-1/4"	2
				358662-S	(XX-87)-washer (rod to lever)-flat-1/4"	3
73/	A,C,F,G,J,L,P,V	All	All	D0AZ 7C232-A	SLEEVE (OIL DISTRIBUTOR)	1
				20386-S	(B-53)-bolt (sleeve to case)-5/16"-18 x 1"	4
73/	A,C,F,G,J,L,P,V	All	All	C4AZ 7A233-A	GEAR (OUTPUT SHAFT PARKING)	1
				7A242	WASHER (PLANET PINION THRUST)	
73/	A,C,F,G,J,L,P,V	All	All	C4AZ 7A242-A	2 9/16" I.D. x 3 11/32" O.D. x 1/16" thick-use as forward clutch thrust	1
73/	A,C,F,G,J,L,P,V	All	All	D20Z 7A242-A	2 3/32" I.D. x 3 21/64" O.D.-use as rev. planet carrier thrust-front	1

YEAR	MODEL/RESTRICTIONS	ENGINE CYL.	ENGINE C.I.D. (C.C.D.)	PART NUMBER	DESCRIPTION	QTY.
73/	A,C,F,G,J,L,P,V	All	All	C7AZ 7E242-A	SCREEN ASSY. (GOVERNOR OIL)	1
				7A246	Refer to group 7034	
73/	A,C,F,G,J,L,P,V	All	All	C2AZ 7A248-A	SEAL (FRONT OIL PUMP)-small-2" I.D. x 2 3/4" O.D.	1
				7A256	LEVER ASSY. (MANUAL CONTROL)	
79	A	8	All	D9AZ 7A256-A	#D9AP-AP	1
73/76	C - - column shift	6&8	All	D20Z 7A256-B		1
74/	F - - column shift	8	All			1
73/74	C - - console shift	6&8	All	★ D1FZ 7A256-A		1
74	F - - console shift	8	All	Not replaced	Exc. PEF-E7 trans.	1
74	F - - console or floor shift	8	All	D50Z 7A256-C	With PEF-trans. -incl. 7341 insulator	1
75/	F - - console or floor shift	8	All			1
73/74	J	4&6	All	★ D2RY 7A256-A Not replaced(3/81)	With PED-E,E1,E2,L,L1,Y1,BB and BC trans.	1
74	J	4&6	All	★ D4RY 7A256-A	With Ped-BB1 and BC1 trans.-Not repl. (3/79)	1
74/	L	All	All	D5FZ 7A256-A		1
73/77	P - - column shift	6&8	All	D5BZ 7A256-A		1
73/76	P - - console shift	6&8	All	D1DZ 7A256-A		1
75/	G - - console or floor shift	All	All			1
77/	V - - console shift	8	All			1
75/	G - - column shift	All	All	D5DZ 7A256-A		1
77/	V - - column shift	8	All			1
78/	P - - console or floor shift	6&8	All	D8BZ 7A256-B		1
79	J - - console or floor shift	All	All			1
78/	P - - column shift	6&8	All	D8BZ 7A256-C		1
73/	A,C,F,G,J,L,P,V	All	All	C4AZ 7D256-A	RING (FORWARD CLUTCH PISTON SPRING PRESSURE)-2 5/8" I.D. x 2 7/8" O.D. x 1/8" thick	1
73/	A,C,F,G,J,L,P,V	All	All	C0AP 7B258-A	BUSHING (FRONT OIL PUMP)	1
				7B261	BUSHING (FRONT PUMP SUPPORT)	
73/	A,C,F,G,J,L,P,V	All	All	D0AZ 7B261-A	27/32" I.D. x 31/32" O.D.	1
73/	A,C,F,G,J,L,P,V	All	All	D0AZ 7D261-A	LEVER (DOWNSHIFT DETENT)	1
				★33798-S2	Nut (lever to shaft)-5/16"-24	1
				★34806-S	Washer-5/16"	1
				7A262	PISTON (CLUTCH)	
73/77	C,F,G,J,L,P,V	All	All	D0AZ 7A262-B	#D0AP 7A258-B -forward clutch-u/with C4AZ 7A548-C square cut seal	1
78/	A,G,J,L,P,V	All	All			1
78/	F - - exc. police & taxi	All	All			1
78/	F - - police & taxi	8	302	E0AZ 7A262-C	#D80P 7A258-AA forward clutch-u/with D80Z 7A548-A flair lip seal	1
73/	A,C,F,G,J,L,P,V	All	All	E1AZ 7A262-A	Reverse clutch	1
				7D273	CONNECTOR ASSY. (OIL COOLER TUBES)	
73/76	C	6&8	All	D8AZ 7D273-A	1/8"-27 straight connector	AR
74/79	F,J	All	All			2
78/79	A,P	All	All			2
73/74	C,P	6&8	All	★ C5DZ 7D273-A	45° elbow-incl. locknut and "O" ring	2
74	F	8	All	Not replaced		2
73/	G,L,V	6&8	All	D7BZ 7D273-A	elbow connector	AR
73/77	J,P	6&8	All			AR
73/	A,C,F,G,J,L,P,V	All	All	380892-S	(KK-43-B)-seal "O" ring-7/16" O.D.	AR
74/	F	8	All		1/2" O.D.	2
				7F286	SPACER (PARK LEVER)	
78/	A,F,G,J,L,P,V	All	All	D8BZ 7F286-A	use with D8BZ 7A117-A lever	1

COPYRIGHT © 1986 — FORD MOTOR COMPANY — DEARBORN, MICHIGAN

YEAR	MODEL/RESTRICTIONS	ENGINE CYL.	ENGINE C.I.D. (C.C.D.)	PART NUMBER	DESCRIPTION	QTY.
				7A294	SEAL (CLUTCH PISTON INNER)	
73/	A,C,F,G,J,L,P,V	All	All	D0AZ 7A294–A	Forward clutch	1
				D0AZ 7D404–A	Reverse clutch	1
				7326	Serviced in 7A100 assy. only	
				7E332	SPRING (MANUAL VALVE DETENT)	
73/	A,C,F,G,J,L,P,V	All	All	D0DZ 7E332–B	Incl. pin and roller	1
73/	A,C,F,G,J,L,P,V	All	All	D0AZ 7E336–A	PLATE (THROTTLE PRESSURE BOOSTER STOP)	AR
				7340	Serviced only in assy.–refer to group 7A100	
				7A360	CYLINDER (FRONT CLUTCH)	
	▲ 2000 cc @ 2300 cc ⊕ cc					
73/	A,C,F,G,V	All	All	D80Z 7A360–A	#No grooves on large O.D.	1
73/77	P	6&8	250,302			1
78/	J,P	8	302			1
73/74	J	4&6	All	★ D1FZ 7A360–A	#No grooves on large O.D. of drum–	1
74	L	4	▲122	Not replaced(3/81)	42 external splines–28 internal splines	1
74/77	L	4&6	140,171	D8ZZ 7A360–A	#Three grooves on large O.D.	1
79	J	6	171			1
73/77	P	6	200	D1DZ 7A360–A	#(1)groove on large O.D.	1
78/	J,P	6	200	D8BZ 7A360–A	#One groove on large O.D.	1
73/	A,C,F,G,J,L,P,V	All	All	C4AZ 7B368–A	WASHER (OUTPUT SHAFT THRUST REAR)– 1 3/16" I.D. x .030" thick–3 slots	1
73/	A,C,F,G,J,L,P,V	All	All	D5AZ 7E368–A	VALVE KIT (THROTTLE PRESSURE LIMIT)	1
	Consists of 1–D0AP 7E340–A Spring			1–D0AP 7E368–A Valve		
73/	A,C,F,G,J,L,P,V	All	All	C5AZ 7D375–A	PIN (THROTTLE PRESSURE BOOSTER RETAINER)–1/8" dia. x 15/16" long	1
				7D376	VALVE (INTERM. SERVO ACCUMULATOR CHECK)	
73/79	A,C,F,G,J,L,P,V	All	All	D9AZ 7D376–A		1
				7A377	DIAPHRAGM ASSY. (VACUUM THROTTLE VALVE)	
	$ DAD–dual area diaphragm † SAD–single area diaphragm ‡ S/SAD–super single area diaphragm					
73/75	G,P	All	All	D2AZ 7A377–A	*TM–15–#yellow stripe–†SAD	1
76	C,F	8	351			1
76	G,P	8	All			1
76	L	6	⊕171			1
77/	P	8	302			1
77	F,G	8	351			1
78/	A,F	8	All			1
73/75	C,F,G,J,L,P	All	All	D30Z 7A377–A	*TM–20–#red stripe–$DAD	1
76	C,F	8	351			1
76	L	4	@140			1
75/76	C,F	8	351	D5AZ 7A377–B	*TM–34–#green strip–‡S/SAD	1
76	G,P	6	All			1
76	L	6	⊕171			1
77	G	6&8	250,302			1
77/	A,F	8	302,351			1
77/	L	4&6	@140 ⊕171			1
77/	P	6	All			1
77	V	8	302			1
79	J	6	171,200			1

YEAR	MODEL/RESTRICTIONS	ENGINE CYL.	ENGINE C.I.D. (C.C.D.)	PART NUMBER	DESCRIPTION	QTY.
				7A377	DIAPHRAGM ASSY. (VACUUM THROTTLE — Cont'd VALVE)	
	$ DAD-dual area diaphragm † SAD-single area diaphragm ‡ S/SAD-super single area diaphragm					
77	V	8	351	D7BZ 7A377-A	*TM-41-#blue strip-Altitude compensating diaph.	1
78	P	6	200			1
79	A	8	351			1
77/	L	4	@140	D7DZ 7A377-A	*TM-42-#D7OP 7A377-AA -Altitude compensating diaph.	1
77/	G,J,P,V	8	302			1
79	F	8	351			1
79	G	6&8	250,302	D9AZ 7A377-A	*TM-51-#Blue stripe-‡ S/SAD	1
79	P	6&8	200,302			1
				7A380	ROD KIT (THROTTLE CONTROL VALVE)	
73/	A,C,F,G,J,L,P,V	All	All	D3AZ 7A380-B	Consists of(1)each D3AP 7A380-HA, JA,KA LA,MA-rod used in select fit	1
73/	A,C,F,G,J,L,P,V	All	All	D3OZ 7E387-A	SCREEN (TRANSMISSION MAIN CONTROL)	1
				7C389	Serviced only in assy.-refer to group 7A100	
				7C391	OVERHAUL KIT	
73/	A,C,F,G,J,L,P,V	All	All	E0AZ 7C391-B		1

Consists of

OIL SEALS	PLATES	GASKET KIT	LOCK-NUT
1-B9AP 7A011-A	4-C5AZ 7B164-B	1-E0AZ 7153-B	2-388307-S100
1-D5AZ 7052-B	5-C8AZ 7B164-D		1-389049-S
	8-C4AZ 7B442-B		
	1-INSTRUCTION SHEET		

YEAR	MODEL/RESTRICTIONS	CYL.	C.I.D. (C.C.D.)	PART NUMBER	DESCRIPTION	QTY.
				7A394	LEVER (DOWNSHIFT CONTROL OUTER)	
73/76	C	6&8	All	D0DZ 7A394-A		1
74/76	F	8	All			1
73/74	J	4&6	All	★ D2RY 7A394-A Not replaced(10/80)		1
74/	L	All	All	C9ZZ 7A394-A		1
73/77	P	6&8	All	D0DZ 7A394-B		1
75	G	All	All			1
76/	G	6	All			1
76/	G,V	8	All	D6DZ 7A394-A		1
77/	F	8	All			1
78/	P	All	All	D8BZ 7A394-A	#D8BP 7A394-AA	1
79	J	All	All			1
79	A	All	All	C5TZ 7A394-A		1
73/	A,C,P,G,J,L,P,V	All	All	D3AZ 7E396-A	RETAINER (LOW SERVO MODULATOR PLUG)	1
73/	A,C,F,G,J,L,P,V	All	All	D1AZ 7A398-A	GEAR (PLANETARY FORWARD)	1
				7D404	Refer to group 7A294	
73/	A,C,F,G,J,L,P,V	All	All	C1AP 7B426-A	GASKET (THROTTLE VALVE DIAPHRAGM)	1
				7E433	ROLLER (PARK LEVER ACTUATING ROD)	
73/	A,C,F,G,J,L,P,V	All	All	D2OZ 7E433-A	1/4"I.D. x 7/16"O.D. x 5/32" thick	1
				7A441	PAWL (PARKING)	
73/79	A,C,F,G,J,L,P,V	All	All	D8OZ 7A441-A		1
				7B442	Refer to group 7B164	
73/	A,C,F,G,J,L,P,V	All	All	D4FZ 7B456-A	RACE (OVERRUNNING CLUTCH OUTER)	1
				7A480	SPRING and RETAINER KIT (REVERSE CLUTCH)-Also refer to group 7A527	
73/74	C,J,P	All	All	D0AZ 7A480-B		1
74	F	8	All			1
75/	A,C,F,G,J,L,P,V	All	All			1
74	L	All	All	★ D1FZ 7A480-B Not replaced	2 9/16" dia. x 1 29/32" long	1
73/	A,C,F,G,J,L,P,V	All	All	C4AZ 7C492-B	STOP (BAND ADJUSTING-INTERMEDIATE and REVERSE)	AR
				380850-S	(MM-54-H)-nut-hex. lock-1/2"-16	2

COPYRIGHT © 1986 — FORD MOTOR COMPANY — DEARBORN, MICHIGAN

YEAR	MODEL/RESTRICTIONS	ENGINE CYL.	ENGINE C.I.D. (C.C.D.)	PART NUMBER	DESCRIPTION	QTY.
73/	A,C,F,G,J,L,P,V	All	All	C4AZ 7C495-A	LINK (PARKING PAWL TOGGLE OPERATING LEVER)	1
				97409-S	(Q-5-A)-ring(link to case)-1/4" dia. retaining	2
				7B498	SEAL (MANUAL CONTROL LEVER OIL)	
73/	A,C,F,G,J,L,P,V	All	All	D5AZ 7B498-A		1
				7C498	DRUM ASSY. (REVERSE BRAKE)	
73/	A,C,F,G,J,L,P,V	All	All	D4FZ 7C498-A		1
73/	A,C,F,G,J,L,P,V	All	All	D2AZ 7A527-A	RETAINER (CLUTCH PISTON SPRING)	1
				383691-S	(QQ-92-H)-ring(retain spring to piston)-2 1/4" dia.	1
				7A548	SEAL (CLUTCH PISTON OUTER OIL)	
73/	A,C,F,G,J,L,P,V	All	All	C8AZ 7A548-B	Reverse clutch piston-4 1/16" I.D. x 4 9/16" O.D.	1
73/77	C,F,G,J,L,P,V	All	All	C4AZ 7A548-C	Forward clutch piston 4" I.D. x 4 7/16" O.D.	1
78/	A,F,G,J,L,P,V - - exc. police & taxi	All	All		square cut seal-use w/D0AZ 7A262-B piston	1
78/	F - - police & taxi	8	302	D80Z 7A548-A	#Blue dye-flair lip seal use w/D80Z 7A262-A piston	1
				7A577	SNAP RING (CLUTCH PRESSURE PLATE RETAINER) Selective fit	
73/	A,C,F,G,J,L,P,V	All	All	D0AZ 7A577-B	.052 thick-5" I.D.	AR
				D0AZ 7A577-A	.066 thick	AR
				D0AZ 7A577-C	.080 thick	AR
				D0AZ 7A577-D	.094 thick	AR
73/	A,C,F,G,J,L,P,V	All	All	D0AZ 7A577-C	Retain 7B070 spring in 7A360 cyl.	1
				7902	CONVERTER ASSY.	
	@ 2300 cc ⊕ 2800 cc					
73/76	C,G,P	6&8	250,302	D00Z 7902-A	#BV,CH,CW,BP	1
77	G,P	6	250			1
73/74	J	6	All	★ D2RY 7902-A Not replaced	#BS-exc. PED-BC trans.	1
		4	All	D2RY 7902-B		1
74	J	6	All	D4RY 7902-A	With PED-BC trans.	1
74	L	4	All	★ D1FZ 7902-A Not replaced (10/78)	#BU-use with PEJ-B6,C,G, trans.	1
74	L	4	@140	D4ZZ 7902-B	#CL,CU-use with PEJ-C1,G1 trans.	1
75/76	L	4	@140		Use with all trans.	1
78/	L	4	@140			1
73/	P	6	200	D0DZ 7902-A	#BW,FE	1
79	J	6	200			1
73/76	C,F,G	8	351	E04Y 7902-A	#BR,CS,DC,DD,DJ,DK,DL,DM,FG,FM	1
77/	V	8	302,351			1
76/	G	8	302			1
77/	A,F,J,P	8	302			1
77/	A,F,G	8	351	D70Z 7902-B	#DF, DX	1
78/	G	6	250	D8DZ 7902-A	#DH,FB	1
75/	L	6	⊕171	D8ZZ 7902-A	#CJ,CT,DZ,FA	1
77	L	4	@140			1
79	J	6	⊕171			1
73/	A,C,F,G,J,P,V	All	All	378941-S7	(MM-169-H)-nut(converter studs to flywheel)-3/8"-28	AR
74/	L	4	All	★357649-S8	Bolt(converter to flywheel)-3/8"-16 X 1 3/4"	4
				382535-S100	(MM-118-L)-nut-hex.-3/8"-16	2
				7976	HOUSING (CONVERTER)	
	⊕ 2800 cc					
73/77	P	6	200	C4TZ 7976-B	#C5GP 7976-A,D6BP 7976-AA	1
73/74	C - - column shift	6&8	250,302	★ D20Z 7976-B Not replaced	#D20P 7976-AA With PEE-AE or V trans.	1
75/76	G - - column shift	6&8	250,302			1
77	G - - column shift	6	250			1

YEAR	MODEL/RESTRICTIONS	ENGINE CYL.	ENGINE C.I.D. (C.C.D.)	PART NUMBER	DESCRIPTION	QTY.
				7976	HOUSING (CONVERTER) — Cont'd	
	⊕ 2800 cc					
73/74	C – – floor shift	6&8	250,302	C50Z 7976–A	#C50P 7976–A–use with PEE–AF or M trans.	1
75/76	G – – floor shift	6&8	250,302			1
73/76	P	6&8	250,302			1
77	G – – floor shift	6	250			1
77	P	6	250			1
73/74	C,F – – column shift	8	351	D80Z 7976–A	#D2AP 7976–AA,D6AP 7976–AA,D9AP 7976–BA	1
75/76	C	8	351W			1
76	G	8	302		With PEE–CA3 trans.	1
75/77	G – – column shift	8	351W			1
77/78	F	8	351W			1
77	V – – column shift	8	351			1
79	A	8	302		use w/PEE–DZ–EM trans.	1
79	A	8	351			1
75/	C,F	8	351M	D50Z 7976–A	#D50P 7976–BA	1
73/74	C – – floor shift	8	351	D3BZ 7976–A	#D3BP 7976–AA,D6TP 7976–AA	1
74/76	F – – floor shift	8	351W			1
75/77	G – – floor shift	8	351W			1
76	G,P	8	302		With PEE–CE1,CS,CT trans.	1
77	V – – console shift	8	351			1
73/74	J	6	All	★ D2RY 7976–A		1
		4	All	★ D2RY 7976–B Not replaced(10/80)		1
74/79	L	4	All	D4FZ 7976–A		1
75/79	J	4	All			1
75/	J,L	6	⊕171	D5FZ 7976–A		1
77/	F,G,V – – floor shift	8	302	D7BZ 7976–A	#D7BP 7976–AA	1
78/	G – – floor shift	6	250			1
77/	P	8	302			1
79	J	8	302			1
77/	F,G,V – – column shift	8	302	D80Z 7976–B	#D7DP 7976–AA,D9AP 7976–AA	1
78/	G – – column shift	6	250			1
79	A	8	302		use w/PEE–DZ1,EA,EMI,FB,FC trans.	1
78/	J,P	6	200	D8BZ 7976–B	#D8BP 7976–AA	1
73/74	J			379062–S	(BB–545–LB)–screw(housing to engine)	5
				630174–S71	Lockwasher(housing to engine)	5
				804129–S	Screw(housing to engine)	6
73/	A,C,F,G,J,P,V	6&8	All	57662–S2	(U–18–J)–bolt(housing to engine)–7/16"–14 X 1 3/4"	AR
				34793–S2	(X–67–A)–lockwasher–7/16"	AR
73/	A,C,F,G,J,P,V	6&8	A'LL	378785–S	(BB–545–L)–bolt(converter housing and front pump to case)–hex, washer head–3/8"–16 x 1 5/8"	7
73/74	J	4&6	All			5
73/	A,C,F,G,J,P,V	8	All	383013–S2	(II–106–NB)–bolt (converter housing to case)–hex, washer head–7/16"–14 x 1 1/4"	5
				379296–S	(BB–545–K)–bolt(pump to case)–hex. washer head–3/8"–16 x 1 3/8"	7
73/	A,C,F,G,J,L,P,V	6&8	250,302	379062–S	(BB–545–LB)–bolt(pump to case and housing to case)–3/8"–16 x 1 3/4"	7
73/74	J	4&6	All	388157–GS2	Bolt and lockwasher(converter housing to engine)–M10 x 48 (Metric)	6
74	L	4	122	N800012–S100	(AW–45)–screw stud (housing to engine)–3/8"–16 nut	2

COPYRIGHT © 1986 — FORD MOTOR COMPANY — DEARBORN, MICHIGAN

YEAR	MODEL/RESTRICTIONS	ENGINE CYL.	ENGINE C.I.D. (C.C.D.)	PART NUMBER	DESCRIPTION	QTY.
				7986	COVER (CONVERTER)	
	⊕ 2800 cc					
73/	C,F	8	302	C5AZ 7986-A		1
73/78	C,F	8	351W			1
76/	G,P	8	302			1
78/	G	6	250			1
79	J	8	302			1
73/	P	6	200	C5DZ 7986-A		1
73/77	G,P	6	250	C5DZ 7986-B		1
73/75	G,P	8	302			1
73	C,F	8	351M	C8SZ 7986-A		1
74	L	4	All	D4FZ 7986-A		1
75/78	L	6	All	D4ZZ 7986-A		1
79	J,L	6	All	D9ZZ 7986-A		1
75/	L,P	4	All	D4ZZ 7986-B		1
79	A	All	All	E2AZ 7986-A		1
73/	A,C,F,G,J,L,P,V	All	All	42789-S8	(UU-10)-screw & washer assy.-5/16"-18 x 3/4"	AR
73/74	J	4&6	All	★ D2RY 7986-B Not replaced(10/80)	SCREEN (AIR INLET CONVERTER HOUSING)	1
				7986	SCREEN (AIR OUTLET CONVERTER HOUSING)	
73/74	J	6	All	★ D2RY 7986-A		1
		4	All	★ D2RY 7986-C Not replaced(10/80)		1
73/74	J	4	All	388274-GS8	Screw-M4.2 attach 7986 to 7976	8
73/	A,C,F,G,J,L,P,V	All	All	386078-S	SEAL (DOWNSHIFT CONTROL LEVER OIL)	1

YEAR	MODEL/RESTRICTIONS	ENGINE CYL.	ENGINE C.I.D. (C.C.D.)	PART NUMBER	DESCRIPTION	QTY.
				7D000	TUBE (OIL DISTRIBUTOR)	
73/	A,C,D,F,K,Y	8	All	C6AZ 7D000-A	Inlet	1
				C6AZ 7D000-B	Outlet	1
73/75	A,C,D,F,K,Y	8	All	★ C8AZ 7D002-A Not replaced	SLEEVE (MAIN OIL PRESSURE BOOSTER)- 13/64" large I.D. x 7/8" O.D. x 1 5/64" long	1
75/77	A,C,D,F,K,Y	8	All	★ D6AZ 70002-A Not replaced	7/8" O.D. - 19/32" large I.D.-1 11/32" long	1
78	A,D,F,K	8	All	D8AZ 7D002-A	#2 Grooves on O.D.	1
				7005	CASE ASSY.	
	@ Use 7D080 valve primary pressure throttle control from old case assy.					
73	C,F	8	351	★ D3OZ 7005-B	Incl.(1)C7AZ 7E206-A retainer,(1) C6AZ 7D433-A shaft and(1)instruction sheet-r/b (1) each-D6UZ 7005-A, D3AZ 7F006-B, D4AZ 7A377-B, 378782-S	1
73	A,C,D,K,Y	8	400,429 460	E0UZ 7005-A	Incl. (1) C8AZ 7034-A Vent (1) C7AZ 7E206-A ret. (1) C6AZ 7D433-A shaft (1) instr. sheet	1
74	A,C,D,F,K,Y	8	400,460			1
75/78	A,C,D,F,K,Y	All	All			1
79	D,F,K	All	All			1
79	A	All	All	E0UZ 7005-B	Incl. (1) C7AZ 7E206-A, (1) C6AZ 7D433-A, and instruction sheet	1
73/74	C,F,Y	8	351			1
73/	A,C,D,F,K,Y	8	All	20470-S8	(B-107)-bolt(case to engine)-7/16"-14 x 1 1/2"	5
				20546-S8	(B-114)-bolt(case to engine)-7/16"-14 x 2 1/2"	2
				34793-S2	(X-67-A)-lockwasher-7/16"	6
				87650-S	(P-12)-plug(front servo holes)-1/8"-27 dryseal	2
				7D006	PLANET ASSY. (REVERSE)	
73/	A,C,D,K,Y	8	All	C6SZ 7D006-B	With four pinion gears	1
73/	A,C,D,F,K,Y	8	All	C6AZ 7D006-B	With three pinion gears	1
73/	A,C,D,F,K,Y	8	All	377155-S	(QQ-94-E)-ring(planet to drum)-5 7/32" dia.	1
73/	A,C,D,F,K,Y	8	All	D3AZ 7F006-B	CLIP (DUAL AREA DIAPHRAGM RETAINER) Use w/push-in type diaphragm	1
73/76	A,C,D,F,K,Y	8	All	D0AZ 7A008-E	PLATE (MAIN CONTROL SEPARATING)	1
				7A011	Serviced only in 7A039 extension	
73/	A,C,D,F,K,Y	8	All	C4AZ 7D011-A	RING (GOVERNOR HOUSING OIL SEAL)	3
				7D014	WASHER (FRONT PUMP SUPPORT THRUST)	
73/	A,C,D,F,K,Y	8	All	C6AZ 7D014-A	#1-.055" thick-selective fit	1
				C6AZ 7D014-B	#2-.074" thick	
				C6AZ 7D014-C	#3-.099" thick	
				C6AZ 7D014-D	#4-.104" thick	
				C6AZ 7D014-E	#5-.119" thick	
73/	A,C,D,F,K,Y	8	All	D2AZ 7017-A	SHAFT (INPUT)-30 teeth 7A360 end, 31 teeth 7902 end	1
73/	A,C,D,F,K,Y	8	All	C6AZ 7D019-A	SEAL (FORWARD CLUTCH CYLINDER)	2
				7A020	INDICATOR (OIL LEVEL)	
73	A,Y	8	400	D3AZ 7A020-A	#D3AP 7A020-BB-19 11/16" long	1
74	A,Y	8	400	D4AZ 7A020-A	#D4AP 7A020-AA	1

COPYRIGHT © 1986 — FORD MOTOR COMPANY — DEARBORN, MICHIGAN

YEAR	MODEL/RESTRICTIONS	ENGINE CYL.	ENGINE C.I.D. (C.C.D.)	PART NUMBER	DESCRIPTION	QTY.
				7A020	INDICATOR (OIL LEVEL) — Cont'd	
73/74	A,Y(P/C)	8	460	★ D3AZ 7A020-B Not replaced(3/81)	#D3AP 7A020-CA	1
73/74	A,Y(exc. P/C)	8	429,460	★ D3AZ 7A020-C Not replaced	#D3AP 7A020-DA	1
73/74	C	8	All	D30Z 7A020-A	#D30P 7A020-AA	1
73/74	K	8	All	D20Z 7A020-C		1
73/74	D,F	8	All	★ D3ZZ 7A020-A Not replaced	#D3ZP 7A020-AA	1
75	A,D,K,Y "Before 6/2/75"	8	400,460	D5AZ 7A020-B	#D5AP-BA	1
75/76	A,D,K,Y "From 6/2/75"	8	400,460	D6AZ 7A020-A	#D5AP 7A020-BB	1
77/78	A	8	All	D7AZ 7A020-A	#D7AP 7A020-AA	1
77/	D,K	8	All			1
79	A	8	All	D9AZ 7A020-C	#D9AP 7A020-C1A,C2A	1
75	C,F,Y "Before 6/2/75"	8	351,400, 460	★ D50Z 7A020-D Not replaced	#D50P-DA,D1A,D2A	1
75/76	C,F "From 6/2/75"	8	351,400, 460	D60Z 7A020-A	#D50P 7A020-DB	1
77/	F	8	All	D70Z 7A020-A	#D70P 7A020-A1A,A2A	1
				7D021	PISTON ASSY. (INTERMEDIATE BAND SERVO and RELATED PARTS)	

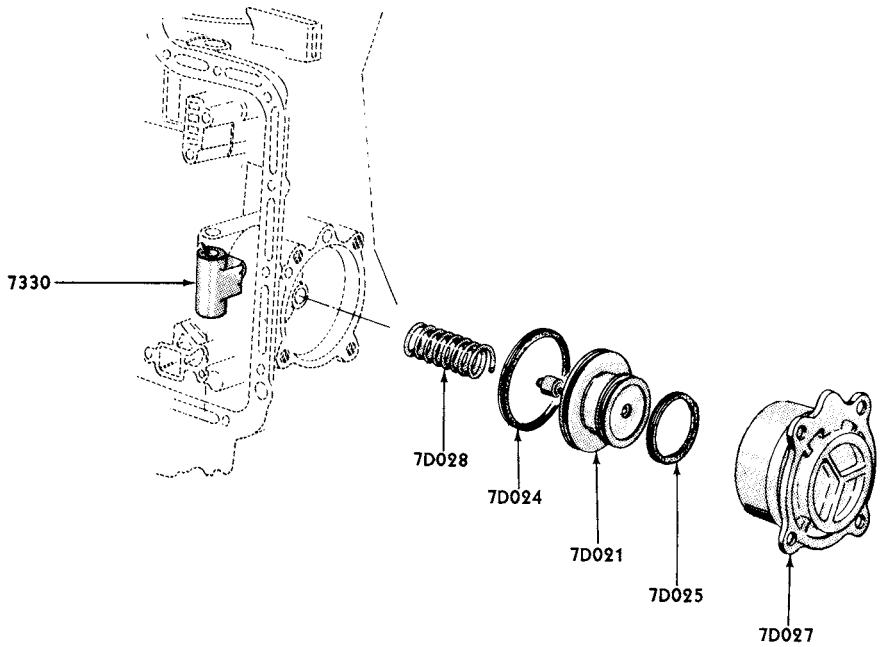

P-6299

YEAR	MODEL	ENGINE CYL.	ENGINE C.I.D.	QTY.	TRANSMISSION MODEL USAGE RESTRICTIONS	PISTON 7D021	SEAL 7D024	SEAL 7D025	CVR. 7D027	SPRG. 7D028	LEVER 7330
▲ Moulded rubber on piston and rod assy. 7D021											
73/74	A	8	400,429	1	Use with PJB trans.	1	5	9	10	14	18
			400,429,460	1	Use with PJA trans.	2	▲	▲	11	16	18
73/74	A,C	8	429,460	1	Use with PJC trans.	3	7	9	12	15	19
73	A	8	460	1	Use with PJD trans.	2	▲	▲	11	16A	18

YEAR	MODEL	ENGINE CYL.	ENGINE C.I.D.	QTY.	TRANSMISSION MODEL USAGE RESTRICTIONS	PISTON 7D021	SEAL 7D024	SEAL 7D025	CVR. 7D027	SPRG. 7D028	LEVER 7330
▲ Moulded rubber on piston and rod assy. 7D021 — Cont'd											
75	A	8	400	1	Use with PJA trans.	4A	▲	▲	13	14	18
75	A,C,Y	8	460	1	Use with PJC–H9,J3 trans.	21	▲	▲	22	15	18
				1	Use with PJC–K2,L trans.	21	▲	▲	22	16	18
74/75	A	8	460	1	Use with PJD trans.	21	▲	▲	22	16	23
76	A	8	400	1	Use with PJA–P trans.	4A	▲	▲	13	16B	23
76	A	8	400	1	Use with PJA–C trans.	4A	▲	▲	13	16	17
76	A	8	460	1	Use with PJC trans.	4B	▲	▲	22	15	18
76	A	8	460	1	Use with PJD trans.	4B	▲	▲	22	15	23
77	A	8	351,400	1	Use with PJA–C13,BU trans.	4A	▲	▲	13	14	17
77	A	8	400	1	Use with PJA–BH,BV trans.	4A	▲	▲	13	16	17
77	A	8	460	1	Use with PJD trans.	4D	▲	▲	13A	14	23
77	A	8	460	1	Use with PJC trans.	4B	▲	▲	22	15	18
78	A	8	351,400	1	Use with PJA–BH3 trans.	4A	▲	▲	13	16	23
78	A	8	351,400	1	Use with PJA–BU trans.	4A	▲	▲	13	14	17
78	A	8	400	1	Use with PJA–C17 trans.	4D	▲	▲	13A	14	23
78	A	8	460	1	Use with PJC trans.	4B	▲	▲	22	16B	18
78	A	8	460	1	Use with PJD trans.	4B	▲	▲	22	15	23
79	A	8	351	1	Use with PGD–BH,CF,CH,CU trans.	4A	▲	▲	13	16	23
79	A	8	351	1	Use with PGD–CF1,CT trans.	4A	▲	▲	13	14	23
79	A	8	351	1	Use with PGD–BZ–CR trans.	4D	▲	▲	13A	16	17
73/74	C	8	351	1	Use with PGA–AW or AY trans.	4	▲	▲	13	1 4	17
			351	1	Use with PGA–AF or AG trans.	3	7	8	12	15	20
73/74	C	8	400,429	1	Use with PJA trans.	2	▲	▲	11	15	18
74/75	C	8	460	1	Use with PJD trans.	21	▲	▲	22	16	23
75	C	8	351	1	Use with PJA trans.	4A	▲	▲	13	14	17
			400	1	Use with PJA trans.	4A	▲	▲	13	14	18
76	C	8	351	1	Use with PJA trans.	4A	▲	▲	13	14	23
			400	1	Use with PJA–R trans.	4A	▲	▲	13	16B	23
76	C	8	400	1	Use with PJA–G trans.	4A	▲	▲	13	16	17
76	C	8	460	1	Use with PJC trans.	4B	▲	▲	22	15	18
76	C	8	460	1	Use with PJD trans.	4B	▲	▲	22	15	23
73	D	8	460	1		2	▲	▲	11	16	18
74/75	D	8	460	1		21	▲	▲	22	16	23
76	D	8	460	1		4B	▲	▲	22	15	23
77	D	8	400	1	Use with PJA–BL trans.	4A	▲	▲	13	16	17
77	D	8	400	1	Use with PJA–CA trans.	4A	▲	▲	13	14	17
77	D	8	460	1		4D	▲	▲	13A	14	23
78	D	8	400	1	Use with PJA–CC trans.	4A	▲	▲	13	16	23
78	D	8	400	1	Use with PJA–CA3 trans.	4D	▲	▲	13A	14	23
78	D	8	460	1	Use with PJD trans.	4B	▲	▲	22	15	23
79	D	8	400	1		4D	▲	▲	13A	14	23
73/74	F	8	351–4/B	1	Use with PGA–AU trans.	3	6	8	12	15	20
			351–2B	1	Use with PGA–AV trans.	4	▲	▲	13	14	17
74	F	8	400	1		2	▲	▲	11	15	18
75	F	8	351	1		4A	▲	▲	13	14	17
75	F	8	400	1	Use with PJA trans.	4A	▲	▲	13	14	18
74/75	F	8	460	1	Use with PJD trans.	21	▲	▲	22	16	23
76	F	8	351	1	Use with PJA trans.	4A	▲	▲	13	16B	23
			400	1	Use with PJA–R,S trans.	4A	▲	▲	13	16B	23
76	F	8	400	1	Use with PJA–G,H trans.	4A	▲	▲	13	16	17
76	F	8	460	1	Use with PJD trans.	4B	▲	▲	22	15	23
77	F	8	400	1	Use with PJA–BJ,R4,54 trans.	4A	▲	▲	13	16	17
77	F	8	351	1	Use with PJA, AU trans.	4A	▲	▲	13	14	23
77	F	8	400	1	Use with PJA–G11,H12 trans.	4A	▲	▲	13	14	17
78/	F	8	351,400	1	Use with PJA–BJ3,DK trans.	4A	▲	▲	13	16	23
78	F	8	400	1	Use with PJA–G15,H16 trans.	4D	▲	▲	13A	14	23
73	K	8	460	1		2	▲	▲	11	16	18
			460	1	Use with PJD trans.	2	▲	▲	11	16A	18
74/75	K	8	460	1	Use with PJD trans.	21	▲	▲	22	16	23

COPYRIGHT © 1986 — FORD MOTOR COMPANY — DEARBORN, MICHIGAN

YEAR	MODEL	ENGINE CYL.	ENGINE C.I.D.	QTY.	TRANSMISSION MODEL USAGE RESTRICTIONS	PISTON 7D021	SEAL 7D024	SEAL 7D025	CVR. 7D027	SPRG. 7D028	LEVER 7330
▲ Moulded rubber on piston and rod assy. 7D021 — Cont'd											
76	K	8	460	1		4B	▲	▲	22	15	23
77	K	8	400	1	Use with PJA-BK trans.	4A	▲	▲	13	16	17
77	K	8	400	1	Use with PJA-BW trans.	4A	▲	▲	13	14	17
77	K	8	460	1		4D	▲	▲	13A	14	23
78	K	8	400	1	Use with PJA-CB trans.	4A	▲	▲	13	16	23
78	K	8	400	1	Use with PJA-BW3 trans.	4D	▲	▲	13A	14	23
78	K	8	460	1	Use with PJD trans.	4B	▲	▲	22	15	23
79	K	8	400	1		4D	▲	▲	13A	14	23
73/74	Y	8	400,429,460	1	Use with PJA trans.	2	▲	▲	11	16	18
			400,429	1	Use with PJB trans.	1	5	9	10	15	18
73	Y	8	460	1	Use with PJD trans.	2	▲	▲	11	16A	18
73/74	Y	8	460	1	Use with PJC trans.	3	7	9	12	15	19
75	Y	8	400	1	Use with PJA trans.	4A	▲	▲	13	14	18
74/75	Y	8	460	1	Use with PJD trans.	21	▲	▲	22	16	23
76	Y	8	400	1	Use with PJA-P trans.	4A	▲	▲	13	16B	23
76	Y	8	400	1	Use with PJA-C trans.	4A	▲	▲	13	16	17
76	Y	8	460	1	Use with PJC trans.	4B	▲	▲	22	15	18
76	Y	8	460	1	Use with PJD trans.	4B	▲	▲	22	15	23

CODE NO.	PART NUMBER	DESCRIPTION	CODE NO.	PART NUMBER	DESCRIPTION
			7D021	PISTON ASSY. (INTERMEDIATE SERVO) — Cont'd	
1	C6AZ 7D021-A	#RF C6AP 7D022-A	10	C6AZ 7D027-A	#C6AP 7D027-A or D
2	★C8VY 7D021-B	#C8VP 7E221-C	11	C8VY 7D027-C	#C8VP 7D027-C
	r/bD5TZ 7D021-A(8/76)		12	D10Z 7D027-A	#D10P 7D027-AA or J
3	★D10Z 7D021-A	#RF D10P 7D022-AA	13	D3AZ 7D027-A	#D3AP 7D027-AA or N
	Not repl'd(2/81)		13A	D7AZ 7D027-A	#S
4	★D3AZ 7D021-B	#RF D3AP 7E221-AA	14	C8SZ 7D028-B	#Yellow
	r/bD5UZ 7D021-A		15	D10Z 7D028-A	#Green-2 5/8" free length-8 3/4 coils
4A	D5UZ 7D021-A	#D5UP 7E221-BA	16	D1AZ 7D028-A	#Brown-2 9/16" free length-10 1/2 coils
4B	D5TZ 7D021-B	#D5TP 7E221-DA			
4C	D5TZ 7D021-A	#D5TP 7E221-CA and green dye	16A	★C7AZ 7D028-A	
4D	D7AZ 7D021-A	#D7TP 7E221-AA		r/bD60Z 7D028-A (2/77)	
5	★C6AZ 7D024-E	#White, round cut lip-2 11/16" dia.	16B	D60Z 7D028-A	#Pink
	Not repl'd		17	C6AZ 7330-B	#B
6	★D10Z 7D024-A	#Blue-2 11/32" I.D.	18	C6AZ 7330-D	#E
	Not repl'd(10/80)		19	C6AZ 7330-E	#F
7	★D2AZ 7D024-A	#Yellow-2 25/64" dia.	20	★C6VY 7330-A	#D Not replaced (10/78)
	Not repl'd(10/80)		21	★D4LY 7D021-A	#D4LP 7E221-AA
8	C6AZ 7D025-E	1 13/16" I.D.		r/bD5TZ 7D021-B (2/77)	
9	★D2AZ 7D025-A	#Yellow-1 3/4" I.D.	22	D4LY 7D027-A	#P
	Not repl'd(10/80)		23	D4AZ 7330-A	#A

YEAR	MODEL/RESTRICTIONS	ENGINE CYL.	ENGINE C.I.D. (C.C.D.)	PART NUMBER	DESCRIPTION	QTY.
				7D024	SEAL (INTERMEDIATE BAND SERVO PISTON COVER)-3" I.D.	
73/79	A,C,D,F,K,Y	8	All	D5TZ 7D024-B	#2 white stripes	1
				7D024-5	SEAL (INTERMEDIATE BAND SERVO PISTON OIL)-Refer to group 7D021	
				7025	BUSHING (CASE)-Serviced only in 7005 case	
73/	A,C,D,F,K,Y	8	All	C6AZ 7D025-A	SEAL(INTERMEDIATE BRAKE DRUM)-2 7/8" dia.	2
				7D026	GASKET (INTERMEDIATE BAND SERVO COVER)	
73/	A,C,D,F,K,Y	8	All	D4AZ 7D026-A		1
				7D027	COVER (INTERMEDIATE BAND SERVO PISTON)-Refer to group 7D021	
73/	A,C,D,F,K,Y	8	All	57633-S2	(U-10-A)-screw & lockwasher(cover to case)-hex.hd.-5/16"-18 x 3/4	4

YEAR	MODEL/RESTRICTIONS	ENGINE CYL.	ENGINE C.I.D. (C.C.D.)	PART NUMBER	DESCRIPTION	QTY.
				7D028	SPRING (INTERMEDIATE BAND SERVO PISTON)-Refer to group 7D021	
				7D029	STRUT (INTERMEDIATE BAND)	
73/	A,C,D,F,K,Y	8	All	C6AZ 7D029-C	Actuating	1
				C6AZ 7D430-C	Anchor	1
73/	A,C,D,F,K,Y	8	All	D0AZ 7034-B	TUBE (BREATHER)	1
				7A034	BUSHING (EXTENSION HOUSING)	
73/	A,C,D,F,K,Y	8	All	B5AZ 7A034-A	1 13/16" O.D. x 2 1/2" long	1
				7D034	BAND (INTERMEDIATE SERVO)	
73/79	A,C,D,F,K,Y	All	All	D9AZ 7D034-B		1
				7A039	HOUSING (EXTENSION)	
73/74	A,C,F,Y	8	351,400, 429,460	D1AZ 7A039-A	All exc. PJC-H trans.	1
75/78	A,C,F,Y	8	351,400, 460	D5AZ 7A039-B	Use with PJA,PJD trans.	1
79	A,F	8	All			1
73/74	A	8	460	★ D5AZ 7A039-C	Use with PJC-H trans.	1
75/76	A,C,Y	8	460	Not replaced	Use with PJC trans.	1
77/78	A	8	460		Use with PJC-M trans.	1
73/	D,K	8	All	D5VY 7A039-A		1
77	A	8	460		Use with PJC-H trans.	1
73/	A,C,D,F,K,Y	8	All	380207-S	(BB-545-G)-bolt-hex. hd.-3/8"-16 x 1 1/4"	2
				380209-S	(BB-545-H)-bolt-hex. hd.-3/8"-16 x 1 5/16"	4
				7D044	DRUM ASSY. (INTERMEDIATE BRAKE)	
73/74	A,C,D,F,K,Y	8	351,400, 429,460	C9AZ 7D044-A	Use with PGA,PJA,PJB and PJD trans.	1
75/	A,C,D,F,K,Y	8	All		All exc. PJC-H9,J3,K2,L	1
73/74	A,C,F,Y	8	460	C9SZ 7D044-A	Use with PJC trans.	1
75/78	A,C,Y	8	460		Use with PJC-H9,J3,K2,L	1
				7D046	BUSHING (INTERMEDIATE BRAKE DRUM)	
73/	A,C,D,F,K,Y	8	All	C6AZ 7D046-B	Front-2 15/16" I.D. x 3 1/8" O.D. x 3/8" wide	1
				C6AZ 7D046-A	Rear-2 3/4" I.D. x 2 7/8" O.D. x 1 1/4" wide	1
				7052	SEAL (EXTENSION HOUSING OIL)	
73/	A,C,D,F,K,Y	8	All	D5AZ 7052-A		1
				7060	SHAFT (OUTPUT)	
73/76	A,C,F,Y	8	All	D6AZ 7060-A	23 3/16" long-25-34-36 teeth-31 splines-	1
79	A	8	All		8 tooth speedo. gear rolled on shaft incl. (1) D6TZ 7A233-A gear, (1) D3TZ 7B368-A washer, (1) 387031-S5 ring, (1) 387035-S5 ring	1
73/78	A,Y	8	460	D6VY 7060-A	26 3/4" long 25-34-36 teeth-31 splines-9 tooth	1
73/79	D,K	8	All		speedo. gear rolled on shaft-incl. (1) D6TZ 7A233-A gear, (1) D3TZ 7B368-A washer, (1) 387031-S5 ring and (1) 387035-S5 ring	1

COPYRIGHT © 1986 — FORD MOTOR COMPANY — DEARBORN, MICHIGAN

YEAR	MODEL/RESTRICTIONS	ENGINE CYL.	ENGINE C.I.D. (C.C.D.)	PART NUMBER	DESCRIPTION	QTY.
				7060	shaft (output) — Cont'd	
77/78	A,F	8	All	D7AZ 7060-B	Use with PJA,PJD trans. 23 3/16" long-25-34-36 teeth-31 splines-9 tooth speedo.gear rolled on shaft	1
73/76		All	All	377137-S	(QQ-16-E)-#no identification-ring retaining (retains 7D164 to 7060)-3/64" thick-1 11/32" I.D. x 1 23/64" O.D.	1
76/		All	All	387031-S5	(QQ-16-EA)-#Copper flash plate-ring retaining(retains 7D164 to 7060)-5/64" thick-1 11/32" I.D. x 1 23/64" O.D.-use with D6AZ 7060-A and D6VY 7060-A shafts only	1
73/76		All	All	377138-S	(QQ-16-F)-#no identification-ring retaining (retains 7C063 to 7060)-3/64" thick-1 27/64" I.D. x 1 43/64" O.D.	1
76/		All	All	387035-S5	(QQ-16-FA)-#Copper flash plate-ring retaining (7C063 to 7060)-5/64" thick-1 27/64" I.D. x 1 43/64" O.D.-use with D6AZ 7060-A and D6VY 7060-A shafts only	1
73/	A,C,D,F,K,Y	8	All	C6AZ 7E062-A	GASKET (OIL PAN SCREEN)-Also serviced in kit-group 7153	1
				7C063	BODY ASSY. (GOVERNOR)	
73/74	C	8	351	★ C6AZ 7C063-A	Use with PGA-AF or AG trans.	1
73/74	F	8	351	Not replaced	Use with PGA-AU	1
73/74	A,C,Y	8	460	★ C7AZ 7C063-A Not replaced(1/81)	Use with PJC trans.	1
73/74	A,Y	8	400,429	D30Z 7C063-C	#Green paint-use with PJA,PJB- C1,F1,K	1
73	A,D,K,Y	8	460		Use with PJD-E2,F2,G1	1
73/74	C,F	8	351,400, 429		Use with PGA-AV2,AW1,AY1,PJA,PJB-A1,B1 trans.	1
73/74	A,Y	8	429	D3TZ 7C063-B	#Brown paint-use with PJB-C2	1
73	A,D,K,Y	8	460		Use with PJD-E3,F3,F4,G2,G3	1
73/74	C	8	429		Use with PJB-A2,B2 trans.	1
74	A,C,D,F,K,Y	8	460	C9AZ 7C063-A	Use with PJD trans.	1
75/76	A,C,D,F,K,Y	8	All	D5AZ 7C063-A	#Pink paint	1
77	A	8	400,460	D7AZ 7C063-A	#Pink paint or #1	1
77	F	8	400			1
77	D,K	8	460			1
77	A,D,K	8	400	D7AZ 7C063-C	#Green paint or #3	1
77	F	8	351			1
78	A	8	400,460	D8AZ 7C063-A	#Pink paint or #10	1
79	A	8	351			1
78/	F	8	351,400			1
78/	D,K	8	400,460			1
78	A	8	460	D8AZ 7C063-B	#Black paint or #11	1
78/	A	8	351,400	D8AZ 7C063-C	#Green paint or #12	1
78/	D,F,K	8	400			1
79	D,K	8	400	D8TZ 7C063-A	#Purple paint or #17	1
73/	A,C,D,F,K,Y	8	All	20344-S8	(B-42)-body to 7D220 oil collector)-1/4"-20 x 3/4"	4
				34805-S8	(X-62)-lockwasher-1/4"	4
73/	A,C,D,F,K,Y	8	All	C6AZ 7D063-A	GEAR ASSY. (SUN)-34 teeth-2 1/16" dia. x 2 7/8" long	1
73/	A,C,D,F,K,Y	8	All	C6AZ 7D064-A	SHELL (INPUT)-34 internal teeth-7 3/8" dia. x 3" wide at center	1
				377300-S	(QQ-105)-ring (shell to sun gear)-2" dia. retaining	2

YEAR	MODEL/RESTRICTIONS	ENGINE CYL.	ENGINE C.I.D. (C.C.D.)	PART NUMBER	DESCRIPTION	QTY.
				7B066	PLATE (CLUTCH PRESSURE)	
73/	A,C,D,F,K,Y	8	All	C6AZ 7B066–A	#Triangle depression on face of plate–forward clutch–front plate	1
				C6AZ 7B066–B	#Triangle depression on one tooth–forward clutch–rear plate–direct drive clutch	1
				C6AZ 7B066–C	#Flat surface on both sides–reverse clutch–7/16" thick	1
73/	A,C,D,F,K,Y	8	All	C6AZ 7D066–A	WASHER (INPUT SHELL THRUST)– 3 3/4" dia. x .040" thick	1
				7B067	HUB (CLUTCH)	
73/76	A,C,D,F,K,Y	8	All	C6AZ 7B067–D	Forward ring gear –1" thick – with 11/64" x 17/64" step on flange –74 teeth–4 1/2" O.D.	1
76/	A,C,D,F,K,Y	8	All	D6AZ 7B067–A	Forward ring gear – 59/64" thick –w/out 11/64" x 17/64" step on flange– 74 teeth–4 1/2" O.D.	1
73/	A,C,D,F,K,Y	8	All	C6AZ 7B067–B	Reverse clutch–72 teeth – 5 1/2" O.D. 3 7/16" long–incl. race, pins and hub	1
73/77	A,C,D,F,K,Y	8	All	D2AZ 7D069–A	PLUNGER (MANUAL VALVE DETENT)–5/16" 5/16" dia. x 61/64" long	1
				7B070	SPRING (FORWARD CLUTCH PISTON DISC)	
73/76	A,C,D,F,K,Y "Before 5/1/76"	8	All	C6AZ 7B070–B	5/64" thick	1
76/79	A,C,D,F,K,Y "From 5/1/76 to 1/3/79"	All	All	D6AZ 7B070–A	3/32" thick–use w/D6AZ 7A360–A cyl. only	1
79	A,D,F,K "From 1/3/79"	All	All	D9AZ 7B070–A	5/64" thick–use w/D9AZ 7A360–A cyl. only	1
73/		All	All	377127–S	(QQ–96)–(retains spring disc in cylinder)– 6 21/32" dia.	1
73/	A,C,D,F,K,Y	8	All	C6AZ 7D070–B	SPRING (PARKING PAWL RETURN)	1
73/	A,C,D,F,K,Y	8	All	C6AZ 7D071–A	SHAFT (PARKING PAWL)–1 13/16" long x 1/2" dia.	1
73/	A,C,D,F,K,Y	8	All	D5AZ 7D080–A	VALVE (THROTTLE CONTROL)	1
73/76	A,C,D,F,K,Y	8	All	C6AZ 7E080–A	RETAINER (REVERSE CLUTCH PISTON BALL CHECK)	1
				7E085	SPRING (CLUTCH PRESSURE)	
76/78	A,C,D,F,K,Y "Before 12/15/77"	8	All	D6AZ 7E085–A	Reverse clutch – 6 7/8" O.D. – 5 21/32" I.D. six waves equally spaced	1
78/	A,D,F,K "From 12/15/77"	8	All	D8AZ 7E085–A	Reverse clutch – 6 7/8" O.D. – 5 49/64" I.D. – eight waves equally spaced	1
76/	A,C,D,F,K,Y	8	All	D6AZ 7E085–B	Forward clutch – 4 teeth in a 26 tooth blank	1
73/	A,C,D,F,K,Y	8	All	C6AZ 7086–A	GASKET (EXTENSION HOUSING)–Also serviced in kit–group 7153	1
73/	A,C,D,F,K,Y	8	All	D0AZ 7A089–A	CLUTCH KIT (OVERRUNNING)	1
	Consists of 16–Roller			1–Spring assy.	1–Bushing	
73/	A,C,D,F,K,Y	8	All	C9AZ 7D090–A	WASHER (FORWARD CLUTCH HUB THRUST)–2 3/16" I.D. x 2 7/8" O.D.	1
73/	A,C,D,F,K,Y	8	All	C6AZ 7C096–A	WASHER (INTERMEDIATE BRAKE DRUM THRUST)–2 13/16" I.D. x 3 13/16" O.D.	1
				7A098	SCREEN ASSY. (OIL PAN)	
73/74	C,F	8	All	C6AZ 7A098–B	*FT–37–A–incl.(1)C6AZ 7A191–B gasket	1
73/74	A,Y	8	All		Use with PJA,PJB,PJC trans.	1
73/74	D,K	8	All	C6VY 7A098–B	*FT–38–A–incl.(1)C6AZ 7A191–B gasket	1
73/74	A,Y	8	All		Use with PJD trans.	1
75/	A,C,D,F,K,Y	8	All	D5AZ 7A098–B	*FT–52–incl. (1) C6AZ 7A191–B gasket	1

COPYRIGHT © 1986 — FORD MOTOR COMPANY — DEARBORN, MICHIGAN

YEAR	MODEL/RESTRICTIONS	ENGINE CYL.	ENGINE C.I.D. (C.C.D.)	PART NUMBER	DESCRIPTION	QTY.
				7C099	SEAL (CLUTCH PISTON OIL INNER)-Also serviced in kit-group 7153	
73/	A,C,D,F,K,Y	8	All	C8AZ 7C099-A	Direct clutch	1
				C7AZ 7D404-A	Reverse clutch	1
				377130-S94	(KK-52-C)-forward clutch-"O" ring	1
				7A100	CONTROL ASSY. (MAIN)	

MAIN CONTROL IDENTIFICATION CHART

An identification number appears on a metal tag at the lower end of the main control assembly. The following chart will provide quick identification of the service part number when the identification number is known. The main control assembly may also be selected by year, model and description under group 7A100 which follows this chart.

IDENTIFICATION	PART NUMBER	IDENTIFICATION	PART NUMBER
#CX	D2AZ 7A100-C	#HJ,HS	D5AZ 7A100-C
#CX1,DM	D4AZ 7A100-D	#JD,KM	D7AZ 7A100-A
#CY,DS	D2SZ 7A100-A	#JT	D6AZ 7A100-C
#DG,DW	D3AZ 7A100-F	#JX,KK	D7UZ 7A100-B
#DH	D30Z 7A100-D	#JZ,KG	D7AZ 7A100-D
#DJ	D3VY 7A100-A	#KB,KL	D7AZ 7A100-C
#DK,DU	D3AZ 7A100-B	#LA	D8AZ 7A100-A
#DP,FS	D30Z 7A100-D	#LD	D8AZ 7A100-C
#FT	D3AZ 7A100-B	#LS	D9TZ 7A100-C
#FU	D4AZ 7A100-D	#KZ,LW,MC	D9AZ 7A100-A
#FW,GC	D3AZ 7A100-F	#MA	D9AZ 7A100-B
#HH,HP	D5AZ 7A100-A		

YEAR	MODEL/RESTRICTIONS	ENGINE CYL.	ENGINE C.I.D. (C.C.D.)	PART NUMBER	DESCRIPTION	QTY.
				7A100	CONTROL ASSY. (MAIN) — Cont'd	
73/74	A,C,Y	8	400	★ D3AZ 7A100-B Not replaced(10/80)	#DK,DU,FT	1
73	A,C,Y	8	429,460	★ D3AZ 7A100-F	#DG,#DW,FW	1
74	A,C,F,Y	8	400	Not replaced		1
73	D,K	8	All		#DJ,GC	1
73/74	A,C,D,F,K,Y	8	351-4/B, 460	★ D4AZ 7A100-D Not replaced	#CS,CW,CX,CX1,CY,CZ,DM,FU	1
73/74	C,F	8	351-2/B	★ D30Z 7A100-D Not replaced(10/80)	#DH,#DP,FS	1
75	A,C,D,F,K,Y	8	351,460	D5AZ 7A100-C	#HJ,HS	1
75	A,C,D,F,K,Y	8	400,460	D5AZ 7A100-A	#HH,HP	1
76	A,C,D,F,K,Y "Before 4/1/76"	8	All		#HP	1
76	A,C,D,F,K,Y, "From 4/1/76"	8	All	D6AZ 7A100-C	#JT	1
77	A	8	460	D7AZ 7A100-A	#JD,KM-use with PJC trans.	1
77	A,F	8	400	D7AZ 7A100-C	#KB,KL	1
77	A	8	460		use with PJD trans.	1
77	D,K	8	460			1
77	F	8	351	★ D7AZ 7A100-D	#JZ,KG-not replaced	1
77	A,D,F,K	8	400,460	D7UZ 7A100-B	#JX,KK	1
77	F	8	351			1
78	A	8	460	D8AZ 7A100-C	#LD	1
78/79	A,D,F,K	8	351,400, 460	D9AZ 7A100-B	#LA,MA	1
78/79	A	8	351,400	D9AZ 7A100-A	#KZ,LW,MC	1
78/79	D,F,K	8	400			1

YEAR	MODEL/RESTRICTIONS	ENGINE CYL.	ENGINE C.I.D. (C.C.D.)	PART NUMBER	DESCRIPTION	QTY.
				7A100	CONTROL ASSY. (MAIN) — Cont'd	
79	D,K	8	400	D9TZ 7A100–C	#LS	1
73/	A,C,D,F,K,Y	8	All	20464–S	(B–43–EA)–bolt(main control to case) –1/4"–20 x 1 1/2"	2
				20384–S	(B–43)–bolt–1/4"–20 x 1"	6
74/	A,C,D,F,K,Y	8	All	380919–S	(BB–541–HM)–screw–No. 10–24 x 1 3/8"–hex. washer head	AR
				385475–S	(BB–121–G)–screw–No. 10–24 x 1/2"–hex. head	AR
				385476–S	(BB–541–HH)–screw–No. 10–24 x 15/16"–hex. washer head	AR
				7D100	GASKET (VALVE BODY SEPARATOR PLATE)	
73/76	A,C,D,F,K,Y "Before 4/1/76"	8	All	D5AZ 7D100–A		1
76	A,C,D,F,K,Y "From 4/1/76"	8	All	D6AZ 7D100–A	Use with 7A100 assy. ident. "JT"	1
77/	A,D,F,K	8	All			1
73/	A,C,D,F,K,Y	8	All	C8AZ 7A103–B	PUMP ASSY. (FRONT OIL) 5	
73/	A,C,D,F,K,Y	8	All	C9AZ 7A108–A	SUPPORT ASSY. (FRONT PUMP)	1
				58619–S2	(BB–55–C)–bolt(support to pump)–5/16"–18 x 3/4"	5
73/	A,C,D,F,K,Y	8	All	E0TZ 7A115–A	LEVER ASSY. (MANUAL CONTROL VALVE DETENT)	1
				377330–S	(MM–169–K)–nut (lever to 7A256 lever)–9/16"–18	1
73/	A,C,D,F,K,Y	8	All	E0AZ 7A136–B	GASKET (FRONT OIL PUMP TO CASE)–Also serviced in kit–group 7153	1
				7153	GASKET and OIL SEAL KIT	
	▲ For PJC trans. order (1) D2AZ 7D024–A SEAL					
73/	▲A,C,D,F,K,Y	All	All	D7AZ 7153–A		1

Consists of

OIL SEALS	OIL SEALS	GASKETS	"O" RINGS
3–C4AZ 7D011–A	1–C8AZ 7C099–A		
2–C6AZ 7D019–A	1–C2AZ 7A248–A	1–D4AZ 7D026–A	1–87034–S94
1–C6AZ 7D024–E	1–C6AZ 7A248–A	1–C6AZ 7E062–A	1–87056–S94
1–C6AZ 7D024–H	1–C8AZ 7D403–A	1–C6AZ 7086–A	1–377130–S94
1–D10Z 7D024–A	1–C7AZ 7D404–A	1–D5AZ 7D100–A	1–377159–S
1–D5TZ 7D024–B	1–D5AZ 7B498–A	1–D6AZ 7D100–A	1–386078–S
2–C6AZ 7D025–A	1–C6AZ 7A548–A	1–C6AZ 7A136–A	INSULATOR
1–C6AZ 7D025–E	1–C8AZ 7A548–C	1–C6AZ 7A191–B	1–D5AZ–7341–A
1–C6AZ 7D025–G	1–D6AZ 7A548–A	1–C1AP 7B426–A	
1–C6AZ 7D025–J		1–D2AZ 7B426–A	1–INSTRUCTION SHEET

73/	A,C,D,F,K,Y	8	All	C6AZ 7A153–A	GEAR (OUTPUT SHAFT RING)–74 teeth–5" dia. x 1 11/16" long	1
				377132–S	(QQ–94–A)–ring(gear to hub)–retaining 4 21/32" dia.	1

COPYRIGHT © 1986 — FORD MOTOR COMPANY — DEARBORN, MICHIGAN

YEAR	MODEL/RESTRICTIONS	ENGINE CYL.	ENGINE C.I.D. (C.C.D.)	PART NUMBER	DESCRIPTION	QTY.
				7B164	PLATE (CLUTCH INTERNAL and EXTERNAL SPLINE)	
	FRONT (FORWARD) CLUTCH					
73/76	A,C,F,Y "Before 4/1/76"	8	351,400, 429	D2AZ 7B164–A	Internal friction – #Dark brown lining .061/.065 thick	3
73/76	A,C,D,K,Y "Before 4/1/76"	8	460			4
73/76	A,C,F,Y "Before 4/1/76"	8	351,400, 429	C6AZ 7B442–C	External–steel–#Blue or yellow stripe	2
73/76	A,C,D,K,Y "Before 4/1/76"	8	460			3
76/	A,C,D,F,K,Y "From 4/1/76"	8	All	D6AZ 7B164–B	Internal–friction –#Light beige lining .075/.079 thick	4
76/	A,C,D,F,K,Y "From 4/1/76"	8	All	C6AZ 7B442–A	External – Steel	4
	DIRECT (HIGH) CLUTCH					
73/	A,C,F,Y	8	351,400, 429	C8AZ 7B164–H	Internal–friction	3
73/	A,C,D,K,Y	8	460			4
73/	A,C,F,Y	8	351,400, 429	C6AZ 7B442–A	External–steel	3
73/	A,C,D,K,Y	8	460			4
	REVERSE CLUTCH					
73/76	A,C,Y	8	400,429	C6AZ 7B164–C	Internal–friction–use with PJB trans.–#Dark brown lining	5
73/76	A,C,D,K,Y	8	460			5
73/76	C,F	8	351			4
73/76	A,C,F,Y	8	400,429		Use with PJA trans.	4
73/76	A,C,Y	8	400,429	C6AZ 7B442–B	External–steel–use with PJB trans.	5
73/76	A,C,D,K,Y	8	460			5
73/76	C,F	8	351			4
73/76	A,C,F,Y	8	400,429		Use with PJA trans.	4
76/	A,C,D,F,K,Y	8	All	D6AZ 7B164–A	Internal–friction #Cream color lining	5
76/	A,C,D,F,K,Y	8	All	C6AZ 7B442–B	External–steel	5
73/	A,C,D,F,K,Y	8	All		snap ring–clutch plate retaining–forward and direct clutch–selective fit	
				377437–S	(QQ–98–H)–.058" thick	AR
				377126–S	(QQ–95)–.067" thick	AR
				377127–S	(QQ–96)–.076" thick	AR
				377128–S	(QQ–97)–.085" thick	AR
				377444–S	(QQ–98–B)–.094" thick	AR
				386841–S	(QQ–100–E)Forward clutch–.112 thick	AR
				386842–S	(QQ–100–F)Forward clutch–.130 thick	AR
				385046–S100	(BB–429–WR)–reverse clutch–non–selective–.076" thick	1
73/	A,C,D,F,K,Y	8	All	C9AZ 7D164–A	HUB (OUTPUT SHAFT)–74 helical teeth 34 splines	1
				7A166	WASHER (PLANET CARRIER THRUST)	
73/74	A,C,D,K	8	460	C6SZ 7A166–A	#4 tabs–use on reverse planet carrier front and rear	2
75/	A,C,Y	8	460		Use with PJC–H9,J3,K2,L	2
73/74	C,F	8	351	C6AZ 7A166–A	#6 tabs–use on forward planet carrier	1
73/74	A,C,Y	8	400,419			1
75/	A,C,D,F,K,Y	8	All		use on reverse & forward planet carrier–all exc. PJC–H9,J3,K2,L	AR
73/	A,C,D,F,K,Y	8	All	C6AZ 7D167–A	BOLT (OVERRUNNING CLUTCH TO CASE)–hex. head–5/16"–24 x 2"	5
73/	A,C,D,F,K,Y	8	All	C9AZ 7D171–A	RACE (OVERRUNNING CLUTCH INNER)	1

YEAR	MODEL/RESTRICTIONS	ENGINE CYL.	ENGINE C.I.D. (C.C.D.)	PART NUMBER	DESCRIPTION	QTY.
73/	A,C,D,F,K,Y	8	All	C6AZ 7A178-A	SCREW (REVERSE BAND ADJUSTING)	1
				375185-S100	(MM-295-N)-nut and washer-9/16"-12	1
73/	A,C,D,F,K,Y	8	All	C4AZ 7190-B	ROLLER (CONVERTER STATOR CLUTCH)- 7/8" long x 5/16" dia.-use as converter stator support-also refer to group 7A089	8
73/74	A,C,D,F,K,Y	8	All	★ C8AZ 7A190-A Not replaced (11/75)	RETAINER (GOVERNOR PRIMARY SPRING)-	1
73/	A,C,D,F,K,Y	8	All	C6AZ 7A191-B	GASKET (OIL PAN TO CASE)	1
				7A194	PAN ASSY. (OIL)	
73/74	A,C,D,F,K,Y	8	All	C6AZ 7A194-A		1
75/	A,C,D,F,K,Y	8	All	D5AZ 7A194-A		1
73/	A,C,D,F,K,Y	8	All	378782-S	(BB-543-B)-bolt(oil pan to case)- 5/16"-18 x 9/16"	17
73/	A,C,D,F,K,Y	8	All	C7AZ 7E206-A	RETAINER (INTERMEDIATE BAND SERVO LEVER)	1
73/	A,C,D,F,K,Y	8	All	C4AZ 7D218-B	RETAINER (GOVERNOR SECONDARY VALVE SPRING)	1
73/	A,C,D,F,K,Y	8	All	C7AZ 7D220-A	BODY (GOVERNOR OIL COLLECTOR)- Also refer to group 7C063	1
73/	A,C,D,F,K,Y	8	All	C4AZ 7D227-A	SPACER (THROTTLE PRESSURE VALVE SECONDARY)	1
				7A228	TUBE (OIL FILLER)	
73/74	A,Y	8	400	D3AZ 7A228-A	#Orange-17 5/8" long	1
73/74	A(P/C),Y(P/C)	8	460	★ D3AZ 7A228-B Not replaced (3/79)	#White	1
73/74	A,Y	8	429	★ D3AZ 7A228-C	#Silver-17 5/8" long	1
73/74	A(exc. P/C,Y(exc. P/C)	8	460	Not replaced		1
75/78	A,Y	8	All	D6AZ 7A228-A	#Pink paint-incl. (1) D6AZ 7A020-A ind.	1
75/	K	8	All		replaces filler tube #white paint	1
79	A	8	All	D9AZ 7A228-C	#Purple paint	1
73/74	C	8	351	D30Z 7A228-B	#Pink	1
73/74	C	8	400	D20Z 7A228-C	17 15/16" long	1
73/74	C,K	8	429,460	★ D30Z 7A228-C Not replaced	#Pink-17 21/32"	1
75/76	C,F	8	351,400, 460	D60Z 7A228-A	#Red-incl.(1) D60Z 7A020-A ind.	1
77/	F	8	All	D70Z 7A228-A	#Yellow paint	1
73/74	D	8	All	★ D3VY 7A228-A Not replaced (3/79)	#Yellow-17 13/32" long	1
75/	D	8	All	D6VY 7A228-A	#Orange-incl. (1) D6AZ 7A020-A ind. replaces filler tube #Yellow paint	1
73	F "Before 11/1/72"	8	All	★ D1ZZ 7A228-A Not replaced	#Yellow-17 23/32" long	1
73/74	F "From 11/1/72"	8	All	★ D3ZZ 7A228-A Not replaced(10/80)	#Yellow-17 23/32"	1
73/	A,C,D,F,K,Y	8	All	C6AZ 7C232-A	SLEEVE (OIL DISTRIBUTOR)	1
				20386-S8	(B-53)-bolt(sleeve to case)-5/16"-18 x 1"	4
				7A233	GEAR (OUTPUT SHAFT PARKING)	
73/76	A,C,D,F,K,Y	8	All	D3TZ 7A233-A	#D3TP 7A233-AA-3/4" hub thickness- 4 19/32" O.D.-14-36 teeth-incl.(1) D3TZ 7B368-A washer	1
76/	A,C,D,F,K,Y	8	All	D6TZ 7A233-A	#D5TP 7A233-AA, or D50P 7A233-AA -1/2" hub thickness - one grove on hub surface -4 19/32" O.D.-14-36 teeth-incl. (1) D3TZ 7B368-A washer-use with D6AZ 7060-A and D6VY 7060-A shafts only	1
73/	A,C,D,F,K,Y	8	All	C6AZ 7D234-A	BEARING (SUN GEAR THRUST)- 1 3/8" I.D. x 2 1/16" O.D.-incl. 42 rollers	1

COPYRIGHT © 1986 — FORD MOTOR COMPANY — DEARBORN, MICHIGAN

YEAR	MODEL/RESTRICTIONS	ENGINE CYL.	ENGINE C.I.D. (C.C.D.)	PART NUMBER	DESCRIPTION	QTY.
				7D235-6	RACE (SUN GEAR THRUST BEARING)	
73/	A,C,D,F,K,Y	8	All	C6AZ 7D235-A	Rear-1 7/16" I.D. x 2" O.D.	1
				C6AZ 7D236-A	Front-1 7/16" I.D. x 2 1/8" O.D.	
				7A248	SEAL (FRONT PUMP OIL)- Also serviced in group 7153	
73/	A,C,D,F,K,Y	8	All	C6AZ 7A248-A	Large-9 1/2" I.D. x 10 5/16" O.D.	1
				C2AZ 7A248-A	Small-2" I.D. x 2 3/4" O.D.	1
				7A256	LEVER ASSY. (MANUAL CONTROL)	
73	A,Y	8	All	D2AZ 7A256-A		1
74	A,Y	8	All	★ D4AZ 7A256-D Not replaced		1
75/78	A,Y	8	All	D5AZ 7A256-B		1
79	A	8	All	D9AZ 7A256-B		1
73/76	C - - column shift	8	All	D2SZ 7A256-A		1
73/74	C - - floor shift	8	All	★ D20Z 7A256-A Not replaced		1
73/	D	8	All	D5VY 7A256-A		1
73	F	8	All	★ D2ZZ 7A256-A Not replaced		1
74/	F - - column shift	8	All	D2SZ 7A256-A		1
74	F - - floor shift	8	All	★ D20Z 7A256-A Not replaced	Exc. PGA-AG4,AY3,PJA-H4 and PJD-S1 trans.	1
74	F - - floor shift- "Before 5/15/74"	8	All	★ D40Z 7A256-B Not replaced (3/79)	With PGA-AG4,AY3,PJA-H4 and PJD-S1 trans.	1
74/78	F - - floor shift "From 5/15/74"	8	All	D50Z 7A256-B		1
73/	K	8	All	D5SZ 7A256-A		1
74	C,F	8	All	385805-S2	(NN-128-FH)-pin for 7A256	2
73/	A,C,D,F,K,Y	8	All	C6AZ 7D256-B	RING (FORWARD CLUTCH PISTON SPRING)	1
73/	A,C,D,F,K,Y	8	All	C6AZ 7B258-A	BUSHING (FRONT OIL PUMP)	1
73/	A,C,D,F,K,Y	8	All	E0TZ 7A261-A	SPRING (MANUAL CONTROL VALVE DETENT LEVER)	1
				★376562-S	Screw (retain spring in valve body)-1/4"-20 x 1/2" hex. hd.	1
73/	A,C,D,F,K,Y	8	All	D0AZ 7D261-B	LEVER ASSY. (DOWNSHIFT DETENT INNER)	1
				33798-S	(M-62)-nut(lever to 7A394 lever)-5/16"-24	1
				34806-S	(X-64)-lockwasher-5/16"	1
				7A262	PISTON (FORWARD CLUTCH)	
73/76	A,C,D,F,K,Y	8	All	C6AZ 7A262-A	Forward clutch #C9AP 7A258-A	1
76/	A,C,D,F,K,Y	8	All	D6AZ 7A262-A	Forward clutch #D6AP 7A258-AA or BA	1
73/	A,C,D,F,K,Y	8	All	C9AZ 7A262-B	Direct drive clutch	1
				7D273	CONNECTOR (OIL COOLER TUBE)	
73/79	A,C,D,F,K,Y	8	All	D7AZ 7D273-B	1/8"-27 male x 1/2"-20 female thread long straight connector	2
77/79	A,D,F,K	All	All	E0UZ 7D273-A	1/4"-20 male x 1/2"-20 female thread	2
73/	A,C,D,F,K,Y	All	All	87973-S	(I-14)-connector-straight-1/ 4" -18 male x 1/2"-20 female thread	AR
73	F	8	All	C9ZZ 7D273-A	1/8"-27 x 9/16" male x 1/2"-20 x 5/16" female thread-90° elbow incl. lock nut	1
73/	A,C,F,Y	8	All	377159-S	(KK-48-A)-seal-"O" ring (connector to tube)-15/32" I.D.	AR
				★352790-S	Nut-1/4"-18	AR
				380892-S	(KK-43-B)-seal-"O" ring-11/32" I.D.	AR
73/	A,C,D,F,K,Y	8	All	E0TZ 7326-D	ROD (GEAR SELECTOR VALVE)	1
				7330	Refer to group 7D021	
				7341	INSULATOR (GEARSHIFT LEVER)	
73/75	A,C,D,Y	8	All	D4AZ 7341-A		1
75/	A,C,D,Y	8	All	D5AZ 7341-A		1

YEAR	MODEL/RESTRICTIONS	ENGINE CYL.	ENGINE C.I.D. (C.C.D.)	PART NUMBER	DESCRIPTION	QTY.
				7341	INSULATOR (GEARSHIFT LEVER) — Cont'd	
73	K	8	All	D2SZ 7341–A		1
74/	K	8	All	D4AZ 7341–B		1
				7A360	CYLINDER (FORWARD CLUTCH)	
73/76	A,C,F,Y "Before 5/1/76"	8	351,400 429	D5AZ 7A360–A	#Two grooves on large O.D. – 28 teeth in 30 tooth blank on internal spline (for input shaft) use w/PGA or PJA trans.	1
73/74 73/76	A,Y "Before 5/1/76" A,C,D,F,K,Y "Before 5/1/76"	8 8	400,429 460	D5AZ 7A360–B	#No grooves or 3 grooves on large O.D. – 28 teeth in 30 tooth blank on internal spline (For input shaft) exc. PGA or PJA trans.	1 1
76/79	A,C,D,F,K,Y "From 5/1/76"	All	All	D9AZ 7A360–A	Incl. (1) D9AZ 7B707–A spring	1
73/	A,C,D,F,K,Y	8	All	D3TZ 7B368–A	WASHER (OUTPUT SHAFT THRUST REAR)– 1 3/4" I.D.	1
				7A377	DIAPHRAGM ASSY. (VACUUM THROTTLE VALVE)	
73/74	A,C,F,Y	8	All	D4AZ 7A377–A	*TM–28–#Blue band–repl. diaph. #white or green band	1
73/74	A,C,D,F,K,Y	8	All	D4AZ 7A377–B	*TM–29–#Pink band– repl. diaph. #Yellow or Purple band	1
75/76	A,C,D,F,K,Y	8	All		Dual area diaphragm	1
75/	A,C,D,F,K,Y	8	All	D5AZ 7A377–A	*TM–33–Single area diaphragm– #purple band	1
76/77	A,C,D,F,K,Y	8	All	★ D6AZ 7A377–A r/b D8AZ 7A377–A(4/78)	*TM–37–#D6AP 7A377–BA–single area diaphragm–altitude compensating diaph.	1
77/	A,D,F,K	8	All	D70Z 7A377–A	*TM–43 #Green band–single area diaphragm	1
78/	A,D,F,K	8	All	D8AZ 7A377–A	*TM–49–#D7AP 7A377–AA –single area altitude compensating diaph.	1
				7A380	KIT (THROTTLE CONTROL ROD)	
73/78	A,C,D,F,K,Y "Before 11/1/77"	8	All	★ D3AZ 7A380–A r/b D8AZ 7A380–A(9/78)	Consists of (1) C4AP 7A380–A, D3AP 7A380–DA,EA, FA,GA rod	1
78/	A,D,F,K "From 11/1/77"	8	All	D8AZ 7A380–A	Consists of (1) C4AP 7A380–A, D1AP 7A380–BA, D3AP 7A380–DA,EA,FA,GA,D8AP 7A380–AA rod	1
73/	A,C,D,F,K,Y	8	All	D0AZ 7E387–A	SCREEN (MAIN CONTROL PUMP INLET)	1
				7C391	OVERHAUL KIT	
73/76	A,C,D,F,K,Y "Before 4/1/76"	8	All	D6AZ 7C391–A		1

Consists of

OIL SEALS	PLATES	GASKET KIT	LOCK–NUT
1–B8AZ 7A011–A	6–C6AZ 7B164–C	1–D6AZ 7153–A	1–375185–S100
3–C4AZ 7D011–A	5–C8AZ 7B164–H		
2–C6AZ 7D019–A	5–D2AZ 7B164–A	1–INSTRUCTION SHEET	
2–C6AZ 7D025–A	5–C6AZ 7B442–A		
1–D5AZ 7052–A	6–C6AZ 7B442–B		
1–C2AZ 7A248–A	4–C6AZ 7B442–C		

76/	A,C,D,F,K,Y "From 4/1/76"	8	All	D6AZ 7C391–D		1

Consists of

OIL SEALS	PLATES	GASKET	LOCK–NUT
1–B8AZ 7A011–A	4–C8AZ 7B164–H	1–D6AZ 7153–A	1–375185–S100
1–D5AZ 7052–A	5–D6AZ 7B164–A		
	4–D6AZ 7B164–B	1–INSTRUCTION SHEET	
	8–C6AZ 7B442–A		
	5–C6AZ 7B442–B		

COPYRIGHT © 1986 — FORD MOTOR COMPANY — DEARBORN, MICHIGAN

YEAR	MODEL/RESTRICTIONS	ENGINE CYL.	ENGINE C.I.D. (C.C.D.)	PART NUMBER	DESCRIPTION	QTY.
				7D392	GEAR (FORWARD RING)	
73/76	A,C,D,F,K,Y	8	All	C7AZ 7D392–A	#No ring groove on O.D. teeth–2" thick	1
76/	A,C,D,F,K,Y	8	All	D6AZ 7D392–A	#One ring groove on O.D. teeth–1 29/32" thick	1
				377132–S	(QQ–94–A)–ring(retain gear in hub) 4 21/32" dia.	1
				7A394	LEVER ASSY. (DOWNSHIFT CONTROL)	
73/74	A,D,Y	8	400,429, 460	D0AZ 7A394–A	Use with PJA–C,PJB,PJC–H,PJD–F or G trans.	1
75/78	A,Y	8	All			1
75/	D	8	All			1
73/74	A,C,K,Y	8	351,400, 429,460	★ D2ZZ 7A394–A Not replaced (10/78)	Use with PGA,PJA–G,H,PJC–J,PJD–E trans.	1
73/74	F	8	351		Use with PGA–AV trans.	1
79	A	8	All	D9AZ 7A394–A	#D9AP–CA	1
75/	C,F,K	8	All	D50Z 7A394–B		1
73/74	F	8	351	★ D00Z 7A394–B Not replaced(1/81)	Use with PGA–AU trans.	1
				7A398	PLANET ASSY. (FORWARD)	
73/	A,C,D,F,K,Y	8	All	D5AZ 7A398–A		1
				7D402	PISTON (REVERSE CLUTCH)	
73/76	A,C,D,F,K,Y	8	All	C6AZ 7D402–A	#with check ball – 2 5/32" wide	1
76/	A,C,D,F,K,Y	8	All	D8AZ 7D402–A	#W/out check ball – 2 3/64" wide–incl. (1) D8AZ 7E085–A spring	1
				7D403	Refer to Group 7A548	
				7D404	Refer to Group 7C099	
73/76	A,C,D,F,K,Y "Before 4/1/76" "From 4/1/76 refer to group 7D406"	8	All	C6AZ 7D405–A	SPRING (REVERSE CLUTCH PISTON) 1 1/8" free length–12 coils	24
				7D406	RETAINER (REVERSE CLUTCH)	
73/76	A,C,D,F,K,Y "Before 4/1/76"	8	All	C6AZ 7D406–A	W/out clutch piston springs	1
76/	A,C,D,F,K,Y "From 4/1/76"	8	All	D6AZ 7D406–A	Incl. clutch piston springs	1
73/		All	All	377133–S	(QQ–31–B)–ring (retainer to piston) – 3 3/8" dia.	1
				7D411	ROD (PARKING PAWL ACTUATING)	
73/	A,C,D,F,K,Y	All	All	D7AZ 7D411–A	Incl. (1) D6AP 7D419–AA plate, (1) 380505–S retainer	1
73/	A,C,D,F,K,Y	8	All	C9AZ 7D414–A	PLATE ASSY. (PARKING ROD SUPPORT)– Incl. (1) C9AZ 7D417–A spring	1
73/	A,C,D,F,K,Y	8	All	C9AZ 7D417–A	SPRING (PARKING PLATE TORSION)	1
73/	A,C,D,F,K,Y	8	All	C6AZ 7D418–A	SHAFT (PARKING PLATE)	1
				EAA 6572–A	Plug–parking plate shaft	1
				7D419	PLATE (PARKING ROD GUIDE)	
	NOTE 1–For 1977/ Vehicles use D7AZ 7D411–A Assy.					
73/76	A,G,D,F,K,Y	All	All	★ C6AZ 7D419–A NOTE 1	R/b D7AZ 7D411–A	1
				20326–S7	(B–49)bolt (Plate to case) 5/16"–18 x 5/8"	2
				7D422	WASHER (OUTPUT SHAFT HUB THRUST)	
73/	A,C,D,F,K,Y	8	All	C9AZ 7D422–A		1
				7B426	GASKET (THROTTLE VALVE DIAPHRAGM)	
73/	A,C,D,F,K,Y	8	All	D2AZ 7B426–A	Use with push–in diaphragm	1
				7D430	Refer to group 7D029	
73/	A,C,D,F,K,Y	8	All	C6AZ 7D433–A	SHAFT (INTERMEDIATE BAND ACTUATING LEVER)	1
73/	A,C,D,F,K,Y	8	All	D1AZ 7A441–A	PAWL (PARKING)	1
				7B442	Refer to group 7B164	
73/	A,C,D,F,K,Y	8	All	C7ZZ 7B488–A	SPRING (DIRECT DRIVE CLUTCH PISTON)– 1 7/16" free length–15 coils	AR
				7B498	SEAL (MANUAL CONTROL LEVER OIL)	
73/	A,C,D,F,K,Y	8	All	D5AZ 7B498–A		1

YEAR	MODEL/RESTRICTIONS	ENGINE CYL.	ENGINE C.I.D. (C.C.D.)	PART NUMBER	DESCRIPTION	QTY.
73/	A,C,D,F,K,Y	8	All	C6AZ 7A527-A	RETAINER (DIRECT DRIVE CLUTCH PISTON SPRING)	1
				377136-S	(QQ-92-B)-ring(retainer to piston)- 3 1/2" dia.	1
				7A548	SEAL (CLUTCH PISTON OIL OUTER)-	
73/76	A,C,D,F,K,Y	8	All	C6AZ 7A548-A	Forward clutch-square cut lip - 5 1/2" I.D.	1
76/	A,C,D,F,K,Y	8	All	D6AZ 7A548-A	Forward clutch-flair lip-5 11/32" I.D.	1
73/	A,C,D,F,K,Y	8	All	C8AZ 7D403-A	Reverse clutch-6 1/2" I.D.	1
73/	A,C,D,F,K,Y	8	All	C8AZ 7A548-C	Direct drive clutch-5 7/8" O.D. x 31/32" thick	1
				7902	CONVERTER ASSY.	
73/74	A,C,D,F,K,Y	8	351-2/B, 400, 429,460	D1AZ 7902-A	#64,65,70,87,89,90,91,94, 98,25,53	1
75/76	A,C,D,F,K,Y	8	All			1
77	A,F	8	All			1
77	D,K	8	400,460			1
78/	A,D,F,K	All	All			1
73/74	C,F	8	351-4/B	★ D20Z 7902-A	#67,#69,#CB-not replaced	1
				7986	COVER (CONVERTER HOUSING)	
73/74	A,C,D,F,K,Y	8	400,429 460	C8SZ 7986-A		1
75/78	A,C,F,Y	8	All			1
75/	D,K	8	All			1
79	F	8	351			1
79	A	8	All	E2AZ 7986-A		1
73/74	C,F	8	351	D10Z 7986-A		1
				55981-S	(U-254-E)-screw-1/4"-14 x 1/2"	AR
73/	A,C,D,F,K,Y	8	All	386078-S	SEAL (THROTTLE CONTROL LEVER OIL)	1

COPYRIGHT © 1986 — FORD MOTOR COMPANY — DEARBORN, MICHIGAN

YEAR	MODEL/RESTRICTIONS	ENGINE CYL.	ENGINE C.I.D. (C.C.D.)	PART NUMBER	DESCRIPTION	QTY.
	2000 cc					
73/74	J	4	122	★ D0RY 7A003-A Not replaced(10/80)	SPRING (FRONT BAND SERVO PISTON RETRACTING)	1
				7005	CASE ASSY.	
73	J	4	122	★ D1RY 7005-C Not replaced(10/80)		1
74	J	4	122	D4RY 7005-B		1
73/74	J	4	122	87708-S	(P-14)-plug-1/8"-27 x 19/64"	1
73/74	J	4	122	★ D1RY 7A010-A Not replaced(10/80)	PLUG (OIL PAN DRAIN)	1
73/74	J	4	122	★ D0RY 7D011-B Not replaced(10/80)	RING (REAR CLUTCH DRUM OIL SEAL)	2
73/74	J	4	122	★ D0RY 7D011-B Not replaced(10/80)	SNAP RING (GOVERNOR TO SHAFT)	1
73/74	J	4	122	★ D0RY 7D011-A Not replaced(10/80)	SNAP RING (REAR CLUTCH SEAL TO SUN GEAR)	3
73/74	J	4	122	★ D0RY 7D014-A Not replaced(10/80)	WASHER (FRONT PUMP SUPPORT THRUST)	2
73/74	J	4	122	★ D0RY 7017-C Not repalced(10/80)	SHAFT (INPUT)	1
				7019	WASHER (INPUT SHAFT THRUST)	
73/74	J	4	122	★ D0RY 7019-A Not replaced(10/80)	.062" thick	1
				★ D0RY 7019-B Not replaced(10/80)	.079" thick	1
73/74	J	4	122	★ D0RY 7A020-A Not replaced(10/80)	INDICATOR (OIL LEVER)	1
73/74	J	4	122	★ D0RY 7D025-A Not replaced(10/80)	SEAL (FRONT DRUM)	1
73/74	J	4	122	★ D0RY 7D025-B Not replaced(10/80)	SEAL (REAR SERVO INTER BAND)	1
73/74	J	4	122	★ D0RY 7D028-A Not replaced(10/80)	SPRING (REAR BAND SERVO PISTON1	1
				7A039	HOUSING (EXTENSION)	
73/74	J	4	122	★ D1RY 7A039-C Not replaced(10/80)		1
				E404105-S76	Bolt(attach housing to case)-7/16"-14	2
				34808-S8	(X-67)-lockwasher(attach housing to case)-7/16"	2
				E404104-S	Stud(attach housing to case)	2
				E430101-S	Spacer(attach housing to case)	2
73/74	J	4	122	★ D2RY 7K040-A Not replaced (3/79)	DRUM and BEARING KIT (FRONT)	1
73/74	J	4	122	★ D1RY 7E050-A Not replaced(10/80)	SEAL (OIL LEVEL INDICATOR)	1
73/74	J	4	122	★ D0RY 7C051-A Not replaced(10/80)	SEAL (REAR CLUTCH PISTON OIL OUTER)	1
73/74	J	4	122	D5RY 7052-A	SEAL (EXTENSION HOUSING OIL)	1
73/74	J	4	122	★ D2RY 7C053-A Not replaced (3/79)	GOVERNOR	1
				112929-ES	(BB-68-D)-bolt & washer(governor to output shaft)-1/4"-20 x 1 3/8"	2
				112941-ES	Bolt(attach governor assy.)-No. 10-24 x 3/8"	1
73/74	J	4	122	★ D1RY 7060-A Not replaced(10/80)	SHAFT (OUTPUT)	1
73/74	J	4	122	★ D0RY 7B067-A Not replaced(10/80)	HUB (FORWARD CLUTCH)	1

COPYRIGHT © 1986 — FORD MOTOR COMPANY — DEARBORN, MICHIGAN

YEAR	MODEL/RESTRICTIONS	ENGINE CYL.	ENGINE C.I.D. (C.C.D.)	PART NUMBER	DESCRIPTION	QTY.
	2000 cc					
				7L069	STIFFENER (CONVERTER HOUSING TO CASE)	
73/74	J	4	122	★ D1RY 7L069-A ★ D1RY 7L069-B Not replaced(10/80)	L.H. R.H.	1 1
73/74	J	4	122	★ D0RY 7B070-A Not replaced(10/80)	SPRING (CLUTCH PISTON RETURN DISC)	1
73/74	J	4	122	★ D1RY 7086-C Not replaced(10/80)	GASKET (EXTENSION HOUSING)	1
73/74	J	4	122	★ D0RY 7A089-A Not replaced(10/80)	CLUTCH (PLANETARY GEARS)	1
73/74	J	4	122	★ D0RY 7C096-A Not replaced(10/80)	WASHER (PRIMARY SUN GEAR THRUST)	2
73/74	J	4	122	★ D0RY 7A098-A Not replaced	SCREEN (OIL PAN)	1
73/74	J	4	122	★ D1RY 7C099-A Not replaced(10/80)	SEAL (FRONT CLUTCH PISTON OIL INNER)	1
				7A100	CONTROL (MAIN VALVE BODY)	
73/74	J	4	122	★ D1RY 7A100-A Not replaced(10/80)		1
				43522-S	(U-4)-bolt & washer-1/4"-20 x 1 1/4"	1
				53864-S7-8	(U-169)-screw & washer-No. 10-24 x 5/8"	11
				53870-S8	(U-169-B)-screw & washer-No. 10-24 x 1 3/8"	1
				53874-S7-8	(U-169-C)-screw & washer-No. 10-24 x 2"	2
				54273-S	Screw & washer-No. 10-24 x 3/8"	10
				54433-S	Screw & washer-No. 10-24 x 1"	7
				112933-ES	Bolt & washer-1/4"-20 x 2"	2
				130928-ES	Screw & washer-No. 10-24 x 15/16"	9
73/74	J	4	122	★ D1RY 7L101-A Not replaced(10/80)	GASKET (OIL DRAIN PLUG)	1
73/74	J	4	122	★ D1RY 7L102-A Not replaced(10/80)	SPRING (SERVO SCREW ADJUSTMENT)	1
73/74	J	4	122	★ D0RY 7A103-A Not replaced(10/80)	PUMP (OIL FRONT)	1
				112949-ES	Bolt & washer(attach oil pump to case)-5/16"-18 x 7/8"	11
				53864-S7-8	(U-169)-bolt & washer(attach oil pump)-No. 10-24 x 5/8"	3
73/74	J	4	122	★ D1RY 7L103-A Not replaced(10/80)	RETAINER (SERVO SPRING SCREW ADJUSTMENT)	1
73/74	J	4	122	★ D0RY 7A115-A Not replaced(10/80)	LEVER (MANUAL CONTROL VALVE DETENT)	1
				130802-ES	Pin(attach lever to 7A256)	1
				7A117	LEVER (PARKING PAWL OPERATING)	
73	J "Before 12/12/72"	4	122	D0RY 7A117-A		1
73/74	J "From 12/12/72"	4	122	★ D3RY 7A117-A Not replaced (3/79)		1
				305077-S	Pin(use w/lever 7A117)	2
73/74	J	4	122	★ D0RY 7A119-A Not replaced(10/80)	PIN (PARKING PAWL TOGGLE)	1
73/74	J	4	122	★ D0RY 7A121-A Not replaced(10/80)	LEVER (PARKING PAWL TOGGLE)	1
				7A122	ROD (PARKING PAWL)	
73	J "Before 12/12/72"	4	122	★ D1RY 7A122-A Not replaced(10/80)		1
73/74	J "From 12/12/72"	4	122	★ D3RY 7A122-A Not replaced (3/79)		1
73/74	J	4	122	113975-ES	Pin(attach rod to 7A115 and 7B470)-self-locking	2

YEAR	MODEL/RESTRICTIONS	ENGINE CYL.	ENGINE C.I.D. (C.C.D.)	PART NUMBER	DESCRIPTION	QTY.
	2000 cc					
73/74	J	4	122	★ D0RY 7C122-A Not replaced(10/80)	SNAP RING (OUTPUT SHAFT GEAR RING)	1
73/74	J	4	122	★ D0RY 7A127-A Not replaced(10/80)	VALVE (REAR PUMP CHECK)	1
73/74	J	4	122	★ D1RY 7A128-A Not replaced(10/80)	SPRING (REAR PUMP CHECK VALVE)	1
				7A130	SUPPORT (PLANETARY GEAR)	
73	J "Before 2/27/73"	4	122	D0RY 7A130-A		1
73/74	J "From 2/27/73"	4	122	★ D3RY 7A130-A Not replaced (3/79)		1
73/74	J	4	122	★ D0RY 7A136-A Not replaced(10/80)	GASKET (FRONT OIL PUMP TO CASE)	1
73/74	J	4	122	D1RY 7153-B	GASKET and OIL SEAL REPAIR KIT	1

Consists of

OIL SEAL	OIL SEAL	GASKETS	SNAP RING
3-D0RY 7D011-A	1-D0RY 7A294-A	2-D1RY 7086-C	1-66128-S
2-D0RY 7D011-B	2-D0RY 7A294-B	1-D0RY 7A136-A	
1-D0RY 7D025-A	2-D2RY 7A294-A	1-D1RY 7A191-A	
1-D0RY 7D025-B	1-D0RY 7C329-B	1-D0RY 7D256-B	
1-D0RY 7C051-A	2-D0RY 7B498-A		
1-D1RY 7C099-A	1-D0RY 7A548-A		
3-D0RY 7C169-A	1-116552-ES		
2-D0RY 7C169-B	1-116602-ES		
1-D0RY 7A248-A	1-392393-GS		
1-D0RY 7A248-B			

YEAR	MODEL/RESTRICTIONS	CYL.	C.I.D. (C.C.D.)	PART NUMBER	DESCRIPTION	QTY.
73/74	J	4	122	★ D0RY 7A153-A Not replaced(10/80)	GEAR (OUTPUT SHAFT RING)	1
73/74	J	4	122	★ D2RY 7D157-A Not replaced (3/79)	PISTON (REAR CLUTCH)	1
73/74	J	4	122	★ D0RY 7A158-A Not replaced(10/80)	STRUT (FRONT BAND)	2
73/74	J	4	122	★ D0RY 7A160-A Not replaced(10/80)	TUBE (FRONT PUMP SUCTION INLET)	1
73/74	J	4	122	★ D2RY 7A162-A Not replaced(10/80)	BAND (FRONT and REAR SERVO)	1
73/74	J	4	122	★ D1RY 7A164-A Not replaced(10/80)	PISTON (FRONT BAND SERVO)	1
73/74	J	4	122	D1RY 7B164-A	CLUTCH PLATE KIT (FRONT)	1
73/74	J	4	122	★ D0RY 7A165-A Not replaced(10/80)	SHAFT (FRONT BAND ACTUATING LEVER)	1
				305092-S	Pin(attach. 7A165 and 7A171 to servo body)	2
				7C168	COLLAR (PARKING PAWL LEVER)	
73	J "Before 5/12/73"	4	122	D0RY 7C168-A		1
73/74	J "From 5/12/73"	4	122	★ D3RY 7C168-A Not replaced (3/79)		1
				305039-S7	Pin(retains collar to 7A256)	1
73/74	J	4	122	D1RY 7A169-A	LEVER (REAR BAND ACTUATING)	1
73/74	J	4	122	★ D0RY 7C169-A Not replaced(10/80)	SEAL (PRIMARY SUN GEAR SHAFT OIL)	3
73/74	J	4	122	★ D0RY 7C169-B Not replaced(10/80)	SEAL (FRONT CLUTCH SUN GEAR OIL)	2
73/74	J	4	122	★ D0RY 7A171-A Not replaced(10/80)	SHAFT (REAR BAND ACTUATING LEVER)	1
73/74	J	4	122	★ D0RY 7A174-A Not replaced(10/80)	TUBE (OIL DISTRIBUTOR REAR)	1
73/74	J	4	122	★ D1RY 7A178-A Not replaced(10/80)	SCREW (FRONT BAND ADJUSTING)	1
73/74	J	4	122	★ D0RY 7A178-A Not replaced(10/80)	SCREW (REAR BAND ADJUSTING)	1
				114394-ES	Nut-rear band adjustment screw	1

COPYRIGHT © 1986 — FORD MOTOR COMPANY — DEARBORN, MICHIGAN

YEAR	MODEL/RESTRICTIONS	ENGINE CYL.	ENGINE C.I.D. (C.C.D.)	PART NUMBER	DESCRIPTION	QTY.
	2000cc					
73/74	J	4	122	★ D3RY 7A180–A Not replaced (3/79)	SPRING (PARKING PAWL TORSION)	1
73/74	J	4	122	★ D1RY 7A180–A Not replaced(10/80)	SPRING(PARKING PAWL DETENT LEVER)	1
73/74	J	4	122	D1RY 7A187–A	CABLE (CONTROL VALVE)	1
73/74	J	4	122	D1RY 7A191–A	GASKET (OIL PAN)	1
73/74	J	4	122	★ D0RY 7B193–A Not replaced(10/80)	SERVO (REAR)	1
				110766–ES	Bolt & washer(attach rear servo to case)–3/8"–16 x 1 1/2"	1
73/74	J	4	122	★ D1RY 7A194–A Not replaced(10/80)	PAN (OIL)	
				57624–S	Bolt(attach pan to case)–5/16"–18 x 2 1/2"	7
				112949–ES	Bolt(attach pan to case)–5/16"–18 x 7/8"	8
73/74	J	4	122	★ D1RY 7K195–A Not replaced(10/80)	MAGNET (OIL PAN)	1
73/74	J	4	122	★ D0RY 7A204–A Not replaced(10/80)	TUBE (REAR PUMP OIL OUTLET)	1
73/74	J	4	122	★ D0RY 7A204–B Not replaced(10/80)	TUBE (FRONT PUMP PRESSURE OUTLET)	1
73/74	J	4	122	★ D0RY 7A208–A Not replaced(10/80)	TUBE (REAR BAND SERVO PISTON GUIDE)	1
73/74	J	4	122	★ D0RY 7K220–A Not replaced(10/80)	ADAPTOR (REAR PUMP)	1
				43416–S	Bolt & washer(attach adaptor to case)–3/4"–20 x 1 1/8"	5
73/74	J	4	122	D1RY 7C224–A	CLUTCH PLATE KIT (REAR)	1
73/74	J	4	122	★ D1RY 7A228–A Not replaced(10/80)	TUBE (OIL FILLER)	1
				392303–GS	Seal–oil filler	1
73/74	J	4	122	★ D0RY 7A242–A Not replaced(10/80)	WASHER (NEEDLE THRUST BEARING)	1
				7A244	PIN (PARKING PAWL TOGGLE)	
73/74	J	4	122	★ D0RY 7A244–B Not replaced(10/80)	Link to pawl	1
				★ D1RY 7A244–A Not replaced(10/80)	Lever	1
73/74	J	4	122	D0RY 7A248–A	SEAL FRONT PUMP OIL–5 5/8" x 5 3/8" x 1/8"	1
73/74	J	4	122	D0RY 7A248–B	SEAL (FRONT PUMP OIL)	1
73/74	J	4	122	★ D1RY 7A256–A Not replaced(10/80)	SHAFT (MANUAL CONTROL)	1
				130802–ES	Pin(retains lever to 7A115)–manual valve detent	1
73/74	J	4	122	★ D0RY 7B256–A Not replaced(10/80)	PLATE (OUTPUT SHAFT THRUST WASHER)	1
73/74	J	4	122	★ D0RY 7D256–B Not replaced(10/80)	RING (FORWARD CLUTCH PISTON SPRING PRESSURE)	1
73/74	J	4	122	★ D0RY 7A261–A Not replaced	SPRING (MANUAL CONTROL VALVE DETENT LEVER)	1
				353075–S	Ball(use w/spring and lever)	1
73/74	J	4	122	★ D0RY 7D261–A Not replaced(10/80)	CAM ASSY. (CONTROL VALVE)	1
				130929–ES	Screw(attach. cam assy. to transmission)–No. 10–35 x 1 7/16"	2
				63422–S	(S–18)–rivet(cam assy.)	1
73/74	J	4	122	★ D2RY 7A262–A Not replaced (3/79)	PISTON (FRONT CLUTCH)	1

YEAR	MODEL/RESTRICTIONS	ENGINE CYL.	ENGINE C.I.D. (C.C.D.)	PART NUMBER	DESCRIPTION	QTY.
	2000 cc					
73/74	J	4	122	★ D1RY 7K262-A Not replaced(10/80)	SERVO (FRONT)	1
				112937-ES	Bolt(front servo to case)-5/16"-18 x 1"	5
				112932-ES	Bolt(front servo to case)-5/16"-18 x 1 3/8"	1
73/74	J	4	122	★ D0RY 7B264-B Not replaced (6/79)	SNAP RING (FRONT SERVO GUIDE SEAL)	1
73/74	J	4	122	★ D0RY 7A266-A Not replaced(10/80)	PISTON (REAR BAND SERVO)	1
73/74	J	4	122	★ D1RY 7A269-A Not replaced(10/80)	GUIDE (FRONT BAND SERVO RELEASE PISTON)	1
73/74	J	4	122	★ D1RY 7A291-A Not replaced(10/80)	BOLT (PLANETARY SUPPORT TO CASE)	2
				7A294	SEAL (FRONT SERVO PISTON OIL)	
73/74	J	4	122	★ D0RY 7A294-A Not replaced(10/80)	Small-1 1/4" x 1 1/16" x 3/32"	1
				★ D2RY 7A294-A Not replaced(10/80)	Large	2
73/74	J	4	122	★ D0RY 7A295-A Not replaced(10/80)	PIN (PARKING TOGGLE PAWL)	1
				116552-ES	Seal (use w/pin 7A295)- 9/16" x 7/16" x 1/16"	1
73/74	J	4	122	★ D1RY 7K313-A Not replaced(10/80)	WASHER (CONTROL CABLE SEALING)	1
73/74	J	4	122	D0RY 7C329-B	SEAL (PUMP INLET TUBE OIL)	1
73/74	J	4	122	★ D0RY 7330-A Not replaced(10/80)	LEVER (FRONT BAND ACTUATING)	1
73/74	J	4	122	★ D0RY 7A360-A Not replaced(10/80)	CYLINDER (FRONT CLUTCH)	1
73/74	J	4	122	★ D0RY 7B368-A Not replaced(10/80)	WASHER (OUTPUT SHAFT THRUST REAR)	1
73/74	J	4	122	★ D0RY 7A385-A Not replaced(10/80)	WASHER (OUTPUT SHAFT THRUST FRONT)	1
73/74	J	4	122	★ D1RY 7K393-A Not replaced(10/80)	SPRING (MANUAL SHIFT)	1
73/74	J	4	122	★ D1RY 7A394-A Not replaced(10/80)	LEVER (DOWN SHIFT CONTROL OUTER)	1
				E620413-S72	Nut(attach down shift lever to main control lever)	1
73/74	J	4	122	★ D3RY 7A398-A Not replaced (3/79)	DRUM and PLANETARY GEAR ASSY. (REAR BRAKE)	1
73/74	J	4	122	★ D1RY 7A399-A Not replaced(10/80)	GEAR (PRIMARY SUN)	1
				116602-ES	Seal (use w/primary sun gear)-oil	1
73/74	J	4	122	★ D0RY 7A441-A Not replaced(10/80)	PAWL (PARKING)	1
				305077-S	Pin (use w/parking pawl)	1
73/74	J	4	122	★ D0RY 7B456-A Not replaced(10/80)	RACE (OVERRUNNING CLUTCH OUTER)	1
				7D469	TUBE (FRONT SERVO)	
73/74	J	4	122	★ D0RY 7D469-A Not replaced(10/80)	Outlet	1
				★ D0RY 7D469-B Not replaced(10/80)	Inlet	1
73/74	J	4	122	★ D1RY 7B470-A Not replaced(10/80)	LEVER (PARKING PAWL TORSION SPRING)	1
				74275-S	Clip (attach. lever to 7A117)-spring retainer	1
				113368-ES	Washer (use between lever and 7A117)	1

COPYRIGHT © 1986 — FORD MOTOR COMPANY — DEARBORN, MICHIGAN

YEAR	MODEL/RESTRICTIONS	ENGINE CYL.	ENGINE C.I.D. (C.C.D.)	PART NUMBER	DESCRIPTION	QTY.
	2000 cc					
73/74	J	4	122	★ D0RY 7D474–A Not replaced(10/80)	SPRING (REAR CLUTCH BAND SERVO PISTON)	1
73/74	J	4	122	★ D0RY 7D477–A Not replaced(10/80)	BOLT (REAR SERVO BODY TO CASE)	1
				34807–S8	(X–66)–lockwasher–rear servo bolt	1
73/74	J	4	122	★ D0RY 7D480–A Not replaced(10/80)	BEARING (REAR CLUTCH SUN GEAR FRONT)	1
73/74	J	4	122	★ D0RY 7C495–A Not replaced(10/80)	LINK(PARKING TOGGLE PAWL)	1
73/74	J	4	122	D0RY 7B498–A	SEAL (MANUAL CONTROL SHAFT)	2
73/74	J	4	122	★ D0RY 7A527–A Not replaced(10/80)	SEAT (REAR CLUTCH PISTON SPRING)	1
				7A533	WASHER (FRONT CLUTCH CYLINDER THRUST)	
73/74	J	4	122	★ D3RY 7A533–A Not replaced (3/79)	Front	1
				★ D0RY 7A533–B Not replaced(10/80)	Rear	1
73/74	J	4	122	★ D0RY 7A548–A Not replaced(10/80)	SEAL (CLUTCH PISTON OIL)	1
73/74	J	4	122	D1RY 7L560–A	SNAP RING and SPRING KIT (FRONT CLUTCH)	1
73/74	J	4	122	★ D0RY 7A577–A Not replaced(10/80)	SNAP RING (PLANETARY CLUTCH)	3
73/74	J	4	122	D1RY 7902–A	COVERTER ASSY.	1
73/74	J	4	122	★ D1RY 7975–A Not replaced(10/80)	HOUSING (CONVERTER)	1
73/74	J	4	122	★ D0RY 7986–A Not replaced(10/80)	SCREEN (CONVERTER COVER HOUSING)	3
73/74	J	4	122	★ D3RY 7986–B Not replaced (3/79)	COVER (CONVERTER HOUSING LOWER)	1

YEAR	MODEL/RESTRICTIONS	ENGINE CYL.	ENGINE C.I.D. (C.C.D.)	PART NUMBER	DESCRIPTION	QTY.
74/	L,P	4&6	All	D4ZZ 7005-B	CASE ASSY.	1
76/	J					1
				E450102-S80	(AP-10-G)-plug (case-1/8"-27(Metric)	2
74/	L,P	4&6	All	D4ZZ 7D006-A	PLANET ASSY. (REVERSE)	1
76/	J					1
				E860119-S	(AQ-35-F)-ring (planet to drum)-M110.1 x 1.6(Metric)	1
74/	L,P	4&6	All	D4ZZ 7F006-A	CLAMP (THROTTLE VALVE CONTROL DIAPHRAGM)	1
76/	J					
				7A008	PLATE (MAIN CONTROL SEPARATOR)	
79	P	6	200	D9BZ 7A008-A	Use w/79DT-NA trans. built between 5/24/78 & 8/4/78	1
				E800162-S72	(AB-117-H)-screw (plate to valve body)-hex. washer head-M6 x 25(Metric coarse)	2
74/	L,P	4&6	All	D4ZZ 7D011-B	RING (GOVERNOR HOUSING SEAL)	3
76/	J					3
				7D014	WASHER (FRONT PUMP SUPPORT THRUST)-selective fit	
74/	L,P	4&6	All	D4ZZ 7D014-A	#1-3/64" thick	1
76/	J			D4ZZ 7D014-B	#2-1/16" thick	1
				D4ZZ 7D014-C	#3-5/64" thick	1
				D4ZZ 7D014-D	#4-3/32" thick	1
				D4ZZ 7D014-E	#5-7/64" thick	1
74/	L,P	4&6	All	D4ZZ 7017-C	SHAFT (INPUT)-21 spline converter end, 22 spline clutch end	1
76/	J					1
74/	L,P	4&6	All	D4ZZ 7D019-A	SEAL (FORWARD CLUTCH CYLINDER)	2
76/	J					2
				7A020	INDICATOR (OIL LEVEL)	
74	L	4	All	D4FZ 7A020-B	#D42P 7A020-C1A,C2A	1
75/	L	4	All	D5FZ 7A020-A	#D52P-B1A,B2A	1
75/	L	6	All	D5FZ 7A020-C	#D52P-D1A,D2A	1
79	J	6	All			1
76/78	J - - with A/C	4&6	All	★ D5RY 7A020-A Not replaced		1
76/78	J - - without A/C	4&6	All	D5RY 7A020-B		1
79	J	4	All	D9ZZ 7A020-B	#D9ZP 7A020-BA	1
78/	P	4	All	D8BZ 7A020-A	#D8BP 7A020-A1A,A2A	1
78/	P	6	All	D8BZ 7A020-B	#D8BP 7A020-BB	1
				7D021	PISTON and ROD ASSY. (INTERMEDIATE BAND SERVO)	
74/77	L "Before 6/27/77"	4	All	D4ZZ 7D021-A	#Yellow dye	1
76/78	J	6	All			1
78	P - - use w/78DT-BJA	6	200			1
75/77	L "Before 6/27/77"	6	All	D8DZ 7D021-A	#Blue dye	1
77/79	L "From 6/27/77"	All	All			1
76/78	J	4	All			1
79	J	All	All			1
78/79	P - - exc. 78DT-BJA	All	All			1
				7D025	SEAL (INTERM. BRAKE DRUM)	
74/79	J,L,P	All	All	D4ZZ 7D025-A		2
				7D027	COVER (INTERMEDIATE BAND SERVO)	
74/77	L "Before 6/27/77"	4	All	D4ZZ 7D027-A	#74DT 7D027-AB	1
76/78	J	6	All			1
78	P - - use w/78DT-BJA	6	200			1
75/77	L "Before 6/27/77"	6	All	D5FZ 7D027-A	#74DT 7D027-BB	1
76/	J	4	All			1
79	J	All	All			1
77/	L "From 6/27/77"	All	All			1
78/	P - - exc. 78DT-BJA	All	All			1

COPYRIGHT © 1986 — FORD MOTOR COMPANY — DEARBORN, MICHIGAN

YEAR	MODEL/RESTRICTIONS	ENGINE CYL.	ENGINE C.I.D. (C.C.D.)	PART NUMBER	DESCRIPTION	QTY.
				7D027	COVER (INTERMEDIATE BAND SERVO) — Cont'd	
74/ 76/	L J	All	All	E860106-S	(AQ-40-H)-retainer(cover to case)-M11 (Metric)	1 1
74/ 76/	L,P J	4&6	All	D4ZZ 7D028-A	SPRING (INTERMEDIATE BAND SERVO PISTON)-#orange dye-7 coils	1 1
74/ 76/	L,P J	4&6	All	D4ZZ 7D029-A	STRUT (INTERMEDIATE BRAKE BAND)	1 1
74/77 76/77	L,P J	4&6	All	D4ZZ 7D031-A	SPRING (REVERSE SERVO PISTON)-5 coils	1 1
				7034	VENT (CASE)	
74/	J.L.P	All	All	D0AZ 7034-B		1
				7A034	BUSHING (EXTENSION HOUSING)	
74/	J,L,P	All	All	D7FZ 7A034-A		1
				7D034	BAND ASSY. (INTERMEDIATE SERVO)	
74/77 76/78	L "Before 6/27/77" J	All All	All All	D4ZZ 7D034-A	#74DT 7D034-A1A,A2A	1 1
77/ 78/ 79	L "From 6/27/77" P J	All All All	All All All	D8ZZ 7D034-A	#78DT 7D034-A1A,A2A	1 1 1
74/ 76/	L,P J	4&6	All	D4ZZ 7D036-A	COVER (REVERSE BAND SERVO)	1 1
				E800156-S72	(AB-227-F)-screw(cover to valve body)-hex. washer head-M6 x 20(Metric coarse)	4
				7A039	HOUSING (EXTENSION)	
74/	L	All	All	E0FZ 7A039-A	#74DT 7A041-BE	1
76/78	J	4&6	All	★ D5RY 7A039-A Not replaced	#74DT 7A041-AC	1
78/ 79	P J	All	All	D8BZ 7A039-A	#78DT 7A041-AA	1 1
74/ 76/	L,P J	4	All	E800152-S72	(AB-119-F)-screw(housing to case)-hex. washer head -M10 x 30(Metric coarse)	6 6
74/	J,L,P	4&6	All	D4ZZ 7D040-A	SEAL (SERVO COVER TO CASE)	1
				7D044	DRUM ASSY. (INTERMEDIATE BRAKE)	
74/78	J,L,P "Before 3/6/78"	4	All	D4ZZ 7D044-B	No grooves on lugs-(8) plate drum assy. use w/D4ZZ 7B442-B-.082 thick ext. plate only	1
75/78	J,L,P "Before 3/6/78"	6	All	D5FZ 7D044-A	#2 grooves-(10) plate drum assy. use w/D4ZZ 7B442-B-.082 thick ext. plate only	1
78/	J,L,P "From 3/6/78"	4	All	D8ZZ 7D044-A	No grooves on lugs-(8) plate drum assy. use w/D8ZZ 7B442-B-.071 thick ext. plate only	1
78/	J,L,P "From 3/6/78"	6	All	D8ZZ 7D044-C	#2 grooves on lugs-(10) plate drum assy. use w/D8ZZ 7B442-B.071 thick ext. plate only	1
				7052	SEAL ASSY. (EXTENSION HOUSING OIL)	
74/	J,L,P	4&6	All	D5ZZ 7052-A		1
				7C054	VALVE (GOVERNOR PRIMARY)	
74/76 77 76/77	L L "Before 6/27/77" J	All All All	All All All	D6FZ 7C054-A	Use w/D6FZ 7C063-A body only	1 1 1
77/78 78 79	L "From 6/27/77" P J,L,P	All 4 4	All All All	D8FZ 7C054-A	#6	1 1 1
78	P	6	All	D8ZZ 7C054-A	#7	1
79	J,L	6	All	D9ZZ 7C054-A		1
79	P	6	All	E1BZ 7C054-A		1
				7060	SHAFT ASSY. (OUTPUT	
74/77 76/77	L - - exc. 76DT-FA,FB,GA- "Before 6/27/77" J	4&6	All	D4ZZ 7060-A	-incl. speedo drive gear rolled on shaft-6 teeth-right hand helix #C6 located before speedo gear	1 1

YEAR	MODEL/RESTRICTIONS	ENGINE CYL.	ENGINE C.I.D. (C.C.D.)	PART NUMBER	DESCRIPTION	QTY.
				7060	SHAFT ASSY. (OUTPUT) — Cont'd	
76/77	L - - use w/76DT-FA,FB,GA "Before 6/27/77"	6	All	D6FZ 7060-A	Incl. speedo drive gear rolled on shaft-8 teeth #D8-located before speedo. gear	1
78	P	All	All	D8BZ 7060-A	Incl. speedo-drive gear rolled on shaft 8 teeth #D8 located before speedo. gear	1
77/78	L "From 6/27/77"	All	All	★ D8ZZ 7060-A Not replaced	Incl. speedo. drive gear rolled on shaft 6 teeth #C6 located before speedo. gear	1
79	L	All	All	D9FZ 7060-A	incl. speedo. drive gear rolled on shaft-7 teeth #D7-located before speedo. gear	1
79	J,P	All	All	D9ZZ 7060-A	incl. speedo. drive gear rolled on shaft-7 teeth #D7 located before speedo. gear	1
74/ 76/	L,P J	4&6	All	D4ZZ 7E062-A	GASKET (OIL PAN SCREEN)	1 1
74/75 76/77	L - - exc. 76DT-FA,FB J	4&6	All	D4ZZ 7C063-A	BODY (GOVERNOR)	1 1
76 77	L - - use w/76DT-FA,FB L "Before 6/27/77"	6 All	All All	D6FZ 7C063-A	#76DT 7A300-AA	1 1
78	P	6	All	D8BZ 7C063-A		1
77/78 79 78 79	L "From 6/27/77" J,L P P	All 4 4 All	All All All All	D8ZZ 7C063-A		1 1 1 1
79	J,L	6	All	D9ZZ 7C063-A		1
74/ 76/	L,P J	4&6	All	D4ZZ 7D063-A	GEAR ASSY. (SUN)	1 1
				E860121-S	(AQ-45-D)-ring(governor to shell)-M39 (Metric)	2
74/ 76/	L,P J	4&6	All	D4ZZ 7D064-A	SHELL (INPUT)-27 spline	1 1
				7B066	PLATE (CLUTCH PRESSURE)	
74/ 76/	L,P J	4&6	All	D4ZZ 7B066-A	19 teeth	1
				D4ZZ 7B066-B	20 teeth	1
					Ring(retain plate in drum)-select fit	
				E860126-S	(AQ-35-R)-M130.1 x 1.37(Metric)	1
				E860127-S	(AQ-35-T)-M130.1 x 1.73(Metric)	1
				E860128-S	(AQ-35-V)-M130.1 x 2.08(Metric)	1
				E860129-S	(AQ-35-X)-M130.1 x 2.44(Metric)	1
74/ 76/	L,P J	4&6	All	D4ZZ 7D066-A	WASHER (INPUT SHELL THRUST)-27 teeth	1 1
74/ 76/	L,P J	4&6	All	D4ZZ 7B067-A	HUB (FORWARD RING GEAR)-57 teeth	1 1
				E860109-S	(AQ-30-D)-ring(hub to gear)-M34 I.D. (Metric)	1
				E860122-S	(AQ-40-K)-ring(retain hub)-M87(Metric)	1
					Ring(hub to cylinder assy.)-select fit	
				E860115-S	(AQ-35-H)-M125.1 x 1.37(Metric)	1
				E860116-S	(AQ-35-K)-M125.1 x 1.73(Metric)	1
				E860117-S	(AQ-35-M)-M125.1 x 2.08(Metric)	1
				E860118-S	(AQ-35-P)-M125.1 x 2.44(Metric)	1
				7B070	SPRING (FORWARD CLUTCH CUSHION)	
74/78	J,L,P	All	All	D4ZZ 7B070-A	Steel wave spring-u/with D5ZZ 7A262-A piston only	1
78/	J,L,P	All	All	D8ZZ 7B070-A	Rubber cushion spring-4 1/2" O.D. x 21/64" wide-u/with D8ZZ 7A262-A piston only	1

COPYRIGHT © 1986 — FORD MOTOR COMPANY — DEARBORN, MICHIGAN

YEAR	MODEL/RESTRICTIONS	ENGINE CYL.	ENGINE C.I.D. (C.C.D.)	PART NUMBER	DESCRIPTION	QTY.
74/ 76/	L,P J	4&6	All	D4ZZ 7D070-A	SPRING (PARKING PAWL RETURN)	1 1
74/ 76/	L,P J	4&6	All	D4ZZ 7D071-A	SHAFT (PARKING PAWL)	1 1
74/ 76/	L,P J	4&6	All	D4ZZ 7D080-A	VALVE (THROTTLE CONTROL)	1 1
74/ 76/	L,P J	4&6	All	★ 7B085	CLIP (ENGINE TO TRANS. VACUUM TUBE)-improvise	
74/ 76/	L,P J	4&6	All	D4ZZ 7086-B	GASKET (EXTENSION HOUSING)	1 1
74/ 76/	L,P J	4&6	All	D4ZZ 7D090-A	WASHER (FORWARD CYLINDER HUB THRUST)-#3 tabs	1 1
74/ 76/	L,P J	4&6	All	D4ZZ 7D090-B	WASHER (FORWARD RING GEAR HUB THRUST)-#4 tabs	1 1
74/ 76/	L,P J	4&6	All	D4ZZ 7D095-A	BAND ASSY. (REVERSE)-#74DT 7D095-AB	1 1
74/ 76/	L,P J	4&6	All	D4ZZ 7C096-A	WASHER (INTERMEDIATE BRAKE DRUM THRUST)-#74DT 7D248-AA	1 1
				7A098	SCREEN ASSY. (OIL PAN)	
74/78	J,L,P	All	All	★ D4ZZ 7A098-A r/b D4ZZ 7A098-B(1/80)	*FT-43-without gasket	1
78/	J,L,P	All	All	D4ZZ 7A098-B	*FT-51-incl. (1) D5ZZ 7A191-B gasket	1
				7A100	CONTROL VALVE BODY ASSY. (MAIN)	
74/76	L	4	All	★ D6ZZ 7A100-A Not replaced	#FB,HA,HB	1
75/76	L	6	All	★ D6FZ 7A100-B	#JA,KA,KB-not replaced (8/81)	1
76	J	4&6	All	★ D5RY 7A100-A Not replaced(3/81)	#LA	1
77	J	4&6	All	★ D7RY 7A100-A	#ACA-not replaced	1
77	L "Before 6/27/77"	6	All	★ D7FZ 7A100-C	#UA-not replaced	1
77	L "Before 6/27/77"	4	All	D7ZZ 7A100-B	#SA	1
77	L "Before 6/27/77"	4	All	D7ZZ 7A100-C	#TA	1
77	L "Before 6/27/77"	6	All	★ D7ZZ 7A100-D	#AAA-not replaced	1
77/78	L "From 6/27/77"	4	All	D8ZZ 7A100-A	#AFA	1
77/78 78	L "From 6/27/77" P	6 6	All All	D8ZZ 7A100-B	#AGA	1 1
77/78 78	L "From 6/27/77" P	4 4	All All	D8ZZ 7A100-C	#BAA	1 1
78	P	6	All	D8BZ 7A100-D	#AHA	1
78	P	6	All	D8BZ 7A100-F	#AKA	1
79	J,L,P	4	All	D9ZZ 7A100-A	#AMA	1
79	J,P	4	All	D9ZZ 7A100-B	#ANA	1
79	J,L	6	All	D9ZZ 7A100-C	#ARA	1
79	P	6	All	D9BZ 7A100-A	#ASA	1
74/	J,L,P	All	All	E800153-S72	(AB-117-R)-screw(valve body to case)-hex. washer head-M6 x 40(Metric coarse)	12
				E800154-S72	(AB-117-T)-screw(valve body to case)-hex. washer head-M6 x 45(Metric coarse)	3
				E800163-S72	(AB-117-N)-screw(valve body to case)-hex. washer head-M6 x 35(Metric coarse)	1
				E800185-S72	(AB-117-K)-screw(valve body to case)-hex. washer head-M6 x 30(Metric coarse)	2
				7D100	GASKET (VALVE BODY SEPARATOR PLATE)	
74/ 76/	L,P J	4&6	All	D4ZZ 7D100-A	#74DT 7D100-CB	1 1
				D4ZZ 7D100-B	#74DT 7D100-BC-upper	1

YEAR	MODEL/RESTRICTIONS	ENGINE CYL.	ENGINE C.I.D. (C.C.D.)	PART NUMBER	DESCRIPTION	QTY.
				7A103	SUPPORT and GEAR ASSY (FRONT PUMP)	
74/79	J,L,P	All	All	D6ZZ 7A103-A	incl. (1) D4ZZ-7B472-A plate	1
74/	J,L,P	All	All	E800152-S72	(AB-119-F)-screw(support and gear assy. to case)-hex. washer head-M10 x 30 (Metric coarse)	8
				E830124-S	(AX-14)-washer flat(support and gear assy. to case)-M10 I.D. x 22 O.D.(Metric)	8
74/ 76/	L,P J	4&6	All	D4ZZ 7A115-A	LEVER (MANUAL CONTROL INNER)	1 1
				E820112-S72	(AM-13-G)-nut(lever to lever assy. down shift detent inner)-hex.-M14 x 1.5(Metric fine)	1
				E864109-S	(AG-32)-clip(retain lever to rod)	1
				7A124	SPRING (PARK ACTUATING LEVER ROD)	
74/ 78/	J,L P - - exc. 78DT-BAA, 79DT-NA	All All	All All	D4ZZ 7A124-A		1 1
78/	P - - use w/78DT-BAA, 79DT-NA	6	All	D9BZ 7A124-A	#Yellow paint	1
				7F124	COUNTER WEIGHT (GOVENOR BODY)	
77/ 78/	L "From 6/27/77" J,P	All All	All All	D8ZZ 7F124-A		1 1
74/ 76/	L,P J	4&6	All	D4ZZ 7A136-A	GASKET (OIL PUMP)-#74DT 7A136-AP	1 1

COPYRIGHT © 1986 — FORD MOTOR COMPANY — DEARBORN, MICHIGAN

YEAR	MODEL/RESTRICTIONS	ENGINE CYL.	ENGINE C.I.D. (C.C.D.)	PART NUMBER	DESCRIPTION	QTY.
				7153	GASKET and OIL SEAL KIT	
74/	J,L,P	All	All	D7ZZ 7153–A		1

Consists of

OIL SEALS	OIL SEALS	GASKETS	"O" RINGS
3–D4ZZ 7D011–B	1–D4ZZ 7A548–A	1–D4ZZ 7E062–A	1–D5ZZ 7A248–A
2–D4ZZ 7D019–A	1–D4ZZ 7A548–B	1–D4ZZ 7086–B	1–87034–S94
2–D4ZZ 7D025–A	1–D4ZZ 7A548–C	1–D4ZZ 7D100–A	4–380392–S94
1–D4ZZ 7D040–A	1–D7ZZ 7A548–A	1–D4ZZ 7D100–B	1–E853110–S
1–D4ZZ 7A248–A	1–386078–S	1–D4ZZ 7A136–A	1–E853116–S
1–D4ZZ 7D404–A	INSULATOR	1–D4ZZ 7L173–A	
1–D7ZZ 7D404–A	1–D5AZ 7341–C	1–D5ZZ 7A191–B	
1–D4ZZ 7423–A			
1–D4ZZ 7423–B	1–INSTRUCTION SHEET		
1–D5AZ 7B498–A			

YEAR	MODEL/RESTRICTIONS	CYL.	C.I.D. (C.C.D.)	PART NUMBER	DESCRIPTION	QTY.
74/	L,P	4&6	All	D4ZZ 7A153–A	GEAR (OUTPUT SHAFT RING)–57 teeth	1
76/	J					1
				E661138–S	(AQ–8–K)–ring(retain gear to planet)–M38 x 1.75(Metric)	1
				7A160	TUBE (LUBE OIL INLET–SHORT)	
74/79	L,P	All	All	D4FZ 7A160–A	Curved	1
79	J	All	All			1
76/78	J	All	All	D6RY 7A160–A	Straight–4 1/6" long	1
				7B164	PLATE (CLUTCH INTERNAL and EXERNAL SPLINE)	
	FORWARD CLUTCH					
74/	L,P	4	All	D4ZZ 7B164–A	Internal–friction–72 teeth	3or4
75/	J,L,P	6	All			5
74/78	L,P "Before 2/22/78"	4	All	D4ZZ 7B442–A	External–steel–19 teeth–.082 thick–use w/ D5FZ 7A360–A or D5ZZ–7A360–A cyl.	3or4
75/78	J,L,P "Before 2/22/78"	6	All			5
78/	J,L,P "From 2/22/78"	4	All	D8ZZ 7B442–A	External–steel–19 teeth–.071 thick–use w/ D8ZZ–7A360–A or B cyl.	4
78/	J,L,P "From 2/22/78"	6	All			5
	HIGH (reverse) CLUTCH					
74/	L,P	4	All	D4ZZ 7B164–B	Internal–friction–48 teeth	4
75/	J,L,P	6	All			5
74/78	L,P "Before 3/6/78"	4	All	D4ZZ 7B442–B	External steel–20 teeth–.082 thick–use w/ D4ZZ–7D044–B or D5FZ 7D044–A drum	4
75/78	J,L,P "Before 3/6/78"	6	All			5
78/	J,L,P "From 3/6/78"	4	All	D8ZZ 7B442–B	External steel–20 teeth–.071 thick–use w/ D8ZZ–7D044–A or B drum	4
78/	J,L,P "From 3/6/78"	6	All			5
74/	L,P	4&6	All	D4ZZ 7D164–A	HUB (OUTPUT SHAFT)–57 external and 31 internal teeth	1
76/	J					1
				E860122–S	(AQ–40–K)–ring(retain hub)–M87(Metric)	1
				E661125–S	(AQ–8–E)–ring(retain hub to output shaft)–M25 x 1.2(Metric)	1
				7A166	WASHER (PLANET CARRIER THRUST)	
74/	J,L,P	All	All	D4ZZ 7A166–A	#74DT–7D423–AA–forward	1
					reverse	2
74/	L,P	4&6	All	D4ZZ 7D167–A	BOLT (OVERRUN CLUTCH TO CASE)–M6 x 30(Metric coarse)	5
76/	J					5
74/	L,P	4&6	All	D4ZZ 7D171–A	RACE (OVERRUN CLUTCH INNER)	1
76/	J					1
74/	L,P	4&6	All	D4ZZ 7L173–A	GASKET (REVERSE SERVO SEPARATOR PLATE COVER)	1
76/	J					1
				7D189	PISTON and ROD ASSY. (REVERSE BAND SERVO) select fit	
74/79	J,L,P	4&6	All	D7ZZ 7D189–A	#3 11/32 Rod length–2 grooves on rod	1
				D7ZZ 7D189–B	#3 13/32 Rod length–no grooves on rod	1
				D7ZZ 7D189–C	#3 31/64 Rod length–1 groove on rod	1

YEAR	MODEL/RESTRICTIONS	ENGINE CYL.	ENGINE C.I.D. (C.C.D.)	PART NUMBER	DESCRIPTION	QTY.
74/ 76/	L,P J	4&6	All	D4ZZ 7190-A	ROLLER (OVERRUN CLUTCH)	10 10
				7D190	ROD (REVERSE BAND SERVO PISTON)-selective fit	
74/77 73/77	L J "Before 9/24/76" -From 9/24/76 refer to group 7D189	4&6	All	★ D4ZZ 7D190-A r/bD7ZZ 7D189-A (6/79) ★ D4ZZ 7D190-B r/bD7ZZ 7D189-B(5/82) ★ D4ZZ 7D190-C r/bD7ZZ 7D189-C (1/78)	#Yellow dye-3 11/32" long #Green dye-3 13/32" long #Red dye-3 31/64" long	1 1 1
74/ 76/	L,P J	4&6	All	E860131-S	(AQ-70-D)-ring(retain rod to piston)-M8 (Metric)	1
74/	J,L,P	4&6	All	D5ZZ 7A191-B	GASKET (OIL PAN)	1
74/ 76/	L,P J	4&6	All	D4ZZ 7D191-A E860120-S	RETAINER (OVERRUN CLUTCH WITH SPRINGS)-incl.(10)74DT 7D170-AB springs (AQ-35-D)-ring(retainer to drum)-M87 x 1.3(Metric)	1 1 1
74/ 76/	L,P J	4&6	All	D4ZZ 7A194-A E800158-S72	PAN (OIL) (AB-117-V)-screw(pan to case)-hex. washer head-M8 x 14(Metric coarse)	1 1 13
74/ 76/	L,P J	4&6	All	D4ZZ 7E207-A	SPRING (REVERSE BAND ACCUMULATOR)-#6 coils	1 1
				7D220	BODY (GOVERNOR OIL COLLECTOR)	
74/77	J,L,P	All	All	★ D4ZZ 7D220-A Not replaced		1
78/	J,L,P	All	All	D8ZZ 7D220-A		1
74/	J,L,P	4&6	All	E800192-S72 E860132-S	(AB-117-C)-screw (body governor to governor assy.)-hex. washer head-M6 x 16(Metric coarse) (AQ-8-G)-ring (retain body to shaft assy. output)-M26 x 1.3(Metric)	4 1
				7A228	TUBE (OIL FILLER)	
74	L	4	All	★ D4FZ 7A228-B Not replaced		1
75/	L	4	All	D5FZ 7A228-A	#Orange paint	1
75/ 79	L J	6 6	All All	D5FZ 7A228-C	#Yellow paint	1 1
76/78	J - - without A/C	4	All	★ D5RY 7A228-J Not replaced	#74DT-EC	1
76/78	J - - with A/C	4	All	★ D5RY 7A228-G Not replaced	#75DT-AA,CA	1
76/78	J - - without A/C	6	All	★ D5RY 7A228-H Not replaced	#74DT-FC	1
76/78	J - - with A/C	6	All	★ D5RY 7A228-F Not replaced	#75DT-BA,DA	1
79	J	4	All	D9ZZ 7A228-B	#White paint	1
78/	P	4	All	D8BZ 7A228-A	#White paint	1
78/	P	6	All	D8BZ 7A228-B	#Brown paint	1
74/	J,L,P	4&6	All	87034-S94	(T-1-A)-seal (used with filler tube)-"O" ring-9/16" I.D.	1
74/	J,L,P	4&6	All	D5ZZ 7D235-A	RACE (SUN GEAR THRUST BEARING REAR)	1
				7A248	SEAL ASSY. (FRONT OIL PUMP)	
74/	J,L,P	4&6	All	D4ZZ 7A248-A	#74DT 7A248-A1A	1
74/	J,L,P	4&6	All	D5ZZ 7A248-A	"O" ring	1
74/	J,L,P	4&6	All	★ 7A254 87944-S8	TUBE ASSY. (OIL COOLER BY-PASS)-improvise from bulk tubing(2269) (I-22)-fitting(tube assy. to case)-1/2" x 20	AR 2

COPYRIGHT © 1986 — FORD MOTOR COMPANY — DEARBORN, MICHIGAN

YEAR	MODEL/RESTRICTIONS	ENGINE CYL.	ENGINE C.I.D. (C.C.D.)	PART NUMBER	DESCRIPTION	QTY.
				7A256	LEVER ASSY. (MANUAL CONTROL)	
74/	L	All	All	D4ZZ 7A256-A		1
76/78	J	All	All	★ D5RY 7A256-A Not replaced		1
79	J	All	All	D9ZZ 7A256-A		1
78/	P	All	All	D8BZ 7A256-A		1
				E820109-S	(AM-11-G)-nut(lever assy. to case)-hex. M8 x 1(Metric fine)	1
74	L "Before 9/1/74"	4	All	E646516-S	(AN-5-B)-pin(retai n lever) -M3 x 24(Metric)	1
74/	J,L,P "From 9/1/74"	4	All	E840125-S	(AN-5-C)-pin retain lever)-M3 x 26(Metric)	1
74/	L,P	4&6	All	D4ZZ 7D261-A	LEVER ASSY. (DOWN SHIFT DETENT INNER)	1
76/	J					1
				7A262	PISTON (FRONT CLUTCH)	
74/77	L	All	All	D4ZZ 7A262-A	#74DT 7A258-BA u/with D4ZZ 7D404-A D4ZZ 7A548-C flair lip seals	1
76/77	J	All	All			
77/	J,L,P	All	All	E0ZZ 7A262-A	#74DT 7A258-CA u/with E0ZZ 7D404-A, D7ZZ 7A548-A square cut seals	1
				7A262	PISTON ASSY. (FORWARD CLUTCH)	
74/78	J,L,P	4&6	All	★ D5ZZ 7A262-A r/b D8ZZ 7A262-A	#74DT 7A262-AB repl. piston #74DT-AA u/with D4ZZ 7B070-A steel cushion spring only	1
74/79	J,L,P	All	All	D8ZZ 7A262-A	#74DT-7A258-DA-incl. (1) D8ZZ-7B070-A rubber cushion spring	1
74/	J,L,P	All	All	E860125-S	(AQ-30-K)-ring(retain piston in drum)-M62 I.D.(Metric)	1
74/77	L "Before 9/24/76"	4&6	All	★ D4ZZ 7A266-A r/b 7D189-Piston & rod assy.	PISTON (REVERSE BAND SERVO)-#74DT 7A266-AB	1
76/77	J "Before 9/24/76" -From 9/24/76 refer to group 7D189					1
74/	L,P	4&6	All	D4ZZ 7D273-B	CONNECTOR ASSY. (OIL TUBE)-2 req'd. for oil cooler lines-2 req'd. for oil cooler by-pass tube assy.	2
76/	J					2
				380892-S94	(KK-43-B)-seal	4
74/	L,P	4&6	All	D4ZZ 7D300-A	SPACER (REAR BAND SERVO ROD)	1
76/	J					1
74/76	L - - exc. 76DT-FA,FB	4&6	All	D4ZZ 7A302-B	SPRING (GOVERNOR VALVE) -#orange dye-8 coils	1
76/77	J					1
76	L - - use w/76DT-FA,FB	6	All	★ D6FZ 7A302-A Not repl.(3/81)	#Light green dye-8 coils	1
77	L "Before 6/27/77"	All	All			1
78	P	6	All	D8BZ 7A302-A	#Brown dye	1
77/78	L "From 6/27/77"	4	All	D8ZZ 7A302-A	#Light green or orange dye	1
77/78	L "From 6/27/77"	4&6	All	D8ZZ 7A302-B	#Yellow dye	1
78	P	4	All			1
79	J,L	4	All			1
79	P	All	All			1
79	J,L	6	All	D9ZZ 7A302-A		1
				7D307	WIRE ASSY. (NEUTRAL SWITCH)	
74	L	4	All	D4ZZ 7D307-A	5 connectors one end	1
75/78	J,L	All	All	D6ZZ 7D307-A		1
79	L	All	All			1
78	P	All	All	D8BZ 7D307-A	#D8BB 7C078-AB	1
79	J,P	All	All	E1SZ 7D307-A		1
				7D324	WEIGHT (GOVERNOR)	
74/76	J,L	All	All	D6FZ 7D324-A	Inner #no grooves or one groove	1
77	L - - use w/77DT-CA	4	All			1
77	L	6	All			1
77	L - - use w/77DT-BA	4	All	★ D7ZZ 7D324-A Not replaced	Inner - #two grooves	1
74/77	J,L "Before 6/27/77"	All	All	D4ZZ 7D324-D	Outer - # orange dye	1

YEAR	MODEL/RESTRICTIONS	ENGINE CYL.	ENGINE C.I.D. (C.C.D.)	PART NUMBER	DESCRIPTION	QTY.
				7D324	WEIGHT (GOVERNOR) — Cont'd	
78	P	6	All	D8BZ 7D324-A	Outer-1 1/2" O.D.	1
79	J,L,P	All	All			1
78	L "From 6/27/77"	All	All	D8ZZ 7D324-A	Outer-1 3/8" O.D.	1
78	P	4	All			1
				E660118-S	(AQ-3-E) ring (retain inner to outer) M18 (metric)	1
				E660128-S	(AQ-3-K)-ring (retain outer to gov.) M28 (metric)	1
				7330	LEVER (INTERMEDIATE BAND SERVO)	
74/75	L	4	All	D4ZZ 7330-B	#D	1
76/	J	6	All			1
77/	L "From 6/27/77"	6	All			1
78/	P - - exc. 78DT-BJA	6	All			1
75/77	L "Before 6/27/77"	6	All	★ D5FZ 7330-A	#B	1
76/78	J	4	All	Not replaced		1
76/	L,P	4	All	D6ZZ 7330-A	#E	1
78	P - - use w/78DT-BJA	6	All			1
79	J	4	All			1
74/	L	4&6	All	D4ZZ 7E332-A	SPRING ASSY. (MANUAL VALVE DETENT)	1
76/	J					1
78/	P	All	All	D8BZ 7E332-A		1
74/	L,P	4&6	All	D4ZZ 7E333-A	PIN (MANUAL VALVE DETENT LEVER INNER)	1
76/	J					1
				7A360	CYLINDER ASSY. (FORWARD CLUTCH)	
74/78	J,L,P "Before 2/22/78"	4	All	D5ZZ 7A360-A	#No grooves-(8) plate clutch cyl.-refer to T.S.B. #76-repl. cyl. w/2 grooves-use w/ D4ZZ 7B442-A-.082 thick ext. plate only	1
75/78	J,L,P "Before 2/22/78"	6	All	★ D5FZ 7A360-A r/b D8ZZ 7A360-E(2/79)	#3 grooves-(10) plate clutch cyl.-use w/ D4ZZ-7B442-A-.082 thick ext. plate only	1
75/78	J,L,P "Before 2/22/78"	6	All	D8ZZ 7A360-E	#3 grooves-(10) plate clutch cyl. incl (5) D8ZZ 7B442-A plates-.071 thick	1
78/	J,L,P "From 2/22/78"	4	All	D8ZZ 7A360-B	#No grooves-(8) plate clutch cyl. use w/ D8ZZ-7B442-A-.071 thick ext. clutch plate only	1
78/	J,L,P "From 2/22/78"	6	All	D8ZZ 7A360-C	#3 grooves-(10) plate clutch cyl. use w/ D8ZZ-7B442-A-.071 thick ext. clutch plate only	1
74/	L,P	4&6	All	D4ZZ 7B368-A	WASHER (OUTPUT SHAFT THRUST REAR)- #74DT 7B368-AA or 76DT 7B368-AA	1
76/	J					1
74	L	4	All	D4ZZ 7D370-A	VALVE KIT (SERVO ACCUMULATOR)- Consists of (1) 74DT 7D370-BA valve	1
75/77	L - - exc. Calif.	All	All			1
				7A377	DIAPHRAM ASSY. (THROTTLE VALVE CONTROL)	
74/	L,J,P	All	All	E1ZZ 7A377-B	*TM-61-SAD-Replaces DAD diaph.- refer to T.S.B. 107	1
				E853110-A	(AK-3-H) "O" ring (seal diaphragm to case) - M15.6 (metric)	1
74/	L,P	4&6	All	D4ZZ 7A380-A	ROD (THROTTLE CONTROL VALVE)	1
76/	J					1
				7C391	OVERHAUL KIT	
74/78	J,L,P "Before 2/22/78"	All	All	D5ZZ 7C391-A	Kit contains .082 thick ext. cl. plates	1

Consists of
OIL SEALS
1-D5ZZ 7052-A

PLATES
5-D4ZZ 7B164-A
5-D4ZZ 7B164-B
5-D4ZZ 7B442-A-(.082 thick)
5-D4ZZ 7B442-B-(.082 thick)

GASKET KIT
1-D7ZZ 7153-A

1-INSTRUCTION SHEET

LOCK-NUT
1-380850-S

COPYRIGHT © 1986 — FORD MOTOR COMPANY — DEARBORN, MICHIGAN

YEAR	MODEL/RESTRICTIONS	ENGINE CYL.	ENGINE C.I.D. (C.C.D.)	PART NUMBER	DESCRIPTION	QTY.
				7C391	OVERHAUL KIT — Cont'd	
78/	J,L,P "From 2/22/78"	All	All	D8ZZ 7C391-A	Kit contains .071 thick ext. cl. plates	1
	Consists of OIL SEALS 1-D5ZZ 7052-A	PLATES 5-D4ZZ-7B164-A 5-D4ZZ-7B164-B 5-D8ZZ 7B442-A-(.071 thick) 5-D8ZZ 7B442-B-(.071 thick)		GASKET KIT 1-D7ZZ 7153-A	LOCK-NUT 1-380850-S 1-INSTR. SHEET	
74/ 76/	L,P J	4&6	All	D4ZZ 7D392-A	GEAR (RING FORWARD)-72 external-57 internal teeth	1 1
				7A394	LEVER ASSY. (DOWNSHIFT CONTROL OUTER)	
74/ 79	L,P J	All	All	D4ZZ 7A394-A		1 1
76/78	J	All	All	★ D6RY 7A394-A Not replaced		1
				E853107-S	(AK-1-R)-"O" ring-M9.3 (Metric)	1
74/ 76/	L,P J	4&6	All	D4ZZ 7A398-A	PLANET ASSY. (FORWARD)	1 1
				7D404	SEAL (HIGH CLUTCH PISTON INNER)	
74/77	J,L	All	All	D4ZZ 7D404-A	Flair lip-u/with D4ZZ 7A262-A piston	1
77/	J,L,P	All	All	D7ZZ 7D404-A	square cut u/with D7ZZ 7A262-A piston	1
				7D411	ROD (PARKING PAWL-ACTUATING)	
74/	J,L,P	All	All	D9ZZ 7D411-A		1
74/ 76/	L,P J	4&6	All	D4ZZ 7D422-A	WASHER (OUTPUT SHAFT HUB THRUST)-#74DT 7D422-AA	1 1
				7423	SEAL (REVERSE BAND SERVO PISTON OIL)	
74/ 76/	L,P J	4&6	All	D4ZZ 7423-A	Large-2 51/64" I.D.	1
				D4ZZ 7423-B	Small-1 3/32" I.D.	1
74/ 76/	L,P J	4&6	All	D4ZZ 7D430-A	STRUT (INTERMEDIATE BRAKE BAND ANCHOR)	1 1
				E825100-S100	(AM-42)-nut & seal-hex.-1/2"-16 (Metric coarse)	1
74/ 76/	L,P J	4&6	All	D4ZZ 7D433-A	SHAFT (INTERMEDIATE BAND ACTUATING LEVER)	1 1
				7A441	PAWL (PARKING BRAKE)	
74/	J,L	All	All	D4ZZ 7A441-A		1
78/	P	All	All	D8BZ 7A441-A	#5/32" dia. indentation on side of pawl	1
				7B442	Refer to group 7B164	
74/78 76/78	L,P J	4&6	All	D4ZZ 7E446-B	ROD (GOVERNOR)	1 1
				E860134-S	(AX-23-DH)-ring	1
74/ 76/	L,P J	4&6	All	D4ZZ 7B472-A	PLATE (OIL PUMP ADAPTER)	1 1
				7A480	SPRING (CLUTCH PISTON)	
74/ 76/	L,P J	4&6	All	D4ZZ 7A480-A	#74DT 7C151-AA-forward (13 coils)	15
				D4ZZ 7A480-B	#74DT 7C151-BA-high (12 coils)	20
74/ 76/	L,P J	4&6	All	D4ZZ 7C492-A	SCREW (REVERSE BAND ADJUSTING)	1 1
				7B498	SEAL ASSY. (MANUAL CONTROL LEVER OIL)	
74/	J,L,P	4&6	All	D5AZ 7B498-A		1
74/ 76/	L,P J	4&6	All	D4ZZ 7C498-A	DRUM ASSY. (REVERSE BRAKE)	1 1
				7A527	RETAINER (CLUTCH PISTON SPRING)	
74/ 76/	L,P J	4&6	All	D4ZZ 7A527-A	Forward	1
				D4ZZ 7A527-B	High	1
				7A548	SEAL (CLUTCH PISTON OIL)	
74/ 76/	L,P J	4&6	All	D4ZZ 7A548-A	Forward (outer)-4 7/32" I.D.	1
				D4ZZ 7A548-B	Forward (inner)-1 15/32" I.D.	1

YEAR	MODEL/RESTRICTIONS	ENGINE CYL.	ENGINE C.I.D. (C.C.D.)	PART NUMBER	DESCRIPTION	QTY.
				7A548	SEAL (CLUTCH PISTON OIL) — Cont'd	
74/77	J,L	All	All	D4ZZ 7A548-C	High (outer) Flair lip-3 27/32" I.D. u/with D4ZZ 7A262-Apiston	1
77/	J,L,P	All	All	D7ZZ 7A548-A	High (outer) square cut-3 15/16" I.D. u/with D7ZZ 7A262-A piston	1
				7902	CONVERTER ASSY.	
74	L	4	All	★ D4FZ 7902-A	#74DT 7902-BE-9 1/2" O.D.-r/b D4FZ 7902-B and (3) N800081-S51 bolts	1
74	L	4	All	D4FZ 7902-B		1
75/	L	4&6	All	D5ZZ 7902-B	#TC,RA,LG	1
76/	J	4	All			1
78/	P	4	All			1
76/	J	6	All	D6RY 7902-A	#NC,LF	1
78/	P	6	All	D8BZ 7902-A	#AA	1
74/	J,L,P	4&6	All	E450102-S80	(AP-10-G)-plug(dry seal)-1/8" x 27 (Metric)	1
				7976	HOUSING ASSY. (CONVERTER)	
74/	L	4	All	D4FZ 7976-B	Incl. bushing #74DT 7A834-FC,FD	1
75/	L	6	All	D5FZ 7976-B	Incl. bushing #74DT 7A834-JB,JC	1
79	J	6	All			1
76/78	J	4	All	★ D5RY 7976-B Not replaced	Incl. bushing #74DT 7A834-DC	1
76/78	J	6	All	★ D5RY 7976-A Not replaced	Incl. bushing #74DT 7A834-AC	1
78/	P	4	All	D4ZZ 7976-C	Incl. bushing #74DT-7A834-HB,HC	1
79	J	4	All			1
78/	P	6	All	D8BZ 7976-A	Incl. bushing #78DT 7A834-AA	1
				7986	COVER (CONVERTER HOUSING)	
74/79	L,P	4	All	D4ZZ 7986-B		1
74/78	L	6	All			1
76/78	J	All	All			1
79	J,L	6	All	D9ZZ 7986-A		1
79	P	6	All	C5DZ 7986-A		1
74/	J,L,P	All	All	386078-S	SEAL (THROTTLE CONTROL LEVER OIL)	1

COPYRIGHT © 1986 — FORD MOTOR COMPANY — DEARBORN, MICHIGAN

YEAR	MODEL/RESTRICTIONS	ENGINE CYL.	ENGINE C.I.D. (C.C.D.)	PART NUMBER	DESCRIPTION	QTY.
74	A	8	400	B5AZ 7A003-A	SPRING (FRONT BAND SERVO PISTON RETAINING)	1
74	A	8	400	D3AZ 7005-C	CASE ASSY.	1
74	A	8	400	★ D3AZ 7A008-B N/R (5/78)	PLATE (MAIN CONTROL VALVE BODY SEPARATING)	1
74	A	8	400	C0AZ 7015-C	SHAFT (INPUT)-29 spline-7 21/32" long	1
74	A	8	400	B5S 7019-A	WASHER (INPUT SHAFT THRUST)	1
74	A	8	400	★ D3AZ 7D019-A Not replaced(3/81)	SEAL (OIL DISTRIBUTOR)-1 29/32" O.D.	4
74	A	8	400	D3AZ 7A020-E	INDICATOR (OIL LEVEL)	1
74	A	8	400	★ B1A 7025-B Not replaced (3/82)	BUSHING (CASE)	1
74	A	8	400	★ D3AZ 7D029-C Not replaced (5/78)	STRUT (INTERMEDIATE BRAKE BAND)	1
74	A	8	400	★ D3AZ 7A039-A Not replaced(10/80)	HOUSING (EXTENSION)	1
				385814-S2	(BB-566-AH)-screw & washer assy.-hex.-3/8"-16 x 1 7/8"	5
74	A	8	400	B1AZ 7C050-B	GUIDE SEAL	1
74	A	8	400	★ D3AZ 7C051-A Not replaced (10/78)	SEAL (REAR CLUTCH PISTON OUTER OIL)	1
74	A	8	400	D5AZ 7052-A	SEAL (EXTENSION HOUSING OIL)	1
74	A	8	400	★ D3AZ 7C053-B Not replaced(3/81)	GOVERNOR (WITH COUNTERWEIGHT)	1
				353351-S	(AA-9)-ball-1/4" (governor to shaft)	1
74	A	8	400	D3AZ 7060-A	SHAFT (OUTPUT)	1
74	A	8	400	★ D3AZ 7C062-A Not replaced (10/78)	SEAT (OIL PRESSURE)	1
74	A	8	400	★ D3AZ 7D063-A Not replaced (10/78)	GEAR (REAR CLUTCH SUN)	1
74	A	8	400	★ B5AZ 7B066-A Not replaced(3/81)	PLATE (CLUTCH PRESSURE)	1
74	A	8	400	★ D3AZ 7B067-A Not replaced(10/80)	HUB (FRONT CLUTCH)	1
74	A	8	400	★ D3AZ 7B070-A Not replaced(3/81)	SPRING (FRONT CLUTCH PISTON DISC)	1
74	A	8	400	★ D3AZ 7F081-A Not replaced (10/78)	PLATE (FRONT SERVO ADJUSTING)	1
74	A	8	400	★ D3AZ 7F082-A Not replaced (10/78)	SPRING (FRONT SERVO ADJUSTING SCREW)	1
74	A	8	400	★ D3AZ 7086-A Not replaced(3/81)	GASKET (EXTENSION HOUSING)	1
74	A	8	400	D3AZ 7A089-A	CLUTCH (PLANETARY GEARS)	1
74	A	8	400	★ D3AZ 7A094-A Not replaced(10/80)	BODY (FRONT BAND SERVO)	1
74	A	8	400	★ D3AZ 7C096-B Not replaced(3/81)	BEARING (FRONT CLUTCH SUN GEAR THRUST REAR)	1
				7A098	SCREEN ASSY. (OIL PAN)	
74	A	8	400	D3AZ 7A098-B	*FT-47-incl. (1) B5AZ 7A191-B gasket	1
74	A	8	400	★ D3AZ 7C099-A Not replaced (10/78)	SEAL (REAR CLUTCH PISTON OIL INNER)	1
74	A	8	400	★ D4AZ 7A100-E Not replaced(3/81)	CONTROL ASSY. (MAIN)-#20	1
74	A	8	400	C3AZ 7A103-E	PUMP (OIL FRONT)	1

COPYRIGHT © 1986 — FORD MOTOR COMPANY — DEARBORN, MICHIGAN

YEAR	MODEL/RESTRICTIONS	ENGINE CYL.	ENGINE C.I.D. (C.C.D.)	PART NUMBER	DESCRIPTION	QTY.
74	A	8	400	★ B5AZ 7A108-A Not replaced (10/78)	SUPPORT (CONVERTER STATOR)	1
74	A	8	400	D3AZ 7A115-A	LEVER (MANUAL CONTROL VALVE DETENT)	1
74	A	8	400	★ D3AZ 7A117-A Not replaced (10/78)	LEVER (PARKING PAWL)	1
74	A	8	400	★ D3AZ 7A119-A Not replaced (10/78)	PIN (PARKING PAWL TOGGLE)	1
74	A	8	400	★ D3AZ 7A121-A Not replaced (10/78)	LEVER (PARKING PAWL)	1
74	A	8	400	★ D3AZ 7C122-A Not replaced (10/78)	SNAP RING (OUTPUT SHAFT RING-GEAR RETAINING)-5 13/32" O.D. x .055" thick	1
74	A	8	400	D3AZ 7A130-A	SUPPORT (PLANET)	1
74	A	8	400	B1AZ 7A136-A	GASKET (FRONT OIL PUMP TO CASE)	1
				7153	KIT (GASKET and OIL SEAL)	
74	A	8	400	★ D4AZ 7153-A Not replaced(3/82)		1

Consists of

OIL SEALS	GASKETS	"O" RINGS
1-B1AZ 7C050-B	1-D3AZ 7086-A	1-D3AZ 7C099A
1-D3AZ 7C051-A	1-B1AZ 7A136-A	1-D3AZ 7423-A
1-B1AZ 7A294-B	1-D3AZ 7A191-A	1-D3AZ 7C326-A
1-D3AZ 7A294-A	1-D3AZ 7A222-A	1-386078-S
1-D3AZ 7A294-B	1-C1AP 7B426-A	
1-D3AZ 7B498-A	INSULATOR	1-INSTRUCTION SHEET
1-D3AZ 7A548-A	1-D5AZ 7341-A	

74	A	8	400	★ D3AZ 7A153-A Not replaced(10/80)	GEAR (OUTPUT SHAFT RING)	1
74	A	8	400	★ D3AZ 7D157-A Not replaced (10/78)	PISTON (REAR CLUTCH)	1
74	A	8	400	★ D3AZ 7A158-A Not replaced (10/78)	STRUT (FRONT BAND ACTUATING)	1
				7A162	BAND (FRONT)	
74	A	8	400	D2AZ 7A162-A		1
74	A	8	400	B6SZ 7A163-A	PIN (FRONT SERVO PISTON PIN)	1
				7B164	PLATE (CLUTCH)	
74	A	8	400	★ D3AZ 7B164-A Not replaced(3/82)	Forward internal spline	4
				★ D3AZ 7B442-A Not replaced(3/81)	Forward external spline	3
				D3AZ 7B164-A	Rear internal spline	5
				★ D3AZ 7B442-B Not replaced(3/81)	Rear external spline	5
74	A	8	400	★ D3AZ 7A165-A Not replaced (10/78)	SHAFT (FRONT BAND)	1
74	A	8	400	★ D3AZ 7A166-A Not replaced(3/81)	WASHER (REAR CLUTCH SUN GEAR THRUST)-front	1
74	A	8	400	★ D3AZ 7A169-A Not replaced (10/78)	LEVER (REAR BAND SERVO ACTUATING)	1
				385816-S2	(XX-182-A)-flat washer	1
74	A	8	400	★ D3AZ 7C169-A Not replaced(3/82)	SEAL (PRIMARY SUN GEAR OIL-INTERMEDIATE)	1
74	A	8	400	★ D3AZ 7A171-A Not replaced (10/78)	SHAFT (REAR BAND ACTUATING LEVER)	1
74	A	8	400	C1AZ 7A172-A	STRUT (REAR BAND ACTUATING)	1

YEAR	MODEL/RESTRICTIONS	ENGINE CYL.	ENGINE C.I.D. (C.C.D.)	PART NUMBER	DESCRIPTION	QTY.
74	A	8	400	★ D3AZ 7B172–A Not replaced (3/79)	BODY (REAR BAND SERVO)	1
				B7A 77420–A	Bolt (special)–7/16"–14 x 2 1/2"–w/pilot end(servo body to case)	1
				385812–S2	(BB–177–A)–bolt (servo body to case)–hex.–7/16"–14 x 1 7/8"	1
74	A	8	400	★ D3AZ 7A175–A Not replaced (10/78)	STRUT (REAR BAND ANCHOR)	1
74	A	8	400	B5SZ 7A176–B	BAND (REAR)	1
74	A	8	400	★ D3AZ 7A178–A Not replaced (10/78)	SCREW (REAR BAND ADJUSTER)	1
				385815–S2	(MM–151–GH)–locknut–hex. 1/2"–16	1
74	A	8	400	★ D3AZ 7A180–A Not replaced (10/78)	SPRING(PARK PAWL TORSION)	1
74	A	8	400	★ D3AZ 7E185–A Not replaced(3/81)	SEAL (PRIMARY SUN GEAR OIL–FRONT)	2
74	A	8	400	★ D3AZ 7E186–A Not replaced(3/81)	SEAL (PRIMARY SUN GEAR OIL–REAR)	2
74	A	8	400	B5AZ 7A191–B	GASKET (OIL PAN)	1
74	A	8	400	★ D3AZ 7A194–A Not replaced (3/79)	PAN (OIL)	1
				385813–S2	(BB–555–D)–screw & washer assy.–hex.–5/16"–18 x 9/16"	14
74	A	8	400	★ D3AZ 7E195–A Not replaced(10/80)	BALL (COASTING BOOSTER VALVE SHUTTLE)	1
74	A	8	400	★ D3AZ 7A221–A Not replaced (10/78)	RACE (REAR BRAKE DRUM OUTER)–5 3/4" O.D.–over tabs	1
74	A	8	400	★ D3AZ 7A222–A Not replaced(3/81)	GASKET (REAR OIL PUMP TO CASE)	1
74	A	8	400	D3AZ 7A228–E	TUBE (OIL FILLER)	1
74	A	8	400	★ D3AZ 7A232–A Not replaced (10/78)	ROD (PARKING PAWL TOGGLE)	1
74	A	8	400	★ D3AZ 7E243–A Not replaced (10/78)	STRUT (FRONT BAND ANCHOR)	1
74	A	8	400	★ D3AZ 7A244–A Not replaced (10/78)	PIN (PARK PAWL TOGGLE LEVER)–25/32" long–5/16" O.D.	1
74	A	8	400	★ D3AZ 7E245–A Not replaced (10/78)	WASHER (REAR CLUTCH SUN GEAR)–THRUST	1
74	A	8	400	C5AZ 7A246–A	TUBE (BREATHER)	1
74	A	8	400	D3AZ 7A248–A	SEAL (FRONT PUMP OIL)	1
74	A	8	400	★ D3AZ 7K248–A Not replaced (10/78)	SPRING (CONTROL PRIMARY REGULATOR VALVE)	1
74	A	8	400	★ D3AZ 7E253–A Not replaced (10/78)	SNAP RING (GOVERNOR TO SHAFT)–1 19/32" free dia. x 3/64" thick	1
74	A	8	400	★ D3AZ 7A256–B Not replaced (10/78)	LEVER (MANUAL CONTROL)	1
74	A	8	400	B5AZ 7B256–A	BUSHING (PLANETARY GEAR DRUM SUPPORT FLANGE)–OUTER	1
74	A	8	400	B1AZ 7B257–B	BUSHING (PLANETARY GEAR DRUM SUPPORT FLANGE)–inner–1" I.D. x 3/4" long	1

COPYRIGHT © 1986 — FORD MOTOR COMPANY — DEARBORN, MICHIGAN

YEAR	MODEL/RESTRICTIONS	ENGINE CYL.	ENGINE C.I.D. (C.C.D.)	PART NUMBER	DESCRIPTION	QTY.
74	A	8	400	C1AZ 7B258–A	BUSHING (FRONT OIL PUMP)– 2 1/16" O.D. x 9/16" long	1
74	A	8	400	★ D3AZ 7A260–A Not replaced (10/78)	PISTON (FRONT BAND SERVO)	1
74	A	8	400	B5AZ 7B260–A	BUSHING (REAR OIL PUMP BODY)– 2 1/16" I.D. x 2 3/8" O.D. x 3/4" long	1
74	A	8	400	★ D3AZ 7A261–A Not replaced (3/79)	SPRING (MANUAL VALVE DETENT LEVER)	1
74	A	8	400	★ D3AZ 7A262–A Not replaced (3/79)	PISTON (FRONT CLUTCH)	1
74	A	8	400	★ D3AZ 7B264–A Not replaced (10/78)	RETAINER (REAR BAND SERVO SPRING)– 3 1/4" O.D.	1
74	A	8	400	D3AZ 7A266–A	PISTON (REAR BAND SERVO)	1
74	A	8	400	★ D3AZ 7A269–A Not replaced (10/78)	RETAINER (FRONT BAND SERVO PISTON)	1
74	A	8	400	★ D3AZ 7A291–A Not replaced (10/78)	BOLT (PLANETARY GEARS SUPPORT)– 3/8"–16 x 1 1/8" long	1
				7A294	PISTON SEAL	
74	A	8	400	★ D3AZ 7A294–A Not replaced (10/78)	1 15/32" I.D. x 1 5/8" O.D.	1
				★ D3AZ 7A294–B Not replaced (10/78)	2 3/32" I.D. x 2 11/32" O.D.	1
				★ B1AZ 7A294–B Not replaced (3/79)	1 3/16" I.D.	1
74	A	8	400	★ D3AZ 7A295–A Not replaced (10/78)	PIN (PARKING PAWL TOGGLE LEVER)– 1 3/4" long	1
74	A	8	400	★ D3AZ 7C328–A Not replaced (10/78)	"O" RING (FRONT CLUTCH PISTON OIL INNER)	1
74	A	8	400	★ D3AZ 7330–A Not replaced (10/78)	LEVER (FRONT BAND SERVO ACTUATING)	1
74	A	8	400	D4AZ 7341–A	INSULATOR (GEARSHIFT ARM)	1
74	A	8	400	★ C3AZ 7A360–A Not replaced(10/80)	CYLINDER (FRONT CLUTCH)–45 external teeth, 54 internal teeth, 3 5/32" long	1
74	A	8	400	★ D3AZ 7366–A Not replaced (10/78)	PISTON (FRONT BAND SERVO RELEASE)	1
74	A	8	400	C1SZ 7B368–A	WASHER (OUTPUT SHAFT THRUST)	1
74	A	8	400	D3ZZ 7A377–A	DIAPHRAGM ASSY.–*TM–17–#orange or blue band	1
74	A	8	400	★ D3AZ 7A380–C Not replaced(10/80)	ROD (THROTTLE CONTROL LEVER)	1
74	A	8	400	★ D3AZ 7A383–A Not replaced(3/81)	SUPPORT (REAR)	1
				7A385	WASHER (OUTPUT SHAFT)–THRUST FRONT	
74	A	8	400	★ D3AZ 7A385–A Not replaced (3/79)	.064"/.0615" thick	1
				★ D3AZ 7A385–B Not replaced (10/78)	.070"/.0675" thick	1
				★ D3AZ 7A385–C Not replaced(10/80)	.077"/.0745" thick	1
				D3AZ 7A385–D	.084"/.0815" thick	1
74	A	8	400	D4AZ 7C391–A	OVERHAUL KIT	1

Consists of

OIL SEALS
1–D3AZ 7D019–A
1–D5AZ 7052–A
2–C0AZ 7C169–A
1–D3AZ 7A248–A
2–1P–77542–A
2–1P–77543–B

PLATES
9–D3AZ 7B164–A
3–D3AZ 7B442–A
5–D3AZ 7B442–B

GASKET KIT
1–D4AZ 7153–A

1–INSTRUCTION SHEET

YEAR	MODEL/RESTRICTIONS	ENGINE CYL.	ENGINE C.I.D. (C.C.D.)	PART NUMBER	DESCRIPTION	QTY.
74	A	8	400	★ D3AZ 7A394-B Not replaced (10/78)	LEVER (DOWNSHIFT CONTROL OUTER)	1
				7A398	PLANET ASSY.	
74	A	8	400	★ D3AZ 7A398-B Not replaced (3/82)	Incl. (1) B5SZ 7A176-B band	1
74	A	8	400	★ D3AZ 7A399-B Not replaced(10/80)	GEAR (PRIMARY SUN)	1
74	A	8	400	★ D3AZ 7C415-A Not replaced (10/78)	WASHER (REVERSE SUN GEAR THRUST)-rear	1
74	A	8	400	★ D3AZ 7E415-A Not replaced (10/78)	PIN (PARK PAWL TOGGLE LINK)	1
74	A	8	400	★ D3AZ 7E416-A Not replaced (2/79)	SPRING (PARKING PAWL TOGGLE RETAINING)	1
74	A	8	400	★ D3AZ 7423-A Not replaced (10/78)	"O" RING (REAR BAND SERVO PISTON OIL SMALL)	1
74	A	8	400	C1AP 7B426-A	GASKET (THROTTLE VALVE DIAPHRAGM)	1
74	A	8	400	★ D3AZ 7B437-A Not replaced (10/78)	PLATE (REAR CLUTCH PRESSURE)	1
74	A	8	400	B4AZ 7A441-A	PAWL (PARKING BRAKE)	1
				7B442	Refer to group 7B164	
74	A	8	400	★ D3AZ 7D459-A Not replaced (10/78)	RETAINER (PARKING PAWL TOGGLE LEVER SUPPORT PIN)	1
74	A	8	400	★ D3AZ 7D469-A Not replaced (10/78)	TUBE (FRONT BAND SERVO OIL)-5/16" O.D. x 2 23/32" long	1
74	A	8	400	★ D3AZ 7B470-A Not replaced (10/78)	LEVER (PARK PAWL TORSION SPRING)	1
74	A	8	400	★ D3AZ 7D471-A Not replaced (10/78)	BEARING (REAR SERVO LEVER NEEDLE)-(set consists of 29 pieces)	1set
				385816-S2	(XX-182-A)-washer-flat-1/2" I.D. x 1" O.D.	2
74	A	8	400	★ D3AZ 7D474-A Not replaced (10/78)	SPRING (REAR BAND SERVO PISTON)	1
74	A	8	400	★ D3AZ 7A478-A Not replaced (3/79)	RETAINER (MAIN OIL PRESSURE REGULATOR VALVE)	1
74	A	8	400	★ D3AZ 7A480-A Not replaced (10/78)	SPRING (REAR CLUTCH PISTON)	1
74	A	8	400	★ D3AZ 7D480-A Not replaced (10/78)	BEARING ASSY. (REAR CLUTCH SUN GEAR FRONT)	1
74	A	8	400	★ D3AZ 7D483-A Not replaced (10/78)	RETAINER (REAR CLUTCH PLATE)	1
74	A	8	400	★ D3AZ 7E487-A Not replaced(10/80)	RACE (FRONT CLUTCH SUN GEAR THRUST-REAR)	1
74	A	8	400	★ D3AZ 7C492-A Not replaced (10/78)	SCREW (REVERSE BAND ADJUSTMENT)	1

COPYRIGHT © 1986 — FORD MOTOR COMPANY — DEARBORN, MICHIGAN

YEAR	MODEL/RESTRICTIONS	ENGINE CYL.	ENGINE C.I.D. (C.C.D.)	PART NUMBER	DESCRIPTION	QTY.
74	A	8	400	★ D3AZ 7B498-A Not replaced (3/82)	SEAL (MANUAL CONTROL LEVER-OIL)	1
74	A	8	400	★ D3AZ 7A548-A Not replaced(3/81)	SEAL (FRONT CLUTCH PISTON OIL OUTER)	1
74	A	8	400	★ D3AZ 7A577-A Not replaced (10/78)	SNAP RING (PLANET CLUTCH)	1
74	A	8	400	★ D3AZ 7A626-B Not replaced (6/79)	DRUM and SUN GEAR (FRONT BRAKE)	1
74	A	8	400	★ D3AZ 7902-A	CONVERTER ASSY.-N/R (6/78)	1
74	A	8	400	D3AZ 7976-A	HOUSING (CONVERTER)	1
74	A	8	400	C8SZ 7986-A	COVER (CONVERTER)	1
74	A	8	400	386078-S	SEAL (THROTTLE CONTROL LEVER OIL)	1
74	A	8	400	B5A 77283-A	LEVER (THROTTLE CONTROL-INNER)	1
74	A	8	400	1P 77312-A	PIN (PARKING PAWL)-1/2" dia. x 2" long	1
74	A	8	400	1P 77316-A	LINK (PARKING PAWL TOGGLE)	1
74	A	8	400	1P 77356-A	PIN (REAR BAND ACTUATING LEVER SHAFT)	1
74	A	8	400	1P 77366-A	SNAP RING (FRONT BAND SERVO PISTON GUIDE TO SERVO)	1
74	A	8	400	B8A 77417-A	SNAP RING (BAND SERVO PISTON)	1
				77420	Refer to group 7B172	
74	A	8	400	1P 77516-B	SEAT (REAR CLUTCH PISTON SPRING)	1
74	A	8	400	1P 77517-A	SNAP RING (REAR CLUTCH PISTON SPRING RETAINING)	1
74	A	8	400	1P 77524-A	WASHER (REAR CLUTCH SUN GEAR INNER THRUST)	1
74	A	8	400	B5A 77563-A	RING (FRONT CLUTCH PISTON DISC SPRING)	1
74	A	8	400	1P 77567-A	SNAP RING (FRONT CLUTCH DISC SPRING RETAINING)	1
74	A	8	400	B5S 77577-B	WASHER (FRONT CLUTCH HUB TO INPUT SHAFT)THRUST	1
				77607	PLUNGER (MANUAL CONTROL VALVE DETENT LEVER)	
74	A	8	400	372720-S	(AA-11)-Ball (used as plunger-3/8")	1

YEAR	MODEL/RESTRICTIONS	ENGINE CYL.	ENGINE C.I.D. (C.C.D.)	PART NUMBER		DESCRIPTION	QTY.
					7005	CASE ASSY.	
77/	G	6	250	D7DZ	7005-B		1
					7D006	PLANET ASSY. (REVERSE)	
77/	G	6	250	D37Z	7D006-A		1
					7D011	RING (GOVERNOR HOUSING SEAL)	
77/	G	6	250	D37Z	7D011-A		3
					7D014	WASHER (FRONT PUMP SUPPORT THRUST) Selective fit	
77/	G	6	250	D37Z	7D014-F	1.50 mm I.D.	AR
				D37Z	7D014-G	1.70 mm I.D.	AR
				D37Z	7D014-A	1.90 mm I.D.	AR
				D37Z	7D014-B	2.10 mm I.D.	AR
				D37Z	7D014-C	2.30 mm I.D.	AR
				D37Z	7D014-D	2.50 mm I.D.	AR
				D37Z	7D014-E	2.70 mm I.D.	AR
					7017	SHAFT (INPUT)	
77/	G	6	250	D7DZ	7017-B		1
					7D019	SEAL (FORWARD CLUTCH CYLINDER)	
77/	G	6	250	D37Z	7D019-A		2
					7A020	INDICATOR (OIL LEVEL)	
77/	G	6	250	D7DZ	7A020-B	#D7DP 7A020-CB	1
					7D020	SEAL (REVERSE CLUTCH CYLINDER)	
77/	G	6	250	D37Z	7D020-A		2
					7D021	PISTON (INTERM. BAND SERVO)	
77/	G	6	250	D7DZ	7D021-A		1
					7D024	SEAL (INTERM. BAND SERVO PISTON)	
77/	G	6	250	D67Z	7D024-A	Large – retainer seal	1
				D7DZ	7D024-A	Small – piston seal	1
					7D025	SEAL (INTERM. BAND SERVO PISTON OIL)	
77/	G	6	250	D7DZ	7D025-A		1
					7D026	GASKET (INTERM. BAND SERVO COVER)	
77/	G	6	250	D7DZ	7D026-A	7D036 to 7005	1
					7D026	SEAL (INTERM. BAND SERVO PISTON)	
77/	G	6	250	D37Z	7D026-A	7D027 to 7005	1
					7D027	RETAINER (INTERM. BAND SERVO)	
77/	G	6	250	D7DZ	7D027-A		1
					7D028	SPRING (INTERM. BAND SERVO PISTON)	
77/	G	6	250	D37Z	7D028-A		1
					7D029	STRUT (INTERM. BAND)	
77/	G	6	250	D37Z	7D029-A	Actuating	1
					7034	TUBE (BREATHER)	
77/	G	6	250	D7DZ	7034-A		1
					7A034	BUSHING (EXTENSION HOUSING)	
77/	G	6	250	B3TZ	7A034-A		1
					7D034	BAND ASSY. (INTERM. SERVO)	
77/79	G	6	250	D37Z	7D034-A		1
					7D036	COVER (INTERM. BAND SERVO)	
77/	G	6	250	D7DZ	7D036-A		1
					7F037	SOLENOID ASSY. (DOWNSHIFT)	
77/	G	6	250	D7DZ	7F037-A		1

COPYRIGHT © 1986 — FORD MOTOR COMPANY — DEARBORN, MICHIGAN

YEAR	MODEL/RESTRICTIONS	ENGINE CYL.	ENGINE C.I.D. (C.C.D.)	PART NUMBER		DESCRIPTION	QTY.
					7A039	HOUSING (EXTENSION)	
77/	G	6	250	D7DZ	7A039-B		1
					7D044	DRUM ASSY. (INTERM. BRAKE)	
77/	G	6	250	D37Z	7D044-A		1
					7052	SEAL (EXTENSION HOUSING OIL)	
77/	G	6	250	E2DZ	7052-A		1
					7060	SHAFT (OUTPUT)	
77/	G	6	250	D7DZ	7060-A		1
					7C063	BODY ASSY. (GOVERNOR)	
77/	G	6	250	D7DZ	7C063-D		1
					7D063	GEAR ASSY. (SUN)	
77/	G	6	250	D37Z	7D063-A		1
					7D064	SHELL (INPUT)	
77/	G	6	250	D37Z	7D064-A		1
					7B066	PLATE (CLUTCH PRESSURE)	
77/	G	6	250	D37Z	7B066-G	Forward clutch	1
				D7DZ	7B066-A	Reverse clutch - select fit 15.8mm thick	AR
				D7DZ	7B066-B	Reverse clutch - select fit 16.0mm thick	AR
				D7DZ	7B066-C	Reverse clutch - select fit 16.2mm thick	AR
				D7DZ	7B066-D	Reverse clutch - select fit 16.4mm thick	AR
				D7DZ	7B066-E	Reverse clutch - select fit 16.6mm thick	AR
				D7DZ	7B066-F	Reverse clutch - select fit 16.8mm thick	AR
				D7DZ	7B066-G	Direct drive - select fit 10.6mm thick	AR
				D7DZ	7B066-H	Direct drive - select fit 10.8mm thick	AR
				D7DZ	7B066-J	Direct drive - select fit 11.0mm thick	AR
				D7DZ	7B066-K	Direct drive - select fit 11.2mm thick	AR
				D7DZ	7B066-L	Direct drive - select fit 11.4mm thick	AR
				D7DZ	7B066-M	Direct drive - select fit 11.6mm thick	AR
					7D066	WASHER (INPUT SHELL THRUST)	
77/	G	6	250	D37Z	7D066-A		1
					7B067	HUB (FORWARD CLUTCH)	
77/	G	6	250	D37Z	7B067-A		1
					7B070	SPRING (REVERSE CLUTCH PISTON DISC)	
77/	G	6	250	D37Z	7B070-A		1
					7D070	SPRING (PARKING PAWL RETURN)	
77/	G	6	250	D37Z	7D070-A		1
					7D071	SHAFT (PARKING PAWL)	
77/	G	6	250	D37Z	7D071-A		1
					7E085	SPRING (CLUTCH PRESSURE)	
77/	G	6	250	D37Z	7E085-A	Forward clutch Direct drive clutch	1 1
					7086	GASKET (EXTENSION HOUSING)	
77/	G	6	250	D37Z	7086-A		1
					7A089	CLUTCH (OVERRUNNING)	
77/	G	6	250	D37Z	7A089-A		1
					7C096	BEARING ASSY. (PRIMARY SUN GEAR THRUST)	
77/	G	6	250	D37Z	7C096-A		3
					7A098	SCREEN ASSY. (OIL PAN)	
77/	G	6	250	D7DZ	7A098-B	*FT-53-incl. (1) D7DZ 7A191-A gskt.	1
					7C099	SEAL (CLUTCH PISTON OIL)	
77/	G	6	250	D37Z	7C099-A	Forward clutch Direct drive clutch	1 1

YEAR	MODEL/RESTRICTIONS	ENGINE CYL.	ENGINE C.I.D. (C.C.D.)	PART NUMBER		DESCRIPTION	QTY.
					7A100	VALVE BODY ASSY. (MAIN CONTROL)	
77/	G	6	250	D8DZ	7A100–D		1
					7A103	PUMP ASSY. (FRONT OIL)	
77/	G	6	250	D47Z	7A103–A		1
					7A108	SUPPORT ASSY. (FRONT PUMP)	
77/	G	6	250	D7DZ	7A108–A		1
					7A115	LEVER (MANUAL CONTROL VALVE DETENT)	
77/79	G	6	250	D9DZ	7A115–A		1
					7A121	SUPPORT (PARK ACTUATOR)	
77/	G	6	250	D47Z	7A121–A		1
					7A136	GASKET (FRONT OIL PUMP TO CASE)	
77/	G	6	250	D47Z	7A136–A		1
					7153	GASKET and OIL SEAL KIT	
77/	G	6	250	D7DZ	7153–A		1

Consists of

OIL SEALS	OIL SEALS	GASKETS	"O" RINGS
3–D37Z 7D011–A	1–D37Z 7A248–A	1–D7DZ 7D026–A	1–D37Z 7A248–B
2–D37Z 7D019–A	1–D37Z 7D403–A	1–D37Z 7086–A	1–87034–S94
2–D37Z 7D020–A	1–D37Z 7D404–A	1–D47Z 7A136–A	1–87035–S94
1–D67Z 7D024–A	1–D7DZ 7B498–A	1–D7DZ 7A191–A	
1–D7DZ 7D024–A	1–D7DZ 7B498–B	2–D37Z 7B426–A	
1–D7DZ 7D025–A	2–D37Z 7A548–A		
1–D37Z 7D026–A			
2–D37Z 7C099–A			

					7A153	GEAR (RING)	
77/	G	6	250	D37Z	7A153–A	Front clutch hub	1
				D37Z	7A153–B	Output shaft	1
					7A160	TUBE (LUBE OIL INLET – SHORT)	
77/	G	6	250	D7DZ	7A160–A		1
					7B164	PLATE (CLUTCH INTERNAL and EXTERNAL SPLINE)	
	FRONT (Forward) CLUTCH						
77/	G	6	250	D37Z	7B164–A	Internal friction	6
77/	G	6	250	D37Z	7B442–A	External steel	6
	DIRECT (High) CLUTCH						
77/	G	6	250	D37Z	7B164–A	Internal friction	4
77/	G	6	250	D37Z	7B442–A	External steel	4
	REVERSE CLUTCH						
77/	G	6	250	D37Z	7B164–B	Internal friction	7
77/	G	6	250	D37Z	7B442–B	External steel	7
					7D164	HUB (OUTPUT SHAFT)	
77/	G	6	250	D37Z	7D164–A		1
					7A166	WASHER (PLANET CARRIER THRUST)	
77/	G	6	250	D37Z	7A166–A	Use at forward and reverse planet carrier	2
					7D171	RACE (OVERRUNNING CLUTCH)	
77/	G	6	250	D7DZ	7D171–A		1
					7A178	BOLT (INTERM. BAND ANCHOR)	
77/	G	6	250	D7DZ	7A178–A		1
					7D190	ROD (INTERM. BAND SERVO PISTON)	
77/	G	6	250	D7DZ	7D190–A		1
					7A191	GASKET (OIL PAN)	
77/	G	6	250	D7DZ	7A191–A		1
					7A194	PAN ASSY. (OIL)	
77/	G	6	250	D7DZ	7A194–A		1

COPYRIGHT © 1986 — FORD MOTOR COMPANY — DEARBORN, MICHIGAN

YEAR	MODEL/RESTRICTIONS	ENGINE CYL.	ENGINE C.I.D. (C.C.D.)	PART NUMBER		DESCRIPTION	QTY.
					7D218	RETAINER (GOVERNOR VALVE SPRING)	
77/	G	6	250	D37Z	7D218-A		3
					7D220	BODY (GOVERNOR OIL COLLECTOR)	
77/	G	6	250	D37Z	7D220-A		1
					7A228	TUBE (OIL FILLER)	
77/	G	6	250	E0DZ	7A228-B	#Green paint	1
					7A232	ROD ASSY. (PARKING LEVER ACTUATING)	
77/79	G	6	250	D9DZ	7A232-A		1
					7D234	BEARING ASSY. (THRUST)	
77/	G	6	250	D37Z	7D234-A	Forward clutch hub to forward clutch cyl. Oil collector body to case	1 1
				D37Z	7D234-B	Output shaft ring gear hub to inner race	1
				D37Z	7D234-C	Forward clutch cyl. to front pump supt.	1
					7D236	RACE (THRUST BEARING)	
77/	G "From 8/20/77" (before 8/20/77 - refer to group 7A387)	6	250	D7DZ	7D236-A	Forward clutch hub to forward clutch cyl. Output shaft rear thrust bearing	1 1
77/	G	6	250	D37Z	7D236-B	Forward clutch cyl. to front pump supt. - select fit - 1.2 mm	AR
				D37Z	7D236-C	select fit - 1.4 mm	AR
				D37Z	7D236-D	select fit - 1.6 mm	AR
				D37Z	7D236-E	select fit - 1.8 mm	AR
				D37Z	7D236-F	select fit - 2.0 mm	AR
				D37Z	7D236-G	select fit - 2.2 mm	AR
					7A248	SEAL (FRONT OIL PUMP)	
77/	G	6	250	D37Z	7A248-A	Small	1
				D37Z	7A248-B	Large - "O" ring	1
					7A256	LEVER (MANUAL CONTROL)	
77/	G	6	250	D7DZ	7A256-A		1
					7A262	PISTON (CLUTCH)	
77/	G	6	250	D37Z	7A262-A	Forward clutch Direct drive clutch	1 1
					7D273	CONNECTOR (OIL COOLER TUBE)	
77/79	G	6	250	D8DZ	7D273-A	Incl. (1) 31313-S5101-6 washer	2
					31313-FD100	washer-reqd. between 7D273 & 7005	2
					31314-FD100	seal-reqd. between 7D273 & 7005	2
					7D300	SPACER (INTERM. BAND SERVO ROD)	
77/	G	6	250	D37Z	7D300-A		1
					7A360	CYLINDER (FORWARD CLUTCH)	
77/	G	6	250	D7DZ	7A360-A		1
					7A377	DIAPHRAGM ASSY. (VACUUM THROTTLE VALVE)	
77/	G	6	250	D7DZ	7A377-B	*TM-44	1
					7A380	ROD (THROTTLE CONTROL VALVE) Selective fit	
77/	G	6	250	D37Z	7A380-A	30.0 mm long	AR
				D37Z	7A380-B	31.0 mm long	AR
				D37Z	7A380-C	30.5 mm long	AR
				D37Z	7A380-D	29.0 mm long	AR
				D37Z	7A380-E	29.5 mm long	AR
					7A387	RACE (OUTPUT SHAFT REAR THRUST BRG)	
77/	G "Before 8/20/77" From 8/20/77 refer to group 7D236	6	250	★ D37Z /bD7DZ	7A387-A 7D376-A(1/79)		1
					7C389	VALVE (MAIN VALVE BODY MANUAL CONTR.)	
77/	G	6	250	D37Z	7C389-A		1

YEAR	MODEL/RESTRICTIONS	ENGINE CYL.	ENGINE C.I.D. (C.C.D.)	PART NUMBER		DESCRIPTION	QTY.
					7C391	OVERHAUL KIT	
77/	G	6	250	D7DZ	7C391-A		1
	Consists of PLATES 10-D37Z 7B164-A 7-D37Z 7B164-B 10-D37Z 7B442-A 7-D37Z 7B442-B	OIL SEALS 1-D5AZ 7052-B			GASKET KIT 1-D7DZ 7153-A		
					7A398	PLANET ASSY. (FORWARD)	
77/	G	6	250	D37Z	7A398-A		1
					7D402	PISTON (REVERSE CLUTCH)	
77/	G	6	250	D37Z	7D402-A		1
					7D403	SEAL (REVERSE CLUTCH PISTON OUTER)	
77/	G	6	250	D37Z	7D403-A		1
					7D404	SEAL (REVERSE CLUTCH PISTON INNER)	
77/	G	6	250	D37Z	7D404-A		1
					7D406	RETAINER (REVERSE CLUTCH)	
77/	G	6	250	D37Z	7D406-A		1
					7D414	PLATE (PARKING ROD SUPPORT)	
77/	G	6	250	D37Z	7D414-A		1
					7E416	SPRING (BALL PARK SUPPORT)	
77/	G	6	250	D37Z	7E416-A		2
					7D419	PLATE (PARKING SUPPORT RETAINING)	
77/	G	6	250	D47Z	7D419-A		1
					7B426	GASKET (THROTTLE VALVE DIAPHRAGM)	
77/	G	6	250	D37Z	7B426-A	Vacuum diaphragm Downshift solenoid	1 1
					7A441	PAWL (PARKING)	
77/	G	6	250	D37Z	7A441-A		1
					7B442	Refer to group 7B164	
					7B456	RACE (OVERRUNNING CLUTCH OUTER)	
77/	G	6	250	D37Z	7B456-A		1
					7D483	SNAP RING (CLUTCH PRESSURE PLATE RETAINER)	
77/	G	6	250	D37Z	7D483-A	Forward clutch Direct drive clutch	1 1
					7B488	SPRING (CLUTCH PISTON RETURN)	
77/	G	6	250	D37Z	7B488-A	Forward clutch Direct drive clutch	10 10
					7C493	SHAFT (MANUAL CONTROL)	
77/	G	6	250	D7DZ	7C493-A		1
					7B498	SEAL (MANUAL CONTROL LEVER OIL)	
77/	G	6	250	D7DZ D7DZ	7B498-A 7B498-B	Outer Inner	1 1
					7C498	DRUM ASSY. (REVERSE BRAKE)	
77/	G	6	250	D37Z	7C498-A		1
					7A527	RETAINER (CLUTCH PISTON SPRING)	
77/	G	6	250	D37Z	7A527-A	Forward clutch Direct drive clutch	1 1
					7A548	SEAL (CLUTCH PISTON OUTER OIL)	
77/	G	6	250	D37Z	7A548-A	Forward clutch Direct drive clutch	1 1
					7902	CONVERTER ASSY.	
77/79	G	6	250	D7DZ	7902-B		1
					7976	HOUSING (CONVERTER)	
77/	G	6	250	D7DZ	7976-B		1
					7986	COVER (CONVERTER)	
77/	G	6	250	C5DZ	7986-B		1
					384568-S	(BB-543-A) bolt att. 7986 to 7976-5/16"-18 x 5/8"	2

COPYRIGHT © 1986 — FORD MOTOR COMPANY — DEARBORN, MICHIGAN

1973/79 LINCOLN-MERCURY CARS

YEAR	MODEL/RESTRICTIONS	ENGINE CYL.	ENGINE C.I.D. (C.C.D.)	QUANTITY FMX	C4	C6	B/W	C3	PLA	PART NUMBER	DESCRIPTION
	TRANSMISSION TYPE PLA SHOWN ABOVE IDENTIFIES THE JATCO AUTOMATIC TRANSMISSION										
7007	PLATE ASSY. (ENGINE REAR)-Also refer to group 6A366 ▲ 2000 cc @ 2300 cc ⊕ 2800 cc										
73/74	A,C,F,Y	8	351C,W	1	1	1				D2TZ 7007-A	
75/77	C,G,V	8	351W	1	1	1					
77/78	F,P,V	8	302		1						
73/74	C	8	302	1							
77	G	8	302		1						
73/78	A,C,D,K,Y	8	429 460			1	1			D1AZ 7007-A	
75/76	C,	8	351M	1	1	1					
75/	F,Y	8	351M	1	1	1					
73/78	A,C,D,F,Y	8	400	1		1	1				
79	A	8	302,351		1	1				D90Z 7007-A	
73/76	C,G,P	6&8	250,302		1					D20Z 7007-A	
77	G,P,V	6	250		1				1		
78/	G	6	250						1		
78/	G	6&8	250,302		1					D8DZ 7007-A	
79	F,J,P,V	8	302,351W	1	1						
73/74	J	4	All		1		1			D1RY 7007-B	
73/78	J	6	All		1			1		D2RY 7007-A	
76/78	J	4	@140					1		★ D5RY 7007-A	Not replaced
74	L	4	▲122		1					★ D4FZ 7007-D	Not replaced
74/79	L,P	4	@140		1			1		E3TZ 7007-B	
79	J				1			1			
75/	L	6	⊕171		1			1		D4ZZ 7007-B	
73/77	P	6	200		1					C3DZ 7007-A	
78/	P	6	200		1			1		D8BZ 7007-A	
79	J	6	200		1			1			
73/78	J	6	All		2					388379-GS	Bolt (plate to engine)-M8 x 15 (Metric)
7C008	CLIP (TRANSMISSION OIL TUBE)-Improvise										
7K022	BUSHING (TRANSMISSION GEARSHIFT LEVER)										
73	C,K	6&8	All			1				D20Z 7K022-A	5/16" I.D. x 3/8" O.D. x 3/8" long x 37/64" flange dia.
74/76	K	8	All			1					
74/76 74/ 77/	C, F,G,V K	6 & 8	All	1	1	1			1	D40Z 7K022-A	5/16" I.D. x 13/32" O.D. x 3/8 " long
7A024	ROD (COLUMN SHIFT SELECTOR BELLCRANK LEVER TO TRANSMISSION)										
73	A,Y	8	351,429 460	1						★ D0AZ 7A024-C	6 15/32" overall length-Not repl.
		8	All			1				★ D2AZ 7A024-A	5 7/8" overall length-not repl.
		8	400	1						★ D2AZ 7A024-A	Not replaced
74	A,Y	8	351	1						★ D4AZ 7A024-A	6 7/8" long-Green dye-Not repl.
		8	400	1						★ D4AZ 7A024-B	6 1/4" long-Not repl.
		8	All			1					
75/78	A,Y	8	351,400 460	1		1				D7AZ 7A024-A	
79	A	8	All	1						D9AZ 7A024-B	
79	A	8	All		1	1				D9AZ 7A024-C	
73/76	C	6&8	All		1					★ D0OZ 7A024-A	Not replaced
74	F	6&8	All	1	1	1					
73	D	8	All			1				★ D2VY 7A024-A	8" overall length-not replaced
74/	D	8	All			1				D4VY 7A024-A	8 1/4" long
73/77	P	6	200		1					★ D0DZ 7A024-A	13 1/4" overall length-not replaced
73/77	P	6&8	250,302		1					D0DZ 7A024-C	13 1/4" long
78	P "Before 6/1/78"	4&6	All		1			1		D8BZ 7A024-B	

COPYRIGHT © 1986 — FORD MOTOR COMPANY — DEARBORN, MICHIGAN

YEAR	MODEL/RESTRICTIONS	ENGINE CYL.	ENGINE C.I.D. (C.C.D.)	QUANTITY FMX	C4	C6	B/W	C3	PLA	PART NUMBER	DESCRIPTION
	TRANSMISSION TYPE PLA SHOWN ABOVE IDENTIFIES THE JATCO AUTOMATIC TRANSMISSION										
7A024	ROD (COLUMN SHIFT SELECTOR BELLCRANK LEVER TO TRANSMISSION) — Cont'd										
78/	P "From 6/1/78"	4&6	All		1			1		D8BZ 7A024-C	
78/	P	8	302		1			1		D8BZ 7A024-A	
73	A,D,P,Y	6&8	All	1	1	1				383098-S	(MM-173-TC)-nut & washer (rod to connecting rod stud)-5/16"-18
7A026	STUD (TRANSMISSION COLUMN SHIFT SELECTOR BELLCRANK MOUNTING TO ENGINE)										
73/77	P	8	All		1					C8OZ 7A026-B	2 1/4" long
7K027	INSULATOR (GEARSHIFT CABLE)-unless listed below improvise from Bulk 9324 hose										
73/78	K	8	All			1				★ D3SZ 7K027-A	Not replaced
73/78	K	8	All			1				385369-S100	(GG-384)-clip
7B028	TUBE (OIL COOLING OIL INLET REAR)-Refer to group 7A030-1										
7A030-1	TUBE ASSY. (TRANSMISSION OIL COOLER INLET AND OUTLET)										
73/	A,C,D,F,G,J,K,L,P,V,Y	All	All	AR	AR	AR	AR	AR	AR	★	Cut to required length from 8C 2269-A (5/16" dia.)bulk tubing and improvise shape to fit appropriate fittings
											Connector-oil cooler inlet or outlet
				AR	AR	AR	AR	AR	AR	359279-S	(II-32)-5/16" dia x 1/2"-20 and 1/8 " 27 thread x 1 5/32" long
				AR	AR	AR	AR	AR	AR	376148-S8	(II-191-K)-5/16" dia. x 1/8"-27 thread x 3/8" long
											Connector-transmission inlet or outlet-Also refer to Parts List Section group 7D273
73/	A,C,D,F,G,J,K,L,P,V,Y	All	All			AR	AR	AR	AR	★ 359058-S	(II-77)-5/16" dia. x 1/2"-20 female-1/8"-27 male thread-steel-Not repl.
				AR	AR		AR	AR	AR	359324-S8	(II-79)-5/16" dia.-1/4"-28 female-1/2"-20 male thread
						AR		AR	AR	87972-S	(I-13)-5/16" dia. x 1/2"-20 female-1/8"-27 male thread-brass
73/	A,C,D,F,G,J,K,L,P,V,Y	All	All	AR	AR	AR	AR	AR	AR	87944-S8	(I-22)-fitting-5/16"-20 x 1/2"
						AR	AR	AR	AR	★ 370717-S100	(GG-86)-clip(cooler tubes retaining)-NR
						AR	AR	AR	AR	20314-S8	(B-98)-bolt (clip to engine block or frame)-7/16"-14 x 1/2"
						AR	AR	AR	AR	372223-S2	(GG-256-A)-clip (to hold tubes together)-5/8" long I.D.
76/	A,C,F,Y	All	All	AR						387267-S2	(IT-64-DA) -7/16" long - 1/4-18" male - 3/8 - 18" Female thread
73/	L	4	All		AR					★ N602568-S51M	(AB-67)-screw & washer assy.-(clip to engine)-Not repl.
73/78	J	4&6	All		7					N620412-S	Nut(AM-5)-M6 (metric coarse)
					1					E630172-S71	Lockwasher
					1					E602167-S71	(AB-7)-screw(Metric coarse)
7F030	INSULATOR (TRANSMISSION CONTROL CABLE BRACKET)										
73	C,K	6&8	All	1	1	1				D20Z 7F030-A	
73/77	K	6&8	All			1					
7B033	Refer to group 7A110										
7B036	Refer to group 15A808										
7B037	LENS (TRANSMISSION COLUMN SHIFT SELECTOR DIAL)-Also refer to group 7A110										
73/74	D	8	All			1				★ D2VY 7B037-A	Not replaced
75/77	D	8	All			1				★ D5VY 7B037-A	Not replaced
73/77	K	8	All			1				D2LY 7B037-A	
7E046	PLATE (TRANSMISSION COLUMN SHIFT SELECTOR BELLCRANK MOUNTING)										
73/77	P	8	All		1					★ D1DZ 7E046-B	Not replaced
7B052	MASK (TRANSMISSION CONSOLE SHIFT SELECTOR INDICATOR DIAL)										
73/74	C,F,P	6&8	All	1	1	1				C9ZZ 7B052-A	Incl. (1) 382954-S set screw
75/	F	8	All	1	1	1					

YEAR	MODEL/RESTRICTIONS	ENGINE CYL.	ENGINE C.I.D. (C.C.D.)	QUANTITY FMX	C4	C6	B/W	C3	PLA	PART NUMBER	DESCRIPTION
	TRANSMISSION TYPE PLA SHOWN ABOVE IDENTIFIES THE JATCO AUTOMATIC TRANSMISSION										
7B052	**MASK (TRANSMISSION CONSOLE SHIFT SELECTOR INDICATOR DIAL) — Cont'd**										
74/	L	4	All		1			1		D4FZ 7B052-A	
75/	G,V	6&8	All		1				AR		
75/76	P	6&8	All		1						
78	P	All	All		1			1			
79	J,P	All	All		1			1		D9BZ 7B052-A	
75/	D	8	460			1				D5VY 7B052-A	
7E055	**BEZEL and LENS ASSY. (TRANSMISSION COLUMN SHIFT CONTROL SELECTOR)-also refer to group 7A213**										
73/76	C - - w/(PRNDS)dial "Before 7/6/76"	6&8	All	1	1	1				★ D20Z 7E055-C	# Black-not replaced
73/76	C,F - - w/(PRND21)dial fixed whl "Before 7/6/76"	6&8	All	1	1	1				★ D30Z 7E055-C	# Beige-not replaced(10/80)
				1	1	1				★ D30Z 7E055-B	# Blue -not replaced (3/82)
				1	1	1				★ D30Z 7E055-D	# Tan-not replaced(10/80)
				1	1	1				★ D30Z 7E055-F	# Tobacco-not replaced
				1	1	1				D30Z 7E055-A	# Black
73/75	C.F - - w/(PRND21)dial fixed whl	6&8	All	1	1	1				★ D30Z 7E055-G	# Green-r/b D30Z-A paint to match
				1	1	1				★ D30Z 7E055-E	# Gold-r/b D30Z-A paint to match
76	C,F,P - - w/(PRND21)dial fixed whl "Before 7/6/76"	6&8	All	1	1	1				★ D60Z 7E055-A	# Dark red-not replaced(10/80)
				1	1	1				★ D60Z 7E055-B	# Gold-not replaced(10/80)
				1	1	1				★ D60Z 7E055-C	# Saddle-not replaced(10/80)
				1	1	1				★ D60Z 7E055-D	# Medium green-not replaced(10/80)
76	F - - w/(PRND21)dial fixed whl "Before 7/6/76"	8	All	1	1	1				★ D60Z 7E055-E	# Light aqua-not replaced(10/80)
76/	F - - with (PRND21) dial fixed whl "From 7/6/76"	8	All	1	1	1				D70Z 7E055-A	# Red
				1	1	1				D70Z 7E055-B	# Jade
				1	1	1				D70Z 7E055-C	# Blue
				1	1	1				D70Z 7E055-D	# Bright Red
				1	1	1				D70Z 7E055-E	# Saddle
				1	1	1				D70Z 7E055-F	# Chamois
				1	1	1				D70Z 7E055-G	# Silver
				1	1	1				D70Z 7E055-J	# Black
73	P "Before 2/5/73"	6&8	All		1					★ D2DZ 7E055-A	# Black-not replaced (3/82)
73/76	P "From 2/5/73 to 7/6/76"	6&8	All		1					D3DZ 7E055-A	# Black-paint to match
73/76	P "Before 7/6/76"	6&8	All		1					★ D3DZ 7E055-E	# Avocado-not replaced(10/80)
					1					★ D3DZ 7E055-B	# Beige-not replaced(10/80)
					1					★ D3DZ 7E055-C	# Blue-not replaced(10/80)
					1					★ D3DZ 7E055-D	# Ginger-not replaced(10/80)
					1					★ D3DZ 7E055-F	# Orange-not replaced(10/80)
76/77	P "From 7/6/76"	6&8	All		1					D7BZ 7E055-A	# Black
					1					D7BZ 7E055-B	# Blue
					1					D7BZ 7E055-C	# Bright Red
					1					D7BZ 7E055-D	# Tan
					1					D7BZ 7E055-F	# Green
7K065	**MEMBER (TRANSMISSION SUPPORT)**										
78/	P	All	All		1			1		D8BZ 7K065-A	R.H.-# D8BB 7K065-AB
79	J	All	All		1			1		E1ZZ 7K065-A	L.H.-# D9ZB 7F157-AA
7B071	**SPRING (TRANSMISSION CONTROL SELECTOR LEVER PLUNGER)**										
73/77	A,C,D,F,G,K,P,V,Y - - fixed wheels	6&8	All	1	1	1	1		1	C5SZ 7B071-A	1 1/8" free length-8 1/2 coils
78	A,D,F,G,K,V - - Fixed whl	All	All	1	1	1			1		
79	D,F,G,K,V - - fixed whl	All	All	1	1	1		1	1		
78/	P - - column shift	All	All		1			1		D8BZ 7B071-A	13 coils-1 17/32" Free length
79	A	All	All	1	1	1					
73/	C,D,F,G,K,Y - - tilt wheel	8	All	1	1	1	1			C7SZ 7B071-A	1 3/16" long-12 coils
73/78	A	All	All	1	1	1					

COPYRIGHT © 1986 — FORD MOTOR COMPANY — DEARBORN, MICHIGAN

YEAR	MODEL/RESTRICTIONS	ENGINE CYL.	ENGINE C.I.D. (C.C.D.)	QUANTITY FMX	C4	C6	B/W	C3	PLA	PART NUMBER	DESCRIPTION
	TRANSMISSION TYPE PLA SHOWN ABOVE IDENTIFIES THE JATCO AUTOMATIC TRANSMISSION										
7C072	CLIP (TRANSMISSION VACUUM TUBE)-Improvise										
7B084	TUBE (ENGINE TO TRANSMISSION VACUUM)-Improvise from bulk tubing (2269)										
7B085	CLIP (TRANSMISSION VACUUM TUBE RETAINING)-Improvise										
7B086	HOSE (ENGINE TO TRANSMISSION VACUUM TUBE FRONT)										
73/	A,C,D,F,G,K,P,V,Y	6&8	All	AR	AR	AR	AR	AR	AR	★7B086	5/32" dia.-improvise from bulk hose D0PZ 17543-C 7/32" dia.-improvise from bulk hose D0PZ 17543-A
73/	F	8	351	1	1	1				D3ZZ 7B086-A	3/16" I.D. x 5 3/4" long-attach 7B094 to diaphragm
7B087	CONNECTOR (ENGINE TO TRANSMISSION VACUUM TUBE)										
73/	A,C,F,Y	6&8	All	1	1	1				D3AZ 7B087-A	1/4" dia.
73	A,C,F,Y	6&8	All	1	1	1				★ D0VY 7B087-A	7/16" dia.-1 1/2" x 1 1/8" elbow
73/	D	8	All			1				D3VY 7B087-A	3/16" dia.-15" long
73/	F,G,V	6&8	All	1	1	1			1	D3ZZ 7B087-A	1/4" dia. x 7 1/4" long(attach 7B094 vacuum diaphragm)
73/	K	8	All			AR				D1ZZ 7B087-A	7/16" dia. x 4" long elbow
73	J	4	All		1						
73/77	P	6	All		AR						
78/	P	6&8	All		1			1			cut to fit
74	F	6&8	All	1						C90Z 7B087-A	7/32" I.D.-7/16" O.D.-2" x 1 1/8" long elbow
74	L	4	All		1						
7B093	HOSE ASSY. (TRANSMISSION OIL COOLER)										
73/74	A,C,F,K	All	All	1	1	1				★	Cut to required length from 8C-2269-A (5/16" dia.) bulk tubing and improvise shape to fit appropriate fittings
75/	A,C,D,F,G,K,P	All	All	1	1	1	1	1	1	D5AZ 7B093-A	Approx. 44" long-cut to fit
7B094-5	TUBE (ENGINE TO TRANSMISSION VACUUM FRONT OR REAR)-Improvise from bulk tubing (2269) unless listed below										
73/	C,F	8	302,351	1						D3AZ 7B094-A	
7A095	COOLER ASSY. (TRANSMISSION OIL) Also refer to 7K177										
73/78	J	4&6	All		1					★ D2RY 7A095-A	Not replaced (3/82)
73/	All	All	All	1	1	1		1		D4AZ 7A095-A	Approx. 15" long x 4" wide-1 1/2 thick
77/	All	All	All	1	1	1				D7AZ 7A095-A	Approx. 12" long x 8" wide-1 1/2 thick
7B100	COVER (TRANSMISSION CONTROL SELECTOR INDICATOR OPENING)										
75/76	G "Before 10/1/75"	All	All		1					★ D5DZ 7B100-A Not replaced(10/80)	
76/	G "From 10/1/75"	All	All		1					D6DZ 7B100-A	Burled walnut
77/	G - - Canada only	All	All		1					★ D7DZ 7B100-A	Black-not replaced (3/83)
78/	P - - Floor shift	All	All		1			1		D8BZ 7B100-A	Front
78/	P - - Floor or column shift	All	All		1			1		D8BZ 7B100-B	Rear
77/	V	All	All		1					D74Y 7B100-A	#Alum.
7C102	SEAL (TRANSMISSION SELECTOR TUBE)										
73/	A,D,F,P,Y	6&8	All	1	1	1				C9AZ 7C102-A	1 5/8" I.D. x 2 1/4" O.D. x 1" wide
7A110	INDICATOR (TRANSMISSION CONTROL SELECTOR)										
73	A,Y - - with(PRND21)dial	8	All	1	1	1				D5AZ 7A110-A	Incl. cable, brkt., indicator & ret.
74	A,Y - - (PRND21)dial	8	All	1	1	1	1			D4AZ 7A110-A	Incl. cable, brkt., indicator & ret.
73/78	A,Y - - w/(PRNDS) dial	8	All	1	1	1				D7AZ 7A110-B	Incl. cable, brkt., ind., & ret.
74	A,Y - - (PRNDS)dial	8	All	1	1	1				D4AZ 7A110-B	Incl. cable, brkt., indicator & ret.

YEAR	MODEL/RESTRICTIONS	ENGINE CYL.	ENGINE C.I.D. (C.C.D.)	QUANTITY FMX	C4	C6	B/W	C3	PLA	PART NUMBER	DESCRIPTION
TRANSMISSION TYPE PLA SHOWN ABOVE IDENTIFIES THE JATCO AUTOMATIC TRANSMISSION											
7A110	INDICATOR (TRANSMISSION CONTROL SELECTOR) — Cont'd										
75/78	A - - w/(PRND21)dial	8	All	1	1	1				D7AZ 7A110-A	Incl. cable, brkt., indicator & ret.
79	A - - w/(PRND21) dial	8	All	1	1	1				E1MY 7A110-A	Incl. cable, brkt, indicator & ret.
				1	1	1					
79	A - - w/(PRNDS) dial	8	All	1	1	1				D9MY 7B033-A	Indicator lens only-use w/ D9MY 7A110-A w/P/C opt. only
73	C,P - - w/column shift	6&8	All	1	1	1				C8AZ 7A110-A	1 5/16" long-insert type
74	C - - w/column shift & fixed wheel	6&8	All	1	1	1					
74	F	6&8	All	1	1	1					
74	P - - w/column shift	6&8	All		1						
73/74	C,F,P - - w/floor shift	6&8	All	1	1	1				C9ZZ 7A110-A	
75/76	F	8	All	1	1	1					
77/	F - -w/console shift "From 12/1/76"	8	All	1	1	1				D70Z 7A110-A	
74/79	C,F - - tilt wheel	8	All	1	1	1				D70Z 7A110-B	
75/	G,V - - column shift	6&8	All		1				1	D6DZ 7A110-A	Incl. cable, brkt., indicator & ret.
73/74	D	8	All		1	1				D2VY 7A110-A	
75/77	D "Before 12/1/76"	8	All			1				D5VY 7A110-A	
77	D - - "From 12/1/76"	8	All			1				D7VY 7A110-A	
78/	D	8	All			1				D8VY 7A110-A	Incl. cable, brkt., indicator & ret.
73/77	K - - "Before 12/1/76"	8	All			1				D2LY 7A110-A	Incl. cable, brkt., indicator & ret.
77/	K - - "From 12/1/76"	8	All			1				D7LY 7A110-A	Incl. cable, brkt., indicator & ret.
74/77	L	4	All		1			1		D4ZZ 7A110-A	
75/77	G - - console shift "Before 12/1/76"	6&8	All		1						
75/76	P - - console shift	6&8	All		1						
77/	G,L,V - - console shift "From 12/1/76"	All	All		1				1	D7FZ 7A110-A	
79	J	All	All		1						
78/	P - - floor shift	All	All		1			1			
78/	P - - column shift-w/(PRND21) dial	All	All		1			1		D8BZ 7A110-A	Incl. cable, brkt., indicator & ret.
78/	P - - column shift-w/(PRNDS) dial	All	All		1			1		D8BZ 7A110-B	Incl. cable, brkt., indicator & ret.
7E123	ACTUATOR (TRANSMISSION SHIFT SELECTOR INDICATOR)										
73/	D	8	All			1				D0VY 7E123-A	
7B125	TRUNNION (TRANSMISSION GEARSHIFT LEVER)										
74/78	J	4&6	All		1			1		D4RY 7B125-A	
7E130	SHIELD (TRANSMISSION SHIFT SELECTOR INDICATOR)										
73/74	C,P	6&8	All	1	1	1				C9ZZ 7E130-A	Upper -1" x 1 3/4" x 5/8"
73/	F	6&8	All	1	1	1					
73/74	C	6&8	All	1	1	1				C9ZZ 7E130-B	Lower
73/	F	6&8	All	1	1	1					
73/76	P	6&8	All		1						
75/	G,V	6&8	All		1						
74/	L	4&6	All		1			1			
78/	P - - floor shift	All	All		1			1			
75/	G,V	6&8	All	1	1	1				D1FZ 7E130-A	Upper
75/76	P	6&8	All		1						
74/	L	4&6	All		1			1			
78/	P - - floor shift	All	All		1			1			

COPYRIGHT © 1986 — FORD MOTOR COMPANY — DEARBORN, MICHIGAN

YEAR	MODEL/RESTRICTIONS	ENGINE CYL.	ENGINE C.I.D. (C.C.D.)	QUANTITY FMX	C4	C6	B/W	C3	PLA	PART NUMBER	DESCRIPTION
TRANSMISSION TYPE PLA SHOWN ABOVE IDENTIFIES THE JATCO AUTOMATIC TRANSMISSION											
7A133	BUSHING (TRANSMISSION CONSOLE SHIFT SELECTOR SHAFT)										
73/	C,F,G,L,V	All	All	2	2	2		2	2	D5ZZ 7A133-A	With floor or console shift
75/76	P	6&8	All		2						
78/	P - - Floor Shift	All	All		1			1			
73/78	J	4&6	All		2		2	2		D2RY 7A133-A	
7F136	RETAINER ASSY. (TRANSMISSION CONTROL CABLE BRACKET)										
75/	C,F - - column shift	8	All			1				D50Z 7F136-B	
75/	K	8	All			1				D5SZ 7F136-A	
7B142	BRACKET (OIL COOLER)										
73/78	J	4&6	All		1				1	D2RY 7B142-A	
7F144	BRACKET (TRANSMISSION OIL COOLER LOWER)										
75/76	A,Y	8	All			1				★ D5MY 7F144-A Not replaced(3/81)	
75/76	K	8	All			1				★ D5SZ 7F144-A Not replaced(10/80)	
77/	F,K	8	All	1	1	1				D7AZ 7F144-A	
77/	A	8	351,460	1		1					
77/78	A "Before 4/3/78"	8	400	1		1					
78	A(exc. 71)"From 4/3/78"	8	400			1					
78	A(71) "From 4/3/78"	8	400	1							
77/	D - - w/trailer tow III pkg.	8	400,460			1					
78	A(exc. 71)"From 4/3/78"	8	400	1						★ D8AZ 7F144-A	
78	A(71) "From 4/3/78"	8	400			1				Not replaced (3/82)	
7B146	SPRING (TRANSMISSION KICKDOWN CONTROL SHAFT RETRACTING)-Also refer to Carburetor Parts										
73	A,C,D,F,K,P,Y	8	All	1	1	1				C5AZ 7B146-F	Use w/Rochester carburetors
73/	A,C,D,F,G,K,P,V,Y	8	All	1	1	1	1			D1AZ 7B146-A	Use w/Ford or Holley carburetors
75/	L	6	All		1						
79	J	6	171 (2800)		1			1			
73/76	C,G,P	6	All		1					D1ZZ 7B146-A	25 coils-1/2" dia. x 6" free length
73/78	J	4&6	All		1				1	★ D2RY 7B146-A	Not replaced (3/82)
74/76	L	4	All		1					C5AZ 7B146-F	
77	G,P,V	6	All		1					D7DZ 7B146-AA	
78/	G	6	All		1						
78/	P	6	All		1			1		D8BZ 7B146-A	
79	J	6	200		1			1			
77/	G	6	250						1	D7DZ 7B146-B	
77/	L,P	4	All		1				1	D7FZ 7B146-A	
7C147	PLUG (TRANSMISSION SHIFT CONTROL ADJUSTING HOLE)										
73/	C,F,G,L,V - - w/floor shift	6&8	All	1	1	1				C7ZZ 7C147-A	
73/76	P - - w/floor shift				1						
78/	P - - Floor Shift	All	All		1			1			
7F175	SWITCH (TRANSMISSION KICKDOWN CONTROL)										
77/	G	6	250						1	D7DZ 7F175-A	
7C176	RETAINER (TRANSMISSION KICKDOWN LEVER SPRING)										
73/	C,G,V	6	250		1				1	C9ZZ 7C176-B	
73/76	P				1						
73/77	P	6	200		1					★ C9ZZ 7C176-A Not replaced(3/81)	

1973/79 LINCOLN-MERCURY CARS

YEAR	MODEL/RESTRICTIONS	ENGINE CYL.	ENGINE C.I.D. (C.C.D.)	QUANTITY FMX	C4	C6	B/W	C3	PLA	PART NUMBER	DESCRIPTION
TRANSMISSION TYPE PLA SHOWN ABOVE IDENTIFIES THE JATCO AUTOMATIC TRANSMISSION											
7K177	AUXILIARY OIL COOLER KIT (TRANSMISSION) ▲ 2000 cc										
73/	C,D,F,G,K,P,V,Y - - A/T	8	All	1	1	1	1		1	C9AZ 7K177-A	High capacity
73/	A - - without A/C	8	All	1	1	1	1				
76/	A,C,D,F,G,K,P,V	6&8	All	1	1	1			1	D6AZ 7K177-A	Slim-line - - extra high capacity
76/	J,L	6	All		1			1			
73/	A - - A/C	8	All	1	1	1	1				
73/74	J	4	▲122					1		★ D1RY 7K177-A	Not replaced
73/79	A,C,D,F,G,K,P,V,Y	All	All	1	1	1	1	1	1	E3AZ 7K177-A	High capacity
73/79	A,C,D,E,G,K,P,V,Y	All	All	1	1	1	1	1	1	E3DZ 7K177-A	Economy unit
7A185	BELLCRANK ASSY. (TRANSMISSION CONTROL TO ACCELERATOR SHAFT)										
73/74	P	6	200		1					★ D3DZ 7A185-A	#White paint-Not repl.
73/74	C,P	6	250		1					★ D30Z 7A185-A	Not repl.
75	G,P	6	200,250		1					★ D5DZ 7A185-B	Not replaced
76	G,P	6	200,250		1					★ D6DZ 7A185-A Not replaced(10/80)	
77	G,P	6	200,250		1					D7DZ 7A185-A	
78/	G	6	250		1						
77/	G	6	250						1	D7DZ 7A185-B	
79	J	6	200		1			1		D8BZ 7A185-B	

COPYRIGHT © 1986 — FORD MOTOR COMPANY — DEARBORN, MICHIGAN

YEAR	MODEL/RESTRICTIONS	ENGINE CYL.	ENGINE C.I.D. (C.C.D.)	QUANTITY FMX	C4	C6	B/W	C3	PLA	PART NUMBER	DESCRIPTION
TRANSMISSION TYPE PLA SHOWN ABOVE IDENTIFIES THE JATCO AUTOMATIC TRANSMISSION											
7A185	BELLCRANK ASSY. (TRANSMISSION CONTROL TO ACCELERATOR SHAFT) — Cont'd										
78/	P	6	200		1			1		D8BZ 7A185-B	
73/	C,P	6	All		AR					351754-S33	(MM-167)-nut-1/4" x 28 x 7/16"
											Bolt-refer to group 7E310
7A185	BELLCRANK ASSY. (TRANSMISSION COLUMN SHIFT SELECTOR)										
73	A,Y	8	351	1						★ D0AZ 7A185-B	Not repl.
73	A,Y	8	All			1				D4AZ 7A185-A	
		8	351	1						★ D4AZ 7A185-B	Not repl.
		8	400	1						★ D4AZ 7A185-C	Not repl.
74	A	8	400				1			★ D4AZ 7A185-D	Not repl.
75/78	A,Y	8	All	1						★ D5AZ 7A185-B	Not repl.
		8	All			1				D5AZ 7A185-A	
79	A	8	All	1						D9AZ 7A185-C	
79	A	8	All		1	1				D9AZ 7A185-D	
73/74	D	8	All			1				★ D4VY 7A185-A	Not repl.
75/	D	8	All			1				D5VY 7A185-A	
73	P	6	250		1					D5BZ 7A185-C	
		8	302		1					D5BZ 7A185-B	
73/77	P	6	200		1					D5BZ 7A185-A	
74/77	P	6	250		1					D5BZ 7A185-C	
		8	302		1					D5BZ 7A185-B	
78	P	4&6	All		1			1		D8BZ 7A185-A	
78/	P	8	All		1			1		E1BZ 7A185-A	
79	P	4&6	All		1			1			
73/	A,Y	8	All	AR	AR	AR				56720-S2	(B-318-GD)-bolt (bellcrank to frame)-5/16"-18 x 7/8"
					AR	AR	AR			383123-S	(MM-192-UB)-nut and retainer assy.-5/16"-18
					2	2	2			C7AZ 4346-A	Bolt(bellcrank to engine)
73/77	P	6&8	All		AR					56740-S2	(B-323)-bolt(bellcrank to frame)-3/8"-16 x 1"
7A187	ROD (TRANSMISSION KICKDOWN CONTROL SHAFT)										
	A (Mercury)										
73	A	8	351	1						★ D3AZ 7A187-A	#Yellow paint-28" long-not repl.
73/74	A - - without T/E	8	400	1			1			D4AZ 7A187-A	
74	A - - T/E	8	400	1						D4AZ 7A187-E	#White and Brown paint
75	A,Y	8	351,400	1							
73/74	A - - without T/E	8	400			1				D3AZ 7A187-D	#Brown paint
74	A - - T/E	8	400			1				D4AZ 7A187-C	#Red and Silver paint
75	A,Y	8	400			1					
73/74	A - - without T/E	8	429,460			1				★ D3AZ 7A187-E	Not repl.
74	A - - T/E	8	460			1				D4AZ 7A187-B	#Red and Blue paint
75/76	A,Y	8	460			1				★ D5AZ 7A187-A	#Red and Brown paint-not repl.
77/78	A	8	460			1				D7AZ 7A187-A	#Blue and yellow paint daub
77/78	A - - w/Hi-alt. carb.	8	400			1				D7AZ 7A187-C	#Violet paint daub
76	A,Y	8	351,400	1		1				D6AZ 7A187-A	#Green paint
77/78	A	8	351-M	1							
76/78	A,Y - - exc. Hi-Alt.	8	400			1				D6AZ 7A187-B	#Violet paint
77/78	A	8	351-M			1					
79	A	8	302	1						D9AZ 7A187-C	#Tan paint daub
79	A - - exc. Canada	8	302,351		1					D9AZ 7A187-A	#Green paint daub
79	A - - Canada	8	302		1					D9AZ 7A187-F	
79	A - - Canada	8	351		1					D9AZ 7A187-D	
79	A - - exc. Canada	8	351			1				D9AZ 7A187-B	#Violet paint daub
79	A - - Canada	8	351			1				D9AZ 7A187-E	

YEAR	MODEL/RESTRICTIONS	ENGINE CYL.	ENGINE C.I.D. (C.C.D.)	QUANTITY FMX	C4	C6	B/W	C3	PLA	PART NUMBER	DESCRIPTION
TRANSMISSION TYPE PLA SHOWN ABOVE IDENTIFIES THE JATCO AUTOMATIC TRANSMISSION											
7A187	ROD (TRANSMISSION KICKDOWN CONTROL SHAFT) — Cont'd										
	C (Montego)										
73	C "Before 12/1/72"	8	302	1						D20Z 7A187-L	
73/74	C "From 12/1/72"	8	302	1						D30Z 7A187-M	#Green paint
73/74	C	8	351C	1						★ D30Z 7A187-F Not replaced(10/80)	#White and #Blue paint-27" long
73/74	C	8	351W	1						D30Z 7A187-G	#Silver and #Brown paint-26 5/8" long
75/76	C	8	351W	1						★ D50Z 7A187-D	#Yellow paint-not repl.
75/76	C	8	351M, 400	1						D50Z 7A187-B	#Orange and White paint
76	C	8	351M, 400	1						D60Z 7A187-B	#Red paint
73/74	C	6	250		1					D30Z 7A187-L	25" long
73/74	C	8	302		1					★ D30Z 7A187-E	Not repl.
73/74 75/76	C C	8 8	351C 351M		1 1					D30Z 7A187-A	#White paint-28" long
73	C "Before 12/1/72"	8	351W		1					D20Z 7A187-A	#White paint-27" long
73/76	C "From 12/1/72"	8	351W		1					D30Z 7A187-K	#Red and #Yellow paint-27 3/16" long
76	C	8	351M		1					★ D60Z 7A187-A Not replaced(10/80)	#Blue and Orange paint
73/74	C	8	351C			1				D30Z 7A187-H	#White and #Violet paint-26 1/4" long
73/74	C	8	351CJ			1				D30Z 7A187-B	#Violet paint-26 1/2" long
73	C "Before 12/1/72"	8	351W			1				★ D20Z 7A187-B	#Violet paint-27" long-not repl.
73	C "From 12/1/72"	8	351W			1				D30Z 7A187-J	#Black and #Blue paint-25 7/8" long
73/74	C - - without T/E	8	400			1				★ D30Z 7A187-D	#Silver paint-26 1/4" long-not repl.
74	C - - T/E	8	400			1				D40Z 7A187-B	#Black paint-26 5/8" long
75	C	8	351M, 400			1				D50Z 7A187-C	#Black and Red paint
76	C	8	351M, 400			1				D60Z 7A187-C	#White paint
73/74	C - - without T/E	8	429,460			1				★ D30Z 7A187-C Not replaced(1/81)	#Brown paint-29 1/2" long
74	C - - T/E	8	460			1				D40Z 7A187-A	#Black and Blue paint
75/76	C	8	460			1				D50Z 7A187-A	#Blue paint
	D (Lincoln)										
73/74	D - - without T/E	8	All			1				D3AZ 7A187-E	#Silver paint
74	D - - T/E	8	All			1				D4AZ 7A187-B	
75/76	D	8	All			1				★ D5AZ 7A187-A	#Red and Brown paint-not repl.
77 78/	D D - - exc. Hi-Alt. Carb.	8 8	400 400							D6AZ 7A187-B	#Violet paint daub
78/	D - - w/Hi-Alt. carb.	8	400			1				D7AZ 7A187-C	#Violet paint daub
77/78	D	8	460			1				D7AZ 7A187-A	#Blue and yellow paint daub
	F (Cougar)										
77/	F	8	302		1					D70Z 7A187-D	#Orange and Black paint daub
78/	F	8	302	1						D90Z 7A187-A	#Black paint daub
73	F	8	351	1						D3ZZ 7A187-B	#Black paint-27" long
74	F	8	351W	1						D30Z 7A187-G	#Silver and Brown paint-26 5/8" long
74	F	8	351C	1						★ D30Z 7A187-F Not replaced(10/80)	27 3/8" long
75	F	8	351M, 400	1						D50Z 7A187-B	#Orange and White paint
75/76	F	8	351W	1						★ D50Z 7A187-D	#Yellow paint-not repl.
76/79	F	8	351M	1						D60Z 7A187-B	#Red paint daub
74/76	F	8	351W		1					D30Z 7A187-K	#Red and Yellow paint-27 3/16" long
77/	F	8	351-W	1						D70Z 7A187-E	#Red and Violet paint daub
77	F - - "Before 2/1/77"	8	351-W		1					D70Z 7A187-F	#Orange and Red paint daub
77/78	F - - "From 2/1/77"	8	351W		1					D70Z 7A187-H	#Green and white paint
74/75	F	8	351C-M		1					D30Z 7A187-A	#White daub-28" long

COPYRIGHT © 1986 — FORD MOTOR COMPANY — DEARBORN, MICHIGAN

YEAR	MODEL/RESTRICTIONS	ENGINE CYL.	ENGINE C.I.D. (C.C.D.)	QUANTITY FMX	C4	C6	B/W	C3	PLA	PART NUMBER	DESCRIPTION
	TRANSMISSION TYPE PLA SHOWN ABOVE IDENTIFIES THE JATCO AUTOMATIC TRANSMISSION										
	▲ 2000cc @ 2300cc ⊕ 2800cc										
7A187	ROD (TRANSMISSION KICKDOWN CONTROL SHAFT) — Cont'd										
	F (Cougar)										
76	F	8	351M		1					★ D60Z 7A187-A Not replaced(10/80)	#Blue and orange paint
77/78	F - - exc. Calif.	8	351-M		1					D70Z 7A187-B	#Blue and Green paint daub
79	F - - w/o Hi Alt. carb.	8	351-M		1						
77	F - - Calif.	8	351-M		1					D70Z 7A187-G	#Gray and Red paint daub
79	F - - w/Hi Alt. carb.	8	351-M		1						
73/74	F	8	351C			1				★ D3ZZ 7A187-C Not replaced(10/80)	#Red paint-26 3/8" long
74	F - - without T/E	8	400			1				★ D30Z 7A187-D	#Silver paint-26 1/4" long-not repl.
74	F - - T/E	8	400			1				D40Z 7A187-B	26 5/8" long
75	F	8	351M, 400			1				D50Z 7A187-C	#Black and Red paint
76/78	F - - w/o Hi altitude	8	351M, 400			1				D60Z 7A187-C	#White paint
77/78	F	8	400-2V	1						D60Z 7A187-B	#Red paint
77/78	F - - Hi Altitude	8	351-M,			1				D70Z 7A187-C	#Tan paint daub
79	F		400			1					
74	F - - without T/E	8	460			1				★ D30Z 7A187-C Not replaced(1/81)	#Brown paint-29 1/2" long
74	F - - T/E	8	460			1				D40Z 7A187-A	28" long
75/76	F	8	460			1				D50Z 7A187-A	#Blue paint
	G (Monarch)										
75/77	G	6	250		1					D5DZ 7A187-C	#Black paint
78/	G	6	250		1					D70Z 7A187-A	#Brown paint daub
75	G	8	302		1					D5DZ 7A187-A	#Black and white paint
76	G All "Before 11/3/75"	8	302		1						
76	G - - Calif., "From 11/3/75 to 4/1/76"	8	302		1					D6DZ 7A187-A	#White & Green paint
76	G - - exc. Calif., "From 11/3/75 to 4/1/76"	8	302 (exc. VV)		1					D7DZ 7A187-C	#Orange paint
76/78	G - - "From 4/1/76"										
79	G	8	302 (exc. VV)		1					D9DZ 7A187-B	
77	G 'Before 3/1/77"	8	302-VV		1					D7DZ 7A187-A	#Blue and White paint daubs
77/78	G "From 3/1/77"	8	302-VV		1					★ D7DZ 7A187-B	#Orange and Blue paint-not repl.
79	G	8	302-VV		1					D9DZ 7A187-C	
75	G	8	351W		1					D5DZ 7A187-B	#Green and red paint
76	G	8	351W		1					D6DZ 7A187-B	#Blue and red paint
77	G	8	351-W		1					D70Z 7A187-F	#Orange and Red paint daub
	J (CAPRI)										
79	J	4	@140					1		D8BZ 7A187-B	
79	J	6	⊕171					1		D9ZZ 7A187-B	
79	J - - Calif.	6	⊕171		1					D9ZZ 7A187-C	
79	J - - exc. Calif.	6	⊕171		1					D9ZZ 7A187-D	
79	J	6	200		1					D8BZ 7A187-D	
79	J	6	200					1		D8BZ 7A187-C	
79	J - - exc. Calif.	8	302		1					D8BZ 7A187-A	
79	J - - Calif.	8	302		1					D8BZ 7A187-E	
	K (Mark IV & V)										
73/74	K - - without T/E	8	All			1				★ D3SZ 7A187-B Not replaced(1/81)	#White-27 1/2" long
74	K - - T/E	8	All			1				★ D4SZ 7A187-A	#Red-28" long-Not Repl.
75/76	K	8	All			1				D50Z 7A187-A	#Blue paint
77	K	8	400			1				D60Z 7A187-C	#White paint daub
78/	K - - exc. Hi-Alt. carb.	8	400			1					
78/	K - - w/Hi-Alt. carb.	8	400			1				D70Z 7A187-C	#Tan paint daub
77/78	K	8	460			1				D7LY 7A187-A	#Orange and Green paint daub

YEAR	MODEL/RESTRICTIONS	ENGINE CYL.	ENGINE C.I.D. (C.C.D.)	QUANTITY FMX	C4	C6	B/W	C3	PLA	PART NUMBER	DESCRIPTION
	TRANSMISSION TYPE PLA SHOWN ABOVE IDENTIFIES THE JATCO AUTOMATIC TRANSMISSION										
	▲ 2000 cc @2300 cc ⊕ 2800 cc										
7A187	ROD (TRANSMISSION KICKDOWN CONTROL SHAFT) — Cont'd										
	L (Bobcat)										
73/74	L	4	▲122		1					D1FZ 7A187-A	22" long
74/	L	4	@140		1					D4FZ 7A187-A	22 3/8" long
74	L	4	@140					1		D4FZ 7A187-B	#Red paint
75/	L	4	@140					1		D4ZZ 7A187-C	23 1/2" long
75	L "Before 12/2/74"	6	⊕171		1			1		★ D5FZ 7A187-A	#Black or violet paint-not repl.
75/76	L "From 12/2/74"	6	⊕171		1			1		D5FZ 7A187-B	#Green paint
77/78	L - - Calif.	6	⊕171					1		D9FZ 7A187-A	#Yellow and black paint daubs
79	L - - Calif. "Before 12/4/78"	6	⊕171		1						
77/78	L - - exc. Calif.	6	⊕171		1			1		D9FZ 7A187-B	
79	L - - exc. Calif.	6	⊕171		1						
79	L - - Calif. "From 12/4/78"	6	⊕171		1						
79	L	6	⊕171					1			
	P (Comet or Zephyr)										
73/74	P	6	200		1					D1DZ 7A187-A	#White-25 3/4" long
75/77	P	6	200		1					D5BZ 7A187-B	#Green paint
73/74	P	6	250		1					D3ZZ 7A187-E	#Green-23" long
75/77	P	6	250		1					D5DZ 7A187-C	#Black paint
73/74	P	8	302		1					★ D3ZZ 7A187-D	26 3/4" long-not repl.
75/76	P	8	302		1					D5BZ 7A187-A	#Red paint
77	P	8	302-2V		1					D7BZ 7A187-A	#White paint daub
77	P	8	302-VV		1					D7BZ 7A187-B	#Blue paint daub
78/	P	4	All					1		D8BZ 7A187-B	#Gray paint- approx. 22.56" long
78/	P	6	200					1		D8BZ 7A187-C	#Red paint-approx. 24" long
78/	P	6	200		1					D8BZ 7A187-D	#Brown paint-approx. 22.74" long
78/	P - - exc. Calif.	8	302		1			1		D8BZ 7A187-A	#Brown and Yellow-approx. 26.26" long
78/	P - - Calif.	8	302		1			1		D8BZ 7A187-E	#Green and White-approx. 26.56" long
	V (Versailles)										
77/78	V	8	302 (exc. VV)		1					D7DZ 7A187-C	#Blue and Gray paint
77/78	V	8	302-VV		1					★ D7DZ 7A187-B	#Orange and Blue paint-not repl.
79	V	8	302 (exc. VV)		1					D9DZ 7A187-B	
79	V	8	302-VV		1					D9DZ 7A187-C	
77	V	8	351W		1					D70Z 7A187-F	#Orange
	Y (Meteor)										
73/74	Y	8	351	1						★ D3AZ 7A187-A Not replaced(11/80)	#Yellow paint-28" long
73/74	Y - - without T/E	8	400	1						D4AZ 7A187-A	
74	Y - - T/E	8	400	1						D4AZ 7A187-E	#White and Brown paint
74	Y	8	351		1					D4AZ 7A187-F	#Green-violet paint
73/74	Y - - without T/E	8	400			1				D3AZ 7A187-D	#Brown paint
74	Y - - T/E	8	400			1				D4AZ 7A187-C	#Red and Silver paint
73/74	Y - - without T/E	8	429,460			1				D3AZ 7A187-E	
74	Y - - T/E	8	460			1				D4AZ 7A187-B	#Red and Blue paint
75/76	Y - - refer to A(Mercury) model for application										
73/76	A,C,D,F,K,P,Y			AR	AR	AR				97409-S	(Q-5-A)-washer-"C" type-17/32"
				AR	AR	AR				383212-S2	(GG-362)-clip
7A187	CABLE (TRANSMISSION KICKDOWN CONTROL)										
73/74	J	4	All				1			D1RY 7A187-A	
73/74	J	4&6	All		1			1		D2RY 7A187-A	
74	J	6	⊕171		1					D4RY 7A187-B	
74	J	6	⊕171				1			D4RY 7A187-A	
76/78	J	4	@140					1		D5RY 7A187-B	
76/78	J	6	⊕171					1		★ D5RY 7A187-A	Not repl.

COPYRIGHT © 1986 — FORD MOTOR COMPANY — DEARBORN, MICHIGAN

YEAR	MODEL/RESTRICTIONS	ENGINE CYL.	ENGINE C.I.D. (C.C.D.)	QUANTITY FMX	C4	C6	B/W	C3	PLA	PART NUMBER	DESCRIPTION
	TRANSMISSION TYPE PLA SHOWN ABOVE IDENTIFIES THE JATCO AUTOMATIC TRANSMISSION										
	▲ 2000 cc @2300 cc ⊕ 2800 cc										
7K189	BUSHING (TRANSMISSION GEAR SHIFT SHAFT)										
78/	P - - column shift	All	All		1			1		D8BZ 7K189-A	
79	A - - column shift	8	All	1	1	1					
7K193	BRACKET (TRANSMISSION KICK DOWN CABLE)										
74/78	J	4	All		1		1			★ D4RY 7K193-A Not replaced(10/80)	
7E196	SPRING (TRANSMISSION CONTROL SELECTOR PIVOT)										
73/74	A,Y	6&8	All	1		1				★ D1AZ 7E196-A	Not replaced
73/77	D	8	All			1				D0VY 7E196-A	1/4" dia. x 1" free length, 27 coils
73/	K	8	All			1				D0AZ 7E196-A	1/4" dia. x 15/16" free length, 23 coils
78	D "Before 4/3/78"	All	All			1					
75/	G,V	8	All		1						
75/78	A,Y "Before 4/3/78"	All	All	1	1	1					
78	A "From 4/3/78"	All	All	1	1	1				D8AZ 7E196-A	
78/	D "From 4/3/78"	All	All	1	1	1					
78/	P	All	All		1			1		D8BZ 7E196-A	55/64" free length
79	A - - column shift	8	All	1	1	1					
7210	LEVER ASSY. (TRANSMISSION COLUMN SHIFT SELECTOR)-Incl. lever, knob, insulator and impact sleeve										
73/76	C,F,P - - w/fixed wheel- "Before 11/17/75"	6&8	All	1	1	1				D5DZ 7210-B	#Chrome
73/	D,G,K,V,Y - - w/fixed wheel	6&8	All	1	1	1			1		
73/78	A - - Fixed wheel	All	All	1	1	1					
76/	C,F - - w/fixed wheel- "From 11/17/75"	6&8	All	1	1	1				D60Z 7210-A	#Black
76/77	P - - w/fixed wheel- "From 11/17/75"	6&8	All	1	1	1				D6BZ 7210-B	#Black
78	P	All	All		1			1		E0AZ 7210-A	
79	A,P - - Column shift	All	All	1	1	1		1		E0AZ 7210-B	
73/75	C,F - - tilt wheel- "Before 11/17/75"	6&8	All	1	1	1				D3AZ 7210-B	#Chrome
73/	D,G,K,V,Y - - tilt wheel	6&8	All	1	1	1					
75/78	A - - Tilt wheel	All	All	1	1	1					
76/	C,F - - tilt wheel	6&8	All	1	1	1				D60Z 7210-B	#Black
73/	A,C,D,K,P,Y	8	All	1	1	1				384714-S2	(NN-109-V)-pin (lever to socket)- 3/16" x 1"
74	F	8	All	1	1	1					
7210	LEVER ASSY. (TRANSMISSION CONSOLE SHIFT SELECTOR)-Incl. lever, rollers, pawl and cable assy. -Also refer to group 7210 Hsg. and Lever Assy.										
73/76	C	6&8	All		1	1				D20Z 7210-A	
74/	F	All	All	1	1	1					
73	F	8	All	1		1				C9ZZ 7210-C	
73	J	4&6	All		1					D0RY 7210-B	
73/74	J						1				
74/78	J	4&6	All		1			1		★ D6RY 7210-A	Not replaced
74/	L	4	All		1			1		D4FZ 7210-A	#Chrome
75/	G,V	6&8	All		1						
75/76	P	6&8	All		1						
73/74	P	6&8	All		1					★ D1DZ 7210-A Not replaced(10/80)	#Black
78	P	All	All		1			1		D8BZ 7210-B	
73/78	J	4&6	All		1		1	1		34370-S8	(M-99)-nut-3/8"-24
					1		1	1		371800-S	(NN-132)-pin (attaches lever assy.)- 3/32" x 7/16"
7210	LEVER AND HOUSING ASSY. (TRANS. FLOOR SHIFT CONTROL SELECTOR)										
79	J,P	All	All		1			1		D9BZ 7210-D	
7212	TUBE ASSY. (TRANSMISSION COLUMN SHIFT SELECTOR)										
73/78	A,Y - - fixed wheel	8	All	1		1	1			D0AZ 7212-A	28 1/16" long

YEAR	MODEL/RESTRICTIONS	ENGINE CYL.	ENGINE C.I.D. (C.C.D.)	QUANTITY FMX	C4	C6	B/W	C3	PLA	PART NUMBER	DESCRIPTION
	TRANSMISSION TYPE PLA SHOWN ABOVE IDENTIFIES THE JATCO AUTOMATIC TRANSMISSION										
7212	**TUBE ASSY. (TRANSMISSION COLUMN SHIFT SELECTOR) — Cont'd**										
73/78	A,Y – – tilt wheel	8	All	1		1	1			D0AZ 7212-E	25 5/16" long
79	A	8	302,351	1	1	1				D9AZ 7212-A	
73/	C,F,K – – fixed wheel	6&8	All	1	1	1				D20Z 7212-F	
73/	C,F,K – – tilt wheel	8	All	1	1	1				D2SZ 7212-B	
73/	D – – fixed wheel	8	All			1				D2VY 7212-A	30 7/16" long
73/	D – – tilt wheel	8	All			1				D2VY 7212-B	28 5/64" long
75/	G,V – – fixed wheel	6&8	All		1				1	D5DZ 7212-B	
76/	G,V – – tilt wheel	6&8	All		1					D6DZ 7212-A	15 61/64" long
73	P "Before 7/5/73"	6&8	All		1					★ D0DZ 7212-C Not replaced(1/81)	24 15/16" long
73/77	P "From 7/5/73"	6&8	All		1					D4DZ 7212-B	25 3/8" long
78	P "Before 6/1/78"	All	All		1			1		★ D8BZ 7212-A	Not replaced
78/	P "From 6/1/78"	All	All		1			1		E0SZ 7212-A	
7212	**TUBE ASSY. (TRANSMISSION FLOOR SHIFT STEERING COLUMN INNER)**										
73/	F – – fixed wheel	8	All	1	1	1				D1ZZ 7212-A	27 1/16" long
73/	F – – tilt wheel	8	All	1	1	1				D1ZZ 7212-B	26 1/16" long
73	P "Before 7/5/73"	6&8	All		1					D1DZ 7212-A	25" long
73/76	P "From 7/5/73"	6&8	All		1					★ D4DZ 7212-C Not replaced(10/80)	
7L212	**CONNECTOR ASSY. (ENGINE TO TRANSMISSION VACUUM REAR)**										
74	J	4&6	All		1					★ D4RY 7L212-A	Not replaced
7213	**KNOB (TRANSMISSION COLUMN SHIFT SELECTOR LEVER)**										
73/	D,G,K,V,Y	6&8	All	1	1	1	1		1	D30Z 7213-A	#Chrome
73/76	C,F,P "Before 11/17/15"	6&8	All	1	1	1	1	1			
73/78	A	All	All	1	1	1					
79	A	8	302,351	1	1	1				D9AZ 7213-A	#Chrome
76/	C,F,P- "From 11/17/75"	All	All	1	1	1	1			D60Z 7213-A	#Black
7213	**KNOB ASSY. (TRANSMISSION CONSOLE SHIFT SELECTOR LEVER)**										
73/	C,F	6&8	All	1	1	1				D30Z 7213-B	#Chrome – Kit "T" handle
75/76	P	6&8	All		1						
74/77	L "Before 6/29/77"	All	All		1			1			
78/	P	All	All		1			1			
	Consists of 1-D30A 7217-BA Knob				1-D30A 7C488-A Button					1-383870-S100 Screw	
77/	L "From 6/29/77"	All	All		1			1		D8FZ 7213-A	Black "T" handle
75/	F	8	All	1	1	1				D4ZZ 7213-A	Burled walnut "T" handle
75/	G	6&8	All		1					D5DZ 7213-B	High gloss burled walnut "T" handle
77/	V	8	All		1					D74Y 7213-A	Gray – leather wrapped
					1					★ D74Y 7213-B	Blue – leather wrapped-not repl.
					1					D74Y 7213-C	Cordovan – leather wrapped
					1					D74Y 7213-D	Chamois – leather wrapped
					1					D74Y 7213-E	White – leather wrapped
73/77	J(exc. 64S) "Before 5/2/77"	4&6	All		1		1	1		★ D0RY 7213-D	Incl. dummy button-not repl.
76/77	J(64S) "Before 5/2/77"	6&8	All					1		★ D6RY 7213-A	Not repl.
77	J "From 5/2/77"	All	All					1		D7RY 7213-A	#Chrome
79	J	All	All		1			1		D9ZZ 7213-A	"T" handle
73	J				1		1			374949-ES8	Screw-set(handle to lever assy.)
74/78	J				1		1	1		E404106-S82	(AU-28-GG)-screw(knob to lever)-set-hex. socket

COPYRIGHT © 1986 — FORD MOTOR COMPANY — DEARBORN, MICHIGAN

YEAR	MODEL/RESTRICTIONS	ENGINE CYL.	ENGINE C.I.D. (C.C.D.)	QUANTITY FMX	C4	C6	B/W	C3	PLA	PART NUMBER	DESCRIPTION
TRANSMISSION TYPE PLA SHOWN ABOVE IDENTIFIES THE JATCO AUTOMATIC TRANSMISSION											
7A213	DIAL (TRANSMISSION COLUMN SHIFT SELECTOR)										
74/76	C,F - - w/tilt steering "Before 7/6/76"	6&8	All	1	1	1				D40Z 7A213-A	#Black
				1	1					★ D40Z 7A213-B	#Blue-repl. by D70Z 7A213-C
				1	1	1				★ D40Z 7A213-E	#Gold-repl. by D40Z 7A213-A-(paint to match)
				1	1	1				D40Z 7A213-H	#Green
				1	1	1				★ D40Z 7A213-F	#Saddle-repl. by D70Z 7A213-E
				1	1	1				D40Z 7A213-D	#Tan
				1	1	1				★ D40Z 7A213-J	#Red-repl. by D40Z 7A213-A (Paint to match)
76/	F - - w/tilt steering "From 7/6/76"	8	All	1	1	1				D70Z 7A213-A	#Red
				1	1	1				D70Z 7A213-B	#Jade
				1	1	1				D70Z 7A213-C	#Blue
				1	1	1				★ D70Z 7A213-D	#Bright Red-not repl.
				1	1	1				D70Z 7A213-E	#Saddle
				1	1	1				D70Z 7A213-F	#Chamois
				1	1	1				D70Z 7A213-G	#Silver
				1	1	1				D70Z 7A213-H	#Black
7A213	DIAL (TRANSMISSION FLOOR or CONSOLE SHIFT SELECTOR)-Also refer to group 7D443										
73/	C,F	6&8	All	1	1	1				D1ZZ 7A213-A	
73/76	P	6&8	All		1						
7A216	INSERT (TRANSMISSION SHIFT SELECTOR POSITION)										
73/78	A,Y(exc. P/C and Fleet) - - fixed wheel (PRND21)	8	All	1		1	1			D3AZ 7A216-A	
73/78	A,Y(P/C and Fleet) - - fixed wheel (PRNDS)	8	All		1	1	1			D3AZ 7A216-B	
79	A(PRND21) dial	8	All	1	1	1				D8BZ 7A216-A	
79	A(PRNDS) dial	8	All	1	1	1				D8AZ 7A216-A	
73/78	A,Y - - tilt wheel	8	All	1		1	1			D0AZ 7A216-C	
73/	C,F - - tilt wheel	All	All	1	1	1					
75/	G,V	6&8	All		1						
73/	C,F (exc. P/C and Fleet) Fixed wheel	6&8	All	1	1	1				D3AZ 7A216-A	
73/	C,F (P/C and Fleet) Fixed wheel	6&8	All	1	1	1				D3AZ 7A216-B	
73/	D - - fixed wheel	8	All			1				D3AZ 7A216-A	
73/	D - - tilt wheel	8	All			1				D0AZ 7A216-C	
73/	K - - fixed wheel	8	All			1				D3AZ 7A216-A	
73/	K - - tilt wheel	8	All			1				D0AZ 7A216-C	
73/77	P - - fixed wheel	6&8	All		1					D3AZ 7A216-A	
75/	G,V	6&8	All		1			1			
78/	P - - column shift-(PRND21) dial	All	All		1			1		D8BZ 7A216-A	
78/	P - - column shift (PRNDS) dial	All	All		1			1		D8AZ 7A216-A	
73/	A - - fixed wheel	8	All	2		2				42134-S8	(U-249)-screw (insert to socket)-No. 10-12
73/	C,D,K,P	6&8	All	2	2	2					
73/78	A,Y - - tilt wheel	8	All	2		2				376368-S101	(UU-59)-screw (insert to socket)-No. 8-32 x 3/8"
73/	D - - tilt wheel	8	All	2		2					
7220	CAP (TRANSMISSION SELECTOR HANDLE)										
73/78	J - - exc. Ghia	4&6	All		1		1	1		D0RY 7220-A	
76/78	J - - Ghia	4&6	All					1		★ D6RY 7220-A	Not repl.
7225	BEARING (TRANSMISSION GEAR SHIFT LEVER SOCKET)										
78/	P - - column shift	All	All		1			1		D8BZ 7225-A	
79	A	8	All	1	1	1					

1973/79 LINCOLN-MERCURY CARS

YEAR	MODEL/RESTRICTIONS	ENGINE CYL.	ENGINE C.I.D. (C.C.D.)	QUANTITY FMX	C4	C6	B/W	C3	PLA	PART NUMBER	DESCRIPTION
	TRANSMISSION TYPE PLA SHOWN ABOVE IDENTIFIES THE JATCO AUTOMATIC TRANSMISSION										
7228	**SOCKET (TRANSMISSION COLUMN SHIFT SELECTOR LEVER)**										
73	A,D,K,Y - - w/tilt wheel	6&8	All	1	1	1				D0AZ 7228-C	
74/78	A,Y - - w/tilt wheel	6&8	All	1	1	1	1			★ D4AZ 7228-A	R/b D4AZ 7228-C
74/	D,K - - w/tilt wheel	8	All			1					
76/	G,V - - w/tilt wheel	6&8	All		1						
73/78	A,Y - - w/fixed wheel	6&8	All	1	1	1				D0AZ 7228-D	
73/	D,K - - w/fixed wheel	8	All			1					
75/	G,V - - w/fixed wheel	6&8	All		1				1		
73/79	C,F,P - - w/fixed wheel	6&8	All	1	1	1				D70Z 7228-A	
74/	C,F - - w/tilt wheel	6&8	All	1	1	1				★ D40Z 7228-A	R/b E2TZ 7228-A
7B229	**BRACKET (TRANSMISSION SELECTOR CABLE)**										
73/76	C	8	All	1						D20Z 7B229-C	
73/74	J "Before 6/1/74"	4&6	All		1					★ D2RY 7B229-B	
	-not used "From 6/1/74"									Not replaced	
73/78	J	6	All		1					★ D2RY 7B229-A	Not replaced
73/74	J	4	All				1			★ D0RY 7B229-A	
										Not replaced(10/80)	
							2			112949-ES	Screw & washer (bracket assy.)
7B233	**PLATE (TRANSMISSION SELECTOR LEVER OPENING)**										
73/73	C(63R,65D) - - w/floor shift	6&8	All		1	1				★ D40Z 7B233-B	Not repl.
74	F - - w/floor shift	6&8	All	1	1	1					
7E234-5	**BRACE (TRANSMISSION CASE TO ENGINE BLOCK)**										
73/74	D	8	All			1				★ D0VY 7E234-A	R.H.-not replaced
						1				C8LY 7E235-A	L.H.
78/	P	4	140					1		D7ZZ 7E235-A	L.H.
79	J		(2300)					1			
78/	P	6	200		1					D8BZ 7E234-A	R.H.
					1					D8BZ 7E235-A	L.H.
7246	**INSULATOR (TRANSMISSION COLUMN SHIFT SELECTOR LEVER)**										
73/	A,C,D,F,G,K,P,V,Y	6&8	All	1	1	1	1		1	C20Z 7246-A	1" long x 3/4" O.D.
7D246	**CABLE (TRANSMISSION CONSOLE SHIFT SELECTOR LEVER LINKAGE)** Incl. ball, threaded sleeve, cable and bushing.										
73/	C,F	6&8	All	1	1	1				C5ZZ 7D246-A	9" long
73/74	P	6&8	All		1						
73/78	J	4&6	All		1		1			D2RY 7D246-B	
					1		1			E822010-S72	Locknut
74/	L	4	All		1					D4FZ 7D246-A	8 1/4" long
75/	G,V	6&8	All		1						
75/76	P	6&8	All								
78	P	All	All		1			1			
7A247	**SWITCH ASSY. (TRANSMISSION CONTROL SELECTOR NEUTRAL)**										
73/78	A,C,D,G,K,P,V,Y - - w/column shift	6&8	All							★	Refer to group 15520
79	A	8	302	1						D9AZ 7A247-A	*SW-1545-#D9AP-CA
79	A	8	All		1	1				D8TZ 7A247-B	*SW-1491-#D9AP-AA-BA
73/74	C - - w/floor shift	6&8	All	1	1	1				D20Z 7A247-B	*SW-1059-A-eliminate Blue connector for 1976/ applications
75/	F	8	All		1	1	1				
73/74	F	8	All	1						D2ZZ 7A247-B	*SW-903-B
73	F	8	All			1				D2ZZ 7A247-C	*SW-1148-#D2ZP 7A247-AA,BA #D3ZP 7A247-AA
73	J	4&6	All		1					D2RY 7A247-A	*SW-1145-#D2FP 7A247-AA
73/74	J	4	All				1			D0RY 7A247-A	*SWE-1035
73/74	J	4	All				1			114174-ES7	Nut (switch to trans.)

COPYRIGHT © 1986 — FORD MOTOR COMPANY — DEARBORN, MICHIGAN

YEAR	MODEL/RESTRICTIONS	ENGINE CYL.	ENGINE C.I.D. (C.C.D.)	QUANTITY FMX	C4	C6	B/W	C3	PLA	PART NUMBER	DESCRIPTION
	TRANSMISSION TYPE PLA SHOWN ABOVE IDENTIFIES THE JATCO AUTOMATIC TRANSMISSION										
7A247	SWITCH ASSY. (TRANSMISSION CONTROL SELECTOR NEUTRAL) — Cont'd										
74	J	4&6	All		1					D4RY 7A247-A	*SW-1239-#D4FP 7A247-AA
74/76	J "Before 9/1/75"	All	All					1		D4ZZ 7A247-B	*SW-1241-for wire assy. 7D307-refer to Section A70.5
76/	J "From 9/1/75"	All	All					1		D6RY 7A247-B	*SW-1391 - - 4 prong connector repl. *SW-1367
74/	L,P	All	All					1			
74	L,P - - w/floor shift	All	All		1					D4FZ 7A247-A	*SW-1225
75/77	G,P,V	All	All		1						
78/	G,V	All	All		1						
78	P	All	All		1					D8BZ 7A247-A	*SW-1490-#D8BP-AA,AB- located on trns
79	J,P	6&8	All		1					E0SZ 7A247-A	*SW-1616 #E0SP 7A247-AA- replaces 7A247 #D8BP-AC-located on trans.
75/	L	All	All		1					D5FZ 7A247-A	*SW-1263-#D52P-AA, D6EP-AA-eliminate purple wire w/white hash marks
79	J	4	All		1						
73	P - - w/floor shift	6&8	All		1					D2ZZ 7A247-C	*SW-1148-#D2ZP 7A247-AA,BA,
7E271	SHIELD (TRANSMISSION CONSOLE SHIFT SELECTOR HOUSING)										
73/74	C,F,P	6&8	All	1	1	1				C9ZZ 7E271-A	
75/	C,F	8	All	1	1	1					
75/	G,L,V	All	All		1			1		D4FZ 7E271-A	
75/76	P	6&8	All		1						
78	P	All	All		1			1			
7277	BOOT (TRANSMISSION GEARSHIFT LEVER)										
73/78	J	4&6	All		1		1			D3RY 7277-A	#Black
76/	C,F	All	All	1	1	1				D60Z 7277-A	
7E299	RETAINER (TRANSMISSION SELECTOR INDICATOR CABLE)										
73/	A,D,G,K,V,Y - -w/tilt wheel	6&8	All	1	1	1	1			D0AZ 7E299-A	
74/76	C,F - - w/tilt wheel	6&8	All	1	1	1	1				
7C300	SPRING (TRANSMISSION SELECTOR LEVER REVERSE LOCKOUT RETURN)										
73/	C,F,G,L,V	All	All	1	1	1				C5ZZ 7C300-A	2 1/16" free length-27 coils
75/76	P	6&8	All		1						
78	P	All	All		1			1			
73/78	J	4&6	All		1		1			D0RY 7C300-A	
7E300	RETAINER (TRANSMISSION SELECTOR INDICATOR CABLE REAR)										
73/	A,D,K,Y	8	All	1	1	1	1			D0AZ 7E300-A	
74	C,F	8	All	1	1	1	1				
75/	G,V	6&8	All		1						
7302	ARM and SUPPORT ASSY. (TRANSMISSION SELECTOR LEVER)										
73/76	C - - w/floor shift	8	All	1	1	1				★ D20Z 7302-A	Not replaced
73/74	F - - w/floor shift "Before 1/2/74"	8	All	1	1	1				★ D1ZZ 7302-A	Not replaced
73/74	P - - w/floor shift	6&8	All	1	1	1					
74/	F - - w/floor shift "From 1/2/74"	8	All	1	1	1				D40Z 7302-A	
75/76	G	6&8	All		1					D5ZZ 7302-A	
75/76	P	6&8	All		1						
78	P - - floor shift	All	All		1			1		★ D8BZ 7302-A	Not replaced
79	J,P	All	All		1			1		D9BZ 7302-A	
77/	G,V - - floor shift	6&8	All		1					D7ZZ 7302-A	incl. bushing
73/74	J "Before 6/1/74"	4&6	All		1		1			★ D2RY 7302-B	Not replaced
74	J "From 6/1/74"	4&6	All		1					★ D4RY 7302-A	Not replaced
76/78	J	4&6	All					1		★ D5RY 7302-A	Not replaced
74	L	4	All		1					★ D1FZ 7302-A	Not replaced
75/	L - - floor shift	4&6	All		1			1		D7FZ 7302-A	incl. bushing
73/78	J	4&6	All		1		1			★ 72003-S7	(N-38)-pin-cotter(arm and support to 7A477)-1/16" x 1/2"-Not repl.
					1		1			16435-ES8	Pin-clevis (arm and support to 7A477)-3/16" x 53/64"

1973/79 LINCOLN-MERCURY CARS

YEAR	MODEL/RESTRICTIONS	ENGINE CYL.	ENGINE C.I.D. (C.C.D.)	QUANTITY FMX	C4	C6	B/W	C3	PLA	PART NUMBER	DESCRIPTION
	TRANSMISSION TYPE PLA SHOWN ABOVE IDENTIFIES THE JATCO AUTOMATIC TRANSMISSION										
7A306	HOUSING (TRANSMISSION CONSOLE SHIFT CONTROL SELECTOR)										
73/74	C	6&8	All	1	1	1				★ D20Z 7A306-A	Not repld.
73/74	F,P	6&8	All	1	1	1				D1ZZ 7A306-A	
74	L	4	All		1					★ D4FZ 7A306-A	Not replaced
75/	F	8	All	1	1	1				D50Z 7A306-A	
75/	G,L,V	All	All		1			1		D5DZ 7A306-A	
75/76	P	6&8	All		1						
78	P - - floor shift	All	All		1			1			
73	J	4&6	All		1					★ D2RY 7A306-B	Not replaced
73/74	J	4	All				1			★ D0RY 7A306-A	Not replaced
74	J	4&6	All		1					★ D4RY 7A306-A	Not replaced
76/78	J	4&6	All					1		★ D5RY 7A306-A	Not replaced
73/	C,F,P	6&8	All	4	4	4				52554-S8	(U-230)-screw (housing to floor pan)-self-tapping-No. 8-15 x 5/8"
73/78	J	4&6	All				1			E857117-S	Plug (to housing assy.)
							5			112098-ES8	(BB-863-E)-bolt & washer assy. (housing to floor pan)
							4			113884-ES32	Clip (to housing assy.)
					2					E630153-S71	Lockwasher
					2					E602186-S72	Bolt
7D307	WIRING (TRANSMISSION CONTROL SWITCH)-Also refer to transmission parts List A70.5										
73/78	J	4&6	All		1					★ D2RY 7D307-C	Not replaced
73/74	J	4	All				1			★ D2RY 7D307-B	Not replaced
76/78	J	All	All					1		D6RY 7D307-A	Use w/D6RY 7A247-B
7E310	BOLT (TRANSMISSION KICKDOWN SHAFT RETAINING)										
73/76	C,G,P	6	All		1					C8AZ 7E310-A	
77/	G,P	6	All		1			1	1	D7DZ 7E310-A	
79	J	6	200		1			1			
7326	ROD (TRANSMISSION MANUAL CONTROL SELECTOR CONNECTING)										
73	A,Y	8	All	1		1				C9AZ 7326-A	6 1/2" long
74	A,Y	6&8	All	1	1	1	1			D4AZ 7326-A	
75/78	A,Y	8	All	1	1	1				D5AZ 7326-A	
79	A	8	302,351	1	1	1				D9AZ 7326-B	
73/76	C - - w/flr. shift	All	All		1					D60Z 7326-B	
73/76	C - - w/floor shift	8	All			1				D20Z 7326-C	#Red-17" long
73	D	8	All			1				D2VY 7326-A	5" long-"S" shape
74/	D	8	All			1				D4VY 7326-A	
73/	F	8	All	1						D1ZZ 7326-A	#Yellow-18 1/2" long
73/74	F	8	All			1				D2ZZ 7326-A	#Red-17 1/2" long
75/	F - - floor or console shift	8	All			1				D60Z 7326-A	
74/	F - - floor or console shift	8	All		1					D60Z 7326-B	
74	J	4&6	All		1		1			D4RY 7326-A	Incl. 7B125 trunnion and E620014-S72
76/78	J	4&6	All					1		D5RY 7326-A	#74DT 7A187-AA
79	J	4&8	All		1			1		D9BZ 7326-A	
79	J	6	All		1						
79	J	6	All					1		E1BZ 7326-A	
73/	K	8	All			1				D0SZ 7326-A	4" long
74	L	4	All		1					D4FZ 7326-A	18 3/8" long
75/	L	All	All		1			1		D5FZ 7326-A	
73/77	P - - w/column shift	6&8	All		1					D0DZ 7326-A	D 1/2" long
73/74	P - - w/floor shift	6&8	All		1					★ D1DZ 7326-C	17" long-not replaced
78	P - - column shift-"Before 6/1/78"	All	All		1			1		★ D8BZ 7326-A	Not replaced

COPYRIGHT © 1986 — FORD MOTOR COMPANY — DEARBORN, MICHIGAN

YEAR	MODEL/RESTRICTIONS	ENGINE CYL.	ENGINE C.I.D. (C.C.D.)	QUANTITY FMX	C4	C6	B/W	C3	PLA	PART NUMBER	DESCRIPTION
	TRANSMISSION TYPE PLA SHOWN ABOVE IDENTIFIES THE JATCO AUTOMATIC TRANSMISSION										
7326	**ROD (TRANSMISSION MANUAL CONTROL SELECTOR CONNECTING) — Cont'd**										
78/	P - - column shift- "From 6/1/78"	All	All		1			1		D8BZ 7326-D	
78	P - - floor shift	All	All		1			1		★ D8BZ 7326-B	Not replaced
79	P - - floor shift	4&8	All		1					D9BZ 7326-A	
79	P - - floor shift	6	All		1						
75/76	G - - floor shift	6&8	All		1					D5DZ 7326-B	
75/76	P - - floor shift	6&8	All		1						
77/	G,V - - floor shift	6&8			1					D7DZ 7326-B	16 21/32" long
73/	A,D,P,Y - - w/column shift	6&8	All	1	1	1				383098-S	(MM-173-TC)-locknut(rod to gearshift bellcrank stud)-5/16"-18
73/	C,F,P - - w/floor shift	6&8	All	1	1	1				351467-S	(XX-352)-washer(rod to trans. gear-shift lever)-spring-5/16"
				1	1	1				44727-S8	(X-24)-washer-flat-5/16"
				1	1	1				352358-S	(NN-127)-pin-cotter
				1	1	1				383098-S	(MM-173-TC)-locknut(rod to gearshift arm stud)-5/16"-18
7C327	**BEARING (TRANSMISSION SHIFT BELLCRANK)**										
75/	A,D,P,Y	6&8	All	1	1	1				E0SZ 7C327-A	
7D328	**ROLLER (TRANSMISSION CONSOLE SHIFT SELECTOR LEVER LOCK)**										
73/	C,F,G,L,V	6&8	All	1	1	1				C5ZZ 7D328-A	
73/76	P	6&8	All		1						
78/	P - - floor shift	All	All		1			1			
79	J	All	All		1			1			
7E330	**ROD (TRANSMISSION FLOOR SHIFT SELECTOR LOCK CONTROL)**										
73	F	8	All	1						★ D1ZZ 7E330-A	#Yellow-13" long-Not repl.
						1				★ D1ZZ 7E330-B	#Red-13" long-Not repl.
73/76	P	6	200		1					★ D1DZ 7E330-C	16" long-Not repl.
		6	250		1					★ D1DZ 7E330-F	#Red daub-15 5/8" long-Not repl.
73/76	P	8	302			1					
7335	**BUSHING (TRANSMISSION GEAR SHIFT TUBE)**										
73/	C,K	6&8	All	1	1	1				D20Z 7335-A	1 5/8" I.D. x 1 57/64" flange dia. x 1/2" wide
7341	**INSULATOR (TRANSMISSION CONTROL SELECTOR SHIFT ARM)**										
73/74	A,D,Y	8	All	1		1				★ C7SZ 7341-B	Use for bellcrank mtg. bracket
73/74	P	6&8	All		1					r/bD5AZ 7C327-A	7/16" I.D. x 11/16" O.D. x 13/32" long
75/	A,F,G,P,V,Y	6&8	All	1	1	1			1	E0SZ 7341-A	#Natural or gray
73/	A,P,Y	8	All	1	1	1				E0BZ 7341-B	#Brown or black-used in 7A185 and 7A256
73/	C,F,L			AR	AR		AR	AR			Used in 7A185 and 7A256
73/	D					AR					Used in 7A185 and 7A256
78/	P	All	All		1						Used in 7212
75/	A,P,Y			1	1	1				E0SZ 7341-A	Used in 7A185
73/74	C,F - - w/floor shift	6&8	All	1	1	1					Use for gearshift arm-3/8" I.D. x 3/8" long
73/74	P - - w/floor shift-				1						
73/74	F,P - - w/floor shift	6&8	All	1	1	1				D0ZZ 7341-A	Use for steering column tube lock control rod-5/16" I.D. x 15/32" long
74	J	4&6	All		1		1			D4RY 7341-A	
76/78	J	4&6	All					1		D5RY 7A440-A	
73/79	K	8	All			1				D4AZ 7341-B	
7343	**BUSHING (TRANSMISSION CONTROL SELECTOR ARM)-Also refer to group 7341**										
73/	C,F,P - - w/floor shift	6&8	All	1	1	1				C2AZ 7343-B	3/8" I.D. x 7/16" O.D. x 3/8" long-nylon
7346	**ARM (TRANSMISSION CONTROL SELECTOR)**										
73/	C,K	6&8	All	1	1	1				D20Z 7346-A	"L" shaped-use for repair on lower end of 7212 tube assy.-9/64" thick x 1 13/32" long-1" bend

YEAR	MODEL/RESTRICTIONS	ENGINE CYL.	ENGINE C.I.D. (C.C.D.)	QUANTITY FMX	C4	C6	B/W	C3	PLA	PART NUMBER	DESCRIPTION
TRANSMISSION TYPE PLA SHOWN ABOVE IDENTIFIES THE JATCO AUTOMATIC TRANSMISSION											
7347	BEARING (TRANSMISSION CONTROL SELECTOR TUBE)										
73/	A,D,F,Y	6&8	All	1	1	1	1			C9AZ 7347–C	Upper–2 3/16" dia.
73/77	P – – w/column shift	6&8	All		1						
74/75	A,D,F,P,Y	6&8	All		1		1			D1AZ 7347–A	Lower–1 5/16" I.D. x 1 5/8" O.D. x 1 5/8"
76/77	A,D,F,P,Y	6&8	All	1	1	1				D6AZ 7347–A	Lower–1.80" long–1.88 flange–1" I.D.–includes insulator
78/	A,D,F	All	All	1	1	1					
73/76	C – – w/floor shift	6&8	All	1	1	1				D20Z 7347–E	
73/	C,K – – w/column shift	6&8	All	1	1	1				D20Z 7347–F	
74	F	6&8	All	1	1	1					
75/	G,V – – column shift	6&8	All		1				1	D5DZ 7347–B	
73/76	P – – w/floor shift	6&8	All		1					C9AZ 7347–E	Upper–2 1/8" dia.
7A347	RETAINER (TRANSMISSION COLUMN SHIFT SELECTOR LEVER PLUNGER)										
73/74	A,C,D,K,P,Y – – w/fixed wheel "Before 4/1/74"	6&8	All	1	1	1				C0DF 7A347–A	
7D351	SEAL (TRANSMISSION CONTROL SELECTOR DIAL)										
73/	C,F	6&8	All	1	1	1				D1ZZ 7D351–A	
73/76	P	6&8	All		1						
73/	L	All	All		1			1		D1FZ 7D351–A	
78/	G,J,P	All	All		1			1			
7353	SLEEVE (TRANSMISSION SELECTOR SHIFT ROD ADJUSTMENT)										
73/74	C,L,P – – w/floor shift	All	All		1	1				D10Z 7353–A	Use at 7326 rod end–1 3/8" long
73/	F – – w/floor shift	6&8	All	1	1	1				D00Z 7353–A	Use to lock 7E330 to 7003–1 1/4" long x 3/8" long from flange to pin hole
73/76	P	6&8	All		1						
73/	F	8	All	1	1	1				C90Z 7353–A	Use at 7326 rod end–1 3/8" long x 15/32" long from flange to pin hole
75/	G,L,V	All	All		1			1		D5ZZ 7353–A	Connect 7302 and 7326
75/76	P	6&8	All		1						
73/	C,F,G,L,P,V			1	1	1		1		372285–S	(XX–165)–washer(stud to gearshift arm)–3/8"
				1	1	1		1		352358–S	(NN–127)–pin–cotter
				1	1	1		1		351467–S	(XX–352)–spring washer–3/8"
7361	PLUNGER (TRANSMISSION COLUMN SHIFT SELECTOR LEVER)										
73/74	A,C,D,K,P,Y– "Before 4/1/74"	6&8	All	1	1	1				C0DF 7361–A	1 5/8" long
74/77	A,C,D,G,K,P,V,Y– "From 4/1/74"	6&8	All	1	1	1				D4AZ 7361–A	1 5/16" long
78	A,D,G,K,V	All	All	1	1	1			1		
79	D,G,K,V	All	All	1	1	1			1		
78/	P – – column shift	All	All		1			1		E0AZ 7361–A	2 15/16" long
79	A – – column shift	All	All	1	1	1					
7E363	BRACKET and CABLE (TRANSMISSION CONTROL SELECTOR)										
73/78	A,Y	8	All	1	1	1	1			D3AZ 7E363–A	
78/	D	All	All			1					
79	A	8	All	1	1	1				D9MY 7E363–A	
73/74	D	8	All			1				D0VY 7E363–B	
75	D	8	All			1				D5VY 7E363–A	
76/77	D	8	All			1				D6VY 7E363–A	
75/	G,V	6&8	All		1				1	D6DZ 7E363–A	
78/	P	All	All		1			1		D8BZ 7E363–A	
73/76	K	8	All			1				D2SZ 7E363–A	
77/	K	8	All			1				D7LY 7E363–A	
						1				★ 42117–S8	(U–244)–screw–hex. hd.–washer tapping–No. 6–20 x 1/4"
						1				52720–S8	(U–380)–screw–hex. hd.–washer–No. 8–18 x 1/4"

COPYRIGHT © 1986 — FORD MOTOR COMPANY — DEARBORN, MICHIGAN

1973/79 LINCOLN-MERCURY CARS

YEAR	MODEL/RESTRICTIONS	ENGINE CYL.	ENGINE C.I.D. (C.C.D.)	QUANTITY FMX	C4	C6	B/W	C3	PLA	PART NUMBER	DESCRIPTION
TRANSMISSION TYPE PLA SHOWN ABOVE IDENTIFIES THE JATCO AUTOMATIC TRANSMISSION											
7C369	COVER (TRANSMISSION CONTROL)										
78/	P - - column shift	All	All		1			1		D8BZ 7C369-A	
79	A - - column shift	8	All	1	1	1					
7C370	SEAL (TRANSMISSION CONTROL SELECTOR HOUSING)										
73/74	C,P	All	All	1	1	1				D1ZZ 7C370-A	
73/	F	6&8	All	1	1	1					
75/79	G,V	All	All		1					D7DZ 7C370-A	
75/78	P	All	All		1			1			
73/79	L	All	All		1			1			
73/74	J	4	All				1			D0RY 7C370-A	
73/78	J	4&6	All		1			1		D6RY 7C370-A	
79	J,P	All	All		1			1		D9BZ 7C370-A	
7D383	SLEEVE (TRANSMISSION CONTROL SELECTOR ARM)										
73/75	K	8	All			1				★ D2SZ 7D383-A Not repl.(3/81)	Green-use for selective fit to increase length of selector arm to actuate back-up light switch-23/32" long x 5/8" wide
						1				★ D2SZ 7D383-B Not repl.(3/81)	Black-use for selective fit to increase length of selector arm to actuate back-up light switch-23/32" long x 5/8" wide x 3/64" thick wall-hollow box design
7D394	HOUSING ASSY. (TRANSMISSION CONSOLE SHIFT)										
73/78	J(exc. 64S)	4&6	All		1			1		D2RY 7D394-B	
73/74	J	4	All				1			D0RY 7D394-B	
76/78	J(64S)	4&6	All					1		D6RY 7D394-A	
7E395	CABLE (TRANSMISSION SHIFT)										
73/74	C,F	6&8	All			1				D40Z 7E395-B	
73	K	All	All			1					
73/79	C,F	6&8	All	1	1					D70Z 7E395-A	
75/79	C,F	All	All			1					
75/76	G "Before 7/19/76"	All	All		1					★ D6DZ 7E395-A	R/b D7DZ 7E395-A (9/78)
76/	G,V "From 7/19/76"	All	All		1					E0DZ 7E395-A	
77/	G	6	250						1	D7DZ 7E395-B	
74	K	8	All			1				D4SZ 7E395-A	
75/76	K "Before 4/1/76"	All	All			1				D5SZ 7E395-A	
76/	K "From 4/1/76"	8	All			1				D6SZ 7E395-A	
73	C,K	6&8	All	2	2					384921-S100	(BB-429-WL)-bolt (cable assy. to converter hsg.)-hex. washer hd.-3/8"-16 x 1"
7B415	STUD (TRANSMISSION CONTROL SELECTOR CONNECTING ROD ADJUSTMENT)										
73	A,D,F,Y	6&8	All	1	1	1				D0DZ 7B415-A	1 9/64" long x 5/16"-18 thread at one end-1/8" under cut at the other
73/77	P	6&8	All		1	1					
74/78	A,D,Y	8	All	1	1	1	1			D4AZ 7B415-A	
78/	P - - column shift	All	All		1			1			
79	D	8	All			1					
79	A	8	All	1	1	1				D9AZ 7B415-A	
74	C,F	6&8	All	1	1	1				D40Z 7B415-A	
75/	C,F,G,V - - column shift	6&8	All	1	1	1			1		
73	C	6&8	All	1	1	1				D20Z 7B415-A	1 7/64" long x 7/64" flange dia. 5/16"-18 thread at one end-23/64" at the other

1973/79 LINCOLN-MERCURY CARS

YEAR	MODEL/RESTRICTIONS	ENGINE CYL.	ENGINE C.I.D. (C.C.D.)	QUANTITY FMX	C4	C6	B/W	C3	PLA	PART NUMBER	DESCRIPTION
TRANSMISSION TYPE PLA SHOWN ABOVE IDENTIFIES THE JATCO AUTOMATIC TRANSMISSION											
7B415	STUD (TRANSMISSION CONTROL SELECTOR CONNECTING ROD ADJUSTMENT) — Cont'd										
73/76	P - - console shift	6	All	1	1	1				D00Z 7B415-A	1 7/32" long
73/76	P - - console shift	8	All	1	1	1					
78/	P - - floor shift	All	All		1			1			
75/	F,G,V - - console shift	8	All	1	1	1					
79	J - - floor shift	All	All		1						
73/76	K	8	All			1				D2SZ 7B415-A	1 3/4" long x 3/4" flange dia.-5/16"-18 thread one end
77/	K	8	All			1				D20Z 7B415-A	1 7/64" long X 7/64" flauge dia. -5/16" - 18 thread at one end - 23/64" at the other
7E417	PLATE (TRANSMISSION GEARSHIFT TUBE BRACKET)										
75/	G	6&8	All		1					D5DZ 7E417-A	
7C431	BRACKET (TRANSMISSION COLUMN SHIFT SELECTOR BELLCRANK MOUNTING)										
73	A	8	400	1						D3AZ 7C431-A	
74	A,Y	8	400	1			1			★ D4AZ 7C431-C	Not repl.
73/74	A,Y	8	351,429	1	1					★ D4AZ 7C431-A	Not repl.
75/78	A,Y	8	All	1						★ D5AZ 7C431-B	Not repl.
73/74	A,Y	8	All			1				★ D4AZ 7C431-B	Not replaced(10/80)
75/78	A,Y	8	All			1				D5AZ 7C431-A	
79	A	8	All	1						E0AZ 7C431-D	
79	A	8	All		1					D9AZ 7C431-B	
79	A	8	All			1				D9AZ 7C431-A	
73	D	8	All			1				D1VY 7C431-A	
74/	D	8	All			1				D5VY 7C431-A	
73/77	P	6	200		1					★ D5BZ 7C431-A	Not repl.
		6	250		1					★ D5BZ 7C431-B	Not repl.
73/77	P	8	302		1						Refer to group 7A026
78	P - - column shift	4	All		1			1		D8BZ 7C431-A	# D8BC-AB-Blue
79	P - - column shift	4	All		1			1		D8BZ 7C431-D	# D8BC-AC-Black
78	P - - column shift- "Before 6/1/78"	6	All		1			1		★ D8BZ 7C431-B	Not repl.
78/	P - - column shift- "From 6/1/78"	6	All		1			1		D8BZ 7C431-E	
78/	P - - column shift	8	All		1			1		E0BZ 7C431-A	
73	A,D,Y			2	2					20346-S8	(B-50)-bolt (bracket to engine or converter housing)-hex. head-5/16" x 18 3/4"
				2	2					356590-S	(XX-170)-washer-flat-3/8"
						2				56138-S4	(B-319-V)-bolt (bracket to engine or converter housing)-hex. washer head-3/8"-16 x 3/4"
7A438	BUSHING (TRANSMISSION GEARSHIFT CABLE ADJUSTING)										
73/	D,K	6&8	All	1	1	1				D20Z 7A438-A	11/32" I.D. x 5/8" flange dia. x 1/4" long
73/	C,F	6&8	All	1	1	1					
75/	G - - column shift	All	All		1					D5DZ 7A438-A	3/8" I.D. x 7/16" O.D. x 1/4" long
77/	G,L,V - - floor shift	All	All		1			1	1	D7FZ 7A438-A	
78/	P - - floor shift	All	All		1			1			
79	J	All	All		1			1			

COPYRIGHT © 1986 — FORD MOTOR COMPANY — DEARBORN, MICHIGAN

YEAR	MODEL/RESTRICTIONS	ENGINE CYL.	ENGINE C.I.D. (C.C.D.)	QUANTITY FMX	C4	C6	B/W	C3	PLA	PART NUMBER	DESCRIPTION
	TRANSMISSION TYPE PLA SHOWN ABOVE IDENTIFIES THE JATCO AUTOMATIC TRANSMISSION										
7A440	Refer to group 7341										
7E440	SWITCH (TRANSMISSION OIL PRESSURE)-Also refer to group 10B924										
73/74	A,C,D,F,K,P,Y	6&8	All		1	1	1			D2AZ 7E440-A	*SW-1089
76/78	J	4&6	All					1			
7C441	PAWL ASSY. (TRANSMISSION CONSOLE SHIFT SELECTOR LEVER)										
73	J	4&6	All		1		1			D0RY 7C441-A	
					1		1			114324-ES8	Locknut-attaches pawl to 7D246
74	J	4&6	All				1			D0RY 7C441-A	
					1					★ D4RY 7C441-A	Not replaced(10/80)
7D443	BEZEL (TRANSMISSION CONSOLE SELECTOR DIAL)										
73/	C,F	6&8	All	1	1	1				D1ZZ 7D443-A	
77/	V	8	All		1					D74Y 7D443-A	#Walnut woodgrain
75/79	G	All	All		1					★ D5FZ 7D443-A	#Woodgrain
74/79	L	All	All		1			1		r/bD5FZ 7D443-B	
74/79	G,L	All	All		1			1		D5FZ 7D443-B	# Black Corinthian Grain
75/76	P	All	All		1						
78/	P - - floor shift	All	All		1			1			
79	J	All	All		1			1			
73/74	P	6&8	All		1					C9ZZ 7D443-A	Incl. (4) 382964-S screws
7C448	RETAINER (TRANSMISSION SHIFT SELECTOR LEVER GUIDE PLATE)										
73/78	J	4&6	All		1		1			D0RY 7C448-A	
					3		3			376389-S101	(UU-82-D)-screw (retainer to shift control housing)
7449	LEVER (TRANSMISSION GEARSHIFT SELECTOR)										
78	P - - column shift- "Before 6/1/78"	All	All		1			1		D8BZ 7449-A	
78/79	P - - column shift- "From 6/1/78 to 6/29/79"	All	All		1			1		D8BZ 7449-B	
79	P "From 6/29/79"	All	All		1			1		E0SZ 7449-A	
79	A "Before 6/29/79"	8	All	1	1	1				D9AZ 7449-A	
79	A "From 6/29/79"	8	All	1	1	1				E0AZ 7449-A	
7D462	RETAINER (TRANSMISSION CONTROL SELECTOR DIAL)										
73/	C,F,G,K,V	6&8	All	1	1	1				D0MZ 7D462-A	
7A477	CABLE (TRANSMISSION SELECTOR LINKAGE CONTROL)										
73/75	J	4	All		1					D2RY 7A477-D	
73/74	J	4	All				1			D2RY 7A477-C	35 1/32" long
73	J	6	All		1					D4RY 7A477-A	37 13/32" long
74	J "Before 6/1/74"	6	All		1					D4RY 7A477-B	33 15/32" long From 6/1/74 refer to 7326
73/78	J	4&6	All		1		1			118511-ES2	Clip-attaches cable assy.
					2		2			★ 72003-S7	(N-38)-pin-cotter-attaches cable assy.-1/16" x 1/2"-Not repl.
					2		2			116435-ES8	Pin-clevis-attaches cable assy.-3/16" x 53/64"
7C488	BUTTON ASSY. (TRANSMISSION CONTROL SELECTOR LEVER RELEASE)										
73	C,F,P	6&8	All	1	1	1				C80Z 7C488-A	L.H.-#Chrome-release button
				1	1	1				C8ZZ 7C488-A	R.H.-#Black-dummy
74/	C,F,L,G,J,V	6&8	All	1	1	1				D30Z 7C488-A	
74/76	P	6&8	All		1						
78/	P - - floor shift	All	All		1			1			
77/78	J	All	All		1		1	1		★ D7RY 7C488-A	Not repl.

1973/79 LINCOLN-MERCURY CARS

YEAR	MODEL/RESTRICTIONS	ENGINE CYL.	ENGINE C.I.D. (C.C.D.)	QUANTITY FMX	C4	C6	B/W	C3	PLA	PART NUMBER	DESCRIPTION
	TRANSMISSION TYPE PLA SHOWN ABOVE IDENTIFIES THE JATCO AUTOMATIC TRANSMISSION										
7C491	SPRING (TRANSMISSION CONSOLE SHIFT SELECTOR LEVER BUTTON RETURN)										
73/78	J	4&6	All		1		1			D0RY 7C491-A	
7512	WASHER (BRAKE PEDAL TO SHAFT SPRING)										
73/78	J	4&6	All		1		1			D0RY 7512-A	
7659	BRACKET (TRANSMISSION EXTENSION ENGINE SUPPORT)										
77/	V	8	302		1					D74Y 7659-A	
7K738	BRACKET (TRANSMISSION GEARSHIFT SUPPORT)										
78/	P – – column shift	All	All		1			1		D9AZ 7K738-A	
79	A – – column shift	All	All	1	1	1					

COPYRIGHT © 1986 — FORD MOTOR COMPANY — DEARBORN, MICHIGAN

YEAR	MODEL/RESTRICTIONS	PART NUMBER	DESCRIPTION		QTY.
8B002	EXTENSION (RADIATOR GRILLE OPENING PANEL)-Incl. attaching parts				
73	D	(RH) ★ D3VY 8B002-A N.R.	(LH) ★ D3VY 8B002-B N.R.	Fits between grille and headlamp cover	1
8005	RADIATOR				

RADIATOR CROSS REFERENCE GUIDE

A To use this guide
1. Find the identification marking on radiator top tank or the side mounting bracket.
2. Locate this number in column marked "Identification" .
3. Read across to next column to right to find the service number.

B If the radiator identification is not known, the pages following this guide have radiator part numbers arranged in the following order–
1. Car line 2. Model years 3. Number of cylinders 4. Cubic inch displacement

IDENTIFICATION	PART NUMBER	IDENTIFICATION	PART NUMBER	IDENTIFICATION	PART NUMBER	IDENTIFICATION	PART NUMBER
C7TE	8005-D	C6TZ	8005-P	D30E	8005-EB	D30Z	8005-B
75AB	8005-FA	D0RY	8005-B	D30E	8005-EC	D30Z	8005-B
D1DE	8005-HA	D2DZ	8005-A	D30E	8005-FA	D3VY	8005-A
D1DE	8005-NA	D2DZ	8005-B	D30E	8005-FB	D3VY	8005-A
D1DE	8005-PA	D2DZ	8005-A	D30E	8005-FC	D30Z	8005-B
D1DE	8005-RA	D2DZ	8005-A	D30E	8005-GA	D30Z	8005-B
D2DE	8005-BA	D1DZ	8005-A	D30E	8005-GB	D3VY	8005-A
D2DE	8005-EA	D2DZ	8005-A	D30E	8005-GC	D30Z	8005-B
D22E	8005-AB	D2FZ	8005-A	D30E	8005-HA	D30Z	8005-B
D22E	8005-BA	D1FZ	8005-A	D30E	8005-HB	D30Z	8005-B
D3AE	8005-AA	D3AZ	8005-A	D30E	8005-HC	D30Z	8005-B
D3AE	8005-AB	D3AZ	8005-A	D30E	8005-JA	D30Z	8005-B
D3AE	8005-AC	D3AZ	8005-A	D30E	8005-KA	D30Z	8005-B
D3AE	8005-BA	D3AZ	8005-A	D30E	8005-KB	D30Z	8005-B
D3AE	8005-BB	D3AZ	8005-A	D30E	8005-LA	D30Z	8005-B
D3AE	8005-CA	D3AZ	8005-A	D30E	8005-MA	D30Z	8005-B
D3AE	8005-CB	D3AZ	8005-A	D30E	8005-MB	D30Z	8005-B
D3AE	8005-CC	D3AZ	8005-A	D30E	8005-NA	D3VY	8005-A
D3AE	8005-DA	D3AZ	8005-B	D30E	8005-RA	D30Z	8005-B
D3AE	8005-DB	D3AZ	8005-B	D30E	8005-SA	D30Z	8005-B
D3AE	8005-DC	D3AZ	8005-B	D30E	8005-UA	D2VY	8005-A
D3AE	8005-EA	D3AZ	8005-B	D30E	8005-VA	D3VY	8005-A
D3AE	8005-EB	D3AZ	8005-A	D30E	8005-VB	D3VY	8005-A
D3AE	8005-FA	D3AZ	8005-A	D30E	8005-ZA	D3VY	8005-A
D3AE	8005-GA	D3AZ	8005-A	D3SE	8005-AA	D30Z	8005-B
D3AE	8005-HA	D3AZ	8005-C	D3SE	8005-BA	D3VY	8005-A
D3AE	8005-JA	D3AZ	8005-B	D3TA	8005-AZA	D2TZ	8005-B
D3AE	8005-KA	D3AZ	8005-A	D3TA	8005-BAA	D2TZ	8005-B
D3AE	8005-LA	D3AZ	8005-A	D3TA	8005-BBA	D2TZ	8005-B
D3AE	8005-MA	D3AZ	8005-B	D3TA	8005-BCA	D2TZ	8005-B
D3DE	8005-AA	D2DZ	8005-B	D3TA	8005-BCB	D2TZ	8005-B
D3DE	8005-AB	D2DZ	8005-B	D3VE	8005-AA	D3VY	8005-A
D3DE	8005-BB	D2DZ	8005-B	D3VE	8005-BA	D3VY	8005-A
D3DE	8005-HA	D2DZ	8005-A	D3VE	8005-CA	D3VY	8005-A
D3DE	8005-JA	D2DZ	8005-A	D3WE	8005-AA	D3ZZ	8005-A
D30E	8005-AA	D30Z	8005-B	D3ZE	8005-AA	D3ZZ	8005-A
D30E	8005-AB	D30Z	8005-B	D3ZE	8005-AB	D3ZZ	8005-A
D30E	8005-AC	D30Z	8005-B	D3ZE	8005-AC	D3ZZ	8005-A
D30E	8005-BA	D30Z	8005-B	D3ZE	8005-BA	D3ZZ	8005-A
D30E	8005-BB	D30Z	8005-B	D3ZE	8005-BB	D3ZZ	8005-A
D30E	8005-BC	D30Z	8005-B	D3ZE	8005-BC	D3ZZ	8005-A
D30E	8005-CB	D30Z	8005-B	D3ZE	8005-CA	D3ZZ	8005-A
D30E	8005-CC	D30Z	8005-B	D3ZE	8005-CB	D3ZZ	8005-A
D30E	8005-DA	D30Z	8005-B	D3ZE	8005-CC	D3ZZ	8005-C
D30E	8005-DB	D30Z	8005-B	D3ZE	8005-DA	D3ZZ	8005-B
D30E	8005-DC	D30Z	8005-B				

COPYRIGHT © 1986 — FORD MOTOR COMPANY — DEARBORN, MICHIGAN

RADIATOR CROSS REFERENCE GUIDE

IDENTIFICATION	PART NUMBER	IDENTIFICATION	PART NUMBER
D3ZE 8005-DB	D3ZZ 8005-B	D4DF 8005-EA	★ D4DZ 8005-E
D3ZE 8005-DC	D3ZZ 8005-B	D4DF 8005-FA	★ D4DZ 8005-E
D3ZE 8005-EA	D3ZZ 8005-B	D4DF 8005-GA	D4DZ 8005-A
D3ZE 8005-EB	D3ZZ 8005-B	D4DF 8005-HA	D4DZ 8005-C
D3ZE 8005-EC	D3ZZ 8005-B	D4DF 8005-JA	★ D4DZ 8005-E
D3ZE 8005-FA	D3ZZ 8005-A	D4DH 8005-AA	★ D4DZ 8005-E
D3ZE 8005-FB	D3ZZ 8005-A	D4DH 8005-BA	★ D4DZ 8005-E
D3ZE 8005-FC	D3ZZ 8005-C	D4DH 8005-CA	D4DZ 8005-F
D3ZE 8005-GA	D3ZZ 8005-A	D4DH 8005-DA	D4DZ 8005-A
D3ZE 8005-GB	D3ZZ 8005-A	D4DH 8005-EA	D4DZ 8005-A
D3ZE 8005-HA	D3ZZ 8005-A	D40F 8005-AA	D30Z 8005-B
D3ZE 8005-JA	D3ZZ 8005-A	D40F 8005-BA	D30Z 8005-B
D3ZE 8005-KA	D3ZZ 8005-A	D40F 8005-CA	D30Z 8005-B
D3ZE 8005-LA	D3ZZ 8005-A	D40F 8005-DA	D30Z 8005-B
D3ZE 8005-MA	D3ZZ 8005-B	D40F 8005-EA	D30Z 8005-B
D3ZE 8005-NA	D3ZZ 8005-B	D40F 8005-FA	D30Z 8005-B
D3ZE 8005-RA	D3ZZ 8005-B	D40F 8005-GA	D30Z 8005-B
D3ZE 8005-SA	D3ZZ 8005-A	D40F 8005-HA	D30Z 8005-B
D3ZE 8005-TA	D3ZZ 8005-A	D40F 8005-JA	D30Z 8005-B
D4AF 8005-AA	D3AZ 8005-A	D40F 8005-KA	D30Z 8005-B
D4AF 8005-BA	D3AZ 8005-A	D40F 8005-LA	D30Z 8005-B
D4AF 8005-BB	D3AZ 8005-A	D40F 8005-MA	D30Z 8005-B
D4AF 8005-CA	D3AZ 8005-A	D40F 8005-NA	D30Z 8005-B
D4AF 8005-CB	D3AZ 8005-A	D40F 8005-PA	D30Z 8005-B
D4AF 8005-DA	D3AZ 8005-A	D40F 8005-RA	D3VY 8005-A
D4AF 8005-EA	D3AZ 8005-A	D40F 8005-SA	D3VY 8005-A
D4AF 8005-EB	D3AZ 8005-A	D40F 8005-TA	D2VY 8005-A
D4AF 8005-FA	D3AZ 8005-A	D40F 8005-UA	D3VY 8005-A
D4AF 8005-GA	D3AZ 8005-B	D40F 8005-VA	D30Z 8005-B
D4AF 8005-HA	D3AZ 8005-C	D40F 8005-XA	D30Z 8005-B
D4AF 8005-JA	D3AZ 8005-B	D40F 8005-YA	D30Z 8005-B
D4AF 8005-KA	D3AZ 8005-A	D40F 8005-YB	D30Z 8005-B
D4AF 8005-LA	D3AZ 8005-B	D40F 8005-YC	D30Z 8005-B
D4DE 8005-AA	D4DZ 8005-A	D40F 8005-ZA	D30Z 8005-B
D4DE 8005-AB	D4DZ 8005-A	D40F 8005-AAA	D30Z 8005-B
D4DE 8005-BA	D4DZ 8005-A	D40F 8005-ABA	D30Z 8005-B
D4DE 8005-BB	D4DZ 8005-A	D4VF 8005-AA	D3AZ 8005-B
D4DE 8005-CA	D4DZ 8005-B	74EB 8005-AA	★ D4RY 8005-C
D4DE 8005-CB	D4DZ 8005-B	74EB 8005-BA	D5RY 8005-C
D4DE 8005-DA	D4DZ 8005-B	74EB 8005-BD	D5RY 8005-C
D4DE 8005-DB	D4DZ 8005-B	74EB 8005-BF	D5RY 8005-C
D4DE 8005-EA	★ D4DZ 8005-E	74EB 8005-AFA	D5RY 8005-C
D4DE 8005-EB	★ D4DZ 8005-E	74EB 8005-AFB	D5RY 8005-C
D4DE 8005-FA	D4DZ 8005-B	D5AH 8005-AA	D3AZ 8005-A
D4DE 8005-GA	D4DZ 8005-B	D5AH 8005-BA	D3AZ 8005-A
D4DE 8005-GB	D4DZ 8005-B	D5AH 8005-CA	D3AZ 8005-A
D4DE 8005-HA	D1DZ 8005-A	D5AH 8005-DA	D3AZ 8005-A
D4DE 8005-JA	D1DZ 8005-A	D5AH 8005-EA	D3AZ 8005-B
D4DE 8005-KA	D4DZ 8005-C	D5AH 8005-FA	D3AZ 8005-B
D4DF 8005-AA	D4DZ 8005-F	D5AH 8005-GA	D3AZ 8005-B
D4DF 8005-AB	D4DZ 8005-F	D5BH 8005-AA	D5BZ 8005-A
D4DF 8005-BA	D4DZ 8005-B	D5BH 8005-BA	D5BZ 8005-A
D4DF 8005-BB	D4DZ 8005-B	D5BH 8005-BB	D5BZ 8005-A
D4DF 8005-CA	★ D4DZ 8005-E	D5BH 8005-CA	D5BZ 8005-B
D4DF 8005-CB	D4DZ 8005-B	D5BH 8005-DA	D5BZ 8005-B
D4DF 8005-DA	D4DZ 8005-A	D5DH 8005-AA	D5DZ 8005-A
D4DF 8005-DB	D4DZ 8005-A	D5DH 8005-AB	D5DZ 8005-A

RADIATOR CROSS REFERENCE GUIDE

IDENTIFICATION	PART NUMBER	IDENTIFICATION	PART NUMBER
D5DH 8005-BA	D5DZ 8005-A	D6DH 8005-DA	D5DZ 8005-A
D5DH 8005-CA	D6DZ 8005-A	D6DH 8005-EA	D5DZ 8005-A
D5DH 8005-DA	D6DZ 8005-A	D6DH 8005-FA	D5DZ 8005-A
D5DH 8005-EA	D5DZ 8005-A	D6DH 8005-GA	D6DZ 8005-A
D5DH 8005-FA	D5DZ 8005-A	D6DH 8005-HA	D6DZ 8005-A
D5DH 8005-GA	D5DZ 8005-A	D6DH 8005-JA	D6DZ 8005-A
D5DH 8005-HA	D5DZ 8005-A	D6DH 8005-KA	D5DZ 8005-A
D5DH 8005-JA	D5DZ 8005-B	D6DH 8005-LA	D5DZ 8005-A
D5DH 8005-JB	D5DZ 8005-B	D6DH 8005-MA	D5DZ 8005-A
D5DH 8005-KA	D6DZ 8005-A	D6DH 8005-NA	D5DZ 8005-A
D5DH 8005-LA	D5DZ 8005-A	D6DH 8005-PA	D6DZ 8005-A
D5DH 8005-MA	D5DZ 8005-A	D6DH 8005-RA	D6DZ 8005-A
D5DH 8005-NA	D6DZ 8005-A	D6DH 8005-SA	D6DZ 8005-A
D5DH 8005-PA	D6DZ 8005-A	D6DH 8005-TA	D5DZ 8005-A
D5DH 8005-RA	D6DZ 8005-A	D6DH 8005-UA	D5DZ 8005-A
D5DH 8005-SA	D5DZ 8005-B	D6DH 8005-VA	D5DZ 8005-A
D5DH 8005-TA	D5DZ 8005-B	D6DH 8005-XA	D5DZ 8005-A
D5DH 8005-UA	D6DZ 8005-A	D6DH 8005-YA	D6DZ 8005-A
D5DH 8005-VA	D5DZ 8005-A	D6EH 8005-AA	D5FZ 8005-A
D5DH 8005-XA	D6DZ 8005-A	D6EH 8005-BA	D5FZ 8005-D
D50H 8005-AA	D30Z 8005-B	D6EH 8005-CA	D5FZ 8005-A
D5SH 8005-AA	D3VY 8005-A	D60H 8005-AA	D30Z 8005-B
D5VH 8005-AA	D3AZ 8005-B	D60H 8005-BA	D30Z 8005-B
D52H 8005-AA	D5FZ 8005-A	D60H 8005-CA	D30Z 8005-B
D52H 8005-AB	D5FZ 8005-A	D60H 8005-DA	D30Z 8005-B
D52H 8005-BA	D5FZ 8005-A	D60H 8005-EA	D2VY 8005-A
D52H 8005-CA	D5FZ 8005-B	D60H 8005-FA	D30Z 8005-B
D52H 8005-CB	D5FZ 8005-B	D60H 8005-GA	D30Z 8005-B
D52H 8005-DA	D5FZ 8005-B	D60H 8005-HA	D30Z 8005-B
D52H 8005-EA	★ D5FZ 8005-C	D6SH 8005-AA	D3VY 8005-A
D52H 8005-FA	D5FZ 8005-D	D6SH 8005-BA	D3VY 8005-A
D52H 8005-GA	★ D5FZ 8005-C	D6VH 8005-AA	D3AZ 8005-C
D52H 8005-HA	D5FZ 8005-D	D7AH 8005-AA	D3AZ 8005-A
D52H 8005-JA	D5FZ 8005-B	D7AH 8005-BA	D3AZ 8005-A
D52H 8005-KA	D5FZ 8005-B	D7DH 8005-AA	D5DZ 8005-A
D52H 8005-LA	D5FZ 8005-B	D7EH 8005-JA	D5FZ 8005-A
D52H 8005-MA	D5FZ 8005-B	D7EH 8005-KA	D5FZ 8005-B
75EB 8005-AA	D5RY 8005-E	D7EH 8005-LA	D5FZ 8005-D
75EB 8005-DA	D5RY 8005-C	D7EH 8005-MA	★ D5FZ 8005-C
75EB 8005-HA	D5RY 8005-E	D70H 8005-AA	D30Z 8005-B
75EB 8005-JA	D5RY 8005-C	D70H 8005-EA	D30Z 8005-B
75EB 8005-KA	D5RY 8005-E	D70H 8005-FA	D30Z 8005-B
75EB 8005-LA	D5RY 8005-C	D7ZH 8005-MA	D4ZZ 8005-D
75EB 8005-MA	D5RY 8005-E	D7ZH 8005-PA	D4ZZ 8005-A
D6AH 8005-BA	D3AZ 8005-A	D7ZH 8005-RA	D5ZZ 8005-C
D6AH 8005-CA	D3AZ 8005-A	D74H 8005-AA	D5DZ 8005-A
D6AH 8005-GA	D3AZ 8005-A	D8AH 8005-BA	D8AZ 8005-A
D6AH 8005-HA	D3AZ 8005-A	D8AH 8005-CA	D8AZ 8005-A
D6AH 8005-JA	D3AZ 8005-A	D8AH 8005-DA	D8AZ 8005-B
D6AH 8005-KA	D3AZ 8005-A	D8AH 8005-EA	D8AZ 8005-A
D6AH 8005-LA	D3AZ 8005-A	D8AH 8005-FA	D8AZ 8005-A
D6AH 8005-MA	D3AZ 8005-A	D8AH 8005-GA	D8AZ 8005-B
D6AH 8005-NA	D3AZ 8005-A	D8AH 8005-HA	D8VY 8005-A
D6AH 8005-RA	D3AZ 8005-C	D8BH 8005-TB	D8BZ 8005-C
D6BH 8005-AA	D5BZ 8005-B	D8BH 8005-VB	D8BZ 8005-B
D6BH 8005-BA	D5BZ 8005-A	D8BH 8005-UB	D8BZ 8005-D
D6BH 8005-CA	D5BZ 8005-A	D8BH 8005-XA	D8BZ 8005-B
D6BH 8005-DA	★ D4DZ 8005-E	D8BH 8005-AAA	D8BZ 8005-A
D6DH 8005-BA	D6DZ 8005-A	D8BH 8005-ABA	D8BZ 8005-A
D6DH 8005-CA	D5DZ 8005-A	D8BH 8005-ACA	D8BZ 8005-B

COPYRIGHT © 1986— FORD MOTOR COMPANY —DEARBORN, MICHIGAN

RADIATOR CROSS REFERENCE GUIDE

IDENTIFICATION	PART NUMBER	IDENTIFICATION	PART NUMBER
D8BH 8005-ADA	D8BZ 8005-C	D8ZH 8005-HA	D4ZZ 8005-B
D8BH 8005-AEA	D8BZ 8005-C	D8ZH 8005-JA	D4ZZ 8005-A
D8BH 8005-AFA	D8BZ 8005-D	D8ZH 8005-KA	D5ZZ 8005-A
D8BH 8005-AGA	D8BZ 8005-D	D8ZH 8005-LA	D5ZZ 8005-A
D8BH 8005-AHA	D8BZ 8005-C	D8ZH 8005-MA	D4ZZ 8005-D
ED-D8BH 8005-AHA	D8BZ 8005-C	D8ZH 8005-NA	D4ZZ 8005-D
D8BH 8005-ANA	D9ZZ 8005-A	D9AH 8005-AA	D9AZ 8005-A
D8BH 8005-APA	D8BZ 8005-A	D9AH 8005-BA	D9AZ 8005-C
D8BH 8005-ARA	D8BZ 8005-A	D9AH 8005-CA	D9AZ 8005-B
D8DH 8005-AB	D8DZ 8005-A	D9AH 8005-DA	D9AZ 8005-A
D8DH 8005-DB	D8DZ 8005-A	D9AH 8005-EA	E0AZ 8005-A
D8DH 8005-EA	D8DZ 8005-D	D9AH 8005-FA	D9AZ 8005-D
D8DH 8005-FA	D8DZ 8005-D	D9AH 8005-GA	D9AZ 8005-D
D8DH 8005-GA	D8DZ 8005-D	D9AH 800J-HA	D9AZ 8005-D
D8DH 8005-HA	D8DZ 8005-B	D9AH 8005-JA	D9AZ 8005-E
D8DH 8005-KA	D8DZ 8005-B	D9BH 8005-AA	D8BZ 8005-C
D8DH 8005-LA	D8DZ 8005-A	D9BH 8005-BA	D8BZ 8005-B
D8DH 8005-MA	D8DZ 8005-A	D9BH 8005-CA	D8BZ 8005-C
D8DH 8005-NA	D8DZ 8005-C	D9BH 8005-DA	D8BZ 8005-C
D8DH 8005-RA	★ D8DZ 8005-B	D9BH 8005-EA	D8BZ 8005-B
	r/b E0DZ 8005-B	D9BH 8005-FA	D9BZ 8005-B
D8DH 8005-SA	★ D8DZ 8005-B	D9BH 8005-GA	D9BZ 8005-B
	r/b E0DZ 8005-B	D9DH 8005-AA	D8DZ 8005-A
★ D8EH 8005-AA	D5FZ 8005-A	D9DH 8005-BA	D8DZ 8005-B
D8EH 8005-BA	D5FZ 8005-A	D9DH 8005-CA	D9DZ 8005-B
D8EH 8005-CA	D5FZ 8005-A	D9DH 8005-DA	D9DZ 8005-A
D8EH 8005-DA	D5FZ 8005-C	D9EH 8005-AA	D5FZ 8005-B
D8EH 8005-EA	D5FZ 8005-B	D9EH 8005-BA	D5FZ 8005-D
D8EH 8005-FA	D5FZ 8005-B	D90H 8005-AA	D80Z 8005-B
D80H 8005-AB	D80Z 8005-A	D90H 8005-BA	D80Z 8005-B
D80H 8005-CA	D80Z 8005-A	D9ZH 8005-BA	D8BZ 8005-B
D80H 8005-DA	D80Z 8005-B	D9ZH 8005-GA	D8BZ 8005-B
D80H 8005-EA	D80Z 8005-A	D9ZH 8005-HA	D8BZ 8005-B
D80H 8005-FA	D80Z 8005-A	D9ZH 8005-JA	D8BZ 8005-B
D80H 8005-GA	D80Z 8005-A	D9ZH 8005-KA	D9BZ 8005-B
D80H 8005-HA	D80Z 8005-C	D9ZH 8005-LA	D9ZZ 8005-A
D80H 8005-JA	D80Z 8005-A	D9ZH 8005-MA	D9ZZ 8005-A
D8VH 8005-BA	D8AZ 8005-B	D9ZH 8005-NA	D9ZZ 8005-A
D8VH 8005-CA	D8VY 8005-A	D9ZH 8005-PA	D9ZZ 8005-A
D8ZH 8005-AA	D8ZZ 8005-A	D9ZH 8005-RA	D9ZZ 8005-B
D8ZH 8005-BA	D8ZZ 8005-A	79EB 8005-HA	★ D1RY 8005-C
D8ZH 8005-CA	D8ZZ 8005-A	79EB 8005-HB	★ D1RY 8005-C
D8ZH 8005-DA	D8ZZ 8005-A	E0AH 8005-AA	E0AZ 8005-A
D8ZH 8005-EA	D4ZZ 8005-D	E0AH 8005-BA	E0AZ 8005-A
D8ZH 8005-FA	D4ZZ 8005-B	E0VH 8005-AA	D9AZ 8005-D
D8ZH 8005-GA	D4ZZ 8005-B	E0VH 8005-BA	D9AZ 8005-D

YEAR	MODEL/RESTRICTIONS	QUANTITY STD. COOLING	QUANTITY EXTRA COOLING	QUANTITY H/D COOLING	QUANTITY A/C	PART NUMBER	DESCRIPTION CORE HEIGHT (INCHES)	DESCRIPTION CORE THICKNESS (INCHES)	DESCRIPTION CORE WIDTH (INCHES)
8005	RADIATOR								

APPLICATION CHART

A (Mercury)

73	8 cyl. 351,400,429,460-(exc. P.C) - - w/o 3.25 axle ratio or trailer towing pkg.	1			1	D8AZ 8005-B	17 27/32"	1 1/2"	29 1/2"
	8 cyl. 351,400,429,460-(exc. P/C) - - w/3.25 axle ratio or trailer towing pkg.	1		1	1	D8VY 8005-A	17 27/32"	2 1/4"	29 1/2"
	8 cyl. 351,400,429-(P/C)	1			1				

YEAR	MODEL/RESTRICTIONS	QUANTITY STD. COOL-ING	EXTRA COOL-ING	H/D COOL-ING	A/C	PART NUMBER	DESCRIPTION CORE HEIGHT (INCHES)	CORE THICKNESS (INCHES)	CORE WIDTH (INCHES)
8005	RADIATOR — Cont'd								

APPLICATION CHART

A (Mercury)

73	8 cyl. 460 P/C	1			1	D8VY 8005-A	17 27/32"	2 1/4"	29 1/2"
74/75	8 cyl. 460 (exc. P/C) - - w/o trailer towing or 3.25 axle	1			1	D8AZ 8005-B	17 27/32"	1 1/2"	29 1/2"
	8 cyl. 400 (exc. P/C) - - w/o trailer towing or 3.25 axle								
	8 cyl. 400 (exc. P/C) - - w/o T/E, trailer towing or 3.25 axle				1				
	8 cyl. 400,460 (P/C)	1			1	D8VY 8005-A	17 27/32"	2 1/4"	29 1/2"
	8 cyl. 400,460 (exc. P/C) - - w/class II trailer towing or 3.25 axle	1			1				
	8 cyl. 400 (exc. P/C) - - T/E w/o trailer towing or 3.25 axle				1				
	8 cyl. 400,460 (exc. P/C) - - w/class III trailer towing	1			1				
	8 cyl. 460 P/C	1			1				
76/77	8 cyl. 351,400,460 (exc. P/C) - - w/ or w/o 3.25 axle, w/o trailer towing pkg.	1			1	D8AZ 8005-B	17 27/32"	1 1/2"	29 1/2"
	8 cyl. 400,460 (exc. P/C) - - w/trailer towing pkg.	1			1	D8VY 8005-A	17 27/32"	2 1/4"	29 1/2"
	8 cyl. 351,400,460 (P/C)	1			1				
	8 cyl. 460 P/C	1			1				
78	8 cyl. 351M,400 - - exc. P/C, or trailer tow pkg.	1				★D8AZ 8005-A r/bD8AZ 8005-B	17 27/32"	1 1/2"	29 1/2"
	8 cyl. 351M,400 - - exc. P/C or trailer tow pkg.				1	D8AZ 8005-B	17 27/32"	1 1/2"	29 1/2"
	8 cyl. 351M,400,460(P/C)	1			1	D8VY 8005-A	17 27/32"	2 1/4"	29 1/2"
	8 cyl. 460 P/C	1			1				
	8 cyl. 400,460 - - exc. P/C, with trailer tow pkg.	1			1				
79	8 cyl. 302 - - "Before 1/2/79"	1				D9AZ 8005-E	17 13/16"	13/16"	28"
	8 cyl. 302 - - "From 1/2/79" except 2.73 axle	1							
	8 cyl. 302 - - "Before 1/2/79"				1	E0AZ 8005-A	17 13/16"	1 1/2"	28"
	8 cyl. 351 - - exc. P/C or trailor tow	1			1				
	8 cyl. 302 - - "From 1/2/79" with 2.73 axle	1				D9AZ 8005-D	17 13/16"	1 1/2"	28"
	8 cyl. 302 - - "From 1/2/79"				1				
	8 cyl. 351W - - with P/C or trailer tow	1			1	D9AZ 8005-B	17 13/16"	2 1/4"	28"

COPYRIGHT © 1986— FORD MOTOR COMPANY —DEARBORN, MICHIGAN

1973/79 LINCOLN-MERCURY CARS

8005 RADIATOR — Cont'd

APPLICATION CHART

C (Montego)

YEAR	MODEL/RESTRICTIONS	QUANTITY STD. COOL-ING	EXTRA COOL-ING	H/D COOL-ING	A/C	PART NUMBER	DESCRIPTION CORE HEIGHT (INCHES)	CORE THICKNESS (INCHES)	CORE WIDTH (INCHES)
73	6 cyl. 250	1			1	D80Z 8005-B	17 27/32"	1 1/2"	28"
	8 cyl. 302	1			1				
	8 cyl. 351-2/B (exc. P/C) - - w/o trailer towing pkg.	1	1		1				
	8 cyl. 351-4/B	1							
	8 cyl. 351-4/B		1		1	D80Z 8005-C	17 27/32"	2 1/4"	28"
	8 cyl. 351-2/B,400,429-(exc. P/C) - - w/trailer towing pkg.	1			1				
	8 cyl. 351,400,429-(P/C)	1			1				
	8 cyl. 460 P/C	1			1				
	8 cyl. 400,429-(exc. P/C) - - w/o trailer towing pkg.	1	1		1				
74/75	6 cyl. 250	1			1	D80Z 8005-B	17 27/32"	1 1/2"	28"
	8 cyl. 302 (exc. P/C) - - w/o trailer towing pkg.	1			1				
	8 cyl. 351-2/B - - w/o trailer towing pkg.	1			1				
	8 cyl. 351-4/B,400,460 - - w/o trailer towing pkg.	1							
	8 cyl. 302 (P/C & Taxi)	1			1	D80Z 8005-C	17 27/32"	2 1/4"	28"
	8 cyl. 351-2/B (P/C)	1							
	8 cyl. 351-2/B (exc. P/C) - - w/3.25 axle ratio				1				
	8 cyl. 351-4/B,400,460 (exc. P/C)				1				
	8 cyl. 351-2/B(P/C)				1				
	8 cyl. 351-4/B(P/C)	1							
	8 cyl. 400,460,460P/C(P/C)	1			1				
	8 cyl. 351-2/B (exc. P/C) - - w/class II trailer towing pkg.	1			1				
	8 cyl. 400,460 (exc. P/C) - - w/class II & III trailer towing pkg. or 3.25 axle ratio	1			1				
76	8 cyl. 351 (exc. P/C) - - w/o trailer towing pkg. or 3.25 axle	1			1	D80Z 8005-B	17 27/32"	1 1/2"	28"
	8 cyl. 400,460 (exc. P/C) - - w/o trailer towing pkg. or 3.25 axle ratio	1							
	8 cyl. 400,460 (exc. P/C) - - w/o trailer towing pkg. or 3.25 axle ratio				1	D80Z 8005-C	17 27/32"	2 1/4"	28"
	8 cyl. 351,400,460 (exc. P/C) - - w/trailer towing pkg. or 3.25 axle ratio	1			1				
	8 cyl. 351,400,460 (P/C)	1			1				
	8 cyl. 460 P/C	1			1				

YEAR	MODEL/RESTRICTIONS	QUANTITY STD. COOLING	EXTRA COOLING	H/D COOLING	A/C	PART NUMBER	DESCRIPTION CORE HEIGHT (INCHES)	CORE THICKNESS (INCHES)	CORE WIDTH (INCHES)
8005	RADIATOR — Cont'd								

APPLICATION CHART

D (Lincoln)

73	8 cyl. 460	1			1	D80Z 8005-C	17 27/32"	2 1/4"	28"
74/77	8 cyl. 400, 460	1			1	D8VY 8005-A	17 27/32"	2 1/4"	29 1/2"
78/	8 cyl. 400,460 - - without trail tow pkg.	1			1	D8AZ 8005-B	17 27/32"	1 1/2"	29 1/2"
	8 cyl. 400,460 - - with trail tow pkg.	1			1	D8VY 8005-A	17 27/32"	2 1/4"	29 1/2"

F (Cougar)

73	8 cyl. 351-2/B 8 cyl. 351-4/B	1 1	 1		1 1	★D3ZZ 8005-C N/R 2/24/81	17 27/32"	1 1/2"	26"
74/75	8 cyl. 351 - - w/o trailer towing pkg. 8 cyl. 400,460 - - w/o trailer towing pkg.	1 1			1	D80Z 8005-B	17 27/32"	1 1/2"	28"
	8 cyl. 351 - - w/trailer towing pkg. 8 cyl. 400,460 - - w/o trailer towing pkg. or 3.25 axle 8 cyl. 400,460 - - w/trailer towing pkg. and/or 3.25 axle				1 1 1	D80Z 8005-C	17 27/32"	2 1/4"	28"
76	8 cyl. 351 - - w/o trailer towing pkg. or 3.25 axle ratio 8 cyl. 400,460 - - w/o trailer towing pkg. or 3.25 axle	1 1			1	D80Z 8005-B	17 27/32"	1 1/2"	28"
	8 cyl. 400,460 - - w/o trailer towing pkg. or 3.25 axle 8 cyl. 351,400,460 - - w/ trailer towing pkg. or 3.25 axle	 1			1 1	D80Z 8005-C	17 27/32"	2 1/4"	28"
77	8 cyl. 302,351,400 (exc. taxi) - - w/or w/o 3.00 axle without trailer tow. pkg.	1			1	D80Z 8005-B	17 27/32"	1 1/2"	28"
	8 cyl. 351,400 (taxi) 8 cyl. 351,400 (exc. taxi) w/trailer tow pkg.	1 1			1 1	D80Z 8005-C	17 27/32"	2 1/4"	28"
78	8 cyl. 302,351W 8 cyl. 351M,400 - - exc. trail. tow pkg.	1 1			1	D80Z 8005-A	17 27/32"	1 1/2"	28"
	8 cyl. 351M,400 - - exc. trail. tow pkg.				1	D80Z 8005-B	17 27/32"	1 1/2"	28"
	8 cyl. 400 - - with trail. tow pkg.	1			1	D80Z 8005-C	17 27/32"	2 1/4"	28"

COPYRIGHT © 1986 — FORD MOTOR COMPANY — DEARBORN, MICHIGAN

1973/79 LINCOLN-MERCURY CARS

YEAR	MODEL/RESTRICTIONS	QUANTITY STD. COOLING	EXTRA COOLING	H/D COOLING	A/C	PART NUMBER	DESCRIPTION CORE HEIGHT (INCHES)	CORE THICKNESS (INCHES)	CORE WIDTH (INCHES)
8005	RADIATOR — Cont'd								

APPLICATION CHART

F (Cougar)

79	8 cyl. 302 exc. P/C	1			1	D80Z 8005-A	17 27/32"	1 1/2"	28"
	8 cyl. 351W	1			1				
	8 cyl. 351M	1							
	8 cyl. 302 P/C	1			1	D80Z 8005-B	17 27/32"	1 1/2"	28"
	8 cyl. 351M				1				

G (Monarch)

75	6&8 cyl. 200,250,302,351	1				★D6DZ 8005-A r/bD9DZ 8005-B(11/81)	17 27/32"	1 1/2"	24 1/2"
	6&8 cyl. 200,250,302				1	E0DZ 8005-B	17 27/32"	1 1/2"	24 1/2"
	8 cyl. 351				1	★D5DZ 8005-B	17 27/32"	2 1/4"	24 1/2"
76/77	6&8 cyl. 200,250,302,351	1				★D6DZ 8005-A r/bD9DZ 8005-B(11/81)	17 27/32"	1 1/2"	24 1/2"
	6&8 cyl. 200,250,302,351				1	E0DZ 8005-B	17 27/32"	1 1/2"	24 1/2"
78	6 cyl. 250 - - w/o A/C, Hvy. Dty. Elec. or Calif. emission	1				★D8DZ 8005-C r/bE0DZ 8005-A	17 27/32"	7/8"	24 1/2"
	6 cyl. 250 - - w/A/C, Hvy. Dty. Elec. or Calif. emission	1			1	E0DZ 8005-A	17 27/32"	7/8"	24 1/2"
	8 cyl. 302 - - w/o A/C, Hvy. Dty. Elec. or Calif. emission	1				D9DZ 8005-B	17 27/32"	1 1/2"	24 1/2"
	8 cyl. 302 - - w/A/C, Hvy. Dty. Elec. or Calif. emission	1			1	E0DZ 8005-B	17 27/32"	1 1/2"	24 1/2"
79	6 cyl. 250 exc. Calif.	1		1		E0DZ 8005-A	17 27/32"	7/8"	24 1/2"
	6 cyl. 250 - - Calif. 8 cyl. 302 - - exc. Calif.	1		1	1	D9DZ 8005-B	17 27/32"	1 1/2"	24 1/2"
	8 cyl. 302 with A/C or - - Calif. emissions or Hi Alt.	1		1	1	E0DZ 8005-B	17 27/32"	1 1/2"	24 1/2"

J (Capri)

73	4 cyl. 122 (2000cc)	1			1	D1RY 8005-C	13 11/16"	1 3/8"	17 1/4"
	6 cyl. 159 (2600cc)	1			1	D3RY 8005-A	14 7/32"	1 1/4"	18"
74/78	4 cyl. 122(2000cc) - - without T/E	1			1	D1RY 8005-C	13 11/16"	1 3/8"	17 1/4"
	4 cyl. 122(2000cc) - - with T/E	1			1	★D4RY 8005-C N.R.	13 11/16"	1 5/16"	17 7/32"
	4 cyl. 140 (2300cc)	1			1	D5RY 8005-E	14"	1 9/16"	17 7/8"
	6 cyl. 171 (2800cc)	1			1	D5RY 8005-C	14"	1 9/16"	17 7/8"
79	4 cyl. 140	1				E0ZZ 8005-E	16 7/16"	1 1/4"	17 5/16"
	4 cyl. 140 (exc. T/C) 6 cyl. 171,200	1			1	D9ZZ 8005-B	17 27/32"	7/8"	24 1/2"
	4 cyl. 140 (T/C) 6 cyl. 171,200 8 cyl. 302	1			1 1 1	D9BZ 8005-B	17 27/32"	1 1/2"	24 1/2"
	4 cyl. 140 (T/C) Indy 500 8 cyl. 302 Indy 500 exc. man. trans. or All Calif. 8 cyl. 302 Indy 500	1 1			1 1	D9ZZ 8005-A	17 27/32"	1 1/2"	24 1/2"
	8 cyl. 302 Indy 500 with man. trans. or All Calif. 8 cyl. 302 "From 1/2/79"	1			1	D9BZ 8005-B	17 27/32"	1 1/2"	24 1/2"
73	6 & 8 cyl. - - All	4	4		4	376712-S	(BB-210)-bolt (rad. to suppt.)-5/16"-24 x 3/4"		
73	6 & 8 cyl. - - All	4	4		4	34806-S7	(X-64)-washer-5/16"		
73	6 & 8 cyl. - - All	4	4		4	359952-S2	(MM-198)-nut-retainer-5/16"-24		

8005 RADIATOR — Cont'd

APPLICATION CHART

YEAR	MODEL/RESTRICTIONS	QUANTITY STD. COOLING	QUANTITY EXTRA COOLING	QUANTITY H/D COOLING	QUANTITY A/C	PART NUMBER	DESCRIPTION CORE HEIGHT (INCHES)	DESCRIPTION CORE THICKNESS (INCHES)	DESCRIPTION CORE WIDTH (INCHES)
	K (Mark IV or V)								
73/77	8 cyl. 400,460 – – All	1			1	D80Z 8005–C	17 27/32"	2 1/4"	28"
78/	8 cyl. 400,460 – – without trail. tow pkg.	1			1	D8AZ 8005–B	17 27/32"	1 1/2"	19 1/2"
	8 cyl. 400,460 – – with trail. tow pkg.	1			1	D8VY 8005–A	17 27/32"	2 1/4"	19 1/2"
	L (Bobcat)								
74	4 cyl. 122 (2000 cc) 4 cyl. 140 (2300 cc)	1 1			1	★D4FZ 8005–B N.R.	15 3/8"	1 1/4"	17 1/4"
	4 cyl. 140 (2300 cc)				1	★D4FZ 8005–A	15 3/8"	1 1/4"	20 1/4"
75/	4 cyl. 140 (2300 cc) – – w/o trailer towing pkg.	1				D5FZ 8005–A	16 7/16"	1 1/4"	17 5/16"
	4 cyl. 140 (2300 cc) – – w/trailer towing pkg. or A/C	1			1	D5FZ 8005–B	16 7/16"	1 1/4"	20 1/4"
	6 cyl. 171 (2800 cc) – – w/o trailer towing pkg.	1				★D5FZ 8005–C	16 7/16"	1 1/4"	20 1/4"
	6 cyl. 171 (2800 cc) – – trailer towing pkg. or A/C	1			1	D5FZ 8005–D	15 1/2"	1 15/16"	20 1/4"
	P (Comet or Zephyr)								
73	6 cyl. 200	1			1	D2DZ 8005–A	16 7/16"	1 1/4"	20 1/4"
	6 cyl. 250 8 cyl. 302	1 1			1	D2DZ 8005–B	16 7/16"	1 1/4"	20 1/4"
	8 cyl. 302				1	D1DZ 8005–A	15 1/2"	1 15/16"	20 1/4"
74	6 cyl. 200	1				D4DZ 8005–F	16 7/16"	1 1/4"	17 1/4"
	6 cyl. 200				1	D5BZ 8005–B	16 7/16"	1 1/4"	20 1/4"
	6 cyl. 205	1			1	★D4DZ 8005–E	16 7/16"	1 1/4"	20 1/4"
	8 cyl. 302	1				D4DZ 8005–A	16 7/16"	1 1/4"	20 1/4"
	8 cyl. 302				1	D1DZ 8005–A	15 1/2"	1 15/16"	20 1/4"
75	6 cyl. 200	1			1	D5BZ 8005–B	16 1/2"	1 1/4"	20 1/4"
	6 cyl. 250	1			1	★D4DZ 8005–E	16 7/16"	1 1/4"	20 1/4"
	8 cyl. 302	1				D4DZ 8005–A	16 7/16"	1 1/4"	20 1/4"
	8 cyl. 302				1	★D5BZ 8005–A	15 1/2"	2"	20 1/4"
76/77	6 cyl. 200 – – M/T	1				D2DZ 8005–A	16 7/16"	1 1/4"	20 1/4"
	6 cyl. 200 – – A/T	1				D4DZ 8005–F	16 7/16"	1 1/4"	17 1/4"
	6 cyl. 200 – – M/T & A/T 6 cyl. 200 – – w/Hvy. dty. opt.	 1			1	D5BZ 8005–B	16 1/2"	1 1/4"	20 1/4"
	6 cyl. 250	1			1	★D4DZ 8005–E	16 7/16"	1 1/4"	20 1/4"
	8 cyl. 302 – – w/o Hvy. dty. opt.	1				D4DZ 8005–A	16 7/16"	1 1/4"	20 1/4"
	8 cyl. 302 8 cyl. 302 – – w/Hvy. dty. opt.	 1			1	★D5BZ 8005–A N.R.	15 1/2"	2"	20 1/4"
78	4 cyl. 140	1				E0ZZ 8005–E	16 7/16"	1 1/4"	17 5/16"
	4 cyl. 140 6 cyl. 200	 1			1	D9ZZ 8005–B	17 27/32"	7/8"	24 1/2"
	6 cyl. 200				1	D8BZ 8005–D	17 27/32"	7/8"	24 1/2"
	8 cyl. 302	1			1	D9BZ 8005–B	17 27/32"	1 1/2"	24 1/2"

COPYRIGHT © 1986— FORD MOTOR COMPANY —DEARBORN, MICHIGAN

1973/79 LINCOLN-MERCURY CARS

YEAR	MODEL/RESTRICTIONS	QUANTITY STD. COOLING	EXTRA COOLING	H/D COOLING	A/C	PART NUMBER	DESCRIPTION CORE HEIGHT (INCHES)	CORE THICKNESS (INCHES)	CORE WIDTH (INCHES)
8005	RADIATOR — Cont'd								

APPLICATION CHART

P (Comet or Zephyr)

79	4 cyl. 140	1				E0ZZ 8005-E	16 7/16"	1 1/4"	17 5/16"
	4 cyl. 140				1	D9ZZ 8005-B	17 27/32"	7/8"	24 1/2"
	6 cyl. 200	1			1				
	8 cyl. 302D9BZ	1			1	D9BZ 8005-B	17 27/32"	1 1/2"	24 1/2"

V (Versailles)

77	8 cyl. 302,351	1				D6DZ 8005-A	17 27/32"	1 1/2"	24 1/2"
	8 cyl. 302,351				1	D5DZ 8005-A	17 27/32"	1 1/2"	24 1/2"
78/	8 cyl. 302	1				D9DZ 8005-B	17 27/32"	1 1/2"	24 1/2"
78/	8 cyl. 302				1	E0DZ 8005-B	17 27/32"	1 1/2"	24 1/2"

Y (Meteor)

73	8 cyl. 351,400,429,460-(exc. P/C) - - w/o 3.25 axle ratio or trailer towing pkg.	1			1	D3AZ 8005-A	17 27/32"	1 1/2"	29 1/2"
	8 cyl. 351,400,429,460-(exc. P/C) - - w/3.25 axle ratio or trailer towing pkg.	1		1	1	D8VY 8005-A	17 27/32"	2 1/4"	29 1/2"
	8 cyl. 351,400,429-(P/C)	1			1				
	8 cyl. 460 P/C	1			1				
74/75	8 cyl. 351,460 (exc. P/C) - - w/o trailer towing or 3.25 axle	1			1	D3AZ 8005-A	17 27/32"	1 1/2"	29 1/2"
	8 cyl. 400 (exc. P/C) - - w/o trailer towing or 3.25 axle	1							
	8 cyl. 400 (exc. P/C) - - w/o T/E, trailer towing or 3.25 axle				1				
	8 cyl. 351,400,460 (P/C)	1			1	D8VY 8005-A	17 27/32"	2 1/4"	29 1/2"
	8 cyl. 351,400,460 (exc. P/C) - - w/class II trailer towing or 3.25 axle	1			1				
	8 cyl. 400 (exc. P/C) - - T/E w/o trailer towing or 3.25 axle				1				
	8 cyl. 400,460 (exc. P/C) - - w/class III trailer towing	1			1				
	8 cyl. 460 (P/C)	1			1				
76	8 cyl. 351,400,460 (exc. P/C) - - w/ and w/o 3.25 axle, w/o trailer towing pkg.	1			1	D3AZ 8005-A	17 27/32"	1 1/2"	29 1/2"
	8 cyl. 400,460 (exc. P/C) - - w/trailer towing pkg.	1			1	D8VY 8005-A	17 27/32"	2 1/4"	29 1/2"
	8 cyl. 351,400,460 (P/C)	1			1				
	8 cyl. 460 P/C	1			1				

1973/79
LINCOLN-MERCURY CARS

YEAR	MODEL/RESTRICTIONS	ENGINE CYL.	ENGINE C.I.D. (C.C.D.)	PART NUMBER	DESCRIPTION	QTY.
8C015	GUARD (LOWER RAD. HOSE)					
79	F	8	302	D9ZZ 8C015-A		1
8B016	CONNECTOR (RADIATOR FILLER NECK)					
73	J	4	122 (2000)	D0RY 8B016-A		1
74/78	J	4&6	All	D4RY 8B016-A		1
8B029	BAFFLE ASSY. (RADIATOR AIR INTAKE)					
78/79	J,P	4	140	D9ZZ 8B029-A	Replaces D8BZ 8B029-A(3/79)	1
8C030	SHIELD (RADIATOR GRILLE SIGHT)-Also refer to groups 8C055-6&8C071					
73/77	P	6&8	All	D34Y 8C030-A	Used between grille & stone deflector	1
8N030	CONNECTOR (RADIATOR OVERFLOW HOSE)					
78/	J,P	4	All	D8BZ 8N030-B	# Nylon	1
8052	BRACKET (RADIATOR SUPPORT LOWER)					
73	F	8	351	★ D00Z 8052-A	R.H.-N.R.	1
				★ D00Z 8052-B	L.H.-N.R.	1
75/	G,V	6&8	All	D5DZ 8052-A	R.H.	1
				D5DZ 8052-B	L.H.	1
79	A	All	All	D9AZ 8052-A		2
8C055-6	SHIELD (RADIATOR GRILLE SIGHT)-Also refer to groups 8C030 & 8C071					
73	C	6&8	All	D3GY 8C055-B	Lower	2
73	F	8	351	★ D3WY 8C055-A	R.H.-lower-polypropylene-not replaced	1
				★ D3WY 8C056-A	L.H.-lower-polypropylene-not replaced	1
73	F	8	351	★ D3WY 8C055-B	Lower-steel-not replaced	1
74/76	C,F	6&8	All	★ D4GY 8C055-A	Lower-polypropylene-18 11/16" long-N.R.	2
74	F	8	All	D4WY 8C055-A	Lower-rigid vinyl-23" long	1
75/76	F	8	All	★ D5WY 8C055-A	Lower-rigid vinyl-23" long-not replaced	1
77	K	8	All	★ D7LY 8C055-A	Lower-approx 29.80" length & 14" wide	1
78	K	8	All	D8LY 8C055-A	Lower 29.8" long	1
8B057	BRACE (RADIATOR GRILLE OPENING PANEL) - incl. att. parts					
77/79	D	All	All	★ D8VY 8B057-A		1
77/79	F	8	All	D7WY 8B057-A		1
77/79	V	All	All	D74Y 8B057-A		1
79	A	All	All	D9MY 8B057-A		1
8C071	SHIELD ASSY. (RADIATOR GRILLE SIGHT)-Also refer to groups 8C030 & 8C055-6					
74/76	D	8	460	★ D4VY 8C071-A	Upper-polypropylene	1
77/79	D "From 7/10/77 to 2/26/79"	8	all	D8VY 8C071-A	Not used after 2/26/79	
73/76	K	8	460	D5LY 8C071-A	Upper-incl. 13B195 cvr.	1
75/76	K	8	460	★ D5LY 8C071-B	Upper-without 13B195 cvr.	1
8075	HOSE (RADIATOR OVERFLOW)-Unless listed improvise from bulk hose (9324)					
73/	J	4&6	All	★ D4RY 8075-A	R/B C9PZ 9324-B	1
8C077	TRANSFER (RADIATOR GRILLE OPENING PANEL COLOR STRIPE)					
75/79	A(53L,65L)	8	All	D5MY 8C077-A	# Black-R.H. & L.H.	1
76/79	A(65K) - - w/two tone paint			D5MY 8C077-B	# Yellow-R.H. & L.H.	1
				D5MY 8C077-C	# White-R.H. & L.H.	1
				D5MY 8C077-D	# Red-R.H. & L.H. -not used in 1977	1
				D5MY 8C077-E	# Gold-R.H. & L.H.	1
				D5MY 8C077-F	# Brown-R.H. & L.H.	1
				D5MY 8C077-G	# Silver-R.H. & L.H.	1
				D5MY 8C077-H	# Bright Red-R.H. & L.H. -not used in 1977	1
				D5MY 8C077-J	# Tan-R.H. & L.H. -not used in 1977	1
				D5MY 8C077-K	# Blue-R.H. & L.H.	1

COPYRIGHT © 1986— FORD MOTOR COMPANY —DEARBORN, MICHIGAN

1973/79 LINCOLN-MERCURY CARS

YEAR	MODEL/RESTRICTIONS	ENGINE CYL.	ENGINE C.I.D. (C.C.D.)	PART NUMBER	DESCRIPTION	QTY.
8C077	**TRANSFER (RADIATOR GRILLE OPENING PANEL COLOR STRIPE) — Cont'd**					
77/79	A(53L,65L)	8	All	D7MY 8C077-F	#Dark Jade-R.H. & L.H.	1
77/79	A(65K) - - w/two tone paint			D7MY 8C077-G	#Light Jade-R.H. & L.H.	1
				D7MY 8C077-H	#Light Blue-R.H. & L.H.	1
				D7MY 8C077-J	#Bright Red-R.H. & L.H.	1
				D7MY 8C077-K	#Light Orange-R.H. & L.H.	1
75/76	A(53H,K,65H,K),Y	8	All	★ D5MY 8C077-AA	#Black-R.H. & L.H.-not replaced	1
				★ D5MY 8C077-AB	#White-R.H. & L.H.-not replaced	1
				★ D5MY 8C077-AC	#Red-R.H. & L.H.-not replaced	1
				★ D5MY 8C077-AD	#Yellow-R.H. & L.H.-not replaced	1
				★ D5MY 8C077-AF	#Brown-R.H. & L.H.-not replaced	1
				★ D5MY 8C077-AG	#Silver-R.H. & L.H.-not replaced	1
				★ D5MY 8C077-AH	#Bright Red-R.H. & L.H.-not replaced	1
				★ D5MY 8C077-AJ	#Tan-R.H. & L.H.-not replaced	1
				★ D5MY 8C077-AK	#Blue-R.H. & L.H.-not replaced	1
				D6MY 8C077-A	#Green-R.H. & L.H.	1
75	F(65F)	8	All	D5WY 8C077-A	#Brown	1
76/	G(66H)	All	All	D64Y 8C077-A	#Gold	1
79	J	All	All	D9CY 8C077-A	#Gold-R.H. & L.H.	1
				★ D9CY 8C077-B	#Silver-R.H. & L.H.	1
				★ D9CY 8C077-C	#Red-R.H. & L.H.	1
				D9CY 8C077-D	#Blue-R.H. & L.H.	1
				D9CY 8C077-E	#Orange-R.H. & L.H.	1
				D9CY 8C077-F	#Black-R.H. & L.H.	1
				D9CY 8C077-G	#White-R.H. & L.H.	1
				★ D9CY 8C077-H	#Green-R.H. & L.H.	1
77/	K - - w/Givenchy opt	All	All	D7LY 8C077-P	#Chamois	1
79	K - - w/Givenchy opt.	All	All	D9LY 8C077-A	#Amethyst	1
78	K - - w/Diamond Jubilee	8	All	★ D8LY 8C077-B	# Blue-N.R.	1
				★ D8LY 8C077-C	# Gold-N.R.	1
8A080	**RESERVOIR ASSY. (RADIATOR COOLANT RECOVERY)-Also refer to group 17618**					
73/74	A,Y "Before 5/1/74"	8	All	★ D3AZ 8A080-A	#D3AE 8C045-AA-not replaced	1
74/77	A,Y "From 5/1/74 to 9/7/76"	8	All	D7AZ 8A080-A	#D7AE 8C045-AA repls. D4ME 8A080-AA	
77/	A "From 9/7/76"	8	All	D7AZ 8A080-A	#D7AE 8C045-AA	1
73/77	C,F	8	All	D70Z 8A080-A	# D7SE 8C045-AA replaces D3OE-AA	1
77/	F	8	All			1
73/	D	8	All	D7VY 8A080-A	#D7VE 8C045-AA, repls D2VE-AB,AC,D5VE-AA	1
76/77	G "Before 2/15/77"	All	All	D6DZ 8A080-A	#D6DE 8C045-AA	1
77/	G,V "From 2/15/77"	All	All	D7DZ 8A080-A	#D7DE 8C045-A1A	1
73/76	K	8	All	D2LY 8A080-A	#D2LE 8C045-AA,AB,AC,D3LE 8C045-AA D3LE 8A080-AA	1
77/	K	8	All	D7LY 8A080-A	#D7LE 8C045-AA,D8LE 8C045-AA	1
77/78	L	6	171 (2800)	★ D7FZ 8A080-A /bD9FZ 8A080-A(8/81)	#D7EE 8C045-CA,D8EE 8C045-AA	1
79	L	6	171 (2800)	D9FZ 8A080-A	#D9EE-8C045-AA	1
77/	L	6	171 (2800)	383152-S2	(UU-52-C)-Screw (reservoir to fender apron or rad. support)-Hex. wshr. Hd.-1/4"- 14 x 5/8"	2
73/	A,G,Y	8	All	376838-S2	(MM-296-AF)-nut and washer (reservoir to bracket)-hex. head-5/16"-18	1
73/78	K	8	460	357235-S	(BB-136)-screw & washer (reservoir to bracket)-5/16"-18 x 7/8"	1
73/78	D	8	460	376838-S2	(MM-296-AF)-nut (reservoir to fender apron)	1
8A082	**BRACKET (RADIATOR COOLANT RECOVERY RESERVOIR)**					
73/74	A,Y	8	400,429	D3AZ 8A082-A	#D3AE 8C087-AA	1
73/74	A,Y - - w/trailer towing pkg.- "Before 5/1/74"	8	460			1
73/74	A(P/C),Y(P/C)	8	351,400, 429,460, 460P/C			1

YEAR	MODEL/RESTRICTIONS	ENGINE CYL.	ENGINE C.I.D. (C.C.D.)	PART NUMBER	DESCRIPTION	QTY.
8A082	BRACKET (RADIATOR COOLANT RECOVERY RESERVOIR) — Cont'd					
74/78	A,Y - - A/C and trailer towing pkg.- "From 5/1/74"	8	460	★ D4MY 8A082-A	#D4ME 8C077-AA-L shaped-2 7/8" x 5"-NR	1
				★ D5AZ 8A082-B	#D5AE 8C101-BA - repls D4ME-AA	1
75/	A,Y	8	All	★ D5AZ 8A082-B	Front-#D5AE 8C101-BA	1
				★ D5AZ 8A082-A	Rear-#D5AE 8C087-BA	1
73/	C,F	8	All	★ D30Z 8A082-A	#D30E 8C087-AA	1
73/	D	8	All	D2VY 8A082-B	#D2VE 8C087-A or D2VE 8C101-AA	1
76/77	G "Before 2/15/77"	All	All	★ D6DZ 8A082-A	#D6DE 8C087-AA -not used From 2/15/77-N.R.	1
73/	K	8	All	★ D2LY 8A082-A	#D2LE 8C087-AA or D2LE 8C101-AA,AB	1
73/	A,Y	8	All	384871-S2	(UU-52-AM)-screw and washer (bracket to frame)-hex. head-5/16"-18 x 1"	2
73/	C,F	8	All	382160-S2	(UU-52-C)-screw (bracket to fender apron)-hex. head-1/4"-14 x 5/8" hd.-1/4"-14 x 5/8"	2
76/	G	All	All	383152-S2	(UU-52-BC)-Screw(brkt. to frame)-hex hd.-1/4" - 14 x 5/8"	2
73/78	D,K	8	460	376838-S2	(MM-296-AF)-nut (1) bracket to fender apron-(1) bracket to reservoir-5/16"-18	2
73/78	K	8	460	385347-S7	(GG-385)-clip (bracket to reservoir)	1
8A083	STRAP ASSY. (RADIATOR COOLANT RECOVERY RESERVOIR)					
75/	A,Y	8	All	★ D5AZ 8A083-A	Not replaced	1
8C086	SPACER (RADIATOR GRILLE OPENING PANEL ORNAMENT)					
75/76	A	8	All	D5MY 8C086-A		1
8C099	MOULDING (RADIATOR GRILLE SIGHT SHIELD)					
73/77	P	6&8	All	D34Y 8C099-A	Aluminum-used w/8C030 sight shield	1
8100	CAP (RADIATOR)					
73/	All - - Used with 13 lb. center fill dn. flow system	All	All	E2DZ 8100-A	*RS-50-A-13 lbs. pressure-replaces C9AZ-A, *RS-12-A & D2VY-A *RS-40, Optional with C9ZZ 8100-A	1
				C9ZZ 8100-A	*RS-512-A-#Chrome-13 lbs.-Optional with D7ZZ 8100-A	1
73/	All - - used with 16 lb. side fill cross flow system	All	All	E1FZ 8100-A	*RS-53-16 lbs. pressure-replaces D5VY-A *RS-47-A & D6AZ-A *RS-17-B	1
8C102	BOLT ASSY. (RADIATOR COOLANT RECOVERY RESERVOIR)					
73/78	D	8	460	★ D2VY 8C102-A	Bracket to fender apron-N.R.	1
8K103	CAP (RADIATOR OVERFLOW CONTAINER)					
73/	A,C,D,F,J,K,P,Y	4,6	All	★ D2AZ 8K103-A N/R 4/1/81	Used on overflow supply tank in 8522 coolant recovery kit	1
73/	A,C,D,F,K,Y	8	All	D2VY 8K103-A	Cap-used on production installed 8A080 reservoirs	1
76/	G	All	All	D9HZ 8K103-A	Cap-used on production installed 8A080 reservoirs-screw on type	1
8B105	SEAL (RADIATOR GRILLE OPENING PANEL)					
73	K	8	460	★	Cut from D0MZ 16D130-A	
8C114	STIFFENER (RADIATOR SUPPORT UPPER REINF.)					
79	J	All	All	D9ZZ 8C114-A	R.H.	1
				D9ZZ 8C114-B	L.H.	1
8115	DRAIN COCK (RADIATOR or CYLINDER BLOCK)					
73/78	J	4&6	All	D0RY 8115-B		1
73/	A,C,D,F,K,P,Y,V	6&8	All	★ 8A 8115	1/4" thread-(1) req'd. as radiator cock on all vehicles	1
79	J	All	All	r/b8A 8115-A		1
73/78	J	4&6	All	66082-GS	Gasket-radiator drain plug	1

COPYRIGHT © 1986— FORD MOTOR COMPANY —DEARBORN, MICHIGAN

1973/79 LINCOLN-MERCURY CARS

YEAR	MODEL/RESTRICTIONS	ENGINE CYL.	ENGINE C.I.D. (C.C.D.)	PART NUMBER	DESCRIPTION	QTY.
8120	**BOSS (RADIATOR DRAIN COCK REPAIR)**					
73/	All	All	All	D7TZ 8120-A		1
8124-5	**INSULATOR (RADIATOR MOUNTING)**					
73/78	A,Y	8	All	D4AZ 8124-A	R.H.-upper	1
75/	D			D4AZ 8124-B	L.H.-upper	1
73	A,Y	8	All	D3AZ 8125-A	R.H.-lower	1
				D3AZ 8125-B	L.H.-lower	1
74/78	A,Y	8	All	D4AZ 8125-A	R.H.-lower	1
				D3AZ 8125-B	L.H.-lower	1
79	A - - exc. police or trail tow	All	All	D9AZ 8124-A	R.H.-upper	1
				D9AZ 8124-C	L.H.-upper	1
79	A - - police or trail tow	All	All	D9AZ 8124-B	R.H. & L.H.-upper	2
79	A - - exc. police or trail tow	All	All	D9AZ 8125-A	R.H.-lower	1
				D9AZ 8125-B	L.H.-lower	1
79	A - - police or trail tow	All	All	D9AZ 8125-C	R.H.-lower	1
				D9AZ 8125-D	L.H.-lower	1
73/74	D	8	All	C7SZ 8125-C	R.H.-upper	1
				C7SZ 8125-D	L.H.-upper	1
73/74	C,D,K	6&8	All	D30Z 8125-A	R.H.-lower	1
74/77	C,F,K			D30Z 8125-B	L.H.-lower	1
78/	F	8	All	D30Z 8125-A	R.H.-lower	1
				D30Z 8125-B	L.H.-lower	1
78/	P	All	All	D30Z 8125-A	R.H. & L.H.-lower	2
75/	D	8	All	D3AZ 8125-A	R.H.-lower	1
				D3AZ 8125-B	L.H.-lower	1
73/77	C,F,K	8	All	C7SZ 8125-C	R.H.-upper	1
78	F			C7SZ 8125-D	L.H.-upper	1
75/	G,V	All	All	D30Z 8125-A	R.H. & L.H.-upper	2
79	J			C7SZ 8125-C	R.H. & L.H.-lower	2
76/78	J	4&6	All	★ D5RY 8125-A	N.R.	1
78/	K	8	All	D4AZ 8124-A	R.H.-upper	1
				D4AZ 8124-B	L.H.-upper	1
78/	K	8	All	D3AZ 8125-A	R.H.-lower	1
				D3AZ 8125-B	L.H.-lower	1
8146	**SHROUD (FAN)**					
				A (Mercury)		
73	A	8	351	D3AZ 8146-C	#D3AE-CB or D4AE-AA	1
73/74	A	8	400	D3AZ 8146-A	#D3AE-AB,BA or D4AE-BA	1
73	A (exc. P/C) - - S/C	8	429	★ D3AZ 8146-D	#D3AE-DB or D4AE-CA	1
74	A (exc. P/C) - - S/C with 3.25 axle, hvy. duty or class III trailer towing pkg.	8	460	N.R.		1
73	A (P/C)	8	429	D3AZ 8146-E	#D3AE-EA,EB,FA or D4AE-DA	1
73	A (exc. P/C) - - A/C	8	429			1
73	A	8	460, 460 P/C			1
74	A (exc. P/C) - - A/C with 3.25 axle, hvy. duty or class III trailer towing pkg.	8	460			1
74	A (exc. P/C) - - S/C or A/C without 3.25 axle or trailer towing pkg.	8	460			1
74	A (P/C)	8	460, 460 P/C			1

YEAR	MODEL/RESTRICTIONS	ENGINE CYL.	ENGINE C.I.D. (C.C.D.)	PART NUMBER	DESCRIPTION	QTY.
8146	SHROUD (FAN) — Cont'd					
	A (Mercury)					
75/78	A	8	351,400	D5AZ 8146-B	#D5AE-BA	1
75/78	A	8	460, 460 P/C	D5AZ 8146-A	#D5AE-AA	1
79	A	8	302,351W	D9AZ 8146-A	#D9AE-AA	1
	C (Montego)					
73/74	C	6	250	★D20Z 8146-B	#D20E-CA or CB-not replaced	1
73/76	C	8	302,351, 400	D7LY 8146-A	#D7LE-BA - replaces #D20E-BB,BC or D30E-AA	1
73	C (exc. P/C)	8	429	D2SZ 8146-A	#D2SE-AC	1
73	C (P/C)	8	429, 460 P/C	D30Z 8146-B	#D30E-BA	1
74/76	C	8	460, 460 P/C			1
	D (Lincoln)					
73	D	8	460	★D3VY 8146-A	#D3VE-AA-N.R.	1
74/78	D	8	460	D4VY 8146-A	#D4VE-AA	1
77/	D	8	400	D7VY 8146-A	#D7VE-AA	1
	F (Cougar)					
73	F	8	351	D3ZZ 8146-A	#D1ZE-AA,D3ZE-AA or AB	1
74/76	F	8	351,400	D7LY 8146-A	#D7LE-BA-use in place of shroud ident. D20E-BC,D30E-AA or D7LE-CA	1
77/	F	8	All			1
74/76	F	8	460	D30Z 8146-B	#D30E-BA	1
	G (Monarch)					
75/	G	6	250	D5DZ 8146-B	#D5DE-BA,DA or D6DE-AA	1
75/	G	8	302,351	D5DZ 8146-A	#D5DE-AA	1
	J (Capri)					
73	J	4	122 (2000)	D3RY 8146-A	#72EB-CA	1
74	J - - without A/C					1
74	J - - A/C	4	122 (2000)	★D4RY 8146-C	#74EB-AA-not replaced	1
76/78	J	4	140 (2300)	D5RY 8146-E	Lower	1
				D5RY 8146-F	Upper	1
79	J - - A/C or T/C J - - S/C "From 1/15/79"	4	140 (2300)	D9ZZ 8146-A	#D9ZE-CB	1
73	J	6	159 (2600)	★D3RY 8146-B	#72EB-DA,DB-not replaced	1
74	J - - without T/E	6	171 (2800)	★D5RY 8146-C	#74EB-BA,ABA-repl. by D5RY 8146-D and D5RY 8146-G (8/77)	1
74	J - - T/E	6	171 (2800)	★D4RY 8146-B	#74EB-DA-not replaced	1
76/78	J	6	171 (2800)	★D5RY 8146-G	Lower	1
				★D5RY 8146-D	Upper-#75EB 8147-BA	1
79	J	6	171 (2800)	D9ZZ 8146-B	#D9ZE-BA	1
79	J - - A/C	6	200	D9ZZ 8146-D	#D9ZE-J1A,J1B,J2A,J2B	1
79	J	8	302	★D9ZZ 8146-C	#D9ZE-DC,DD-r/b E2ZZ-B(7/81)	1
76/78	J	6	171 (2800)	E864468-S81	(AG-58)-Clip (upper & lower shroud)	2

COPYRIGHT © 1986— FORD MOTOR COMPANY —DEARBORN, MICHIGAN

1973/79 LINCOLN-MERCURY CARS

YEAR	MODEL/RESTRICTIONS	ENGINE CYL.	ENGINE C.I.D. (C.C.D.)	PART NUMBER	DESCRIPTION	QTY.
8146	SHROUD (FAN) — Cont'd					
	K (Mark IV or V)					
77	K	8	400	D7LY 8146-A	#D7LE-BA-use in place of shroud ident. D20E-BC, D30E-AA or D7LE-CA	1
78/	K	8	400	D5AZ 8146-B	#D5AZ-BA	1
73/76	K	8	460	D2SZ 8146-A	#D2SE-AC	1
77	K	8	460	D30Z 8146-B	#D30E-BA	1
78	K	8	460	D5AZ 8146-A	#D5AE-AA	1
	L (Bobcat)					
74	L	4	122 (2000)	D1FZ 8146-B	#D12E 8146-BB	1
74 74	L - - A/C L - - S/C with trailer towing pkg.	4	140 (2300)	D4FZ 8146-A	#D42E-AA,AB	1 1
75/	L - - A/C or trailer towing pkg.	4	140 (2300)	D5FZ 8146-C	#D52E-CA,CB	1
75/	L - - S/C or X/C	6	171 (2800)	D5FZ 8146-A	#D52E-AA	1
75/	L - - A/C or trailer towing pkg.	6	171 (2800)	D5FZ 8146-B	#D52E-BA	1
	P (Comet or Zephyr)					
78/	P - - A/C P - - S/C "From 1/15/79"	4	140 (2300)	E1DZ 8146-B	#ED-D8BE-EB or E1DE-CA-repls D8BE-EA,EB	1
75/77	P - - A/C	6	200	★D5BZ 8146-B	#D5DE-EA	1
78/	P - - A/C	6	250	D8BZ 8146-B	#D8BE-DA-repl. D8BE-D1B, E0BE-AA	1
74/77	P - - A/C	6	250	D6BZ 8146-A	#D6BE-AA repl. # D5DE-CA	1
73 75/77	P - - S/C P - - S/C	8 8	302 302	D0DZ 8146-B	#D0DE-B	1 1
73 74 75/77	P - - A/C P P - - A/C	8 8 8	302 302 302	D1DZ 8146-A	#D1DE-AB	1 1 1
78/	P - - S/C or A/C	8	302	D8BZ 8146-A	#D8BE-AA	1
	V (Versailles)					
77/	V	8	All	D5DZ 8146-A	#D5DE-AA	1
	Y (Meteor)					
73/74	Y	8	351	D3AZ 8146-C	#D3AE-CB or D4AE-AA	1
73/74	Y	8	400	D3AZ 8146-A	#D3AE-AB,BA or D4AE-BA	1
73 74	Y (exc. P/C) - - S/C Y (exc. P/C) - - S/C with 3.25 axle, hvy. duty or class III trailer towing pkg.	8 8	429 460	D3AZ 8146-D	#D3AE-DB or D4AE-CA	1 1

YEAR	MODEL/RESTRICTIONS	ENGINE CYL.	ENGINE C.I.D. (C.C.D.)	PART NUMBER	DESCRIPTION	QTY.
8146	SHROUD (FAN) — Cont'd					
	Y (Meteor)					
73	Y (P/C)	8	429	D3AZ 8146-E	#D3AE-EA,EB,FA or D4AE-DA	1
73	Y (exc. P/C) - - A/C	8	429			1
73	Y	8	460, 460P/C			1
74	Y (exc. P/C) - - A/C with 3.25 axle, hvy. duty or class III trailer towing pkg.	8	460			1
74	Y (exc. P/C) - - S/C or A/C without 3.25 axle or trailer towing pkg.	8	460			1
74	Y (P/C)	8	460, 460 P/C			1
75/76	Y	8	351,400	D5AZ 8146-B	#D5AE-BA or DA	1
75/76	Y	8	460, 460 P/C	D5AZ 8146-A	#D5AE-AA	1
73/	A,C,D,F,K,P,Y	6&8	All	383375-S2	(MM-284)-nut (shroud to radiator)-No. 12A spring	4
73/	A,C,D,F,K,P,Y	6&8	All	383152-S2	(UU-52-C)-screw (shroud to radiator)-hex. hd.-1/4"-14 x 5/8"	4
73/74	J	4&6	All	45531-GS40	Speed nut (shroud and spacers to radiator)	4
73/74	J	4&6	All	54049-GS40	Bolt (shroud and spacers to radiator)-M6 x 16 (Metric coarse)	4
8C147	SLEEVE (RADIATOR HOSE)					
74	L - - A/C	4	140 (2300)	★ D42E 8C147-AA	Improvise from sponge rubber-2" O.D.-7 1/4" long	AR
8A153-4	BRACKET (RADIATOR GRILLE MOUNTING OUTER)					
73/76	K	8	460	D3LY 8A153-A	R.H.	1
				D3LY 8A154-A	L.H.	1
8156	MOULDING (RADIATOR GRILLE OPENING PANEL LOWER)-Incl. attaching parts					
77/	D	8	All	D7VY 8156-A	R.H.	1
				D7VY 8156-B	L.H.	1
75/77	G	6,8	All	D54Y 8156-A	R.H.	1
				D54Y 8156-B	L.H.	1
8A156	MOULDING (RADIATOR GRILLE OPENING PANEL)-Incl. attaching parts					
73	D	8	460	D2VY 8A156-A		1
74/76	C	6&8	All	★ D4GY 8A156-A		1
77/79	F	8	All	D7WY 8A156-A	Incl (3) 56910-S2 Screws	1
8C161	RADIATOR GRILLE SPRING KIT					
77/79	D	8	All	D7VY 8C161-A		1
	Consists of					
	1-D7VB 8C161-AC Spring		2-D7VB 8C181-AA Brkt.		4-56910-S36 Screw	
77/78	F	8	All	D7WY 8C161-A		1
79	F (exc. 65L)					1
	Consists of					
	1-D7WB 8C161-AA Spring		2-D7WB 8384-AA Hinge		2-56904-S43B Screw	
	2-D7GB 8C162-AA Retainer		2-45262-S2 U-Nut		2-57259-S43B Screw	
79	F(65L)	All	All	D9WY 8C161-A	Spring only - - use with 8C162 retainer & 8384 hinge	1
77/	V	All	All	D74Y 8C161-A		1
	Consists of					
	1-D74B 8C161-AB Spring		2-D74B 8384-AA Hinge			
	2-D74B 8C185-AA Retainer		8-56901-S2 Screw			

COPYRIGHT © 1986— FORD MOTOR COMPANY —DEARBORN, MICHIGAN

1973/79 LINCOLN-MERCURY CARS

YEAR	MODEL/RESTRICTIONS	ENGINE CYL.	ENGINE C.I.D. (C.C.D.)	PART NUMBER	DESCRIPTION	QTY.
8C162	**RETAINER (RADIATOR GRILLE SPRING)**					
79	F(65L)	All	All	D9WY 8C162-A	Use with 8C161 spring & 8384 hinge	2
8174	**BRACKET (RADIATOR GRILLE MOUNTING CENTER)**					
75/78	A	8	All	D5MY 8174-A	Lower	1
79	A	All	All	D9MY 8174-A		1
73	D	8	460	D2VY 8174-B	Upper	2
75/76	D	8	All	★ D5VY 8174-A	Lower-N.R.	1
8K174	**CAP (HEATER INLET HOSE CONNECTOR BLANKING)**					
74/	J	4&6	All	D4RY 8K174-A		1
8182-3	**SUPPORT (RADIATOR GRILLE)**					
73	C	6&8	All	D3GY 8182-A	R.H.	1
				D3GY 8183-A	L.H.	1
				★ D3GY 8182-B	Center-not replaced	1
74/76	C	6&8	All	D4GY 8182-A	R.H.	1
				D4GY 8183-A	L.H.	1
				D4GY 8182-B	Center	1
73	D	8	460	★ D3VY 8182-A	R.H.-center-not replaced	1
				★ D3VY 8183-A	L.H.-center-not replaced	1
73	D	8	460	★ D3VY 8182-B	R.H.-outer-not replaced	1
				★ D3VY 8183-B	L.H.-outer-not replaced	1
74	D	8	460	★ D4VY 8182-A	R.H.-outer-not replaced	1
				★ D4VY 8183-A	L.H.-outer-not replaced	1
75/76	D	8	All	★ D5VY 8182-A	R.H.	1
				★ D5VY 8183-A	L.H.	1
74/76	F	8	All	D3GY 8182-A	R.H.	1
				D3GY 8183-A	L.H.	1
				D4WY 8182-A	Center	1
77/	F	All	All	D8SZ 8182-A	R.H.	1
				D7SZ 8183-A	L.H.	1
77	F	All	All	D70Z 8182-A	R.H. - outer - not req'd. From 1/24/77	1
				D70Z 8183-A	L.H. - outer - not req'd. From 1/24/77	1
73/76	K	8	460	★ D3LY 8182-A	R.H.	1
				★ D3LY 8183-B	L.H.	1
77	K	All	All	D7LY 8182-A	R.H.	1
				D7LY 8183-A	L.H.	1
78/	K	All	All	D8LY 8182-A	R.H.	1
				D8LY 8183-A	L.H.	1
75/78	L	4&6	All	★ D5YY 8182-B		1
79	L	All	All	D9FZ 8182-A	Center	1
73/77	P	6&8	All	D14Z 8182-A		1
8188-9	**PANEL (RADIATOR GRILLE OPENING LOWER)**					
73	C	6&8	All	★ D3GY 8188-A	R.H.-N.R.	1
				★ D3GY 8189-A	L.H.-N.R.	1
73	F	8	351	★ D3WY 8188-A	R.H.-N.R.	1
				★ D3WY 8189-A	L.H.-N.R.	1
74/76	F	8	All	★ D4WY 8188-A	R.H.	1
				★ D4WY 8189-A	L.H.	1
73/76	K	8	460	D2LY 8188-A	R.H.	1
				D2LY 8189-A	L.H.	1
8190	**PANEL (RADIATOR GRILLE OPENING)**					
73/74	A (53B,F,65B,F,71B),Y	8	All	D3MY 8190-A		1
73/74	A (53H,K,X,57H,K,X,65H,K,X,71H,K)	8	All	D4MY 8190-A		1

YEAR	MODEL/RESTRICTIONS	ENGINE CYL.	ENGINE C.I.D. (C.C.D.)	PART NUMBER	DESCRIPTION	QTY.
8190	PANEL (RADIATOR GRILLE OPENING) — Cont'd					
75/78	A	All	All	D8MY 8190-B	Does not Incl. hd. lamp cvrs.-use (8) D8MY 8328-A brackets for model 71K if required	1
79	A	All	All	D9MY 8190-A		1
79/	A	All	All	E3MY 8190-B	R.H. partial panel	1
		All	All	E3MY 8190-C	L.H. partial panel	1
73	C	6&8	All	D4WY 8190-B		1
74/76	C	6&8	All	★ D6GY 8190-A		1
73	D	8	460	D3VY 8190-A	Fiberglass	1
74	D	8	460	D6VY 8190-B	Does not incl. hd. lamp cvrs.	1
75/76	D	8	All	D6VY 8190-A	Does not incl. hd. lamp cvrs.	1
77/	D	All	All	D7VY 8190-A	Does not incl hd lamp cvrs – Drill out oil cooler brkt hole if required	1
74/76	F	8	All	D4WY 8190-B		1
77/	F	All	All	D8WY 8190-A		1
75/77	G	6&8	All	D54Y 8190-A		1
78/	G	All	All	E0DZ 8190-A		1
78/79	G – – Canada only-w/o 16850 hole "Before 7/16/79"	All	All	D8DZ 8190-B		1
79/	G – – Canada only-w/o 16850 hole "From 7/16/79"	All	All	E0DZ 8190-B		1
78/	G	All	All	D9DZ 8190-C	R.H. partial panel	1
				D9DZ 8190-D	L.H. partial panel	1
79	J	All	All	D9CY 8190-B	Paint as reqd.	1
77/	K	All	All	D7LY 8190-A	Does not incl. hd. lamp cvrs.	1
77/	V	All	All	E04Y 8190-A	One piece	1
77/	V	All	All	D94Y 8190-B	R.H. partial panel	1
				D94Y 8190-C	L.H. partial panel	1
75/76	Y	8	All	D5MY 8190-B		1
8A193	BRACKET (RADIATOR SUPPORT UPPER)					
73/	A,D	8	All	D8AZ 8A193-A		1
78/	K	8	All			1
73/76	C	6&8	All	D20Z 8A193-A	R.H.	1
74/	F			D20Z 8A193-B	L.H.	1
73	D	8	460	D0VY 8A193-A	R.H.	1
				D0VY 8A193-B	L.H.	1
73	F	8	351	★ D1AZ 8A193-B	R.H.-not replaced	1
				★ D1AZ 8A193-A	L.H.-not replaced	1
75/	G,V	6&8	All	D5DZ 8A193-A		1
73/77	K	8	All	★ D2SZ 8A193-A	R.H.	1
				★ D2SZ 8A193-B	L.H.	1
78/	P	All	All	D8BZ 8A193-A		2
79	A – – S/C exc. P/C	All	All	D9AZ 8A193-A	R.H.-upper	1
				D9AZ 8A193-B	L.H.-upper	1
79	A – – A/C or P/C			D9AZ 8A193-C	R.H. & L.H.	2
79	J	All	All	D8BZ 8A193-A	R.H. & L.H.	2
8194	RETAINER (RADIATOR GRILLE NAME PLATE)					
78	P(54D-66D) – – w/o Sports Option	All	All	D8KY 8194-A		1
8200	GRILLE (RADIATOR)					
73	A (53B,F,65B,F,71B),Y	8	All	★ D3MY 8200-A	N.R.	1
73	A (53H,K,X,57H,K,X,65H,K, X,71H,K)	8	All	D3MY 8200-B		1
74	A (53B,F,65B,F,71B),Y	8	All	D4MY 8200-A		1

COPYRIGHT © 1986— FORD MOTOR COMPANY —DEARBORN, MICHIGAN

1973/79 LINCOLN-MERCURY CARS

YEAR	MODEL/RESTRICTIONS	ENGINE CYL.	ENGINE C.I.D. (C.C.D.)	PART NUMBER	DESCRIPTION	QTY.
8200	GRILLE (RADIATOR) — Cont'd					
74	A (53H,K,X,57H,K,X,65H,K, X,71H,K)	8	All	D4MY 8200-B		1
75/78	A	8	All	D5MY 8200-A		1
79	A	All	All	E0MY 8200-A		1
73	C	6&8	All	★ D3GY 8200-A Not replaced		1
74/76	C	6&8	All	D4GY 8200-A		1
73	D	8	460	D3VY 8200-A	Inner and outer grille	1
74	D	8	All	D4VY 8200-C	Inner	1
				D4VY 8200-B	Outer	1
75/76	D	8	All	D5VY 8200-A		1
77/	D	All	All	D7VY 8200-A	Outer-zinc	1
				D7VY 8200-B	Inner-plastic	1
79	D	All	All	D9VY 8200-A	Inner #Gold	1
73	F	8	351	D3WY 8200-A		1
74/76	F	8	All	D4WY 8200-A		1
77/78	F	All	All	D7WY 8200-A		1
79	F except (65L)	All	All	D7WY 8200-A		1
79	F(65L)	All	All	★ D9WY 8200-A	#Medium Red-r/b D9WY 8200-R(3/81)	1
				★ D9WY 8200-B	#Medium Blue Metallic-r/b D9WY 8200-R	1
				★ D9WY 8200-C	#LT. Medium Blue-r/b D9WY 8200-R	1
				★ D9WY 8200-D	#DK. Blue-r/b D9WY 8200-R(3/81)	1
				★ D9WY 8200-E	#Orange-r/b D9WY 8200-R(3/81)	1
				★ D9WY 8200-F	#Pastel Chamois-r/b D9WY 8200-R	1
				★ D9WY 8200-G	#DK. Jade-r/b D9WY 8200-R(3/81)	1
				★ D9WY 8200-H	#DK. Red-r/b D9WY 8200-R(3/81)	1
				★ D9WY 8200-J	#Grey-r/b D9WY 8200-R(3/81)	1
				★ D9WY 8200-K	#Cordovan-r/b D9WY 8200-R(1/81)	1
				★ D9WY 8200-L	#Black-r/b D9WY 8200-R(3/81)	1
				★ D9WY 8200-M	#Chamois-r/b D9WY 8200-R(3/81)	1
				★ D9WY 8200-N	#White-r/b D9WY 8200-R(3/81)	1
				★ D9WY 8200-P	#Medium Jade-r/b D9WY 8200-R	1
				★ D9WY 8200-Q	#Silver-r/b D9WY 8200-R(3/81)	1
79	F(65L)	All	All	D9WY 8200-R	#All chrome-repls. colored grilles for serv.	1
75/77	G	6&8	All	D54Y 8200-A		1
78/	G - - w/ or w/o Sports Opt	All	All	E04Y 8200-E	#Charcoal Gray Metallic-replaces argent	1
79	G	All	All	D94Y 8200-A	#Blue	1
				D94Y 8200-B	#Pastel Chamois	1
				★ D94Y 8200-C	#White	1
				★ D94Y 8200-D	#Jade	1
				★ D94Y 8200-E	#Cream	1
				★ D94Y 8200-F	#Silver-r/b E04Y 8200-D (9/82)	1
73/74	J	4&6	All	D3RY 8200-A		1
76/78	J (exc. 64S)	4&6	All	D5RY 8200-A	#Black w/chrome mldg.	1
76/78	J (64S)	4&6	All	★ D6RY 8200-A	#Black w/gold mldg.	1
79	J	All	All	E0CY 8200-B	#Black & Chrome (standard)	1
				D9CY 8200-B	#Black (sport)	1
73/76	K	8	460	D3LY 8200-A	Shell	1
	K	8	460	D3LY 8200-B	Front	1
	K	8	460	D3LY 8200-C	Rear	1
77/	K	All	All	D7LY 8200-A	Outer-shell	1
				D7LY 8200-B	Inner-#Chrome & Argent	1
78	K- w/Diamond Jub Opt	All	All	D8LY 8200-A	Inner #Blue	1
78/	K - w/Diamond Jub or Collectors Opt.	All	All	D8LY 8200-B	Inner #Gold	1
74	L	4&6	All	D4FZ 8200-B		1
75/76	L "Before 1/19/76"	4&6	All	★ D5YY 8200-B	R/b D6YY 8200-A	1
76/78	L "From 1/19/76"	4&6	All	D6YY 8200-A		1
79	L	All	All	E0YY 8200-B		1

YEAR	MODEL/RESTRICTIONS	ENGINE CYL.	ENGINE C.I.D. (C.C.D.)	PART NUMBER	DESCRIPTION	QTY.
8200	GRILLE (RADIATOR) — Cont'd					
73/75	P	6&8	All	D34Y 8200-A	Paint as req'd. for GT model	1
76/77	P	All	All	★ D6KY 8200-A	R/b D34Y 8200-A	1
78/79	P - - w/o Sports option	All	All	E0KY 8200-A	#Argent	1
78/79	P - - with Sports option	All	All	★ D9KY 8200-B	#Charcoal-r/b E0KY 8200-B (9/82)	1
77/	V	All	All	D74Y 8200-A	Outer	1
				D74Y 8200-B	Inner	1
75/76	Y	8	All	D5MY 8200-B		1
73/78	J	4&6	All	E610247-S74	Screw (attach 8200 grille)-fill. head self tapping-4.2 x 16	12
79	J	All	All	384709-S2	(MM-284-DH) 1/4-20 U-nut Att. 8B455 to 8A284	A/R
8C208-9	REINF. ASSY. (RAD GRILLE PANEL LOWER CORNER)					
79	J "Before 7/16/79"	All	All	★ D9ZZ 8C208-A	R.H.-r/b E0ZZ 8C208-A (9/82)	
				E0ZZ 8C209-A	L.H.	1
79/	J "From 7/16/79"	All	All	E0ZZ 8C208-A	R.H.	1
				E0ZZ 8C209-A	L.H.	1
8B220-1	EXTENSION (RADIATOR SIDE SUPPORT)					
73	A,Y	8	All	D3AZ 8B220-A	R.H.	1
				D3AZ 8B221-A	L.H.	1
74/	A,Y	8	All	D4AZ 8B220-A	R.H.	1
				D4AZ 8B221-A	L.H.	1
74/	D	8	All	★ D4VY 8B220-A	R.H.	1
				★ D4VY 8B221-A	L.H.	1
78	K	8	All	★ D8LY 8B220-A	R.H.	1
				★ D8LY 8B221-A	L.H.	1
8A223	EMBLEM, MEDALLION, NAMEPLATE or ORNAMENT (RAD. GRLL. OPNG. PNL.)-incl. attach. parts					
73/74	A (53B,F,65B,F,71B)	8	All	★ D3MY 8A223-A		1
73/74	Y	8	All	N.R.		1
73	C (53,63D,65,71)	6&8	All	★ D2GY 8A223-A	Not replaced	1
73	C (63R)	8	All	D2GY 8A223-B	"GT"	1
74/76	C	6&8	All	★ D4GY 8A223-A		1
73	F (65F,76F)	8	351	★ D1WY 8A223-B		1
78/	G	All	All	D84Y 8A223-A	#MERCURY (script)	1
76/78	J (exc. 64S)	4&6	All	D5RY 8A223-A	#Chrome paint	1
76/78	J (64S)	4&6	All	D6RY 8A223-A	#Gold paint	1
79	J - - w/Appear Grp. Special or Sports Option	All	All	D9CY 8A223-A	#MERCURY	1
73/76	K	8	460	D2LY 8A223-A		1
77/	K	All	All	D7LY 8A223-A	"Mark V"	1
73/	K	8	460	373888-S7-8	(MM-290)-nut (emblem to shell)-1/8"	3
78	K - - w/Diamond Jub Opt.	All	All	D8LY 8A223-A	#Ice Blue	1
				D8LY 8A223-B	#Gold	1
78/	P(54D,66D)	All	All	D8KY 8A223-A	#MERCURY	1
77/	V	All	All	D74Y 8A223-A		1
8232-3	BRACKET (RADIATOR GRILLE SUPPORT)					
73	D	8	460	★ D0VB 8232-A	Center-improvise-.060" thick-9 1/2" long -1" bend at each end with .375" holes	1
77	K	All	All	★ D7LY 8232-A	lower	1
78	K	All	All	D8LY 8232-A		1
74/76	L	4	All	★ D4FZ 8232-B	R.H.	1
				★ D4FZ 8233-B	L.H.	1

COPYRIGHT © 1986— FORD MOTOR COMPANY —DEARBORN, MICHIGAN

YEAR	MODEL/RESTRICTIONS	ENGINE CYL.	ENGINE C.I.D. (C.C.D.)	PART NUMBER	DESCRIPTION	QTY.
8C250	TAG ASSY. (RAD. COOLANT REFILL INSTR.)					
79	F – – exc. Canada	6	171 (2800)	D9ZZ 8C250–A	# English–refer to Campaign 366	1
79	F – – Canada	6	171 (2800)	D9ZZ 8C250–B	# French & English–refer to Campaign 366	1
8255	GASKET (WATER OUTLET CONNECTION)–Refer to group 8575					
8255	GASKET ASSORTMENT (WATER OUTLET CONNECTION)					
73/	All	4,6 &8	All	C8PZ 8255–A	*RG–12	1

Consists of

10–B5A 8255–A	*RG–1	5–C8PZ 8255–L	*RG–18	5–C8PZ 8255–S	*RG–22
5–EAG 8255–B	*RG–8	5–C8PZ 8255–M	*RG–19	1–	Display board
5–EAD 8255–A	*RG–10	5–C8PZ 8255–J	*RG–16	10–C8PZ 8255–Z	*RG–26
5–C8PZ 8255–E	*RG–13	5–C8PZ 8255–N	*RG–20	10–C8PZ 8255–AB	*RG–28
5–C8SZ 8255–A	*RG–7	5–C8PZ 8255–R	*RG–21	5–C8PZ 8255–AC	*RG–29
5–C8PZ 8255–G	*RG–14	5–C8PZ 8255–T	*RG–23	15–C9AZ 8255–A	*RG–30
5–C8PZ 8255–H	*RG–15	10–C8PZ 8255–U	*RG–24	10–C8PZ 8255–AA	*RG–27
5–C8PZ 8255–K	*RG–17	5–C8PZ 8255–V	*RG–25		

8260 HOSE (RADIATOR)

GENERAL INFORMATION

Motorcraft numbers as they appear in the model application chart which follows can be used to determine diameter and length of the hose as explained below.

FLEXIBLE RADIATOR HOSE

FIRST LETTER PREFIX: K–Designates the hose line in all cases.

SECOND LETTER PREFIX:
A–Designates 1 1/4" inside diameter at end opening.
B–Designates 1 1/2" inside diameter at end opening.
C–Designates 1 3/4" inside diameter at end opening.
D–Designates 2" inside diameter at end opening.

NUMBERS: (There must always be a three digit numeral.) First two digits designate the amount of full inches of hose length. Third digit designates the remaining fraction of an inch (expressed in eights of an inch) of hose length.

EXAMPLE KAB–194–Flexible radiator hose having a 1 1/4" inside diameter at one end and a 1 1/2" inside diameter at the other end opening and a hose length of 19 1/2" .
KC–092–Flexible radiator hose having a 1 3/4" end opening inside diameter at both ends and a hose length of 9 1/4" .

MOLDED RADIATOR HOSE

FIRST LETTER PREFIX: K–Designates the hose line in all cases.

SECOND and THIRD LETTER PREFIXES:
M–Designates the molded curved type hose.
S–Designates the molded straight type hose.

NUMBERS: Sequential numbering system beginning with the numeral "1" .

EXAMPLE:
KM–174–Motorcraft molded curved radiator hose.
KS–7–Motorcraft molded straight radiator hose.

MODEL	ENGINE CYL.	ENGINE C.I.D. (C.C.D.)	TYPE	UPPER I.D. (INCHES)	UPPER LENGTH (INCHES)	UPPER MOTORCRAFT NO.	UPPER PART NUMBER	LOWER I.D. (INCHES)	LOWER LENGTH (INCHES)	LOWER MOTORCRAFT NO.	LOWER PART NUMBER
8260 Notes:	HOSE (RADIATOR) — Cont'd "M" Moulded ‡Cut to fit										
1973											
A (Mercury)											
A	B	351,400	M	1 1/2	25 1/4	KM-412	D20Z 8260-D	1 1/2 &1 3/4		KM-916	D6PZ 8286-D
A	8	429,460 460 P/C	M	1 1/2	20 5/8	KM-651	D3AZ 8260-C	1 1/2 & 2		KM-379	D1AZ 8286-D
C (Montego)											
C	6	250	M	1 1/2		KM-611	D2PZ 8260-N	1 1/2 & 2	23 3/8	KM-408	D20Z 8286-B
C	8	302, 351W	M	1 1/2	20 1/2	KM-136	D0AZ 8260-A	1 1/2 & 1 3/4		KM-916	D6PZ 8286-D
C	8	351C, 400	M	1 1/2	24 15/16	KM-412	D20Z 8260-D	1 1/2 & 1 3/4		KM-916	D6PZ 8286-D
C	8	429,460 P/C	M	1 1/2	18 1/2	KM-396	D1VY 8260-A	1 1/2 & 2		KM-379	D1AZ 8286-D
D (Lincoln)											
D	8	460	M	1 1/2	18 1/2	KM-396	D1VY 8260-A	1 1/2 & 2		KM-379	D1AZ 8286-D
F (Cougar)											
F	8	351	M	1 1/2	24 15/16	KM-412	D20Z 8260-D	1 1/2 & 1 3/4	22	KM-369	D1AZ 8286-A
J (Capri)											
J	4	122 (2000)		1 1/4	10 1/8	KM-364	D1FZ 8260-A	1 1/4 & 1 1/2	14 1/2	KM-367	D1FZ 8286-A
J	6	159 (2600)		1 1/4		KM-622-A	D3RY 8260-A	1 1/4		KM-621-A	C3DZ 8260-D
K (Mark IV)											
K	8	460	M	1 1/2	18 1/2	KM-396	D1VY 8260-A	1 1/2 & 2		KM-379	D1AZ 8286-D
P (Comet)											
P	8	200	M	1 1/4	15 1/8	KM-598	‡ D2PZ 8260-B	1 1/4 & 1 1/2		KM-613	D2PZ 8286-H
P	8	250	M	1 1/2		KM-612	D2PZ 8260-G	1 1/2 & 1 7/8	20 3/16	KM-370	D1DZ 8286-A
P	8	302	M	1 1/2		KM-615	D2PZ 8260-H	1 1/2 & 1 3/4	16 3/8	KM-372	D1DZ 8286-C
Y (Meteor)											
Y	8	351,400	M	1 1/2	25 1/4	KM-412	D20Z 8260-D	1 1/2 & 1 3/4		KM-916	D6PZ 8286-D
Y	8	429,460 460 P/C	M	1 1/2	20 5/8	KM-651	D3AZ 8260-C	1 1/2 & 2		KM-379	D1AZ 8286-D

COPYRIGHT © 1986 — FORD MOTOR COMPANY — DEARBORN, MICHIGAN

1973/79 LINCOLN-MERCURY CARS

MODEL	ENGINE CYL.	ENGINE C.I.D. (C.C.D.)	TYPE	UPPER I.D. (INCHES)	UPPER LENGTH (INCHES)	UPPER MOTORCRAFT NO.	UPPER PART NUMBER	LOWER I.D. (INCHES)	LOWER LENGTH (INCHES)	LOWER MOTORCRAFT NO.	LOWER PART NUMBER
8260 Notes:	HOSE (RADIATOR) — Cont'd "M" Moulded ‡Cut to fit										
1974											
A (Mercury)											
A	8	351,400	M	1 1/2	24 5/16	KM-412	D20Z 8260-D	1 1/2 & 1 3/4		KM-916	D6PZ 8286-D
A	8	460, 460 P/C	M	1 1/2	18 1/2	KM-396	D1VY 8260-A	1 1/2 & 2	19 3/16	KM-379	D1AZ 8286-D
C (Montego)											
C	6	250	M	1 1/2		KM-611	D2PZ 8260-N	1 1/2 & 2	23 3/8	KM-408	D20Z 8286-B
C	8	302, 351W	M	1 1/2	20 1/2	KM-136	D0AZ 8260-A	1 1/2 & 1 3/4		KM-916	D6PZ 8286-D
C	8	351C, 400	M	1 1/2	24 15/16	KM-412	D20Z 8260-D	1 1/2 & 1 3/4		KM-916	D6PZ 8286-D
C	8	460, 460 P/C	M	1 1/2	18 1/2	KM-396	D1VY 8260-A	1 1/2 & 2		KM-379	D1AZ 8286-D
D (Lincoln)											
D	8	460	M	1 1/2	19 21/32	KM-814	D5VY 8260-A	1 1/2 & 2		KM-379	D1AZ 8286-D
F (Cougar)											
F	8	351C, 400	M	1 1/2	24 15/16	KM-412	D20Z 8260-D	1 1/2 & 1 3/4	22	KM-369	D1AZ 8286-A
F	8	351W	M	1 1/2	20 1/2	KM-136	D0AZ 8260-A	1 1/2 & 1 3/4		KM-916	D6PZ 8286-D
F	8	460	M	1 1/2	18 1/2	KM-396	D1VY 8260-A	1 1/2 & 2		KM-379	D1AZ 8286-D
J (Capri)											
J - - without T/E or A/C	4	122 (2000)	M			KM-364	D1FZ 8260-A			KM-768	D3RY 8286-B
J - - T/E without A/C	4	122 (2000)	M			KM-364	D1FZ 8260-A			KM-766	D4RY 8286-B
J - - A/C	4	122 (2000)	M			KM-765	★D4RY 8260-B r/bD4FZ 8260-C (9/82)			KM-767	D4RY 8286-C
J	6	171 (2800)	M	1 1/4		KM-743	★D4RY 8260-A	1 1/4		KM-198	C20Z 8260-H
K (Mark IV)											
K - - W/Sierracin system	8	460	M	1 1/2	19 21/32	KM-814	D5VY 8260-A	1 1/2 &2		KM-379	D1AZ 8286-D
K - - w/o Sierracin system	8	460	M	1 1/2	18 1/2	KM-396	D1VY 8260-A	1 1/2 &2		KM-379	D1AZ 8286-D
1974											
L (Bobcat)											
L - - S/C	4	122 (2000)	7	1 1/4	13 1/2	DM-731	D4FZ 8260-C	1 1/4 & 1 1/2	14 1/8	KM-732	D4ZZ 8286-A
L - - A/C	4	122 (2000)	M	1 1/4	10 1/8	KM-364	D1FZ 8260-A	1 1/2	15 11/16	KM-625	D2FZ 8286-A

MODEL	ENGINE CYL.	ENGINE C.I.D. (C.C.D.)	TYPE	UPPER I.D. (INCHES)	UPPER LENGTH (INCHES)	UPPER MOTORCRAFT NO.	UPPER PART NUMBER	LOWER I.D. (INCHES)	LOWER LENGTH (INCHES)	LOWER MOTORCRAFT NO.	LOWER PART NUMBER
8260 Notes:	HOSE (RADIATOR) — Cont'd "M" Moulded ‡Cut to fit										
1974											
L (Bobcat)											
L - - S/C	4	140 (2300)	M	1 1/4	16 1/4	KN-729	D4FZ 8260-A	1 1/4 & 1 1/2	14 5/8	KM-741	D4FZ 8286-D
L - - A/C	4	140 (2300)	M	1 1/4 & 1 1/8	16 11/16	KM-730	★D4FZ 8260-B r/bD8ZZ 8260-A	1 1/4 & 1 1/2	18 13/32	KM-735	★D4ZZ 8286-D r/bE1BZ 8286-A
P (Comet)											
P	6	200	M	1 1/4	15 1/8	KM-598	‡ D2PZ 8260-B	1 1/4 & 1 1/2		KM-613	‡ D2PZ 8286-H
P	6	250	M	1 1/4 &1 1/2	13 3/4	KM-367	D1FZ 8286-A	1 1/2 & 1 7/8	20 3/16	KM-370	D1DZ 8286-A
P	8	302	M	1 1/2		KM-615	D2PZ 8260-H	1 1/2	16 3/8	KM-372	D1DZ 8286-C
Y (Meteor)											
Y	8	351,400	M	1 1/2	24 5/16	KM-412	D20Z 8260-D	1 1/2 & 1 3/4		KM-916	D6PZ 8286-D
Y	8	460, 460 P/C	M	1 1/2	18 1/2	KM-396	D1VY 8260-A	1 1/2 & 2		KM-379	D1AZ 8286-D
1975											
A (Mercury)											
A	8	400	M	1 1/2	24 5/16	KM-412	D20Z 8260-D	1 1/2 & 1 3/4		KM-916	D6PZ 8286-D
A	8	460, 460 P/C	M	1 1/2	18 1/2	KM-396	D1VY 8260-A	1 1/2		KM-379	D1AZ 8286-D
C (Montego)											
C	8	351W	M	1 1/2	20 1/2	KM-136	D0AZ 8260-A	1 1/2 & 1 3/4		KM-916	D6PZ 8286-D
C	8	351,M 400	M	1 1/2	24 15/16	KM-412	D20Z 8260-D	1 1/2 & 1 3/4		KM-916	D6PZ 8286-D
C	8	460	M	1 1/2	18 1/2	KM-396	D1VY 8260-A	1 1/2 & 2		KM-379	D1AZ 8286-D
D (Lincoln)											
D - - w/o brake skid control system	8	460	M	1 1/2	19 21/32	KM-814	D5VY 8260-A	1 1/2 & 2		KM-379	D1AZ 8286-D
D - - w/brake skid control system	8	460		1 1/2	19 21/32	KM-814	D5VY 8260-A	1 1/2 & 2	18 25/64	KM-790	D5SZ 8286-A
F (Cougar)											
F	8	351W	M	1 1/2	20 1/2	KM-136	D0AZ 8260-A	1 1/2 & 1 3/4		KM-916	D6PZ 8286-D
F	8	351M, 400	M	1 1/2	24 15/16	KM-412	D20Z 8260-D	1 1/2 & 1 3/4	22	KM-369	D1AZ 8286-A
F	8	460	M	1 1/2	18 1/2	KM-396	D1VY 8260-A	1 1/2 & 2		KM-379	D1AZ 8286-D
G (Monarch)											
G	6	200	M	1 1/4 & 1 1/2	16 15/16	KM-849	D5DZ 8260-C	1 1/2	20 11/16	KM-995	D8BZ 8286-C

COPYRIGHT © 1986— FORD MOTOR COMPANY —DEARBORN, MICHIGAN

1973/79 LINCOLN-MERCURY CARS

MODEL	ENGINE CYL.	ENGINE C.I.D. (C.C.D.)	TYPE	UPPER I.D. (INCHES)	UPPER LENGTH (INCHES)	UPPER MOTORCRAFT NO.	UPPER PART NUMBER	LOWER I.D. (INCHES)	LOWER LENGTH (INCHES)	LOWER MOTORCRAFT NO.	LOWER PART NUMBER
8260 Notes:	HOSE (RADIATOR) — Cont'd "M" Moulded ‡Cut to fit										
1975											
G (Monarch)											
G	6	250	M	1 1/2	16 13/16	KM-864	★D6DZ 8260-A r/bE4PZ 8260-A(2/85)	1 1/2 & 1 7/8	20 3/16	KM-863	D6BZ 8286-A
G	8	302, 351W	M	1 1/2	17 13/16	KM-785	D5DZ 8260-A	1 3/4 & 1 1/2	26 13/32	KM-788	D5DZ 8286-A
K (Mark IV)											
K - - w/o brake skid control system	8	460	M	1 1/2	19 21/64	KM-814	D5VY 8260-A	1 15/16 & 1 1/2		KM-379	D1AZ 8286-D
K - - w/brake skid control system	8	460	M	1 1/2	19 21/32	KM-814	D5VY 8260-A	1 1/2 & 2	18 25/64	KM-790	D5SZ 8286-A
L (Bobcat)											
L	4	140 (2300)	M	1 1/4	16 11/16	KM-730	★D4FZ 8260-B r/bD8ZZ 8260-A	1 1/4 & 1 1/2	16 1/2	KM-735	★D4ZZ 8286-D r/bE1BZ 8286-A
L	6	171 (2800)	M	1 1/4	15 1/8	KM-598	‡ D2PZ 8260-B	1 1/4	15 1/8	KM-598	‡ D2PZ 8260-B
P (Comet)											
P	6	200	M	1 1/4	12 5/8	KM-847	D5BZ 8260-B	1 1/4 & 1 1/2	20 13/32	KM-613	D2PZ 8286-H
P	6	250	M	1 1/4 &1/2	13 3/4	KM-367	D1FZ 8286-A	1 1/2 & 1 7/8	18 7/8	KM-822	D5BZ 8286-B
P	8	302	M	1 1/2		KM-615	D2PZ 8260-H	1 1/2 & 1 3/4	16 3/8	KM-372	D1DZ 8286-C
Y (Meteor)											
Y	8	351M, 400	M	1 1/2	24 5/16	KM-412	D20Z 8260-D	1 1/2 & 1 3/4		KM-916	D6PZ 8286-D
Y	8	460	M	1 1/2	18 1/2	KM-396	D1VY 8260-A	1 1/2 & 2		KM-379	D1AZ 8286-D
1976											
A (Mercury)											
A	8	400	M	1 1/2	24 5/16	KM-412	D20Z 8260-D	1 1/2 & 1 3/4		KM-916	D6PZ 8286-D
A	8	460, 460 P/C	M	1 1/2	18 1/2	KM-396	D1VY 8260-A	1 1/2		KM-379	D1AZ 8286-D

MODEL	ENGINE CYL.	ENGINE C.I.D. (C.C.D.)	TYPE	UPPER I.D. (INCHES)	UPPER LENGTH (INCHES)	UPPER MOTORCRAFT NO.	UPPER PART NUMBER	LOWER I.D. (INCHES)	LOWER LENGTH (INCHES)	LOWER MOTORCRAFT NO.	LOWER PART NUMBER
8260 Notes:	HOSE (RADIATOR) — Cont'd "M" Moulded ‡Cut to fit										
1976											
C (Montego)											
C	8	351W	M	1 1/2	20 1/2	KM-136	D0AZ 8260-A	1 1/2 & 1 3/4		KM-916	D6PZ 8286-D
C	8	351M, 400	M	1 1/2	24 15/16	KM-412	D20Z 8260-D	1 1/2 & 1 3/4		KM-916	D6PZ 8286-D
C	8	460	M	1 1/2	18 1/2	KM-396	D1VY 8260-A	1 1/2 & 2		KM-379	D1AZ 8286-D
D (Lincoln)											
D - - w/o brake skid control system	8	460	M	1 1/2	19 21/32	KM-814	D5VY 8260-A	1 1/2 & 2		KM-379	D1AZ 8286-D
D - - w/brake skid control system	8	460	M	1 1/2	19 21/32	KM-814	D5VY 8260-A	1 1/2 & 2	18 25/64	KM-790	D5SZ 8286-A
F (Cougar)											
F	8	351W	M	1 1/2	20 1/2	KM-136	D0AZ 8260-A	1 1/2 & 1 3/4		KM-916	D6PZ 8286-D
F	8	351M, 400	M	1 1/2	24 15/16	KM-412	D20Z 8260-D	1 1/2 & 1 3/4	22	KM-369	D1AZ 8286-A
F	8	460	M	1 1/2	18 1/2	KM-396	D1VY 8260-A	1 1/2 & 2		KM-379	D1AZ 8286-D
G (Monarch)											
G	6	200	M	1 1/4 &1 1/2	16 15/16	KM-849	D5DZ 8260-C	1 1/2	20 11/16	KM-995	D8BZ 8286-C
G	6	250	M	1 1/2	16 13/16	KM-864	★D6DZ 8260-A r/bEOPZ 8260-A(2/85)	1 1/2 & 1 7/8	20 3/16	KM-863	D6BZ 8286-A
G	8	302, 351W	M	1 1/2	17 13/16	KM-785	D5DZ 8260-A	1 3/4 & 1 1/2	26 13/32	KM-788	D5DZ 8286-A
J (Capri)											
J	4	140 (2300)	M			KM-836 KM-730	★D4FZ 8260-B r/bD8ZZ 8260-A			KM-853	★D5RY 8286-B
J	6	171 (2800)	M			KM-852	D5RY 8260-B			KM-198	C20Z 8260-H
K (Mark IV)											
K - - w/o brake skid control system	8	460	M	1 1/2	19 21/32	KM-814	D5VY 8260-A	1 15/16 & 1 1/2		KM-379	D1AZ 8286-D
K - - w/brake skid control system	8	460	M	1 1/2	19 21/32	KM-814	D5VY 8260-A	1 1/2 & 2	18 25/64	KM-790	D5SZ 8286-A

COPYRIGHT © 1986— FORD MOTOR COMPANY —DEARBORN, MICHIGAN

1973/79 LINCOLN-MERCURY CARS

MODEL	ENGINE CYL.	ENGINE C.I.D. (C.C.D.)	TYPE	UPPER I.D. (INCHES)	UPPER LENGTH (INCHES)	UPPER MOTORCRAFT NO.	UPPER PART NUMBER	LOWER I.D. (INCHES)	LOWER LENGTH (INCHES)	LOWER MOTORCRAFT NO.	LOWER PART NUMBER
8260 Notes:	HOSE (RADIATOR) — Cont'd "M" Moulded ‡Cut to fit										
1976											
L (Bobcat)											
L	4	140 (2300)	M	1 1/8 & 1 1/4	16 11/16	KM-730	★D4FZ 8260-B r/bD8ZZ 8260-A	1 1/4 & 1 1/2	16 1/2	KM-735	★D4ZZ 8286-D r/bE1BZ 8286-A
L	6	171 (2800	M	1 1/4	15 1/8	KM-598	‡ D2PZ 8260-B	1 1/4	15 1/8	KM-598	‡ D2PZ 8260-B
P (Comet)											
P	6	200	M	1 1/4	12 5/8	KM-847	D5BZ 8260-B	1 1/4 & 1 1/2	20 13/32	KM-613	D2PZ 8286-H
P	6	250	M	1 1/4 &1/2	13 11/16	KM-367	D1FZ 8286-A	1 1/2 & 1 7/8	18 7/8	KM-822	D5BZ 8286-B
P	8	302	M	1 1/2		KM-615	D2PZ 8260-H	1 1/2 & 1 3/4	16 3/8	KM-372	D1DZ 8286-C
Y (Meteor)											
Y	8	351M, 400	M	1 1/2	24 5/16	KM-412	D20Z 8260-D	1 1/2 & 1 3/4		KM-916	D6PZ 8286-D
Y	8	460	M	1 1/2	18 1/2	KM-396	D1VY 8260-A	1 1/2 & 2		KM-379	D1AZ 8286-D
1977											
A (Mercury)											
A	8	351,400	M	1 1/2	19 5/8	KM-903	D7AZ 8260-A	1 1/2 & 1 3/4		KM-916	D6PZ 8286-D
A	8	460, 460 P/C	M	1 1/2	18 1/2	KM-396	D1VY 8260-A	1 1/2 & 2		KM-379	D1AZ 8286-D
D (Lincoln)											
D	8	400	M	1 1/2	19 5/8	KM-903	D7AZ 8260-A	1 1/2& 1 3/4		KM-916	D6PZ 8286-D
D - - w/o brake skid control system	8	460	M	1 1/2	19 21/32	KM-814	D5VY 8260-A	1 1/2 & 2		KM-379	D1AZ 8286-D
D - - w/brake skid control system	8	460	M	1 1/2	19 21/32	KM-814	D5VY 8260-A	1 1/2 & 2	18 25/64	KM-790	D5SZ 8286-A
F (Cougar)											
F	8	302, 351W	M	1 1/2	20 1/2	KM-136	D0AZ 8260-A	1 1/2 & 1 3/4		KM-916	D6PZ 8286-D
F	8	351M, 400	M	1 1/2	19 5/8	KM-903	‡ D7AZ 8260-A	1 1/2 & 1 3/4	22	KM-369	D1AZ 8286-A

MODEL	ENGINE CYL.	ENGINE C.I.D. (C.C.D.)	TYPE	UPPER I.D. (INCHES)	UPPER LENGTH (INCHES)	UPPER MOTORCRAFT NO.	UPPER PART NUMBER	LOWER I.D. (INCHES)	LOWER LENGTH (INCHES)	LOWER MOTORCRAFT NO.	LOWER PART NUMBER
8260 Notes:	HOSE (RADIATOR) — Cont'd "M" Moulded ‡Cut to fit										
1977											
G (Monarch)											
G	6	200	M	1 1/4 & 1 1/2	16 15/16	KM-849	D5DZ 8260-C	1 1/2	20 11/16	KM-995	D8BZ 8286-C
G	6	250	M	1 1/2	16 13/16	KM-864	★D6DZ 8260-A r/bE0PZ 8260-A(2/85)	1 1/2 & 1 7/8	20 3/16	KM-863	D6BZ 8286-A
G	8	302 ,351W	M	1 1/2	17 13/16	KM-785	D5DZ 8260-A	1 3/4 & 1 1/2	26 13/32	KM-788	D5DZ 8286-A
J (Capri)											
J	4	140 (2300)	M			KM-836 KM-730	★D4FZ 8260-B r/bD8ZZ 8260-A			KM-853	★D5RY 8286-B
J	6	171 (2800)	M			KM-852	D5RY 8260-B			KM-198	C20Z 8260-H
K (Mark V)											
K	8	400	M	1 1/2	21 1/2	KM-903	D7AZ 8260-A	1 1/2 & 1 3/4		KM-916	D6PZ 8286-D
K - - w/o brake skid control system	8	460	M	1 1/2	18 1/2	KM-396	D1VY 8260-A	1 15/16 & 1 1/2		KM-379	D1AZ 8286-D
K - - w/brake skid control system	8	460	M	1 1/2	18 1/2	KM-396	D1VY 8260-A	1 1/2 & 2	18 25/64	KM-790	D5SZ 8286-A
L (Bobcat) "Before 6/27/77"-"From 6/27/77" refer to 1978											
L	4	140 (2300)	M	1 1/4	16 5/16	KM-1159	E0FZ 8260-A	1 1/4 & 1 1/2	16 1/2	KM-735	★D4ZZ 8286-D r/bE1BZ 8286-A
L	6	171 (2800)	M	1 1/4	15 1/8	KM-598	‡ D2PZ 8260-B	1 1/4	15 1/8	KM-598	‡ D2PZ 8260-B
P (Comet)											
P	6	200	M	1 1/4	12 5/8	KM-847	D5BZ 8260-B	1 1/4 & 1 1/2	20 13/32	KM-613	D2PZ 8286-H
P	6	250	M	1 1/4 & 1/2	13 11/16	KM-367	D1FZ 8286-A	1 7/8	18 3/4	KM-370	D1DZ 8286-A
P	8	302	M	1 1/2		KM-615	D2PZ 8260-H	1 1/2 & 1 3/4	16 3/8	KM-372	D1DZ 8286-C
V (Versailles)											
V	8	All	M	1 1/2	17 13/16	KM-785	D5DZ 8260-A	1 3/4 & 1 1/2	26 13/32	KM-788	D5DZ 8286-A

COPYRIGHT © 1986— FORD MOTOR COMPANY —DEARBORN, MICHIGAN

1973/79 LINCOLN-MERCURY CARS

MODEL	ENGINE CYL.	ENGINE C.I.D. (C.C.D.)	TYPE	UPPER I.D. (INCHES)	UPPER LENGTH (INCHES)	UPPER MOTORCRAFT NO.	UPPER PART NUMBER	LOWER I.D. (INCHES)	LOWER LENGTH (INCHES)	LOWER MOTORCRAFT NO.	LOWER PART NUMBER
8260 Notes:	HOSE (RADIATOR) — Cont'd "M" Moulded ‡Cut to fit										
1978											
A (Mercury)											
A	8	351,400	M	1 1/2	19 5/8	KM-903	D7AZ 8260-A	1 1/2 & 1 3/4		KM-916	D6PZ 8286-D
A	8	460, 460 P C	M	1 1/2	18 1/2	KM-396	D1VY 8260-A	1 1/2 & 2		KM-379	D1AZ 8286-D
D (Lincoln)											
D	8	400	M	1 1/2	19 5/8	KM-903	D7AZ 8260-A	1 1/2& 1 7/8		KM-916	D6PZ 8286-D
D	8	460	M	1 1/2	20 55/64	KM-814	D5VY 8260-A	1 1/2 &2		KM-379	D1AZ 8286-D
F (Cougar)											
F	8	302,351W	M	1 1/21	20 1/2	KM-136	† D0AZ 8260-A	1 1/2 & 1 3/4		KM-916	D6PZ 8286-D
F	8	351M, 400	M	1 1/2	19 5/8	KM-903	‡ D7AZ 8260-A	1 1/2 & 1 3/4		KM-916	D6PZ 8286-D
G (Monarch)											
G – – exc. dlr. A/C	6	250	M	1 1/2	16 13/16	KM-864	★ D6DZ 8260-A r/b E0PZ 8260-A(2/85)	1 1/2 & 1 7/8	20 3/16	KM-863	D6BZ 8286-A
G – – dlr. A/C	6	250	M			KM-552-A	D8PZ 8260-A	1 1/2 & 1 7/8	20 3/16	KM-863	D6BZ 8286-A
G	8	302	M	1 1/2	17 13/16	KM-785	D5DZ 8260-A	1 3/4 & 1 1/2	26 13/32	KM-788	D5DZ 8286-A
J (Capri)											
J	4	140 (2300)	M			KM-730	★ D4FZ 8260-B r/b D8ZZ 8260-A			KM-853	★ D5RY 8286-B
J	6	171 (2800)	M			KM-852	D5RY 8260-B			KM-198	C20Z 8260-H
K (Mark V)											
K	8	400	M	1 1/2	22 19/64	KM-1002	D8LY 8260-B	1 1/2 1 7/8		KM-916	D6PZ 8286-D
K	8	460	M	1 1/2	21 61/64	KM-1001	D8LY 8260-A	1 1/2 2		KM-379	D1AZ 8286-D
L (Bobcat)											
L	4	140 (2300)	M	1 1/4	16 5/16	KM-1159	E0FZ 8260-A	1 1/4 & 1 1/2	16 1/2	KM-735	★ D4ZZ 8286-D r/b E1BZ 8286-A
L	6	171 (2800)	M	1 1/4	15 1/8	KM-598	‡ D2PZ 8260-B	1 1/4	15 1/8	KM-598	‡ D2PZ 8260-B

MODEL	ENGINE CYL.	ENGINE C.I.D. (C.C.D.)	TYPE	UPPER I.D. (INCHES)	UPPER LENGTH (INCHES)	UPPER MOTORCRAFT NO.	UPPER PART NUMBER	LOWER I.D. (INCHES)	LOWER LENGTH (INCHES)	LOWER MOTORCRAFT NO.	LOWER PART NUMBER
8260 Notes:	HOSE (RADIATOR) — Cont'd "M" Moulded ‡ Cut to fit										
1978											
P (Zephyr)											
P - - S/C	4	140 (2300)	M	1 1/4	14	KM-1032	D8BZ 8260-F	1 1/4 1 1/2	16	KM-1046	D9ZZ 8286-A
P - - A/C "Before 3/6/78"	4	140 (2300)	M	1 1/4	22 3/8	KM-1005	D8BZ 8260-E	1 1/2	43	KM-1047	D9ZZ 8286-B
P - - A/C "From 3/6/78"	4	140 (2300)	M	1 1/4	26 1/2	KM-1033	D8BZ 8260-G	1 1/2	43	KM-1047	D9ZZ 8286-B
P	6	200	M	1 1/4	16 11/16	KM-991	D8BZ 8260-C	1 1/4	16 1/2	KM-995	D8BZ 8286-C
P	8	302	M	1 1/4 1 1/2	17 1/2	KM-1154	E0SZ 8260-A	1 1/2 1 3/4	21 1/2	KM-987	D8BZ 8286-A
V (Versailles)											
V	8	All	M	1 1/2	17 13/16	KM-785	D5DZ 8260-A	1 3/4 & 1 1/2	26 13/32	KM-788	D5DZ 8286-A
1979											
A (Mercury)											
A	8	302,351	M	1 1/2 & 1 1/4	22	KM-1044	D9AZ 8260-A	1 1/2 & 1 3/4	22 1/8	KM-1045	D9AZ 8286-A
D (Lincoln)											
D	8	400	M	1 1/2	21 5/64	KM-903	D7AZ 8260-A	1 1/2 & 1 7/8		KM-916	D6PZ 8286-D
F (Cougar)											
F	8	302,351W	M	1 1/21	20 1/2	KM-136	D0AZ 8260-A	1 1/2 & 1 3/4	22 5/8	KM-916	D6PZ 8286-D
F	8	351M,	M	1 1/2	19 5/8	KM-903	‡ D7AZ 8260-A	1 1/2 & 1 3/4	22 5/8	KM-916	D6PZ 8286-D
G (Monarch)											
G - - exc. dlr. A/C	6	250	M	1 1/2	16 13/16	KM-864	★ D6DZ 8260-A r/b E0PZ 8260-A(2/85)	1 1/2 & 1 7/8	20 3/16	KM-863	D6BZ 8286-A
G - - dlr. A/C	6	250	M			KM-552-A	D8PZ 8260-A	1 1/2 & 1 7/8	20 3/16	KM-863	D6BZ 8286-A
G	8	302	M	1 1/2	17 13/16	KM-785	D5DZ 8260-A	1 3/4 & 1 1/2	26 13/32	KM-788	D5DZ 8286-A
J (Capri)											
J - - S/C exc. T/C	4	140 (2300)	M	1 1/4	16 1/2	KM-1032	D8BZ 8260-F	1 1/4 & 1 1/2	16 1/4	KM-1046	D9ZZ 8286-A

COPYRIGHT © 1986— FORD MOTOR COMPANY —DEARBORN, MICHIGAN

1973/79 LINCOLN-MERCURY CARS

MODEL	ENGINE CYL.	ENGINE C.I.D. (C.C.D.)	TYPE	UPPER I.D. (INCHES)	UPPER LENGTH (INCHES)	UPPER MOTORCRAFT NO.	UPPER PART NUMBER	LOWER I.D. (INCHES)	LOWER LENGTH (INCHES)	LOWER MOTORCRAFT NO.	LOWER PART NUMBER
8260		HOSE (RADIATOR) — Cont'd									
Notes:		"M" Moulded ‡Cut to fit % must transfer guard from old hose									
1979											
J (Capri)											
J - - A/C factory inst. J - - T/C	4	140 (2300)	M	1 1/4	26 1/2	KM-1033	D8BZ 8260-G	1 1/2	41 3/4	KM-1047	D9ZZ 8286-B
J - - AC dlr. inst.	4	140 (2300)	M	1 1/4	26 1/2	KM-1033	D8BZ 8260-G	1 1/4 1 1/2	16 1/2	KM-735	★D4ZZ 8286-D r/bE1BZ 3286-A
J	6	171 (2800)	M	1 1/2	20 5/8	KM-1080	D9ZZ 8260-B	1 1/4 & 1 1/2	20 3/4	KM-1048	D9ZZ 8286-C
J	6	200	M	1 1/4	16 41/64	KM-1144	D9ZZ 8260-C	1 1/2	20 13/16	KM-1145	★D9ZZ 8286-F r/bD8BZ 8206-C
J	8	302	M	1 1/4 & 1 1/2	26 1/4	KM-1050	★D9ZZ 8260-A r/bE0ZZ 8260-A	1 1/2 & 1 3/4	18 5/8	KM-1119	% D9ZZ 8286-E
K (Mark V)											
K	8	400	M	1 1/2	22 19/64	KM-1002	D8LY 8260-B	1 1/2 1 7/8		KM-916	D6PZ 8286-D
L (Bobcat)											
L - - S/C "Before 1/2/79"	4	140 (2300)	M	1 1/4	16 1/4	KM-1159	E0FZ 8260-A	1 1/4 & 1 1/2	14 3/4	KM-1127	★D9FZ 8286-A r/bD9ZZ 8286-A
L - - A/C "Before 1/2/79"	4	140 (2300)	M	1 1/4	17	KM-912	D7FZ 8260-A	1 1/4 1 1/2	16 1/2	KM-735	★D4ZZ 8286-D r/bE1BZ 8286-A
L - - S/C "From 1/2/79 to 5/1/79"	4	140 (2300)	M	1 1/4	17	KM-912	D7FZ 8260-A	1 1/4& 1 1/2	14 3/4	KM-1127	★D9FZ 8286-A r/bD9ZZ 8286-A
L - - S/C "From 5/1/79"	4	140 (2300)	M	1 1/4	16 1/4	KM-1159	E0FZ 8260-A	1 1/4 & 1 1/2	14 3/4	KM-1127	★D9FZ 8286-A r/bD9ZZ 8286-A
L	6	171 (2800)	M	1 1/4	15 1/8	KM-598	‡ D2PZ 8260-B	1 1/4	15 1/8	KM-598	‡ D2PZ 8260-B
P (Zephyr)											
P - - S/C	4	140 2300	M	1 1/4	16 1/2	KM-1032	D8BZ 8260-F	1 1/4 & 1 1/2	16	KM-1046	D9ZZ 8286-A
P - - A/C factory inst.	4	140 2300	M	1 1/4	26 1/2	KM-1033	D8BZ 8260-G	1 1/2	43	KM-1047	D9ZZ 8286-B
P - - A/C dlr. inst.	4	140 (2300)	M	1 1/4	26 1/2	KM-1033	D8BZ 8260-G	1 1/4 1 1/2	16 1/2	KM-735	★D4ZZ 8286-D E1BZ 8286-A
P	6	200	M	1 1/4	16 11/16	KM-991	D8BZ 8260-C			KM-995	D8BZ 8286-C
P	8	302	M	1 1/4 1 1/2	17 1/2	KM-1154	E0SZ 8260-A			KM-788	D5DZ 8286-A
V (Versailles)											
V	8	All	M	1 1/2	17 13/16	KM-785	D5DZ 8260-A	1 3/4 & 1 1/2	26 13/32	KM-788	D5DZ 8286-A

YEAR	MODEL/RESTRICTIONS	ENGINE CYL.	ENGINE C.I.D. (C.C.D.)	PART NUMBER	DESCRIPTION	QTY.
8261	SUPPORT (RADIATOR GRILLE OPENING PANEL)					
75/	G	6,8	All	D5DZ 8261-A		1
79	J	All	All	D9CY 8261-A	Center	1
73/76	K	8	All	★ D5LY 8261-A	R.H.-not replaced	1
				★ D5LY 8261-B	L.H.-N.R.	1
77	K	All	All	D7LY 8261-A	Center	1
8A278	BRACKET (RADIATOR GRILLE MOUNTING UPPER)					
73/	K	8	460	D2LY 8A278-A		1
78	P	All	All	D8BZ 8A278-B		1
8A281	REINFORCEMENT (ASSY. RADIATOR SUPPORT SIDE)					
78/79	P	All	All	E2DZ 8A281-A	# R.H.	1
				E2DZ 8A281-B	# L.H.	1
79	J	All	All	E0ZZ 8A281-A	# R.H.	1
				E0ZZ 8A281-B	# L.H.	1
8A284	REINFORCEMENT (RADIATOR GRILLE OPENING PANEL)					
75/76	D	8	All	D5VY 8A284-A		1
79/	J	All	All	D9CY 8A284-A		1
8286	Refer to group 8260					
8287	CLAMP (HOSE)					
73/	A,C,D,F,J,K,P,Y,V	All	All	B7A 8287-A	*YF-229-worm type-5/8" dia. to 1 1/4" dia.	AR
73/	A,C,D,F,J,K,P,Y,V	All	All	B7A 8287-B	*YF-230-worm type-1 1/2" dia. to 2 1/2" dia.	AR
73/	A,C,D,F,J,K,P,Y,V	All	All	B7AZ 8287-C	*YF-232-worm type-13/16" dia. to 1 3/4" dia.	AR
73/	A,C,D,F,J,K,P,Y,V	All	All	B7AZ 8287-D	*YF-233-worm type-2 1/2" dia. to 4" dia.	AR
73/	A,C,D,F,J,K,P,Y,V	All	All	C9AZ 8287-A	*YF-231-clamp-hose-1/4" dia. to 5/8" dia.	AR
73/	A,C,D,F,J,K,P,Y,V	All	All	C9AZ 8287-B	*YF-234-clamp-hose-2 1/16" dia. to 3" dia.	AR
73/	J	All	All	B7A 8287-A	*YF-263-clamp-hose-11/16" dia. to 1" dia.	AR
73/	J	All	All	D2RY 8287-D	*YF-264-clamp-hose	AR
8310-1	DEFLECTOR ASSY. (RADIATOR AIR)					
79	A	All	All	D9AZ 8310-A	R.H.	1
79	A	All	All	D9AZ 8311-A	L.H.	1
8326-7	DEFLECTOR (RADIATOR AIR)					
74/	A,Y	8	All	D5AZ 8327-A	Lower	1
78	A(71K)	All	All	★ D8MY 8326-A	Upper-N.R.	1
79	A	All	All	D9MY 8326-A	Attaches to 8190	1
79	A - - with P/C or T/T	All	All	D9AZ 8326-B	Attaches to 16138	1
78/	G,V	All	All	D8DZ 8326-A	Attaches to 8190	1
73	J	4&6	All	★ D2RY 8327-B	N.R.	1
74	J - - without A/C	6	171 (2800)	★ D4RY 8327-A N/R (3/79)		1
74	J - - with A/C	6	171 (2800)	★ D4RY 8327-B N/R (3/79)		1
76/78	J - - without A/C	4&6	All	D5RY 8327-A		1
76/78	J - - with A/C	4&6	All	D5RY 8327-B		1
73/77	P - - A/T	6&8	250,302	★ D1DZ 8326-A	N.R.	1
73/76	C	8	351,400,	E0TZ 8327-A	att to 8005	1
74/	F		460 P/C	D30Z 8326-A	att to 16138	1
78/79	F	All	All	D9SZ 8326-A	Upper	1
73/77	K	8	All	D2SZ 8326-A	Rear	1
8328	BRACKET (RADIATOR UPPER AIR DEFLECTOR)					
78	A(71K)	All	All	D8MY 8328-A	attaches 8326 to 8190	1

COPYRIGHT © 1986 — FORD MOTOR COMPANY — DEARBORN, MICHIGAN

1973/79 LINCOLN-MERCURY CARS

YEAR	MODEL/RESTRICTIONS	ENGINE CYL.	ENGINE C.I.D. (C.C.D.)	PART NUMBER	DESCRIPTION	QTY.
8333	**HOSE (RADIATOR BULK)**					
73/	Cut to fit	6&8	All	C9PZ 8333-A	*KS-5-1 1/2" I.D. x 36" long-cut to fit	AR
	Cut to fit	6&8	All	C9PZ 8333-B	*KS-6-1 3/4" I.D. x 36" long-cut to fit	AR
	Cut to fit	6&8	All	C9PZ 8333-C	*KS-7-2" I.D. x 36" long-cut to fit	AR
	Cut to fit	6&8	All	C9PZ 8333-D	*KS-8-1 1/4" x 36" long-cut to fit	AR
	Cut to fit	6&8	All	D1PZ 8333-A	*KS-9-A 1 5/8" I.D. x 36" long	AR
	Cut to fit	6&8	All	D9PZ 8333-A	*KS-16 2 1/2" I.D. x 36" long	AR
	Cut to fit	6&8	All	D9PZ 8333-B	*KS-17 2 3/4" I.D. x 36" long	AR
	Cut to fit	6&8	All	D9PZ 8333-C	*KS-18 3" I.D. x 36" long	AR
	Cut to fit	6&8	All	D9PZ 8333-D	*KS-19 3 1/4" I.D. x 36" long	AR
	Cut to fit	6&8	All	D9PZ 8333-E	*KS-20 3 1/2" I.D. x 36" long	AR
8349	**SEAL (RADIATOR AIR DEFLECTOR)**					
73/74	A,Y	8	429,460, 460 P/C	★ D3AZ 8349-A	Lower-not req'd. not repl'd.	1
79	A	All	All	D9AZ 8349-A	Lower	1
73	F - - A/T	8	351C, 2/B	D00Z 8349-A		1
74	L	4	140 (2300)	★ D4FZ 8349-A	Lower	1
75/	L	6	171 (2800)	D6FZ 8349-A	Lower	1
77/	L - - A/T w A/C	4	140 (2300)			1
74/	C,F	8	All	D9AZ 8349-A	Lower	1
75	K - - w/trailer towing pkg.	8	460			1
75/76	P	6&8	All	★ D5BZ 8349-A	Not replaced	1
77/	V	8	All	D74Y 8349-A		1
8A360	**SPACER (RADIATOR)**					
73	J	4&6	All	★ D0RY 8A360-A	N.R.	1
8384	**HINGE (RADIATOR GRILLE)**					
79	F(65L)	All	All	D9WY 8384-A	Use with 8C161 spring and 8C162 retainer	2
8B404	**GLASS (RADIATOR COOLANT LEVEL SIGHT)**					
73	All	All	All	★ D0AZ 8B404-A	Not replaced	1
8408	**CLIP (RADIATOR GRILLE TO VALENCE PANEL)**					
74/78	J	4&6	All	D2RY 8408-A		4
8419	**MOULDING (RADIATOR GRILLE)**					
75/76	D	8	All	D5VY 8419-A	R.H.	1
				D5VY 8419-B	L.H.	1
74/76	F	8	All	D4WY 8419-A		1
8B455	**BRACKET (RADIATOR GRILLE OPENING PANEL)**					
73/74	A	8	All	★ D3AZ 8B455-A	N.R.	1
73/76	Y					1
79	A	All	All	E0AZ 8B455-A	Inner	2
74/	D	8	All	D4VY 8B455-A	R.H.-approx. 10 1/2" long	1
				D4VY 8B455-B	L.H.-approx. 10 1/2" long	1
				D4VY 8B455-C	R.H.-approx. 2 7/8" x 2 1/4" x 2 5/16"	1
				D4VY 8B455-D	L.H.-approx. 2 7/8" x 2 1/4" x 2 5/16"	1
77	F	All	All	D80Z 8B455-A	Center	1
				D70Z 8B455-B	R.H. - not req'd. "From 1/24/77"	1
				D70Z 8B455-C	L.H. - not req'd. "From 1/24/77"	1
78	F	All	All	D80Z 8B455-A	Center	1
75/	G	All	All	D5DZ 8B455-A	R.H.	1
75	P			D8DZ 8B455-A	L.H.	1

YEAR	MODEL/RESTRICTIONS	ENGINE CYL.	ENGINE C.I.D. (C.C.D.)	PART NUMBER	DESCRIPTION	QTY.
8B455	BRACKET (RADIATOR GRILLE OPENING PANEL) — Cont'd					
78/	G	All	All	D8DZ 8B455-C	R.H. Rear	1
				D8DZ 8B455-D	L.H. Rear	1
75	G,P	All	All	★ D5DZ 8B455-C	Center-not replaced	1
79	J	All	All	★ D9ZZ 8B455-A	Center-r/b E3ZZ-A(4/82)	1
79	J	All	All	D9ZZ 8B455-B	Inner	2
79	J	All	All	D9ZZ 8B455-C	R.H.-outer	1
				D9ZZ 8B455-D	L.H.-outer	1
77/	V	All	All	D74Y 8B455-A	R.H.	1
				D74Y 8B455-B	L.H.	1
				D74Y 8B455-C	Center	2
8A468	KIT RADIATOR RELOCATION					
74	J - - w/hang-on A/C	4	122 (2000)	D4RY 8A468-A		1
	Consists of 2-(2-5926) Spacer 2-(2-16698) Spacer 2-(2-16797) Screw 2-(2-16699) Screw 2-(100277) Screw 2-(2-16696) Strap					
74	J - - w/Hang-on A/C	6	171 (2800)	D4RY 8A468-B		1
	Consists of 2-(2-5926) Spacer 2-(2-16797) Screw 2-(100277) Screw 2-(2-16696) Strap					
8A483	SUPPORT (RADIATOR HOSE)					
78	P - - with A/C	4	140 (2300)	★ D8BZ 8A483-B	Upper-N.R.	1
				E0ZZ 8A483-A	Lower	2
79	J,P - - with A/C or T/C	4	140 2300	E0ZZ 8A483-A	Lower	1
8501	PUMP ASSY. (WATER)-Less pulley-incl. (8507) gasket Note 1-When used on (C) Montego, (F) Cougar-remove D0AZ 8555-A tube & Instl. D00Z 8555-A tube Note 2-When used on (A) Mercury, (Y) Meteor-remove D00Z 8555-A tube & instl. D0AZ 8555-A tube					
73/74	J,L	4	122 (2000)	D3RY 8501-A	*PW-130	1
74/ 79	L,P J	4	140 (2300)	D8FZ 8501-A	*PW-158 - - Includes 8507 gasket	1
76/78	J	4	140 (2300)	D5RY 8501-A	*PW-145	1
73	J	6	159	D3RY 8501-C	*PW-171 repls. *PW-131	1
74/	J,L	6	171 (2800)	D8ZZ 8501-A	*PW-163 - - Includes 8255 & 8507 gasket	1
73	P	6	200	C6DZ 8501-D		1
74 74 75	P - - T/E P - - S/C without T/E G,P - - without A/C-"Before 4/12/75"	6 6 6	200 200 200	D4DZ 8501-A	*PW-134	1 1 1
74	P - - A/C without T/E	6	200	★ D4DZ 8501-B	*PW-135-N.R.	1
75/77 75/77	G,P - - with A/C G,P - - without A/C-"From 4/12/75"	6 6	200 200	D8BZ 8501-A		1 1
73/	C,G,P	6	250	D5DZ 8501-A	*PW-143	1
78/	J,P	6	200	D8BZ 8501-A	*PW-157 - - Incl. (1) CODE 8507-A gskt. & (1) 388218-S stud (to be used when replng. D5BZ 8501-A)	1
73/	C,F,G,P,V	8	302, 351W	D6ZZ 8501-B Note 2	*PW-153 - - Incl. C5AZ 8507-B & D7AZ 8513-A & D0AZ 8555-A tube	1
79	J	8	302	E0ZZ 8501-A	*PW-169 - - Incl. (1) D9AZ 8507-A gasket	1
79	A	8	302,351W	D9AZ 8501-A	*PW-164 - - Incl. (1) D9AZ 8507-A gasket	1

COPYRIGHT © 1986 — FORD MOTOR COMPANY — DEARBORN, MICHIGAN

YEAR	MODEL/RESTRICTIONS	ENGINE CYL.	ENGINE C.I.D. (C.C.D.)	PART NUMBER	DESCRIPTION	QTY.
8501	PUMP ASSY. (WATER)-Less pulley-incl. (8507) gasket — Cont'd Note 1-When used on (C) Montego, (F) Cougar-remove D0AZ 8555-A tube & Instl. D00Z 8555-A tube Note 2-When used on (A) Mercury, (Y) Meteor-remove D00Z 8555-A tube & instl. D0AZ 8555-A tube					
73/	A,C,D,F,K,Y	8	351M, 400	D6AZ 8501-A Note 1	*PW-151 - - Incl. D7AZ 8513-A-gasket and (1) ea. D00Z 8555-A & D90Z 8555-A tube	1
73/77	A,C,D,F,K,Y	8	429,460, 460 P/C	D8TZ 8501-B	*PW-162 - - Incl. (1) C8VZ 8507-A gskt., (1) C8SZ 8508-A plate & (1) C8SZ 8513-A gskt.	1
78	A,D,K	8	460			1
73	All off-highway vehicles	8	351C, 400	★ D0ZX 8505-A	Aluminum-not repl.	1
73/74	J	4	122 (2000)	E602187-S82	(AB-17)-bolt (pump to block)-hex. hd.-M8 x 20 (Metric coarse)	4
73/78	J	4	All	E600312-S82	(AB-33)-bolt (pump to block)-hex. hd.-M10 x 35 (Metric coarse)	1
73/78	J	6	All	E602166-S72	Bolt (pump to front cover)-hex. hd.-M6 x 16 (Metric coarse)	9
73/78	J	6	All	E602167-S71	(AB-7)-bolt (pump to block)-hex. hd.-M6 x 20 (Metric coarse)	1
74/	L,P	4	140 (2300)	N800065-S	(AB-20-K)-bolt (pump to block)-hex. hd.-M8 x 1.25 x 50 (Metric fine)	3
73/74	P	6	200	370790-S	(BB-428)-bolt (pump to block)-hex. hd.-5/16"-18 x 3/4"	1
73/74	P	6	200	★ 379862-S8 N/R(12/78)	(BB-429-H)-bolt (pump and alternator to block)-hex. hd.-5/16"-18 x 2"	2
75/	G,P	6	200			3
73/	C,G,P	6	250		(Pump to block)	4
73/	C,G,P	8	302	300958-S	(B-73-B)-bolt (pump and front cover to block)-hex. hd.-5/16"-24 x 5"	1
73/	C,F	8	351W			2
73/	C,P	8	302	376256-S	(BB-545-A)-bolt (pump to block)-hex. washer hd.-5/16"-18 x 1"	2
73/	A,C,F,Y	8	351C,400	★ 383965-S2 N/R(12/78)	(UU-52-JE)-bolt and washer (pump to front cover)-hex. hd.-5/16"-18 x 2 7/8"	1
73/	A,C,F,Y	8	351C,400	382127-S2	(UU-52-AE)-bolt (pump to front cover)-hex. hd.-5/16"-18 x 1 1/4"	2
73/	A,C,F,Y	8	351C,400	★ 383963-S N/R(12/78)	(BB-545-BE)-bolt (pump and cover to block)-hex. washer hd.-5/16"-18 x 2 29/32"	3
73/	C,F	8	351W			1
73/	A,C,F,Y	8	351C,400	373564-S	(BB-562-D)-screw and washer (pump and cover to block)-hex. hd.-5/16"-18 x 1 7/8"	5
73/	A,C,D,F,K,Y	8	429,460, 460 P/C	382133-S2	(BB-429-J)-bolt (pump to cover)-hex. hd.-5/16"-18 x 1 11/16"	5
73/	A,C,D,F,K,Y	8	429,460, 460 P/C	382134-S2	(BB-429-M)-bolt (pump and cover to block)-hex. hd.-5/16"-18 x 4"	6
73/	A,C,D,F,J,K,P,Y	6&8	All	34806-S	(X-65)-washer-lock-5/16"	AR
78	A,F,D,K	8	351M,400	387879-57	(BB-552-AB) Screw (pump to frt. cover & block) Hex Washer Hd. 5/16"-18 x 2 7/8"	1
79	A,D	8	302,351W	388895-S2	(BB-277-F) bolt (pump to blk.) 5/16"-18 x 4" hex. hd.	2
79	A,J	8	302,351W	388432-S2	(WW-123-KJ) Stud (pump to frt. crv.) 3/8"-16-5/16-18 x 3.5"	2
79	A,D	8	302,351W	388433-S2	(WW-123-KK) Stud (pump to frt. blk.) 3/8"-16-5/16-18 x 5.4	2 1
79	A,J	8	302,351W	388434-S2	(WW-123-KL) stud (pump to cvr. to blk.) 3/8"-16-5/16-18 x 6.6	1 1
8505	HOUSING (WATER PUMP)-Refer to group 8501					
8507	GASKET (WATER PUMP HOUSING)-Also refer to group 8513					
73/74	J,L	4	122 (2000)	D1FZ 8507-A		1
74/	J,L,P	4	140 (2300)	★ D4FZ 8507-A /bE4ZZ 8507-A		1
73/	J,L	6	171	D2RY 8507-B		1
73/	G,J,P	6	200	C0DE 8507-A		1

YEAR	MODEL/RESTRICTIONS	ENGINE CYL.	ENGINE C.I.D. (C.C.D.)	PART NUMBER	DESCRIPTION	QTY.
8507	GASKET (WATER PUMP HOUSING)-Also refer to group 8513 — Cont'd					
73/	C,G,P	6	250	C9DZ 8507-A		1
73/	C,F,G,P,V	8	302,351W	E2ZZ 8507-A		1
73/79	A,J		302,351W			
73/	A,C,D,F,K,Y	8	429,460, 460P/C	C8VZ 8507-A		1
75/76	A,Y	8	351M 400-2V	D2SZ 8507-A		1
8508	COVER (WATER PUMP)					
73/	C,F,G,P,V	8	302,351W	D00Z 8508-A		1
75/76	A,Y	8	351M 400-2V	D2SZ 8508-A		1
73/	A,C,D,F,K,Y	8	429,460, 460P/C	C8SZ 8508-A		1
79	A,J	8	302,351W	D9AZ 8508-A		1
73/	C,F,G,P,V	8	302,351W	382985-S2	(BB-427-Z)-bolt (cover to pump)-hex. hd.-5/16"-18 x 5/8"	4

YEAR	MODEL/RESTRICTIONS	ENGINE CYL.	ENGINE C.I.D. (C.C.D.)	PART NUMBER	SHEAVES	O.D.	DESCRIPTION	QTY.
8509	PULLEY (WATER PUMP)							
	A (Mercury)							
73/75	A - - S/C- "Before 6/30/75"	8	351,400	C90Z 8509-D	1	6 61/64	#C90E-G or D1AE-BA	1
76/78	A - - S/C "From 3/1/76"	8	351,400					1
79	A - - A/C	8	302,351W	D9AZ 8509-B	1	5 3/8"	#D9AE-CA	1
73/	A - - A/C	8	351C,M,	C90Z 8509-C	1	5 15/16	#D1AE-AA, C90E-F	1
		8	400				replaces #D8AE-AA	1
73/76	A - - A/C	8	351W					
75/76	A - - S/C- "From 6/30/75 to 3/1/76"	8	351,400					1
79	A - - S/C	8	302,351W	D9AZ 8509-C	1	6 29/32"	#D9AE-DA	1
73	A - - P/S without A/C	8	429	D00Z 8509-A	1	7	#D00E-A	1
73/74	A - - A/C without T/E- "Before 5/1/74"	8	429,460	D0SZ 8509-B	2	6 1/8	#D0SE-B	1
73/74	A - - A/C without T/E		460 P/C					1
74/78	A - - A/C without T/E- "From 5/1/74"	8	460	★D2SZ 8509-A	2	6 1/8	#D2SE-AA	1
73/74	A - - P/S without A/C or T/E	8	460, 460P/C	D00Z 8509-H	1	6 1/8		1
74/78	A - - T/E with P/S & A/C- "Before 5/1/74"	8	460, 460 P/C	D00Z 8509-E	3	6 3/8		1
74/78	A(P/C) - - T/E w/ P/S w/o A/C							1
74/78	A(exc.P/C) - - T/E w/ P/S w/o A/C	8	460	★D5AZ 8509-A	2	7		1
74	A - - T/E with P/S & A/C- "From 5/1/74"	8	460	★D1VY 8509-A	3	6 1/8		1
75/78	A(exc. P/C) - - integral A/C	8	460					1
75/78	A(P/C) - - integral A/C- "From 1/13/75"	8	460, 460 P/C					1
75/78	A(P/C) - - integral A/C- "Before 1/13/75"	8	460, 460 P/C	★D5MY 8509-A	3	6 19/32	#D5VE-AA	1
75/78	A - - w/hang-on A/C	8	460, 460P/C	★D6AZ 8509-A N.R.	2			1
	C (Montego)							
73	C - - without A/C	6	250	★D7DZ 8509-B	1	6 1/2	#D7DE-BA repls.	1
74	C - - without T/E or A/C	6	250				#D10E 8A528-AA	1

COPYRIGHT © 1986— FORD MOTOR COMPANY —DEARBORN, MICHIGAN

1973/79 LINCOLN-MERCURY CARS

YEAR	MODEL/RESTRICTIONS	ENGINE CYL.	ENGINE C.I.D. (C.C.D.)	PART NUMBER	SHEAVES	O.D.	DESCRIPTION	QTY.
8509	PULLEY (WATER PUMP) — Cont'd							
	C (Montego)							
73	C – – factory installed A/C	6	250	★D4DZ 8509-E	3	5 3/4	#D3DE-CA repl. pulley ident. #D20E-BA	1
73/76	C – – without A/C, P/S or idler pulley	8	302,351, 400	C90Z 8509-B	1	6 61/64	#C90E-E	1
73/76	C – – P/S or idler pulley without A/C	8	302,351, 400	C90Z 8509-D	1	6 61/64	#D1AE-BA	1
73/	C – – A/C	8	302,351, C,M,W	D20Z 8509-A	1	6 7/32	#D20E-AA	1
73/74	C – – A/C w/o T/TOW	8	400					1
75/	C – – A/C	8	400					1
73/74	C – – A/C	8	351CJ4V	C90Z 8509-C	1	5 15/16"	#D1AE-AA, C90E-F replaces #D8AE-AA	1
	C – – A/C With T/Tow	8	400					1
73	C – – P/S or idler pulley without A/C	8	429	D00Z 8509-A	1	7	#D00E-A	1
73/74	C – – A/C-without T/E	8	429,460, 460P/C	D0SZ 8509-B	2	6 1/8		1
73/74	C – – P/S without A/C or T/E	8	460, 460 P/C	D00Z 8509-H	1	6 1/8		1
74/76	C – – T/E w/P/S w/A/C	8	460, 460P/C	D00Z 8509-E	3	6 3/8"		1
74/76	C(P/C) – – T/E w/P/S w/o A/C							1
74/76	C(exc.P/C) – – T/E w/P/S w/o A/C	8	460	★D5AZ 8509-A	2	7		1
75/76	C – – w/hang-on A/C	8	460, 460P/C	★D6AZ 8509-A N.R.	2			1
	D (Lincoln)							
77/	D	8	400	C90Z 8509-C	1	5 15/16"	#D1AE-AA, C90E-F replaces #D8AE-AA	1
73	D – – A/C	8	460	★D2SZ 8509-A	2	6 1/8	#D2SE-AA	1
74	D – – without T/E	8	460					1
74	D – – T/E	8	460	★D1VY 8509-A	3	6 1/8		1
75/78	D – – without Sierracin system	8	460					1
75/78	D – – with Sierracin system	8	460	★D4SZ 8509-A	3	6	#D4SE-AA	1
75/78	D – – w/hang-on A/C	8	460	★D6AZ 8509-A	2			1
	F (Cougar)							
73/	F – – without A/C, P/S or idler pulley	8	351	C90Z 8509-B	1	6 61/64	#C90E-B	1
73/	F – – P/S without A/C	8	302,351 400	C90Z 8509-D	1	6 61/64	#C90E-G or D1AE-BA	1
73	F – – A/C	8	302,351C	C90Z 8509-C	1	5 15/16"	#D1AE-AA, C90E-F replaces #D8AE-AA	1
74/	F – – A/C	8	302,351, 400	D20Z 8509-A	1	6 7/32	#D20E-AA	1
74	F – – P/S without A/C without T/E	8	460	D00Z 8509-H	1	6 1/8		1
74/76	F – – P/S without A/C with T/E	8	460	★D5AZ 8509-A	2	7	#D3AE-AA,D4AE-AA	1
74	F – – P/S and A/C without T/E	8	460	D0SZ 8509-B	2	6 1/8		1
74/76	F – – P/S and A/C with T/E	8	460	D00Z 8509-E	3	6 3/8		1
	G (Monarch)							
75	G – – without A/C– "Before 4/12/75"	6	200	★D4DZ 8509-A	2	6	#D4DE-AA	1
75/76	G – – without A/C– "From 4/12/75"	6	200	★D5DZ 8509-A	2	5 5/8	#D5DE-BA	1
77	G – – without A/C	6	200	★D7DZ 8509-A Not replaced(2/81)	2	5 5/8"& 5 43/64"	#D7BE-AA	1

YEAR	MODEL/RESTRICTIONS	ENGINE CYL.	ENGINE C.I.D. (C.C.D.)	PART NUMBER	SHEAVES	O.D.	DESCRIPTION	QTY.
8509	PULLEY (WATER PUMP) — Cont'd							
	G (Monarch)							
75	G – – factory installed A/C	6	200	★ D5BZ 8509-A	3	5	#D5DE-AA	1
75/77	G – – dealer installed A/C	6	200	★ D5DZ 8509-B				1
75/76 77 78/	G – – S/C G – – S/C with T/E G – – S/C w/o P/S with T/E	6	250	D4DZ 8509-D	2	6 9/16	#D3DE-AA	1 1 1
77 78/	G – – S/C without T/E G – – S/C w/o P/S w/o T/E	6	250	★ D7DZ 8509-B	1	6 1/2"	#D7DE-BA	1 1
74/76	G – – AC dlr. installed	6	250	D40Z 8509-A	–	–		1
75	G – – A/C – – factory installed	6	250	★ D4DZ 8509-E	3	5 3/4	#D3DE-CA	1
74/76	G – – A/C (dlr. installed)	6	250	D40Z 8509-A				1
76 77 78/ 78/	G – – A/C-factory installed G – – A/C with T/E G – – S/C with P/S with T/E G – – A/C with T/E pump	6	250	D6DZ 8509-A	3	4 1/64 &5 29/32	#D6DE-AA,BA	1 1 1
77 78/ 78/	G – – without T/E G – – S/C with P/S w/o T/E G – – A/C without T/E pump	6	250	★ D7DZ 8509-C	2	5 25/32"	#D7DE-AA	1 1
75/	G – – without P/S or A/C	8	302,351	C90Z 8509-B	1	6 61/64	#C90E-B,C90E 8A528-F	1
75/	G – – with P/S without A/C	8	302,351	C90Z 8509-D	1	6 61/64	#C90E-G,D1AE-BA	1
75/76	G – – A/C "Before 7/6/76"	8	302,351W	C90Z 8509-C	1	5 15/16"	#D1AE-AA, C90E-F replaces #D8AE-AA	1
76/	G – – A/C "From 7/6/76"	8	302,351	D20Z 8509-A	1	6 7/32	#D20E-AA	1
	J (Capri)							
73/74	J – – without A/C	4	122 (2000)	★ D0RY 8509-A N.R.	1			1
73	J – – with hang-on A/C	4	122 (2000)	★ D2FZ 8509-A				1
74	J – – with hang-on A/C	4	122 (2000)	D1FZ 8509-A	2			1
74	J – – with integral A/C	4	122 (2000)	★ D4RY 8509-C	2	4 1/4		1
76/78 76 76/78	J – – without P/S or A/C J – – with A/C and P/S "Before 8/1/75" J – – A/T w/A/C & P/S- exc. Trch. "From 8/1/75"	4 4	140 (2300) 140 (2300)	★ D5RY 8509-G /bD5RY 8509-F (1/82)	2	5 63/64	#757F 8A528-BA,BB	1 1 1
76/78	J – – M/T w/A/C & P/S- exc. T/C "From 8/1/75"	4	140 (2300)	D6RY 8509-A	2	5 1/2	#767F 8A528-AB	1
76/78	J – – with P/S without A/C exc. T/C	4	140 (2300)	D5RY 8509-F	3		#757F 8A528-CA,CB	1
79	J – – S/C – exc. T/C	4	140 (2300)	E1FZ 8509-A	3	5 7/8	#D52E-CA repls. #D42E-AA,AB,BA D4ZE-BA	1
79	J – – with T/C	4	140	D9ZZ 8509-B	3	6	#D9ZE-BA	1
73	J – – without A/C	6	159 (2600)	★ D3RY 8509-C	1	5 5/32		1
73	J – – with A/C	6	159 (2600)	D3RY 8509-B				1
74/	J – – A/C	6	171 (2800)	D4RY 8509-D	2	5 1/8	#74TF 8A528-DA repl. Pulley I.D. 74TF 8A528-AA, BA & 75TF 8A528-AA	1
79	J – – w/pulse air	6	200	D8BZ 8509-A	3	4 7/8 5 1/4	#D9BE-CA, #D8BE-AA repl. D8BE-AA	1
79	J	8	302	D9ZZ 8509-A	1	5 15/32"	#D9ZE-AA	1

COPYRIGHT © 1986— FORD MOTOR COMPANY —DEARBORN, MICHIGAN

1973/79 LINCOLN-MERCURY CARS

YEAR	MODEL/RESTRICTIONS	ENGINE CYL.	ENGINE C.I.D. (C.C.D.)	PART NUMBER	SHEAVES	O.D.	DESCRIPTION	QTY.
8509	PULLEY (WATER PUMP) — Cont'd							
	K (Mark IV or V)							
77/	K - - A/C	8	400	C90Z 8509-C	1	5 15/16"	#D1AE-AA, C90E-F replaces #D8AE-AA	1
73 74	K - - A/C K - - without T/E or Sierracin alt.	8 8	460 460	★D2SZ 8509-A	2	6 1/8	#D2SE-AA	1 1
74/78	K - - T/E without Sierracin alt.	8	460	★D1VY 8509-A	3	6 1/8		1
74/78	K - - with Sierracin alt.	8	460	★D4SZ 8509-A	3	6	#D4SE-AA	1
75/78	K - - hang-on A/C	8	460	★D6AZ 8509-A	2			1
	L (Bobcat)							
74	L	4	122 (2000)	D1FZ 8509-A	2			1
74/ 74/	L - - w/o A/C L - - w/Factory A/C	4	140 (2300)	D6FZ 8509-B	3	5 7/8	#D52E-CA repls. D52E-BA, D42E-AA,AB,BA & D4ZE-BA	1 1
79	L - - (dealer A/C)	4	140 (2300)	D9FZ 8509-A				1
75/	L - - without A/C	6	171 (2800)	D4ZZ 8509-A	1	5 1/2	#D4ZE-AA	1
75/	L - - A/C	6	171 (2800)	D5FZ 8509-A	1	5	#D52E-AA	1
	P (Comet or Zephyr)							
78/	P	4	140 (2300)	D6FZ 8509-B	3	5 7/8	#D52E-CA repl. D52E-BA D42E-AB, D4ZE-BA	1
73	P - - without A/C	6	200	★C0DE 8509-A	1	5 5/8		1
73	P - - factory installed A/C	6	200	C4SZ 8509-A	2	6 13/64		1
74	P - - without T/E or A/C	6	200	★C0DE 8509-A	1	5	#D4DE-CA	1
74	P - - without T/E-with A/C	6	200	D4DZ 8509-C	2	5	#D4DE 8A528-CA	1
74 75	P - - T/E P - - without A/C- "Before 4/12/75"	6 6	200 200	★D4DZ 8509-A	2	6	#D4DE-AA	1 1
75/76	P - - without A/C- "From 4/12/75"	6	200	★D5DZ 8509-A	2	5 5/8	#D5DE-BA	1
75/77	P - - factory installed A/C	6	200	★D5BZ 8509-A	3	5	#D5DE-AA	1
75/	P - - dealer installed A/C	6	200	★D5DZ 8509-B				1
78/	P	6	200	D8BZ 8509-A	3	4 7/8 5 1/4	#D9BE-CA,D8BE-AA repl. pulley D8BE-BA	1
73 74	P - - without A/C P - - without T/E or A/C	6 6	250 250	★D7DZ 8509-B	1	6 1/2	#D7DE-BA repl. #D10E 8A528-AA	1 1

YEAR	MODEL/RESTRICTIONS	ENGINE CYL.	ENGINE C.I.D. (C.C.D.)	PART NUMBER	SHEAVES	O.D.	DESCRIPTION	QTY.
8509	PULLEY (WATER PUMP) — Cont'd							
	P (Comet or Zephyr)							
73	P – – factory installed A/C	6	250	★D10Z 8509-B	2	5 7/8	#D10E 8509-AA	1
74/77	P – – without T/E-with A/C "Before 6/1/77"	6	250					1
74/77	P – – T/E without A/C – – (exc. CANADA only)	6	250	D4DZ 8509-D	2	6 9/16	#D3DE-AA	1
	P – – w/o T/E or A/C- "From 6/1/77"	6	250					1
77	P – – w/o T/E without A/C "Before 6/1/77"	6	250	★D7DZ 8509-B	1	6 1/2	#D7DE-BA	1
74/77	P – – T/E and A/C – – (exc. CANADA only)	6	250	★D4DZ 8509-E	3	5 3/4	#D3DE-CA	1
	P – – w/o T/E w/ A/C- "From 6/1/77"	6	250					1
77	P – – S/C and A/C – (CANADA only)	6	250					1
73/77	P – – without A/C or P/S	8	302	C90Z 8509-B	1	6 61/64	#C90E-B or C90E 8A528-F	1
73/77	P – – P/S without A/C	8	302	C90Z 8509-D	1	6 61/64	#C90E-G or D1AE-BA	1
73/77	P – – A/C	8	302	C90Z 8509-C	1	5 15/16	#D1AE-AA, C90E-F	1
78/	P – – without A/C	8	302	D6ZZ 8509-B	1	6 15/16"	#D5ZE 8509-BA	1
78/	P – – factory installed A/C	8	302	D8BZ 8509-B	1	5 11/16"	#D5ZE 8509-AA	1
79	P – – A/C factory w/o T/E	8	302					1
79	P – – A/C factory with T/E	8	302	D8BZ 8509-A	3	4 7/8 5 1/4	#D9BE-CA,D8BE-AA	1
78	P – – dealer installed A/C	8	302	D6ZZ 8509-A	1	5 11/16"	#D5ZE-AB	1
	V (Versailles)							
77/78	V – – A/C, 60 amp. alt.	8	All	D20Z 8509-A	1	6 7/32	D20E-AA	1
77/78	V – – A/C, 70,90 amp. alt.	8	All	C90Z 8509-C	1	5 15/16"	#D1AE-AA, C90E-F replaces #D8AE-AA	1
79	V	8	All	D7LY 8509-A	1	5 3/8"	#D7AE-AA	1
	Y (Meteor)							
73/75	Y – – S/C- "Before 6/30/75"	8	351,400	C90Z 8509-D	1	6 61/64	#C90E-G or D1AE-BA	1
76	Y – – S/C- "From 3/1/76"	8	351,400					1
73/76	Y – – A/C		351C,M 351W,400	C90Z 8509-C	1	5 15/16"	#D1AE-AA, C90E-F replaces #D8AE-AA	1
75/76	Y – – S/C- "From 6/30/75 to 3/1/76"	8	351,400					1
73	Y – – P/S without A/C	8	429	D00Z 8509-A	1	7	#D00E-A	1
73/74	Y – – A/C without T/E- "Before 5/1/74"	8	429,460	D0SZ 8509-B	2	6 1/8		1
73/74	Y – – A/C without T/E	8	460 P/C					1
74	Y – – A/C without T/E- "From 5/1/74"	8	460	★D2SZ 8509-A	2	6 1/8	#D2SE-AA	1
73/74	Y – – P/S without A/C or T/E	8	460, 460P/C	D00Z 8509-H	1	6 1/8		1
74	Y – – T/E with P/S and A/C- "Before 5/1/74"	8	460, 460P/C	D00Z 8509-E	3	6 3/8		1

COPYRIGHT © 1986— FORD MOTOR COMPANY —DEARBORN, MICHIGAN

1973/79 LINCOLN-MERCURY CARS

YEAR	MODEL/RESTRICTIONS	ENGINE CYL.	ENGINE C.I.D. (C.C.D.)	PART NUMBER	SHEAVES	O.D.	DESCRIPTION	QTY.
8509	**PULLEY (WATER PUMP) — Cont'd**							
	Y (Meteor)							
74/76	Y - - T/E with P/S without A/C	8	460	★ D5AZ 8509-A	2	7	# D3AE-AA,D4AE-AA	1
74	Y - - T/E with P/S and A/C- "From 5/1/74"	8	460	★ D1VY 8509-A	3	6 1/8		1
75/76	Y (exc. P/C) - - integral A/C	8	460					1
75/76	Y (P/C) - - integral A/C- "From 1/13/75"	8	460, 460 P/C					1
75	Y (P/C) - - integral A/C- "Before 1/13/75"	8	460, 460 P/C	★ D5MY 8509-A	3	6 19/32	# D5VE-AA	1
75/76	Y - - hang-on A/C	8	460	★ D6AZ 8509-A	2			1

YEAR	MODEL/RESTRICTIONS	ENGINE CYL.	ENGINE C.I.D. (C.C.D.)	PART NUMBER	DESCRIPTION	QTY.
8512	**IMPELLER (WATER PUMP)**					
73/74	J	4	122 (2000)	D1FZ 8512-B		1
74	L	4	122 (2000)	★ 8512	Serviced only in 8501 assy.	1
74/	J,L,P	4	140 (2300)	D4FZ 8512-A		1
75/	G,J,P - - with A/C	6	200			1
75/	G,J,P - - without A/C- "From 4/12/75"	6	200			1
73/74	P	6	200	★ C3DZ 8512-B		1
75	G,P - - without A/C- "Before 4/12/75"	6	200	N.R.		1
73/74	C,P	6	250	★ D2DZ 8512-A	N/R(2/81)	1
75/	G,P	6	250	D5DZ 8512-A		1
73/76	A,C,F,G,P,Y- "Before 3/15/76"	8	302,351, 400	D00Z 8512-A		1
76/	C,D,F,G,K,P,V,Y- "From 3/15/76"	8	302,351, 400	D60Z 8512-A		1
76/78	A "From 3/15/76"	8	302,351W, 400			1
79	A,J	8	302,351W	D9AZ 8512-A		1
73/78	A,C,D,F,K,Y	8	429,460, 460P/C	D2TZ 8512-A		1
8513	**GASKET (WATER PUMP COVER)-Also refer to group 8507**					
73/76	A,C,F,G,P,Y "Before 3/15/76"	8	302,351, 400	★ D0AZ 8513-A r/b D7AZ 8513-A(11/80)		1
76/	C,D,F,G,K,P,Y,V- "From 3/15/76"	8	302,351, 400	D7AZ 8513-A		1
76/78	A "From 3/15/76"	8	302,351, 400			1
79	A,J	8	302,351W	D9AZ 8513-A		1
73/78	A,C,D,F,K,Y	8	429,460, 460P/C	C8SZ 8513-A		1
8517	**SEAT ASSY. (WATER PUMP IMPELLER)**					
73/74	J	4	122 (2000)	★ D0RY 8517-A Not replaced(3/80)		1
73/74	C,G,P	6	250	C9AZ 8517-A		1
73/76	A,C,F,G,P,Y- "Before 3/15/76"- use 8564 From 3/15/76	8	302,351, 400			1

YEAR	MODEL/RESTRICTIONS	ENGINE CYL.	ENGINE C.I.D. (C.C.D.)	PART NUMBER	DESCRIPTION	QTY.
8K517	PLATE (WATER BY-PASS ORIFICE)					
73/	A,C,F,Y	8	351C,M	D0AZ 8K517-A	3/4" I.D. x 1 13/16" O.D.-acts as water restrictor	1
8522	COOLANT RECOVERY KIT					
73/	All	6&8	All	★ D0AZ 8522-A(10/79)	Not replaced	1
	Consists of					
	1-D0AJ 8007-A	Tank Assy.		1-D2AJ 8B081-A	Overflow hose	
	1-D0AJ 8N040-A	Clip		1-D2VY 8100-A	Radiator cap	
	1-D0AJ 8N041-A	Clip		1-D2AZ 8K103-A	Overflow container cap	
8530	SHAFT and BEARING ASSY. (WATER PUMP)					
73	J,L	4	122 (2000)	D0RY 8530-A		1
74	J,L	4	122 (2000)	D4RY 8530-A		1
76/78	J	4	140 (2300)	D5RY 8530-A		1
74/ 79	L,P J	4	140 (2300)	D4FZ 8530-A		1
73	P	6	200	C6DZ 8530-C		1
74	P	6	200	D4DZ 8530-A	Incl. slinger	1
75	G,P - - without A/C- "Before 4/12/75"	6	200			1
75/	G,J,P - - with A/C	6	200	D5BZ 8530-A	Without slinger	1
75/	G,J,P - - without A/C "From 4/12/75"	6	200			1
73/74	C,G,P	6	250	D2DZ 8530-A		1
75/	G,P	6	250	C9DZ 8530-A		1
73/76	A,C,F,G,P,Y- "Before 3/15/76"	8	302,351, 400	★ D2AZ 8530-A Not replaced(2/81)		1
76/	C,D,F,G,K,P,V,Y- "From 3/15/76"	8	302,351, 400	D6AZ 8530-A		1
76/78	A "From 3/15/76"	8	302,351, 400			1
79	A	8	302,351W	D9AZ 8530-A		1
73/74	A,C,D,F,K,Y "Before 4/1/74"	8	460, 460P/C	★ D1VY 8530-A Not replaced(2/81)	Incl. slinger-use with D2VY 8501-C	1
74/78	A,C,D,F,K,Y "From 4/1/74"	8	429,460, 460P/C	D2VY 8530-A	Less slinger-use with D4VY 8501-A	1
8K537	RETAINER (WATER PUMP BEARING)					
73/74	J	4	122 (2000)	★ D0RY 8K537-A N.R.		1
8546	SPACER (PULLEY TO FAN)					

A (Mercury)

73/	A	8	351,400	C4AZ 8546-G	*YA-75-2 5/8" thick	1
73/75	A (exc. P/C) - - S/C- "Before 6/30/75"	8	429,460	C9AZ 8546-A	1 1/4" thick	1
73/74	A(P/C)	8	429,460, 460 P/C	D1DZ 8546-A	*YA-44 2 3/16" thick	1
75/78	A (exc. P/C) - - S/C- "From 6/30/75"	8	460			1

C (Montego)

73/74	C (exc. P/C or taxi) - - S/C	6	250	D9ZZ 8546-D		1
73	C(exc. P/C or taxi) - - factory installed A/C	6	250	D1DZ 8546-A	*YA-44-2 3/16" thick	1
73/74	C (P/C or taxi)	6	250			1

COPYRIGHT © 1986 — FORD MOTOR COMPANY — DEARBORN, MICHIGAN

1973/79 LINCOLN-MERCURY CARS

YEAR	MODEL/RESTRICTIONS	ENGINE CYL.	ENGINE C.I.D. (C.C.D.)	PART NUMBER	DESCRIPTION	QTY.
8546	SPACER (PULLEY TO FAN) — Cont'd					
	C (Montego)					
73/74	C - - dealer installed A/C	6	250	★D2DZ 8546-C	*YA-53-2 7/8" thick	1
73/76	C (exc. P/C) - - S/C or X/C	8	302,351-2/B,400	C6OZ 8546-D	*YA-81-1 7/8" thick	1
73/76	C (exc. P/C) - - A/C	8	302,351-2/B,400	C4AZ 8546-G	*YA-75-2 5/8" thick	1
73/74	C (exc. P/C)	8	351-4/B			1
73/76	C (P/C)	8	302,351, 400			1
73/75	C (exc. P/C) - - S/C or X/C- "Before 1/2/75"	8	429,460	C9AZ 8546-A	1 1/4" thick	1
73/76	C (P/C)	8	429,460, 460P/C	D1DZ 8546-A	*YA-44-2 3/16" thick	1 1
75/76	C (exc. P/C) - - S/C or X/C "From 1/2/75"	8	460			1
	D (Lincoln)					
77/	D	8	400	C4AZ 8546-G	*YA-75-2 5/8" thick	1
	F (Cougar)					
73	F - - S/C	8	351-2/B	C8YZ 8546-A	*YA-20-1 1/4" thick	1
73/	F - - A/C	8	351-2/B, 400	C4AZ 8546-G	*YA-75-2 5/8" thick	1
73/74	F	8	351-4/B			1
77/	F - - A/C	8	302			1
74/	F - - S/C or X/C	8	351-2/B, 400	C6OZ 8546-D	*YA-81-1 7/8" thick #C8AE-C, D4OE-BA	1
77/	F - - S/C	8	302			1
74/75	F - - S/C,X/C- "Before 1/2/75"	8	460	C9AZ 8546-A	1 1/4" thick	1
75/76	F - - S/C,X/C- "From 1/2/75"	8	460	D1DZ 8546-A	*YA-44-2 3/16" thick	1
	G (Monarch)					
75	G - - S/C "Before 4/12/75"	6	200	C9TZ 8546-A	*YA-29-#C9TE-C,D5DE-B1A ,B2A	1
75	G - - A/C	6	200			
75/76	G - - S/C "From 4/12/75"	6	200	C8AZ 8546-A	1" thick-#C8AE-B3,D5DE -C1A,C2A	1
77	G - - S/C	6	200	★D5BZ 8546-C	*YA-134-1 1/8 thick- #D5BE-CB	1
76	G - - dealer installed A/C	6	200	★D2DZ 8546-C	*YA-53-2 7/8" thick	1
75	G(54H,66H) - - S/C	6	250	D9ZZ 8546-D		1
75	G(54H,66H) - - A/C	6	250	D1DZ 8546-A	*YA-44-2 3/16" thick	1
76/	G(54H,66H) - - S/C and A/C	6	250	D6DZ 8546-A	*YA-129-#D6DE-AA,BA, CA -1 7/8" thick	1
76/	G(54K,66K) - - S/C & A/C- "From 5/3/76"-not used prior	6	250			1
76	G(54K,66K) - - dealer installed A/C	6	250	C8YZ 8546-A	*YA-20-#C8YE-A or D1OE-AA	1
75/	G(54H,66H) - - S/C	8	302,351	C6OZ 8546-D	*YA-81-1 7/8" thick #C8AE-C, D4OE-BA	1
75/	G(54H,66H) - - A/C	8	302,351	C4AZ 8546-G	*YA-75-2 5/8" thick	1
75/76	G(54K,66K) - - S/C— "Before 7/6/76"	8	351			1
76/	G(54K,66K) - - S/C & A/C "From 7/6/76"	8	302,351			1
76/	G(54H,66H) - - A/C	8	302		opt.w/C6OZ-D for this appl.-used only with fan D4OZ 8600-A	1

YEAR	MODEL/RESTRICTIONS	ENGINE CYL.	ENGINE C.I.D. (C.C.D.)	PART NUMBER	DESCRIPTION	QTY.
8546	SPACER (PULLEY TO FAN) — Cont'd					
	J (Capri)					
73/74	J - - exc. hang-on A/C	4	122 (2000)	D2RY 8546-B	*YA-64	1
76	J "Before 8/30/76"	4	140 (2300)	★D5RY 8546-A	#75EB 8K629-AA-use with 8A616 and D4RY 8546-E	1
76/78	J "From 8/30/76"	4	140 (2300)	D6RY 8546-B	#77EB-BA	1
79	J - - w/A/C	4	140 (2300)	D9ZZ 8546-D	EDD40E-CA-#Red stripe or D9ZE-C2A-repls. #D0SE-A, D40E-CA	1
74 76	J - - w/w/o A/C J - - w/Integral A/C "Before 8/30/76"	6	171 (2800)	★D4RY 8546-A	#74EB 8K629-AA or 74BB 8K629-AA used with 8A616 and D4RY 8546-E (stepped flange) only	1 1
76	J - - w/o A/C "Before 8/30/76"	6	171 (2800)	★D5RY 8546-B	#75EB 8A645-AA-use with 8A616 only does not use D4RY 8546-E spacer	1
76/78	J - - with hang-on A/C	6	171 (2800)	★D5FZ 8546-A	*YA-128	1
79	J - - dlr. A/C	6	171 (2800)	D9ZZ 8546-C		1
76/78	J "From 8/30/76"	6	171 (2800)	★D6RY 8546-A N.R.	#77EB-AA - Does not use 8A616 clutch	1
79	J - - exc. dlr. A/C	6	171	D4ZZ 8546-A	*YA-115 #D4ZE-AA 2 5/8" thick	1
74/76	J - - w/w/o A/C "Before 8/30/76"	4&6	All	★D4RY 8546-E	#74BB 4K254-AA-used with 8A616 and D4RY 8546-A or D5RY 8546-A only-recessed groove for stepped flange	1
79	J	6	200	C9TZ 8546-A	*YA-29 #C9TE-C or D5DE-B1A,B2A	1
79	J	8	302	D9ZZ 8546-B	*YA-150 #D9ZE-AB-2" thick	1
	K (Mark V)					
77/	K	8	400	C4AZ 8546-G	*YA-75-2 5/8" thick	1
	L (Bobcat)					
74	L - - S/C or factory installed A/C	4	122 (2000)	★D1FZ 8546-B	*YA-45-#D1ZE-D1A or D2A-1 1/8" thick	1
74	L - - dealer installed A/C	4	122 (2000)	★D3FZ 8546-A N.R.	*YA-112	1
74	L - - S/C	4	140 (2300)	★D0SZ 8546-B	1" thick	1
74 75/	L - - A/C L - - S/C & A/C	4	140 (2300)	C9AZ 8546-A	1 1/4" thick	1 1
75/	L	6	171 (2800)	★D5FZ 8546-A	*YA-128-2 5/16" thick	1
79	L - - dlr. A/C	6	171 (2800)	D9ZZ 8546-C		1

COPYRIGHT © 1986— FORD MOTOR COMPANY —DEARBORN, MICHIGAN

1973/79 LINCOLN-MERCURY CARS

YEAR	MODEL/RESTRICTIONS	ENGINE CYL.	ENGINE C.I.D. (C.C.D.)	PART NUMBER	DESCRIPTION	QTY.
8546	SPACER (PULLEY TO FAN) — Cont'd					
	P (Comet or Zephyr)					
78	P "Before 9/2/77"	4	140 (2300)	D2VY 8546-A	#D8BE-L2A,L4A or D2VE-AA,AB- 2 5/8" thick	1
78/	P "From 9/2/77"	4	140 (2300)	D9ZZ 8546-D	#D9ZE-CA repls. #D0SE-A, D40E-CA	1
78/	P - - S/C & A/C	6	200	C9TZ 8546-A	*YA-29 #C9TE-C or D5DE-BA	1
73/75	P - - S/C "Before 4/12/75"	6	200	C60Z 8546-D	*YA-81-1 7/8" thick	1
75	P - - S/C "From 4/12/75 to 7/1/75"	6	200	C8AZ 8546-A	1" thick-#C8AE-B3,D5DE-C1A,C2A	1
73	P - - factory installed A/C	6	200	C4AZ 8546-G	*YA-75-2 5/8" thick	1
74	P - - factory installed A/C	6	200	D0AZ 8546-A	*YA-31-#D0AE-A D4DE-DA-2 21/32" thick	1
75	P - - factory installed A/C- "Before 7/1/75"	6	200	D5BZ 8546-A	*YA-127-#D5DE-AA-1 19/32" thick	1
75/77	P - - S/C and A/C-	6	200	★ D5BZ 8546-C	*YA-134-#D5DE-CB-1 1/8" thick	1
73/77	P - - dealer installed A/C- "From 7/1/75" without H/D fan	6	200	★ D2DZ 8546-B	*YA-52-1" thick	1
73/77	P - - dealer installed A/C- with H/D fan	6	200,250	D2DZ 8546-C	*YA-53-2 7/8" thick	1
73/75 75	P - - S/C "Before 7/28/75" P - - A/C- "From 11/1/74 to 7/28/75"	6 6	250 250	D9ZZ 8564-D		1 1
73/75	P - - factory A/C- "Before 11/1/74"	6	250	D1DZ 8546-A	*YA-44-2 3/16" thick	1
75/77	P - - S/C and A/C- "From 7/28/75"	6	250	D5BZ 8546-B	*YA-133-#D5DE-EA,FA,GA-1 15/32" thick	1
73/75	P - - S/C "Before 10/21/74"	8	302	C8YZ 8546-A	*YA-20-1 1/4" thick	1
73/76 75/76	P - - A/C P - - S/C "From 10/21/74"	8 8	302 302	C4AZ 8546-F	*YA-74-2 7/16" thick	1 1
77	P - - S/C & A/C	8	302	C60Z 8546-D	*YA-81-1 7/8" thick-#C8AE-C, D40E-AA or BA	1
78	P - - S/C & A/C	8	302	C4AZ 8546-G	*YA-75 2 7/16" thick	1
	V (Versailles)					
78	V	8	302	C4AZ 8546-G	*YA-75 2 7/16" thick	1
	Y (Meteor)					
73/76	Y	8	351,400	C4AZ 8546-G	*YA-75-2 5/8" thick	1
73/75	Y (exc. P/C) - - S/C- "Before 6/30/75"	8	429,460	C9AZ 8546-A	1 1/4" thick	1
73/74 75/76	Y (P/C) Y (exc. P/C) - - S/C- "From 6/30/75"	8 8	429,460, 460 P/C 460	D1DZ 8546-A	*YA-44-2 3/16" thick	1 1
8548	TUBE or HOSE (WATER BY-PASS)					
75/	G,P - - with A/C	8	302	★ D4TE 8548-CA	Improvise-cut to fit from D1PZ 9324-B	AR
8550	SLINGER (WATER PUMP SHAFT)					
73/74	J	4	122 (2000)	★ D0RY 8550-A N.R.		1
8553	HUB (WATER PUMP PULLEY)					
73/74	J,L	4	122 (2000)	D0RY 8553-A		1
79	J,L	6	171 (2800)			1
76/78	J	4	140 (2300)	D5RY 8553-A		1

YEAR	MODEL/RESTRICTIONS	ENGINE CYL.	ENGINE C.I.D. (C.C.D.)	PART NUMBER	DESCRIPTION	QTY.
8553	HUB (WATER PUMP PULLEY) — Cont'd					
74/ 79	L,P J	4	140 (2300)	D4FZ 8553-A		1
73	P	6	200	B4A 8553-A		1
78/	J,P	6	200			1
74/	A,C,D,F,G,K,P,V,Y	8	302,351, 400			1
74/77	G,P	6	200	B9AE 8553-A		1
73	A,C,D,F,K,P,Y	6&8	250,302, 351,429, 460, 460 P/C	D2VY 8553-A		1
74/	A,C,D,F,G,K,P,Y	6&8	250,460, 460P/C			1
79	J	8	302	★ D9ZZ 8553-A	R/b E4ZZ 8553-AMR	1
8555	TUBE (WATER BY-PASS)-Also refer to group 8597					
73/	C,G,P	6	250	★ C5AZ 8555-A	Steel-2 1/2" long-5/8" O.D.	1
73/	A,C,D,F,K,Y	8	351C,M, 400	r/bC5AZ 8555-B	Use in block	1
73/	A,C,D,F,K,Y	8	429,460, 460 P/C		Cut to fit-(1) in pump and (1) in intake manifold	2
74/	J,L	4	140 (2300)			1
73/	A,Y	8	351C,M, 400	★ D90Z 8555-A r/bD90Z 8555-B	Steel-2 1/8" long-3/4" O.D.	1
73/	C,F,G,P,V	8	302, 351W	D00Z 8555-A	Steel-1 3/4" long-3/4" and 5/8" O.D.	2
73/	C,D,F,K,	8	351C,M, 400			1
79	D,F,K	8	351M,400	★ D90Z 8555-A r/bD90Z 8555-B	Steel 2 1/8" long x 3/4" O.D.	1
73/	J,L	6	All	D2RY 8555-A	*KM-897-rubber hose-lower rear water outlet connector to by-pass tube D2RY 8555-B	1
73/	J,L	6	All	D2RY 8555-B	Water pump by-pass	1
73	J	6	159 (2600)	★ D2RY 8555-C	Upper water outlet connector to shut off valve hose	1
74/	J	6	171 (2800)	8555	Upper-refer to group 18599	1
79	J	8	302	D9ZZ 8555-A	Steel 3" long x 5/8"	1
8564	SEAL (WATER PUMP)					
74	J,L	4	122 (2000)	★ D2RY 8564-A		1
74/	J,L,P	4	140 (2300)	D4FZ 8564-A		1
73/74	P	6	200	B2AZ 8564-D		1
75	G,P - - without A/C- "Before 4/12/75"	6	200			1
73	J	4	122 (2000)	B6TZ 8564-D		1
73/74	C,P	6	250			1
73/76	C,G,P "Before 3/15/76"	8	302			1
73/76	A,C,F,G,Y "Before 3/15/76"	8	351,400			1
73	A,C,D,F,K,Y	8	429,460			1
74/	A,C,D,F,K,Y	8	460	D4AZ 8564-A	Incl. 8517 seat-use with D4VY 8501-A	1
75/	G,J,P - - with A/C	6	200			1
75/	G,J,P - - without A/C- "From 4/12/75"	6	200			1
75/	G,P	6	250			1
76/	A,C,D,F,G,K,P,V,Y- "From 3/15/76"	8	302,351, 400			1

COPYRIGHT © 1986— FORD MOTOR COMPANY —DEARBORN, MICHIGAN

8A564 SWITCH (COOLANT TEMPERATURE CONTROL VACUUM)–Also refer to groups 9D473 and 12A091

To select the correct coolant temp. switch by knowing the identification number only:

- Check the switch, taken from the vehicle, for an identification part number.
- Refer to the Identification Chart below.
- Find the switch identification part number (sequenced numerically) and find the service part number in the adjacent column.

For example:

The service part number for switch identified D5AE-A2A, D7DE-A1A, D7DE-A2A, E1AE-J1A, E1AE-J2A is D5AZ 8A564-A.

- Refer to application for other forms of Identification.

IDENTIFICATION CHART

IDENTIFICATION	PART NUMBER	IDENTIFICATION	PART NUMBER
8A564 SWITCH (COOLANT TEMPERATURE CONTROL VACUUM)			
D4VE-AA	D4VY 8A564-B	E1AE-E1A	E1AZ 8A564-D
D4VE-B1A	D4VY 8A564-B	E1AE-E2A	E1AZ 8A564-D
D4VE-B2A	D4VY 8A564-B	E1AE-G1A	E1AZ 8A564-D
D5AE-A2A	D5AZ 8A564-A	E1AE-G2A	E1AZ 8A564-D
D50E-A2A	D50Z 8A564-A	E1AE-H2A	E1AZ 8A564-A
D5ZE-A2A	D5ZZ 8A564-A	E1AE-J1A	D5AZ 8A564-A
D7DE-A1A	D5AZ 8A564-A	E1AE-J2A	D5AZ 8A564-A
D7DE-A2A	D5AZ 8A564-A	E1BE-A1A	D5ZZ 8A564-A
D7LE-A1A	D5ZZ 8A564-A	E1BE-A2A	D5ZZ 8A564-A
D7LE-A2A	D5ZZ 8A564-A	E1DE-AA	E1AZ 8A564-D
D70E-A1A	D50Z 8A564-A	E1DE-B2A	E1AZ 8A564-C
D70E-A2A	D50Z 8A564-A	E1SE-AA	E1SZ 8A564-A
E1AE-AA	E1AZ 8A564-A	E1SE-B2A	E1SZ 8A564-A
E1AE-BA	E1AZ 8A564-B	E1ZE-AA	E1ZZ 8A564-A
E1AE-CA	E1AZ 8A564-C	E1ZE-C2A	E1ZZ 8A564-A
		E2BE-A2A	E1AZ 8A564-B

YEAR	MODEL/RESTRICTIONS	ENGINE CYL.	ENGINE C.I.D. (C.C.D.)	PART NUMBER	DESCRIPTION	QTY.
74/		All	All	D4VY 8A564-B	# Pink dye-84° temp.	AR
				D5ZZ 8A564-A	*DY-173-# Blue or Green dye-125° temp.	AR
				★ D50Z 8A564-A	*DY-183-# Black or Brown dye-95° temp.	AR
				r/b E1AZ 8A564-D (9/82)		AR
				D5AZ 8A564-A	*DY-174-# Purple or Yellow dye-160° temp.	AR
8A565 SHIELD (WATER OUTLET CONNECTION)						
77/	A,D,K	8	460, 460P/C	★ D7VY 8A565-A N.R.		1

YEAR	MODEL	C.I.D.	GASKET L O C. ✠	GASKET MOTOR CRAFT NO.	GASKET PART NUMBER	THERMOSTAT MOTOR CRAFT NO.	THERMOSTAT 0° TEMP.	THERMOSTAT PART NUMBER	CONNECTOR PART NUMBER
8575 THERMOSTAT (WATER)									

✠ Location-LF - - (lower front)-LR - - (lower rear)-U - - (upper)-UM - - (upper manual trans.)-UA - - (upper auto. trans.)

‡ Gasket has a non adhesive back $ Gasket has an adhesive back

4 CYLINDER

73	J	122		RG-33	‡ D1FZ 8255-A	RT-179	192	D5PZ 8575-E	D3FZ 8592-A
73/74	L	(2000)		RG-518	$ D4PZ 8255-J				
74	J	122		RG-33	‡ D1FZ 8255-A	RT-179	192	D5PZ 8575-E	★ D4RY 8592-A
		(2000)		RG-518	$ D4PZ 8255-J				Not replaced
74/78	J,L,P	140		RG-43	‡ D4FZ 8255-A	RT-179	192	D5PZ 8575-E	D4FZ 8592-A
	"Before 5/15/78"	(2300)		RG-521	$ D4PZ 8255-K				
78/	J,L,P	140		RG-43	‡ D4FZ 8255-A	RT-1023	192	★ D9FZ 8575-A	D8FZ 8592-A
	"From 5/15/78"	(2300)		RG-521	$ D4PZ 8255-K			r/b E3FZ 8575-A	

YEAR	MODEL	C.I.D.	GASKET			THERMOSTAT			CONNECTOR
			LOC. ✠	MOTOR CRAFT NO.	PART NUMBER	MOTOR CRAFT NO.	0° TEMP.	PART NUMBER	PART NUMBER
8575	THERMOSTAT (WATER) — Cont'd								
	✠ Location–LF - - (lower front)–LR - - (lower rear)–U - - (upper)–UM - - (upper manual trans.)–UA - - (upper auto. trans.)								
	‡ Gasket has a non adhesive back $ Gasket has an adhesive back								
	6 CYLINDER								
73	J	159 (2600)	LF	RG–39	‡ D2RY 8255–B	RT–252	192	D4ZZ 8575–A	D2RY 8592–B
			LF	RG–522	$ D4PZ 8255–L				
			LR	RG–40	D2RY 8255–C				D2RY 8592–C
			U	RG–38	D2RY 8255–A				D2RY 8592–A
74/	J,L	171 (2800)	LF	RG–39	‡ D2RY 8255–B	RT–252	192	D4ZZ 8575–A	D4ZZ 8592–C
			LF	RG–522	$ D4PZ 8255–L				
			LR	RG–40	D2RY 8255–C				D2RY 8592–C
74/78	J,L	171 (2800)	U	RG–38	D2RY 8255–A "Before 7/1/74"				D4ZZ 8592–B "Before 7/1/74"
			U	RG–47	D4RY 8255–A "From 7/1/74"				D6FZ 8592–A "From 7/1/74"
79	J,L	171 (2800)	U	RG–47	D4RY 8255–A				D9FZ 8592–A
73/78	G,J,P	200		RG–29	‡ C8PZ 8255–AC	RT–350	160	D5PZ 8575–A	C1DZ 8592–C
				RG–506	‡ D4PZ 8255–C				
						RT–351	180	D5PZ 8575–B	
						RT–357	190	D4PZ 8575–A	
79	J,P	200		RG–29	‡ C8PZ 8255–AC	RT–1025	192°	E1BZ 8575–A	C1DZ 8592–C
				RG–506	$ D4PZ 8255–C				
73/78	C,G,P	250		RG–29	‡ C8PZ 8255–AC	RT–350	160	D5PZ 8575–A	C9DZ 8592–A
				RG–506	$ D4PZ 8255–C				
						RT–351	180	D5PZ 8575–B	
						RT–357	190	D4PZ 8575–A	
79	G	250		RG–29	‡ C8PZ 8255–AC	RT–1030	192°	E1BZ 8575–A	C9DZ 8592–A
				RG–506	$ D4PZ 8255–C				
	8 CYLINDER								
73/78	C,F,G,P,V	302,351W		RG–30	‡ C9AZ 8255–A	RT–350	160	D5PZ 8575–A	C90Z 8592–A
				RG–514	$ D4PZ 8255–G				
						RT–351	180	D5PZ 8575–B	
						RT–357	190	D4PZ 8575–A	
73	A,C,F,Y	351C,400		RG–7	‡ C8SZ 8255–A	RT–139	192	D0AZ 8575–A	D1AZ 8592–A
				RG–530	$ E2PZ 8255–A				
						RT–310	180	D7PZ 8575–A	
74/76	A,C,F,Y	351C,M,400		RG–7	‡ C8SZ 8255–A	RT–139	192	D0AZ 8575–A	D5AZ 8592–A
				RG–530	$ E2PZ 8255–A				
						RT–310	180	D7PZ 8575–A	
77/78	A,D,F,K	351M, 400		RG–7	‡ C8SZ 8255–A	RT–139	192	D0AZ 8575–A	D7AZ 8592–A
				RG–530	$ E2PZ 8255–A				
						RT–310	180	D7PZ 8575–A	
79	A,D,F,G,P,V	302,351W		RG–30	‡ C9AZ 8255–A	RT–1021	197	D9AZ 8575–A	C90Z 8592–A
				RG–514	$ D4PZ 8255–G				
79	J	302		RG–30	‡ C9AZ 8255–A	RT–1021	197	D9AZ 8575–A	D5TZ 8592–A
				RG–514	$ D4PZ 8255–G				
73/76	A,C,D,F,K,Y	429,460		RG–7	‡ C8SZ 8255–A	RT–357	190	D4PZ 8575–A	C8SZ 8592–A
				RG–530	$ E2PZ 8255–A				
77/78	A,D,K	460		RG–7	‡ C8SZ 8255–A	RT–357	190	D4PZ 8575–A	D7VY 8592–A
				RG–530	$ E2PZ 8255–A				
79	D,K	400		RG–7	‡ C8SZ 8255–A	RT–1021	197	★ D90Z 8575–A	D7AZ 8592–A
	F	351M		RG–530	$ E2PZ 8255–A			r/b D0AZ 8575–A	

COPYRIGHT © 1986— FORD MOTOR COMPANY —DEARBORN, MICHIGAN

1973/79 LINCOLN-MERCURY CARS

YEAR	MODEL/RESTRICTIONS	ENGINE CYL.	ENGINE C.I.D. (C.C.D.)	PART NUMBER	DESCRIPTION	QTY.
8575	**THERMOSTAT (WATER) — Cont'd**					
73/74	J,L	4	122 (2000)	E602187-S82	(AB-17)-bolt (connector to block)-hex. hd.-M8 x 20 (Metric coarse)	2
74/	J,L,P	4	140 (2300)	N800025-S	(AB-171)-bolt (connector to cyl. hd.)-M8 x 18 (Metric coarse)	2
73/	J,L	6	All	20406-GS2	Bolt (connector to intake manifold)-M8 x 28 (Metric coarse)	3
73/	J,L	6	All	E600119-S71	Bolt (connector to front cover & block)-hex. hd.-M6 x 70 (Metric coarse)	3
73/	J,L	6	All	E600122-S72	(AB-12-G)-bolt (connector to front cover block)-hex. hd.-M6 x 90 (Metric coarse)	1
73/	C,G,P	6	200,250	★ 377388-S N/R	(BB-249-G)-bolt (connector to cyl. hd.)-hex. hd.-5/16"-18 x 1 1/4"	2
73/	C,F,G,P,V	8	302, 351W	357235-S	(BB-136)-bolt (connector to intake manifold)-hex. hd.-5/16"-18 x 7/8"	2
73/	A,C,D,F,K,Y	8	351C 400	372995-S13	(BB-545-AA)-screw and washer (connector to block)-hex. hd.-5/16"-18 x 3/4"	2
73/	A,C,D,F,K,Y	8	429,460, 460 P/C	★ 352464-S8 r/b58619-S(B-55-C)	(BB-139)-bolt (connector to intake manifold)-hex. hd.-5/16"-18 x 1 1/8"	2
74/	A,C,D,F,K,Y	8	460	384794-S	(WW-128-K)-stud & washer (water outlet connection)-1/4"-20 5/16"-18 x 1 3/4"	1
8590	**SEAL (THERMOSTAT)**					
73/74	J,L	4	122 (2000)	★ D4PZ 8590-A	*RTS-4	1
74/	J,L	6	171 (2800)	D4PZ 8590-B	*RTS-5	1
78	J,L,P	4	140 (2300)	D8FZ 8590-A	*RTS-7 Not used prior to 5/15/78-#"O" ring type with rib around O.D.	1
79/	J,L,P	4	140 (2300)	E0FZ 8590-A	*RT-8-#flat washer type with concave center	1
8591	**REPAIR KIT (WATER PUMP)**					
73/74	J	4	122 (2000)	★ D0RY 8591-A(2/80) Not replaced		1
8592	**CONNECTION (WATER OUTLET)-Refer to Group 8575**					
8593	**WASHER (THERMOSTAT GASKET)**					
73/74	J,L	4	122 (2000)	D1FZ 8593-A	Use to retain thermostat gasket	1
8597	**HOSE (WATER BY-PASS)-Also refer to group 8555**					
73/ 73/78	C,F,G,P,V,Y A	8	302,351W	D00Z 8597-B	*KM-640-rubber-3/4" I.D. x 1 5/32" O.D. and 5/8" I.D. x 1" O.D.-cut to fit	1 1
79	A	8	302	★ D9AZ 8597-A r/bD00Z 8597-B	*KM-1081 #D9AE-AA rubber I.D. 3/4" & 5/8"	1
79	J	8	302	★ D9ZZ 8597-B r/bD00Z 8597-B	*KM-1082 #D9ZE-AA rubber I.D. 3/4" & 5/8"	1
79	A	8	351W	★ D9AZ 8597-B r/bD00Z 8597-B	*KM-1083 #D9AE-BA rubber I.D. 3/4" & 5/8"	1
73/78	A,C,D,F,K,Y	8	429,460, 460P/C	C20Z 8597-D	Rubber-5/8" I.D. x 2 3/4" O.D.-cut to fit	1

1973/79 LINCOLN-MERCURY CARS

YEAR	MODEL/RESTRICTIONS	ENGINE CYL.	ENGINE C.I.D. (C.C.D.)	PART NUMBER	BLADES	DIAMETER (INCHES)	CTR. HOLE (INCHES)	DESCRIPTION	QTY.
8600	FAN BLADE ASSY.								
	A (Mercury)								
73/75	A (exc. P/C) - - S/C- "Before 6/30/75"	8	351,400, 429,460	D20Z 8600-A	4	18 1/2	5/8	#D20E-AB	1
76/	A (exc. P/C) - - S/C- "From 3/1/76"	8	351,400 302						1
75/76	A(exc. P/C) - - S/C "From 6/30/75 to 3/1/76"	8	351,400	D9AZ 8600-A	5	18 1/2	5/8	#D9AE-EA repls. D80E-AA, D7AE-AA, D2SE-AA	1
73/	A(exc. P/C) - - A/C or T/Tow	8	351,400						1
73/78	A(P/C)	8	351,400						1
75/78	A(exc. P/C) - - S/C or T/Tow	8	460						1
79	A(P/C) or A/C	8	All	D9MY 8600-A	7	18 1/2	2 3/8	#D9ME-AA,BA	1
73/77	A (exc. P/C) - - A/C	8	429,460	C6MY 8600-A	7	19 1/2	2 3/8	#C6ME-A,D0AE-C or D1AE-BA	1
78	A(exc. P/C) - - with A/C	8	460	D8VY 8600-A	7	19 1/2	2 3/8	#D8VE-AA,BA	1
73/75	A (P/C) "Before 1/13/75"	8	429,460, 460 P/C	C8AZ 8600-B	7	19 1/2	5/8	*YA-16-#C8AE-B or D30E-BA	1
75/78	A (P/C) "From 1/13/75"	8	460, 460 P/C	D3TZ 8600-B	7	19		#H-D4TA-BA,MA	1
	C (Montego)								
73	C (exc. P/C) - - S/C	6	250	D20Z 8600-A	4	18 1/2	5/8	#D20E-AB	1
73	C (exc. P/C) - - A/C	6	250	C8SZ 8600-B	5	17 1/2	5/8	*YA-17-#C8SE-D or D0ZE-B	1
73	C (P/C)	6	250						1
74	C	6	250	C60Z 8600-A	4	17 1/2	5/8		1
73	C - - dealer installed A/C	8	351C	D3DZ 8600-A	7	17 9/16	5/8	#D1DE-BA	1
73/76	C (exc. P/C or Taxi) - - S/C or X/C	8	302,351-2/B,400, 429	D20Z 8600-A	4	18 1/2	5/8	#D20E-AB	1
74/75	C (exc. P/C) - - without A/C- "Before 1/2/75"	8	460						1
73/75	C (exc. P/C or Taxi) - - A/C	8	302,351-2/B,400	D9AZ 8600-A	5	18 1/2	5/8	#D9AE-EA- repl. #D30E-AA, #D40E-AA	1
74	C (exc. P/C)	8	351-4/B						1
73/75	C (P/C or Taxi)	8	302,351, 400						1
75	C (exc. P/C) - - without A/C- "From 1/2/75"	8	460						1
76	C(exc. P/C or Taxi) - - A/C	8	351,400	D9AZ 8600-A	5	18 1/2	5/8	#D9AE-EA- replaces *YA-132 #D60E-AA, #D40E-AA	1
76	C(P/C or Taxi)	8	351,400						1
76	C - - X/C	8	460						1
73/76	C (exc. P/C) - - A/C without trailer towing pkg.	8	460	★ D0SZ 8600-A	7	19	2 3/8	#D0SE-A	1
75/76	C (exc. P/C) - - A/C with trailer towing pkg.	8	460	C6MY 8600-A	7	19 1/2	2 3/8	#C6ME-A,D0AE-C or D1AE-BA	1
73/75	C (P/C) "Before 1/2/75"	8	460, 460 P/C	C8AZ 8600-B	7	19 1/2	5/8	*YA-16-#C8AE-B or D30E-BA	1

COPYRIGHT © 1986— FORD MOTOR COMPANY —DEARBORN, MICHIGAN

1973/79 LINCOLN-MERCURY CARS

YEAR	MODEL/RESTRICTIONS	ENGINE CYL.	ENGINE C.I.D. (C.C.D.)	PART NUMBER	BLADES	DIAMETER (INCHES)	CTR. HOLE (INCHES)	DESCRIPTION	QTY.
8600	FAN BLADE ASSY. — Cont'd								
	C (Montego)								
75/76	C (P/C) "From 1/2/75 to 5/17/76"	8	460, 460 P/C	D50Z 8600-A	7	19 1/2		#D50E-BA	1
76	C(P/C) "From 5/17/76"	8	460, 460 P/C	D3TZ 8600-B	7	19		#H-D4TA-BA,MA	1
	D (Lincoln)								
73/75	D "Before 1/13/75"	8	460	★D0SZ 8600-A	7	19	2 3/8	#D0SE-A	1
75/77	D "From 1/13/75"	8	460	C6MY 8600-A	7	19 1/2	2 3/8	#C6ME-A,D0AE-C or D1AE-BA	1
78	D	8	460	D8VY 8600-A	7	19 1/2	2 3/8	#D8VE-AA,BA	1
77/	D	8	400	D9AZ 8600-A	5	18 1/2	5/8	#D9AE-EA replaces #D80E-AA, D7AE-AA	1
	F (Cougar)								
73	F - - S/C or X/C "Before 2/19/73"	8	351	C60Z 8600-A	4	17 1/2	5/8	#C6AE-E or C90E-A	1
73	F - - A/C	8	351	D9AZ 8600-A	5	18 1/2	5/8	#D9AE-EA	1
73/	F - - S/C,X/C "From 2/19/73"	8	351-2/B, 400	D20Z 8600-A	4	18 1/2	5/8	#D20E-AB	1
74/75	F - - S/C,X/C "Before 1/2/75"	8	460						1
77/	F - - S/C	8	302						1
74/75	F - - A/C	8	351-2/B, 400	D9AZ 8600-A	5	18 1/2	5/8	#D9AE-EA replaces #D60E-AA, #D40E-AA	1
75	F - - S/C,X/C "From 1/2/75"	8	460						1
74	F	8	351-4/B						1
78	F - - A/C "Before 5/1/78"	8	302,351, 400						1
78/79	F - - A/C "From 5/1/78"	8	302,351, 400	D9AZ 8600-A	5	18 1/2	5/8	#D9AE-EA replaces #D80E-AA	1
76/77	F - - A/C	8	351,400	D9AZ 8600-A	5	18 1/2	5/8	#D9AE-EA replaces #D60E-AA, #D40E-AA	1
76	F - - S/C	8	460						1
77	F - - A/C	8	302						1
74/76	F - - A/C without trailer towing pkg.	8	460	★D0SZ 8600-A	7	19	2 3/8	#D0SE-A	1
75/76	F - - A/C with trailer tow. pkg.	8	460	C6MY 8600-A	7	19 1/2	2 3/8	#C6ME-A,D0AE-C or D1AE-BA	1
	G (Monarch)								
75/77	G - - S/C	6	200	C60Z 8600-A	4	17 1/2	5/8	#C6AE-E,C90E-A	1
75/	G(54H,66H) - - S/C	6	250						1
76	G(66H) - - S/C "Before 5/3/76"	6	250	D6DZ 8600-A	7	18	2 3/8	*YA-130-#D6DE-AA-opt. w/C60Z 8600-A for this application	1
76/	G(66H) - - S/C "From 5/3/76"	6	250	★D6BZ 8600-A	2	17 1/2	5/8	#D6BE-AA,BA-opt. w/ C60Z 8600-A for this appl.	1
75	G - - A/C	6	200	C8SZ 8600-B	5	17 1/2	5/8	*YA-17-#C8SE-D, D0ZE-B	1
75	G(54H,66H) - - A/C	6	250						1
76	G(54H,66H) - - A/C "Before 6/7/76"	6	250	D6DZ 8600-B	5	18	5/8	*YA-131-#D6DE-BA	1
76	G(54H,66H) - - A/C "From 6/7/76"	6	250	D6DZ 8600-C	7	17 1/2	2 3/8	#D6DE-AA & clutch #C9SE 8A616-B refer Recall Camp 315	1
76	G(54K,66K) - - S/C and factory A/C "From 5/3/76"	6	250					replaces Flex fan #D8DE-AA, D6ZE-AA or D7DE-B2A	1

YEAR	MODEL/RESTRICTIONS	ENGINE CYL.	ENGINE C.I.D. (C.C.D.)	PART NUMBER	BLADES	DIAMETER (INCHES)	CTR. HOLE (INCHES)	DESCRIPTION	QTY.
8600	FAN BLADE ASSY. — Cont'd								
	G (Monarch)								
75	G(54K,66K) - - S/C & A/C	6&8	250,302	C8SZ 8600-C	7	18	2 3/8	#C8SE-C	1
75	G(54K,66K) - - A/C	8	351						1
76	G(54K,66K) - -S/C & factory A/C- "Before 5/3/76"	6	250	D6DZ 8600-A	7	18	2 3/8	*YA-130 - #D6DE-AA	1
76	G(54K,66K) - - S/C and A/C- "Before 7/1/76"	8	302						1
76	G(54K,66K) - - A/C- "Before 7/1/76	8	351						1
77	G(54H,66H) - - A/C	6	250	D6DZ 8600-D	7	17 1/2	5/8	*YA-159-#D9PE-AA - - Refer Recall Camp 315 replaces #D8DE-AA D6ZE-AA & D7DE-B2A use with Spacer D6DZ 8546-A-*YA-129	1
77	G(54K,66K) - - S/C and factory A/C	6	250						1
78/79	G - -S/C and Factory A/C	6	250	D6DZ 8600-D	7	17 1/2	5/8"	*YA-159 #D9PE-AA replaces #D8DE-AA	1
76	G(54K,66K) - - dealer installed A/C	6	250	D8BZ 8600-C	5	18	5/8	*YA-131-#D6DE-BA	1
75/	G(54H,66H) - - S/C	8	302,351	D2OZ 8600-A	4	18 1/2	5/8	#D2OE-AB repls. 2 blade #D7DE-AA	1
75/78	G(54H,66H) - - A/C- "Before 5/1/78"	8	302,351	D9AZ 8600-A	5	18 1/2	5/8	#D9AE-EA repls. #D4OE-AA	1
75/76	G(54K,66K) - - S/C- "Before 7/1/76"	8	351						1
76/78	G(54K,66K) - - S/C & A/C- "From 7/1/76 to 11/7/77"	8	302,351	D9AZ 8600-A	5	18 1/2	5/8	#D9AE-EA repls. #D4OE-AA opt. w/D2OZ-A for this appl.	1
76/78	G(54H,66H) - - S/C "Before 7/1/76 to 5/1/78"	8	302						1
78/	G(54H,66H) - - A/C "From 5/1/78" G(54K,66K) - - S/C & A/C	8	302	D9AZ 8600-A	5	18 1/2	5/8	#D9AE-EA replaces #D8OE-AA	1
	J (Capri)								
73/74	J - - without A/C	4	122 (2000)	★D3RY 8600-A				#72GB-CA	1
73	J "Before 4/1/73"	6	159 (2600)	★D2RY 8600-B Not replaced	6	13 25/32	29/32	#70TF-BA,72GB-EA -repl. 7 blade fan	1
73	J "From 4/1/73"	6	159 (2600)	D3RY 8600-B	8	14 3/32	59/64	#73EB 8600-AA	1
73/74	J - - dealer installed A/C	4,6	122,159	C9RZ 8600-A	6	14 5/16	5/8		1
74	J - - without A/C	6	171 (2800)	D4RY 8600-A	8	14 1/64	3 3/8	#74EB 8600-AA	1
74	J - - integral A/C with Fan clutch								1
74	J - - integral A/C without fan clutch	4,6	122,171	★D4RY 8600-B	8	15 3/64	15/16	#74EB 8600-BA	1
76	J "Before 8/30/76"	4&6	All	D5RY 8600-A	8	15 63/64	3 31/64	#75EB-BA,CA	1
76/78	J "From 8/30/76"	4&6	All	D6RY 8600-A	7	16	5/8	#77EB-AA	1
74/	J - - hang-on A/C "Before 6/7/76"	6	171 (2800)	D4ZZ 8600-A	4	16	5/8	*YA-113-#D4ZE-AA	1
79	J - - S/C	4,6	140,171						1
79	J - - A/C w/T/C	4	140 (2300)	D9ZZ 8600-C	5	16 1/2	5/8	*YA-154 #D9ZE-JB	1
79	J - - A/C without T/C	4	140 (2300)	D8FZ 8600-A	5	16 1/2	5/8	*YA-148 # D8EE-AA	1
79	J - - A/C	6	171 (2800)	D8BZ 8600-D	4	16 3/4	5/8	#D8BE-EA	1

COPYRIGHT © 1986— FORD MOTOR COMPANY —DEARBORN, MICHIGAN

1973/79 LINCOLN-MERCURY CARS

8600 FAN BLADE ASSY. — Cont'd

J (Capri)

YEAR	MODEL/RESTRICTIONS	ENGINE CYL.	ENGINE C.I.D. (C.C.D.)	PART NUMBER	BLADES	DIAMETER (INCHES)	CTR. HOLE (INCHES)	DESCRIPTION	QTY.
79	J – – S/C or A/C	6	200	D8BZ 8600-D	4	16 3/4	5/8	#D8BE-EA	1
79	J – – S/C or A/C	8	302	D9ZZ 8600-E	5	18	5/8	*YA-162 #D9ZE-MA replaces #D9ZE-DC	1

K (Mark IV or V)

YEAR	MODEL/RESTRICTIONS	CYL.	C.I.D. (C.C.D.)	PART NUMBER	BLADES	DIAMETER (INCHES)	CTR. HOLE (INCHES)	DESCRIPTION	QTY.
77/	K	8	400	D9AZ 8600-A	5	18 1/2	5/8	#D9AE-EA replaces #D80E-AA, D7AE-AA	1
73/76	K	8	460	★D0SZ 8600-A	7	19	2 3/8	#D0SE-A	1
77	K	8	460	C6MY 8600-A	7	19 1/2	2 3/8	#C6ME-A,D0AE-C or D1AE-BA	1
78	K	8	460	D8VY 8600-A	7	19 1/2	2 3/8	#D8VE-AA	1

L (Bobcat)

YEAR	MODEL/RESTRICTIONS	CYL.	C.I.D. (C.C.D.)	PART NUMBER	BLADES	DIAMETER (INCHES)	CTR. HOLE (INCHES)	DESCRIPTION	QTY.
74	L – – S/C or integral A/C	4	122 (2000)	D4ZZ 8600-A	4	16	5/8	*YA-113 #D4ZE-AA	1
	L – – Hang-on A/C	4	122 (2000)	C9RZ 8600-A	6	14 5/16	5/8		1
74/	L – – S/C w/o Rallye pkg.	4&6	140,171 (2300) (2800)	D4ZZ 8600-A	4	16	5/8	*YA-113 #D4ZE-AA opt. w/D6FZ 8600-A For this application	1
76	L – – S/C	4	140 (2300)	D6FZ 8600-A	2	16	5/8	#D6EE-AA-opt with D6ZZ 8600-A For this application	1
74/78	L – – Integral A/C or Rallye pack	4	140 (2300)	D8FZ 8600-A	5	16 1/2	5/8	*YA-148-#D8EE-AA replaces #D42E-AA	1
74/	L – – Hang-on A/C	4	140 (2300)	D4ZZ 8600-B	5	16 1/2	5/8	#D4ZE-BA	1
74/77	L – – A/C or Rallye pkg. – "Before 2/1/77"	6	171 (2800)						1
78	L – – dealer installed A/C	6	171 (2800)						1
77/	L – – A/C or Rallye pkg. – "From 2/1/77"	6	171 (2800)	D8BZ 8600-D	5	16 3/4	5/8	#D8BE-EA	1

P (Comet or Zephyr)

YEAR	MODEL/RESTRICTIONS	CYL.	C.I.D. (C.C.D.)	PART NUMBER	BLADES	DIAMETER (INCHES)	CTR. HOLE (INCHES)	DESCRIPTION	QTY.
78/	P – – S/C	4	140 (2300)	D4ZZ 8600-A	4	16	5/8	*YA-113-#D4ZE-AA	1
78/	P – – A/C	4	140 (2300)	D8FZ 8600-A	5	16 1/2	5/8	*YA-148-#D8EE-AA replaces #D42E-AA	1
73	P – – S/C	6	200	C60Z 8600-D	4	17 1/8	5/8		1
73	P – – S/C	6	250	C60Z 8600-A	4	17 1/2	5/8	#C6AE-E or C90E-A	1
74/77	P – – S/C	6	200,250						1
77	P – – S/C	8	302						1
76/77	P – – S/C	6	200	★D6BZ 8600-A	2	17 1/2	5/8	#D6BE-AA, BA-opt. with C60Z 8600-A for this application	1

YEAR	MODEL/RESTRICTIONS	ENGINE CYL.	ENGINE C.I.D. (C.C.D.)	PART NUMBER	BLADES	DIAMETER (INCHES)	CTR. HOLE (INCHES)	DESCRIPTION	QTY.
8600	FAN BLADE ASSY. — Cont'd								
	P (Comet or Zephyr)								
73/75	P - - A/C	6	200	C8SZ 8600-B	5	17 1/2	5/8	*YA-17-#C8SE-D or D0ZE-B	1
73/75	P - - A/C "Before 11/1/74"	6	250						1
75/76	P - - S/C "From 10/21/74"	8	302						1
75	P - - A/C "From 11/1/74"	6	250	★ D5ZZ 8600-A	7	17 1/2			1
76/77	P - - A/C	6	200,250	D8BZ 8600-C	5	18	5/8	#D8BE-CA,FA,FB repls. *YA-131-#D6DE-BA	
73/75	P - - S/C "Before 10/21/74"	8	302	C90Z 8600-B	4	17 9/16	5/8	#C8SE-A	1
78/	P - - A/C	6	200	D8FZ 8600-A	5	16 1/2	5/8	*YA-148-#D8EE-AA	1
78	P - - S/C	6	200					replaces #D4ZE-AA	1
79	P - - S/C	6	200	D8BZ 8600-D	4	16 3/4	5/8	#D8BE-EA	1
73/76	P - - A/C	8	302	D3DZ 8600-A	7	17 9/16	5/8	#D1DE-BA	1
77	P - - A/C	8	302	D6BZ 8600-B	7	17 1/2	5/8	*YA-157 #D7DE-B2A replaces D6ZE-AA	1
78/	P(exc. P/C) - - S/C	8	302	D8BZ 8600-A	2	18	5/8	#D8BE-AA	1
78/	P - - A/C	8	302	D8BZ 8600-C	5	18	5/8	#D8BE-CA,FA,FB	1
78/	P(P/C)	8	302						1
	V (Versailles)								
77/	V	8	All	C8SZ 8600-C	7	18	2 3/8	#C8SE-C	1
	Y (Meteor)								
73/75	Y (exc. P/C) - - S/C- "Before 6/30/75"	8	351,400, 429,460	D20Z 8600-A	4	18 1/2	5/8	#D20E-AB	1
76	Y (exc. P/C) - - S/C "From 3/1/76"	8	351,400						1
73/76	Y (exc. P/C) - - A/C	8	351,400	D9AZ 8600-A	5	18 1/2	5/8	#D9AE-EA-repls. D7AE-AA, D2SE-AA, D50E-AA	1
75/76	Y (exc. P/C) - - S/C- "From 6/30/75 to 3/1/76"	8	351,400						1
73/76	Y (P/C)	8	351,400						
75/76	Y (exc. P/C) - - S/C "From 6/30/75"	8	460						1
									1
73/76	Y (exc. P/C) - - A/C	8	429,460	C6MY 8600-A	7	19 1/2	2 3/8	#C6ME-A,D0AE-C or D1AE-BA	1
73/75	Y (P/C) "Before 1/13/75"	8	429,460, 460P/C	C8AZ 8600-B	7	19 1/2	5/8	*YA-16-#C8AE-B or D30E-BA	1
75/76	Y(P/C) "From 1/13/75"	8	460, 460 P/C	D3TZ 8600-B	7	19		#H	1

YEAR	MODEL/RESTRICTIONS	ENGINE CYL.	ENGINE C.I.D. (C.C.D.)	PART NUMBER	DESCRIPTION	QTY.
8600	FAN BLADE ASSY. — Cont'd					
74	L - - S/C	4	All	N800086-S51	(AB-118-F)-bolt (fan, spacer and pulley to pump)-hex. head-M8 x 50 (Metric coarse)	4
74/	L,P - - A/C	4	140	N800085-S51	(AB-118-G)-bolt (fan, spacer and pulley	4
75/	L,P - - S/C		(2300)		to pump)-hex.head-M8 x 55(Metric coarse)	
73/	J	4	All	E600214-S72	Bolt (fan, spacer and pulley to pump)- hex. head-M8 x 45 (metric coarse)	4
73	J	6	All	E602187-S82	(AB-17)-bolt (fan to pump)-hex. head- M8 x 20 (Metric coarse)	4
74/76	J	6	All	E601212-S72	(AB-36-K)Bolt (Fan & spacer to pump)-hex hd. M8 x 35 (metric coarse)	4
77	J	6	All	E601219-S72	(AB-20-E)bolt (fan & spacer to pump)-hex hd. M8, x 70 (metric coarse)	4
73/	J	4&6	All	★ E830034-S71 N/R	Washer (fan to pump) (Metric) (12/78)	4
75/	L	6	171 (2800)	N800122-S51	(AB-160-G)-bolt (fan, spacer and pulley to pump)-hex. head-M8 x 80 (Metric coarse)	4
73/	All	All	All	34806-S7	(X-64)-lockwasher (fan to pump)-5/16"	AR

COPYRIGHT © 1986— FORD MOTOR COMPANY —DEARBORN, MICHIGAN

1973/79 LINCOLN-MERCURY CARS

YEAR	MODEL/RESTRICTIONS	ENGINE CYL.	ENGINE C.I.D. (C.C.D.)	PART NUMBER	DESCRIPTION	QTY.
8600	**FAN BLADE ASSY. — Cont'd**					
73/	C,P - - S/C and X/C	6&8	200,302, 351,400	300891-S2	(B-166-A)-bolt (fan and spacer to pulley)- hex. head-5/16"-24 x 3"	4
73/	A,Y - - S/C	8	351			4
73/	C,P - - S/C	6	250			4
73/	P - - A/C	6 & 8	200,302	45539-S7	(B-167)-bolt (fan and spacer to pulley)- hex. head-5/16"-24 x 3 1/4"	4
73/	A(P/C),C(P/C),Y(P/C)	8	429, 460P/C			4
73/	A,C,F,Y - - A/C	8	302,351, 400	★ 377888-S N/R(12/78)	(BB-211-F)-bolt (fan and spacer to pulley)- hex. head-5/16"-24 x 3 5/8"	4
73/	C,P - - A/C	6	250			4
73/	A,F,Y - - S/C	8	351-4/B 400			4
73/	F,P - - S/C	8	302, 351-2/B	379031-S8	(BB-211-B)-bolt (fan and spacer to pulley) hex. head-5/16"-24 x 2 1/8"	4
73/	A,C,Y - - S/C and X/C	8	429			4
73/	A,C,D,K,Y - - A/C	8	429,460- exc. P/C	377937-S	(BB-210-B)-bolt (fan clutch to pulley)- hex. head-5/16"-24 x 1"	4
73/	A,C,D,K,Y - - A/C	8	429,460- exc. P/C	20326-S7	(B-49)-bolt (fan to fan clutch)-hex. head- 5/16"-18 x 5/8"	4
75	A,C,F,G,Y	8	302,351, 400	300903-S	(B-166-AH)-bolt (fan and spacer to pulley)- hex. hd.-5/16"-24 x 3 1/2"	4
8A611	**GUARD (FAN)**					
73	C	6	250	D30Z 8A611-A		1
75/	G,V	6&8	All	D5DZ 8A611-A		1
77/	L	4	140 (2300)	D7FZ 8A611-A		1
78/	P	4	140 (2300)	D8BZ 8A611-A		1
79	J - - S/C	4	140 (2300)			1
78/	P - - S/C "Before 6/4/79"	6	200	D8BZ 8A611-B		1
79	J - - with A/C	6	171 (2800)			1
79/	J - - S/C	6	200	E0ZZ 8A611-A		1
79	P - - S/C "From 6/4/79"	6	200	E1DZ 8A611-A		1
73	C	6	250	55914-S36	(U-254-F)-bolt (fan guard to radiator support)-1/4"-14 x 3/4"	2
8A613	**SPACER (IDLER PULLEY)**					
73/	C,F,G,P	8	302,351	D0AZ 8A613-A	29/64" I.D. x 7/8" O.D. x 1/2" thick- use w/adjustable idler pulley	1
73/74	J - - w/A/C	4	122 (2000)	★ C9RZ 8A613-A Not replaced		1
8A616	**CLUTCH ASSY. (FAN)**					
76/	J	4	140 (2300)	D5RY 8A616-A	*YB-177-#75EB-AA	1
74	J	6	171 (2800)			1
76/	J	6	171 (2800)	D5RY 8A616-B	*YB-178-#75EB-BA	1
75/	A(P/C) ,Y(P/C)	8	460, 460 P/C	D5AZ 8A616-A	*YB-188-#D5AE-AA	1
73/76	C (exc. P/C),F - - A/C or trailer towing pkg.	8	429,460	C8SZ 8A616-B	*YB-98-#C9SE-B,D3LE-AA, D6DE-CA	1
76	G - - A/C	6	250			1
76	G - - S/C or A/C	6	250		for vehicles reworked on camp #315-use with fan #D6DE-AA	
73/78	K - - A/C or trailer towing pkg.	8	460			1
75/78	D "From 1/13/75"	8	460			1

YEAR	MODEL/RESTRICTIONS	ENGINE CYL.	ENGINE C.I.D. (C.C.D.)	PART NUMBER	DESCRIPTION	QTY.
8A616	CLUTCH ASSY. (FAN) — Cont'd					
73/78 73/75 75	A (exc. P/C),Y(exc. P/C) - - A/C D "Before 1/13/75" G(54K,66K) - - A/C- "Before 5/15/75"	8 8 6	429,460 460 250	C9AZ 8A616-B	*YB-99-#D1AE-AA	1 1 1
76	C(P/C)	8	460, 460 P/C	★ D60Z 8A616-A N.R.	*YB-196 - #D60E-AA	1
75	G(54K,66K) - - A/C- "From 5/15/75"	6	250	★ D5DZ 8A616-D N.R.	*YB-191-#D5DE-DA	1
75	G(54K,66K) - - S/C- "Before 5/15/75"	6	250	★ D5DZ 8A616-A N.R.	*YB-174-#D5DE-AA	1
75	G(54K,66K) - - S/C- "From 5/15/75"	6	250	★ D5DZ 8A616-C N.R.	*YB-190-#D5DE-CA	1
76	G - - S/C	6	250	★ D6DZ 8A616-A	*YB-189-#D6DE-AA,BA-N.R.	1
75/76 75	G(54K,66K) - - S/C G(54K,66K) - - S/C	8 8	302 351	★ D5DZ 8A616-B /bE0WY 3A616-A(9/82)	*YB-175-#D5DE-BA	1 1
75/76 77/ 79	G(54K,66K) - - A/C V A - - A/C, P/C or trailer tow	8 8 8	302,351 302,351 302,351W	E0MY 8A616-A	*YB-229-E0ME-AA repls. #C7AE-C or C9AE-D	1 1 1
73/	A,C (exc. P/C),D,K,Y - - A/C	8	429,460, 460 P/C	20326-S7	(B-49)-bolt (fan to fan clutch)-hex. head-5/16"-18 x 5/8"	4
				377937-S	(BB-210-B)-bolt (fan clutch to pulley)-hex. head-5/16"-24 x 1"	4
76/	J	All	All	E804483-S72	(AB-120-G) Screw (Spacer, Fan & Fan clutch to Spacer)-allen head-M10X20 (Metric coarse)	1
76/	J	All	All	E600111-S72	(AB-26-A) Bolt (Fan clutch to Fan)-Hex. hd.-M6X18 (Metric coarse)	4

COPYRIGHT © 1986 — FORD MOTOR COMPANY — DEARBORN, MICHIGAN

8620 BELT (DRIVE)

DRIVE BELTS

HOW TO IDENTIFY FAN BELTS

1. By size and length–the Motorcraft Part Number allows you to determine belt size as explained below.

FIRST LETTER PREFIX: J–Designates the V–belt line in all cases

SECOND LETTER PREFIX:

Designates	Top width of belt	Designates	Top width of belt
A	13/32", 27/64" or 3/8"	G	7/8"
B	15/32"	H	1/4"
C	1/2"	M	19/32"
D	5/8"	P	23/32"
E	11/16"	R	17/32"
F	3/4"	K6	27/32" "V" rib

NUMBERS (There must always be a three digit numeral)
First two digits designate the amount of whole inches of outside circumference of the belt.
Third digit designates the remaining fraction of an inch (expressed in eighths of an inch) of outside circumference of the belt

LETTER SUFFIXES: Suffixes will designate special types of V–belts–
C–For cog belts L–For laminated belts

EXAMPLES *JB–493–L–Laminated belt with 15/32" top width and 49 3/8" outside circumference.
*JF–535–C–Cog belt with 3/4" top width and 53 5/8" outside circumference.

2. By identification marking–refer to following chart
3. By year, model and application–refer to listing beginning on page 5 of this section

BELT IDENTIFICATION MARKING TO SERVICE PART NUMBER GUIDE

The purpose of this guide is to help find service part numbers for fan belts. Belts are identified with a marking on the outer (wide) surface of the belt. Although the identification marking and service part number may be the same in some instances, this is not generally true. Find the belt marking in the "Belt Identification Marking" column, then order the number listed in the "Service Part Number" column. Following the guide chart, belt part numbers are listed by model year to help find service part numbers when the belt marking is not known.

BELT IDENTIFICATION CHART

8620 BELT (DRIVE)

NOTE: Any production belt with numerals in the suffix such as A1A,A2A ect. are the same as the suffix AA.
EXAMPLES: D2VE 8620–L1A,L2A,L3A,L4A belts are the same as D2VE 8620–LA

IDENTIFICATION	PART NUMBER	IDENTIFICATION	PART NUMBER
*JA 303	D5PZ 8620–L	*JB 390	C9PZ 8620–M
*JA 333–L	D5PZ 8620–M	*JB 394	C9PZ 8620–N
*JA 426–C	D9PZ 8620–BA	*JB 401	C9PZ 8620–P
*JA 435	D5PZ 8620–P	*JB 403	★ D4RY 8620–A
*JA 450–L	D5PZ 8620–R		r/bC9PZ 8620–S
*JA 533–L	★ D5PZ 8620–S	*JB 406–C	D7PZ 8620–D
	r/bE1PZ 8620–D	*JB 412	C9PZ 8620–S
*JA 542–C	D9PZ 8620–D	*JB 414–L	C9PZ 8620–GM
*JA 543–L	D5PZ 8620–K	*JB 420	C9PZ 8620–T
*JA 552–L	D8PZ 8620–J	*JB 423	C9PZ 8620–V
*JA 585–C	D8PZ 8620–L	*JB 430–LA	C9PZ 8620–GK
*JB 315	C9PZ 8620–B	*JB 432	D1PZ 8620–A
*JB 331	D4RY 8620–B	*JB 436–L	C9PZ 8620–GJ
*JB 332	C9PZ 8620–C	*JB 441	C9PZ 8620–AA
*JB 336	D0AZ 8620–G	*JB 443	C9PZ 8620–AB
*JB 341	C9PZ 8620–D	*JB 446	C9PZ 8620–AC
*JB 346	C9PZ 8620–E	*JB 451	C9PZ 8620–AD
*JB 351	★ D4RY 8620–C(N/R)	*JB 455	D1PZ 8620–B
*JB 354	C9PZ 8620–F	*JB 456	C9PZ 8620–AE
*JB 361	D1RY 8620–C	*JB 461–L	C9PZ 8620–FY
*JB 363	D8PZ 8620–K	*JB 464	C9PZ 8620–AG
*JB 363–A	D8PZ 8620–K	*JB 470	C9PZ 8620–AH
*JB 366–L	C9PZ 8620–GY	*JB 482	C9PZ 8620–AM
*JB 382	D6PZ 8620–H	*JB 486–LA	C9PZ 8620–GL
*JB 382–C	D6PZ 8620–H	*JB 493–L	C9PZ 8620–FU

BELT IDENTIFICATION CHART

8620 BELT (DRIVE) — Cont'd

NOTE: Any production belt with numerals in the suffix such as A1A,A2A ect. are the same as the suffix AA.
EXAMPLES: D2VE 8620-L1A,L2A,L3A,L4A belts are the same as D2VE 8620-LA

IDENTIFICATION	PART NUMBER	IDENTIFICATION	PART NUMBER
*JB 496-A	D5PZ 8620-E	*JH 356	D4PZ 8620-C
*JB 501	C9PZ 8620-AK	*JH 361	D00Z 8620-A
*JB 505	C9PZ 8620-AN	*JH 367	D4PZ 8620-F
*JB 513	C9PZ 8620-AT	*JH 371	D5PZ 8620-A
*JB 516	C9PZ 8620-AP	*JH 386	D7PZ 8620-G
*JB 522-A	D7PZ 8620-A	*JH 391	D4PZ 8620-A
*JB 535	E1PZ 8620-D	*JH 396	D4PZ 8620-E
*JB 535-A	E1PZ 8620-D	*JH 411	D7PZ 8620-E
*JB 542-A	D6PZ 8620-F	*JJ 311	C9PZ 8620-E
*JB 546	C9PZ 8620-AU	*JK6 496	D9PZ 8620-H
*JB 551-L	C9PZ 8620-HC	*JK6 502	D9PZ 8620-G
*JB 556-A	D5PZ 8620-H	*JK6 506	D9PZ 8620-F
*JB 571-B	D6PZ 8620-E	*JK6 512	D9PZ 8620-J
*JB 576-C	D8PZ 8620-S	*JK6 596	E0VY 8620-B
*JB 581-A	D7PZ 8620-J	*JK6 842	D9PZ 8620-T
*JB 583-C	D8PZ 8620-R	*JK6 942	D9PZ 8620-K
*JC 373	C9PZ 8620-BH	C8SE 8620-A	D1AZ 8620-A (JC-550)
*JC 416	★ C9PZ 8620-BR	D0HA 8620-N	D8PZ 8620-N (JC-626-LA)
*JC 420	★ C9PZ 8620-FS	D2AE 8620-BA	C9PZ 8620-GJ (JB-436-L)
	r/bC9PZ 8620-BR	D2AE 8620-VA	C9PZ 8620-CV (JC-564)
*JC 423	C9PZ 8620-BS	D2AE 8620-YA	C9PZ 8620-GC (JC-552-L)
*JC 455	C9PZ 8620-CA	D2AE 8620-ZA	C9PZ 8620-CR (JC-537)
*JC 465	C9PZ 8620-CC	D2AE 8620-ACA	C9PZ 8620-CC (JC-465)
*JC 477	C9PZ 8620-CF	D2AE 8620-BCA	C9PZ 8620-GJ (JB-436-L)
*JC 483	C9PZ 8620-CD	D2AE 8620-BNA	C9PZ 8620-GC (JC-552-L)
*JC 490	C9PZ 8620-CG	D2AE 8620-BRA	D0AZ 8620-E (JC-527-L)
*JC 492	D4RY 8620-E	D2AE 8620-BSA	C9PZ 8620-CM (JC-524)
*JC 495-L	C9PZ 8620-CH	D2AE 8620-BTA	D0VZ 8620-B (JC-517)
*JC 501-L	C9PZ 8620-GD	D2AE 8620-BUA	C9PZ 8620-CK (JC-504)
*JC 504	C9PZ 8620-CK	D2AE 8620-CFA	C9PZ 8620-FM (JB-475)
*JC 507	D0TZ 8620-B	D2AE 8620-CLA	C9PZ 8620-AB (JB-443)
*JC 514	D9PZ 8620-N	D2AE 8620-CRA	C9PZ 8620-M (JB-390)
*JC 514-A	D9PZ 8670-N	D2AE 8620-CSA	C9PZ 8620-P (JB-401)
*JC 517	D9PZ 8620-U	D2AE 8620-CUA	C9PZ 8620-GM (JB-414-L)
*JC 517-A	D9PZ 8620-U	D2AE 8620-CYA	C9PZ 8620-V (JB-423)
*JC 524	C9PZ 8620-CM	D2AE 8620-CZA	C9PZ 8620-V (JB-423)
*JC 527-L	D0AZ 8620-E	D2AE 8620-DEA	C9PZ 8620-DG (JC-624)
*JC 534	C9PZ 8620-CP	D2DE 8620-CA	C9PZ 8620-GM (JB-414-L)
*JC 537	C9PZ 8620-CR	D2DE 8620-HA	C9PZ 8620-FY (JB-461-L)
*JC 544	C9PZ 8620-CS	D2DE 8620-KA	C9PZ 8620-FU (JB-493-L)
*JC 550	D1AZ 8620-A	D2DE 8620-LA	C9PZ 8620-FU (JB-493-L)
*JC 552-L	C9PZ 8620-GC	D2DE 8620-NA	C9PZ 8620-E (JB-346)
*JC 563	C3AZ 8620-F	D2DE 8620-TA	C9PZ 8620-K (JB-382)
*JC 564	C9PZ 8620-CV	D20E 8620-ABA	D00Z 8620-A (JH-361)
*JC 574	C9PZ 8620-CY	D20E 8620-ACA	C9PZ 8620-CK (JC-504)
*JC 594	C9PZ 8620-DB	D20E 8620-AGA	C9PZ 8620-CM (JC-524)
*JC 600	C9PZ 8620-DC	D20E 8620-AHA	D0TZ 8620-B (JC-507)
*JC 604	C9PZ 8620-GT	D20E 8620-AMA	C9PZ 8620-AL (JB-480)
*JC 616	C9PZ 8620-DF	D20E 8620-ASA	C9PZ 8620-F (JB-354)
*JC 624	C9PZ 8620-DG	D20E 8620-AVA	C9PZ 8620-GJ (JB-436-L)
*JC 626-LA	D8PZ 8620-N	D2SE 8620-DA	C9PZ 8620-GC (JC-552-L)
*JH 299	D6PZ 8620-B	D2TE 8620-BA	C9PZ 8620-DC (JC-600)
*JH 300	D6PZ 8620-J	D2TE 8620-AGA	C9PZ 8620-CC (JC-465)
*JH 311	D7PZ 8620-F	D2TE 8620-ALA	C9PZ 8620-CF (JC-477)
*JH 321	D4PZ 8620-D	D2TE 8620-AMA	C9PZ 8620-CF (JC-477)
*JH 325	D8PZ 8620-P	D2TE 8620-BEA	C9PZ 8620-DB (JC-594)
*JH 331	D4PZ 8620-B	D2TE 8620-BFA	C9PZ 8620-CS (JC-544)
*JH 335	D7PZ 8620-H	D2TE 8620-BGA	D0TZ 8620-B (JC-507)
*JH 341	D9PZ 8620-R	D2TE 8620-BJA	C9PZ 8620-GD (JC-501-L)
*JH 346	D4PZ 8620-G	D2TE 8620-BVA	C9PZ 8620-AN (JB-505)
*JH 351	D4PZ 8620-H	D2TE 8620-BYA	C9PZ 8620-AC (JB-446)

COPYRIGHT © 1986— FORD MOTOR COMPANY —DEARBORN, MICHIGAN

BELT IDENTIFICATION CHART

8620 BELT (DRIVE) — Cont'd

NOTE: Any production belt with numerals in the suffix such as A1A,A2A ect. are the same as the suffix AA.
EXAMPLES: D2VE 8620-L1A,L2A,L3A,L4A belts are the same as D2VE 8620-LA

IDENTIFICATION	PART NUMBER		IDENTIFICATION	PART NUMBER		IDENTIFICATION	PART NUMBER	
D2TE	8620-BZA		C9PZ	8620-AE	(JB-456)	D7EE	8620-AA	
D2TE	8620-CFA		C9PZ	8620-F	(JB-354)	D8AE	8620-AA	
D2TE	8620-CKA		C9PZ	8620-S	(JB-412)	D8AE	8620-BA	
D2TE	8620-CLA		C9PZ	8620-S	(JB-412)	D8AE	8620-CA	
D2TE	8620-CMA		C9PZ	8620-T	(JB-420)	D8BE	8620-AA	
D2TE	8620-CNA		D1PZ	8620-A	(JB-432)	D8DE	8620-BA	
D2VE	8620-KA		C3AZ	8620-F	(JC-563)	D8DE	8620-BB	
D2VE	8620-LA		C9PZ	8620-CM	(JC-524)	D8DE	8620-CA	
D2VE	8620-MA		D9PZ	8620-U	(JC-517-A)	D8DE	8620-DA	
D2VE	8620-NA		C9PZ	8620-AD	(JB-451)	D8EE	8620-AA	
D2VE	8620-RA		D8PZ	8620-K	(JB-363-A)	D8EE	8620-BA	
D2ZE	8620-EA		C9PZ	8620-E	(JB-346)	D9AE	8620-BA	
D2ZE	8620-JA		C9PZ	8620-DF	(JC-616)	D9AE	8620-CA	
D2ZE	8620-LA		C9PZ	8620-GT	(JC-604)	D9AE	8620-EA	
D2ZE	8620-TA		C9PZ	8620-FY	(JB-461-L)	D9AE	8620-FA	
D2ZE	8620-AAA		D6PZ	8620-H	(JB-382-C)	D9AE	8620-GA	
D2ZE	8620-ABA		C9PZ	8620-GK	(JB-430-LA)	D9DE	8620-AA	
D2ZE	8620-AFA		C9PZ	8620-CR	(JC-537)	D9DE	8620-BA	
D2ZE	8620-AGA		C9PZ	8620-CP	(JC-534)	D9ZE	8620-AA	
D2ZE	8620-AHA		D0AZ	8620-E	(JC-527-L)	D9ZE	8620-BA	
D2ZE	8620-AJA		D9PZ	8620-N	(JC-514-A)	D9ZE	8620-CA	
D2ZE	8620-AKA		C9PZ	8620-AH	(JB-470)	D9ZE	8620-DA	
D22E	8620-AA		C9PZ	8620-GL	(JB-486-LA)	E0BE	8620-AA	
D22E	8620-BA		C9PZ	8620-GY	(JB-366-L)	71HF	8620-AB	
D22E	8620-EA		C9PZ	8620-FU	(JB-493-L)	74THF	8620-BA	
D3BE	8620-AA		C9PZ	8620-GL	(JB-486-LA)	74HF	8620-BB	
D3HE	8620-BA		C9PZ	8620-CD	(JC-483)	74HF	8620-CA	
D3TE	8620-AA		D5PZ	8620-A	(JH-371)	74HF	8620-CB	
D3TE	8620-BA		D4PZ	8620-H	(JH-351)	74TF	8620-AA	
D3TE	8620-DA		C9PZ	8620-CY	(JC-574)	74TF	8620-CA	
D3VE	8620-AA		D4PZ	8620-F	(JH-367)	74TF	8620-GA	
D3VE	8620-BA		C9PZ	8620-F	(JB-354)			
D3ZE	8620-BA		D7PZ	8620-H	(JH-335)	74TF	8620-HA	
D4AE	8620-AA		D4PZ	8620-B	(JH-331)	74TF	8620-HB	
D4DE	8620-AA		D4PZ	8620-E	(JH-396)	74TF	8620-KA	
D40E	8620-AA		D4PZ	8620-D	(JH-321)	74TF	8620-KB	
D4SE	8620-AA		D4PZ	8620-F	(JH-367)	74TF	8620-NA	
D4TE	8620-EA		D4PZ	8620-G	(JH-346)	74TF	8620-BA	
D4ZE	8620-CA		C9PZ	8620-AP	(JB-516)	757F	8620-AA	
D4ZE	8620-DA		E1PZ	8620-D	(JB-535-LB)	757F	8620-AB	
D4ZE	8620-EA		D5PZ	8620-K	(JA-543-L)	757F	8620-BA	
D42E	8620-BA		D5PZ	8620-P	(JA-435)	757F	8620-CA	
D42E	8620-CA		C9PZ	8620-AD	(JB-451)	757F	8620-CB	
D42E	8620-DA		D4PZ	8620-C	(JH-356)	757F	8620-DA	
D42E	8620-FA		D00Z	8620-A	(JH-361)	757F	8620-EA	
D5ME	8620-AA		C9PZ	8620-DC	(JC-600)	757F	8620-FA	
D5SE	8620-AA		D1RY	8620-C	(JB-361)	757F	8620-GA	
D5TE	8620-DA		C9PZ	8620-CG	(JC-490)	757F	8620-HA	
D5UE	8620-BA		C9PZ	8620-CY	(JC-574)	75TF	8620-AD	
D5VE	8620-AA		C9PZ	8620-FU	(JB-493-L)	75TF	8620-BA	
D5ZE	8620-AA		C9PZ	8620-AT	(JB-513)	75TF	8620-CA	
D6DE	8620-AA		D6PZ	8620-B	(JH-299)	75TF	8620-DA	
D6DE	8620-BA		C9PZ	8620-BH	(JC-373)	75TF	8620-EA	
D6DE	8620-CA		C9PZ	8620-AM	(JB-482)	75TF	8620-FA	
D6DE	8620-FA		D6PZ	8620-E	(JB-571-B)	75TF	8620-GA	
D6DE	8620-GA		C9PZ	8620-FU	(JB-493-L)	76HF	8620-CA	
D6DE	8620-HA		D6PZ	8620-E	(JB-571-B)	76TF	8620-BA	
D7AE	8620-AA		D7PZ	8620-D	(JB-406)	77TF	8620-BA	
D7BE	8620-BA		D7PZ	8620-E	(JH-411)	777F	8620-AA	
D7BE	8620-CA		D7PZ	8620-G	(JH-386)	777F	8620-BA	
D7DE	8620-AA		D7PZ	8620-F	(JH-311)	777F	8620-CA	
D7DE	8620-CA		D7PZ	8620-J	(JB-581-A)			

PART NUMBER		
D8PZ	8620-J	(JA-552-L)
C9PZ	8620-CD	(JC-483)
C9PZ	8620-FP	(JC-493)
D8PZ	8620-P	(JH-325)
C9PZ	8620-V	(JB-423)
C9PZ	8620-AM	(JB-482)
D8PZ	8620-R	(JB-583-A)
D8PZ	8620-L	(JA-585-C)
D8PZ	8620-S	(JB-576-A)
D8PZ	8620-J	(JA-552-L)
C9PZ	8620-AE	(JB-456)
D9PZ	8620-F	(JK6-506)
D9PZ	8620-R	(JH-341)
D9PZ	8620-G	(JK6-502)
D9PZ	8620-H	(JK6-496)
D9PZ	8620-J	(JK6-512)
D9PZ	8620-D	(JA-542-C)
D9PZ	8620-E	(JA-546-C)
D9PZ	8620-K	(JK6-942)
D9PZ	8620-L	(JK6-834)
D9PZ	8620-T	(JK6-842)
D9PZ	8620-T	(JK6-842)
C9PZ	8620-V	(JB-423)
C9PZ	8620-E	(JB-346)
D1PZ	8620-A	(JB-432)
D1PZ	8620-A	(JB-432)
D4RY	8620-E	(JC-492)
D4RY	8620-E	(JC-492)
D4RY	8620-A	(JB-403)
D4RY	8620-B	(JB-331)
★ D4RY	8620-C (NR)	(JB-351)
D0AZ	8620-E	(JC-527-L)
D0AZ	8620-E	(JC-527-L)
C9PZ	8620-V	(JB-423)
C9PZ	8620-V	(JB-423)
D1PZ	8620-A	(JB-432)
D1PZ	8620-A	(JB-432)
D5PZ	8620-R	(JA-450-L)
D5PZ	8620-R	(JA-450-L)
D5PZ	8620-E	(JB-469-A)
D5PZ	8620-K	(JA-543-L)
D5PZ	8620-K	(JA-543-L)
C9PZ	8620-N	(JB-394)
D00Z	8620-A	(JH-361)
C9PZ	8620-BR	(JC-416)
D5PZ	8620-K	(JA-543-L)
D5PZ	8620-R	(JA-450-L)
C9PZ	8620-C	(JB-332)
D5PZ	8620-M	(JA-333-L)
C9PZ	8620-GK	(JB-430-LA)
C9PZ	8620-GJ	(JB-436-L)
C9PZ	8620-CR	(JC-537)
D5PZ	8620-L	(JA-303)
D5PZ	8620-M	(JA-333-L)
C9PZ	8620-E	(JB-346)
C9PZ	8620-N	(JB-394)
C9PZ	8620-D	(JB-341)
C9PZ	8620-S	(JB-412)
C9PZ	8620-HC	(JB-551-L)
C9PZ	8620-AU	(JB-546)

APPLICATION CHART

YEAR	MODEL/RESTRICTIONS	QUANTITY ALT.	P/S	A/C COMP.	IDLER PULLEY	PART NUMBER	DESCRIPTION	
8620	BELT (DRIVE) — Cont'd							
	1973							
	A (Mercury) 8 CYL. 351							
73	Alternator–42,55,66 amp.	1				C9PZ 8620–P	*JB–401	15/32" x 40 1/8"
	Alternator–70 amp.	1				C9PZ 8620–S	*JB–412	15/32" x 41 1/4"
	P/S without A/C		1			D9PZ 8620–U	*JC–517–A	1/2" x 51 7/8"
	P/S and A/C		1			DOTZ 8620–B	*JC–507	1/2" x 50 7/8"
	A/C			1		C9PZ 8620–GC	*JC–552–L	1/2" x 55 1/4"
	A (Mercury) 8 CYL. 400							
73	Alternator–55,61 amp.	1				C9PZ 8620–S	*JB–412	15/32" x 41 1/4"
	Alternator–70 amp.	1				★C9PZ 8620–V r/bE4PZ 8620–J	*JB–423	15/32" x 42 3/8"
	P/S without A/C		1			D9PZ 8620–U	*JC–517–A	1/2" x 51 7/8"
	P/S and A/C		1			DOTZ 8620–B	*JC–507	1/2" x 50 7/8"
	A/C			1		C9PZ 8620–GC	*JC–552–L	1/2" x 55 1/4"
	A (Mercury) 8 CYL. 429							
73	Alternator–55,61 amp.	1				★C9PZ 8260–F r/bE5PZ 8620–D	*JB–354	15/32" x 35 1/2"
	Alternator–70 amp–(exc. P/C)	1				C9PZ 8620–G	*JB–363	15/32" x 36 3/8"
	Alternator–70 amp.–(P/C)	1				C9PZ 8620–E	*JB–346	15/32" x 34 3/4"
	P/S without A/C–(exc. P/C)		1			C9PZ 8620–CM	*JC–524	1/2" x 52 1/2"
	P/S without A/C–(P/C)		1			DOAZ 8620–E	*JC–527–L	1/2" x 52 7/8"
	P/S and A/C–(exc. P/C)		1			DOAZ 8620–E	*JC–527–L	1/2" x 52 7/8"
	P/S and A/C–(P/C)		1			C9PZ 8620–CM	*JC–524	1/2" x 52 1/2"
	A/C–(exc. P/C)			1		C3AZ 8620–F	*JC–563	1/2" x 56 3/8"
	A/C–(P/C)			1		D1AZ 8620–A	*JC–550	1/2" x 55"
	A (Mercury) 8 CYL. 460–exc. P/C							
73	Alternator–55,61 amp.	1				★C9PZ 8620–F r/bE5PZ 8620–D	*JB–354	15/32" x 35 1/2"
	Alternator–70 amp.	1				C9PZ 8620–G	*JB–363	15/32" x 36 3/8"
	P/S		1			DOAZ 8620–E	*JC–527–L	1/2" x 52 7/8"
	A/C			1		C3AZ 8620–F	*JC–563	1/2" x 56 3/8"
	A (Mercury) 8 CYL. 460 P/C							
73	Alternator	1				C9PZ 8620–E	*JB–346	15/32" x 34 3/4"
	P/S		1			C9PZ 8620–CM	*JC–524	1/2" x 52 1/2"
	A/C			1		D1AZ 8620–A	*JC–550	1/2" x 55"
	C (Montego) 6 CYL. 250							
73	Alternator without A/C	1				D1PZ 8620–A	*JB–432	15/32" x 43 1/4"
	Alternator and factory installed A/C	2				C9PZ 8620–FU	*JB–493–L	15/32" x 49 3/8"
	Alternator and dealer installed A/C	2				C9PZ 8620–AM	*JB–482	15/32" x 48 1/4"
	P/S		1			C9PZ 8620–FY	*JB–461–L	15/32" x 46 1/8"
	A/C–factory installed			2		C9PZ 8620–FU	*JB–493–L	15/32" x 49 3/8"
	A/C–dealer installed			2		C9PZ 8620–AM	*JB–482	15/32" x 48 1/4"
	C (Montego) 8 CYL. 302							
73	Alternator without P/S or idler pulley	1				D1PZ 8620–A	*JB–432	15/32" x 43 1/4"
	Alternator–38,42,55,61 amp. with P/S or idler pulley	1				C9PZ 8620–P	*JB–401	15/32" x 40 1/8"

COPYRIGHT © 1986— FORD MOTOR COMPANY —DEARBORN, MICHIGAN

APPLICATION CHART

YEAR	MODEL/RESTRICTIONS	QUANTITY ALT.	P/S	A/C COMP.	IDLER PULLEY	PART NUMBER	DESCRIPTION	
8620	BELT (DRIVE) — Cont'd							
	1973							
	C (Montego)					**8 CYL. 302**		
73	Alternator-70,90 amp. with P/S or idler pulley	1				C9PZ 8620-S	*JB-412	15/32" x 41 1/4"
	P/S		1			D0TZ 8620-B	*JC-507	1/2" x 50 7/8"
	A/C-factory installed			1		C9PZ 8620-GC	*JC-552-L	1/2" x 55 1/4"
	A/C-dealer installed			1		C9PZ 8620-CP	*JC-534	1/2" x 53 1/2"
	Idler pulley				1	C9PZ 8620-CF	*JC-477	1/2" x 47 7/8"
	C (Montego)					**8 CYL. 351-2/B**		
73	Alternator without P/S or idler pulley	1				D1PZ 8620-A	*JB-432	15/32" x 43 1/4"
	Alternator-38,42,55,61 amp. with P/S or idler pulley	1				C9PZ 8620-P	*JB-401	15/32" x 40 1/8"
	Alternator-70,90 amp with P/S or idler pulley	1				C9PZ 8620-S	*JB-412	15/32" x 41 1/4"
	P/S without A/C		1			D9PZ 8620-U	*JC-517-A	1/2" x 51 7/8"
	P/S and A/C		1			D0TZ 8620-B	*JC-507	1/2" x 50 7/8"
	A/C-factory installed			1		C9PZ 8620-GC	*JC-552-L	1/2" x 55 1/4"
	A/C-dealer installed			1		C9PZ 8620-CP	*JC-534	1/2" x 53 1/2"
	Idler pulley				1	C9PZ 8620-CF	*JC-477	1/2" x 47 7/8"
	C (Montego)					**8 CYL. 351-4/B**		
73	Alternator-38,42 amp.	1				C9PZ 8620-GJ	*JB-436-L	15/32" x 43 3/4"
	Alternator-55 amp.	1				C9PZ 8620-K	*JB-382	15/32" x 38 1/4"
	Alternator-70,90 amp.	1				★C9PZ 8620-M r/bE3AZ 8620-E	*JB-390	15/32" x 39"
	P/S without A/C		1			C9PZ 8620-CM	*JC-524	1/2" x 52 1/2"
	P/S and A/C		1			D0TZ 8620-B	*JC-507	1/2" x 50 7/8"
	A/C-factory installed			1		C9PZ 8620-CR	*JC-537	1/2" x 53 7/8"
	A/C-dealer installed			1		C9PZ 8620-CP	*JC-534	1/2" x 53 1/2"
	C (Montego)					**8 CYL. 400**		
73	Alternator without P/S and A/C	1				C9PZ 8620-AB	*JB-443	15/32" x 44 3/8"
	Alternator-55,61 amp. and P/S	1				C9PZ 8620-S	*JB-412	15/32" x 41 1/4"
	Alternator-70,90 amp. and P/S	1				★C9PZ 8620-V r/bE4PZ 8620-J	*JB-423	15/32" x 42 3/8"
	P/S without A/C		1			D9PZ 8620-U	*JC-517-A	1/2" x 51 7/8"
	P/S and A/C		1			D0TZ 8620-B	*JC-507	1/2" x 50 7/8"
	A/C-factory installed			1		C9PZ 8620-GC	*JC-552-L	1/2" x 55 1/4"
	A/C-dealer installed			1		C9PZ 8620-CP	*JC-534	1/2" x 53 1/2"

APPLICATION CHART

YEAR	MODEL/RESTRICTIONS	QUANTITY ALT.	P/S	A/C COMP.	IDLER PULLEY	PART NUMBER	DESCRIPTION	
8620	BELT (DRIVE) — Cont'd							
	1973							
	C (Montego)					**8 CYL. 429**		
73	Alternator–42,55,61 amp.	1				★C9PZ 8620–F r/bE5PZ 8620–D	*JB–354	15/32" x 35 1/2"
	Alternator–70 amp.–(exc. P/C)	1				C9PZ 8620–G	*JB–363	15/32" x 36 3/8"
	Alternator–70 amp.–(P/C)	1				C9PZ 8620–E	*JB–346	15/32" x 34 3/4"
	P/S without A/C–(exc. P/C)		1			C9PZ 8620–CM	*JC–524	1/2" x 52 1/2"
	P/S without A/C–(P/C)		1			C9PZ 8620–CP	*JC–534	1/2" x 53 1/2"
	P/S and A/C–(exc. P/C)		1			D0AZ 8620–E	*JC–527–L	1/2" x 52 7/8"
	P/S and A/C–(P/C)		1			C9PZ 8620–CM	*JC–524	1/2" x 52 1/2"
	A/C–(exc. P/C)			1		C3AZ 8620–F	*JC–563	1/2" x 56 3/8"
	A/C–(P/C)			1		D1AZ 8620–A	*JC–550	1/2" x 55"
	Idler pulley				1	C9PZ 8620–CC	*JC–465	1/2" x 46 5/8"
	C (Montego)					**8 CYL. 460 P/C**		
73	Alternator–70 amp.	1				C9PZ 8620–E	*JB–346	15/32" x 34 3/4"
	P/S		1			C9PZ 8620–CM	*JC–524	1/2" x 52 1/2"
	A/C			1		D1AZ 8620–A	*JC–550	1/2" x 55"
	D (Lincoln)					**8 CYL. 460**		
73	Alternator–70,90 amp.	1				C9PZ 8620–G	*JB–363	15/32" x 36 3/8"
	P/S		1			D0TZ 8620–B	*JC–507	1/2" x 50 7/8"
	A/C			1		C9PZ 8620–DB	*JC–594	1/2" x 59 1/2"
	F (Cougar)					**8 CYL. 351–2/B**		
73	Alternator–42,55,61 amp.	1				C9PZ 8620–P	*JB–401	15/32" x 40 1/8"
	Alternator–65,70 amp.	1				C9PZ 8620–S	*JB–412	15/32" x 41 1/4"
	P/S without A/C		1			C9PZ 8620–CM	*JC–524	1/2" x 52 1/2"
	P/S and A/C		1			D0TZ 8620–B	*JC–507	1/2" x 50 7/8"
	A/C–factory installed			1		C9PZ 8620–GC	*JC–552–L	1/2" x 55 1/4"
	A/C–dealer installed			1		C9PZ 8620–CP	*JC–534	1/2" x 53 1/2"
	Idler pulley				1	C9PZ 8620–CF	*JC–477	1/2" x 47 7/8"
	F (Cougar)					**8 CYL. 351–4/B**		
73	Alternator–42 amp.	1				C9PZ 8620–GJ	*JB–436–L	15/32" x 43 3/4"
	Alternator–55 amp.	1				C9PZ 8620–K	*JB–382	15/32" x 38 1/4"
	Alternator–65 amp.	1				C9PZ 8620–S	*JB–412	15/32" x 41 1/4"
	Alternator–70 amp.	1				★C9PZ 8620–M r/bE3AZ 8620–E	*JB–390	15/32" x 39"
	P/S without A/C		1			C9PZ 8620–CM	*JC–524	1/2" x 52 1/2"
	P/S and A/C		1			D0TZ 8620–B	*JC–507	1/2" x 50 7/8"
	A/C–factory installed			1		C9PZ 8620–CR	*JC–537	1/2" x 53 7/8"
	A/C–dealer installed			1		C9PZ 8620–CP	*JC–534	1/2" x 53 1/2"
	Idler pulley				1	C9PZ 8620–CF	*JC–477	1/2" x 47 7/8"
	J (Capri)					**4 CYL. 122 (2000 cc)**		
73	Alternator with or without factory installed A/C	1				C9PZ 8620–E	*JB–346	15/32" x 34 3/4"
	Alternator and dealer installed A/C	1				★C9PZ 8620–F r/bE5PZ 8620–D	*JB–354	15/32" x 35 1/2"
	A/C–factory installed			1		C9PZ 8620–CH	*JC–495–L	1/2" x 49 5/8"
	A/C–dealer installed			1		C9PZ 8620–GD	*JC–501–L	1/2" x 50 1/8"

COPYRIGHT © 1986— FORD MOTOR COMPANY —DEARBORN, MICHIGAN

APPLICATION CHART

YEAR	MODEL/RESTRICTIONS	QUANTITY ALT.	P/S	A/C COMP.	IDLER PULLEY	PART NUMBER	DESCRIPTION	
8620	BELT (DRIVE) — Cont'd							
	1973							
	J (Capri)					**6 CYL. 159 (2600 cc)**		
73	Alternator without A/C	1				C9PZ 8620-N	*JB-394	
	Alternator and A/C	1				C9PZ 8620-P	*JB-401	15/32" x 40 1/8"
	A/C			1		C9PZ 8620-CM	*JC-524	1/2" x 52 1/2"
	K (Mark IV)					**8 CYL. 460**		
73	Alternator-61 amp.	1				★C9PZ 8620-F r/bE5PZ 8620-D	*JB-354	15/32" x 35 1/2"
	Alternator-70 amp.	1				C9PZ 8620-G	*JB-363	15/32" x 36 3/8"
	P/S		1			D0TZ 8620-B	*JC-507	1/2" x 50 7/8"
	A/C			1		C9PZ 8620-DB	*JC-594	1/2" x 59 1/2"
	P (Comet)					**6 CYL. 200**		
73	Alternator without A/C	1				C9PZ 8620-E	*JB-346	15/32" x 34 3/4"
	Alternator and factory installed A/C	2				C9PZ 8620-FY	*JB-461-L	15/32" x 46 1/8"
	Alternator and dealer installed A/C	1				★C9PZ 8620-F r/bE5PZ 8620-D	*JB-354	15/32" x 35 1/2"
	P/S		1			C9PZ 8620-GM	*JB-414-L	15/32" x 41 1/2"
	A/C-factory installed			2		C9PZ 8620-FY	*JB-461-L	15/32" x 46 1/8"
	A/C-dealer installed			1		D1PZ 8620-B	*JB-455	15/32" x 45 5/8"
	P (Comet)					**6 CYL. 250**		
73	Alternator without A/C	1				D1PZ 8620-A	*JB-432	15/32" x 43 1/4"
	Alternator and factory installed A/C	2				C9PZ 8620-FU	*JB-493-L	15/32" x 49 3/8"
	Alternator and dealer installed A/C	2				C9PZ 8620-AM	*JB-482	15/32" x 48 1/4"
	P/S		1			C9PZ 8620-FY	*JB-461-L	15/32" x 46 1/8"
	A/C-factory installed			2		C9PZ 8620-FU	*JB-493-L	15/32" x 49 3/8"
	A/C-dealer installed			2		C9PZ 8620-AM	*JB-482	15/32" x 48 1/4"
	P (Comet)					**8 CYL. 302**		
73	Alternator without A/C,P/S or idler pulley	1				D1PZ 8620-A	*JB-432	15/32" x 43 1/4"
	Alternator with A/C,P/S or idler pulley	1				C9PZ 8620-P	*JB-401	15/32" x 40 1/8"
	P/S without A/C		1			D9PZ 8620-N	*JC-514-A	1/2" x 51 1/2"
	P/S and A/C		1			C9PZ 8620-CK	*JC-504	1/2" x 50 1/2"
	A/C			1		C9PZ 8620-GC	*JC-552-L	1/2" x 55 1/4"
	Idler pulley				1	C9PZ 8620-CF	*JC-477	1/2" x 47 7/8"
	Y (Meteor)					**8 CYL. 351**		
73	Alternator-42,55,66 amp.	1				C9PZ 8620-P	*JB-401	15/32" x 40 1/8"
	Alternator-70 amp.	1				C9PZ 8620-S	*JB-412	15/32" x 41 1/4"
	P/S without A/C		1			D9PZ 8620-U	*JC-517-A	1/2" x 51 7/8"
	P/S and A/C		1			D0TZ 8620-B	*JC-507	1/2" x 50 7/8"
	A/C			1		C9PZ 8620-GC	*JC-552-L	1/2" x 55 1/4"

APPLICATION CHART

YEAR	MODEL/RESTRICTIONS	QUANTITY ALT.	P/S	A/C COMP.	IDLER PULLEY	PART NUMBER	DESCRIPTION	
8620	BELT (DRIVE) — Cont'd							
	1973							
	Y (Meteor) 8 CYL. 400							
73	Alternator–55,61 amp.	1				C9PZ 8620–S	*JB–412	15/32" x 41 1/4"
	Alternator–70 amp.	1				★C9PZ 8620–V r/bE4PZ 8620–J	*JB–423	15/32" x 42 3/8"
	P/S without A/C		1			D9PZ 8620–U	*JC–517–A	1/2" x 51 7/8"
	P/S and A/C		1			D0TZ 8620–B	*JC–507	1/2" x 50 7/8"
	A/C			1		C9PZ 8620–GC	*JC–552–L	1/2" x 55 1/4"
	Y (Meteor) 8 CYL. 429							
73	Alternator–55,61 amp.	1				★C9PZ 8620–F r/bE5PZ 8620–D	*JB–354	15/32" x 35 1/2"
	Alternator–70 amp.–(exc. P/C	1				C9PZ 8620–G	*JB–363	15/32" x 36 3/8"
	Alternator–70 amp.–(P/C)	1				C9PZ 8620–E	*JB–346	15/32" x 34 3/4"
	P/S without A/C–(exc. P/C)		1			C9PZ 8620–CM	*JC–524	1/2" x 52 1/2"
	P/S without A/C–(P/C)		1			D0AZ 8620–E	*JC–527–L	1/2" x 52 7/8"
	P/S and A/C–(exc. P/C)		1			D0AZ 8620–E	*JC–527–L	1/2" x 52 7/8"
	P/S and A/C–(P/C)		1			C9PZ 8620–CM	*JC–524	1/2" x 52 1/2"
	A/C–(exc. P/C)			1		C3AZ 8620–F	*JC–563	1/2" x 56 3/8"
	A/C–(P/C)			1		D1AZ 8620–A	*JC–550	1/2" x 55"
	Y (Meteor) 8 CYL. 460–exc. P/C							
73	Alternator–55,61 amp.	1				★C9PZ 8620–F r/bE5PZ 8620–D	*JB–354	15/32" x 35 1/2"
	Alternator–70 amp.	1				C9PZ 8620–G	*JB–363	15/32" x 36 3/8"
	P/S		1			D0AZ 8620–E	*JC–527–L	1/2" x 52 7/8"
	Y (Meteor) 8 CYL. 460 P/C							
73	Alternator–70 amp.	1				C9PZ 8620–E	*JB–346	15/32" x 34 3/4"
	P/S		1			C9PZ 8620–CM	*JC–524	1/2" x 52 1/2"
	A/C			1		D1AZ 8620–A	*JC–550	1/2" x 55"

APPLICATION CHART

YEAR	MODEL/RESTRICTIONS	QUANTITY Alt.	Idler or P/S	Air Pump	A/C Comp.	PART NUMBER	DESCRIPTION	
8620	BELT (DRIVE) — Cont'd							
	1974							
	A (Mercury) 8 CYL. 400							
74	Alternator–42,55,61 amp.	1				C9PZ 8620–S	*JB–412	15/32" x 41 1/4"
	Alternator–70,90 amp.	1				★C9PZ 8620–V r/bE4PZ 8620–J	*JB–423	15/32" x 42 3/8"
	P/S without A/C		1			D9PZ 8620–U	*JC–517–A	1/2" x 51 7/8"
	P/S and A/C		1			D0TZ 8620–B	*JC–507	1/2" x 50 7/8"
	T/E pump			1		D4PZ 8620–B	*JH–331	1/4" x 33 1/8"
	A/C–factory installed				1	C9PZ 8620–GC	*JC–552–L	1/2" x 55 1/4"
	A/C–dealer installed				1	C9PZ 8620–CP	*JC–534	1/2" x 53 1/2"

COPYRIGHT © 1986— FORD MOTOR COMPANY —DEARBORN, MICHIGAN

APPLICATION CHART

YEAR	MODEL/RESTRICTIONS	QUANTITY Alt.	Idler or P/S	Air Pump	A/C Comp.	PART NUMBER	DESCRIPTION	
8620	BELT (DRIVE) — Cont'd							
	1974							
	A (Mercury)					**8 CYL. 460 exc. P/C**		
74	Alternator–42,55,61 amp.	1				★C9PZ 8620–F r/bE5PZ 8620–D	*JB–354	15/32" x 35 1/2"
	Alternator–70 amp.	1				C9PZ 8620–G	*JB–363	15/32" x 36 3/8"
	P/S– "Before 5/1/74"		1			D0AZ 8620–E	*JC–527–L	1/2" x 52 7/8"
	P/S– "From 5/1/74"		1			D0TZ 8620–B	*JC–507	1/2" x 50 7/8"
	T/E pump– "Before 5/1/74"			1		D00Z 8620–A	*JH–361	1/4" x 36 1/8"
	T/E pump– "From 5/1/74"			1		D4PZ 8620–F	*JH–367	1/4" x 36 7/8"
	A/C–factory installed– "Before 5/1/74"				1	C9PZ 8620–CV	*JC–564	1/2" x 56 1/2"
	A/C–factory installed– "From 5/1/74"				1	C9PZ 8620–DC	*JC–600	1/2" x 60"
	A/C–dealer installed				1	C9PZ 8620–CY	*JC–574	1/2" x 57 1/2"
	A (Mercury)					**8 CYL. 460 P/C**		
74	Alternator	1				C9PZ 8620–E	*JB–346	15/32" x 34 3/4"
	P/S– "Before 1/17/74"		1			C9PZ 8620–CM	*JC–524	1/2" x 52 1/2"
	P/S– "From 1/17/74"		1			D0TZ 8620–B	*JC–507	1/2" x 50 7/8"
	A/C				1	C9PZ 8620–GC	*JC–550	1/2" x 55"
	C (Montego)					**6 CYL. 250**		
74	Alternator (exc. P/C & taxi)	1				D1PZ 8620–A	*JB–432	15/32" x 43 1/4"
	Alternator (P/C & taxi)	1				C9PZ 8620–AE	*JB–456	15/32" x 45 3/4"
	P/S		1			C9PZ 8620–FY	*JB–461–L	15/32" x 46 1/8"
	C (Montego)					**8 CYL. 302**		
74	Alternator without P/S or idler pulley	1				D1PZ 8620–A	*JB–432	15/32" x 43 1/4"
	Alternator–42,55,61 amp. with P/S or idler pulley	1				C9PZ 8620–P	*JB–401	15/32" x 40 1/8"
	Alternator–70,90 amp. with P/S or idler pulley	1				C9PZ 8620–S	*JB–412	15/32" x 41 1/4"
	P/S		1			D0TZ 8620–B	*JC–507	1/2" x 50 7/8"
	Idler pulley		1			C9PZ 8620–CF	*JC–477	1/2" x 47 7/8"
	T/E pump			1		D4PZ 8620–D	*JH–321	1/4" x 32 1/8"
	A/C–factory installed				1	C9PZ 8620–GC	*JC–552–L	1/2" x 55 1/4"
	A/C–dealer installed				1	C9PZ 8620–CP	*JC–534	1/2" x 53 1/2"

APPLICATION CHART

YEAR	MODEL/RESTRICTIONS	QUANTITY Alt.	Idler or P/S	Air Pump	A/C Comp.	PART NUMBER	DESCRIPTION	
8620	BELT (DRIVE) — Cont'd							
	1974							
	C (Montego)					**8 CYL. 351-2/B**		
74	Alternator without P/S, idler pulley or rear window defogger	1				D1PZ 8620-A	*JB-432	15/32" x 43 1/4"
	Alternator with rear window defogger-without P/S or idler pulley	1				C9PZ 8620-GJ	*JB-436-L	15/32" x 43 3/4"
	Alternator-42,55,61 amp. with P/S or idler pulley	1				C9PZ 8620-P	*JB-401	15/32" x 40 1/8"
	Alternator-70,90 amp. with P/S or idler pulley	1				C9PZ 8620-S	*JB-412	15/32" x 41 1/4"
	P/S without A/C		1			D9PZ 8620-U	*JC-517-A	1/2" x 51 7/8"
	P/S and A/C		1			D0TZ 8620-B	*JC-507	1/2" x 50 7/8"
	Idler pulley		1			C9PZ 8620-CF	*JC-477	1/2" x 47 7/8"
	T/E pump-without P/S, idler pulley or A/C			1		D4PZ 8620-B	*JH-331	1/4" x 33 1/8"
	T/E pump-with P/S, idler pulley or A/C			1		D4PZ 8620-D	*JH-321	1/4" x 32 1/8"
	A/C-factory installed				1	C9PZ 8620-GC	*JC-552-L	1/2" x 55 1/4"
	A/C-dealer installed				1	C9PZ 8620-CP	*JC-534	1/2" x 53 1/2"
	C (Montego)					**8 CYL. 351-4/B**		
74	Alternator-55 amp.-w/o P/S	1				C9PZ 8620-GJ	*JB-436-L	15/32" x 43 3/4"
	Alternator-55 amp. with P/S	1				C9PZ 8620-K	*JB-382	15/32" x 38 1/4"
	Alternator-70,90 amp.	1				C9PZ 8620-M	*JB-390	15/32" x 39"
	P/S without A/C		1			C9PZ 8620-CM	*JC-524	1/2" x 52 1/2"
	P/S and A/C		1			D0TZ 8620-B	*JC-507	1/2" x 50 7/8"
	A/C				1	C9PZ 8620-CR	*JC-537	1/2" x 53 7/8"
	C (Montego)					**8 CYL. 400**		
74	Alternator-42,55,61 amp.	1				C9PZ 8620-S	*JB-412	15/32" x 41 1/4"
	Alternator-70,90 amp.	1				★C9PZ 8620-V r/bE4PZ 8620-J	*JB-423	15/32" x 42 3/8"
	P/S without A/C		1			D9PZ 8620-U	*JC-517-A	1/2" x 51 7/8"
	P/S and A/C		1			D0TZ 8620-B	*JC-507	1/2" x 50 7/8"
	T/E pump			1		D4PZ 8620-B	*JH-331	1/4" x 33 1/8"
	A/C-factory installed				1	C9PZ 8620-GC	*JC-552-L	1/2" x 55 1/4"
	A/C-dealer installed				1	C9PZ 8620-CP	*JC-534	1/2" x 53 1/2"
	C (Montego)					**8 CYL. 460-exc. P/C**		
74	Alternator-42,55,61 amp.	1				★C9PZ 8620-F r/bE5PZ 8620-D	*JB-354	15/32" x 35 1/2"
	Alternator-70 amp.	1				C9PZ 8620-G	*JB-363	15/32" x 36 3/8"
	P/S without A/C		1			D0AZ 8620-E	*JC-527-L	1/2" x 52 7/8"
	P/S and A/C		1			C9PZ 8620-CP	*JC-534	1/2" x 53 1/2"
	T/E pump			1		D00Z 8620-A	*JH-361	1/4" x 36 1/8"
	A/C-factory installed				1	C9PZ 8620-CV	*JC-564	1/2" x 56 1/2"
	A/C-dealer installed				1	C9PZ 8620-CY	*JC-574	1/2" x 57 1/2"
	C (Montego)					**8 CYL. 460 P/C**		
74	Alternator	1				C9PZ 8620-E	*JB-346	15/32" x 34 3/4"
	P/S		1			C9PZ 8620-CM	*JC-524	1/2" x 52 1/2"
	A/C				1	C9PZ 8620-GC	*JC-552-L	1/2" x 55 1/4"

COPYRIGHT © 1986— FORD MOTOR COMPANY —DEARBORN, MICHIGAN

APPLICATION CHART

YEAR	MODEL/RESTRICTIONS	QUANTITY Alt.	Idler or P/S	Air Pump	A/C Comp.	PART NUMBER	DESCRIPTION	
8620	BELT (DRIVE) — Cont'd							
	1974							
	D (Lincoln) 8 CYL. 460							
74	Alternator 61 amp.–w/o T/E	1				★C9PZ 8620–F r/bE5PZ 8620–D	*JB–354	15/32" x 35 1/2"
	Alternator 70,90 amp.	1				C9PZ 8620–G	*JB–363	15/32" x 36 3/8"
	P/S		1			D0TZ 8620–B	*JC–507	1/2" x 50 7/8"
	T/E pump			1		D00Z 8620–A	*JH–361	1/4" x 36 1/8"
	A/C				1	C9PZ 8620–DC	*JC–600	1/2" x 60"
	F (Cougar) 8 CYL. 351–2/B							
74	Alternator without P/S idler pulley or rear window defogger	1				D1PZ 8620–A	*JB–432	15/32" x 43 1/4"
	Alternator with rear window defogger–without P/S or idler pulley	1				C9PZ 8620–GJ	*JB–436–L	15/32" x 43 3/4"
	Alternator–42,55,61 amp. with P/S or idler pulley	1				C9PZ 8620–P	*JB–401	15/32" x 40 1/8"
	Alternator–70,90 amp. with P/S or idler pulley	1				C9PZ 8620–S	*JB–412	15/32" x 41 1/4"
	Idler pulley		1			C9PZ 8620–CF	*JC–477	1/2" x 47 7/8"
	P/S without A/C		1			D0VZ 8620–B	*JC–517	1/2" x 51 7/8"
	P/S and A/C		1			D0TZ 8620–B	*JC–507	1/2" x 50 7/8"
	T/E pump–without P/S, idler pulley or A/C			1		D4PZ 8620–B	*JH–331	1/4" x 33 1/8"
	T/E pump–with P/S, idler pulley or A/C			1		D4PZ 8620–D	*JH–321	1/4" x 32 1/8"
	A/C–factory installed				1	C9PZ 8620–GC	*JC–552–L	1/2" x 55 1/4"
	A/C–dealer installed				1	C9PZ 8620–CP	*JC–534	1/2" x 53 1/2"
	F (Cougar) 8 CYL. 351–4/B							
74	Alternator–55 amp. w/o P/S	1				C9PZ 8620–GJ	*JB–436–L	15/32" x 43 3/4"
	Alternator–55 amp. with P/S	1				C9PZ 8620–K	*JB–382	15/32" x 38 1/4"
	Alternator–70,90 amp.	1				★C9PZ 8620–M r/bE3AZ 8620–E	*JB–390	15/32" x 39"
	P/S without A/C		1			C9PZ 8620–CM	*JC–524	1/2" x 52 1/2"
	P/S and A/C		1			D0TZ 8620–B	*JC–507	1/2" x 50 7/8"
	A/C				1	C9PZ 8620–CR	*JC–537	1/2" x 53 7/8"
	F (Cougar) 8 CYL. 400							
74	Alternator–42,55,61 amp.	1				C9PZ 8620–S	*JB–412	15/32" x 41 1/4"
	Alternator–70,90 amp.	1				★C9PZ 8620–V r/bE4PZ 8620–J	*JB–423	15/32" x 42 3/8"
	P/S without A/C		1			D0VZ 8620–B	*JC–517	1/2" x 51 7/8"
	P/S and A/C		1			D0TZ 8620–B	*JC–507	1/2" x 50 7/8"
	T/E pump			1		D4PZ 8620–B	*JH–331	1/4" x 33 1/8"
	A/C–factory installed				1	C9PZ 8620–GC	*JC–552–L	1/2" x 55 1/4"
	A/C–dealer installed				1	C9PZ 8620–CP	*JC–534	1/2" x 53 1/2"

APPLICATION CHART

YEAR	MODEL/RESTRICTIONS	QUANTITY Alt.	Idler or P/S	Air Pump	A/C Comp.	PART NUMBER	DESCRIPTION	
8620	BELT (DRIVE) — Cont'd							
	1974							
	F (Cougar) 8 CYL. 460							
74	Alternator–42,55,61 amp.	1				★C9PZ 8620–F r/bE5PZ 8620–D	*JB–354	15/32" x 35 1/2"
	Alternator–70 amp.	1				C9PZ 8620–G	*JB–363	15/32" x 36 3/8"
	P/S without A/C		1			D0AZ 8620–E	*JC–527–L	1/2" x 52 7/8"
	P/S and A/C		1			C9PZ 8620–CP	*JC–534	1/2" x 53 1/2"
	T/E pump			1		D00Z 8620–A	*JH–361	1/4" x 36 1/8"
	A/C–factory installed				1	C9PZ 8620–CV	*JC–564	1/2" x 56 1/2"
	A/C–dealer installed				1	C9PZ 8620–CY	*JC–574	1/2" x 57 1/2"
	J (Capri) 4 CYL. 122 (2000 cc)							
74	Alternator with or without factory A/C – w/o T/E	1				C9PZ 8620–E	*JB–346	15/32" x 34 3/4"
	Alternator with dealer installed A/C	1				★C9PZ 8620–F r/bE5PZ 8620–D	*JB–354	15/32" x 35 1/2"
	Alternator & T/E pump	1				D1PZ 8620–A	*JB–432	15/32" x 43 1/4"
	A/C–factory installed– "Before 11/1/73"				1	C9PZ 8620–CA	*JC–455	1/2" x 45 5/8"
	A/C–factory installed– "From 11/1/73"				1	★D4RY 8620–E	*JC–492	1/2" x 49 1/4"
	A/C–dealer installed				1	C9PZ 8620–GD	*JC–501–L	1/2" x 50 1/8"
	J (Capri) 6 CYL. 171 (2800 cc)							
74	Alternator without T/E or A/C	1				★D4RY 8620–A r/bC9PZ 8620–S	*JB–403	15/32" x 40 3/8"
	Alternator with T/E without A/C– "Before 5/1/76"	1				★D4RY 8620–B r/bC9PZ 8620–C	*JB–331	15/32" x 33 1/8"
	Alternator with T/E without A/C "From 5/1/76"	1				C9PZ 8620–B	*JB–315	15/32" x 31 5/8"
	Alternator with factory A/C	1				★D4RY 8620–C	*JB–351	15/32" x 35 1/8"–not repl'd.
	Alternator with hang–on A/C	1				C9PZ 8620–D	*JB–341	15/32" x 34 1/8"
	T/E pump–Calif.			1		D1PZ 8620–A	*JB–432	15/32" x 43 1/4"
	T/E pump–exc. Calif.			1		★C9PZ 8620–V r/bE4PZ 8620–J	*JB–423	15/32" x 42 3/8"
	A/C–factory installed				1	D0AZ 8620–E	*JC–527–L	1/2" x 52 7/8"
	A/C–dealer installed				1	C9PZ 8620–CP	*JC–534	1/2" x 53 1/2"
	K (Mark IV) 8 CYL. 460							
74	Alternator–55,61 amp.	1				★C9PZ 8620–F r/bE5PZ 8620–D	*JB–354	15/32" x 35 1/2"
	Alternator–70,90 amp.	1				C9PZ 8620–G	*JB–363	15/32" x 36 3/8"
	Alternator (aux.)–with Sierracin system	1				C9PZ 8620–AM	*JB–482	15/32" x 48 1/4"
	P/S without Sierracin system		1			D0TZ 8620–B	*JC–507	1/2" x 50 7/8"
	P/S with Sierracin system		1			C9PZ 8620–CK	*JC–504	1/2" x 50 1/2"
	T/E pump–without Sierracin system			1		D00Z 8620–A	*JH–361	1/4" x 36 1/8"
	T/E pump–with Sierracin system			1		D4PZ 8620–F	*JH–367	1/4" x 36 7/8"
	A/C without Sierracin system				1	C9PZ 8620–DC	*JC–600	1/2" x 60"
	A/C with Sierracin system				1	C9PZ 8620–DB	*JC–594	1/2" x 59 1/2"

COPYRIGHT © 1986— FORD MOTOR COMPANY —DEARBORN, MICHIGAN

APPLICATION CHART

YEAR	MODEL/RESTRICTIONS	QUANTITY Alt.	Idler or P/S	Air Pump	A/C Comp.	PART NUMBER	DESCRIPTION	
8620	BELT (DRIVE) — Cont'd							
	1974							
	L (Bobcat) 4 CYL. 122 (2000 cc)							
74	Alternator	1				C9PZ 8620-GY	*JB-366-L	15/32" x 36 3/4"
	T/E pump			1		C9PZ 8620-CF	*JC-477	1/2" x 47 7/8"
	L (Bobcat) 4 CYL. 140 (2300 cc)							
74	Alternator-38,61 amp.	1				★D5PZ 8620-P r/bC9PZ-AA(6/82)	*JA-435	13/32" x 43 5/8"
	Alternator-70 amp	1				C9PZ 8620-AD	*JB-451	15/32" x 45 1/8"
	T/E pump-without A/C			1		D4PZ 8620-F	*JH-367	1/4" x 36 7/8"
	T/E pump and factory A/C-"Before 11/1/73"			1		D4PZ 8620-C	*JH-356	1/4" x 35 3/4"
	T/E pump and factory A/C-"From 11/1/73"			1		D4PZ 8620-H	*JH-351	1/4" x 35 1/8"
	T/E pump and dealer A/C			1		C9PZ 8620-GY	*JB-366-L	15/32" x 36 3/4"
	A/C-factory installed				1	C9PZ 8620-BR	*JC-416	1/2" x 41 3/4"
	A/C-dealer installed				1	D2PZ 8620-A	*JC-397-C	1/2" x 39 7/8"
	P (Comet) 6 CYL. 200							
74	Alternator without A/C	1				C9PZ 8620-E	*JB-346	15/32" x 34 3/4"
	Alternator and A/C	2				C9PZ 8620-FY	*JB-461-L	15/32" x 46 1/8"
	P/S		1			C9PZ 8620-GM	*JB-414-L	15/32" x 41 1/2"
	A/C-factory installed				2	C9PZ 8620-FY	*JB-461-L	15/32" x 46 1/8"
	A/C-dealer installed				2	D1PZ 8620-B	*JB-455	15/32" x 45 5/8"
	P (Comet) 6 CYL. 250							
74	Alternator without A/C	1				D1PZ 8620-A	*JB-432	15/32" x 43 1/4"
	Alternator and A/C	2				C9PZ 8620-FU	*JB-493-L	15/32" x 49 3/8"
	P/S		1			C9PZ 8620-FY	*JB-461-L	15/32" x 46 1/8"
	T/E pump			1		D4PZ 8620-E	*JH-396	1/4" x 39 3/4"
	A/C				2	C9PZ 8620-FU	*JB-493-L	15/32" x 49 3/8"
	P (Comet) 8 CYL. 302							
74	Alternator without A/C,P/S or idler pulley	1				D1PZ 8620-A	*JB-432	15/32" x 43 1/4"
	Alternator with A/C,P/S or idler pulley	1				C9PZ 8620-P	*JB-401	15/32" x 40 1/8"
	P/S without A/C		1			D9PZ 8620-N	*JC-514-A	1/2" x 51 1/2"
	P/S and A/C		1			C9PZ 8620-CK	*JC-504	1/2" x 50 1/2"
	Idler pulley		1			C9PZ 8620-CF	*JC-477	1/2" x 47 7/8"
	T/E pump			1		D4PZ 8620-D	*JH-321	1/4" x 32 1/8"
	A/C				1	C9PZ 8620-GC	*JC-552-L	1/2" x 55 1/4"
	Y (Meteor) 8 CYL. 351							
74	Alternator-42,55,61 amp.	1				C9PZ 8620-P	*JB-401	15/32" x 40 1/8"
	Alternator-70,90 amp.	1				C9PZ 8620-S	*JB-412	15/32" x 41 1/4"
	P/S without A/C		1			D9PZ 8620-U	*JC-517-A	1/2" x 51 7/8"
	P/S and A/C		1			D0TZ 8620-B	*JC-507	1/2" x 50 7/8"
	T/E pump without P/S or A/C			1		D4PZ 8620-B	*JH-331	1/4" x 33 1/8"
	T/E pump-with P/S or A/C			1		D4PZ 8620-D	*JH-321	1/4" x 32 1/8"
	A/C-factory installed				1	C9PZ 8620-GC	*JC-552-L	1/2" x 55 1/4"
	A/C-dealer installed				1	C9PZ 8620-CP	*JC-534	1/2" x 53 1/2"

APPLICATION CHART

YEAR	MODEL/RESTRICTIONS	QUANTITY Alt.	Idler or P/S	Air Pump	A/C Comp.	PART NUMBER	DESCRIPTION	
8620	BELT (DRIVE) — Cont'd							
	1974							
	Y (Meteor) 8 CYL. 400							
74	Alternator–42,55,61 amp.	1				C9PZ 8620–S	*JB–412	15/32" x 41 1/4"
	Alternator–70,90 amp.	1				★9PZ 8620–V r/bE4PZ 8620–J	*JB–423	15/32" x 42 3/8"
	P/S without A/C		1			D0VZ 8620–B	*JC–517	1/2" x 51 7/8"
	P/S and A/C		1			D0TZ 8620–B	*JC–507	1/2" x 50 7/8"
	T/E pump			1		D4PZ 8620–B	*JH–331	1/4" x 33 1/8"
	A/C–factory installed				1	C9PZ 8620–GC	*JC–552–L	1/2" x 55 1/4"
	A/C–dealer installed				1	C9PZ 8620–CP	*JC–534	1/2" x 53 1/2"
	Y (Meteor) 8 CYL. 460–Exc. P/C							
74	Alternator–42,55,61 amp.	1				★9PZ 8620–F r/bE5PZ 8620–D	*JB–354	15/22" x 35 1/2"
	Alternator–70 amp.	1				C9PZ 8620–G	*JB–363	15/32" x 36 3/8"
	P/S– "Before 5/1/74		1			D0AZ 8620–E	*JC–527–L	1/2" x 52 7/8"
	P/S– "From 5/1/74"		1			D0TZ 8620–B	*JC–507	1/2" x 50 7/8"
	T/E pump– "Before 5/1/74"			1		D00Z 8620–A	*JH–361	1/4" x 36 1/8"
	T/E pump– "From 5/1/74"			1		D4PZ 8620–F	*JH–367	1/4" x 36 7/8"
	A/C–factory installed– "Before 5/1/74"				1	C9PZ 8620–CV	*JC–564	1/2" x 56 1/2"
	A/C–factory installed– "From 5/1/74"				1	C9PZ 8620–DC	*JC–600	1/2" x 60"
	A/C–dealer installed				1	C9PZ 8620–CY	*JC–574	1/2" x 57 1/2"
	Y (Meteor) 8 CYL. 460 P/C							
74	Alternator	1				C9PZ 8620–E	*JB–346	15/32" x 34 3/4"
	P/S		1			C9PZ 8620–CM	*JC–524	1/2" x 52 1/2"
	A/C				1	C9PZ 8620–GC	*JC–552–L	1/2" x 55 1/4"
	1975							
	A (Mercury) 8 CYL. 400							
75	Alternator–42,55,61 amp. without A/C	1				C9PZ 8620–GM	*JB–414–L	15/32" x 41 1/2"
	Alternator–55,61 amp. with A/C	1				C9PZ 8620–S	*JB–412	15/32" x 41 1/4"
	Alternator–70,90 amp.– "Before 5/1/75"	1				★C9PZ 8620–V r/bE4PZ 8620–J	*JB–423	15/32" x 42 3/8"
	Alternator–70,90 amp.– "From 5/1/75"	1				C9PZ 8620–T	*JB–420	15/32" x 42"
	P/S without A/C– "Before 11/1/74"		1			D9PZ 8620–U	*JC–517–A	1/2" x 51 7/8"
	P/S without A/C– "From 11/1/74 to 6/30/75"		1			C9PZ 8620–CM	*JC–524	1/2" x 52 1/2"
	P/S & A/C– "Before 11/1/74"		1			C9PZ 8620–CK	*JC–504	1/2" x 50 1/2"
	P/S & A/C– "From 11/1/74 to 6/30/75" P/S "From 6/30/75"		1 1			D0TZ 8620–B	*JC–507	1/2" x 50 7/8"
	T/E pump			1		D4PZ 8620–D	*JH–321	1/4" x 32 1/8"
	A/C – – factory installed				1	C9PZ 8620–GC	*JC–552–L	1/2" x 55 1/4"
	A/C – – dealer installed				1	C9PZ 8620–CR	*JC–537	1/2" x 53 7/8"

COPYRIGHT © 1986— FORD MOTOR COMPANY —DEARBORN, MICHIGAN

APPLICATION CHART

YEAR	MODEL/RESTRICTIONS	QUANTITY Alt.	Idler or P/S	Air Pump	A/C Comp.	PART NUMBER	DESCRIPTION	
8620	BELT (DRIVE) — Cont'd							
	1975							
	A (Mercury)					**8 CYL. 460–Exc. P/C**		
75	Alternator–42,55,61 amp.	1				★C9PZ 8620–F r/bE5PZ 8620–D	*JB–354	15/32" x 35 1/2"
	Alternator–70 amp.–"Before 5/1/75"	1				C9PZ 8620–G	*JB–363	15/32" x 36 3/8"
	Alternator–70 amp.–"From 5/1/75"	1				D1RY 8620–C	*JB–361	15/32" x 36 1/8"
	P/S without A/C		1			C9PZ 8620–CM	*JC–524	1/2" x 52 1/2"
	P/S and A/C		1			D0TZ 8620–B	*JC–507	1/2" x 50 7/8"
	T/E pump			1		D4PZ 8620–F	*JH–367	1/4" x 36 7/8"
	A/C				1	C9PZ 8620–DC	*JC–600	1/2" x 60"
	A (Mercury)					**8 CYL. 460 P/C**		
75	Alternator– "Before 1/13/75"	1				C9PZ 8620–E	*JB–346	15/32" x 34 3/4"
	Alternator– "From 1/13/75" to 5/1/75"	1				C9PZ 8620–G	*JB–363	15/32" x 36 3/8"
	Alternator– "From 5/1/75"	1				D1RY 8620–C	*JB–361	15/32" x 36 1/8"
	P/S "Before 1/13/75" P/S and A/C "From 1/13/75"		1 1			D0TZ 8620–B	*JC–507	1/2" x 50 7/8"
	P/S without A/C–"From 1/13/75"		1			D0AZ 8620–E	*JC–527–L	1/2" x 52 7/8"
	T/E pump without A/C–"Before 1/13/75"			1		D4PZ 8620–C	*JH–356	1/4" x 35 3/4"
	T/E pump with A/C–"Before 1/13/75"			1		D5PZ 8620–A	*JH–371	1/4" x 37 1/8"
	T/E pump "From 1/13/75"			1		D4PZ 8620–F	*JH–367	1/4" x 36 7/8"
	A/C "Before 1/13/75"				1	C9PZ 8620–GT	*JC–604	1/2" x 60 1/2"
	A/C "From 1/13/75"				1	C9PZ 8620–DC	*JC–600	1/2" x 60"
	C (Montego)					**8 CYL. 351–W**		
75	Alternator–61 amp.	1				C9PZ 8620–P	*JB–401	15/32" x 40 1/8"
	Alternator–70,90 amp.	1				C9PZ 8620–S	*JB–412	15/32" x 41 1/4"
	P/S without A/C		1			D9PZ 8620–U	*JC–517–A	1/2" x 51 7/8"
	P/S and A/C		1			D0TZ 8620–B	*JC–507	1/2" x 50 7/8"
	T/E pump			1		D4PZ 8620–D	*JH–321	1/4" x 32 1/8"
	A/C – – Factory Inst.				1	C9PZ 8620–GC	*JC–552–L	1/2" x 55 1/4"
	A/C – – Dealer Inst.				1	C9PZ 8620–CP	*JC–534	1/2" x 53 1/2"
	C (Montego)					**8 CYL. 351–M**		
75	Alternator–42,55,61 amp.	1				C9PZ 8620–GM	*JB–414–L	15/32" x 41 1/2"
	Alternator–70,90 amp.–"Before 11/15/74"	1				★C9PZ 8620–V r/bE4PZ 8620–J	*JB–423	15/32" x 42 3/8"
	Alternator–70,90 amp.–"From 11/15/74"	1				C9PZ 8620–T	*JB–420	15/32" x 42"
	P/S without A/C		1			D9PZ 8620–U	*JC–517–A	1/2" x 51 7/8"
	P/S and A/C		1			D0TZ 8620–B	*JC–507	1/2" x 50 7/8"
	T/E pump–exc. Calif. T/E pump–Calif.–"Before 11/1/74"			1 1		D4PZ 8620–D	*JH–321	1/4" x 32 1/8"
	T/E pump–Calif.–"From 11/1/74"			1		D4PZ 8620–B	*JH–331	1/4" x 33 1/8"
	A/C				1	C9PZ 8620–GC	*JC–552–L	1/2" x 55 1/4"

APPLICATION CHART

YEAR	MODEL/RESTRICTIONS	QUANTITY Alt.	Idler or P/S	Air Pump	A/C Comp.	PART NUMBER		DESCRIPTION	
8620	BELT (DRIVE) — Cont'd								
	1975								
	C (Montego)					**8 CYL. 400**			
75	Alternator–42,55,61 amp.	1				C9PZ	8620–GM	*JB–414–L	15/32" x 41 1/2"
	Alternator–70,90 amp.– "Before 11/15/74"	1				★C9PZ r/bE4PZ	8620–V 8620–J	*JB–423	15/32" x 42 3/8"
	Alternator–70,90 amp.– "From 11/15/74"	1				C9PZ	8620–T	*JB–420	15/32" x 42"
	P/S without A/C		1			D9PZ	8620–U	*JC–517–A	1/2" x 51 7/8"
	P/S and A/C		1			D0TZ	8620–B	*JC–507	1/2" x 50 7/8"
	T/E pump			1		D4PZ	8620–D	*JH–321	1/4" x 32 1/8"
	A/C				1	C9PZ	8620–GC	*JC–552–L	1/2" x 55 1/4"
	C (Montego)					**8 CYL. 460–Exc. P/C**			
75	Alternator–42,55,61 amp.	1				★C9PZ r/bE5PZ	8620–F 8620–D	*JB–354	15/32" x 35 1/2"
	Alternator–70 amp.– "Before 11/15/74"	1				C9PZ	8620–G	*JB–363	15/32" x 36 3/8"
	Alternator–70 amp.– "From 11/15/74"	1				D1RY	8620–C	*JB–361	15/32" x 36 1/8"
	P/S without A/C		1			C9PZ	8620–CM	*JC–524	1/2" x 52 1/2"
	P/S and A/C		1			C9PZ	8620–CP	*JC–534	1/2" x 53 1/2"
	T/E pump			1		D4PZ	8620–F	*JH–367	1/4" x 36 7/8"
	A/C				1	C9PZ	8620–CV	*JC–564	1/2" x 56 1/2"
	C (Montego)					**8 CYL. 460 P/C**			
75	Alternator	1				C9PZ	8620–E	*JB–346	15/32" x 34 3/4"
	P/S		1			C9PZ	8620–CM	*JC–524	1/2" x 52 1/2"
	T/E pump			1		D4PZ	8620–C	*JH–356	1/4" x 35 3/4"
	A/C without adj. idler				1	C9PZ	8620–CV	*JC–564	1/2" x 56 1/2"
	A/C with adj. idler– "Before 11/25/74"				1	C9PZ	8620–GC	*JC–552–L	1/2" x 55 1/4"
	A/C with adj. idler– "From 11/25/74"				1	C3AZ	8620–F	*JC–563	1/2" x 56 3/8"
	D (Lincoln)					**8 CYL. 460**			
75	Alternator–61 amp. w/o Sierracin system	1				★C9PZ r/bE5PZ	8620–F 8620–D	*JB–354	15/32" x 35 1/2"
	Alternator–70,90 amp. w/o Sierracin system– "Before 5/1/75"	1				C9PZ	8620–G	*JB–363	15/32" x 36 3/8"
	Alternator–70,90 amp. w/o Sierracin system– "From 5/1/75"	1				D1RY	8620–C	*JB–361	15/32" x 36 1/8"
	Alternator (upper)–with Sierracin system	1				C9PZ	8620–FU	*JB–493–L	15/32" x 49 3/8"
	Alternator (lower)–with Sierracin system	1				C9PZ	8620–GY	*JB–366–L	15/32" x 36 3/4"
	P/S–w/o Sierracin system		1			D0TZ	8620–B	*JC–507	1/2" x 50 7/8"
	P/S–with Sierracin system		1			C9PZ	8620–CK	*JC–504	1/2" x 50 1/2"
	T/E pump			1		D4PZ	8620–F	*JH–367	1/4" x 36 7/8"
	A/C				1	C9PZ	8620–DC	*JC–600	1/2" x 60"

COPYRIGHT © 1986— FORD MOTOR COMPANY —DEARBORN, MICHIGAN

APPLICATION CHART

YEAR	MODEL/RESTRICTIONS	QUANTITY Alt.	Idler or P/S	Air Pump	A/C Comp.	PART NUMBER	DESCRIPTION	
8620	BELT (DRIVE) — Cont'd							
	1975							
	F (Cougar) 8 CYL. 351-M							
75	Alternator-42,55,61 amp.	1				C9PZ 8620-GM	*JB-414-L	15/32" x 41 1/2"
	Alternator-70,90 amp.- "Before 11/15/74"	1				★C9PZ 8620-V r/bE4PZ 8620-J	*JB-423	15/32" x 42 3/8"
	Alternator-70,90 amp.- "From 11/15/74"	1				C9PZ 8620-T	*JB-420	15/32" x 42"
	P/S without A/C		1			D9PZ 8620-U	*JC-517-A	1/2" x 51 7/8"
	P/S and A/C		1			D0TZ 8620-B	*JC-507	1/2" x 50 7/8"
	T/E pump-exc. Calif. T/E pump-Calif.- "Before 11/1/74"			1 1		D4PZ 8620-D	*JH-321	1/4" x 32 1/8"
	T/E pump-Calif.- "From 11/1/74"			1		D4PZ 8620-B	*JH-331	1/4" x 33 1/8"
	A/C				1	C9PZ 8620-GC	*JC-552-L	1/2" x 55 1/4"
	F (Cougar) 8 CYL. 351-W							
75	Alternator-61 amp.	1				C9PZ 8620-P	*JB-401	15/32" x 40 1/8"
	Alternator-70,90 amp.	1				C9PZ 8620-S	*JB-412	15/32" x 41 1/4"
	P/S without A/C		1			D9PZ 8620-U	*JC-517-A	1/2" x 51 7/8"
	P/S and A/C		1			D0TZ 8620-B	*JC-507	1/2" x 50 7/8"
	T/E pump			1		D4PZ 8620-D	*JH-321	1/4" x 32 1/8"
	A/C				1	C9PZ 8620-GC	*JC-552-L	1/2" x 55 1/4"
	F (Cougar) 8 CYL. 400							
75	Alternator-42,55,61 amp.	1				C9PZ 8620-GM	*JB-414-L	15/32" x 41 1/2"
	Alternator-70,90 amp.- "Before 11/15/74"	1				★C9PZ 8620-V r/bE4PZ 8620-J	*JB-423	15/32" x 42 3/8"
	Alternator-70,90 amp.- "From 11/15/74"	1				C9PZ 8620-T	*JB-420	15/32" x 42"
	P/S without A/C		1			D9PZ 8620-U	*JC-517-A	1/2" x 51 7/8"
	P/S with A/C		1			D0TZ 8620-B	*JC-507	1/2" x 50 7/8"
	T/E pump			1		D4PZ 8620-D	*JH-321	1/4" x 32 1/8"
	A/C				1	C9PZ 8620-GC	*JC-552-L	1/2" x 55 1/4"
	F (Cougar) 8 CYL. 460							
75	Alternator-42,55,61 amp.	1				★C9PZ 8620-F r/bE5PZ 8620-D	*JB-354	15/32" x 35 1/2"
	Alternator-70 amp.- "Before 11/15/74"	1				C9PZ 8620-G	*JB-363	15/32" x 36 3/8"
	Alternator-70 amp.- "From 11/15/74"	1				D1RY 8620-C	*JB-361	15/32" x 36 1/8"
	P/S without A/C		1			C9PZ 8620-CM	*JC-524	1/2" x 52 1/2"
	P/S and A/C		1			C9PZ 8620-CP	*JC-534	1/2" x 53 1/2"
	T/E pump			1		D4PZ 8620-F	*JH-367	1/4" x 36 7/8"
	A/C				1	C9PZ 8620-CV	*JC-564	1/2" x 56 1/2"

APPLICATION CHART

YEAR	MODEL/RESTRICTIONS	QUANTITY Alt.	Idler or P/S	Air Pump	A/C Comp.	PART NUMBER	DESCRIPTION	
8620	BELT (DRIVE) — Cont'd							
	1975							
	G (Monarch)					**6 CYL. 200**		
75	Alternator without A/C	1				C9PZ 8620–E	*JB–346	15/32" x 34 3/4"
	Alternator & integral A/C	2				C9PZ 8620–AG	*JB–464	15/32" x 46 1/2"
	Alternator & hang–on A/C	2				D1PZ 8620–B	*JB–455	15/32" x 45 5/8"
	P/S		1			C9PZ 8620–GM	*JB–414–L	15/32" x 41 1/2"
	T/E pump without A/C– "Before 5/12/75"			1		D5PZ 8620–A	*JH–371	1/4" x 37 1/8"
	T/E pump with A/C T/E pump without A/C– "From 5/12/75"			1 1		D00Z 8620–A	*JH–361	1/4" x 36 1/8"
	G (Monarch)					**6 CYL. 250**		
75	Alternator without A/C	1				D1PZ 8620–A	*JB–432	15/32" x 43 1/4"
	Alternator and A/C	2				C9PZ 8620–FU	*JB–493–L	15/32" x 49 3/8"
	P/S		1			C9PZ 8620–FY	*JB–461–L	15/32" x 46 1/8"
	T/E pump			1		D4PZ 8620–A	*JH–391	1/4" x 39 1/8"
	G (Monarch)					**8 CYL. 302**		
75	Alternator–40 amp. w/o P/S	1				D1PZ 8620–A	*JB–432	15/32" x 43 1/4"
	Alternator–40 amp w/P/S Alternator–60 amp	1 1				C9PZ 8620–A	*JB–401	15/32" x 40 1/8"
	Alternator–70 amp w/o A/C "Before 5/1/75"	1				C9PZ 8620–AD	*JB–451	15/32" x 45 1/8"
	Alternator–70 amp w/o A/C "From 5/1/75"	1				C9PZ 8620–AC	*JB446	15/32" x 44 3/4"
	Alternator–70 amp w/A/C	1				C9PZ 8620–S	*JB–412	15/32" x 41 1/4"
	P/S without A/C		1			D9PZ 8620–N	*JC–514–A	1/2" x 51 1/2"
	P/S and A/C		1			C9PZ 8620–CK	*JC–504	1/2" x 50 1/2"
	Idler pulley		1			C9PZ 8620–CF	*JC–477	1/2" x 47 7/8"
	T/E pump			1		D4PZ 8620–D	*JH–321	1/4" x 32 1/8"
	A/C				1	C9PZ 8620–GC	*JC–552–L	1/2" x 55 1/4"
	G (Monarch)					**8 CYL. 351–W**		
75	Alternator without A/C– "Before 5/1/75"	1				C9PZ 8620–AD	*JB–451	15/32" x 45 1/8"
	Alternator without A/C– "From 5/1/75"	1				C9PZ 8620–AC	*JB–446	15/32" x 44 3/4"
	Alternator and A/C	1				C9PZ 8620–S	*JB–412	15/32" x 41 1/4"
	P/S without A/C		1			C9PZ 8620–CM	*JC–524	1/2" x 52 1/2"
	P/S and A/C		1			D9PZ 8620–N	*JC–514–A	1/2" x 51 1/2"
	T/E pump			1		D4PZ 8620–D	*JH–321	1/4" x 32 1/8"
	A/C				1	C9PZ 8620–GC	*JC–552–L	1/2" x 55 1/4"
	J (Capri)					**refer to 1976**		

COPYRIGHT © 1986 — FORD MOTOR COMPANY — DEARBORN, MICHIGAN

APPLICATION CHART

8620 BELT (DRIVE) — Cont'd

1975

K (Mark IV) — 8 CYL. 460

YEAR	MODEL/RESTRICTIONS	QUANTITY Alt.	Idler or P/S	Air Pump	A/C Comp.	PART NUMBER	DESCRIPTION	
75	Alternator-w/o Sierracin system- "Before 11/15/74"	1				C9PZ 8620-G	*JB-363	15/32" x 36 3/8"
	Alternator-w/o Sierracin system- "From 11/15/74"	1				D1RY 8620-C	*JB-361	15/32" x 36 1/8"
	Alternator (upper)-with Sierracin system	1				C9PZ 8620-GL	*JB-486-LA	15/32" x 48 3/4"
	Alternator (lower)-with Sierracin system	1				★C9PZ 8620-F r/bE5PZ 8620-D	*JB-354	15/32" x 35 1/2"
	P/S-w/o Sierracin system		1			D0TZ 8620-B	*JC-507	1/2" x 50 7/8"
	P/S-with Sierracin system		1			C9PZ 8620-CK	*JC-504	1/2" x 50 1/2"
	T/E pump			1		D4PZ 8620-F	*JH-367	1/4" x 36 7/8"
	A/C				1	C9PZ 8620-DC	*JC-600	1/2" x 60"

L (Bobcat) — 4 CYL. 140 (2300 cc)

YEAR	MODEL/RESTRICTIONS	Alt.	Idler or P/S	Air Pump	A/C Comp.	PART NUMBER	DESCRIPTION	
75	Alternator-42,61 amp. without P/S	1				★D5PZ 8620-P r/bC9PZ-AA(6/82)	*JA-435	13/32" x 43 5/8"
	Alternator-70 amp. without P/S	1				C9PZ 8620-AD	*JB-451	15/32" x 45 1/8"
	Alternator-42,61 amp. and P/S	2				E1PZ 8620-D	*JB-535-LB	15/32" x 53 5/8"
	Alternator-70 amp. and P/S	2				★C9PZ 8620-AU r/bE3TZ 8620-N	*JB-546	15/32" x 54 3/4"
	T/E pump without A/C			1		D4PZ 8620-F	*JH-367	1/4" x 36 7/8"
	T/E pump and factory A/C			1		D4PZ 8620-H	*JH-351	1/4" x 35 1/8"
	T/E pump and dealer A/C			1		C9PZ 8620-GY	*JB-366-L	15/32" x 36 3/4"
	A/C-factory installed				1	C9PZ 8620-BS	*JC-423	1/2" x 42 3/8"
	A/C-dealer installed				1	D2PZ 8620-A	*JC-397-C	1/2" x 39 7/8"

L (Bobcat) — 6 CYL. 171 (2800 cc)

YEAR	MODEL/RESTRICTIONS	Alt.	Idler or P/S	Air Pump	A/C Comp.	PART NUMBER	DESCRIPTION	
75	Alternator & T/E pump	1				C9PZ 8620-AP	*JB-516	15/32" x 51 3/4"
	P/S		1			C9PZ 8620-GJ	*JB-436-L	15/32" x 43 3/4"
	A/C				1	C9PZ 8620-CP	*JC-534	1/2" x 53 1/2"

P (Comet) — 6 CYL. 200

YEAR	MODEL/RESTRICTIONS	Alt.	Idler or P/S	Air Pump	A/C Comp.	PART NUMBER	DESCRIPTION	
75	Alternator without A/C	1				C9PZ 8620-E	*JB-346	15/32" x 34 3/4"
	Alternator & integral A/C	2				C9PZ 8620-AG	*JB-464	15/32" x 46 1/2"
	Alternator & hang-on A/C	2				D1PZ 8620-B	*JB-455	15/32" x 45 5/8"
	P/S		1			C9PZ 8620-GM	*JB-414-L	15/32" x 41 1/2"
	T/E pump-without A/C- "Before 5/12/75"			1		D5PZ 8620-A	*JH-371	1/4" x 37 1/8"
	T/E pump with A/C T/E pump without A/C- "From 5/12/75"			1 1		D00Z 8620-A	*JH-361	1/4" x 36 1/8"

P (Comet) — 6 CYL. 250

YEAR	MODEL/RESTRICTIONS	Alt.	Idler or P/S	Air Pump	A/C Comp.	PART NUMBER	DESCRIPTION	
75	Alternator without A/C	1				D1PZ 8620-A	*JB-432	15/32" x 43 1/4"
	Alternator and A/C	2				C9PZ 8620-FU	*JB-493-L	15/32" x 49 3/8"
	P/S		1			C9PZ 8620-FY	*JB-461-L	15/32" x 46 1/8"
	T/E pump			1		D4PZ 8620-A	*JH-391	1/4" x 39 1/8"

APPLICATION CHART

YEAR	MODEL/RESTRICTIONS	QUANTITY Alt.	Idler or P/S	Air Pump	A/C Comp.	PART NUMBER	DESCRIPTION	
8620	BELT (DRIVE) — Cont'd							
	1975							
	P (Comet)					**8 CYL. 302**		
75	Alternator without A/C	1				C9PZ 8620-AD	*JB-451	15/32" x 45 1/8"
	Alternator with A/C	1				C9PZ 8620-S	*JB-412	15/32" x 41 1/4"
	P/S without A/C		1			D9PZ 8620-N	*JC-514-A	1/2" x 51 1/2"
	P/S and A/C		1			C9PZ 8620-CH	*JC-495-L	1/2" x 49 5/8"
	Idler pulley		1			C9PZ 8620-CF	*JC-477	1/2" x 47 7/8"
	T/E pump			1		D4PZ 8620-D	*JH-321	1/4" x 32 1/8"
	A/C				1	C9PZ 8620-GC	*JC-552-L	1/2" x 55 1/4"
	Y (Meteor)					**8 CYL. 351-M**		
75	Alternator-42,55,61 amp. without A/C	1				C9PZ 8620-GM	*JB-414-L	15/32" x 41 1/2"
	Alternator-55,61 amp. with A/C	1				C9PZ 8620-S	*JB-412	15/32" x 41 1/4"
	Alternator-70,90 amp.- "Before 5/1/75"	1				★C9PZ 8620-V r/bE4PZ 8620-J	*JB-423	15/32" x 42 3/8"
	Alternator-70,90 amp.- "From 5/1/75"	1				C9PZ 8620-T	*JB-420	15/32" x 42"
	P/S without A/C- "Before 6/30/75"		1			D9PZ 8620-U	*JC-517-A	1/2" x 51 7/8"
	P/S and A/C- "Before 6/30/75" P/S "From 6/30/75"		1 1			C9PZ 8620-CK	*JC-504	1/2" x 50 1/2"
	T/E pump-exc. Calif. T/E pump-Calif. "Before 11/1/74"			1 1		D4PZ 8620-D	*JH-321	1/4" x 32 1/8"
	T/E pump-Calif.- "From 11/1/74"			1		D4PZ 8620-B	*JH-331	1/4" x 33 1/8"
	A/C - - factory installed				1	C9PZ 8620-GC	*JC-552-L	1/2" x 55 1/4"
	A/C - - dealer installed				1	C9PZ 8620-CR	*JC-537	1/2" x 53 7/8"
	Y (Meteor)					**8 CYL. 400**		
75	Alternator-42,55,61 amp. without A/C	1				C9PZ 8620-GM	*JB-414-L	15/32" x 41 1/2"
	Alternator-55,61 amp. with A/C	1				C9PZ 8620-S	*JB-412	15/32" x 41 1/4"
	Alternator-70,90 amp.- "Before 5/1/75"	1				★C9PZ 8620-V r/bE4PZ 8620-J	*JB-423	15/32" x 42 3/8"
	Alternator-70-90 amp.- "From 5/1/75"	1				C9PZ 8620-T	*JB-420	15/32" x 42"
	P/S without A/C- "Before 11/1/74"		1			D9PZ 8620-U	*JC-517-A	1/2" x 51 7/8"
	P/S without A/C- "From 11/1/74 to 6/30/75"		1			C9PZ 8620-CM	*JC-524	1/2" x 52 1/2"
	P/S and A/C- "Before 11/1/74"		1			C9PZ 8620-CK	*JC-504	1/2" x 50 1/2"
	P/S and A/C- "From 11/1/74 to 6/30/75" P/S "From 6/30/75"		1 1			D0TZ 8620-B	*JC-507	1/2" x 50 7/8"
	T/E pump			1		D4PZ 8620-D	*JH-321	1/4" x 32 1/8"
	A/C - - factory installed				1	C9PZ 8620-GC	*JC-552-L	1/2" x 55 1/4"
	A/C - - dealer installed				1	C9PZ 8620-CR	*JC-537	1/2" x 53 7/8"

COPYRIGHT © 1986— FORD MOTOR COMPANY —DEARBORN, MICHIGAN

APPLICATION CHART

YEAR	MODEL/RESTRICTIONS	QUANTITY Alt.	Idler or P/S	Air Pump	A/C Comp.	PART NUMBER		DESCRIPTION	
8620	BELT (DRIVE) — Cont'd								
	1975								
	Y (Meteor) 8 CYL. 460–Exc. P/C								
75	Alternator–42,55,61 amp.	1				★C9PZ r/bE5PZ	8620–F 8620–D	*JB–354	15/32" x 35 1/2"
	Alternator–70 amp.– "Before 5/1/75"	1				C9PZ	8620–G	*JB–363	15/32" x 36 3/8"
	Alternator–70 amp.– "From 5/1/75"	1				D1RY	8620–C	*JB–446	15/32" x 44 3/4"
	P/S without A/C		1			C9PZ	8620–CM	*JC–524	1/2" x 52 1/2"
	P/S and A/C		1			D0TZ	8620–B	*JC–507	1/2" x 50 7/8"
	T/E pump			1		D4PZ	8620–F	*JH–367	1/4" x 36 7/8"
	A/C				1	C9PZ	8620–DC	*JC–600	1/2" x 60"
	Y (Meteor) 8CYL. 460 P/C								
75	Alternator– "Before 1/13/75"	1				C9PZ	8620–E	*JB–346	15/32" x 34 3/4"
	Alternator– "From 1/13/75 to 5/1/75"	1				C9PZ	8620–G	*JB–363	15/32" x 36 3/8"
	Alternator– "From 5/1/75"	1				D1RY	8620–C	*JB–446	15/32" x 44 3/4"
	P/S "Before 1/13/75" P/S and A/C– "From 1/13/75"		1 1			D0TZ	8620–B	*JC–507	1/2" x 50 7/8"
	P/S without A/C– "From 1/13/75		1			D0AZ	8620–E	*JC–527–L	1/2" x 52 7/8"
	T/E pump without A/C			1		D4PZ	8620–C	*JH–356	1/4" x 35 3/4"
	T/E pump with A/C "Before 1/13/75"			1		D5PZ	8620–A	*JH–371	1/4" x 37 1/8"
	T/E pump with A/C– "From 1/13/75"			1		D4PZ	8620–F	*JH–367	1/4" x 36 7/8"
	A/C "Before 1/13/75"				1	C9PZ	8620–GT	*JC–604	1/2" x 30 1/2"
	A/C "From 1/13/75"				1	C9PZ	8620–DC	*JC–600	1/2" x 60"
	1976								
	A (Mercury) 8 CYL. 400								
76	Alternator–60 amp.	1				C9PZ	8620–S	*JB–412	15/32" x 41 1/4"
	Alternator–70,90 amp.	1				C9PZ	8620–T	*JB–420	15/32" x 42"
	P/S and A/C P/S without A/C– "Before 3/1/76"		1 1			D0TZ	8620–B	*JC–507	1/2" x 50 7/8"
	P/S without A/C– "From 3/1/76"		1			D9PZ	8620–U	*JC–517–A	1/2" x 51 7/8"
	T/E pump			1		D4PZ	8620–B	*JH–331	1/4" x 33 1/8"
	A/C–factory				1	C9PZ	8620–GC	*JC–552–L	1/2" x 55 1/4"
	A/C–dealer				1	C9PZ	8620–CR	*JC–537	1/2" x 53 7/8"
	A (Mercury) 8 CYL. 460–460 P/C								
76	Alternator–40,60 amp.	1				★C9PZ r/bE5PZ	8620–F 8620–D	*JB–354	15/32" x 35 1/2"
	Alternator–70,90 amp.	1				D1RY	8620–C	*JB–361	15/32" x 36 1/8"
	P/S without A/C (exc. P/C)		1			C9PZ	8620–CM	*JC–524	1/2" x 52 1/2"
	P/S without A/C (P/C)		1			D0AZ	8620–E	*JC–527–L	1/2" x 52 7/8"
	P/S and A/C		1			D0TZ	8620–B	*JC–507	1/2" x 50 7/8"
	T/E pump			1		D4PZ	8620–F	*JH–367	1/4" x 36 7/8"
	A/C				1	C9PZ	8620–DC	*JC–600	1/2" x 60"

APPLICATION CHART

YEAR	MODEL/RESTRICTIONS	QUANTITY Alt.	Idler or P/S	Air Pump	A/C Comp.	PART NUMBER	DESCRIPTION	
8620	BELT (DRIVE) — Cont'd							
	1976							
76	Alternator–40,60 amp.	1				C9PZ 8620–P	*JB–401	15/32" x 40 1/8"
	Alternator–70,90 amp.	1				C9PZ 8620–S	*JB–412	15/32" x 41 1/4"
	P/S without A/C		1			D9PZ 8620–U	*JC–517–A	1/2" x 51 7/8"
	P/S and A/C		1			D0TZ 8620–B	*JC–507	1/2" x 50 7/8"
	T/E pump			1		D4PZ 8620–B	*JH–331	1/4" x 33 1/8"
	A/C – – Factory Inst.				1	C9PZ 8620–GC	*JC–552–L	1/2" x 55 1/4"
	A/C – – Dealer Inst.				1	C9PZ 8620–CP	*JC–534	1/2" x 53 1/2"
	C (Montego) 8 CYL. 351–M–400							
76	Alternator–40,60 amp.	1				C9PZ 8620–GM	*JB–414–L	15/32" x 41 1/2"
	Alternator–70,90 amp.	1				C9PZ 8620–T	*JB–420	15/32" x 42"
	P/S without A/C		1			D9PZ 8620–U	*JC–517–A	1/2" x 51 7/8"
	P/S and A/C		1			D0TZ 8620–B	*JC–507	1/2" x 50 7/8"
	T/E pump			1		D4PZ 8620–B	*JH–331	1/4" 33 1/8"
	A/C				1	C9PZ 8620–GC	*JC–552–L	1/2" x 55 1/4"
	C (Montego) 8 CYL. 460–Exc. P/C							
76	Alternator–40,60 amp.	1				★C9PZ 8620–F r/bE5PZ 8620–D	*JB–354	15/32" x 35 1/2
	Alternator–70 amp.	1				D1RY 8620–C	*JB–361	15/32" x 36 1/8"
	P/S without A/C		1			C9PZ 8620–CM	*JC–524	1/2" x 52 1/2"
	P/S and A/C		1			C9PZ 8620–CP	*JC–534	1/2" x 53 1/2"
	T/E pump			1		D4PZ 8620–F	*JH–367	1/4" x 36 7/8"
	A/C				1	C3AZ 8620–F	*JC–563	1/2" x 56 3/8"
	C (Montego) 8 CYL. 460 P/C							
76	Alternator "Before 5/17/76"	1				C9PZ 8620–D	*JB–341	15/32" x 34 1/8"
	Alternator "From 5/17/76"	1				D1RY 8620–C	*JB–361	15/32 x 36 1/8"
	P/S "Before 5/17/76"		1			C9PZ 8620–CM	*JC–524	1/2" x 52 1/2"
	P/S – w/o A/C "From 5/17/76"		1			D0AZ 8620–E	*JC–527–L	1/2" x 52 7/8"
	P/S – w/ A/C "From 5/17/76"		1			C9PZ 8620–CP	*JC–534	1/2" x 53 1/2"
	T/E pump "Before 5/17/76"			1		D4PZ 8620–C	*JH–356	1/4" x 35 3/4
	T/E pump "From 5/17/76"			1		D4PZ 8620–F	*JH–367	1/4" x 36 7/8"
	A/C				1	C3AZ 8620–F	*JC–563	1/2" x 56 3/8"
	D (Lincoln) 8 CYL. 460							
76	Alternator–60 amp. w/o Sierracin system	1				★C9PZ 8620–F r/bE5PZ 8620–D	*JB–354	15/32" x 35 1/2"
	Alternator–70,90 amp. w/o Sierracin system	1				D1RY 8620–C	*JB–361	15/32" x 36 1/8"
	Alternator (upper)–with Sierracin system	1				C9PZ 8620–FU	*JB–493–L	15/32" x 49 3/8"
	Alternator (lower)–with Sierracin system	1				C9PZ 8620–GY	*JB–366–L	15/32" x 36 3/4"
	P/S–w/o Sierracin system		1			D0TZ 8620–B	*JC–507	1/2" x 50 7/8"
	P/S–with Sierracin system		1			C9PZ 8620–CK	*JC–504	1/2" x 50 1/2"
	T/E pump			1		D4PZ 8620–F	*JH–367	1/4" x 36 7/8"
	A/C				1	C9PZ 8620–DC	*JC–600	1/2" x 60"

COPYRIGHT © 1986— FORD MOTOR COMPANY —DEARBORN, MICHIGAN

APPLICATION CHART

YEAR	MODEL/RESTRICTIONS	QUANTITY Alt.	Idler or P/S	Air Pump	A/C Comp.	PART NUMBER	DESCRIPTION	
8620	BELT (DRIVE) — Cont'd							
	1976							
	F (Cougar) 8 CYL. 351-W							
76	Alternator-40,60 amp.	1				C9PZ 8620-P	*JB-401	15/32" x 40 1/8"
	Alternator-70,90 amp.	1				C9PZ 8620-S	*JB-412	15/32" x 41 1/4"
	P/S without A/C		1			D9PZ 8620-U	*JC-517-A	1/2" x 51 7/8"
	P/S and A/C		1			D0TZ 8620-B	*JC-507	1/2" x 50 7/8"
	T/E pump			1		D4PZ 8620-B	*JH-331	1/4" x 33 1/8"
	A/C				1	C9PZ 8620-GC	*JC-552-L	1/2" x 55 1/4"
	F (Cougar) 8 CYL. 351-M-400							
76	Alternator-40,60 amp.	1				C9PZ 8620-GM	*JB-414-L	15/32" x 41 1/2"
	Alternator-70,90 amp.	1				C9PZ 8620-T	*JB-420	15/32" x 42"
	P/S-without A/C		1			D9PZ 8620-U	*JC-517-A	1/2" x 51 7/8"
	P/S and A/C		1			D0TZ 8620-B	*JC-507	1/2" x 50 7/8"
	T/E pump			1		D4PZ 8620-B	*JH-331	1/4" x 33 1/8"
	A/C				1	C9PZ 8620-GC	*JC-552-L	1/2" x 55 1/4"
	F (Cougar) 8 CYL. 460							
76	Alternator-60 amp.	1				★C9PZ 8620-F r/bE5PZ 8620-D	*JB-354	15/32" x 35 1/2"
	Alternator-70 amp.	1				D1RY 8620-C	*JB-361	15/32" x 36 1/8"
	P/S and A/C		1			C9PZ 8620-CP	*JC-534	1/2" x 53 1/2"
	T/E pump			1		D4PZ 8620-F	*JH-367	1/4" x 36 7/8"
	A/C				1	C3AZ 8620-F	*JC-563	1/2" x 56 3/8"
	G (Monarch) 6 CYL. 200							
76	Alternator without A/C	1				C9PZ 8620-E	*JB-346	15/32" x 34 3/4"
	Alternator with dealer A/C	2				D1PZ 8620-B	*JB-455	15/32" x 45 5/8"
	P/S		1			C9PZ 8620-GM	*JB-414-L	15/32" x 41 1/2"
	T/E pump			1		D00Z 8620-A	*JH-361	1/4" x 36 1/8"
	G (Monarch) 6 CYL. 250							
76	Alternator-without A/C	1				D1PZ 8620-A	*JB-432	15/32" x 43 1/4"
	Alternator-with A/C without P/S	2				C9PZ 8620-FU	*JB-493-L	15/32" x 49 3/8"
	Alternator-with A/C and P/S	2				D6PZ 8620-E	*JB-571-B	15/32" x 57 1/8"
	P/S - - without A/C		1			C9PZ 8620-FY	*JB-461-L	15/32" X 46 1/8"
	T/E pump without A/C			1		D4PZ 8620-A	*JH-391	1/4" x 39 1/8"
	T/E pump with A/C			1		D6PZ 8620-J	*JH-300	1/4" x 30"
	A/C				1	C9PZ 8620-BH	*JC-373	1/2" x 37 3/8"

APPLICATION CHART

YEAR	MODEL/RESTRICTIONS	QUANTITY Alt.	Idler or P/S	Air Pump	A/C Comp.	PART NUMBER	DESCRIPTION	
8620	BELT (DRIVE) — Cont'd							
	1976							
	G (Monarch)					**8 CYL. 302**		
76	Alternator–40 amp. without P/S	1				D1PZ 8620–A	*JB–432	15/32" x 43 1/4"
	Alternator–40 amp. with P/S Alternator–60 amp.	1 1				C9PZ 8620–P	*JB–401	15/32" x 40 1/8"
	Alternator–70 amp. without A/C	1				C9PZ 8620–AC	*JB–446	15/32" x 44 3/4"
	Alternator–70 amp. with A/C	1				C9PZ 8620–S	*JB–412	15/32" x 41 1/4"
	P/S "Before 7/6/76" P/S w/o A/C "From 7/6/76" P/S & A/C(54H,66H) – – "From 7/6/76"		1 1 1			D9PZ 8620–N	*JC–514–A	1/2" x 51 1/2"
	P/S & A/C (54K,66K) – – "From 7/6/76"		1			D0VZ 8620–B	*JC– 517	1/2" x 51 7/8"
	Idler pulley "Before 7/6/76" Idler Pulley(54H,66H) – – "From 7/6/76"		1 1			C9PZ 8620–CD	*JC–483	1/2" x 48 3/8"
	Idler Pulley(54K,66K) – – "From 7/6/76"		1			C9PZ 8620–CG	*JC–490	1/2" x 49"
	T/E pump			1		D4PZ 8620–B	*JH–331	1/4" x 33 1/8"
	A/C				1	C9PZ 8620–DF	*JC–616	1/2" x 61 3/4"
	G (Monarch)					**8 CYL. 351–W**		
76	Alternator–40,60 amp. without P/S	1				D1PZ 8620–A	*JB–432	15/32" x 43 1/4"
	Alternator–70 amp. without P/S	1				C9PZ 8620–AC	*JB–446	15/32" x 44 3/4"
	Alternator–40,60 amp. with P/S	1				C9PZ 8620–P	*JB–401	15/32" x 40 1/8"
	Alternator–70 amp. with P/S	1				C9PZ 8620–S	*JB–412	15/32" x 41 1/4"
	P/S without A/C		1			C9PZ 8620–CM	*JC–524	1/2" x 52 1/2"
	P/S & A/C "Before 7/6/76" P/S & A/C(54H,66H) – – "From 7/6/76"		1 1			D9PZ 8620–N	*JC–514–A	1/2" x 51 1/2"
	P/S & A/C(54K,66K) – – "From 7/6/76"		1			D9PZ 8620–U	*JC–517–A	1/2" x 51 7/8"
	T/E pump			1		D4PZ 8620–B	*JH–331	1/4" x 33 1/8"
	A/C				1	C9PZ 8620–DF	*JC–616	1/2" x 61 3/4"

COPYRIGHT © 1986 — FORD MOTOR COMPANY — DEARBORN, MICHIGAN

APPLICATION CHART

8620 BELT (DRIVE) — Cont'd

1976

J (Capri) — 4 CYL. 140 (2300 cc)

YEAR	MODEL/RESTRICTIONS	QUANTITY Alt.	Idler or P/S	Air Pump	A/C Comp.	PART NUMBER	DESCRIPTION	
76	Alternator without P/S– "Before 8/1/75"	1				C9PZ 8620-AD	*JB-451	15/32" x 45 1/8"
	Alt. w/o P/S (A/T)– "From 8/1/75"	1						
	Alt. w/o P/S or A/C (M/T)– "From 8/1/75"	1						
	Alt. w/o P/S w/A/C (M/T)– "From 8/1/75"	1				D1PZ 8620-B	*JB-455	15/32" x 45 5/8"
	Alternator with P/S– "Before 8/1/75"	2				★D6PZ 8620-F r/bE3TZ 8620-X(1/84)	*JB-542-A	15/32" x 54 1/4"
	Alt. w/P/S (A/T)– "From 8/1/75"	2						
	Alt. w/P/S w/o A/C (M/T)– "From 8/1/75"	2						
	Alt. w/P/S & A/C (M/T)– "From 8/1/75"	2				★D6PZ 8620-F r/bE3TZ 8620-X(1/84)	*JB-542-A	15/32" x 54 1/4"
	T/E pump–without A/C or P/S			1		C9PZ 8620-AK	*JB-501	15/32" x 50 1/8"
	T/E pump–with P/S w/o A/C			1		C9PZ 8620-P	*JB-401	15/32" x 40 1/8"
	T/E pump–with A/C–factory installed			1		D4PZ 8620-H	*JH-351	1/4" x 35 1/8"
	T/E pump and dealer A/C– "Before 9/1/75"			1		C9PZ 8620-GY	*JB-366-L	15/32" x 36 3/4"
	T/E pump and dealer A/C– "From 9/1/75"			1		★C9PZ 8620-F r/bE5PZ 8620-D	*JB-354	15/32" x 35 1/2"
	A/C–factory installed				1	E3HZ 8620-C	*JC-416-LA	1/2" x 41 3/4"
	A/C–dealer installed				1	D2PZ 8620-A	*JC-397-C	1/2" x 39 7/8"

J (Capri) — 6 CYL. 171 (2800 cc)

76	Alternator without A/C	1				C9PZ 8620-B	*JB-315	15/32" x 31 5/8"
	Alternator with factory A/C	1				D0AZ 8620-G	*JB-336	15/32" x 33 3/4"
	Alternator with hang-on A/C	1				C9PZ 8620-B	*JB-315	15/32" x 31 5/8"
	P/S		1			D4RY 8620-B	*JB-331	15/32" x 33 1/8"
	T/E pump			1		★C9PZ 8620-V r/bE4PZ 8620-J	*JB-423	15/32" x 42 3/8"
	A/C–factory installed				1	C9PZ 8620-CR	*JC-537	1/2" x 53 7/8"
	A/C–dealer installed				1	D0TZ 8620-B	*JC-507	1/2" x 50 7/8"

K (Mark IV) — 8 CYL. 460

76	Alternator–60 amp. w/o Sierracin system	1				★C9PZ 8620-F r/bE5PZ 8620-D	*JB-354	15/32" x 35 1/2"
	Alternator–70,90 amp. w/o Sierracin system	1				D1RY 8620-C	*JB-361	15/32" x 36 1/8"
	Alternator (upper)–with Sierracin system	1				C9PZ 8620-GL	*JB-486-LA	15/32" x 48 3/4"
	Alternator (lower)–with Sierracin system	1				★C9PZ 8620-F r/bE5PZ 8620-D	*JB-354	15/32" x 35 1/2"
	P/S–w/o Sierracin system		1			D0TZ 8620-B	*JC-507	1/2" x 50 7/8"
	P/S–with Sierracin system		1			C9PZ 8620-CK	*JC-504	1/2" x 50 1/2"
	T/E pump			1		D4PZ 8620-F	*JH-367	1/4" x 36 7/8"
	A/C				1	C9PZ 8620-DC	*JC-600	1/2" x 60"

APPLICATION CHART

YEAR	MODEL/RESTRICTIONS	QUANTITY Alt.	Idler or P/S	Air Pump	A/C Comp.	PART NUMBER	DESCRIPTION	
8620	BELT (DRIVE) — Cont'd							
	1976							
	L (Bobcat) 4 CYL. 140 (2300 cc)							
76	Alternator–40,60 amp.–without P/S	1				★D5PZ 8620–P r/bC9PZ–AA(6/82)	*JA–435	13/32" x 43 5/8"
	Alternator–70 amp.–without	1				C9PZ 8620–AD	*JB–451	15/32" x 45 1/8"
	Alternator–40,60 amp.–with P/S	2				E1PZ 8620–D	*JB–535–LB	15/32" x 53 5/8"
	Alternator–70 amp. with P/C	2				D6PZ 8620–F	*JB–542–A	15/32" x 54 1/2"
	T/E pump without A/C			1		★D4PZ 8620–F r/bE5PZ 8620–D	*JH–367	1/4" x 36 7/8"
	T/E pump and factory A/C			1		D4PZ 8620–G	*JH–346	1/4" x 34 3/4"
	T/E pump and dealer A/C			1		C9PZ 8620–F	*JB–354	15/32" x 35 1/2"
	A/C–factory installed				1	C9PZ 8620–CC	*JC–465	1/2" x 46 5/8"
	A/C–dealer installed				1	D2PZ 8620–A	*JC–397–C	1/2" x 39 7/8"
	L (Bobcat) 6 CYL. 171 (2800 cc)							
76	Alternator and T/E pump	1				C9PZ 8620–AP	*JB–516	15/32" x 51 3/4"
	P/S		1			C9PZ 8620–GJ	*JB–436–L	15/32" x 43 3/4"
	A/C–factory installed				1	C9PZ 8620–CP	*JC–534	1/2" x 53 1/2"
	A/C–dealer installed				1	D9PZ 8620–U	*JC–517–A	1/2" x 51 7/8"
	P (Comet) 6 CYL. 200							
76	Alternator without A/C	1				C9PZ 8620–E	*JB–346	15/32" x 34 3/4"
	Alternator with factory A/C	2				C9PZ 8620–AH	*JB–464	15/32" x 46 1/2"
	Alternator with dealer A/C	2				D1PZ 8620–B	*JB–455	15/32" x 45 5/8"
	P/S		1			C9PZ 8620–GM	*JB–414–L	15/32" x 41 1/2"
	T/E pump			1		D00Z 8620–A	*JH–361	1/4" x 36 1/8"
	P (Comet) 6 CYL. 250							
76	Alternator without A/C	1				D1PZ 8620–A	*JB–432	15/32" x 43 1/4"
	Alternator with A/C	2				C9PZ 8620–FU	*JB–493–L	15/32" x 49 3/8"
	P/S		1			C9PZ 8620–FY	*JB–461–L	15/32" x 46 1/8"
	T/E pump			1		D4PZ 8620–A	*JH–391	1/4" x 39 1/8"
	P (Comet) 8 CYL. 302							
76	Alternator–40 amp. without P/S	1				D1PZ 8620–A	*JB–432	15/32" x 43 1/4"
	Alternator–40 amp. with P/S Alternator–60 amp.	1 1				C9PZ 8620–P	*JB–401	15/32" x 40 1/8"
76	Alternator–70 amp. without A/C	1				C9PZ 8620–AC	*JB–446	15/32" x 44 3/4"
	Alternator–70 amp. with A/C	1				C9PZ 8620–S	*JB–412	15/32" x 41 1/4"
	P/S		1			C9PZ 8620–CK	*JC–504	1/2" x 50 1/2"
	Idler pulley		1			C9PZ 8620–CF	*JC–477	1/2" x 47 7/8"
	T/E pump			1		D4PZ 8620–B	*JH–331	1/4" x 33 1/8"
	A/C				1	C9PZ 8620–GC	*JC–552–L	1/2" x 55 1/4"

COPYRIGHT © 1986— FORD MOTOR COMPANY —DEARBORN, MICHIGAN

APPLICATION CHART

YEAR	MODEL/RESTRICTIONS	QUANTITY Alt.	Idler or P/S	Air Pump	A/C Comp.	PART NUMBER		DESCRIPTION	
8620	BELT (DRIVE) — Cont'd								
	1976								
	Y (Meteor) 8 CYL. 351-M								
76	Alternator-60 amp.	1				C9PZ	8620-S	*JB-412	15/32" x 41 1/4"
	Alternator-70,90 amp.	1				C9PZ	8620-T	*JB-420	15/32" x 42"
	P/S and A/C P/S without A/C- "Before 3/1/76"		1 1			C9PZ	8620-CK	*JC-504	1/2" x 50 1/2"
	P/S without A/C- "From 3/1/76"		1			D9PZ	8620-U	*JC-517-A	1/2" x 51 7/8"
	T/E			1		D4PZ	8620-B	*JH-331	1/4" x 33 1/8"
	A/C-factory				1	C9PZ	8620-GC	*JC-552-L	1/2" x 55 1/4"
	A/C-dealer				1	C9PZ	8620-CR	*JC-537	1/2" x 53 7/8"
	Y (Meteor) 8 CYL. 400								
76	Alternator-40 amp.	1				C9PZ	8620-GM	*JB-414-L	15/32" x 41 1/2"
	Alternator-60 amp.	1				C9PZ	8620-S	*JB-412	15/32" x 41 1/4"
	Alternator-70,90 amp.	1				C9PZ	8620-T	*JB-420	15/32" x 42"
	P/S and A/C P/S without A/C- "Before 3/1/76"		1 1			D0TZ	8620-B	*JC-507	1/2" x 50 7/8"
	P/S without A/C- "From 3/1/76"		1			D9PZ	8620-U	*JC-517-A	1/2" x 51 7/8"
	T/E pump			1		D4PZ	8620-B	*JH-331	1/4" x 33 1/8"
	A/C-factory				1	C9PZ	8620-GC	*JC-552-L	1/2" x 55 1/4"
	A/C-dealer				1	C9PZ	8620-CR	*JC-537	1/2" x 53 7/8"
	Y (Meteor) 8 CYL. 460-460 P/C								
76	Alternator-40,60 amp.	1				★C9PZ r/bE5PZ	8620-F 8620-D	*JB-354	15/32" x 35 1/2"
	Alternator-70,90 amp.	1				D1RY	8620-C	*JB-361	15/32" x 36 1/8"
	P/S without A/C (exc. P/C)		1			C9PZ	8620-CM	*JC-524	1/2" x 52 1/2"
	P/S without A/C (P/C)		1			D0AZ	8620-E	*JC-527-L	1/2" x 52 7/8"
	P/S and A/C		1			D0TZ	8620-B	*JC-507	1/2" x 50 7/8"
	T/E pump			1		D4PZ	8620-F	*JH-367	1/4" x 36 7/8"
	A/C				1	C9PZ	8620-DC	*JC-600	1/2" x 60"
	1977								
	A (Mercury) 8 CYL. 351M-400								
77	Alternator-40,60 amp.	1				C9PZ	8620-GM	*JB-414-L	15/32" x 41 1/2"
	Alternator-70,90 amp.	1				C9PZ	8620-T	*JB-420	15/32" x 42"
	P/S without A/C		1			D9PZ	8620-U	*JC-517-A	1/2" x 51 7/8"
	P/S and A/C		1			D0TZ	8620-B	*JC-507	1/2 x 50 7/8"
	T/E pump (w/o Hi-altitude carb.)			1		D4PZ	8620-B	*JH-331	1/4" x 33 1/8"
	T/E pump (Hi-altitude carb.)			1		D4PZ	8620-D	*JH-321	1/4" x 32 1/8"
	A/C-factory				1	C3AZ	8620-F	*JC-563	1/2 x 56 3/8"

APPLICATION CHART

YEAR	MODEL/RESTRICTIONS	QUANTITY Alt.	Idler or P/S	Air Pump	A/C Comp.	PART NUMBER	DESCRIPTION	
8620	BELT (DRIVE) — Cont'd							
	1977							
	A (Mercury)					**8 CYL. 460-460 P/C**		
77	Alternator-40,60 amp.	1				★C9PZ 8620-F r/bE5PZ 8620-D	*JB-354	15/32" x 35 1/2"
	Alternator-70,90 amp.	1				D1RY 8620-C	*JB-361	15/32" x 36 1/8"
	P/S without A/C (exc. P/C)		1			C9PZ 8620-CM	*JC-524	1/2" x 52 1/2"
	P/S without A/C (P/C		1			D0AZ 8620-E	*JC-527- L	1/2" X 52 7/8"
	P/S and A/C		1			D0TZ 8620-B	*JC-507	1/2" x 50 7/8"
	T/E pump w/o A/C (exc. P/C)			1		D5PZ 8620-A	*JH-371	1/4" x 37 1/8"
	T/E pump w/ A/C (exc. P/C T/E pump (P/C)			1 1		D4PZ 8620-F	*JH-367	1/4" x 36 7/8"
	A/C				1	C9PZ 8620-DC	*JC-600	1/2" x 60"
	D (Lincoln)					**8 CYL. 400**		
77	Alternator-60 amp.	1				D7PZ 8620-D	*JB-406-C	15/32" x 40 3/4"
	Alternator-70,90 amp.	1				C9PZ 8620-T	*JB-420	15/32" x 42"
	P/S		1			D0TZ 8620-B	*JC-507	1/2" x 50 7/8"
	T/E pump			1		D4PZ 8620-B	*JH-331	1/4" x 33 1/8"
	A/C				1	C3AZ 8620-F	*JC-563	1/2" x 56 3/8"
	D (Lincoln)					**8 CYL. 460**		
77	Alternator-60 amp.	1				★C9PZ 8620-F r/bE5PZ 8620-D	*JB-354	15/32" x 35 1/2"
	Alternator-70,90 amp.	1				D1RY 8620-C	*JB-361	15/32" x 36 1/8"
	P/S		1			D0TZ 8620-B	*JC-507	1/2" x 50 7/8"
	T/E pump			1		D4PZ 8620-F	*JH-367	1/4" x 36 7/8"
	A/C				1	C9PZ 8620-DC	*JC-600	1/2" x 60"
	F (Cougar)					**8 CYL. 302**		
77	Alternator-40,60 amp.	1				C9PZ 8620-P	*JB-401	15/32" x 40 1/8"
	Alternator-70,90 amp.	1				C9PZ 8620-S	*JB-412	15/32" x 41 1/4"
	P/S without A/C		1			D9PZ 8620-N	*JC-514-A	1/2" x 51 1/2"
	P/S and A/C		1			C9PZ 8620-CK	*JC-504	1/2" x 50 1/2"
	T/E pump			1		D4PZ 8620-B	*JH-331	1/4" x 33 1/8"
	A/C				1	C9PZ 8620-GC	*JC-552-L	1/2" x 55 1/4"
	F (Cougar)					**8 CYL. 351-W**		
77	Alternator-40,60 amp.	1				C9PZ 8620-P	*JB-401	15/32" x 40 1/8"
	Alternator-70,90 amp.	1				C9PZ 8620-S	*JB-412	15/32" x 41 1/4"
	P/S without A/C		1			D9PZ 8620-U	*JC-517-A	1/2" x 51 7/8"
	P/S and A/C		1			D0TZ 8620-B	*JC-507	1/2" x 50 7/8"
	A/C				1	C9PZ 8620-GC	*JC-552-L	1/2" x 55 1/4"
	F (Cougar)					**8 CYL. 351-M-400**		
77	Alternator-40,60 amp.	1				C9PZ 8620-GM	*JB-414-L	15/32" x 41 1/2"
	Alternator-70,90 amp.	1				C9PZ 8620-T	*JB-420	15/32" x 42"
	P/S-without A/C		1			D9PZ 8620-U	*JC-517-A	1/2" x 51 7/8"
	P/S and A/C		1			D0TZ 8620-B	*JC-507	1/2" x 50 7/8"
	T/E pump (w/o Hi-altitude carb.)			1		D4PZ 8620-B	*JH-331	1/4" x 33 1/8"
	T/E pump (Hi-altitude carb.)			1		D4PZ 8620-D	*JH-321	1/4" x 32 1/8"
	A/C				1	C9PZ 8620-GC	*JC-552-L	1/2" x 55 1/4"

COPYRIGHT © 1986— FORD MOTOR COMPANY —DEARBORN, MICHIGAN

APPLICATION CHART

YEAR	MODEL/RESTRICTIONS	QUANTITY Alt.	Idler or P/S	Air Pump	A/C Comp.	PART NUMBER	DESCRIPTION	
8620	BELT (DRIVE) — Cont'd							
	1977							
	G (Monarch) 6 CYL. 200							
77	Alternator without A/C	1				C9PZ 8620–E	*JB–346	15/32" x 34 3/4"
	Alternator with dealer A/C	2				D1PZ 8620–B	*JB–455	15/32" x 45 5/8"
	P/S		1			C9PZ 8620–GM	*JB–414–L	15/32 x 41 1/2"
	T/E pump			1		D00Z 8620–A	*JH–361	1/4" x 36 1/8"
	G (Monarch) 6 CYL. 250							
77	Alternator–without A/C	1				D1PZ 8620–A	*JB–432	15/32" x 43 1/4"
	Alternator–with A/C without P/S	2				C9PZ 8620–FU	*JB–493–L	15/32" x 49 3/8"
	Alternator–w/A/C and P/S w/o Htd. Back Light	2				D6PZ 8620–E	*JB–571–B	15/32" x 57 1/8"
	Alternator–w/A/C & P/S w/Htd Back Light	2				D7PZ 8620–J	*JB–581–A	15/32" x 58 1/8"
	P/S – – without A/C		1			C9PZ 8620–FY	*JB–561–L	15 32" x 56 1/8"
	T/E pump without A/C			1		D7PZ 8620–E	*JH–411	1/4" x 41 1/8"
	T/E pump with A/C			1		D7PZ 8620–F	*JH–311	1/4" x 31 1/8"
	A/C				1	C9PZ 8620–BH	*JC–373	1/2" x 37 3/8"
	G (Monarch) 8 CYL. 302							
77	Alternator–40 amp. w/o P/S	1				D1PZ 8620–A	*JB–432	15/32" x 43 1/4"
	Alternator–40 amp.w/P/S	1				C9PZ 8620–P	*JB–401	15/32" x 40 1/8"
	Alternator–60 amp w/P/S	1						
	Alternator–70 amp w/o A/C	1				C9PZ 8620–AC	* JB–446	15/32" X 44 3/4"
	Alternator–70 amp w/A/C	1				C9PZ 8620–S	* JB–412	15/32" X 41 1/4"
	P/S without A/C		1			D9PZ 8620–N	*JC–514–A	1/2" x 51 1/2"
	P/S and A/C		1			D9PZ 8620–U	*JC–517–A	1/2" x 51 7/8"
	Idler pulley		1			C9PZ 8620–CG	*JC–490	1/2" x 49"
	T/E pump – w/o High Alt. Carb.			1		D4PZ 8620–B	*JH–331	1/4" x 33 1/8"
	T/E pump – High Altitude Carb.			1		D4PZ 8620–D	*JH–321	1/4" x 32 1/8"
	A/C				1	C9PZ 8620–DF	*JC–616	1/2" x 61 3/4"
	G (Monarch) 8 CYL. 351–W							
77	Alternator–40,60 amp.– without P/S	1				D1PZ 8620–A	*JB–432	15/32" x 43 1/4"
	Alternator–40,60 amp.– with P/S	1				C9PZ 8620–P	*JB–401	15/32" x 40 1/8"
	Alternator–70 amp.	1				C9PZ 8620–S	*JB–411	15/32" x 41 1/4"
	P/S without A/C		1			C9PZ 8620–CM	*JC–524	1/2" x 52 1/2"
	P/S with A/C		1			D9PZ 8620–U	*JC–517–A	1/2" x 51 7/8"
	A/C				1	C9PZ 8620–DF	*JC–616	1/2" x 61 3/4"

APPLICATION CHART

YEAR	MODEL/RESTRICTIONS	QUANTITY Alt.	Idler or P/S	Air Pump	A/C Comp.	PART NUMBER	DESCRIPTION	
8620	BELT (DRIVE) — Cont'd							
	1977							
	J (Capri) 4 CYL. 140 (2300cc)							
77	Alt. w/o P/S (A/T) Alt. w/o P/S or A/C (M/T)	1 1				C9PZ 8620-AD	*JB-451	15/32 x 45 1/8"
	Alt. w/o P/S w/A/C (M/T)	1				D1PZ 8620-B	*JB-455	15/32" x 45 5/8"
	Alt. w/ P/S & A/C	2				D6PZ 8620-F	*JB-542-A	15/32" x 54 1/4"
	T/E pump - without A/C or P/S			1		C9PZ 8620-AK	*JB-501	15/32" x 50 1/8"
	T/E pump - w/o A/C w/P/S			1		C9PZ 8620-P	*JB-401	15/32" x 40 1/8"
	T/E pump - with A/C - factory installed			1		D4PZ 8620-H	*JH-351	1/4" x 35 1/8"
	T/E pump - with A/C- Dealer installed			1		★C9PZ 8620-F r/bE5PZ 8620-D	*JB-354	15/32" x 35 1/2"
	A/C - Factory installed				1	C9PZ 8620-BR	*JC-416	1/2" x 41 3/4"
	A/C - Dealer installed				1	D2PZ 8620-A	*JC-397-C	1/2" x 39 7/8"
	J (Capri) 6 CYL. 171 (2800cc)							
77	Alternator without A/C	1				C9PZ 8620-B	*JB-315	15/32" x 31 5/8"
	Alternator with Factory A/C	1				D0AZ 8620-G	*JB-336	15/32" x 33 3/4"
	Alternator w/Dealer A/C	1				C9PZ 8620-B	*JB-315	15/32" x 31 5/8"
	P/S		1			D4RY 8620-B	*JB-331	15/32" x 33 1/8"
	T/E pump			1		★C9PZ 8620-V r/bE4PZ 8620-J	*JB-423	15/32" x 42 3/8"
	A/C - Factory installed				1	C9PZ 8620-CR	*JC-537	1/2" x 53 7/8"
	A/C - Dealer installed				1	D0TZ 8620-B	*JC-507	1/2" x 50 7/8"
	K (Mark V) 8 CYL. 400							
77	Alternator-60 amp.	1				D7PZ 8620-D	*JB-406-C	15/32" x 40 3/4"
	Alternator-70,90 amp.	1				C9PZ 8620-T	*JB-420	15/32" x 42"
	P/S		1			D0TZ 8620-B	*JC-507	1/2" x 50 7/8"
	T/E pump			1		D4PZ 8620-B	*JH-331	1/4" x 33 1/8"
	A/C				1	C3AZ 8620-F	*JC-563	1/2" x 56 3/8"
	K (Mark V) 8 CYL. 460							
77	Alternator-60 amp.	1				★C9PZ 8620-F r/bE5PZ 8620-D	*JB-354	15/32" x 35 1/2"
	Alternator-70,90 amp.	1				D1RY 8620-C	*JB-361	15/32" x 36 1/8"
	P/S		1			D0TZ 8620-B	*JC-507	1/2" x 50 7/8"
	T/E pump			1		D4PZ 8620-F	*JH-367	1/4" x 36 7/8"
	A/C				1	C9PZ 8620-DC	*JC-600	1/2" x 60"
	L (Bobcat) 4 CYL. 140 (2300cc) "Before 6/27/77"-"From 6/27/77" refer to 1978							
77	Alternator-without P/S	1				★D5PZ 8620-P r/bD5PZ-P(6/82)	*JA-435	13/32" x 43 5/8"
	Alternator-with P/S	2				D8PZ 8620-J	*JA-552-L	3/8" x 55 1/4"
	T/E pump without A/C			1		D4PZ 8620-F	*JH-367	1/4" x 36 7/8"
	T/E pump and factory A/C			1		D4PZ 8620-G	*JH-346	1/4" x 34 3/4"
	T/E pump and dealer A/C			1		★C9PZ 8620-F r/bE5PZ 8620-D	*JB-354	15/32" x 35 1/2"
	A/C-factory installed				1	C9PZ 8620-CC	*JC-465	1/2" x 46 5/8"
	A/C-dealer installed				1	D2PZ 8620-A	*JC-397-C	1/2" x 39 7/8"

COPYRIGHT © 1986— FORD MOTOR COMPANY —DEARBORN, MICHIGAN

APPLICATION CHART

YEAR	MODEL/RESTRICTIONS	QUANTITY Alt.	Idler or P/S	Air Pump	A/C Comp.	PART NUMBER	DESCRIPTION	
8620	BELT (DRIVE) — Cont'd							
	1977							
	L (Bobcat) — 6 CYL. 171 (2800cc) "Before 6/27/77"–"From 6/27/77" refer to 1978							
77	Alternator w/o T/E pump	1				C9PZ 8620–E	*JB–346	15/32" x 34 3/4"
	Alternator and T/E pump	1				C9PZ 8620–AP	*JB–516	15/32" x 51 3/4"
	P/S		1			C9PZ 8620–GJ	*JB–436–L	15/32" x 43 3/4"
	A/C–factory installed				1	C9PZ 8620–CP	*JC–534	1/2" x 53 1/2"
	A/C–dealer installed				1	D9PZ 8620–U	*JC–517–A	1/2" x 51 7/8"
	P (Comet) — 6 CYL. 200							
77	Alternator without A/C	1				C9PZ 8620–E	*JB–346	15/32" x 34 3/4"
	Alternator with factory A/C	2				C9PZ 8620–AH	*JB–464	15/32" x 46 1/2"
	Alternator with dealer A/C	2				D1PZ 8620–B	*JB–455	15/32" x 45 5/8"
	P/S		1			C9PZ 8620–GM	*JB–414–L	15/32" x 41 1/2"
	T/E pump – – (M/T)			1		D00Z 8620–A	*JH–361	1/4" x 36 1/8"
	T/E pump – – (A/T)			1		D7PZ 8620–G	*JH–386	1/4" x 38 3/4"
	P (Comet) — 6 CYL. 250							
77	Alternator without A/C	1				D1PZ 8620–A	*JB–432	15/32" x 43 1/4"
	Alternator with A/C	2				C9PZ 8620–FU	*JB–493–L	15/32" x 49 3/8"
	P/S		1			C9PZ 8620–FY	*JB–461–L	15/32" x 46 1/8"
	T/E pump (exc. CANADA)			1		D7PZ 8620–E	*JH–411	1/4" x 41 1/8"
	T/E pump (CANADA ONLY)			1		D4PZ 8620–A	*JH–391	1/4" x 39 1/8"
	P (Comet) — 8 CYL. 302							
77	Alt without A/C or P/S	1				D1PZ 8620–A	*JB–432	15/32" x 43 1/4"
	Alt w/A/C w/ w/o P/S	1				C9PZ 8620–P	*JB–401	15/32" x 40 1/8"
	P/S without A/C		1			D9PZ 8620–N	*JC–514–A	1/2" x 51 1/2"
	P/S and A/C		1			C9PZ 8620–CK	*JC–504	1/2" x 50 1/2"
	Idler pulley		1			C9PZ 8620–CF	*JC–477	1/2" x 47 7/8"
	T/E pump – w/o High Alt. Carb.			1		D4PZ 8620–B	*JH–331	1/4" x 33 1/8"
	T/E pump – High Altitude Carb.			1		D4PZ 8620–D	*JH–321	1/4" x 32 1/8"
	A/C				1	C9PZ 8620–GC	*JC–552–L	1/2" x 55 1/4"
	V (Versailles) — 8 CYL. 302							
77	Alternator–60 amp.	1				C9PZ 8620–P	*JB–401	15/32" x 40 1/8"
	Alternator–70 amp	1				C9PZ 8620–S	*JB–412	15/32" x 41 1/4"
	P/S		1			D9PZ 8620–U	*JC–517–A	1/2" x 51 7/8"
	Idler Pulley		1			C9PZ 8620–CG	*JC–490	1/2" x 49"
	T/E pump			1		D4PZ 8620–B	*JH–331	1/4" x 33 1/8"
	A/C				1	C9PZ 8620–DF	*JC–616	1/2" x 61 3/4"
	V (Versailles) — 8 CYL. 351W							
77	Alternator–60 amp.	1				C9PZ 8620–P	*JB–401	15/32" x 40 1/8"
	Alternator–70 amp	1				C9PZ 8620–S	*JB–412	15/32" x 41 1/4"
	P/S		1			D9PZ 8620–U	*JC–517–A	1/2" x 51 7/8"
	A/C				1	C9PZ 8620–DF	*JC–616	1/2" x 61 3/4"

APPLICATION CHART

YEAR	MODEL/RESTRICTIONS	QUANTITY Alt.	Idler or P/S	Air Pump	A/C Comp.	PART NUMBER	DESCRIPTION
8620	BELT (DRIVE) — Cont'd						

1978

A (Mercury) — 8 CYL. 5.8L & 6.6L (351M-400)

78	Alternator-40,60 amp.	1				C9PZ 8620-GM	*JB-414-L 15/32" x 41 1/2"
	Alternator-70,90 amp.	1				C9PZ 8620-T	*JB-420 15/32" x 42"
	P/S w/o A/C (Ford pump)		1			C9PZ 8620-CS	*JC-544 1/2" x 54 1/2"
	P/S w/o A/C (Saginaw Pump)		1			C9PZ 8620-FP	*JC-493 1/2" x 49 3/8"
	P/S & A/C (Ford pump)		1			C9PZ 8620-CP	*JC-534 1/2" x 53 1/2"
	P/S & A/C (Saginaw Pump)		1			C9PZ 8620-CD	*JC-483-L 1/2" x 48 3/8"
	T/E pump (w/o Hi-Altitude Carb) - - 8 cyl. (351M)			1		D8PZ 8620-P	*JH-325 1/4" x 32 5/8"
	T/E pump (w/o Hi-altitude carb.) - - 8 cyl. (400)			1		D4PZ 8620-B	*JH-331 1/4" x 33 1/8"
	T/E pump (Hi-altitude carb.)			1		D4PZ 8620-D	*JH-321 1/4" x 32 1/8"
	A/C-factory				1	C3AZ 8620-F	*JC-563 1/2" x 56 3/8"

A (Mercury) — 8 CYL. 7.5L (460-460 P/C)

78	Alternator-40,60 amp.	1				★C9PZ 8620-F r/bE5PZ 8620-D	*JB-354 15/32" x 35 1/2"
	Alternator-70,90 amp.	1				D1RY 8620-C	*JB-361 15/32" x 36 1/8"
	P/S without A/C (exc. P/C)		1			C9PZ 8620-CM	*JC-524 1/2" x 52 1/2"
	P/S without A/C (P/C)		1			D0AZ 8620-E	*JC-527-L 1/2" x 52 7/8"
	P/S and A/C		1			D0TZ 8620-B	*JC-507 1/2" x 50 7/8"
	T/E pump w/o A/C (exc. P/C)			1		D5PZ 8620-A	*JH-371 1/4" x 37 1/8"
	T/E pump w/A/C (exc. P/C) T/E pump (P/C)			1 1		D4PZ 8620-F	*JH-367 1/4" x 36 7/8"
	A/C				1	C9PZ 8620-DC	*JC-600 1/2" x 60"

D (Lincoln) — 8 CYL. 6.6L (400)

78	Alternator-60 amp.	1				D7PZ 8620-D	*JB-406-C 15/32" x 40 3/4"
	Alternator-70,90 amp.	1				C9PZ 8620-T	*JB-420 15/32" x 42"
	P/S		1			D0TZ 8620-B	*JC-507 1/2" x 50 7/8"
	T/E pump			1		D4PZ 8620-B	*JH-331 1/4" x 33 1/8"
	A/C				1	C3AZ 8620-F	*JC-563 1/2" x 56 3/8"

D (Lincoln) — 8 CYL. 7.5L (460)

78	Alternator	1				D1RY 8620-C	*JB-361 15/32" x 36 1/8"
	P/S		1			C9PZ 8620-CD	*JC-483 1/2" x 48 3/8"
	T/E pump			1		D4PZ 8620-F	*JH-367 1/4" x 36 7/8"
	A/C				1	C9PZ 8620-DC	*JC-600 1/2" x 60"

F (Cougar) — 8 CYL. 5.0L (302)

78	Alternator-40,60,65 amp.	1				C9PZ 8620-P	*JB-401 15/32" x 40 1/8"
	Alternator-70,90 amp.	1				C9PZ 8620-S	*JB-412 15/32" x 41 1/4"
	P/S without A/C		1			C9PZ 8620-CM	*JC-524 1/2" x 52 1/2"
	P/S and A/C		1			D9PZ 8620-N	*JC-514-A 1/2" x 51 1/2"
	T/E pump			1		D4PZ 8620-B	*JH-331 1/4" x 33 1/8"
	A/C				1	C9PZ 8620-GC	*JC-552-L 1/2" x 55 1/4"

F (Cougar) — 8 CYL. 5.8L (351-W)

78	Alternator-40,60,65 amp.	1				C9PZ 8620-P	*JB-401 15/32" x 40 1/8"
	Alternator-70,90 amp.	1				C9PZ 8620-S	*JB-412 15/32" x 41 1/4"
	P/S without A/C		1			C9PZ 8620-CK	*JC-504 1/2" x 50 1/2"
	P/S and A/C		1			C9PZ 8620-CH	*JC-495-L 1/2" x 49 5/8"
	A/C				1	C9PZ 8620-GC	*JC-552-L 1/2" x 55 1/4"

COPYRIGHT © 1986— FORD MOTOR COMPANY —DEARBORN, MICHIGAN

APPLICATION CHART

YEAR	MODEL/RESTRICTIONS	QUANTITY Alt.	Idler or P/S	Air Pump	A/C Comp.	PART NUMBER	DESCRIPTION	
8620	BELT (DRIVE) — Cont'd							
	1978							
	F (Cougar)					**8 CYL. 5.8L & 6.6L (351-M-400)**		
78	Alternator-40,60 amp.	1				C9PZ 8620-GM	*JB-414-L	15/32" x 41 1/2"
	Alternator-70,90 amp.	1				C9PZ 8620-T	*JB-420	15/32" x 42"
	P/S-without A/C		1			C9PZ 8620-CS	*JC-544	1/2" x 54 1/2"
	P/S and A/C		1			C9PZ 8620-CP	*JC-534	1/2" x 53 1/2"
	T/E pump (w/o Hi Alt. carb) - - 8 cyl. (351M)			1		D8PZ 8620-P	*JH-325	1/4" x 32 5/8"
	T/E pump (w/o Hi-altitude carb.) - - 8 cyl. (400)			1		D4PZ 8620-B	*JH-331	1/4" x 33 1/8"
	T/E pump (Hi-altitude carb.)			1		D4PZ 8620-D	*JH-321	1/4" x 32 1/8"
	A/C				1	C9PZ 8620-GC	*JC-552-L	1/2" x 55 1/4"
	G (Monarch)					**6 CYL. 4.1L (250)**		
78	Alternator-w/o A/C or P/S	1				D1PZ 8620-A	*JB-432	15/32" x 43 1/4"
	Alternator-with A/C without P/S	2				C9PZ 8620-FU	*JB-493-L	15/32" x 49 3/8"
	Alternator - w/P/S w/o A/C	1				★D8PZ 8620-R r/bE1PZ-E(12/81)	*JB-583-C	15/32" x 58 3/8"
	Alternator (60-65 amp) with A/C & P/S	2				E1PZ 8620-E	*JB-584-C	15/32" x 58 1/2"
	Alternator (70 amp) with A/C & P/S "Before 12/15/77"	2				D8PZ 8620-S	*JB-576-C	15/32" x 57 3/4"
	Alternator (70 amp) with A/C & P/S "From 12/15/77"	2				D8PZ 8620-L	*JA-585-C	13/32" x 58 9/16"
	T/E pump without A/C			1		D7PZ 8620-E	*JH-411	1/4" x 41 1/8"
	T/E pump with factory A/C T/E-pump w/dlr A/C			1 1		D7PZ 8620-F	*JH-311	1/4" x 31 1/8"
	A/C - - factory installed				1	C9PZ 8620-BH	*JC-373	1/2" x 37 3/8"
	A/C - - dealer installed				1	★C9PZ 8620-FS r/bC9PZ-BR(5/82)	*JC-420	1/2" x 42"
	G (Monarch)					**8 CYL. 5.0L (302)**		
78	Alternator-40 amp. w/o P/S	1				D1PZ 8620-A	*JB-432	15/32" x 43 1/4"
	Alternator-40 amp. w/P/S Alternator-60 amp. w/P/S	1 1				C9PZ 8620-P	*JB-401	15/32" x 40 1/8"
	Alternator-70 amp. w/A/C	1				C9PZ 8620-S	*JB-412	15/32" x 41 1/4"
	P/S without A/C		1			C9PZ 8620-CM	*JC-524	1/2" x 52 1/2"
	P/S and A/C(Ford pump)		1			D9PZ 8620-U	*JC-517-A	1/2" x 51 7/8"
	P/S with A/C(Saginaw pump)		1			D9PZ 8620-N	*JC-514-A	1/2" x 51 1/2"
	Idler pulley		1			C9PZ 8620-CG	*JC-490	1/2" x 49"
	T/E(M/T) w/o Hi Alt Carb T/E(A/T Calif.) w/o Hi Altitude Carb.			1 1		D4PZ 8620-B	*JH-331	1/4" x 33 1/8"
	T/E(A/T except Calif.) w/o Hi Altitude Carb.			1		D7PZ 8620-H	*JH-335	1/4" x 33 1/2"
	T/E pump-High Altitude Carb.			1		D4PZ 8620-D	*JH-321	1/4" x 32 1/8"
	A/C "Before 10/3/77"				1	C9PZ 8620-DF	*JC-616	1/2" x 61 3/4"
	A/C "From 10/3/77"				1	C9PZ 8620-DG	*JC-624	1/2" x 62 1/2"
	J (Capri)					**4 CYL. 2.3L (140)**		
78	Alt. w/o P/S (A/T) Alt. w/o P/S or A/C (M/T)	1 1				C9PZ 8620-AD	*JB-451	15/32 x 45 1/8"

APPLICATION CHART

YEAR	MODEL/RESTRICTIONS	QUANTITY Alt.	Idler or P/S	Air Pump	A/C Comp.	PART NUMBER		DESCRIPTION	
8620	BELT (DRIVE) — Cont'd								
	1978								
	J (Capri) 4 CYL. 2.3L (140)								
78	Alt. w/o P/S w/A/C (M/T)	1				D1PZ	8620-B	*JB-455	15/32" x 45 5/8"
	Alt. w/ P/S (A/T) Alt. w/ P/S w/o A/C (M/T)	2 2				D5PZ	8620-K	*JA-543-L	13/32" x 54 3/8"
	Alt. w/ P/S & A/C (M/T)	2				D6PZ	8620-F	*JB-542-A	15/32" x 54 1/4"
	T/E pump-without A/C or P/S			1		C9PZ	8620-AK	*JB-501	15/32" x 50 1/8"
	T/E pump-w/o A/C w/P/S			1		C9PZ	8620-P	*JB-401	15/32" x 40 1/8"
	T/E pump-with A/C-factory installed			1		D4PZ	8620-H	*JH-351	1/4" x 35 1/8"
	T/E pump-with A/C-Dealer installed			1		★C9PZ r/bE5PZ	8620-F 8620-D	*JB-354	15/32" x 35 1/2"
	A/C-Factory installed				1	E3HZ	8620-C	*JC-416-LA	1/2" x 41 3/4"
	A/C-Dealer installed				1	D2PZ	8620-A	*JC-397-C	1/2" x 39 7/8"
	J (Capri) 6 CYL. 2.8L (171)								
78	Alternator without A/C	1				C9PZ	8620-B	*JB-315	15/32" x 31 5/8"
	Alternator with Factory A/C	1				D0AZ	8620-G	*JB-336	15/32" x 33 3/4"
	Alternator w/Dealer A/C	1				C9PZ	8620-B	*JB-315	15/32" x 31 5/8"
	P/S		1			D4RY	8620-B	*JB-331	15/32" x 33 1/8"
	T/E pump			1		★C9PZ r/bE4PZ	8620-V 8620-J	*JB-423	15/32" x 42 3/8"
	A/C-Factory installed				1	C9PZ	8620-CR	*JC-537	1/2" x 53 7/8"
	A/C-Dealer installed				1	D0TZ	8620-B	*JC-507	1/2" x 50 7/8"
	K (Mark V) 8 CYL. 6.6L (400)								
78	Alternator-60 amp.	1				D7PZ	8620-D	*JB-406-C	15/32" x 40 3/4"
	Alternator-70,90 amp.	1				C9PZ	8620-T (1/80)	*JB-420	15/32" x 42"
	P/S		1			C9PZ	8620-CD	*JC-483	1/2" x 48 3/8"
	T/E pump			1		D4PZ	8620-B	*JH-331	1/4" x 33 1/8"
	A/C				1	C3AZ	8620-F	*JC-563	1/2" x 56 3/8"
	K (Mark V) 8 CYL. 7.5L (460)								
78	Alternator	1				D1RY	8620-C	*JB-361	15/32" x 36 1/8"
	P/S		1			D0TZ	8620-B	*JC-507	1/2" x 50 7/8"
	T/E pump			1		D4PZ	8620-F	*JH-367	1/4" x 36 7/8"
	A/C				1	C9PZ	8620-DC	*JC-600	1/2" x 60"
	L (Bobcat) 4 CYL. 2.3L (140)								
78	Alternator-without P/S	1				D5PZ	8620-P	*JA-435	13/32" x 43 5/8"
	Alternator-with P/S	2				D8PZ	8620-J	*JA-552-L	3/8" x 55 1/4"
	T/E pump without A/C			1		D4PZ	8620-F	*JH-367	1/4" x 36 7/8"
	T/E pump and factory A/C			1		D4PZ	8620-G	*JH-346	1/4" x 34 3/4"
	T/E pump and dealer A/C			1		★C9PZ r/bE5PZ	8620-F 8620-D	*JB-354	15/32" x 35 1/2"
	A/C-factory installed				1	C9PZ	8620-CC	*JC-465	1/2" x 46 5/8"
	A/C-dealer installed				1	D2PZ	8620-A	*JC-397-C	1/2" x 39 7/8"
	L (Bobcat) 6 CYL. 2.8L (171)								
78	Alternator and T/E pump	1				C9PZ	8620-AP	*JB-516	15/32" x 51 3/4"
	P/S		1			C9PZ	8620-AE	*JB-456	15/32" x 45 3/4"
	A/C-factory installed				1	C9PZ	8620-CP	*JC-534	1/2" x 53 1/2"
	A/C-dealer installed				1	D9PZ	8620-U	*JC-517-A	1/2" x 51 7/8"

COPYRIGHT © 1986— FORD MOTOR COMPANY —DEARBORN, MICHIGAN

APPLICATION CHART

YEAR	MODEL/RESTRICTIONS	QUANTITY Alt.	Idler or P/S	Air Pump	A/C Comp.	PART NUMBER	DESCRIPTION	
8620	BELT (DRIVE) — Cont'd							
	1978							
	P (Zephyr)					**4 CYL. 2.3L (140)**		
78	Alternator–40,60,65 amp.–without P/S	1				★D5PZ 8620–P r/bC9PZ–AA(6/82)	*JA–435	13/32" x 43 5/8"
	Alternator–40,60,65 amp.–with P/S	2				D8PZ 8620–J	*JA–552–L	13/32" x 55 1/4"
	Alternator–70 amp.	1				C9PZ 8620–AD	*JB–451	15/32" x 45 1/8"
	T/E pump without A/C			1		D4PZ 8620–F	*JH–367	1/4" x 36 7/8"
	T/E pump with A/C			1		D4PZ 8620–G	*JH–346	1/4" x 34 3/4"
	A/C				1	C9PZ 8620–CC	*JC–465	1/2" x 46 5/8"
	P (Zephyr)					**6 CYL. 3.3L (200)**		
78	Alternator –40,60,65 amp–without A/C	1				C9PZ 8620–E	*JB–346	15/32" x 34 3/4"
	Alternator 70,90 amp–without A/C	1				D8PZ 8620–K	*JB–363–A	15/32" x 36 3/8"
	Alt – – 70 amp–dealer A/C	2				C9PZ 8620–AG	*JB–464	15/32" x 46 1/2"
	Alternator with factory A/C	2				C9PZ 8620–AL	*JB–480	15/32" x 48"
	Alt.–60,65 amp.–dealer A/C	2				D1PZ 8620–B	*JB–455	15/32" x 45 5/8"
	P/S		1			★C9PZ 8620–V r/bE4PZ 8620–J	*JB–423	15/32" x 42 3/8"
	T/E pump – – (M/T)			1		D00Z 8620–A	*JH–361	1/4" x 36 1/8"
	T/E pump – – (A/T)			1		D7PZ 8620–G	*JH–386	1/4" x 38 3/4"
	P (Zephyr)					**8 CYL. 5.0L (302)**		
78	Alternator (40,60,65 amp.) and T/E pump without A/C	1				C9PZ 8620–GJ	*JB–436–L	15/32" x 43 3/4"
	Alternator (40,60,65 amp.) & T/E pump w/A/C w/o Hi Alt. Carb.	1						
	Alternator 70,90 amp.) & T/E pump w/A/C w/o Hi Alt. Carb.	1				C9PZ 8620–AA	*JB–441	15/32" x 44 1/8"
	Alternator (40,60,65 amp.) & T/E pump w/A/C & Hi Alt. Carb.	1				C9PZ 8620–GK	*JB–430–LA	15/32" x 43"
	Alternator (70,90 amp.) & T/E pump w/A/C & Hi Alt. Carb.	1				★D5PZ 8620–P r/bC9PZ–AA(6/82)	*JA–435	13/32" x 43 5/8"
	Alternator (40,60,65 amp.) w/o T/E	1				C9PZ 8620–P	*JB–401	15/32" x 40 1/8"
	Alternator (70,90 amp.) w/o T/E	1				C9PZ 8620–S	*JB–42	15/32" x 41 1/4"
	P/S without A/C		1			D9PZ 8620–N	*JC–514–A	1/2" x 51 1/2"
	P/S with A/C		1			C9PZ 8620–GD	*JC–501–L	1/2" x 50 1/8"
	A/C–factory installed				1	C9PZ 8620–CR	*JC–537	1/2" x 53 7/8"
	A/C–dealer installed				1	D9PZ 8620–N	*JC–514–A	1/2" x 51 1/2"
	V (Versailles)					**8 CYL. 5.0L (302)**		
78	Alternator–60 amp.	1				C9PZ 8620–P	*JB–401	15/32" x 40 1/8"
	Alternator–70 amp.	1				C9PZ 8620–S	JB–412	15/32" x 41 1/4"
	P/S		1			D0VZ 8620–B	*JC–517	1/2" x 51 7/8"
	T/E pump			1		D4PZ 8620–B	*JH–331	1/4" x 33 1/8"
	A/C				1	C9PZ 8620–DF	*JC–616	1/2" x 61 3/4"

APPLICATION CHART

YEAR	MODEL/RESTRICTIONS	QUANTITY Alt.	Idler or P/S	Air Pump	A/C Comp.	PART NUMBER	DESCRIPTION	
8620	BELT (DRIVE) — Cont'd							
	1979							
	A (Mercury)					**8 CYL. 5.0L & 5.8L (302-351-W)**		
79	Alternator - - 60,65 amp without A/C	1	1			★D9PZ 8620-F r/bE5PZ 8620-D	*JK6-506	7/8" x 50 3/4"
	Alternator - - 60,65 amp with A/C	1	1			D9PZ 8620-H	*JK6-496	7/8" x 49 3/4"
	Alternator - - 70,100 amp without A/C	1	1			D9PZ 8620-J	*JK6-512	7/8" x 51 1/4"
	Alternator - - 70,100 amp with A/C	1	1			D9PZ 8620-G	*JK6-502	7/8" x 50 1/4"
	T/E pump 302 (exc. Calif.)			1		D9PZ 8620-R	*JH-341	1/4" x 34 1/8"
	T/E pump 302 (Calif.) T/E pump (351) U.S.			1 1		D8PZ 8620-P	*JH-325	1/4" x 32 5/8"
	T/E pump (351) Canada			1		D4PZ 8620-B	*JH-331	1/4" x 33 1/8"
	A/C - - (302)				1	C9PZ 8620-CY	*JC-574	1/2" x 57 1/2"
	A/C - - (351)				1	C9PZ 8620-DC	*JC-600	1/2" x 60"
	D (Lincoln)					**8 CYL. 6.6L (400)**		
79	Alternator-60 amp.	1				D7PZ 8620-D	*JB-406-C	15/32" x 40 3/4"
	Alternator-70,90 amp.	1				C9PZ 8620-T	*JB-420	15/32" x 42"
	P/S		1			C9PZ 8620-CD	*JC-483	1/2" x 48 3/8"
	T/E pump "Before 10/2/78"			1		D4PZ 8620-B	*JH-331	1/4" x 33 1/8"
	T/E Pump "From 10/2/78 to 2/5/79"			1		D4PZ 8620-D	*JH-321	1/4" x 32 1/8"
79	T/E pump "From 2/5/79"			1		D8PZ 8620-P	*JH-325	1/4" x 32 5/8"
	A/C				1	C3AZ 8620-F	*JC-563	1/2" x 56 3/8"
	F (Cougar)					**8 CYL. 5.0L (302)**		
79	Alternator-40,60,65 amp.	1				C9PZ 8620-P	*JB-401	15/32" x 40 1/8"
	Alternator-70,90 amp.	1				C9PZ 8620-S	*JB-412	15/32" x 41 1/4"
	P/S without A/C		1			C9PZ 8620-CM	*JC-524	1/2" x 52 1/2"
	P/S and A/C		1			D9PZ 8620-N	*JC-514-A	1/2" x 51 1/2"
	T/E pump			1		D4PZ 8620-B	*JH-331	1/4" x 33 1/8"
	A/C				1	C9PZ 8620-GC	*JC-552-L	1/2" 55 x 1/4"
	F (Cougar)					**8 CYL. 5.8L (351-W)**		
79	Alternator-40,60,65 amp.	1				C9PZ 8620-P	*JB-401	15/32" x 40 1/8"
	Alternator-70,90 amp.	1				C9PZ 8620-S	*JB-412	15/32" x 41 1/4"
	P/S without A/C		1			C9PZ 8620-CK	*JC-504	1/2" x 50 1/2"
	P/S and A/C		1			C9PZ 8620-CH	*JC-495-L	1/2" x 49 5/8"
	T/E pump			1		D4PZ 8620-B	*JH-331	1/4" x 33 1/8"
	A/C				1	C9PZ 8620-GC	*JC-552-L	1/2" x 55 1/4"
	F (Cougar)					**8 CYL. 5.8L (351-M)**		
79	Alternator-40,60 amp.	1				C9PZ 8620-GM	*JB-414-L	15/32" x 41 1/2"
	Alternator-70,90 amp.	1				C9PZ 8620-T	*JB-420	15/32" x 42"
	P/S-without A/C		1			C9PZ 8620-CS	*JC-544	1/2" x 54 1/2"
	P/S and A/C		1			C9PZ 8620-CP	*JC-534	1/2" x 53 1/2"
	T/E pump (w/o Hi-altitude carb.)			1		D4PZ 8620-B	*JH-331	1/4" x 33 1/8"
	T/E pump (Hi-altitude carb.)			1		D4PZ 8620-D	*JH-321	1/4" x 32 1/8"
	T/E pump (Calif.)			1		D8PZ 8620-P	*JH-325	1/4" x 32 5/8"
	A/C				1	C9PZ 8620-GC	*JC-552-L	1/2" x 55 1/4"

COPYRIGHT © 1986— FORD MOTOR COMPANY —DEARBORN, MICHIGAN

APPLICATION CHART

8620 BELT (DRIVE) — Cont'd

1979

G (Monarch) — 6 CYL. 4.1L (250)

YEAR	MODEL/RESTRICTIONS	QUANTITY Alt.	Idler or P/S	Air Pump	A/C Comp.	PART NUMBER	DESCRIPTION	
79	Alternator w/o A/C or P/S	1				D1PZ 8620-A	*JB-432	15/32" x 43 1/4"
	Alternator with A/C without P/S	2				C9PZ 8620-FU	*JB-493-L	15/32" x 49 3/8"
	Alternator with A/C & P/S	2				D9PZ 8620-D	*JA-542-C	3/8" x 54 1/4"
	T/E pump S/C w/P/S or A/C			1		D7PZ 8620-F	*JH-311	1/4" x 31 1/8"
	T/E pump S/C w/o P/S			1		D7PZ 8620-E	*JH-411	1/4" x 41 1/8"
	T/E pump Dir A/C			1		D4PZ 8620-D	*JH-321	1/4" x 32 1/8"
	A/C - - factory installed				1	C9PZ 8620-BH	*JC-373	1/2" x 37 3/8"
	A/C - - dealer installed				1	E3HZ 8620-C	*JC-416-LA	1/2" x 41 3/4"

G (Monarch) — 8 CYL. 5.0L (302)

YEAR	MODEL/RESTRICTIONS	Alt.	Idler or P/S	Air Pump	A/C Comp.	PART NUMBER	DESCRIPTION	
79	Alternator-40 amp. w/o P/S	1				D1PZ 8620-A	*JB-432	15/32" x 43 1/4"
	Alternator-40 amp. w/P/S	1				C9PZ 8620-P	*JB-401	15/32" x 40 1/8"
	Alternator-60 amp. w/P/S	1						
	Alternator-70 amp. w/A/C	1				C9PZ 8620-S	*JB-412	15/32" x 41 1/4"
	P/S without A/C		1			C9PZ 8620-CM	*JC-524	1/2" x 52 1/2"
	P/S and A/C		1			D9PZ 8620-U	*JC-517-A	1/2" x 51 7/8"
	Idler pulley		1			C9PZ 8620-CG	*JC-490	1/2" x 49"
	T/E w/o Hi Alt Carb			1		D4PZ 8620-B	*JH-331	1/4" x 33 1/8"
	T/E pump-High Altitude Carb.			1		D4PZ 8620-D	*JH-321	1/4" x 32 1/8"
	A/C "From 10/3/77"				1	C9PZ 8620-DG	*JC-624	1/2" x 62 1/2"

J (Capri) — 4 CYL. 2.3L (140)

YEAR	MODEL/RESTRICTIONS	Alt.	Idler or P/S	Air Pump	A/C Comp.	PART NUMBER	DESCRIPTION	
79	Alternator-without P/S	1				★D5PZ 8620-P r/bC9PZ-AA(6/82)	*JA-435	13/32" x 43 5/8"
	Alternator-w/P/S	2				E1PZ 8620-D	*JB-535-LB	15/32" x 53 5/8"
	Alternator-70 amp	1				C9PZ 8620-AD	*JB-451	15/32" x 45 1/8"
	T/E pump without A/C			1		D4PZ 8620-F	*JH-367	1/4" x 36 7/8"
	T/E pump & Factory A/C without T/C			1		D4PZ 8620-G	*JH-346	1/4" x 34 3/4"
	T/E pump & factory A/C-with T/C			1		D9PZ 8620-R	*JH-341	1/4" x 34 1/8"
	T/E pump & Dealer A/C			1		★C9PZ 8620-F r/bE5PZ 8620-D	*JB-354	15/32" x 35 1/2"
	A/C-factory Installed				1	C9PZ 8620-CC	*JC-465	1/2" x 46 5/8"
	A/C-dealer Installed				1	D2PZ 8620-A	*JC-397-C	1/2" x 39 7/8"

J (Capri) — 6 CYL. 2.8L (171)

YEAR	MODEL/RESTRICTIONS	Alt.	Idler or P/S	Air Pump	A/C Comp.	PART NUMBER	DESCRIPTION	
79	Alternator w/o T/E pump	1				C9PZ 8620-E	*JB-346	15/32" x 34 3/4"
	Alternator & T/E pump	1				C9PZ 8620-AP	*JB-516	15/32" x 51 3/4"
	P/S		1			C9PZ 8620-AE	*JB-456	15/32" x 45 3/4"
	A/C-factory Installed				1	C9PZ 8620-CS	*JC-544	1/2" x 54 1/2"
	A/C-dealer Installed				1	D9PZ 8620-U	*JC-517-A	1/2" x 51 7/8"

APPLICATION CHART

YEAR	MODEL/RESTRICTIONS	QUANTITY Alt.	Idler or P/S	Air Pump	A/C Comp.	PART NUMBER	DESCRIPTION	
8620	BELT (DRIVE) — Cont'd							
	1979							
	J(Capri)					**6 cyl. 3.3L (200)**		
79	Alternator - - 70 amp.- without A/C	2				D8PZ 8620-K	*JB-363-A	15/32" x 36 7/8"
	Alternator - - 60,65 amp.- without A/C	1				C9PZ 8620-E	*JB-346	15/32" x 34 3/4"
	Alternator with A/C	2				C9PZ 8620-AL	*JB-480	15/32" x 48"
	P/S		1			★C9PZ 8620-V r/bE4PZ 8620-J	*JB-423	15/32" x 42 3/8"
	J (Capri)					**8 CYL. 5.0L (302)**		
79	Alternator w/o A/C	1				D9PZ 8620-T	*JK6-842	7/8" x 84 1/4"
	Alternator with A/C	1				D9PZ 8620-K	*JK6-942	7/8" x 94 1/4"
	K (Mark V)					**8 CYL. 6.6L (400)**		
79	Alternator-60 amp.	1				D7PZ 8620-D	*JB-406-C	15/32" x 40 3/4"
	Alternator-70,90 amp.	1				C9PZ 8620-T	*JB-420	15/32" x 42"
	P/S		1			C9PZ 8620-CD	*JC-483	1/2" x 48 3/8"
	T/E pump 'Before 10/2/78"			1		D4PZ 8620-B	*JH-331	1/4" x 33 1/8"
	T/E Pump "From 10/2/78"			1		D4PZ 8620-D	*JH-321	1/4" x 32 1/8
	A/C				1	C3AZ 8620-F	*JC-563	1/2" x 56 3/8"
	L (Bobcat)					**4 CYL. 2.3L (140)**		
79	Alternator-without P/S	1				★D5PZ 8620-P r/bC9PZ-AA(6/82)	*JA-435	13/32" x 43 5/8"
	Alternator-with P/S	2				E1PZ 8620-D	*JB-535-LB	5/8" x 53 5/8"
	Alternator-70 amp	1				C9PZ 8620-AD	*JB-451	15/32" x 45 1/8"
	T/E pump without A/C			1		D4PZ 8620-F	*JH-367	1/4" x 36 7/8"
	T/E pump and factory A/C			1		D4PZ 8620-G	*JH-346	1/4" x 34 3/4"
	T/E pump and dealer A/C			1		★C9PZ 8620-F r/bE5PZ 8620-D	*JB-354	15/32" x 35 1/2"
	A/C-factory installed				1	C9PZ 8620-CC	*JC-465	1/2" x 46 5/8"
	A/C-dealer installed				1	D2PZ 8620-A	*JC-397-C	1/2" x 39 7/8"
	L (Bobcat)					**6 CYL. 2.8L (171)**		
79	Alternator and T/E pump	1				C9PZ 8620-AP	*JB-516	15/32" x 51 3/4"
	P/S		1			C9PZ 8620-AE	*JB-456	15/32" x 45 3/4"
	A/C-factory installed				1	C9PZ 8620-CP	*JC-534	1/2" x 53 1/2"
	A/C-dealer installed				1	D0VZ 8620-B	*JC-517	1/2" x 51 7/8"
	P (Zephyr)					**4 CYL. 2.3L (140)**		
79	Alternator-40,60,65 amp.- without P/S	1				★D5PZ 8620-P r/bC9PZ-AA(6/82)	*JA-435	13/32" x 43 5/8"
	Alternator-40,60,65 amp.- with P/S	2				E1PZ 8620-D	*JB-535-LB	15/32" x 53 5/8"
	Alternator-70 amp.	1				C9PZ 8620-AD	*JB-451	15/32" x 45 1/8"
	T/E pump without A/C			1		D4PZ 8620-F	*JH-367	1/4" x 36 7/8"
	T/E pump with factory A/C			1		D4PZ 8620-G	*JH-346	1/4" x 34 3/4"
	T/E pump with dlr A/C			1		★C9PZ 8620-F r/bE5PZ 8620-D	*JB-354	15/32" x 35 1/2"
	A/C - - factory installed				1	C9PZ 8620-CC	*JC-465	1/2" x 46 5/8"
	A/C - - dealer installed				1	D2PZ 8620-A	*JC-397-C	1/2" x 39 7/8"

COPYRIGHT © 1986— FORD MOTOR COMPANY —DEARBORN, MICHIGAN

APPLICATION CHART

YEAR	MODEL/RESTRICTIONS	QUANTITY Alt.	Idler or P/S	Air Pump	A/C Comp.	PART NUMBER	DESCRIPTION	
8620	BELT (DRIVE) — Cont'd							
	1979							
	P (Zephyr) 6 CYL. 3.3L (200)							
79	Alternator–40,60,65 amp–without A/C	1				C9PZ 8620–E	*JB–346	15/32" x 34 3/4"
	Alternator 70,90 amp–without A/C	1				D8PZ 8620–K	*JB–363–A	15/32" x 36 3/8"
	Alt – – 70 amp–dealer A/C	2				C9PZ 8620–AG	*JB–464	15/32" x 46 1/2"
	Alternator with factor A/C	2				C9PZ 8620–AL	*JB–480	15/32" x 48"
	Alt.–60,65 amp.–dealer A/C	2				D1PZ 8620–B (2/80)	*JB–455	15/32" x 45 5/8"
	P/S		1			★C9PZ 8620–V r/bE4PZ 8620–J	*JB–423	15/32" x 42 3/8"
	T/E pump – – (M/T)			1		D00Z 8620–A	*JH–361	1/4" x 36 1/8"
	T/E pump – – (A/T)			1		D7PZ 8620–G	*JH–386	1/4" x 38 3/4"
	P (Zephyr) 8 CYL. 5.0L (302)							
79	Alternator (40,60,65 amp.) and T/E pump without A/C	1				C9PZ 8620–GJ	*JB–436–L	15/32" x 43 3/4"
	Alternator (40,60,65 amp.) & T/E pump w/A/C w/o Hi Alt. Carb.	1						
	Alternator (70,90 amp.) & T/E pump w/A/C w/o Hi Alt. Carb.	1				C9PZ 8620–AA	*JB–441	15/32" x 44 1/8"
	Alternator (40,60,65 amp.) & T/E pump w/A/C & Hi Alt. Carb.	1				C9PZ 8620–GK	*JB–430–LA	15/32" x 43"
	Alternator (70,90 amp) & T/E pump w/A/C & Hi Alt. Carb.	1				★D5PZ 8620–P r/bC9PZ–AA(6/82)	*JA–435	13/32" x 43 5/8"
	Alternator (40,60,65 amp) w/o T/E	1				C9PZ 8620–P	*JB–401	15/32" x 40 1/8"
	Alternator (70,90 amp) w/o T/E	1				C9PZ 8620–S	*JB–42	15/32" x 41 1/4"
	P/S without A/C		1			D9PZ 8620–N	*JC–514–A	1/2" x 51 1/2"
	P/S with A/C		1			C9PZ 8620–GD	*JC–501–L	1/2" x 50 1/8"
	A/C–factory installed				1	C9PZ 8620–CR	*JC–537	1/2" x 53 7/8"
	A/C–dealer installed				1	D9PZ 8620–N	*JC–514–A	1/2" x 51 1/2"
	V (Versailles) 8 CYL. 5.0L (302)							
79	Alternator–60 amp.	1				C9PZ 8620–P	*JB–401	15/32" x 40 1/8"
	Alternator–70 amp.	1				C9PZ 8620–S	JB–412	15/32" x 41 1/4"
	P/S		1			D9PZ 8620–N	*JC–514–A	1/2" x 51 1/2"
	T/E pump			1		D4PZ 8620–B	*JH–331	1/4" x 33 1/8"
	A/C				1	C9PZ 8620–DG	*JC–624	1/2" x 62 1/2"

YEAR	MODEL/RESTRICTIONS	ENGINE CYL.	C.I.D. (C.C.D.)	PART NUMBER	DESCRIPTION	QTY.
8A652	SPACER (IDLER PULLEY BRACKET)					
73/	C,F,G,P,V	8	302,351	D1AZ 8A652–A	*YS–30–cut to fit	1
8653	DECALOMANIA (FAN WARNING)					
73/	All	4,6 &8	All	C0AZ 8653–A		1
79	All	All	All	D9AZ 8653–A	# French	1

YEAR	MODEL/RESTRICTIONS	ENGINE CYL.	ENGINE C.I.D. (C.C.D.)	PART NUMBER	DESCRIPTION	QTY.
8A653	SUPPORT (IDLER PULLEY BRACKET)					
79	A - - (dealer A/C)	8	302,351W	D9AZ 8A653-A		1
73/	C,F - - without A/C	8	302,351	D7TZ 8A653-B		1
73/76	C,F,G,P - - A/C	8	302,351	D7TZ 8A653-C		1
77	P - - A/C w/o P/S	8	302	D7TZ 8A653-C	#D7TE 8B616-CA	1
73/	C,F,P	8	302,351	375860-S2	(BB-405-CE)-bolt (bracket to cyl. head)-7/16"-14 x 5 1/4"	1
73/	C,F,P	8	302,351	42998-S8	(B-252-A)-bolt (bracket to pump)-3/8"-16 x 7/8"	2
8B659	SUPPORT (FAN GUARD)					
79	J - - S/C	6	200	D9ZZ 8B659-A	Refer service recall campaign #345	1
8678	PULLEY ASSY. (BELT IDLER)					
74	J - - factory installed A/C	4	122 (2000)	★ D4RY 8678-B Not replaced		1
74	L - - factory installed A/C	4	122 (2000)	D2FZ 8678-B	R.H.-adjustable- #D22A 8A617-AA or D32H 8A617-AA	1
74/ 76/	L - - with A/C J - - with A/C	4	140 (2300)	D4FZ 8678-A	Fixed-#D42H 8A617-BB, BC or D52H-BA	1 1
74/77 76/ 78	L - - with A/C J - - with A/C L,P - - with A/C	4 4	140 (2300) 140 (2300)	D8BZ 8678-A	Adjustable-*YS-104 #D8ZH 19W653-AA replaces #D42H 8A617-AB or CA	1 1 1
74	J - - factory installed A/C	6	171 (2800)	D4RY 8678-A		1
76/	J - - with P/S	6	171 (2800)	D5RY 8678-A	Adjustable	1
75/78 76/	L - - with A/C J - - with A/C	6 6	171 (2800)	D8FZ 8678-A	Adjustable *YS-100 #D8EH 19W653-AA replaces #D52H 8A617-C1A,C2A	1 1
75/78	L - - with A/C	6	171 (2800)	D8FZ 8678-B	Fixed *YS-101 #D8EH 19W653-BA -repls. D52H 8A617-AA	1
78/ 78/ 78/	F - - with A/C G - - with A/C P,V - - with A/C	8 8 8	302,351, 400 302,351W 302	D80Z 8678-A	Adjustable *YS-103 #D80H 19W653-AA-replaces #D0AA 8A617-C, #D3AH 8A617-BA and #D4AH 8A617-BA	1 1 1
78/79 78/79	D,K - - with factory A/C A	8 8	400 351M,400	D8LY 8678-A	Adjustable *YS-102 #D8LH-19W653-AA, D8VH-AA	1 1
73/	A,C,F,J,P,Y - - dealer installed A/C	4,6,8	All	D8RZ 8678-A	Pulley only-Refer to 8680 for brkt.	1
73/77 73/77	C,F,G,P,V,Y - - Factory A/C A,D,K	8 8	All 351,400	D80Z 8678-A	R.H.-adjustable-*YS-103 #D80H 19W653-AA repls. #D0AA 8A617-C, D3AH 8A617-BA or D4AH 8A617-BA	1 1
78/79	A,D,K - - factory A/C	8	351M 400	D8LY 8678-A	Adjustable-*YS-120-#D8LH-19W653-AA replaces #D7AH 8A617-A	1
73 74/76	C - - factory installed A/C C (exc. P/C),F - - factory installed A/C	8 8	429, 460P/C 460	D0AZ 8678-B	L.H.-fixed-#D0AA 8A617-B, D3AH 8A617-AA or D40H 8A617-AA	1 1
73	A,Y - - factory installed A/C	8	429,460, 460P/C	D3MY 8678-A	L.H.-fixed-#D3MH 8A617-AA or D4AH 8A617-AA	1

COPYRIGHT © 1986 — FORD MOTOR COMPANY — DEARBORN, MICHIGAN

1973/79 LINCOLN-MERCURY CARS

YEAR	MODEL/RESTRICTIONS	ENGINE CYL.	ENGINE C.I.D. (C.C.D.)	PART NUMBER	DESCRIPTION	QTY.
8679	**PULLEY (BELT IDLER)**					
73/	C,F,G,P - - without P/S- w/adjustable idler pulley	8	302,351	D0AZ 8679-A	*YS-32-L.H.	1
8680	**BRACKET (BELT IDLER PULLEY)**					
73/74	J,L - - dealer installed A/C	4	122 (2000)	★ D2FZ 8680-A	*YS-54	1
74/ 78/	J,L - - dealer installed A/C P - - dealer installed A/C	4	140 (2300)	D4FZ 8680-A	*YS-94	1
73	J - - dealer installed A/C	6	159 (2600)	★ D2RY 8680-A		1
79	A - - dealer installed A/C	8	302,351W	D9AZ 8680-A	*YS-105	1
76/	G	8	302	D6DZ 8680-A		1
73/ 75 75/	C,F,G,P - - without P/S- w/adjustable idler pulley G G,V	8 8 8	302,351 302 351W	D0AZ 8680-C	*YS-44-L.H.	1 1 1
78	P - - A/C dealer installed	8	302	D5ZZ 8680-C		1
73/ 73/74	C,F,J,L,P,V - - dealer installed A/C A,Y - - dealer installed A/C	6&8	171,302, 351,400	D1FZ 8680-A	*YS-46	1 1
75/	A,Y - - dealer installed A/C	8	351M,400	★ D2AZ 8680-C	*YS-51	1
73 74	A,C,Y - - dealer installed A/C F - - dealer installed A/C	8	429,460	★ D2AZ 8680-D ★ D2AZ 8680-E	*YS-52-upper *YS-53-lower	1 1

1973/79
LINCOLN-MERCURY CARS

YEAR	MODEL/RESTRICTIONS	PART NUMBER	DESCRIPTION	QTY.
9002	TANK ASSY. (FUEL)			
	A (Mercury)			
73	A(exc. 71)	D2AZ 9002-B	22 gallon capacity	1
74	A(exc. 71) - - 8 cyl. 460 P/C			1
73	A(71)	D2AZ 9002-A	21 gallon capacity	1
74	A(71) - - 8 cyl. 460 P/C			1
74	A(exc. 71) - - 8 cyl. 400, 460 exc. P/C	D4AZ 9002-A	22 gallon capacity-std.	1
74	A(71) - - 8 cyl. 400,460 exc. P/C	D7AZ 9002-D	21 gallon capacity	1
75/76	A(71) - - w/o auxiliary tank		Standard Tank	1
77/78	A(71)			1
75/76	A(exc. 71) - - w/auxiliary tank	★ D5AZ 9002-G	24 gallon capacity-std. tank	1
75/76	A(exc. 71) - - w/o auxiliary tank	D7AZ 9002-C	24 gallon capacity-std. tank	1
77/78	A(exc. 71)			1
75/76	A(71) - - w/auxiliary tank	★ D6AZ 9002-B	21 gallon capacity-std. tank	1
75/76	A(exc. 71) - - w/auxiliary tank	★ D6AZ 9104-A	8 gallon capacity-auxiliary tank-plastic-not replaced	1
75/76	A(71) - - w/auxiliary tank	★ D6AZ 9104-B	8 gallon capacity-auxiliary tank-plastic-not replaced	1
79	A(exc. 74)	E1AZ 9002-B	20 gallon capacity	1
79	A(74)	E1AZ 9002-C	20 gallon capacity	1
	C (Montego)			
73	C(exc. 71)	D20Z 9002-D	22.5 gallon capacity	1
73	C(71)	D20Z 9002-C	20.5 gallon capacity	1
74/76	C(exc. 71)	D60Z 9002-E	26.5 gallon capacity	1
75/76	C(71) - - U.S.	D70Z 9002-A	21 gallon capacity	1
75	C(71) - - Canada "Before 6/18/75"	D50Z 9002-B	21 gallon capacity	1
75/76	C(71) - - Canada "From 6/18/75"	D60Z 9002-D	21 gallon capacity	1
74	C(71)			1
	D (Lincoln)			
73	D	D2AZ 9002-B	22 gallon capacity	1
74	D	D4AZ 9002-A	22 gallon capacity-std.	1
75/76	D - - w/auxiliary tank	D5AZ 9002-G	24 gallon capacity-std. tank	1
75/76	D - - w/auxiliary tank	D6AZ 9104-A	8 gallon capacity-auxiliary tank-plastic	1
75/76	D - - w/o auxiliary tank	D7AZ 9002-C	24 gallon capacity	1
77/78	D - - 8 cyl. 460			1
77/	D - - 8 cyl. 400			1
	F (Cougar)			
73	F	D1WY 9002-A	19.5 gallon capacity	1
74/76	F	D60Z 9002-E	26.5 gallon capacity	1
77	F(exc. 71)	D90Z 9002-A	27.5 gallon capacity	1
79	F - - w/extended range fuel tank			1
77	F(71) - - exc. Canada	D70Z 9002-A	21 gallon capacity-use w/unleaded fuel	1
77	F(71) - - Canada	D60Z 9002-D	21 gallon capacity-use w/leaded fuel	1
78	F "Before 2/1/78"	D80Z 9002-A	21 gallon capacity-w/in-tank vent tube	1
78	F "From 2/1/78"	D80Z 9002-B	21 gallon capacity-w/o in-tank vent tube	1
79	F - - w/std fuel tank			1

COPYRIGHT © 1986 — FORD MOTOR COMPANY — DEARBORN, MICHIGAN

1973/79 LINCOLN-MERCURY CARS

YEAR	MODEL/RESTRICTIONS	PART NUMBER	DESCRIPTION	QTY.
9002	TANK ASSY. (FUEL) — Cont'd			
	G (Monarch)			
75	G	D5DZ 9002-A	19 gallon capacity	1
76	G - - 6 cyl. 200, 8 cyl. 351W			1
76	G - - 6 cyl. 250, 8 cyl. 302-exc. w/economy fuel pkg.			1
76	G - - 6 cyl. 250, 8 cyl. 302-w/economy fuel pkg.	D7DZ 9002-C	18 gallon capacity	1
77/	G			1
	J (Capri)			
73/74	J - - 4 cyl.	★D3RY 9002-A	12.5 gallon capacity	1
73	J - - 6 cyl.			1
74	J - - 6 cyl.	★D4RY 9002-A	12 gallon capacity	1
76	J "Before 8/1/75"	★D5RY 9002-A	12 gallon capacity-w/forward mounted sending unit	1
76	J "From 8/1/75 to 6/1/76"	★D6RY 9002-A	12 gallon capacity-w/side mounted sending unit and vapor valve mounted forward of tank	1
76/78	J "From 6/1/76"	★D6RY 9002-B	12 gallon capacity-w/vapor valve mounted in top of tank	1
79	J	E0ZZ 9002-B		1
	K (Mark IV, Mark V)			
73	K	D20Z 9002-D	22.5 gallon capacity	1
74/77	K	D90Z 9002-A	26 gallon capacity	1
78/	K	D8LY 9002-A	25 gallon capacity	1
	L (Bobcat)			
74	L(exc. 73)	★D4FZ 9002-A	12 gallon capacity	1
74	L(73)	D4FZ 9002-B	12 gallon capacity	1
75/76	L(exc. 73)	D5FZ 9002-B	13 gallon capacity	1
75/76	L(73)	D5FZ 9002-A	14.5 gallon capacity	1
77/	L(exc. 73)	D7FZ 9002-A	13 gallon capacity	1
77/	L(73)	D7FZ 9002-B	14 gallon capacity	1
	P (Comet)			
73/74	P	D3DZ 9002-A	15 gallon capacity	1
75	P - - 6 cyl.- "Before 5/1/75"	★D5DZ 9002-B	16 gallon capacity	1
75	P - - 8 cyl.- "Before 3/17/75"			1
75/76	P - - 6 cyl.- "From 5/1/75"	D5DZ 9002-A	19 gallon capacity	1
75/76	P - - 8 cyl.- "From 3/17/75"			1
77	P	D7DZ 9002-C	18 gallon capacity	1
	P (Zephyr)			
78/	P	E0BZ 9002-D	16 gallon capacity	1
	V (Versailles)			
77/	V	D7DZ 9002-C	19 gallon capacity	1
	Y (Meteor)			
73	Y(exc. 71)	D2AZ 9002-B	22 gallon capacity	1
74	Y(exc. 71) - - 8 cyl. 460 P/C			1
73	Y(71)	D2AZ 9002-A	21 gallon capacity	1
74	Y(71) - - 8 cyl. 460 P/C			1

YEAR	MODEL/RESTRICTIONS	PART NUMBER	DESCRIPTION	QTY.
9002	TANK ASSY. (FUEL) — Cont'd			
	Y (Meteor)			
74	Y(exc. 71) - - 8 cyl. 351,400, 460 exc. P/C	D4AZ 9002-A	22 gallon capacity-std.	1
74	Y(71) - - 8 cyl. 351,400, 460 exc. P/C	D7AZ 9002-D	21 gallon capacity	1
75/76	Y(71) - -w/o auxiliary tank		Standard tank	1
75/76	Y(exc. 71) - - w/o auxiliary tank	D7AZ 9002-C	24 gallon capacity-std. tank	1
75/76	Y(exc. 71) - - w/auxiliary tank	★ D5AZ 9002-G	24 gallon capacity-std. tank	1
75/76	Y(71) - - w/auxiliary tank	★ D6AZ 9002-B	21 gallon capacity-std. tank	1
75/76	Y(exc. 71) - - w/auxiliary tank	★ D6AZ 9104-A	8 gallon capacity-auxiliary tank-plastic	1
75/76	Y(71) - - w/auxiliary tank	★ D6AZ 9104-B	8 gallon capacity-auxiliary tank-plastic	1
73/76	A,C,D,K,P,Y	382802-S2	(MM-173-JB)-nut (tank to underbody)-hex. hd. lock-3/8"-16	1
73/76	A,C,D,F,K,P,Y	353055-S7	(PP-29)Plug-1/4"-18 pipe thread	1
9A004	BRACKET (FUEL TANK SUPPORT)			
74/	L(73)	★ D2FZ 9A004-A		1
9B007	SHIELD (FUEL TANK)			
74	L(62,64)	★ D1FZ 9B007-A	Formed	1
75	L(62,64) - - w/single exhaust			1
76	L(62,64)			1
74/76	L(62,64)	★ D1FZ 9B007-C	Flat	1
75	L(62,64) - - w/dual exhaust	★ D5FZ 9B007-A	Not replaced	1
77/	L(62,64)	★ E0FZ 9B007-A	# D9EC 9B007-CA,E0EC 9B007-AA	1
77/	L(73)	★ E0FZ 9B007-B	# D9EC 9B007-DA,E0EC 9B007-BA	1
77/	G,V	★ E0DZ 9B007-A	# D9DC 9B007-AA,E0DC 9B007-AA-use on R.H. fuel tank strap	1
77/	G,V	★ D9DZ 9B212-A	# D9DC 9B212-AA- use on L.H. fuel tank strap	1
78/	P	E0BZ 9B007-A	# D9BC 9B007-AA, E0BC 9B007-AA-front	1
78/	P	D9BZ 9B212-A	# D9BC 9B212-AA-rear	1
78	P	★ EDD8BC 9B212-AB	Use on R.H. c/member-front-cut from D8BZ 9B007-B	1
79	J	E0ZZ 9B007-A	# D9ZC 9B007-AC, E0ZC 9B007-AA-front	1
79	J	D9ZZ 9B212-B	# D9ZC 9B212-AB-rear	1
9B007	SHIELD and PIPE KIT (FUEL TANK MODIFICATION)			
74	L(62,64)	D1FZ 9B007-B		1
75/76	L(62,64) - - Canada-w/single exhaust		Use w/leaded fuel	1
76	L(62,64) - - Canada-w/dual exhaust		Use w/leaded fuel	1

Consists of

1-D1FZ 9B007-A	Shield-formed	2-D1FZ 9B224-A	Bracket
1-D1FZ 9B007-C	Shield-flat	4-33777-S8	Nut-1/4"-20
2-D1FZ 9A010-A	Bolt	2-51755-S36	Screw-1/4"-14 x 3/4"
1-D5FZ 9034-E	Pipe	2-55738-S2	Nut-3/8"-16
1-D7DZ 9072-A	Seal	2-58819-S2	Bolt-3/8"-16 x 1"
1-D8OC 9B075-AA	Cup	2-382598-S2	Washer-flat-1/2"
1-D7FZ 9076-A	Gasket	4-388275-S2	Screw-1/4"-14 x 3/4"
1-D1FZ 9B211-A	Reinforcement		1-Instruction sheet
1-D1FZ 9B223-A	Plate		

COPYRIGHT © 1986— FORD MOTOR COMPANY —DEARBORN, MICHIGAN

1973/79 LINCOLN-MERCURY CARS

YEAR	MODEL/RESTRICTIONS	PART NUMBER	DESCRIPTION	QTY.
9B007	**SHIELD and PIPE KIT (FUEL TANK MODIFICATION) — Cont'd**			
75/76	L(62,64) - - w/single exhaust	D5FZ 9B007-C	Use w/unleaded fuel	1
76	L(62,64) - - w/dual exhaust		Use w/unleaded fuel	1

Consists of

1-D1FZ 9B007-A	Shield-formed	2-D1FZ 9B224-A	Bracket
1-D1FZ 9B007-C	Shield-flat	4-33777-S8	Nut-1/4"-20
2-D1FZ 9A010-A	Bolt	2-51755-S36	Screw-1/4"-14 x 3/4"
1-D5FZ 9034-F	Pipe	2-55738-S2	Nut-3/8"-16
1-D7DZ 9072-A	Seal	2-58819-S2	Bolt-3/8"-16 x 1"
1-D80C 9B075-AA	Cup	2-382598-S2	Washer-flat-1/2"
1-D7FZ 9076-A	Gasket	4-388275-S2	Screw-1/4"-14 x 3/4"
1-D1FZ 9B211-A	Reinforcement		1-Instruction sheet

75	L(62,64)	D5FZ 9B007-D	Use w/unleaded fuel	1

Consists of

1-D1FZ 9B007-C	Shield-flat	2-D1FZ 9B224-A	Bracket
1-D5FZ 9B007-A	Shield-formed	4-33777-S8	Nut-1/4"-20
2-D1FZ 9A010-A	Bolt	2-51755-S36	Screw-1/4"-14 x 3/4"
1-D5FZ 9034-F	Pipe	2-55738-S2	Nut-3/8"-16
1-D7DZ 9072-A	Seal	2-58819-S2	Bolt-3/8"-16 x 1"
1-D80C 9B075-AA	Cup	2-382598-S2	Washer-flat-1/2"
1-D7FZ 9076-A	Gasket	4-388275-S2	Screw-1/4"-14 x 3/4"
1-D1FZ 9B211-A	Reinforcement		1-Instruction sheet

75	L(62,64) - - Canada-w/dual exhaust	★ D5FZ 9B007-E	Use w/leaded fuel-not replaced	1

Consists of

1-D1FZ 9B007-C	Shield-flat	2-D1FZ 9B224-A	Bracket
1-D5FZ 9B007-A	Shield-formed	4-33777-S8	Nut-1/4"-20
2-D1FZ 9A010-A	Bolt	2-51755-S36	Screw-1/4"-14 x 3/4"
1-D5FZ 9034-E	Pipe	2-55738-S2	Nut-3/8"-16
1-D7DZ 9072-A	Seal	2-58819-S2	Bolt-3/8"-16 x 1"
1-D80C 9B075-AA	Cup	2-382589-S2	Washer-flat-1/2"
1-D7FZ 9076-A	Gasket	4-388275-S2	Screw-1/4"-14 x 3/4"
1-D1FZ 9B211-A	Reinforcement		1-Instruction sheet

9008	**SEAL ASSY. (FUEL TANK FILLER PIPE)**			
73/	A,D	D1AZ 9008-A	Seal-4 3/4" O.D. metal plate with 4 1/2" long rubber seal	1
73/76	Y			1
74/76	C(exc. 71),F	D9DZ 9008-A	#D7DB 9A125-AA, D9DB 9A125-AA-lower	1
75/	G			1
77/	V			1
73	F	D7DZ 9008-A	Seal-lower	1
74/77	P			1
79	J	D9ZZ 9008-B		1
77	F(exc. 71)	★ D70Z 9008-A	#D4SB 9A125-AB, D70B 9A125-AA-seal-lower	1
74/	K			1
78/	F			1
78/	P	E2ZZ 9008-A	Seal-lower	1
9A010	**BOLT (FUEL TANK STRAP)**			
73/76	A,C(exc. 71),D,K,L,P,Y	D5AZ 9A010-A	3/8"-16 x 3" carriage bolt	2
74/76	F			2
75/76	G			2
73/76	C(71)	★ C5AZ 9A010-D	3/8"-16 x 9.75"-incl. loop	1
73	F	C8AZ 9A010-A	R.H. and L.H.-3/8"-16 x 4 1/4" carriage bolt	2
76/78	J	★ D6RY 9A010-A	M8 x 100.0 (Metric)-incl. hook-not replaced	2
77/78	A,D	D7AZ 9A010-A	M10-1.5 x 65.6-Metric- (square head-small)	2
79	D			2

YEAR	MODEL/RESTRICTIONS	PART NUMBER	DESCRIPTION	QTY.
9A010	BOLT (FUEL TANK STRAP) — Cont'd			
77	F(exc. 71)	★ D70Z 9A010-A	M10-1.5 x 65.6 -Metric- (square head-large)	2
77/	G,K,L,P,V	r/bN801077-S100(8/82)		2
78/	F			2
79	J			2
77	F(71)	★ D70Z 9A010-B	M10-1.5 x 204.5-Metric- (hook bolt)	1
73/76	A,C,D,F,K,P,Y	382802-S2	(MM-173-JB)-nut-lock-3/8"-16 hex. washer	2
77/78	A,D,F,G,K,L,P,V	N800077-S51	(AM-5-VE)-nut-hex flange- M10-1.5-Metric	2
79	A,D,F,G,J,K,L,P,V	N800152-S100	(AM-5-VF) nut (strap to bolt) M10 (metric)	2
9A010	BOLT (FUEL TANK SHIELD)			
74/76	L(exc. 73)	★ D1FZ 9A010-A	"U" 1/4-20 x 1 3/4"-not replaced	2
74/76	L(exc. 73)	33777-S8	(M-89-JB)-nut-hex 1/4"	2
9011	SLEEVE (FUEL TANK DRAIN OPENING)			
75/76	A(exc. 71),D,Y(exc. 71)	★ D5AZ 9011-A	Use w/auxiliary fuel tank-not replaced	1
9A011	FILTER (FUEL TANK SENDER)			
73/75	A	D1AZ 9A011-A	Use with 3/8" outlet tube- also serviced in 9275 assy.	1
76/	A - - exc. 460 P/C with electric fuel pump & sender			1
73/76	C,Y			1
73/	D,F,K			1
73/75	P			1
75	G			1
76/78	A - - 8 cyl. 460 P/C	D7AZ 9A011-A	Use with electric fuel pump & sender	1
73/	J,L	D1FZ 9A011-A	Use with 5/16" outlet tube-also serviced in 9275 assy.	1
76/	G,P			1
77/	V			1
9K015	STONE SHIELD and ANTI-SQUEAK (FUEL TANK)			
76	J	★ D5RY 9K015-A	W/forward mounted (fuel tank gauge) sending unit -Not replaced	1
9023	TUBE (FUEL TANK AIR RELIEF)-Improvise from bulk tubing (9291)			
9B026-7	BRACKET (FUEL TANK VENT TUBE SHIELD UPPER and LOWER)-Improvise			
9030	CAP ASSY. (FUEL TANK FILLER)			
NOTE:	Important-Fuel cap are to be used only for years and models as cataloged			

NON-LOCKING

A (Mercury)

73/75	A	D5AZ 9030-B	*FC-769-A	1
76/	A	E1AZ 9030-A	*FC-812-A	1

C (Montego)

73/75	C	D5AZ 9030-B	*FC-769-A	1
76	C	E1AZ 9030-A	*FC-812-A	1

D (Lincoln)

73/75	D	D5AZ 9030-B	*FC-769-A	1
76/	D	E1AZ 9030-A	*FC-812-A	1

F (Cougar)

73/75	F	D5AZ 9030-B	*FC-769-A	1
76/	F	E1AZ 9030-A	*FC-812-A	1

G (Monarch)

75	G	D5AZ 9030-B	*FC-769-A	1
76/	G	E1AZ 9030-A	*FC-812-A	1

COPYRIGHT © 1986— FORD MOTOR COMPANY —DEARBORN, MICHIGAN

1973/79
LINCOLN-MERCURY CARS

YEAR	MODEL/RESTRICTIONS	PART NUMBER	DESCRIPTION	QTY.
9030	CAP ASSY. (FUEL TANK FILLER) — Cont'd			
NOTE:	Important-Fuel cap are to be used only for years and models as cataloged			

NON-LOCKING

J (Capri)

73/74	J	D1RY 9030-C	*FC-550	1
76	J	★D5RY 9030-A	"Capri II"-bright finish	1
76	J "Before 8/1/75"	D1UZ 9030-A	*FC-543-primer finish	1
76/78	J "From 8/1/75"	D8RZ 9030-A	*FC-796	1
79	J	E1AZ 9030-A	*FC-812-A	1

K (Mark IV, Mark V)

73/75	K	D5AZ 9030-B	*FC-769-A	1
76/	K	E1AZ 9030-A	*FC-812-A	1

L (Bobcat)

74/	L(62,64)	D80Z 9030-A	*FC-813-primer finish-paint to match	1
76/	L(73-exc. Squire)			1
74/	L(62,64)	D1PZ 9030-M	*FC-822-chrome	1
74/76	L(62,64)	D1FZ 9030-B	KIT-Used w/locking or non-Ford fuel caps-use in conjunction w/diaphragm and cup assy. included in shield and pipe kit(9B007).	1
	Consists of 1-D12C 9A107-AA Cap 1-D52C 9K001-AA Handle		1-Instruction sheet	
74	L(73)	★D10Z 9030-C	*FC-546-wood grain finish	1
75	L(73)	D50Z 9030-A	*FC-771-primer finish-dealer must paint and/or install wood grain decal	1 1
75	L(73)	D5PZ 9030-AA	*FC-824-chrome with painted handle	1
76/78	L(73-exc. Squire) "From 4/1/78"	★D8YY 9030-A	"Wood grain finish"	1
79	L(73-exc. Squire)	D8FZ 9030-A	Wood grain finish	1

P (Comet)

73/75	P	★D54Y 9030-A	"Comet" emblem	1
75	P	D2PZ 9030-C	*FC-708-stainless steel	1
76/77	P	★D74Y 9030-A	"Comet" emblem	1
76/77	P	D7PZ 9030-C	*FC-734 plain decorative	1

P (Zephyr)

78/	P	E1AZ 9030-A	*FC-812-A	1

V (Versailles)

77/	V	E1AZ 9030-A	*FC-812-A	1

Y (Meteor)

73/75	Y	D5AZ 9030-B	*FC-769-A	1
76	Y	E1AZ 9030-A	*FC-812-A	1

LOCKING

A (Mercury)

73/75	A	D5AZ 9030-A	*FC-768	1
76	A	D6AZ 9030-B	*FC-782	1

YEAR	MODEL/RESTRICTIONS	PART NUMBER	DESCRIPTION	QTY.
9030	CAP ASSY. (FUEL TANK FILLER) — Cont'd			
NOTE:	Important-Fuel cap are to be used only for years and models as cataloged			

LOCKING

C (Montego)

73/75	C	D5AZ 9030-A	*FC-768	1
76	C	D6AZ 9030-B	*FC-782	1

D (Lincoln)

73/75	D	D5AZ 9030-A	*FC-768	1
76	D	D6AZ 9030-B	*FC-782	1

F (Cougar)

73/75	F	D5AZ 9030-A	*FC-768	1
76	F	D6AZ 9030-B	*FC-782	1

G (Monarch)

75	G	D5AZ 9030-A	*FC-768	1
76	G	D6AZ 9030-B	*FC-782	1

J (Capri)

73/74	J	D1PZ 9030-L	*FC-753-A	1

K (Mark IV)

73/75	K	D5AZ 9030-A	*FC-768	1
76	K	D6AZ 9030-B	*FC-782	1

L (Bobcat)

74/75	L	D5FZ 9030-C	*FC-774-chrome-plain	1
76	L(73)	D8TZ 9030-K	*FC-814	1

P (Comet)

73/75	P	D1PZ 9030-E	*FC-755	1
75	P	★ D54Y 9030-B	"Comet"-emblem	1
76	P	D8TZ 9030-K	*FC-814	1
76	P	★ D64Y 9030-B	"Comet"-emblem	1

Y (Meteor)

73/75	Y	D5AZ 9030-A	*FC-768	1
76	Y	D6AZ 9030-B	*FC-782	1
9030	LOCK (FUEL GUARD)			
73/79	A,C,D,F,G,K,L,P,V,Y	E4PZ 9030-A	Fits into filler neck	1
9034	PIPE ASSY. (FUEL TANK FILLER)			

A (Mercury)

73/74	A(exc. 71)	★ D3MY 9034-A		1
73/74	A(71)	★ D4AZ 9034-A	Incl. (1) D4AZ 9N276-A tube	1
75/76	A(exc. 71) - - with aux. tank-U.S.	★ D5MY 9034-D	Use w/unleaded fuel	1
75/76	A(71) - - with aux. tank-U.S.	★ D5AZ 9034-F	Use w/unleaded fuel	1
75/77	A(exc. 71) - - w/o aux. tank-Canada	D5MY 9034-E	Use w/leaded fuel	1
75/76	A(exc. 71) - - with aux. tank-Canada	★ D5MY 9034-C	Use w/leaded fuel	1
75/77	A(71) - - w/o aux. tank-Canada	D5AZ 9034-J	Use w/leaded fuel	1

COPYRIGHT © 1986— FORD MOTOR COMPANY —DEARBORN, MICHIGAN

1973/79 LINCOLN-MERCURY CARS

YEAR	MODEL/RESTRICTIONS	PART NUMBER	DESCRIPTION	QTY.
9034	PIPE ASSY. (FUEL TANK FILLER) — Cont'd			
	A (Mercury)			
75/76	A(71) - - with aux. tank-Canada	★D5AZ 9034-G	Use w/leaded fuel	1
75/76	A(exc. 71) - - w/o aux. tank	D8MY 9034-A	Use w/unleaded fuel	1
77/78	A(exc. 71)			1
78	A(exc. 71) - - Canada	★D8MY 9034-B	Use w/leaded fuel-not replaced	1
75/76	A(71) - - w/o aux. tank	D8AZ 9034-C	Use w/unleaded fuel	1
77/78	A(71)			1
79	A(exc. 74)	E0AZ 9034-A		1
79	A(74)	D9AZ 9034-B		1
	C (Montego)			
73	C(exc. 71)	★D3GY 9034-A		1
74	C(exc. 71)	★D40Z 9034-A		1
75/76	C(exc. 71) - - U.S.	D50Z 9034-A	Use w/unleaded fuel	1
75	C(exc. 71) - - Canada	D50Z 9034-D	Use w/leaded fuel	1
76	C(exc. 71) - - Canada	★D60Z 9034-B	Use w/leaded fuel	1
	D (Lincoln)			
73	D	★D2VY 9034-A		1
74	D	★D4VY 9034-A		1
75/76	D - - with aux. tank-U.S.	★D5VY 9034-C	Use w/unleaded fuel	1
75/76	D - - w/o aux. tank-Canada	★D5VY 9034-B	Use w/leaded fuel	1
75/76	D - - with aux. tank-Canada	★D5VY 9034-D	Use w/leaded fuel	1
75/76	D - - w/o aux. tank-U.S.	D7VY 9034-A	Use w/unleaded fuel	1
77	D - - 8 cyl. 460			1
77	D - - 8 cyl. 400 "From 11/1/76"			1
77	D - - 8 cyl. 400"Before 11/1/76"	★D7VY 9034-D	Use w/unleaded fuel	1
78/	D	D8VY 9034-A	Use w/unleaded fuel	1
	F (Cougar)			
73	F	★D1WY 9034-A		1
74	F	★D40Z 9034-A		1
75/76	F - - U.S.	D50Z 9034-A	Use w/unleaded fuel	1
75	F - - Canada	D50Z 9034-D	Use w/leaded fuel	1
76	F - - Canada	D60Z 9034-B	Use w/leaded fuel	1
77	F(exc. 71)	D70Z 9034-A	Use w/unleaded fuel	1
77	F(exc. 71) - - Canada	★D70Z 9034-D	Use w/leaded fuel	1
78	F "Before 2/1/78"	D80Z 9034-C	Use w/unleaded fuel - w/in-tank vent tube	1
78	F "From 2/1/78"	D80Z 9034-E	Use w/unleaded fuel-w/o in-tank vent tube	1
79	F - - w/std fuel tank		used with 21 gallon fuel tank	1
78	F - - Canada "From 2/1/78"	★D80Z 9034-D	Use w/leaded fuel - w/in-tank vent tube	1
78	F - - Canada "From 2/1/78"	★D80Z 9034-F	Use w/leaded fuel-w/o in-tank vent tube	1
79	F - - Canada		used with 21 gallon fuel tank	1
79	F - - w/extended range fuel tank	★D90Z 9034-A	used with 27.5 gallon fuel tank	1
	G (Monarch)			
75/76	G - - Canada "From 10/15/75"	D5DZ 9034-C	Use w/leaded fuel	1
75/76	G - - U.S.	D6DZ 9034-A	Use w/unleaded fuel	1
76	G - - Canada "From 10/15/75"	★D6DZ 9034-B	Use w/leaded fuel	1
77	G - - Canada	D7DZ 9034-H	Use w/leaded fuel	1
78/	G - - Canada	★D8DZ 9034-E	Use w/leaded fuel	1
77/	G	D9DZ 9034-B	use w/unleaded fuel	1

YEAR	MODEL/RESTRICTIONS	PART NUMBER	DESCRIPTION	QTY.
9034	PIPE ASSY. (FUEL TANK FILLER) — Cont'd			
	J (Capri)			
73/74	J	★D1RY 9034-A	Not replaced	1
76/78	J - - with ev/em-U.S.	★D5RY 9034-A	Use w/unleaded fuel	1
76	J - - without ev/em-Canada	★D5RY 9034-B	Use w/leaded fuel	1
79	J - - 6&8 cyl.	E0ZZ 9034-A		1
79	J - - 4 cyl. 140 TC (2300cc)			1
79	J - - 4 cyl. 140 exc. TC (2300cc)-with A/C			1
79	J - - 4 cyl. 140 exc. TC (2300cc)-without A/C	D9ZZ 9034-B		1
	K (Mark IV, Mark V)			
73	K	★D3LY 9034-A		1
74	K	★D4SZ 9034-B		1
75/76	K - - U.S.	D5SZ 9034-A	Use w/unleaded fuel	1
75/76	K - - Canada	★D5SZ 9034-B	Use w/leaded fuel-not replaced	1
77	K	D7LY 9034-A	Use w/unleaded fuel	1
78/	K	D8LY 9034-A	Use w/unleaded fuel	1
	L (Bobcat)			
74	L(62,64)	★D5FZ 9034-E		1
75/76	L(62,64) - - Canada		Use w/leaded fuel	1
74	L(73)	D3FZ 9034-C		1
75/76	L(62,64) - - U.S.	★D5FZ 9034-F	Use w/unleaded fuel	1
75/76	L(73) - - U.S.	★D5FZ 9034-B	Use w/unleaded fuel	1
75/76	L(73) - - Canada	★D5FZ 9034-C	Use w/leaded fuel	1
77	L(73)	D7FZ 9034-G	Use w/leaded fuel	1
77	L(exc. 73) - - Canada "Before 8/25/76"	D7FZ 9034-H	Use w/leaded fuel	1
77	L(exc. 73) - - Canada "From 8/25/76"	D7FZ 9034-K	Use w/leaded fuel	1
77/	L(exc. 73) - - 6 cyl. 171 (2800 cc)	E0FZ 9034-H	Use w/unleaded fuel	1
77/	L(exc.73) - - 4 cyl. 140(2300 cc) - exc. Calif.		Use w/unleaded fuel	1
77/	L(exc. 73) - - 4 cyl. 140 (2300 cc)--Calif.	E0FZ 9034-C	Use w/unleaded fuel	1
78/	L(exc. 73)	★D8FZ 9034-C	Use w/leaded fuel	1
78/	L(73)	★D8FZ 9034-D	Use w/leaded fuel	1
77/	L(73)	E0FZ 9034-B	Use w/unleaded fuel	1
	P (Comet)			
73/74	P	★D14Y 9034-A		1
75	P - - U.S.-6 cyl.- "Before 5/1/75"	★D54Y 9034-A	Use w/unleaded fuel and 16 gallon tank	1
75	P - - U.S.-8 cyl.- "Before 3/17/75"			1
75	P - - U.S.-8 cyl- "From 3/17/75"	★D54Y 9034-C	Use w/unleaded fuel and 19 gallon tank-	1
75	P - - U.S.-6 cyl.- "From 5/1/75"		Not replaced	1
76	P - - U.S. "Before 10/15/75"			1
76	P - - U.S. "From 10/15/75"	★D64Y 9034-A	Use w/unleaded fuel-not replaced	1
75	P - - Canada-6 cyl.- "Before 5/1/75"	★D54Y 9034-B	Use w/leaded fuel and 16 gallon tank	1
75	P - - Canada-8 cyl.- "Before 3/17/75"			1
75	P - - Canada-8 cyl.- "From 3/17/75"	D54Y 9034-D	Use w/leaded fuel and 19 gallon tank	1
75	P - - Canada-6 cyl.- "From 5/1/75"			1
76	P - - Canada "Before 10/15/75"			1
76	P - - Canada "From 10/15/75"	★D64Y 9034-B	Use w/leaded fuel	1

COPYRIGHT © 1986— FORD MOTOR COMPANY —DEARBORN, MICHIGAN

1973/79 LINCOLN-MERCURY CARS

YEAR	MODEL/RESTRICTIONS	PART NUMBER	DESCRIPTION	QTY.
9034	PIPE ASSY. (FUEL TANK FILLER) — Cont'd			
	P (Comet)			
77	P	★D74Y 9034-D	Use w/unleaded fuel	1
77	P	★D74Y 9034-E	Use w/leaded fuel	1
	P (Zephyr)			
78/	P	E1BZ 9034-D	Use w/unleaded fuel	1
78/	P	★D8BZ 9034-B	Use w/leaded fuel	1
	V (Versailles)			
77	V	D84Y 9034-A	Use w/unleaded fuel	1
	Y (Meteor)			
73/74	Y(exc. 71)	★D3MY 9034-A		1
73/74	Y(71)	★D4AZ 9034-A	Incl. (1) D4AZ 9N276-A tube	1
75/76	Y(exc. 71) - - w/o aux. tank	D5MY 9034-E	Use w/leaded fuel	1
75/76	Y(exc. 71) - - with aux. tank	★D5MY 9034-C	Use w/leaded fuel	1
75/76	Y(71) - - w/o aux. tank	D5AZ 9034-J	Use w/leaded fuel	1
75/76	Y(71) - - with aux. tank	★D5AZ 9034-G	Use w/leaded fuel	1
73/74	J	54507-ES7	Screw (fuel tank filler pipe)	4
73/	K	381877-S2	(UU-52-A)-screw (pipe assy. to floor pan fill tube support bracket)-hex. washer hd.-5/16"-18 x 3/4"	2
74/	L(73)	381949-S36	(UU-85-A) screw (pipe to panel) 1/4-14 x 3/4"	3
73/	P	55981-S2	(U-254-E)-screw-hex. washer head tap-1/4"-14 x 1/2"	5
74/76	L(62,64)	388275-S2	(UU-168-E) screw-1/4-14 x 3/4" (pipe to panel)	4
9A034	SLEEVE (FUEL TANK VENT TUBE)-Improvise			
9035	GASKET (FUEL TANK CAP)			
73/74	J	★D1RY 9035-C		1
76/78	J - - with ev/em	★D5RY 9035-A	Not replaced	1
76	J - - without ev/em	★D5RY 9035-B	Not replaced	1
9N035	CONNECTOR (FUEL RETURN TO TANK-TUBE)			
74	J - - 6 cyl.-with ev/em	★D4RY 9N035-A	Located in bottom of fuel tank	1
9038	PIPE ASSY. (AUXILIARY FUEL TANK FILLER LOWER)			
75/76	A(exc. 71),D,Y(exc. 71)	★D5AZ 9038-B		1
9046	BRACKET ASSY. (FUEL TANK REAR SUPPORT)			
73	F,P	D1ZZ 9046-A	Reinforcement	2
9047	HOSE (FUEL TANK TO FILLER PIPE)			
75/76	A(exc. 71),D,Y(exc. 71)	★D5AZ 9047-C	Use w/auxiliary fuel tank-attaches 9B168 to 9038	1
75/76	A(71),Y(71)	★D5AZ 9047-A	Use w/auxiliary fuel tank-attaches 9034 to 9B168	1
75/76	A(71),Y(71)	★D5AZ 9047-B	Auxiliary tank to main tank	1
75/76	A(exc. 71),D,Y(exc. 71)	D70Z 9047-A	Use w/auxiliary fuel tank-cut 3 1/2" - attaches 9034 to 9B168	AR
73/78	J	D0RY 9047-A		1
73/78	J	D0RY 9047-B	Drain	1
9049	TUBE (FUEL TANK VENT)-Unless listed improvise from bulk hose (9324)			
73/74	J - - 4 cyl.	★D1RY 9049-B	Front	1
		D1RY 9049-A	Rear	1
73/74	J - - 6 cyl.	D2RY 9049-C		1
75/76	K	★D5SZ 9049-A		1
77/	F		Cut to length as req'd	1
77/	K		Cut to length as req'd	1
9054	STRAP ASSY. (FUEL TANK)-Also refer to group 9092			
76/78	J	D5RY 9054-B	R.H.	1
76/78	J	D6RY 9092-A	L.H.	1

YEAR	MODEL/RESTRICTIONS	PART NUMBER	DESCRIPTION	QTY.
9061	SUPPORT (FUEL TANK)			
73/76	C(71)	★ D3AZ 9061-A	13" long	1
77	F(71)			1
9A068	INSULATOR (FUEL TANK TO FLOOR PAN)-Improvise			
9072	SEAL (FUEL TANK FILLER PIPE)			
73/76	C(exc. 71),Y(exc. 71)	E1AZ 9072-A	Rubber-2 3/16" I.D. x 3 1/8" O.D. x 41/64" thick	1
73/	D,K			1
73/78	A(exc. 71),			1
74/	F,L			1
75/	G,P			1
77/	V			1
79	A,J			1
73/76	A(71),Y(71)	D0AZ 9072-A	1 11/16" I.D. x 2 5/8" O.D.	1
77/78	A(71)			1
73	F,P	★ D1ZZ 9072-A	Rubber-2 11/64" I.D. x 3 19/64" O.D.	1
74	P			1
73/74	J	★ D0RY 9072-A	Lower	1
76/78	J	★ D5RY 9072-A	#74EB 9072-AA Upper and lower	2
9075	PAD (FUEL TANK)			
73/78	J	D0RY 9075-A		1
9076	GASKET (FUEL TANK FILLER TO QUARTER PANEL)-Also refer to group 28630			
73/76	A,D,Y	★ D0AZ 9076-A		1
73/76	F	D0DZ 9076-A		1
74/76	C(exc. 71)			1
74/77	P			1
75/	G			1
73/74	J	★ D0RY 9076-A	Fuel tank filler pipe seal-upper	1
		★ D0RY 9076-B	Fuel tank to body-gasket	1
74/	L(73)	D1FZ 9076-BA	3 5/8" O.D.	1
74/	L(exc.73)	★ D7FZ 9076-A		1
77/	V	★ D74Y 9076-A		1
73/	A,D,F,K,P,Y	55981-S2	(U-254-E)-screw-hex. washer hd.-1/4"-14 x 1/2"	4
9B076	SEAL (SEPARATOR FUEL VAPOR)			
74/76	A,C,D,F,G,K,L,Y	E1FZ 9B076-A		1
77/	A,D,F,G,K,L,V			1
75/	P			1
76/	J			1
9K079	PIPE ASSY. (FUEL TANK VENT)			
76/78	J - - with ev/em	★ D5RY 9K079-A	"T" shaped-not replaced	1
9080	GROMMET (FUEL TANK FILLER PIPE)			
73/74	J	★ D0RY 9080-B	Outer-roof side	1
9A084	TUBE (FUEL TANK TO PUMP REAR)-Improvise from bulk tubing (2269)			
73/	All	42154-S7-8	(U-256)-screw-hex. washer hd.-No. 14-10 x 1"	AR
73/	All	★ 381832-S100	Clip (tube to underbody floor pan)	AR
73/	All	381877-S2	(UU-52-AK)-screw (tube to body sill)-hex. head-self tapping-5/16"-18 x 3/4"	AR
73/	All	352999-S32	(GG-17)-clip (tube to center floor pan and to pump)	AR
9092	STRAP ASSY. (FUEL TANK SUPPORT)-Also refer to group 9054			
73/74	A(exc. 71),D,Y(exc. 71)	D5AZ 9092-C		2
75/76	A(exc. 71),D,Y(exc. 71)		Use w/std. tank	2
73/74	A(71),Y(71)	D5AZ 9092-D		2
75/76	A(71),Y(71)		Use w/std. tank	2
75/76	A(exc. 71),D,Y(exc. 71)	★ D5AZ 9092-A	Use w/auxiliary fuel tank-not replaced	1
75/76	A(71),Y(71)	★ D5AZ 9092-B	Use w/auxiliary fuel tank-not replaced	1

COPYRIGHT © 1986— FORD MOTOR COMPANY —DEARBORN, MICHIGAN

1973/79 LINCOLN-MERCURY CARS

YEAR	MODEL/RESTRICTIONS	PART NUMBER	DESCRIPTION	QTY.
9092	STRAP ASSY. (FUEL TANK SUPPORT)-Also refer to group 9054 — Cont'd			
77/78	A(exc. 71),D	D7AZ 9092-A		2
79	D			2
77/78	A(71)	D7AZ 9092-C		2
79	A(exc. 74)	E0AZ 9092-B		2
79	A(74)	E1AZ 9092-C		2
73	C(exc. 71),K	D20Z 9092-A		1
74	K			2
73	C(71)	D50Z 9092-B	Use around bottom of tank	1
		★ D20Z 9092-C	Use at rear side of tank	1
74	C(exc. 71),F,K	D50Z 9092-A		2
75/76	C(exc.71),F			2
75	K			2
74/76	C(71)	D40Z 9092-B	Use at rear side of tank	1
77	F(71)			1
74/76	C(71)	D50Z 9092-B		1
77	F(71)			1
73	F	★ D1ZZ 9092-A	Not replaced	2
77/	F(exc. 71)	D80Z 9092-A		2
77/	K			2
75/76	G	D5DZ 9092-A		2
75/76	P "From 5/1/75"		Use w/19 gallon fuel tank	2
77/	G,V	D7DZ 9092-B		2
76	J "Before 8/1/75"	D5RY 9054-A	R.H. and L.H.	2
76/78	J "From 8/1/75"		R.H.	1
76/78	J "From 8/1/75"	★ D6RY 9092-A	L.H.	1
79	J	E1ZZ 9092-A	R.H.	1
		E1ZZ 9092-B	L.H.	1
76	K	★ D6SZ 9092-A	Not replaced	2
74/76	L(exc. 73)	D5FZ 9092-C	R.H.	1
		D5FZ 9092-D	L.H.	1
73/74	L(73)	D2FZ 9092-A		2
75/76	L(73)	★ D5FZ 9092-A		2
77/	L(exc. 73)	E0FZ 9092-A	R.H.	1
		D7FZ 9092-A	L.H.	1
77/	L(73)	D7FZ 9092-C		2
73/74	P	★ D5DZ 9092-B		2
75	P "Before 5/1/75"		Use w/16 gallon fuel tank	2
77	P	★ D7DZ 9092-A		2
78/	P	E1BZ 9092-A		2
73/	A,D	382802-S2	(MM-173-JB)-nut-hex. washer lock-3/8"-16	2
73/	A,D	23575-S8	(B-13)-bolt-carriage-3/8"-16 x 3"	2
74/	L(62,64)	384460-S	(BB-817-WM)-bolt(strap assy. to floor pan)-"L" shaped-3/8"-16 x 31/32"	2
74/76	L(62,64)	55738-S2	(M-96-G)-nut (reinforce strap)-lock-3/8-16	2
74/76	L(62,64)	58819-S2	(B-9-A)-bolt (reinforce strap)-carriage-3/8-16 x 1"	2
74/76	L(62,64)	382598-S2	(XX-191-F)-washer (reinforce strap)-flat-1/2"	2
79	J	N800590-S100	(AB-317-E)-bolt (strap to underbody)-break shank-M10-1.5 x 69.4	2
79	A	N800480-S100	(AW-44-K)-Stud (strap to underbody) M10 x 88 (metric)	2
79	J	N800152-S100	(AM-5-VF)-nut (strap to underbody) M10 (metric)	2
79	A	N800627-S100	(AM-10-L)-nut (strap to underbody)-M10 (metric)	2
79	A	N800478-S100	(AM-64-E) "J" nut (strap to underbody) M10 (metric)	2
9A095	LABEL (FUEL UNLEADED)			
75/76	A,D,K - - U.S.	★ D5AZ 9A095-B	Plastic-located behind fuel filler door	1
77	A,D - - U.S.			1
78	A(exc. 71),D - - U.S.	★ D8VZ 9A095-A	Aluminum- located behind fuel filler door	1
79	D			1

YEAR	MODEL/RESTRICTIONS	PART NUMBER	DESCRIPTION	QTY.
9A095	LABEL (FUEL UNLEADED) — Cont'd			
75/76	A,D,K,Y - - Canada-English and French wording	★ D5AZ 9A095-C	Plastic-located behind fuel filler door	1
77/78	A,D - - Canada			1
77/	F,G,K,L,P - - U.S.	D70Z 9A095-A	Decal-located at fuel filler area	1
76/78	J(exc. 64S) - - U.S.			1
78	A(71) - - U.S.			1
79	A,J - - U.S.			1
77/	F,G,K,L,P - - Canada	D7TZ 9A095-B	Decal-located at fuel filler area	1
76/78	J(exc. 64S) - - Canada			1
79	A,J - - Canada			1
76/78	J(64S) - - U.S.	★ D7RY 9A095-C	Decal-located at fuel filler area	1
76/78	J(64S) - - Canada	★ D7RY 9A095-D	Decal-located at fuel filler area	1
75/76	C(71) - - U.S.	★ D50Z 9A095-C	Plastic-located behind fuel filler door	1
75/76	C(71) - - Canada-English and French wording	★ D50Z 9A095-D	Plastic-located behind fuel filler door	1
75/76	C(exc. 71),F,G,J,L,P - - U.S.-English wording	★ D6FZ 9A095-A	Decal-located at fuel filler area-r/b D70Z 9A095-A(6/81)	1
75/76	C(exc. 71),F,G,J,L,P - - Canada-English and French wording	D6FZ 9A095-B	Decal-located at fuel filler area	1
75	L - - English and French wording-Canada	D5FZ 9A095-C	Decal (white on clear)-located on quarter panel above fuel filler cap	1
75	L - - English and French wording-Canada	D5FZ 9A095-D	Decal (black on clear)-located on quarter panel above fuel filler cap	1
77/	V - - U.S.	★ D74Y 9A095-A	Aluminum-located behind fuel filler door	1
77/	V - - Canada	★ D74Y 9A095-B	Aluminum-located behind fuel filler door	1
77/	V	387317-S	(SS-53-E)-blind rivet (label to back panel)	2
9A097	SHIELD (FUEL TANK FILLER PIPE)			
74/76	K	★ D4SZ 9A097-A	Not replaced	1
77/	F (exc. 71),K	D80Z 9A097-A		1
9099	GUARD (FUEL TANK)			
73/76	C(71)	★ D50Z 9099-A	Plastic	1
77	F (71)			1
9104	TANK ASSY (FUEL AUXILIARY)-Refer to group 9002			
9A108	RETAINER (AUXILIARY)-Refer to group 9002			
75/76	D	★ D5VY 9A108-A	Not replaced	1
9109	FLANGE (FUEL TANK FILLER INNER)			
75/76	A(71),Y(71)	★ D5AZ 9109-A	Not replaced	1
9A129	HOSE (FUEL TANK OVERFLOW)-Improvise from bulk hose (9324)			
73	A,Y	97329-S35	(E-6)-clamp (hose to fuel tank fill pipe housing assy.	1
9A153	VALVE ASSY. (FUEL TANK VENT)			
73/78	J	D0DZ 9A153-C		1

YEAR	MODEL/RESTRICTIONS	ENGINE CYL.	ENGINE C.I.D. (C.C.D.)	PART NUMBER	DESCRIPTION	QTY.
9155	FILTER ASSY. (FUEL)-Also refer to group 9510 for Carburetor Parts List Instructions ▲ 2000 cc @ 2300 cc ⊕ 2800					
Note 1-	New hoses cut to length from E1PZ 9324-B must be installed when the filter is replaced					
73/74	J	4	All	D3FZ 9155-A	*FG-44-A-#D32E 9155-AA,BA,D8DE 9155-BA-	1
74	L	4	▲122	Note 1	incl. (2) clamp	1
77	A,F "Before 3/1/77"	8	351M, 400			1
77	D,K "Before 3/1/77"	8	400			1
79	A,D,F,G,J,K,P	8	All			1

COPYRIGHT © 1986 — FORD MOTOR COMPANY — DEARBORN, MICHIGAN

1973/79 LINCOLN-MERCURY CARS

YEAR	MODEL/RESTRICTIONS	ENGINE CYL.	ENGINE C.I.D. (C.C.D.)	PART NUMBER	DESCRIPTION	QTY.
9155	FILTER ASSY. (FUEL)-Also refer to group 9510 for Carburetor Parts List Instructions — Cont'd					
	▲ 2000 cc @ 2300 cc ⊕ 2800					
Note 1-	New hoses cut to length from E1PZ 9324-B must be installed when the filter is replaced					
73/74	A	8	All	D3AZ 9155-B	*FG-14-B,#D3VE 9155-AA,A1A,A4A, D8DE 9155-AA-	
75/76	A	8	400		incl. (1) hose and (2) clamps	1
73	C	6	250			1
73/74	C	8	All(exc. 351-4/B)			1
75/76	C,F	8	351,400			1
73/74	D	8	460			1
73/74	F	8	All(exc. 351-4/B)			1
75/	G	6	All			1
75/76	G	8	302,351			1
73/76	J	6	All			1
76/	J	4	@140			1
77/	J - - exc. Calif.	6	⊕171			1
73/74	K	8	460			1
74	L	4	@140			1
75/76	L	4&6	All			1
77	L "Before 6/27/77"	4	@140			1
78	L - - Canada	4	@140			1
77/	L - - exc. Calif.	6	⊕171			1
73/76	P	6&8	All			1
77/	P	6	All			1
73/74	Y	8	All			1
75/76	Y	8	351,400			1
79	J	6	200			1
79	P	4	@140			1
73/74	C,F	8	351-4/B	D30Z 9155-A	*FG-19-B-incl. (2) clamps	1
75/76	A,C,D,F,K,Y	8	460	Note 1	and (1) D1ZZ 9229-A gasket	1
77/78	A,D,K	8	460		If vehicle is equipped with either a 6", 2" or 9" hose improvise appropriate hose length from E1PZ 9324-B bulk hose. It is mandatory that the correct hose length be installed in the vehicle.	1
77/78	F,G,P	8	302-2/B exc (VV)	D7TZ 9155-C Note 1	*FG-778-A-#D8PE 9155-AA-incl. (1) D7DZ 9324-B hose and (2) 388254-S100 clamps	1
77	G,V	8	351W			1
77/78	F	8	351W			1
77/78	A,F "From 3/1/77"	8	351M, 400			1
77/78	D,K "From 3/1/77"	8	400			1
77/78	L "From 6/27/77"	4	@140			1
78	P	4	@140			1
77/	G,P,V	8	302-2/B (VV)	D7ZZ 9155-A	*FG-779-cartridge type-incl. (1) D1ZZ 9229-A gasket	1
77/	J,L - - Calif.	6	⊕171			1
79	A - - exc. Canada	8	351W			1

YEAR	MODEL/RESTRICTIONS	PART NUMBER	DESCRIPTION	QTY.
9159	TUBE (FUEL VALVE)-Improvise from D0AZ 9049-A			
9A159	SLEEVE (FUEL TANK FILLER PIPE)			
75/76	A(exc. 71),D,Y(exc. 71)	★ D5AZ 9A159-A	Use w/auxiliary fuel tank-not replaced	1
75/76	A(71),Y(71)	★ D5AZ 9A159-B	Use w/auxiliary fuel tank-not replaced	1

YEAR	MODEL/RESTRICTIONS	PART NUMBER	DESCRIPTION	QTY.
9B161	COVER ASSY. (AUXILIARY FUEL TANK)			
75/76	A(exc. 71),Y(exc. 71)-	★ D5AZ 9B161-B	Not replaced	1
75/76	D			1
75/76	A(exc. 71),D,Y(exc. 71)	★ D5VY 9B161-F	Gray-burloom mat-use as a trim cover over auxiliary tank-not replaced	1
75/76	A(exc. 71),Y(exc. 71)	D5VZ 9B161-A	Gray-cut pile carpet	1
75/76	D	D5VY 9B161-E	Black-cut pile carpet	1
		★ D5VY 9B161-C	Blue-cut pile carpet-not replaced	1
		★ D5VY 9B161-J	Gold-cut pile carpet-not replaced	1
		D5VY 9B161-H	Green-cut pile carpet	1
		★ D5VY 9B161-K	Jade-cut pile carpet-not replaced	1
		D5VY 9B161-G	Red-cut pile carpet	1
		★ D5VY 9B161-D	Tan-cut pile carpet-not replaced	1
		★ D5VY 9B161-B	Taupe-cut pile carpet-not replaced	1
76	D	★ D6VY 9B161-A	Saddle-cut pile carpet-not replaced	1
9B162	BASE ASSY. (AUXILIARY FUEL TANK COVER)			
75/76	A(exc. 71),Y(exc. 71)	★ D5AZ 9B162-C	Not replaced	1
75/76	D			1
75/76	A(71),Y(71)	★ D5AZ 9B162-B	Not replaced	1
75/76	A,Y	386196-S100	(MM-173-MR)-nut and washer (cover and base to rear floor pan)-5/16"-18	4
9B163	SEAL (AUXILIARY FUEL TANK COVER TO BASE)			
75/76	A(exc. 71),D,Y(exc. 71)	★ D5AZ 9B163-A	Not replaced	1
75/76	A(71),Y(71)	★ D5AZ 9B163-B	Not replaced	1
9B166	PIPE (AUXILIARY TO FUEL TANK)			
75/76	A(71),Y(71)	★ D5AZ 9B166-A	Front	1
9B168	PIPE (AUXILIARY TANK FILLER)			
75/76	A(71),Y(71)	★ D5AZ 9B168-B		1
75/76	A(exc. 71),Y(exc. 71)	★ D5MY 9B168-A		1
75/76	D	★ D5VY 9B168-A		1
9B169	COVER (AUXILIARY FUEL TANK)			
75/76	A(71),Y(71)	★ D5AZ 9B169-A	Not replaced	1
9170	HOSE (FUEL TANK VENT TUBE)			
73/74	A(71),Y(71)	D3AZ 9170-A	Bellows type-use w/std. tank	1
75/76	A,D,Y		Use w/auxiliary fuel tank	1
77/78	A			1
76/78	J	★ D5RY 9170-A		1
9B170	SEAL (AUXILIARY FUEL TANK FILLER PIPE)			
75/76	A(exc. 71),D,Y(exc. 71)	★ D5AZ 9B170-B	Not replaced	1
75/76	A(71),Y(71)	★ D5AZ 9B170-A	Not replaced	1
9171	CLAMP (HOSE)			
73/	A,C,D,F,G,J,K,L,P,Y	8M 9171-B		AR
77/	V			1
9B171	RETAINER (AUXILIARY TANK FILLER PIPE)			
75/76	A(exc. 71),D,Y(exc. 71)	★ D5AZ 9B171-B	Not replaced	1
75/76	A(71),Y(71)	★ D5AZ 9B171-A	Not replaced	1
9B172-3	HOSE ASSY. (AUXILIARY FUEL TANK DRAIN)			
75/76	A(exc. 71),D,Y(exc. 71)	★ D5AZ 9B172-C	Drain hose-fuel-aux. tank to main tank-not repl.	1
75/76	A(71),Y(71)	D5AZ 9B172-A	Drain hose-drains moisture from base	1
75/76	A(71),Y(71) "Before 3/1/76"	★ D5AZ 9B173-A	Vent hose-not replaced	1
76	A(71),Y(71) "From 3/1/76"	★ D6AZ 9B173-A	Vent hose-not replaced	1
75/76	A(71),Y(71)	386183-S	(KK-56-RG)-grommet (vent hose)-2 1/4" dia.	1
75/76	A(71),Y(71)	386184-S32D	(GG-163-ZH)-Clip-tube to 9002-1/4"	1
9B174	RETAINER ASSY. (FUEL TANK FILLER PIPE SEAL)			
75/76	A(exc. 71),Y(exc. 71)	★ D5AZ 9B174-A	W/auxiliary fuel tank-not replaced	1
75/76	D			1
9B187	REINFORCEMENT (AUXILIARY FUEL TANK COVER)			
75/76	A(exc. 71),D,Y(exc. 71)	★ D5AZ 9B187-A	Not replaced	13
75/76	A(71),Y(71)			14

COPYRIGHT © 1986 — FORD MOTOR COMPANY — DEARBORN, MICHIGAN

1973/79 LINCOLN-MERCURY CARS

YEAR	MODEL/RESTRICTIONS	PART NUMBER	DESCRIPTION	QTY.
9B187	REINFORCEMENT (AUXILIARY FUEL TANK COVER) — Cont'd			
75/76	A(71),Y(71)	★ D5AZ 9B187-B	Not replaced	1
75/76	A(exc. 71),D,Y(exc. 71)	★ D5VY 9B187-A	Not replaced	1
9189	FUEL STOP KIT (VALVE)			
73/74	J - - 4 cyl. 122 (2000 cc)	★ D4RY 9189-A		1
9202	FLOAT ASSY. (FUEL TANK SENDER)			
73/76	A,C,D,F,G,L,P,Y	C0AZ 9202-B		1
77/	A,D,F,G,L,P,V			1
73/77	K			1
78/	K - - exc. with "Miles to Empty" fuel indicator			1
78/	K - - with "Miles to Empty" fuel indicator		Serviced only as part of basic 9275 (gauge assy-fuel tank unit)	
9B211	REINFORCEMENT (FUEL TANK FILLER PIPE FLANGE)			
74/76	L(exc. 73)	★ D1FZ 9B211-A	Not replaced	1
9B212	SHIELD (FUEL TANK REAR) - Refer to group 9B007			
9A220	CONNECTOR ASSY. (FUEL VALVE TUBE)			
73/78	J	★ D0DZ 9A220-A	Not replaced	1
9B224	BRACKET (FUEL TANK SHIELD SUPPORT)			
74/76	L(exc. 73)	★ D1FZ 9B224-A	Not replaced	2
9A227	HOSE (FUEL TANK EMISSION TUBE) - Improvise from bulk hose (9324)			
9A228	TUBE (FUEL TANK VENT TO STORAGE CANISTER) - Improvise from bulk tubing (9291)			
73/	A,D,Y	★ 385233-S2	Clip (tube to frame)-5/16"-3/8"	3
73/	A,C,D,Y	381877-S2	(UU-52-AF)-screw (tube and clip to cross member and L.H. side rail)-5/16"-18 x 3/4"	AR
73/	C,K		(Tube to fuel tank support)	1
73/	P	55981-S2	(U-254-E)-screw (tube assy. to cross member)-hex. washer head-1/4"-14 x 1/2"	1
9229	GASKET (FUEL FILTER MOUNTING)-Also refer to group 9510 for Carburetor Parts List Instructions			
73	F - - 8 cyl. 351-4/B	D1ZZ 9229-A		1
77/	G,P,V - - 8 cyl. 302-2/B (VV)			1
77/	L - - 6 cyl. 171 (2800cc)-Calif			1
9A231	HOUSING (FUEL TANK VENT VALVE EXPANSION CONNECTOR)			
76/77	J	★ D6RY 9A231-A	Use for (9B593) valve next to fuel tank-not repl.	1
9242	UNION (FLANGE CARBURETOR)			
73/78	J - - 6 cyl. ⊕171	★ D3RY 9242-A	Not replaced	1
9269	SHIELD (FUEL LINE)			
76/78	J - - 4 cyl. 140 (2300 cc)	★ D6RY 9269-A	Use on fuel supply hose and fuel vapor return hose at intersection near cross member	2
9G270	CAP (FUEL TANK SENDER OUTLET TUBE)			
73/76	A,Y - - 8 cyl. 460 P/C	★ D2AZ 9G270-A	1/2" O.D. x 1/4" long-not replaced	1
73	C - - 8 cyl. 460 P/C			1
9G271	TUBE ASSY. (FUEL VAPOR RETURN)			
77/ ★	L - - 6 cyl. exc. Calif.- "From 6/27/77"	★ D8FZ 9G271-A		1
77/ ★	L - - 6 cyl. Calif.- "From 6/27/77"	★ D8FZ 9G271-B		1
78/	P - - 4 cyl. without A/C	★ D8BZ 9G271-A		1
78/	P - - 4 cyl. with A/C	★ D8BZ 9G271-B		1
79	J - - 8 cyl.	★ D8ZZ 9G271-A		1
79	J - - 6 cyl.	★ D8ZZ 9G271-D		1
79	J - - 4 cyl.	★ D8ZZ 9G271-E	Att. R.H. fender apron	1
78/	J,P - - 4 cyl. M/T without A/C	D8ZZ 9G271-G		1
79	J - - 4 cyl. with A/C	★ D8ZE 9G271-FA	Improvise	1
79	P - - 4 cyl. 140 (2300 cc) M/T without A/C	D9BZ 9G271-C		1
79	J,P - - 4 cyl. 140 (2300 cc) A/T without A/C	D9ZZ 9G271-H		1
79	J - - 4 cyl. 140 (2300 cc) A/T with A/C	D9ZZ 9G271-J		1

YEAR	MODEL/RESTRICTIONS	PART NUMBER	DESCRIPTION	QTY.
9273	GAUGE ASSY. (OIL PRESSURE INSTRUMENT PANEL UNIT)-Also refer to group 9B308			
73/74	D	D1VY 9273-A		1
73	F(65F,76F) - - w/gauges-8 cyl.	★ D1WY 9273-A	Not replaced	1
73/74	J - - w/gauges	★ D3RY 9273-A	Number dial-not replaced	1
74	J - - w/gauges	★ D4RY 9273-A	Plain dial	1
76/78	J	D6RY 9273-A		1
73/78	J - - w/gauges	E603120-S72	(AB-3)-screw (oil pressure gauge)-pan head-M4 x 6 (Metric)	1
9B273	TUBE ASSY. (FUEL FILTER TO FUEL PUMP)-Improvise from bulk tubing (9291)			
73/	A,C,D,F,G,K,P,Y	87944-S8	(I-22)-fitting-5/16" tube	1
77/	V			1
73/	A,C,D,F,G,K,P,Y	87945-S8	(I-23)-fitting-3/8" tube	1
		383591-S	(GG-363)-clip (9B273 and 12226 to bracket)-tubing-3/8"	1
77/	V			1
9A274	TUBE ASSY. (FUEL FILTER TO CARBURETOR)-Improvise from bulk tubing (9291)			
73/	A,C,D,F,G,K,P,Y	87944-S8	(I-22)-fitting-connector nut-5/16"-20 x 1/2"	2
73/	A,C,D,F,G,K,P,Y	87945-S	(I-23)-fitting-connector nut-5/16"-18 x 3/8"	2
		383591-S	(GG-363)-clip (9B273 and 12226 to bracket)-tubing-3/8"	1

YEAR	MODEL/RESTRICTIONS	ENGINE CYL.	ENGINE C.I.D. (C.C.D.)	PART NUMBER	DESCRIPTION	QTY.
9275	GAUGE ASSY. (FUEL TANK UNIT)					
	A (Mercury)					
73	A(exc. 71)	8	351,400	D1AZ 9275-F	#D1AF 9275-AA or AB	1
73	A(exc. 71) - - w/o fuel vapor return tubes exc. P/C	8	429,460			1
74	A(exc. 71)	8	400		incl. (1) C0AF 9276-A gasket	1
74	A(exc. 71) - - without T/E exc. P/C	8	460			1
73	A(71)	8	351,400	D1AZ 9275-E	#D1AF 9275-BA-incl. (1) C0AF 9276-A gasket and (1) C8AF 9327-A hose	1
73	A(71) - - w/o fuel vapor return tubes - exc. P/C	8	429,460			1
74/76	A(71)	8	400			1
74	A(71) - - without T/E exc. P/C	8	460			1
77/78	A(71)	8	400			1
77/78	A(71) "From 11/22/76"	8	460			1
73	A(exc. 71) - - w/fuel vapor return tubes-exc. P/C	8	429,460	D3AZ 9275-A	#D3AF 9275-AA-incl. (1) C0AF 9276-A gasket	1
74	A(exc. 71) - - T/E exc. P/C	8	460			1
73	A(71) - - w/fuel vapor return tubes - exc. P/C	8	429,460	D3AZ 9275-B	#D3AF 9275-BA-incl. (1) C0AF 9276-A gasket and (1) C8AF 9327-A hose	1
74	A(71) - - T/E exc. P/C	8	460			1
75/77	A(71) "Before 11/22/76"	8	460			1
73/74	A	8	460 P/C	★ D2AZ 9275-A	#D2AF 9275-AA-incl. (1) C0AF 9276-A gasket -Not replaced	1
75/76	A(exc. 71)	8	400	D5AZ 9275-A	#D5AF 9275-AA,D9VF 9275-AA-incl. (1) C0AF 9276-A gasket	1
77/78	A (exc. 71)	8	351M, 400			1
77/78	A(exc. 71) "From 11/22/76"	8	460-exc. P/C			1

COPYRIGHT © 1986 — FORD MOTOR COMPANY — DEARBORN, MICHIGAN

1973/79 LINCOLN-MERCURY CARS

YEAR	MODEL/RESTRICTIONS	ENGINE CYL.	ENGINE C.I.D. (C.C.D.)	PART NUMBER	DESCRIPTION	QTY.
9275	GAUGE ASSY. (FUEL TANK UNIT) — Cont'd					
	A (Mercury)					
75/76	A(exc. 71)	8	460,460 P/C	D5AZ 9275-B	#D5AF 9275-BA-inc. (1) COAF 9276-A gasket	1 1
77	A(exc. 71) "Before 11/22/76"	8	460-exc. P/C			1
77/78	A	8	460 P/C	★	Serviced only in group 9350	1
79	A(exc. 74) - - w/o fuel vapor return tube	8	302,351 exc. P/C	E0AZ 9275-D	#D9AE 9275-AB,CA, E0LF 9275-AA-incl. (1) COAF 9276-A gasket	
79	A(74)	8	All	D9AZ 9275-B	#D9AE 9275-BB,DA-incl. (1) COAF 9276-A gasket	1
79	A(exc. 74) - - w/fuel vapor return tubes	8	351 P/C	E0LY 9275-A	#E0LF 9275-KA-incl. (1) COAF 9276-A gasket	1
	C (Montego)					
73	C(exc. 71) - - w/o fuel vapor return tubes	6&8	All	D20Z 9275-A	#D20F 9275-AA or AB-incl. (1) COAF 9276-A gasket	1 1
73	C(71)	6&8	250,302, 351,400	D20Z 9275-B	#D20F 9275-BA-incl. (1) COAF 9276-A gasket	1
74/76	C(71)	8	302,351, 400			1
74	C(71) - - without T/E	8	460			1
73	C(exc. 71) - - w/fuel vapor return tubes	8	351 W,429, 460P/C	★D30Z 9275-A	#D30F 9275-AA-incl. (1) COAF 9276-A gasket	1
73	C(71)	8	429, 460P/C	★D30Z 9275-B	#D30F 9275-BA-incl. (1) COAF 9275-A gasket	1
74/76	C(71) - - T/E	8	460			1
74	C(exc. 71)	6&8	250,302, 351,400	D4LY 9275-A	#D4LF 9275-AA,D9LF 9275-BA incl. (1) COAF 9276-A gasket	1
74	C(exc. 71) - - without T/E and fuel vapor return tubes	8	460 exc. P/C			1
75/76	C(exc. 71) - - w/o fuel vapor return tubes	8	351M, 400			1
75/76	C	8	351W			1
74/76	C(exc. 71) - - T/E w/fuel vapor return tubes	8	460	D4LY 9275-B	#D4LF 9275-BA-incl. (1) COAF 9276-A gasket	1
	D (Lincoln)					
73	D	8	460	D3AZ 9275-A	#D3AF 9275-AA-incl. (1) COAF 9276-A gasket incl. (1) COAF 9276-A gasket	1
74	D - - T/E	8	460			1
73/74	D - - without T/E	8	460	D1AZ 9275-F	#D1AF 9275-AA or AB-incl. COAF 9276-A gasket	1
75/77	D "Before 11/22/76"	8	460	D5AZ 9275-B	#D5AF 9275-BA-incl. (1) COAF 9276-A gasket	1
77/78	D "From 11/22/76"	8	460	D5AZ 9275-A	#D5AF 9275-AA D9VF 9275-AA-incl. (1) COAF 9276-A gasket	1
77/	D "From 11/1/76"	8	400			1
77	D "Before 11/1/76"	8	400	★D7VY 9275-A	#D7VF 9275-AA-incl. (1) COAF 9276-A gskt -not replaced	1
	F (Cougar)					
73	F(65D,76D)	8	All	D1ZZ 9275-A	#D1ZF 9275-AA,AB or AC-incl. (1) COAF 9276-A gasket	1
73	F(65F,76F)	8	All	★D1WY 9275-A	#D1WF 9275-AA,AB,or AC-incl. (1) COAF 9276-A gasket-not replaced	1

YEAR	MODEL/RESTRICTIONS	ENGINE CYL.	ENGINE C.I.D. (C.C.D.)	PART NUMBER	DESCRIPTION	QTY.
9275	GAUGE ASSY. (FUEL TANK UNIT) — Cont'd @2300cc, ⊕2800cc					
	F (Cougar)					
74/76	F	8	351,400	D4LY 9275-A	#D4LF 9275-AA,D9LF 9275-BA-incl. (1) C0AF 9276-A gasket	1
74	F - - without T/E and fuel vapor return tubes	8	460			1
75/76	F - - w/o fuel vapor return tube	8	460			1
77	F(exc. 71)	8	All			1
79	F - - w/extended range fuel tank	8	All		-used with 27.5 gallon fuel tank	1
74	F - - T/E w/fuel vapor return tubes	8	460	D4LY 9275-B	#D4LF 9275-BA-incl. (1) C0AF 9276-A gasket	1
75/76	F - - w/fuel vapor return tubes	8	460			1
77	F(71)	8	All	D20Z 9275-B	#D20F 9275-BA-incl. (1) C0AF 9276-A gasket	1
78	F	8	All	D7LZ 9275-A	#D7LF 9275-AA, D9SF 9275-AA-incl.	1
79	F - - w/std fuel tank-w/o fuel vapor return tubes	8	302,351 exc. P/C		(1) C0AF 9276-A gasket-used with 21 gallon fuel tank	1
79	F - - w/std fuel tank-w/fuel vapor return tubes	8	351 P/C	E0LY 9275-A	#E0LF 9275-KA-incl. (1) C0AF 9276-A gasket	1
	G (Monarch)					
75	G	6&8	All	D5DZ 9275-B	#D5DF 9275-AB-incl. (1) C0AF 9276-A gskt.	1
76	G	6&8	200,351W	D6DZ 9275-A	#D6DF 9275-AA, D94F 9275-AA-incl. (1) C0AF 9276-A gasket	1
76	G - - exc. w/economy fuel pkg.	6&8	250,302		With std. 19 gallon tank	1
77	G	6&8	All			1
76	G - - w/economy fuel pkg.	6&8	250,302	D6DZ 9275-B	#D6DF 9275-BA-incl. (1) C0AF 9276-A gskt. use w/optional 18 gallon tank	1
78	G - - "Before 5/15/78"	6&8	All		use w/std. 18 gallon fuel tank	1
78/	G "From 5/15/78"	6&8	All	D8DZ 9275-A	#D8DF 9275-AA, D9DF 9275-AA-incl. (1) C0AF 9276-A gskt.	1
	J (Capri)					
73/74	J	4&6	All	★D3RY 9275-A	Incl. (1) gasket-not replaced	1
76	J "Before 8/1/75"	4	@140	★D5RY 9275-A	#75EB 9275-BB-incl. (1) D0RY 9276-A gskt.	1
76	J "From 8/1/75 to 8/1/76"	4	@140	D6RY 9275-E	#76EB 9275-EA-incl. (1) D0RY 9276-A gskt.	1
76/78	J "From 8/1/76"	4	@140	★D6RY 9275-F	#76EB 9275-EB-incl. (1) D0RY 9276-A gskt.	1
76	J "Before 8/1/75"	6	⊕171	★D5RY 9275-B	#75EB 9275-CA-incl. (1) D0RY 9276-A gskt.	1
76	J "From 8/1/75 to 8/1/76"	6	⊕171	D6RY 9275-D	#76EB 9275-DA-incl. (1) D0RY 9276-A gskt.	1
76/78	"From 8/1/76"	6	⊕171	D6RY 9275-G	#76EB 9275-DB-incl. (1) D0RY 9276-A gasket	1
79	J	4	@140 TC	D9ZZ 9275-D	#D9ZF 9275-DB,GA-incl. (1) C0AF 9276-A	1
79	J - - with A/C	4	@140-exc. TC		gasket	1
79	J - - without A/C	4	@140-exc. TC	D9ZZ 9275-F	#D9ZF 9275-FA-incl. (1) C0AF 9276-A gasket	1
79	J	6&8	All	D9ZZ 9275-C	#D9ZF 9275-CA,CB-incl. (1) C0AF 9276-A gasket	1
	K (Mark IV, Mark V)					
73	K - - w/fuel vapor return tubes	8	All	D3LY 9275-A	#D3LF 9275-AA-incl.(1) C0AF 9276-A gasket	1
73	K - - w/o fuel vapor return tubes	8	All	D2LY 9275-A	#D2LF-9275-AA,AB	1
74	K - - without T/E and fuel vapor return tubes	8	460	D4LY 9275-A	#D4LF 9275-AA,D9LF 9275-BA-incl. (1) C0AF 9276-A gasket	1
77	K	8	400			1
77	K "From 11/22/76"	8	460			1
78/	K - - exc. with "Miles to Empty" fuel indicator	8	All			1
74	K - - T/E w/fuel vapor return tubes	8	460	D4LY 9275-B	#D4LF 9275-BA-incl. (1) C0AF 9276-A gasket	1
75/76	K - - w/fuel vapor return tubes	8	460			1
77	K "Before 11/22/76"	8	460			1
78/	K - - with "Miles to Empty" fuel indicator	8	All	D9LY 9275-A	#D8LF 9275-BA,D9LF 9275-AA,CA-incl. (1) C0AF 9276-A gasket	

COPYRIGHT © 1986 — FORD MOTOR COMPANY — DEARBORN, MICHIGAN

YEAR	MODEL/RESTRICTIONS	ENGINE CYL.	ENGINE C.I.D. (C.C.D.)	PART NUMBER	DESCRIPTION	QTY.
9275	GAUGE ASSY. (FUEL TANK UNIT) — Cont'd					
	L (Bobcat)					
74/76	L(exc. 73)	4	All	D4ZZ 9275-B	#D4ZF 9275-BA-incl. (1) C0AF 9276-A gasket	1
74	L(73)	4	All	D4FZ 9275-A	#D42F 9275-AA-incl. (1) C0AF 9276-A gasket	1
75/76	L(73)	4	@140	D5FZ 9275-A	#D52F 9275-AA-incl. (1) C0AF 9276-A gasket	1
75/76	L(exc. 73)	6	⊕171	D4ZZ 9275-A	#D4ZF 9275-AA-incl. (1) C0AF 9276-A gasket	1
75/76	L(73)	6	⊕171	★D5FZ 9275-B	#D52F 9275-BA-incl. (1) C0AF 9276-A gasket	1
77/	L(73)	6	⊕171	D7FZ 9275-A	#D7EF 9275-AA,D9EF 9275-DA-incl. (1) C0AF 9276-A gasket	1
77/	L(exc. 73)	6	⊕171	D7ZZ 9275-A	#D7ZF 9275-AA,D9EF 9275-CA-incl. C0AF 9276-A gasket	1
77/	L(73)	4	@140	D9FZ 9275-B	D7EF 9275-BA, D9EF 9275-BA,FA-incl. (1) C0AF 9276-A gasket	1
77/	L(exc. 73)	4	@140	D9FZ 9275-A	D7EF 9275-BA, D9EF 9275-AA,EA-incl. (1) C0AF 9276-A gasket	1
	P (Comet)					
73/75	P	6&8	All	D5DZ 9275-B	#D1DF 9275-AA,AB-D5DF 9275-AB-incl. (1) C0AF 9276-A gasket	1
76/77	P	6&8	All	D6DZ 9275-A	#D6DF 9275-AA,D94F 9275-AA-incl. (1) C0AF 9276-A gasket	1
	P (Zephyr)					
78/	P	6&8	All	D8BZ 9275-A	#D8BF 9275-AB-D9BF 9275-AA-incl. (1) C0AF 9276-A gasket	1
78/	P	4	@140	D8BZ 9275-B	#D8BF 9275-BB-D9BF 9275-BA,CA-incl. (1) C0AF 9276-A gasket	1
	V (Versailles)					
77/	V	8	All	D6DZ 9275-A	#D6DF 9275-AA, D94F 9275-AA-incl. (1) C0AF 9276-A gasket	1
	Y (Meteor)					
73	Y(exc. 71)	8	351,400	D1AZ 9275-F	#D1AF 9275-AA or AB-incl. (1) C0AF 9276-A gasket	1
74	Y(exc. 71)	8	351,400			1
74	Y(exc. 71) - - without T/E	8	460 exc. P/C			1
73	Y(71)	8	351,400	D1AZ 9275-E	#D1AF 9275-BA-incl. (1) C0AF 9276-A gasket and (1) C8AF 9327-A hose	1
73	Y(71) - - w/o fuel vapor return tubes	8	429,460 exc. P/C			1
74	Y(71)	8	351,400			1
74	Y(71) - - without T/E	8	460			1
75/76	Y(71)	8	351M, 400			1
73	Y(exc. 71)	8	429,460 exc. P/C	D3AZ 9275-A	#D3AF 9275-AA-incl. (1) C0AF 9276-A gasket	1
74	Y(exc. 71) - - T/E	8	460 exc. P/C			1
73	Y(71) - - w/fuel vapor return tubes	8	429,460 exc. P/C	D3AZ 9275-B	#D3AF 9275-BA-incl. (1) C0AF 9276-A gasket and (1) C8AF 9327-A hose	1
74	Y(71) - - T/E	8	460			1
75/76	Y(71)	8	460			1
73/74	Y	8	460 P/C	D2AZ 9275-A	#D2AF 9275-AA-incl. (1) C0AF 9276-A gasket	1
75/76	Y(exc. 71)	8	351M, 400	D5AZ 9275-A	#D5AF 9275-AA,D9VF 9275-AA-incl. (1) C0AF 9276-A gasket	1
75/76	Y(exc. 71)	8	460	D5AZ 9275-B	#D5AF 9275-BA-incl. (1) C0AF 9276-A gasket	1

YEAR	MODEL/RESTRICTIONS	PART NUMBER	DESCRIPTION	QTY.
9C275	HOSE (FUEL TUBE INTERMEDIATE)-Improvise from bulk hose (9324)			
9276	GASKET (FUEL GAUGE TANK UNIT)			
73/76	C,Y	C0AF 9276-A	Rubber-2 1/4" I.D. x 2 3/8" O.D. x 1/8" thick	1
73/	A,D,F,G,K,L,P			1
79	J			1
73/78	J	★ D0RY 9276-A	R/b E0RZ 9276-A(6/81)	1
9276	GASKET (SEPARATOR ASSY. FUEL VAPOR)			
73/75	A,C,D,F,G,K,L,P,Y	C0AF 9276-A		1
9N276	TUBE ASSY. (FUEL TANK FILLER)			
73/74	A(71),Y(71) "Before 9/15/73"	★ D3AZ 9N276-A	Steel tubing-not replaced	1
74/76	A(71),Y(71) "From 9/15/73"	★ D4AZ 9N276-A		1
77/78	A (71)			1
75/76	A(71),Y(71)	D5AZ 9N276-B	Use w/auxiliary fuel tank	1
75/76	A(exc. 71),Y(exc. 71)	★ D5MY 9N276-A		1
75/76	D	★ D5VY 9N276-A	Use w/auxiliary fuel tank	1
9278	GAUGE ASSY. (OIL PRESSURE ENGINE UNIT)			
73/76	A,D,G,K,P,Y	D4AZ 9278-A	*SW-1311-stamped No. 6	1
73/76	C,F - - w/o gauges			1
74	L - - 4 cyl. 122 (2000 cc)			1
75/78	L - - 6 cyl. 171 (2800 cc)			1
77/	A,D,G,K,V			1
77/	F - - w/o tachometer			1
77/78	P - - 6 cyl. 200, 8 cyl. 302			1
79	J,P - - w/o gauges			1
79	L			1
73/74	D	E4ZZ 9278-A	*SW-1547-B-stamped No. 90	1
73/76	C,F - - w/gauges			1
77/	F - - w/tachometer			1
79	J - - w/gauges exc. 4 cyl. 140 TC (2300 cc)			1
79	P - - w/gauges			1
73/78	J "Before 7/5/78"	★ D1RY 9278-A	*SWE-1053 r/b D8RZ 9278-B(6/81)	1
78	J "From 7/5/78"	★ D8RZ 9278-A	SWE-1053-A-r/b D8RZ 9278-B(6/81)	1
74/78	L - - 4 cyl. 140 (2300 cc)	D0HZ 9278-A	*SW-978	1
78	P - - 4 cyl. 140 (2300cc)			1
79	J - - 4 cyl. 140TC(2300cc)	D9ZZ 9278-B	*SW-1547-A-stamped No. 90	1
79	J - - 4 cyl. 140 TC (2300cc)	388452-S8	(II-254-E) Fitting (att gauge and oil supply line to block)	1
9B278	TUBE ASSY. (OIL PRESSURE GAUGE)-Also refer to group 9D295			
73/74	J - - 4 cyl.-w/gauges	D3RY 9B278-A		1
76/78	J - - 4 cyl.-w/gauges	D5RY 9B278-A		1
73/78	J - - 6 cyl.-w/gauges	D3RY 9B278-B		1
73/78	J - - 6 cyl.	120337-ES	Clip (tube assy. to block)	1
9280	GAUGE ASSY. (FUEL LEVEL and/or TEMPERATURE and/or OIL PRESSURE)-Also refer to group 9305			
73/74	D	★ D1VY 9280-A	Incl. body, pointer and dial	1
73	F(65F,76F)	★ D1WY 9280-B	Incl. body, pointer and dial-not replaced	1
73	F(65D,76D)	★ D2WY 9280-A	Incl. body, pointer, dial and warning lights-not repl.	1
9G281	TUBE and CLIP ASSY. (FUEL PUMP TO FUEL FILTER)			
73	A,C,D,K,Y - - 8 cyl. 429,460 exc. P/C	★ D3VY 9G281-A	Not replaced	1
73	C - - 8 cyl. 351W	★ D30Z 9G281-A		1
9282	TUBE (FUEL TANK TO PUMP)-Improvise from bulk tubing (9291)			
73/	All	374277-S	(KK-84)-grommet	1
73/	All	★ 352977-S100	Clip (fuel line to No. 4 cross member)	1
73/	All	381877-S2	(UU-52-AF)-screw (fuel line clip to frame cross member)-hex. head self tapping-5/16"-18 x 3/4"	1

COPYRIGHT © 1986— FORD MOTOR COMPANY —DEARBORN, MICHIGAN

1973/79 LINCOLN-MERCURY CARS

YEAR	MODEL/RESTRICTIONS	PART NUMBER	DESCRIPTION	QTY.
9C287	HOSE (FUEL VAPOR SEPARATOR TO FUEL TANK REAR)-Cut from 9324			
		377931-S8	(EE-5)-clamp-hose-circle clamp-3/8"	AR
9F287	HOSE (THERMACTOR AIR BY-PASS VALVE INLET)			
74	A,C,F,Y - - 8 cyl. 351C-2/B,400	★ D4AZ 9F287-A	#D4AE 9F287-AA-3/4" I.D. x 16" long	1
74	A,C,D,F,Y - - 8 cyl. 460	★ D4VY 9F287-A	#D4VE 9F287-AA	1
74	K - - w/o heated W/S			1
75/76	A,C,F,Y - - 8 cyl. 351M,400	D5AZ 9F287-A	#D5AE 9F287-AA	1
77/78	A,D,F,K - - 8 cyl. 351M, 400			1
79	D			1
79	F - - 8 cyl. 351M			1
75/76	A,C,D,F,Y - - 8 cyl. 460	D5VZ 9F287-A	#D5VE 9F287-AA	1
75/76	K - - w/o heated W/S and back window			1
77/78	A,D,K - - 8 cyl. 460			1
73	C,P - - 6 cyl. 250	★	Cut to length from C7AZ 9B466-A	1
74	C - - 8 cyl. 302	D40Z 9F287-A	#D40E 9F287-AA,D8EE 9K446-AA,BA	1
79	L,J - - 4 cyl. 140 (2300cc)		D9ZE 9K446-AA,CA	1
75	C - - 8 cyl. 351W	D5UZ 9F287-F	#D5UE 9F287-CB,DA	1
75	G - - 8 cyl. 302,351W-exc. Calif.-w/o catalyst	★ D50Z 9F287-A	#D50E 9F287-AA-used between by-pass valve (9B289) with 3/4" dia. inlet nipple & air pump (9A486)	1
75	G - - 8 cyl. 302-w/catalyst-	★ D5DZ 9F287-B	#D5DE 9F287-BA-used between by-pass valve (9B289) with 7/8" dia. inlet nipple & air pump (9A486)	1
75/77	P - - 8 cyl. 302-Calif.-w/catalyst			1
75	G - - 8 cyl. 351W-	★ D50Z 9F287-B	#D50E 9F287-BA-used between by-pass valve (9B289) with 7/8" dia. inlet nipple & air pump (9A486)	1
77	F - - 8 cyl. 302			1
75/76	C - - 8 cyl. 351W			1
75/78	F - - 8 cyl. 351W			1
76	G - - 8 cyl. 302,351W	D6DZ 9F287-B	#D6DE 9F287-BA	1
77	V - - 8 cyl. 302			1
77/	F,G - - 8 cyl. 302			1
78	G - - 8 cyl. 302-Calif.	★ D8DZ 9F287-C	#D8DE 9H308-AA-tube assy.	1
78	V - - 8 cyl. 302			1
78	G - - 8 cyl. 302-Calif.	★ D8DE 9H298-AA	#D8DE 9H298-AA-cut from D8BZ 9F287-B-upper hose	1
74	J - - 4 cyl. 122 (2000 cc)	★ D4RY 9F287-A		1
76/78	J - - 4 cyl. 140 (2300 cc)-with A/C-ev/em	★ D5RY 9F287-E	#757F 9F287-EA-7/8" x 3/4" I.D.	1
76/78	J - - 4 cyl. 140 (2300 cc)-without A/C with ev/em	D5RY 9F287-F	#757F 9F287-FA-7/8" x 3/4" I.D.	1
76/78	J - - 6 cyl. 171 (2800 cc)-with T/E-Calif.	D5RY 9F287-A	#75TF 9F287-AA	
74	K - - w/heated W/S and back window	★ D4SZ 9F287-A	#D4SZ 9F287-AA-used w/Sierracin system	1
75/76	K - - w/heated W/S and back window	★ D5VY 9F287-B	#D5VE 9F287-BA	1
74	L - - 4 cyl. 140 (2300 cc) without A/C	★ D4FZ 9F287-A	#D42E 9F287-A	1
74	L - - 4 cyl. 140 (2300 cc)-with A/C	★ D4FZ 9F287-B	#D42E 9F287-BA,BB	1
74	L - - 4 cyl. 122 (2000 cc)	★ D4FZ 9F287-C	#D42E 9F287-CA,CB,CC	1
75	L - - 4 cyl. 140 (2300 cc)-without A/C-exc. Calif. "Before 1/6/75"	★ D5FZ 9F287-E	#D52E 9F287-DB-3/4" I.D. both ends	1
75/76	L - - 4 cyl. 140 (2300 cc)-without A/C-Calif.	★ D5FZ 9F287-F	#D52E 9F287-BC-7/8" x 3/4" I.D.	1
75/76	L - - 4 cyl. 140 (2300 cc)-without A/C-exc. Calif. "From 1/6/75"			1
75/76	L - - 4 cyl. 140 (2300 cc)-with A/C	D5FZ 9F287-G	#D52E 9F287-AC-7/8" x 3/4" I.D.	1
77/78	G - - 6 cyl. 250			1

YEAR	MODEL/RESTRICTIONS	PART NUMBER	DESCRIPTION	QTY.
9F287	HOSE (THERMACTOR AIR BY-PASS VALVE INLET) — Cont'd			
77	L - - 4 cyl. 140 (2300 cc) without A/C "Before 6/27/77"	★ D7FZ 9F287-A	#D7EE 9F287-AA	1
78	L - - 4 cyl. 140 (2300cc)-without A/C -Canada			1
77	L - - 4 cyl. 140 (2300 cc)-with A/C	D7FZ 9F287-B	#D7EE 9F287-BA	1
78/	L - - 4 cyl. 140 (2300cc)-with A/C -Canada			1
79	J - - 4 cyl. 140 (2300cc) with A/C-Calif.			1
75	L - - 6 cyl. 171 (2800 cc)- "Before 2/11/75"	★ D5ZZ 9F287-A	#D5ZE 9F287-AB-use w/by-pass valve (9B289) with outlet nipple 180° from inlet nipple	1
75	L - - 6 cyl. 171 (2800 cc)- "From 2/11/75"	★ D5ZZ 9F287-H	#D5ZE 9F287-AC-use w/by-pass valve (9B289) with outlet nipple 90° from inlet nipple	1
75/76	G,P - - 6 cyl.			1
76/	L - - 6 cyl. 171(2800 cc)	★ D6ZZ 9F287-F	#D5ZE 9F287-FA	1
79	J - - 6 cyl. 171 (2800cc)			1
77/78	L - - 4 cyl. 140 (2300 cc)-without A/C-exc. Calif. "From 6/27/77"	D8FZ 9F287-B	#D8EE 9F287-BA	1
79	F,J,P - - 4 cyl. 140 (2300 cc)-without A/C-exc. Calif.	D9FZ 9F287-B	#D9EE 9F287-BA	1
77/78	L - - 4 cyl. 140 (2300 cc)-without A/C-Calif. "From 6/27/77"	★ D8FZ 9F287-A	#D8EE 9F287-AA	1
78	P - - 4 cyl. 140 (2300 cc)-without A/C-Calif.			1
79	L,J,P - - 4 cyl. 140 (2300 cc)-without A/C - Calif.	D9FZ 9F287-A	#D9EE 9F287-AA	1
74	P - - 8 cyl. 302	★ D40Z 9F287-B	#D40E 9F287-BA	1
75/77	P - - 8 cyl. 302 exc. Calif.-w/o catalyst	★ D5DZ 9F287-C	#D5DE 9F287-CA-used between by-pass valve (9B289) with 3/4" dia. inlet nipple & air pump (9A486)	1
76/77	P - - 8 cyl. 302	★ D6DZ 9F287-A	#D6BE 9F287-AA	1
78	P - - 8 cyl. 302-Calif. and w/Hi-altitude carb.	★ D8BZ 9F287-B	#D8BE 9H298-AB-upper hose	1
79	A,J,P - - 8 cyl. 302		Upper	1
78	P - - 8 cyl. 302-Calif. and w/Hi-altitude carb.	★ D8BZ 9F287-C	#D8BE 9H299-AB-lower hose	1
79	P - - 8 cyl. 302			1
78	P - - 8 cyl. 302-Calif. and w/Hi-altitude carb.	★ D8BZ 9F287-D	#D8BE 9H308-AC-tube assy.	1
79	P - - 8 cyl. 302			1
78/	V - - 8 cyl. 302-Calif.	★ D80Z 9F287-A	#D80E 9F287-AA	1
79	A - - 8 cyl. 302	★ D9AZ 9F287-A	Lower	1
79	A - - 8 cyl. 351W-Canada	D9AZ 9F287-B	#D9AE 9F287-BC	1
79	A - - 8 cyl. 351W	D9AZ 9F287-C	#D9AE 9F287-CA	1
79	F - - 8 cyl. 351W	★ D9SZ 9F287-A	#D9SE 9F287-AA	1
79	J - - 8 cyl. 302	★ D9ZZ 9F287-A	Lower	1
9C288	TUBE (FUEL VAPOR SEPARATOR TO FUEL TANK FRONT)-Improvise from bulk tubing (9291)			
73/	All	374277-S	(KK-84)-grommet	1
73/	All	377931-S8	(EE-5)-clamp-hose-circle clamp-3/8"	AR
9K288	GROMMET (FUEL LINE TO SIDE APRON)			
73	F	★ D0DZ 9K288-A	Rubber-1 1/4" O.D.-(1) 3/8" diameter hole-	1
73/	P		(1) 3/16" diameter hole	1
73	F	★ D1ZZ 9K288-A	1 1/4" O.D.-used as insulator tube to spring tower	1
75/	G,P		on L.H. side	1

COPYRIGHT © 1986-- FORD MOTOR COMPANY —DEARBORN, MICHIGAN

1973/79 LINCOLN-MERCURY CARS

YEAR	MODEL/RESTRICTIONS	PART NUMBER	DESCRIPTION	QTY.
9B289	VALVE ASSY. (AIR BY-PASS-THERMACTOR)			
74	A,C,F,Y - - 8 cyl. 351C-2/B,400,460	D4AZ 9B289-A	#D4AE 9B289-AA	1
74	J - - 4 cyl. 122 (2000 cc)-with M/T and T/E			1
74	L - - 4 cyl. 140 (2300 cc)-with A/T and T/E			1
74	P - - 6 cyl.			1
75	P - - 6 cyl. 250-Calif.			1
75	Y - - 8 cyl. 351M-exc. Calif.			1
77	D - - 8 cyl. 460			1
77	D - - 8 cyl. 400 "From 11/1/76"			1
74	A,C,D,F,K,Y - - 8 cyl. 460	D4VY 9B289-A	#D4VE 9B289-AA-Use with 3/4" I.D. inlet nipple	1
74	J			1
74	L - - 4 cyl. 140 (2300 cc)			1
75	G - - 6 cyl. 250,8 cyl. 302,351W-w/o catalyst "Before 1/20/75"			1
75	P - - 6 cyl. 250,8 cyl. 302-w/o catalyst "Before 1/20/75"			1
75	A,Y - - 8 cyl. 351M,400-with A/C	D5TZ 9B289-A	#D5TE 9B289-AA	1
75/76	A,C,D,F,G,K,P,Y	D5AZ 9B289-C	#D5AE 9B289-CB-Use with 7/8" I.D. inlet nipple-outlet nipple 180° from inlet nipple	1
75	L - - 6 cyl. 171 (2800 cc)- "Before 2/11/75"			1
75	L - - 4 cyl. 140 (2300 cc)-exc. Canada "Before 6/2/75"			1
76/78	J - - 4 cyl. 140 (2300 cc)- & 6 cyl. 171 (2800 cc)-Calif.			1
77/	A,D,F,K,V			1
77	G,P - - 8 cyl.			1
78	G,P - - 8 cyl. 302 Calif. and w/Hi-altitude carb.			1
78/	L,P - - 4 cyl. 140 (2300 cc) M/T Calif.--without A/C			1
79	J - - 4 cyl. 140 (2300cc)-M/T without A/C-Calif.			1
79	G - - 8 cyl. 302 w/Hi-altitude carb.			1
74	C,P - - 8 cyl. 302	D4TZ 9B289-A	#D4TE 9B289-AA	1
74	C,P - - 8 cyl. 302	★ D40Z 9B289-A	#D40E 9B289-AA	1
75/76	G,P - - 6 cyl. 250,8 cyl. 302,351W-w/o catalyst "From 1/20/75"	D5DZ 9B289-A	#D5DE 9B289-AA-Use with 7/8" I.D. inlet nipple	1
76/	J - - 4 cyl. 140 (2300 cc)			1
75	L - - 4 cyl. 140 (2300 cc)-exc. Calif.			1
77	P - - 6 cyl. 250 Canada			1
75	G,P - - 6 cyl. 200- "Before 1/20/75"	★ D5ZZ 9B289-A	#D5ZZ 9B289-AA,AB-Use with 3/4" I.D. inlet nipple	1
76	J - - 4 cyl. 140 (2300 cc)-exc. Calif. "Before 8/1/75"			1
75	G,P - - 6 cyl. 200- "From 1/20/75 to 6/1/75"	★ D5ZZ 9B289-B	#D5ZE 9B289-BA,BB-Use with 7/8" I.D. inlet nipple	1
75/76	G,P - - 6 cyl. 200- "From 6/2/75"	E1ZZ 9B289-A	*CX-690-#D5ZE 9B289-FA-7/8" dia. inlet nipple	1
76/77	G,P - - 6 cyl. 250			1
76/78	J - - 6 cyl. 171 (2800 cc)-exc. Calif.			1
76	L - - 6 cyl. 171 (2800 cc)			1
78/	P - - 4 cyl. 140 (2300cc) M/T without A/C-exc. Calif.			1
79	J - - 4 cyl. 140 (2300cc) M/T without A/C-exc. Calif.			1

YEAR	MODEL/RESTRICTIONS	PART NUMBER	DESCRIPTION	QTY.
9B289	VALVE ASSY. (AIR BY-PASS-THERMACTOR) — Cont'd			
78	G - - 6 cyl. 250	E3TZ 9B289-E	*CX-222-A-#D8EE 9B289-AA-incl. (1)	1
78/	P - - 6 cyl. 200 A/T-T/E		D8BZ 9F429-A gasket	1
78	P - - 4 cyl. 143 (2300 cc) M/T with A/C-Calif.			1
79	J,P - - 4 cyl. 140 (2300cc) M/T-Calif.			1
79	L - - 4 cyl. 140 (2300cc) without A/C-Calif. or Hi-altitude			1
79	G - - 6 cyl. 250 M/T			1
79	G - - 6 cyl. 250 A/T-Calif.			1
79	A,J,P - - 8 cyl. 302 A/T-Calif.			1
79	J,P - - 8 cyl. 302 M/T			1
79	J,P - - 8 cyl. 302 w/Hi-altitude carb.			1
77/	L - - 4 cyl. 140 (2300cc)-with A/C "From 6/27/77"	D8FZ 9B289-D	*CX-238-A#D8EE 9B289-BA, E3AA 9B289-AB -incl. (1) D8BZ 9F429-A gasket	1
79	J - - 4 cyl. 140 (2300cc) with A/C-Calif.			1
79	L (exc. 73) - - 4 cyl. 140 (2300cc) A/T with A/C-Calif.			1
79	L - - 4 cyl. 140 (2300cc) with A/C			1
79	L - - 4 cyl. 140 (2300 cc) with Hi-altitude carb.-with A/C			1
79	P - - 4 cyl. 140 (2300cc) A/T Calif.			1
79	P - - 4 cyl. 140 (2300 cc) A/T-with Hi-altitude carb.			1
78/	G - - 8 cyl. 302 A/T-exc. Calif.	D8DZ 9B289-B	*CX-282-#D8DE 9B289-BA	1
78/	F - - 8 cyl. 351W			1
79	J - - 8 cyl. 302 A/T exc. w/Hi-altitude carb.			1
78/	P - - 8 cyl. 302 A/T-exc. Calif.	D8BZ 9B289-H	*CX-281-A#D8BE 9B289-EA,EB-incl. (1) D8BZ 9F429-A gasket	
79	A - - 8 cyl. 302 A/T-exc. Calif.			1
79	G - - 6 cyl. A/T-exc. Calif.			1
79	J - - 8 cyl. 302 A/T-exc. Calif. or Hi-altitude carb.			1
78/	P - - 6 cyl. 200 M/T	E3TZ 9B289-F	*CX-221-B- #D8BE 9B289-DA, E1TE 9B289-NB, E3AE 9B289-BA	1
73	J	★ D0RY 9B289-A		1
74	J - - 4 cyl. 122 (2000 cc)-A/T	C8TZ 9B289-A	#C8TE 9B289-B	1
74	J - - 6 cyl. 171 (2800 cc)			1
74	L - - 4 cyl. 122 (2000 cc)-with M/T and T/E			1
75	G - - 6 cyl. 250-A/T			1
75	L - - 6 cyl. 171 (2800 cc)- "From 2/11/75"	★ D5ZZ 9B289-C	#D5ZE 9B289-CA-Use with 7/8" I.D. inlet nipp	1
75	L - - 4 cyl. 140 (2300 cc)-exc. Canada "From 6/2/75"	D5ZZ 9B289-E	#D5ZZ 9B289-EA	1
77	G,P - - 6 cyl. 200-M/T			1
77/	L - - 6 cyl. 171 (2800 cc)			1
79	J - - 6 cyl. 171 (2800 cc)			1

COPYRIGHT © 1986 — FORD MOTOR COMPANY — DEARBORN, MICHIGAN

1973/79 LINCOLN-MERCURY CARS

YEAR	MODEL/RESTRICTIONS	PART NUMBER	DESCRIPTION	QTY.
9B289	**VALVE ASSY. (AIR BY-PASS-THERMACTOR) — Cont'd**			
76/77	L - - 4 cyl. 140 (2300 cc)- "Before 6/27/77"	D6FZ 9B289-A	#D6EE 9B289-AA	1
76/78	J - - 4 cyl. 140 (2300 cc)- Calif. "From 8/1/75"			1
78/	L - - 4 cyl. 140 (2300cc) without A/C			1
79	P - - 4 cyl. 140 (2300cc) A/T without A/C-Calif.			1
79	J - - 4 cyl. 140 (2300cc) without A/C-Calif.			1
79	J,L - - 4 cyl. 140 (2300 cc) with Hi-altitude carb. without A/C			1
78/	P - - 4 cyl. 140 (2300 cc) M/T with A/C-exc. Calif.	E3TZ 9B289-G	*CX-938-#D8BE 9B289-BA, E3TE 9B289-CA D8BZ 9F429-A gasket	1
79	J,L - - 4 cyl. 140 (2300cc) M/T with A/C-exc. Calif. or Hi-altitude			1
78/	V - - 8 cyl. 302	D8BZ 9B289-C	*CX-220-#D8BE 9B289-CA-incl. (1) D8BZ 9F429-A gasket	1
9C289	**TUBE (FUEL VAPOR SEPARATOR TO FUEL TANK REAR)-Improvise from bulk tubing (9291)**			
73/	All	42154-S7-8	(U-256)-screw-hex. washer head-No. 14-10 x 1"	AR

YEAR	MODEL/RESTRICTIONS	ENGINE CYL.	ENGINE C.I.D. (C.C.D.)	PART NUMBER	DESCRIPTION	QTY.
9B290	**BRACKET (ANTI-BACKFIRE VALVE)-also refer to 9C486**					
73	C,P	8	302	★ C8AZ 9B290-A	#C8OE 9C486-A	1
73	C	8	351W	★ D0ZZ 9B290-A	#D0ZE 9C486-A	1
9B290	**BRACKET (AIR BY-PASS VALVE-THERMACTOR)-Also refer to 9C486** ▲ 2000 cc ⊕ 2800 cc					
74	A,C,F,Y	8	351C-2/B,400, 400P/C	★ D4AZ 9B290-B	#D4AE 9C486-BA,CA	1
74	A,C,D,F,K,Y	8	460	★ D4VY 9B290-A	#D4VE 9C486-AA	1
75/76	A,Y - - A/C	8	351M, 400	★ D5AZ 9B290-B	#D5AE 9C486-BA	1
77/78	A,D,K - - A/C	8	351M, 400			1
79	D,K	8	400			1
75/76	A,Y - - without A/C	8	351M, 400	D5AZ 9B290-C	#D5AE 9C486-CA	1
75/76	C,F					1
77/78	A,D,K - - without A/C	8	351M, 400			1
77/78	F	8	351M, 400			1
79	F	8	351M			1
75/76	A,C,D,F,Y	8	460, 460P/C	★ D5VY 9B290-A	#D5VE 9C486-AA,AB	1
75/76	K - - w/o heated W/S and back window	8	460			1
77/78	A,D,K	8	460			1
74	C,P	8	302	★ D40Z 9B290-A	#D3OE 9C486-AA	1
74	C,F	8	351W			1
75	C,G	8	351W	★ D50Z 9B290-A	#D5OE 9C486-AA	1
76	C	8	351W			1
78/	F	8	351W			1

YEAR	MODEL/RESTRICTIONS	ENGINE CYL.	ENGINE C.I.D. (C.C.D.)	PART NUMBER	DESCRIPTION	QTY.
9B290	BRACKET (AIR BY-PASS VALVE-THERMACTOR)-Also refer to 9C486 — Cont'd ▲ 2000CC ⊕ 2800CC					
75	G,P - - w/o catalyst	8	302	★ D5DZ 9B290-A		1
75/76	G,P	6	All	★ D5DZ 9B290-B	#D5DE 9C486-BA	1
77/78	G,P	6	All	★ D7DZ 9B290-A	#D7BE 9C486-AA-not replaced	1
79	G - - with P/S and dealer installed A/C	6	250	D9DZ 9B290-A		1
76	G	8	302, 351W	D6DZ 9B290-A	#D6DE 9C486-AA,D8AE 9C486-AA	1
77	F,G,V	8	302			1
78/	G	8	302			1
79	F	8	302			1
74	J	4	▲122	★ D4RY 9B290-B		1
74	J	6	⊕171	★ D4RY 9B290-A		1
75/76	K - - w/heated W/S and back window	8	460	★ D5VY 9B290-B	#D5VE 9C486-BA	1
74	L	4	▲122	★ D4FZ 9B290-A	#D42E 9C486-AA,AB	1
75/	L	6	⊕171	★ D5ZZ 9B290-A	#D5ZE 9C486-AB-use w/by-pass valve with outlet nipple 180° from inlet nipple	1
76/	J	6	⊕171			1
75	L	6	⊕171	★ D5ZZ 9B290-D	#D5ZZ 9C486-AC-use w/by-pass valve with outlet nipple 90° from inlet nipple	1
78/	L - - without A/C Calif.	4	@140	D8FZ 9B290-A	# D8EE 9C486-AA	1
78	P - - M/T Calif.-without A/C	4	@140			1
76/78	P	8	302	★ D6DZ 9B290-B	#D6BE 9C486-AA	1
74	J	4	▲122	E630174-S71	(AX-32)-lockwasher (9B290 to 9A486)	6
9291	TUBE (FUEL)					
73/74	J	4&6	All	★ D1RY 9291-B		1
73/	All	All	All	E0AZ 9291-A	1/4" O.D.-25 ft. roll-steel	AR
73/	All	All	All	E0AZ 9291-B	5/16" O.D.-25 ft. roll-steel	AR
73/	All	All	All	E0AZ 9291-C	3/8" O.D.-25 ft. roll-steel	AR
73/	A,C,K,Y	6&8	All	381877-S2	(UU-52-AF)-screw (fuel line clip to frame cross member)-hex. head self tapping-5/16"-18 x 3/4"	AR
73/	A,Y	8	All	372323-S	(GG-154-B)-clip (fuel tube to frame cross member)	AR
73/	C,K	6&8	All	382479-S100	(GG-277-A)-clip (fuel tube to side member)	AR
73/	A,Y	8	All	385265-S2	(GG-386)-clip (fuel tubes to cross member and lower arm mounting bracket)-1/4"-3/8"	AR
9B291	TUBE ASSY. (ANTI-BACKFIRE VALVE)					
78	L,P - - M/T Calif.	4	@140	D8FZ 9B291-A	#D8EE 9G432-AA	1
79	J,P - - M/T - Calif.	4	@140			1
78/	L,P - - M/T-Calif.	4	@140	380637-S	(II-191-AA)-fitting (tube to intake manifold) 3/8-18 x 1 5/16"	1
79	J - - M/T - exc. Calif.	8	302	★ D9ZZ 9B291-A		1
9C291	SHIELD (FUEL TUBE)					
76/	L	4&6	All	★ D6FZ 9C291-A		1
9G293	FILTER ASSY. (FUEL VAPOR SEPARATOR)					
74	A,C,D,F,K,Y - - T/E	8	460	★ D4VY 9G293-B	Incl. (1) D4VY 9G294-A bracket-not replaced	1
9G294	BRACKET ASSY. (FUEL VAPOR SEPARATOR)					
74	A,C,D,F,K,Y - - T/E	8	460	D4VY 9G294-A		1
9D295	ADAPTER (OIL PRESSURE GAUGE TO CYLINDER BLOCK)					
73/78	J - - w/gauges	4&6	All	D3RY 9D295-C		1
9G295	HOSE (FUEL VAPOR SEPARATOR TO FUEL FILTER)-Improvise from bulk hose (9324)					

COPYRIGHT © 1986— FORD MOTOR COMPANY —DEARBORN, MICHIGAN

1973/79 LINCOLN-MERCURY CARS

YEAR	MODEL/RESTRICTIONS	ENGINE CYL.	ENGINE C.I.D. (C.C.D.)	PART NUMBER	DESCRIPTION	QTY.
9E296	**FLASHER ASSY. (OIL TEMPERATURE INDICATOR)**					
79	J	4	@140-TC	D9ZZ 9E296-A	*SF-578	1
9G296	**HOSE (FUEL VAPOR SEPARATOR TO FUEL PUMP)-Improvise from bulk hose (9324)**					
9G297	**HOSE (FUEL VAPOR RETURN)-Unless listed improvise from bulk hose (9324)**					
78/	A,D,K	8	400	D8TZ 9G297-A	2 1/2" long-reduces 3/8" to 1/4" tube	1
78/	F,G,P	8	All			1
77/	L "From 6/27/77"	6	⊕171			1
78	A,D,K	8	460	D8FZ 9G297-A	90° elbow x 27" long	1
79	J	4	@140			1
78	A,D,K	8	460	D8VZ 9G297-A	18" long-reduces 3/8" to 1/4" tube	1
77/	L "From 6/27/77"	6	⊕171	★ D8FZ 9G297-C	90° elbow-short ends	1
78/	P	8	302	D9ZZ 9G297-A	45° elbow end x 3/8" tube size	1
78/	P	4	@140			1
79	J	All	All			1
78/	G,J,P	6	All	★ D8BZ 9G297-C	90° elbow x 3 3/4" long x 3 3/4" long	1
78/	A,G,J,L,V	All	All	★ D9AZ 9G297-B	90° elbow - 3/8" tube size	1
78/	A,G,J,L,V	All	All	D9AZ 9G297-C	90° elbow - 3/8" tube size x 17" long	AR
79	J,P - - A/T without A/C	4	@140	★ D9BZ 9G297-A	From carb to fuel vapor canister	1
79	P - - A/T	4	@140	D9BZ 9G297-S		1
79	J without A/C	4	@140	★ D8ZZ 9G297-G		1
9B298	**VALVE ASSY. (ANTI-BACKFIRE)**					
78	L,P - - M/T Calif.	4	@140	D8FZ 9B298-A	*CX-295-# D8EE-AA	1
79	J,P - - M/T-Calif.	4	@140			1
79	J - - M/T	8	302			1
9G298	**TUBE (FUEL VAPOR SEPARATOR TO FUEL FILTER)-Improvise from bulk tubing (9291)**					
9H298	**HOSE (AIR BY-PASS VALVE INLET UPPER)-refer to group 9F287**					

1973/79 LINCOLN-MERCURY CARS

YEAR	MODEL/RESTRICTIONS	ENGINE CYL.	ENGINE C.I.D. (C.C.D.)	PART NUMBER	DESCRIPTION	QTY.
9H301	VALVE ASSY. (THERMACTOR VACUMM VENT CONTROL)-Also refer to group 12A226 ⊕ 2800 cc @ 2300 cc					
77/	G,P,V - - A/T- Calif.	8	302	D7FZ 9H301-A	#D7EE 9H301-AA, D8EE 9H301-AA	1
77/	J	4	@140			1
77/	J,L - - Calif.	6	⊕171			1
78/	L - - A/T-Calif.	4	@140			1
78/	P	4	@140			1
79	A	8	302			1
77/	G,J,L,P,V		All	388356-S2	(GC-232-DC)-clip 7/8" retainer	1
9H302	BRACKET ASSY. (FUEL INDICATOR-MILES TO EMPTY)					
78	K "Before 5/22/78"	8	All	★ D8LY 9H302-A	Not replaced	1
78/	K "From 5/22/78"	8	All	D9LY 9H302-A		1
9H302	BRACKET (LOW FUEL LEVEL WARNING SWITCH)					
79	A	8	All	D9AZ 9H302-A	#D9AF 9H313-AB	1
79	D	8	All	D9VY 9H302-A	#D9VF 9H313-AA	1
79	J,P	All	All	D9ZZ 9H302-A	#D9ZF 9H313-AA	1
9305	GAUGE ASSY. (FUEL INSTRUMENT PANEL UNIT)-Also refer to group 9280 and 9G327 ▲ 2000 cc					
73/76	A,Y	8	All	D4AZ 9305-A	w/red pointer	1
77	A "Before 12/1/76"	8	All			1
77/78	A "From 12/1/76"	8	All	D7AZ 9305-A	w/yellow pointer	1
79	A - - w/o tripodometer	8	All	D9MY 9305-A	Use w/unleaded fuel	1
79	A - - w/tripodometer	8	All	D9MY 9305-B	Use w/unleaded fuel	1
79	A - - w/o tripodometer	8	All	★ D9MY 9305-C	Use w/leaded fuel	1
79	A - - w/tripodometer	8	All	★ D9MY 9305-D	Use w/leaded fuel	1
73	C - - w/rallye instrument group	6&8	All	★ D2GY 9305-B	Not replaced	1
73	C - - w/o ralleye instrument group	6&8	All	★ D2GY 9305-A		1
74/76	C - - w/o rallye instrument group	6&8	All	★ D4GY 9305-A		1
74/76	C - - w/rallye instrument group	6&8	All	★ D4GY 9305-B		1
74/76	F	8	All			1
75/77	D "Before 12/1/76"	8	All	D5VY 9305-A	w/red pointer	1
77	D "From 12/1/76"	8	All	★ D7VY 9305-A	w/ yellow pointer-not replaced	1
78/	D	8	All	D8VY 9305-A		1
77/	F - - w/o tachometer	8	All	D7SZ 9305-A		1
77/	F - - w/tachometer	8	All	D7SZ 9305-B		1
75	G	6	250	D5DZ 9305-A	Use w/leaded fuel	1
75/77	G "Before 12/1/76"	6&8	All	D6DZ 9305-B	Use w/ unleaded fuel-red pointer	1
77/	G "From 12/1/76"	6&8	All	D7DZ 9305-C	Use w/unleaded fuel - w/yellow pointer	1
76/77	G "Before 12/1/76"	6&8	All	★ D6DZ 9305-A	Use w/leaded fuel - red pointer	1
77/	G "From 12/1/76"	6&8	All	D7DZ 9305-B	Use w/leaded fuel - w/yellow pointer	1
73/74	J - - w/gauges	4&6	All	★ D3RY 9305-B		1
73	J - - w/o gauges	4	▲122	D3RY 9305-A		1
74	J - - w/o gauges	4	▲122	★ D3RY 9305-C	Not replaced	1
76/78	J	4&6	All	D5RY 9305-B		1
79	J	All	All	★ D9ZZ 9305-A		1
73/76	K	8	All	D2LY 9305-A	Use w/leaded fuel	1
75/76	K	8	460	★ D5LY 9305-A	Use w/unleaded fuel	1
77	K "Before 12/1/76"	8	All	★ D7LY 9305-A	w/red pointer-not replaced	1
77/	K "From 12/1/76"	8	All	D7LY 9305-B	w/yellow pointer-reads "E" thru "F"	1
75	L "Before 5/1/75"	4&6	All	★ D5FZ 9305-A	Use w/unleaded fuel-not replaced	1
75/76	L "From 5/1/75"	4&6	All	★ D5FZ 9305-C	Use w/unleaded fuel	1
77	L - - w/o tachometer "Before 12/1/76"	4&6	All		Use w/unleaded fuel - w/red pointer	1
77/78	L - - w/o tachometer "From 12/1/76"	4&6	All	★ D7FZ 9305-D	Use w/unleaded fuel - w/yellow pointer	1

COPYRIGHT © 1986— FORD MOTOR COMPANY —DEARBORN, MICHIGAN

1973/79 LINCOLN-MERCURY CARS

YEAR	MODEL/RESTRICTIONS	ENGINE CYL.	ENGINE C.I.D. (C.C.D.)	PART NUMBER	DESCRIPTION	QTY.
9305	GAUGE ASSY. (FUEL INSTRUMENT PANEL UNIT)-Also refer to group 9280 and 9G327 — Cont'd					
	▲ 2000 cc					
77	L - - w/tachometer - "Before 12/1/76"	4&6	All	★ D7FZ 9305-B	w/white pointer-not replaced	1
77/	L - - w/tachometer "From 12/1/76"	4&6	All	★ D7FZ 9305-C	W/yellow pointer	1
74/75	L "Before 5/1/75"	4	All	★ D4FZ 9305-A	Use w/leaded fuel	1
75/76	L "From 5/1/75"	4&6	All	★ D5FZ 9305-B	Use w/leaded fuel	1
77	L - - w/o tachometer "Before 12/1/76"	4&6	All		Use w/leaded fuel - w/red pointer	1
77/78	L - - w/o tachometer "From 12/1/76"	4&6	All	★ D7FZ 9305-E	Use w/leaded fuel - w/yellow pointer	1
79	L - - w/o tachometer	4&6	All	D9FZ 9305-A	Use w/unleaded fuel	1
79	L - - w/o tachometer	4&6	All	★ D9FZ 9305-B	Use w/leaded fuel	1
73/77	P "Before 12/1/76"	6&8	All	D0DZ 9305-A	w/red pointer	1
77	P "From 12/1/76"	6&8	All	★ D7DZ 9305-A	w/yellow pointer-not replaced	1
78	P - - w/o clock-U.S. & Canada	All	All	D8BZ 9305-A	"Unleaded fuel only"	1
79	P - - w/o clock and w/o tachometer-U.S. and Canada	All	All			1
78	P - - w/clock-U.S. & Canada	All	All	D8BZ 9305-B	"Unleaded fuel only"	1
79	P - - w/clock and w/o tachometer-U.S. and Canada	All	All			1
78	P - - w/o clock-Canada	All	All	★ D8BZ 9305-C	Leaded fuel	1
79	P - - w/o clock and w/o tachometer-Canada	All	All			1
78	P - - w/clock-Canada		All	D8BZ 9305-D	Leaded fuel	1
79	P - - w/clock and w/o tachometer-Canada	All	All			1
79	P - - w/tachometer	All	All	★ D9ZZ 9305-A		1
77/	V	8	All	D7DZ 9305-C	Use w/unleaded fuel	1
9A307	RING (FUEL TANK SENDER RETAINER LOCKING)					
73/76	A,C,D,F,G,K,L,P,Y	6&8	All	C0AZ 9A307-B	Also used on separator assy.-fuel vapor	1
74/76	C - - w/o rallye instrument group	8	All		Used on engine vacuum gauge assy.	1
77/	A,D,F,G,K,L,P,V	4,6&8	All			1
9B308	GAUGE ASSY. (OIL PRESSURE INSTRUMENT PANEL UNIT)-Also refer to group 9273					
73	C - - w/rallye instrument group	6&8	All	★ D2GY 9B308-A	Not replaced	1
74/75	C - - w/rallye instrument group	6&8	All	★ D4GY 9B308-A		1
74/75	F	8	All			1
76	C - - w/rallye instrument group	6&8	All	★ D60Z 9B308-A		1
76	F	8	All			1
77/	F - - w/tachometer	8	All	D7SZ 9B308-A		1
79	J	All	All	D9ZZ 9B308-A		1
79	P - - w/tachometer	All	All			1
9H308	TUBE (AIR BYPASS VALVE INLET)					
79	A	8	302	★ D9AZ 9H308-A		1
79	J - - A/T	8	302	★ D9ZZ 9H308-A		1
79	J - - M/T	8	302	★ D9ZZ 9H308-B	# D9ZE 9B308-BA	1
9H309	BRACKET (FUEL VAPOR RETURN TUBE)					
78/	G,V	8	302	D8DZ 9H309-A		1
79	J	4	@140	★ D8ZZ 9H309-A		1
9H314	ADAPTER (AIR BYPASS VALVE)					
79	J	8	302	D9ZZ 9H314-A		1

YEAR	MODEL/RESTRICTIONS	ENGINE CYL.	ENGINE C.I.D. (C.C.D.)	PART NUMBER	DESCRIPTION	QTY.
9A317	BRACKET (FUEL LINE SUPPORT)-Also refer to group 9D319					
73/74	J	6	All	★ D3RY 9A317-A		1
9A318	TUBE (FUEL FRONT)-Improvise from bulk tubing (9291)					
9D319	BRACKET (FUEL LINE SUPPORT)-Also refer to groups 9A317 & 9B303 @ 2300cc					
73/77	P	6&8	All	★ D0DZ 9D319-A		1
75/78	G	6&8	All			1
77/	V	8	All			1
79	D,K	8	400	D9AZ 9D319-E		1
79	F	8	351M			1
79	F,G,J,P	8	302	D9AZ 9D319-B		1
79	F	8	351W	D90Z 9D319-A		1
79	A	8	351W	D9UZ 9D319-A		1
78/	L,P	4	@140	★ D9ZZ 9D319-B		1
79	J	4	@140-exc. TC			1
9K319	CONNECTOR (FUEL VAPOR HOSE)					
78/	A,C,D,F,G,K,L,P,V	4,6 &8	All	D8AZ 9K319-A	#Red-.070 orifice	1
78/	A,C,D,F,G,K,L,P,V	4,6 &8	All	D8VZ 9K319-A	#Green-.060 orifice	1
79	A,C,D,F,G,K,L,P,V	4,6 &8	All	D9TZ 9K319-A	#Orange-.050 orifice	1
77/	G	8	302	387759-S	(II-191-VH) natural color nylon	1
9G323	RESTRICTOR (VACUUM GAUGE TUBE)					
74/76	C	6&8	All	★ D40Z 9G323-A	Use w/vacuum gauges-not replaced	1
9324	HOSE (FUEL TUBE)-Unless listed improvise from bulk hose (9324) @ 2300cc ⊕ 2800cc					
73/	A,C,D,F,K,L,P,Y	All	All	E1PZ 9324-A	*KFL-1-A bulk hose-3/8" I.D. x 19/32" O.D.-25 ft. roll	AR
75/	G,J	All				AR
77/	V	8	All			AR
73/	A,C,D,F,K,L,PY	All	All	E1PZ 9324-B	*KFL-2-A bulk hose-5/16" I.D. x 17/32" O.D.-25 ft. roll	AR
75/	G,J	All				AR
77/	V	8	All			AR
73/	A,C,D,F,K,L,P,Y	All	All	D1PZ 9324-A	*KFL-3 3/16" tube size-.156" I.D. x .343" O.D.-25 ft. roll	AR
75/	G,J	All				AR
77/	V	8	All			AR
73/	A,C,D,F,K,L,P,Y	All	All	E1PZ 9324-E	*KFL-4-A 1/4" tube size-.222" I.D. x .438" O.D.-25 ft. roll	AR
75/	G,J	All				AR
77/	V	8	All			AR
73/	A,C,D,F,K,L,P,Y	All	All	D1PZ 9324-C	*KFL-5 1/2" tube size-.475" I.D. x .781" O.D.-25 ft. roll	AR
75/	G,J	All				AR
77/	V	8	All			AR
73/	A,C,D,F,K,L,P,Y	All	All	D9PZ 9324-B	*KFL-6-A 5/8" tube size-.630" I.D. x .912" O.D.-25 ft. roll	AR
75/	G,J	All				AR
77/	V	8	All			AR
73/	A,C,D,F,K,L,P,Y	All	All	D9PZ 9324-A	*KFL-7-A 3/4" tube size-.73" I.D. x 1.03" O.D.	AR
75/	G,J	All				AR
77/	V	8	All			AR
73	A,Y	8	All	★ D3AZ 9324-A	Front moulded-attaches to the fuel vapor storage canister	1

COPYRIGHT © 1986— FORD MOTOR COMPANY —DEARBORN, MICHIGAN

1973/79 LINCOLN-MERCURY CARS

YEAR	MODEL/RESTRICTIONS	ENGINE CYL.	ENGINE C.I.D. (C.C.D.)	PART NUMBER	DESCRIPTION	QTY.
9324	HOSE (FUEL TUBE)-Unless listed improvise from bulk hose (9324) — Cont'd @ 2300cc ⊕ 2800cc					
75/78	A	8	460P/C	★ D5AZ 9324-A	3/8" I.D.-moulded	1
75/76	G	6&8	All		Cut to required length	1
75/76	Y	8	460 P/C			1
76	C,F	8	All	★ D6GZ 9324-B	Use or cut to length as required	1
77/	A,D,F,G,K,P,V	8	All	D7DZ 9324-B	Connects fuel filter to 2150 Carb.	1
77/	F	8	302	★ D70Z 9324-A	5/16" X 3/8" tube size- moulded-connects 9291 fuel tube to fuel pump	1
76	G	8	351W	★ D6DZ 9324-B	Fuel pump hose-not replaced	1
73/74	J	6	All	D0RY 9324-A	Center	1
73/74	J	6	All	★ D2RY 9324-A	Front	1
73/74	J	6	All	★ D2RY 9324-B	Rear	1
76/78	J	4&6	All	★ D5RY 9324-A	White	1
				379816-S32	(GG-234-A)-clip	4
74/76	P	6&8	All	D5DZ 9324-A	1/4"-moulded-cut to required length	1
79	J	4	@140-TC		Fuel return	1
77/	P	8	302-2/B-(VV)	D7DZ 9324-A	3/8" tube size-moulded	1
77/	V	8	302			1
78	V	8	302	★ D84Y 9324-A		1
78	G - - A/T Calif.	8	302			1
79	A	8	All	D9AZ 9324-A	1/4" tube size-used on fuel vapor canister	AR
79	A	8	All	D9AZ 9324-B	5/16" tube size-used on fuel vapor canister	1
79	J	6	⊕ 171	E0ZZ 9324-A	Moulded-connects 9291 fuel line to fuel pump	1
79	J,P	4	@140			1
79	J,P	8	302			1
73/	All	All	All	389252-S32	(EE-17-H)-clamp-used with 1/4" hose	AR
73/	All	All	All	389253-S100	(EE-17-J)-clamp-used with 5/16" hose	AR
9F326	SWITCH ASSY. (FUEL LOW LEVEL WARNING)					
73/77	D,K	8	All	E4VZ 9F326-A		1
76/	G	6&8	All			1
77	F	8	All			1
77/	V	8	All			1
78/	K - - exc. w/"Miles to empty" fuel indicator	8	All			1
79	A,D,J,P	All	All			1
73/	D,K	8	All	★ 42160-S7-8	Screw (switch assy. to instrument cluster panel-above glove box)-15 x 1 1/2"	2
73/	D,K	8	All	45174-S8	(M-138)-nut (switch assy. to instrument cluster panel-above glove box)-spring No. 8	2
9327	HOSE (FUEL TUBE REAR)-Unless listed improvise from bulk hose (9234)					
73/74	J	6	All	D0RY 9327-A		1
76	J	4&6	All			1
9C327	HOSE (FUEL RETURN)					
79	J,P	4	@140	D9BZ 9C327-A	1/4" tube size	1
9G327	INDICATOR ASSY. (MILES TO EMPTY)-also refer to group 9305					
78/	K - - with "Miles to Empty" fuel indicator	8	All	D8LY 9G327-A	#D8LF 9G327-AC "MILES TO EMPTY"	1
9B328	SEPARATOR ASSY. (FUEL VAPOR)-Also refer to group 9B593 ▲ 2000 cc @ 2300 cc ⊕ 2800 cc					
73	A,D,K,Y	8	All(exc. 460P/C)	★ D1AZ 9B328-A		1
73	C(exc. 71),F,P	6&8	All(exc. 460P/C)			1
74/75	P	6&8	All		Use with 15 or 16 gal. fuel tank	1

YEAR	MODEL/RESTRICTIONS	ENGINE CYL.	ENGINE C.I.D. (C.C.D.)	PART NUMBER	DESCRIPTION	QTY.
9B328	SEPARATOR ASSY. (FUEL VAPOR)-Also refer to group 9B593— Cont'd ▲ 2000 cc @ 2300 cc ⊕ 2800 cc					
74	A,K,Y	8	All exc. 460 P/C	★ D4AZ 9B328-A		1
75	A,Y	8	All		Main and auxiliary fuel tanks	1
75	D	8	All		Use w/auxiliary fuel tank	1
75	K	8	All			1
74/75	L	4&6	All		Mounted in fuel tank	1
73	C(71)	6&8	All	★ D20Z 9B328-A	Incl. (1) D20A 9B076-AB seal-not replaced	1
74	L	4	▲122	★ D4FZ 9B328-A	Locate in fuel line near carburetor	1
74/	J	6	⊕171			1
9G328	VALVE ASSY. (THERMACTOR IDLE VACUUM) @ 2300 cc ⊕ 2800 cc					
76/	L	6	⊕171	D6DZ 9G328-A	#D6DE 9G328-A1A,A2A	1
76/78	G,P - - with M/T	6	All			1
77/	J	4	@140			1
77/	J	6	⊕171			1
78/	G,P	8	302			1
78/	L,P	4	@140			1
79	A	8	302			1
9B337	TUBE (FUEL VAPOR RETURN)-Improvise from bulk tubing (9291)					
9B339	FITTING (OIL PRESSURE SENDER)					
73	A,C,Y	8	460P/C	D2AZ 9B339-A		1
73/74	C - - w/rallye instrument group	8	302	D1UZ 9B339-A		1
73/76	C - - w/rallye instrument group	8	351W	C20Z 9B339-A	4 1/2" long	1
74/77	F	8	351W			1
78/	F	8	302			1
79	J	8	302			1
76/	J,L	6	⊕171	N800299-S100	(AI-16-E)-connection (gauge to block) 1/4" pipe x 1/4" straight thread	1
78/	F - - w/tachometer	8	351W	E6TZ 9B339-A	2 7/8" long	1
79	P - - w/tachometer	8	302			1
79	J	4	@140-TC	388452-S8	(II-254-E)-fitting (att. oil supply line)-tee	1
9C341	SEPARATOR ASSY. (FUEL PUMP ELECTRIC)-Also refer to group 9350					
73	A(exc. 71),Y(exc. 71)	8	460P/C	D2AZ 9C341-A	Incl. (1) D2AF 9C344-AB connector, (1) C0AF 9276-A gasket and (2) 376545-S8 clamp	1
73	A (71),Y(71)	8	460P/C	D2AZ 9C341-B	Incl. (1) D2AF 9C344-AB connector, (1) C0AF 9276-A gasket and (2) 376545-S8 clamp	1
73	C(exc. 71)	8	460 P/C	D20Z 9C341-A	Incl. (1) D2AF 9C344-AB connector, (1) C0AF 9276-A gasket and (2) 376545-S8 clamp	1
9342	SPRING (CARBURETOR FUEL FILTER RETAINING) ⊕2800cc					
77/	L - - Calif.	6	⊕ 171	D7ZZ 9342-A	Use with D7ZZ 9155-A filter	1
77/	G,P,V	8	302-2/B-(VV)			1
9344	SWITCH ASSY. (FUEL PUMP OIL PRESSURE)					
73	A,C,Y	8	460 P/C	★ D2AZ 9344-A	#D2AF 9344-AA-not replaced	1
9345	RELAY ASSY. (FUEL PUMP)					
74	A,C,Y	8	460 P/C	★ D4AZ 9345-A	#D4AB 9345-AA-not replaced	1
76/78	A	8	460 P/C	★ D7AZ 9345-A	#D7AB 9345-AA- use with electric in-tank fuel pump	1

COPYRIGHT © 1986— FORD MOTOR COMPANY —DEARBORN, MICHIGAN

IDENTIFICATION CHART

IDENTIFICATION	PART NUMBER	IDENTIFICATION	PART NUMBER
9350 PUMP ASSY. (FUEL)			
D0AE-E	D0AZ 9350-A	D9ZE-DA	D9ZZ 9350-A
D0VE-C	D7VZ 9350-C	D9ZE-DB	D9ZZ 9350-A
D0VE-D	D7VZ 9350-C	E0AE-BA	E0AZ 9350-B
D3DE-AA	D3DZ 9350-A	1002	D0RY 9350-D
D30E-AA	★ D30Z 9350-A	1075	D3FZ 9350-B
D3VE-AA	D7VZ 9350-C	1081	D4ZZ 9350-B
D3VE-BA	D7VZ 9350-C	1082	D4RY 9350-C
D40E-AA	D40Z 9350-B	1084	D4RY 9350-B
D40E-BA	D40Z 9350-B	1123	D6RY 9350-A
D40E-CA	D30Z 9350-B	1124	D6ZZ 9350-B
D40E-DA	D0AZ 9350-C	M4688-S	D0AZ 9350-C
D4VE-AA	D4VY 9350-A	4861-S	D0AZ 9350-A
D42E-AB	D4FZ 9350-A	4888-SA	D0AZ 9350-C
D42E-AC	D4FZ 9350-A	4898-S	D0VY 9350-A
D5AE-AA	D5AZ 9350-A	6092-SA	D3DZ 9350-A
D5AE-BA	D5AZ 9350-B	6445-SA	D4FZ 9350-A
D5DE-DA	★ D5DZ 9350-D	6470-S	D3VY 9350-B
D5DE-EA	★ D5DZ 9350-D	6472-S	★ D30Z 9350-A
D50E-AB	D70Z 9350-A	6477-S	D30Z 9350-B
D50E-BB	D70Z 9350-A	6588-S	D40Z 9350-B
D58E-BB	D5RY 9350-A	6621	D4VY 9350-A
D6AE-BB	D6AZ 9350-B	6678	D70Z 9350-A
D6AE-CA	★ D6AZ 9350-C	6747	D5RY 9350-C
D6DE-AB	D6DZ 9350-B	6748	D6FZ 9350-A
D6DE-BA	D6DZ 9350-B	6749	D6DZ 9350-B
D6EE-AB	D6FZ 9350-A	6750	D60Z 9350-A
D60E-AB	D60Z 9350-A	6751	D60Z 9350-D
D60E-BA	D60Z 9350-A	6752	D6AZ 9350-B
D60E-CA	D60Z 9350-D	6753	D6VZ 9350-B
D60E-DA	D60Z 9350-D	6757	D5AZ 9350-B
D6RE-AA	★ D5RY 9350-C	6867	★ D6AZ 9350-C
D6VE-AC	D6VZ 9350-B	6873	D7VZ 9350-B
D6VE-BA	D6VZ 9350-B	M6878S	D7VZ 9350-C
D7AE-AA	★ D7AZ 9350-A	M6882S	D7SZ 9350-B
D7AE 9192-AA	D7AZ 9350-B	6977	D60Z 9350-A
D7AF 9H307-AA	★ D7AZ 9350-C	72HF-AA	D3FZ 9350-A
D70E-AA	D70Z 9350-A	74HF-BA	★ D4RY 9350-B
D7SE-BA	D7SZ 9350-B	72TF-BA	D3RY 9350-A
D7VE-BA	D7VZ 9350-B	72TF-BB	D3RY 9350-A
D7VE-CA	D7VZ 9350-C	74TF-AA	D4RY 9350-C
D8AE-AA	D9AZ 9350-A	74TF-BA	D4ZZ 9350-B
D8BE-AA	D60Z 9350-A	74TF-BB	D4ZZ 9350-B
D9DE-AA	D6DZ 9350-B	75TF-AA	D6RY 9350-A
D9PE-AA	★ D9PZ 9350-A	76HF-AA	D3FZ 9350-B
D9ZE-AA	D9ZZ 9350-A	76TF 9350-AA	D4RY 9350-C
D9ZE-CA	E0ZZ 9350-B	76TF 9K371-AA	D6RY 9350-A

YEAR	MODEL/RESTRICTIONS	ENGINE CYL.	ENGINE C.I.D. (C.C.D.)	PART NUMBER	DESCRIPTION	QTY.
9350	PUMP ASSY. (FUEL) — Cont'd ▲ 2000 cc @ 2300 cc ♦ 2600 cc ⊕ 2800 cc					

APPLICATION CHART

4 CYLINDER

73	J	4	▲122	D3FZ 9350-B	Incl. (1) D9FZ 9417-A gasket	1
74	J,L	4	▲122	★ D4RY 9350-B	Incl. (1) D2RY 9417-A gasket	1

YEAR	MODEL/RESTRICTIONS	ENGINE CYL.	ENGINE C.I.D. (C.C.D.)	PART NUMBER	DESCRIPTION	QTY.
9350	PUMP ASSY. (FUEL) — Cont'd ▲ 2000 cc @ 2300 cc ♦ 2600 cc ⊕ 2800 cc					

APPLICATION CHART

4 CYLINDER

74/75	L	4	@140	D4FZ 9350-A	Carter-incl. (1) D4FZ 9417-A gasket	1
76/78	J	4	@140	★ D5RY 9350-C	Incl. (1) D4FZ 9417-A gasket	1
76/	L	4	@140	D6FZ 9350-A	Carter-incl. 9417 mounting gasket	1
78/	P	4	@140			1
79	J	4	@140-exc. TC			1
79	J	4	@140-TC	E0ZZ 9350-B	Incl. (1) D4FZ 9417-A gasket	1
74/	L	4	@140	N602550-S2	(AB-62)-screw & washer assy. (fuel pump to cyl. block)-M8 x 25 (metric)	2
78/	P	4	@140			2
79	J	4	@140			1
79	J	4	@140	N800616-S2	(AW-65-D) stud & washer assy. (fuel pump to shield to block) M8 x 47 (metric)	1

6 CYLINDER

73	J	6	♦159	D3RY 9350-A	Incl. mounting gasket	1
73/74	C,P	6	All	★ D3DZ 9350-A	Carter-Incl. 9417 mounting gasket	1
74	J	6	⊕171	D4RY 9350-C	Incl. (1) D9FZ 9417-A gasket	1
75	L	6	⊕171	D4ZZ 9350-B	Incl. (1) D9FZ 9417-A gasket	1
75	G,P	6	200,250	★ D5DZ 9350-D	Incl. (1) D5DZ 9417-A gasket	1
76/	G,P	6	All	D6DZ 9350-B	Incl. (1) D5DZ 9417-A gasket	1
79	J	6	200			1
76/78	J	6	⊕171	D6RY 9350-A	Incl. (1) 9417 gasket	1
76/78	L	6	⊕171	D6ZZ 9350-B	Incl. (1) 9417 gasket	1
79	J	6	⊕171			1
79	L	6	⊕171	D6ZZ 9350-B	Incl. (1) gasket	1

8 CYLINDER

73/75	A,C,F,Y	8	351C,M, 400	D0AZ 9350-A	Carter-incl. 9417 mounting gasket	1
73/74	A,C,D,K,Y - - w/o fuel vapor return tubes	8	429, 460 (exc. P/C)	D7VZ 9350-C	Incl. 9417 mounting gasket	1
77/78	A,D,K - - w/o fuel vapor return tubes	8	460 exc. P/C			1
75	A,C,D,F,K,Y - - w/fuel vapor return tubes	8	460	D7VZ 9350-B	Carter-incl. 9417 mounting gasket and bolts	1
75	A,C,Y	8	460P/C			
76	C,F,Y	8	460-exc. P/C			1
76/77	A,D,K "Before 11/22/76"	8	460 exc. P/C			1
76	A,C,Y	8	460P/C	★ D6AZ 9350-C	Carter-incl. 9417 mounting gasket	1
77/78	A	8	460P/C	★ D7AZ 9350-B	Valve-fuel line shut off-Carter-incl. 9417 mounting gasket & bolts-used with electric fuel pump & sender	1

COPYRIGHT © 1986 — FORD MOTOR COMPANY — DEARBORN, MICHIGAN

YEAR	MODEL/RESTRICTIONS	ENGINE CYL.	ENGINE C.I.D. (C.C.D.)	PART NUMBER	DESCRIPTION	QTY.
9350	PUMP ASSY. (FUEL) — Cont'd ▲ 2000 cc @ 2300 cc ♦ 2600 cc ⊕ 2800 cc					

APPLICATION CHART

8 CYLINDER

76	A,C,F,Y	8	351M, 400	D7SZ 9350-B	Carter-incl. 9417 mounting gasket	1
77/78	A,D,F,K	8	400			1
77/78	A,F	8	351M			1
79	F - - w/o fuel vapor return tubes	8	351M exc. P/C			1
73/74	C,P	8	302	D40Z 9350-B	Carter-incl. 9417 mounting gasket	1
74	C,F	8	351W			1
73	C - - w/fuel vapor return tubes	8	351W	★ D30Z 9350-A	Carter-incl. 9417 mounting gasket	1
75/76	C,G	8	351W	D70Z 9350-A	Incl. 9417 mounting gasket	1
75	G,P	8	302			1
76/78	F	8	351W			1
77/	F	8	302			1
76/78	G,P	8	302	D60Z 9350-A	Carter-incl. 9417 mounting gasket	1
77	G	8	351W			1
77/	V	8	302,351W			1
79	A,G	8	302			1
79	A,F - - w/o fuel vapor return tube	8	351W exc. P/C			1
79	A - - w/fuel vapor return tubes	8	351W P/C	E0AZ 9350-B	Incl. 9417 mounting gasket	1
79	F - - w/fuel vapor return tubes	8	351W P/C	★ D9PZ 9350-A	Incl. 9417 mounting gasket	1
79	J,P	8	302	D9ZZ 9350-A	Carter-incl. 9417 mounting gasket	1
79	D,K	8	400	D9AZ 9350-A	Incl. 9417 mounting gasket	1
79	A	8	351W P/C	D9AZ 9350-B	Kit-hot fuel handling	1

Consists of

1-D9AC 9G291-AA	Tube assy.	1-371059-S2	Clip	12-372223-S2	Clip
1-D9AC 9B337-AB	Tube assy.	3-384029-S2	Clip	1-E0LY 9288-A	Hose
1-D7LY 9275-B	Gauge assy.	1-381136-S350A	Hose	1-381136-S100-A	Hose
1-E0AZ 9350-B	Pump assy.	10-385766-S32	Clamp		

79	F	8	351M P/C	D90Z 9350-B	Kit-hot fuel handling	1

Consists of

1-D90C 9G291-AA	Tube assy.	2-384029-S2	Clip
1-D90C 9B337-AA	Tube assy.	12-372232-S2	Clip
1-D7LY 9275-B	Gauge assy.	1-381136-S075A	Hose
1-D7AZ 9350-A	Pump assy.	1-381136-S100A	Hose
1-381136-S0901	Hose	10-385766-S32	Clamp

79	F	8	351W P/C	D90Z 9350-A	Kit-hot fuel handling	1

Consists of

1-D90C 9G291-AA	Tube assy.	12-3722232-S2	Clip
1-D90C 9B337-AA	Tube assy.	1-381136-S075A	Hose
1-D7LY 9275-B	Guage assy.	1-381136-S100A	Hose
1-D9PZ 9350-A	Pump assy.	10-385766-S32	Clamp
2-384029-S2	Clip	1-381136-S090A	Hose

YEAR	MODEL/RESTRICTIONS	ENGINE CYL.	ENGINE C.I.D. (C.C.D.)	PART NUMBER	DESCRIPTION	QTY.
9350	PUMP ASSY. (FUEL) — Cont'd ▲ 2000 cc @ 2300 cc ♦ 2600 cc ⊕ 2800 cc					

APPLICATION CHART

8 CYLINDER

ELECTRIC

73/74	A,C,Y	8	460 P/C	D2AZ 9350-D	Kit	1
	Consists of 1-C0AF 9276-A gasket 1-D9PF 9350-AA pump			1-D7AZ 9A011-A Filter 1-376545-S8 Clamp	1-instruction sheet	
74	A(exc. 71),Y(exc. 71)	8	460P/C	★ D4AZ 9350-A	# D4AF 9C340-AA-incl. (1) separator and (1) C0AF 9276-A gasket	1
76	A	8	460P/C	D7MY 9350-A	As listed in TSB No. 141, dated Aug 23,1977, article 1951	1
77/78	A	8	460 P/C	D7AZ 9350-C	Incl. sending unit, separator and (1) C0AF 9276-A gasket	1
73/	C,P	8	302	20448-S2	(X-24)-screw & washer assy. (fuel pump to front cover)-3/8"-16 x 1 3/8"	2
73/	A,C,F,Y	8	351C, 400	55736-S8	(M-96-F)-nut (fuel pump to cylinder block)-5/16" x 18	1
73/	A,C,F,Y	8	351C, 400	383751-S	(WW-10)-stud (fuel pump to block)-5/16"-18 x 1 1/2"	1
9A350	WIRING ASSY. (FUEL PUMP)					
73/74	A,Y	8	460P/C	D3AZ 9A350-A	# D3AB 9A350-AA	1
73	C	8	460P/C	D20Z 9A350-A	# D20B 9A350-AA	1
9K353	SCREW (FUEL PUMP FILTER BOWL) ▲2000 cc ⊕2800 cc					
73/74	J	4&6	▲122, ⊕171	★ D1FZ 9K353-A Not replaced		1
74	L	4	▲122			1
9B354	LEVER (FUEL PUMP ROCKER ARM RETURN SPRING)					
73 73	C,P A,C,D,F,K,Y	8 8	302 351, 400,429, 460(exc. P/C)	C8TZ 9B354-A	Use w/pumps ident. D0AE-E,D0VE-C,D, D30E-AA,D3VE-AA,BA,4861-S,4898-S, 6470,6472-S or 6477-S	1 1
74 74 74	A,C,D,F,K,Y - - without T/E C,P C,F	8 8 8	460 302 351W	C8TZ 9B354	Use w/pumps ident. D40E-AA,BA,CA,DA	1 1 1
9K354	WASHER (FUEL PUMP FILTER BOWL SEAL) ▲ 2000 cc					
74	L	4	▲122	★ D1FZ 9K354-A	Not replaced	1
9355	BOWL (FUEL PUMP FILTER) ▲ 2000 cc ⊕ 2800 cc					
73/74	J	4&6	▲122, ⊕171	D1FZ 9355-A		1
74	L	4	▲122			1

COPYRIGHT © 1986 — FORD MOTOR COMPANY — DEARBORN, MICHIGAN

1973/79 LINCOLN-MERCURY CARS

YEAR	MODEL/RESTRICTIONS	ENGINE CYL.	ENGINE C.I.D. (C.C.D.)	PART NUMBER	DESCRIPTION	QTY.
9364	GASKET (FUEL PUMP FILTER BOWL) ▲ 2000 cc					
73/77	J	4&6	All	D3FZ 9364-A		1
74	L	4	▲122			1
9365	ELEMENT ASSY. (FUEL FILTER) ▲ 2000 cc ⊕2800 cc					
73/74	J,L	4	▲122	★ D4ZZ 9365-A	*FG-1002-A	1
74/77	J	6	⊕171			1
9369	TUBE (FUEL PUMP TO CARBURETOR)-Improvise from bulk tubing (2269)					
73/	All			87944-S8	(I-22)-nut-flared tube fitting-1/2"-20 x 5/16"	AR
				87972-S	(I-13)-fitting-inverted flared tube-5/16"	1
				★ 372795-S	Clip-1/2" tube	AR
				★ 378691-S	Clip-steel	AR
9C369	SEPARATOR ASSY. (FUEL VACUUM) ▲ 2000 cc @ 2300 cc ⊕ 2800 cc					
74/76	J	6	⊕171	D4FZ 9C369-A	#D32E-AA	1
74	L - - M/T and T/E	4	▲122			1
75/	L	4	@140			1 or 2
75	L	6	⊕171			1
76/	J	4	@140			1 or 2
78	P	4	@140			1 or 2
79	F,G,J,P	8	302			1
77/	J,L - - Calif.	6	⊕ 171	D7ZZ 9C369-A	#D7ZE-AA-use with VV carb.	1
78/	P	6	200			1
79	J	6	200			1
9C372	TUBE ASSY. (FUEL PUMP TO FUEL VAPOR SEPARATOR)-Improvise from bulk tubing (2269)					
9376	ARM ASSY. (FUEL PUMP ROCKER)					
73/75	A,C,F,Y	8	351C, 400	★ D0AZ 9376-A	Use w/pump ident. D0AE-E or 4861-S	1
9B376	CONNECTOR ASSY. (FUEL PUMP OUTLET)					
73/78	J	4&6	All	★ D1FZ 9B376-A	Not replaced	1
9380	SPRING (FUEL PUMP ROCKER ARM RETURN)					
73	C,P	6	All	C7AZ 9380-A	Use w/pump ident. D3DE-AA or 6092-SA	1
73	C,P	8	302, 351W	C8VY 9380-A	Use w/pumps ident. D0VE-C,D,D3OE-AA, D3VE-AA,BA,4898-S,6470-S,6472-S or	1
73/74	A,C,D,F,K,Y - - without T/E	8	429, 460(exc. P/C)		6477-S	1
74	C,P	8	302		Use w/pumps ident. D4OE-AA,BA,CA,DA	1
74	C,F	8	351W			1
9C383	SUPPORT ASSY. (FUEL PUMP SHIELD)					
79	J	4	@140	D9ZZ 9C383-A		1
79	J	4	@140	N800336-S100	(AB-122-C)-bolt (bracket to block) M10 x 18-hex head flange	1
9A389	BEZEL (SELECTOR SWITCH)					
73	A(P/C and taxi),Y(P/C and taxi)	8	All	B6TZ 9A389-A	Use w/outside lamp	1
9A397	SHIELD (FUEL PUMP) @ 2300cc ⊕ 2800cc					
77/	L	4	@140	D7FZ 9A397-B	#D7EE 9A397-AC	1
77/	L	6	⊕ 171	D7ZZ 9A397-A	#D7ZE 9A396-AB	1
78/	P	4	@140	D8BZ 9A397-A	#D8BE 9A397-AA	1
78/	P - - with A/C	8	302	D8BZ 9A397-B	#D8BE 9A397-BB	1
78/	P - - without A/C	8	302	★ D8BZ 9A397-C	#D8BE 9A397-DA	1
79	P	4	@140	D9BZ 9A397-B	#D9BE 9A397-BA	1

YEAR	MODEL/RESTRICTIONS	ENGINE CYL.	ENGINE C.I.D. (C.C.D.)	PART NUMBER	DESCRIPTION	QTY.
9A397	SHIELD (FUEL PUMP) — Cont'd					
79	J	4	@140	D9ZZ 9A397-D	#D9ZE 9A397-LA	1
79	J	4	@140	N800110-S	(AB-117-G)-bolt(attach shield to support)-M6 x 20-hex head	1
79	J	8	302	D9ZZ 9A397-A	#D9ZE 9A397-AB,KA,KB	1
79	J	6	⊕171	D9ZZ 9A397-C	#D9ZE 9A396-AB	1
77/ 78/	L P	4 4	@140 @140	57644-S2	(U-16-A)-screw-hex head tapping-(shield to engine mount)-3/8"-16 x 3/4"	1
				N800081-S51	(AB-159)-bolt-hex flange-(shield & alternator bracket to engine block)-M10 (metric)	1
				D1AZ 8A652-A	Spacer-shield to engine block	1
9400	PUSH ROD (FUEL PUMP) ▲ 2000 cc ⊕ 2800 cc					
73/74	J,L	4	▲122	D2RY 9400-B		1
73/	J	6	⊕171	D2RY 9400-A		1
9A400	WIRE ASSY. (FUEL PUMP FEED)					
73	C	8	460P/C	D20Z 9A400-A	#D20B 9A400-AA	1
9G400	WASTEGATE ACTUATOR PROTECTION CIRCUIT KIT (TURBOCHARGER)					
79	J - - exc. Calif.	4	@140-TC	D9ZZ 9G400-A		1

Consists of

1-E0ZE 9E455-DA	Connector assembly	1-D9FZ 9E606-A	Fitting
1-D9ZZ 9G469-C	Tube assembly	1-95873-S	Strap
1-C9AZ 9C492-A	Cap	1-Instruction sheet	
1-D9ZZ 9H533-A	Hose		

79	J - - Calif.	4	@140-TC	D9ZZ 9G400-B		1

Consists of

1-E0ZE 9E455-EA	Connector assembly	1-D9ZZ 9H533-A	Hose
1-D9ZZ 9G469-C	Tube assembly	1-D9FZ 9E606-A	Fitting
1-D9ZE 9C485-AKA	Decal	1-95873-S	Strap
1-C9AZ 9C492-A	Cap	1-Instruction sheet	

9417	GASKET (FUEL PUMP MOUNTING) ▲ 2000cc @ 2300 cc					
73/74	C,P	6	200,250	A8TZ 9417-A	Also serviced in kits (6008) and (9349)	1
73/76	A,C,D,F,K,Y	8	429,460	C3AZ 9417-C		1
73/76	C,P	8	302, 351W			1
77/78	A,D,K	8	460			1
77/	F,G,P,V	8	302			1
77/78	F,G,V	8	351W			1
79	A,F	8	351W			1
74/	J,L	4	@140			1
78/	P	4	@140			1
75/	G,P	6	200,250			1
79	A	8	302			1
73/76	A,C,F,Y	8	351C,M, 400	D0AZ 9417-A		1
77/78	A,D,K	8	351M			1
77/	F	8	351M			1
77/78	A,F	8	400			1
77/	D,K	8	400			1
73/	J,L	6	All	D9FZ 9417-A		1
73/74	J,L	4	▲122	★ D2RY 9417-A	1/4" thick	1

COPYRIGHT © 1986 — FORD MOTOR COMPANY — DEARBORN, MICHIGAN

1973/79 LINCOLN-MERCURY CARS

YEAR	MODEL/RESTRICTIONS	ENGINE CYL.	ENGINE C.I.D. (C.C.D.)	PART NUMBER	DESCRIPTION	QTY.
9424-5	MANIFOLD (INTAKE) ▲ 2000 cc ⊕ 2800 cc @ 2300 cc					
	A (Mercury)					
73	A	8	351	★ D4AZ 9424-C	Not replaced	1
73/74	A - - without T/E	8	400	★ D3AZ 9424-B	Not replaced	1
73	A	8	429,460, 460P/C	D3VY 9424-A		1
74	A - - T/E	8	400	★ D4AZ 9424-B	Not replaced	1
74	A - - T/E	8	460	★ D4VY 9424-B	Not replaced	1
74	A - - without T/E	8	460	★ D4VY 9424-C	Not replaced	1
75	A	8	400	★ D5AZ 9424-C	Use w/o EGR system-not replaced	1
75/76	A	8	400	★ D5AZ 9424-D	Use with EGR system-not replaced	1
77/78	A	8	351M, 400	E0TZ 9424-B		1
75/78	A	8	460, 460P/C	★ D6VZ 9424-A		1
79	A	8	302	E0VY 9424-A		1
79	A	8	351W	E1TZ 9424-B	Aluminum	1
	C (Montego)					
73/74	C	8	302	★ D30Z 9424-A	Not replaced	1
73/74	C	8	351W	★ D30Z 9424-B	Not replaced	1
73/74	C	8	351C-2/B	★ D4AZ 9424-C	Not replaced	1
73/74	C	8	351-4/B	★ D3ZZ 9424-A	Not replaced	1
73/74	C - - without T/E	8	400	D3AZ 9424-B		1
73	C	8	429,460, 460P/C	D3VY 9424-A		1
74	C - - T/E	8	400	★ D4AZ 9424-B	Not replaced	1
74	C - - T/E	8	460	★ D4VY 9424-B	Not replaced	1
74	C - - without T/E	8	460	★ D4VY 9424-C	Not replaced	1
75	C	8	351M, 400	★ D5AZ 9424-C	Use w/o EGR back pressure control system-not replaced	1
75/76	C	8	351M, 400	★ D5AZ 9424-D	Use with EGR back pressure control system-Not replaced	1
75/76	C	8	351W	D60Z 9424-A	Incl. (1) 87710-S to plug left rear corner heat switch hole	1
75/76	C	8	460, 460 P/C	★ D6VZ 9424-A		1
	D (Lincoln)					
73	D	8	460	D3VY 9424-A		1
74	D - - T/E	8	460	★ D4VY 9424-B	Not replaced	1
74	D - - without T/E	8	460	★ D4VY 9424-C	Not replaced	1
75/78	D	8	460	★ D6VZ 9424-A		1
77/	D	8	400	E0TZ 9424-B		1
	F (Cougar)					
73/74	F	8	351C-2/B	★ D4AZ 9424-C	Not replaced	1
73/74	F	8	351-4/B	★ D3ZZ 9424-A	Not replaced	1
74	F	8	351W	★ D30Z 9424-B	Not replaced	1
74	F - - without T/E	8	400	★ D3AZ 9424-B	Not replaced	1
74	F - - T/E	8	400	★ D4AZ 9424-B	Not replaced	1
74	F - - T/E	8	460	★ D4VY 9424-B	Not replaced	1
74	F - - without T/E	8	460	★ D4VY 9424-C	Not replaced	1

YEAR	MODEL/RESTRICTIONS	ENGINE CYL.	ENGINE C.I.D. (C.C.D.)	PART NUMBER	DESCRIPTION	QTY.
9424-5	MANIFOLD (INTAKE) — Cont'd ▲ 2000 cc ⊕ 2800 cc @ 2300 cc					
	F(Cougar)					
75	F	8	351M, 400	★ D5AZ 9424-C	Use w/o EGR back pressure control system-not replaced	1
75/76	F	8	351M, 400	★ D5AZ 9424-D	Use with EGR back pressure control system-Not replaced	1
75/76	F	8	460	★ D6VZ 9424-A		1
77	F	8	302	★ D70Z 9424-A		1
77/	F	8	351M, 400	E0TZ 9424-B		1
75/78	F	8	351W	D60Z 9424-A	Incl. (1) 87710-S to plug left rear corner heat switch hole	1
78/	F	8	302	E3AZ 9424-C		1
79	F	8	351W	E1TZ 9424-B		1
	G (Monarch)					
75/76	G	8	302	★ D50Z 9424-G	Not replaced	1
77	G	8	302	★ D70Z 9424-A		1
75/77	G	8	351W	D60Z 9424-A	Incl. (1) 87710-S to plug left rear corner heat switch hole	1
78	G(54H)	8	302	E3AZ 9424-C	Cast iron	1
78	G(66H) "Ghia"	8	302			1
78	G(66H) exc. "Ghia"-Calif.	8	302			1
78	G(66H) exc. "Ghia"-exc. Calif.	8	302	D84Y 9424-C	Aluminum	1
79	G	8	302	E0VY 9424-A		1
	J (Capri)					
73	J	4	▲122	★ D1FZ 9424-A	Not replaced	1
73	J	6	All	★ D2RY 9424-B		1
74	J "Before 6/1/74"	4	▲122	★ D4FZ 9424-A	Not replaced	1
74	J "From 6/1/74"	4	▲122	★ D4FZ 9424-B	Not replaced	1
74	J	6	⊕171	★ D4RY 9424-B		1
76	J "Before 8/30/76"	6	⊕171	★ D5FZ 9424-A		1
76/	J "From 8/30/76"	6	⊕ 171	D6RY 9424-A		1
76/78	J	4	@140	E1ZZ 9425-B		1
79	J	4	@140-exc. T/C			1
79	J	4	@140-TC	E0ZZ 9424-A		1
79	J	8	302	E0VY 9424-A		1
	K (Mark IV, Mark V)					
73	K	8	460	D3VY 9424-A		1
74	K - - T/E	8	460	★ D4VY 9424-B	Not replaced	1
74	K - - without T/E	8	460	★ D4VY 9424-C	Not replaced	1
75/78	K	8	460	★ D6VZ 9424-A		1
77/	K	8	400	D8TZ 9424-A		1
	L (Bobcat)					
74	L	4	▲122	D4FZ 9424-A		1
74/	L	4	@140	E1ZZ 9425-B		1
75/76	L	6	⊕171	D5FZ 9424-A		1
77/	L	6	⊕ 171	D6RY 9424-A		1

COPYRIGHT © 1986— FORD MOTOR COMPANY —DEARBORN, MICHIGAN

1973/79 LINCOLN-MERCURY CARS

YEAR	MODEL/RESTRICTIONS	ENGINE CYL.	ENGINE C.I.D. (C.C.D.)	PART NUMBER	DESCRIPTION	QTY.
9424-5	MANIFOLD (INTAKE) — Cont'd ▲ 2000 cc ⊕ 2800 cc @ 2300 cc					
	P (Comet)					
73/74	P - - without T/E	8	302	★D30Z 9424-A	Not replaced	1
74	P - - T/E	8	302	★D4DZ 9424-A	Not replaced	1
75/76	P	8	302	★D50Z 9424-G	Not replaced	1
77	P	8	302	★D70Z 9424-A		1
	P (Zephyr)					
78/	P	4	@140	E1ZZ 9425-B		1
78/	P	8	302	E3AZ 9424-C		1
	V (Versailles)					
77	V	8	302	★D70Z 9424-A	Cast iron	1
77	V	8	351W	D60Z 9424-A	Incl. (1) 87710-S to plug left rear corner heat switch hole	1
78/	V	8	302	D84Y 9424-C	Aluminum	1
78	V	8	302	E3AZ 9424-C	Cast iron	1
	Y (Meteor)					
73/74	Y	8	351C-2/B	★D4AZ 9424-C	Not replaced	1
73/74	Y - - without T/E	8	400	★D3AZ 9424-B	Not replaced	1
73	Y	8	429,460, 460P/C	D3VY 9424-A		1
74	Y - - T/E	8	400	★D4AZ 9424-B	Not replaced	1
74	Y - - T/E	8	460	★D4VY 9424-B	Not replaced	1
74	Y - - without T/E	8	460	★D4VY 9424-C	Not replaced	1
75	Y	8	351M, 400	★D5AZ 9424-C	Use w/o EGR back pressure control system-not replaced	1
75/76	Y	8	351M, 400	★D5AZ 9424-D	Use with EGR back pressure control system-not replaced	1
75/76	Y	8	460, 460P/C	★D6VZ 9424-A		1
73/	A,C,F,P,Y	8	302,351, 400	371485-S	(PP-48-A)-plug (core holes in intake manifold)-3/4"	1
73/	A,C,D,F,K,Y	8	429,460	382130-S	(BB-545-LA)-screw & washer assy. (intake manifold to cyl. hd.)-5/16"-18 x 1 5/8"	10
73/	A,C,D,F,K,Y	8	429,460	383744-S	(WW-12-CA)-stud (intake manifold to block)-3/8"-16 x 2 1/2"	6
73	A,C,D,F,K,Y	8	351,400, 429,460	351089-S8	(MM-20)-nut (carb. to intake manifold)-5/16" x 24	4
74/	A,C,F,P,Y	8	302,351, 400			4
74/	C,G,P	8	302	382198-S	(WW-14-D)-stud (intake manifold to cyl. head)-5/16"-18-18 x 2 3/8"	4
73/	A,C,D,F,K,Y	8	302,351, 400,429, 460	88471-S	(W-9-C)-stud (carb. to manifold)-5/16"-18 x 2 1/2"	4
74/	C,F - - T/E	8	351W	376063-S8	(WW-14-AD)-stud (carb. to intake manifold)-5/16"-18-24 x 1 3/4"	4
73	C,P	6	All	87837-S	(P-15)-plug (intake manifold)-1/4"-18	1
73	P	6	200	88392-S8	(W-14)-stud (carb. to manifold)-3/8"-16 x 1 1/2"	2
73	C,P	6	250	★376282-S2	Stud (carb. to intake manifold)-3/8"-16-24 x 1 5/8"	2

1973/79 LINCOLN–MERCURY CARS

YEAR	MODEL/RESTRICTIONS	ENGINE CYL.	ENGINE C.I.D. (C.C.D.)	PART NUMBER	DESCRIPTION	QTY.
73	C,P	8	302	42964–S2	(B–227–EA) Bolt (intake manifold to cyl. hd.)–hex. washer hd.–5/16"–18 x 2"	8
73 74/	C,P A,C,D,F,K,Y	8 8	302 460	351089–S8	(MM–20)–nut (carb. to intake manifold)–hex.–5/16" x 24	4 4
73/	C,P	8	302	374031–S7–8	(MM–295–AA)–nut (intake manifold to cyl. hd.)–hex.–5/16"–18	4
78	F,G,P,V	8	302, 351W	388058–S	(BB–545–BB) bolt (intake manifold to block)–hex washer hd–5/16–18 x 2."	AR
78	F	8	351W	388059–S	(BB–545–BC) bolt (choke plate to intake manifold to block)–hex washer hd.–5/16–18 x 2 3/4"	2
73/76	C	8	351W	87710–S	(P–16)–plug (heat indicator hole in intake manifold)–3/8"–18	1
73/74	J – – A/T	4	▲122		(Used to plug decel. valve hole)	1
74/78	K	8	460			1
77	F,G	8	351W		(used to plug heat switch hole)	1
77	F,G,P,V	8	302	387383–S2	(WW–157)–stud (att. intake manifold & locates (12024–coil & strap) on R.H. side – –5/16" – 18 x 2 1/2" – hex shoulder	1
74/	L	4	@140	385613–S36	(II–62–G)–nut (adapter to deceleration valve)–1"–12	1
73/	J,L	4	All	E602551–S72	(AB–63)–screw & washer assy. (manifold to cyl. hd.)–M8 x 30 (Metric coarse)	3
73/74	J	4	▲122	E804048–S76	(AW–22)–stud (manifold to cyl. hd.)–M8 x 1.25–M8 x 1.25 x 42 (Metric fine)	2
73/74	J	4	▲122	★ E620413–S72	Nut lock (attach. 9430)–M6 (Metric coarse)	AR
73/74	J	4	▲122	E804295–S72	(AW–20–A)–stud (carb. to intake manifold)–M8 x 1.25–M8 x 1.25 x 42MM (Metric fine)	4
73/	J	6	All	375178–GS2	Bolt (intake manifold to cyl. hd.)–M8 x 107 (Metric coarse)	3
73	J	6	All	388116–GS40	Bolt (intake manifold to block)–M8 x 85 (Metric coarse)	2
73/	J	6	All	E820100–S71	Nut (intake manifold to block)–M8 (Metric coarse)	2
73	J	6	All	388358–GS2	Bolt (intake manifold to block)–M8 x 117 (Metric coarse)	1
74/	J	6	⊕171	E800409–S72	(AB–20–N)–bolt (intake manifold to block)–M8 x 113mm (Metric coarse)	3
74/	J	6	⊕171	E800410–S76	(AB–20–NG)–bolt (intake manifold to block)–M8 x 120mm (Metric)	1
73/	J	6	All	E620013–S72	Nut (carb. to intake manifold)–M8 (Metric coarse)	8
73/	J	6	All	E630027–S71	Washer (carb. to intake manifold) (Metric)	8
73/	J	6	All	E804106–S71	Stud (carb. to intake manifold)–M8 x 47 (Metric coarse)	4
73/	J	6	All	E904100–S70	Stud (intake manifold to block)–M8 x 75 (Metric coarse)	2
73/	J	6	All	E804079–S72	(AW–38)–stud (manifold to cyl. block)–M8 x 33 (Metric coarse)	4
74/ 79	L J	4 4	@140 @140	N800103–S51	(AM–11)–nut (carb. to intake manifold)–M8–12 (Metric)	4 4
74/ 79	L J	4 4	@140 @140	N800120–S100	(AW–55–A)–stud (carb. to intake manifold)–M8 x 50mm (metric)	4 4
79	J	4	@140–TC	N800461–S2	(AB–118–EF)–bolt (manifold to head)–M8 x 30 hex (metric coarse)	8
79	J	4	@140–TC	N800468–S	(AB–122–B)–bolt (manifold to turbo charger)–M8 x S2 hex. (metric coarse)	2

COPYRIGHT © 1986 — FORD MOTOR COMPANY — DEARBORN, MICHIGAN

1973/79 LINCOLN-MERCURY CARS

YEAR	MODEL/RESTRICTIONS	ENGINE CYL.	ENGINE C.I.D. (C.C.D.)	PART NUMBER	DESCRIPTION	QTY.
9A424-5	**SEAL (INTAKE MANIFOLD TO CYLINDER BLOCK)-Also refer to group 9433**					
73/74	A,C,F,Y	8	351C	★ D0AZ 9A424-A	Front and rear-repl. by D0AZ 9433-A and D0AZ 9433-B	2
73/74	A,C,D,F,K,Y	8	429,460, 460P/C	★ C9SZ 9A425-A	Front and rear-8 1/16" long with .20 tapered tab on each end-r/b C9AZ 9433-A(6/79)	2
9F424	**VALVE ASSY. (EGR VACUUM LOAD CONTROL)-WOT**					
76	A,C,F,Y	8	400	D6AZ 9F424-A	#D6AE 9F424-A1A	1
78	A,D,F,K	8	400			1
78	A,D,K	8	460			1
78/	P	6	200			1
79	A,F	8	302			1
79	J	6	200			1
77	A,D,F,K	8	400-2/B	D7DZ 9F424-B	#D6BE 9F424-B1A, B2A	1
77	G,P	6	200,250			1
78/	G	6	250			1
79	D,K	8	400			1
77/	J - - M/T	6	⊕171	D8ZZ 9F424-A	#D7ZE 9F424-AIA, 77TF 9F424-AA	1
77/	J - - A/T	6	⊕171	D8ZZ 9F424-B	#D7ZE 9F424-BIA, 77TF 9F424-BA	1
77/	L "From 6/27/77"	6	⊕171			1
9G424	**HOSE (EXHAUST AIR SUPPLY CONTROL VALVE)**					
78/	L - - Calif.	4	@140	D8FZ 9G424-A	#D8EE 9G424-AA	1
78	L,P - - M/T Calif.	4	@140	D8FZ 9G424-B	#D8EE 9G424-BA	1
79	J,P - - M/T-Calif.	4	@140			1
9G426	**BRACKET (EXHAUST AIR SUPPLY CONTROL VALVE)**					
77/	L "From 6/27/77"	4	@140	D8FZ 9G426-A	#D8EE 9G426-AA,BA	1
78/	P	4	@140			1
79	J	4	@140-exc. TC			1
79	A	8	351W	D9AZ 9G426-A	#D9AE 9G426-AB	1
79	J	4	@140 TC	D9ZZ 9G426-B	#D9ZE 9G426-BA	1
9A427	**VALVE ASSY. (EXHAUST CONTROL)-Also refer to group 9A435** ⊕ 2800 cc					
75/76	A,C,F,Y	8	351M, 400	D5AZ 9A427-A	#D5AE 9A427-AA	1
75/76	C,F	8	351W	★ D50Z 9A427-B	#D5UE 9A427-AA	1
75	G,P	8	302, 351W	D50Z 9A427-A	#D50E 9A427-AA	1
76	G - - Canada	8	351W			1
76	P - - Calif. & Canada	8	302, 351W			1
76	G - - A/T with A/C	8	302			1
77	G,P - - Canada	8	302			1
75/76	L	6	⊕171	★ D5FZ 9A427-A	#D52E 9A427-AB	1
74	P - - T/E	8	302	★ D4DZ 9A427-B		1
9G427	**SILENCER (EXHAUST AIR SUPPLY REED VALVE)-Refer to 9F449**					
9A428	**TUBE (VACUUM-HIGH TEMPERATURE)** ⊕ 2800 cc					
75/76	A,C,F,G,P,Y	8	302,351, 400	D5AZ 9A428-A	Attaches 9A427 to 9E488-cut as required	1
75/76	L	6	⊕171			1
9G428	**SENSOR (EGR VALVE)**					
79	A	8	351W	E43Z 9G428-A	*CX-863 #D9AE 9G428-AA, E43F 9G428-AA	1
9C429	**PLUG (EXHAUST AIR SUPPLY PUMP RELIEF VALVE)** ⊕ 2800 cc					
74	A,C,D,F,K,Y	8	460	★ C8AZ 9C429-A		1
74	J	6	⊕171			1

YEAR	MODEL/RESTRICTIONS	ENGINE CYL.	ENGINE C.I.D. (C.C.D.)	PART NUMBER	DESCRIPTION	QTY.
9F429	GASKET (EXHAUST AIR SUPPLY PUMP ELBOW - OUTLET)					
77/	L "From 6/27/77"	4	@140	D8BZ 9F429-A		1
78	G,P	6	All			1
78	P	4	@140			1
78/	P,V	8	302			1
79	J	8	302			1
9430-1	MANIFOLD (EXHAUST) ▲ 2000 cc @ 2300 cc ⊕ 2800 cc ♦ 2600 cc					

4 CYLINDER

J (Capri)

73	J	4	▲122	★D1FZ 9430-A		1
74	J - - without T/E	4	▲122	★D4FZ 9430-E		1
74	J - - T/E	4	▲122	★D4FZ 9430-C	74HF 9430-CB	1
76	J "Before 8/30/76"	4	@140	E1BC 9430-C		1
76/	J "From 8/30/76"	4	@140	D9ZZ 9430-A	Use plug 87675-S(P-17) when T/E hole is not req'd.	1

L (Bobcat)

74	L - - without T/E	4	▲122	★D4FZ 9430-E		1
74	L - - T/E	4	▲122	★D4FZ 9430-C		1
74/76	L	4	@140	E1BZ 9430-C		1
77/	L	4	@140	D9ZZ 9430-A	Use plug 87675-S(P-17) when T/E hole is not req'd.	1

P (Zephyr)

78/	P	4	@140	D9ZZ 9430-A	Use plug 87675-S (P-17) when T/E hole is not req'd	1
73/74	J	4	▲122	★E620413-S5	Nut (manifold to cyl. hd.)(Metric fine)	6
73/74	J,L	4	▲122	E804048-S76	(AW-22)-stud (manifold to cyl. hd.) M8 x 1.25-M8 x 1.25 x 42 (Metric fine)	6
74	J	4	▲122	★E850022-S72	Plug (exhaust manifold thermactor hole)-M14 x 1.25 x 11.7 (Metric)	1
74	L	4	▲122	★E620413-S5	Nut (exhaust manifold to cyl. head)-M8 x 13 (Metric coarse)	AR
74/	L	4	@140	N800048-S	(AB-33-CE)-bolt (manifold to cyl. head)-hex.-M10 x 55 (Metric)	8
74/	L	4	@140	N800095-S100	(AW-43)-stud (exhaust manifold to cyl. head)-M10 x M10 x 78MM (Metric)	1
77/	L - - exc. Calif. "From 6/27/77"	4	@140	N800016-S51	(AP-13)Plug (sensor hole at exhaust pipe connection)-hex head-M18 x 1.5	1
77/	L - - exc. Calif. "From 6/27/77"	4	@140	87675-S	(P-17)Plug (T/E hole)-1/2"-14 pipe thread	1
78/	P	4	@140			1
79	J	4	@140	N800301-S2	(AU-26-E)-bolt (exhaust manifold to cylinder head) M10 x 2.50 (metric)	8

6 CYLINDER

C (Montego)

73/74	C	6	250	★D3DZ 9430-C		1

COPYRIGHT © 1986— FORD MOTOR COMPANY —DEARBORN, MICHIGAN

YEAR	MODEL/RESTRICTIONS	ENGINE CYL.	ENGINE C.I.D. (C.C.D.)	PART NUMBER	DESCRIPTION	QTY.
9430-1	MANIFOLD (EXHAUST) — Cont'd ▲ 2000 cc @ 2300 cc ⊕ 2800 cc ♦ 2600 cc					

6 CYLINDER

G (Monarch)

76	G - - exc. Calif.	6	200,250	D7DZ 9430-C	(2) 353832-S reducer req'd.	1
77	G	6	200			1
77	G - - M/T	6	250			1
77	G - - A/T-exc. Calif.	6	250		Use 371485-S (PP-48-A) to plug T/E	1
78/	G	6	250		hole in center of flange	
75	G	6	All	D7DZ 9430-D	Multi entry thermactor-353832-S reducer req'd.	1
76	G - - Calif.	6	All			1
77	G - - A/T-Calif.	6	250			1

J (Capri)

73	J	6	♦159	★ D2RY 9430-B	R.H.	1
				★ D2RY 9431-A	L.H.	1
74	J	6	⊕171	★ D4ZZ 9430-A	R.H.	1
				★ D4ZZ 9431-A	L.H.	1
76	J "Before 8/1/75"	6	⊕171	★ D5ZZ 9430-B	R.H.-#75TF 9430-BA, 3 hole T/E	1
				★ D5FZ 9431-B	L.H.-#75TF 9431-BB, 3 hole T/E	1
76	J "From 8/1/75 to 8/30/76"	6	⊕171	★ D5ZZ 9430-B	R.H.-#75TF 9430-BA, 3 hole T/E	1
				★ D6RY 9431-E	L.H.-#75TF 9431-EA, 3 hole T/E	1
76/78	J "From 8/30/76"	6	⊕ 171	★ D6ZZ 9430-D	R.H.-#75TF 9430-DA, 2 hole T/E	1
				★ D6ZZ 9431-D	L.H.-#75TF 9431-DA, 2 hole T/E	1
79	J	6	⊕171	★ D6FZ 9430-C	R.H.#75TF 9430-CA	1
				★ D6ZZ 9431-D	L.H. #75TF 9431-DA	1
79	J	6	200	D7DZ 9430-C		1

L (Bobcat)

75	L	6	⊕171	★ D5FZ 9430-A	R.H.-#75TF 9430-AA, 3 hole T/E	1
				★ D5FZ 9431-B	L.H.-#75TF 9431-BB, 3 hole T/E	1
76	L	6	⊕171	★ D6FZ 9430-C	R.H.-#75TF 9430-CA, 2 hole T/E	1
				★ D6ZZ 9431-D	L.H.-#75TF 9431-DA, 2 hole T/E	1
77	L - - Calif. "Before 6/27/77"	6	⊕ 171	★ D6FZ 9430-C	R.H. #75TF 9430-CA	1
				★ D6ZZ 9431-D	L.H.#75TF 9431-DA	1
77	L - - exc. Calif. "Before 6/27/77"	6	⊕ 171	★ D7FZ 9430-B	R.H.	1
				★ D7ZZ 9431-A	L.H.	1
77/	L "From 6/27/77"	6	⊕171	D6FZ 9430-C	R.H.#75TF 9430-CA	1
				D6ZZ 9431-D	L.H. #75TF 9431-DA	1

P (Comet)

73	P	6	200	★ D3DZ 9430-D		1
74	P - - without T/E	6	200	★ D3DZ 9430-D		1
74	P - - T/E	6	200	★ D4DZ 9430-B		1
73/74	P - - without T/E	6	250	★ D3DZ 9430-C		1
74	P - - T/E	6	250	★ D4DZ 9430-D		1
76	P - - exc. Calif.	6	200,250	D7DZ 9430-C	(2) 353832-S reducer req'd.	1
77	P	6	200			1
77	P - - M/T	6	250			1
77	P - - A/T-exc. Calif.	6	250		Use 371485-S (PP-48-A) to plug T/E	1
					hole in center of flange	
75	P	6	All	D7DZ 9430-D	Multi entry thermactor-353832-S reducer req'd.	1
76	P - - Calif.	6	All			1
77	P - - A/T-Calif.	6	250			1

P (Zephyr)

78/	P - - exc. Calif.	6	200	D7DZ 9430-C		1
78/	P - - Calif.	6	200	D7DZ 9430-D		1

YEAR	MODEL/RESTRICTIONS	ENGINE CYL.	ENGINE C.I.D. (C.C.D.)	PART NUMBER	DESCRIPTION	QTY.
73	C,P	6	All	45522-S8	(B-93)-bolt (exhaust manifold to cyl. hd.)-3/8"-16 x 2 1/2"	AR
77	G,P - - A/T-exc. Calif.	6	250	371485-S	(PP-48 -A) - Plug-T/E hole in center of exhaust manifold flange	1
73/	C,P	6	All	★382330-S	Stud & washer (exhaust manifold)-5/16"-18-3/16-3/16-16 x 3 1/4"	2
74	C,P	6	All	373139-S	(BB-163)-screw & washer assy. (exhaust manifold to cyl. head)-3/8"-16 x 2 5/8"	AR
75/76	G,P	6	All	386903-S	(WW-132-R)-stud & washer assy. (manifold to cyl. head)-3/8"-16 x 3 1/4"	2
77	G,P	6	All	387745-S	(WW-132-AB)-stud & washer assy.-(manifold to cylinder head)-hex shoulder-3/8"-16-3/8" x 3 3/8"	2
76/	G,P	6	All	353832-S	(II-50)-reducer fitting (T/E tube to exh. manifold)-hex-3/4"-14 to 1/2"-14	1
74	J	6	⊕171	E650413-S72	(AP-14)-plug (R.H. exhaust manifold)-3/8" dry seal (Metric)	1
74	J	6	⊕171	E804451-S76	(AB-33-D)-bolt (exhaust manifolds to block)-M10 x 65 (Metric coarse)	10
74/	J,L	6	⊕171	N804601-S2	(AB-120-H)-bolt (exhaust manifold to cyl. head)-hex. head-M10 x 63 (Metric coarse)	9
75/	J,L	6	⊕171	N800048-S	(AB-33-CE)-bolt (manifold to cyl. head)-hex. hd.-M10 x 55 (Metric)-use in upper front holes	2
74/	J,L	6	⊕171	N804602-S2	(AW-43A)-stud (exhaust manifold to cyl. head)-M8 x 11-M10 x 65 (Metric coarse)	2
74	J	6	⊕171	E850021-S76	(AP-12)-plug (L.H. exhaust manifold)-M16 x 18 (Metric)	1
74	J	6	⊕171	E855093-S72	(AB-135-E)-Banjo bolt (used on exhaust manifold)-M16 x 42 (Metric)	1
78/	P - - T/E-Pulsed air type	6	200	87538-S	(I-17)-Connector (air supply tube to manifold) 3/4"-14 inverted tube	1
79	J - - T/E-Pulsed air type	6	200			1

YEAR	MODEL/RESTRICTIONS	ENGINE CYL.	ENGINE C.I.D. (C.C.D.)	PART NUMBER RIGHT HAND	PART NUMBER LEFT HAND	DESCRIPTION	QTY.

9430-1 MANIFOLD EXHAUST — Cont'd
@ 2300 cc, ⊕ 2800 cc

8 CYLINDER

A (Mercury)

Note 2 Incl. (1) D50Z 9A603-A shroud, (1) D50Z 9A603-C shroud, (1) D5AZ 12A406-A shield (3) 386160-S stud, (5) 377506-S screw

73	A	8	351	D4AZ 9430-D Note 2	D1ZZ 9431-A		1
73/74	A	8	400	D4AZ 9430-C	★D1AZ 9431-A		1
73	A "Before 3/15/73"	8	429,460 exc. P/C	D3VY 9430-A	D4VY 9431-A		1
73	A "From 3/15/73"	8	429,460 exc. P/C	D3VY 9430-B	D4VY 9431-A		1
73	A "Before 3/15/73"	8	460 P/C	★D30Z 9430-B Not replaced	D20Z 9431-A		1
73	A "From 3/15/73"	8	460 P/C	★D30Z 9430-D Not replaced	D20Z 9431-A		1
74	A	8	460, 460 P/C	D3VY 9430-B	D4VY 9431-A		1
75/76	A	8	400	D5AZ 9430-A	D5AZ 9431-A		1
75/78	A	8	460, 460 P/C	★D5VY 9430-A	D5VY 9431-A		1

COPYRIGHT © 1986— FORD MOTOR COMPANY —DEARBORN, MICHIGAN

1973/79 LINCOLN-MERCURY CARS

YEAR	MODEL/RESTRICTIONS	ENGINE CYL.	ENGINE C.I.D. (C.C.D.)	PART NUMBER RIGHT HAND	PART NUMBER LEFT HAND	DESCRIPTION	QTY.
9430-1	MANIFOLD EXHAUST — Cont'd @ 2300 cc, ⊕ 2800 cc						

8 CYLINDER

A (Mercury)

Note 1– incl. (1) D9ZZ 9G458-A plug and (1) 371485-S plug

77/78	A	8	351M, 400	D5AZ 9430-A	D5AZ 9431-A		1
79	A	8	302	D9BZ 9430-E	D80Z 9431-A		1
79	A	8	351W	D9AZ 9430-F Note 1	D80Z 9431-A		1

C (Montego)

Note 2– incl. (1) D50Z 9A603-A, (1) D50Z 9A603-C shroud, (1) D5AZ 12A406-A shield, (3) 386160-S stud, (5) 377506-S screw

73/74	C – – M/T	8	302	D40Z 9430-B and D5DZ 9A603-B	D40Z 9431-B		1
73/74	C – – A/T	8	302	D40Z 9430-B and D5DZ 9A603-B	D40Z 9431-D		1
73/74	C	8	351W	D4AZ 9430-E and D50Z 9A603-B	★ D00Z 9431-B		1
73/	C	8	351C-2/B	D20Z 9430-B	★ D1ZZ 9431-A		1
74	C	8	351C-2/B	D4AZ 9430-D Note 2	★ D1ZZ 9431-A		1
73/74	C	8	351-4/B	★ D0AZ 9430-B	D1ZZ 9431-B		1
73/74	C	8	400	D4AZ 9430-C	★ D1AZ 9431-A		1
73	C "Before 3/15/73"	8	429, 460 P/C	★ D30Z 9430-B Not replaced	D20Z 9431-A		1
73	C "From 3/15/73"	8	429, 460 P/C	★ D30Z 9430-D Not replaced	D20Z 9431-A		1
74	C	8	460, 460 P/C	D3VY 9430-B	D4VY 9431-A		1
75/76	C	8	351M, 400	D5AZ 9430-A	D5AZ 9431-A		1
75/76	C	8	351W	★ D50Z 9430-C	D50Z 9431-B		1
75/76	C	8	460, 460 P/C	★ D5VY 9430-A	D5VY 9431-A		1

D (Lincoln)

73	D "Before 3/15/73"	8	460	D3VY 9430-A	D4VY 9431-A		1
73/74	D "From 3/15/73"	8	460	D3VY 9430-B	D4VY 9431-A		1
75/78	D	8	460	★ D5VY 9430-A	D5VY 9431-A		1
77/	D	8	400	D5AZ 9430-A	D5AZ 9431-A		1

G (Monarch)

75/76	G "Before 11/3/75"	8	302	D5DZ 9430-A	D5DZ 9431-B		1
76	G – – M/T "From 11/3/75"	8	302				1
76	G – – A/T-Calif. and Canada- "From 11/3/75"	8	302				1

YEAR	MODEL/RESTRICTIONS	ENGINE CYL.	ENGINE C.I.D. (C.C.D.)	PART NUMBER RIGHT HAND	PART NUMBER LEFT HAND	DESCRIPTION	QTY.
9430-1	MANIFOLD EXHAUST — Cont'd @ 2300 cc, ⊕ 2800 cc						

8 CYLINDER

G (Monarch)

76	G - - A/T-exc. Calif. and Canada- "From 11/3/75"	8	302	D5DZ 9430-A	★D4DZ 9431-A		1
77/	G - - exc. Calif.	8	302-2/B exc (VV)	D5DZ 9430-A	★D4DZ 9431-A		1
77/	G - - Calif.	8	302-2/B (VV)	★D8DZ 9430-A	D7DZ 9431-A	Large volume exhaust	1
75	G	8	351W	D5DZ 9430-D	★D5DZ 9431-C	Not replaced	1
76	G - - Canada-leaded fuel only	8	351W	D5DZ 9430-D	★D5DZ 9431-C	Not replaced	1
76	G - - exc. Canada	8	351W	D5DZ 9430-D	D6DZ 9431-A	Beveled exhaust conn.	1
77	G	8	351W	D5DZ 9430-D	D6DZ 9431-A		1

F (Cougar)

Note 2- Incl. (1) D50Z 9A603-A shroud, (1) D50Z 9A603-C shroud, (1) D5AZ 12A406-A shield, (3) 386160-S stud, (5) 377506-S screw

73/74	F	8	351C-2/B	D4AZ 9430-D Note 2	★D1ZZ 9431-A		1
73/74	F	8	351-4/B	★D0AZ 9430-B	D1ZZ 9431-B		1
74	F	8	351W	D4AZ 9430-E and D50Z 9A603-B	★D00Z 9431-B		1
74	F	8	400	D4AZ 9430-C	★D1AZ 9431-A		1
74	F	8	460	D3VY 9430-B	D4VY 9431-A		1
75/	F	8	351M	D5AZ 9430-A	D5AZ 9431-A		1
75/78	F	8	400				1
75/76	F	8	460	★D5VY 9430-A	D5VY 9431-A		1
75/78	F	8	351W	★D50Z 9430-C	D50Z 9431-B		1
77/	F	8	302	D9BZ 9430-E	D5DZ 9431-B		1
79	F	8	351W	★D50Z 9430-C	D80Z 9431-A		1

J (Capri)

79	J	8	302	D9BZ 9430-E	D80Z 9431-A		1

K (Mark IV, Mark V)

73	K "Before 3/15/73"	8	460	D3VY 9430-A	D4VY 9431-A		1
73/74	K "From 3/15/73"	8	460	D3VY 9430-B	D4VY 9431-A		1
75/78	K	8	460	★D5VY 9430-A	D5VY 9431-A		1
77/	K	8	400	D5AZ 9430-A	D5AZ 9431-A		1

P (Comet)

73/74	P	8	302	D4DZ 9430-E and D5DZ 9A603-C	★D4DZ 9431-A		1
75/77	P	8	302	★D5DZ 9430-C	★D4DZ 9431-A		1

P (Zephyr)

78/	P	8	302	D9BZ 9430-E	D80Z 9431-A		1

V (Versailles)

77	V	8	302-2/B (VV)	D8DZ 9430-A	★D7DZ 9431-A		1

COPYRIGHT © 1986— FORD MOTOR COMPANY —DEARBORN, MICHIGAN

YEAR	MODEL/RESTRICTIONS	ENGINE CYL.	ENGINE C.I.D. (C.C.D.)	PART NUMBER RIGHT HAND	PART NUMBER LEFT HAND	DESCRIPTION	QTY.
9430-1	MANIFOLD EXHAUST — Cont'd @ 2300 cc, ⊕ 2800 cc						
	8 CYLINDER						
	V (Versailles)						
77	V	8	351W	D5DZ 9430-D	D6DZ 9431-A		1
78/	V	8	302	D8DZ 9430-A	★D7DZ 9431-A		1
	Y (Meteor)						
Note 2-	Incl. (1) D50Z 9A603-A shroud, (1) D50Z 9A603-C shraud, (1) D5AZ 12A406-A shield, (3) 386160-S stud, (5) 377506-S screw						
73/74	Y	8	351C	D4AZ 9430-D Note 2	★D1ZZ 9431-A		1
73/74	Y	8	400	D4AZ 9430-C	★D1AZ 9431-A		1
73	Y "Before 3/15/73"	8	429,460 exc. P/C	D3VY 9430-A	D4VY 9431-A		1
73	Y "From 3/15/73"	8	429,460 exc. P/C	D3VY 9430-B	D4VY 9431-A		1
73	Y "Before 3/15/73"	8	460 P/C	★D30Z 9430-B Not replaced	D20Z 9431-A		1
73	Y "From 3/15/73"	8	460 P/C	★D30Z 9430-D Not replaced	D20Z 9431-A		1
74	Y	8	460, 460 P/C	D3VY 9430-B	D4VY 9431-A		1
75/76	Y	8	351M, 400	D5AZ 9430-A	D5AZ 9431-A		1
75/76	Y	8	460, 460 P/C	★D5VY 9430-A	D5VY 9431-A		1

YEAR	MODEL/RESTRICTIONS	ENGINE CYL.	ENGINE C.I.D. (C.C.D.)	PART NUMBER	DESCRIPTION	QTY.
9430-1	MANIFOLD EXHAUST — Cont'd @ 2300 cc ⊕ 2800 cc					
73/	A,C,F,P,Y	8	302,351C, 400	381731-S	(BB-869-F)-screw & washer assy. (manifolds to cyl. hd.)-3/8"-16 x 7/8"	AR
73/	C,P	8	302	★377277-S	Screw & washer assy. (manifolds to cyl. hd.)-3/8"-16 x 2 5/16"	4
73 74/78	A,D,K,Y A,C,D,F,K,Y	8 8	429,460 exc. P/C 460 exc. P/C	378168-S7-8	(BB-157-B)-screw & washer assy. (exhaust manifold to cyl. hd.)- 3/8"-16 x 1 5/8"	14 14
73 73	A,C,Y C	8 8	460 P/C 429	373139-S	(BB-163) screw & washer assy. (exhaust manifold to cyl. hd.)-3/8"-16 x 2 5/8"	15
73/78 73	A,C,Y C	8 8	460 P/C 429	★382199-S	Stud & washer (exhaust manifold to cyl. hd.)-5/16"-18 x 3/8"-16 x 3 7/16"	1 1
74/	C,P	8	302	★381730-S	Screw & washer assy. (exhaust manifold to cyl. hd.)-3/8"-16 x 1 1/4"	8
74/	C,P - - A/T	8	302	381732-S	(BB-869-H)-screw & washer assy. (manifold to cyl. hd.)-3/8"-16 x 2 1/4"	4
73/ 74/	A,C,F,Y C,P	8 8	351C 302	386160-S	(WW-132-A)-stud & washer assy. (manifold to cyl. hd.)-3/8"-16 x 3/8"-16 x 2 15/16"	2 4
73/ 77/	C,F V	8 8	351W 302	381732-S	(BB-869-H)-screw & washer assy. (manifolds to cyl. hd.)-hex. hd.- 3/8"-16 x 2 1/4"	AR 2
73/ 77/	C,F V	8 8	351W 302	382952-S	(WW-132-BA)-stud & washer assy. (manifolds to cyl. hd.)-3/8"-16 x 3 5/16"	4 2

YEAR	MODEL/RESTRICTIONS	ENGINE CYL.	ENGINE C.I.D. (C.C.D.)	PART NUMBER	DESCRIPTION	QTY.
9430-1	MANIFOLD EXHAUST — Cont'd @ 2300 cc ⊕ 2800 cc					
75/	A,C,D,F,K,Y	8	460	386160-S	(WW-132-A)-stud and washer assy. (manifold to cyl. head)-3/8"-16 x 3/8"-16 x 2 15/16"	2
75/	G	8	302	386839-S	(WW-132-K)-stud & washer assy. (A/C support bracket) & (manifold to cyl. head at L.H. front position)	1
75/	P	8	302		(A/C support bracket)	1
77/	G - - Calif.	8	302	387745-S	(WW-132-AB)-stud & washer assy.-(manifold to cylinder head)-hex shoulder-3/8"-16-3/8" x 3 3/8"	3
77/	V	8	302			2
77/	G,V	8	302	353051-S	(PP-32)-Plug (R.H. exhaust manifold when EGR cooler tube is not req'd)-3/4"-14 pipe thread	1
74/	J	6	⊕171	N804601-S2	(AB-120-H)-bolt (exhaust manifold to cyl. head)-M10 x 63 (Metric coarse)	11
76	J	4	@140	N800127-S2	(AW-70)-stud & washer assy. (manifold to cyl. head)-hex. shoulder-M10 x 78.0	1
79	A	8	351W	388469-S	(WW-132-BC)-stud & washer assy. (manifold to cylinder head)-3/8-16-3/8 x 3 13/32"	3
9D430	CONNECTOR ASSY. (VACUUM TUBE) ▲ 2000 cc @ 2300 cc ⊕ 2800 cc					
73	A,D,K,Y - - w/hidden headlamp	8	All	D00Z 9D430-A	Use for hidden headlamp vacuum lines	1
73	C	6	All	★ D20Z 9D430-A	Not replaced	1
73	C,F,P - - M/T	8	All			1
74	L - - C3	4	@140			1
75	C,G	8	302,351			1
76	P	6	250			1
74	J	4	▲122	★ D4RY 9D430-A	Use w/ported vacuum switch EGR-not repl.	1
74	J	4	▲122	★ D4RY 9D430-B	Use w/ported vacuum switch cooling-not repl.	1
74	J - - without T/E	4	▲122	★ D4RY 9D430-E	Not replaced	1
74	J - - M/T	4	▲122	★ D4RY 9D430-F	Not replaced	1
76	J - - ev/em-Calif.	4	@140	★ D5RY 9D430-H	Not replaced	1
74	J "Before 11/1/73"	6	⊕171	★ D4RY 9D430-C	Use w/ported vacuum switch cooling-not repl.	1
74/76	J "From 11/1/73"	6	⊕171	★ D4RY 9D430-G	Not replaced	1
73/74	A,D,K,P,Y	8	All	★ D3AZ 9D430-A	Use for A/T vacuum line	1
74	L - - A/T	4	▲122			1
75	C,D,F,K,Y	8	All			1
75	G,P - - A/T	6	250			1
76	A,C,F,Y	8	351M, 400			1
9F430	BRACKET (EGR VACUUM RESERVOIR)					
78	A,F - - w/Hi-altitude carb	8	351M, 400	★ D8AZ 9F430-A	# D8AE 9E487-AA	1
78/	D,K - - w/Hi-altitude carb	8	400			1
79	F - - w/Hi-altitude carb.	8	351M			1

COPYRIGHT © 1986— FORD MOTOR COMPANY —DEARBORN, MICHIGAN

1973/79 LINCOLN-MERCURY CARS

YEAR	MODEL/RESTRICTIONS	ENGINE CYL.	ENGINE C.I.D. (C.C.D.)	PART NUMBER	DESCRIPTION	QTY.
9F432	WIRING ASSY. (EXHAUST AIR SUPPLY PUMP) @ 2300 cc					
75/76	L "Before 2/9/76"	4	@140	★ D5FZ 9F432-A	#D52B 9F432-AD-not replaced	1
76	L - - M/T-Calif.- "From 2/9/76"	4	@140	★ D6FZ 9F432-A	#D6EB 9F432-AA,AD-not replaced	1
76	L - - A/T	4	@140			1
76	L - - M/T exc. Calif.- "From 2/9/76"	4	@140	★ D6FZ 9F432-B	#D6EB 9F432-BA-not replaced	1
77	L	4	@140	★ D7FZ 9F432-A	#D6EB 9F432-AB-not replaced	1
9G432	FILTER ASSY. (ANTI-BACKFIRE VALVE)-refer to 9B291					
9433	GASKET SET (MANIFOLD)					
73/74	C,	8	302	D1AZ 9433-B		1
73/76	P	8	302			1
75/76	G	8	302			1
	Consists of 1-E3AE 9A424-CA Seal-rear 1-E3AE 9A425-CA Seal-front 2-C80E 9439-A,B,C Gasket					
73/74	A,C,F,Y	8	351C-2/B	D0AZ 9433-B		1
	Consists of 2-D0AZ 9A424-A Seal 1-D0AE 9C484-A or D0AE 9D440-B Gasket					
73/74	C,F	8	351-4/B	D0AZ 9433-A		1
	Consists of 2-D0AZ 9A424-A Seal 1-D0AE 9C484-B or D0AE 9D440-A Gasket					
73/74	C,F - - without T/E	8	351W	D1AZ 9433-C		1
	Consists of 1-E3AE 9A424-BA Seal-rear 1-E3AE 9A425-BA Seal-front 2-C90E 9439-B Gasket					
73/74	A,C,F,Y - - without T/E	8	400	D1AZ 9433-A		1
	Consists of 2-D1AE 9A425-AA Seal 1-D1AE 9C484-AA or D1AE 9D440-AA Gasket					
73/74	A,D,K,Y	8	460	C9AZ 9433-A		1
74	C,F	8	460			1
73	C	8	460 exc. P/C			1
73	A,C,Y	8	429			1
	Consists of 2-C9SZ 9A425-A Seal 2-C8SZ 9441-A Gasket					
73	A,C	8	460 P/C	D00Z 9433-A		1
	Consists of 2-C9SZ 9A425-A Seal 2-D00Z 9441-A Gasket					
74	A,C,F,Y - - T/E	8	400	★ D4AZ 9433-B		1
	Consists of 2-D1AE 9A425-AA Seal 1-D4AE 9C484-BB Gasket					
74	P - - T/E	8	302	★ D4DZ 9433-A	Not replaced	1
	Consists of 1-D10Z 9A425-A Seal 1-D10Z 9A425-A Seal 2-D4DZ 9441-A Gasket					

YEAR	MODEL/RESTRICTIONS	ENGINE CYL.	ENGINE C.I.D. (C.C.D.)	PART NUMBER	DESCRIPTION	QTY.
9433	GASKET SET (MANIFOLD) — Cont'd					
75/76	A,C,F,Y	8	351M,	D5AZ 9433-A		1
77/78	A,F	8	351M			1
77/78	A,D,F,K	8	400			1
79	F	8	351M			1
79	D,K	8	400			1
	Consists of 2-D1AE 9A425-AA Seal				1-D5AE 9C484-AC Gasket	
75/76	A,C,D,F,K,Y	8	460, 460 P/C	D5AZ 9433-C		1
77/78	A,D,K	8	460			1
	Consists of 1-D6VE 9C484-AA Gasket				2-E3HE 9A425-AA Seal	
75/76	C,F,G	8	351W	D9AZ 9433-A		1
77/	A,F,G,V	8	351W			1
	Consists of 1-E3AE 9A424-BA Seal				1-E3AE 9A425-BA Seal; 2-E5TE 9439-DA Gasket	
77/	F,G,P,V	8	302	D9AZ 9433-B		1
79	A,J	8	302			1
	Consists of 1-E3AE 9A424-CA Seal				1-E3AE 9A425-CA Seal; 2-E4TE 9439-AA Gasket	
9C433	HOSE (EXHAUST AIR SUPPLY CHECK VALVE INLET)					
74	P - - T/E	8	302	★	Improvise from C8TZ 9B466-A	1
74	C - - T/E	8	302	D4DZ 9C433-A	L.H.	1
9C433	HOSE (ANTI-BACKFIRE VALVE VACUUM)					
79	J	4	@140-TC	D9ZZ 9C433-A	Moulded	1
9D434	TUBE ASSY. (VACUUM MANIFOLD TO ENGINE)-Improvise from bulk tubing (9291)					
73/74	All	6&8	All	87945-S8	(I-23)-fitting-tube-vacuum manifold	1
9E434	COVER (INTAKE MANIFOLD) @ 2300 cc					
74/	J,L	4	@140	D4FZ 9E434-A	#D42E 9E434-AB	1
74/	J,L	4	@140	★ N602529-S	Screw & washer assy. (cover to intake manifold)-M6 x 20 (Metric)	4
9A435	SPACER (EXHAUST MANIFOLD TO MUFFLER INLET PIPE)-Also refer to group 9A427 ⊕ 2800 cc					
75/76	A,C,F,Y	8	351M, 400	D5AZ 9A435-A		1
76	C	8	351W			1
77/78	A,F	8	351M			1
77/78	A,F	8	400			1
77/78	F	8	351W			1
79	A	8	351W			1
79	F "Before 2/1/79"	8	351			1
77/79	D,K "Before 2/1/79"	8	400			1
79	F "From 2/1/79"	8	351	D9AZ 9A435-A		1
79	D,K "From 2/1/79"	8	400			1
76/78	J	6	⊕171	★ D5RY 9A435-A	Not replaced	1
77/	F	8	302	D70Z 9A435-A		1
79	A	8	302			1
9C435	GASKET (EXHAUST AIR SUPPLY TUBE UPPER) ⊕ 2800 cc					
74/76	C,F,G - - T/E "Before 5/1/76"	8	351W	C8TZ 9C435-A		2
77	A,F	8	351M			1
75/76	G,P "Before 5/1/76"	8	302			2

COPYRIGHT © 1986— FORD MOTOR COMPANY —DEARBORN, MICHIGAN

YEAR	MODEL/RESTRICTIONS	ENGINE CYL.	ENGINE C.I.D. (C.C.D.)	PART NUMBER	DESCRIPTION	QTY.
9C435	GASKET (EXHAUST AIR SUPPLY TUBE UPPER) — Cont'd ⊕ 2800 cc					
74	C,F,Y	8	351C-2/B	★ D4AZ 9C435-A		2
74/76	A,C,D,F,K,Y	8	460	D5VZ 9C435-A		2
76/	J	6	⊕ 171			2
77/78	A,D,K	8	460			2
75/	L	6	⊕ 171			2
76	C,F,G "From 5/1/76"	8	351W	D6DZ 9C435-A	1.5" dia.- upper-bolthead to air tube	2
76	G,P "From 5/1/76"	8	302		Upper-bolthead to air tube	2
74	J	6	⊕171	D6DZ 9C435-B	1.3" dia.	1
76	C,F,G "From 5/1/76"	8	351W		Lower air tube to cyl. head	2
76	G,P "From 5/1/76"	8	302		Lower-air tube to cyl. head	2
77/	F,G,J,P,V	8	302	D7DZ 9C435-A		2
79	A,F	8	351W	D7DZ 9C435-B		2
9D436	CLAMP (EXHAUST AIR SUPPLY TUBE) ⊕ 2800 cc					
74	C,F,Y	8	351C-2/B	★ D4AZ 9D436-A	Not replaced	2
74/76	A,C,D,F,K,Y	8	460, 460 P/C	D8VZ 9D436-A		2
75/78	L	6	⊕171			2
77/78	A,D,K	8	460			2
9E436	GASKET (INTAKE MANIFOLD COVER) @ 2300 cc					
74/	J,L	4	@140	D8FZ 9E436-A	#D8EE 9E436-AA	1
78/	P	4	@140			1
9K437	SPACER (DIFFUSER) ▲ 2000 cc					
73/74	J	4	▲122	★ D2RY 9K437-A	Not replaced	1
9G437	PIPE (EXHAUST MANIFOLD OUTLET) - Also refer to group 5E212 @ 2300cc					
79	J - - exc. Calif.	4	@140-TC	D9ZZ 9G437-A		1
9G438	TURBOCHARGER ASSY. @ 2300cc					
79	J	4	@140-TC	E0ZZ 9G438-E	#D9ZE 9G438-BA,BC	1
79	J	4	@140-TC	87103-S96	(T-2-DG) seal O-ring (turbo outlet) 1 3/8" I.D.	1
79	J	4	@140-TC	87141-S96	(T-6-G) seal-O ring (turbo inlet) 2 1/4" I.D.	1
79	J	4	@140-TC	87023-S96	(T-1-EF) seal-O ring (oil return) 15/16" I.D.	1
79	J	4	@140-TC	87500-S	(I-31-B) fitting (oil return) 45°-1/2" tube size	1
79	J	4	@140-TC	87381-S	(I-35) fitting (oil inlet) 90°-1/4" tube size	
79	J	4	@140-TC	N800468-S	(AB-122-B) bolt (manifold to turbo charger) M8 x 22 hex. (metric coarse)	2
79	J	4	@140-TC	N800064-S2	(AW-36) stud (turbo charger to exhaust pipes) M12 x 64 (metric)	4
79	J	4	@140-TC	387039-S7	(MM-169-LC) nut (turbo charger to exhaust pipes) 7/16 x 14	4
9D439	CONNECTOR (EXHAUST MANIFOLD-TUBE)					
78/	V	8	302	D84Y 9D439-A		1

YEAR	MODEL/RESTRICTIONS	ENGINE CYL.	ENGINE C.I.D. (C.C.D.)	PART NUMBER	DESCRIPTION	QTY.
9G439	SUPPORT (TURBOCHARGER) @ 2300cc					
79	J	4	@140-TC	D9ZZ 9G439-A		1
9G440	TUBE (TURBOCHARGER OIL SUPPLY) @ 2300cc					
79	J	4	@140-TC	D9ZZ 9G440-A		1
9441	GASKET (INTAKE MANIFOLD TO CYLINDER HEAD)-Also refer to group 9433 ▲ 2000cc @ 2300cc ♦ 2600cc ⊕ 2800cc					
73/74	C,P - - without T/E	8	302	★ C3AZ 9441-D	Serviced only in kit (D1AZ 9433-B)	2
75/76	G,P	8	302			2
73/74	A,C,F,Y	8	351C-2/B	★ D0AZ 9441-A	Serviced only in kit (D0AZ 9433-B)	1
73/74	C,F	8	351-4/B	★ D0AZ 9441-B	Serviced only in kit (D0AZ 9433-A)	1
73/74	C,F - - without T/E	8	351W	★ C9OZ 9441-A	Serviced only in kit(D1AZ 9433-C)	2
73	A,C,D,K,Y	8	429,460	★ C8SZ 9441-A	Serviced only in kit (9433)	2
73	A,C,Y	8	460 P/C			2
74	A,C,D,F,K,Y	8	460			1
73/74	J,L	4	▲122	D1FZ 9441-A		1
73	J	6	♦159	D2RY 9441-C		1
74	J "Before 10/11/74"	6	⊕171	D4ZZ 9441-A		1
75	L "Before 10/11/74"	6	⊕171			1
74	J "From 10/11/74 to 1/1/75"	6	⊕171	★ D4ZZ 9441-B	#78TM 9A454-KB	1
75	L "From 10/11/74 to 1/1/75"					1
74	P - - T/E	8	302	D4DZ 9441-A		1
74	C,F - - T/E	8	351W	D40Z 9441-A		1
74/	J,L	4	@140	D4FZ 9441-A	#D42E 9439-AA	1
78/	P	4	@140			1
75/	L "From 1/1/75"	6	⊕171	D5ZZ 9441-B	#75TM 9441-AB,AC-78TM 9A454-GB	1
74/	J "From 1/1/75"	6	⊕171			1
9E441	VALVE and BRACKET ASSY. (VACUUM DIFFERENTIAL) @ 2300 cc ⊕ 2800 cc					
75/76	A,C,F,Y - - C6	8	351M, 400	★ D5FZ 9E441-D	#D52E 9E441-DA	1
75	L	4	@140			1
76/78	J - - T/E - exc. Calif.	6	⊕171			1
77	A,F	8	351M			1
77	A,F - - exc. Canada		400			1
75	A,C,F,Y-FMX	8	351M	D5AZ 9E441-C	#D5AE 9E441-CA	1
76	A,C,F,Y - - Canada	8	400			1
76/78	J - - T/E - Calif.	6	⊕171			1
77	A,F - - Canada	8	351M, 400			1
78	A,F - - Canada	8	351M, 400	★ D8AZ 9E441-A	#D7AE 9E441-AA	1
75/	G,P - - exc. Calif.	6	250	D5FZ 9E441-C	#D52E 9E441-CA	1
75/76	A,C,Y	8	460, 460 P/C			1
75/76	D,F,K	8	460			1
75	G - - M/T-exc. Calif.	8	302	★ D5DZ 9E441-A	#D5DE 9E441-AA	1
75/	G,P - - Calif.	8	302	D5AZ 9E441-B	#D5AE 9E441-BA	1
75/	G,P	6	200,250			1
77/	V	8	302			1

COPYRIGHT © 1986— FORD MOTOR COMPANY —DEARBORN, MICHIGAN

1973/79 LINCOLN-MERCURY CARS

YEAR	MODEL/RESTRICTIONS	ENGINE CYL.	ENGINE C.I.D. (C.C.D.)	PART NUMBER	DESCRIPTION	QTY.
9G441	TUBE (TURBOCHARGER OIL RETURN) @ 2300cc					
79	J	4	@140-TC	E0ZZ 9G441-B		1
79	J	4	@140-TC	87500-S	(I-31-B)fitting inverted elbow(oil return) 45°-1/2" tube size	1
79	J	4	@140-TC	87023-S96	(T-1-CF)seal-"O" ring(oil return)15/16" I.D.	1
79	J	4	@140-TC	388458-S	(II-23-SB)-elbow(oil return to block) 1/2 hose x 3/8 pipe	1
9E442	BAFFLE (INTAKE MANIFOLD FUEL DISTRIBUTION) ▲ 2000 cc					
74	L - - A/T	4	▲122	★ D3FZ 9E442-A	Not replaced	1
9G442	VALVE and BRACKET ASSY. (EXHAUST AIR SUPPLY)-refer to groups 9G426 & 9F491					
9K442	ADAPTER (MANIFOLD INLET VACUUM PIPE TO DISTRIBUTOR) ▲ 2000 cc					
73/74	J	4	▲122	D1FZ 9K442-A	1/8"-27 thread one end	1
74	L	4	▲122			1
73	J	6	All			1
9G443	MANIFOLD (EXHAUST GAS RECIRCULATION COOLER)					
79	A	8	351W	D9AZ 9G443-A		1
9E444	VALVE and ADAPTOR ASSY. (E.G.R)-Service details					
9B445-6	MANIFOLD ASSY. (EXHAUST AIR SUPPLY) — Also refer to group 9B449 ▲ 2000 cc					
74	P - - T/E	6	All	D4DZ 9B445-B	#D4DE 9B445-BA	1
74	C,P - - T/E	8	302	★ D40Z 9B445-A	R.H.-#D40E 9B445-AA,AB-not replaced	1
				★ D40Z 9B446-A	L.H.-#D40E 9B446-AA-not replaced	1
75	G,P	6	200,250	D5DZ 9B445-A	#D5DE 9B445-BA,BB	1
76/77	G,P	6	250			1
78/	P	6	200			1
74	J - - T/E	4	▲122	★ D4RY 9B445-A	#74HF 9B445-AC Not replaced	1
74	L - - T/E	4	▲122	D4FZ 9B445-B	#74HF 9B445-BA	1
73	C	6	250	385176-S36	(II-41-H)Compression fitting-(air manifold to exhaust manifold)-9/16"-20	4
73/74	P	6	250			4
75/	G,P	6	All			4
9F445	WIRING ASSY. (EXHAUST AIR SUPPLY PUMP)-Also refer to group 9F432					
76	A - - exc. Calif.	8	460 P/C	★ D6AZ 9F445-A	#D6AB 9F445-AA-not replaced	1
76	C,F,Y	8	351M			1
76	A,C,F,Y	8	400			1
76	C,Y	8	460 P/C			1
76	A - - Calif.	8	460 P/C	★ D6AZ 9F445-B	#D6AB 9F445-BA-not replaced	1
9F446	SENSOR ASSY. (E.G.R. SOLENOID VALVE) @ 2300 cc ⊕ 2800 cc					
75	A,Y	8	351M	★ D5AZ 9F446-A	#D5AB 9F446-A1A,A2A,A3A	1
76/	J	6	⊕171			1
76/	J	4	@140			1
75	A,Y	8	460	D5AZ 9F446-B	#D5AB 9F446-B1A	1
76	A - - exc. Calif. & Canada	8	460			1
75/	P - - Calif.	6	250	★ D5DZ 9F446-A	#D5DB 9F446-A1A	1
75	P - - A/T-Calif.	8	302			1
75/	G,P	6	250			1
75	G - - Calif.	8	302, 351W	★ D5DZ 9F446-D	#D5DB 9F446-D1A-not replaced	1
75	C,F	8	351,400	★ D50Z 9F446-A	#D50B 9F446-A1A-not replaced	1
77	F	8	351M 400-2/B			1
75	C,F	8	460	★ D50Z 9F446-B	#D50B 9F446-B1A-not replaced	1
76	C - - exc. Calif. & Canada	8	460 P/C			1
75/76	L	6	⊕171	★ D5ZZ 9F446-A	#D5ZB 9F446-A1A	1

YEAR	MODEL/RESTRICTIONS	ENGINE CYL.	ENGINE C.I.D. (C.C.D.)	PART NUMBER	DESCRIPTION	QTY.
9K446	HOSE (BY-PASS VALVE TO CHECK VALVE) @ 2300cc					
77/	L - - Calif. & w/Hi-altitude carb.	4	@140	★ D8EE 9K446-AA	#D8EE 9K446-AA,BA cut A/R from D40Z 9F287-A	1
78/	P	4	@140			1

YEAR	MODEL/RESTRICTIONS	ENGINE CYL.	ENGINE C.I.D. (C.C.D.)	PART NUMBER	CARB. TO MANFLD.	CARB. TO SPACER	SPACER TO MANFLD.	CARB. TO HEAT SHIELD	DESCRIPTION
9447	GASKET (CARBURETOR TO INTAKE MANIFOLD)-Also refer to group 9A589 and 9E795 ▲ 2000 cc @ 2300 cc ♦ 2600 cc ▶2800 cc								
	A (Mercury)								
73 74	A A	8 8	351,400 400	D5ZZ 9C477-A *CG-424		1 1			#D3AE 9C477-AB,AC, D5ZE 9C477-AA
73 74	A A - - without T/E	8 8	351,400 400	D3AZ 9447-B *CG-353			1 1		#D3AE 9447-BC
73	A	8	429,460, 460 P/C	D3VY 9447-B *CG-363		1			#D3VE 9C477-A2C
73/74	A	8	429,460, 460 P/C	D3VY 9447-A *CG-358			1		
74	A - - T/E	8	400	D4AZ 9447-B *CG-401			1		#D4AE 9447-BA
74	A - - T/E	8	460	★ D4VY 9C477-A		1			#D4VE 9C477-AA
75/76	A	8	400	D5AZ 9447-B *CG-466			1		#D5AE 9447-AB
75	A	8	460, 460 P/C	D5VY 9447-A *CG-418			1		#D5VE 9447-AA
76	A	8	460, 460 P/C	D6VZ 9447-B *CG-469			1		#D6VE 9447-AB,BA
75/78 79	A A - - used with cast iron manifold	8 8	351M, 400 302,351	D7FZ 9C477-A *CG-473		1 1			#D5AE 9C477-AA, D7AE 9C477-A1B,A2B, D7EE 9C477-AA
75/78	A	8	460, 460P/C	D7VZ 9C477-A *CG-496		1			#D5VE 9C477-AD, D6VE 9C477-AA, D7VE 9C477-BA
77/78	A	8	460, 460P/C	D7VZ 9447-C *CG-497			1		#D7VE 9447-AA,CA
77/78	A	8	351M, 400	D7AZ 9447-B *CG-488			1		#D7AE 9447-BA, D8AE 9447-AA,AB
79	A - - used with cast iron manifold	8	302,351	D70Z 9447-A *CG-479			1		#D70E 9447-AA
	C (Montego)								
73/74	C	6	250	D3DZ 9447-B *CG-367		1			
73/74	C	6	All	D3DZ 9447-E *CG-235-A			1		.020" thick
73/74	C	6	250	D4DZ 9447-A *CG-467	1				.270" thick
73/74	C	6	250	D3DZ 9447-A *CG-373				1	
73/74	C	8	302	D30Z 9447-B *CG-355			1		#D30E 9447-BB
73/74	C	8	351C-2/B 400	D5ZZ 9C477-A *CG-424		1			#D3AE 9C477-AB,AC, D5ZE 9C477-AA
73/74 73/74	C C - - without T/E	8 8	351C-2/B 400	D3AZ 9447-B *CG-353			1 1		#D3AE 9447-BC

COPYRIGHT © 1986— FORD MOTOR COMPANY —DEARBORN, MICHIGAN

1973/79 LINCOLN-MERCURY CARS

YEAR	MODEL/RESTRICTIONS	ENGINE CYL.	ENGINE C.I.D. (C.C.D.)	PART NUMBER	CARB. TO MANFLD.	CARB. TO SPACER	SPACER TO MANFLD.	CARB. TO HEAT SHIELD	DESCRIPTION
9447	GASKET (CARBURETOR TO INTAKE MANIFOLD)-Also refer to group 9A589 and 9E795 — Cont'd ▲ 2000 cc @ 2300 cc ♦ 2600 cc ▶2800 cc								
	C (Montego)								
73/74	C	8	351-4/B	D3ZZ 9447-B *CG-364		1			
73/74	C	8	351-4/B	D3ZZ 9447-A *CG-359			1		
73/74	C	8	351W	D30Z 9447-A *CG-354			1		#D30E 9447-AA,AB
73	C	8	429, 460 P/C	D3VY 9447-B *CG-363		1			#D3VE 9C477-A2C
73/74	C	8	429, 460 P/C	D3VY 9447-A *CG-358			1		
74	C - - T/E	8	400	D4AZ 9447-B *CG-401			1		#D4AE 9447-BA
74	C - - T/E	8	460	★D4VY 9C477-A		1			#D4VE 9C477-AA
73/76	C	8	302, 351W	D5ZZ 9C477-A *CG-424		1			#D30E 9C477-BA,BB, D4TE 9447-JA, D40E 9C477-AA,AB, D5ZE 9C477-AA
75/76	C	8	351M, 400	D7FZ 9C477-A *CG-473					D5AE 9C477-AA, D7AE 9C477-AA, D7EE 9C477-AA
75/76	C	8	351M, 400	D5AZ 9447-B *CG-466			1		#D5AE 9447-AB
75/76	C	8	351W	D70Z 9447-A *CG-479			1		#D50E 9447-BA, D70E 9447-AA
75	C	8	460, 460 P/C	D5VY 9447-A *CG-418			1		#D5VE 9447-AA
75/76	C	8	460, 460 P/C	D7VZ 9C477-A *CG-496		1			#D5VE 9C477-AD, D6VE 9C477-AA, D7VE 9C477-AA
76	C	8	460, 460 P/C	D6VZ 9447-B *CG-469			1		#D6VE 9447-AB,BA
	D (Lincoln)								
73/74	D	8	All	D3VY 9447-A *CG-358			1		
73	D	8	All	D3VY 9447-B *CG-363		1			#D3VE 9C477-A2C
74	D - - T/E	8	460	★D4VY 9C477-A		1			#D4VE 9C477-AA
75/76	D	8	460	D6VZ 9C477-A *CG-475		1			#D5VE 9C477-AD, D6VE 9C477-AA-r/b D7VZ 9C477-A(12/78)
75	D	8	460	D5VY 9447-A *CG-418			1		#D5VE 9447-AA
76	D	8	460	D6VZ 9447-B *CG-469			1		#D6VE 9447-AB,BA
77/	D	8	400	D7FZ 9C477-A *CG-473		1			#D7AE 9C477-A1B,A2B, D7EE 9C477-AA
77/78	D	8	460	D7VZ 9C477-A *CG-496		1			#D7VE 9C477-BA

YEAR	MODEL/RESTRICTIONS	ENGINE CYL.	ENGINE C.I.D. (C.C.D.)	PART NUMBER	CARB. TO MANFLD.	CARB. TO SPACER	SPACER TO MANFLD.	CARB. TO HEAT SHIELD	DESCRIPTION
9447	GASKET (CARBURETOR TO INTAKE MANIFOLD)-Also refer to group 9A589 and 9E795 — Cont'd ▲ 2000 cc @ 2300 cc ♦ 2600 cc ◗2800 cc								
	D (Lincoln)								
77/78	D	8	460	D7VZ 9447-C *CG-497			1		#D7VE 9447-AA,CA
77/	D	8	400	D7AZ 9447-B *CG-488			1		#D7AE 9447-BA, D8AE 9447-AA,AB
	F (Cougar)								
73/74 74	F F - - without T/E	8 8	351C-2/B 400	D3AZ 9447-B *CG-353			1 1		#D3AE 9447-BC
73/74	F	8	351-4/B	D3ZZ 9447-B *CG-364		1			
73	F	8	351-4/B	D3ZZ 9447-A *CG-359			1		
74	F - - T/E	8	400	D4AZ 9447-B *CG-401			1		#D4AE 9447-BA
74	F	8	351W	D30Z 9447-A *CG-354			1		
73/74	F	8	351, 400	D5ZZ 9C477-A *CG-424		1			#D3AE 9C477-AB,AC, D30E 9C477-BA,BB, D5ZE 9C477-AA
74	F - - without T/E	8	460	D3VY 9447-A *CG-358			1		
74	F - - without T/E	8	460	D3VY 9447-B *CG-363		1			
74	F - - T/E	8	460	★D4VY 9C477-A		1			#D4VE 9C477-AA
75/76	F	8	351M, 400	D5AZ 9447-B *CG-466			1		#D5AE 9447-AB
75/76	F	8	460	D7VZ 9C477-A *CG-496		1			#D5VE 9C477-AD, D6VE 9C477-AA, D7VE 9C477-AA
75	F	8	460	D5VY 9447-A *CG-418			1		#D5VE 9447-AA
76	F	8	460	D6VZ 9447-B *CG-469			1		#D6VE 9447-AB,BA
77/	F	8	302, 351W	D70Z 9447-A *CG-479			1		#D70E 9447-AA
77/ 77/78	F F	8	351M 400	D7AZ 9447-B *CG-488			1 1		#D7AE 9447-BA, D8AE 9447-AA,AB
75/	F	8	All	D7FZ 9C477-A *CG-473		1			#D5AE 9C477-AA, D7AE 9C477-A1B,A2B, D7EE 9C477-AA
	G (Monarch)								
75/76	G	6	200,250	D5DZ 9447-A *CG-415			1		#D5DE 9447-AC
75/76	G	8	302, 351W	D5ZZ 9C477-A *CG-424		1			#D5ZE 9C477-AA
77/	G	6	All	D7DZ 9447-A *CG-482			1		#D7DE 9447-AA

COPYRIGHT © 1986— FORD MOTOR COMPANY —DEARBORN, MICHIGAN

1973/79 LINCOLN-MERCURY CARS

YEAR	MODEL/RESTRICTIONS	ENGINE CYL.	ENGINE C.I.D. (C.C.D.)	PART NUMBER	CARB. TO MANFLD.	CARB. TO SPACER	SPACER TO MANFLD.	CARB. TO HEAT SHIELD	DESCRIPTION
9447	GASKET (CARBURETOR TO INTAKE MANIFOLD)-Also refer to group 9A589 and 9E795 — Cont'd ▲ 2000 cc @ 2300 cc ♦ 2600 cc ▶2800 cc								
	G (Monarch)								
75/78 75/77	G G	8	302 351W	D70Z 9447-A *CG-479			1 1		#D50E 9447-BA, D70E 9447-AA
77/78 77	G G	8	302 351W	D7FZ 9C477-A *CG-473		1 1			#D7AE 9C477-A1B,A2B, D7EE 9C477-AA
75/	G	6	All	E4TZ 9C477-A *CG-665		1			#D7TE 9C477-AB
	J (Capri)								
73/74	J	4	▲122	★D1FZ 9447-E *CG-333-A	1				
76/	J	4	@140	D9FZ 9447-A *CG-403-A		1			#757F 9447-AA, D42E 9447-AB, D9EE 9447-AA
74/	J	4	@140	D4FZ 9C477-A			1		
73	J	6	♦159	★D2RY 9447-B *CG-350		2			
73/74	J	6	All	D2RY 9447-A *CG-351			1		#72TF 9447-AA
74	J	6	All	D4ZZ 9447-A *CG-405		1			#D4ZE 9447-AB
76	J "Before 8/30/76"	6	⊕171	D5ZZ 9447-A *CG-434			1		#75TF 9447-BA
76/	J "From 8/30/76"	6	⊕171	D6RY 9447-B *CG-481			1		#77TF 9447-BA
76	J "Before 8/30/76"	6	⊕171	D5ZZ 9C477-A *CG-424		1			#D5ZE 9C477-AA
76/	J "From 8/30/76"	6	⊕171	D7FZ 9C477-A *CG-473		1			#D7EE 9C477-AA .187" thick
79	J	6	200	D7DZ 9447-A *CG-482			1		#D7DE 9447-AA
79	J	6	200	E4TZ 9C477-A *CG-665		1			#D7TE 9C477-AB
79	J	8	302	D70Z 9447-A *CG-479			1		#D70E 9447-AA
79	J	8	302	D7FZ 9C477-A *CG-473		1			#D7AE 9C477-A1B,A2B, D7TE 9C477-AB
	K (Mark IV, Mark V)								
73	K	8	All	D3VY 9447-B *CG-363		1			#D3VE 9C477-A2C
73/74	K	8	All	D3VY 9447-A *CG-358			1		
74	K - - T/E	8	460	★D4VY 9C477-A		1			#D4VE 9C477-AA
75	K	8	460	D5VY 9447-A *CG-418			1		#D5VE 9447-AA
76	K	8	460	D6VZ 9447-B *CG-469			1		#D6VE 9447-AB,BA
77/	K	8	400	D7FZ 9C477-A *CG-473		1			#D7AE 9C477-A1B,A2B, D7EE 9C477-AA
75/78	K	8	460	D7VZ 9C477-A *CG-496		1			#D5VE 9C477-AD, D6VE 9C477-AA, D7VE 9C477-BA

YEAR	MODEL/RESTRICTIONS	ENGINE CYL.	ENGINE C.I.D. (C.C.D.)	PART NUMBER	CARB. TO MANFLD.	CARB. TO SPACER	SPACER TO MANFLD.	CARB. TO HEAT SHIELD	DESCRIPTION
9447	GASKET (CARBURETOR TO INTAKE MANIFOLD)-Also refer to group 9A589 and 9E795 — Cont'd ▲ 2000 cc @ 2300 cc ♦ 2600 cc ◗2800 cc								
	K (Mark IV, Mark V)								
77/78	K	8	460	D7VZ 9447-C *CG-497			1		#D7VE 9447-AA,CA
77/	K	8	400	D7AZ 9447-B *CG-488			1		#D7AE 9447-BA, D8AE 9447-AA,AB
	L (Bobcat)								
74	L	4	▲122	D1FZ 9447-E *CG-333-A	1				#D12E 9447-BA or D32E 9447-AA
74/	L	4	@140	D4FZ 9C477-A			1		
74/	L	4	@140	D9FZ 9447-A *CG-403-A		1			#D42E 9447-AB, D9EE 9447-AA
75/76	L	6	⊕171	D5ZZ 9C477-A *CG-424		1			#D5ZE 9C477-AA
75/76	L	6	⊕171	D5ZZ 9447-A *CG-434			1		#75TF 9447-BA
77/	L	6	⊕171	D6RY 9447-B *CG-481			1		#77TF 9447-BA
77/	L	6	⊕171	D7FZ 9C477-A *CG-473		1			#D7EE 9C477-AA .187" thick
	P (Comet)								
73	P	6	200	★D3DZ 9447-C *CG-366		1			
73/74 74	P P	6 6	250 200	D3DZ 9447-B *CG-367		1 1			
73/74	P	6	All	D3DZ 9447-E *CG-235-A			1		.020" thick
73/74	P	6	200,250	D4DZ 9447-A *CG-467	1				.270" thick
73/77	P	6	All	E4TZ 9C477-A *CG-665		1			D7TE 9C477-AA
74	P - - T/E	6	200	★D4DZ 9C477-A		1			
74	P - - A/T with T/E	6	250	★D4DZ 9C477-B *CG-417		1			
73/74	P	6	250	D3DZ 9447-A *CG-373				1	
75/76	P	6	200,250	D5DZ 9447-A *CG-415			1		#D5DE 9447-AC
73/74	P	8	302	D30Z 9447-B *CG-355			1		#D30E 9447-BB
75/76	P	8	302	D5ZZ 9C477-A *CG-424		1			#D40E 9C477-AA,AB, D4TE 9447-JA, D5ZE 9C477-AA
77	P	6	200,250	D7DZ 9447-A *CG-482			1		#D7DE 9447-AA
75/77	P	8	302	D70Z 9447-A *CG-479			1		#D50E 9447-BA, D70E 9447-AA
77	P	8	302	D7FZ 9C477-A *CG-473		1			#D7AE 9C477-A1B,A2B, D7EE 9C477-AA

COPYRIGHT © 1986— FORD MOTOR COMPANY —DEARBORN, MICHIGAN

1973/79 LINCOLN-MERCURY CARS

YEAR	MODEL/RESTRICTIONS	ENGINE CYL.	ENGINE C.I.D. (C.C.D.)	PART NUMBER	CARB. TO MANFLD.	CARB. TO SPACER	SPACER TO MANFLD.	CARB. TO HEAT SHIELD	DESCRIPTION
9447	GASKET (CARBURETOR TO INTAKE MANIFOLD)-Also refer to group 9A589 and 9E795 — Cont'd ▲ 2000 cc @ 2300 cc ♦ 2600 cc ◗2800 cc								
	P (Zephyr)								
78/	P	4	@140	D9FZ 9447-A *CG-403-A		1			#D42E 9447-AB, D9EE 9447-AA
78/	P	4	@140	D4FZ 9C477-A			1		
78/	P	6	200	D7DZ 9447-A *CG-482			1		#D7DE 9447-AA
78/	P	6	200	E4TZ 9C477-A *CG-665		1			#D7TE 9C477-AB
78/	P	8	302	D70Z 9447-A *CG-479			1		#D70E 9447-AA
78/	P	8	302	D7FZ 9C477-A *CG-473		1			#D7AE 9C477-A1B,A2B-D7EE 9C477-AA
	V (Versailles)								
77	V	8	302, 351W	D70Z 9447-A *CG-479			1		#D70E 9447-AA
77/ 77	V V	8	302 351W	D7FZ 9C477-A *CG-473		1 1			#D7AE 9C477-A1B,A2B, D7EE 9C477-AA
78/	V	8	302	D84Y 9447-A *CG-504			1		#D8DE 9447-AB
	Y (Meteor)								
73/74	Y	8	351,400	D5ZZ 9C477-A *CG-424		1			#D3AE 9C477-AB,AC, D5ZE 9C477-AA
73/74 73/74	Y Y - - without T/E	8 8	351 400	D3AZ 9447-B *CG-353			1 1		#D3AE 9447-BC
73	Y	8	429,460, 460P/C	D3VY 9447-B *CG-363		1			#D3VE 9C477-A2C
73/74	Y	8	429,460 460 P/C	D3VY 9447-A *CG-358			1		
74	Y - - T/E	8	400	D4AZ 9447-B *CG-401			1		#D4AE 9447-BA
74	Y - - T/E	8	460	★D4VY 9C477-A		1			#D4VE 9C477-AA
75/76	Y	8	351M, 400	D7FZ 9C477-A *CG-473		1			#D5AE 9C477-AA, D7AE 9C477-AA, D7EE 9C477-AA
75/76	Y	8	351M, 400	D5AZ 9447-B *CG-466			1		#D5AE 9447-AB
75	Y	8	460,	D5VY 9447-A *CG-418			1		#D5VE 9447-AA
75/76	Y	8	460	D7VZ 9C477-A *CG-496		1			#D5VE 9C477-AD, D6VE 9C477-AA, D7VE 9C477-AA
76	Y	8	460,	D6VZ 9447-B *CG-469			1		#D6VE 9447-AB,BA

YEAR	MODEL/RESTRICTIONS	ENGINE CYL.	ENGINE C.I.D. (C.C.D.)	PART NUMBER	DESCRIPTION	QTY.
9B447	PULLEY ASSY. (EXHAUST AIR SUPPLY PUMP) ▲ 2000 cc @ 2300 cc ⊕ 2800 cc					
74/76	A,D,K,Y - - A/C	8	460	D1VY 9B447-A	#D1VE 9C480-AA	1
75/76	A,Y - - with A/C- "From 1/13/75"	8	460 P/C			1
77/78	A - - with A/C	8	460, 460P/C			1
77/78	D,K	8	460			1

YEAR	MODEL/RESTRICTIONS	ENGINE CYL.	ENGINE C.I.D. (C.C.D.)	PART NUMBER	DESCRIPTION	QTY.
9B447	PULLEY ASSY. (EXHAUST AIR SUPPLY PUMP) — Cont'd					
	▲ 2000 cc @ 2300 cc ⊕ 2800 cc					
74	A,C,F,Y	8	351C-2/B,400	D4AZ 9B447-A	#D3AE 9C480-AA-4 3/4" O.D.	1
74	P	6	200			1
74/76	A,C,F,Y - - without A/C	8	460	D4AZ 9B447-B	#D3AE 9C480-BA, D5TE 9B447-B1A,B7A-	1
74/	L - - with A/C	4	@140		5 3/8" O.D.	1
74	P	6	250			1
77/78	A - - without A/C	8	460			1
78/	P - - with A/C	4	@140			1
79	J - - with A/C	4	@140-exc. TC			1
79	A - - exc. Calif.	8	302			1
79	F - - A/T exc. Calif.	8	302			1
75/76	A,Y - - without A/C- "From 1/13/75"	8	460 P/C	★ D00Z 9B447-B	#D0OE 9C480-A	1
74/76	C,F - - with A/C	8	460			1
74	A - - with A/C	8	460			1
76	C - - without A/C "From 5/17/76"	8	460P/C			1
77/78	A - - without A/C	8	460P/C			1
75	A,Y - - with A/C	8	460 P/C	★ D5MY 9B447-A	#D4ME 9C480-AA, #D5ME 9B447-AA-	1
75	A(71),Y(71) "Before 1/13/75"	8	351M		5 7/8" O.D.	1
75/78	A,C,Y - - w/dealer installed A/C	8	460	★ D5AZ 9B447-B		1
75	A,C,F,Y "From 6/2/75"	8	351M, 400	D5UZ 9B447-B	#D5UE 9C480-BA, D5UE 9B447-BA	1
75/76	C,G "From 6/2/75"	8	351W			1
75/76	G,P "From 6/2/75"	8	302			1
77/78	F,G,V	8	351W			1
77/	F,V	8	302			1
77/78	G,P - - exc. Hi-altitude carb.	8	302			1
78	A,F - - Canada	8	351M			1
78	F	8	351W			1
79	A - - Calif.	8	302			1
79	F	8	302			1
79	F - - Canada	8	351M			1
79	G - - A/T-Calif.	8	302			1
79	G - - M/T	8	302			1
79	D "From 2/5/79"	8	400			1
78	P - - exc. w/Hi-altitude carb.	8	302	C8DZ 9B447-A	#C8DE 9C480-A	1
79	P	8	302			1
76	A,C,F,Y	8	351M, 400	D6AZ 9B447-A	#D6AE 9B447-AA, D5UE 9C480-AA	1
77/78	A,F	8	351M			1
77/78	A,D,F,K - - exc. Hi-altitude carb.	8	400			1
79	A - - Canada	8	351W			1
79	F - - exc. Calif.	8	351M			1
79	F	8	351W			1
79	J - - with A/C	4	@140-TC			1
79	D - - exc. Calif. and exc. w/Hi-altitude carb. "Before 2/5/79"	8	400			1
79	K - - exc. Calif. and exc. w/Hi-altitude carb.	8	400			1

COPYRIGHT © 1986— FORD MOTOR COMPANY —DEARBORN, MICHIGAN

1973/79 LINCOLN-MERCURY CARS

YEAR	MODEL/RESTRICTIONS	ENGINE CYL.	ENGINE C.I.D. (C.C.D.)	PART NUMBER	DESCRIPTION	QTY.
9B447	PULLEY ASSY. (EXHAUST AIR SUPPLY PUMP) — Cont'd ▲ 2000 cc @ 2300 cc ⊕ 2800 cc					
74	C,F	8	351W	D40Z 9B447-A	#D40E 9C480-AA or D5AE-BA (plastic)	1
75	G,P "Before 6/2/75"	8	302			1
76	G,P - - Canada	8	302			1
75	A,C,F,Y "Before 6/2/75"	8	400			1
75	A,C,F,Y "Before 6/2/75"	8	351M			1
75	G "Before 6/2/75"	8	351W			1
76	G - - Canada	8	351W			1
74	C,P - - T/E	8	302			1
77/78	A,F - - w/Hi-altitude carb.	8	400			1
77/78	G,P - - w/Hi-altitude carb.	8	302			1
78/	D,K - - w/Hi-altitude carb.	8	400			1
79	D,K - - Calif.	8	400			1
79	G - - w/Hi-altitude carb.	8	302			1
75/76	C - - without A/C "Before 5/17/76"	8	460 P/C	★ D5AZ 9B447-A	#D5AE 9C480-AA	1
75	A,Y - - without A/C- "Before 1/13/75"	8	460 P/C			1
75/77	G,P	6	200	D5DZ 9B447-B	#D5DE 9C480-BA	1
78/	P - - M/T	6	200			1
79	P - - Calif.	6	200			1
75	G,P	6	250	★ D5DZ 9B447-A	#D5DE 9C480-AA,C1A,C2A,D5DE 9B447-AA-5" O.D.	1
76/78	G - - without A/C	6	250			1
76/78	P	6	250			1
76	G - - with A/C	6	250	★ D6DZ 9B447-A	#D6DE 9C480-AA,A1A,A2A	1
77/	G - - with A/C	6	250	D7DZ 9B447-A	#D7DE 9C480-AA, D7DE 9B447-AA	1
78/	G - - without A/C, with P/S	6	250			1
74	J	4	▲122	★ D4RY 9B447-B	#74HF 9K444-AD-not replaced	1
76/78	J - - A/C	4	@140	★ D5RY 9B447-A	#757F 9K444-AA,767F 9K464-AA	1
76/78	J - - without P/S and A/C	4	@140	★ D5RY 9B447-B	#757F 9K444-BA,767F 9K464-BA	1
74/78	J	6	⊕171	★ D4RY 9B447-A	#74TF 9K444-AA,76TF 9K464-AA	1
76/78	J - - with P/S, without A/C	4	@140	★ D6RY 9B447-C	#767F 9K464-CA, 757F 9K464-AA	1
74	L	4	▲122	★ C8AZ 9B447-D		1
74/	L - - without A/C	4	@140	D5FZ 9B447-D	#D52E 9B447-D1A,D7A,D42E 9C480-AA,EA	1
77	G,P - - A/T-Calif.	6	250			1
78/	G - - without A/C and P/S	6	250			1
78/	P - - without A/C	4	@140			1
79	J - - without A/C	4	@140			1
74/75	L - - w/built-in A/C-dealer installed	4	@140	★ D4FZ 9B447-C		1
75/	L	6	⊕171	D5ZZ 9B447-B	#D5ZE 9C480-BA,D7ZE 9B447-AA	1
79	J	6	⊕171			1
76/	J,L - - w/built-in A/C- dealer installed	4	@140	E0ZZ 9B447-B		1
79	P - - w/built-in A/C- dealer installed	4	@140			1
78/	P - - A/T	6	200	D4FZ 9B447-B	#D42E 9C480-BA	1
78/	P - - w/Hi-altitude carb.	8	302	★ D5ZZ 9B447-A	#D5ZE 9C480-AA	1
79	J	8	302	E0ZZ 9B447-A	#D9ZE 9B447-A3B, D9ZE 9C480-AA,AB, E0ZE 9C480-AA	1
74/78	J	6	⊕171	E602165-S82	(AB-16) Screw (pulley to airpump) M6 x 14 hex. head	3
79	J	8	302	387054-S2	(BB-574-N)-Screw (pulley to pump) 1/4"-20 x 5/8"	3
74/	A,D,F,G,J,K,L,P,V		All	354476-52	(BB-570)- Screw & washer assy. (pulley to air pump)1/4"-20 x 5/8" hex.hd.	3
9E447	SWITCH ASSY. (EXHAUST GAS RECIRCULATION CONTROL)					
73	A,C,D,F,K,Y	8	351C, 400,429, 460, 460 P/C	★ D3AZ 9E447-B	#D3AF 9E447-AA,BA or BB-not replaced	1

1973/79
LINCOLN-MERCURY CARS

YEAR	MODEL/RESTRICTIONS	ENGINE CYL.	ENGINE C.I.D. (C.C.D.)	PART NUMBER	DESCRIPTION	QTY.
9448	GASKET (EXHAUST MANIFOLD TO CYLINDER HEAD) ▲ 2000 cc @ 2300cc ⊕ 2800 cc					
73/74	J,L	4	▲122	D1FZ 9448-A	Inner	1
				★ D1FZ 9448-B	Outer	3
73	J	6	All	★ D2RY 9448-A		6
79	J	4	@140	D9FZ 9448-B	#D9EE 9448-BA	1
74/	J	6	⊕171	D4RY 9448-A	Use w/oval connecting flange	A/R
75/	L	6	⊕171			A/R
74/	J	6	⊕171	D4RY 9448-B	Use w/round connecting flange	A/R
75/	L	6	⊕171			A/R
74/78	A,C,D,F,K,Y	8	460	D4VY 9448-B	R.H.-#D4VE 9A457-BA	1
				D4VY 9448-A	L.H.-#D4VE 9A457-AA	1
77/	G,V	8	302	D7DZ 9448-A	#D7DE 9448-AB	2
9B448	TUBE ASSY. (EXHAUST AIR SUPPLY MANIFOLD) ⊕ 2800 cc					
74	J - - T/E	6	⊕171	★ D4RY 9B448-A		1
9B448	TUBE ASSY. (EXHAUST AIR SUPPLY PUMP UPPER)-Also refer to group 9B449					
74	A,C,D,F,K,Y - - T/E	8	460	D0SZ 9B448-B		1
75/76	C,F,G	8	351W	D30Z 9B448-A	#D6BE 9B449-AA	1
9D448 ★	VALVE ASSY. (INTEGRAL E.G.R. and BACK PRESSURE-TRANSDUCER)- Also refer to groups 9F452,9D475					

To select the correct EGR valve by knowing the identification number only:

- Check the EGR valve, taken from the vehicle, for an identification part number.
- Refer to the Identification Chart below.
- Find the EGR valve identification part number (sequenced numerically) and find the service part number in the adjacent column.

★

For example:

The service part number for EGR valve identified D7AE 9D448-C1A,C2A,C3A is D7AZ 9D448-C.

IDENTIFICATION CHART

IDENTIFICATION	PART NUMBER	IDENTIFICATION	PART NUMBER
9D448 VALVE ASSY. (INTEGRAL E.G.R and BACK PRESSURE-TRANSDUCER) Also refer to groups 9F452 and 9D475			
D7AE 9D448-C1A	E3PZ 9D448-B	D7AE 9D448-K3A	D7AZ 9D448-K
D7AE 9D448-C2A	E3PZ 9D448-B	D7DE 9D448-B1A	E3PZ 9D448-B
D7AE 9D448-C3A	E3PZ 9D448-B	D7DE 9D448-B2A	E3PZ 9D448-B
D7AE 9D448-D1A	E3PZ 9D448-B	D7DE 9D448-B3A	E3PZ 9D448-B
D7AE 9D448-D2A	E3PZ 9D448-B	D7DE 9D448-D1A	D7DZ 9D448-D
D7AE 9D448-D3A	E3PZ 9D448-B	D7DE 9D448-D2A	D7DZ 9D448-D
D7AE 9D448-E1A	E4PZ 9D448-H	D7DE 9D448-E1A	★ D7DZ 9D448-H
D7AE 9D448-E2A	E4PZ 9D448-H	D7DE 9D448-E2A	★ D7DZ 9D448-H
D7AE 9D448-E3A	E4PZ 9D448-H	D7DE 9D448-E3A	★ D7DZ 9D448-H
D7AE 9D448-F1A	E3PZ 9D448-B	D7DE 9D448-G1A	D7DZ 9D448-G
D7AE 9D448-F2A	E3PZ 9D448-B	D7DE 9D448-G2A	D7DZ 9D448-G
D7AE 9D448-F3A	E3PZ 9D448-B	D7DE 9D448-G3A	D7DZ 9D448-G
D7AE 9D448-G1A	E4PZ 9D448-H	D70E 9D448-B1A	D70Z 9D448-B
D7AE 9D448-G2A	E4PZ 9D448-H	D70E 9D448-B2A	D70Z 9D448-B
D7AE 9D448-G3A	E4PZ 9D448-H	D70E 9D448-B3A	D70Z 9D448-B
D7AE 9D448-H1A	★ D7AZ 9D448-H	D70E 9D448-C1A	E2PZ 9D448-A
D7AE 9D448-H2A	★ D7AZ 9D448-H	D70E 9D448-C3A	E2PZ 9D448-A
D7AE 9D448-H3A	★ D7AZ 9D448-H	D70E 9D448-C3A	E2PZ 9D448-A
D7AE 9D448-K1A	D7AZ 9D448-K	D70E 9D448-D1A	E2PZ 9D448-A
D7AE 9D448-K2A	D7AZ 9D448-K	D70E 9D448-D2A	E2PZ 9D448-A

COPYRIGHT © 1986— FORD MOTOR COMPANY —DEARBORN, MICHIGAN

IDENTIFICATION CHART

IDENTIFICATION	PART NUMBER	IDENTIFICATION	PART NUMBER
9D448 VALVE ASSY. (INTEGRAL E.G.R and BACK PRESSURE-TRANSDUCER) — Cont'd Also refer to groups 9F452 and 9D475 Refer to page 36 for Identification Instructions			
D70E 9D448-D3A	E2PZ 9D448-A	D7UE 9D448-H2A	★ D7UZ 9D448-H
D70E 9D448-E1A	E3PZ 9D448-B	D7UE 9D448-J2A	★ D7UZ 9D448-J
D70E 9D448-E2A	E3PZ 9D448-B	D7VE 9D448-A1A	E2PZ 9D448-A
D70E 9D448-E3A	E3PZ 9D448-B	D7VE 9D448-A2A	E2PZ 9D448-A
D7SE 9D448-A1A	E3PZ 9D448-B	D7VE 9D448-A3A	E2PZ 9D448-A
D7SE 9D448-A2A	E3PZ 9D448-B	D7ZE 9D448-A1A	E3PZ 9D448-A
D7SE 9D448-A3A	E3PZ 9D448-B	D7ZE 9D448-A2A	E3PZ 9D448-A
D7TE 9D448-A1A	E4PZ 9D448-V	D7ZE 9D448-A3A	E3PZ 9D448-A
D7TE 9D448-A2A	E4PZ 9D448-V	D8AE 9D448-A1A	E2PZ 9D448-A
D7TE 9D448-A3A	E4PZ 9D448-V	D8AE 9D448-A2A	E2PZ 9D448-A
D7TE 9D448-B1A	E3PZ 9D448-C	D8AE 9D448-A3A	E2PZ 9D448-A
D7TE 9D448-B2A	E3PZ 9D448-C	D8AE 9D448-B1A	D8AZ 9D448-B
D7TE 9D448-B3A	E3PZ 9D448-C	D8AE 9D448-B2A	D8AZ 9D448-B
D7TE 9D448-C1A	E4PZ 9D448-H	D8AE 9D448-B3A	D8AZ 9D448-B
D7TE 9D448-C2A	E4PZ 9D448-H	D8AE 9D448-C1A	D8AZ 9D448-C
D7TE 9D448-C3A	E4PZ 9D448-H	D8AE 9D448-C2A	D8AZ 9D448-C
D7TE 9D448-E1A	D7TZ 9D448-E	D8AE 9D448-C3A	D8AZ 9D448-C
D7TE 9D448-E2A	D7TZ 9D448-E	D3AE 9D448-D1A	E3PZ 9D448-B
D7TE 9D448-E3A	D7TZ 9D448-E	D8AE 9D448-D2A	E3PZ 9D448-B
D7TE 9D448-F1A	D7TZ 9D448-F	D8AE 9D448-D3A	E3PZ 9D448-B
D7TE 9D448-F2A	D7TZ 9D448-F	D8AE 9D448-F1A	E3PZ 9D448-B
D7TE 9D448-F3A	D7TZ 9D448-F	D8AE 9D448-F2A	E3PZ 9D448-B
D7TE 9D448-G1A	★ D7TZ 9D448-G	D8AE 9D448-F3A	E3PZ 9D448-B
D7TE 9D448-G2A	★ D7TZ 9D448-G	D8BE 9D448-B2A	D8BZ 9D448-B
D7TE 9D448-G3A	★ D7TZ 9D448-G	D8DE 9D448-B1A	D8DZ 9D448-B
D7TE 9D448-H1A	D7TZ 9D448-H	D8DE 9D448-B2A	D8DZ 9D448-B
D7TE 9D448-H2A	D7TZ 9D448-H	D8DE 9D448-B3A	D8DZ 9D448-B
D7TE 9D448-H3A	D7TZ 9D448-H	D80E 9D448-A1A	E3PZ 9D488-B
D7TE 9D448-J1A	D7TZ 9D448-J	D80E 9D448-A2A	E3PZ 9D448-B
D7TE 9D448-J2A	D7TZ 9D448-J	D80E 9D448-A3A	E3PZ 9D448-B
D7TE 9D448-J3A	D7TZ 9D448-J	D80E 9D448-B1A	E3PZ 9D448-B
D7TE 9D448-K1A	E3PZ 9D448-B	D80E 9D448-B2A	E3PZ 9D448-B
D7TE 9D448-K2A	E3PZ 9D448-B	D80E 9D448-B3A	E3PZ 9D448-B
D7TE 9D448-K3A	E3PZ 9D448-B	D80E 9D448-C1A	E3PZ 9D448-B
D7TE 9D448-L1A	★ D7TZ 9D448-L	D80E 9D448-C2A	E3PZ 9D448-B
D7TE 9D448-L2A	★ D7TZ 9D448-L	D80E 9D448-C3A	E3PZ 9D448-B
D7TE 9D448-L3A	★ D7TZ 9D448-L	D80E 9D448-D1A	E3PZ 9D448-C
D7TE 9D448-M1A	E4PZ 9D448-V	D80E 9D448-D2A	E3PZ 9D448-C
D7TE 9D448-M2A	E4PZ 9D448-V	D80E 9D448-D3A	E3PZ 9D448-C
D7TE 9D448-M3A	E4PZ 9D448-V	D8TE 9D448-E1A	E3PZ 9D448-C
D7TE 9D448-N1A	E4PZ 9D448-E	D8TE 9D448-E2A	E3PZ 9D448-C
D7TE 9D448-N2A	E4PZ 9D448-E	D8TE 9D448-E3A	E3PZ 9D448-C
D7TE 9D448-N3A	E4PZ 9D448-E	D8TE 9D448-H2A	D8TZ 9D448-H
D7TE 9D448-S2A	E4PZ 9D448-X	D8TE 9D448-J1A	E3PZ 9D448-C
D7TE 9D448-T2A	D7TZ 9D448-T	D8TE 9D448-J2A	E3PZ 9D448-C
D7UE 9D448-A1A	E4PZ 9D448-Y	D8TE 9D448-J3A	E3PZ 9D448-C
D7UE 9D448-A2A	E4PZ 9D448-Y	D8TE 9D448-K1A	D8TZ 9D448-K
D7UE 9D448-A3A	E4PZ 9D448-Y	D8TE 9D448-K2A	D8TZ 9D448-K
D7UE 9D448-B1A	E4PZ 9D448-D	D8TE 9D448-K3A	D8TZ 9D448-K
D7UE 9D448-B2A	E4PZ 9D448-D	D8TE 9D448-L2A	E4PZ 9D448-V
D7UE 9D448-B3A	E4PZ 9D448-D	D8TE 9D448-M1A	D8TZ 9D448-M
D7UE 9D448-D1A	E3PZ 9D448-A	D8TE 9D448-M2A	D8TZ 9D448-M
D7UE 9D448-D2A	E3PZ 9D448-A	D8TE 9D448-M3A	D8TZ 9D448-M
D7UE 9D448-D3A	E3PZ 9D448-A		

IDENTIFICATION CHART

IDENTIFICATION		PART NUMBER		IDENTIFICATION		PART NUMBER	
9D448	VALVE ASSY. (INTEGRAL E.G.R. and BACK PRESSURE-TRANSDUCER) — Cont'd Also refer to groups 9F452 and 9D475 Refer to page 36 for Identification Instructions						
D8TE	9D448-P1A	E3PZ	9D448-B	D9BE	9D448-A2A	D9BZ	9D448-A
D8TE	9D448-P2A	E3PZ	9D448-B	D9BE	9D448-B1A	E5PZ	9D448-D
D8TE	9D448-P3A	E3PZ	9D448-B	D9BE	9D448-B2A	E5PZ	9D448-D
D8TE	9D448-S2A	D8TZ	9D448-S	D9DE	9D448-A2A	D9DZ	9D448-A
D8TE	9D448-U2A	D8TZ	9D448-U	D9DE	9D448-C2A	D9DZ	9D448-C
D8UE	9D448-D1A	E4PZ	9D448-Y	D9DE	9D448-E1A	D9DZ	9D448-E
D8UE	9D448-E1A	E4PZ	9D448-Y	D9DE	9D448-E2A	D9DZ	9D448-E
D8UE	9D448-E2A	E4PZ	9D448-Y	D9DE	9D448-G1A	D9DZ	9D448-G
D8UE	9D448-E3A	E4PZ	9D448-Y	D9DE	9D448-G2A	D9DZ	9D448-G
D8UE	9D448-F1A	E3PZ	9D448-C	D9DE	9D448-H1A	D9DZ	9D448-H
D8UE	9D448-F2A	E3PZ	9D448-C	D9DE	9D448-H2A	D9DZ	9D448-H
D8UE	9D448-F3A	E3PZ	9D448-C	D90E	9D448-A2A	D90Z	9D448-B
D8UE	9D448-G1A	D8UZ	9D448-G	D90E	9D448-A1B	E3PZ	9D448-B
D8UE	9D448-G2A	D8UZ	9D448-G	D90E	9D448-A2B	E3PZ	9D448-B
D8UE	9D448-G3A	D8UZ	9D448-G	D9SE	9D448-A1A	E2PZ	9D448-A
D8UE	9D448-H2A	D8UZ	9D448-H	D9SE	9D448-A2A	E2PZ	9D448-A
D8UE	9D448-H2B	D8UZ	9D448-M	D9TE	9D448-E2A	D9TZ	9D448-E
D8UE	9D448-L2A	★ D8UZ	9D448-L	D9TE	9D448-F1A	E3PZ	9D448-C
D8VE	9D448-A1A	E2PZ	9D448-A	D9TE	9D448-F2A	E3PZ	9D448-C
D8VE	9D448-A2A	E2PZ	9D448-A	D9TE	9D448-G2A	D9TZ	9D448-G
D8VE	9D448-A3A	E2PZ	9D448-A	D9TE	9D448-K2A	D9TZ	9D448-K
D8VE	9D448-C1A	E2PZ	9D448-A	D9TE	9D448-L2A	D9TZ	9D448-L
D8VE	9D448-C2A	E2PZ	9D448-A	D9TE	9D448-M2A	D9TZ	9D448-M
D8VE	9D448-C3A	E2PZ	9D448-A	D9TE	9D448-N2A	D9TZ	9D448-N
D8ZE	9D448-A1A	D8ZZ	9D448-A	D9TE	9D448-R1A	D9TZ	9D448-R
D8ZE	9D448-A2A	D8ZZ	9D448-A	D9TE	9D448-R2A	D9TZ	9D448-R
D8ZE	9D448-A3A	D8ZZ	9D448-A	D9UE	9D448-A1A	D9UZ	9D448-A
D8ZE	9D448-B1A	D8ZZ	9D448-B	D9UE	9D448-A2A	D9UZ	9D448-A
D8ZE	9D448-B2A	D8ZZ	9D448-B	D9UE	9D448-A3A	D9UZ	9D448-A
D8ZE	9D448-B3A	D8ZZ	9D448-B	D9UE	9D448-D1A	E4PZ	9D448-Y
D8ZE	9D448-D1A	E3PZ	9D448-B	D9UE	9D448-D2A	E4PZ	9D448-Y
D8ZE	9D448-D2A	E3PZ	9D448-B	D9UE	9D448-E1A	E4PZ	9D448-A
D8ZE	9D488-D3A	E3PZ	9D448-B	D9UE	9D448-E2A	E4PZ	9D448-A
D8ZE	9D448-E1A	D8ZZ	9D448-E	D9UE	9D448-F1A	E4PZ	9D448-Y
D8ZE	9D448-E2A	D8ZZ	9D448-E	D9ZE	9D448-A1B	D9ZZ	9D448-A
D8ZE	9D448-E3A	D8ZZ	9D448-E	D9ZE	9D448-A2B	D9ZZ	9D448-A
D8ZE	9D448-F1A	D8ZZ	9D448-F	D9ZE	9D448-B1A	E3PZ	9D448-B
D8ZE	9D448-F2A	D8ZZ	9D448-F	D9ZE	9D448-B2A	E3PZ	9D448-B
D8ZE	9D448-F3A	D8ZZ	9D448-F	D9ZE	9D448-F1A	D9ZZ	9D448-F
D8ZE	9D448-G1A	E5PZ	9D448-E	D9ZE	9D448-F2A	D9ZZ	9D448-F
D8ZE	9D448-G2A	E5PZ	9D448-E	D9ZE	9D448-H1A	E4PZ	9D448-E
D9AE	9D448-F1A	E3PZ	9D448-A	D9ZE	9D448-H2A	E4PZ	9D448-E
D9AE	9D448-F2A	E3PZ	9D448-A	E2PJ	9D448-AA	E2PZ	9D448-A
D9AE	9D448-G1A	D9AZ	9D448-G	E2PJ	9D448-BA	E3PZ	9D448-B
D9AE	9D448-G2A	D9AZ	9D448-G	E3PJ	9D448-AA	E3PZ	9D448-A
D9AE	9D448-H1A	D9AZ	9D448-H	E3PJ	9D448-BA	E3PZ	9D448-B
D9AE	9D448-H2A	D9AZ	9D448-H	E3PJ	9D448-CA	E3PZ	9D448-C
				79TF	9D448-AB	D9FZ	9D448-A

COPYRIGHT © 1986— FORD MOTOR COMPANY —DEARBORN, MICHIGAN

9D448 VALVE ASSY. (INTEGRAL E.G.R. and BACK PRESSURE-TRANSDUCER) Also refer to group 9F452 and 9D475

HOW TO FIND EGR VALVES

To select the correct EGR valve the following information must be known and utilized–

- Year
- Car line (Mercury, Cougar, Monarch, etc.)
- Engine (4 cyl. 2.3L, 6 cyl. 4.1L–250 C.I.D., 8 cyl. 5.8L–351 C.I.D., etc.)
- Transmission (manual, automatic, etc.)
- Other factors (California, hi–altitude, etc.)
- In some cases, more than one service EGR valve may be specified in the catalog based on the above information. In these cases the identification part number shown on the EGR valve is also required.

For example:

If an EGR valve is required for a 1977 Comet with an 8 cylinder 5.0L (302 C.I.D.) engine, automatic transmission, used in Canada and 49 states (except California)–

- Refer to 1977 P (Comet)
- Read down to find "P – – A/T–exc. Calif. 8 (cyl.) 302 (C.I.D.)".

The service part numbers listed for this application are D7DZ 9D448–B and D7DZ 9D448–D. Therefore, to select the correct service part number, the identification part number shown on the EGR valve taken from the vehicle, must be used.

If the EGR identification is D7DE 9D448–B1A, D7DE 9D448–B2A or D7DE 9D448–B3A the service part number is D7DZ 9D448–B. If the EGR identification is D7DE 9D448–D1A, D7DE 9D448–D2A or D7DE 9D448–D3A the service part number is D7DZ 9D448–D.

YEAR	MODEL/RESTRICTIONS	ENGINE CYL.	ENGINE C.I.D. (C.C.D.)	PART NUMBER	DESCRIPTION	QTY.
9D448	VALVE ASSY. (INTEGRAL E.G.R. and BACK PRESSURE-TRANSDUCER)-Also refer to group 9F452 and 9D475					
NOTE:	For gasket-refer to group 9E464					
	1977					
	A (MERCURY)					
77	A – – exc. Calif.	8	351M	E3PZ 9D448-B	*CX-914-A – #D7AE 9D448-D1A,D2A,D3A	1
77	A – – exc. Calif.	8	351M, 400	E3PZ 9D448-B	*CX-914-A – #D7AE 9D448-C1A,C2A,C3A	1
77	A – – Canada	8	351M, 400	D7AZ 9D448-K	*CX-194 – #D7AE 9D448-K1A,K2A,K3A	1
77	A – – Calif.– "Before 4/1/77"	8	400	E3PZ 9D448-B	*CX-914-A – #D7AE 9D448-D1A,D2A,D3A	1
77	A – – w/Hi-altitude carb.	8	400			1
77	A – – Calif.– "From 4/1/77"	8	400	E3PZ 9D448-B	*CX-914-A – #D7DE 9D448-B1A,B2A,B3A	1
77	A – – w/Hi-altitude carb.	8	460	★D7AZ 9D448-H	*CX-172 – #D7AE 9D448-H1A,H2A,H3A	1
77	A(exc. 71)	8	460	E2PZ 9D448-A	*CX-913 – #D7VE 9D448-A1A,A2A,A3A	1
77	A(71)	8	460	E2PZ 9D448-A	*CX-913 – #D70E 9D448-C1A,C2A,C3A	1
	D (LINCOLN)					
77	D – – exc. Calif.	8	400	E3PZ 9D448-B	*CX-914-A – #D7AE 9D448-C1A,C2A,C3A	1
77	D – – Calif.– "Before 4/1/77"	8	400	E3PZ 9D448-B	*CX-914-A – #D7AE 9D448-D1A,D2A,D3A	1
77	D – – Calif.– "From 4/1/77"	8	400	E3PZ 9D448-B	*CX-914-A – #D7DE 9D448-B1A,B2A,B3A	1
77	D – – w/Hi-altitude carb.	8	460	★D7AZ 9D448-H	*CX-172 – #D7AE 9D448-H1A,H2A,H3A	1
77	D	8	460	E2PZ 9D448-A	*CX-913 – #D70E 9D448-C1A,C2A,C3A	1
77	D	8	460	E2PZ 9D448-A	*CX-913-#D7VE 9D448-A1A,A2A,A3A	1

YEAR	MODEL/RESTRICTIONS	ENGINE CYL.	ENGINE C.I.D. (C.C.D.)	PART NUMBER	DESCRIPTION	QTY.
9D448	VALVE ASSY. (INTEGRAL E.G.R. and BACK PRESSURE-TRANSDUCER) Also refer to group 9F452 and 9D475 — Cont'd					
NOTE:	For gasket-refer to group 9E464					
	Refer to page 39 for Application Instructions					

1977

F (COUGAR)

77	F "Before 2/1/77"	8	302	D70Z 9D448-B	*CX-142 - #D70E 9D448-B1A,B2A,B3A	1
77	F "From 2/1/77"	8	302	E3PZ 9D448-B	*CX-914-A-#D7AE 9D448-C1A,C2A,C3A	1
77	F - - w/Hi-altitude carb.	8	351M	E3PZ 9D448-B	*CX-914-A - #D70E 9D448-E1A,E2A,E3A	1
77	F - - Calif.	8	351M	E3PZ 9D448-B	*CX-914-A - #D7TE 9D448-K1A,K2A,K3A	1
77	F - - exc. Calif.	8	351M	E3PZ 9D448-B	*CX-914-A - #D7AE 9D448-D1A,D2A,D3A	1
77	F - - Canada	8	351M, 400	D7AZ 9D448-K	*CX-194 - #D7AE 9D448-K1A,K2A,K3A	1
77	F - - exc. Calif.	8	351M, 400	E3PZ 9D448-B	*CX-914-A - #D7AE 9D448-C1A,C2A,C3A	1
77	F	8	351W	D70Z 9D448-B	*CX-142 - #D70E 9D448-B1A,B2A,B3A	1
77	F	8	351W	E2PZ 9D448-A	*CX-913 - #D70E 9D448-D1A,D2A,D3A	1
77	F - - Calif.- "Before 4/1/77"	8	400	E3PZ 9D448-B	*CX-914-A - #D7AE 9D448-D1A,D2A,D3A	1
77	F - - w/Hi-altitude carb.	8	400			1
77	F - - Calif.- "From 4/1/77"	8	400	E3PZ 9D448-B	*CX-914-A - #D7DE 9D448-B1A,B2A,B3A	1
77	F	8	400	E3PZ 9D448-B	*CX-914-A - #D7SE 9D448-A1A,A2A,A3A	1

G (MONARCH)

77	G	8	302	E3PZ 9D448-B	*CX-914-A - #D7DE 9D448-B1A,B2A,B3A	1
77	G - - w/Hi-altitude carb.	8	302	E4PZ 9D448-D	*CX-1050 - #D7UE 9D448-B1A,B2A,B3A	1
77	G - - Calif.	8	302	D7TZ 9D448-J	*CX-179 - #D7TE 9D448-J1A,J2A,J3A	1
77	G - - M/T	8	302	E3PZ 9D448-B	*CX-914-A - #D7AE 9D448-F1A,F2A,F3A	1
77	G	8	351W	E3PZ 9D448-A	*CX-940 - #D7UE 9D448-D1A,D2A,D3A	1

K (MARK V)

77	K - - exc. Calif.	8	400	E3PZ 9D448-B	*CX-914-A - #D7AE 9D448-C1A,C2A,C3A	1
77	K - - Calif.- "Before 4/1/77"	8	400	E3PZ 9D448-B	*CX-914-A - #D7AE 9D448-D1A,D2A,D3A	1
77	K - - Calif.- "From 4/1/77"	8	400	E3PZ 9D448-B	*CX-914-A - #D7DE 9D448-B1A,B2A,B3A	1
77	K - - w/Hi-altitude carb.	8	460	★D7AZ 9D448-H	*CX-172 - #D7AE 9D448-H1A,H2A,H3A	1
77	K	8	460	E2PZ 9D448-A	*CX-913 - #D70E 9D448-C1A,C2A,C3A	1
77	K	8	460	E2PZ 9D448-A	*CX-913-#D7VE 9D448-A1A,A2A,A3A	1

P (COMET)

77	P - - A/T-exc. Calif.	8	302	E3PZ 9D448-B	*CX-914-A-#D7DE 9D448-B1A,B2A,B3A	1
77	P - - A/T with A/C-exc. Calif.	8	302	D7DZ 9D448-D	*CX-134 - #D7DE 9D448-D1A,D2A,D3A	1
77	P - - A/T-Calif.	8	302	D7DZ 9D448-G	*CX-143 - #D7DE 9D448-G1A,G2A,G3A	1
77	P - - w/Hi-altitude carb.	8	302	D7UZ 9D448-B	*CX-196 - #D7UE 9D448-B1A,B2A,B3A	1

V (VERSAILLES)

77	V - - Calif.	8	302	D7TZ 9D448-H	*CX-185-#D7TE 9D448-H1A,H2A,H3A	1
77	V - - Calif.	8	302	D7TZ 9D448-J	*CX-179 - #D7TE 9D448-J1A,J2A,J3A	1
77	V	8	351W	D7UZ 9D448-D	*CX-152 - #D7UE 9D448-D1A,D2A,D3A	1

1978

A (MERCURY)

78	A - - Canada	8	351M	E3PZ 9D448-C	*CX-915-A - #D80E 9D448-D1A,D2A,D3A- incl. (1) D7AZ 9E464-E gasket	1
78	A - - exc. Calif.- "Before 9/1/77"	8	351M	E3PZ 9D448-B	*CX-914-A - #D8AE 9D448-F1A,F2A,F3A- incl. (1) D7AZ 9E464-E gasket	1
78	A - - exc. Calif.- "From 9/1/77"	8	351M	E3PZ 9D448-B	*CX-914-A - #D8ZE 9D448-D1A,D2A,D3A- incl. (1) D7AZ 9E464-E gasket	1

COPYRIGHT © 1986— FORD MOTOR COMPANY —DEARBORN, MICHIGAN

1973/79 LINCOLN-MERCURY CARS

YEAR	MODEL/RESTRICTIONS	ENGINE CYL.	ENGINE C.I.D. (C.C.D.)	PART NUMBER	DESCRIPTION	QTY.

9D448 VALVE ASSY. (INTEGRAL E.G.R. and BACK PRESSURE-TRANSDUCER) Also refer to group 9F452 and 9D475 — Cont'd
NOTE: For gasket-refer to group 9E464
Refer to page 39 for Application Instructions

1978

A (MERCURY)

78	A - - w/2.47 axle ratio-exc. Calif.	8	400	D8AZ 9D448-C	*CX-283 - #D8AE 9D448-C1A,C2A,C3A-incl. (1) D7AZ 9E464-E gasket	1
78	A - - w/2.75/3.00 axle ratio-exc. Calif.	8	400	E3PZ 9D448-B	*CX-914-A - #D8AE 9D448-D1A,D2A,D3A-incl. (1) D7AZ 9E464-E gasket	1
78	A - - Calif.	8	400	E3PZ 9D448-B	*CX-914-A - #D8ZE 9D448-D1A,D2A,D3A-incl. (1) D7AZ 9E464-E gasket	1
78	A - - w/Hi-altitude carb.	8	400	D8AZ 9D448-B	*CX-252 - #D8AE 9D448-B1A,B2A,B3A-incl. (1) D7AZ 9E464-E gasket	1
78	A	8	460	E2PZ 9D448-A	*CX-913 - #D8VE 9D448-A1A,A2A,A3A-incl. (1) D7AZ 9E464-E gasket	1
78	A	8	460	E2PZ 9D488-A	*CX-913-#D8VE 9D448-C1A,C2A,C3A incl. (1) D7AZ 9E464-E gasket	1

D (LINCOLN)

78	D - - exc. Calif.	8	400	E3PZ 9D448-B	*CX-914-A - #D8AE 9D448-D1A,D2A,D3A-incl. (1) D7AZ 9E464-E gasket	1
78	D - - Calif.	8	400	E3PZ 9D448-B	*CX-914-A - #D8ZE 9D448-D1A,D2A,D3A-incl. (1) D7AZ 9E464-E gasket	1
78	D - - w/Hi-altitude carb.	8	400	D8AZ 9D448-B	*CX-252 - #D8AE 9D448-B1A,B2A,B3A-incl. (1) D7AZ 9E464-E gasket	1
78	D	8	460	D8VY 9D448-C	*CX-297 - #D8VE 9D448-C1A,C2A,C3A-incl. (1) D7AZ 9E464-E gasket	1

F (COUGAR)

78	F	8	302	E3PZ 9D448-B	*CX-914-A - #D80E 9D448-A1A,A2A,A3A-incl. (1) D7AZ 9E464-E gasket	1
78	F - - Calif.	8	351M	E3PZ 9D448-B	*CX-914-A - #D80E 9D448-B1A,B2A,B3A-incl. (1) D7AZ 9E464-E gasket	1
78	F - - Canada	8	351M	E3PZ 9D448-C	*CX-915-A - #D80E 9D448-D1A,D2A,D3A-incl. (1) D7AZ 9E464-E gasket	1
78	F - - w/o T/E-exc. Calif. & Canada	8	351M	E3PZ 9D448-B	*CX-914-A - #D8AE 9D448-D1A,D2A,D3A-incl. (1) D7AZ 9E464-E gasket	1
78	F - - w/T/E-exc. Calif. & Canada	8	351M	E3PZ 9D488-B	*CX-914-A - #D80E 9D448-C1A,C2A,C3A-incl. (1) D7AZ 9D464-E gasket	1
78	F - - w/Hi-altitude carb.	8	351M, 400	D8AZ 9D448-B	*CX-252 - #D8AE 9D448-B1A,B2A,B3A-incl. (1) D7AZ 9E464-E gasket	1
78	F	8	351W	E2PZ 9D448-A	*CX-913 - #D8AE 9D448-A1A,A2A,A3A-incl. (1) D7AZ 9D464-E gasket	1
78	F - - exc. Calif.	8	400	E2PZ 9D448-A	*CX-913 - #D8AE 9D448-A1A,A2A,A3A-incl. (1) D7AZ 9E464-E gasket	1
78	F - - exc. Calif.	8	400	D8AZ 9D448-C	*CX-283 - #D8AE 9D448-C1A,C2A,C3A-incl. (1) D7AZ 9E464-E gasket	1
78	F - - Calif.	8	400	E3PZ 9D488-B	*CX-914-A - #D8ZE 9D448-D1A,D2A,D3A-incl. (1) D7AZ 9E464-E gasket	1

G (MONARCH)

78	G - - M/T	8	302	E3PZ 9D448-C	*CX-915-A - #D8UE 9D448-F1A,F2A,F3A-incl. (1) D7AZ 9E464-E gasket	1
78	G - - A/T-exc. Calif.	8	302	E2PZ 9D448-A	*CX-913-#D8AE 9D448-A1A,A2A,A3A-incl. (1) D7AZ 9E464-E	1
78	G - - A/T-exc. Calif.	8	302	E5PZ 9D448-E	*CX-1057-A-#D8ZE 9D448-G1A,G2A-incl. (1) D7AZ 9E464-E gasket	1
78	G - - A/T-Calif.	8	302	D8ZZ 9D448-E	*CX-280 - #D8ZE 9D448-E1A,E2A,E3A-incl. (1) D7AZ 9E464-E gasket	1
78	G - - w/Hi-altitude carb.	8	302	D8TZ 9D448-K	*CX-268 - #D8TE 9D448-K1A,K2A,K3A-incl. (1) D7AZ 9E464-E gasket	1

YEAR	MODEL/RESTRICTIONS	ENGINE CYL.	ENGINE C.I.D. (C.C.D.)	PART NUMBER	DESCRIPTION	QTY.
9D448	VALVE ASSY. (INTEGRAL E.G.R. and BACK PRESSURE-TRANSDUCER) Also refer to group 9F452 and 9D475 — Cont'd					
NOTE:	For gasket-refer to group 9E464					
	Refer to page 39 for Application Instructions					
	1978					
	K (MARK V)					
78	K - - exc. Calif.	8	400	E3PZ 9D448-B	*CX-914-A - #D8AE 9D448-D1A,D2A,D3A- incl. (1) D7AZ 9E464-E gasket	1
78	K - - Calif.	8	400	E3PZ 9D448-B	*CX-914-A - #D8ZE 9D448-D1A,D2A,D3A- incl. (1) D7AZ 9E464-E gasket	1 1
78	K - - w/Hi-altitude carb.	8	400	D8AZ 9D448-B	*CX-252 - #D8AE 9D448-B1A,B2A,B3A- incl. (1) D7AZ 9E464-E gasket	1
78	K	8	460	E2PZ 9D488-A	*CX-913 - #D8VE 9D448-C1A,C2A,C3A incl. (1) D7AZ 9E464-E gasket	1
	P (ZEPHYR)					
78	P - - A/T-Calif.	6	200	D8BZ 9D448-B	*CX-242 - #D8BE 9D448-B1A,B2A,B3A- incl. (1) D7AZ 9E464-E gasket	1
78	P	8	302	D8ZZ 9D448-E	*CX-280 - #D8ZE 9D448-E1A,E2A,E3A- incl. (1) D7AZ 9E464-E gasket	1
78	P - - A/T-w/Hi-altitude carb.	8	302	E3PZ 9D448-C	*CX-915-A - #D8TE 9D448-J1A,J2A,J3A- incl. (1) D7AZ 9E464-E gasket	1
	V (VERSAILLES)					
78	V	8	302	D8ZZ 9D448-E	*CX-280 - #D8ZE 9D448-E1A,E2A,E3A- incl. (1) D7AZ 9D464-E gasket	1
78	V - - w/Hi-altitude carb.	8	302	D8TZ 9D448-K	*CX-268 - #D8TE 9D448-K1A,K2A,K3A- incl. (1) D7AZ 9E464-E gasket	1
	1979					
	A (MERCURY)					
79	A - - Calif.	8	302	D9AZ 9D448-H	*CX-381 - #D9AE 9D448-H1A,H2A- incl. (1) D7AZ 9E464-E gasket	1
79	A - - Canada	8	351W	E2PZ 9D448-A	*CX-913 - #D9SE 9D448-A1A,A2A- incl. (1) D7AZ 9E464-E gasket	1
79	A - - with 2.26 axle ratio- exc. Calif.	8	302	E3PZ 9D488-A	*CX-940-#D9AE 9D448-F1A,F2A- incl. (1) D7AZ 9E464-E gasket	1
79	A - - with 3.08 axle ratio- exc. Calif.	8	302	E3PZ 9D448-B	*CX-914-A-#D90E 9D448-A1B,A2B- incl. (1) D7AZ 9E464-E gasket	1
79	A - - with 2.73 axle ratio- exc. Calif.	8	302	D90Z 9D448-B	*CX-408-#D90E 9D448-A2A-incl. (1) D7AZ 9E464-E gasket	1
	D (LINCOLN)					
79	D "Before 2/5/79"	8	400	E3PZ 9D488-B	*CX-914-A-#D8ZE 9D448-D1A,D2A,D3A- incl. (1) D7AZ 9E464-E gasket	1
79	D "From 2/5/79"	8	400	E3PZ 9D448-B	*CX-914-A -#D80E 9D448-B1A,B2A,B3A- incl. (1) D7AZ 9E464-E gasket	1
79	D - - w/Hi-altitude carb.	8	400	D8AZ 9D448-B	*CX-252-#D8AE 9D448-B1A,B2A,B3A- incl. (1) D7AZ 9E464-E gasket	1
	F (COUGAR)					
79	F - - exc. Calif. "Before 2/5/79"	8	302	E3PZ 9D448-B	*CX-914-A - #D90E 9D448-A1B,A2B- incl. (1) D7AZ 9E464-E gasket	1
79	F - - exc. Calif. "From 2/5/79"	8	302	D9TZ 9D448-R	*CX-413-#D9TE 9D448-R1A,R2A incl (1) D7AZ 9E464-E gasket	1

COPYRIGHT © 1986— FORD MOTOR COMPANY —DEARBORN, MICHIGAN

1973/79 LINCOLN-MERCURY CARS

YEAR	MODEL/RESTRICTIONS	ENGINE CYL.	ENGINE C.I.D. (C.C.D.)	PART NUMBER	DESCRIPTION	QTY.
9D448	VALVE ASSY. (INTEGRAL E.G.R. and BACK PRESSURE-TRANSDUCER)-Also refer to groups 9F452 and 9D475 — Cont'd					
NOTE:	For gasket-refer to group 9E464					
	Refer to page 39 for Application Instructions					

1979

F (COUGAR)

79	F - - w/Hi-altitude carb.	8	351M	D8AZ 9D448-B	*CX-252-#D8AE 9D448-B1A,B2A,B3A-incl. (1) D7AZ 9E464-E gasket	1
79	F - - exc. Calif. "Before 3/5/79"	8	351M	D8AZ 9D448-F	*CX-285-#D8AE 9D448-F1A,F2A,F3A-incl. (1) D7AZ 9E464-E gasket	1
79	F - - exc. Calif. "From 3/5/79"	8	351M	D80Z 9D448-C	*CX-287 -#D80E 9D448-C1A,C2A,C3A-incl. (1) D7AZ 9E464-E gasket	1
79	F - - Calif.	8	351M	E3PZ 9D448-B	*CX-914-A-#D80E 9D448-B1A,B2A,B3A-incl. (1) D7AZ 9E464-E gasket	1
79	F	8	351W	E2PZ 9D448-A	*CX-913 - #D9SE 9D448-A1A,A2A-incl. (1) D7AZ 9E464-E gasket	1

G (MONARCH)

79	G - - M/T	6	250	D9DZ 9D448-A	*CX-319 - #D9DE 9D448-A2A-incl. (1) D7AZ 9E464-E gasket	1
79	G - - A/T-Calif.	6	250	D9DZ 9D448-C	*CX-382 - #D9DE 9D448-C2A-incl. D7AZ 9E464-E gasket	1
79	G - - M/T-exc. Calif.	8	302	D9DZ 9D448-G	*CX-383 - #D9DE 9D448-G1A,G2A-incl. (1) D7AZ 9E464-E gasket	1
79	G - - A/T-exc. Calif.	8	302	D9DZ 9D448-E	*CX-390 -#D9DE 9D448-E1A,E2A-incl. (1) D7AZ 9E464-E gasket	1
79	G - - A/T-exc. Calif.	8	302	D9DZ 9D448-H	*CX-389 - #D9DE 9D448-H1A,H2A-incl. (1) D7AZ 9E464-E gasket	1
79	G - - A/T-Calif.	8	302	D9AZ 9D448-G	*CX-395 - #D9AE 9D448-G1A,G2A-incl. (1) D7AZ 9E464-E gasket	1
79	G - - w/Hi-altitude carb.	8	302	E4PZ 9D448-E	*CX-1051-#D9ZE 9D448-H1A,H2A incl. (1) D7AZ 9E464-E gasket	1

J (CAPRI)

79	J - - A/T-Calif.	6	⊕171	D9FZ 9D448-A	*CX-402-#79TF 9D448-AB-incl. (1) D7VZ 9E464-A	1
79	J - - A/T-exc. Calif.	8	302	E3PZ 9D448-B	*CX-914-A - #D9ZE 9D448-B1A,B2A-incl. (1) D7AZ 9E464-E gasket	1
79	J - - A/T-Calif.	8	302	D9AZ 9D448-G	*CX-395 - #D9AE 9D448-G1A,G2A-incl. (1) D7AZ 9E464-E gasket	1
79	J - - M/T-exc. Calif.	8	302	D9ZZ 9D448-A	*CX-323 - #D9ZE 9D448-A1B,A2B-incl. (1) D7AZ 9E464-E gasket	1

K (MARK)

79	K	8	400	D8ZZ 9D448-D	*CX-294-#D8ZE 9D448-D1A,D2A,D3A-incl. (1) D7AZ 9E464-E	1
79	K - - W/Hi-altitude carb.	8	400	D8AZ 9D448-B	*CX-252-#D8AE 9D448-B1A,B2A,B3A-incl. (1) D7AZ 9E464-E gasket	1

L (BOBCAT)

79	L - - A/T Calif.	6	⊕171	D9FZ 9D448-A	*CX-402-#79TF 9D448-AB incl. (1) D7VZ 9E464-A gasket	1

P (ZEPHYR)

79	P - - A/T-Calif.	6	200	D9BZ 9D448-A	*CX-392 - #D9BE 9D448-A2A-incl. (1) D7AZ 9E464-E gasket	1
79	P - - M/T-exc. Calif.	8	302	E5PZ 9D448-D	*CX-1062-A - #D9BE 9D448-B1A,B2A-incl. (1) D7AZ 9E464-E gasket	1
79	P - - A/T-exc. Calif.	8	302	D8ZZ 9D448-E	*CX-280-#D8ZZ 9D448-E1A,E2A-incl. (1) D7AZ 9E464-E gasket	1

YEAR	MODEL/RESTRICTIONS	ENGINE CYL.	ENGINE C.I.D. (C.C.D.)	PART NUMBER	DESCRIPTION	QTY.
9D448	VALVE ASSY. (INTEGRAL E.G.R. and BACK PRESSURE-TRANSDUCER)-Also refer to groups 9F452 and 9D475 — Cont'd					
NOTE:	For gasket-refer to group 9E464					
	Refer to page 39 for Application Instructions					
	1979					
	P (ZEPHYR)					
79	P - - A/T - Calif.	8	302	E3PZ 9D448-B	*CX-914-A-#D8AE 9D448-D1A,D2A-incl. (1) D7AZ 9E464-E gasket	1
79	P - - w/Hi-altitude carb.	8	302	D8TZ 9D448-J	*CX-298-#D8TE 9D448-J1A,J2A,J3A-incl. (1) D7AZ 9E464-E gasket	1
	V (VERSAILLES)					
79	V - - Calif. without EEC	8	302	D80Z 9D448-A	*CX-253-#D80E 9D448-A1A-incl.(1) D7AZ 9E464-E gasket	1
9449	SPRING (EXHAUST THERMOSTAT CONTROL VALVE)					
73	A,C,D,K,Y	8	429,460, 460 P/C	C70Z 9449-A		1
9B449	TUBE ASSY. (EXHAUST AIR SUPPLY MANIFOLD)-Also refer to group 9B448 & 9B445 ⊕ 2800 cc					
75/76	A,C,D,F,K,Y	8	460, 460 P/C	D5VY 9B449-A	#D5VE 9B449-AB	1
77/78	A,D,K	8	460			1
75/76	G,P	8	302	★ D5ZZ 9B449-A		1
75/	L	6	⊕171	D5ZZ 9B449-B	Includes check valve	1
76/	J	6	⊕171			1
77/	F,G,V	8	302	D7DZ 9B449-B	#D7DE 9B449-BA	1
78	P	8	302			1
79	A,J	8	302			1
77	P	8	302	D7DZ 9B449-C	#D7BE 9B449-AA	1
77/78	F,V	8	351W	D7DZ 9B449-A	#D7DE 9B449-AA	1
79	A,F	8	351W	D9AZ 9B449-A	#D9AE 9B449-AA	1
77/	F,G,J,P,V	8	302, 351W	384720-S100	(BB-545-AD)-bolt(air supply tube to cylinder head)-5/16-18 x 1 1/2" hex washer head	2
9F449	SILENCER (EXHAUST AIR SUPPLY-PULSE AIR)					
78/	P - - T/E - Pulsed air type	6	200	D8BZ 9F449-B	#D8BE 9G427-AA,A1A,BA,B2A,C2A	1
79	J	6	200			1
9450	GASKET (EXHAUST MANIFOLD TO MUFFLER INLET PIPE)-Refer to sizes and Model Requirements as listed below - Also refer to group 9A427 and 9A435 ▲ 2000 cc @ 2300 cc ⊕ 2800 cc ♦ 2600 cc					
73/	A,C,D,F,G,K,P,V,Y	6&8	All	D0DZ 9450-A	1.79" I.D. x 2.50" O.D. x .62" thick	AR
				D0AZ 9450-A	1.86" I.D. x 2.75" O.D. x .78" thick	AR
				C6AZ 9450-D	2.03" I.D. x 2.50" O.D. x .58" thick	AR
				C8LY 9450-A	2.14" I.D. x 3.12" O.D. x .78" thick	AR
				C8SZ 9450-A	2.40" I.D. x 3.12" O.D. x .80" thick	AR
73/74	J	4	▲122	D1RY 9450-A		1
73/74	J	6	♦159, ⊕171	D0RY 9450-A		2
76/	J - - Calif.	4	@140	D5RY 9450-A	1.69" I.D. x 2.24" O.D. x .55" thick	1
76/	J	6	⊕171			2
74	L	4	▲122	D1FZ 9450-A	1.90" I.D. x 2.38" O.D. x .63" thick	1

COPYRIGHT © 1986— FORD MOTOR COMPANY —DEARBORN, MICHIGAN

1973/79 LINCOLN–MERCURY CARS

YEAR	MODEL/RESTRICTIONS	ENGINE CYL.	ENGINE C.I.D. (C.C.D.)	GASKET PART NUMBER	GASKET QTY.	HEAT VALVE or SPACER PART NUMBER	HEAT VALVE or SPACER QTY.	DESCRIPTION
9450	GASKET (EXHAUST MANIFOLD TO MUFFLER INLET PIPE) – refer to sizes and Model Requirements as listed below – Also refer to group 9A427 and 9A435 ▲ 2000 cc @ 2300 cc ⊕ 2800 cc ♦ 2600 cc							
	A (Mercury)							
73	A	8	351C	Not required		Not required		
73/74	A	8	400	Not required		Not required		
73	A	8	429,460	C8SZ 9450–A	2	Not required		
74	A	8	460	C8SZ 9450–A	2	Not required		
75/78	A	8	460	Not required		Not required		
76	A – – w/heat valve	8	351M, 400	Not required		D5AZ 9A427–A	1	
76/78	A – – w/spacer	8	351M, 400	Not required		D5AZ 9A435–A	1	
79	A	8	302, 351W	Not required		Not required		
	C (Montego)							
73/74	C	6	250	C6AZ 9450–D	1	Not required		
73/74	C	8	302	C6AZ 9450–D	2	Not required		
73/74	C	8	351W–2/B	D0AZ 9450–A	2	Not required		
73/74	C	8	351C–2/B 400	Not required		Not required		
73/74	C	8	351–4/B	Not required		Not required		
73	C	8	429,460	C8LY 9450–A	2	Not required		
74	C	8	460	C8LY 9450–A	2	Not required		
75/76	C – – w/heat valve	8	351W	Not required		D50Z 9A427–B	1	
75/76	C – – w/heat valve	8	351M, 400	Not required		D5AZ 9A427–A	1	
75/76	C – – w/spacer	8	351,400	Not required		D5AZ 9A435–A	1	
75/76	C	8	460	Not required		Not required		
	D (Lincoln)							
73/74	D	8	460	C8LY 9450–A	2	Not required		
75/78	D	8	460	Not required		Not required		
77/	D	8	400	Not required		D5AZ 9A435–A	1	
	F (Cougar)							
73/74	F	8	351C–2/B, &4/B	Not required		Not required		
74	F	8	351W–2/B	D0AZ 9450–A	2	Not required		
74	F	8	400	Not required		Not required		
74	F	8	460	C8LY 9450–A	2	Not required		
75/76	F – – w/heat valve	8	351W	Not required		D50Z 9A427–B	1	
75/76	F – – w/heat valve	8	351M, 400	Not required		D5AZ 9A427–A	1	
75/78	F – – w/spacer	8	351 ,400	Not required		D5AZ 9A435–A	1	
75/76	F	8	460	Not required		Not required		
77/	F	8	302	Not required		D70Z 9A435–A	1	
79	F	8	351	Not required		D5AZ 9A435–A	1	
	G (Monarch)							
75	G – – w/o Converter	6	200	C6AZ 9450–D	1	Not required		
75	G – – w/Converter	6	200	D0DZ 9450–A	1	Not required		
75/	G	6	250	C6AZ 9450–D	1	Not required		
75/76	G	8	302	C6AZ 9450–D	1	D50Z 9A427–A	1	
75/76	G	8	351W	C6AZ 9450–D	2	D50Z 9A427–A	1	
76/77	G	6	200	D0DZ 9450–A	1	Not required		
77/	G – – w/converter	8	302	C6AZ 9450–D	2	Not required		U.S.
77/	G – – w/o converter	8	302	C6AZ 9450–D	2	D50Z 9A427–A	1	Canada
77	G	8	351W	C6AZ 9450–D	2	Not required		

1973/79
LINCOLN-MERCURY CARS

YEAR	MODEL/RESTRICTIONS	ENGINE CYL.	ENGINE C.I.D. (C.C.D.)	GASKET PART NUMBER	GASKET QTY.	HEAT VALVE or SPACER PART NUMBER	HEAT VALVE or SPACER QTY.	DESCRIPTION
9450	GASKET (EXHAUST MANIFOLD TO MUFFLER INLET PIPE) – refer to sizes and Model Requirements — Cont'd as listed below – Also refer to group 9A427 and 9A435 ▲ 2000 cc @ 2300 cc ⊕ 2800 cc ♦ 2600 cc							
	J (Capri)							
73/74	J	4	▲122	D1RY 9450–A	1	Not required		
73/74	J	6	All	D0RY 9450–A	2	Not required		
76/78	J – – exc. Calif.	4	@140	Not required		Not required		
76/78	J – – Calif.	4	@140	D5RY 9450–A	1	Not required		
76/78	J	6	⊕171	D5RY 9450–A	2	D5RY 9A435–A	1	
79	J	4	@140	Not required		Not required		
79	J	6	⊕171	Not required		Not required		
79	J	6	200	D0DZ 9450–A	1	Not required		
79	J	8	302	Not required		Not required		
	K (Mark IV, Mark V)							
73/74	K	8	460	C8LY 9450–A	2	Not required		
75/78	K	8	460	Not required		Not required		
77/	K	8	400	Not required		D5AZ 9A435–A	1	
	L (Bobcat)							
74	L	4	▲122	D1FZ 9450–A	1	Not required		
74/78	L	4	@140	Not required		Not required		
75/76	L	6	⊕171	Not required		D5FZ 9A427–A	1	
77/	L	6	⊕171	Not required		Not required		
	P (Comet)							
73/77	P	6	200	D0DZ 9450–A	1	Not required		
73/77	P	6	250	C6AZ 9450–D	1	Not required		
73	P	8	302	C6AZ 9450–D	2	Not required		
74	P – – exc. Calif.	8	302	C6AZ 9450–D	2	Not required		
74	P – – Calif.	8	302	C6AZ 9450–D	2	D4DZ 9A427–B	1	T/E
75/76	P	8	302	C6AZ 9450–D	2	D50Z 9A427–A	1	
77	P – – w/converter	8	302	C6AZ 9450–D	2	Not required		U.S.
77	P – – w/o converter	8	302	C6AZ 9450–D	2	D50Z 9A427–A	1	Canada
	P (Zephyr)							
78/	P	4	@140	Not required		Not required		
78/	P	6	200	D0DZ 9450–A	1	Not required		
78/	P	8	302	C6AZ 9450–D	1	Not required		
	V (Versailles)							
77/	V	8	302	C6AZ 9450–D	2	Not required		
77	V	8	351W	C6AZ 9450–D	2	Not required		
	Y (Meteor)							
73	Y	8	351W	D0AZ 9450–A	2	Not required		
73	Y	8	400	Not required		Not required		
73	Y	8	429,460	C8SZ 9450–A	2	Not required		
74	Y	8	351,400	Not required		Not required		
74	Y	8	460	C8SZ 9450–A	2	Not required		
75/76	Y – – w/heat valve	8	351,400	Not required		D5AZ 9A435–A	1	
75/76	Y – – w/spacer	8	351,400	Not required		D5AZ 9A435–A	1	
75/76	Y	8	460	Not required		Not required		

COPYRIGHT © 1986 — FORD MOTOR COMPANY — DEARBORN, MICHIGAN

1973/79 LINCOLN-MERCURY CARS

YEAR	MODEL/RESTRICTIONS	ENGINE CYL.	ENGINE C.I.D. (C.C.D.)	PART NUMBER	DESCRIPTION	QTY.
9B450	BRACKET (EXHAUST AIR SUPPLY PUMP)-Also refer to group 10A313, 10156 and 2882 ▲ 2000 cc @ 2300 cc ⊕ 2800 cc					
73	A,C,Y	8	429,460	D0VY 9B450-A	#D4VE 9B450-AA- Use as alternator mtg. bracket	1
73	D,K	8	460		Use as alternator mtg. bracket	1
74/76	A,C,F,Y	8	460		Use as alternator & air pump mtg. bracket	1
74/76	D,K-w/o heated w/s	8	460		Use as alternator & air pump mtg. bracket	1
77/78	A,D,K	8	460		Use as alternator & air pump mtg. bracket	1
74	A,C,F,Y	8	351C, 400	D3AZ 9B450-A	#D3AE 9B450-AA	1
75/76	A,C,F,Y	8	351M, 400			1
77/78	A,F	8	351M			1
77/78	A,D,F,K	8	400			1
75/76	G,P	6	200	★ D5DZ 9B450-B	#D5DE 9B450-AA,AB	1
77	G,P	6	200	★ D7DZ 9B450-B	#D7BE 9B450-BA	1
76/	G - - with A/C	6	250	D6DZ 9B450-A	#D6DE 9C476-AA	1
78/	G - - with P/S, without A/C	6	250			1
78/	G - - with P/S and dealer installed A/C	6	250	D8DZ 9B450-B		1
77	G - - without A/C	6	250	D7DZ 9B450-C	#D7BE 9B450-CC	1
77	P	6	250			1
78/	G - - without P/S, without A/C	6	250			1
74/75	J	6	⊕171	★ D4RY 9B450-A		1
76/78	J	6	⊕171	★ D6RY 9B450-A	Not replaced	1
74	J - - Calif.	4	▲122	★ D4RY 9P780-A	#74HF 9P780-BB-Mounts on R.H. side-not replaced	1
76/78	J - - without A/C	4	@140	★ D5RY 9B450-A	#757F 9C476-CA	1
76/78	J - - A/C	4	@140	★ D5RY 9B450-B	#757F 9A450-BA-r/b D5FZ 2888-B	1
74/76	D,K - - w/heated W/S	8	460	★ D4SZ 9B450-A	#D4SE 9B450-AA-use w/Sierracin system	1
74	L - - without A/C	4	▲122	★ D4FZ 9B450-B	#D42E 9C476-AA,AB	1
74	L - - without A/C	4	@140	★ D4FZ 9B450-A	#D42E 9B450-AB,AC,AD	1
74	L - - with A/C-dealer installed	4	@140	★ D4FZ 9B450-C		1
75/78	L - - without A/C	4	@140	★ D5FZ 9B450-B	#D52E 9B450-BA	1
78	P - - without A/C	4	@140			1
79	J - - without A/C "Before 4/2/79"	4	@140TC			1
79	J - - without A/C "From 4/2/79"	4	@140TC	E0ZZ 9B450-B	#D9ZE 9B450-BA, E0ZZ 9B450-BA	1
75/	L	6	⊕171	★ D5FZ 9B450-A	#D52E 9B450-AA	1
79	J	6	⊕171			1
74	P	6	200	★ D4DZ 9B450-B	#D4DE 9B450-BA,BB	1
74	P	8	302	D30Z 9B450-A	#D30E 9B450-AA	1
75/76	C,G,P	8	302, 351W			1
77/78	P,V	8	302			1
77/78	G,V	8	351W			1
75/	F	8	302, 351W			1
77/	G	8	302			1
74	P - - without P/S	6	250	★ D4DZ 9B450-A	#D4DE 9B450-AA	1
75/76	G,P	6	200,250			1
78/	P	6	200	D8BZ 9B450-B	#D8BE 9B450-AB, E3PZ 9B450-AA	1
79	F	8	351M	★ D9AZ 9B450-B	#D9AE 9B450-BA	1
79	D,K	8	400			1
79	A	8	302,351W	D9AZ 9B450-C	#D9AE 9B450-CA	1

YEAR	MODEL/RESTRICTIONS	ENGINE CYL.	ENGINE C.I.D. (C.C.D.)	PART NUMBER	DESCRIPTION	QTY.
9B450	BRACKET (EXHAUST AIR SUPPLY PUMP)-Also refer to group 10A313,10156 and 2888 — Cont'd ▲ 2000cc @ 2300cc ⊕ 2800cc					
79	L,P - - without A/C- "Before 3/5/79"	4	@140	D9FZ 9B450-A	#D9EE 9B450-AA	1
79	J - - without A/C- "Before 3/5/79"	4	@140- exc. TC			1
79	L,P - - without A/C- "From 3/5/79"	4	@140	D9FZ 9B450-B	#D9EE 9B450-AB	1
79	J - - without A/C "From 3/5/79"	4	@140 Exc. TC			1
79	J	8	302	D9ZZ 9B450-A	#D9ZE 9B450-AB	1
74	J	4	▲122	E602046-S72	(AB-16-J)-bolt (bracket to pump)-M8 x 16-(Metric)-hex head	2
74/	L	4	@140	N800100-S2	(AB-119-H)-bolt (bracket to block)- M10 x 35	4
74/	L	4	@140	N800080-S2	(AB-119-E)-bolt (bracket to block)- M10 x 30	4
9B451	SUPPORT (EXHAUST AIR SUPPLY PUMP BRACKET) ▲ 2000 cc					
74	J	4	▲122	★ D4RY 9B451-A	Not replaced	1
74	L - - T/E	4	▲122	D4FZ 9B451-A		1
9E451	AMPLIFIER ASSY. (EXHAUST GAS RECIRCULATION VACUUM) @ 2300 cc ⊕ 2800 cc					
74	C,F,P - - T/E	8	302,351W	D4TZ 9E451-A		1
74	J - - T/E	6	All			1
74	L - - T/E	4	All			1
75	C,G - - Calif.	8	351W	★ D5AZ 9E451-A	#D5AE 9E451-AA	1
75	G,P	6	200,250	D5TZ 9E451-A	#D5TE 9E451-A1A,A2A	1
75/	L - - Calif.	4	@140			1
76/	J - - A/T	4	@140			1
76/	J - - A/T	6	⊕171			1
75/	G - - A/T-exc. Calif.	6	250	D4ZZ 9E451-A	#D4ZE 9E451-AA	1
75/77	P - - A/T with A/C-exc. Calif.	6	250			1
75/78	G,P - - A/T	6	250	D5DZ 9E451-B	#D5DE-B1A,B2A,B3A	1
75	G,P - - exc. Calif.	8	302	D50Z 9E451-A	#D50E 9E451-AA	1
75/78	L - - M/T-exc. Calif.- "From 6/2/75"	4	@140			1
74	J - - without T/E	4	All	★ D4RY 9E451-A		1
74	J - - T/E	4	All	★ D4UZ 9E451-A		1
74	J - - without T/E	6	All	D3DZ 9E451-A		1
74	L - - without T/E	4	All	D3DZ 9E451-A	#D3DE 9E451-AA	1
75	L - - A/T-exc. Calif.	4	@140	D5FZ 9E451-A	#D52E 9E451-A1A,A2A,A3A	1
76/78	J - - M/T-Calif.	4	@140			1
75	L - - M/T-exc. Calif.- "Before 6/2/75"	4	@140	D5FZ 9E451-B	#D52E 9E451-B1A,B2A,B3A,75EB 9E451-B2A	1
75	G,P	6	200			1
76/78	J - - M/T-exc. Calif.	4	@140			1
74	P - - A/T and T/E	6	250	★ D4DZ 9E451-A	#D4DE 9E451-AA	1
74/	C,F - - T/E	8	351W	★ 385797-S2	Screw (amplifier assy. to bracket)-No. 6-32 x 1 5/8"	4
74/	P - - T/E	8	302			4
74/	J	4&6	All	E602527-S72	(AB-51)-screw & washer assy. (amplifier assy. to bracket)-M6 x 14 (Metric)	2
9K451	HOSE (EXHAUST AIR SUPPLY PUMP TO BY-PASS VALVE) ▲ 2000 cc					
74	J	4	▲122	★ D4RY 9K451-A	Not replaced	1
74	J	6	All	★ D4RY 9K451-B	Not replaced	1
74/78	J	6	All	D4RY 9K451-C	By-pass valve to check valve	1
76/77	G	6	250	★ D6DZ 9K451-A	#D6DE 9K451-AA	1

COPYRIGHT © 1986 — FORD MOTOR COMPANY — DEARBORN, MICHIGAN

1973/79 LINCOLN-MERCURY CARS

YEAR	MODEL/RESTRICTIONS	ENGINE CYL.	ENGINE C.I.D. (C.C.D.)	PART NUMBER	DESCRIPTION	QTY.
9B452	ARM (EXHAUST AIR SUPPLY PUMP BELT ADJUSTMENT) ▲ 2000 cc @ 2300 cc ⊕ 2800 cc					
74	A,C,F,Y	8	351C-2/B,400	D3AZ 9B452-A	#D3AE 9B452-AA	1
75/76	A,C,F,Y	8	351M, 400			1
77/78	A,F	8	351M			1
77/78	A,D,F,K	8	400			1
74/76	A,C,D,F,Y	8	460	D4VY 9B452-A	#D4VE 9B452-AA	1
74/76	K - - w/o heated W/S	8	460			1
77/78	A,D,K	8	460			1
75/76	G,P	6	200	★ D4DZ 9B452-B	#D4DE 9B452-BB	1
76	G - - with A/C	6	250	★ D6DZ 9B452-B	#D6DE 9B452-BA-not replaced	1
77	G	6	200	D7DZ 9B452-A	#D7BE 9B452-AA	1
77	G - - without A/C	6	250	★ D7DZ 9B452-B	#D7BE 9B452-BA	1
77	P	6	250			1
78/	G - - without P/S, without A/C	6	250			1
77/	G - - with A/C	6	250	D7DZ 9B452-C	#D7DE 9B452-AA	1
78/	G - - with P/S, without A/C	6	250			1
78/	G - - with P/S and dealer installed A/C	6	250	D8DZ 9B452-A		1
77/	P	6	200	D7DZ 9B452-D	#D7BE 9B452-AB, E2ZE 9B452-CA	1
74/78	J - - without P/S	6	All	★ D4RY 9B452-A		1
75	J,L - - with A/C	4	@140	★ D5FZ 9B452-B	#D52E 9B452-BA,757F 9B452-DA	1
76/78	J	4	@140		#757F 9B452-BA	1
78	P - - with A/C	4	@140			1
76/78	J - - without A/C	4	@140	★ D5RY 9B452-B	#757F 9B452-CA	1
76/78	J - - with P/S	6	⊕171	★ D5RY 9B452-D	#75TF 9B452-AA,AB	1
74	K - - w/heated W/S- "Before 6/1/74"	8	460	★ D4SZ 9B452-A	#D4SE 9B452-AA-use w/Sierracin system	1
74/76	K - - w/heated W/S- "From 6/1/74"	8	460	★ D5VY 9B452-A	#D5VE 9B452-AA-use w/Sierracin system	1
74	L	4	▲122	★ D4FZ 9B452-B	#D42E 9B452-BA,BB	1
74/78	L - - without A/C	4	@140	D5FZ 9B452-A	#D42E 9B452-AA,AB,AC,AD,D52E 9B452-AB	1
78	P - - M/T without A/C	4	@140			1
74	L - - with A/C	4	@140	★ D4FZ 9B452-C	#D42E 9B452-CA,CB,CC-not replaced	1
74/75	L - - w/built-in A/C-dealer installed	4	@140	★ D4FZ 9B452-E		1
76/78	L - - with A/C	4	@140	D6FZ 9B452-A	#D52E 9B452-BB	1
79	J,P - - with A/C	4	@140			1
76/	J,L - - w/built-in A/C-dealer installed	4	@140	D6FZ 9B452-B		1
79	P - - w/built-in A/C-dealer installed	4	@140			1
74	P	8	302	D30Z 9B452-A	#D30E 9B452-AA	1
75/76	C,F,G,P	8	302, 351W			1
77/78	F,G,P,V	8	302			1
77/78	F,G,V	8	351W			1
79	F,G	8	302			1
79	F	8	351W			1
74	P	6	250	★ D4DZ 9B452-A	#D4DE 9B452-AA	1
75/76	G,P	6	250			1
77	P - - Canada	6	250			1
78/	P	8	302	D5ZZ 9B452-A	#D5ZE 9B452-AA	1
79	J	8	302			1
79	F	8	351M	★ D9AZ 9B452-B	#D9AE 9B452-BA	1
79	D,K	8	400			1
79	A	8	All	D9AZ 9B452-C	#D9AE 9B452-CA	1
79	J,L,P - - without A/C	4	@140	E0ZZ 9B452-A	#D9EE 9B452-AA, E0ZE 9B450-AA	1

YEAR	MODEL/RESTRICTIONS	ENGINE CYL.	ENGINE C.I.D. (C.C.D.)	PART NUMBER	DESCRIPTION	QTY.
9B452	BRACKET (THERMACTOR PUMP TO ADJUSTMENT ARM)					
78/	G - - with P/S and dealer installed A/C	6	250	★ D8DZ 9B452-B		1
9E452	BRACKET (EXHAUST GAS RECIRCULATION VACUUM AMPLIFIER) ▲ 2000 cc @ 2300 cc					
74/	J	6	All	★ D4RY 9E452-B		1
74	J	4	▲122			1
74	L	4	@140	★ D4FZ 9E452-A	#D42E 9E452-AA-use w/Fram amplifier	1
74	L	4	All	★ D4FZ 9E452-B	#D42E 9E494-AA,AB-use w/Ranco amplifier	1
75/	L	4&6	All	★ D4ZZ 9E452-A	Use w/Fram amplifier	1

9F452 VALVE ASSY. (EXHAUST GAS RECIRCULATION BACK PRESSURE)-TRANSDUCER
Also refer to groups 9D448 and 9D475

HOW TO FIND EGR VALVES

To select the correct EGR valve the following information must be known and utilized–

- Year
- Car line (Mercury, Cougar, Monarch, etc.)
- Engine (4 cyl. 2.3L, 6 cyl. 4.1L-250 C.I.D., 8 cyl. 5.8L- 351 C.I.D., etc.)
- Transmission (manual, automatic, etc.)
- Other restrictions (California, hi-altitude, etc.)
- Identification part number shown on EGR valve

For Example

If an EGR valve is required for a 1976 Mercury with an 8 cylinder 6.0L (400 C.I.D.) engine, automatic transmission, used in Canada and 49 states (except California)–

- Refer to 1976 A (Mercury)
- Read down to find "A - - A/T-exc. Calif. 8 (cyl.) 400 (C.I.D.)".

The service part numbers listed for this application are D6AZ 9F452-D and D6AZ 9F452-E. Therefore, to select the correct service part number, the identification part number shown on the EGR valve taken from the vehicle, must be used.

If the EGR identification is D6AE 9F452-DA the service part number is D6AZ 9F452-AB.
If the EGR identification is D6AE 9F452-EA the service part number is D6AZ 9F452-G.

IDENTIFICATION CHART

IDENTIFICATION	PART NUMBER	IDENTIFICATION	PART NUMBER
9F452 VALVE ASSY. (EXHAUST GAS RECIRCULATION BACK PRESSURE-TRANSDUCER			
D5AE 9F452-BA	D5AZ 9F452-D	D6BE 9F452-BA	★ D6AZ 9F452-AD
D5AE 9F452-BB	D6AZ 9F452-V	D6DE 9F452-BA	★ D6DZ 9F452-B *CX-47
D5DE 9F452-AA	D5AZ 9F452-H		
D5DE 9F452-BA	D5AZ 9F452-F	D6DE 9F452-CA	D6AZ 9F452-N
D5DE 9F452-EA	D5AZ 9F452-K	D6DE 9F452-DA	D6AZ 9F452-T
D5DE 9F452-FA	D5AZ 9F452-L	D60E 9F452-BA	D6AZ 9F452-M
D5ZE 9F452-AA	D5AZ 9F452-E	D60E 9F452-DA	D6AZ 9F452-Y
D6AE 9F452-BA	D6AZ 9F452-R	D60E 9F452-EA	D6AZ 9F452-Z
D6AE 9F452-DA	D6AZ 9F452-AB	D6TE 9F452-DA	D6AZ 9F452-U
D6AE 9F452-EA	D6AZ 9F452-G	D6VE 9F452-CA	D6VZ 9F452-CA
D6AE 9F452-FA	D6AZ 9F452-AC	D6VE 9F452-DA	D6VZ 9F452-DA
D6BE 9F452-AB	D6AZ 9F452-P	D6VE 9F452-EA	D6VZ 9F452-EA

COPYRIGHT © 1986— FORD MOTOR COMPANY —DEARBORN, MICHIGAN

IDENTIFICATION CHART

IDENTIFICATION	PART NUMBER	IDENTIFICATION	PART NUMBER
9F452 VALVE ASSY. (EXHAUST GAS RECIRCULATRION BACK PRESSURE)-TRANSDUCER — Cont'd			
D6VE 9F452-GA	D6VZ 9F452-GA	D8AE 9F452-MA	D6AZ 9F452-M
D6ZE 9F452-AA	D6AZ 9F452-AE	D8AE 9F452-NA	D6AZ 9F452-N
D7DE 9F452-BA	D7DZ 9F452-B *CX-90	D8AE 9F452-PA	D6AZ 9F452-P
		D8AE 9F452-RA	D6AZ 9F452-R
D7EE 9F452-CA	D7FZ 9F452-C *CY-116	D8AE 9F452-TA	D6AZ 9F452-T
		D8AE 9F452-UA	D6AZ 9F452-U
D7EE 9F452-DA	D9FZ 9F452-D *CY-115-A	D8AE 9F452-VA	D6AZ 9F452-V
		D8AE 9F452-YA	D6AZ 9F452-Y
D8AE 9F452-AA	D6AZ 9F452-AA *CX-47-A	D8AE 9F452-ZA	D6AZ 9F452-Z
		D8EE 9F452-CA	D7FZ 9F452-C *CX-116
D8AE 9F452-AAA	D6AZ 9F452-G		
D8AE 9F452-ABA	D6AZ 9F452-AB	D8EE 9F452-DA	D9FZ 9F452-D *CY-115-A
D8AE 9F452-ACA	D6AZ 9F452-AC *CX-63-A		
		D9VE 9F452-CA	D6VZ 9F452-CA
D8AE 9F452-ADA	★ D6AZ 9F452-AD	D9VE 9F452-DA	D6VZ 9F452-DA
D8AE 9F452-AEA	D6AZ 9F452-AE	D9VE 9F452-EA	D6VZ 9F452-EA
D8AE 9F452-CA	D7DZ 9F452-B *CX-90	D9VE 9F452-GA	D6VZ 9F452-GA
		76TF 9F452-AA	★ D6ZZ 9F452-A *CY-61
D8DE 9F452-DA	D5AZ 9F452-D		
D8AE 9F452-EA	D5AZ 9F452-E	77TF 9F452-AA	D7ZZ 9F452-A *CY-191
D8AE 9F452-FA	D5AZ 9F452-F		
D8AE 9F452-GA	D5AZ 9F452-G	77TF 9F452-BA	D7ZZ 9F452-B *CY-311
D8AE 9F452-HA	D5AZ 9F452-H		
D8AE 9F452-JA	D5AZ 9f452-J	777F 9F452-AA	D7FZ 9F452-C *CY-116
D8AE 9F452-KA	D5AZ 9F452-K		
D8AE 9F452-LA	D5AZ 9F452-L		

YEAR	MODEL/RESTRICTIONS	ENGINE CYL.	ENGINE C.I.D. (C.C.D.)	PART NUMBER	DESCRIPTION	QTY.
9F452	VALVE ASSY. (EXHAUST GAS RECIRCULATION BACK PRESSURE)-TRANSDUCER — Cont'd					
	Also refer to groups 9D448 and 9D475					
NOTE:	For gasket refer to groups 9E464 or 9D476					

1975

A (MERCURY)

75	A - - exc. Calif.	8	400	D5AZ 9F452-D		1

C (MONTEGO)

75	C - - A/T-exc. Calif.	8	351M	D5AZ 9F452-E		1
75	C - - exc. Calif.	8	400	D5AZ 9F452-D		1

F (COUGAR)

75	F - - exc. Calif.	8	400	D5AZ 9F452-D		1
75	F - - A/T-exc. Calif.	8	351M	D5AZ 9F452-E		1

G (MONARCH)

75	G - - M/T-exc. Calif.	8	302	D5AZ 9F452-J		1
75	G - - M/T-exc. Calif.	8	302	D5AZ 9F452-L		1
75	G - - A/T-exc. Calif.	8	302	D5AZ 9F452-F		1
75	G - - A/T-Calif.	8	302	D5AZ 9F452-H		1

YEAR	MODEL/RESTRICTIONS	ENGINE CYL.	ENGINE C.I.D. (C.C.D.)	PART NUMBER	DESCRIPTION	QTY.

9F452 VALVE ASSY. (EXHAUST GAS RECIRCULATION BACK PRESSURE)– TRANSDUCER
Also refer to groups 9D448 and 9D475
NOTE: For gasket refer to groups 9E464 or 9D476
Refer to page 50 for Application Instructions

1975

P (COMET)

75	P – – M/T–exc. Calif.	8	302	D5AZ 9F452–G		1
75	P – – M/T–exc. Calif.	8	302	D5AZ 9F452–K		1
75	P – – A/T–exc. Calif.	8	302	D5AZ 9F452–F		1
75	P – – A/T–Calif.	8	302	D5AZ 9F452–H		1

Y (METEOR)

75	Y	8	351M	D5AZ 9F452–E		1
75	Y	8	400	D5AZ 9F452–D		1

1976

A (MERCURY)

76	A	8	351M, 400	D6AZ 9F452–R		1
76	A – – Canada	8	400	D6AZ 9F452–F		1
76	A – – A/T–exc. Calif.	8	400	D6AZ 9F452–AB		1
76	A – – A/T–exc. Calif.	8	400	D6AZ 9F452–G		A
76	A – – exc. Calif. & Canada "Before 1/5/76"	8	460	D6VZ 9F452–DA		1
76	A – – exc. Calif. & Canada "From 1/5/76"	8	460	D6VZ 9F452–GA		1
76	A – – Canada	8	460	D6VZ 9F452–EA		1
76	A – – Calif.	8	460	D6VZ 9F452–CA		1

C (MONTEGO)

76	C	8	351M, 400	D6AZ 9F452–R		1
76	C – – A/T–exc. Calif.	8	351W	D6AZ 9F452–M		1
76	C – – Canada	8	400	D6AZ 9F452–F		1
76	C – – A/T–exc. Calif.	8	400	D6AZ 9F452–G		1
76	C – – A/T–exc. Calif.	8	400	D6AZ 9F452–AB		1
76	C – – Canada	8	460	D6VZ 9F452–EA		1
76	C – – exc. Calif. & Canada "Before 1/5/76"	8	460	D6VZ 9F452–DA		1
76	C – – exc. Calif. & Canada "From 1/5/76"	8	460	D6VZ 9F452–GA		1
76	C – – Calif.	8	460	D6VZ 9F452–CA		1

D (LINCOLN)

76	D – – exc. Calif. & Canada "Before 1/5/76"	8	460	D6VZ 9F452–DA		1
76	D – – exc. Calif. & Canada "From 1/5/76"	8	460	D6VZ 9F452–GA		1
76	D – – Calif.	8	460	D6VZ 9F452–CA		1
76	D – – Canada	8	460	D6VZ 9F452–EA		1

COPYRIGHT © 1986 — FORD MOTOR COMPANY — DEARBORN, MICHIGAN

1973/79 LINCOLN-MERCURY CARS

YEAR	MODEL/RESTRICTIONS	ENGINE CYL.	ENGINE C.I.D. (C.C.D.)	PART NUMBER	DESCRIPTION	QTY.

9F452 VALVE ASSY. (EXHAUST GAS RECIRCULATION BACK PRESSURE)-TRANSDUCER — Cont'd
Also refer to groups 9D448 and 9D475
NOTE: For gasket refer to groups 9E464 or 9D476
Refer to page 50 for Application Instructions

1976

F (COUGAR)

76	F	8	351M, 400	D6AZ 9F452-R		1
76	F	8	351W	D6AZ 9F452-V		1
76	F - - Canada	8	400	D6AZ 9F452-F		1
76	F - - A/T-exc. Calif.	8	400	D6AZ 9F452-AB		1
76	F - - A/T-exc. Calif.	8	400	D6AZ 9F452-G		1
76	F - - Canada	8	460	D6VZ 9F452-EA		1
76	F - - exc. Calif. & Canada "Before 1/5/76"	8	460	D6VZ 9F452-DA		1
76	F - - exc. Calif. & Canda "From 1/5/76"	8	460	D6VZ 9F452-GA		1
76	F - - Calif.	8	460	D6VZ 9F452-CA		1

G (MONARCH)

76	G - - M/T-Calif.	6	250	★ D6DZ 9F452-B	*CX-47	1
76	G - - M/T-Calif.	6	250	D6AZ 9F452-AA	*CX-47-A	1
76	G - - M/T	8	302	D6DZ 9F452-A		1
76	G - - M/T	8	302	D6AZ 9F452-P		1
76	G - - M/T	8	302	D6AZ 9F452-N		1
76	G - - A/T	8	302	D6AZ 9F452-T		1
76	G - - A/T-exc. Calif.	8	302, 351W	D6AZ 9F452-M		1
76	G - - A/T-Canada	8	302	★ D6AZ 9F452-AD		1
76	G - - A/T-Calif.	8	351W	D6DZ 9F452-D		1

J (CAPRI)

76	J - - M/T-Calif.- "From 8/30/76"	6	⊕171	D7ZZ 9F452-B	*CX-311	1
76	J - - A/T-Calif.- "From 8/30/76"	6	⊕171	D7ZZ 9F452-A	*CX-191	1

K (MARK V)

76	K - - Canada	8	460	D6VZ 9F452-EA		1
76	K - - exc. Calif. & Canada "Before 1/5/76"	8	460	D6VZ 9F452-DA		1
76	K - - exc. Calif. & Canada "From 1/5/76"	8	460	D6VZ 9F452-GA		1
76	K - - Calif.	8	460	D6VZ 9F452-CA		1

P (COMET)

76	P - - M/T-Calif.	6	250	★ D6DZ 9F452-B	*CX-47	1
76	P - - M/T-Calif.	6	250	D6AZ 9F452-AA	*CX-47-A	1
76	P - - M/T	8	302	D6AZ 9F452-P		1
76	P - - A/T-Canada	8	302	★ D6AZ 9F452-AD		1
76	P - - A/T-exc. Canada	8	302	D6AZ 9F452-T		1

Y (METEOR)

76	Y	8	351M, 400	D6AZ 9F452-R		1
76	Y	8	400	D6AZ 9F452-F		1
76	Y - - A/T	8	400	D6AZ 9F452-AB		1
76	Y - - A/T	8	400	D6AZ 9F452-G		1

YEAR	MODEL/RESTRICTIONS	ENGINE CYL.	ENGINE C.I.D. (C.C.D.)	PART NUMBER	DESCRIPTION	QTY.
9F452	VALVE ASSY. (EXHAUST GAS RECIRCULATION BACK PRESSURE) -TRANSDUCER — Cont'd					
	Also refer to groups 9D448 and 9D475					
NOTE:	For gasket refer to groups 9E464 or 9D476					
	Refer to page 50 for Application Instructions					
	1976					
	Y (METEOR)					
76	Y	8	460	D6VZ 9F452-EA		1
76	Y "Before 1/5/76"	8	460	D6VZ 9F452-DA		1
76	Y "From 1/5/76"	8	460	D6VZ 9F452-GA		1
	1977					
	G (MONARCH)					
77	G	6	200,250	D7DZ 9F452-B	*CX-90	1
77	G - - A/T-Canada	8	302	D6AZ 9F452-T		1
	J (CAPRI)					
77	J - - Calif.	4	@140	D7FZ 9F452-C	*CX-116	1
77	J - - M/T-Calif.	6	⊕171	D7ZZ 9F452-B	*CX-311	1
77	J - - A/T-Calif.	6	⊕171	D7ZZ 9F452-A	*CX-191	1
	L (BOBCAT)					
77	L - - Calif.	4	@140	D7FZ 9F452-C	*CX-116	1
77	L	4	@140	D9FZ 9F452-D	*CX-115-A	1
	P (COMET)					
77	P	6	200,250	D7DZ 9F452-B	*CX-90	1
	1978					
	G (MONARCH)					
78	G	6	250	D7DZ 9F452-B	*CX-90	1
	J (CAPRI)					
78	J - - Calif.	4	@140	D7FZ 9F452-C	*CX-116	1
78	J - - M/T-Calif.	6	⊕171	D7ZZ 9F452-B	*CX-311	1
78	J - - A/T-Calif.	6	⊕171	D7ZZ 9F452-A	*CX-191	1
	L (BOBCAT)					
78	L	4	@140	D9FZ 9F452-D	*CX-115-A	1
78	L - - Calif.	4	@140	D7FZ 9F452-C	*CX-116	1

COPYRIGHT © 1986 — FORD MOTOR COMPANY — DEARBORN, MICHIGAN

YEAR	MODEL/RESTRICTIONS	ENGINE CYL.	ENGINE C.I.D. (C.C.D.)	PART NUMBER	DESCRIPTION	QTY.
9F452	VALVE ASSY. (EXHAUST GAS RECIRCULATION BACK PRESSURE)- TRANSDUCER — Cont'd					
	Also refer to groups 9D448 and 9D475					
NOTE:	For gasket refer to groups 9E464 or 9D476					
	Refer to page 50 for Application Instructions					
	1978					
	P (ZEPHYR)					
78	P - - M/T-Calif.	4	@140	D9FZ 9F452-D	*CX-115-A	1
78	P	6	200	D7DZ 9F452-B	*CX-90	1
	1979					
	J (CAPRI)					
79	J	4	@140-exc TC	D9FZ 9F452-D	*CX-115-A	1
	P (ZEPHYR)					
79	P	4	@140	D9FZ 9F452-D	*CX-115-A	1
9E453	RESERVOIR ASSY. (EXHAUST GAS RECIRCULATION VACUUM)					
	▲ 2000 cc @ 2300 cc ⊕ 2800 cc					
74	P	8	302	D4DZ 9E453-A	#D4DE 9E453-AA	1
75/78	L - - A/T-exc. Calif.	4	@140			1
75/78	G,P	8	302			1
75/78	L - - A/T-Canada	4	@140			1
76	L	6	⊕171			1
76/77	G,P	6	All			1
76	J	4	@140			1
77/78	V	8	302			1
78	A,D,F,K - - w/Hi-altitude Carb.	8	351M, 400			1
78/	G	6	250			1
78/	P - - A/T	6	200			1
79	D,K - - w/Hi-altitude carb.	8	400			1
79	F - - w/Hi-altitude carb.	8	351M			1
79	G,P - - w/Hi-altitude carb.	8	302			1
76	J	4	@140	★ D5RY 9E453-A	#75EB 9E453-BA	1
74	J	6	All	★ D4RY 9E453-A		1
74	J - - A/T-Calif.	4	▲122	★ D4RY 9E453-B		1
74	L - - T/E	4	▲122	★ D4FZ 9E453-B	#D42E 9E453-BA-not replaced	1
74	G,P	6	All	D4DZ 9E453-C	#D4DE 9E453-BA	1
74	L	4	@140	D5FZ 9E453-A	#D42E 9E453-AA, D52E 9E453-AA	1
75/	G,P	8	302			1
76/	L	6	⊕171	D6TZ 9E453-A	#D6TE 9E453-AA, 77EB 9E453-AA	1
76/	J "From 8/30/76"	6	⊕171			1
77/	J	4	@140			1
78/	G - - A/T Calif.	8	302			1
78/	L - - Calif.	4	@140			1
78/	P - - M/T	4	@140			2
78/	P(exc. 74) - - M/T without A/C	6	200			1
79	A,F,J	8	302			1
79	A - - exc. Canada	8	351W	D9AZ 9E453-A		1
9H453	PLUG (E.G.R. COOLER MANIFOLD)					
79	A	8	351W	D9AZ 9H453-A		1

9E455 CONNECTOR ASSY. (EXHAUST GAS RECIRCULATION VACUUM CONTROL)

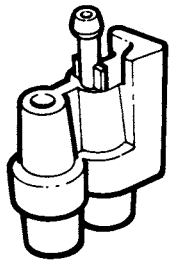

★ D5OZ-9E499-A (2 PORT)

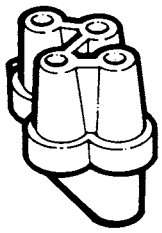

★ D5TZ-9E499-A (4 PORT)

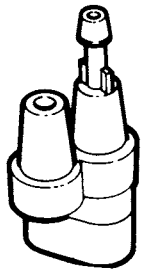

★ D5UZ-9E499-A (2 PORT)

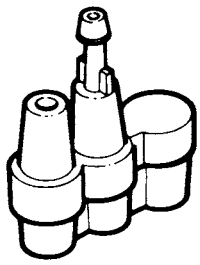

★ D5UZ-9E499-B (3 PORT)

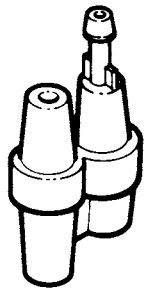

★ D5UZ-9E499-C (2 PORT)

383003-S (II-191-VF) CONNECTOR

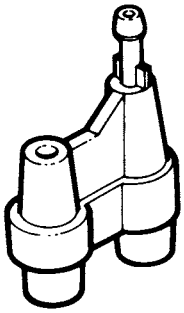

★ D5FZ-9E499-A (2 PORT)

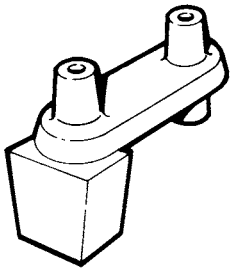

★ D5DZ-9E499-A

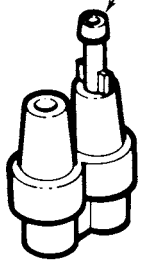

★ D4UZ-9E499-C (2-PORT)

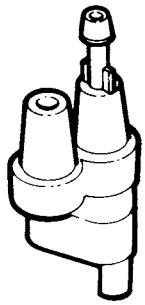

★ D4DZ-9E499-A (2-PORT) (WITH OFF-SET)

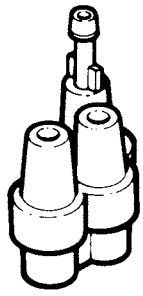

★ D4DZ-9E499-B (3-PORT)

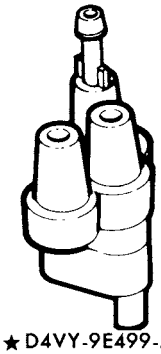

★ D4VY-9E499-A (3-PORT) (WITH OFF-SET)

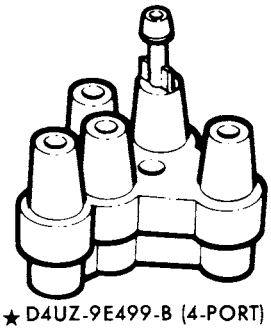

★ D4UZ-9E499-B (4-PORT)
D4UZ-9E499-A (5-PORT)

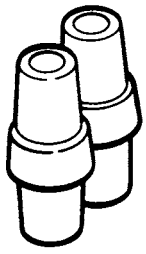

★ D5VZ-9E499-B (2 PORT)

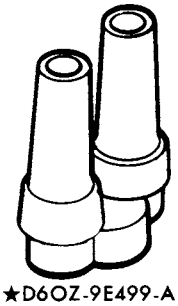

★ D6OZ-9E499-A (2 PORT)

UNLESS LISTED BELOW IMPROVISE FROM DOPZ 12226-B BULK HOSE AND UTILIZE FITTINGS ILLUSTRATED ABOVE

P-11109

COPYRIGHT © 1986 — FORD MOTOR COMPANY — DEARBORN, MICHIGAN

1973/79 LINCOLN-MERCURY CARS

YEAR	MODEL/RESTRICTIONS	ENGINE CYL.	ENGINE C.I.D. (C.C.D.)	PART NUMBER	DESCRIPTION	QTY.
9E455	CONNECTOR ASSY. (EXHAUST GAS RECIRCULATION VACUUM CONTROL) — Cont'd ▲ 2000 cc @ 2300 cc ⊕ 2800 cc					
74	J "Before 11/1/73"	6	⊕171	★ D4RY 9E455-C	3-port	1
74	J "Before 11/1/73"	6	⊕171	★ D4RY 9E455-D	4-port	1
74	J - - without A/C and T/E- "From 11/1/73"	6	⊕171	★ D4RY 9E455-F		1
74	J - - T/E without A/C- "From 11/1/73"	6	⊕171	★ D4RY 9E455-G		1
74	J - - A/C without T/E- "From 11/1/73"	6	⊕171	★ D4RY 9E455-H		1
74	J - - A/C-T/E- "From 11/1/73"	6	⊕171	★ D4RY 9E455-J		1
74/	A,C,D,F,G,J,K,L,P,Y	4,6 &8	All	383003-S	(II-191-VE)-fitting (hose connector)-1/8" x 1/8" x 1 1/8" long (nylon)	AR
				373846-S	(II-191-Q)-fitting (hose connector tee-3 way)-3/16" x 3/16" x 3/16" x 1 7/16" long (nylon)	AR
				383847-S	(II-106-VA)-fitting (hose connector tee-4 way) 1/4" x 1/4" x 1/4" x 2 13/16" long (nylon)	AR
				384111-S	(II-106-VE)fitting (hose connector tee-5 way)-3/16" x 3/16" x 3/16" x 3" long-(nylon)	AR
75/	A,C,D,F,G,J,K,L,P,Y	4,6 &8	All	387042-S	(II-233-G)-fitting (hose connector cross tee 3/16" tube)	AR
				387065-S	(II-187-AJ)-fitting (hose connector elbow 3/16" tube)	AR
9L456	BRACKET KIT (EGR TUBE)					
77/	G - - A/T Calif.	6	250	★ D8DZ 9L456-A		1
77	P - - A/T Calif.	6	250			1
	Consists of 2-D8DE 9L456-AA Bracket 1-33777-S2 Nut 1-302370-S Bolt					
78	P - - A/T Calif.	6	200	★ D8BZ 9L456-A		1
	Consists of 2-D8BE 9L456-AB Bracket 1-33777-S2 Nut 1-302370-S Bolt					
9B457	TUBE ASSY. (AIR SUPPLY PUMP OUTLET) ⊕ 2800 cc					
75/	L	6	⊕171	C8TZ 9B457-A	As listed in TSB No. 148, dated 12/5/77, article 2068	1
78	L - - Calif.	4	@140			1
9E457	O-RING (EXHAUST GAS RECIRCULATION VALVE)					
79	A	8	351W	D9AZ 9E457-A		1
9A458	SPRING (EXHAUST CONTROL VALVE STOP)					
73	A,C,D,K,Y	8	429,460, 460 P/C	C5AZ 9A458-A		1
9G458	PLUG (EXHAUST MANIFOLD)					
79	J - - exc. Calif.	4	@140-TC	D9ZZ 9G458-A		1

YEAR	MODEL/RESTRICTIONS	ENGINE CYL.	ENGINE C.I.D. (C.C.D.)	PART NUMBER	DESCRIPTION	QTY.
9D459	CLIP (EXHAUST GAS RECIRCULATION TUBE) @ 2300 cc					
74	L	4	@140	★	Improvise-EGR tube to 6010	1
9F459	TUBE (BACK PRESSURE VALVE TO EXHAUST GAS RECIRCULATION VALVE)					
75	A,C,F,Y	8	351M, 400	★ D5AZ 9F459-A	Not replaced	1
75	G,P	8	302			1
9G459	HOSE (EXHAUST AIR SUPPLY CONTROL VALVE TO CHECK)					
79	A - - Calif.	8	351W	D9AZ 9G459-A	#D9AE 9G459-AA	1
9B461	SPACER (EXHAUST AIR SUPPLY PUMP MOUNTING BRACKET) @ 2300 cc					
74/78	J	4&6	All	★ D4RY 9B461-A	Not replaced	1
74	P	6	200	C8DZ 9B461-A	Cut to required length	1
74	L	4	All			1
75/	L - - without A/C	4	@140	D5FZ 9B461-A		1
9G461	RESTRICTOR (EXHAUST AIR SUPPLY TUBE)					
78/	P - - T/E - Pulsed air type-Canada	6	200	D8BZ 9G461-A		1
9A462	SHIELD (CARBURETOR HEAT) ▲ 2000 cc					
73	C,P	6	250	D3DZ 9A462-A	#D3DE 9S596-AB	1
73/74	J,L	4	▲122	★ D1FZ 9A462-A	Not replaced	1
77/	G,V - - Calif.	8	302	D7DZ 9A462-A	*CX-80	1
78	P	8	302	D8BZ 9A462-A		1
73/74	J	4	▲122	N620412-S	(AM-5)-nut (attach. shield to exhaust manifold)-M6 (Metric coarse)	2
73/74	J,L	4	▲122	★ E804043-S76	Stud (attach. shield to exhaust manifold)-M6-9-15 x 27 (Metric coarse)	2
9F462	SHIELD (EXHAUST AIR SUPPLY CHECK VALVE)					
77/78	A,F	8	351M	★ D7AZ 9F462-A	Nylon-not replaced	1
77/78	A,D,F,K	8	400			1
79	F	8	351M			1
79	D,K	8	400			1
9E463	BAFFLE (INTAKE MANIFOLD AIR) @ 2300 cc					
74/	L	4	@140	D4FZ 9E463-A		1
76/	J	4	@140			1
78/	P	4	@140			1
74/	L	4	@140	N800055-S	(AU-20)-screw (baffle to carb. spacer)-M6 x 20 (metric)	2
76/	J	4	@140			1
78/	P	4	@140			2
9D464	FLANGE (EXHAUST RECIRCULATING VALVE OUTLET TUBE)					
73	C,P	6	All	D3DZ 9D464-A		1
73	C,P	6	All	370519-S	(BB-125)-screw & washer assy. (flange to spacer)-1/4"-20 x 7/8"	2
9E464	GASKET (EXHAUST GAS RECIRCULATION VALVE ADAPTER)-Also refer to group 9D476					
73/74	A,C,D,F,K,Y - - without T/E	8	429,460	D3AZ 9E464-B	*CG-555	1
75	A,C,D,F,K,Y	8	460, 460 P/C			1
76	A,C,F,Y - - Canada	8	460			1
76	A,C,Y	8	460 P/C			1
74	A,C,D,F,K,Y	8	460	★ D4AZ 9E464-A	Not replaced	1
76	A,C,D,F,K,Y	8	460	D6VZ 9E464-C	Use on both sides of back pressure valve	2

COPYRIGHT © 1986 — FORD MOTOR COMPANY — DEARBORN, MICHIGAN

1973/79 LINCOLN-MERCURY CARS

YEAR	MODEL/RESTRICTIONS	ENGINE CYL.	ENGINE C.I.D. (C.C.D.)	PART NUMBER	DESCRIPTION	QTY.
9E464	**GASKET (EXHAUST GAS RECIRCULATION VALVE ADAPTER)-Also Refer to group 9D476 — Cont'd**					
77/	A,D,F,G,K,L,P,V	6	All	★ D7AZ 9E464-E	R/b E0AZ 9D476-A(6/81)	AR
76/	J "From 8/30/76"	6	⊕171			1
77/	G,P	6	All	D7BZ 9E464-A	Required when 1980 cylinder heads are used on 1977/79 vehicles-use with D7DZ 9G496-A plate.	1
9F464	**COOLER ASSY. (EGR)**					
78/	V	8	302	★ D8DZ 9F464-A	#D8DE 9F464-AC	1
79	A	8	351W	D9AZ 9F464-B	#D9AE 9F464-BB	1
9F465	**KIT BRACKET & CLAMP (EGR COOLER)**					
78/	V	8	302	★ D8DZ 9F465-A		1
79	A	8	351W			1
	Consists of 1-D8DE 9F465-AE Bracket 1-D8DE 9F486-AC Clamp					
9F465	**BRACKET (EGR RECIRCULATING COOLER MOUNTING)**					
79	A	8	351W	D9AZ 9F465-C	#D9AE 9F465-CB	1
79	A	8	351W	388468-S	(WW-128-G) stud & washer assy. (bracket to manifold) hex. shoulder 3/8-16-16 x 2 1/4"	1
9B466	**HOSE (EXHAUST AIR SUPPLY CHECK VALVE INLET MOULDED)** ▲ 2000 cc @ 2300 cc ⊕ 2800 cc					
74	A,C,D,F,Y	8	460	★ D4VY 9B466-A	#D4VE 9B466-AA	1
74	K - - w/heated W/S-without T/E	8	460		Used w/Sierracin system	1
74	A,C,F,Y	8	400	D4AZ 9B466-A	#D4AE 9B466-AA	1
75/76	A,C,F,Y	8	351M, 400			1
74	L	4	▲122	D4FZ 9B446-B	#D42E 9B466-BA,BB, D5VE 9B466-AA	1
75/76	A,C,D,F,Y	8	460			1
75/76	K - - w/heated W/S-exc. Calif.	8	460			1
77/78	A,D,K	8	460			1
77/78	A,F	8	351M	D7AZ 9B466-A	#D7AE 9B466-BA	1
77/78	A,D,F,K	8	400			1
79	F	8	351M			1
79	D,K	8	400			1
74	C(71)	8	302	★ D40Z 9B466-B	#D40E 9B466-AB	1
74	C,F,Y	8	351C-2/B	★ D4AZ 9B466-B		1
75	C,F,G	8	351W	D0ZZ 9B466-A	#D0ZE 9B466-A	1
76	C,F	8	351W			1
78	F	8	351W			1
77/	F,G,V	8	302	D7DZ 9B466-A	#D7DE 9B466-AB	1
78/	G - - exc. A/C	6	All			1
78/	P - - T/E - air pump type	6	200			1
74/75	G,P	6	All	D4DZ 9B466-A	#D4DE 9B466-AA-use between 9A487 and 9B289	1
75/77	G,P	6	200,250	D5TZ 9B466-C	#D5TE 9B466-CA	1
75	G,P	6	250	E2UZ 9B466-A	#D4TE 9B466-BA, E1UE 9B466-AA	1
76	G - - with A/C	6	250	D6DZ 9B466-B	#D6DZ 9B466-BA	1
76	G - - exc. with A/C	6	250	D6DZ 9B466-E	#D6DE 9B466-EA	1
76	G,P	6	200			1
76	P	6	250			1
77	G,P	6	200		cut as required	1
77	G - - without A/C	6	250		cut as required	1
77	P	6	250		cut as required	1
75	G,P "Before 3/1/75"	8	302	★ D5DZ 9B466-A	#D5DE 9B466-AA	1
76	G	8	302	D6DZ 9B466-C	#D6DE 9B466-CA	1
77	G - - A/T Canada	8	302			1
76	G	8	351W	★ D6DZ 9B466-D	#D6DE 9B466-DA	1
77	G - - A/C	6	250	★ D7DZ 9B466-C	#D7DE 9B466-BA	1

YEAR	MODEL/RESTRICTIONS	ENGINE CYL.	ENGINE C.I.D. (C.C.D.)	PART NUMBER	DESCRIPTION	QTY.
9B466	HOSE (EXHAUST AIR SUPPLY CHECK VALVE INLET MOULDED) — Cont'd ▲ 2000 cc @ 2300 cc ⊕ 2800 cc					
78/	G - - with A/C	6	250	D8DZ 9B466-A	#D8DE 9B466-AA	1
78/	G - - with P/S, without A/C	6	250			1
76/78	J	4	@140	E24Z 9B466-A	#757F 9B466-AA, E1UE 9B466-AA	1
74/76	K - - w/heated W/S and T/E	8	460	★ D4VY 9B466-B	#D4VE 9B466-AB-use w/Sierracin system	1
74	L - - T/E	4	▲122	D4FZ 9B466-B	#D42E 9B466-BA,BB	1
74	L - - A/C	4	@140	★ D4ZZ 9B466-B	#D4VE 9B466-BA,BB	1
74	L	4	@140	D4TZ 9B466-B	#D42E 9B466-AA	1
75/	L	6	⊕171	D5ZZ 9B466-A	#D5ZE 9B466-AA,75TF 9B466-AA	1
74/78	J	6	⊕ 171			1
75/	L	6	⊕171	D5ZZ 9B466-D	#D5ZE 9B466-AB	1
77	L	4	@140	★ D7EE 9B466-AA	#D7EE 9B466-AA- cut as required from D1PZ 9324-E	1
74	P	6	All	D4TZ 9B466-B	Use between 9A486 and 9B289	1
74	P	8	302	★ D40Z 9B466-A	#D40E 9B466-AA	1
74	C(exc. 71)	8	302			1
75/76	P - - Calif.	8	302	★ D5DZ 9B466-B	#D4DE 9B466-BA	1
76/78	P "From 3/1/75"	8	302	★ D6BE 9B466-AA	#D6BE 9B466-AA- cut from D5DZ 9B466-A	1
77	P	8	302	★ D7DZ 9B466-B	#D7BE 9B466-AB	1
78	P - - T/E Pulsed air type "Before 10/1/77"	6	200	D8BZ 9B466-H	#D8BE 9B466-HA	1
78/	P - - T/E Pulsed air type "From 10/1/77"	6	200	D8BZ 9B466-G	#D8BE 9B466-GA	1
79	J	6	200			1
79	A - - exc. Canada	8	351W	D9AZ 9B466-B	#D9AE 9B466-BB	1
79	A - - Canada	8	351W	D9SZ 9B466-A	#D9SE 9B466-AA	1
79	F	8	351W			1
79	J - - Calif.	4	@140-TC	D9ZZ 9B466-B	#D9ZE 9B466-BA	1
79	J - - M/T	8	302	D9ZZ 9B466-C	#D9ZE 9B466-CA	1
9K466	HOSE (EXHAUST AIR SUPPLY BY-PASS VALVE)					
79	J - - Calif.	4	@140-TC	★ D9ZE 9K466-AA	#D9ZE 9K466-AA-cut from D40Z 9F287-A	1
9F468	TUBE (EGR COOLER-INLET)					
78/	V	8	302	D8DZ 9F468-A		1
79	A	8	351W	D9AZ 9F468-B		1
79	A	8	351W	387285-S36	(II-85-R)-connector (tube to mainfold)-3/4"-14 x 7/8"	1
9A469	SPRING (EXHAUST CONTROL VALVE TENSION)					
73	A,C,D,K,Y	8	429,460	C5TZ 9A469-A		1
9F469	TUBE (EGR COOLER-OUTLET)					
78/	V	8	302	D8DZ 9F469-A		1
79	A	8	351W	D9AZ 9F469-B		1
9G469	TUBE (MANIFOLD VACUUM CONTROL)					
79	J	4	@140-TC	D9ZZ 9G469-C	Intake manifold to waste gate	1
79	J	4	@140-TC	D9ZZ 9G469-B	Intake manifold to switch assy.	1
9A470	SPACER (EXHAUST CONTROL VALVE)					
73	A,C,D,K,Y	8	429,460, 460 P/C	★ C5TZ 9A470-A		1
9F470	GASKET (EGR COOLER TUBE-INLET)					
78/	V	8	302	D8DZ 9F470-B	Conical shape	2
79	A	8	351W			1
9G470	ADAPTER (EXHAUST AIR SUPPLY PUMP)					
79	A,F	8	351W	D9SZ 9G470-A		1
9471	SHIELD (INTAKE MANIFOLD)					
77/	L	4	@140	D7FZ 9471-A	Nylon	1
78/	P	4	@140			1

COPYRIGHT © 1986 — FORD MOTOR COMPANY — DEARBORN, MICHIGAN

1973/79 LINCOLN-MERCURY CARS

YEAR	MODEL/RESTRICTIONS	ENGINE CYL.	ENGINE C.I.D. (C.C.D.)	PART NUMBER	DESCRIPTION	QTY.
9B471	NUT AND FERRULE ASSY. (EXHAUST AIR SUPPLY)					
74/	C,P	8	302	D5TZ 9B471-A		6
9G471	SUPPORT ASSY. (EGR VACUUM CONTROL VALVE)					
79	G - - A/T-Calif.	6	250	D9DZ 9G471-A		1
79	P - - M/T-exc. Calif.	6	200			1
9C472	FAN ASSY. (EXHAUST AIR SUPPLY PUMP)					
74/	A,C,D,F,K,L,P,Y	All	All	D4TZ 9C472-A		1
9F472	SENSOR ASSY. (EXHAUST GAS-OXYGEN) @ 2300cc					
78	L	4	@140	E1AZ 9F472-A	#D8EE 9F472-AA, D9EE 9F472-AA,	1
79	A	8	351W		E0DE 9F472-AA, E1AF 9F472-AA	1
79	J,L	4	@140			1

9D473 VALVE ASSY. (EXHAUST GAS RECIRCULATION CONTROL)-Also refer to group 8A564 and 12A091

To select the correct EGR valve by knowing the identification number only:

- Check the EGR valve, taken from the vehicle, for an identification part number.
- Refer to the Identification Chart below.
- Find the EGR valve identification part number (sequenced numerically) and find the service part number in the adjacent column.

For example:

The service part number for EGR valve identified D3TE-AA, D5ZE-A2A, D7ZE-A1A, D7ZE-A2A or D5DE-B1A is D3TZ 9D473-A.

IDENTIFICATION CHART

IDENTIFICATION	PART NUMBER	IDENTIFICATION	PART NUMBER
9D473 VALVE ASSY. (EXHAUST GAS RECIRCULATION CONTROL)			
D5DE-A1A	D7BZ 9D473-A	D7BE-A2A	D7BZ 9D473-A
D5DE-B1A	D3TZ 9D473-A	D7TE-A1A	D5FZ 9D473-A
77TF-A1A	D3TZ 9D473-A	D7TE-A2A	D5FZ 9D473-A
D3AE-AA	D3AZ 9D473-A	D7VE-A1A	D5VY 9D473-A
D30E-AA	D7BZ 9D473-A	D7VE-A2A	D5VY 9D473-A
D30E-A2A	D7BZ 9D473-A	D7ZE-A1A	D3TZ 9D473-A
D3TE-AA	D3TZ 9D473-A	D7ZE-A2A	D3TZ 9D473-A
D3TE-A1A	D3TZ 9D473-A	D8BE-A1A	D8BZ 9D473-A
D4TE-A1A	★D4TZ 9D473-A	D8BE-A2A	D8BZ 9D473-A
D4TE-A2A	★D4TZ 9D473-A	D8TE-B1A	D8TZ 9D473-B
D50E-A1A	D7BZ 9D473-A	D8TE-B2A	D8TZ 9D473-B
D50E-A2A	D7BZ 9D473-A	E1AE-A1A	D7BZ 9D473-A
D5VE-A1A	D5VY 9D473-A	E1AE-A2A	D7BZ 9D473-A
D5VE-A2A	D5VY 9D473-A	E1SE-A1A	D3TZ 9D473-A
D5ZE-A2A	D3TZ 9D473-A	E1SE-A2A	D3TZ 9D473-A
D52E-A1A	D5FZ 9D473-A	E1TE-A1A	D5FZ 9D473-A
D52E-A2A	D5FZ 9D473-A	E1TE-A2A	D5FZ 9D473-A
D52E-B2A	D5FZ 9D473-A	E1ZE-A1A	D5VY 9D473-A
D7BE-A1A	D7BZ 9D473-A	E1ZE-A2A	D5VY 9D473-A

9D473 VALVE ASSY. (EXHAUST GAS RECIRCULATION CONTROL) — Cont'd

HOW TO FIND EGR VALVES

To select the correct EGR valve the following information must be known and utilized–

- Year
- Car line (Mercury, Cougar, Monarch, etc.)
- Engine (4 cyl. 2.3L, 6 cyl. 4.1L–250 C.I.D., 8 cyl. 5.8L–351 C.I.D., etc.)
- Transmission (manual, automatic, etc.)
- Other restrictions (California, hi-altitude, etc.)
- Identification part number shown on EGR valve

For Example

If an EGR valve is required for a 1979 Monarch with an 6 cylinder 4.1L (250 C.I.D.) engine used in California

- Refer to 1979 G (Monarch)
- Read down to find "G – – Calif. 6 (cyl.) 250 (C.I.D.)".

The service part numbers listed for this application are D8TZ 9D473–B and D30Z 9D473–A. Therefore, to select the correct service part number, the identification part number shown on the EGR valve taken from the vehicle must be used.

If the EGR identification is D8TE–B1A or D8TE–B2A the service part number is D8TZ 9D473–B. If the EGR identification is D30E–A1A, D50E–A2A, D7BE–A1A, D7BE–A2A or D5DE–A1A the service part number is D30Z 9D473–A.

YEAR	MODEL/RESTRICTIONS	ENGINE CYL.	ENGINE C.I.D. (C.C.D.)	PART NUMBER	DESCRIPTION	QTY.
9D473	VALVE ASSY. (EXHAUST GAS RECIRCULATION CONTROL) — Cont'd Refer to page 63 for Application Instructions					
	A (Mercury)					
73	A	8	460 P/C	D7BZ 9D473–A		1
74	A	8	351C,400			1
77/78	A	8	460,460 P/C			1
79	A – – with 2.26 axle ratio	8	302			1
73	A	8	351C,400 429,460 –exc. P/C	D3TZ 9D473–A		1
74	A	8	460,460 P/C			1
75	A	8	351M,400			1
78	A	8	351M,400			1
79	A – – with 2.73 axle ratio	8	302			1
75/76	A	8	460,460 P/C	D5VY 9D473–A		1
76/77	A	8	351M,400			1
	C (Montego)					
73	C	8	351C,400, 460 P/C	D3TZ 9D473–A		1
73	C – – without 3.25 axle	8	429,460 exc. P/C			1
74	C	8	302			1
74	C – – without T/E	8	351C,400			1
74	C	8	460, 460 P/C			1
75	C		351M, 400			1

COPYRIGHT © 1986 — FORD MOTOR COMPANY — DEARBORN, MICHIGAN

1973/79 LINCOLN-MERCURY CARS

YEAR	MODEL/RESTRICTIONS	ENGINE CYL.	ENGINE C.I.D. (C.C.D.)	PART NUMBER	DESCRIPTION	QTY.
9D473	VALVE ASSY. (EXHAUST GAS RECIRCULATION CONTROL) — Cont'd					
	Refer to page 63 for Application Instructions					
	C (Montego)					
73	C	8	302	D7BZ 9D473-A		1
73/74	C	8	351W			1
73	C - - with 3.25 axle	8	429,460 exc. P/C			1
74	C - - T/E	8	351C,400			1
75/76	C	8	351W	D7BZ 9D473-A		1
75/76	C	8	460, 460 P/C	D5VY 9D473-A		1
	D (Lincoln)					
73/74	D	8	460	D3TZ 9D473-A		1
79	D - - Calif. or Hi-altitude carb.	8	400			1
75/76	D	8	460	D5VY 9D473-A		1
79	D - - exc. Calif.	8	400			1
77/78	D	8	460	D7BZ 9D473-A		1
79	D - - exc. Calif. & Hi-altitude carb.	8	400			1
	F (Cougar)					
73	F	8	351	D3TZ 9D473-A		1
74	F	8	351,400, 460			1
75/76	F	8	351M,400			1
78	F	8	351M,400			1
79	F	8	302			1
79	F - - w/o Hi-altitude carb.	8	351			1
75/76	F	8	460	D7BZ 9D473-A		1
77/78	F	8	302,351W			1
79	F - - w/Hi-altitude carb.	8	351M			1
77	F	8	351M,400	D5VY 9D473-A		1
	G (Monarch)					
75/77	G	6	200	D3TZ 9D473-A		1
75	G	6	250			1
77	G - - exc. Calif.	6	250			1
75/77	G	8	302	D7BZ 9D473-A		1
76/77	G	8	351W			1
76	G	6	250			1
78/	G	6	250			1
79	G - - M/T	8	302			2
75	G	8	351W	D7BZ 9D473-A		1
77	G - - Calif.	6	250	D3AZ 9D473-A	*CX-3	1
78	G - - exc. Calif.	8	302	D8BZ 9D473-A	*CX-240	1
79	G - - w/Hi-altitude carb.	8	302			1
78/	G - - Calif.	8	302	D8TZ 9D473-B	*CX-241	1
79	G - - Calif.	6	250			1
79	G - - w/o Hi-altitude carb.	8	302	D5FZ 9D473-A		1
	J (Capri)					
74	J	4	@140	D3TZ 9D473-A		1
76	J	6	⊕171			1
79	J - - Calif.	4	@140-TC			1
79	J	6	200			1
76	J	4	@140	D5FZ 9D473-A		1

YEAR	MODEL/RESTRICTIONS	ENGINE CYL.	ENGINE C.I.D. (C.C.D.)	PART NUMBER	DESCRIPTION	QTY.
9D473	VALVE ASSY. (EXHAUST GAS RECIRCULATION CONTROL) — Cont'd Refer to page 63 for Application Instructions					
	J (Capri)					
77/78	J	4 6	@140, ⊕171	D7BZ 9D473-A		1
79	J - - exc. Calif.	4	@140-TC			1
79	J - - Calif.	4	@140-exc. TC			1
79	J - - M/T	8	302			2
79	J	6	⊕171			1
79	J	4	@140-exc TC	D5VY 9D473-A		1
79	J - - A/T-exc. Calif.	8	302	D5FZ 9D473-A		1
79	J - - A/T-Calif.	8	302	D8TZ 9D473-B	*CX-241	1
	K (Mark IV, Mark V)					
73/74	K	8	460	D3TZ 9D473-A		1
79	K - - Calif. or Hi-altitude carb.	8	400			1
75/76	K	8	460	D5VY 9D473-A		1
79	K - - exc. Calif.	8	400			1
77/78		8	460	D7BZ 9D473-A		1
79	K - - exc. Calif. & Hi-altitude carb.	8	400			1
	L (Bobcat)					
74	L	4	@140	D3TZ 9D473-A		1
75/76	L	6	⊕171			1
75/76	L	4	@140	D5FZ 9D473-A		1
77/78	L	4	@140	D7BZ 9D473-A		1
77/	L		⊕171			1
79	L - - Calif.	4	@140			1
79	L - - exc. Calif.	4	@140	D5VY 9D473-A		1
	P (Comet)					
73/77	P	6	200	D3TZ 9D473-A		1
73/76	P	6	250			1
73/77	P	8	302	D3TZ 9D473-A		1
77	P - - exc. Calif.	6	250			1
77	P - - Calif.	6	250	D3AZ 9D473-A	*CX-3	1
	P (Zephyr)					
78/	P	4	@140	D5VY 9D473-A		1
79	P - - Calif.	4	@140	D7BZ 9D473-A		1
79	P - - M/T	8	302			2
78	P	6	200	D3TZ 9D473-A		1
79	P - - A/T	6	200			1
78/	P - - Calif.	8	302	D8TZ 9D473-B	*CX-241	1
79	P - - M/T	6	200			1
78	P - - exc Calif.	8	302	D8BZ 9D473-A	*CX-240	1
79	P - - w/Hi-altitude carb.	8	302			1
79	P - - w/o Hi-altitude carb.	8	302	D5FZ 9D473-A		1
	V (Versailles)					
77	V	8	302,351	D7BZ 9D473-A		1
78/	V - - with EEC. Calif.	8	302	D3TZ 9D473-A		1
79	V - - exc. Calif.	8	302			1
79	V - - without EEC-Calif.	8	302	D8TZ 9D473-B	*CX-241	1

COPYRIGHT © 1986 — FORD MOTOR COMPANY — DEARBORN, MICHIGAN

1973/79 LINCOLN-MERCURY CARS

YEAR	MODEL/RESTRICTIONS	ENGINE CYL.	ENGINE C.I.D. (C.C.D.)	PART NUMBER	DESCRIPTION	QTY.
9D473	VALVE ASSY. EXHAUST GAS RECIRCULATION CONTROL) — Cont'd					
	Refer to page 63 for Application Instructions					
	Y (Meteor)					
73	Y	8	460 P/C	D7BZ 9D473-A		1
74	Y	8	351C,400			1
73	Y	8	351C,400	D3TZ 9D473-A		1
73	Y	8	429			1
73	Y	8	460 exc. P/C			1
74	Y	8	460,460 P/C			1
75	Y	8	351M,400			1
75/76	Y	8	460,460 P/C	D5VY 9D473-A		1
76	Y	8	351M			1
9A474	FITTING ASSY. (INTAKE MANIFOLD VACUUM OUTLET)–Also refer to group 9A476					
73	A,Y	8	351,400	D50Z 9A474-A		1
73	D - - w/o skid control	8	All		Front	1
74/76	A,C,D,F,K,Y	8	460			1
74	C,F,Y	8	351C			1
74	C,F	8	400			1
74	C,F - - without T/E	8	351W			1
74	C	8	302			1
75	C	8	351W			1
76	A,C,Y	8	460P/C			1
77/	A	8	460			1
73	A,D,Y - - w/skid control	8	All	★ D2VY 9A474-B	Front	1
75/76	A,C,F,Y	8	351M, 400	★ D5AZ 9A474-B		1
75/76	A,C,F,Y	8	460	★ D5AZ 9A474-A	Not replaced	1
77/78	A,D,F,K	8	351M, 400	D7SZ 9A474-B	2-ports	1
79	F	8	351M			1
79	D,K	8	400			1
73/74	C,P	6	All	D5DZ 9A474-C		1
73	C,F	8	302,351W	★ D30Z 9A474-A		1
73/74	P	8	302			1
73	C	8	400	★ D20Z 9A474-A		1
73	C	8	429	★ D10Z 9A474-F	Rear–not replaced	1
73/74	D,K	8	All	★ D2SZ 9A474-B	Rear	1
73	A,Y - - w/skid control	8	All			1
75/78	D,K	8	460	★ D5SZ 9A474-A		1
75	G	8	351W	★ D5DZ 9A474-D		1
75/76	G,P	6	200,250	D5DZ 9A474-C		1
75/78	G,P	6	All	D6DZ 9A474-B		1
79	G	6	250			1
75	G,P - - A/T	8	302	★ D5ZZ 9A474-B	6 outlets	1
76/78	G,P	8	302	D6DZ 9A474-C		1
76/77	G	8	351W			1
77/78	A,F	8	302, 351W			1
77/	V	8	302,351W			1
79	F,G	8	302			1
79	F	8	351W			1
73/74	J - - A/C "Before 12/4/73"	4	▲122	★ D4RY 9A474-B		1
73/74	J - - A/C "From 12/4/73"	4	▲ 122	★ D3FZ 9A474-B		1
74	J	6	All	★ D4FZ 9A474-C	3/8" pipe thread–3 small ports	1
76/78	J	4	@140	D5RY 9A474-B	1/4"-18 pipe thread	1
76/78	J	4	@140	★ D5RY 9A474-C	Use w/rear vacuum topping intake manifold	1
74	L	4	@140	D4FZ 9A474-A		1

YEAR	MODEL/RESTRICTIONS	ENGINE CYL.	ENGINE C.I.D. (C.C.D.)	PART NUMBER	DESCRIPTION	QTY.
9A474	FITTING ASSY. (INTAKE MANIFOLD VACUUM OUTLET)-Also refer to group 9A476 — Cont'd					
74/77	L "Before 6/27/77"	4	@140	D9BZ 9A474-A		1
77/	L "From 6/27/77"	4	@140	D8FZ 9A474-A	4 outlets	1
78/	P	4	@140			1
75/	J,L	6	⊕171	★ D5FZ 9A474-A		1
78	V	8	302	★ D84Y 9A474-A	Not replaced	1
79	A	8	302	D9AZ 9A474-C		1
79	A	8	351W	D9AZ 9A474-B		1
79	J,P - - A/T	4	@140	D9BZ 9A474-A		1
79	J - - M/T	4	@140-exc. TC	D9BZ 9A474-B		1
79	P - - M/T	4	@140			1
79	J - - M/T	4	@140-TC	★ D9ZZ 9A474-D		1
79	J - - exc. Calif.	6	⊕171	★ D9ZZ 9A474-A		1
79	J - - Calif.	6	⊕171	★ D9ZZ 9A474-B		1
79	J,P	6	200	★ D9BZ 9A474-C		1
79	J,P	8	302	★ D9ZZ 9A474-C		1
73/	A,C,D,F,K,P,Y	6&8	All	380613-S	(DD-2)-cap (use to cap unused outlets) vacuum tee-1/4"	AR
73/	A,C,D,F,K,P,Y	6&8	All	380614-S	(DD-3)-cap (use to cap unused outlets) vacuum tee-3/16"	AR
76/	J	4	@140			AR
9D474	VALVE ASSY. (E.G.R. SOLENOID VACUUM) @2300cc ⊕ 2800cc					
75	A,C,F,Y	8	460	D50Z 9D474-A	#D50E 9D474-A2A,A3A	1
76	A,C,Y	8	460 P/C			1
77	A	8	460			1
76/78	J	6	⊕171			1
75/76	C,F,Y	8	351M	★ D50Z 9D474-B	#D50E 9D474-B2A,B3A	1
75/76	C,F	8	400			1
77	F	8	351M, 400			1
75	G,P	6	200	★ D5DZ 9D474-A	#D5DE 9D474-A2A	1
75/78	G,P	6	250			1
75	G,P - - A/T-Calif.	8	302	D5ZZ 9D474-B	#D5ZE 9D474-B2A,B3A	1
76	C - - A/T-exc. Calif.	8	351W			1
76	G - - A/T-Calif.	8	All			1
76	P	8	302			1
75	P - - A/T-exc. Calif.	8	302	★ D5ZZ 9D474-C	#D5ZE 9D474-C2A,C3A	1
76/	L	4	@140	D8BZ 9D474-A	#D6EE 9D474-AA, D7EE 9D474-A3A, D8EE 9D474-A2A,A3A	1
77	J	4	@140			
78/	P - - with A/C	4	@140			
79	J - - with A/C	4	@140			
76/	J	4	@140	D5FZ 9D474-C	#D52E 9D474-C2A	1
75	L	4	@140			1
78	P	6	200			1
75	L	6	⊕171	D5FZ 9D474-A	#D52E 9D474-A2A	1
76/	L	6	⊕171	★ D5ZZ 9D474-A	#D5ZE 9D474-A2A,A3A	1
79	J	6	@171			1
78/	V	8	302	D84Y 9D474-A	#D8VE 9D474-AA	1
79	A	8	351W	D9AZ 9D474-A	#D9AE 9D474-A2A,A3A-mounted on R.H. fender apron	1
79	A	8	351W	E0AZ 9D474-D	#D9AE 9D474-B2A,B3A,E0AE 9D474-C2A,D3A -mounted on left rocker cover	1
79	A - - with A/C	8	All	D9AZ 9D474-C	#D9AE 9D474-C2A,C3A-mounted on left rocker cover	1
9F474	FILTER ASSY. (EGR AIR VALVE)					
78/	V	8	302	D80Z 9F474-A	*FA-677-#D80E-AA	

COPYRIGHT © 1986— FORD MOTOR COMPANY —DEARBORN, MICHIGAN

YEAR	MODEL/RESTRICTIONS	ENGINE CYL.	ENGINE C.I.D. (C.C.D.)	PART NUMBER	DESCRIPTION	QTY.
9C475	ELBOW (EXHAUST AIR SUPPLY PUMP OUTLET)					
74	A,Y	8	All	D4TZ 9C475-A		1
74/	L	4	All			1
75/	A,C,D,F,G,K,P,Y	6&8	All			1
77	V	8	All			1
79	J	All	All			1

9D475 VALVE ASSY. (EXHAUST GAS RECIRCULATION)-Also refer to groups 9D448 and 9F452

To select the correct EGR valve by knowing the identification number only:

- Check the EGR valve, taken from the vehicle, for an identification part number.
- Refer to the Identification Chart below.
- Find the EGR valve identification part number (sequenced numerically) and find the service part number in the adjacent column.

For example:

The service part number for EGR valve identified D3VE 9D475-AA is D3VY 9D475-A.

IDENTIFICATION CHART

IDENTIFICATION	PART NUMBER	IDENTIFICATION	PART NUMBER
9D475 VALVE ASSY. (EXHAUST GAS RECIRCULATION)			
D3AE 9D475-F1C	D3AZ 9D475-F	D3SE 9D475-AA	★D3SZ 9D475-A
D3AE 9D475-F2C	D3AZ 9D475-F	D3TE 9D475-C1B	D3TZ 9D475-C
D3AE 9D475-GA	D3AZ 9D475-G	D3TE 9D475-C2B	D3TZ 9D475-C
D3AE 9D475-GB	D3AZ 9D475-G	D3UE 9D475-A1A	★D3UZ 9D475-A
D3AE 9D475-GC	★D3AZ 9D475-N	D3UE 9D475-A2A	★D3UZ 9D475-A
D3AE 9D475-G1B	D3AZ 9D475-G	D3UE 9D475-B1A	D3UZ 9D475-B
D3AE 9D475-G2B	D3AZ 9D475-G	D3UE 9D475-B2A	D3UZ 9D475-B
D3AE 9D475-HA	D3AZ 9D475-H	D3UE 9D475-C1A	★D3UZ 9D475-C
D3AE 9D475-H1B	D3AZ 9D475-H	D3UE 9D475-C2A	★D3UZ 9D475-C
D3AE 9D475-H2B	D3AZ 9D475-H	D3UE 9D475-E1A	D3UZ 9D475-E
D3AE 9D475-KA	D3AZ 9D475-K	D3UE 9D475-E2A	D3UZ 9D475-E
D3AE 9D475-KB	★D4AZ 9D475-A	D3VE 9D475-AA	D3VY 9D475-A
D3AE 9D475-LA	D3AZ 9D475-L	D3ZE 9D475-A2C	★D3ZZ 9D475-A
D3AE 9D475-LB	★D4AZ 9D475-B	D3ZE 9D475-B1C	D3ZZ 9D475-B
D3BE 9D475-A1B	D3BZ 9D475-A	D3ZE 9D475-B2C	D3ZZ 9D475-B
D3BE 9D475-A2B	D3BZ 9D475-A	D3ZE 9D475-B1D	★D3ZZ 9D475-C
D3DE 9D475-A1C	D3DZ 9D475-A	D3ZE 9D475-B2D	★D3ZZ 9D475-C
D3DE 9D475-A2C	D3DZ 9D475-A	D4AE 9D475-A1B	D3AZ 9D475-F
D3DE 9D475-C1A	★D3DZ 9D475-D	D4AE 9D475-A2B	D3AZ 9D475-F
D3DE 9D475-C2A	★D3DZ 9D475-D	D4AE 9D475-B1A	D3AZ 9D475-H
D30E 9D475-B1B	D30Z 9D475-B	D4AE 9D475-B2A	D3AZ 9D475-H
D30E 9D475-B2B	★D30Z 9D475-B	D4AE 9D475-C1A	★D3AZ 9D475-N
D30E 9D475-C1A	★D30Z 9D475-C	D4AE 9D475-C2A	★D3AZ 9D475-N
D30E 9D475-C2A	D30Z 9D475-C	D4AE 9D475-D1A	D3AZ 9D475-G
D30E 9D475-DA	D30Z 9D475-D	D4AE 9D475-D2A	D3AZ 9D475-G
D30E 9D475-D1A	D30Z 9D475-D	D4AE 9D475-E1A	★D4AZ 9D475-E
D30E 9D475-D2A	D30Z 9D475-D	D4AE 9D475-E2A	★D4AZ 9D475-E
D30E 9D475-D1B	★D30Z 9D475-E	D4AE 9D475-F1A	D30Z 9D475-D
D30E 9D475-D2B	★D30Z 9D475-E	D4AE 9D475-F2A	D30Z 9D475-D

IDENTIFICATION CHART

IDENTIFICATION	PART NUMBER	IDENTIFICATION	PART NUMBER
9D475 VALVE ASSY. (EXHAUST GAS RECIRCULATION) — Cont'd			
Refer to page 68 for Identification Instructions			
D4AE 9D475-G1A	★ D4AZ 9D475-G	D42E 9D475-E1B	D5FZ 9D475-M
D4AE 9D475-G2A	★ D4AZ 9D475-G	D42E 9D475-E2A	D5FZ 9D475-M
D4DE 9D475-A1B	★ D4DZ 9D475-A	D42E 9D475-E2B	D5FZ 9D475-M
D4DE 9D475-A2B	★ D4DZ 9D475-A	D42E 9D475-FA	D4FZ 9D475-H
D4DE 9D475-E1A	D3DZ 9D475-A	D5AE 9D475-A1A	D5AZ 9D475-A
D4DE 9D475-E2A	D3DZ 9D475-A	D5AE 9D475-A2A	D5AZ 9D475-A
D4DE 9D475-F1A	★ D3DZ 9D475-D	D9ZE 9D475-B3A	D9ZZ 9D475-B
D4DE 9D475-F2A	★ D3DZ 9D475-D	D5DE 9D475-A1A	D5DZ 9D475-A
D4DE 9D475-G1A	D4TZ 9D475-F	D5DE 9D475-A2A	D5DZ 9D475-A
D4DE 9D475-G2A	D4TZ 9D475-F	D5DE 9D475-B1A	★ D5DZ 9D475-B
D4DE 9D475-H1A	★ D4DZ 9D475-H	D5DE 9D475-B2A	★ D5DZ 9D475-B
D4DE 9D475-H2A	★ D4DZ 9D475-H	D50E 9D475-A1A	★ D50Z 9D475-A
D40E 9D475-A1A	D30Z 9D475-C	D50E 9D475-A2A	★ D50Z 9D475-A
D40E 9D475-A2A	D30Z 9D475-C	D5TE 9D475-C1A	D5TZ 9D475-D
D40E 9D475-B1A	D30Z 9D475-D	D5TE 9D475-C2A	D5TZ 9D475-D
D40E 9D475-B2A	D30Z 9D475-D	D5TE 9D475-C1B	D5TZ 9D475-C
D40E 9D475-C1A	★ D30Z 9D475-E	D5TE 9D475-C2B	D5TZ 9D475-C
D40E 9D475-C2A	★ D30Z 9D475-E	D5TE 9D475-F1A	★ D6TZ 9D475-B
D40E 9D475-D1A	★ D30Z 9D475-B	D5TE 9D475-F2A	★ D6TZ 9D475-B
D40E 9D475-D2A	★ D30Z 9D475-B	D5UE 9D475-A1A	★ D5UZ 9D475-A
D4TE 9D475-A1A	D3BZ 9D475-A	D5UE 9D475-A2A	★ D5UZ 9D475-A
D4TE 9D475-A2A	D3BZ 9D475-A	D5UE 9D475-B1A	★ D5UZ 9D475-B
D4TE 9D475-B1A	D3TZ 9D475-C	D5UE 9D475-B2A	★ D5UZ 9D475-B
D4TE 9D475-B2A	D3TZ 9D475-C	D5UE 9D475-C1A	★ D5UZ 9D475-C
D4TE 9D475-E1A	★ D4TZ 9D475-E	D5UE 9D475-C2A	★ D5UZ 9D475-C
D4TE 9D475-E2A	★ D4TZ 9D475-E	D5VE 9D475-C1A	D5VY 9D475-C
D4TE 9D475-F1A	D4TZ 9D475-F	D5VE 9D475-C2A	D5VY 9D475-C
D4TE 9D475-F2A	D4TZ 9D475-F	D5VE 9D475-EA	★ D5VY 9D475-E
D4TE 9D475-J1A	D4TZ 9D475-J	D5VE 9D474-F1A	★ D5VY 9D475-E
D4TE 9D475-J2A	D4TZ 9D475-J	D5VE 9D475-F2A	★ D5VY 9D475-E
D4UE 9D475-A1A	★ D3UZ 9D475-C	D5ZE 9D475-C1A	D5ZZ 9D475-J
D4UE 9D475-A2A	★ D3UZ 9D475-C	D5ZE 9D475-C2A	D5ZZ 9D475-J
D4UE 9D475-B1A	D3UZ 9D475-B	D5ZE 9D475-D1A	D5ZZ 9D475-K
D4UE 9D475-B2A	D3UZ 9D475-B	D5ZE 9D475-D2A	D5ZZ 9D475-K
D4UE 9D475-C1A	★ D3UZ 9D475-A	D52E 9D475-D2A	D5FZ 9D475-D
D4UE 9D475-C2A	★ D3UZ 9D475-A	D52E 9D475-D2B	D5FZ 9D475-M
D4VE 9D475-CA	★ D4VY 9D475-C	D52E 9D475-E2B	D4FZ 9D475-C
D4ZE 9D475-A1A	D3ZZ 9D475-B	D52E 9D475-F2A	★ D4FZ 9D475-G
D4ZE 9D475-A2A	D3ZZ 9D475-B	D52E 9D475-G2B	D4FZ 9D475-J
D4ZE 9D475-B1A	★ D3ZZ 9D475-C	D52E 9D475-H2A	D5FZ 9D475-H
D4ZE 9D475-B2A	★ D3ZZ 9D475-C	D52E 9D475-H2B	D5FZ 9D475-N
D4ZE 9D475-C1A	★ D3ZZ 9D475-A	D52E 9D475-J2A	D5FZ 9D475-J
D4ZE 9D475-C2A	★ D3ZZ 9D475-A	D52E 9D475-J2B	★ D5FZ 9D475-P
D42E 9D475-A1F	D4FZ 9D475-J	D52E 9D475-K2B	★ D5FZ 9D475-Q
D42E 9D475-A1G	D4FZ 9D475-J	D52E 9D475-L2A	D5FZ 9D475-L
D42E 9D475-A2G	D4FZ 9D475-J	D52E 9D475-L2B	D5FZ 9D475-R
D42E 9D475-A2F	D4FZ 9D475-J	D58E 9D475-A2A	★ D5RY 9D475-E
D42E 9D475-C1C	D4FZ 9D475-C	D6AE 9D475-B1A	D6AZ 9D475-B
D42E 9D475-C1D	D4FZ 9D475-C	D6AE 9D475-B2A	D6AZ 9D475-B
D42E 9D475-C2C	D4FZ 9D475-C	D6AE 9D475-C1A	★ D6AZ 9D475-C
D42E 9D475-C2D	D4FZ 9D475-C	D6AE 9D475-C2A	★ D6AZ 9D475-C
D42E 9D475-D1A	★ D4FZ 9D475-G	D6DE 9D475-A1A	D6DZ 9D475-A
D42E 9D475-D1B	★ D4FZ 9D475-G	D6DE 9D475-A2A	D6DZ 9D475-A
D42E 9D475-D2A	★ D4FZ 9D475-G	D6TE 9D475-A1A	D6TZ 9D475-A
D42E 9D475-D2B	★ D4FZ 9D475-G	D6TE 9D475-A2A	D6TZ 9D475-A
D42E 9D475-D1C	D4FZ 9D475-K	D6VE 9D475-AA	D6VZ 9D475-A
D42E 9D475-E1A	D5FZ 9D475-M	D6VE 9D475-B1B	D6VZ 9D475-A
		D7BE 9D475-A1A	D8TZ 9D475-A

COPYRIGHT © 1986— FORD MOTOR COMPANY —DEARBORN, MICHIGAN

IDENTIFICATION CHART

IDENTIFICATION	PART NUMBER	IDENTIFICATION	PART NUMBER
9D475 VALVE ASSY. (EXHAUST GAS RECIRCULATION) — Cont'd			
Refer to page 68 for Identification Instructions			
D7BE 9D475-A2A	D8TZ 9D475-A	E1ZE 9D475-R3A	D8FZ 9D475-F
D7BE 9D475-B1A	D7DZ 9D475-C	E2ZE 9D475-B2A	E2ZZ 9D475-B
D7BE 9D475-B2A	D7DZ 9D475-C	E2ZE 9D475-B3A	E2ZZ 9D475-B
D7DE 9D475-A1A	D7DZ 9D475-D	E2ZE 9D475-C2A	E2ZZ 9D475-C
D7DE 9D475-A2A	D7DZ 9D475-D	E2ZE 9D475-C3A	E2ZZ 9D475-C
D7DE 9D475-B1A	D7DZ 9D475-B	74HF 9D475-AE	★ D4RY 9D475-A
D7DE 9D475-B2A	D7DZ 9D475-B	74HF 9D475-BE	★ D4RY 9D475-B
D7DE 9D475-C1A	D7DZ 9D475-E	74HF 9D475-DE	★ D4RY 9D475-D
D7DE 9D475-C2A	D7DZ 9D475-E	74HF 9D475-DF	★ D4RY 9D475-F
D7EE 9D475-D2A	D9ZZ 9D475-D	74HF 9D475-EE	★ D4FZ 9D475-E
D7EE 9D475-E2A	D7FZ 9D475-E	74TF 9D475-A1A	★ D4ZZ 9D475-A
D7EE 9D475-F2A	D7FZ 9D475-F	74TF 9D475-A2A	★ D4ZZ 9D475-A
D7EE 9D475-G2A	E2ZZ 9D475-C	74TF 9D475-B1A	★ D4ZZ 9D475-B
D7EE 9D475-H2A	★ D7FZ 9D475-H	74TF 9D475-B2A	★ D4ZZ 9D475-B
D7EE 9D475-J2A	D7FZ 9D475-J	74TF 9D475-D1A	D4ZZ 9D475-D
D7EE 9D475-K2A	D8FZ 9D475-D	74TF 9D475-E1A	★ D4RY 9D475-E
D7EE 9D475-L2A	D8FZ 9D475-L	74TF 9D475-E2A	★ D4RY 9D475-E
D7EE 9D475-M2A	D7FZ 9D475-M	74TF 9D475-F1A	D4ZZ 9D475-F
D7UE 9D475-A1A	★ D7UZ 9D475-A	75TF 9D475-A1A	★ D5RY 9D475-F
D7UE 9D475-A2A	★ D7UZ 9D475-A	75TF 9D475-A2A	★ D5RY 9D475-F
D8BE 9D475-B1A	D8BZ 9D475-B	75TF 9D475-D1A	★ D5ZZ 9D475-D
D8BE 9D475-B2A	D8BZ 9D475-B	75TF 9D475-D2A	★ D5ZZ 9D475-D
D8BE 9D475-D1A	D8BZ 9D475-D	75TF 9D475-E1A	D5RY 9D475-A
D8BE 9D475-D2A	D8BZ 9D475-D	75TF 9D475-E2A	D5RY 9D475-A
D8BE 9D475-E1A	D8BZ 9D475-E	75TF 9D475-F1A	D5RY 9D475-B
D8BE 9D475-E2A	D8BZ 9D475-E	75TF 9D475-F2A	D5RY 9D475-B
D8BE 9D475-F1A	D8BZ 9D475-F	75TF 9D475-G1A	★ D5RY 9D475-D
D8BE 9D475-F2A	D8BZ 9D475-F	75TF 9D475-G2A	★ D5RY 9D475-D
D8DE 9D475-B1A	D7DZ 9D475-B	75TF 9D475-H1A	★ D5RY 9D475-C
D8DE 9D475-B2A	D7DZ 9D475-B	75TF 9D475-H2A	★ D5RY 9D475-C
D8DE 9D475-C1A	D8DZ 9D475-C	75TF 9D475-J1A	★ D5ZZ 9D475-J
D8DE 9D475-C2A	D8DZ 9D475-C	75TF 9D475-J2A	★ D5ZZ 9D475-J
D8EE 9D475-D2A	D8FZ 9D475-D	75TF 9D475-K1A	D5ZZ 9D475-K
D8EE 9D475-D3A	D8FZ 9D475-D	75TF 9D475-K2A	D5ZZ 9D475-K
D8EE 9D475-E2A	E2ZZ 9D475-C	77TF 9D475-C1A	D7DZ 9D475-B
D8EE 9D475-E3A	E2ZZ 9D475-C	77TF 9D475-C2A	D7DZ 9D475-B
D9BE 9D475-A2A	D9BZ 9D475-A	77TF 9D475-D1A	D7ZZ 9D475-D
D9ZE 9D475-AA	D9ZZ 9D475-A	77TF 9D475-D2A	D7ZZ 9D475-D
D9ZE 9D475-B2A	E2ZZ 9D475-B	77TF 9D475-E1A	D7ZZ 9D475-E
D9ZE 9D475-B3A	E2ZZ 9D475-B	77TF 9D475-E2A	D7ZZ 9D475-E
D9ZE 9D475-C2A	D9ZZ 9D475-C	77TF 9D475-F1A	D7RY 9D475-F
D9ZE 9D475-D2A	D9ZZ 9D475-D	77TF 9D475-F2A	D7RY 9D475-F
D9ZE 9D475-G2A	D9ZZ 9D475-G	777F 9D475-AA	D7FZ 9D475-K
E1ZE 9D475-J2A	E2ZZ 9D475-B	777F 9D475-BA	E2ZZ 9D475-C
E1ZE 9D475-J3A	E2ZZ 9D475-B	777F 9D475-CA	★ D7RY 9D475-C
E1ZE 9D475-L2A	D8FZ 9D475-D	777F 9D475-DA	D7FZ 9D475-F
E1ZE 9D475-L3A	D8FZ 9D475-D	79TF 9D475-FA	D9FZ 9D475-F
E1ZE 9D475-R2A	D8FZ 9D475-F	79TF 9D475-GA	D9FZ 9D475-G

9D475 VALVE ASSY. (EXHAUST GAS RECIRCULATION)

HOW TO FIND EGR VALVES

To select the correct EGR valve the following information must be known and utilized–

- Year
- Car line (Mercury, Cougar, Comet, etc.)
- Engine (4 cyl. 2.3L, 6 cyl. 4.1L–250 C.I.D., 8 cyl. 5.8L–351 C.I.D., etc.)
- Transmission (manual, automatic, etc.)
- Other restrictions (California, hi–altitude, etc.)
- Identification part number shown on EGR valve (identification part numbers not shown are no longer serviced)

For Example

If an EGR valve is required for a 1975 Mercury with an 8 cylinder 7.5L (460 C.I.D.) engine, automatic transmission, used in California.

- Refer to 1975 A (Mercury)
- Read down to find "A – – Calif. 8 (cyl.) 460 (C.I.D.)".

The service part numbers listed for this application are D5VY 9D475–C and D5VY 9D475–E. Therefore, to select the correct service part number, the identification part number shown on the EGR valve taken from the vehicle, must be used.

If the EGR identification is D5VE 9D475–C1A, the service part number is D5VY 9D475–C. If the EGR identification is D5VE 9D475–EA, D5VE 9D475–F1A or D5VE 9D475–F2A the service part number is D5VY 9D475–E.

YEAR	MODEL/RESTRICTIONS	ENGINE CYL.	ENGINE C.I.D. (C.C.D.)	PART NUMBER	DESCRIPTION	QTY.
9D475	VALVE ASSY. (EXHAUST GAS RECIRCULATION)–Also refer to groups 9D448, 9F452					
NOTE –	For gasket–refer to groups 9E464 or 9D476					
	▲ 2000cc @ 2300cc ⊕ 2800cc					
	APPLICATION CHART					
	1973					
	A (MERCURY)					
73	A(exc. 71) – – w/3.25 axle	8	351	D3ZZ 9D475–C	#D3ZE 9D475–BD,B1D,B2D, D4ZE 9D475–B1A,B2A	1
73	A(71) – – A/T	8	351C	D3AZ 9D475–F	#D3AE 9D475–FC,F1B, D4AE 9D475–A1A,A1B,A2A,A2B	1
73	A – – A/T	8	351C	D3ZZ 9D475–B	#D3ZE 9D475–BB,BC, D4ZE 9D475–A1A, A2A	1
73	A	8	400	D3AZ 9D475–G	#D3AE 9D475–GA,GB,G1B,G2B, D4AE 9D475–D1A,D2A	1
73	A – – C6 and 2.75 axle	8	400	★D3AZ 9D475–N	#D3AE 9D475–GC, D4AE 9D475–C1A,C2A	1
73	A – – w/3.25 axle	8	429	★D3SZ 9D475–A	#D3SE 9D475–AA–not replaced	1
73	A(71) – – w/3.25 axle	8	429	D30Z 9D475–C	#D30E 9D475–CA, D40E 9D475–A1A,A2A	1
73	A – – w/3.25 axle	8	429,460	D3BZ 9D475–A	#D3BE 9D475–AA, D4TE 9D475–A1A,A2A	1
73	A – – w/3.25 axle	8	429,460 exc. P/C	D3AZ 9D475–K	#D3AE 9D475–KA	1
73	A	8	460	D30Z 9D475–C	#D30E 9D475–CA, D40E 9D475–A1A,A2A	1
73	A(exc. 71) – – w/o 3.25 axle	8	460	D3VY 9D475–A	#D3VE 9D475–AA	1
73	A(71) – – w/3.25 axle	8	460	★D3UZ 9D475–C	#D3UE 9D475–AA, D4UE 9D475–A1A,A2A–not replaced	1

COPYRIGHT © 1986 — FORD MOTOR COMPANY — DEARBORN, MICHIGAN

1973/79 LINCOLN-MERCURY CARS

YEAR	MODEL/RESTRICTIONS	ENGINE CYL.	ENGINE C.I.D. (C.C.D.)	PART NUMBER	DESCRIPTION	QTY.

9D475 VALVE ASSY. (EXHAUST GAS RECIRCULATION)-Also refer to groups 9D448, 9F452 — Cont'd

NOTE - For gasket-refer to groups 9E464 or 9D476

▲ 2000cc @ 2300cc ⊕ 2800cc

Refer to page 71 for Application Instructions

APPLICATION CHART

1973

A (MERCURY)

73	A	8	460 P/C	D3AZ 9D475-F	#D3AE 9D475-FC,F1B, D4AE 9D475-A1A,A1B,A2A,A2B	1
73	A	8	460 P/C	D3AZ 9D475-H	#D3AE 9D475-HA,HB, D4AE 9D475-B1A, B2A	1
73	A	8	460 P/C	D3DZ 9D475-A	#D3DE 9D475-AC,A1C, D4DE 9D475-E1A,E2A	1

C (MONTEGO)

73	C - - M/T	6	All	★D3DZ 9D475-D	#D3DE 9D475-CA,C1A,C2A, D4DE 9D475-F1A,F2A	1
73	C - - A/T	6&8	250, 351W	D3DZ 9D475-A	#D3DE 9D475-AC,A1C, D4DE 9D475-E1A,E2A	1
73	C - - M/T	8	302	D30Z 9D475-B	#D30E 9D475-BA,BB, D40E 9D475-D1A,D2A	1
73	C(71) - - A/T	8	302	D30Z 9D475-D	#D30E 9D475-DA,D1A,D2A, D4AE 9D475-F1A,F2A, D40E 9D475-B1A,B2A	1
73	C - - A/T	8	351C	D3ZZ 9D475-B	#D3ZE 9D475-BB,BC D4ZE 9D475-A1A,A2A	1
73	C(71) - - A/T	8	351C	D3AZ 9D475-F	#D3AE 9D475-FC,F1B, D4AE 9D475-A1A,A1B,A2A,A2B	1
73	C	8	460 P/C	D3DZ 9D475-A	#D3DE 9D475-AC,A1C, D4DE 9D475-E1A,E2A	1

D (LINCOLN)

73	D - - exc. 3.25 axle	8	460	D30Z 9D475-C	#D30E 9D475-CA, D40E 9D475-A1A,A2A	1
73	D - - with 3.25 axle	8	460	★D3UZ 9D475-C	#D3UE 9D475-AA, D4UE 9D475-A1A,A2A-not replaced	1
73	D - - Calif.	8	460	D3VY 9D475-A	#D3VE 9D475-AA	1

F (COUGAR)

73	F - - M/T	8	351-4/B	★D3ZZ 9D475-A	#D3ZE 9D475-AA,AB,AC, D4ZE 9D475-C1A,C2A-not replaced	1
73	F - - A/T	8	351-4/B	D3ZZ 9D475-B	#D3ZE 9D475-BB,BC, D4ZE 9D475-A1A,A2A	1
73	F - - A/T	8	351C	D3AZ 9D475-F	#D3AE 9D475-FC, D4AE 9D475-A1A,A1B,A2A,A2B	1

K (MARK V)

73	K	8	460	D30Z 9D475-C	#D30E 9D475-CA, D40E 9D475-A1A,A2A	1
73	K	8	460	D3VY 9D475-A	#D3VE 9D475-AA	1
73	K - - w/3.25 axle	8	460	★D3UZ 9D475-C	#D3UE 9D475-AA, D4UE 9D475-A1A,A2A Not replaced	1

P (COMET)

73	P - - M/T	6	All	★D3DZ 9D475-D	#D3DE 9D475-CA,C1A,C2A, D4DE 9D475-F1A,F2A	1
73	P - - without T/E	6	200	D30Z 9D475-D	#D30E 9D475-DA,D1A,D2A, D40E 9D475-B1A,B2A	1
73	P - - M/T & 2.79 axle-without A/C	8	302	D30Z 9D475-B	#D3ZE 9D475-BB,BC, D4ZE 9D475-A1A,A2A	1
73	P - - M/T with 3.00 axle & A/C	8	302			1

YEAR	MODEL/RESTRICTIONS	ENGINE CYL.	ENGINE C.I.D. (C.C.D.)	PART NUMBER	DESCRIPTION	QTY.

9D475 VALVE ASSY. (EXHAUST GAS RECIRCULATION)-Also refer to groups 9D448, 9F452 — Cont'd
NOTE - For gasket-refer to groups 9E464 or 9D476
▲ 2000cc @ 2300cc ⊕ 2800cc
Refer to page 71 for Application Instructions

APPLICATION CHART

1973

P (COMET)

73	P - - A/T	8	302	D30Z 9D475-D	#D30E 9D475-DA,D1A,D2A, D40E 9D475-B1A,B2A	1

Y (METEOR)

73	Y(exc. 71) - - w/3.25 axle	8	351	★D3ZZ 9D475-C	#D3ZE 9D475-BD,B1D,B2D, D4ZE 9D475-B1A,B2A	1
73	Y - - A/T	8	351C	D3ZZ 9D475-B	#D3ZE 9D475-BB,BC, D4ZE 9D475-A1A,A2A	1
73	Y - - A/T	8	351C	D3AZ 9D475-F	#D3AE 9D475-FC,F1B, D4AE 9D475-A1A,A1B,A2A,A2B	1
73	Y - - A/T	8	351W	D3DZ 9D475-A	#D3DE 9D475-AC,A1C, D4DE 9D475-E1A,E2A	1
73	Y	8	400	D3AZ 9D475-G	#D3AE 9D475-GA,GB,G1B,G2B, D4AE 9D475-D1A,D2A	1
73	Y - - C6 & 2.75 axle	8	400	★D3AZ 9D475-N	#D3AE 9D475-GC, D4AE 9D475-C1A,C2A	1
73	Y - - w/3.25 axle	8	429	★D3SZ 9D475-A	#D3SE 9D475-AA-not replaced	1
73	Y - - w/3.25 axle	8	429,460	D3BZ 9D475-A	#D3BE 9D475-AA, D4TE 9D475-A1A,A2A	1
73	Y(71) - - w/3.25 axle	8	460	★D3UZ 9D475-C	#D3UE 9D475-AA, D4UE 9D475-A1A,A2A Not replaced	1
73	Y	8	460 P/C	D3AZ 9D475-H	#D3AE 9D475-HA,HB, D4AE 9D475-B1A,B2A	1
73	Y	8	460 P/C	D3DZ 9D475-A	#D3DE 9D475-AC,A1C, D4DE 9D475-E1A,E2A	1

1974

A (MERCURY)

74	A	8	400	D3AZ 9D475-G	#D3AE 9D475-GA,GB,G1B,G2B, D4AE 9D475-D1A,D2A	1
74	A(71) - - w/3.25 axle	8	460	★D4AZ 9D475-A	#D3AE 9D475-KB	1
74	A - - T/E	8	460	★D4VY 9D475-C	#D4VE 9D475-CA	1
74	A	8	460 P/C	★D4AZ 9D475-B	#D3AE 9D475-LB-not replaced	1

C (MONTEGO)

74	C	6	250	D3DZ 9D475-A	#D3DE 9D475-AC,A1C, D4DE 9D475-E1A,E2A	1
74	C - - A/T without T/E	8	302	D30Z 9D475-D	#D30E 9D475-DA,D1A,D2A, D4AE 9D475-F1A,F2A, D40E 9D475-B1A,B2A	1
74	C - - T/E	8	351-2/B	D30Z 9D475-D	#D30E 9D475-DA,D1A,D2A, D4AE 9D475-F1A,F2A, D40E 9D475-B1A,B2A	1
74	C	8	351-4/B	D3ZZ 9D475-B	#D3ZE 9D475-BB,BC, D4ZE 9D475-A1A,A2A	1
74	C - - without T/E	8	351W	D3AZ 9D475-F	#D3AE 9D475-FC,F1B, D4AE 9D475-A1A,A1B,A2A,A2B	1

D (LINCOLN)

74	D - - without T/E	8	460	D3AZ 9D475-L	*CX-4-#D3AE 9D475-LA	1
74	D - - with T/E	8	460	★D4VY 9D475-C	#D4VE 9D475-CA	1

COPYRIGHT © 1986 — FORD MOTOR COMPANY — DEARBORN, MICHIGAN

1973/79 LINCOLN-MERCURY CARS

YEAR	MODEL/RESTRICTIONS	ENGINE CYL.	ENGINE C.I.D. (C.C.D.)	PART NUMBER	DESCRIPTION	QTY.

9D475 VALVE ASSY. (EXHAUST GAS RECIRCULATION)–Also refer to groups 9D448, 9F452 — Cont'd

NOTE - For gasket–refer to groups 9E464 or 9D476

▲ 2000cc @ 2300cc ⊕ 2800cc

Refer to page 71 for Application Instructions

APPLICATION CHART

1974

F (COUGAR)

74	F	8	351–4B	D3ZZ 9D475–B	#D3ZE 9D475–BB,BC, D4ZE 9D475–A1A,A2A	1
74	F	8	351W	D3AZ 9D475–F	#D3AE 9D475–FC, D4AE 9D475–A1A,A1B,A2A,A2B	1
74	F – – with T/E	8	400	D3AZ 9D475–G	#D3AE 9D475–G1A,G1B,G2A,G2B, D4AE–9D475–D1A,D2A	1
74	F	8	400	D4TZ 9D475–F	#D4TE 9D475–F1A,F2A	1
74	F – – without T/E	8	351C-2/B	D30Z 9D475–D	#D30E 9D475–D1A,D2A, D40E 9D475–B1A,B2A, D4AE 9D475–F1A,F2A	1
74	F – – with T/E	8	351C-2/B	D4AZ 9D475–G	#D4AE 9D475–G1A,G2A	1
74	F	8	460	★D4VY 9D475–C	#D4VE 9D475–CA	1

J (CAPRI)

74	J – – A/T without T/E	6	⊕171	D4ZZ 9D475–F	#74TF 9D475–F1A	1

K (MARK IV)

74	K – – w/3.25 axle	8	460	★D4AZ 9D475–A	#D3AE 9D475–KB	1
74	K – – T/E	8	460	★D4VY 9D475–C	#D4VE 9D475–CA	1
74	K – – without T/E	8	460	D3AZ 9D475–L	*CX–4 – #D3AE 9D475–LA	1

L (BOBCAT)

74	L	4	▲122	★D4FZ 9D475–E	#74HF 9D475–EE	1
74	L – – T/E	4	@140	D4FZ 9D475–C	#D42E 9D475–C1A,C1C,C1D,C2A,C2C,C2D, D52E 9D475–E2B	1
74	L – – M/T	4	@140	★D4FZ 9D475–K	#D42E 9D475–D1C	1
74	L – – A/T without T/E	4	@140	★D4FZ 9D475–G	#D42E 9D475–D1A,D1B,D2A,D2B, D52E 9D475–F2A	1
74	L – – M/T without T/E	4	@140	D4FZ 9D475–H	#D42E 9D475–FA	1
74	L – – A/T without T/E	4	@140	D4FZ 9D475–J	#D42E 9D475–A1C,A1D,A1F,A1G,A2C,A2D, A2F,A2G, D52E 9D475–G2A,G2B	1
74	L – – M/T with T/E	4	@140	D5FZ 9D475–M	#D42E 9D475–E1A,E1B,E2A,E2B, D52E 9D475–D2A,D2B	1

P (COMET)

74	P – – T/E	6	All	★D4DZ 9D475–A	#D4DE 9D475–A1B,A2B–not replaced	1
74	P – – without T/E	6	200	D30Z 9D475–D	#D30E 9D475–DA,D1A,D2A, D40E 9D475–B1A,B2A	1
74	P – – without T/E	6	250	D3DZ 9D475–A	#D3DE 9D475–AC,A1C, D4DE 9D475–E1A,E2A	1
74	P – – T/E	6	250	D4TZ 9D475–F	#D4TE 9D475–F1A,F2A	1
74	P – – M/T without T/E	8	302	D3ZZ 9D475–B	#D3ZE 9D475–BB,BC, D4ZE 9D475–A1A,A2A	1
74	P – – A/T–Calif.	8	302	D3AZ 9D475–F	#D3AE 9D475–FC, D4AE 9D475–A1A,A1B,A2A,A2B	1

Y (METEOR)

74	Y	8	351C–2/B	★D4AZ 9D475–E	#D4AE 9D475–E1A,E2A–not replaced	1
74	Y – – without T/E	8	351C–2/B	D30Z 9D475–D	#D30E 9D475–DA,D1A,D2A, D4AE 9D475–F1A,F2A, D40E 9D475–B1A,B2A	1

YEAR	MODEL/RESTRICTIONS	ENGINE CYL.	ENGINE C.I.D. (C.C.D.)	PART NUMBER	DESCRIPTION	QTY.

9D475 VALVE ASSY. (EXHAUST GAS RECIRCULATION)-Also refer to groups 9D448, 9F452 — Cont'd
NOTE - For gasket-refer to groups 9E464 or 9D476
▲ 2000cc @ 2300cc ⊕ 2800cc
Refer to page 71 for Application Instructions

APPLICATION CHART

1974

Y (METEOR)

74	Y	8	400	D3AZ 9D475-G	#D3AE 9D475-GA,GB,G1B,G2B, D4AE 9D475-D1A,D2A	1
74	Y - - T/E	8	460	★D4VY 9D475-C	#D4VE 9D475-CA	1

1975

A (MERCURY)

75	A	8	400	D30Z 9D475-C	#D30E 9D475-CA, D40E 9D475-A1A,A2A	1
75	A	8	460	D3AZ 9D475-L	*CX-4 - #D3AE 9D475-LA	1
75	A - - Calif.	8	460	★D5VY 9D475-C	#D5VE 9D475-C1A-not replaced	1
75	A - - Calif.	8	460	★D5VY 9D475-E	#D5VE 9D475-EA,F1A,F2A	1

C (MONTEGO)

75	C - - exc. Calif.	8	351M	D30Z 9D475-D	#D30E 9D475-DA,D1A,D2A, D4AE 9D475-F1A,F2A, D40E 9D475-B1A,B2A	1
75	C - - A/T-Calif.	8	351M	D3DZ 9D475-A	#D3DE 9D475-AC,A1C, D4DE 9D475-E1A,E2A	1

D (LINCOLN)

75	D	8	460	D3VY 9D475-A	#D3VE 9D475-AA	1
75	D - - Calif.	8	460	★D5VY 9D475-C	#D5VE 9D475-C1A-not replaced	1
75	D - - Calif.	8	460	★D5VY 9D475-E	#D5VE 9D475-EA,F1A,F2A	1

F (COUGAR)

75	F - - exc. Calif.	8	351M	D30Z 9D475-D	#D30E 9D475-D1A,D2A, D40E 9D475-B1A,B2A, D4AE 9D475-F1A,F2A	1
75	F	8	351W	D5AZ 9D475-A	#D5AE 9D475-A1A,A2A	1
75	F - - Calif.	8	351M	D3DZ 9D475-A	#D3DE 9D475-A1A,A1C, D4DE 9D475-E1A,E2A	1
75	F	8	400	D30Z 9D475-C	#D30E 9D475-CA, D40E 9D475-A1A,A2A	1
75	F - - Calif.	8	460	★D5VY 9D475-C	#D5VE 9D475-C1A-not replaced	1
75	F - - exc. Calif.	8	460	D3AZ 9D475-L	*CX-4-#D3AE 9D475-LA	1
75	F - - Calif.	8	460	★D5VY 9D475-E	#D5VE 9D475-EA,F1A,F2A	1

G (MONARCH)

75	G - - M/T-Canada	6	200	D4TZ 9D475-J	#D4TE 9D475-J1A,J2A	1
75	G - - A/T	6	250	D5DZ 9D475-A	*CX-23-#D5DE 9D475-A1A,A2A	1
75	G - - A/T-U.S.	6	250	D5DZ 9D475-B	*CX-28-#D5DE 9D475-B1A,B2A	1
75	G - - A/T & A/C-Calif.	6	250	D4TZ 9D475-F	#D4TE 9D475-F1A,F2A	1
75	G - - A/T-exc. Calif.	6	250	D4TZ 9D475-J	#D4TE 9D475-J1A,J2A	1
75	G - - M/T-exc. Calif.	6	250	D5TZ 9D475-C	#D5TE 9D475-C1B,C2B	1
75	G	8	302	D5DZ 9D475-A	*CX-23-#D5DE 9D475-A1A,A2A	1
75	G - - A/T	8	302 (2300)	D4TZ 9D475-E	#D4TE 9D475-E1A,E2A	1
75	G - - A/T-exc. Calif.	8	302	★D50Z 9D475-A	#D50E 9D475-A1A,A2A	1
75	G - - A/T-exc. Calif.	8	302	D4TZ 9D475-J	#D4TE 9D475-J1A,J2A	1
75	G - - M/T-exc. Calif.	8	302	D30Z 9D475-B	#D30E 9D475-BA,BB, D40E 9D475-D1A, D2A	1
75	G - - Calif.	8	302, 351W	D5TZ 9D475-D	#D5TE 9D475-C1A,C2A	1
75	G - - exc. Calif.	8	351W	D5AZ 9D475-A	#D5AE 9D475-A1A,A2A	1
75	G - - exc. Calif.	8	351W	D30Z 9D475-D	#D30E 9D475-DA, D40E 9D475-B1A,B2A	1

COPYRIGHT © 1986— FORD MOTOR COMPANY —DEARBORN, MICHIGAN

1973/79 LINCOLN-MERCURY CARS

YEAR	MODEL/RESTRICTIONS	ENGINE CYL.	ENGINE C.I.D. (C.C.D.)	PART NUMBER	DESCRIPTION	QTY.
9D475	VALVE ASSY. (EXHAUST GAS RECIRCULATION)-Also refer to groups 9D448, 9F452 — Cont'd					
NOTE -	For gasket-refer to groups 9E464 or 9D476					
	▲ 2000cc @ 2300cc ⊕ 2800cc					
	Refer to page 71 for Application Instructions					

APPLICATION CHART

1975

K (MARK IV)

75	K	8	460	D3VY 9D475-A	#D3VE 9D475-AA	1
75	K - - Calif.	8	460	★D5VY 9D475-C	#D5VE 9D475-C1A	1
75	K - - Calif.	8	460	★D5VY 9D475-E	#D5VE 9D475-EA,F1A,F2A	1

L (BOBCAT)

75	L - - T/E	4	@140	D4FZ 9D475-C	#D42E 9D475-C1A,C1C,C1D,C2A,C2C,C2D, D52E 9D475-E2B	1
75	L - - A/T without T/E	4	@140	★D4FZ 9D475-G	#D42E 9D475-D1A,D1B,D2A,D2B, D52E 9D475-F2A	1
75	L - - M/T-exc. Calif.	4	@140	D5FZ 9D475-N	#D52E 9D475-H2B	1
75	L - - M/T-Canada	4	@140			1
75	L - - M/T-Calif.	4	@140	D5FZ 9D475-L	*CX-2 - #D52E 9D475-L2A	1
75	L - - M/T-Calif.	4	@140	D5FZ 9D475-R	*CX-9 - #D52E 9D475-L2B	1
75	L - - A/T-exc. Calif.	4	@140	★D5FZ 9D475-P	*CX-7 - #D52E 9D475-J2B	1
75	L - - A/T-exc. Calif.	4	@140	D5FZ 9D475-J	#D52E 9D475-J2A	1
75	L - - A/T-exc. Calif.	4	@140	★D5FZ 9D475-Q	*CX-8 - #D52E 9D475-K2B	1
75	L - - A/T without T/E	4	@140	D4FZ 9D475-J	#D42E 9D475-A1C,A1D,A1F,A1G,A2 C,A2D, A2F,A2G, D52E 9D475-G2A,G2B	1
75	L - - M/T with T/E	4	@140	D5FZ 9D475-M	#D42E 9D475-E1A,E1B,E2A,E2B, D52E 9D475-D2A,D2B	1
75	L - - M/T-Calif.	4	@140			1
75	L	6	⊕171	D5TZ 9D475-C	#D5TE 9D475-C1B,C2B	1
75	L - - M/T-exc. Calif.	6	⊕171	★D5ZZ 9D475-J	*CX-18 - D5ZE 9D475-C1A,C2A, 75TF 9D475-J1A,J2A	1
75	L - - A/T	6	⊕171	★D5ZZ 9D475-D	*CX-17 - #75TF 9D475-D1A,D2A	1
75	L - - A/T-exc. Calif.	6	⊕171	D5ZZ 9D475-K	*CX-19 - #D5ZE 9D475-D1A,D2A, 75TF 9D475-K1A,K2A	1

P (COMET)

75	P - - M/T-Canada	6	200	D4TZ 9D475-J	#D4TE 9D475-J1A,J2A	1
75	P - - M/T-exc. Calif.	6	200	D30Z 9D475-D	#D30E 9D475-DA,D1A,D2A, D40E 9D475-B1A,B2A	1
75	P - - T/E	6	250	D4TZ 9D475-F	#D4TE 9D475-F1A,F2A	1
75	P - - exc. Calif.	6	250	D4TZ 9D475-J	#D4TE 9D475-J1A,J2A	1
75	P - - Calif.	6	250	D3DZ 9D475-D	#D3DE 9D475-CA,C1A,C2A, D4DE 9D475-F1A,F2A	1
75	P - - M/T-exc. Calif.	6	250	D5TZ 9D475-C	#D5TE 9D475-C1B,C2B	1
75	P - - A/T	6	250	D5DZ 9D475-A	*CX-23 - #D5DE 9D475-A1A,A2A	1
75	P - - A/T-exc. Canada	6	250	★D5DZ 9D475-B	*CX-28 - #D5DE 9D475-B1A,B2A	1
75	P	8	302	D5DZ 9D475-A	*CX-23 - #D5DE 9D475-A1A,A2A	1
75	P - - Calif.	8	302	D5TZ 9D475-D	#D5TE 9D475-C1A,C2A	1
75	P - - M/T-exc. Calif.	8	302	D3ZZ 9D475-B	#D3ZE 9D475-BB,BC, D4ZE 9D475-A1A,A2A	1
75	P - - A/T-exc. Calif.	8	302	★D50Z 9D475-A	#D50E 9D475-A1A,A2A	1

YEAR	MODEL/RESTRICTIONS	ENGINE CYL.	ENGINE C.I.D. (C.C.D.)	PART NUMBER	DESCRIPTION	QTY.
9D475	VALVE ASSY. (EXHAUST GAS RECIRCULATION)-Also refer to groups 9D448, 9F452 — Cont'd					
NOTE -	For gasket-refer to groups 9E464 or 9D476					
	▲ 2000cc @ 2300cc ⊕ 2800cc					
	Refer to page 71 for Application Instructions					
	APPLICATION CHART					
	1975					
	Y (METEOR)					
75	Y	8	351M	D30Z 9D475-D	#D30E 9D475-DA,D1A,D2A, D4AE 9D475-F1A,F2A, D40E 9D475-B1A,B2A	1
75	Y - - A/T-Calif.	8	351M	D3DZ 9D475-A	#D3DE 9D475-AC,A1C, D4DE 9D475-E1A,E2A	1
75	Y	8	400	D30Z 9D475-C	#D30E 9D475-CA, D40E 9D475-A1A,A2A	1
75	Y	8	460	★D5VY 9D475-C	#D5VE 9D475-C1A-not replaced	1
75	Y	8	460	★D5VY 9D475-E	#D5VE 9D475-EA,F1A,F2A	1
75	Y	8	460	D3AZ 9D475-L	*CX-4 - #D3AE 9D475-LA	1
	1976					
	A (MERCURY)					
76	A	8	400	D30Z 9D475-C	#D30E 9D475-CA, D40E 9D475-A1A,A2A	1
76	A	8	400	D6AZ 9D475-B	*CX-51 - #D6AE 9D475-B1A,B2A	1
76	A	8	460	D6VZ 9D475-A	*CX-27 - #D6VE 9D475-AA,B1B	1
76	A - - exc. Calif.	8	460 P/C	D3VY 9D475-A	#D3VE 9D475-AA	1
76	A - - Calif.	8	460 P/C	★D5VY 9D475-E	#D5VE 9D475-EA,F1A,F2A	1
	C (MONTEGO)					
76	C - - exc. Calif.	8	351M, 351W	D3AZ 9D475-F	#D3AE 9D475-FC, D4AE 9D475-A1A,A1B,A2A,A2B	1
	D (LINCOLN)					
76	D	8	460	D6VZ 9D475-A	*CX-27 - #D6VE 9D475-AA,B1B	1
	F (COUGAR)					
76	F - - Calif.	8	351M, 351W	★D6AZ 9D475-C	*CX-53 - #D6AE 9D475-C1A,C2A	1
76	F - - exc. Calif.	8	351M, 351W	D3AZ 9D475-F	D3AE 9D475-FC, D4AE 9D475-A1A,A1B,A2A,A2B	1
76	F	8	400	D6AZ 9D475-B	*CX-51 - #D6AE 9D475-B1A,B2A	1
76	F	8	460	D6VZ 9D475-A	*CX-27 - #D6VE 9D475-AA,B1B	1
	G (MONARCH)					
76	G - - M/T-exc. Calif.	6	200	D30Z 9D475-D	#D30E 9D475-DA, D40E 9D475-B1A,B2A	1
76	G - - A/T	6	200	D4TZ 9D475-K	#D4TE 9D475-K1A,K2A	1
76	G - - A/T	6	250	D5DZ 9D475-A	*CX-23-#D5DE 9D475-A1A,A2A	1
76	G - - M/T-exc. Calif.	6	250	D5TZ 9D475-C	#D5TE 9D475-C1B,C2B	1
76	G - - M/T-Calif.	6	250	D6TZ 9D475-B	*CX-73-D5TE 9D475-F1A,F2A	1
76	G	8	302	D5DZ 9D475-A	*CX-23-D5DE 9D475-A1A,A2A	1
76	G - - Calif.	8	302, 351W	D5TZ 9D475-D	#D5TE 9D475-C1A,C2A	1
76	G	8	351W	D5DZ 9D475-A	*CX-23-#D5DE 9D475-A1A,A2A	1
76	G - - Canada	8	351W	D30Z 9D475-D	#D30E 9D475-DA, D40E 9D475-B1A,B2A	1
	J (CAPRI)					
76	J	4	@140	D4FZ 9D475-J	#D42E 9D475-A1C,A1D,A1F,A1G,A2C,A2D, A2F,A2G, D52E 9D475-G2A,G2B	1
76	J - - M/T-exc. Calif.	4	@140	D5FZ 9D475-N	#D52E 9D475-H2B	1
76	J - - M/T-Calif.	4	@140	D5FZ 9D475-R	*CX-9 - #D52E 9D475-L2B	1
76	J - - A/T-exc. Calif.	4	@140	★D5RY 9D475-E	*CX-12 - #D58E 9D475-A2A-not replaced	1
76	J - - A/T-Calif.	4	@140	D5FZ 9D475-M	*CX-5 - #D52E 9D475-D2B	1
76	J - - M/T and T/E-Calif.- "Before 8/30/76"	6	⊕171	D5RY 9D475-B	*CX-14 - #75TF 9D475-F1A,F2A	1

COPYRIGHT © 1986 — FORD MOTOR COMPANY — DEARBORN, MICHIGAN

1973/79 LINCOLN-MERCURY CARS

YEAR	MODEL/RESTRICTIONS	ENGINE CYL.	ENGINE C.I.D. (C.C.D.)	PART NUMBER	DESCRIPTION	QTY.

9D475 VALVE ASSY. (EXHAUST GAS RECIRCULATION)-Also refer to groups 9D448, 9F452 — Cont'd
NOTE - For gasket-refer to groups 9E464 or 9D476
▲ 2000cc @ 2300cc ⊕ 2800cc
Refer to page 71 for Application Instructions

APPLICATION CHART

1976

J (CAPRI)

76	J - - M/T and T/E- "Before 8/30/76"	6	⊕171	★D5RY 9D475-F	*CX-21 - #75TF 9D475-A1A,A2A	1
76	J - - M/T- "From 8/30/76 to 1/1/77"	6	⊕171	D7DZ 9D475-B	*CX-124 - #D7DE 9D475-B1A,B2A, 77TF 9D475-C1A,C2A	1
76	J - - A/T and T/E-Calif.- "Before 8/30/76"	6	⊕171	★D5RY 9D475-C	*CX-15 - #75TF 9D475-H1A,H2A	1
76	J - - A/T and T/E- "Before 8/30/76"	6	⊕171	★D5RY 9D475-D	*CX-16 - #75TF 9D475-G1A,G2A-not replaced	1
76	J - - A/T-exc. Calif.- "From 8/30/76"	6	⊕171	D7ZZ 9D475-D	*CX-192 - #77TF 9D475-D1A,D2A	1
76	J - - A/T-Calif.- "From 8/30/76"	6	⊕171	D7ZZ 9D475-E	*CX-193 - #77TF 9D475-E1A,E2A	1

K (MARK IV)

76	K	8	460	D6VZ 9D475-A	*CX-27 - #D6VE 9D475-AA,B1B	1

L (BOBCAT)

76	L - - M/T-exc. Calif.	4	@140	D5FZ 9D475-N	#D52E 9D475-H2B	1
76	L - - M/T-Canada	4	@140			1
76	L - - M/T-Calif.	4	@140	D5FZ 9D475-R	*CX-9 - #D52E 9D475-L2B	1
76	L - - M/T	4	@140			1
76	L - - A/T-Canada	4	@140	★D5FZ 9D475-P	*CX-7 - #D52E 9D475-J2B	1
76	L - - A/T without T/E	4	@140	D4FZ 9D475-J	#D42E 9D475-A1C,A1D,A1F,A1G,A2 C,A2D, A2F,A2G, D52E 9D475-G2A,G2B	1
76	L	4	@140			1
76	L - - A/T-Calif.	4	@140	D5FZ 9D475-M	#D42E 9D475-E1A,E1B,E2A,E2B, D52E 9D475-D2A,D2B	1
76	L	6	⊕171	D5TZ 9D475-C	#D5TE 9D475-C1B,C2B	1
76	L - - M/T-exc. Calif.	6	⊕171	D5ZZ 9D475-J	*CX-18 - #D5ZE 9D475-C1A,C2A 75TF 9D475-J1A,J2A	1
76	L - - A/T	6	⊕171	D5ZZ 9D475-D	*CX-17 - #75TF 9D475-D1A,D2A	1
76	L - - A/T-exc. Calif.	6	⊕171	D5ZZ 9D475-K	*CX-19 - #D5ZE 9D475-D1A,D2A, 75TF 9D475-K1A,K2A	1

P (COMET)

76	P - - M/T-exc. Calif.	6	200	D30Z 9D475-D	#D30E 9D475-DA,D1A,D2A, D40E 9D475-B1A,B2A	1
76	P - - A/T-exc. Calif.	6	200	D4TZ 9D475-K	#D4TE 9D475-K1A,K2A	1
76	P - - M/T-exc. Calif.	6	250	D5TZ 9D475-C	#D5TE 9D475-C1B,C2B	1
76	P - - M/T-Calif.	6	250	D6TZ 9D475-B	*CX-73 - #D5TE 9D475-F1A,F2A	1
76	P - - A/T	6	250	D5DZ 9D475-A	*CX-23 - #D5DE 9D475-A1A,A2A	1
76	P	8	302	D5DZ 9D475-A	*CX-23 - #D5DE 9D475-A1A,A2A	1
76	P - - Calif.	8	302	D5TZ 9D475-D	#D5TE 9D475-C1A,C2A	1

Y (METEOR)

76	Y	8	351M	D3AZ 9D475-F	#D3AE 9D475-FC,F1B, D4AE 9D475-A1A,A1B,A2A,A2B	1
76	Y	8	400	D30Z 9D475-C	#D30E 9D475-CA, D40E 9D475-A1A,A2A	1
76	Y	8	400	D6AZ 9D475-B	*CX-51 - #D6AE 9D475-B1A,B2A	1
76	Y	8	460	D6VZ 9D475-A	*CX-27 - #D6VE 9D475-AA,B1B	1
76	Y - - exc. Calif.	8	460 P/C	D3VY 9D475-A	#D3VE 9D475-AA	1

YEAR	MODEL/RESTRICTIONS	ENGINE CYL.	ENGINE C.I.D. (C.C.D.)	PART NUMBER	DESCRIPTION	QTY.

9D475 VALVE ASSY. (EXHAUST GAS RECIRCULATION)-Also refer to groups 9D448, 9F452 — Cont'd
NOTE - For gasket-refer to groups 9E464 or 9D476
▲ 2000cc @ 2300cc ⊕ 2800cc
Refer to page 71 for Application Instructions

APPLICATION CHART

1977

A (MERCURY)

77	A	8	460 P/C	★ D7AZ 9D475-C	*CX-139 - #D7AE 9D475-C1A,C2A	1

G (MONARCH)

77	G - - M/T	6	200,250	D7DZ 9D475-B	*CX-124-#D7DE 9D475-B1A,B2A	1
77	G - - A/T-exc. Calif.	6	250	D7DZ 9D475-D	*CX-126-#D7DE 9D475-A1A,A2A	1
77	G - - A/T-Calif.	6	250	D7DZ 9D475-E	*CX-166-#D7DE 9D475-C1A,C2A	1

J (CAPRI)

77	J - - M/T-exc. Calif.	4	@140	D8FZ 9D475-D	*CX-176-A-#D7EE 9D475-K2A, D8EE 9D475-D2A,D3A, 777F 9D475-AA-incl. (1) D7FZ 9D476-A gasket	1
77	J - - M/T-Calif.	4	@140	★ D7RY 9D475-C	*CX-359 - #777F 9D475-CA	1
77	J - - A/T-exc. Calif.	4	@140	E2ZZ 9D475-C	*CX-113-B-#D7EE 9D475-G2A,777F 9D475-BA, D8EE 9D475-E2A,E3A-incl. (1) D7FZ 9D476-A gasket	1
77	J - - A/T-Calif.	4	@140	D7FZ 9D475-F	*CX-112 - #D7EE 9D475-F2A, 777F 9D475-DA	1
77 77	J - - M/T- "From 8/30/76 to 1/1/77" J - - M/T-exc. Calif.- "From 1/1/77"	6	⊕171	D7DZ 9D475-B	*CX-124 - #D7DE 9D475-B1A,B2A, 77TF 9D475-C1A,C2A	1 1
77	J - - M/T-Calif.	6	⊕171	D7RY 9D475-F	*CX-303 - #77TF 9D475-F1A,F2A-incl. (1) D7AZ 9E464-E gasket	1
77	J - - A/T-exc. Calif.	6	⊕171	D7ZZ 9D475-D	*CX-192 - #77TF 9D475-D1A,D2A	1
77	J - - A/T-Calif.	6	⊕171	D7ZZ 9D475-E	*CX-193 - #77TF 9D475-E1A,E2A	1

L (BOBCAT)

77	L	4	@140	E2ZZ 9D475-C	*CX-113-B-#D7EE 9D475-G2A, D8EE 9D475-E2A,E3A, E2ZE 9D475-CA-incl. (1) D7FZ 9D476-A gasket	1
77	L - - M/T-w/Hi-altitude carb.	4	@140	D8FZ 9D475-D	*CX-176-A - #D7EE 9D475-K2A,D8EE 9D475-D2D,D3A-incl. (1) D7FZ 9D476-A gasket	1
77	L - - M/T-Calif.	4	@140	D9ZZ 9D475-D	*CX-110 - #D7EE 9D475-D2A, D9ZE 9D475-D2A	1
77	L - - M/T-Calif.	4	@140	D7FZ 9D475-E	*CX-111 - #D7EE 9D475-E2A	1
77	L - - A/T-w/Hi-altitude carb.	4	@140	★ D7FZ 9D475-H	*CX-114 - #D7EE 9D475-H2A	1
77	L - - A/T-exc. Calif.	4	@140	D7FZ 9D475-M	*CX-244 - #D7EE 9D475-M2A-incl. (1) D7FZ 9D476-A gasket	1
77	L - - A/T-Calif.	4	@140	D7FZ 9D475-F	*CX-112 - #D7EE 9D475-F2A	1
77	L - - A/T-exc. Calif.	6	⊕171	D7ZZ 9D475-D	*CX-192 - #77TF 9D475-D1A,D2A	1
77	L - - A/T-Calif.	6	⊕171	D7ZZ 9D475-E	*CX-193 - #77TF 9D475-E1A,E2A	1

P (COMET)

77	P - - A/T	6	200	D7DZ 9D475-C	*CX-125 - #D7BE 9D475-B1A,B2A	1
77	P - - M/T-exc. Calif.	6	200,250	D7DZ 9D475-B	*CX-124 - #D7DE 9D475-B1A,B2A	1
77	P - - A/T-exc. Calif.	6	250	D7DZ 9D475-D	*CX-126 - #D7DE 9D475-A1A,A2A	1
77	P - - A/T-Calif.	6	250	D7DZ 9D475-E	*CX-166 - #D7DE 9D475-C1A,C2A	1

COPYRIGHT © 1986— FORD MOTOR COMPANY —DEARBORN, MICHIGAN

1973/79 LINCOLN-MERCURY CARS

YEAR	MODEL/RESTRICTIONS	ENGINE CYL.	ENGINE C.I.D. (C.C.D.)	PART NUMBER	DESCRIPTION	QTY.

9D475 VALVE ASSY. (EXHAUST GAS RECIRCULATION)-Also refer to groups 9D448, 9F452 — Cont'd
NOTE - For gasket-refer to groups 9E464 or 9D476
▲ 2000cc @ 2300cc ⊕ 2800cc
Refer to page 71 for Application Instructions

APPLICATION CHART

1978

A (MERCURY)

78	A	8	460 P/C	D7DZ 9D475-B	*CX-124 - #D7DE 9D475-B1A,B2A, 77TF 9D475-C1A,C2A	1

G (MONARCH)

78	G - - M/T	6	250	D7DZ 9D475-B	*CX-124-#D7DE 9D475-B1A,B2A	1
78	G - - A/T-without T/E-exc. Calif.	6	250	D7DZ 9D475-C	*CX-125-#D7BE 9D475-B2A	1
78	G - - A/T-with T/E-exc. Calif.	6	250	D8DZ 9D475-C	*CX-301- #D8DE 9D475-C1A,C2A-incl. (1) D7AZ 9E464-E gasket	1
78	G - - A/T-Calif.	6	250	D7DZ 9D475-E	*CX-166-#D7DE 9D475-C1A,C2A	1

J (CAPRI)

78	J - - M/T-exc. Calif.	4	@140	D8FZ 9D475-D	*CX-176-A- D7EE 9D475-K2A, D8EE 9D475-D2A,D3A, 777F 9D475-AA-incl. (1) D7FZ 9D476-A gasket	1
78	J - - M/T-Calif.	4	@140	D9ZZ 9D475-D	*CX-110-#D7EE 9D475-D2A, D9ZE 9D475-D2A-incl. (1) D7FZ 9D476-A gasket	1
78	J - - A/T-exc. Calif.-	4	@140	E2ZZ 9D475-C	*CX-113-A-#D7EE 9D475-G2A, 777F 9D475-BA D8EE 9D475-E2A,E3A, E2ZE 9D475-CA-incl. (1) D7FZ 9D476-A gasket	1
78	J - - A/T-Calif.	4	@140	D7FZ 9D475-F	*CX-112 - #D7EE 9D475-F2A, 777F 9D475-DA	1
78	J - - M/T-exc. Calif.	6	⊕171	D7DZ 9D475-B	*CX-124 - #D7DE 9D475-B1A,B2A, 77TF 9D475-C1A,C2A	1
78	J - - M/T-Calif.	6	⊕171	D7RY 9D475-F	*CX-303 - #77TF 9D475-F1A,F2A-incl. (1) D7AZ 9E464-E gasket	1
78	J - - A/T-exc. Calif.	6	⊕171	D7ZZ 9D475-D	*CX-192 - #77TF 9D475-D1A,D2A	1
78	J - - A/T-Calif.	6	⊕171	D7ZZ 9D475-E	*CX-193 - #77TF 9D475-E1A,E2A	1

L (BOBCAT)

78 78	L L - - A/T-w/Hi-altitude carb.	4 4	@140 @140	E2ZZ 9D475-C	*CX-113-B-#D7EE 9D475-G2A,D8EE 9D475-E2A,E3A, E2ZE 9D475-CA-incl. (1) D7FZ 9D476-A gasket	1 1
78	L - - M/T	4	@140	D8FZ 9D475-D	*CX-176-A-D7EE 9D475-K2A, D8EE 9D475-D2A,D3A-incl. (1) D7FZ 9D476-A gasket-	1
78	L - - M/T-Calif.	4	@140	D9ZZ 9D475-D	*CX-110-#D7EE 9D475-D2A, D9ZE 9D475-D2A-incl. (1) D7FZ 9D476-A gasket	1
78	L - - M/T-Calif.	4	@140	D8FZ 9D475-L	*CX-299 - #D7EE 9D475-L2A-incl. (1) D7FZ 9D476-A gasket	1
78	L - - M/T-Calif.	4	@140	D7FZ 9D475-E	*CX-111-#D7EE 9D475-E2A	1
78	L - - A/T-exc. Calif.	4	@140	D7FZ 9D475-M	*CX-244 - #D7EE 9D475-M2A-incl. (1) D7FZ 9D476-A gasket	1
78	L - - A/T-Calif.	4	@140	D7FZ 9D475-F	*CX-112 - #D7EE 9D475-F2A	1
78	L - - Calif.	6	⊕171	D7DZ 9D475-B	*CX-124 - #D7DE 9D475-B1A,B2A, 77TF 9D475-C1A,C2A	1
78	L - - exc. Calif.	6	⊕171	D7ZZ 9D475-D	*CX-192-#77TF 9D475-D1A,D2A	1

YEAR	MODEL/RESTRICTIONS	ENGINE CYL.	ENGINE C.I.D. (C.C.D.)	PART NUMBER	DESCRIPTION	QTY.
9D475	VALVE ASSY. (EXHAUST GAS RECIRCULATION)-Also refer to groups 9D448, 9F452 — Cont'd					
NOTE -	For gasket-refer to groups 9E464 or 9D476					
	▲ 2000cc @ 2300cc ⊕ 2800cc					
	Refer to page 71 for Application Instructions					
	APPLICATION CHART					
	1978					
	P (ZEPHYR)					
78	P	4	@140	E2ZZ 9D475-C	*CX-113-B-#D7EE 9D475-G2A,D8EE 9D475-E2A,E3A, E2ZE 9D475-CA-incl. (1) D7FZ 9D476-A gasket	1
78	P - - M/T-Calif.	4	@140	D9ZZ 9D475-D	*CX-110-#D7EE 9D475-D2A, D9ZE 9D475-D2A-incl. (1) D7FZ 9D476-A gasket	1
78	P - - M/T	6	200	D8BZ 9D475-D	*CX-245 - #D8BE 9D475-D1A,D2A-incl. (1) D7AZ 9E464-E gasket	1
78	P - - C4-A/T-exc. Calif.	6	200	D8BZ 9D475-B	*CX-246 - #D8BE 9D475-B1A,B2A-incl. (1) D7AZ 9E464-E gasket	1
78	P - - A/T-w/Hi-altitude carb.	6	200			1
78	P - - C3-A/T-exc. Calif.	6	200	D8BZ 9D475-E	*CX-247 - #D8BE 9D475-E1A,E2A-incl. (1) D7AZ 9D464-E gasket	1
	1979					
	G (MONARCH)					
79	G - - A/T-with T/E-exc. Calif.	6	250	D8DZ 9D475-C	*CX-301-#D8DE 9D475-C1A,C2A-incl. (1) D7AZ 9E464-E gasket	
	G - - A/T-without T/E-exc. Calif.	6	250	D7DZ 9D475-C	*CX-125-#D7BE 9D475-B2A	1
	J (CAPRI)					
79	J - - M/T-w/Hi-altitude carb.	4	@140-exc. TC	D8FZ 9D475-D	*CX-176-A,D3A-#D8EE 9D475-D2A,D3A-incl. (1) D7FZ 9D476-A gasket	1
79	J - - A/T-exc. Calif.	4	@140-exc. TC	E2ZZ 9D475-B	*CX-329-A - #D9ZE 9D475-B2A,B3A-incl. (1) D7FZ 9D476-A gasket	1
79	J - - A/T-Calif.	4	@140-exc. TC	D9BZ 9D475-A	*CX-326 - #D9BE 9D475-A2A-incl. (1) D7FZ 9D476-A gasket	1
79	J - - M/T-Calif.	4	@140-exc. TC	D9ZZ 9D475-D	*CX-387 - #D9ZE 9D475-D2A-incl. (1) D7FZ 9D476-A gasket	1
79	J - - M/T-exc. Calif.	4	@140-exc. TC	D9ZZ 9D475-C	*CX-376 - #D9ZE 9D475-C2A-incl. (1) D7FZ 9D476-A gasket	1
79	J - - exc. Calif.	4	@140-TC	D9ZZ 9D475-A	*CX-312 - #D9ZE 9D475-AA-incl. (1) D7FZ 9D476-A gasket	1
79	J - - Calif.	4	@140-TC	D9ZZ 9D475-G	*CX-386 - #D9ZE 9D475-G2A-incl. (1) D7FZ 9D476-A gasket	1
79	J - - A/T-exc. Calif.	6	⊕171	D9FZ 9D475-G	*CX-404-#79TF 9D475-GA-incl. (1) D7VZ 9E464-A gasket	1
79	J - - M/T	6	⊕171	D9FZ 9D475-F	*CX-403-#79TF 9D475-FA-incl. (1) D7VZ 9E464-A gasket	1
79	J	6	200	D8BZ 9D475-E	*CX-247-#D8BE 9D475-E1A,E2A-incl. (1) D7AZ 9E464-E gasket	1

COPYRIGHT © 1986 — FORD MOTOR COMPANY — DEARBORN, MICHIGAN

1973/79 LINCOLN-MERCURY CARS

YEAR	MODEL/RESTRICTIONS	ENGINE CYL.	ENGINE C.I.D. (C.C.D.)	PART NUMBER	DESCRIPTION	QTY.

9D475 VALVE ASSY. (EXHAUST GAS RECIRCULATION)-Also refer to groups 9D448, 9F452 — Cont'd

NOTE- For gasket-refer to groups 9E464 or 9D476

▲ 2000cc @ 2300cc ⊕ 2800 cc

Refer to page 71 for Application Instructions

APPLICATION CHART

1979

L (BOBCAT)

79	L - - M/T-w/Hi-altitude carb.	4	@140	D8FZ 9D475-D	*CX-176-A,D3A-#D8EE 9D475-D2A,D3A-incl. (1) D7FZ 9D476-A gasket	1
79	L - - A/T-exc. Calif.	4	@140	E2ZZ 9D475-B	*CX-329-A - #D9ZE 9D475-B2A,B3A-incl. (1) D7FZ 9D476-A gasket	1
79	L - - A/T-Calif.	4	@140	E2ZZ 9D475-C	*CX-113-B-#D8EE 9D475-E2A,E3A, E2ZE 9D475-CA-incl. (1) D7FZ 9D476-A gasket	1
79	L - - M/T-exc. Calif.	4	@140	D9ZZ 9D475-C	*CX-376 - #D9ZE 9D475-C2A-incl. (1) D7FZ 9D476-A gasket	1
79	L - - A/T-exc. Calif.	6	⊕171	D9FZ 9D475-G	*CX-404-#79TF 9D475-GA-incl. (1) D7VZ 9E464-A gasket	1
79	L - - M/T	6	⊕171	D9FZ 9D475-F	*CX-403-#79TF 9D475-FA-incl. (1) D7VZ 9E464-A GASKET	1

P (ZEPHYR)

79	P - - A/T-Calif.	4	@140	D9BZ 9D475-A	*CX-326-#D9BE 9D475-A2A-incl. (1) D7FZ 9D476-A gasket	1
79	P - - A/T-exc. Calif.	4	@140	E2ZZ 9D475-B	*CX-329-A - #D9ZE 9D475-B2A,B3A-incl. (1) D7FZ 9D476-A gasket	1
79	P - - M/T-Calif.	4	@140	D9ZZ 9D475-D	*CX-387 - #D9ZE 9D475-D2A-incl. (1) D7FZ 9D476-A gasket	1
79	P - - M/T-exc. Calif.	4	@140	D9ZZ 9D475-C	*CX-376 - #D9ZE 9D475-C2A-incl. (1) D7FZ 9D476-A gasket	1
79	P - - A/T-exc. Calif.	6	200	D8BZ 9D475-E	*CX-247 - #D8BE 9D475-E1A,E2A-incl. (1) D7AZ 9E464-E gasket	1
79	P - - M/T	6	200	D8BZ 9D475-D	*CX-245 - #D8BE 9D475-D1A,D2A-incl. (1) D7AZ 9E464-E gasket	1
74/	L	4	@140	D4FZ 6379-B	Used to retain EGR valve	1
73/	A,C,D,F,K,P,Y	6&8	All	34807-S8	(X-66)-washer (EGR valve to carb. spacer)-3/8"	1
73/	A,C,D,F,K,P,Y	6&8	All	★55644-S13	Screw & washer assy. (EGR valve to carb. to intake manifold spacer)-5/16"-18 x 1 1/8"	1
73/	A,C,D,F,K,P,Y	6&8	All	354135-S7-8	(BB-155-A)-bolt (EGR valve to carb. spacer)-hex. head-3/8"-16 x 1 1/8"	1
75/	A,C,D,F,G,J,K,L,P,Y	6&8	All	376785-S2	(MM-292-H)-nut (EGR valve to carb. spacer)-3/8"-16	1
75/	A,C,D,F,G,J,K,L,P,Y	6&8	All	376838-S2	(MM-296-AF)-nut (EGR valve to carb. spacer)-5/16"-18	1
73	C,F - - A/T & 2.75 axle	8	351,400	385509-S	(BB-539-N)-screw (use to service D3ZE 9D475-A1C,B1C,B1D EGR valve)-No. 8-32 x 3/8"	4
75/	A,C,D,F,G,K,P,Y	6&8	All	386694-S	(WW-153)-stud (EGR valve & back pressure valve to carb. spacer)-3/8"-16-16 x 2.45"	1
75/	A,C,D,F,G,K,P,Y	6&8	All	386999-S	(WW-14-DA)-stud (EGR valve & back pressure valve to carb. spacer)-5/16"-18-18 x 2.40"	1

YEAR	MODEL/RESTRICTIONS	ENGINE CYL.	ENGINE C.I.D. (C.C.D.)	PART NUMBER	DESCRIPTION	QTY.
9D475	VALVE ASSY. (EXHAUST GAS RECIRCULATION)-Also refer to groups 9D448, 9F452 — Cont'd					
74/	L	4	@140	N602550-S2	(AB-62)-screw & washer assy. (EGR valve to carb. spacer)-M8 x 25 (Metric)	2
76/	J- "From 8/30/76"	6	⊕171	E800209-S72	(AB-182-G)-bolt (attach EGR valve)-M10-28	2
74	J	4&6	All	E800417-S72	Screw-hex. head-M10 x 25 (Metric)	1
76/	J	4	@140	E800490-S72	(AB-119-B)-bolt (attach EGR valve)-M10-20	2
74	J - - T/E	4	▲122	E820046-S72	(AM-12-G)-nut (valve assy. to mounting gasket)-1/2"-14 pipe thread	2
79	A	8	351W	388431-S	(BB-929-E) bolt & washer (EGR valve to manifold) 3/8-16 x 1 3/16	1
9A476	FITTING ASSY. (INTAKE MANIFOLD OUTLET)-Also refer to group 9A474 ⊕ 2800 cc					
74	C,F	8	460	★ D40Z 9A476-F		1
9D476	GASKET (EXHAUST GAS RECIRCULATION VALVE)-Also refer to group 9E464 @ 2300 cc ⊕ 2800 cc					
73/76	A,C,D,F,G,K,L,P,Y	6&8	All	D5AZ 9D476-B	*CG-560	AR
74	J	6	⊕171	D4ZZ 9D476-A		1
74/76	L	4	@140	D4FZ 9D476-B	*CG-559	1
76	J	4	@140			1
77/	J,L	4	@140	E5ZZ 9D476-A	*CG-480-B	1
78/	P	4	@140			1
78	V	8	302	★ D84Y 9D476-A		1
79	A	8	351W	D9AZ 9D476-B		1
73	C,P	8	302	378830-S	(II-106-H)-tee (valve)-3-way-3/16"	AR
9E476	GASKET (EXHAUST GAS RECIRCULATION VALVE BODY)					
73	C - - A/T	8	351C, 400	★ D3AZ 9E476-A Not replaced	Round type-incl. 3 holes-1" I.D. x 1 3/8" O.D.-used with EGR valves ident. by D3AE 9D475-G2B,D3ZE 9D475-A2C,B2C or B2D	1
73	A,F - - A/T	8	351C			1
9E476	GASKET (EXHAUST GAS RECIRCULATION VALVE ADAPTER)					
73	C	8	351W, 400	★ D3AZ 9E476-B Not replaced	Rectangular type-incl. 4 bolt holes-1 3/4" long x 1 3/16" wide-used with EGR valves ident. by D3AE 9D475-G1B,D3ZE 9D475-A1C, B1C or B1D	1
73	C,F - - with 2.75 axle	8	351C-2/B			1
9C477	GASKET (CARBURETOR TO INTAKE MANIFOLD SPACER)-Refer to group 9447					
9D477	TUBE (EXHAUST RECIRCULATION VALVE TO EXHAUST MANIFOLD) ▲ 2000 cc @ 2300 cc ⊕ 2800 cc					
73/74	C,P	6	All	D3DZ 9D477-B	Incl. (1) 385728-S36 elbow	1
75	G,P - - exc. Calif. "Before 10/14/75"	6	250	★ D5DZ 9D477-A		1
75/76	G,P - - Calif. "Before 10/14/75"	6	250	D5DZ 9D477-B		1
75/76	G,P "From 10/14/75"	6	250			1
75/76	G,P	6	200	D5DZ 9D477-C	✓	1
77/	G,P - - exc. Calif.	6	All	D7DZ 9D477-C	No loop type	1
79	J	6	200			1
77	P - - Calif.	6	250	D8DZ 9D477-A		1
77/78	G - - Calif.	6	250			1
78/	P - - Calif.	6	200	D8BZ 9D477-C	3 loop type	1
74	J,L	4	▲122	★ D4FZ 9D477-C		1
74	J	6	⊕171	D4ZZ 9D477-A		1
77/	L,J	4	@140	D8FZ 9D477-B	Incl. insulator, retainer & tube end nuts	1
78/	P	4	@140			1

COPYRIGHT © 1986— FORD MOTOR COMPANY —DEARBORN, MICHIGAN

1973/79 LINCOLN-MERCURY CARS

YEAR	MODEL/RESTRICTIONS	ENGINE CYL.	ENGINE C.I.D. (C.C.D.)	PART NUMBER	DESCRIPTION	QTY.
9D477	TUBE (EXHAUST RECIRCULATION VALVE TO EXHAUST MANIFOLD) — Cont'd ▲ 2000 cc @ 2300 cc ⊕ 2800 cc					
74/76	L	4	@140	D4FZ 9D477-A		1
76	J	4	@140			1
79	J - - w/o Hi-altitude carb.	4	@140-exc. TC	D9FZ 9D477-A		1
79	J	4	@140-TC	D9ZZ 9D477-A		1
79	L	4	@140	D9FZ 9D477-D		1
79	J - - w/Hi-altutude carb.	4	@140-exc. TC			1
73/74	C,P		All	385345-S36	(MM-109-H)-nut (tube to exhaust manifold)-1/2"	1
74	C,P	6	All	385728-S36	(II-153-AE)-elbow (tube to carb. spacer)-3/8" pipe	1
74/	J	6	⊕171	N855074-S51	(AM-34)-pipe nut (tube to exhaust manifold)-M18 x 1.5 x 12.3 I.D. (Metric)	1
74/	J	4&6	All	E855200-S72	(AI-15)-connector (tube to exhaust manifold)-3/8 x M18 x 1.5 (Metric)	1
74/	J	6	⊕171	E855090-S72	(AI-36)-connector (tube to exhaust manifold)-3/8 x M22 (Metric)	1
75/76	G,P	6	All	386439-S36	(II-163-A)-elbow (tube to carb. spacer)-90°-1/2"-14 x 5/8"	1
74/76	L,J	4	@140	N855076-S51	(AI-13)-elbow (tube to EGR valve)-90°-3/8" pipe (Metric)	1
75/76	G,P	6	All	386250-S36	(II-86-H)-connector (EGR tube to exhaust manifold-1/2"-14-5/8" tube	1
75/	G,P	6	All	386252-S	(MM-109-M)-nut (EGR tube to elbow at carb. spacer and to connector at exhaust manifold)-7/8"-18-5/8"tube compression	2
77	G,P - - exc. Calif.	6	All	387404-S36	(II-229-L)Elbow -(EGR tube to carb. spacer)-3/4"-14-5/8" tube	1
78	G,P - - exc. Calif.	6	All	388081-S36	(II-229-M) Elbow (EGR tube to carb. spacer)3/4"-14 x 5/8" tube	1
77/	G,P - - exc. Calif.	6	All	387403-S36	(II-85-DL) Connector-(EGR tube to manifold)-3/4"-14-5/8" tube	1
77/	G,P - - Calif.	6	250	387405-S36	(II-229-P)- elbow 90°(EGR. tube to carb. spacer)-3/4"-14-3/4" tube	1
77/	G,P - - Calif.	6	250	387464-S36	(II-176-Z) -elbow 35°(EGR tube to manifole) 3/4"-14-3/4"tube	1
77/	J,L	4	@140	N800142-S8	(AI-13-L) Elbow-(EGR tube to exhaust manifold) -90°-1/2"-14 male x M22 female thread-(16.0 tube Metric)	1
78/	P	4	@140			1
9G477	CLIP (TUBE RETENTION BACK PRESSURE TRANSDUCER)					
75/76	A,C,D,F,G,K,P	8	All	D8AZ 9G477-A		1
9F478	GASKET (EGR COOLER TUBE)-OUTLET					
78/	V	8	302	D8DZ 9F478-B	Conical shape	2
79	A	8	351W			1
9G478	SHIELD (TURBOCHARGER HEAT)					
79	J	4	@140-TC	D9ZZ 9G478-B		1
79	J	4	@140-TC	N800552-S36	(AW-74-E)-stud (attch shield) M6 x 1.0 x M8 x 1.25 x 48.1	1
79	J	4	@140-TC	N621906-S2	(AM-24-E)-nut(attach shield) M6 x 1.0	1

YEAR	MODEL/RESTRICTIONS	ENGINE CYL.	ENGINE C.I.D. (C.C.D.)	PART NUMBER	DESCRIPTION	QTY.
9F479	SENSOR ASSY (MANIFOLD ABSOLUTE PRESSURE) - Also refer to group 12A680					
78/79	V "Before 11/6/78"	8	302	D84Y 9F479-A	*CX-214-#D8VE 9F479-AB-"From 11/6/78" refer to group 12A680	1
9G479	BRACKET (TURBOCHARGER HEAT SHIELD)					
79	J	4	@140 TC	★ D9ZZ 9G479-A	R/b D9ZZ 9G478-B	1
9B480	TUBE ASSY. (EXH. AIR SUPPLY CHECK VALVE-PULSE AIR)					
78/	P - - T/E-Pulsed air type	6	200	D8BZ 9B480-C		1
79	J	6	200			1
9D480	TUBE ASSY. (EXHAUST AIR SUPPLY)					
74	C,F,Y	8	351C-2/B	D4AZ 9D480-A		1
9B481	BRACKET (EXHAUST AIR SUPPLY TUBE) ▲ 2000 cc					
74	J - - T/E	4	▲122	★ D4RY 9B481-A	Not replaced	1
74/77	P - - T/E	6	All	★ C8DZ 9B481-A		1
75/	G,P	6	250			1
78/	P-T/E-Pulsed air type	6	200	D8BZ 9B481-A		1
79	J	6	200			1
78/	L - - Calif.	4	@140	D8FZ 9B481-A		1
78	V	8	302	387750-S2	(BB-929-E)Screw & washer (EGR valve to spacer)-3/8"-16 x 1.12 Socket head	1
9C481	BOLT (EXHAUST AIR SUPPLY TUBE)					
74	C,F - - T/E	8	351W	★ C8TZ 9C481-A		1
75/76	G,P	8	302	D6DZ 9C481-A		2
75/76	C,F,G	8	351W			2
75/	G,P	6	250	D5DZ 9C481-A	1.28" long	1
77/	F,G,P,V	8	302, 351W	384720-S100	(BB-545-AD)-bolt(air supply tube to cylinder head)-5/16-18 x 1 1/2" hex washer head	2
9E481	INSULATOR (EXHAUST GAS RECIRCULATION VALVE TO EXHAUST MANIFOLD TUBE) @ 2300cc					
77/	L "From 6/27/77"	4	@140	D8DZ 9E481-A	7/8" nominal dia. x 30" long-cut to length-for use on (9D477) T/E tube	AR
78/	P	4	@140			AR
78/	V	8	302		Use on "Cooler" tubes-inlet & outlet	AR
9F481	CLAMP (EGR COOLER TUBE-OUTLET)-Also refer to group 9F488					
78/	V	8	302	D84Y 9F481-A		2
79	A	8	351W			1
9F483	VALVE ASSY. (EGR PRESSURE EXTERNAL)					
78/79	V "Before 11/6/78"	8	302	D84Y 9F483-A	*CX-213-#D8VE 9F483-A1A,A2A, D84E-9F483-B1A,B2A,C2D,D1A incl. (1) D84Y 9D476-A gasket	1
79	V "From 11/6/78"	8	302	D94Y 9F483-C	*CX-409-#D94E 9F483-CA-incl. (1) D84Y 9D476-A gasket	1
79	A	8	351W	D90Z 9F483-A	*CX-337 - #D90E 9F483-A1A,A2A,A3A,A4A	1
78/	V	8	302	387750-S2	(BB-929-E) Screw & washer (EGR valve to spacer) 3/8"-16 x 1.12 socket head	1
9A484	TUBE AND BOLT ASSY. (EXHAUST AIR SUPPLY-THERMACTOR)					
74	P	6	All	D5DZ 9A484-A	4.95" long	2
75/	G,P	6	All			1
9A484	TUBE (EXHAUST AIR SUPPLY LOWER) ▲ 2000cc, ⊕ 2800cc					
74	C,P - - T/E	8	302	★ D40Z 9A484-A	Not replaced	6
75/76	G,P	6	200,250	D5DZ 9A484-B	4.74" long	4
77	G,P - - A/T -Calif.	6	250			1
78	G - - A/T Calif.	6	250			4
78/	P	6	200			4

COPYRIGHT © 1986— FORD MOTOR COMPANY —DEARBORN, MICHIGAN

1973/79 LINCOLN-MERCURY CARS

YEAR	MODEL/RESTRICTIONS	ENGINE CYL.	ENGINE C.I.D. (C.C.D.)	PART NUMBER	DESCRIPTION	QTY.
9A484	TUBE (EXHAUST AIR SUPPLY LOWER) — Cont'd ▲ 2000 cc, ⊕ 2800 cc					
75/76	G,P	6	250	D5DZ 9A484-C	.63" long	4
74	J,L	4	▲122	D4FZ 9A484-A		4
74	P - - A/T	6	250	★ D4DZ 9A484-B	Not replaced	2
74	J	4	▲122	E855088-S76	(AI-35)-nut (tube)-compression fitting	4
74/	J	6	⊕171	E855091-S72	(AM-38)-pipe nut (tube & bolt assy.)-M22	
75	G,P	6	200,250	385176-S36	(II-41-H)-nut (exhaust air supply manifold assy. to exhaust air supply lower tube)-compression-9/16"-20 thread x 9/16" long	4
9G484	TURBINE HOUSING and ELBOW KIT (TURBOCHARGER)					
79	J	4	@140-TC	E0ZZ 9G484-A		1

Consists of
1- Turbine housing 1- Retaining ring 6-Bolt-hex head M8 x 16 (Metric coarse)
1- Elbow 5-Bolt-hex head M8 x 20 (Metric coarse)

9G485	COMPRESSOR HOUSING KIT (TURBOCHARGER)					
79	J	4	@140-TC	E0ZZ 9G485-A		1

Consists of
1- Compressor housing assy. 1- Clamp 1- 6-Bolt-hex head Retaining ring M8 x 10 (Metric coarse)
1- "O" ring 1- Clamp

IDENTIFICATION CHART

IDENTIFICATION	PART NUMBER	IDENTIFICATION	PART NUMBER
9A486 PUMP ASSY. (EXHAUST AIR SUPPLY-THERMACTOR)			
D3AE 9A486-AA	E1TZ 9A486-D *CX-631	D5TE 9A486-C1C	E1TZ 9A486-D *CX-631
D3DE 9A486-AA	E1TZ 9A486-D *CX-631	D5TE 9A486-C2C	E1TZ 9A486-D *CX-631
D4AE 9A486-AA	E1TZ 9A486-D *CX-631	D5TE 9A486-C3C	E1TZ 9A486-D *CX-631
D4TE 9A486-BA	E1TZ 9A486-D *CX-631	D7AE 9A486-A1A	E1TZ 9A486-D *CX-631
D4TE 9A486-CA	E1TZ 9A486-D *CX-631	D7AE 9A486-A2A	E1TZ 9A486-D *CX-631
D42E 9A486-AA	E1TZ 9A486-D *CX-631	D7AE 9A486-A3A	E1TZ 9A486-D *CX-631
D5AE 9A486-A1C	E1TZ 9A486-D *CX-631	D7TE 9A486-A1A	E1TZ 9A486-C *CX-630
D5AE 9A486-A2C	E1TZ 9A486-D *CX-631	D7TE 9A486-A2A	E1TZ 9A486-C *CX-630
D5TE 9A486-A1C	E1TZ 9A486-D *CX-631	D7TE 9A486-A3A	E1TZ 9A486-C *CX-630
D5TE 9A486-A2C	E1TZ 9A486-D *CX-631	D8BE 9A486-A1A	E1TZ 9A486-A *CX-629
D5TE 9A486-CA	E1TZ 9A486-D *CX-631	D8BE 9A486-A2A	E1TZ 9A486-A *CX-629
D5TE 9A486-CB	E1TZ 9A486-D *CX-631	D8BE 9A486-A3A	E1TZ 9A486-A *CX-629

IDENTIFICATION CHART

IDENTIFICATION	PART NUMBER	IDENTIFICATION	PART NUMBER
9A486 PUMP ASSY. (EXHAUST AIR SUPPLY-THERMACTOR)			
D8BE 9A486-B1A	D8BZ 9A486-C *CX-278-A	D84E 9A486-A1A	E1TZ 9A486-A *CX-629
D8BE 9A486-B2A	D8BZ 9A486-C *CX-278-A	D84E 9A486-A2A	E1TZ 9A486-A *CX-629
D8DE 9A486-A1A	D8DZ 9A486-B *CX-279-A	D84E 9A486-A3A	E1TZ 9A486-A *CX-629
D8DE 9A486-A2A	D8DZ 9A486-B *CX-279-A	D9AE 9A486-A1A	E1TZ 9A486-A *CX-629
D8EE 9A486-A1A	E1TZ 9A486-D *CX-631	D9AE 9A486-A2A	E1TZ 9A486-A *CX-629
D8EE 9A486-A2A	E1TZ 9A486-D *CX-631	E1PE 9A486-AA	D8DZ 9A486-B *CX-279-A
D8EE 9A486-A3A	E1TZ 9A486-D *CX-631	E1SE 9A486-A1A	D8BZ 9A486-C *CX-278-A
D8EE 9A486-C1A	D8DZ 9A486-B *CX-279-A	E1SE 9A486-A2A	D8BZ 9A486-C *CX-278-A
D8EE 9A486-C2A	D8DZ 9A486-B *CX-279-A	74HF 9A486-AC	E1TZ 9A486-D *CX-631
D8UE 9A486-A1A	E1TZ 9A486-A *CX-629	74TF 9A486-BA	D5RY 9A486-A
		74TF 9A486-CA	D5RY 9A486-A
D8UE 9A486-A2A	E1TZ 9A486-A *CX-629	75TF 9A486-AA	D5RY 9A486-A
		75TF 9A486-AB	D5RY 9A486-A
D8UE 9A486-A3A	E1TZ 9A486-A *CX-629	757F 9A486-AA	E1TZ 9A486-D *CX-631
		771F 9A486-AB	D8RZ 9A486-A *CX-178

YEAR	MODEL/RESTRICTIONS	ENGINE CYL.	ENGINE C.I.D. (C.C.D.)	PART NUMBER	DESCRIPTION	QTY.
9A486 PUMP ASSY. (EXHAUST AIR SUPPLY THERMACTOR) ▲ 2000cc @ 2300cc ⊕ 2800cc						
74/78	A,D,F,K,L	4,6 &8	All	E1TZ 9A486-D	*CX-631	1
74/76	C,Y	6&8	All			1
74/	J	4	@140			1
75/77	G	6&8	All			1
74/77	P	6&8	All			1
78/	P	4&6	All			1
77	V	8	All			1
78	G	6	250			1
78/	G - - M/T	8	302			1
78/	G - - A/T-Calif. or Hi-altitude carb.	8	302			1
79	D,F,K,	8	All			1
79	J,L	4&6	All			1
78/	G - - A/T exc. Calif.	8	302	D8DZ 9A486-B	*CX-279-A	1
78	F	8	351W			1
79	G - - A/T-exc. Calif.	6	250			1

COPYRIGHT © 1986 — FORD MOTOR COMPANY — DEARBORN, MICHIGAN

1973/79 LINCOLN-MERCURY CARS

YEAR	MODEL/RESTRICTIONS	ENGINE CYL.	ENGINE C.I.D. (C.C.D.)	PART NUMBER	DESCRIPTION	QTY.
9A486	PUMP ASSY. (EXHAUST AIR SUPPLY THERMACTOR) — Cont'd ▲ 2000 cc @ 2300 cc ⊕ 2800cc					
78/	P - - w/Hi-altitude carb. or Calif.	8	302	E1TZ 9A486-A	*CX-629	1
78/	V	8	302			1
79	A(54,66)-with 2.66 axle ratio-Calif.	8	302			1
79	A(54,66) with 2.73 axle ratio	8	302			1
79	A(74)	8	302			1
79	A	8	351W			1
79	J,P - - A/T-Calif. or Hi-altitude carb.	8	302			1
79	J,P - - M/T	8	302			1
78	P - - exc. Calif. or Hi-altitude carb.	8	302	D8BZ 9A486-C	*CX-278-A	1
79	A(54,66)-with 2.66 axle ratio exc. Calif.	8	302			1
79	J,P - - A/T-exc. Calif.	8	302			1
74/78	J	6	⊕171	D5RY 9A486-A		1
77/	G - - with 70 amp. alternator	8	302	387823-S2	(BB-171-J)-bolt (air pump pivot)-3/8"-16 x 7 1/4"-hex head	1
77/	V - - with 90 amp. alternator	8	302			1
78/	P	6	200	383272-S2	(BB-552-BC)-bolt (air pump to bracket)-3/8"-16 x 4 1/4"-hex washer head	1
9C486	BRACKET (AIR BY-PASS VALVE) - also refer to 9B290					
79	A,F	8	351W	D9SZ 9C486-A	#D9SE 9C486-AA,AB	1
9C486	Refer to group 9B290					
9G486	TURBINE HOUSING BOLT KIT (TURBOCHARGER) @2300cc					
79	J	4	@140-TC	D9ZZ 9G486-A		1
	Consists of 1- Retaining ring 6-Bolt-hex head M8 x 16 (Metric coarse)					
9A487	VALVE ASSY. (EXHAUST AIR SUPPLY CHECK) ▲ 2000 cc @ 2300 cc ⊕ 2800 cc					
74/76	A,C,F,Y	8	351M, 400	D4AZ 9A487-A		1
77/78	A,F	8	351M	D7AZ 9A487-A	*CX-103	1
77/78	A,D,F,K	8	400			1
79	F	8	351M			1
79	D,K	8	400			1
74/76	A,C,D,F,K,Y	8	351C-2/B,460	D4VY 9A487-A		1
75/76	G,P	8	302, 351W			1
75/76	A,C,F,Y	8	460, 460 P/C			1
74	J	6	⊕171			1
74	J,L	4	▲122			1
74/75	G,P	6	250			1
74/76	C,F - - T/E	8	351W			1
75/76	G,P	6	200,250			1
76	G,P - - Calif. and Canada	6	250			1
77/78	A,D,K	8	460			1
77/	F,G,J,P,V	8	302			1
77	G,P - - Calif.	6	All			1
77	F,G,V	8	351W			1
78	L - - M/T-Calif.	4	@140			1
79	L,J - - A/T-Calif.	4	@140			1
79	L,J - - M/T-Calif. "Before 3/1/79"	4	@140			1
79	A	8	302			1
79	A	8	351W		Attach to 9B449	1

YEAR	MODEL/RESTRICTIONS	ENGINE CYL.	ENGINE C.I.D. (C.C.D.)	PART NUMBER	DESCRIPTION	QTY.
9A487	VALVE ASSY. (EXHAUST AIR SUPPLY CHECK) — Cont'd ▲ 2000 cc @ 2300 cc ⊕ 2800 cc					
78	P T/E-Pulsed air type "Before 9/12/77"	6	200	D7TZ 9A487-D	*CX-228	1
78/	P - - T/E-Pulsed air type "From 9/12/77"	6	200	E0BZ 9A487-B	*CX-380-A	1
79	J	6	200			1
76	G,P - - exc. Calif. and Canada	6	All	D6DZ 9A487-B		1
77	G,P - - exc. Calif.	6	All			1
78/	G	6	250			1
78/	P - - T/E-air pump type	6	200			1
74	L - - T/E	4	@140	D4FZ 9A487-A		1
77/	L,J "From 6/27/77"	4	@140	D8FZ 9A487-A	*CX-229-includes curved pipe	1
78/	P	4	@140			1
75/76	F	4	@140	D7FZ 9A487-A	*CX-108	1
76	J	4	@140			1
77	J,L	4	@140			1
78	L - - A/T-Canada	4	@140			1
74	P - - T/E	8	302	D4DZ 9A487-A		2
79	A	8	351W	D9AZ 9A487-C	*CX-385-att. to 5F235	1
79	L,J - - M/T-Calif. "From 3/1/79"	4	@140			1
76	G,P	6	All	87538-S	(I-17)-connector (valve assy. to exhaust manifold)-3/4" tube	1
74/	L	4	@140	385604-S36	(II-63-K)-connector (valve assy. to exhaust manifold)-1/2"-14 x 1/2"-14	1
9A487	VALVE KIT (REED)					
78	P - - T/E-Pulsed air type-Canada	6	200	D8BZ 9A487-C		1
	Consists of 1-D8BZ 9F449-B Silencer 1-D8BZ 9G461-A Restrictor			1-D9BZ 9A487-A Valve		
78	P - - T/E-Pulsed air type-exc. Canada	6	200	D8BZ 9A487-D		1
	Consists of 1-D8BZ 9F449-B Silencer			1-D9BZ 9A487-A Valve		
9C487	SUPPORT (EXHAUST AIR SUPPLY HOSE) @ 2300 cc					
74/	L - - T/E	4	@140	★ D4FZ 9C487-A	#D42E 9C487-AA, 757F 9C487-AA	1
76/	J	4	@140			1
75/	L	4	@140			1
75/	G,P	6	200,250	D5TZ 9C487-A	#D5TE 9C487-AA	1
76/77	G - - with A/C	6	250	★ D6DZ 9C487-A	#D6DE 9C487-AA	1
9F487	INSULATOR (EGR COOLER MTG. BRACKET)					
78	V	8	302	★ D8DZ 9F487-A	Not replaced	1
78	V	8	302	★ D8DZ 9F487-B	Not replaced	1
9G487	"O" RING KIT (TURBOCHARGER) @2300cc					
79	J	4	@140-TC	D9ZZ 9G487-A		1
	Consists of 1-87023-S96 "O" ring 1-87103-S96 "O" ring			1-87141-S96 "O" ring 1- "O" ring	1- "O" ring	
9B488	SPACER (PUMP ASSY. EXHAUST AIR SUPPLY)					
73/	A,C,D,K,Y	6&8	All	★	Improvise from D0VY 10A370-A	1
78/	V	8	302	D84Y 9B488-A		1
9E488	TUBE (EXHAUST VACUUM CONTROL VALVE)-Improvise from 9291					

COPYRIGHT © 1986— FORD MOTOR COMPANY —DEARBORN, MICHIGAN

1973/79 LINCOLN-MERCURY CARS

YEAR	MODEL/RESTRICTIONS	ENGINE CYL.	ENGINE C.I.D. (C.C.D.)	PART NUMBER	DESCRIPTION	QTY.
9F488	**CLAMP (EGR COOLER TUBE-INLET)-Also refer to group 9F481**					
78/	V	8	302	D84Y 9F488-B		2
79	A	8	351W			1
9G488	**ACTUATOR KIT (TURBOCHARGER)**					
79	J	4	@140-TC	D9ZZ 9G488-B		1
	Consists of					
	1- Actuator assy.			1-	Retaining ring	
	1- Rod end			2-Bolt-hex head	M8 x 10 (Metric coarse)	
9C490	**MANIFOLD ASSY. (VACUUM OUTLET)**					
73/75	A,Y	8	All	★ D3AZ 9C490-A	Plastic	1
76/	A,Y	8	All	D1AZ 9C490-A		1
74/76	C,F	8	All	D40Z 9C490-A		1
77/	F	8	All			1
73	D	8	460	★ D2VY 9C490-A	9 outlets	1
74	D	8	460	★ D4VY 9C490-B		1
76/	G	8	All	D6DZ 9C490-A		1
77/	G	6	All			1
77/	V	8	302,351W			1
73	K	8	All	★ D2SZ 9C490-A		1
74/	K	8	All	D4SZ 9C490-A		1
75/	D	8	All			1
76/	P	8	302	D6DZ 9C490-B	4 ports	1
78	P	6	200			1
79	A	8	All			1
79	J	6&8	All			1
9F490	**REGULATOR (EMISSION VACUUM CONTROL)**					
79	G,J,P	8	302	D9DZ 9F490-A	*CX-384 - #D8DE 9F490-C2A	1
79	A	8	302	D9BZ 9F490-A	*325-#D9BE 9F490-A2A	1
79	F	8	302	D90Z 9F490-A	*CX-391 - #D90E 9F490-A2A	1
9E491	**FILTER (EXHAUST GAS RECIRCULATING VACUUM CONTROL VALVE)**					
74/	A,C,D,F,J,K,L,P,Y	4,6, &8	All	D4AZ 9E491-A		AR
75/	G	6&8	All			AR
77/	V	8	All			AR
9F491	**VALVE ASSY. (EXHAUST AIR SUPPLY CONTROL) @ 2300cc**					
78/	L - - Calif.	4	@140	D8FZ 9F491-A	*CX-249-#D8EE 9F491-AA	1
79	J - - Calif.	4	@140			1
79	A	8	351W	D9AZ 9F491-D	*CX-316 - #D9AE 9F491-D3A	1
9C492	**CAP (VACUUM OUTLET MANIFOLD) @ 2300 cc**					
73/	A,C,D,F,K,L,P,Y	6&8	All	C9AZ 9C492-A	Neoprene-23/64" I.D.-1/2" long	AR
75/	G	6&8	All			AR
77/	V	8	All			AR
73/	A,C,D,F,K,L,P,Y	6&8	All	C9AZ 9C492-C	Neoprene-3/16" I.D.-1 1/3" long	AR
74/	J	4&6	@140, 171		Used w/o surged tank	1
75/	G	6&8	All			AR
77/	V	8	All			AR
73/	A,C,D,F,K,L,P,Y	4,6 &8	All	C9AZ 9C492-B	Neoprene-1/4" I.D.-1 1/3" long	AR
75/	G	6&8	All			AR
77/	V	8	All			AR
73/	D,K	8	460	D0SZ 9C492-B	Use w/skid control 31/64" I.D. x 1 1/2" long	1
73/	K	8	All	D0SZ 9C492-A	1/8" I.D.-1 1/4" long	1
76/	J	4	@140		Used w/surged tank	1

YEAR	MODEL/RESTRICTIONS	ENGINE CYL.	ENGINE C.I.D. (C.C.D.)	PART NUMBER	DESCRIPTION	QTY.
9K495	ADAPTER (INTAKE MANIFOLD TO DECELERATION VALVE)					
73/	J,L	4&6	All	D1FZ 9K495-A		1
77/	L - - M/T with A/C - Calif.	4	@140	D7FZ 9K495-A	Offset type-includes nut	1
9G496	PLATE (EGR VALVE HOLE)					
77/	G,P	6	All	D7DZ 9G496-A	Required when 1980 cylinder heads are used on 1977/79 vehicles-use with D7BZ 9E464-A gasket.	1
9E498	CONNECTOR ASSY. (EMISSION MAIN VACUUM CONTROL)-Service details					
9E499	CONNECTOR (EMISSION VACUUM CONTROL)-Refer to group 9E455					
9K499	WIRING ASSY. (EXHAUST EMISSION CONTROL) ▲ 2000 cc					
73/74	J - - M/T	4	▲122	★ D3RY 9K499-A	Not replaced	1
73/78	J - - A/T	6	All			1

COPYRIGHT © 1986 — FORD MOTOR COMPANY — DEARBORN, MICHIGAN

9J500–9509 Refer to group 9510 for Carburetor Parts List Instructions

9510 CARBURETOR ASSY.

HOW TO IDENTIFY CARBURETORS and RELATED PARTS

To facilitate the identification of service kits and parts for a specific carburetor, parts lists or bills of material are provided in Sections 95.23 and up, of this catalog for each carburetor assembly. It is necessary first to identify the carburetor assembly per the instructions that follow.

Carburetors can be identified by the stamping number shown on the carburetor or on a metal tag attached to the carburetor.

Each carburetor for 1973/ models has an identification tag. An illustration and explanation of the carburetor identification tags are shown on Page 2 of this section.

If either the tag or stamping identification number is known, the related carburetor and carburetor parts list numbers can be determined from the Chart beginning on Page 2 of this section.

Carburetors and their parts lists can also be identified by Engine, Model Year, etc. in the Carburetor Application Chart beginning on Page 33 of this section. Also shown in the Carburetor Application Chart is the page number for a typical parts illustration for each carburetor assembly.

Carburetor illustrations are shown in Illustration Section 95 of Form FP–8095–B.

Parts lists are grouped by type and engine and each group of related carburetor parts lists is shown in a separate section. The section number can readily be identified with the carburetor parts list numbers as shown in the following example;

Carburetor Type	Engine No. of Cyls.	Engine C.I.D.	Parts List Number	Catalog Section No.
Carter 1/B	6	200	23A,23B,etc.	95.23
Ford 2/B	8	302	24A,24B,etc.	95.24
Ford 4/B	8	429	27A,27B,etc.	95.27

For ready reference, kit part numbers are shown with the carburetor identification chart and at the beginning of each parts list section. A listing of components for each kit is shown in Section 95A. Refer to the Index at the beginning of Section 95A for page number of service kit.

Carburetor attaching parts are shown at the beginning of their respective parts lists following the part numbers for the kits.

To identify the parts or kits for a specific carburetor it is only necessary to refer to the related parts list and parts illustration.

An Alphabetical Index showing a cross–reference between noun description and basic group number is located at the beginning of this catalog.

IMPORTANT: ALWAYS FURNISH APPROPRIATE PATENT PLATE INFORMATION and DSO NUMBER IF APPLICABLE WHEN ORDERING PARTS NOT LISTED IN THE CATALOG

COPYRIGHT © 1986 — FORD MOTOR COMPANY — DEARBORN, MICHIGAN

9510 CARBURETOR ASSY. — Cont'd

CARBURETOR IDENTIFICATION TAGS

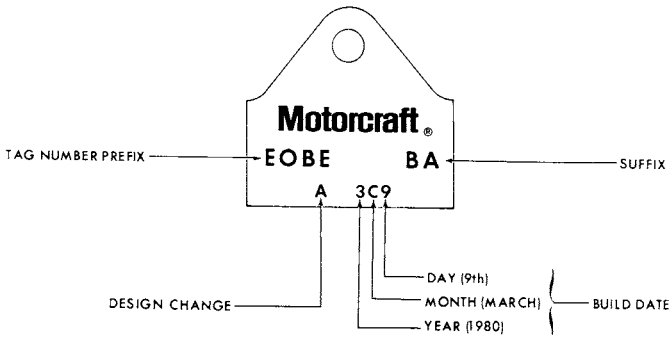

P-10186A

IDENTIFICATION CHART

IDENTIFICATION	PARTS LIST 95.	PART NUMBER	REPLACED BY	GASKET SET	TUNE-UP KIT	ILLUS. SEC. 95 PAGE
9510		**CARBURETOR ASSY. — Cont'd**				
		▲ Parts List to follow in subsequent change				
		‡ To follow in a subsequent change				
D3AF–BC	27A	★ D3AZ 9510–B *CA–972	D3PZ 9510–E *CA–1331	D3AZ 9502–A *CG–221–B	D3AZ 9A586–A *CT–226–B	6
D3AF–CD	28A	★ D3AZ 9510–D *CA–973–A	D4PZ 9510–H *CA–1027–B	D4AZ 9502–A *CG–264–C	D4AZ 9A586–A *CT–499–D	5
D3AF–CE	28D	★ D3AZ 9510–E *CA–1027	D4PZ 9510–H *CA–1027–B	D4AZ 9502–A *CG–264–C	D4AZ 9A586–A *CT–499–D	5
D3AF–DB	28D	★ D3AZ 9510–E *CA–1027	D4PZ 9510–H *CA–1027–B	D4AZ 9502–A *CG–264–C	D4AZ 9A586–A *CT–499–D	5
D3AF–DC	28D	★ D3AZ 9510–E *CA–1027	D4PZ 9510–H *CA–1027–B	D4AZ 9502–A *CG–264–C	D4AZ 9A586–A *CT–499–D	5
D3AF–EB	27B	★ D3AZ 9510–A *CA–971	D3AZ 9510–F *CA–789–A	D3AZ 9502–A *CG–221–B	D3AZ 9A586–A *CT–226–B	6
D3AF–FA	27E	★ D3AZ 9510–F *CA–789–A	D8PZ 9510–M *CA–2023	D3AZ 9502–A *CG–221–B	D3AZ 9A586–A *CT–226–B	6
D3AF–GA	27D	★ D3AZ 9510–G *CA–788–B	D3PZ 9510–E *CA–1331	D3AZ 9502–A *CG–221–B	D3AZ 9A586–A *CT–226–B	6
D3AF–HB	27D	★ D3AZ 9510–G *CA–788–B	D3PZ 9510–E *CA–1331	D3AZ 9502–A *CG–221–B	D3AZ 9A586–A *CT–226–B	6
D3AF–JA	28D	★ D3AZ 9510–E *CA–1027	D4PZ 9510–H *CA–1027–B	D4AZ 9502–A *CG–264–C	D4AZ 9A586–A *CT–499–D	5
D3AF–KA	28D	★ D3AZ 9510–E *CA–1027	D4PZ 9510–H *CA–1027–B	D4AZ 9502–A *CG–264–C	D4AZ 9A586–A *CT–499–D	5
D3AF–LA	27D	★ D3AZ 9510–G *CA–788–B	D3PZ 9510–E *CA–1331	D3AZ 9502–A *CG–221–B	D3AZ 9A586–A *CT–226–B	6
D3AF–NA	28D	★ D3AZ 9510–E *CA–1027	D4PZ 9510–H *CA–1027–B	D4AZ 9502–A *CG–264–C	D4AZ 9A586–A *CT–499–D	5
D3AF–PA	28D	★ D3AZ 9510–E *CA–1027	D4PZ 9510–H *CA–1027–B	D4AZ 9502–A *CG–264–C	D4AZ 9A586–A *CT–499–D	5
D3AF–RA	28D	★ D3AZ 9510–E *CA–1027	D4PZ 9510–H *CA–1027–B	D4AZ 9502–A *CG–264–C	D4AZ 9A586–A *CT–499–D	5
D3AF–RB	28D	★ D3AZ 9510–E *CA–1027	D4PZ 9510–H *CA–1027–B	D4AZ 9502–A *CG–264–C	D4AZ 9A586–A *CT–499–D	5

IDENTIFICATION CHART

IDENTIFICATION	PARTS LIST 95.	PART NUMBER	REPLACED BY	GASKET SET	TUNE-UP KIT	ILLUS. SEC. 95 PAGE
9510	CARBURETOR ASSY. — Cont'd ▲ Parts List to follow in subsequent change ‡ To follow in a subsequent change					
D3AF-TA	27E	★ D3AZ 9510-F *CA-789-A	D8PZ 9510-M *CA-2023	D3AZ 9502-A *CG-221-B	D3AZ 9A586-A *CT-226-B	6
D3AF-UA	28D	★ D3AZ 9510-E *CA-1027	D4PZ 9510-H *CA-1027-B	D4AZ 9502-A *CG-264-C	D4AZ 9A586-A *CT-499-D	5
D3AF-VA	27D	★ D3AZ 9510-G *CA-788-B	D3PZ 9510-E *CA-1331	D3AZ 9502-A *CG-221-B	D3AZ 9A586-A *CT-226-B	6
D3AF-XA	28D	★ D3AZ 9510-E *CA-1027	D4PZ 9510-H *CA-1027-B	D4AZ 9502-A *CG-264-C	D4AZ 9A586-A *CT-499-D	5
D3AF-ABA	24C	★ D30Z 9510-D *CA-1026	D4PZ 9510-G *CA-1026-B	D4AZ 9502-A *CG-264-C	D4AZ 9A586-A *CT-499-D	5
D3AF-ACA	27E	★ D3AZ 9510-F *CA-789-A	D8PZ 9510-M *CA-2023	D3AZ 9502-A *CG-221-B	D3AZ 9A586-A *CT-226-B	6
D3AF-ADA	27E	★ D3AZ 9510-F *CA-789-A	D8PZ 9510-M *CA-2023	D3AZ 9502-A *CG-221-B	D3AZ 9A586-A *CT-226-B	6
D3DE-AA	24C	★ D30Z 9510-D *CA-1026	D4PZ 9510-G *CA-1026-B	D4AZ 9502-A *CG-264-C	D4AZ 9A586-A *CT-499-D	5
D3DF-AA	23A	D3DZ 9510-A *CA-977		D0DZ 9502-A *CG-257	D0DZ 9A586-B *CT-842-A	3
D3DF-AB	23A	D3DZ 9510-A *CA-977		D0DZ 9502-A *CG-257	D0DZ 9A586-B *CT-842-A	3
D3DF-BA	23C	★ D3DZ 9510-B *CA-978	D3PZ 9510-AJ *CA-1419	D0DZ 9502-A *CG-257	D0DZ 9A586-B *CT-842-A	3
D3DF-BB	23C	★ D3DZ 9510-B *CA-978	D3PZ 9510-AJ *CA-1419	D0DZ 9502-A *CG-257	D0DZ 9A586-B *CT-842-A	3
D3DF-CA	23B	★ D3DZ 9510-C *CA-979	D3PZ 9510-AH *CA-1418	D0DZ 9502-A *CG-257	D0DZ 9A586-B *CT-842-A	3
D3DF-DA	23D	★ D3DZ 9510-D *CA-980	D3PZ 9510-AH *CA-1418	D0DZ 9502-A *CG-257	D0DZ 9A586-B *CT-842-A	3
D3DF-EA	24C	★ D30Z 9510-D *CA-1026	D4PZ 9510-G *CA-1026-B	D4AZ 9502-A *CG-264-C	D4AZ 9A586-A *CT-499-D	5
D3DF-FA	23E	★ D3DZ 9510-F *CA-1045	D3PZ 9510-AS *CA-1431	D0DZ 9502-A *CG-257	D0DZ 9A586-B *CT-842-A	3
D3DF-FB	23E	★ D3DZ 9510-F *CA-1045	D3PZ 9510-AS *CA-1431	D0DZ 9502-A *CG-257	D0DZ 9A586-B *CT-842-A	3
D3DF-GA	23F	★ D3DZ 9510-G *CA-1046	D3PZ 9510-AS *CA-1431	D0DZ 9502-A *CG-257	D0DZ 9A586-B *CT-842-A	3
D3DF-GB	23F	★ D3DZ 9510-G *CA-1046	D3PZ 9510-AS *CA-1431	D0DZ 9502-A *CG-257	D0DZ 9A586-B *CT-842-A	3
D3GF-AD	24B	★ D3GY 9510-A *CA-985	D3PZ 9510-CG *CA-1734	D4AZ 9502-A *CG-264-C	D4AZ 9A586-A *CT-499-D	5
D3GF-AE	24C	D3PZ 9510-CG *CA-1734		D4AZ 9502-A *CG-264-C	D4AZ 9A586-A *CT-499-D	5
D3GF-AF	24C	D3PZ 9510-CG *CA-1734		D4AZ 9502-A *CG-264-C	D4AZ 9A586-A *CT-499-D	5
D3GF-BA	24C	★ D30Z 9510-D *CA-1026	D4PZ 9510-G *CA-1026-B	D4AZ 9502-A *CG-264-C	D4AZ 9A586-A *CT-499-D	5
D3GF-BB	24C	★ D30Z 9510-D *CA-1026	D4PZ 9510-G *CA-1026-B	D4AZ 9502-A *CG-264-C	D4AZ 9A586-A *CT-499-D	5
D3GF-BC	24C	★ D30Z 9510-D *CA-1026	D4PZ 9510-G *CA-1026-B	D4AZ 9502-A *CG-264-C	D4AZ 9A586-A *CT-499-D	5
D3MF-AD	28C	★ D3MY 9510-A *CA-994	D4PZ 9510-H *CA-1027-B	D4AZ 9502-A *CG-264-C	D4AZ 9A586-A *CT-499-D	5

COPYRIGHT © 1986 — FORD MOTOR COMPANY — DEARBORN, MICHIGAN

IDENTIFICATION CHART

IDENTIFICATION	PARTS LIST 95.	PART NUMBER	REPLACED BY	GASKET SET	TUNE-UP KIT	ILLUS. SEC. 95 PAGE
9510	CARBURETOR ASSY. — Cont'd ▲ Parts List to follow in subsequent change ‡ To follow in a subsequent change					
D3MF-AE	28D	★ D3AZ 9510-E *CA-1027	D4PZ 9510-H *CA-1027-B	D4AZ 9502-A *CG-264-C	D4AZ 9A586-A *CT-499-D	5
D3MF-BA	28D	★ D3AZ 9510-E *CA-1027	D4PZ 9510-H *CA-1027-B	D4AZ 9502-A *CG-264-C	D4AZ 9A586-A *CT-499-D	5
D3MF-CA	28D	★ D3AZ 9510-E *CA-1027	D4PZ 9510-H *CA-1027-B	D4AZ 9502-A *CG-264-C	D4AZ 9A586-A *CT-499-D	5
D3MF-DA	28D	★ D3AZ 9510-E *CA-1027	D4PZ 9510-H *CA-1027-B	D4AZ 9502-A *CG-264-C	D4AZ 9A586-A *CT-499-D	5
D3MF-EA	28D	★ D3AZ 9510-E *CA-1027	D4PZ 9510-H *CA-1027-B	D4AZ 9502-A *CG-264-C	D4AZ 9A586-A *CT-499-D	5
D3MF-FA	28D	★ D3AZ 9510-E *CA-1027	D4PZ 9510-H *CA-1027-B	D4AZ 9502-A *CG-264-C	D4AZ 9A586-A *CT-499-D	5
D3MF-GA	28D	★ D3AZ 9510-E *CA-1027	D4PZ 9510-H *CA-1027-B	D4AZ 9502-A *CG-264-C	D4AZ 9A586-A *CT-499-D	5
D30F-AD	24A	★ D30F 9510-A *CA-995	D4PZ 9510-G *CA-1026-B	D4AZ 9502-A *CG-264-C	D4AZ 9A586-A *CT-499-D	5
D30F-BA	31A	★ D30Z 9510-B *CA-996	D4PZ 9510-AJ *CA-1421	D0ZZ 9502-A *CG-306	D0ZZ 9A586-B *CT-224-A	3
D30F-BC	31A	★ D30Z 9510-B *CA-996	D4PZ 9510-AJ *CA-1421	D0ZZ 9502-A *CG-306	D0ZZ 9A586-B *CT-224-A	3
D30F-CA	31B	★ D30Z 9510-C *CA-997	D4PZ 9510-AJ *CA-1421	D0ZZ 9502-A *CG-306	D0ZZ 9A586-B *CT-224-A	3
D30F-CB	31B	★ D30Z 9510-C *CA-997	D4PZ 9510-AJ *CA-1421	D0ZZ 9502-A *CG-306	D0ZZ 9A586-B *CT-224-A	3
D30F-CC	31B	★ D30Z 9510-C *CA-997	D4PZ 9510-AJ *CA-1421	D0ZZ 9502-A *CG-306	D0ZZ 9A586-B *CT-224-A	3
D30F-EA	24C	★ D30Z 9510-D *CA-1026	D4PZ 9510-G *CA-1026-B	D4AZ 9502-A *CG-264-C	D4AZ 9A586-A *CT-499-D	5
D30F-FA	24C	★ D30Z 9510-D *CA-1026	D4PZ 9510-G *CA-1026-B	D4AZ 9502-A *CG-264-C	D4AZ 9A586-A *CT-499-D	5
D30F-JA	24C	★ D30Z 9510-D *CA-1026	D4PZ 9510-G *CA-1026-B	D4AZ 9502-A *CG-264-C	D4AZ 9A586-A *CT-499-D	5
D3PF-AA	27D	★ D3AZ 9510-G *CA-788-B	D3PZ 9510-E *CA-1331	D3AZ 9502-A *CG-221-B	D3AZ 9A586-A *CT-226-B	6
D3PF-BA	29C	★ D3ZZ 9510-E *CA-885-C	D40Z 9510-F *CA-885-D	★ D30Z 9502-A *CG-335-B	D30Z 9A586-A *CT-862-B	7
D3PF-CA	27E	★ D3AZ 9510-F *CA-789-A	D4AZ 9510-C *CA-789-B	D3AZ 9502-A *CG-221-B	D3AZ 9A586-A *CT-226-B	6
D3PF-EA	24C	★ D30Z 9510-D *CA-1026	D4PZ 9510-G *CA-1026-B	D4AZ 9502-A *CG-264-C	D4AZ 9A586-A *CT-499-D	5
D3PF-EB	24C	★ D30Z 9510-D *CA-1026	D4PZ 9510-G *CA-1026-B	D4AZ 9502-A *CG-264-C	D4AZ 9A586-A *CT-499-D	5
D3PF-FA	28D	★ D3AZ 9510-E *CA-1027	D4PZ 9510-H *CA-1027-B	D4AZ 9502-A *CG-264-C	D4AZ 9A586-A *CT-499-D	5
D3PF-FB	28D	★ D3AZ 9510-E *CA-1027	D4PZ 9510-H *CA-1027-B	D4AZ 9502-A *CG-264-C	D4AZ 9A586-A *CT-499-D	5
D3PF-GA	28A	★ D3AZ 9510-D *CA-973-A	D4PZ 9510-H *CA-1027-B	D4AZ 9502-A *CG-264-C	D4AZ 9A586-A *CT-499-D	5
D3PF-NA	27D	★ D3AZ 9510-G *CA-788-B	D3PZ 9510-E *CA-1331	D3AZ 9502-A *CG-221-B	D3AZ 9A586-A *CT-226-B	6
D3VF-AC	27C	★ D3VY 9510-A *CA-1019	D3PZ 9510-E *CA-1331	D3AZ 9502-A *CG-221-B	D3AZ 9A586-A *CT-226-B	6

IDENTIFICATION CHART

IDENTIFICATION	PARTS LIST 95.	PART NUMBER	REPLACED BY	GASKET SET	TUNE-UP KIT	ILLUS. SEC. 95 PAGE
9510	CARBURETOR ASSY. — Cont'd ▲ Parts List to follow in subsequent change ‡ To follow in a subsequent change					
D3VF-BB	27D	★ D3AZ 9510-G *CA-788-B	D3PZ 9510-E *CA-1331	D3AZ 9502-A *CG-221-B	D3AZ 9A586-A *CT-226-B	6
D3VF-CB	27D	★ D3AZ 9510-G *CA-788-B	D3PZ 9510-E *CA-1331	D3AZ 9502-A *CG-221-B	D3AZ 9A586-A *CT-226-B	6
D3VF-DA	27D	★ D3AZ 9510-G *CA-788-B	D3PZ 9510-E *CA-1331	D3AZ 9502-A *CG-221-B	D3AZ 9A586-A *CT-226-B	6
D3VF-EA	27D	★ D3AZ 9510-G *CA-788-B	D3PZ 9510-E *CA-1331	D3AZ 9502-A *CG-221-B	D3AZ 9A586-A *CT-226-B	6
D3WF-AC	28B	★ D3WY 9510-A *CA-1020	D4PZ 9510-H *CA-1027-B	D4AZ 9502-A *CG-264-C	D4AZ 9A586-A *CT-499-D	5
D3WF-CA	28D	★ D3AZ 9510-E *CA-1027	D4PZ 9510-H *CA-1027-B	D4AZ 9502-A *CG-264-C	D4AZ 9A586-A *CT-499-D	5
D3ZF-AC	29A	★ D3ZZ 9510-A *CA-1022	D40Z 9510-F *CA-885-D	★ D30Z 9502-A *CG-335-B	D30Z 9A586-A *CT-862-B	7
D3ZF-BC	29B	★ D3ZZ 9510-B *CA-1023	D40Z 9510-F *CA-885-D	★ D30Z 9502-A *CG-335-B	D30Z 9A586-A *CT-862-B	7
D3ZF-EA	24C	★ D30Z 9510-D *CA-1026	D4PZ 9510-G *CA-1026-B	D4AZ 9502-A *CG-264-C	D4AZ 9A586-A *CT-499-D	5
D3ZF-EB	24C	★ D30Z 9510-D *CA-1026	D4PZ 9510-G *CA-1026-B	D4AZ 9502-A *CG-264-C	D4AZ 9A586-A *CT-499-D	5
D3ZF-FA	28D	★ D3AZ 9510-E *CA-1027	D4PZ 9510-H *CA-1027-B	D4AZ 9502-A *CG-264-C	D4AZ 9A586-A *CT-499-D	5
D3ZF-GA	24C	★ D30Z 9510-D *CA-1026	D4PZ 9510-G *CA-1026-B	D4AZ 9502-A *CG-264-C	D4AZ 9A586-A *CT-499-D	5
D3ZF-JA	29C	★ D3ZZ 9510-E *CA-885-C	D40Z 9510-F *CA-885-D	★ D30Z 9502-A *CG-335-B	D30Z 9A586-A *CT-862-B	7
D3ZF-KA	29C	★ D3ZZ 9510-E *CA-885-C	D40Z 9510-F *CA-885-D	★ D30Z 9502-A *CG-335-B	D30Z 9A586-A *CT-862-B	7
D3ZF-LA	29C	★ D3ZZ 9510-E *CA-885-C	D40Z 9510-F *CA-885-D	★ D30Z 9502-A *CG-335-B	D30Z 9A586-A *CT-862-B	7
D3ZF-MA	29C	★ D3ZZ 9510-E *CA-885-C	D40Z 9510-F *CA-885-D	★ D30Z 9502-A *CG-335-B	D30Z 9A586-A *CT-862-B	7
D3ZF-NA	24C	★ D3PZ 9510-CF *CA-1733		D4AZ 9502-A *CG-264-C	D4AZ 9A586-A *CT-499-D	5
D3ZF-NB	24C	★ D3PZ 9510-CF *CA-1733		D4AZ 9502-A *CG-264-C	D4AZ 9A586-A *CT-499-D	5
D4AE-AA	27F	★ D4AZ 9510-A *CA-1097	D4AZ 9510-C *CA-789-B	D3AZ 9502-A *CG-221-B	D3AZ 9A586-A *CT-226-B	6
D4AE-BB	35A	★ D4AZ 9510-B *CA-1098	None	★ D4AZ 9502-B *CG-431	D4AZ 9A586-B *CT-1062	10
D4AE-BC	35A	★ D4AZ 9510-B *CA-1098	None	★ D4AZ 9502-B *CG-431	D4AZ 9A586-B *CT-1062	10
D4AE-CA	28P	★ D4AZ 9510-CA *CA-1177	D4PZ 9510-V *CA-1196-A	D4AZ 9502-A *CG-264-C	D4AZ 9A586-A *CT-499-D	5
D4AE-DA	28M	★ D4AZ 9510-DA *CA-1174	D4PZ 9510-H *CA-1027-B	D4AZ 9502-A *CG-264-C	D4AZ 9A586-A *CT-499-D	5
D4AE-EA	28N	★ D4AZ 9510-EA *CA-1173	D4PZ 9510-H *CA-1027-B	D4AZ 9502-A *CG-264-C	D4AZ 9A586-A *CT-499-D	5
D4AE-FA	28Q	★ D4AZ 9510-FA *CA-1171	D4PZ 9510-H *CA-1027-B	D4AZ 9502-A *CG-264-C	D4AZ 9A586-A *CT-499-D	5
D4AE-GA	28R	★ D4AZ 9510-GA *CA-1170	D4PZ 9510-H *CA-1027-B	D4AZ 9502-A *CG-264-C	D4AZ 9A586-A *CT-499-D	5

COPYRIGHT © 1986 — FORD MOTOR COMPANY — DEARBORN, MICHIGAN

IDENTIFICATION CHART

IDENTIFICATION	PARTS LIST 95.	PART NUMBER	REPLACED BY	GASKET SET	TUNE–UP KIT	ILLUS. SEC. 95 PAGE
9510	**CARBURETOR ASSY. — Cont'd**					
	▲ Parts List to follow in subsequent change					
	‡ To follow in a subsequent change					
D4AE–HB	28S	★ D4AZ 9510–HB *CA–1172	D4PZ 9510–V *CA–1196–A	D4AZ 9502–A *CG–264–C	D4AZ 9A586–A *CT–499–D	5
D4AE–JA	27J	★ D4AZ 9510–C *CA–789–B	D8PZ 9510–M *CA–2023	D3AZ 9502–A *CG–221–B	D3AZ 9A586–A *CT–226–B	6
D4AE–NA	27H	★ D40Z 9510–G *CA–788–C	Note 3	D3AZ 9502–A *CG–221–B	D3AZ 9A586–A *CT–226–B	6
D4AF–EA	28F	★ D4AZ 9510–E *CA–1062	D4PZ 9510–V *CA–1196–A	D4AZ 9502–A *CG–264–C	D4AZ 9A586–A *CT–499–D	5
D4DE–AA	31C	★ D4DZ 9510–AA *CA–1104	D4PZ 9510–AK *CA–1422	D0ZZ 9502–A *CG–306	D0ZZ 9A586–B *CT–224–A	3
D4DE–AB	31C	★ D4DZ 9510–AA *CA–1104	D4PZ 9510–AK *CA–1422	D0ZZ 9502–A *CG–306	D0ZZ 9A586–B *CT–224–A	3
D4DE–BA	31D	★ D4DZ 9510–BA *CA–1105	D4PZ 9510–AK *CA–1422	D0ZZ 9502–A *CG–306	D0ZZ 9A586–B *CT–224–A	3
D4DE–BB	31E	D4DZ 9510–BB *CA–1193		D0ZZ 9502–A *CG–306	D0ZZ 9A586–B *CT–224–A	3
D4DE–EA	23G	D4DZ 9510–EA *CA–1108		D0DZ 9502–A *CG–257	D0DZ 9A586–B *CT–842–A	3
D4DE–FA	23H	★ D4DZ 9510–FA *CA–1109	D5PZ 9510–AM *CA–1425	D0DZ 9502–A *CG–257	D0DZ 9A586–B *CT–842–A	3
D4DE–GA	23K	★ D4DZ 9510–GA *CA–1175	D5PZ 9510–AM *CA–1425	D0DZ 9502–A *CG–257	D0DZ 9A586–B *CT–842–A	3
D4DE–HA	23J	★ D4DZ 9510–HA *CA–1158	D5PZ 9510–AM *CA–1425	D0DZ 9502–A *CG–257	D0DZ 9A586–B *CT–842–A	3
D4DE–JA	23L	★ D4DZ 9510–J *CA–1182	D5PZ 9510–AM *CA–1425	D0DZ 9502–A *CG–257	D0DZ 9A586–B *CT–842–A	3
D4DE–JB	23N	D4DZ 9510–JB *CA–1209		D0DZ 9502–A *CG–257	D0DZ 9A586–B *CT–842–A	3
D4DE–KA	23M	★ D4DZ 9510–K *CA–1183	D5PZ 9510–AM *CA–1425	D0DZ 9502–A *CG–257	D0DZ 9A586–B *CT–842–A	3
D4DE–KB	23Q	★ D4DZ 9510–KB *CA–1210	D5PZ 9510–AM *CA–1425	D0DZ 9502–A *CG–257	D0DZ 9A586–B *CT–842–A	3
D4DE–NB	24G	★ D4DZ 9510–NB *CA–1191	D4PZ 9510–Y *CA–1195–A	D4AZ 9502–A *CG–264–C	D4AZ 9A586–A *CT–499–D	5
D4DE–PA	24G	★ D4DZ 9510–P *CA–1184	D4PZ 9510–G *CA–1026–B	D4AZ 9502–A *CG–264–C	D4AZ 9A586–A *CT–499–D	5
D4DE–RB	24J	★ D4DZ 9510–R *CA–1185	D3PZ 9510–CF *CA–1733	D4AZ 9502–A *CG–264–C	D4AZ 9A586–A *CT–499–D	5
D4DE–SA	31F	★ D4DZ 9510–S *CA–1178	D4PZ 9510–AJ *CA–1421	D0ZZ 9502–A *CG–306	D0ZZ 9A586–B *CT–224–A	3
D4DE–SB	31F	★ D4DZ 9510–S *CA–1178	D4PZ 9510–AJ *CA–1421	D0ZZ 9502–A *CG–306	D0ZZ 9A586–B *CT–224–A	3
D4DE–TA	31G	★ D4DZ 9510–TA *CA–1192	D4PZ 9510–AJ *CA–1421	D0ZZ 9502–A *CG–306	D0ZZ 9A586–B *CT–224–A	3
D4DE–UA	24F	★ D4DZ 9510–C *CA–1195	D4PZ 9510–Y *CA–1195–A	D4AZ 9502–A *CG–264–C	D4AZ 9A586–A *CT–499–D	5
D4DE–VA	24F	★ D4DZ 9510–C *CA–1195	D4PZ 9510–Y *CA–1195–A	D4AZ 9502–A *CG–264–C	D4AZ 9A586–A *CT–499–D	5
D4DE–AAA	31H	★ D4DZ 9510–E *CA–1205	D4PZ 9510–AJ *CA–1421	D0ZZ 9502–A *CG–306	D0ZZ 9A586–B *CT–224–A	3
D4DE–ABA	23P	★ D4DZ 9510–AB *CA–1175–A	D5PZ 9510–AM *CA–1425	D0DZ 9502–A *CG–257	D0DZ 9A586–B *CT–842–A	3

NOTE 3 – Replaced by D8PZ 9510–C *CA–2018 for vehicles w/o California emission on 1974 460–4V, or D8PZ 9510–D *CA–2019 for vehicles w/o California emission on 1973 429–4V, or D8PZ 9510–E *CA–2051 for vehicles w/California emission on 1973 429–4V and 1974 460–4V.

IDENTIFICATION CHART

IDENTIFICATION	PARTS LIST 95.	PART NUMBER	REPLACED BY	GASKET SET	TUNE-UP KIT	ILLUS. SEC. 95 PAGE
9510	CARBURETOR ASSY. — Cont'd ▲ Parts List to follow in subsequent change ‡ To follow in a subsequent change					
D4DE-ACA	23T	★ D4DZ 9510-D *CA-1158-A	D5PZ 9510-AM *CA-1425	D0DZ 9502-A *CG-257	D0DZ 9A586-B *CT-842-A	3
D4DE-ADA	31J	★ D4DZ 9510-AD *CA-1212	None	D0ZZ 9502-A *CG-306	D0ZZ 9A586-B *CT-224-A	3
D4DE-AFA	23R	★ D4DZ 9510-AF *CA-1220	D5PZ 9510-AM *CA-1425	D0DZ 9502-A *CG-257	D0DZ 9A586-B *CT-842-A	3
D4DE-AGA	23S	★ D4DZ 9510-AG *CA-1221	D5PZ 9510-AM *CA-1425	D0DZ 9502-A *CG-257	D0DZ 9A586-B *CT-842-A	3
D4DF-AA	24D	★ D4DZ 9510-A *CA-1086	D4PZ 9510-Y *CA-1195-A	D4AZ 9502-A *CG-264-C	D4AZ 9A586-A *CT-499-D	5
D4DF-BA	24E	★ D4DZ 9510-B *CA-1085	D4PZ 9510-Y *CA-1195-A	D4AZ 9502-A *CG-264-C	D4AZ 9A586-A *CT-499-D	5
D4ME-BA	28U	D4PZ 9510-BK *CA-1362		D4AZ 9502-A *CG-264-C	D4AZ 9A586-A *CT-499-D	5
D4ME-CA	28U	D4PZ 9510-V *CA-1196-A		D4AZ 9502-A *CG-264-C	D4AZ 9A586-A *CT-499-D	5
D4MF-BA	28K	★ D4MY 9510-B *CA-1060	D4PZ 9510-V *CA-1196-A	D4AZ 9502-A *CG-264-C	D4AZ 9A586-A *CT-499-D	5
D4MF-CA	28L	★ D4MY 9510-C *CA-1059	D4PZ 9510-V *CA-1196-A	D4AZ 9502-A *CG-264-C	D4AZ 9A586-A *CT-499-D	5
D4OE-AA	29D	★ D4OZ 9510-AA *CA-1102	D4OZ 9510-F *CA-885-D	★ D3OZ 9502-A *CG-335-B	D3OZ 9A586-A *CT-862-B	7
D4OE-BA	29E	★ D4OZ 9510-BA *CA-1103	D4OZ 9510-F *CA-885-D	★ D3OZ 9502-A *CG-335-B	D3OZ 9A586-A *CT-862-B	7
D4OE-EA	24K	★ D4PZ 9510-E *CA-1180	D4PZ 9510-G *CA-1026-B	D4AZ 9502-A *CG-264-C	D4AZ 9A586-A *CT-499-D	5
D4OE-FA	28T	D4PZ 9510-V *CA-1196-A		D4AZ 9502-A *CG-264-C	D4AZ 9A586-A *CT-499-D	5
D4OE-GA	24L	★ D4OZ 9510-H *CA-1026-A	D4PZ 9510-G *CA-1026-B	D4AZ 9502-A *CG-264-C	D4AZ 9A586-A *CT-499-D	5
D4OE-JA	24L	D3PZ 9510-CG *CA-1734		D4AZ 9502-A *CG-264-C	D4AZ 9A586-A *CT-499-D	5
D4OF-AA	28E	★ D4OZ 9510-A *CA-1066	D4PZ 9510-H *CA-1027-B	D4AZ 9502-A *CG-264-C	D4AZ 9A586-A *CT-499-D	5
D4OF-BA	28G	★ D4OZ 9510-B *CA-1061	D4AZ 9510-F *CA-1196	D4AZ 9502-A *CG-264-C	D4AZ 9A586-A *CT-499-D	5
D4OF-CA	28H	★ D4OZ 9510-C *CA-1064	D4PZ 9510-V *CA-1196-A	D4AZ 9502-A *CG-264-C	D4AZ 9A586-A *CT-499-D	5
D4OF-DA	28J	★ D4OZ 9510-D *CA-1063	D4PZ 9510-V *CA-1196-A	D4AZ 9502-A *CG-264-C	D4AZ 9A586-A *CT-499-D	5
D4PE-AA	29F	★ D4OZ 9510-F *CA-885-D	Note 1	★ D3OZ 9502-A *CG-335-B	D3OZ 9A586-A *CT-862-B	7
D4PE-AEA	23G	D4DZ 9510-EA *CA-1108		D0DZ 9502-A *CG-257	D0DZ 9A586-B *CT-842-A	3
D4PE-AJA	31G	D4PZ 9510-AJ *CA-1421		D0ZZ 9502-A *CG-306	D0ZZ 9A586-B *CT-224-A	3
D4PE-AKA	31C	★ D4PZ 9510-AK *CA-1422	None	D0ZZ 9502-A *CG-306	D0ZZ 9A586-B *CT-224-A	3
D4PE-ALA	34AH	★ D4PZ 9510-AL *CA-1289-A	None	★ D1FZ 9502-A *CG-324	★ D4PZ 9A586-D *CT-1074	12
D4PE-ALB	34AK	★ D4PZ 9510-ALB *CA-1381	None	★ D1FZ 9502-A *CG-324	★ D4PZ 9A586-D *CT-1074	12

NOTE 1 - Replaced by D8PZ 95 10-K *CA-2022 for vehicles w/o California emission
or D8PZ 9510-L *CA-2054 for vehicles w/California emission

COPYRIGHT © 1986 — FORD MOTOR COMPANY — DEARBORN, MICHIGAN

IDENTIFICATION CHART

IDENTIFICATION	PARTS LIST 95.	PART NUMBER	REPLACED BY	GASKET SET	TUNE-UP KIT	ILLUS. SEC. 95 PAGE
9510	CARBURETOR ASSY. — Cont'd ▲ Parts List to follow in subsequent change ‡ To follow in a subsequent change					
D4PE-ANA	34M	D4PZ 9510-AN *CA-1382		E0PZ 9502-B *CG-453-E	D5PZ 9A586-E *CT-1075-A	12
D4PE-AMA	34L	★ D4PZ 9510-AM *CA-1309-A	None	E0PZ 9502-B *CG-453-E	D5PZ 9A586-E *CT-1075-A	12
D4PE-ASA	34R	★ D4PZ 9510-AS *CA-1208-A	None	D1FZ 9502-A *CG-324	D4PZ 9A586-D *CT-1074	12
D4PE-BA	27H	D40Z 9510-G *CA-788-C		D3AZ 9502-A *CG-221-B	D3AZ 9A586-A *CT-226-B	6
D4PE-BKA	28R	★ D4PZ 9510-BK *CA-1362	None	D4AZ 9502-A *CG-264-C	D4AZ 9A586-A *CT-499-D	9
D4PE-BLA	34T	D4PZ 9510-BL *CA-1383		E0PZ 9502-B *CG-453-E	D5PZ 9A586-E *CT-1075-A	12
D4PE-CA	27J	★ D4AZ 9510-C *CA-789-B	D8PZ 9510-M *CA-2023	D3AZ 9502-A *CG-221-B	D3AZ 9A586-A *CT-226-B	6
D4PE-CCA	▲	D0PZ 9510-CA *CA-766-A		D4AZ 9502-A *CG-264-C	D4AZ 9A586-A *CT-499-D	
D4PE-CDA	24G	D1PZ 9510-CD *CA-1732		D4AZ 9502-A *CG-264-C	D4AZ 9A586-A *CT-499-D	9
D4PE-CEA	28P	D0PZ 9510-CE *CA-728-A		D4AZ 9502-A *CG-264-C	D4AZ 9A586-A *CT-499-D	9
D4PE-CFA	24G	D3PZ 9510-CF *CA-1733		D4AZ 9502-A *CG-264-C	D4AZ 9A586-A *CT-499-D	9
D4PE-CGA	24G	★ D3PZ 9510-CG *CA-1734	None	D4AZ 9502-A *CG-264-C	D4AZ 9A586-A *CT-499-D	9
D4PE-GA	24L	★ D40Z 9510-H *CA-1026-A	D4PZ 9510-G *CA-1026-B	D4AZ 9502-A *CG-264-C	D4AZ 9A586-A *CT-499-D	9
D4PE-GB	24L	D4PZ 9510-G *CA-1026-B		D4AZ 9502-A *CG-264-C	D4AZ 9A586-A *CT-499-D	9
D4PE-HA	28T	★ D4AZ 9510-H *CA-1027-A	D4PZ 9510-H *CA-1027-B	D4AZ 9502-A *CG-264-C	D4AZ 9A586-A *CT-499-D	9
D4PE-HB	28R	D4PZ 9510-H *CA-1027-B		D4AZ 9502-A *CG-264-C	D4AZ 9A586-A *CT-499-D	9
D4PE-VA	28U	★ D4AZ 9510-F *CA-1196	D4PZ 9510-V *CA-1196-A	D4AZ 9502-A *CG-264-C	D4AZ 9A586-A *CT-499-D	9
D4PE-VB	28R	D4PZ 9510-V *CA-1196-A		D4AZ 9502-A *CG-264-C	D4AZ 9A586-A *CT-499-D	9
D4PE-YA	24F	★ D4DZ 9510-C *CA-1195	D4PZ 9510-Y *CA-1195-A	D4AZ 9502-A *CG-264-C	D4AZ 9A586-A *CT-499-D	9
D4PE-YC	24F	★ D4PZ 9510-Y *CA-1195-A	None	D4AZ 9502-A *CG-264-C	D4AZ 9A586-A *CT-499-D	9
D4VE-AB	27G	★ D4VY 9510-A *CA-1099	D40Z 9510-G *CA-788-C	D3AZ 9502-A *CG-221-B	D3AZ 9A586-A *CT-226-B	6
D42E-AA	34L	★ D4FZ 9510-A *CA-1163	D4PZ 9510-AN *CA-1832	E0PZ 9502-B *CG-453-E	D5PZ 9A586-E *CT-1075-A	12
D42E-AC	34L	★ D4FZ 9510-A *CA-1163	D4PZ 9510-AN *CA-1832	E0PZ 9502-B *CG-453-E	D5PZ 9A586-E *CT-1075-A	12
D42E-BA	34M	★ D4FZ 9510-B *CA-1164	D4PZ 9510-AN *CA-1832	E0PZ 9502-B *CG-453-E	D5PZ 9A586-E *CT-1075-A	12
D42E-CA	34N	★ D4FZ 9510-C *CA-1165	D4PZ 9510-BL *CA-1383	E0PZ 9502-B *CG-453-E	D5PZ 9A586-E *CT-1075-A	12
D42E-CB	34N	★ D4FZ 9510-C *CA-1165	D4PZ 9510-BL *CA-1383	E0PZ 9502-B *CG-453-E	D5PZ 9A586-E *CT-1075-A	12

IDENTIFICATION CHART

IDENTIFICATION	PARTS LIST 95.	PART NUMBER	REPLACED BY	GASKET SET	TUNE-UP KIT	ILLUS. SEC. 95 PAGE
9510	CARBURETOR ASSY. — Cont'd ▲ Parts List to follow in subsequent change ‡ To follow in a subsequent change					
D42E-CD	34U	★ D4FZ 9510-K *CA-1211	D4FZ 9510-BL *CA-1383	E0PZ 9502-B *CG-453-E	D5PZ 9A586-E *CT-1075-A	12
D42E-DA	34P	★ D4FZ 9510-D *CA-1166	E0PZ 9510-AM *CA-1309-A	E0PZ 9502-B *CG-453-E	D5PZ 9A586-E *CT-1075-A	12
D42E-DB	34P	★ D4FZ 9510-D *CA-1166	D4PZ 9510-AM *CA-1309-A	E0PZ 9502-B *CG-453-E	D5PZ 9A586-E *CT-1075-A	12
D42E-EB	34T	★ D4FZ 9510-J *CA-1208	D4PZ 9510-AS *CA-1208-A	★ D1FZ 9502-A *CG-324	★ D4PZ 9A586-D *CT-1074	12
D42E-FA	34AC	★ D4FZ 9510-FA *CA-1289	D4PZ 9510-AL *CA-1289-A	★ D1FZ 9502-A *CG-324	★ D4PZ 9A586-D *CT-1074	12
D42E-GA	34V	★ D4FZ 9510-L *CA-1222	D4PZ 9510-BL *CA-1383	E0PZ 9502-B *CG-453-E	D5PZ 9A586-E *CT-1075-A	12
D42E-HA	34AJ	★ D4FZ 9510-HA *CA-1301	D4PZ 9510-ALB *CA-1381	★ D1FZ 9502-A *CG-324	★ D4PZ 9A586-D *CT-1074	12
D42E-JA	34AK	★ D4FZ 9510-JA *CA-1302	D4PZ 9510-ALB *CA-1381	★ D1FZ 9502-A *CG-324	★ D4PZ 9A586-D *CT-1074	12
D42E-KA	34M	★ D4FZ 9510-B *CA-1164	D4PZ 9510-AN *CA-1382	E0PZ 9502-B *CG-453-E	D5PZ 9A586-E *CT-1075-A	12
D42E-LA	34AA	★ D4FZ 9510-LA *CA-1309	D4PZ 9510-AM *CA-1309-A	E0PZ 9502-B *CG-453-E	D5PZ 9A586-E *CT-1075-A	12
D42E-MA	34M	★ D4FZ 9510-B *CA-1164	D4PZ 9510-AN *CA-1382	E0PZ 9502-B *CG-453-E	D5PZ 9A586-E *CT-1075-A	12
D42E-NA	34AB	★ D4FZ 9510-N *CA-1320	D4PZ 9510-AN *CA-1382	E0PZ 9502-B *CG-453-E	D5PZ 9A586-E *CT-1075-A	12
D42F-EA	34Q	★ D4FZ 9510-E *CA-1123	D4PZ 9510-ALB *CA-1381	★ D1FZ 9502-A *CG-324	★ D4PZ 9A586-D *CT-1074	12
D42F-FA	34R	★ D4FZ 9510-F *CA-1094	D4PZ 9510-AL *CA-1289-A	★ D1FZ 9502-A *CG-324	★ D4PZ 9A586-D *CT-1074	12
D42F-GA	34S	★ D4FZ 9510-G *CA-1075	D4PZ 9510-ALB *CA-1381	★ D1FZ 9502-A *CG-324	★ D4PZ 9A586-D *CT-1074	12
D5AE-AA	28Z	★ D5AZ 9510-A *CA-1234	D5PZ 9510-BA *CA-1499	E1PZ 9502-C *CG-615	D9PZ 9A586-S *CT-1267	9
D5AE-CA	36C	★ D5AZ 9510-C *CA-1292	D5AZ 9510-R *CA-1363	D8PZ 9502-C *CG-466-B	D8PZ 9A586-E *CT-1072-C	8
D5AE-DA	36D	★ D5AZ 9510-D *CA-1293	D6PZ 9510-AH *CA-1765	D8PZ 9502-C *CG-466-B	D8PZ 9A586-E *CT-1072-C	8
D5AE-EA	28Y	★ D5AZ 9510-E *CA-1355	D5PZ 9510-BA *CA-1499-B	E1PZ 9502-C *CG-615	D9PZ 9A586-S *CT-1267	9
D5AE-RA	36E	★ D5AZ 9510-R *CA-1363	D6PZ 9510-AG *CA-1764	D8PZ 9502-C *CG-466-B	D8PZ 9A586-E *CT-1072-C	8
D5DE-AA	24M	★ D5DZ 9510-A *CA-1231	D5PZ 9510-BE *CA-1502	E1PZ 9502-C *CG-615	D9PZ 9A586-S *CT-1267	9
D5DE-BA	24N	★ D5DZ 9510-B *CA-1230	D5PZ 9510-BG *CA-1230-A	E1PZ 9502-C *CG-615	D9PZ 9A586-S *CT-1267	9
D5DE-DA	31M	★ D5DZ 9510-D *CA-1235	D5PZ 9510-AT *CA-1432	D5PZ 9502-E *CG-468	D5PZ 9A586-F *CT-1112	11
D5DE-DB	31M	★ D5DZ 9510-D *CA-1235	D5PZ 9510-AT *CA-1432	D5PZ 9502-E *CG-468	D5PZ 9A586-F *CT-1112	11
D5DE-EA	31K	★ D5DZ 9510-E *CA-1229	D5PZ 9510-AT *CA-1432	D5PZ 9502-E *CG-468	D5PZ 9A586-F *CT-1112	11
D5DE-EB	31K	★ D5DZ 9510-E *CA-1229	D5PZ 9510-AT *CA-1432	D5PZ 9502-E *CG-468	D5PZ 9A586-F *CT-1112	11

COPYRIGHT © 1986 — FORD MOTOR COMPANY — DEARBORN, MICHIGAN

IDENTIFICATION CHART

IDENTIFICATION	PARTS LIST 95.	PART NUMBER	REPLACED BY	GASKET SET	TUNE-UP KIT	ILLUS. SEC. 95 PAGE
9510	CARBURETOR ASSY. — Cont'd ▲ Parts List to follow in subsequent change ‡ To follow in a subsequent change					
D5DE-FA	31L	★ D5DZ 9510-F *CA-1232	D5PZ 9510-AT *CA-1432	D5PZ 9502-E *CG-468	D5PZ 9A586-F *CT-1112	11
D5DE-FB	31L	★ D5DZ 9510-F *CA-1232	D5PZ 9510-AT *CA-1432	D5PZ 9502-E *CG-468	D5PZ 9A586-F *CT-1112	11
D5DE-GA	31N	★ D5DZ 9510-G *CA-1233	D5PZ 9510-AT *CA-1432	D5PZ 9502-E *CG-468	D5PZ 9A586-F *CT-1112	11
D5DE-GB	31N	★ D5DZ 9510-G *CA-1233	D5PZ 9510-AT *CA-1432	D5PZ 9502-E *CG-468	D5PZ 9A586-F *CT-1112	11
D5DE-JA	24P	★ D5DZ 9510-J *CA-1317	D5PZ 9510-BF *CA-1503	E1PZ 9502-C *CG-615	D9PZ 9A586-JA *CT-1076-C	9
D5DE-MA	31R	★ D5DZ 9510-M *CA-1356	D5PZ 9510-AT *CA-1432	D5PZ 9502-E *CG-468	D5PZ 9A586-F *CT-1112	11
D5DE-MB	31R	★ D5DZ 9510-M *CA-1356	D5PZ 9510-AT *CA-1432	D5PZ 9502-E *CG-468	D5PZ 9A586-F *CT-1112	11
D5DE-NA	23U	★ D5DZ 9510-N *CA-1339	D5PZ 9510-AU *CA-1433	D5PZ 9502-E *CG-468	D5PZ 9A586-F *CT-1112	3
D5DE-NB	23U	★ D5DZ 9510-N *CA-1339	D5PZ 9510-AU *CA-1433	D5PZ 9502-E *CG-468	D5PZ 9A586-F *CT-1112	3
D5DE-RA	23V	★ D5DZ 9510-R *CA-1340	D5PZ 9510-AU *CA-1433	D5PZ 9502-E *CG-468	D5PZ 9A586-F *CT-1112	3
D5DE-RB	23V	★ D5DZ 9510-R *CA-1340	D5PZ 9510-AU *CA-1433	D5PZ 9502-E *CG-468	D5PZ 9A586-F *CT-1112	3
D5DE-UA	28AC	★ D5DZ 9510-U *CA-1334	D6PZ 9510-J *CA-1743	E1PZ 9502-C *CG-615	D9PZ 9A586-S *CT-1267	9
D5DE-VA	24R	★ D5DZ 9510-V *CA-1348	D5PZ 9510-BE *CA-1502	E1PZ 9502-C *CG-615	D9PZ 9A586-S *CT-1267	9
D5DE-YA	31P	★ D5DZ 9510-Y *CA-1341	D5PZ 9510-AT *CA-1432	D5PZ 9502-E *CG-468	D5PZ 9A586-F *CT-1112	11
D5DE-ZA	31Q	★ D5DZ 9510-Z *CA-1342	None	D5PZ 9502-E *CG-468	D5PZ 9A586-F *CT-1112	11
D5DE-ZB	31Q	★ D5DZ 9510-Z *CA-1342	None	D5PZ 9502-E *CG-468	D5PZ 9A586-F *CT-1112	11
D5DE-AAA	31P	D5DZ 9510-AA *CA-1391		D5PZ 9502-E *CG-468	D5PZ 9A586-F *CT-1112	11
D5DE-AAB	31P	D5DZ 9510-AA *CA-1391		D5PZ 9502-E *CG-468	D5PZ 9A586-F *CT-1112	11
D5DE-AEA	24T	★ D5DZ 9510-AE *CA-1455	D5PZ 9510-BF *CA-1503	E1PZ 9502-C *CG-615	D9PZ 9A586-JA *CT-1076-C	9
D5DE-AFA	24T	★ D5DZ 9510-AF *CA-1453	D5PZ 9510-BH *CA-1453-A	E1PZ 9502-C *CG-615	D9PZ 9A586-JA *CT-1076-C	9
D5ME-FA	28AB	★ D5MZ 9510-F *CA-1338	D5PZ 9510-BB *CA-1338-A	E1PZ 9502-C *CG-615	D9PZ 9A586-S *CT-1267	9
D50E-AA	28V	★ D50Z 9510-A *CA-1225	D6PZ 9510-J *CA-1743	E1PZ 9502-C *CG-615	D9PZ 9A586-JA *CT-1076-C	9
D50E-BA	28W	★ D50Z 9510-B *CA-1224	D5PZ 9510-BA *CA-1499	E1PZ 9502-C *CG-615	D9PZ 9A586-S *CT-1267	9
D50E-CA	28X	★ D50Z 9510-C *CA-1223	D5PZ 9510-BC *CA-1500	E1PZ 9502-C *CG-615	D9PZ 9A586-M *CT-1263	9
D50E-EA	28AD	★ D50Z 9510-E *CA-1333	D5PZ 9510-BC *CA-1500	E1PZ 9502-C *CG-615	D9PZ 9A586-S *CT-1267	9
D50E-GA	28AE	★ D50Z 9510-G *CA-1357	D5PZ 9510-BC *CA-1500	E1PZ 9502-C *CG-615	D9PZ 9A586-M *CT-1263	9

IDENTIFICATION CHART

IDENTIFICATION	PARTS LIST 95.	PART NUMBER	REPLACED BY	GASKET SET	TUNE-UP KIT	ILLUS. SEC. 95 PAGE
9510	CARBURETOR ASSY. — Cont'd ▲ Parts List to follow in subsequent change ‡ To follow in a subsequent change					
D50E-HA	28AF	★ D50Z 9510-H *CA-1361	D6PZ 9510-J *CA-1743	E1PZ 9502-C *CG-615	D9PZ 9A586-JA *CT-1076-C	9
D50E-MA	24S	D50Z 9510-M *CA-1371		E1PZ 9502-C *CG-615	D9PZ 9A586-S *CT-1267	9
D5PE-AB	27H	D40Z 9510-G *CA-788-C	Note 3	D3AZ 9502-A *CG-221-B	D3AZ 9A586-A *CT-226-B	6
D5PE-ACA	34AH	★ D5PZ 9510-AC *CA-1482	D6PZ 9510-Y *CA-1482-A	E0PZ 9502-B *CG-453-E	D5PZ 9A586-E *CT-1075-A	12
D5PE-ADA	34AH	★ D5PZ 9510-AD *CA-1483	None	E0PZ 9502-B *CG-453-E	D5PZ 9A586-B *CT-1075-A	12
D5PE-AEA	34AA	★ D5PZ 9510-AE *CA-1484	D6PZ 9510-T *CD-1484-A	E0PZ 9502-B *CG-453-E	D5PZ 9A586-E *CT-1075-A	12
D5PE-AGA	36G	★ D5PZ 9510-AG *CA-1491	D6PZ 9510-AH *CA-1765	D8PZ 9502-C *CG-446-B	D8PZ 9A586-E *CT-1072-C	8
D5PE-AHA	23B	★ D3PZ 9510-AH *CA-1418	None	D0DZ 9502-A *CG-257	D0DZ 9A586-B *CT-842-A	3
D5PE-AJA	23A	★ D3PZ 9510-AJ *CA-1419	None	D0DZ 9502-A *CG-257	D0DZ 9A586-B *CT-842-A	3
D5PE-AMA	23R	D5PZ 9510-AM *CA-1425		D0DZ 9502-A *CG-257	D0DZ 9A586-B *CT-842-A	3
D5PE-ASA	23F	★ D3PZ 9510-AS *CA-1431	None	D0DZ 9502-A *CG-257	D0DZ 9A586-B *CT-842-A	3
D5PE-ATA	31N	D5PZ 9510-AT *CA-1432		D5PZ 9502-E *CG-468	D5PZ 9A586-F *CT-1112	11
D5PE-AUA	23V	★ D5PZ 9510-AU *CA-1432	None	D5PZ 9502-E *CG-468	D5PZ 9A586-F *CT-1112	3
D5PE-BAA	28WA	★ D5PZ 9510-BA *CA-1499	D6PZ 9510-J *CA-1743	E1PZ 9502-C *CG-615	D9PZ 9A586-S *CT-1267	9
D5PE-BB	27J	★ D4AZ 9510-C *CA-789-B	D8PZ 9510-M *CA-2023	D3AZ 9502-A *CG-221-B	D3AZ 9A586-A *CT-226-B	6
D5PE-BBA	28AB	★ D5PZ 9510-BB *CA-1338-A	D6PZ 9510-J *CA-1743	E1PZ 9502-C *CG-615	D9PZ 9A586-Y *CT-1271	9
D5PE-BCA	28AE	★ D5PZ 9510-BC *CA-1500	D6PZ 9510-K *CA-1744	E1PZ 9502-C *CG-615	D9PZ 9A586-M *CT-1263	9
D5PE-BDA	28V	★ D5PZ 9510-BD *CA-1501	D6PZ 9510-J *CA-1743	E1PZ 9502-C *CG-615	D9PZ 9A586-JA *CT-1076-C	9
D5PE-BEA	24R	★ D5PZ 9510-BE *CA-1502	D6PZ 9510-E *CA-1741	E1PZ 9502-C *CG-615	D9PZ 9A586-S *CT-1267	9
D5PE-BFA	24P	★ D5PZ 9510-BF *CA-1503	D6PZ 9510-G *CA-1742	E1PZ 9502-C *CG-615	D9PZ 9A586-JA *CT-1076-C	9
D5PE-BGA	24N	★ D5PZ 9510-BG *CA-1230-A	None	E1PZ 9502-C *CG-615	D9PZ 9A586-Y *CT-1271	9
D5PE-BHA	24T	★ D5PZ 9510-BH *CA-1453-A	None	E1PZ 9502-C *CG-615	D9PZ 9A586-JA *CT-1076-C	9
D5PE-BJA	24Q	★ D5PZ 9510-BJ *CA-1321-A	None	E1PZ 9502-C *CG-615	D9PZ 9A586-Y *CT-1271	9
D5PE-BKA	37D	★ D5PZ 9510-BK *CA-1505	None	E1PZ 9502-C *CG-615	D9PZ 9A586-S *CT-1267	9
D5PE-BLA	37A	D5PZ 9510-BL *CA-1265-A		E1PZ 9502-C *CG-615	D9PZ 9A586-S *CT-1267	9
D5PE-BMA	37B	D5PZ 9510-BM *CA-1266-A		E1PZ 9502-C *CG-615	D9PZ 9A586-KA *CT-1077-D	9

NOTE 3 - Replaced by D8PZ 9510-C *CA-2018 for vehicles w/o California emission on 1974 460-4V, or D8PZ 9510-D *CA-2019 for vehicles w/o California emission on 1973 429-4V, or D8PZ 9510-E *CA-2051 for vehicles w/California emission on 1973 429-4V and 1974 460-4V.

COPYRIGHT © 1986 — FORD MOTOR COMPANY — DEARBORN, MICHIGAN

IDENTIFICATION CHART

IDENTIFICATION	PARTS LIST 95.	PART NUMBER	REPLACED BY	GASKET SET	TUNE-UP KIT	ILLUS. SEC. 95 PAGE
9510	CARBURETOR ASSY. — Cont'd ▲ Parts List to follow in subsequent change ‡ To follow in a subsequent change					
D5PE-BNA	37B	★ D5PZ 9510-BN *CA-1506	D6PZ 9510-D *CA-1740	E1PZ 9502-C *CG-615	D9PZ 9A586-KA *CT-1077-D	9
D5PE-BPA	37G	★ D5PZ 9510-BP *CA-1507	None	E1PZ 9502-C *CG-615	D9PZ 9A586-KA *CT-1077-D	9
D5PE-BRA	37G	D5PZ 9510-BR *CA-1508		E1PZ 9502-C *CG-615	D9PZ 9A586-S *CT-1267	9
D5PE-EB	27D	★ D3PZ 9510-E *CA-1331	Note 4	D3AZ 9502-A *CG-221-B	D3AZ 9A586-A *CT-226-B	6
D5PE-GB	29F	★ D40Z 9510-F *GA-885-D	Note 1	D30Z 9502-A *CG-335-B	D30Z 9A586-A *CT-862-B	8
D5VE-AD	36A	★ D5VY 9510-A *CA-1294	D5AZ 9510-R *CA-1363	D8PZ 9502-C *CG-446-B	D8PZ 9A586-E *CT-1072-C	8
D5VE-BA	36B	★ D5VY 9510-B *CA-1295	D6PZ 9510-AH *CA-1765	D8PZ 9502-C *CG-446-B	D8PZ 9A586-E *CT-1072-C	8
D5WE-CA	28AG	★ D5WZ 9510-C *CA-1360	D6PZ 9510-J *CA-1743	E1PZ 9502-C *CG-615	D9PZ 9A586-S *CT-1267	9
D5WE-EA	28W	★ D5WZ 9510-E *CA-1450	★ D5PZ 9510-BA *CA-1499	E1PZ 9502-C *CG-615	D9PZ 9A586-S *CT-1267	9
D5WE-FA	24T	★ D5WZ 9510-F *CA-1454	D5PZ 9510-BE *CA-1502	E1PZ 9502-C *CG-615	D9PZ 9A586-S *CT-1267	9
D5WE-GA	28W	★ D5WZ 9510-G *CA-1451	D5PZ 9510-BA *CA-1499	E1PZ 9502-C *CG-615	D9PZ 9A586-JA *CT-1076-C	9
D5ZE-AD	37C	★ D5ZZ 9510-AD *CA-1353	D5PZ 9510-BK *CA-1505	E1PZ 9502-C *CG-615	D9PZ 9A586-S *CT-1267	9
D5ZE-AE	37C	★ D5ZZ 9510-AD *CA-1353	D5PZ 9510-BK *CA-1505	E1PZ 9502-C *CG-615	D9PZ 9A586-S *CT-1267	9
D5ZE-BD	37D	★ D5ZZ 9510-BD *CA-1354	D5PZ 9510-BK *CA-1505	E1PZ 9502-C *CG-615	D9PZ 9A586-S *CT-1267	9
D5ZE-BE	37D	★ D5ZZ 9510-BD *CA-1354	D5PZ 9510-BK *CA-1505	E1PZ 9502-C *CG-615	D9PZ 9A586-S *CT-1267	9
D5ZE-CC	37A	★ D5ZZ 9510-C *CA-1265	D5PZ 9510-BL *CA-1265-A	E1PZ 9502-C *CG-615	D9PZ 9A586-S *CT-1267	9
D5ZE-CE	37A	★ D5ZZ 9510-C *CA-1265	D5PZ 9510-BL *CA-1265-A	E1PZ 9502-C *CG-615	D9PZ 9A586-S *CT-1267	9
D5ZE-DC	37B	★ D5ZZ 9510-D *CA-1266	D5PZ 9510-BM *CA-1266-A	E1PZ 9502-C *CG-615	D9PZ 9A586-KA *CT-1077-D	9
D5ZE-DE	37B	★ D5ZZ 9510-D *CA-1266	D5PZ 9510-BM *CA-1266-A	E1PZ 9502-C *CG-615	D9PZ 9A586-KA *CT-1077-D	9
D5ZE-DF	37B	D5PZ 9510-BN *CA-1506		E1PZ 9502-C *CG-615	D9PZ 9A586-KA *CT-1077-D	9
D5ZE-JA	24Q	★ D5ZZ 9510-J *CA-1321	D5PZ 9510-BJ *CA-1321-A	E1PZ 9502-C *CG-615	D9PZ 9A586-S *CT-1267	9
D5ZE-YB	37D	★ D5ZZ 9510-Y *CA-1504		E1PZ 9502-C *CG-615	D9PZ 9A586-S *CT-1267	9
D52E-AA	34W	D5FZ 9510-A *CA-1282		E0PZ 9502-B *CG-453-E	D5PZ 9A586-E *CT-1075-A	12
D52E-AB	34W	D5FZ 9510-A *CA-1282		E0PZ 9502-B *CG-453-E	D5PZ 9A586-E *CT-1075-E	12
D52E-AC	34W	D5FZ 9510-A *CA-1282		E0PZ 9502-B *CG-453-E	D5PZ 9A586-E *CT-1075-E	12
D52E-BA	34X	★ D5FZ 9510-B *CA-1283	D5PZ 9510-AC *CA-1482	E0PZ 9502-B *CG-453-E	D5PZ 9A586-E *CT-1075-E	12

NOTE 1 – Replaced by D8PZ 9510-K *CA-2022 for vehicles w/o California emission or D8PZ 9510-L *CA-2054 for vehicles w/California emission

NOTE 4 – Replaced by D8PZ 9510-F *CA-2020 for vehicles w/o California emission on 1973 460-4V, or D8PZ 9510-G *CA-2052 for vehicles w/ California emission on 1973 460-4V, or D8PZ 9510-E *CA-2051 for vehicles w/California emission on 1973 429-4V.

IDENTIFICATION CHART

IDENTIFICATION	PARTS LIST 95.	PART NUMBER	REPLACED BY	GASKET SET	TUNE-UP KIT	ILLUS. SEC. 95 PAGE
9510	CARBURETOR ASSY. — Cont'd ▲ Parts List to follow in subsequent change ‡ To follow in a subsequent change					
D52E-BB	34X	★ D5FZ 9510-B *CA-1283	D5PZ 9510-AC *CA-1482	E0PZ 9502-B *CG-453-E	D5PZ 9A586-E *CT-1075-E	12
D52E-CA	34Y	D5FZ 9510-C *CA-1284		E0PZ 9502-B *CG-453-E	E0PZ 9A586-E *CT-1075-A	12
D52E-CB	34Y	D5FZ 9510-C *CA-1284		E0PZ 9502-B *CG-453-E	E0PZ 9A586-E *CT-1075-A	12
D52E-CC	34Y	D5FZ 9510-C *CA-1284		E0PZ 9502-B *CA-453-E	E0PZ 9A586-E *CT-1075-A	12
D52E-DB	34Z	★ D5FZ 9510-D *CA-1285	D6PZ 9510-Y *CA-1482-A	E0PZ 9502-B *CG-453-E	E0PZ 9A586-E *CT-1075-A	12
D52E-DD	34Z	★ D5FZ 9510-D *CA-1285	D6PZ 9510-Y *CA-1482-A	E0PZ 9502-B *CG-453-E	E0PZ 9A586-E *CT-1075-A	12
D52E-EA	34AL	D5FZ 9510-E *CA-1415		E0PZ 9502-B *CG-453-E	E0PZ 9A586-E *CT-1075-A	12
D52E-FA	34AL	★ D5FZ 9510-F *CA-1413	D6PZ 9510-T *CA-1484-A	E0PZ 9502-B *CG-453-E	E0PZ 9A586-E *CT-1075-A	12
D52E-GA	34AL	★ D5FZ 9510-G *CA-1463	D6PZ 9510-T *CA-1484-A	E0PZ 9502-B *CG-453-E	E0PZ 9A586-E *CT-1075-A	12
D58E-EA	34AQ	★ D5RY 9510-E *CA-1327	D6RY 9510-H *CA-1478	E0PZ 9502-B *CG-453-E	E0PZ 9A586-D *CT-1110	12
D58E-FA	34AR	★ D5RY 9510-F *CA-1329	D6RY 9510-G *CA-1329	E0PZ 9502-B *CG-453-E	E0PZ 9A586-D *CT-1110	12
D58E-GA	34AS	★ D5RY 9510-G *CA-1328	D6RY 9510-G *CA-1476	E0PZ 9502-B *CG-453-E	E0PZ 9A586-D *CT-1110	12
D58E-HA	34AT	D5RY 9510-H *CA-1330		E0PZ 9502-B *CG-453-E	E0PZ 9A586-D *CT-1110	12
D6AE-BA	36F	★ D6AZ 9510-B *CA-1442	D6PZ 9510-AF *CA-1442-A	D8PZ 9502-C *CG-446-B	D8PZ 9A586-E *CT-1072-C	8
D6AE-CA	36F	★ D6AZ 9510-B *CA-1442	D6PZ 9510-AF *CA-1442-A	D8PZ 9502-C *CG-446-B	D8PZ 9A586-E *CT-1072-C	8
D6AE-DA	36G	★ D6AZ 9510-D *CA-1443	D6AZ 9510-DC *CA-1443-A	D8PZ 9502-C *CG-446-B	D8PZ 9A586-E *CT-1072-C	8
D6AE-DC	36H	★ D6AZ 9510-DC *CA-1443-A	D6PZ 9510-AG *CA-1764	D8PZ 9502-C *CG-446-B	D8PZ 9A586-E *CT-1072-C	8
D6AE-EA	36F	★ D6AZ 9510-E *CA-1411	D6PZ 9510-AE *CA-1763	D8PZ 9502-C *CG-446-B	D8PZ 9A586-E *CT-1072-C	8
D6AE-FA	36F	★ D6AZ 9510-E *CA-1411	D6PZ 9510-AE *CA-1763	D8PZ 9502-C *CG-446-B	D8PZ 9A586-E *CT-1072-C	8
D6AE-HA	28AH	★ D6AZ 9510-H *CA-1469	D6PZ 9510-L *CA-1745	E1PZ 9502-C *CG-615	D9PZ 9A586-K *CT-1261	9
D6AE-JA	28AH	D6AZ 9510-J *CA-1495		E1PZ 9502-C *CG-615	D9PZ 9A586-K *CT-1261	9
D6AE-JB	28AH	D6AZ 9510-J *CA-1495		E1PZ 9502-C *CG-615	D9PZ 9A586-K *CT-1261	9
D6AE-KA	28AH	D6AZ 9510-K *CA-1496		E1PZ 9502-C *CG-615	D9PZ 9A586-K *CT-1261	9
D6BE-AA	31S	★ D6DZ 9510-A *CA-1395	D6PZ 9510-M *CA-1542	D5PZ 9502-E *CG-468	D5PZ 9A586-F *CT-1112	11
D6BE-BB	31S	★ D6DZ 9510-D *CA-1461	D6PZ 9510-M *CA-1542	D5PZ 9502-E *CG-468	D5PZ 9A586-F *CT-1112	11
D6BE-CA	31S	★ D6DZ 9510-G *CA-1535	D6PZ 9510-N *CA-1543	D5PZ 9502-E *CG-468	D5PZ 9A586-F *CT-1112	11

COPYRIGHT © 1986 — FORD MOTOR COMPANY — DEARBORN, MICHIGAN

IDENTIFICATION CHART

IDENTIFICATION	PARTS LIST 95.	PART NUMBER	REPLACED BY	GASKET SET	TUNE-UP KIT	ILLUS. SEC. 95 PAGE
9510	CARBURETOR ASSY. — Cont'd ▲ Parts List to follow in subsequent change ‡ To follow in a subsequent change					
D6DE-AB	31S	★ D6DZ 9510-C *CA-1400	D6PZ 9510-P *CA-1544	D5PZ 9502-E *CG-468	D5PZ 9A586-F *CT-1112	11
D6DE-BB	31S	★ D6DZ 9510-B *CA-1394	D6PZ 9510-P *CA-1544	D5PZ 9502-E *CG-468	D5PZ 9A586-F *CT-1112	11
D6DE-CA	31S	★ D6DZ 9510-E *CA-1519	D6PZ 9510-N *CA-1543	D5PZ 9502-E *CG-468	D5PZ 9A586-F *CT-1112	11
D6DE-EA	31S	★ D6DZ 9510-H *CA-1541	D6PZ 9510-P *CA-1544	D5PZ 9502-E *CG-468	D5PZ 9A586-F *CT-1112	11
D6EE-AA	34AN	★ D6FZ 9510-AA *CA-1401	D6PZ 9510-T *CA-1484-A	E0PZ 9502-B *CG-453-E	D5PZ 9A586-D *CT-1110	12
D6EE-BA	34AN	★ D6FZ 9510-B *CA-1403	D6PZ 9510-S *CA-1657	E0PZ 9502-B *CG-453-E	D5PZ 9A586-D *CT-1110	12
D6EE-CA	34AN	★ D6FZ 9510-C *CA-1405	D6PZ 9510-T *CA-1484-A	E0PZ 9502-B *CG-453-E	D5PZ 9A586-D *CT-1110	12
D6EE-DA	34AN	★ D6FZ 9510-DA *CA-1407	D6PZ 9510-T *CA-1484-A	E0PZ 9502-B *CG-453-E	D5PZ 9A586-D *CT-1110	12
D6EE-EA	34AP	★ D6FZ 9510-E *CA-1436	None	E0PZ 9502-B *CG-453-E	D5PZ 9A586-D *CT-1110	12
D6EE-FA	34AP	★ D6PZ 9510-F *CA-1437	D6PZ 9510-V *CA-1655	E0PZ 9502-B *CG-453-E	D5PZ 9A586-D *CT-1110	12
D6EE-HA	34AP	D6FZ 9510-H *CA-1497		E0PZ 9502-B *CG-453-E	D5PZ 9A586-D *CT-1110	12
D6EE-HB	34AP	D6FZ 9510-H *CA-1497		E0PZ 9502-B *CG-453-E	D5PZ 9A586-D *CT-1110	12
D6EE-JA	34AN	★ D6FZ 9510-J *CA-1520	D6PZ 9510-V *CA-1655	E0PZ 9502-B *CG-453-E	D5PZ 9A586-D *CT-1110	12
D6EE-LA	34AN	★ D6FZ 9510-L *CA-1487	D6PZ 9510-V *CA-1655	E0PZ 9502-B *CG-453-E	D5PZ 9A586-D *CT-1110	12
D6EE-MA	34AN	★ D6FZ 9510-M *CA-1488	D6PZ 9510-V *CA-1655	E0PZ 9502-B *CG-453-E	D5PZ 9A586-D *CT-1110	12
D6FE-TA	36G	D6VZ 9510-C *CA-1444		D8PZ 9502-C *CG-446-B	D8PZ 9A586-E *CT-1072-C	8
D6LE-LA	36G	★ D6LZ 9510-L *CA-1551	D6PZ 9510-AE *CA-1763	D8PZ 9502-C *CG-446-B	D8PZ 9A586-E *CT-1072-C	8
D6LE-MA	36G	★ D6LZ 9510-L *CA-1551	D6PZ 9510-AE *CA-1763	D8PZ 9502-C *CG-446-B	D8PZ 9A586-E *CT-1072-C	8
D6ME-AA	28AH	★ D6MZ 9510-A *CA-1460	D6PZ 9510-K *CA-1744	E1PZ 9502-C *CG-615	D9PZ 9A586-JA *CT-1076-C	9
D6ME-BA	28AH	★ D6MZ 9510-B *CA-1480	D6MZ 9510-D *CA-1549	E1PZ 9502-C *CG-615	D9PZ 9A586-JA *CT-1076-C	9
D6ME-CA	28AH	★ D6MZ 9510-C *CA-1548	D6PZ 9510-L *CA-1745	E1PZ 9502-C *CG-615	D9PZ 9A586-JA *CT-1076-C	9
D6ME-DA	28AH	★ D6MZ 9510-D *CA-1549	D6PZ 9510-L *CA-1745	E1PZ 9502-C *CG-615	D9PZ 9A586-JA *CT-1076-C	9
D60E-AA	28AH	★ D60Z 9510-A *CA-1459-B	D6PZ 9510-J *CA-1743	E1PZ 9502-C *CG-615	D9PZ 9A586-K *CT-1261	9
D60E-AB	28AH	D60Z 9510-A *CA-1459-B		E1PZ 9502-C *CG-615	D9PZ 9A586-K *CT-1261	9
D60E-BA	28AH	★ D60Z 9510-B *CA-1392	D6PZ 9510-K *CA-1744	E1PZ 9502-C *CG-615	D9PZ 9A586-K *CT-1261	9
D60E-BB	28AH	★ D60Z 9510-B *CA-1392	D6PZ 9510-K *CA-1744	E1PZ 9502-C *CG-615	D9PZ 9A586-K *CT-1261	9

IDENTIFICATION CHART

IDENTIFICATION	PARTS LIST 95.	PART NUMBER	REPLACED BY	GASKET SET	TUNE-UP KIT	ILLUS. SEC. 95 PAGE
9510	CARBURETOR ASSY. — Cont'd ▲ Parts List to follow in subsequent change ‡ To follow in a subsequent change					
D60E-CA	28AJ	★ D60Z 9510-C *CA-1393	D6PZ 9510-AC *CA-1747	E1PZ 9502-C *CG-615	D9PZ 9A586-K *CT-1261	9
D6PE-ABA	37E	★ D6PZ 9510-AB *CA-1746	None	E1PZ 9502-C *CG-615	D9PZ 9A586-S *CT-1267	9
D6PE-ACA	28AJ	★ D6PZ 9510-AC *CA-1747	None	E1PZ 9502-C *CG-615	D9PZ 9A586-K *CT-1261	9
D6PE-AEA	36N	★ D6PZ 9510-AE *CA-1763	D8PZ 9510-A *CA-2016	D8PZ 9502-C *CG-446-B	D8PZ 9A586-E *CT-1072-C	8
D6PE-AFA	36N	★ D6PZ 9510-AF *CA-1442-A	None	D8PZ 9502-C *CG-446-B	D8PZ 9A586-E *CT-1072-C	8
D6PE-AGA	36N	★ D6PZ 9510-AG *CA-1764	D8PZ 9510-B *CA-2017	D8PZ 9502-C *CG-446-B	D8PZ 9A586-E *CT-1072-C	8
D6PE-AHA	36N	D6PZ 9510-AH *CA-1765		D8PZ 9502-C *CG-446-B	D8PZ 9A586-E *CT-1072-C	8
D6PE-CA	37F	D6PZ 9510-C *CA-1739		E1PZ 9502-C *CG-615	D9PZ 9A586-S *CT-1267	9
D6PE-DA	37F	D6PZ 9510-D *CA-1740		E1PZ 9502-C *CG-615	D9PZ 9A586-S *CT-1267	9
D6PE-EA	24T	D6PZ 9510-E *CA-1741		E1PZ 9502-C *CG-615	D9PZ 9A586-S *CT-1267	9
D6PE-GA	24T	D6PZ 9510-G *CA-1742		E1PZ 9502-C *CG-615	D9PZ 9A586-JA *CT-1076-C	9
D6PE-JA	28AH	D6PZ 9510-J *CA-1743		E1PZ 9502-C *CG-615	D9PZ 9A586-K *CT-1261	9
D6PE-KA	28AH	D6PZ 9510-K *CA-1744		E1PZ 9502-C *CG-615	D9PZ 9A586-JA *CT-1076-C	9
D6PE-LA	28AH	D6PZ 9510-L *CA-1745		E1PZ 9502-C *CG-615	D9PZ 9A586-JA *CT-1076-C	9
D6PE-MA	31S	★ D6PZ 9510-M *CA-1542	None	D5PZ 9502-E *CG-468	D5PZ 9A586-F *CT-1112	11
D6PE-NA	31S	D6PZ 9510-N *CA-1543		D5PZ 9502-E *CG-468	D5PZ 9A586-F *CT-1112	11
D6PE-PA	31S	D6PZ 9510-P *CA-1544		D5PZ 9502-E *CG-468	D5PZ 9A586-F *CT-1112	11
D6PE-SA	34AN	D6PZ 9510-S *CA-1657		E0PZ 9502-B *CG-453-E	D5PZ 9A586-D *CT-1110	12
D6PE-TA	34AN	D6PZ 9510-T *CA-1484-E		E0PZ 9502-B *CG-453-E	D5PZ 9A586-D *CT-1110	12
D6PE-UA	34AL	★ D5PZ 9510-UA *CA-1656	None	E0PZ 9502-B *CG-453-E	D5PZ 9A586-E *CT-1075-E	12
D6PE-VA	34AN	★ D6PZ 9510-V *CA-1655	None	E0PZ 9502-B *CG-453-E	D5PZ 9A586-D *CT-1110	12
D6PE-YA	34AP	D6PZ 9510-Y *CA-1482-E		E0PZ 9502-B *CG-453-E	D5PZ 9A586-D *CT-1110	12
D6VE-EA	36G	★ D6VZ 9510-E *CA-1445	D6PZ 9510-AH *CA-1765	D8PZ 9502-C *CG-446-B	D8PZ 9A586-E *CT-1072-C	8
D6VE-FA	36G	D6VZ 9510-F *CA-1539		D8PZ 9502-C *CG-446-B	D8PZ 9A586-E *CT-1072-C	8
D6VE-GA	36G	D6VZ 9510-F *CA-1539		D8PZ 9502-C *CG-446-B	D8PZ 9A586-E *CT-1072-C	8
D6VE-KA	36G	★ D6LZ 9510-L *CA-1551	D6PZ 9510-AE *CA-1763	D8PZ 9502-C *CG-446-B	D8PZ 9A586-E *CT-1072-C	8

COPYRIGHT © 1986 — FORD MOTOR COMPANY — DEARBORN, MICHIGAN

IDENTIFICATION CHART

IDENTIFICATION	PARTS LIST 95.	PART NUMBER	REPLACED BY	GASKET SET	TUNE-UP KIT	ILLUS. SEC. 95 PAGE
9510	CARBURETOR ASSY. — Cont'd ▲ Parts List to follow in subsequent change ‡ To follow in a subsequent change					
D6WE-AA	28AH	★ D6WZ 9510-A *CA-1396	D6PZ 9510-K *CA-1744	E1PZ 9502-C *CG-615	D9PZ 9A586-JA *CT-1076-C	9
D6WE-BA	28AH	D6WZ 9510-B *CA-1470	D6PZ 9510-L *CA-1745	E1PZ 9502-C *CG-615	D9PZ 9A586-JA *CT-1076-C	9
D6WE-CA	28AH	D6WZ 9510-C *CA-1494		E1PZ 9502-C *CG-615	D9PZ 9A586-JA *CT-1076-C	9
D6WE-CB	28AH	D6WZ 9510-CB *CA-1654		E1PZ 9502-C *CG-615	D9PZ 9A586-JA *CT-1076-C	9
D6WE-EA	28AH	★ D6WZ 9510-E *CA-1511	D6PZ 9510-L *CA-1745	E1PZ 9502-C *CG-615	D9PZ 9A586-JA *CT-1076-C	9
D6WE-FA	28AH	★ D6WZ 9510-E *CA-1511	D6PZ 9510-L *CA-1745	E1PZ 9502-C *CG-615	D9PZ 9A586-JA *CT-1076-C	9
D6ZE-AA	37E	★ D6ZZ 9510-A *CA-1465	D6PZ 9510-C *CA-1739	E1PZ 9502-C *CG-615	D9PZ 9A586-S *CT-1267	9
D6ZE-AAA	37F	★ D6ZZ 9510-D *CA-1468	D6PZ 9510-D *CA-1740	E1PZ 9502-C *CG-615	D9PZ 9A586-S *CT-1267	9
D6ZE-BA	37F	★ D6ZZ 9510-B *CA-1466	D6PZ 9510-C *CA-1739	E1PZ 9502-C *CG-615	D9PZ 9A586-S *CT-1267	9
D6ZE-CA	37E	★ D6ZZ 9510-C *CA-1467	D6PZ 9510-AB *CA-1746	E1PZ 9502-C *CG-615	D9PZ 9A586-S *CT-1267	9
D6ZE-DA	37F	★ D6ZZ 9510-D *CA-1468	D6PZ 9510-D *CA-1740	E1PZ 9502-C *CG-615	D9PZ 9A586-S *CT-1267	9
D6ZE-VA	37E	★ D6ZZ 9510-V *CA-1536	D6PZ 9510-C *CA-1739	E1PZ 9502-C *CG-615	D9PZ 9A586-S *CT-1267	9
D64E-AA	24T	★ D64Z 9510-A *CA-1481	D6PZ 9510-G *CA-1742	E1PZ 9502-C *CG-615	D9PZ 9A586-JA *CT-1076-C	9
D64E-BA	28AJ	★ D64Z 9510-B *CA-1540	D6PZ 9510-AC *CA-1747	E1PZ 9502-C *CG-615	D9PZ 9A586-K *CT-1261	9
D64E-BB	28AJ	★ D64Z 9510-B *CA-1540	D6PZ 9510-AC *CA-1747	E1PZ 9502-C *CG-615	D9PZ 9A586-K *CT-1261	9
D64E-DA	24T	D64Z 9510-D *CA-1554		E1PZ 9502-C *CG-615	D9PZ 9A586-JA *CT-1076-C	9
D7AE-ACA	28AL	★ D7AZ 9510-G *CA-1717	D7PZ 9510-BM *CA-2211	E1PZ 9502-C *CG-615	D9PZ 9A586-S *CT-1267	9
D7AE-ACB	28AL	★ D7AZ 9510-G *CA-1717	D7PZ 9510-BM *CA-2211	E1PZ 9502-C *CG-615	D9PZ 9A586-S *CT-1267	9
D7AE-ADA	28AL	D7AZ 9510-D *CA-1572		E1PZ 9502-C *CG-615	D9PZ 9A586-S *CT-1267	9
D7AE-ADB	28AL	D7AZ 9510-D *CA-1572		E1PZ 9502-C *CG-615	D9PZ 9A586-S *CT-1267	9
D7AE-AHA	28AK	D7AZ 9510-AH *CA-1561-A		E1PZ 9502-C *CG-615	D9PZ 9A586-K *CT-1261	9
D7AE-AHB	28AK	D7AZ 9510-AH *CA-1561-A		E1PZ 9502-C *CG-615	D9PZ 9A586-K *CT-1261	9
D7AE-AKA	28AN	★ D7AZ 9510-AK *CA-1785	D7PZ 9510-BN *CA-2210	E1PZ 9502-C *CG-615	D9PZ 9A586-K *CT-1261	9
D7AE-AKB	28AN	★ D7AZ 9510-AK *CA-1785	D7PZ 9510-BN *CA-2210	E1PZ 9502-C *CG-615	D9PZ 9A586-K *CT-1261	9
D7AE-ANA	36M	★ D7AZ 9510-H *CA-1620	D8PZ 9510-AB *CA-2030	D8PZ 9502-C *CG-446-B	D8PZ 9A586-E *CT-1072-C	8
D7AE-ASA	28AN	★ D7AZ 9510-AS *CA-1816	D7AZ 9510-AK *CA-1785	E1PZ 9502-C *CG-615	D9PZ 9A586-K *CT-1261	9

IDENTIFICATION CHART

IDENTIFICATION	PARTS LIST 95.	PART NUMBER	REPLACED BY	GASKET SET	TUNE-UP KIT	ILLUS. SEC. 95 PAGE
9510	CARBURETOR ASSY. — Cont'd ▲ Parts List to follow in subsequent change ‡ To follow in a subsequent change					
D7AE-AVA	28AQ	★ D7AZ 9510-AV *CA-1863	D7PZ 9510-BP *CA-1863-A	E1PZ 9502-C *CG-615	D9PZ 9A586-J *CT-1260	9
D7AE-CA	28AK	★ D7AZ 9510-C *CA-1561	D7PZ 9510-BN *CA-2210	E1PZ 9502-C *CG-615	D9PZ 9A586-K *CT-1261	9
D7AE-DA	28AL	D7AZ 9510-D *CA-1572		E1PZ 9502-C *CG-615	D9PZ 9A586-S *CT-1267	9
D7AE-GA	28AL	★ D7AZ 9510-G *CA-1717	D7PZ 9510-BM *CA-2211	E1PZ 9502-C *CG-615	D9PZ 9A586-S *CT-1267	9
D7AE-TA	28AP	★ D7AZ 9510-Y *CA-1713	None	E1PZ 9502-C *CG-615	D9PZ 9A586-JA *CT-1076-C	9
D7AE-TB	28AP	★ D7AZ 9510-Y *CA-1713	None	E1PZ 9502-C *CG-615	D9PZ 9A586-JA *CT-1076-C	9
D7BE-AA	31T	★ D7DZ 9510-AA *CA-1623	D7PZ 9510-P *CA-1951	D5PZ 9502-E *CG-468	D5PZ 9A586-F *CT-1112	11
D7BE-AB	31T	★ D7DZ 9510-AB *CA-1707	D7PZ 9510-A *CA-2592	D5PZ 9502-E *CG-468	D5PZ 9A586-F *CT-1112	11
D7BE-ABA	24V	★ D7DZ 9510-S *CA-1864	None	E1PZ 9502-C *CG-615	D9PZ 9A586-JA *CT-1076-C	9
D7BE-BA	31T	★ D7DZ 9510-BA *CA-1624	D7PZ 9510-E *CA-1947	D5PZ 9502-E *CG-468	D5PZ 9A586-F *CT-1112	11
D7BE-BC	31T	★ D7DZ 9510-BC *CA-1624-A	D7PZ 9510-E *CA-1947	D5PZ 9502-E *CG-468	D5PZ 9A586-F *CT-1112	11
D7BE-FA	31U	★ D7DZ 9510-FA *CA-1627	D7PZ 9510-F *CA-1627-A	D5PZ 9502-E *CG-468	D5PZ 9A586-F *CT-1112	11
D7BE-GA	31U	★ D7DZ 9510-GA *CA-1628	D7PZ 9510-G *CA-1628-A	D5PZ 9502-E *CG-468	D5PZ 9A586-F *CT-1112	11
D7BE-HB	31T	★ D7DZ 9510-HA *CA-1629	D7PZ 9510-M *CA-1949	D5PZ 9502-E *CG-468	D5PZ 9A586-F *CT-1112	11
D7BE-JA	24V	★ D7DZ 9510-JA *CA-1576	D7DZ 9510-Y *CA-1790	E1PZ 9502-C *CG-615	D9PZ 9A586-JA *CT-1076-C	9
D7BE-LA	24U	D7DZ 9510-LA *CA-1557		E1PZ 9502-C *CG-615	D9PZ 9A586-K *CT-1261	9
D7BE-NA	31T	★ D7DZ 9510-NA *CA-1712	D7PZ 9510-E *CA-1947	D5PZ 9502-E *CG-468	D5PZ 9A586-F *CT-1112	11
D7BE-PA	24U	D7DZ 9510-PA *CA-1557		E1PZ 9502-C *CG-615	D9PZ 9A586-K *CT-1261	9
D7BE-RA	31T	★ D7DZ 9510-RA *CA-1768	D7PZ 9510-T *CA-1958	D5PZ 9502-E *CG-468	D5PZ 9A586-F *CT-1112	11
D7BE-YA	24V	★ D7DZ 9510-Y *CA-1790	D7PZ 9510-BR *CA-2216	E1PZ 9502-C *CG-615	D9PZ 9A586-JA *CT-1076-C	9
D7DE-ABA	31T	★ D7DZ 9510-ABA *CA-1820	D7PZ 9510-A *CA-2592	D5PZ 9502-E *CG-468	D5PZ 9A586-F *CT-1112	11
D7DE-DA	31T	★ D7DZ 9510-D *CA-1633	D7DZ 9510-DD *CA-1633-A	D5PZ 9502-E *CG-468	D5PZ 9A586-F *CT-1112	11
D7DE-DD	31T	★ D7DZ 9510-DD *CA-1633-A	D7PZ 9510-AS *CA-1633-B	D5PZ 9502-E *CG-468	D5PZ 9A586-F *CT-1112	11
D7DE-GC	31V	★ D7DZ 9510-G *CA-1635	D7PZ 9510-M *CA-1949	D5PZ 9502-E *CG-468	D5PZ 9A586-F *CT-1112	11
D7DE-KA	24U	★ D7DZ 9510-K *CA-1560	D7PZ 9510-CB *CA-2215	E1PZ 9502-C *CG-615	D9PZ 9A586-S *CT-1267	9
D7DE-LA	24U	★ D7DZ 9510-L *CA-1559	D7PZ 9510-BS *CA-2213	E1PZ 9502-C *CG-615	D9PZ 9A586-K *CT-1261	9

COPYRIGHT © 1986 — FORD MOTOR COMPANY — DEARBORN, MICHIGAN

IDENTIFICATION CHART

IDENTIFICATION	PARTS LIST 95.	PART NUMBER	REPLACED BY	GASKET SET	TUNE-UP KIT	ILLUS. SEC. 95 PAGE
9510	CARBURETOR ASSY. — Cont'd ▲ Parts List to follow in subsequent change ‡ To follow in a subsequent change					
D7DE-RA	28AM	★ D7DZ 9510-H *CA-1570	D7PZ 9510-BT *CA-2212	E1PZ 9502-C *CG-615	D9PZ 9A586-K *CT-1261	9
D7DE-RB	28AM	★ D7DZ 9510-H *CA-1570	D7PZ 9510-BT *CA-2212	E1PZ 9502-C *CG-615	D9PZ 9A586-K *CT-1261	9
D7DE-VA	31T	★ D7DZ 9510-V *CA-1769	D7PZ 9510-T *CA-1958	D5PZ 9502-E *CG-468	D5PZ 9A586-F *CT-1112	11
D7EE-AB	34AV	★ D7FZ 9510-AA *CA-1649	D7PZ 9510-C *CA-1845	E0PZ 9502-B *CG-453-E	D7PZ 9A586-E *CT-1172	16
D7EE-AAA	34AW	★ D7FZ 9510-AAA *CA-1694	D7PZ 9510-D *CA-1846	E0PZ 9502-B *CG-453-E	D7PZ 9A586-E *CT-1172	16
D7EE-BDA	34BD	D7FZ 9510-BD *CA-1716		E0PZ 9502-B *CG-453-E	D7PZ 9A586-E *CT-1172	16
D7EE-BGA	34BE	★ D7FZ 9510-BG *CA-1748	D7PZ 9510-B *CA-1844	E0PZ 9502-B *CG-453-E	D7PZ 9A586-E *CT-1172	16
D7EE-BHA	34BE	★ D7FZ 9510-BH *CA-1749	D7PZ 9510-B *CA-1844	E0PZ 9502-B *CG-453-E	D7PZ 9A586-E *CT-1172	16
D7EE-BLA	34BE	★ D7FZ 9510-BL *CA-1751	D7PZ 9510-B *CA-1844	E0PZ 9502-B *CG-453-E	D7PZ 9A586-E *CT-1172	16
D7EE-BMA	34BE	★ D7FZ 9510-BM *CA-1752	D7PZ 9510-B *CA-1844	E0PZ 9502-B *CG-453-E	D7PZ 9A586-E *CT-1172	16
D7EE-BTA	34BE	★ D7FZ 9510-BT *CA-1923	None	E0PZ 9502-B *CG-453-E	D7PZ 9A586-E *CT-1172	16
D7EE-BUA	34BE	★ D7FZ 9510-BU *CA-1924	None	E0PZ 9502-B *CG-453-E	D7PZ 9A586-E *CT-1172	16
D7EE-DA	34AV	★ D7FZ 9510-D *CA-1651	D7PZ 9510-B *CA-1844	E0PZ 9502-B *CG-453-E	D7PZ 9A586-E *CT-1172	16
D7EE-EA	34BC	★ D7FZ 9510-E *CA-1652	D7PZ 9510-B *CA-1844	E0PZ 9502-B *CG-453-E	D7PZ 9A586-E *CT-1172	16
D7EE-FA	34AV	★ D7FZ 9510-F *CA-1698	D7PZ 9510-C *CA-1845	E0PZ 9502-B *CG-453-E	D7PZ 9A586-E *CT-1172	16
D7EE-GA	34AW	D7FZ 9510-G *CA-1653		E0PZ 9502-B *CG-453-E	D7PZ 9A586-E *CT-1172	16
D7EE-HA	34AX	★ D7FZ 9510-H *CA-1690	D7PZ 9510-B *CA-1844	E0PZ 9502-B *CG-453-E	D7PZ 9A586-E *CT-1172	16
D7EE-JA	34AX	★ D7FZ 9510-J *CA-1691	D7PZ 9510-B *CA-1844	E0PZ 9502-B *CG-453-E	D7PZ 9A586-E *CT-1172	16
D7EE-KB	34AX	★ D7FZ 9510-K *CA-1692	D7PZ 9510-C *CA-1845	E0PZ 9502-B *CG-453-E	D7PZ 9A586-E *CT-1172	16
D7EE-LA	34AY	★ D7FZ 9510-L *CA-1699	D7PZ 9510-C *CA-1845	E0PZ 9502-B *CG-453-E	D7PZ 9A586-E *CT-1172	16
D7EE-SA	34BC	★ D7FZ 9510-S *CA-1703	D7PZ 9510-C *CA-1845	E0PZ 9502-B *CG-453-E	D7PZ 9A586-E *CT-1172	16
D7EE-TA	34BC	D7FZ 9510-T *CA-1704		E0PZ 9502-B *CG-453-E	D7PZ 9A586-E *CT-1172	16
D7EE-UA	34BD	★ D7FZ 9510-U *CA-1705	D7PZ 9510-C *CA-1845	E0PZ 9502-B *CG-453-E	D7PZ 9A586-E *CT-1172	16
D7EE-VA	34BD	D7FZ 9510-V *CA-1706		E0PZ 9502-B *CG-453-E	D7PZ 9A586-E *CT-1172	16
D70E-CA	28AK	★ D70Z 9510-C *CA-1568	D7PZ 9510-BY *CA-2209	E1PZ 9502-C *CG-615	D9PZ 9A586-JA *CT-1076-C	9
D70E-CB	28AK	★ D70Z 9510-C *CA-1568	D7PZ 9510-BY *CA-2209	E1PZ 9502-C *CG-615	D9PZ 9A586-JA *CT-1076-C	9

IDENTIFICATION CHART

IDENTIFICATION	PARTS LIST 95.	PART NUMBER	REPLACED BY	GASKET SET	TUNE-UP KIT	ILLUS. SEC. 95 PAGE
9510	CARBURETOR ASSY. — Cont'd ▲ Parts List to follow in subsequent change ‡ To follow in a subsequent change					
D70E-HA	28AN	★ D70Z 9510-H *CA-1567	D7PZ 9510-BU *CA-2208	E1PZ 9502-C *CG-615	D9PZ 9A586-K *CT-1261	9
D70E-HB	28AN	D70Z 9510-HB *CA-1718		E1PZ 9502-C *CG-615	D9PZ 9A586-K *CT-1261	9
D70E-HC	28AN	★ D70Z 9510-H *CA-1567	D7PZ 9510-BU *CA-2208	E1PZ 9502-C *CG-615	D9PZ 9A586-K *CT-1261	9
D70E-HD	28AN	★ D70Z 9510-HB *CA-1718	D7PZ 9510-BU *CA-2208	E1PZ 9502-C *CG-615	D9PZ 9A586-K *CT-1261	9
D70E-LA	28AM	★ D70Z 9510-F *CA-1569	D7PZ 9510-BT *CA-2212	E1PZ 9502-C *CG-615	D9PZ 9A586-K *CT-1261	9
D70E-MA	28AN	★ D70Z 9510-J *CA-1564	D7SZ 9510-A *CA-1564-A	E1PZ 9502-C *CG-615	D9PZ 9A586-K *CT-1261	9
D70E-MB	28AN	★ D70Z 9510-J *CA-1564	D7SZ 9510-A *CA-1564-A	E1PZ 9502-C *CG-615	D9PZ 9A586-K *CT-1261	9
D70E-NA	28AK	★ D70Z 9510-N *CA-1714	D7PZ 9510-BY *CA-2209	E1PZ 9502-C *CG-615	D9PZ 9A586-JA *CT-1076-C	9
D70E-ND	28AK	★ D70Z 9510-N *CA-1714	D7PZ 9510-BY *CA-2209	E1PZ 9502-C *CG-615	D9PZ 9A586-JA *CT-1076-C	9
D70E-RA	28AK	D70Z 9510-R *CA-1761		E1PZ 9502-C *CG-615	D9PZ 9A586-JA *CT-1076-C	9
D70E-RB	28AK	D70Z 9510-R *CA-1761		E1PZ 9502-C *CG-615	D9PZ 9A586-JA *CT-1076-C	9
D70E-TA	28AN	★ D70Z 9510-T *CA-1762	D7PZ 9510-BU *CA-2208	E1PZ 9502-C *CG-615	D9PZ 9A586-K *CT-1261	9
D70E-TB	28AN	★ D70Z 9510-T *CA-1762	D7PZ 9510-BU *CA-2208	E1PZ 9502-C *CG-615	D9PZ 9A586-K *CT-1261	9
D7PE-AA	36L	D7VZ 9510-S *CA-1766		D6PZ 9502-B *CG-446-A	D6PZ 9A586-C *CT-1072-B	8
D7PE-ASA	31T	D7PZ 9510-AS *CA-1633-B		D5PZ 9502-E *CG-468	D5PZ 9A586-F *CT-1112	11
D7PE-BA	34BD	D7PZ 9510-B *CA-1844		E0PZ 9502-B *CG-453-E	D7PZ 9A586-E *CT-1172	16
D7PE-BMA	28AL	★ D7PZ 9510-BM *CA-2211	None	E1PZ 9502-C *CG-615	D9PZ 9A586-S *CT-1267	9
D7PE-BNA	28AK	D7PZ 9510-BN *CA-2210		E1PZ 9502-C *CG-615	D9PZ 9A586-K *CT-1261	9
D7PE-BPA	28AQ	D7PZ 9510-BP *CA-1863-A		E1PZ 9502-C *CG-615	D9PZ 9A586-J *CT-1260	9
D7PE-BRA	24V	★ D7PZ 9510-BR *CA-2216	None	E1PZ 9502-C *CG-615	D9PZ 9A586-JA *CT-1076-C	9
D7PE-BSA	24U	★ D7PZ 9510-BS *CA-2213	None	E1PZ 9502-C *CG-615	D9PZ 9A586-JA *CT-1076-C	9
D7PE-BTA	28AM	D7PZ 9510-BT *CA-2212		E1PZ 9502-C *CG-615	D9PZ 9A586-K *CT-1261	9
D7PE-BUA	28AN	D7PZ 9510-BU *CA-2208		E1PZ 9502-C *CG-615	D9PZ 9A586-K *CT-1261	9
D7PE-BVA	28AN	★ D7PZ 9510-BV *CA-1564-B	None	E1PZ 9502-C *CG-615	D9PZ 9A586-K *CT-1261	9
D7PE-BYA	28AK	D7PZ 9510-BY *CA-2209		E1PZ 9502-C *CG-615	D9PZ 9A586-JA *CT-1076-C	9
D7PE-BZA	24U	D7PZ 9510-BZ *CA-2214		E1PZ 9502-C *CG-615	D9PZ 9A586-JA *CT-1076-C	9
D7PE-CA	34AV	D7PZ 9510-C *CA-1845		E0PZ 9502-B *CD-453-E	D7PZ 9A586-E *CT-1172	16

COPYRIGHT © 1986 — FORD MOTOR COMPANY — DEARBORN, MICHIGAN

IDENTIFICATION CHART

IDENTIFICATION	PARTS LIST 95.	PART NUMBER	REPLACED BY	GASKET SET	TUNE-UP KIT	ILLUS. SEC. 95 PAGE
9510	CARBURETOR ASSY. — Cont'd ▲ Parts List to follow in subsequent change ‡ To follow in a subsequent change					
D7PE-CAA	37H	D7PZ 9510-CA *CA-2218		E1PZ 9502-C *CG-615	D9PZ 9A586-KA *CT-1077-D	9
D7PE-CBA	24W	D7PZ 9510-CB *CA-2215		E1PZ 9502-C *CG-615	D9PZ 9A586-S *CT-1267	9
D7PE-CCA	37H	D7PZ 9510-CC *CA-2217		E1PZ 9502-C *CG-615	D9PZ 9A586-KA *CT-1077-D	9
D7PE-DA	34AW	★ D7PZ 9510-D *CA-1846	None	E0PZ 9502-B *CG-453-E	D7PZ 9A586-E *CT-1172	16
D7PE-EA	31T	D7PZ 9510-E *CA-1947		D5PZ 9502-E *CG-468	D5PZ 9A586-F *CT-1112	11
D7PE-FA	31U	★ D7PZ 9510-F *CA-1627-A	None	D5PZ 9502-E *CG-468	D5PZ 9A586-F *CG-1112	11
D7PE-GA	31U	★ D7PZ 9510-G *CA-1628-A	None	D5PZ 9502-E *CG-468	D5PZ 9A586-F *CG-1112	11
D7PE-MA	31V	D7PZ 9510-M *CA-1949		D5PZ 9502-E *CG-468	D5PZ 9A589-F *CG-1112	11
D7PE-PA	31T	D7PZ 9510-P *CA-1951		D5PZ 9502-E *CG-468	D5PZ 9A586-F *CT-1112	11
D7PE-TA	31T	D7PZ 9510-T *CA-1958		D5PZ 9502-E *CT-468	D5PZ 9A586-F *CT-1112	11
D7RE-EA	34BF	★ D7RY 9510-EA *CA-1788	None	E0PZ 9502-B *CG-453-E	D7PZ 9A586-E *CT-1172	16
D7RE-LA	34BF	★ D7RY 9510-LA *CA-1789		E0PZ 9502-B *CG-453-E	D7PZ 9A586-E *CT-1172	16
D7SE-AA	28AN	★ D7SZ 9510-A *CA-1564-A	D7PZ 9510-BV *CA-1564-B	E1PZ 9502-C *CG-615	D9PZ 9A586-K *CT-1261	9
D7SE-DA	28AK	★ D7SZ 9510-D *CA-1952	D7PZ 9510-BY *CA-2209	E1PZ 9502-C *CG-615	D9PZ 9A586-JA *CT-1076-C	9
D7VE-AAA	36L	★ D7VZ 9510-AA *CA-1861	D8PZ 9510-Z *CA-2028	D8PZ 9502-C *CG-446-B	D8PZ 9A586-E *CT-1072-C	8
D7VE-KA	36J	★ D7VZ 9510-B *CA-1619	None	D8PZ 9502-C *CG-446-B	D8PZ 9A586-E *CT-1072-C	8
D7VE-MA	36K	D7VZ 9510-AC *CA-1715		D8PZ 9502-C *CG-446-B	D8PZ 9A586-E *CT-1072-C	8
D7VE-NA	36K	★ D7VZ 9510-A *CA-1618	D8PZ 9510-Z *CA-2028	D8PZ 9502-C *CG-446-B	D8PZ 9A586-E *CT-1072-C	8
D7VE-SA	36L	D7VZ 9510-S *CA-1766		D8PZ 9502-C *CG-446-B	D8PZ 9A586-E *CT-1072-C	8
D7VE-TA	36J	★ D7VZ 9510-T *CA-1825	D8PZ 9510-AA *CA-2029	D8PZ 9502-C *CG-446-B	D8PZ 9A586-E *CT-1072-C	8
D7WE-EA	24U	★ D7WZ 9510-E *CA-1700	D7WZ 9510-EB *CA-1760	E1PZ 9502-C *CG-615	D9PZ 9A586-JA *CT-1076-C	9
D7WE-EB	24U	★ D7WZ 9510-EB *CA-1760	D7PZ 9510-BZ *CA-2214	E1PZ 9502-C *CG-615	D9PZ 9A586-JA *CT-1076-C	9
D7WE-GA	28AK	D7WZ 9510-F *CA-1711		E1PZ 9502-C *CG-615	D9PZ 9A586-JA *CT-1076-C	9
D7WE-GB	28AK	D7WZ 9510-F *CA-1711		E1PZ 9502-C *CG-615	D9PZ 9A586-JA *CT-1076-C	9
D7YE-AA	37H	★ D7FZ 9510-A *CA-1555	D7PZ 9510-CA *CA-2218	E1PZ 9502-C *CG-615	D9PZ 9A586-KA *CT-1077-D	9
D7YE-BA	37H	D7FZ 9510-B *CA-1556		E1PZ 9502-C *CG-615	D9PZ 9A586-S *CT-1267	9
D7YE-EA	37H	★ D7YZ 9510-E *CA-1693	D7PZ 9510-CA *CA-2218	E1PZ 9502-C *CG-615	D9PZ 9A586-KA *CT-1077-D	9

IDENTIFICATION CHART

IDENTIFICATION	PARTS LIST 95.	PART NUMBER	REPLACED BY	GASKET SET	TUNE-UP KIT	ILLUS. SEC. 95 PAGE
9510	CARBURETOR ASSY. — Cont'd ▲ Parts List to follow in subsequent change ‡ To follow in a subsequent change					
D7ZE-BD	38A	★ D7ZZ 9510-B *CA-1616	D7PZ 9510-DC *CA-2518	★ D7PZ 9502-D *CG-531	D8PZ 9A586-V *CT-1435	13,14,15
D7ZE-BE	38A	★ D7ZZ 9510-B *CA-1616	D7PZ 9510-DC *CA-2518	★ D7PZ 9502-D *CG-531	D8PZ 9A586-V *CT-1435	13,14,15
D7ZE-GD	38B	★ D7ZZ 9510-G *CA-1617	D7PZ 9510-DA *CA-2516	★ D7PZ 9502-D *CG-531	D8PZ 9A586-V *CT-1435	13,14,15
D7ZE-GE	38B	★ D7ZZ 9510-G *CA-1617	D7PZ 9510-DA *CA-2516	★ D7PZ 9502-D *CG-531	D8PZ 9A586-V *CT-1435	13,14,15
D74E-BA	24W	★ D74Z 9510-B *CA-1862	None	E1PZ 9502-C *CG-615	D9PZ 9A586-S *CT-1267	9
D74E-DA	28AM	D70Z 9510-F *CA-1569		E1PZ 9502-C *CG-615	D9PZ 9A586-K *CT-1261	9
D8AE-DA	36M	★ D8AZ 9510-D *CA-2015	D8PZ 9510-BK *CA-2595	D8PZ 9502-C *CG-446-B	D6PZ 9A586-C *CT-1072-B	8
D8AE-JA	28AR	★ D8AZ 9510-J *CA-1942	D8PZ 9510-BU *CA-2612	E1PZ 9502-C *CG-615	D9PZ 9A586-JA *CT-1076-C	9
D8AE-NA	28AR	D8AZ 9510-N *CA-2012		E1PZ 9502-C *CG-615	D9PZ 9A586-S *CT-1267	9
D8AE-TA	28AR	★ D8AZ 9510-T *CA-2013	D8PZ 9510-BS *CA-2611	E1PZ 9502-C *CG-615	D9PZ 9A58-H *CT-1259	9
D8AE-UA	28AR	★ D8AZ 9510-U *CA-2014	D8PZ 9510-BS *CA-2611	E1PZ 9502-C *CG-615	D9PZ 9A58-H *CT-1259	9
D8BE-AB	40A	★ D8BZ 9510-A *CA-1881	D8BZ 9510-AA *CA-1957	E0PZ 9502-AB *CG-542-A	D8PZ 9A586-A *CT-1199	17
D8BE-AAA	40B	D8BZ 9510-AA *CA-1957		E0PZ 9502-AB *CG-542-A	D8PZ 9A586-A *CT-1199	17
D8BE-AGA	40C	D8BZ 9510-AG *CA-2032		E0PZ 9502-AB *CG-542-A	D8PZ 9A586-A *CT-1199	17
D8BE-AHA	40B	★ D8BZ 9510-AH *CA-2033	None	E0PZ 9502-AB *CG-542-A	D8PZ 9A586-A *CT-1199	17
D8BE-AJA	34BG	★ D8BZ 9510-AJ *CA-1990	D8PZ 9510-BJ *CA-2227	E0PZ 9502-B *CG-453-E	D8PZ 9A586-JB *CT-1227	18
D8BE-AKA	34BG	★ D8BZ 9510-AK *CA-1991	D8PZ 9510-BJ *CA-2227	E0PZ 9502-B *CG-453-E	D8PZ 9A586-JB *CT-1227	18
D8BE-ANA	34BG	★ D8BZ 9510-AN *CA-2035	D8PZ 9510-BJ *CA-2227	E0PZ 9502-B *CG-453-E	D8PZ 9A586-JB *CT-1227	18
D8BE-APA	34BG	★ D8BZ 9510-AP *CA-2036	None	E0PZ 9502-B *CG-453-E	D8PZ 9A586-JB *CT-1227	18
D8BE-EB	38C	★ D8BZ 9510-E *CA-1847	D8PZ 9510-CY *CA-2514	D8PZ 9502-B *CG-530	D8PZ 9A586-V *CT-1435	13,14,15
D8BE-FA	34BG	★ D8BZ 9510-F *CA-1829	D8PZ 9510-BJ *CA-2227	E0PZ 9502-B *CG-453-E	D8PZ 9A586-JB *CT-1227	18
D8BE-GA	34BG	★ D8BZ 9510-G *CA-1830	None	E0PZ 9502-B *CG-453-E	D8PZ 9A586-JB *CT-1227	18
D8BE-HA	34BG	★ D8BZ 9510-H *CA-1831	D8PZ 9510-BG *CA-2225	E0PZ 9502-B *CG-453-E	D8PZ 9A586-JB *CT-1227	18
D8BE-MA	37J	★ D8BZ 9510-M *CA-1895	D8BZ 9510-MB *CA-1895-A	E1PZ 9502-C *CG-615	D9PZ 9A586-KA *CT-1077-D	9
D8BE-MB	37J	★ D8BZ 9510-MB *CA-1895-A	D8PZ 9510-CH *CA-2620	E1PZ 9502-C *CG-615	D9PZ 9A586-KA *CT-1077-D	9
D8BE-RA	40C	D8BZ 9510-R *CA-1884		E0PZ 9502-AB *CG-542-A	D8PZ 9A586-A *CT-1199	17
D8BE-UC	40D	D8BZ 9510-U *CA-1886		E0PZ 9502-AB *CG-542-A	D8PZ 9A586-A *CT-1199	17

COPYRIGHT © 1986 — FORD MOTOR COMPANY — DEARBORN, MICHIGAN

IDENTIFICATION CHART

IDENTIFICATION	PARTS LIST 95.	PART NUMBER	REPLACED BY	GASKET SET	TUNE-UP KIT	ILLUS. SEC. 95 PAGE
9510	CARBURETOR ASSY. — Cont'd ▲ Parts List to follow in subsequent change ‡ To follow in a subsequent change					
D8BE-VA	31X	D8BZ 9510-V *CA-1899		D8PZ 9502-D *CG-532	D8PZ 9A586-H *CT-1194	11
D8DE-BB	31W	★ D8DZ 9510-B *CA-1822	None	D8PZ 9502-D *CG-532	D8PZ 9A586-H *CT-1194	11
D8DE-DA	31W	★ D8DZ 9510-D *CA-1823	D8PZ 9510-DK *CA-2606	D8PZ 9502-D *CG-532	D8PZ 9A586-H *CT-1194	11
D8DE-EA	31W	★ D8DZ 9510-E *CA-1824	D8PZ 9510-DJ *CA-2605	D8PZ 9502-D *CG-532	D8PZ 9A586-H *CT-1194	11
D8DE-EB	31W	★ D8DZ 9510-E *CA-1824	D8PZ 9510-DJ *CA-2605	D8PZ 9502-D *CG-532	D8PZ 9A586-HA *CT-1194	11
D8DE-HA	24AA	★ D8DZ 9510-H *CA-1929	None	E1PZ 9502-C *CG-615	D9PZ 9A586-K *CT-1261	9
D8EE-AA	34BH	★ D8FZ 9510-A *CA-1832	None	E0PZ 9502-B *CG-453-E	D8PZ 9A586-JB *CT-1227	18
D8EE-AMA	34BK	D8FZ 9510-AM *CA-1985		E0PZ 9502-B *CG-453-E	D8PZ 9A586-U *CT-1197-A	19
D8EE-ANA	34BK	★ D8FZ 9510-AN *CA-1986	D8PZ 9510-BH *CA-2226	E0PZ 9502-B *CG-453-E	D8PZ 9A586-U *CT-1197-A	19
D8EE-ATA	34BJ	★ D8FZ 9510-AT *CA-2031	D8PZ 9510-BE *CA-2223	E0PZ 9502-B *CG-453-E	D8PZ 9A586-JB *CT-1227	18
D8EE-AUA	34BJ	★ D8FZ 9510-AU *CA-1987	D8PZ 9510-BE *CA-2223	E0PZ 9502-B *CG-453-E	D8PZ 9A586-JB *CT-1227	18
D8EE-AVA	34BJ	★ D8FZ 9510-AV *CA-1988	D8PZ 9510-BE *CA-2223	E0PZ 9502-B *CG-453-E	D8PZ 9A566-JB *CT-1227	18
D8EE-BA	34BH	★ D8FZ 9510-B *CA-1833	None	E0PZ 9502-B *CG-453-E	D8PZ 9A586-JB *CT-1227	18
D8EE-CA	34BH	★ D8FZ 9510-C *CA-1834	D8PZ 9510-BG *CA-2225	E0PZ 9502-B *CG-453-E	D8PZ 9A586-JB *CT-1227	18
D8EE-DA	34BH	★ D8FZ 9510-D *CA-1835	D8PZ 9510-BE *CA-2223	E0PZ 9502-B *CG-453-E	D8PZ 9A586-JB *CT-1227	18
D8EE-EA	34BK	★ D8FZ 9510-E *CA-1981	D8PZ 9510-BF *CA-2224	E0PZ 9502-B *CG-453-E	D8PZ 9A586-U *CT-1197-A	19
D8EE-FA	34BK	★ D8FZ 9510-F *CA-1982	D8PZ 9510-BH *CA-2226	E0PZ 9502-B *CG-453-E	D8PZ 9A586-U *CT-1197-A	19
D8EE-GA	34BK	★ D8FZ 9510-G *CA-1983	D8PZ 9510-BH *CA-2226	E0PZ 9502-B *CG-453-E	D8PZ 9A586-U *CT-1197-A	19
D8EE-HA	34BK	★ D8FZ 9510-H *CA-1984	D8PZ 9510-BF *CA-2224	E0PZ 9502-B *CG-453-E	D8PZ 9A586-U *CT-1197-A	19
D8EE-JA	34BH	★ D8FZ 9510-J *CA-1836	D8PZ 9510-BE *CA-2223	E0PZ 9502-B *CG-453-E	D8PZ 9A586-JB *CT-1227	18
D8EE-KA	34BJ	D8FZ 9510-K *CA-1837		E0PZ 9502-B *CG-453-E	D8PZ 9A586-JB *CT-1227	18
D8EE-LA	34BJ	★ D8FZ 9510-L *CA-1839	None	E0PZ 9502-B *CG-453-E	D8PZ 9A586-JB *CT-1227	18
D8EE-MA	34BJ	★ D8FZ 9510-M *CA-1838	None	E0PZ 9502-B *CG-453-E	D8PZ 9A586-JB *CT-1227	18
D8KE-AA	31W	★ D8KZ 9510-A *CA-1943	D8PZ 9510-DK *CA-2606	D8PZ 9502-D *CG-532	D8PZ 9A586-H *CT-1194	6
D8KE-BA	31W	★ D8KZ 9510-B *CA-1821	D8PZ 9510-DJ *CA-2605	D8PZ 9502-D *CG-532	D8PZ 9A586-H *CT-1194	6
D8KE-BB	31W	★ D8KZ 9510-B *CA-1821	D8PZ 9510-DJ *CA-2605	D8PZ 9502-D *CG-532	D8PZ 9A586-H *CT-1194	6
D8KE-DA	24Y	★ D8KZ 9510-D *CA-1979	D8PZ 9510-CF *CA-2619	E1PZ 9502-C *CG-615	D9PZ 9A586-S *CT-1267	9

IDENTIFICATION CHART

IDENTIFICATION	PARTS LIST 95.	PART NUMBER	REPLACED BY	GASKET SET	TUNE-UP KIT	ILLUS. SEC. 95 PAGE
9510	CARBURETOR ASSY. — Cont'd ▲ Parts List to follow in subsequent change ‡ To follow in a subsequent change					
D8KE-EA	24Y	★ D8KZ 9510-E *CA-1980	D8PZ 9510-CF *CA-2619	E1PZ 9502-C *CG-615	D9PZ 9A586-S *CT-1267	9
D8ME-AA	24Z	★ D8MZ 9510-A *CA-1944	D8PZ 9510-CC *CA-2618	E1PZ 9502-C *CG-615	D9PZ 9A586-S *CT-1267	9
D8ME-BA	24Z	★ D8MZ 9510-B *CA-1969		E1PZ 9502-C *CG-615	D9PZ 9A586-S *CT-1267	9
D80E-BA	28AR	★ D80Z 9510-B *CA-1919	D8PZ 9510-BU *CA-2612	E1PZ 9502-C *CG-615	D9PZ 9A586-JA *CT-1076-C	9
D80E-CA	28AT	★ D80Z 9510-C *CA-1933	D8PZ 9510-BR *CA-2610	E1PZ 9502-C *CG-615	D9PZ 9A586-K *CT-1261	9
D80E-EA	24AA	★ D80Z 9510-E *CA-1934	D8PZ 9510-CB *CA-2617	E1PZ 9502-C *CG-615	D9PZ 9A586-JA *CT-1076-C	9
D80E-HA	28AT	★ D80Z 9510-H *CA-1935	D8PZ 9510-BR *CA-2610	E1PZ 9502-C *CG-615	D9PZ 9A586-K *CT-1261	9
D80E-TA	24AA	★ D80Z 9510-T *CA-2049	D8PZ 9510-CB *CA-2617	E1PZ 9502-C *CG-615	D9PZ 9A586-JA *CT-1076-C	9
D80E-UA	28AT	★ D80Z 9510-U *CA-2078	D8PZ 9510-BR *CA-2610	E1PZ 9502-C *CG-615	D9PZ 9A586-K *CT-1261	9
D80E-VA	28AT	★ D80Z 9510-V *CA-2079	D80Z 9510-C *CA-1933	E1PZ 9502-C *CG-615	D9PZ 9A586-K *CT-1261	9
D8PE-AAA	42L	★ D8PZ 9510-AA *CA-2029	None	★ D8PZ 9502-HA *CG-617	D8PZ 9A586-SA *CT-1300	24
D8PE-ABA	42L	★ D8PZ 9510-AB *CA-2030	None	★ D8PZ 9502-HA *CG-617	D8PZ 9A586-SA *CT-1300	24
D8PE-ADA	42J	D8PZ 9510-A *CA-2016		★ D8PZ 9502-HA *CG-617	D8PZ 9A586-RA *CT-1299	24
D8PE-AEA	42H	D8PZ 9510-B *CA-2017		★ D8PZ 9502-HA *CG-617	D8PZ 9A586-RA *CT-1299	24
D8PE-AFA	42G	D8PZ 9510-C *CA-2018		★ D8PZ 9502-HA *CG-617	D8PZ 9A586-RA *CT-1299	24
D8PE-AGA	42E	★ D8PZ 9510-D *CA-2019	None	★ D8PZ 9502-HA *CG-617	D8PZ 9A586-RA *CT-1299	24
D8PE-BEA	34BJ	D8PZ 9510-BE *CA-2223		E0PZ 9502-B *CG-453-E	D8PZ 9A586-JB *CT-1227	18
D8PE-BFA	34BK	★ D8PZ 9510-BF *CA-2224	None	E0PZ 9502-B *CG-453-E	D8PZ 9A586-U *CT-1197-A	19
D8PE-BGA	34BJ	D8PZ 9510-BG *CA-2225		E0PZ 9502-B *CG-453-E	D8PZ 9A586-JB *CT-1227	18
D8PE-BHA	34BK	D8PZ 9510-BH *CA-2226		E0PZ 9502-B *CG-453-E	D8PZ 9A586-U *CT-1197-A	19
D8PE-BJA	34BG	D8PZ 9510-BJ *CA-2227		E0PZ 9502-B *CG-453-E	D8PZ 9A586-JB *CT-1227	18
D8PE-BKA	42M	★ D8PZ 9510-BK *CA-2595	None	★ D8PZ 9502-HA *CG-617	D8PZ 9A586-PA *CT-1298	24
D8PE-BLA	42M	D8PZ 9510-BL *CA-2596		★ D8PZ 9502-HA *CG-617	D8PZ 9A586-PA *CT-1298	24
D8PE-BMA	28AL	★ D8PZ 9510-BM *CA-1893-A	None	E1PZ 9502-C *CG-615	D9PZ 9A586-S *CT-1267	9
D8PE-BNA	28AT	D8PZ 9510-BN *CA-2609		E1PZ 9502-C *CG-615	D9PZ 9A586-J *CT-1260	9
D8PE-BPA	28AU	★ D8PZ 9510-BP *CA-1892-A	None	E1PZ 9502-C *CG-615	D9PZ 9A586-S *CT-1267	9
D8PE-BRA	28AT	D8PZ 9510-BR *CA-2610		E1PZ 9502-C *CG-615	D9PZ 9A586-K *CT-1261	9
D8PE-BSA	28AR	D8PZ 9510-BS *CA-2611		E1PZ 9502-C *CG-615	D9PZ 9A586-H *CT-1259	9

COPYRIGHT © 1986 — FORD MOTOR COMPANY — DEARBORN, MICHIGAN

IDENTIFICATION CHART

IDENTIFICATION	PARTS LIST 95.	PART NUMBER	REPLACED BY	GASKET SET	TUNE-UP KIT	ILLUS. SEC. 95 PAGE
9510	CARBURETOR ASSY. — Cont'd ▲ Parts List to follow in subsequent change ‡ To follow in a subsequent change					
D8PE-BTA	28AR	D8PZ 9510-BT *CA-2012-A		E1PZ 9502-C *CG-615	D9PZ 9A586-S *CT-1267	9
D8PE-BUA	28AR	D8PZ 9510-BU *CA-2612		E1PZ 9502-C *CG-615	D9PZ 9A586-JA *CT-1076-C	9
D8PE-BVA	28AS	D8PZ 9510-BV *CA-2613		E1PZ 9502-C *CG-615	D9PZ 9A586-K *CT-1261	9
D8PE-BZA	24AV	★ D8PZ 9510-BZ *CA-2615	None	E1PZ 9502-C *CG-615	D9PZ 9A586-K *CT-1261	9
D8PE-CAA	24AW	D8PZ 9510-CA *CA-2616		E1PZ 9502-C *CG-615	D9PZ 9A586-S *CT-1267	9
D8PE-CBA	24AA	D8PZ 9510-CB *CA-2617		E1PZ 9502-C *CG-615	D9PZ 9A586-JA *CT-1076-C	9
D8PE-CCA	24Z	★ D8PZ 9510-CC *CA-2618	None	E1PZ 9502-C *CG-615	D9PZ 9A586-S *CT-1267	9
D8PE-CFA	24Y	D8PZ 9510-CF *CA-2619		E1PZ 9502-C *CG-615	D9PZ 9A586-S *CT-1267	9
D8PE-CHA	37J	D8PZ 9510-CH *CA-2620		E1PZ 9502-C *CG-615	D9PZ 9A586-KA *CT-1077-D	9
D8PE-CYA	38C	★ D8PZ 9510-CY *CA-2514	D9PZ 9510-BH *CA-2823	D8PZ 9502-B *CG-530	D8PZ 9A586-V *CT-1435	13,14,15
D8PE-CZA	38C	D8PZ 9510-CZ *CA-2515		D8PZ 9502-B *CG-530	D8PZ 9A586-V *CT-1435	13,14,15
D8PE-DAA	38B	D7PZ 9510-DA *CA-2516		D7PZ 9502-D *CG-531	D8PZ 9A586-V *CT-1435	13,14,15
D8PE-DBA	38A	★ D7PZ 9510-DB *CA-2517	None	D7PZ 9502-D *CG-531	D8PZ 9A586-V *CT-1435	13,14,15
D8PE-DCA	38A	D7PZ 9510-DC *CA-2518		D7PZ 9502-D *CG-531	D8PZ 9A586-V *CT-1435	13,14,15
D8PE-DEA	31X	★ D8PZ 9510-DE *CA-1899-A	None	D8PZ 9502-D *CG-532	D8PZ 9A586-H *CT-1194	11
D8PE-DJA	31W	D8PZ 9510-DJ *CA-2605		D8PZ 9502-D *CG-532	D8PZ 9A586-H *CT-1194	11
D8PE-DKA	31W	D8PZ 9510-DK *CA-2606		D8PZ 9502-D *CG-615	D8PZ 9A586-H *CT-1194	12
D8PE-EA	27D	D8PZ 9510-E *CA-2051		D3AZ 9502-A *CG-221-B	D3AZ 9A586-A *CT-226-B	6
D8PE-FA	42D	D8PZ 9510-F *CA-2020		★ D8PZ 9502-HA *CG-617	D8PZ 9A586-RA *CT-1299	24
D8PE-GA	27D	★ D8PZ 9510-G *CA-2052	None	D3AZ 9502-A *CG-221-B	D3AZ 9A586-A *CT-226-B	6
D8PE-HA	42C	D8PZ 9510-H *CA-2021		★ D8PZ 9502-HA *CG-617	D8PZ 9A586-RA *CT-1299	24
D8PE-KA	42B	D8PZ 9510-K *CA-2022		★ D8PZ 9502-HA *CG-617	D8PZ 9A586-RA *CT-1299	24
D8PE-LA	29F	★ D8PZ 9510-L *CA-2054	Not replaced	D30Z 9502-A *CG-335-B	D30Z 9A586-A *CT-862-B	7
D8PE-MA	42F	★ D8PZ 9510-M *CA-2023	None	★ D8PZ 9502-HA *CG-617	D8PZ 9A586-RA *CT-1299	24
D8PE-NA	42A	★ D8PZ 9510-N *CA-2024	None	★ D8PZ 9502-HA *CG-617	D8PZ 9A586-RA *CT-1299	24
D8PE-ZA	42K	D8PZ 9510-Z *CA-2028		★ D8PZ 9502-HA *CG-617	D8PZ 9A586-SA *CT-1300	24
D8SE-CA	28AU	★ D8SZ 9510-C *CA-1892	D8PZ 9510-BP *CA-1892-A	E1PZ 9502-C *CG-615	D9PZ 9A586-S *CT-1195	9
D8SE-DA	28AT	★ D8SZ 9510-D *CA-1921	D8PZ 9510-BN *CA-2609	E1PZ 9502-C *CG-615	D9PZ 9A586-J *CT-1260	9
D8SE-EA	28AT	★ D8SZ 9510-E *CA-1922	D8PZ 9510-BN *CA-2609	E1PZ 9502-C *CG-615	D9PZ 9A586-J *CT-1260	9

IDENTIFICATION CHART

IDENTIFICATION	PARTS LIST 95.	PART NUMBER	REPLACED BY	GASKET SET	TUNE-UP KIT	ILLUS. SEC. 95 PAGE
9510	CARBURETOR ASSY. — Cont'd ▲ Parts List to follow in subsequent change ‡ To follow in a subsequent change					
D8SE-FA	28AR	★ D8SZ 9510-F *CA-1963	D8PZ 9510-BN *CA-2609	E1PZ 9502-C *CG-615	D9PZ 9A586-J *CT-1260	9
D8SE-GA	28AR	★ D8SZ 9510-G *CA-1964	D8PZ 9510-BN *CA-2609	E1PZ 9502-C *CG-615	D9PZ 9A586-J *CT-1260	9
D8VE-FA	36P	★ D8VZ 9510-E *CA-1894	D8PZ 9510-BL *CA-2596	D8PZ 9502-C *CG-446-B	D8PZ 9A586-E *CT-1072-C	8
D8VE-GA	36P	★ D8VZ 9510-E *CA-1894	D8PZ 9510-BL *CA-2596	D8PZ 9502-C *CG-446-B	D8PZ 9A586-E *CT-1072-C	8
D8WE-CA	28AU	★ D8WZ 9510-C *CA-1893	D8PZ 9510-BM *CA-1893-A	E1PZ 9502-C *CG-615	D9PZ 9A586-S *CT-1267	9
D8WE-DA	28AS	★ D8WZ 9510-D *CA-1936	D8PZ 9510-BV *CA-2613	E1PZ 9502-C *CG-615	D9PZ 9A586-K *CT-1261	9
D8WE-EA	28AS	★ D8WZ 9510-E *CA-1967	D8PZ 9510-BV *CA-2613	E1PZ 9502-C *CG-615	D9PZ 9A586-K *CT-1261	9
D8YE-AA	37J	★ D8YZ 9510-A *CA-1897	D8YZ 9510-AB *CA-1897-A	E1PZ 9502-C *CG-615	D9PZ 9A586-KA *CT-1077-D	9
D8YE-AB	37J	★ D8YZ 9510-AB *CA-1897-A	D8PZ 9510-CH *CA-2620	E1PZ 9502-C *CG-615	D9PZ 9A586-KA *CT-1077-D	9
D8ZE-YB	38C	★ D8ZZ 9510-D *CA-1889	D8PZ 9510-CZ *CA-2515	D8PZ 9502-B *CG-530	D8PZ 9A586-V *CT-1435	13,14,15
D84E-DB	38C	★ D84Y 9510-D *CA-1880	D8PZ 9510-DB *CA-1880-A	D8PZ 9502-V *CG-530	D8PZ 9A586-V *CT-1435	13,14,15
D84E-EA	24Y	★ D84Z 9510-E *CA-1992	D8PZ 9510-CA *CA-2616	E1PZ 9502-C *CG-615	D9PZ 9A586-S *CT-1267	9
D84E-GA	24Y	★ D84Z 9510-G *CA-1989	D8PZ 9510-CA *CA-2616	E1PZ 9502-C *CG-615	D9PZ 9A586-S *CT-1267	9
D84E-KA	38C	★ D84Y 9510-K *CA-1999	D8PZ 9510-KA *CA-1999-B	D8PZ 9502-B *CG-530	D8PZ 9A586-V *CT-1435	13,14,15
D84E-VA	38C	★ D94Y 9510-V *CA-2258	D94Y 9510-F *CA-1999-A	D8PZ 9502-B *CG-530	D8PZ 9A586-V *CT-1435	13,14,15
D9AE-ACA	41A	★ D9AZ 9510-AC *CA-2181	D9PZ 9510-BC *CA-2819	D9PZ 9502-J *CG-530-A	E0PZ 9A586-W *CT-1436	21,22,23
D9AE-AHA	28AX	★ D9AZ 9510-AH *CA-2170	D9PZ 9510-AD *CA-2806	E1PZ 9502-C *CG-615	D9PZ 9A586-J *CT-1260	9
D9AE-AJA	28AX	★ D9AZ 9510-AJ *CA-2171	D9PZ 9510-AD *CA-2806	E1PZ 9502-C *CG-615	D9PZ 9A586-J *CT-1260	9
D9AE-ANB	28AV	★ D9AZ 9510-AN *CA-2205	D9PZ 9510-G *CA-2807	E1PZ 9502-C *CG-615	D9PZ 9A586-J *CT-1260	9
D9AE-APB	28AV	★ D9AZ 9510-AP *CA-2206	D9PZ 9510-G *CA-2807	E1PZ 9502-C *CG-615	D9PZ 9A586-J *CT-1260	9
D9AE-AVB	28AV	★ D9AZ 9510-AV *CA-2145-A	D9PZ 9510-G *CA-2807	E1PZ 9502-C *CG-615	D9PZ 9A586-J *CT-1260	9
D9AE-AYB	28AV	★ D9AZ 9510-AY *CA-2146-A	D9PZ 9510-G *CA-2807	E1PZ 9502-C *CG-615	D9PZ 9A586-J *CT-1260	9
D9AE-AZA	38E	★ D9AZ 9510-AZ *CA-2290	D9PZ 9510-BD *CA-2820	D9PZ 9502-J *CG-530-A	E0PZ 9A586-W *CT-1436	13,14,15
D9AE-BAA	41A	★ D9AZ 9510-BA *CA-2362	None	D9PZ 9502-J *CG-530-A	E0PZ 9A586-W *CT-1436	21,22,23
D9AE-CB	38E	★ D9AZ 9510-C *CA-2106	D9PZ 9510-BE *CA-2821	D9PZ 9502-J *CG-530-A	E0PZ 9A586-W *CT-1436	13,14,15
D9AE-JB	38E	★ D9AZ 9510-J *CA-2107	D9PZ 9510-BF *CA-2107-A	D9PZ 9502-J *CG-530-A	E0PZ 9A586-W *CT-1436	13,14,15
D9AE-TB	28AV	★ D9AZ 9510-T *CA-2145	D9PZ 9510-G *CA-2807	E1PZ 9502-C *CG-615	D9PZ 9A586-J *CT-1260	9
D9AE-UB	28AV	★ D9AZ 9510-U *CA-2146	D9PZ 9510-G *CA-2807	E1PZ 9502-C *CG-615	D9PZ 9A586-J *CT-1260	9
D9AE-YB	38E	★ D9AZ 9510-Y *CA-2108	D9PZ 9510-BD *CA-2820	D9PZ 9502-J *CG-530-A	E0PZ 9A586-W *CT-1436	13,14,15
D9AE-ZB	38E	★ D9AZ 9510-Z *CA-2179	D9PZ 9510-BE *CA-2821	D9PZ 9502-J *CG-530-A	E0PZ 9A586-W *CT-1436	13,14,15

COPYRIGHT © 1986 — FORD MOTOR COMPANY — DEARBORN, MICHIGAN

IDENTIFICATION CHART

IDENTIFICATION	PARTS LIST 95.	PART NUMBER	REPLACED BY	GASKET SET	TUNE-UP KIT	ILLUS. SEC. 95 PAGE
9510	CARBURETOR ASSY. — Cont'd.					
	▲ Parts List to follow in subsequent change					
	‡ To follow in a subsequent change					
D9BE-AAA	34BM	★ D9BZ 9510-AA *CA-2094	D9PZ 9510-AV *CA-2634	E0PZ 9502-B *CG-453-E	D9PZ 9A586-A *CT-1227-A	18
D9BE-ABA	34BM	★ D9BZ 9510-AB *CA-2095	D9PZ 9510-AJ *CA-2624	E0PZ 9502-B *CG-453-E	D9PZ 9A586-A *CT-1227-A	18
D9BE-ACA	34BM	★ D9BZ 9510-AC *CA-2096	D9PZ 9510-AJ *CA-2624	E0PZ 9502-B *CG-453-E	D9PZ 9A586-A *CT-1227-A	18
D9BE-ADA	34BM	★ D9BZ 9510-AD *CA-2097	D9PZ 9510-AV *CA-2634	E0PZ 9502-B *CG-453-E	D9PZ 9A586-A *CT-1227-A	18
D9BE-AEA	40F	D9BZ 9510-AE *CA-2184		E0PZ 9502-AB *CG-542-A	D8PZ 9A586-A *CT-1199	17
D9BE-AFA	38D	★ D9BZ 9510-AF *CA-2183	D9PZ 9510-BH *CA-2823	D9PZ 9502-J *CG-530-A	E0PZ 9A586-W *CT-1436	13,14,15
D9BE-AHA	40E	D9BZ 9510-M *CA-2119		E0PZ 9502-AB *CG-542-A	D8PZ 9A586-A *CT-1199	17
D9BE-AJA	40E	D9BZ 9510-K *CA-2118		E0PZ 9502-AB *CG-542-A	D8PZ 9A586-A *CT-1199	17
D9BE-AMA	40F	D9BZ 9510-AM *CA-2295		E0PZ 9502-AB *CG-542-A	D8PZ 9A586-A *CT-1199	17
D9BE-KA	40E	D9BZ 9510-K *CA-2118		E0PZ 9502-AB *CG-542-A	D8PZ 9A586-A *CT-1199	17
D9BE-LA	40F	D9BZ 9510-L *CA-2185		E0PZ 9502-AB *CG-542-A	D8PZ 9A586-A *CT-1199	17
D9BE-MA	40E	D9BZ 9510-M *CA-2119		E0PZ 9502-AB *CG-542-A	D8PZ 9A586-A *CT-1199	17
D9BE-RA	31Y	★ D9BZ 9510-R *CA-2130	D9PZ 9510-BFA *CA-3131	D8PZ 9502-D *CG-532	D8PZ 9A586-H *CT-1194	11
D9BE-UA	31Y	★ D9BZ 9510-U *CA-2131	D9PZ 9510-BFA *CA-3131	D8PZ 9502-D *CG-532	D8PZ 9A586-H *CT-1194	11
D9BE-VB	24AB	D9BZ 9510-V *CA-2163		E1PZ 9502-C *CG-615	D9PZ 9A586-K *CT-1261	9
D9BE-YB	24AB	★ D9BZ 9510-Y *CA-2164	None	E1PZ 9502-C *CG-615	D9PZ 9A586-K *CT-1261	9
D9DE-AA	31Z	D9DZ 9510-A *CA-2125		D8PZ 9502-D *CG-532	D8PZ 9A586-H *CT-1194	11
D9DE-AB	31Z	D9DZ 9510-A *CA-2125		D8PZ 9502-D *CG-532	D8PZ 9A586-H *CT-1194	11
D9DE-BA	31Z	★ D9DZ 9510-B *CA-2126	D9PZ 9510-ANA *CA-3133	D8PZ 9502-D *CG-532	D8PZ 9A586-H *CT-1194	11
D9DE-BB	31Z	★ D9DZ 9510-B *CA-2126	D9PZ 9510-ANA *CA-3133	D8PZ 9502-D *CG-532	D8PZ 9A586-H *CT-1194	11
D9DE-CA	31Z	D9DZ 9510-C *CA-2127		D8PZ 9502-D *CG-532	D8PZ 9A586-H *CT-1194	11
D9DE-CC	31Z	D9DZ 9510-C *CA-2127		D8PZ 9502-D *CG-532	D8PZ 9A586-H *CT-1194	11
D9DE-DA	31Z	D9DZ 9510-D *CA-2128		D8PZ 9502-D *CG-532	D8PZ 9A586-H *CT-1194	11
D9DE-DC	31Z	D9DZ 9510-D *CA-2128		D8PZ 9502-D *CG-532	D8PZ 9A586-H *CT-1194	11
D9DE-EA	31Z	★ D9DZ 9510-E *CA-2129	D9PZ 9510-BGA *CA-3134	D8PZ 9502-D *CG-532	D8PZ 9A586-H *CT-1194	11
D9DE-EB	31Z	★ D9DZ 9510-E *CA-2129	D9PZ 9510-BGA *CA-3134	D8PZ 9502-D *CG-532	D8PZ 9A586-H *CT-1194	11
D9DE-HB	38D	★ D9DZ 9510-H *CA-2109	D9PZ 9510-BH *CA-2823	D9PZ 9502-J *CG-530-A	E0PZ 9A586-W *CT-1436	13,14,15
D9DE-NA	24AB	★ D9DZ 9510-N *CA-2186	D9PZ 9510-Z *CA-2813	E1PZ 9502-C *CG-615	D9PZ 9A586-K *CT-1261	9

IDENTIFICATION CHART

IDENTIFICATION	PARTS LIST 95.	PART NUMBER	REPLACED BY	GASKET SET	TUNE-UP KIT	ILLUS. SEC. 95 PAGE
9510	CARBURETOR ASSY. — Cont'd.					
	▲ Parts List to follow in subsequent change					
	‡ To follow in a subsequent change					
D9DE-NB	24AB	★ D9DZ 9510-N *CA-2186	D9PZ 9510-Z *CA-2813	E1PZ 9502-C *CG-615	D9PZ 9A586-K *CT-1261	9
D9DE-RA	24AB	★ D9DZ 9510-R *CA-2166	D9PZ 9510-T *CA-2808	E1PZ 9502-C *CG-615	D9PZ 9A586-JA *CT-1076-C	9
D9DE-RB	24AB	★ D9DZ 9510-R *CA-2166	D9PZ 9510-T *CA-2808	E1PZ 9502-C *CG-615	D9PZ 9A586-JA *CT-1076-C	9
D9DE-RD	24AB	★ D9DZ 9510-RD *CA-2296	D9PZ 9510-T *CA-2808	E1PZ 9502-C *CG-615	D9PZ 9A586-JA *CT-1076-C	9
D9DE-SA	24AB	★ D9DZ 9510-S *CA-2167	D9PZ 9510-T *CA-2808	E1PZ 9502-C *CG-615	D9PZ 9A586-JA *CT-1076-C	9
D9DE-SC	24AB	★ D9DZ 9510-SC *CA-2297	D9PZ 9510-T *CA-2808	E1PZ 9502-C *CG-615	D9PZ 9A586-JA *CT-1076-C	9
D9DE-UA	31Z	D9DZ 9510-U *CA-2346		D8PZ 9502-D *CG-532	D8PZ 9A586-H *CT-1194	11
D9DE-VA	31Z	★ D9DZ 9510-V *CA-2347	D9PZ 9510-BJA *CA-3132	D8PZ 9502-D *CG-532	D8PZ 9A586-H *CT-1194	11
D9EE-AEC	34BL	★ D9FZ 9510-AE *CA-2091	D9PZ 9510-AM *CA-2627	E0PZ 9502-B *CG-453-E	D9PZ 9A586-C *CT-1255	19
D9EE-AED	34BL	★ D9FZ 9510-AE *CA-2091	D9PZ 9510-AM *CA-2627	E0PZ 9502-B *CG-453-E	D9PZ 9A586-C *CT-1255	19
D9EE-AFC	34BL	D9FZ 9510-AF *CA-2092		E0PZ 9502-B *CG-453-E	D9PZ 9A586-C *CT-1255	19
D9EE-AFD	34BL	D9FZ 9510-AF *CA-2092		E0PZ 9502-B *CG-453-E	D9PZ 9A586-C *CT-1255	19
D9EE-AGC	34BL	★ D9FZ 9510-AG *CA-2084	D9PZ 9510-AL *CA-2626	E0PZ 9502-B *CG-453-E	D9PZ 9A586-C *CT-1255	19
D9EE-AGD	34BL	★ D9FZ 9510-AG *CA-2084	D9PZ 9510-AL *CA-2626	E0PZ 9502-B *CG-453-E	D9PZ 9A586-C *CT-1255	19
D9EE-AHC	34BL	★ D9FZ 9510-AH *CA-2093	D9PZ 9510-AL *CA-2626	E0PZ 9502-B *CG-453-E	D9PZ 9A586-C *CT-1255	19
D9EE-AHD	34BL	★ D9FZ 9510-AH *CA-2093	D9PZ 9510-AL *CA-2626	E0PZ 9502-B *CG-453-E	D9PZ 9A586-C *CT-1255	19
D9EE-AJC	34BL	★ D9FZ 9510-AJ *CA-2089	D9PZ 9510-AN *CA-2628	E0PZ 9502-B *CG-453-E	D9PZ 9A586-C *CT-1255	19
D9EE-AJD	34BL	★ D9FZ 9510-AJ *CA-2089	D9PZ 9510-AN *CA-2628	E0PZ 9502-B *CG-453-E	D9PZ 9A586-C *CT-1255	19
D9EE-AKC	34BL	★ D9FZ 9510-AK *CA-2090	D9PZ 9510-AN *CA-2628	E0PZ 9502-B *CG-453-E	D9PZ 9A586-C *CT-1255	19
D9EE-AKD	34BL	★ D9FZ 9510-AK *CA-2090	D9PZ 9510-AN *CA-2628	E0PZ 9502-B *CG-453-E	D9PZ 9A586-C *CT-1255	19
D9EE-ALA	34BM	D9FZ 9510-AL *CA-2098		E0PZ 9502-B *CG-453-E	D9PZ 9A586-A *CT-1227-A	18
D9EE-AMA	34BM	D9FZ 9510-AM *CA-2099		E0PZ 9502-B *CG-453-E	D9PZ 9A586-A *CT-1227-A	18
D9EE-ANA	34BM	★ D9FZ 9510-AN *CA-2100	D9PZ 9510-AH *CA-2623	E0PZ 9502-B *CG-453-E	D9PZ 9A586-A *CT-1227-A	18
D9EE-APA	34BM	★ D9FZ 9510-AP *CA-2101	D9PZ 9510-AH *CA-2623	E0PZ 9502-B *CG-453-E	D9PZ 9A586-A *CT-1227-A	18
D9EE-ARA	34BM	★ D9FZ 9510-AR *CA-2196	None	E0PZ 9502-B *CG-453-E	D9PZ 9A586-A *CT-1227-A	18
D9EE-ASA	34BM	★ D9FZ 9510-AS *CA-2197	None	E0PZ 9502-B *CG-453-E	D9PZ 9A586-A *CT-1227-A	18
D9EE-AVA	34BM	★ D9FZ 9510-AV *CA-2201	D9PZ 9510-AR *CA-2630	E0PZ 9502-B *CG-453-E	D9PZ 9A586-A *CT-1227-A	18
D9EE-AYA	34BM	★ D9FZ 9510-AY *CA-2202	D9PZ 9510-AR *CA-2630	E0PZ 9502-B *CG-453-E	D9PZ 9A586-A *CT-1227-A	18

COPYRIGHT © 1986 — FORD MOTOR COMPANY — DEARBORN, MICHIGAN

IDENTIFICATION CHART

IDENTIFICATION	PARTS LIST 95.	PART NUMBER	REPLACED BY	GASKET SET	TUNE-UP KIT	ILLUS. SEC. 95 PAGE
9510	CARBURETOR ASSY. — Cont'd 38F Parts List to follow in subsequent change ‡ To follow in a subsequent change					
D9ME-AA	41A	★ D9MY 9510-A *CA-2117	D9PZ 9510-BC *CA-2819	D9PZ 9502-J *CG-530-A	E0PZ 9A586-W *CT-1436	21,22,23
D9ME-BA	24AB	★ D9MZ 9510-B *CA-2248	None	E1PZ 9502-C *CG-615	D9PZ 9A586-S *CT-1267	9
D9ME-CA	24AB	★ D9MZ 9510-C *CA-2249	None	E1PZ 9502-C *CG-615	D9PZ 9A586-S *CT-1267	9
D9ME-EA	28AV	★ D9MZ 9510-E *CA-2326	None	E1PZ 9502-C *CG-615	D9PZ 9A586-J *CT-1260	9
D90E-CB	28AX	★ D90Z 9510-C *CA-2187	D9PZ 9510-P *CA-2811	E1PZ 9502-C *CG-615	D9PZ 9A586-J *CT-1260	9
D90E-DB	28AX	★ D90Z 9510-D *CA-2188	D9PZ 9510-P *CA-2811	E1PZ 9502-C *CG-615	D9PZ 9A586-J *CT-1260	9
D9PE-ADA	28BA	D9PZ 9510-AD *CA-2806		E1PZ 9502-C *CG-615	D9PZ 9A586-J *CT-1260	9
D9PE-AHA	34BM	D9PZ 9510-AH *CA-2623		E1PZ 9502-BB *CG-453-F	D9PZ 9A586-A *CT-1227-A	18
D9PE-AJA	34BM	D9PZ 9510-AJ *CA-2624		E1PZ 9502-BB *CG-453-F	D9PZ 9A586-A *CT-1227-A	18
D9PE-AKA	34BM	D9PZ 9510-AK *CA-2625		E1PZ 9502-BB *CG-453-F	D9PZ 9A586-A *CT-1227-A	18
D9PE-ALA	34BL	D9PZ 9510-AL *CA-2626		E0PZ 9502-B *CG-453-E	D9PZ 9A586-C *CT-1255	19
D9PE-AMA	34BL	★ D9PZ 9510-AM *CA-2627	None	E1PZ 9502-BB *CG-453-F	D9PZ 9A586-A *CT-1227-A	19
D9PE-ANA	34BL	D9PZ 9510-AN *CA-2628		E0PZ 9502-B *CG-453-E	D9PZ 9A586-C *CT-1255	19
D9PE-ASA	34BM	D9PZ 9510-AS *CA-2631		E0PZ 9502-B *CG-453-E	D9PZ 9A586-B *CT-1254	18
D9PE-ATA	34BL	D9PZ 9510-AT *CA-2632		E0PZ 9502-B *CG-453-E	D9PZ 9A586-D *CT-1256	19
D9PE-AYA	34BM	D9PZ 9510-AY *CA-2635		E1PZ 9502-BB *CG-453-F	D9PZ 9A586-A *CT-1227-A	19
D9PE-BAA	24AB	D9PZ 9510-BA *CA-2817		E1PZ 9502-C *CG-615	D9PZ 9A586-JA *CT-1076-C	9
D9PE-BBA	38F	D9PZ 9510-BB *CA-2105-A		D9PZ 9502-J *CG-530-A	E0PZ 9A586-W *CT-1436	13,14,15
D9PE-BCA	41A	D9PZ 9510-BC *CA-2819		D9PZ 9502-J *CG-530-A	E0PZ 9A586-W *CT-1436	21,22,23
D9PE-BDA	38E	D9PZ 9510-BD *CA-2820		D9PZ 9502-J *CG-530-A	E0PZ 9A586-W *CT-1436	13,14,15
D9PE-BEA	38E	D9PZ 9510-BE *CA-2821		D9PZ 9502-J *CG-530-A	E0PZ 9A586-W *CT-1436	13,14,15
D9PE-BFA	38E	D9PZ 9510-BF *CA-2107-A		D9PZ 9502-J *CG-530-A	E0PZ 9A586-W *CT-1436	13,14,15
D9PE-BGA	38E	D9PZ 9510-BG *CA-2822		D9PZ 9502-J *CG-530-A	E0PZ 9A586-W *CT-1436	13,14,15
D9PE-BHA	38D	D9PZ 9510-BH *CA-2823		D9PZ 9502-J *CG-530-A	E0PZ 9A586-W *CT-1436	13,14,15
D9PE-FA	37L	D9PZ 9510-F *CA-2812		E1PZ 9502-C *CG-615	D9PZ 9A586-S *CT-1267	9
D9PE-GA	28AV	D9PZ 9510-G *CA-2807		E1PZ 9502-C *CG-615	D9PZ 9A586-J *CT-1260	9
D9PE-LA	28AW	D9PZ 9510-L *CA-2810		E1PZ 9502-C *CG-615	D9PZ 9A586-H *CT-1259	9
D9PE-PA	28BA	D9PZ 9510-P *CA-2811		E1PZ 9502-C *CG-615	D9PZ 9A586-J *CT-1260	9

IDENTIFICATION CHART

IDENTIFICATION	PARTS LIST 95.	PART NUMBER	REPLACED BY	GASKET SET	TUNE-UP KIT	ILLUS. SEC. 95 PAGE
9510	CARBURETOR ASSY. — Cont'd ▲ Parts List to follow in subsequent change ‡ To follow in a subsequent change					
D9PE-TA	24AB	D9PZ 9510-T *CA-2808		E1PZ 9502-C *CG-615	D9PZ 9A586-JA *CT-1076-C	9
D9PE-VA	37K	D9PZ 9510-V *CA-2809		E1PZ 9502-C *CG-615	D9PZ 9A586-KA *CT-1077-D	9
D9PE-ZA	24AB	★ D9PZ 9510-Z *CA-2813	None	E1PZ 9502-C *CG-615	D9PZ 9A586-K *CT-1261	9
D9SE-GA	28AV	★ D9SY 9510-G *CA-2246	None	E1PZ 9502-C *CG-615	D9PZ 9A586-S *CT-1267	9
D9VE-LC	28AW	★ D9VY 9510-L *CA-2156	D9VY 9510-V *CA-2156-A	E1PZ 9502-C *CG-615	D9PZ 9A586-H *CT-1259	9
D9VE-SA	28AY	★ D9VY 9510-S *CA-2165	D9PZ 9510-AD *CA-2806	E1PZ 9502-C *CG-615	D9PZ 9A586-J *CT-1260	9
D9VE-VA	28AW	★ D9VY 9510-V *CA-2156-A	D9PZ 9510-L *CA-2810	E1PZ 9502-C *CG-615	D9PZ 9A586-H *CT-1259	9
D9VE-YB	28AW	★ D9VY 9510-Y *CA-2156-B	D9PZ 9510-L *CA-2810	E1PZ 9502-C *CG-615	D9PZ 9A586-H *CA-2810*CT-1259	9
D9WE-EB	28AV	★ D9WZ 9510-E *CA-2168	D9PZ 9510-G *CA-2807	E1PZ 9502-C *CG-615	D9PZ 9A586-J *CT-1260	9
D9WE-FB	28AV	★ D9WZ 9510-F *CA-2169	D9PZ 9510-G *CA-2807	E1PZ 9502-C *CG-615	D9PZ 9A586-J *CT-1260	9
D9WE-JA	28AV	★ D9WZ 9510-J *CA-2247	None	E1PZ 9502-C *CG-615	D9PZ 9A586-S *CT-1267	9
D9WE-MB	28AV	★ D9WZ 9510-M *CA-2265	D9PZ 9510-G *CA-2807	E1PZ 9502-C *CG-615	D9PZ 9A586-J *CT-1260	9
D9WE-NB	28AV	★ D9WZ 9510-N *CA-2266	D9PZ 9510-G *CA-2807	E1PZ 9502-C *CG-615	D9PZ 9A586-J *CT-1260	9
D9YE-AB	37K	★ D9YZ 9510-A *CA-2115	D9YZ 9510-E *CA-2115-A	E1PZ 9502-C *CG-615	D9PZ 9A586-KA *CT-1077-D	9
D9YE-BB	37K	★ D9YZ 9510-B *CA-2116	D9PZ 9510-V *CA-2809	E1PZ 9502-C *CG-615	D9PZ 9A586-KA *CT-1077-D	9
D9YE-CA	37K	★ D9YZ 9510-C *CA-2199	D9YZ 9510-A *CA-2115	E1PZ 9502-C *CG-615	D9PZ 9A586-KA *CT-1077-D	9
D9YE-DA	37K	★ D9YZ 9510-D *CA-2200	D9YZ 9510-B *CA-2116	E1PZ 9502-C *CG-615	D9PZ 9A586-KA *CT-1077-D	9
D9YE-EA	37K	★ D9YZ 9510-E *CA-2115-A	D9PZ 9510-V *CA-2809	E1PZ 9502-C *CG-615	D9PZ 9A586-KA *CT-1077-D	9
D9YE-FA	37K	★ D9YZ 9510-F *CA-2116-A	D9PZ 9510-V *CA-2809	E1PZ 9502-C *CG-615	D9PZ 9A586-KA *CT-1077-D	9
D9ZE-AYA	37L	★ D9ZZ 9510-AY *CA-2220	D9PZ 9510-F *CA-2812	E1PZ 9502-C *CG-615	D9PZ 9A586-S *CT-1267	9
D9ZE-AZB	38F	★ D9ZZ 9510-AZ *CA-2104	D9PZ 9510-BH *CA-2823	D9PZ 9502-J *CG-530-A	E0PZ 9A586-W *CT-1436	13,14,15
D9ZE-BCA	34BM	★ D9ZZ 9510-BC *CA-2102	D9PZ 9510-AK *CA-2625	E0PZ 9502-B *CG-453-E	D9PZ 9A586-A *CT-1227-A	18
D9ZE-BDA	34BM	★ D9ZZ 9510-BD *CA-2103	D9PZ 9510-AK *CA-2625	E0PZ 9502-B *CG-453-E	D9PZ 9A586-A *CT-1227-A	18
D9ZE-BEA	38F	★ D9ZZ 9510-BE *CA-2194	D9PZ 9510-BH *CA-2823	D9PZ 9502-J *CG-530-A	E0PZ 9A586-W *CT-1436	13,14,15
D9ZE-BFA	24AB	★ D9ZZ 9510-BF *CA-2251	None	E1PZ 9502-C *CG-615	D9PZ 9A586-JA *CT-1076-C	9
D9ZE-BFB	24AB	★ D9ZZ 9510-BF *CA-2251	None	E1PZ 9502-C *CG-615	D9PZ 9A586-JA *CT-1076-C	9
D9ZE-BGA	24AB	D9ZZ 9510-BG *CA-2252		E1PZ 9502-C *CG-615	D9PZ 9A586-JA *CT-1076-C	9
D9ZE-BGB	24AB	D9ZZ 9510-BG *CA-2252		E1PZ 9502-C *CG-615	D9PZ 9A586-JA *CT-1076-C	9

COPYRIGHT © 1986 — FORD MOTOR COMPANY — DEARBORN, MICHIGAN

IDENTIFICATION CHART

IDENTIFICATION	PARTS LIST 95.	PART NUMBER	REPLACED BY	GASKET SET	TUNE-UP KIT	ILLUS. SEC. 95 PAGE
9510	CARBURETOR ASSY. — Cont'd ▲ Parts List to follow in subsequent change ‡ To follow in a subsequent change ⊕ Refer to 1980/ catalog parts list 95.6G					
D9ZE-BHB	24AB	★ D9ZZ 9510-BH *CA-2298	None	E1PZ 9502-C *CG-615	D9PZ 9A586-JA *CT-1076-C	9
D9ZE-BJB	24AB	★ D9ZZ 9510-BJ *CA-2299	None	E1PZ 9502-C *CG-615	D9PZ 9A586-JA *CT-1076-C	9
D9ZE-BKA	40F	D9ZZ 9510-BK *CA-2250		E0PZ 9502-AB *CG-542-A	D8PZ 9A586-A *CT-1199	17
D9ZE-LC	38F	★ D9ZZ 9510-L *CA-2105	D9PZ 9510-BB *CA-2105-A	D9PZ 9502-J *CG-530-A	E0PZ 9A586-W *CT-1436	13,14,15
D9ZE-MD	34BM	D9ZZ 9510-M *CA-2085		E0PZ 9502-B *CG-453-E	D9PZ 9A586-B *CT-1254	18
D9ZE-MF	34BM	D9ZZ 9510-MF *CA-2085-A		E0PZ 9502-B *CG-453-E	D9PZ 9A586-B *CT-1254	18
D9ZE-ND	34BM	D9ZZ 9510-N *CA-2086		E0PZ 9502-B *CG-453-E	D9PZ 9A586-B *CT-1254	18
D9ZE-NF	34BM	★ D9ZZ 9510-NF *CA-2086-A	D9PZ 9510-AS *CA-2631	E0PZ 9502-B *CG-453-E	D9PZ 9A586-B *CT-1254	18
D9ZE-SB	34BL	★ D9ZZ 9510-S *CA-2087	D9PZ 9510-AT *CA-2632	E0PZ 9502-B *CT-453-E	D9PZ 9A586-D *CT-1256	19
D9ZE-TB	34BL	★ D9ZZ 9510-T *CA-2088	D9PZ 9510-AT *CA-2632	E0PZ 9502-B *CT-453-E	D9PZ 9A586-D *CT-1256	19
D94E-AB	38E	★ D94Y 9510-A *CA-2110	D9PZ 9510-BG *CA-2822	D9PZ 9502-J *CG-530-A	E0PZ 9A586-W *CT-1436	13,14,15
D94E-FA	38E	★ D94Y 9510-F *CA-1999-A	D9PZ 9510-BG *CA-2822	D9PZ 9502-J *CG-530-A	E0PZ 9A586-W *CT-1436	13,14,15
D94E-JA	38E	D94Y 9510-J *CA-2207		D9PZ 9502-J *CG-530-A	E0PZ 9A586-W *CT-1436	13,14,15
D94E-KB	24AB	D94Z 9510-K *CA-2559		E1PZ 9502-C *CG-615	D9PZ 9A586-JA *CT-1076-C	9
D94E-LB	24AB	D94Z 9510-L *CA-2560	D9PZ 9510-BA *CA-2817	E1PZ 9502-C *CG-615	D9PZ 9A586-JA *CT-1076-C	9
E0PE-AA	31T	D7PZ 9510-A *CA-3182		D5PZ 9502-E *CG-468	D5PZ 9A586-F *CT-1112	11
E0PE-BA	38C	D8PZ 9510-BA *CA-3128		D8PZ 9502-B *CG-530	D8PZ 9A586-V *CT-1435	13,14,15
E2PE-AA	28AZ	D9PZ 9510-G *CA-2807		E1PZ 9502-C *CG-615	D9PZ 9A586-J *CT-1260	9
E2PE-CA	⊕	E0AZ 9510-AH *CA-2675		E0PZ 9502-C *CG-603	E0PZ 9A586-W *CT-1436	⊕
E2PE-KA	36N	★ D6PZ 9510-AH *CA-1765	None	D8PZ 9502-C *CG-446-B	D8PZ 9A586-E *CT-1072-C	8
E5PE-ANA	31Z	D9PZ 9510-ANA *CA-3133		D8PZ 9502-D *CG-532	D9PZ 9A586-H *CT-1194	11
E5PE-BFA	31Y	D9PZ 9510-BFA *CA-3131		D8PZ 9502-D *CG-532	D8PZ 9A586-H *CT-1194	11
E5PE-BGA	31Z	D9PZ 9510-BGA *CA-3134		D8PZ 9502-D *CG-532	D9PZ 9A586-H *CT-1194	11
E5PE-BJA	31Z	D9PZ 9510-BJA *CA-3132		D8PZ 9502-D *CG-532	D8PZ 9A586-H *CT-1194	11
E5PE-BKA	31Z	E0PZ 9510-BKA *CA-3130		D8PZ 9502-D *CG-532	D8PZ 9A586-H *CT-1194	11
72HF-DA	34A	★ D2RY 9510-D *CA-963	None	D1FZ 9502-A *CG-324	D1FZ 9A586-D *CT-858-A	1
72HF-EA	34B	★ D2RY 9510-E *CA-964	None	D1FZ 9502-A *CG-324	D1FZ 9A586-D *CT-858-A	1

IDENTIFICATION CHART

IDENTIFICATION	PARTS LIST 95.	PART NUMBER	REPLACED BY	GASKET SET	TUNE-UP KIT	ILLUS. SEC. 95 PAGE
9510	CARBURETOR ASSY. — Cont'd 38F Parts List to follow in subsequent change ‡ To follow in a subsequent change					
73HF-AA	34E	D3RY 9510-C *CA-1049		D1FZ 9502-A *CG-324	D1FZ 9A586-D *CT-858-A	1
73HF-BA	34E	D3RY 9510-C *CA-1049		D1FZ 9502-A *CG-324	D1FZ 9A586-D *CT-858-A	1
73HF-BB	34F	D3RY 9510-D *CA-1048		D1FZ 9502-A *CG-324	D1FZ 9A586-D *CT-858-A	1
73HF-LA	34E	★ D3RY 9510-C *CA-1049	None	D1FZ 9502-A *CG-324	D1FZ 9A586-D *CT-858-A	1
73HF-MB	34F	★ D3RY 9510-D *CA-1048	None	D1FZ 9502-A *CG-324	D1FZ 9A586-D *CT-858-A	1
73TF-AA	34C	★ D3RY 9510-A *CA-1028	None	D1FZ 9502-A *CG-324	D1FZ 9A586-D *CT-858-A	1
73TF-BA	34D	★ D3RY 9510-B *CA-1029	None	D1FZ 9502-A *CG-324	D1FZ 9A586-D *CT-858-A	1
74HF-AA	34AF	★ D4RY 9510-A *CA-1154	None	D1FZ 9502-A *CG-324	D1FZ 9A586-D *CT-858-A	1
74HF-BA	34AD	★ D4RY 9510-B *CA-1155	None	D1FZ 9502-A *CG-324	D1FZ 9A586-D *CT-858-A	1
74HF-EA	34AG	★★ D4RY 9510-E *CA-1152	None	D1FZ 9502-A *CG-324	D1FZ 9A586-D *CT-858-A	1
74HF-FA	34AE	★ D4RY 9510-F *CA-1153	None	D1FZ 9502-A *CG-324	D1FZ 9A586-D *CT-858-A	1
74TF-AA	34G	★ D4RY 9510-H *CA-1160	None	D4PZ 9502-D *CG-452	D4PZ 9A586-C *CT-1073	12
74TF-AB	34G	★ D4RY 9510-H *CA-1160	None	D4PZ 9502-D *CG-452	D4PZ 9A586-C *CT-1073	12
74TF-BA	34H	★ D4RY 9510-J *CA-1161	None	D4PZ 9502-D *CG-452	D4PZ 9A586-C *CT-1073	12
74TF-BB	34H	★ D4RY 9510-J *CA-1161	None	D4PZ 9502-D *CG-452	D4PZ 9A586-C *CT-1073	12
74TF-CA	34J	★ D4RY 9510-G *CA-1159	None	D4PZ 9502-D *CG-452	D4PZ 9A586-C *CT-1073	12
74TF-DA	34K	★ D4RY 9510-K *CA-1162	None	D4PZ 9502-D *CG-452	D4PZ 9A586-C *CT-1073	12
74TF-DB	34K	★ D4RY 9510-K *CA-1162	None	D4PZ 9502-D *CG-452	D4PZ 9A586-C *CT-1073	12
75TF-AA	37G	★ D5RY 9510-A *CA-1308	D5PZ 9510-BR *CA-1508	D5PZ 9502-B *CG-459	D9PZ 9A586-S *CT-1267	9
75TF-BA	37G	★ D5RY 9510-B *CA-1303	D5PZ 9510-BP *CA-1507	D5PZ 9502-B *CG-459	D9PZ 9A586-KA *CT-1077-D	9
75TF-CA	37G	★ D5RY 9510-C *CA-1306	D5PZ 9510-BR *CA-1508	D5PZ 9502-B *CG-459	D9PZ 9A586-S *CT-1267	9
75TF-DA	37G	★ D5RY 9510-D *CA-1307	D5PZ 9510-BP *CA-1507	D5PZ 9502-B *CG-459	D9PZ 9A586-KA *CT-1077-D	9
757F-AA	34AT	D5RY 9510-H *CA-1330		E0PZ 9502-B *CG-453-E	D5PZ 9A586-D *CT-1110	12
757F-BA	34AS	★ D5RY 9510-G *CA-1328	D6RY 9510-F *CA-1476	E0PZ 9502-B *CG-453-E	D5PZ 9A586-D *CT-1110	12
757F-CA	34AR	★ D5RY 9510-F *CA-1329	D6RY 9510-G *CA-1329	E0PZ 9502-B *CG-453-E	D5PZ 9A586-D *CT-1110	12
757F-DA	34AQ	D5RY 9510-E *CA-1327		E0PZ 9502-B *CG-453-E	D5PZ 9A586-D *CT-1110	12
767F-AA	34AU	★ D6RY 9510-E *CA-1475	None	E0PZ 9502-B *CG-453-E	D5PZ 9A586-D *CT-1110	12

COPYRIGHT © 1986 — FORD MOTOR COMPANY — DEARBORN, MICHIGAN

IDENTIFICATION CHART

IDENTIFICATION	PARTS LIST 95.	PART NUMBER	REPLACED BY	GASKET SET	TUNE-UP KIT	ILLUS. SEC. 95 PAGE
9510	CARBURETOR ASSY. — Cont'd ▲ Parts List to follow in subsequent change ‡ To follow in a subsequent change					
767F-AB	34AU	★ D6RY 9510-E *CA-1475	None	E0PZ 9502-B *CG-453-E	D5PZ 9A586-D *CT-1110	12
767F-AC	34AU	★ D6RY 9510-E *CA-1475	None	E0PZ 9502-B *CG-453-E	D5PZ 9A586-D *CT-1110	12
767F-AE	34AZ	★ D6RY 9510-J *CA-1724	None	E0PZ 9502-B *CG-453-E	D5PZ 9A586-D *CT-1110	12
767F-BA	34AU	★ D6RY 9510-F *CA-1476	D6RY 9510-K *CA-1725	E0PZ 9502-B *CG-453-E	D5PZ 9A586-D *CT-1110	12
767F-BB	34AU	★ D6RY 9510-F *CA-1476	D6RY 9510-K *CA-1725	E0PZ 9502-B *CG-453-E	D5PZ 9A586-D *CT-1110	12
767F-BC	34AU	★ D6RY 9510-F *CA-1476	D6RY 9510-K *CA-1725	E0PZ 9502-B *CG-453-E	D5PZ 9A586-D *CT-1110	12
767F-BE	34AZ	★ D6RY 9510-K *CA-1725	None	E0PZ 9502-B *CG-453-E	D5PZ 9A586-D *CT-1110	12
767F-CA	34AU	★ D6RY 9510-G *CA-1477	None	E0PZ 9502-B *CG-453-E	D5PZ 9A586-D *CT-1110	12
767F-CB	34AU	★ D6RY 9510-N *CA-1731	None	E0PZ 9502-B *CG-453-E	D5PZ 9A586-D *CT-1110	12
767F-CC	34AU	★ D6RY 9510-N *CA-1731	None	E0PZ 9502-B *CG-453-E	D5PZ 9A586-D *CT-1110	12
767F-CE	34AZ	★ D6RY 9510-L *CA-1726	None	E0PZ 9502-B *CG-453-E	D5PZ 9A586-D *CT-1110	12
767F-DA	34AU	★ D6RY 9510-H *CA-1478		E0PZ 9502-B *CG-453-E	D5PZ 9A586-D *CT-1110	12
767F-DB	34AU	★ D6RY 9510-H *CA-1478		E0PZ 9502-B *CG-453-E	D5PZ 9A586-D *CT-1110	12
767F-DC	34AU	★ D6RY 9510-H *CA-1478		E0PZ 9502-B *CG-453-E	D5PZ 9A586-D *CT-1110	12
767F-DE	34AZ	★ D6RY 9510-M *CA-1727	None	E0PZ 9502-B *CG-453-E	D5PZ 9A586-D *CT-1110	12
77TF-KA	37H	★ D7RY 9510-K *CA-1674	D7PZ 9510-CC *CA-2217	E1PZ 9502-C *CG-615	D9PZ 9A586-S *CT-1267	9
77TF-LA	37H	★ D7RY 9510-L *CA-1673	D7PZ 9510-CC *CA-2217	E1PZ 9502-C *CG-615	D9PZ 9A586-KA *CT-1077-D	9
77TF-MA	38A	★ D7RY 9510-M *CA-1675	D7RY 9510-N *CA-1676	D7PZ 9502-D *CG-531	D7PZ 9A586-FB *CT-1173-A	13,14,15
77TF-NA	38A	★ D7RY 9510-N *CA-1676	D7PZ 9510-DB *CA-2517	D7PZ 9502-D *CG-531	D7PZ 9A586-FB *CT-1173-A	13,14,15
777F-AA	34BA	★ D7RY 9510-A *CA-1658	None	E0PZ 9502-B *CG-453-E	D7PZ 9A586-E *CT-1172	16
777F-AB	34BA	★ D7RY 9510-A *CA-1658	None	E0PZ 9502-B *CG-453-E	D7PZ 9A586-E *CT-1172	16
777F-BA	34BA	★ D7RY 9510-B *CA-1659	None	E0PZ 9502-B *CG-453-E	D7PZ 9A586-E *CT-1172	16
777F-BB	34BA	★ D7RY 9510-B *CA-1659	None	E0PZ 9502-B *CG-453-E	D7PZ 9A586-E *CT-1172	16
777F-CB	34BA	★ D7RY 9510-C *CA-1660	None	E0PZ 9502-B *CG-453-E	D7PZ 9A586-E *CT-1172	16

IDENTIFICATION CHART

IDENTIFICATION	PARTS LIST 95.	PART NUMBER	REPLACED BY	GASKET SET	TUNE-UP KIT	ILLUS. SEC. 95 PAGE
9510	CARBURETOR ASSY. — Cont'd ▲ Parts List to follow in subsequent change ‡ To follow in a subsequent change					
777F-DA	34BA	★ D7RY 9510-D *CA-1661	None	E0PZ 9502-B *CG-453-E	D7PZ 9A586-E *CT-1172	16
777F-DB	34BA	★ D7RY 9510-D *CA-1661	None	E0PZ 9502-B *CG-453-E	D7PZ 9A586-E *CT-1172	16
777F-EA	34BB	★ D7RY 9510-E *CA-1682	None	E0PZ 9502-B *CG-453-E	D7PZ 9A586-E *CT-1172	16
777F-EB	34BB	★ D7RY 9510-E *CA-1682	None	E0PZ 9502-B *CG-453-E	D7PZ 9A586-E *CT-1172	16
777F-GA	34BB	★ D7RY 9510-G *CA-1683	None	E0PZ 9502-B *CG-453-E	D7PZ 9A586-E *CT-1172	16
777F-HA	34BB	★ D7RY 9510-H *CA-1684	None	E0PZ 9502-B *CG-453-E	D7PZ 9A586-E *CT-1172	16
777F-HB	34BB	★ D7RY 9510-H *CA-1684	None	E0PZ 9502-B *CG-453-E	D7PZ 9A586-E *CT-1172	16

COPYRIGHT © 1986 — FORD MOTOR COMPANY — DEARBORN, MICHIGAN

9510 CARBURETOR ASSY.

HOW TO FIND CARBURETORS

To select the correct carburetor the following information must be known and utilized–

- Year
- Car line (Mercury, Capri, Lincoln, etc.)
- Engine (4 cyl. 2.3L, 6 cyl. 4.1L–250 C.I.D., 8 cyl. 5.8L–351 C.I.D., etc.)
- Transmission (manual, automatic, etc.)
- Other factors (California, hi–altitude, etc.)
- In some cases, more than one service carburetor may be specified in the catalog based on the above information. In these cases the identification part number shown on the carburetor is also required.

For example:

If a carburetor is required for a 1973 Capri with a 4 cylinder 2.0L (122 C.I.D.) engine, manual transmission.

- Refer to 1973 J (Capri)
- Read down to find "J – – M/T–4 (cyl.) 122 (C.I.D.)".

The service part numbers listed for this application are D2RY 9510–D and D3RY 9510–C. Therefore, to select the correct service part number, the identification part number shown on the carburetor taken from the vehicle, must be used.

If the carburetor identification is 72HF–DA, the service part number is D2RY 9510–D
If the carburetor identification is 73HF–AA, 73HF–BA or 73HF–LA, the service part number is D3RY 9510–C.

APPLICATION CHART

4 CYLINDER ENGINE

ENGINE C.I.D.	1973	1974	1975	1976	1977	1978	1979		
122	J	J,L							
140		L	L	J,L	J,L	J,L,P	J,L,P		
140TC							J		

APPLICATION CHART

Refer to page 31 for Application Instructions

YEAR	MODEL	ENGINE CYL.	ENGINE C.I.D. (C.C.D.)	TYPE	IDENTIFICATION	ILLUS. SEC. 95 PAGE	NOTES	PART NUMBER	REPLACED BY	PARTS LIST 95.
9510	CARBURETOR ASSY. — Cont'd									

4 CYLINDER 2.0L (2000 cc or 122 C.I.D.) ENGINE

▲Parts list to follow in subsequent change

73	J – – M/T	4	122	HW-2	72HF-DA	1		D2RY 9510-D *CA-963	None	34A
73	J – – A/T	4	122	HW-2	72HF-EA	1		D2RY 9510-E *CA-964	None	34B
73	J – – M/T	4	122	HW-2	73HF-AA,BA,LA	1		D3RY 9510-C *CA-1049	None	34E
73	J – – A/T	4	122	HW-2	73HF-BB,MB	1		D3RY 9510-D *CA-1048	None	34F
74	J – – A/T with T/E	4	122	HW-2	74HF-BA	1		D4RY 9510-B *CA-1155	None	34AD
74	J – – A/T without T/E	4	122	HW-2	74HF-FA	1		D4RY 9510-F *CA-1153	None	34AE
74	J – – M/T with T/E	4	122	HW-2	74HF-AA	1		D4RY 9510-A *CA-1154		34AF
74	J – – M/T without T/E	4	122	HW-2	74HF-EA	1		D4RY 9510-E *CA-1152	None	34AG
74	L – – M/T without T/E	4	122	HW-2	D42E-EB	12		D4FZ 9510-J *CA-1208	D4PZ 9510-AS *CA-1208-A	34T
74	L – – M/T without T/E	4	122	H-2	D4PE-ASA	12	2	D4PZ 9510-AS *CA-1208-A		34R
74	L – – M/T without T/E	4	122	H-2	D42E-JA	12		D4FZ 9510-JA *CA-1302	D4PZ 9510-ALB *CA-1381	34AK
74	L – – M/T without T/E	4	122	H-2	D42F-EA	12		D4FZ 9510-E *CA-1123	D4PZ 9510-ALB *CA-1381	34Q
74	L – – M/T with T/E	4	122	H-2	D42F-FA	12		D4FZ 9510-F *CA-1094	D4PZ 9510-AL *CA-1289-A	34R
74	L – – M/T with T/E	4	122	H-2	D42E-FA	12		D4FZ 9510-FA *CA-1289	D4PZ 9510-AL *CA-1289-A	34AC
74	L – – M/T with T/E	4	122	H-2	D4PE-ALA	12	2	D4PZ 9510-AL *CA-1289-A	None	34AH
74	L – – A/T	4	122	H-2	D42F-GA	12		D4FZ 9510-G *CA-1095	D4PZ 9510-ALB *CA-1381	34S
74	L – – A/T without T/E	4	122	H-2	D42E-HA	12		D4FZ 9510-HA *CA-1301	D4PZ 9510-ALB *CA-1381	34AJ
74	L – – A/T without T/E	4	122	H-2	D4PE-ALB	1	2	D4PZ 9510-ALB *CA-1381	None	34AK

NOTE 2 – Incl. (1) limiter, (1) mounting gasket

COPYRIGHT © 1986 — FORD MOTOR COMPANY — DEARBORN, MICHIGAN

APPLICATION CHART

Refer to page 31 for Application Instructions

YEAR	MODEL	ENGINE CYL.	ENGINE C.I.D. (C.C.D.)	TYPE	IDENTIFICATION	ILLUS. SEC. 95 PAGE	NOTES	PART NUMBER	REPLACED BY	PARTS LIST 95.
9510	CARBURETOR ASSY. — Cont'd									

4 CYLINDER 2.3L (2300 cc or 140 C.I.D.) ENGINE

▲ Parts List to follow in subsequent change

76	J - - M/T exc. Calif.- "Before 8/1/75"	4	140	H-2	D58E-HA,757F-AA	12	1	D5RY 9510-H *CA-1330		34AT
76	J - - M/T exc. Calif.- "From 8/1/75 to 9/1/76"	4	140	H-2	767F-AB,AC	12	1	D6RY 9510-E *CA-1475	None	34AU
76	J - - M/T exc. Calif. "From 9/1/76"	4	140	H-2	767F-AE	12	1	D6RY 9510-J *CA-1724	None	34AZ
76	J - - M/T Calif.- "Before 8/1/75"	4	140	H-2	D58E-FA,757F-CA	12	1	D5RY 9510-F *CA-1329	D6RY 9510-G *CA-1477	34AR
76	J - - M/T Calif.- "From 8/1/75 to 9/1/75"	4	140	H-2	767F-CA	12	1	D6RY 9510-G *CA-1477	None	34AU
76	J - - M/T Calif.- "From 9/1/75 to 9/1/76"	4	140	H-2	767F-CB	12	1	D6RY 9510-N *CA-1731	None	34AU
76	J - - M/T Calif. "From 9/1/76"	4	140	H-2	767F-CE	12	1	D6RY 9510-L *CA-1726	None	34AZ
76	J - - A/T exc. Calif.- "Before 8/1/75"	4	140	H-2	D58E-GA,757F-BA	12	1	D5RY 9510-G *CA-1328	D6RY 9510-F *CA-1476	34AS
76	J - - A/T exc. Calif.- "From 8/1/75 to 9/1/75"	4	140	H-2	767F-BA,BB,BC	12	1	D6RY 9510-F *CA-1476	D6RY 9510-K *CA-1725	34AU
76	J - - A/T exc. Calif. "From 9/1/76"	4	140	H-2	767F-BE	12	1	D6RY 9510-K *CA-1725	None	34AZ
76	J - - A/T Calif.- "Before 8/1/75"	4	140	H-2	D58E-EA,757F-DA	12	1	D5RY 9510-E *CA-1327	D6RY 9510-H *CA-1478	34AQ
76	J - - A/T Calif.- "From 8/1/75 to 9/1/76"	4	140	H-2	767F-DA,DB,DC	12	1	D6RY 9510-H *CA-1478		34AU
76	J - - A/T Calif. "From 9/1/76"	4	140	H-2	767F-DE	12	1	D6RY 9510-M *CA-1727	None	34AZ
77/78	J - - M/T without A/C -exc. Calif. or Hi-altitude	4	140	H-2	777F-AA,AB	16	1	D7RY 9510-A *CA-1658	None	34BA
77/78	J - - M/T with A/C -exc. Calif. or Hi-altitude	4	140	H-2	777F-EA,EB	16	1	D7RY 9510-E *CA-1682	None	34BB
77	J - - M/T without A/C -Calif.	4	140	H-2	777F-CB	16	1	D7RY 9510-C *CA-1660	None	34BA
77	J - - M/T with A/C -Calif.	4	140	H-2	777F-HA,HB	16	1	D7RY 9510-H *CA-1684	None	34BB
77/78	J - - M/T without A/C- Hi-altitude	4	140	H-2	D7RE-EA	16	3	D7RY 9510-EA *CA-1788	None	34BF
77/78	J - - M/T with A/C- Hi-altitude	4	140	H-2	D7RE-LA	16	3	D7RY 9510-LA *CA-1789		34BF
77/78	J - - A/T without A/C -exc. Calif.	4	140	H-2	777F-BA,BB	16	1	D7RY 9510-B *CA-1659	None	34BA
77/78	J - - A/T with A/C -exc. Calif.	4	140	H-2	777F-GA	16	1	D7RY 9510-G *CA-1683	None	34BB
77	J - - A/T without A/C -Calif.	4	140	H-2	777F-DA,DB	16	1	D7RY 9510-D *CA-1661	None	34BA
79	J - - A/T-without A/C -exc. Calif.	4	140	H-2	D9EE-ANA	18	1	D9FZ 9510-AN *CA-2100	D9PZ 9510-AH *CA-2623	34BM

NOTE 1 - Incl. mounting gasket
NOTE 3 - Incl. (1) D7RE 9C485-AA decal, (1) 373846-S tee, (1) 380614-S cap, (1) 381335-S210A hose

APPLICATION CHART

Refer to page 31 for Application Instructions

YEAR	MODEL	ENGINE CYL.	ENGINE C.I.D. (C.C.D.)	TYPE	IDENTIFICATION	ILLUS. SEC. 95 PAGE	NOTES	PART NUMBER	REPLACED BY	PARTS LIST 95.
9510	CARBURETOR ASSY. — Cont'd									

4 CYLINDER 2.3L (2300 cc or 140 C.I.D.) ENGINE

▲ Parts List to follow in subsequent change

79	J - - A/T-with A/C -exc. Calif.	4	140	H-2	D9EE-APA	18	1	D9FZ 9510-AP *CA-2101	D9PZ 9510-AH *CA-2623	34BM
79	J - - A/T-without A/C -Calif.	4	140	H-2	D9ZE-BCA	18	1	D9ZZ 9510-BC *CA-2102		34BM
79	J - - A/T-with A/C -Calif.	4	140	H-2	D9ZE-BDA	18	1	D9ZZ 9510-BD *CA-2103	D9PZ 9510-AK *CA-2625	34BM
79	J - - M/T-without A/C -exc. Calif.	4	140	H-2	D9BE-AAA	18	1	D9BZ 9510-AA *CA-2094		34BM
79	J - - M/T-with A/C -exc. Calif.	4	140	H-2	D9BE-ADA	18	1	D9BZ 9510-AD *CA-2097		34BM
79	J - - M/T-without A/C -Calif.	4	140	H-2	D9BE-ABA	18	1	D9BZ 9510-AB *CA-2095		34BM
79	J - - M/T-with A/C -Calif.	4	140	H-2	D9BE-ACA	18	1	D9BZ 9510-AC *CA-2096		34BM
79	J - - M/T-without A/C Hi-altitude carb.	4	140	H-2	D9EE-AVA	19	1	D9FZ 9510-AV *CA-2201		34BM
79	J - - M/T-with A/C Hi-altitude carb.	4	140	H-2	D9EE-AYA	19	1	D9FZ 9510-AY *CA-2201		34BM
74	L - - A/T without T/E	4	140	H-2	D42E-CA,CB	12	1	D4FZ 9510-C *CA-1165	D4PZ 9510-BL *CA-1383	34N
74	L - - A/T without T/E	4	140	H-2	D4PE-BLA	12	2	D4PZ 9510-BL *CA-1383		34T
74	L - - A/T with T/E	4	140	H-2	D42E-AA,AC	12		D4FZ 9510-A *CA-1163	D4PZ 9510-AN *CA-1382	34L
74	L - - with T/E	4	140	H-2	D4PE-ANA	12	2	D4PZ 9510-AN *CA-1382		34M
74	L - - M/T without T/E	4	140	H-2	D42E-DA,DB	12		D4FZ 9510-D *CA-1166	D4PZ 9510-AM *CA-1309-A	34P
74	L - - M/T with T/E	4	140	H-2	D42E-BA,KA,MA	12		D4FZ 9510-B *CA-1164	D4PZ 9510-AN *CA-1382	34M
74	L - - A/T without T/E	4	140	H-2	D42E-CD	12		D4FZ 9510-K *CA-1211	D4PZ 9510-BL *CA-1383	34U
74	L - - A/T without T/E	4	140	H-2	D42E-GA	12		D4FZ 9510-L *CA-1222	D4PZ 9510-BL *CA-1383	34V
74	L - - A/T Calif.	4	140	H-2	D42E-NA	12		D4FZ 9510-N *CA-1320	D4PZ 9510-AN *CA-1382	34AB
74	L - - M/T without T/E	4	140	H-2	D42E-LA	12		D4FZ 9510-LA *CA-1309	D4PZ 9510-AM *CA-1309-A	34AA
74	L - - M/T without T/E	4	140	H-2	D4PE-AMA	12	2	D4PZ 9510-AM *CA-1309-A		34L
75	L - - A/T Calif.	4	140	H-2	D52E-AA,AB,AC	12	1	D5FZ 9510-A *CA-1282		34W
75	L - - A/T Calif.	4	140	H-2	D5PE-AEA	12	4	D5PZ 9510-AE *CA-1484	D6PZ 9510-T *CA-1484-A	34AA
75	L - - A/T exc. Calif.	4	140	H-2	D52E-BA,BB	12	1	D5FZ 9510-B *CA-1283	D5PZ 9510-AC *CA-1482	34X

NOTE 1 - Incl. mounting gasket
NOTE 2 - Incl. (1) limiter, (1) mounting gasket
NOTE 4 - Incl. (1) D5FZ 9871-A gasket, (1) D1FZ 9871-B gasket, (1) D4FZ 9447-A gasket, (1) C7AZ 9J500-B limiter, (1) 373235-S7 nut, (1) 380614-S cap, (1) ball stud

COPYRIGHT © 1986 — FORD MOTOR COMPANY — DEARBORN, MICHIGAN

APPLICATION CHART

Refer to page 31 for Application Instructions

YEAR	MODEL	ENGINE CYL.	ENGINE C.I.D. (C.C.D.)	TYPE	IDENTIFICATION	ILLUS. SEC. 95 PAGE	NOTES	PART NUMBER	REPLACED BY	PARTS LIST 95.
9510	CARBURETOR ASSY. — Cont'd									

4 CYLINDER 2.3L (2300 cc or 140 C.I.D.) ENGINE

▲ Parts List to follow in subsequent change

75	L - - exc. Calif.	4	140	H-2	D5PE-ACA	12	6	D5PZ 9510-AC *CA-1482	D6PZ 9510-Y *CA-1482-A	34AH
75	L - - M/T Calif.	4	140	H-2	D52E-CA,CB,CC	12	1	D5FZ 9510-C *CA-1284		34Y
75	L - - M/T Calif.	4	140	H-2	D5PE-ADA	12	5	D5PZ 9510-AD *CA-1483		34AH
75	L - - M/T exc. Calif.	4	140	H-2	D52E-DB,DD	12	1	D5FZ 9510-D *CA-1285	D6PZ 9510-Y *CA-1482-A	34Z
75	L - - M/T exc. Calif.	4	140	H-2	D52E-EA	12	1	D5FZ 9510-E *CA-1415		34AL
75	L - - M/T exc. Calif.	4	140	H-2	D6PE-UA	12	5	D5PZ 9510-UA *CA-1656	None	34AL
75	L - - A/T exc. Calif.	4	140	H-2	D52E-FA	12	1	D5FZ 9510-F *CA-1413	D6PZ 9510-T *CA-1484-A	34AL
75	L - - A/T with A/C-exc. Calif.	4	140	H-2	D52E-GA	12	1	D5FZ 9510-G *CA-1463	D6PZ 9510-T *CA-1484-A	34AL
76	L - - M/T exc. Calif. and Canada	4	140	H-2	D6EE-AA	12	1	D6FZ 9510-AA *CA-1401	D6PZ 9510-T *CA-1484-A	34AN
76	L - - M/T exc. Calif. and Canada	4	140	H-2	D6EE-JA	12	1	D6FZ 9510-J *CA-1520	D6PZ 9510-V *CA-1655	34AN
76	L - - M/T exc. Calif. and Canada	4	140	H-2	D6PE-VA	12	5	D6PZ 9510-V *CA-1655	None	34AN
76	L - - M/T exc. Calif. and Canada	4	140	H-2	D6EE-LA	12	1	D6FZ 9510-L *CA-1487	D6PZ 9510-V *CA-1655	34AN
76	L - - A/T exc. Calif.	4	140	H-2	D6EE-BA	12	1	D6FZ 9510-B *CA-1403	D6PZ 9510-S *CA-1657	34AN
76	L - - A/T exc. Calif.	4	140	H-2	D6PE-SA	12	5	D6PZ 9510-S *CA-1657		34AN
76	L - - M/T Calif.	4	140	H-2	D6EE-CA	12	1	D6FZ 9510-C *CA-1405	D6PZ 9510-T *CA-1484-A	34AN
76	L - - M/T exc. Calif.	4	140	H-2	D6EE-MA	12	1	D6FZ 9510-M *CA-1488	D6PZ 9510-V *CA-1655	34AN
76	L - - A/T Calif.	4	140	H-2	D6EE-DA	12	1	D6FZ 9510-DA *CA-1407	D6PZ 9510-T *CA-1484-A	34AN
76	L	4	140	H-2	D6PE-TA	12	6	D6PZ 9510-T *CA-1484-A		34AN
76	L - - A/T exc. Calif.	4	140	H-2	D6EE-EA	12	1	D6FZ 9510-E *CA-1436	None	34AP
76	L - - M/T exc. Calif. and Canada	4	140	H-2	D6EE-FA	12	1	D6FZ 9510-F *CA-1655	D6PZ 9510-V *CA-1655	34AP
76	L - - M/T Canada	4	140	H-2	D6EE-HA,HB	12	1	D6FZ 9510-H *CA-1497		34AP
76	L - - exc. Calif.	4	140	H-2	D6PE-YA	12	6	D6PZ 9510-Y *CA-1482-A		34AP
77	L(73) - - M/T without A/C -Calif.	4	140	H-2	D7EE-AB	16	1	D7FZ 9510-AA *CA-1649	D7PZ 9510-C *CA-1845	34AV
77	L(73) - - M/T with A/C -Calif.	4	140	H-2	D7EE-KB	16	1	D7FZ 9510-K *CA-1692	D7PZ 9510-C *CA-1845	34AX
77	L(62,64) - - M/T without A/C-Calif.-	4	140	H-2	D7EE-SA	16	1	D7FZ 9510-S *CA-1703	D7PZ 9510-C *CA-1845	34BC

NOTE 1 - Incl. mounting gasket

NOTE 5 - Incl. (1) D5FZ 9871-A gasket, (1) D1FZ 9871-B gasket, (1) D4FZ 9447-A gasket

NOTE 6 - Incl. (1) D5FZ 9871-A gasket, (1) D1FZ 9871-A gasket, (1) D4FZ 9447-A gasket, (1) C7AZ 9J500-B limiter, (1) 373235-S7 nut, (1) 380614-S cap, (1) ball stud, (1) cap clamp

APPLICATION CHART

Refer to page 31 for Application Instructions

YEAR	MODEL	ENGINE CYL.	ENGINE C.I.D. (C.C.D.)	TYPE	IDENTIFICATION	ILLUS. SEC. 95 PAGE	NOTES	PART NUMBER	REPLACED BY	PARTS LIST 95.
9510	CARBURETOR ASSY. — Cont'd									

4 CYLINDER 2.3L (2300 cc or 140 C.I.D.) ENGINE

▲ Parts List to follow in subsequent change

77	L(62,64) - - M/T with A/C-Calif.-	4	140	H-2	D7EE-TA	16	1	D7FZ 9510-T *CA-1704		34BC
77	L - - M/T without A/C -exc. Calif.- "Before 6/27/77"	4	140	H-2	D7EE-DA	16	1	D7FZ 9510-D *CA-1651	D7PZ 9510-B *CA-1844	34AV
77/78	L - - M/T with 3.18 axle- without A/C-exc. Calif. "From 6/27/77"	4	140	H-2	D8EE-DA	18	1	D8FZ 9510-D *CA-1835	D8PZ 9510-BE *CA-2223	34BH
77/78	L - - M/T with 2.73 axle without A/C - exc. Calif. "From 6/27/77"	4	140	H-2	D8EE-AUA	18	1	D8FZ 9510-AU *CA-1987	D8PZ 9510-BE *CA-2223	34BJ
78	L - - M/T-fuel economy carb.- exc. Calif.	4	140	H-2	D8EE-ATA	18	1	D8FZ 9510-AT *CA-2031	D8PZ 9510-BE *CA-2223	34BJ
77	L - - M/T with A/C -exc.—Calif.- "Before 6/27/77"	4	140	H-2	D7EE-HA	16	1	D7FZ 9510-H *CA-1690	D7PZ 9510-B *CA-1844	34AX
77/78	L - - M/T with 3.18 axle- with A/C-exc. Calif. "From 6/27/77"	4	140	H-2	D8EE-JA	18	1	D8FZ 9510-J *CA-1836	D8PZ 9510-BE *CA-2223	34BH
77/78	L - - M/T with 2.73 axle with A/C-exc. Calif. "From 6/27/77"	4	140	H-2	D8EE-AVA	18	1	D8FZ 9510-AV *CA-1988	D8PZ 9510-BE *CA-2223	34BJ
77/78	L - - M/T exc. Calif.	4	140	H-2	D8PE-BEA	18		D8PZ 9510-BE *CA-2223		34BJ
77	L - - M/T fuel economy carb.	4	140	H-2	D7EE-BDA	16	1	D7FZ 9510-BD *CA-1716		34BD
77	L - - M/T with A/C -Hi-altitude carb.- carb. "Before 6/27/77"	4	140	H-2	D7EE-BGA	16	1	D7FZ 9510-BG *CA-1748	D7PZ 9510-B *CA-1844	34BE
77/78	L - - M/T with A/C- Hi. altitude carb. "From 6/27/77"	4	140	H-2	D8EE-LA	18	1	D8FZ 9510-L *CA-1839	None	34BJ
77	L - - M/T without A/C Hi-altitude carb.- "Before 6/27/77"	4	140	H-2	D7EE-BHA	16	1	D7FZ 9510-BH *CA-1749	D7PZ 9510-B *CA-1844	34BE
77/78	L - - M/T without A/C- Hi. altitude carb.- "From 6/27/77"	4	140	H-2	D8EE-BA	18	1	D8FZ 9510-B *CA-1833	None	34BH
77	L(73) - - A/T without A/C-Calif.	4	140	H-2	D7EE-FA	16	1	D7FZ 9510-F *CA-1698	D7PZ 9510-C *CA-1845	34AV
77	L(73) - - A/T with A/C -Calif.	4	140	H-2	D7EE-LA	16	1	D7FZ 9510-L *CA-1699	D7PZ 9510-C *CA-1845	34AY
77	L(62,64) - - A/T without A/C-Calif.	4	140	H-2	D7EE-UA	16	1	D7FZ 9510-U *CA-1705	D7PZ 9510-C *CA-1845	34BD
77	L(62,64) - - A/T with A/C-Calif.	4	140	H-2	D7EE-VA	16	1	D7FZ 9510-V *CA-1706		34BD
77	L - - Calif.	4	140	H-2	D7PE-CA	16	7	D7PZ 9510-C *CA-1845		34AV

NOTE 1 - Incl. mounting gasket
NOTE 7 - Incl. (1) D4FZ 9447-A gasket, (1) D6PZ 9J500-A limiter, (1) 380614-S cap, (1) 381138-SX02A hose, (2) 380882-S32 clamps, (1) cap decel. tube, (1) clamp decel. tube

COPYRIGHT © 1986 — FORD MOTOR COMPANY — DEARBORN, MICHIGAN

APPLICATION CHART

Refer to page 31 for Application Instructions

YEAR	MODEL	ENGINE CYL.	ENGINE C.I.D. (C.C.D.)	TYPE	IDENTIFICATION	ILLUS. SEC. 95 PAGE	NOTES	PART NUMBER	REPLACED BY	PARTS LIST 95.
9510	CARBURETOR ASSY. — Cont'd									

4 CYLINDER 2.3L (2300 cc or 140 C.I.D.) ENGINE

▲ Parts List to follow in subsequent change

77	L - - A/T without A/C -exc. Calif "Before 2/1/77"	4	140	H-2	D7EE-EA	16	1	D7FZ 9510-E *CA-1652	D7PZ 9510-B *CA-1844	34BC
77	L - - A/T without A/C -exc. Calif. "From 2/1/77 to 4/25/77"	4	140	H-2	D7EE-BMA	16	1	D7FZ 9510-BM *CA-1752	D7PZ 9510-B *CA-1844	34BE
77	L - - A/T without A/C exc. Calif. - "From 4/25/77 to 6/27/77"	4	140	H-2	D7EE-BTA	16	1	D7FZ 9510-BT *CA-1923	None	34BE
77/78	L - - A/T without A/C- exc. Calif. "From 6/27/77"	4	140	H-2	D8EE-CA	18	1	D8FZ 9510-C *CA-1834	D8PZ 9510-BG *CA-2225	34BH
77	L - - A/T with A/C -exc. Calif. "Before 2/1/77"	4	140	H-2	D7EE-JA	16	1	D7FZ 9510-J *CA-1691	D7PZ 9510-B *CA-1844	34AX
77	L - - exc. Calif.	4	140	H-2	D7PE-BA	16	8	D7PZ 9510-B *CA-1844		34BD
77	L - - A/T with A/C -exc. Calif. "From 2/1/77 to 4/25/77"	4	140	H-2	D7EE-BLA	16	1	D7FZ 9510-BL *CA-1751	D7PZ 9510-B *CA-1844	34BE
77	L - - A/T with A/C exc. Calif. - "From 4/25/77 to 6/27/77"	4	140	H-2	D7EE-BUA	16	1	D7FZ 9510-BU *CA-1924	None	34BE
77/78	L - - A/T with A/C- exc. Calif. "From 6/27/77"	4	140	H-2	D8EE-KA	18	1	D8FZ 9510-K *CA-1837		34BJ
77/78	L - - A/T exc. Calif.	4	140	H-2	D8PE-BGA	18		D8PZ 9510-BG *CA-2225		34BJ
77	L - - A/T without A/C -Hi-altitude carb.- "Before 6/27/77"	4	140	H-2	D7EE-GA	16	1	D7FZ 9510-G *CA-1653		34AW
77/78	L - - M/T without A/C- Hi. altitude carb.- "From 6/27/77"	4	140	H-2	D8EE-AA	18	1	D8FZ 9510-A *CA-1832	None	34BH
77	L - - A/T with A/C -Hi-altitude carb.- "Before 6/27/77"	4	140	H-2	D7EE-AAA	16	1	D7FZ 9510-AAA *CA-1694	D7PZ 9510-D *CA-1846	34AW
77	L - - Hi-altitude carb. "Before 6/27/77"	4	140	H-2	D7PE-DA	16	9	D7PZ 9510-D *CA-1846	None	34AW
77/78	L - - A/T with A/C- Hi. altitude carb. "From 6/27/77"	4	140	H-2	D8EE-MA	18	1	D8FZ 9510-M *CA-1838	None	34BJ
78	L - - M/T with 2.73 axle without A/C-Calif.	4	140	H-2	D8EE-AMA	19	1	D8FZ 9510-AM *CA-1985		34BK
78	L - - M/T with 3.18 axle without A/C-Calif.	4	140	H-2	D8EE-FA	19	1	D8FZ 9510-F *CA-1982	D8PZ 9510-BH *CA-2226	34BK
78	L - - A/T without A/C- Calif.	4	140	H-2	D8EE-EA	19	1	D8FZ 9510-E *CA-1981	D8PZ 9510-BF *CA-2224	34BK
78	L - - M/T with 2.73 axle with A/C-Calif.	4	140	H-2	D8EE-ANA	19	1	D8FZ 9510-AN *CA-1936	D8PZ 9510-BH *CA-2226	34BK

NOTE 1 - Incl. mounting gasket

NOTE 8 - Incl. (1) D4FZ 9447-A gasket, (1) D6PZ 9J500-A limiter, (1) 380614-S cap, (1) 381138-SX02A hose (2) 380882-S32 clamps

NOTE 9 - Incl. (1) D4FZ 9447-A gasket, (1) 381138-SX02A hose, (2) 380882-S32 clamps

APPLICATION CHART

Refer to page 31 for Application Instructions

YEAR	MODEL	ENGINE CYL.	ENGINE C.I.D. (C.C.D.)	TYPE	IDENTIFICATION	ILLUS. SEC. 95 PAGE	NOTES	PART NUMBER	REPLACED BY	PARTS LIST 95.
9510	CARBURETOR ASSY. — Cont'd									

4 CYLINDER 2.3L (2300 cc or 140 C.I.D.) ENGINE

▲ Parts List to follow in subsequent change

78	L - - M/T with 3.18 axle with A/C - Calif.	4	140	H-2	D8EE-GA	19	1	D8FZ 9510-G *CA-1983	D8PZ 9510-BH *CA-2226	34BK
78	L - - M/T Calif.	4	140	H-2	D8PE-BHA	19		D8PZ 9510-BH *CA-2226		34BK
78	L - - A/T with A/C-Calif.	4	140	H-2	D8EE-HA	19	1	D8FZ 9510-H *CA-1984	D8PZ 9510-BF *CA-2224	34BK
78	L - - A/T Calif.	4	140	H-2	D8PE-BFA	19		D8PZ 9510-BF *CA-2224	None	34BK
79	L - - A/T-without A/C -exc. Calif.	4	140	H-2	D9EE-ANA	18	1	D9FZ 9510-AN *CA-2100	D9PZ 9510-AH *CA-2623	34BM
79	L - - A/T-with A/C -exc. Calif.	4	140	H-2	D9EE-APA	18	1	D9FZ 9510-AP *CA-2101	D9PZ 9510-AH *CA-2623	34BM
79	L - - A/T-without A/C -Calif.	4	140	H-2	D9EE-AJC,AJD	19	1	D9FZ 9510-AJ *CA-2089	D9PZ 9510-AN *CA-2628	34BL
79	L - - A/T-with A/C -Calif.	4	140	H-2	D9EE-AKC,AKD	19	1	D9FZ 9510-AK *CA-2090	D9PZ 9510-AN *CA-2628	34BL
79	L - - A/T Calif.	4	140	H-2	D9PE-ANA	19		D9PZ 9510-AN *CA-2628		34BL
79	L - - M/T-without A/C -w/3.08 rear axle ratio-Calif.	4	140	H-2	D9EE-AEC,AED	19	1	D9FZ 9510-AE *CA-2091	D9PZ 9510-AM *CA-2627	34BL
79	L - - M/T-with A/C -w/3.08 rear axle ratio-Calif.	4	140	H-2	D9EE-AFC,AFD	19	1	D9FZ 9510-AF *CA-2092		34BL
79	L-M/T-w/3.08 rear axle ratio-Calif.	4	140	H-2	D9PE-AMA	19		D9PZ 9510-AM *CA-2627	None	34BL
79	L - - M/T-without A/C -w/2.73 rear axle ratio-Calif.	4	140	H-2	D9EE-AGC,AGD	19	1	D9FZ 9510-AG *CA-2084	D9PZ 9510-AL *CA-2626	34BL
79	L - - M/T-with A/C -w/2.73 rear axle ratio-Calif.	4	140	H-2	D9EE-AHC,AHD	19	1	D9FZ 9510-AH *CA-2093	D9PZ 9510-AL *CA-2626	34BL
79	L - - M/T-Calif.	4	140	H-2	D9PE-ALA	19		D9PZ 9510-AL *CA-2626		34BL
79	L - - M/T-without A/C -exc. Calif.	4	140	H-2	D9EE-ALA	18	1	D9FZ 9510-AL *CA-2098		34BM
79	L - - M/T-with A/C -exc. Calif.	4	140	H-2	D9EE-AMA	18	1	D9FZ 9510-AM *CA-2099		34BM
79	L - - M/T exc. Calif.	4	140	H-2	D9PE-AYA	18		D9PZ 9510-AY *CA-2635		34BM
79	L - - A/T - without A/C -Hi-altitude carb.	4	140	H-2	D9EE-ARA	19	1	D9FZ 9510-AR *CA-2196	None	34BM
79	L - - A/T-with A/C- -Hi-altitude carb.	4	140	H-2	D9EE-ASA	19	1	D9FZ 9510-AS *CA-2197	None	34BM
79	L - - M/T-without A/C Hi-altitude carb.	4	140	H-2	D9EE-AVA	19	1	D9FZ 9510-AV *CA-2201	D9PZ 9510-AR *CA-2630	34BM
79	L - - M/T-with A/C Hi-altitude carb.	4	140	H-2	D9EE-AYA	19	1	D9FZ 9510-AY *CA-2202	D9PZ 9510-AR *CA-2630	34BM
78	P - - M/T without A/C -exc. Calif.	4	140	H-2	D8BE-FA	18	1	D8BZ 9510-F *CA-1829	D8PZ 9510-BJ *CA-2227	34BG

NOTE 1 - Incl. mounting gasket

COPYRIGHT © 1986— FORD MOTOR COMPANY —DEARBORN, MICHIGAN

APPLICATION CHART

Refer to page 31 for Application Instructions

YEAR	MODEL	ENGINE CYL.	ENGINE C.I.D. (C.C.D.)	TYPE	IDENTIFICATION	ILLUS. SEC. 95 PAGE	NOTES	PART NUMBER	REPLACED BY	PARTS LIST 95.
9510	CARBURETOR ASSY. — Cont'd									

4 CYLINDER 2.3L (2300 cc or 140 C.I.D.) ENGINE

▲ Parts List to follow in subsequent change

78	P - - M/T with A/C -exc. Calif.- "Before 3/15/78"	4	140	H-2	D8BE-GA	18	1	D8BZ 9510-G *CA-1830	None	34BG
78	P - - M/T with A/C exc. Calif. "From 3/15/78"	4	140	H-2	D8BE-APA	18	1	D8BZ 9510-AP *CA-2036	None	34BG
78	P - - M/T without A/C- Calif.	4	140	H-2	D8BE-AKA	18	1	D8BZ 9510-AK *CA-1991	D8PZ 9510-BJ *CA-2227	34BG
78	P - - M/T with A/C- Calif.- "Before 4/3/78"	4	140	H-2	D8BE-AJA	18	1	D8BZ 9510-AJ *CA-1990	D8PZ 9510-BJ *CA-2227	34BG
78	P - - M/T with A/C Calif. "From 4/3/78"	4	140	H-2	D8BE-ANA	18	1	D8BZ 9510-AN *CA-2035	D8PZ 9510-BJ *CA-2227	34BG
78	P - - M/T Calif.	4	140	H-2	D8PE-BJA	18		D8PZ 9510-BJ *CA-2227		34BG
78	P - - A/T	4	140	H-2	D8BE-HA	18	1	D8BZ 9510-H *CA-1831	D8PZ 9510-BG *CA-2225	34BG4BG
78	P - - A/T exc. Calif.	4	140	H-2	D8PE-BGA	18		D8PZ 9510-BG *CA-2225		34BJ
79	P - - A/T-without A/C -exc. Calif.	4	140	H-2	D9EE-ANA	18	1	D9FZ 9510-AN *CA-2100		34BM
79	P - - A/T-with A/C -exc. Calif.	4	140	H-2	D9EE-APA	18	1	D9FZ 9510-AP *CA-2101		34BM
79	L,P - - A/T- exc. Calif.	4	140	H-2	D9PE-AHA	19		D9PZ 9510-AH *CA-2623		34BM
79	P - - A/T-without A/C -Calif.	4	140	H-2	D9ZE-BCA	18	1	D9ZZ 9510-BC *CA-2102	D9PZ 9510-AK *CA-2625	34BM
79	P - - A/T-with A/C -Calif.	4	140	H-2	D9ZE-BDA	18	1	D9ZZ 9510-BD *CA-2103	D9PZ 9510-AK *CA-2625	34BM
79	P - - A/T-Calif.	4	140	H-2	D9PE-AKA	18		D9PZ 9510-AK *CA-2625		34BM
79	P - - M/T-without A/C -exc. Calif.	4	140	H-2	D9BE-AAA	18	1	D9BZ 9510-AA *CA-2094	D9PZ 9510-AV *CA-2634	34BM
79	P - - M/T-with A/C -exc. Calif.	4	140	H-2	D9BE-ADA	18	1	D9BZ 9510-AD *CA-2097	D9PZ 9510-AV *CA-2634	34BM
79	P - - M/T-without A/C -Calif.	4	140	H-2	D9BE-ABA	18	1	D9BZ 9510-AB *CA-2095	D9PZ 9510-AJ *CA-2624	34BM
79	P - - M/T-with A/C -Calif.	4	140	H-2	D9BE-ACA	18	1	D9BZ 9510-AC *CA-2096	D9PZ 9510-AJ *CA-2624	34BM
79	P - - M/T-Calif.	4	140	H-2	D9PE-AJA	18		D9PZ 9510-AJ *CA-2624		34BM

4 CYLINDER 2.3L (2300 cc or 140 C.I.D.) TC ENGINE

79	J - - without A/C -exc. Calif.- "Before 9/29/78"	4	140	H-2	D9ZE-MD	18	1	D9ZZ 9510-M *CA-2085		34BM
79	J - - without A/C- exc. Calif. "From 9/29/78"	4	140	H-2	D9ZE-MF	18	1	D9ZZ 9510-MF *CA-2085-A		34BM

NOTE 1 - Incl. mounting gasket

APPLICATION CHART

Refer to page 31 for Application Instructions

YEAR	MODEL	ENGINE CYL.	ENGINE C.I.D. (C.C.D.)	TYPE	IDENTIFICATION	ILLUS. SEC. 95 PAGE	NOTES	PART NUMBER	REPLACED BY	PARTS LIST 95.
9510	CARBURETOR ASSY. — Cont'd									

4 CYLINDER 2.3L (2300 cc or 140 C.I.D.) TC ENGINE

▲ Parts List to follow in subsequent change

79	J – – with A/C –exc. Calif.– "Before 9/29/78"	4	140	H-2	D9ZE-ND	18	1	D9ZZ 9510-N *CA-2086		34BM
79	J – – with A/C– exc. Calif. "From 9/29/78"	4	140	H-2	D9ZE-NF	18	1	D9ZZ 9510-NF *CA-2086-A	D9PZ 9510-AS *CA-2631	34BM
79	J – – exc. Calif.	4	140	H-2	D9PE-ASA	18		D9PZ 9510-AS *CA-2631		34BM
79	J – – without A/C –Calif.	4	140	H-2	D9ZE-SB	19	1	D9ZZ 9510-S *CA-2087	D9PZ 9510-AT *CA-2632	34BL
79	J – – with A/C –Calif.	4	140	H-2	D9ZE-TB	19	1	D9ZZ 9510-T *CA-2088	D9PZ 9510-AT *CA-2632	34BL
79	J – – exc. Calif.	4	140	H-2	D9PE-ATA	19		D9PZ 9510-AT *CA-2632		34BL

6 CYLINDER ENGINES

ENGINE C.I.D.	1973	1974	1975	1976	1977	1978	1979		
159	J								
171		J	L	J,L	J,L	J,L	J,L		
200	P	P	G,P	G,P	G,P	P	P,J		
250	C,P	C,P	G,P	G,P	G,P	G	G		

APPLICATION CHART

Refer to page 31 for Application Instructions

YEAR	MODEL	ENGINE CYL.	ENGINE C.I.D. (C.C.D.)	TYPE	IDENTIFICATION	ILLUS. SEC. 95 PAGE	NOTES	PART NUMBER	REPLACED BY	PARTS LIST 95.
9510	CARBURETOR ASSY. — Cont'd									

6 CYLINDER 2.6L (2600 cc or 159 C.I.D.) ENGINE

73	J – – M/T	6	159	HW-2	73TF-AA	1		D3RY 9510-A *CA-1028	None	34C
73	J – – A/T	6	159	HW-2	73TF-BA	1		D3RY 9510-B *CA-1029	None	34D

6 CYLINDER 2.8L (2800 cc or 171 C.I.D.) ENGINE

▲ Parts List to follow in subsequent change

74	J – – A/T-Calif.	6	171	HW-2	74TF-DA,DB	12		D4RY 9510-K *CA-1162	None	34K
74	J – – M/T with T/E	6	171	HW-2	74TF-AA,AB	12		D4RY 9510-H *CA-1160	None	34G
74	J – – M/T-Calif.	6	171	HW-2	74TF-CA	12		D4RY 9510-G *CA-1159	None	34J
74	J – – A/T with T/E	6	171	HW-2	74TF-BA,BB	12		D4RY 9510-J *CA-1161	None	34H
76	J – – M/T without T/E	6	171	F-2	75TF-AA	9		D5RY 9510-A *CA-1308	D5PZ 9510-BR *CA-1508	37G
76	J – – M/T with T/E	6	171	F-2	75TF-CA	9		D5RY 9510-C *CA-1306	D5PZ 9510-BR *CA-1508	37G

NOTE 1 – Incl. mounting gasket

COPYRIGHT © 1986 — FORD MOTOR COMPANY — DEARBORN, MICHIGAN

APPLICATION CHART

Refer to page 31 for Application Instructions

YEAR	MODEL	ENGINE CYL.	ENGINE C.I.D. (C.C.D.)	TYPE	IDENTIFICATION	ILLUS. SEC. 95 PAGE	NOTES	PART NUMBER	REPLACED BY	PARTS LIST 95.
9510	CARBURETOR ASSY. — Cont'd									
6 CYLINDER 2.8L (2800 cc or 171 C.I.D.) ENGINE										
76	J - - M/T	6	171	F-2	D5PE-BRA	9	10	D5PZ 9510-BR *CA-1508		37G
76	J - - A/T without T/E	6	171	F-2	75TF-BA	9		D5RY 9510-B *CA-1303	D5PZ 9510-BP *CA-1507	37G
76	J - - A/T with T/E	6	171	F-2	75TF-DA	9		D5RY 9510-D *CA-1307	D5PZ 9510-BP *CA-1507	37G
76	J - - A/T	6	171	F-2	D5PE-BPA	9	10	D5PZ 9510-BP *CA-1507	None	37G
77/78	J - - M/T-exc Calif.	6	171	F-2	77TF-KA	9	1	D7RY 9510-K *CA-1674	D7PZ 9510-CC *CA-2217	37H
77/78	J	8	171	F-2	D7PE-CCA	9	11	D7PZ 9510-CC *CA-2217		37H
77	J - - M/T-Calif.	6	171	F-2 (VV)	77TF-NA	13,14, 15	1	D7RY 9510-N *CA-1676	D7PZ 9510-DB *CA-2517	38A
77	J - - M/T Calif.	6	171	F-2 (VV)	D8PE-DBA	13,14, 15		D7PZ 9510-DB *CA-2517	None	38A
77/78	J - - A/T-exc Calif.	6	171	F-2	77TF-LA	9	1	D7RY 9510-L *CA-1673	D7PZ 9510-CC *CA-2217	37H7H
77	J - - A/T-Calif.	6	171	F-2 (VV)	77TF-MA	13,14, 15	1	D7RY 9510-M *CA-1675	D7RY 9510-N *CA-1676	38A
79	J - - M/T	6	171	F-2	D9ZE-AYA	9	1	D9ZZ 9510-AY *CA-2220		37L
79	J - - M/T	6	171	F-2	D9PE-FA	9		D9PZ 9510-F *CA-2812		37L
79	J - - A/T with A/C- -exc. Calif.- "Before 11/6/78"	6	171	F-2	D9YE-AB,CA	9	1	D9YZ 9510-A *CA-2115		37K
79	J - - A/T with A/C- exc. Calif.- "From 11/6/78"	6	171	F-2	D9YE-EA	9	1	D9YZ 9510-E *CA-2115-A		37K
79	J - - A/T without A/C -exc. Calif.- "Before 11/6/78"	6	171	F-2	D9YE-BB,DA	9	1	D9YZ 9510-B *CA-2116		37K
79	J - - A/T without A/C- exc. Calif. "From 11/6/78"	6	171	F-2	D9YE-FA	9	1	D9YZ 9510-F *CA-2116-A		37K
79	J - - A/T-Calif.	6	171	F-2 (VV)	D9ZE-LC	13,14, 15	1	D9ZZ 9510-L *CA-2105		38F
79	J - - A/T-Calif.	6	171	F-2 (VV)	D9PE-BBA	13,14 15		D9PZ 9510-BB *CA-2105-A		38F
75	L - - M/T-exc. Calif.	6	171	F-2	D5ZE-AD,AE	9	1	D5ZZ 9510-AD *CA-1353	D5PZ 9510-BK *CA-1505	37C
75	L - - A/T-exc. Calif.	6	171	F-2	D5ZE-BD,BE	9	1	D5ZZ 9510-BD *CA-1354	D5PZ 9510-BK *CA-1505	37D
75	L - - exc. Calif.	6	171	F-2	D5PE-BKA	9	10	D5PZ 9510-BK *CA-1505	None	37D
75	L - - M/T-Calif.	6	171	F-2	D5ZZ-CC,CE	9	1	D5ZZ 9510-C *CA-1265		37A
75	L - - M/T-Calif.	6	171	F-2	D5PE-BLA	9	10	D5PZ 9510-BL *CA-1265-A		37A

NOTE 1 - Incl. mounting gasket
NOTE 10 - Incl. (1) D5ZZ 9447-A gasket, (1) D5ZZ 9C477-A gasket, (2) C7AZ 9J500-B limiters, (1) 380614-S cap
NOTE 11 - Incl. (2) limiters, (2) mounting gaskets

APPLICATION CHART

Refer to page 31 for Application Instructions

YEAR	MODEL	ENGINE CYL.	ENGINE C.I.D. (C.C.D.)	TYPE	IDENTIFICATION	ILLUS. SEC. 95 PAGE	NOTES	PART NUMBER	REPLACED BY	PARTS LIST 95.
9510	CARBURETOR ASSY. — Cont'd									
6 CYLINDER 2.8L (2800 cc or 171 C.I.D.) ENGINE										
75	L - - A/T-Calif.	6	171	F-2	D5ZE-DC,DE	9	1	D5ZZ 9510-D *CA-1266	D5PZ 9510-BM *CA-1266-A	37B
75	L - - A/T-Calif.	6	171	F-2	D5PE-BMA	9	10	D5PZ 9510-BM *CA-1266-A		37B
75	L - - A/T-Calif.	6	171	F-2	D5ZE-DF D5PE-BNA	9	10	D5PZ 9510-BN *CA-1506	D6PZ 9510-D *CA-1740	37B
75/77	L - - A/T-Canada	6	171	F-2	D5ZE-YB	9	1	D5ZZ 9510-Y *CA-1504	None	37D
76	L - - M/T-exc. Calif.	6	171	F-2	D6ZE-AA	9	1	D6ZZ 9510-A *CA-1465	D6PZ 9510-C *CA-1739	37E
76	L - - M/T-exc. Calif.	6	171	F-2	D6ZE-VA	9	1	D6ZZ 9510-V *CA-1536	D6PZ 9510-C *CA-1739	37E
76	L - - exc. Calif.	6	171	F-2	D6PE-CA	9	11	D6PZ 9510-C *CA-1739		37F
76	L - - M/T-Calif.	6	171	F-2	D6ZE-CA	9	1	D6ZZ 9510-C *CA-1467	D6PZ 9510-AB *CA-1746	37E
76	L - - M/T-Calif.	6	171	F-2	D6PE-ABA	9	11	D6PZ 9510-AB *CA-1746		37E
76	L - - A/T-exc. Calif.	6	171	F-2	D6ZE-BA	9	1	D6ZZ 9510-B *CA-1466	D6PZ 9510-C *CA-1739	37F
76	L - - A/T-Calif.	6	171	F-2	D6ZE-DA,AAA	9	1	D6ZZ 9510-D *CA-1468	D6PZ 9510-D *CA-1740	37F
76	L - - A/T-Calif.	6	171	F-2	D6PE-DA	9	11	D6PZ 9510-D *CA-1740		37F
77	L - - M/T-exc. Calif.	6	171	F-2	D7YE-BA	9	1	D7FZ 9510-B *CA-1556		37H
77	L	6	171	F-2	D7PE-CAA	9	11	D7PZ 9510-CA *CA-2218		37H
77	L - - A/T-Calif. "Before 6/27/77"	6	171	F-2 (VV)	D7ZE-BD,BE	13,14, 15	1	D7ZZ 9510-B *CA-1616	D7PZ 9510-DC *CA-2518	38A
77	L - - A/T Calif. "Before 6/27/77"	6	171	F-2 (VV)	D8PE-DCA	13,14, 15		D7PZ 9510-DC *CA-2518		38A
77/78	L - - A/T-Calif. "From 6/27/77"	6	171	F-2 (VV)	D8ZE-YB	13,14, 15	1	D8ZZ 9510-D *CA-1889	D8PZ 9510-CZ *CA-2515	38C
77/78	L - - A/T Calif. "From 6/27/77"	6	171	F-2 (VV)	D8PE-CZA	13,14, 15		D8PZ 9510-CZ *CA-2515		38C
77	L - - A/T without A/C -exc. Calif.- "Before 6/27/77"	6	171	F-2	D7YE-AA	9	1	D7FZ 9510-A *CA-1555	D7PZ 9510-CA *CA-2218	37H
77/78	L - - A/T without A/C- exc. Calif.- "From 6/27/77 to 1/3/78"	6	171	F-2	D8BE-MA	9	1	D8BZ 9510-M *CA-1895	D8BZ 9510-MB *CA-1895-A	37J
78	L - - A/T without A/C exc. Calif. "From 1/3/78"	6	171	F-2	D8BE-MB	9	1	D8BZ 9510-MB *CA-1895-A	D8PZ 9510-CH *CA-2620	37J
77	L - - A/T with A/C -exc. Calif.- "Before 6/27/77"	6	171	F-2	D7YE-EA	9	1	D7YZ 9510-E *CA-1693	None	37H

NOTE 1 - Incl. mounting gasket
NOTE 10 - Incl. (1) D5ZZ 9447-A gasket, (1) D5ZZ 9C477-A gasket, (2) C7AZ 9J500-B limiters, (1) 380614-S cap
NOTE 11 - Incl. (2) limiters, (2) mounting gaskets

COPYRIGHT © 1986 — FORD MOTOR COMPANY — DEARBORN, MICHIGAN

APPLICATION CHART

Refer to page 31 for Application Instructions

YEAR	MODEL	ENGINE CYL.	ENGINE C.I.D. (C.C.D.)	TYPE	IDENTIFICATION	ILLUS. SEC. 95 PAGE	NOTES	PART NUMBER	REPLACED BY	PARTS LIST 95.
9510	CARBURETOR ASSY. — Cont'd									

6 CYLINDER 2.8L (2800 cc or 171 C.I.D.) ENGINE

▲ Parts List to follow in subsequent change

77/78	L - - A/T with A/C- exc. Calif.- "From 6/27/77 to 1/3/78"	6	171	F-2	D8YE-AA	9	1	D8YZ 9510-A *CA-1897	D8YZ 9510-AB *CA-1897-A	37J
78	L - - with A/C exc. Calif. "From 1/3/78"	6	171	F-2	D8YE-AB	9	1	D8YZ 9510-AB *CA-1897-A	D8PZ 9510-CH *CA-2620	37J
78	L - - A/T- exc. Calif.	6	171	F-2	D8PE-CHA	9		D8PZ 9510-CH *CA-2620		37J
79	L - - A/T with A/C- -exc. Calif.- "Before 11/6/78"	6	171	F-2	D9YE-AB,CA	9	1	D9YZ 9510-A *CA-2115	D9YZ 9510-E *CA-2115-A	37K
79	L - - A/T with A/C- exc. Calif.- "From 11/6/78"	6	171	F-2	D9YE-EA	9	1	D9YZ 9510-E *CA-2115-A	D9PZ 9510-V *CA-2809	37K
79	L - - without A/C -exc. Calif.- "Before 11/6/78"	6	171	F-2	D9YE-BB,DA	9	1	D9YZ 9510-B *CA-2116	D9PZ 9510-V *CA-2809	37K
79	L - - A/T without A/C- exc. Calif.- "From 11/6/78"	6	171	F-2	D9YE-FA	9	1	D9YZ 9510-F *CA-2116-A	D9PZ 9510-V *CA-2809	37K
79	L - - A/T-exc. Calif.	6	171	F-2	D9PE-VA	9		D9PZ 9510-V *CA-2809		37K

6 CYLINDER 3.3L (200 C.I.D) ENGINE

▲ Parts List to follow in subsequent change

73	P - - M/T-without A/C	6	200	C-1	D3DF-AA,AB	3	1	D3DZ 9510-A *CA-977		23A
73	P - - M/T-with A/C	6	200	C-1	D3DF-BA,BB	3	1	D3DZ 9510-B *CA-978	D3PZ 9510-AJ *CA-1419	23C
73	P- - M/T	6	200	C-1	D5PE-AJA	3	2	D3PZ 9510-AJ *CA-1419	None	23A
73	P - - A/T-without A/C	6	200	C-1	D3DF-CA	3	1	D3DZ 9510-C *CA-979	D3PZ 9510-AH *CA-1418	23B
73	P - - A/T-with A/C	6	200	C-1	D3DF-DA	3	1	D3DZ 9510-D *CA-980	D3PZ 9510-AH *CA-1418	23D
73	P - - A/T	6	200	C-1	D5PE-AHA	3	2	D3PZ 9510-AH *CA-1418	None	23B
73	P - - A/T-without A/C	6	200	C-1	D3DF-FA,FB	3	1	D3DZ 9510-F *CA-1045	D3PZ 9510-AS *CA-1431	23E
73	P - - A/T-with A/C	6	200	C-1	D3DF-GA,GB	3	1	D3DZ 9510-G *CA-1046	D3PZ 9510-AS *CA-1431	23F
73	P	6	200	C-1	D5PE-ASA	3	2	D3PZ 9510-AS *CA-1431		23F
74	P - - A/T without T/E and A/C	6	200	C-1	D4DE-JA	3	1	D4DZ 9510-J *CA-1182	D5PZ 9510-AM *CA-1425	23L
74	P - - A/T with A/C without T/E	6	200	C-1	D4DE-KA	3	1	D4DZ 9510-K *CA-1183	D5PZ 9510-AM *CA-1425	23M
74	P - - A/T with T/E	6	200	C-1	D4DE-EA,D4PE-AEA	3	1	D4DZ 9510-EA *CA-1108		23G

NOTE 1 - Incl. mounting gasket

NOTE 2 - Incl. (1) limiter, (1) mounting gasket

APPLICATION CHART

Refer to page 31 for Application Instructions

YEAR	MODEL	ENGINE CYL.	ENGINE C.I.D. (C.C.D.)	TYPE	IDENTIFICATION	ILLUS. SEC. 95 PAGE	NOTES	PART NUMBER	REPLACED BY	PARTS LIST 95.
9510	CARBURETOR ASSY. — Cont'd									

6 CYLINDER 3.3L (200 C.I.D) ENGINE

▲ Parts List to follow in subsequent change

74	P - - A/T with T/E and A/C	6	200	C-1	D4DE-FA	3	1	D4DZ 9510-FA *CA-1109	D5PZ 9510-AM *CA-1425	
74	P - - M/T with A/C without T/E	6	200	C-1	D4DE-HA	3		D4DZ 9510-HA *CA-1158	D5PZ 9510-AM *CA-1425	23J
74	P	6	200	C-1	D5PE-AMA	3	13	D5PZ 9510-AM *CA-1425	D5PZ 9510-AM *CA-1425	23R
74	P - - M/T without T/E and A/C	6	200	C-1	D4DE-GA	3		D4DZ 9510-GA *CA-1175	D5PZ 9510-AM *CA-1425	23K
74	P - - M/T without T/E and A/C	6	200	C-1	D4DE-ABA	3	1	D4DZ 9510-AB *CA-1175-A		23P
74	P - - M/T and A/C-without T/E	6	200	C-1	D4DE-ACA	3	1	D4DZ 9510-D *CA-1158-A	D5PZ 9510-AM *CA-1425	23T
74	P - - A/T without T/E and/or A/C	6	200	C-1	D4DE-JB	3	1	D4DZ 9510-JB *CA-1209		23N
74	P - - A/T and A/C without T/E	6	200	C-1	D4DE-KB	3	1	D4DZ 9510-KB *CA-1210	D5PZ 9510-AM *CA-1425	23Q
74	P - - A/T without T/E and/or A/C	6	200	C-1	D4DE-AFA	3		D4DZ 9510-AF *CA-1220	D5PZ 9510-AM *CA-1425	23R
74	P - - A/T with A/C	6	200	C-1	D4DE-AGA	3		D4DZ 9510-AG *CA-1221	D5PZ 9510-AM *CA-1425	23S
75	G,P - - M/T	6	200	C-1	D5DE-NA,NB	11	1	D5DZ 9510-N *CA-1339	D5PZ 9510-AU *CA-1433	23U
75	P - - A/T	6	200	C-1	D5DE-RA,RB	11	1	D5DZ 9510-R *CA-1340	D5PZ 9510-AU *CA-1433	23V
75	P	6	200	C-1	D5PE-AUA	11	2	D5PZ 9510-AU *CA-1433	None	23V
76	G,P - - M/T	6	200	C-1	D6BE-AA	11	1	D6DZ 9510-A *CA-1395	D6PZ 9510-M *CA-1542	31S
76	P - - A/T	6	200	C-1	D6BE-BB	11	1	D6DZ 9510-D *CA-1461	D6PZ 9510-M *CA-1542	31S
76	G,P	6	200	C-1	D6PE-MA	11	2	D6PZ 9510-M *CA-1542	None	31S
77	G,P - - M/T	6	200	C-1	D7BE-GA	11	1	D7DZ 9510-GA *CA-1628	D7PZ 9510-G *CA-1628-A	31U
77	G,P - - M/T	6	200	C-1	D7PE-GA	11	2	D7PZ 9510-G *CA-1628-A	None	31U
77	P - - A/T	6	200	C-1	D7BE-FA	11	1	D7DZ 9510-FA *CA-1627	D7PZ 9510-F *CA-1627-A	31U
77	P - - A/T	6	200	C-1	D7PE-FA	11	2	D7PZ 9510-F *CA-1627-A	None	31U
78	P - - M/T	6	200	C-1	D8BE-VA	11	1	D8BZ 9510-V *CA-1899		31X
78	P	6	200	C-1	D8PE-DEA	11		D8PZ 9510-DE *CA-1899-A	None	31X
78	P - - C3 - exc. Calif.	6	200	H-1	D8BE-RA	17	1	D8BZ 9510-R *CA-1884		40C
78	P - - C3-w/fuel economy carb-exc. Calif.	6	200	H-1	D8BE-AGA	17	1	D8BZ 9510-AG *CA-2032		40C
78	P - - C4-w/fuel economy Carb.-exc. Calif.	6	200	H-1	D8BE-AHA	17	1	D8BZ 9510-AH *CA-2033	None	40B

NOTE 1 - Incl. mounting gasket
NOTE 2 - Incl. (1) limiter, (1) mounting gasket
NOTE 13 - Incl. (1) C7AZ 9J500-B limiter, (1) D3DZ 9447-D gasket, (1) C8AZ 9447-C gasket

COPYRIGHT © 1986 — FORD MOTOR COMPANY — DEARBORN, MICHIGAN

APPLICATION CHART

Refer to page 31 for Application Instructions

YEAR	MODEL	ENGINE CYL.	ENGINE C.I.D. (C.C.D.)	TYPE	IDENTIFICATION	ILLUS. SEC. 95 PAGE	NOTES	PART NUMBER	REPLACED BY	PARTS LIST 95.
9510	CARBURETOR ASSY. — Cont'd									

6 CYLINDER 3.3L (200 C.I.D) ENGINE

▲ Parts List to follow in subsequent change

78 79	P - - C4-exc. Calif. P - - Canada & Hi-altitude carb.	6	200	H-1	D8BE-AAA	17	1	D8BZ 9510-AA *CA-1957		40B
78	P - - A/T-Calif.	6	200	H-1	D8BE-UC	17	1	D8BZ 9510-U *CA-1886		40D
78	P - - Hi-altitude carb	6	200	H-1	D8BE-AB	17	1	D8BZ 9510-A *CA-1881	D8BZ 9510-AA *CA-1957	40A
79	J	6	200	H-1	D9ZE-BKA	17	1	D9ZZ 9510-BK *CA-2250		40F
79	P - - A/T-with T/E -exc. Calif.	6	200	H-1	D9BE-AEA	17	1	D9BZ 9510-AE *CA-2184		40F
79	P - - A/T-without A/C -exc. Calif.	6	200	H-1	D9BE-LA	17	1	D9BZ 9510-L *CA-2185		40F
79	P - -A/T with A/C -exc. Calif.	6	200	H-1	D9BE-AMA	17	1	D9BZ 9510-AM *CA-2295		40F
79	P - - A/T-without A/C -Calif.	6	200	H-1	D9BE-AHA,MA	17	1	D9BZ 9510-M *CA-2119		40E
79	P - - A/T-with A/C -Calif.	6	200	H-1	D9BE-AJA,KA	17	1	D9BZ 9510-K *CA-2118		40E
79	P - - M/T-without A/C	6	200	C-1	D9BE-UA	11	1	D9BZ 9510-U *CA-2131	D9PZ 9510-BFA *CA-3131	31Y
79	P - - M/T-with A/C	6	200	C-1	D9BE-RA	11	1	D9BZ 9510-R *CA-2130	D9PZ 9510-BFA *CA-3131	31Y
79	P - - M/T	6	200	C-1	E5PE-BFA	11		D9PZ 9510-BFA *CA-3131		31Y

6 CYLINDER 4.1L (250 C.I.D) ENGINE

▲ Parts list to follow in a subsequent change

73	C - - M/T	6	250	C-1	D30F-BA,BC	4	1	D30Z 9510-B *CA-996	D4PZ 9510-AJ *CA-1421	31A
73	C,P - - A/T	6	250	C-1	D30F-CA,CB,CC	4	1	D30Z 9510-C *CA-997	D4PZ 9510-AJ *CA-1421	31B
74	C,P - - A/T without T/E	6	250	C-1	D4DE-TA	4	1	D4DZ 9510-TA *CA-1192	D4PZ 9510-AJ *CA-1421	31G
73/74	C,P	6	250	C-1	D4PE-AJA	4	2	D4PZ 9510-AJ *CA-1421		31G
74	P - - A/T with T/E	6	250	C-1	D4DE-AA,AB	4	1	D4DZ 9510-AA *CA-1104	D4PZ 9510-AK *CA-1422	31C
74	P - - M/T with T/E	6	250	C-1	D4DE-BA	4	1	D4DZ 9510-BA *CA-1105	D4PZ 9510-AK *CA-1422	
74	P - - M/T without T/E	6	250	C-1	D4DE-SA,SB	4	1	D4DZ 9510-S *CA-1178	D4PZ 9510-AJ *CA-1421	31F
74	P - - M/T with T/E	6	250	C-1	D4DE-BB	4	1	D4DZ 9510-BB *CA-1193		31E
74	P - - with T/E	6	250	C-1	D4PE-AKA	4	2	D4PZ 9510-AK *CA-1472	None	31C
74	P - - A/T without T/E	6	250	C-1	D4DE-AAA	4	1	D4DZ 9510-E *CA-1205	D4PZ 9510-AJ *CA-1421	31H
74	P - - A/T	6	250	C-1	D4DE-ADA	4	1	D4DZ 9510-AD *CA-1212	None	31J

NOTE 1 - Incl. mounting gasket
NOTE 2 - Incl. (1) limiter, (1) mounting gasket

APPLICATION CHART

Refer to page 31 for Application Instructions

YEAR	MODEL	ENGINE CYL.	ENGINE C.I.D. (C.C.D.)	TYPE	IDENTIFICATION	ILLUS. SEC. 95 PAGE	NOTES	PART NUMBER	REPLACED BY	PARTS LIST 95.
9510	CARBURETOR ASSY. — Cont'd									

6 CYLINDER 4.1L (250 C.I.D) ENGINE

▲ Parts list to follow in a subsequent change

75	G,P - - M/T exc. Calif.- w/o catalyst	6	250	C-1	D5DE-EA,EB	11	1	D5DZ 9510-E *CA-1229	D5PZ 9510-E *CA-1432	31K
75	G,P - - M/T Calif.	6	250	C-1	D5DE-FA,FB	11	1	D5DZ 9510-F *CA-1232	D5PZ 9510-AT *CA-1432	31L
75 76	G,P - - A/T exc. Calif. G,P - - A/T Canada-	6	250	C-1	D5DE-GA,GB	11	1	D5DZ 9510-G *CA-1233	D5PZ 9510-AT *CA-1432	31N
75/76	G,P - - A/T Calif.- "Before 10/1/75"	6	250	C-1	D5DE-DA,DB	11	1	D5DZ 9510-D *CA-1235	D5PZ 9510-AT *CA-1432	31M
75	G,P - - A/T-w/catalyst	6	250	C-1	D5DE-YA	11	1	D5DZ 9510-Y *CA-1341	D5PZ 9510-AT *CA-1432	31P
75	G,P - - M/T exc. Calif.- w/catalyst	6	250	C-1	D5DE-ZA,ZB	11	1	D5DZ 9510-Z *CA-1342	None	31Q
75	G,P - - M/T Calif.	6	250	C-1	D5DE-MA,MB	11	1	D5DZ 9510-M *CA-1356	D5PZ 9510-AT *CA-1432	31R
75	G,P	6	250	C-1	D5PE-ATA	11	2	D5PZ 9510-AT *CA-1432		31N
75	G,P - - A/T	6	250	C-1	D5DE-AAA,AAB	11	1	D5DZ 9510-AA *CA-1391		31P
76	G,P - - A/T exc. Calif.- "Before 12/15/75"	6	250	C-1	D6DE-BB	11	1	D6DZ 9510-B *CA-1394	D6PZ 9510-P *CA-1544	31S
76	G,P - - A/T with A/C- exc. Calif.- "From 12/15/75"	6	250	C-1	D6DE-EA	11	1	D6DZ 9510-H *CA-1541	D6PZ 9510-P *CA-1544	31S
76	G,P - - exc. Calif.	6	250	C-1	D6PE-PA	11	2	D6PZ 9510-P *CA-1544		31S
76	G,P - - M/T exc. Calif.	6	250	C-1	D6DE-AB	11	1	D6DZ 9510-C *CA-1400	D6PZ 9510-P *CA-1544	31S
76	G,P - - A/T Calif.- "From 10/1/75"	6	250	C-1	D6DE-CA	11	1	D6DZ 9510-E *CA-1519	D6PZ 9510-N *CA-1543	31S
76	G,P - - M/T Calif.	6	250	C-1	D6BE-CA	11	1	D6DZ 9510-G *CA-1535	D6PZ 9510-N *CA-1543	31S
76	G,P - - Calif.	6	250	C-1	D6PE-NA	11	2	D6PZ 9510-N *CA-1543		31S
77	G,P - - M/T-exc. Calif.	6	250	C-1	D7BE-AB	11	1	D7DZ 9510-AB *CA-1707	D7PZ 9510-A *CA-3182	31T
77	P - - M/T-exc. Calif.	6	250	C-1	D7BE-AA	11	1	D7DZ 9510-AA *CA-1623	D7PZ 9510-P *CA-1951	31T
77	G - - A/T-Calif.	6	250	C-1	D7DE-GC	11	1	D7DZ 9510-G *CA-1635	D7PZ 9510-M *CA-1949	31V
77	P - - A/T-Calif.	6	250	C-1	D7BE-HB	11	1	D7DZ 9510-HA *CA-1629	D7PZ 9510-M *CA-1949	31T
77	G,P	6	250	C-1	D7PE-MA	11	2	D7PZ 9510-M *CA-1949		31V
77	G,P - - A/T exc. Calif. "Before 4/15/77"	6	250	C-1	D7BE-NA	11	1	D7DZ 9510-NA *CA-1712	D7PZ 9510-E *CA-1947	31T
77	G,P	6	250	C-1	D7PE-EA	11	2	D7PZ 9510-E *CA-1947		31T
77	G - - A/T without A/C -exc. Calif.- "Before 2/7/77"	6	250	C-1	D7BE-BA	11	1	D7DZ 9510-BA *CA-1624	D7PZ 9510-E *CA-1947	31T

NOTE 1 - Incl. mounting gasket
NOTE 2 - Incl. (1) limiter, (1) mounting gasket

COPYRIGHT © 1986 — FORD MOTOR COMPANY — DEARBORN, MICHIGAN

APPLICATION CHART

Refer to page 31 for Application Instructions

YEAR	MODEL	ENGINE CYL.	ENGINE C.I.D. (C.C.D.)	TYPE	IDENTIFICATION	ILLUS. SEC. 95 PAGE	NOTES	PART NUMBER	REPLACED BY	PARTS LIST 95.
9510	CARBURETOR ASSY. — Cont'd									

6 CYLINDER 4.1L (250 C.I.D.) ENGINE

▲ Parts list to follow in subsequent change

77	G - - A/T without A/C -exc. Calif.- "From 2/7/77 to 6/15/77"	6	250	C-1	D7BE-BC	11	1	D7DZ 9510-BC *CA-1624-A	D7PZ 9510-E *CA-1947	31T
77	G - - A/T without A/C -exc. Calif. "From 6/15/77"	6	250	C-1	D7BE-RA	11	1	D7DZ 9510-RA *CA-1768	D7PZ 9510-T *CA-1758	31T
77	G - - A/T with A/C -exc. Calif.- "Before 2/7/77"	6	250	C-1	D7DE-DA	11	1	D7DZ 9510-D *CA-1633	D7DZ 9510-DD *CA-1633-A	31T
77	G - - A/T with A/C -exc. Calif.- "From 2/7/77 to 4/15/77"	6	250	C-1	D7DE-DD	11	1	D7DZ 9510-DD *CA-1633-A	D7PZ 9510-AS *CA-1633-B	31T
77	G - - A/T with A/C -exc. Calif. - "From 4/15/77 to 6/15/77"	6	250	C-1	D7DE-ABA	11	1	D7DZ 9510-ABA *CA-1820	D7PZ 9510-A *CA-3182	31T
77	G,P	6	250	C-1	D7PE-PA	11	2	D7PZ 9510-P *CA-1951		31T
77	G - - A/T with A/C -exc. Calif. "From 6/15/77"	6	250	C-1	D7DE-VA	11	1	D7DZ 9510-V *CA-1769	D7PZ 9510-T *CA-1958	31T
77	G - - A/T-with A/C -exc. Calif.	6	250	C-1	D7PE-ASA	11	3	D7PZ 9510-AS *CA-1633-B		31T
77	G,P	6	250	C-1	D7PE-TA	11	2	D7PZ 9510-T *CA-1958		31T
78	G - - M/T	6	250	C-1	D8DE-BB	11	1	D8DZ 9510-B *CA-1822	None	31W
78	G - - A/T-with A/C -exc. Calif.	6	250	C-1	D8KE-BA,BB	11	1	D8KZ 9510-B *CA-1821	D8PZ 9510-DJ *CA-2605	31W
78	G - - A/T-without A/C -exc. Calif.	6	250	C-1	D8DE-EA,EB	11	1	D8DZ 9510-E *CA-1824	D8PZ 9510-DJ *CA-2605	31W
78	G - - A/T	6	250	C-1	D8PE-DJA	11		D8PZ 9510-DJ *CA-2605		31W
78	G - - A/T-with A/C -Calif.	6	250	C-1	D8DE-DA	11	1	D8DZ 9510-D *CA-1823	D8PZ 9510-DK *CA-2606	31W
78	G - - A/T-without A/C Calif.	6	250	C-1	D8KE-AA	11	1	D8KZ 9510-A *CA-1943	D8PZ 9510-DK *CA-2606	31W
78	G - - A/T-Calif.	6	250	C-1	D8PE-DKA	11		D8PZ 9510-DK *CA-2606		31W
79	G - - A/T-without A/C -Calif.	6	250	C-1	D9DE-BA,BB	11	1	D9DZ 9510-B *CA-2126	D9PZ 9510-ANA *CA-3133	31Z
79	G - - A/T-with A/C -Calif.	6	250	C-1	D9DE-AA,AB	11	1	D9DZ 9510-A *CA-2125		31Z
79	G - - A/T Calif.	6	250	C-1	E5PE-ANA	11		D9PZ 9510-ANA *CA-3133		31Z
79	G - - A/T-without A/C with T/E-exc. Calif.	6	250	C-1	D9DE-DA,DC	11	1	D9DZ 9510-D *CA-2128		31Z
79	G - - A/T-with A/C with T/E-exc. Calif.	6	250	C-1	D9DE-CA,CC	11	1	D9DZ 9510-C *CA-2127		31Z
79	G - - A/T with T/E, exc. Calif.	6	250	C-1	E5PE-BKA	12		E0PZ 9510-BKA *CA-3130		31Z

NOTE 1 - Incl. mounting gasket
NOTE 2 - Incl. (1) limiter, (1) mounting gasket
NOTE 3 - Incl. (1) D7RE 9C485-AA decal, (1) 373846-S tee, (1) 380614-S cap, (1) 381335-S210A hose

APPLICATION CHART

Refer to page 31 for Application Instructions

YEAR	MODEL	ENGINE CYL.	ENGINE C.I.D. (C.C.D.)	TYPE	IDENTIFICATION	ILLUS. SEC. 95 PAGE	NOTES	PART NUMBER	REPLACED BY	PARTS LIST 95.
9510	CARBURETOR ASSY. — Cont'd									

6 CYLINDER 4.1L (250 C.I.D.) ENGINE

▲ Parts list to follow in subsequent change

79	G - - A/T-without A/C-without T/E-exc. Calif.	6	250	C-1	D9DE-VA	11	1	D9DZ 9510-V *CA-2347	D9PZ 9510-BJA *CA-3132	31Z
79	G - - A/T-with A/C-without T/E-exc. Calif.	6	250	C-1	D9DE-UA	11	1	D9DZ 9510-U *CA-2346		31Z
79	G - - A/T without T/E-exc. Calif.	6	250	C-1	E5PE-BJA	11		D9PZ 9510-BJA *CA-3132		31Z
79	G - - M/T	6	250	C-1	D9DE-EA,EB	11	1	D9DZ 9510-E *CA-2129	D9PZ 9510-BGA *CA-3134	31ZZ
79	G - - M/T	6	250	C-1	E5PE-BGA	11		D9PZ 9510-BGA *CA-3134		31Z

NOTE 1 - Incl. mounting gasket

COPYRIGHT © 1986 — FORD MOTOR COMPANY — DEARBORN, MICHIGAN

APPLICATION CHART

Refer to page 31 for Application Instructions

8 CYLINDER ENGINES

ENGINE C.I.D.	1973	1974	1975	1976	1977	1978	1979		
302	C,P	C,P	G,P	G,P	F,G,P,V	F,G,P,V	A,F,G,J,P,V		
351	A,C,F,Y	C,F,Y	C,F,G,Y	C,F,G,Y	A,F,G,V	A,F	A,F		
400	A,C,Y	A,C,F,Y	A,C,F,Y	A,C,F,Y	A,D,F,K	A,D,F,K	D,K		
429	A,C,Y								
460	A,D,K	A,C,D,F K,Y	A,C,D,F, K,Y	A,C,D,F, K,Y	A,D,K	A,D,K			
460P/C	A,C,Y	A,C,Y	A,C,Y	A,C,Y	A	A			

APPLICATION CHART

Refer to page 31 for Application Instructions

YEAR	MODEL	ENGINE CYL.	ENGINE C.I.D. (C.C.D.)	TYPE	IDENTIFICATION	ILLUS. SEC. 95 PAGE	NOTES	PART NUMBER	REPLACED BY	PARTS LIST 95.
9510	CARBURETOR ASSY. — Cont'd									

8 CYLINDER 5.0L (302 C.I.D) ENGINE

▲ Parts List to follow in subsequent change

73	C,P - - M/T	8	302	F-2	D3OF-AD	5	1	D3OZ 9510-A *CA-995	D4PZ 9510-G *CA-1026-B	24A
73	C,P - - A/T	8	302	F-2	D3GF-AD	5	1	D3GY 9510-A *CA-985	D4PZ 9510-G *CA-1026-B	24B
73	C,P	8	302	F-2	D3AF-ABA,D3DE-AA, D3DF-EA,D3GF-BA, BB,BC,D3PF-EA, EB,D3OF-EA,FA,JA, D3ZF-EA,EB,GA	5	16	D3OZ 9510-D *CA-1026	D4PZ 9510-G *CA-1026-B	24C
73	C,P	8	302	F-2	D3ZK-NA,NB,D4PE-CFA	5	17	D3PZ 9510-CF *CA-1733	NONE	24G
73/74	C,P	8	302	F-2	D3GF-AE,AF,D4OE-JA, D4PE-CGA	5	17	D3PZ 9510-CG *CA-1734	None	24G
74	C - - A/T	8	302	F-2	D4DE-NB	5	1	D4DZ 9510-ND *CA-1191	D4PZ 9510-Y *CA-1195-A	24G
74	C - - M/T with A/C without T/E	8	302	F-2	D4OE-EA	5	1	D4OZ 9510-E *CA-1180	D4OZ 9510-H *CA-1026-A	24K
74	C,P - - without T/E	8	302	F-2	D4OE-GA D4PE-GA	5	18	D4OZ 9510-H *CA-1026-A	D4PZ 9510-G *CA-1026-B	24L
74	C,P - - without T/E	8	302	F-2	D4PE-GB	5	18	D4PZ 9510-G *CA-1026-B		24L
74	P - - M/T	8	302	F-2	D4DF-AA	5	1	D4DZ 9510-A *CA-1086	D4PZ 9510-Y *CA-1195-A	24D
74	P - - A/T	8	302	F-2	D4DF-BA	5	1	D4DZ 9510-B *CA-1085	D4PZ 9510-Y *CA-1195-A	24E
74	P - - M/T without T/E	8	302	F-2	D4DE-PA	5	1	D4DZ 9510-P *CA-1184	D4PZ 9510-G *CA-1026-B	24H
74	P - - A/T without T/E	8	302	F-2	D4DE-RB	5	1	D4DZ 9510-R *CA-1185	D4PZ 9510-G *CA-1026-B	24J
74	P - - T/E	8	302	F-2	D4DE-UA,VA, D4PE-YA	5	20	D4DZ 9510-C *CA-1195	D4PZ 9510-Y *CA-1195-A	24F

NOTE 1 - Incl. mounting gasket
NOTE 16 - Incl. (2) C7AZ 9J500-B limiter, (1) 375016-S2 screw
NOTE 17 - Incl. (2) D6PZ 9J500-A limiter, (1) D4OZ 9C477-A gasket, (1) D3OZ 9447-B gasket, (1) C9AZ 9C786-A adapter
NOTE 18 - Incl. (1) D3OZ 9447-B gasket, (1) D4OZ 9C477-A gasket, (2) C7AZ 9J500-B limiters, (1) 375016-S2 screw
NOTE 20 - Incl. (1) D3OZ 9447-B gasket, (1) D3OZ 9447-D gasket, (2) C7AZ 9J500-B limiter, (1) 375016-S2 screw

APPLICATION CHART

Refer to page 31 for Application Instructions

YEAR	MODEL	ENGINE CYL.	ENGINE C.I.D. (C.C.D.)	TYPE	IDENTIFICATION	ILLUS. SEC. 95 PAGE	NOTES	PART NUMBER	REPLACED BY	PARTS LIST 95.
9510	CARBURETOR ASSY. — Cont'd									

8 CYLINDER 5.0L (302 C.I.D) ENGINE

▲ Parts List to follow in subsequent change

74	P - - T/E	8	302	F-2	D4PE-YC	5	20	D4PZ 9510-Y *CA-1195-A	None	24F
75	G - - A/T exc. Calif.	8	302	F-2	D5DE-AA	9	1	D5DZ 9510-A *CA-1231	D5PZ 9510-BE *CA-1502	24M
75	G,P - - exc. Calif.	8	302	F-2	D5PE-BEA	9	19	D5PZ 9510-BE *CA-1502	D6PZ 9510-E *CA-1741	24R
75	G,P - - exc. Calif.	8	302	F-2	D6PE-EA	9	16	D6PZ 9510-E *CA-1742		24T
75	G,P - - M/T exc. Calif.	8	302	F-2	D5DE-BA	9	1	D5DZ 9510-B *CA-1230	D5PZ 9510-BG *CA-1230-A	24N
75	G,P - - M/T exc. Calif.	8	302	F-2	D5PE-BGA	9	19	D5PZ 9510-BG *CA-1230-A	None	24N
75	G,P - - A/T Calif.	8	302	F-2	D5DE-JA	9	1	D5DZ 9510-J *CA-1317	D5PZ 9510-BF *CA-1503	24P
75	G,P - - Calif	8	302	F-2	D5PE-BFA	9	19	D5PZ 9510-BF *CA-1503	D6PZ 9510-G *CA-1742	24P
75	G - - A/T exc. Calif. and Canada	8	302	F-2	D5DE-VA	9	1	D5DZ 9510-V *CA-1348	D5PZ 9510-BE *CA-1502	24R
75	G - - A/T Canada	8	302	F-2	D5OE-MA	9	1	D5OZ 9510-M *CA-1371		24S
75	P - - A/T exc. Calif.	8	302	F-2	D5ZE-JA	9	1	D5ZZ 9510-J *CA-1321	D5PZ 9510-BJ *CA-1321-A	24Q
75	P - - A/T exc. Calif.	8	302	F-2	D5PE-BJA	9	22	D5PZ 9510-BJ *CA-1321-A	None	24Q
75	G,P - - A/T Calif.	8	302	F-2	D5DE-AEA	9	1	D5DZ 9510-AE *CA-1455	D5PZ 9510-BF *CA-1503	24T
75	G,P - - M/T exc. Calif.	8	302	F-2	D5DE-AFA	9	1	D5DZ 9510-AF *CA-1453	D5PZ 9510-BH *CA-1453-A	24T
75	G,P - - M/T exc. Calif.	8	302	F-2	D5PE-BHA	9	19	D5PZ 9510-BH *CA-1453-A	None	24T
75	G,P - - A/T exc. Calif.	8	302	F-2	D5WE-FA	9	1	D5WZ 9510-F *CA-1454	D5PZ 9510-BE *CA-1502	24T
76	G,P - - A/T exc. Calif.	8	302	F-2	D64E-AA	9	1	D64Z 9510-A *CA-1481	D6PZ 9510-G *CA-1742	24T
76	G,P	8	302	F-2	D6PE-GA	9	16	D6PZ 9510-G *CA-1742		24T
76	G,P - - M/T- exc. Calif	8	302	F-2	D64E-DA	9	1	D64Z 9510-D *CA-1554		24T
77	G - - M/T	8	302	F-2	D7DE-LA	9	1	D7DZ 9510-L *CA-1559	D7PZ 9510-BS *CA-2213	24U
77	G - - M/T	8	302	F-2	D7PE-BSA	9	11	D7PZ 9510-BS *CA-2213	None	24U
77	G,P,V - - A/T-Calif. or Hi-altitude	8	302	F-2 (VV)	D7ZE-GD,GE	13,14, 15	1	D7ZZ 9510-G *CA-1617	D7PZ 9510-DA *CA-2516	38B
77	G,P,V - - A/T Calif. or Hi-altitude carb.	8	302	F-2 (VV)	D8PE-DAA	13,14, 15		D7PZ 9510-DA *CA-2516		38B
77	F - - A/T "Before 2/1/77"	8	302	F-2	D7WE-EA	9	1	D7WZ 9510-E *CA-1700	D7WZ 9510-EB *CA-1760	24U

NOTE 1 - Incl. mounting gasket
NOTE 11 - Incl. (2) limiters, (2) mounting gaskets
NOTE 16 - Incl. (2) C7AZ 9J500-B limiter, (1) 375016-S2 screw
NOTE 19 - Incl. (2) C7AZ 9J500-B limiters, (1) D5ZZ 9C477-A gasket, (1) D5OZ 9447-B gasket, (1) 380614-S cap
NOTE 20 - Incl. (1) D3OZ 9447-B gasket, (1) D3OZ 9447-D gasket, (2) C7AZ 9J500-B limiter, (1) 375016-S2 screw
NOTE 22 - Incl. (1) D5OZ 9447-B gasket, (1) D5ZZ 9C477-A gasket, (2) C7AZ 9J500-C limiters, (1) 380614-S cap

COPYRIGHT © 1986 — FORD MOTOR COMPANY — DEARBORN, MICHIGAN

APPLICATION CHART

Refer to page 31 for Application Instructions

YEAR	MODEL	ENGINE CYL.	ENGINE C.I.D. (C.C.D.)	TYPE	IDENTIFICATION	ILLUS. SEC. 95 PAGE	NOTES	PART NUMBER	REPLACED BY	PARTS LIST 95.
9510	CARBURETOR ASSY. — Cont'd									

8 CYLINDER 5.0L (302 C.I.D) ENGINE

▲ Parts List to follow in subsequent change

77	F - - A/T "From 2/1/77"	8	302	F-2	D7WE-EB	9	1	D7WZ 9510-EB *CA-1760	D7PZ 9510-BZ *CA-2214	24U
77	F - - A/T	8	302	F-2	D7PE-BZA	9	11	D7PZ 9510-BZ *CA-2214		24U
77	P - - A/T without A/C -exc. Calif.	8	302	F-2	D7BE-LA	9	1	D7DZ 9510-LA *CA-1557		24U
77	P - - A/T with A/C -exc. Calif.	8	302	F-2	D7BE-PA	9	1	D7DZ 9510-PA *CA-1710		24U
77	G,V - - A/T-exc. Calif.- "Before 4/18/77"	8	302	F-2	D7DE-KA	9	1	D7DZ 9510-K *CA-1560	D7PZ 9510-CB *CA-2215	24U
77	G,V - - A/T-exc Calif. "From 4/18/77"	8	302	F-2	D74E-BA	9	1	D74Z 9510-B *CA-1862		24W
77	G,P,V - - A/T-exc. Calif.	8	302	F-2	D7PE-CBA	9	11	D7PZ 9510-CB *CA-2215		24W
77	F,G,P - - A/T Hi-altitude carb "Before 11/1/76"	8	302	F-2	D7BE-JA	9	1	D7DZ 9510-JA *CA-1576	D7DZ 9510-Y *CA-1790	24U
77	F,G,P - - A/T Hi-altitude carb- "From 11/1/76 to 5/2/77"	8	302	F-2	D7BE-YA	9	1	D7DZ 9510-Y *CA-1790	D7PZ 9510-BR *CA-2216	24V
77	G,P,V - - A/T-Hi-altitude carb.	8	302	F-2	D7PE-BRA	9	11	D7PZ 9510-BR *CA-2216	None	24V
77	F,G,P - - A/T Hi-altitude carb "From 5/2/77"	8	302	F-2	D7BE-ABA	9	1	D7DZ 9510-S *CA-1864	D7PZ 9510-BR *CA-2216	24V
78	G - - M/T	8	302	F-2	D8DE-HA	9	1	D8DZ 9510-H *CA-1929	None	24AA
78	F "Before 4/1/78"	8	302	F-2	D80E-EA	9	1	D80Z 9510-E *CA-1934	D8PZ 9510-CB *CA-2617	24AA
78	F "From 4/10/78"	8	302	F-2	D80E-TA	9	1	D80Z 9510-T *CA-2049	D8PZ 9510-CB *CA-2617	24AA
78	F	8	302	F-2	D8PE-CBA	9		D8PZ 9510-CB *CA-2617		24AA
78	G - - A/T with A/C- exc. Calif.	8	302	F-2	D84E-EA	9	1	D84Z 9510-E *CA-1992	D8PZ 9510-CA *CA-2616	24Y
78	G - - A/T without A/C- exc. Calif.	8	302	F-2	D84E-GA	9	1	D84Z 9510-G *CA-1989	D8PZ 9510-CA *CA-2616	24Y
78	G - - A/T-exc. Calif.	8	302	F-2	D8PE-CAA	9		D8PZ 9510-CA *CA-2616		24Y
78	P - - A/T with A/C- exc. Calif.	8	302	F-2	D8KE-DA	9	1	D8KZ 9510-D *CA-1979	D8PZ 9510-CF *CA-2619	24Y
78	P - - A/T without A/C- exc. Calif.	8	302	F-2	D8KE-EA	9	1	D8KZ 9510-E *CA-1980	D8PZ 9510-CF *CA-2619	24Y
78	P - - A/T-exc. Calif.	8	302	F-2	D8PE-CFA	9		D8PZ 9510-CF *CA-2619		24Y
78	G,P - - A/T-Calif.	8	302	F-2 (VV)	D8BE-EB	13,14, 15	1	D8BZ 9510-E *CA-1847	D8PZ 9510-CY *CA-2514	38C
78	G,P - - A/T Calif.	8	302	F-2 (VV)	D8PE-CYA	13,14, 15		D8PZ 9510-CY *CA-2514	D9PZ 9510-BH *CA-2823	38C
78	G,P - - Hi-altitude carb. - with A/C	8	302	F-2	D8ME-AA	9	1	D8MZ 9510-A *CA-1944	D8PZ 9510-CC *CA-2618	24Z
78	G,P - - Hi-altitude carb. without A/C	8	302	F-2	D8ME-BA	9	1	D8MZ 9510-B *CA-1969		24Z

NOTE 1 - Incl. mounting gasket

NOTE 11 - Incl. (2) limiters, (2) mounting gaskets

APPLICATION CHART

Refer to page 31 for Application Instructions

YEAR	MODEL	ENGINE CYL.	ENGINE C.I.D. (C.C.D.)	TYPE	IDENTIFICATION	ILLUS. SEC. 95 PAGE	NOTES	PART NUMBER	REPLACED BY	PARTS LIST 95.
9510	CARBURETOR ASSY. — Cont'd									

8 CYLINDER 5.0L (302 C.I.D) ENGINE

▲ Parts List to follow in subsequent change

78	G,P - - A/T- Hi-altitude carb.	8	302	F-2	D8PE-CCA	9		D8PZ 9510-CC *CA-2618	None	24Z
78	V - - exc. Calif.	8	302	F-2 (VV)	D84E-DB	13,14, 15	1	D84Y 9510-D *CA-1880	D8PZ 9510-DB *CA-1880-A	38C
78	V - - exc. Calif.	8	302	F-2 (VV)	E0PE-BA	13,14, 15		D8PZ 9510-DB *CA-1880-A		38C
78 79	V - - Calif. V - - exc. Calif.-	8	302	F-2 (VV)	D84E-KA	13,14 15	1	D84Y 9510-K *CA-1999	D8PZ 9510-KA *CA-1999-B	38C
78 79	V - - Calif. V - - exc. Calif.	8	302	F-2 (VV)	E0PE-BA	13,14, 15		D8PZ 9510-KA *CA-1999-B		38C
78/79	V	8	302	F-2 (VV)	E0PE-BA	13,14, 15		D8PZ 9510-BA *CA-3128		38C
79	A - - with A/C -Calif.	8	302	F-2 (VV)	D9AE-CB	13,14, 15	None	D9AZ 9510-C *CA-2106	D9PZ 9510-BE *CA-2821	38E
79	A - - Calif.	8	302	F-2 (VV)	D9PE-BEA	13,14, 15		D9PZ 9510-BE *CA-2821		38E
79	A - - without A/C -Calif.	8	302	F-2 (VV)	D9AE-ZB	13,14, 15	None	D9AZ 9510-Z *CA-2179	D9PZ 9510-BE *CA-2821	38E
79	A - - w/2.26 axle ratio-exc. Calif. "Before 3/5/79"	8	302	F-2 (VV)	D9AE-JB	13,14, 15	None	D9AZ 9510-J *CA-2107	D9PZ 9510-BF *CA-2107-A	38E
79	A - - exc. Calif.	8	302	F-2 (VV)	D9PE-BFA	13,14, 15		D9PZ 9510-BF *CA-2107-A		38E
79	A - - w/2.26 axle ratio-exc. Calif. "From 3/5/79"	8	302	F-2 (VV)	D9AE-AZA	13,14, 15	None	D9AZ 9510-AZ *CA-2290	D9PZ 9510-BD *CA-2820	38E
79	A - - w/2.73 axle ratio-exc. Calif.	8	302	F-2 (VV)	D9AE-YB	13,14, 15	None	D9AZ 9510-Y *CA-2108	D9PZ 9510-BD *CA-2820	38E
79	A - - exc. Calif.	8	302	F-2 (VV)	D9PE-BDA	13,14, 15		D9PZ 9510-BD *CA-2820		38E
79 79 79 79 79	F-w/A/C-exc. Calif.- "Before 6/25/79" G - - A/T with A/C exc. Calif. J,P - - A/T and 2.26 axle ratio-with A/C-exc. Calif.- "Before 3/26/79" J - - A/T and 3.08 axle ratio-with A/C-exc. Calif.- "Before 4/2/79" P - - A/T and 3.08 axle ratio-with A/C-exc. Calif.	8 8 8 8 8	302 302 302 302 302	F-2	D9DE-RA,RB	9	1	D9DZ 9510-R *CA-2166	D9PZ 9510-T *CA-2808	24AB
79	F - - with A/C-exc. Calif.- "From 6/25/79"	8	302	F-2	D94E-LB	9	1	D94Z 9510-L *CA-2560	D9PZ 9510-BA *CA-2817	24AB
79	F - - exc. Calif.	8	302	F-2	D9PE-BAA	9		D9PZ 9510-BA *CA-2817		24AB
79	J,P - - A/T and 2.26 axle ratio-with A/C-exc. Calif.- "From 3/26/79"	8	302	F-2	D9DE-RD	9	1	D9DZ 9510-RD *CA-2296	D9PZ 9510-T *CA-2808	24AB

NOTE 1 - Incl. mounting gasket

COPYRIGHT © 1986 — FORD MOTOR COMPANY — DEARBORN, MICHIGAN

APPLICATION CHART

Refer to page 31 for Application Instructions

YEAR	MODEL	ENGINE CYL.	ENGINE C.I.D. (C.C.D.)	TYPE	IDENTIFICATION	ILLUS. SEC. 95 PAGE	NOTES	PART NUMBER	REPLACED BY	PARTS LIST 95.
9510	CARBURETOR ASSY. — Cont'd									

8 CYLINDER 5.0L (302 C.I.D) ENGINE

▲ Parts List to follow in subsequent change

79	J - - A/T and 3.08 axle ratio–with A/C–exc. Calif.– "From 4/2/79"	8	302	F-2	D9ZE-BHB	9	1	D9ZZ 9510-BH *CA-2298	None	24AB
79	F-w/o A/C–exc. Calif.– "Before 6/25/79"	8	302	F-2	D9DE-SA	9	1	D9DZ 9510-S *CA-2167	D9PZ 9510-T *CA-2808	24AB
79	G - - A/T without A/C exc. Calif.	8	302							
79	J,P - - A/T and 2.26 axle ratio–without A/C–exc. Calif.– "Before 3/26/79"	8	302							
79	J - - A/T and 3.08 axle ratio–without A/C–exc. Calif.– "Before 4/2/79"	8	302							
79	P - - A/T and 3.08 axle ratio–without A/C–exc. Calif.	8	302							
79	F - - without A/C–exc. Calif.– "From 6/25/79"	8	302	F-2	D94E-KB	9	1	D94Z 9510-K *CA-2559		24AB
79	J,P - - A/T and 2.26 axle ratio–without A/C–exc. CaliF.– "From 3/26/79"	8	302	F-2	D9DE-SC	9	1	D9DZ 9510-SC *CA-2297	D9PZ 9510-T *CA-2808	24AB
79	F,G,J,P - - exc. Calif.–A/T	8	302	F-2	D9PE-TA	9		D9PZ 9510-T *CA-2808		24AB
79	J - - A/T and 3.08 axle ratio without A/C–exc. Calif.– "From 4/2/79"	8	302	F-2	D9ZE-BJB	9	1	D9ZZ 9510-BJ *CA-2299	None	24AB
79	G,P - - A/T–with A/C –Calif.	8	302	F-2 (VV)	D9DE-HB	13,14, 15	None	D9DZ 9510-H *CA-2109	D9PZ 9510-BH *CA-2823	38D
79	G,P - - A/T–without A/C –Calif.	8	302	F-2 (VV)	D9BE-AFA	13,14, 15	None	D9BZ 9510-AF *CA-2183	D9PZ 9510-BH *CA-2823	38D
79	G,P - - A/T with A/C–Hi–altitude carb.	8	302	F-2	D9ME-BA	9	1	D9MZ 9510-B *CA-2248	None	24AB
79	G,P - - A/T without A/C–Hi–altitude carb.	8	302	F-2	D9ME-CA	9	1	D9MZ 9510-C *CA-2249	None	24AB
79	G - - M/T "Before 5/7/79"	8	302	F-2	D9DE-NA,NB	9	None	D9DZ 9510-N *CA-2186	D9PZ 9510-Z *CA-2813	24AB
79	G - - M/T	8	302	F-2	D9PE-ZA	9		D9PZ 9510-Z *CA-2813	None	24AB
79	J - - Calif. with A/C	8	302	F-2 (VV)	D9ZE-AZB	13,14, 15	None	D9ZZ 9510-AZ *CA-2104	D9PZ 9510-BH *CA-2823	38F
79	G,J,P - - Calif.–A/T	8	302	F-2 (VV)	D9PE-BHA	13,14, 15		D9PZ 9510-BH *CA-2823		38D
79	J - - Calif. without A/C	8	302	F-2 (VV)	D9ZE-BEA	13,14, 15	None	D9ZZ 9510-BE *CA-2194	D9PZ 9510-BH *CA-2823	38F
79	J - - A/T with A/C–Hi–altitude carb.	8	302	F-2	D9ZE-BFA,BFB	9	None	D9ZZ 9510-BF *CA-2251	None	24AB
79	J - - A/T without A/C–Hi–altitude carb.	8	302	F-2	D9ZE-BGA,BGB	9	None	D9ZZ 9510-BG *CA-2252		24AB
79	J,P - - M/T–with A/C	8	302	F-2	D9BE-VB	9	1	D9BZ 9510-V *CA-2163		24AB
79	G - - M/T–with A/C– "From 5/7/79"	8	302							

NOTE 1 – Incl. mounting gasket

APPLICATION CHART

Refer to page 31 for Application Instructions

YEAR	MODEL	ENGINE CYL.	ENGINE C.I.D. (C.C.D.)	TYPE	IDENTIFICATION	ILLUS. SEC. 95 PAGE	NOTES	PART NUMBER	REPLACED BY	PARTS LIST 95.
9510	CARBURETOR ASSY. — Cont'd									

8 CYLINDER 5.0L (302 C.I.D) ENGINE

▲ Parts List to follow in subsequent change

79	J,P - - M/T-without A/C	8	302	F-2	D9BE-YB	9	1	D9BZ 9510-Y *CA-2164	None	24AB
79	G - - M/T-without A/C- "From 5/7/79"	8	302							
79	V - - Hi-altitude	8	302	F-2 (VV)	D94E-AB	13,14, 15	None	D94Y 9510-A *CA-2110	D9PZ 9510-BG *CA-2822	38E
79	V - - Calif.	8	302	F-2 (VV)	D94E-JA	13,14, 15	1	D94Y 9510-J *CA-2207		38E
79	V - - exc. Calif.- "From 11/1/78 to 11/16/78"	8	302	F-2 (VV)	D84E-VA	13,14, 15	1	D94Y 9510-V *CA-2258	D94Y 9510-F *CA-1999-A	38C
79	V - - exc. Calif.- "From 11/16/78"	8	302	F-2 (VV)	D94E-FA	13,14, 15	1	D94Y 9510-F *CA-1999-A	D9PZ 9510-BG *CA-2822	38E
79	V - - exc. Calif.	8	302	F-2 (VV)	D9PE-BGA	13,14, 15		D9PZ 9510-BG *CA-2822		38E

8 CYLINDER 5.8L (351 C.I.D)-2/B ENGINE

▲ Parts list to follow in subsequent change

73	A,C,F,Y	8	351-C	F-2	D3WF-AC	5	1	D3WY 9510-A *CA-1020	D4PZ 9510-H *CA-1027-B	28B
73	A,C,F,Y	8	351	F-2	D3AF-CE,DB,DC,JA, KA,NA,PA,RA,RB, UA,XA,D3PF-FA,FB, D3WF-CA,D3ZF-FA	5	23	D3AZ 9510-E *CA-1027	D4PZ 9510-H *CA-1027-B	28D
73	C	8	351W	F-2	D3AF-CD, D3PF-GA	5	23	D3AZ 9510-D *CA-973-A	D4PZ 9510-H *CA-1027-B	28A
74	A,C,F,Y - - C/M with T/E	8	351C	F-2	D40F-DA	5	1	D40Z 9510-D *CA-1063	D4PZ 9510-V *CA-1196-A	28J
74	A,C,F,Y - - T/E	8	351C	F-2	D4AE-CA	5	1	D4AZ 9510-CA *CA-1177	D4PZ 9510-V *CA-1196-A	28P
74	A,Y - - C/M with T/E and 3.25 axle	8	351C	F-2	D4AF-EA	5	1	D4AZ 9510-E *CA-1062	D4PZ 9510-V *CA-1196-A	28V
74	C,F,Y	8	351C	F-2	D4PE-VA,D40E-FA	5	24	D4AZ 9510-F *CA-1196	D4PZ 9510-V *CA-1196-A	28U
74	C,F, - - C/M with T/E	8	351W	F-2	D40F-AA	5	1	D40Z 9510-A *CA-1066	D4PZ 9510-H *CA-1027-B	28E
74	C,F, - - C4 with T/E	8	351C	F-2	D40F-BA	5	1	D40Z 9510-B *CA-1061	D4PZ 9510-V *CA-1196-A	28G
74	C,F - - C6 with T/E	8	351C	F-2	D40F-CA	5	1	D40Z 9510-C *CA-1064	D4PZ 9510-V *CA-1196-A	28H
74	C,F - - with 3.25 axle without T/E	8	351W	F-2	D4AE-DA	5	1	D4PZ 9510-DA *CA-1174	D4PZ 9510-H *CA-1027-B	28M
74	C,F,Y	8	351C	F-2	D4PE-VB	5	24	D4PZ 9510-V *CA-1196-A		28R
74	C,F - - with 2.75 axle without T/E	8	351W	F-2	D4AE-EA	5	1	D4PZ 9510-EA *CA-1173	D4PZ 9510-H *CA-1027-B	28N
74	C,F,Y	8	351	F-2	D4PE-HA	5	24	D4AZ 9510-H *CA-1027-A	D4PZ 9510-H *CA-1027-B	28T

NOTE 1 - Incl. mounting gasket
NOTE 23 - Incl. (2) C7AZ 9J500-B limiters
NOTE 24 - Incl. (1) D3AZ 9447-A gasket, (1) D3AZ 9447-B gasket, (1) D3OZ 9447-A gasket, (1) D4TZ 9447-J gasket, (2) C7AZ 9J500-B limiters
NOTE 25 - Incl. (1) D5AZ 9447-A gasket, (1) D5AZ 9C477-A gasket, (2) C7AZ 9J500-B limiters, (1) 380614-S cap
NOTE 26 - Incl. (1) D5AZ 9447-A gasket, (1) D5OZ 9447-B gasket, (1) D5AZ 9C477-A gasket, (1) D5ZZ 9C477-A gasket, (2) C7AZ 9J500-B limiters, (1) C9AZ 9C639-A cap, (1) 380614-S cap
NOTE 30 - Incl. (1) D5OZ 9447-B gasket, (1) D5ZZ 9C477-A gasket, (2) C7AZ 9J500-B limiters, (1) 380614-S cap

COPYRIGHT © 1986 — FORD MOTOR COMPANY — DEARBORN, MICHIGAN

APPLICATION CHART

Refer to page 31 for Application Instructions

YEAR	MODEL	ENGINE CYL.	ENGINE C.I.D. (C.C.D.)	TYPE	IDENTIFICATION	ILLUS. SEC. 95 PAGE	NOTES	PART NUMBER	REPLACED BY	PARTS LIST 95.
9510	CARBURETOR ASSY. — Cont'd									

8 CYLINDER 5.8L (351 C.I.D)-2/B ENGINE

▲ Parts list to follow in subsequent change

74	C,F,Y	8	351	F-2	D4PE-HB	9	24	D4PZ 9510-H *CA-1027-B		28R
75	C,F,Y - - exc. Calif.	8	351M	F-2	D50E-BA	9	1	D50Z 9510-B *CA-1224	D5PZ 9510-BA *CA-1499	28W
75	C,F,Y - - exc. Calif.	8	351M	F-2	D5WE-GA	9	1	D5WZ 9510-G *CA-1451	D5PZ 9510-BA *CA-1499	28W
75	C,F,Y - - exc. Calif.	8	351M	F-2	D5PE-BAA	9	25	D5PZ 9510-BA *CA-1499	D6PZ 9510-J *CA-1743	28W
75	C,F,Y - - Calif.	8	351M	F-2	D50E-CA	9	1	D50Z 9510-C *CA-1223	D5PZ 9510-BC *CA-1500	28X
75	C,F,Y - - Calif.	8	351M 351W	F-2	D5PE-BCA	9	26	D5PZ 9510-BC *CA-1500	D6PZ 9510-K *CA-1744	28AE
75	C,F - - A/T-Calif.	8	351M	F-2	D50E-GA	9	1	D50Z 9510-G *CA-1357	D5PZ 9510-BC *CA-1500	28AE
75	C,G	8	351W	F-2	D50E-AA	9	1	D50Z 9510-A *CA-1225	D6PZ 9510-J *CA-1743	28V
75	C,G - - exc. Calif.	8	351W	F-2	D5PE-BDA	9	30	D5PZ 9510-BD *CA-1501	D6PZ 9510-J *CA-1743	28V
75	G - - exc. Calif.	8	351W	F-2	D5DE-UA	9	1	D5DZ 9510-U *CA-1334	D5PZ 9510-BD *CA-1501	28AC
75	G - - Calif.	8	351W	F-2	D50E-EA	9	1	D50Z 9510-E *CA-1333	D5PZ 9510-BC *CA-1500	28AD
75	C,F - - exc. Calif.	8	351W	F-2	D50E-HA	9	1	D50Z 9510-H *CA-1361	D5DZ 9510-BD *CA-1501	28AF
75 76	G - - exc. Calif. G - - Canada	8 8	351W 351W	F-2 F-2	D5WE-CA	9	1	D5WZ 9510-C *CA-1380	D6PZ 9510-J *CA-1743	28AG
76	C	8	351W	F-2	D60E-AA,AB	9	1	D60Z 9510-A *CA-1459	D6PZ 9510-J *CA-1743	28AH
76	C	8	351W	F-2	D6PE-JA	9	28	D6PZ 9510-J *CA-1743		28AH
76	G - - exc. Calif. and Canada	8	351W	F-2	D60E-BA,BB	9	1	D60Z 9510-B *CA-1392	D6PZ 9510-K *CA-1744	28AH
76 76	C G	8 8	351M 351W	F-2	D6PE-KA	9	28	D6PZ 9510-K *CA-1744		28AH
76	G - - with 2.76 axle-Calif.	8	351W	F-2	D64E-BA,BB	9	1	D64Z 9510-B *CA-1540	D6PZ 9510-AC *CA-1747	28AJ
76	G - - with 3.00/3.07 axle-Calif.	8	351W	F-2	D60E-CA	9	1	D60Z 9510-C *CA-1393	D6PZ 9510-AC *CA-1747	28AJ
76	G - - Calif.	8	351W	F-2	D6PE-ACA	9	27	D6PZ 9510-AC *CA-1747	None	28AJ
76	C,F,Y - - Calif.	8	351M	F-2	D6WE-AA	9	1	D6WZ 9510-A *CA-1396	D6PZ 9510-K *CA-1744	28AH
76	C,F,Y - - exc. Calif. and Canada	8	351M	F-2	D6WE-BA	9	1	D6WZ 9510-B *CA-1470	D6PZ 9510-L *CA-1745	28AH

NOTE 1 - Incl. mounting gasket
NOTE 11 - Incl. (2) limiters, (2) mounting gaskets
NOTE 27 - Incl. (2) D6PZ 9J500-A limiter, (1) D5ZZ 9C477-A gasket, (1) D7OZ 9447-A gasket, (1) 380614-S cap
NOTE 28 - Incl. (2) D6PZ 9J500-A limiters, (1) D5ZZ 9C477-A gasket, (1) D7OZ 9447-A gasket, (1) D7AZ 9C477-A, (1) D5AZ 9447-B gasket, (1) 380614-S cap, (1) C9AZ 9C639-A cap

APPLICATION CHART

Refer to page 31 for Application Instructions

YEAR	MODEL	ENGINE CYL.	ENGINE C.I.D. (C.C.D.)	TYPE	IDENTIFICATION	ILLUS. SEC. 95 PAGE	NOTES	PART NUMBER	REPLACED BY	PARTS LIST 95.
9510	CARBURETOR ASSY. — Cont'd									

8 CYLINDER 5.8L (351 C.I.D)-2/B ENGINE

▲ Parts list to follow in subsequent change

76	C,F,Y - - Canada "Before 3/1/76"	8	351M	F-2	D6WE-CA	9	1	D6WZ 9510-C *CA-1494		28AH
76	C,F,Y - - Canada "From 3/1/76"	8	351M	F-2	D6WE-CB	9	1	D6WZ 9510-CB *CA-1654		28AH
76	C,F,Y - - exc. Calif. and Canada	8	351M	F-2	D6WE-EA,FA	9	1	D6WZ 9510-E *CA-1511	D6PZ 9510-L *CA-1745	28AH
76	C,F,Y	8	351M	F-2	D6PE-LA	9	29	D6PZ 9510-L *CA-1745		28AH
77	F - - Calif.- "Before 12/2/76"	8	351M	F-2	D7AE-CA	9	1	D7AZ 9510-C *CA-1561	D7PZ 9510-BN *CA-2210	28AK
77	F - - Calif.- "From 12/2/76"	8	351M	F-2	D7AE-AHA,AHB	9	1	D7AZ 9510-AH *CA-1561-A		28AK
77	F - - Calif.	8	351M	F-2	D7PE-BNA	9	11	D7PZ 9510-BN *CA-2210		28AK
77	F - - exc. Calif. and Canada	8	351M	F-2	D70E-CA,CB	9	1	D70Z 9510-C *CA-1568	D7PZ 9510-BY *CA-2209	28AK
77/78 78	F - - Canada A - - Canada	8 8	351M 351M	F-2	D7WE-GA,GB	9	1	D7WZ 9510-F *CA-1711		28AK
77/78	A,F - - Canada	8	351M	F-2	D7PE-BUA	9	11	D7PZ 9510-BU *CA-2208		28AN
77	A,F - - exc. Calif. and Canada "Before 2/1/77"	8	351M	F-2	D70E-NA,ND	9	1	D70Z 9510-N *CA-1714	D7PZ 9510-BY *CA-2209	28AK
77	A,F - - exc. Calif. and Canada- From 2/1/77 to 4/25/77"	8	351M	F-2	D70E-RA,RB	9	1	D70Z 9510-R *CA-1761		28AK
77	A,F - - exc. Calif. and Canada "From 4/25/77"	8	351M	F-2	D7SE-DA	9	1	D7SZ 9510-D *CA-1952	D7PZ 9510-BY *CA-2209	28AK
77	A,F - - exc. Calif. and Canada	8	351M	F-2	D7PE-BYA	9	11	D7PZ 9510-BY *CA-2209		28AK
77	A,F - - Hi-altitude carb	8	351M	F-2	D7AE-DA,ADA,ADB	9	1	D7AZ 9510-D *CA-1572		28AL
77	A,F - - Hi-altitude carb.	8	351M	F-2	D7PE-BMA	9	11	D7PZ 9510-BM *CA-2211	None	28AL
77	G,V	8	351W	F-2	D70E-LA, D74E-DA	9	1	D70Z 9510-F *CA-1569	D7PZ 9510-BT *CA-2212	28AM
77	F	8	351W	F-2	D7DE-RA,RB	9	1	D7DZ 9510-H *CA-1570	D7PZ 9510-BT *CA-2212	28AM
77	F,G - - exc. Calif.	8	351W	F-2	D7PE-BTA	9	11	D7PZ 9510-BT *CA-2212		28AM
78	A,F - - with A/C -exc.- Calif.- "Before 11/1/77"	8	351M	F-2	D8AE-JA	9	1	D8AZ 9510-J *CA-1942	D8PZ 9510-BU *CA-2612	28AR
78	A,F - - with A/C -exc. Calif. "From 11/1/77"	8	351M	F-2	D8AE-TA	9	1	D8AZ 9510-T *CA-2013	D8PZ 9510-BS *CA-2611	28AR
78	A,F - - without A/C exc.- Calif.- "Before 11/1/77"	8	351M	F-2	D80E-BA	9	1	D80Z 9510-B *CA-1919		28AR

NOTE 1 - Incl. mounting gasket
NOTE 11 - Incl. (2) limiters, (2) mounting gaskets
NOTE 29 - Incl. (2) D6PZ 9J500-A limiters, (1) D7AZ 9C477-A gasket, (1) D5AZ 9447-B gasket, (1) 380614-S cap

COPYRIGHT © 1986 — FORD MOTOR COMPANY — DEARBORN, MICHIGAN

APPLICATION CHART

Refer to page 31 for Application Instructions

YEAR	MODEL	ENGINE CYL.	ENGINE C.I.D. (C.C.D.)	TYPE	IDENTIFICATION	ILLUS. SEC. 95 PAGE	NOTES	PART NUMBER	REPLACED BY	PARTS LIST 95.
9510	CARBURETOR ASSY. — Cont'd									

8 CYLINDER 5.8L (351 C.I.D)-2/B ENGINE

▲ Parts list to follow in subsequent change

78	A,B,S - - exc. Calif. "Before 11/1/77"	8	351M	F-2	D8PE-BUA	9		D8PZ 9510-BU *CA-2612		28AR
78	A,F - - without A/C -exc. Calif. "From 11/1/77"	8	351M	F-2	D8AE-UA	9	1	D8AZ 9510-U *CA-2014	D8PZ 9510-BS *CA-2611	28AR
78	A,F - - exc. Calif "From 11/1/77"	8	351M	F-2	D8PE-BSA	9		D8PZ 9510-BS *CA-2611		28AR
78	F - - Canada	8	351M	F-2	D8AE-NA	9	1	D8AZ 9510-N *CA-2012		28AR
78	F - - Canada	8	351M	F-2	D8PE-BTA	9		D8PZ 9510-BT *CA-2012-A		28AR
78	F - - with A/C Calif.	8	351M	F-2	D8SE-FA	9	1	D8SZ 9510-F *CA-1963	D8PZ 9510-BN *CA-2609	28AR
78	F - - without A/C Calif.	8	351M	F-2	D8SE-GA	9	1	D8SZ 9510-G *CA-1964	D8PZ 9510-BN *CA-2609	28AR
78	F - - Calif.	8	351M	F-2	D8PE-BNA	9		D8PZ 9510-BN *CA-2609		28AR
78	F - - Hi-altitude carb.	8	351M	F-2	D8WE-CA	9	1	D8WZ 9510-C *CA-1893	D8PZ 9510-BM *CA-1893-A	28AU
78	F - - Hi-altitude carb.	8	351M	F-2	D8PE-BMA	9		D8PZ 9510-BM	None	28AU
78	F - - with A/C	8	351W	F-2	D8WE-DA	9	1	D8WZ 9510-D *CA-1936	D8PZ 9510-BV *CA-2613	28AS
78	F - - without A/C	8	351W	F-2	D8WE-EA	9	1	D8WZ 9510-E *CA-1967	D8PZ 9510-BV *CA-2613	28AS
78	F	8	351W	F-2	D8PE-BVA	9		D8PZ 9510-BV *CA-2613		28AS
79	F - - with A/C -Calif.	8	351M	F-2	D9AE-AHA	9	1	D9AZ 9510-AH *CA-2170	D9PZ 9510-AD *CA-2806	28AX
79	F - - without A/C -Calif.	8	351M	F-2	D9AE-AJA	9	1	D9AZ 9510-AJ *CA-2171	D9PZ 9510-AD *CA-2806	28AX
79	F - - Calif.	8	351M	F-2	D9PE-ADA	9		D9PZ 9510-AD *CA-2806		28AX
79	F - - with A/C -exc. Calif.	8	351M	F-2	D9OE-CB	9	1	D9OZ 9510-C *CA-2187	D9PZ 9510-P *CA-2811	28AX
79	F - - without A/C -exc. Calif.	8	351M	F-2	D9OE-DB	9	1	D9OZ 9510-D *CA-2188	D9PZ 9510-P *CA-2811	28AX
79	F - - exc. Calif.	8	351M	F-2	D9PE-PA	9		D9PZ 9510-P *CA-2811		28AX
79	F - - Hi-altitude carb.	8	351M	F-2	D9WE-JA	9	1	D9WZ 9510-J *CA-2247	None	28AV
79	A - - Calif.	8	351W	F-2 (VV)	D9AE-ACA	21,22, 23	None	D9AZ 9510-AC *CA-2181	D9PZ 9510-BC *CA-2819	41A
79	A - - Calif.	8	351W	F-2 (VV)	D9PE-BCA	21,22, 23		D9PZ 9510-BC *CA-2819		41A
79	A - - Calif.	8	351W P/C	F-2 (VV)	D9AE-BAA	21,22, 23	None	D9AZ 9510-BA *CA-2362	None	41A
79	A - - exc. Calif. and Canada	8	351W	F-2 (VV)	D9ME-AA	21,22, 23	None	D9MY 9510-A *CA-2117	D9PZ 9510-BC *CA-2819	41A
79	A - - with 3.08 rear axle with A/C-Canada	8	351W	F-2	D9AE-TB	9	None	D9AZ 9510-T *CA-2145	D9PZ 9510-G *CA-2807	
79	A - - with 3.08 rear axle with A/C-Canada	8	351W	F-2	D9AE-AVB	9	None	D9AZ 9510-AV *CA-2145-A	D9PZ 9510-G *CA-2807	28AV

NOTE 1 - Incl. mounting gasket

APPLICATION CHART

Refer to page 31 for Application Instructions

YEAR	MODEL	ENGINE CYL.	ENGINE C.I.D. (C.C.D.)	TYPE	IDENTIFICATION	ILLUS. SEC. 95 PAGE	NOTES	PART NUMBER	REPLACED BY	PARTS LIST 95.
9510	CARBURETOR ASSY. — Cont'd									

8 CYLINDER 5.8L (351 C.I.D)-2/B ENGINE

▲ Parts list to follow in subsequent change

79	A - - with 3.08 rear axle without A/C-Canada	8	351W	F-2	D9AE-UB	9	None	D9AZ 9510-U *CA-2146	D9PZ 9510-G *CA-2807	28AV
79	A - - with 3.08 rear axle without A/C-Canada	8	351W	F-2	D9AE-AYB	9	None	D9AZ 9510-AY *CA-2146-A	D9PZ 9510-G *CA-2807	28AV
79	A - - with 2.26 rear axle with A/C-Canada	8	351W	F-2	D9AE-ANB	9	None	D9AZ 9510-AN *CA-2205	D9PZ 9510-G *CA-2807	28AV
79	A - - with 2.26 rear axle without A/C-Canada	8	351W	F-2	D9AE-APB	9	None	D9AZ 9510-AP *CA-2206	D9PZ 9510-G *CA-2807	28AV
79	A - - Hi-altitude carb.	8	351W	F-2	D9ME-EA	9	None	D9MZ 9510-E *CA-2326	None	28AV
79	F(65L) - - with A/C	8	351W	F-2	D9WE-EB	9	None	D9WZ 9510-E *CA-2168	D9PZ 9510-G *CA-2807	28AV
79	F(65L) - - without A/C	8	351W	F-2	D9WE-FB	9	None	D9WZ 9510-F *CA-2169	D9PZ 9510-G *CA-2807	28AV
79	F(53D,65D)- with A/C	8	351W	F-2	D9WE-MB	9	None	D9WZ 9510-M *CA-2265	D9PZ 9510-G *CA-2807	28AV
79	F(53D,65D)- without A/C	8	351W	F-2	D9WE-NB	9	None	D9WZ 9510-N *CA-2266	D9PZ 9510-G *CA-2807	28AV
79	A,F - - exc. Calif.	8	351W	F-2	D9PE-GA E2PE-AA	9		D9PZ 9510-G *CA-2807		28AV

8 CYLINDER 5.8L (351 C.I.D.)-4/B ENGINE

▲ Parts list to follow in subsequent change

73	C - - M/T	8	351	F-4	D3ZF-BC	6	1	D3ZZ 9510-B	D40Z 9510-F	29B
73	C,F - - A/T	8	351	F-4	D3ZF-AC	6	1	D3ZZ 9510-A *CA-1022 *CA-1023	D40Z 9510-F *CA-885-D *CA-885-D	29A
73	C,F	8	351	F-4	D3PF-BA,D3ZF-JA, KA,LA,MA	6	31	D3ZZ 9510-E *CA-885-C	D40Z 9510-F *CA-885-D	29C
74	C,F - - A/T	8	351	F-4	D40E-AA	9	1	D40Z 9510-AA *CA-1102	D40Z 9510-F *CA-885-D	29D
74	C,F - - M/T	8	351	F-4	D40E-BA	6	1	D40Z 9510-BA *CA-1103	D40Z 9510-F *CA-885-D	29E
74	C,F	8	351	F-4	D4PE-AA,D5PE-GB	6	32	D40Z 9510-F *CA-885-D	Note 34	29F
73/74	C,F - - Calif.	8	351	F-4	D8PE-LA	6	32	D8PZ 9510-L *CA-2054	Not replaced	29F
73/74	C,F - - exc. Calif.	8	351	H-4	D8PE-KA	24		D8PZ 9510-K *CA-2022		42B

NOTE 31 - Incl. (1) D1ZZ 9447-A gasket, (2) C7AZ 9J500-B limiters, (1) D1OZ 9A589-A spacer, (1) D4TZ 9447-J gasket, (2) C7AZ 9J500-B limiters

NOTE 32 - Incl. (1) D1ZZ 9447-A gasket, (1) D3ZZ 9447-B gasket, (2) C7AZ 9J500-B limiter, (1) D2AZ 9A589-B spacer, (1) D3PF 9E815-AA sleeve

NOTE 34 - Replaced by D8PZ 9510-K *CA-2022 for vehicles w/o California emission or D8PZ 9510-L *CA-2054 for vehicles w/California emission

COPYRIGHT © 1986 — FORD MOTOR COMPANY — DEARBORN, MICHIGAN

APPLICATION CHART

Refer to page 31 for Application Instructions

YEAR	MODEL	ENGINE CYL.	ENGINE C.I.D. (C.C.D.)	TYPE	IDENTIFICATION	ILLUS. SEC. 95 PAGE	NOTES	PART NUMBER	REPLACED BY	PARTS LIST 95.
9510	CARBURETOR ASSY. — Cont'd									
8 CYLINDER 6.6L (400 C.I.D.)-2/B ENGINE										
▲ Parts list to follow in subsequent change										
73	A,C,Y	8	400	F-2	D3MF-AD	5	1	D3MY 9510-A *CA-994	D4PZ 9510-H *CA-1027-B	28C
73	A,C,Y	8	400	F-2	D3AF-DB, D3PF-FA,FB D3MF-AE,BA,CA,DA, EA,FA,GA	5	23	D3AZ 9510-E *CA-1027	D4PZ 9510-H *CA-1027-B	28D
74	A,C,F,Y - - C/6 with T/E without 3.25 axle	8	400	F-2	D4MF-BA	5	1	D4MY 9510-B *CA-1060	D4PZ 9510-V *CA-1196-A	28K
74	A,C,F,Y - - C6 with T/E and 3.25 axle	8	400	F-2	D4MF-CA	5	1	D4MY 9510-C *CA-1059	D4PZ 9510-V *CA-1196-A	28L
74	A(71),Y(71) - - without T/E	8	400	F-2	D4AE-FA	5	1	D4AZ 9510-FA *CA-1171	D4PZ 9510-H *CA-1027-B	28Q
74	A(exc. 71),C,F,Y (exc. 71) - - without T/E	8	400	F-2	D4AE-GA	5	1	D4AZ 9510-GA *CA-1170	D4PZ 9510-H *CA-1027-B	28R
74	A,C,F,Y - - T/E with 3.00 axle	8	400	F-2	D4AE-HB	5	1	D4AZ 9510-HB *CA-1172	D4PZ 9510-V *CA-1196-A	28S
74	A,C,F,Y	8	400	F-2	D4PE-HA	5	24	D4AZ 9510-H *CA-1027-A	D4PZ 9510-H *CA-1027-B	28T
74	A,C,F,Y	8	400	F-2	D4ME-CA,D4PE-VA, D4OE-FA	5	24	D4AZ 9510-F *CA-1196	D4PZ 9510-V *CA-1196-A	28U
74	A,C,F,Y	8	400	F-2	D4PE-HB	5	24	D4PZ 9510-H *CA-1027-B		28R
74	A,C,F,Y	8	400	F-2	D4PE-VB	5	24	D4PZ 9510-V *CA-1196-A		28R
74	A,C - - Calif.	8	400	F-2	D4ME-BA, D4PE-BKA	5	11	D4PZ 9510-BK *CA-1362	None	28R
75	A,C,F,Y - - exc. Calif.	8	400	F-2	D5AE-AA	9	1	D5AZ 9510-A *CA-1234	D5PZ 9510-BA *CA-1499	28Z
75	A,C,F,Y - - exc. Calif.	8	400	F-2	D5AE-EA	9	1	D5AZ 9510-E *CA-1335	D5PZ 9510-BA *CA-1499	28Y
75	A,C,F,Y - - exc. Calif.	8	400	F-2	D5WE-EA	9	1	D5WZ 9510-E *CA-1450	D5PZ 9510-BA *CA-1499	28W
75	A,C,F,Y - - exc. Calif.	8	400	F-2	D5PE-BAA	9	33	D5PZ 9510-BA *CA-1499	D6PZ 9510-J *CA-1743	28W
75	A,C,F,Y - - Calif.	8	400	F-2	D5ME-FA	9	1	D5MZ 9510-F *CA-1338	D5PZ 9510-BB *CA-1338-A	28AB
75	A,C,F,Y - - Calif.	8	400	F-2	D5PE-BBA	9	33	D5PZ 9510-BB *CA-1338-A	D6PZ 9510-J *CA-1743	28AB
76	A,C,F,Y - - Calif.	8	400	F-2	D6ME-AA	9	1	D6MZ 9510-A *CA-1460	D6PZ 9510-K *CA-1744	28AH

NOTE 1 - Incl. mounting gasket
NOTE 11 - Incl. (2) limiters, (2) mounting gaskets
NOTE 23 - Incl. (2) C7AZ 9J500-B limiters
NOTE 24 - Incl. (1) D3AZ 9447-A gasket, (1) D3AZ 9447-B gasket, (1) D3OZ 9447-A gasket,
NOTE 33 - Incl. (1) D5AZ 9447-A gasket, (1) D5AZ 9C477-A gasket, (2) C7AZ 9J500-B limiters, (1) 380614-S cap

APPLICATION CHART

Refer to page 31 for Application Instructions

YEAR	MODEL	ENGINE CYL.	ENGINE C.I.D. (C.C.D.)	TYPE	IDENTIFICATION	ILLUS. SEC. 95 PAGE	NOTES	PART NUMBER	REPLACED BY	PARTS LIST 95.
9510	CARBURETOR ASSY. — Cont'd									

8 CYLINDER 6.6L (400 C.I.D.)-2/B ENGINE

▲ Parts list to follow in subsequent change

76	A,C,F,Y - - Calif.	8	400	F-2	D6PE-KA	9	35	D6PZ 9510-K *CA-1744		28AH
76	A,C,F,Y - - exc. Calif.	8	400	F-2	D6AE-HA	9	1	D6AZ 9510-H *CA-1469	D6PZ 9510-L *CA-1745	28AH
76	A,C,F,Y	8	400	F-2	D6PE-LA	9	29	D6PZ 9510-L *CA-1745		28AH
76	A,C,F,Y - - exc. Calif.	8	400	F-2	D6ME-CA	9	1	D6MZ 9510-C *CA-1548	D6PZ 9510-L *CA-1745	28AH
76	A,C,F,Y - - exc. Calif.	8	400	F-2	D6ME-DA	9	1	D6MZ 9510-D *CA-1549	D6PZ 9510-L *CA-1745	28AH
76	A,C,F,Y - - Canada	8	400	F-2	D6AE-JA,JB	9	1	D6AZ 9510-J *CA-1495		28AH
76	A,Y - - Canada	8	400	F-2	D6AE-KA	9	1	D6AZ 9510-K *CA-1496	D6MZ 9510-D *CA-1549	28AH
76	A,C,F,Y - - exc. Calif.	8	400	F-2	D6ME-BA	9	1	D6MZ 9510-B *CA-1480		28AH
77	A,D,F,K - - Calif.- "Before 1/3/77"	8	400	F-2	D7OE-MA,MB	9	1	D7OZ 9510-J *CA-1564	D7SZ 9510-A *CA-1564-A	28AN
77	A,D,F,K - - Calif. "Before 1/3/77"	8	400	F-2	D7SE-AA	9	1	D7SZ 9510-A *CA-1564-A	D7PZ 9510-BV *CA-1564-B	28AN
77	A,D,F,K - - Calif.	8	400	F-2	D7PE-BVA	9	11	D7PZ 9510-BV *CA-1564-B	None	28AN
77	A,D,F,K - - Calif.- "From 1/3/77 to 2/28/77"	8	400	F-2	D7AE-AKA,AKB	9	1	D7AZ 9510-AK *CA-1785	D7PZ 9510-BN *CA-2210	28AN
77	A,D,F,K - - Calif.	8	400	F-2	D7PE-BNA	9	11	D7PZ 9510-BN *CA-2210		28AK
77	A,D,F,K - - Calif.- "From 2/28/77 to 4/4/77" "Before 4/10/78"	8	400	F-2	D7AE-ASA	9	1	D7AZ 9510-AS *CA-1816	D7AZ 9510-AK *CA-1785	28AN
77	A,D,F,K - - Calif.- "From 4/4/77"	8	400	F-2	D7AE-AVA	9	1	D7AZ 9510-AV *CA-1863	D7PZ 9510-BP *CA-1863	28AQ
77	A,D,F,K - - Calif.	8	400	F-2	D7PE-BPA	9	11	D7PZ 9510-BP *CA-1863-A		28AQ
77	A,D,F,K - - exc. Calif.	8	400	F-2	D7OE-HA,HC	9	1	D7OZ 9510-H *CA-1567	D7PZ 9510-BU *CA-2208	28AN
77	A,F - - exc. Calif.	8	400	F-2	D7PE-BUA	9	11	D7PZ 9510-BU *CA-2208		28AN
77	A,D,F,K - - exc. Calif.- "Before 2/1/77"	8	400	F-2	D7OE-HB,HD	9	1	D7OZ 9510-HB *CA-1718	D7PZ 9510-BU *CA-2208	28AN
77	A,D,F,K - - exc. Calif.- "From 2/1/77"	8	400	F-2	D7OE-TA,TB	9	1	D7OZ 9510-T *CA-1762	D7PZ 9510-BU *CA-2208	28AN
77	A,D,F,K - - Canada	8	400	F-2	D7AE-TA,TB	9	1	D7AZ 9510-Y *CA-1713		28AP

NOTE 1 - Incl. mounting gasket
NOTE 11 - Incl. (2) limiters, (2) mounting gaskets
NOTE 29 - Incl. (2) D6PZ 9J500-A limiters, (1) D7AZ 9C477-A gasket, (1) D5AZ 9447-B gasket, (1) 380614-S cap
NOTE 35 - Incl. (2) D6PZ 9J500-A limiters, (1) D5ZZ 9C477-A gasket, (1) D7OZ 9447-A gasket, (1) D7AZ 9C477-A gasket, (1) D5AZ 9447-B gasket

COPYRIGHT © 1986 — FORD MOTOR COMPANY — DEARBORN, MICHIGAN

APPLICATION CHART

Refer to page 31 for Application Instructions

YEAR	MODEL	ENGINE CYL.	ENGINE C.I.D. (C.C.D.)	TYPE	IDENTIFICATION	ILLUS. SEC. 95 PAGE	NOTES	PART NUMBER	REPLACED BY	PARTS LIST 95.
9510	CARBURETOR ASSY. — Cont'd									

8 CYLINDER 6.6L (400 C.I.D.)-2/B ENGINE

▲ Parts list to follow in subsequent change

77	A,D,F,K - - Hi altitude carb	8	400	F-2	D7AE-GA,ACA,ACB	9	1	D7AZ 9510-G *CA-1717	D7PZ 9510-BM *CA-2211	28AL
77	A,F - - Hi-altitude carb.	8	400	F-2	D7PE-BMA	9	11	D7PZ 9510-BM *CA-2211		28AL
78	A,D,F,K - - with A/C exc. Calif.-	8	400	F-2	D80E-HA	9	1	D80Z 9510-H *CA-1935	D8PZ 9510-BR *CA-2610	28AT
78	A,D,F,K - - with A/C exc. Calif. "From 4/10/78"	8	400	F-2	D80E-UA	9	1	D80Z 9510-U *CA-2078	D8PZ 9510-BR *CA-2610	28AT
78	A,F - - without A/C exc. Calif.	8	400	F-2	D80E-CA	9	1	D80Z 9510-C *CA-1933	D8PZ 9510-BR *CA-2610	28AT
78	A,F - - without A/C exc. Calif. "From 4/10/78"	8	400	F-2	D80E-VA	9	1	D80Z 9510-V *CA-2079	D80Z 9510-C *CA-1933	28AT
78	A,F, - - exc. Calf.	8	400	F-2	D8PE-BRA	9		D8PZ 9510-BR *CA-2610		28AT
78	A,D,F,K - - with A/C-Calif.	8	400	F-2	D8SE-DA	9	1	D8SZ 9510-D *CA-1921	D8PZ 9510-BN *CA-2609	28AT
78	A,D,F,K - - without A/C-Calif.	8	400	F-2	D8SE-EA	9	1	D8SZ 9510-E *CA-1922	D8PZ 9510-BN *CA-2609	28AT
78	A,D,F,K - - Calif.	8	400	F-2	D8PE-BNA	9		D8PZ 9510-BN *CA-2609		28AT
78	A,D,F,K - - Hi-altitude carb.	8	400	F-2	D8SE-CA	9	1	D8SZ 9510-C *CA-1892	D8PZ 9510-BP *CA-1892-A	28AU
78	A,D,F,K - - Hi-altitude carb.	8	400	F-2	D8PE-BPA	9		D8PZ 9510-BP *CA-2609	None	28AU
79	D,K - - Hi-altitude carb.	8	400	F-2	D9SE-GA	9	1	D9SY 9510-G *CA-2246	None	28AV
79	D,K - - exc. Calif.	8	400	F-2	D9VE-LC	9	1	D9VY 9510-L *CA-2156	D9VY 9510-V *CA-2156-A	28AW
79	D,K - - exc. Calif.	8	400	F-2	D9VE-VA	9	1	D9VY 9510-V *CA-2156-A	D9PZ 9510-L *CA-2810	28AW
79	D,K - - exc. Calif.	8	400	F-2	D9VE-YB	9	1	D9VY 9510-Y *CA-2156-B	D9PZ 9510-L *CA-2810	28AW
79	D,K - - exc. Calif.	8	400	F-2	D9PE-LA	9		D9PZ 9510-L *CA-2810		28AW
79	D,K - - Calif.	8	400	F-2	D9VE-SA	9	1	D9VY 9510-S *CA-2165	D9PZ 9510-AD *CA-2806	28AY
79	D,K - - Calif.	8	400	F-2	D9PE-ADA	9		D9PZ 9510-AD *CA-2806		28AY

8 CYLINDER 7.0L (429 C.I.D.) ENGINE

73	A,C,Y	8	429	F-4	D3AF-BC	6	1	D3AZ 9510-B *CA-972	D3PZ 9510-E *CA-1331	27A
73	A,C,Y	8	429	F-4	D3AF-GA,HB,LA,VA D3PF-AA,NA	6	36	D3AZ 9510-G *CA-788-B	D3PZ 9510-E *CA-1331	27D
73	A,C,Y	8	429	F-4	D5PE-EB	6	36	D3PZ 9510-E *CA-1331	Note 37	27D

NOTE 1 - Incl. mounting gasket

NOTE 11 - Incl. (2) limiters, (2) mounting gaskets

NOTE 36 - Incl. (1) C8SZ 9447-A gasket, (1) D0AZ 9447-B gasket, (2) C7AZ 95500-B limiters, (1) C5AF 3E551-A stud, (1) D3PF 9E815-AA sleeve, (1) 34653-S3 nut, (1) 87743-S plug, (1) 375016-S2 screw

NOTE 37 - Replaced by D8PZ 9510-F *CA-2020 for vehicles w/o California emission on 1973 460-4V, or D8PZ 9510-G *CA-2052 for vehicles w/California emission on 1973 460-4V, or D8PZ 9510-E *CA-2051 for vehicles w/California emission on 1973 429-4V.

APPLICATION CHART

Refer to page 31 for Application Instructions

YEAR	MODEL	ENGINE CYL.	ENGINE C.I.D. (C.C.D.)	TYPE	IDENTIFICATION	ILLUS. SEC. 95 PAGE	NOTES	PART NUMBER	REPLACED BY	PARTS LIST 95.
9510	CARBURETOR ASSY. — Cont'd									
8 CYLINDER 7.0L (429 C.I.D) ENGINE										
73	A,C,Y - - exc Calif.	8	429	H-4	D8PE-AGA	24		D8PZ 9510-D *CA-2019	None	42E
73	A,C,Y - - Calif.	8	429	F-4	D8PE-EA	6	21	D8PZ 9510-E *CA-2051		27D
8 CYLINDER 7.5L (460 C.I.D) ENGINE										
▲ Parts list to follow in subsequent change										
73	A,D,K,Y	8	460	F-4	D3VF-AC	6	1	D3VY 9510-A *CA-1019	D3PZ 9510-E *CA-1331	27C
73	A,D,K,Y	8	460	F-4	D3PF-AA,NA, D3VF-BB,CB,DA,EA	6	36	D3AZ 9510-G *CA-788-B	D3PZ 9510-E *CA-1331	27D
73	A,D,K,Y	8	460	F-4	D5PE-EA	6	36	D3PZ 9510-E *CA-1331	Note 37	27D
73	A,D,K,Y - - exc. Calif.	8	460	H-4	D8PE-FA	24		D8PZ 9510-F *CA-2020		42D
73	A,D,K,Y - - Calif.	8	460	F-4	D8PE-GA	6	21	D8PZ 9510-G *CA-2052	None	27D
74	A,C,D,F,K - - T/E	8	460	C-4	D4AE-BB,BC	1	1	D4AZ 9510-B *CA-1098	None	35A
74	A,C,D,F,K,Y - - without T/E	8	460	F-4	D4VE-AB	6	1	D4VY 9510-A *CA-1099	D4OZ 9510-G *CA-788-C	27G
74	A,C,D,F,K,Y - - without T/E	8	460	F-4	D4AE-NA,D4PE-BA, D5PE-AB	6	1,36	D4OZ 9510-G *CA-788-C	Note 38	27H
74	A,C,D,F,K,Y - - Calif.	8	460	F-4	D8PE-EA	6	21	D8PZ 9510-E *CA-2051		27D
74	A,C,D,K,Y - - exc. Calif.	8	460	H-4	D8PE-AFA	24		D8PZ 9510-C *CA-2018		42G
75	A,C,D,F,K,Y - - exc. Calif.	8	460	F-4	D5VE-AD	8	1	D5VY 9510-A *CA-1294	D5AZ 9510-R *CA-1363	36A
75	A,C,D,F,K,Y - - Calif.	8	460	F-4	D5VE-BA	8	1	D5VY 9510-B *CA-1295	D6PZ 9510-AH *CA-1765	36B
75	A,C,D,F,K,Y - - Calif.	8	460	F-4	D5PE-AGA	8	12	D5PZ 9510-AG *CA-1491	D6PZ 9510-AH *CA-1765	36G

NOTE 1 - Incl. mounting gasket

NOTE 12 - Incl. (2) limiters, (1) mounting gasket

NOTE 21 - Incl. (2) D6PZ 9J500-A limiters, (1) C8SZ 9447-A gasket, (1) D0AZ 9447-B gasket, (1) D3VY 9447-B gasket, (1) C5AF 9E551-A stud, (1) 34656-S36M nut, (1) 44719-S2 washer, (1) 87743-S2 plug, (1) D3PF 9E815-AA sleeve

NOTE 36 - Incl. (1) C8SZ 9447-A gasket, (1) D0AZ 9447-B gasket, (2) C7AZ 95500-B limiters, (1) C5AF 3E551-A stud, (1) D3PF 9E815-AA sleeve, (1) 34653-S3 nut, (1) 87743-S plug, (1) 375016-S2 screw

NOTE 37 - Replaced by D8PZ 9510-F *CA-2020 for vehicles w/o California emission on 1973 460-4V, or D8PZ 9510-G *CA-2052 for vehicles w/California emission on 1973 460-4V, or D8PZ 9510-E *CA-2051 for vehicles w/California emission on 1973 429-4V.

NOTE 38 - Replaced by D8PZ 9510-C *CA-2018 for vehicles w/o California emission on 1974 460-4V, or D8PZ 9510-D *CA-2019 for vehicles w/o California emission on 1973 429-4V, or D8PZ 9510-E *CA-2051 for vehicles w/California emission on 1973 429-4V and 1974 460-4V.

COPYRIGHT © 1986 — FORD MOTOR COMPANY — DEARBORN, MICHIGAN

APPLICATION CHART

Refer to page 31 for Application Instructions

YEAR	MODEL	ENGINE CYL.	ENGINE C.I.D. (C.C.D.)	TYPE	IDENTIFICATION	ILLUS. SEC. 95 PAGE	NOTES	PART NUMBER	REPLACED BY	PARTS LIST 95.
9510	CARBURETOR ASSY. — Cont'd									

8 CYLINDER 7.5L (460 C.I.D.) ENGINE

▲ Parts list to follow in subsequent change

75	A,C,D,F,K,Y – – exc. Calif.	8	460	F-4	D5AE-RA	8	1	D5AZ 9510-R *CA-1363	D6PZ 9510-AG *CA-1764	36E
75	A,C,D,F,K,Y – – exc. Calif.	8	460	H-4	D8PE-AEA	24		D8PZ 9510-B *CA-2017		42H
76	A,C,Y – – Canada	8	460							
76	A,C,D,F,K,Y – – Calif.	8	460	F-4	D6AE-BA,CA	8	1	D6AZ 9510-B *CA-1442	D6PZ 9510-AF *CA-1442-A	36F
76	A,C,D,F,K,Y – – Calif.	8	460	F-4	D6PE-AFA	8	12	D6PZ 9510-AF *CA-1442-A		36N
76	A,C,D,F,K,Y – – exc. Calif. and Canada	8	460	F-4	D6AE-EA,FA	8	1	D6AZ 9510-E *CA-1411	D6PZ 9510-AE *CA-1763	36F
76	A,C,D,F,K,Y – – Canada	8	460	F-4	D6FE-TA	8	1	D6VZ 9510-C *CA-1444		36G
76	A,C,D,F,K,Y – – Hi altitude	8	460	F-4	D6VE-FA,GA	8	1	D6VZ 9510-F *CA-1539		36G
76	A,C,D,F,K,Y – – exc. Calif. and Canada	8	460	F-4	D6LE-LA,MA, D6VE-KA	8	1	D6LZ 9510-L *CA-1551	D6PZ 9510-AE *CA-1763	36G
76	A,C,D,F,K,Y – – exc. Calif. and Canada	8	460	F-4	D6PE-AEA	8	12	D6PZ 9510-AE *CA-1763		36N
76	A,C,D,F,K,Y – – exc. Calif. & Canada	8	460	H-4	D8PE-ADA	24		D8PZ 9510-A *CA-2016		42J
77	A,D,K "Before 12/6/76"	8	460	F-4	D7VE-MA	8	1	D7VZ 9510-AC *CA-1715		36K
77	A,D,K "Before 12/6/76"	8	460	F-4	D7VE-NA	8	1	D7VZ 9510-A *CA-1618	D8PZ 9510-Z *CA-2028	36K
77	ADK "From 12/6/76 to 4/1/77"	8	460	F-4	D7PE-AA, D7VE-SA	8	1	D7VZ 9510-S *CA-1766		36L
77	A,D,K "From 4/1/77"	8	460	F-4	D7VE-AAA	8	1	D7VZ 9510-AA *CA-1861	D8PZ 9510-Z *CA-2028	36L
77	A,D,K	8	460	H-4	D8PE-ZA	24		D8PZ 9510-Z *CA-2028		42K
77	A,D,K – – Hi altitude carb. "Before 3/1/77"	8	460	F-4	D7VE-KA	8	1	D7VZ 9510-B *CA-1619		36J
77	A,D,K – – Hi-altitude carb. "From 3/1/77"	8	460	F-4	D7VE-TA	8	1	D7VZ 9510-T *CA-1825	D8PZ 9510-AA *CA-2029	36J
77	A,D,K – – Hi-altitude carb.	8	460	H-4	D8PE-AAA	24		D8PZ 9510-AA *CA-2029	None	42L
78	A,D,K	8	460	F-4	D8VE-FA,GA	8	1	D8VZ 9510-E *CA-1894	D8PZ 9510-BL *CA-2596	36P
78	A	8	460	H-4	D8PE-BLA	24		D8PZ 9510-BL *CA-2596		42M

8 CYLINDER 7.5L (460 C.I.D) P/C ENGINE

▲ Parts list to follow in subsequent change

73	A,C,Y	8	460 P/C	F-4	D3AF-EB	6	1	D3AZ 9510-A *CA-971	D3AZ 9510-F *CA-789-A	27B
73	A,C,Y	8	460 P/C	F-4	D3AF-FA,TA,ACA,ADA, D3PF-CA	6	19	D3AZ 9510-F *CA-789-A	D4AZ 9510-C *CA-789-B	27E

NOTE 1 – Incl. mounting gasket
NOTE 12 – Incl. (2) limiters, (1) mounting gasket
NOTE 19 – Incl. (2) C7AZ 9J500-B limiters, (1) D5ZZ 9C477-A gasket, (1) D5OZ 9447-B gasket, (1) 380614-S cap

APPLICATION CHART

Refer to page 31 for Application Instructions

YEAR	MODEL	ENGINE CYL.	ENGINE C.I.D. (C.C.D.)	TYPE	IDENTIFICATION	ILLUS. SEC. 95 PAGE	NOTES	PART NUMBER	REPLACED BY	PARTS LIST 95.
9510	CARBURETOR ASSY. — Cont'd									

8 CYLINDER 7.5L (460 C.I.D.) ENGINE

▲ Parts list to follow in subsequent change

74	A,C,Y	8	460 P/C	F-4	D4AE-AA	6	1	D4AZ 9510-A *CA-1097	D4AZ 9510-C *CA-789-B	27F
74	A,C,Y	8	460 P/C	F-4	D4AE-JA,D4PE-CA, D5PE-BB	6	15	D4AZ 9510-C *CA-789-B	D8PZ 9510-M *CA-2023	27J
73/74	A,C,Y	8	460 P/C	H-4	D8PE-MA	24		D8PZ 9510-M *CA-2023	None	42F
75	A,C,Y - - exc. Calif.	8	460 P/C	F-4	D5AE-CA	8	1	D5AZ 9510-C *CA-1292	D5AZ 9510-R *CA-1363	36C
75	A,C,Y - - Calif.	8	460 P/C	F-4	D5AE-DA	8	1	D5AZ 9510-D *CA-1293	D6PZ 9510-AH *CA-1765	36D
75	A,C,Y - - Calif.	8	460 P/C	F-4	D5PE-AGA	8	12	D5PZ 9510-AG *CA-1491	D6PZ 9510-AH *CA-1765	36G
75	A,C,Y - - exc. Calif.	8	460 P/C	F-4	D5AE-RA	8	1	D5AZ 9510-R *CA-1363	D6PZ 9510-AG *CA-1764-A	36E
76	A,C,Y - - exc. Calif. "Before 3/15/76"	8	460 P/C	F-4	D6AE-DA,	8	1	D6AZ 9510-D *CA-1443	D6AZ 9510-DC *CA-1443-A	36G
76	A,C,Y - - exc. Calif. "From 3/15/76"	8	460 P/C	F-4	D6AE-DC	8	1	D6AZ 9510-DC *CA-1443-A	D6PZ 9510-AG *CA-1764	36H
76	A,C,Y - - exc. Calif.	8	460 P/C	F-4	D6PE-AGA	8	12	D6PZ 9510-AG *CA-1764	D8PZ 9510-B *CA-2017	36N
76	A,C,Y - - exc. Calif.	8	460 P/C	H-4	D8PE-AEA	24		D8PZ 9510-B *CA-2017		42H
76	A,C,Y - - Calif.	8	460 P/C	F-4	D6VE-EA	8	1	D6VZ 9510-E *CA-1445	D6PZ 9510-AH *CA-1765	36G
76	A,C,Y - - Calif.	8	460 P/C	F-4	D6PE-AHA, E2PE-KA	8	12	D6PZ 9510-AH *CA-1765		36N
77	A	8	460 P/C	F-4	D7AE-ANA	8	1	D7AZ 9510-H *CA-1620	D8PZ 9510-AB *CA-2030	36M
77	A	8	460 P/C	H-4	D8PE-ABA	24		D8PZ 9510-AB *CA-2030	None	42L
78	A	8	460 P/C	F-4	D8AE-DA	8	1	D8AZ 9510-D *CA-2015	D8PZ 9510-BK *CA-2595	36M
78	A	8	460P/C	H-4	D8PE-BKA	24		D8PZ 9510-BK *CA-2595	None	42M

NOTE 1 - Incl. mounting gasket
NOTE 12 - Incl. (2) limiters, (1) mounting gasket
NOTE 15 - Incl. (1) C8SZ 9447-A gasket, (1) D3VY 9447-B gasket, (2) C7AZ 9J500-B limiters,

COPYRIGHT © 1986 — FORD MOTOR COMPANY — DEARBORN, MICHIGAN

1973/79 LINCOLN-MERCURY CARS

YEAR	MODEL/RESTRICTIONS	ENGINE CYL.	ENGINE C.I.D. (C.C.D.)	PART NUMBER	DESCRIPTION	QTY.
9511	Refer to group 9510 for Carburetor Part List Instructions					
9P512	TUBE (CARBURETOR TO DECELERATION VALVE) @ 2300 cc					
76	J - - Calif.	4	@ 140	★ D5RY 9P512-A	Cut from C9PZ 9324-B	1
9513-9521	Refer to group 9510 for Carburetor Part List Instructions					
9522	PLUG (CARBURETOR FLANGE)					
73/74	J - - M/T	6	All	★ D2RY 9522-A		1
9522	CONNECTION HOSE (CARBURETOR)					
73/74	J - - A/T	6	All	★ D2RY 9522-B		1
9A522-9C531	Refer to group 9510 for Carburetor Parts List Instructions					
9B532	COMPENSATOR (CARBURETOR HOT IDLE) ▲ 2000 cc ⊕ 2800 cc @ 2300 cc					
73/75	A,Y - - w/trailer towing package	8	400	C4AZ 9B532-A		1
74	L - - A/C	4	All	*CM-901		1
73/76	J	6	All	★ D2RY 9B532-A		1
73/76	J	6	All	E630150-S71	Lockwasher (attaches compensator)	1
75	A,C,D,F,K,Y- "Before 2/3/75"	8	460	D5FZ 9B532-A *CM-2073		1
75/77	L	6	⊕171			1
75/	L - - with A/C	4	@140			1
76	J	6	⊕171			1
76/77	G,P	6	200			1
76	G,P	8	302			
77/	G,P - - w/o A/C - Calif.	6	250			1
75/76	A,C,D,F,K,Y- "From 2/3/75 to 3/1/76"	8	460	★ D5VZ 9B532-A *CM-2120	R/B D7DZ 9B532-A (11/77)	1
76/	A,C,D,F,K	8	351M, 400			1
76/	G,P	6	250			
77/	G,P - - exc. Calif.	6	250			1
77/	G,P - - with A/C-Calif.	6	250			1
77/	G	8	351W			1
77/	J	6	⊕171			1
77/	A,C,D,F,K,Y "From 3/1/76"	8	460	D7DZ 9B532-A		1
77/	F,G,P	8	302	*CM-2120-A		
78	L	6	⊕171			1
73/	G,J,L,P	4&6	All	379507-S	(II-98-GG) Tee connector (H.I.C.) 3/8" hose	1
77/	L	6	⊕171	378460-S100	(II-242-E) elbow (hot idle compensator) 1/8 external pipe x 1/8 internal pipe 90°	1
9C532	Refer to group 9510 for Carburetor Parts List Instructions					

9533 JET (CARBURETOR MAIN METERING) – Also refer to group 9510 for Carburetor Parts List Instructions

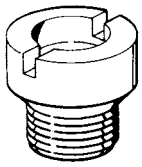

TYPE 1

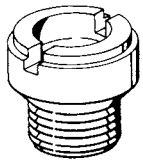

TYPE 2

JET IDENTIFICATION CHART

JET IDENT. NUMBER	TYPE	PART NUMBER
37F	1	C4GY 9533-A *CJ-163
38F	1	C30Z 9533-D *CJ-158
39	2	C20Z 9533-F
39F	1	C3AZ 9533-H *CJ-157
40	2	C20Z 9533-A
40F	1	C30Z 9533-E
41	2	C20Z 9533-B *CJ-120
41F	1	C3AZ 9533-E *CJ-154
42	1	C20Z 9533-E *CJ-125
42	2	C20Z 9533-C
42F	1	C30Z 9533-F *CJ-160
43	1	922A 9533-A *CJ-63
43F	1	C3AZ 9533-F *CJ-155
44	1	B7A 9533-B *CJ-8
44F	1	C30Z 9533-G *CJ-161
45	1	59A 9533-D *CJ-53
45F	1	C30Z 9533-H *CJ-162
46	1	78 9533-C *CJ-56
46F	1	C3AZ 9533-G *CJ-156
47	1	59A 9533-C *CJ-52
47	2	C1AZ 9533-G
47F	1	C3UZ 9533-E *CJ-151
48	1	78 9533-B *CJ-55
48	2	C1AZ 9533-A *CJ-19
48F	1	C3UZ 9533-D *CJ-142
49	1	59A 9533-B *CJ-51
49F	1	C3DZ 9533-C *CJ-137
50	1	78 9533-A *CJ-54
50	2	C1AZ 9533-N
50F	1	C3UZ 9533-C *CJ-141
51	1	59A 9533-A *CJ-50
51	2	C1AZ 9533-M
51F	1	C3DZ 9533-B *CJ-136
52	1	86H 9533 *CJ-62
52F	1	C3UZ 9533-A *CJ-133
53	1	B4T 9533-B *CJ-5
53	2	C1AZ 9533-H
53F	1	C3DZ 9533-A *CJ-128
54	1	06H 9533 *CJ-43
54	2	C1AE 9533-A *CJ-15
54F	1	C3GY 9533-C *CJ-146
55	1	B4T 9533-A *CJ-4
55F	1	C3UZ 9533-B *CJ-140
56	1	78 9533-E *CJ-57
56	2	C1AZ 9533-D *CJ-22
56F	1	C3GY 9533-D *CJ-147
57	1	26H 9533 *CJ-47
57	2	C1AZ 9533-E
57F	1	C30Z 9533-A *CJ-129

COPYRIGHT © 1986 — FORD MOTOR COMPANY — DEARBORN, MICHIGAN

JET IDENTIFICATION CHART

JET IDENT. NUMBER	TYPE	PART NUMBER
58	1	78 9533-F *CJ-58
58	2	C1AZ 9533-U *CJ-35
58F	1	C3GY 9533-A *CJ-144
59	1	B4Q 9533-B *CJ-3
59F	1	C30Z 9533-B *CJ-130
60	1	1GA 9533-C *CJ-46
60	2	C1AZ 9533-S *CJ-33
60F	1	C3GY 9533-B *CJ-145
61	1	B4Q 9533-A *CJ-2
61	2	C1AZ 9533-R *CJ-32
61F	1	C3TZ 9533-C *CJ-138
62	1	1GA 9533-B
62	2	C1AE 9533-D *CJ-45
62F	1	C3AZ 9533-A *CJ-134
63	1	5GA 9533-B *CJ-49
63	2	C1AE 9533-C
63F	1	C3AZ 9533-B *CJ-135
64	1	1GA 9533-A *CJ-44
64	2	C30Z 9533-C *CJ-152
64F	1	C3AZ 9533-C *CJ-143
65	1	5GA 9533-A *CJ-48
65F	1	C3TZ 9533-A *CJ-131
66	1	8MB 9533-B *CJ-61
66F	1	C3TZ 9533-E *CJ-148
67	1	B4C 9533-A *CJ-1
67F	1	C3TZ 9533-D *CJ-139
68	1	8MB 9533-A *CJ-208
68F	1	C3TZ 9533-F *CJ-149
69	1	B7T 9533-A
69F	1	B7T 9533-A *CJ-132
70	1	B6C 9533-A *CJ-6
70F	1	C3TZ 9533-G *CJ-150
71	1	PB8M 9533-A
71F	1	C6AZ 9533-B *CJ-166
72F	1	C6AZ 9533-A *CJ-164
73	1	B7C 9533-A *CJ-9
75F	1	C5AZ 9533-A
77	1	C3AZ 9533-D *CJ-153
79	1	C80Z 9533-A
80	1	D0ZZ 9533-A *CJ-186
82	1	C9ZZ 9533-A *CJ-182
83	1	D00Z 9533-C *CJ-187
85	1	C6AZ 9533-C *CJ-167

YEAR	MODEL/RESTRICTIONS	ENGINE CYL.	ENGINE C.I.D. (C.C.D.)	PART NUMBER	DESCRIPTION	QTY.
9534-9H555	Refer to group 9510 for Carburetor Parts List Instructions					
9P555	GROMMET (CARBURETOR VENT TO AIR CLEANER)					
73/	J	4&6	All	D2RY 9P555-A		1
9H556-9L588	Refer to group 9510 for Carburetor Parts List Instructions					
9B567	GASKET (VALVE ASSY. TO SPACER)					
74/	J	6	All	D4ZZ 9B567-A		1
9A589	SPACER (CARBURETOR TO INTAKE MANIFOLD)-Also refer to group 9447 and 9C477 ⊕ 2800 cc @ 2300 cc					
	A (Mercury)					
73/74	A	8	351C, 400	D7PZ 9A589-P *CM-2645	#D7PE 9A589-PA - Cast iron	1
73/74	A	8	429, 460	D7PZ 9A589-C *CM-2643	#D3VE 9A589-AC, D7PE 9A589-CA-Cast iron	1
75/76	A	8	351M, 400	D5AZ 9A589-B *CM-2324	#D5AE 9A589-AB,AC-aluminum	1
75/76	A	8	351M, 400	D7PZ 9A589-R *CM-3036	#D7PE 9A589-RA-Cast iron	1
75/76	A	8	460, 460 P/C	D7PZ 9A589-D *CM-3033	#D5VE 9A589-AD, D6VE 9A589-CC, D7PE 9A589-DA	1
77	A	8	351M, 400	D7AZ 9A589-C *CM-2402-A	#D7AE 9A589-AA,AC,EA,GA	1
77	A	8	460, 460 P/C	D7VZ 9A589-H *CM-2419-B	#D7VE 9A589-BA,DA,FA,FB,HA-Cast iron	1
78	A "From 10/15/77"	8	351M, 400	★D8AZ 9A589-B *CM-2831	#D8AE 9A589-AA,BA r/b D8AZ 9A589-C(12/81)	1
78	A	8	460	D8VZ 9A589-D *CM-2832	#D8VE 9A589-DA	1
79 79	A A - - exc. Canada	8 8	302 351W (VV)	E0AY 9A589-A *CM-3545	#D9AE 9A589-CA, E0AE 9A589-BA,BB	1 1
79	A - - Canada	8	351W (exc. VV)	D9AZ 9A589-F *CM-3099	#D9AE 9A589-FA	1
	C (Montego)					
73/74	C - - without T/E	6	250	D3DZ 9A589-B *CM-2642	#D3DE 9A589-BE Cast iron	1
73/74	C	8	302	D7PZ 9A589-B *CM-2642	#D30E 9A589-BC, D7PE 9A589-BA cast iron	1
73/74	C	8	351W	D7PZ 9A589-M *CM-2644	#D30E 9A589-AC,D7PE 9A589-MA-Cast iron	1
75/76	C	8	351W	D7PZ 9A589-S *CM-3037	#D50E 9A589-AB-Cast iron	1
73/74	C	8	351-4/B	D3ZZ 9A589-A		1
73/74	C	8	351C-2/B,400	D7PZ 9A589-P *CM-2645	#D7PE 9A589-PA-Cast iron	1
75/76	C	8	351M, 400	D5AZ 9A589-B *CM-2324	#D5AE 9A589-AB,AC-aluminum	1
75/76	C	8	351M, 400	D7PZ 9A589-R *CM-3036	#D7PE 9A589-RA-Cast iron	1
73/74	C	8	429, 460	D7PZ 9A589-C *CM-2643	#D3VE 9A589-AC, D7PE 9A589-CA-cast iron	1
75/76	C	8	460, 460 P/C	D7PZ 9A589-D *CM-3033	#D5VE 9A589-AD, D6VE 9A589-CC, D7PE 9A589-DA-Cast iron	1

COPYRIGHT © 1986 — FORD MOTOR COMPANY — DEARBORN, MICHIGAN

1973/79 LINCOLN-MERCURY CARS

YEAR	MODEL/RESTRICTIONS	ENGINE CYL.	ENGINE C.I.D. (C.C.D.)	PART NUMBER	DESCRIPTION	QTY.
9A589	SPACER (CARBURETOR TO INTAKE MANIFOLD)-Also refer to group 9447 and 9C477 — Cont'd ⊕ 2800 cc @ 2300 cc					
	D (Lincoln)					
73/74	D	8	429, 460	D7PZ 9A589-C *CM-2643	#D3VE 9A589-AC, D7PE 9A589-CA-cast iron	1
75/76	D	8	460	D7PZ 9A589-D *CM-3033	#D5VE 9A589-AD, D6VE 9A589-CC, D7PE 9A589-DA-Cast iron	1
77	D	8	400	D7AZ 9A589-C *CM-2402-A	D7AE 9A589-AA,AC,EA,GA	1
77	D	8	460	D7VZ 9A589-H *CM-2419-B	#D7VE 9A589-BA,DA,FA,FB,HA-Cast iron	1
78/	D	8	400	★D8AZ 9A589-B *CM-2831	#D8AE 9A589-AA,BA r/b D8AZ 9A589-C (12/81)	1
78	D	8	460	D8VZ 9A589-D *CM-2832	#D8VE 9A589-DA	1
	F (Cougar)					
73/74	F	8	351W	D7PZ 9A589-M *CM-2644	#D30E 9A589-AC,D7PE 9A589-MA-cast iron	1
73/74	F	8	351-4/B	D3ZZ 9A589-A		1
73/74	F	8	351C-2/B,400	D7PZ 9A589-P *CM-2645	#D7PE 9A589-PA-Cast iron	1
75/76	F	8	351W	D7PZ 9A589-S *CM-3037	#D50E 9A589-AB-Cast iron	1
75/76	F	8	351M, 400	D5AZ 9A589-B *CM-2324	#D5AE 9A589-AB,AC-aluminum	1
75/76	F	8	351M, 400	D7PZ 9A589-R *CM-3036	#D7PE 9A589-RA-Cast iron	1
73/74	F	8	429, 460	D7PZ 9A589-C *CM-2643	#D3VE 9A589-AC, D7PE 9A589-CA-cast iron	1
75/76	F	8	460	D7PZ 9A589-D *CM-3033	#D5VE 9A589-AD, D6VE 9A589-CC, D7PE 9A589-DA-cast iron	1
77 77/78 78	F F F - - exc. Calif.	8 8	302 351W 302	★D70Z 9A589-B *CM-2405-A	#D70E 9A589-AB,AD,DA r/b D70Z 9A589-C (12/81)	1 1
79	F	8	302	D70Z 9A589-C *CM-2405-B	#D70E 9A589-AD,DA-also incl. gaskets	1
78	F - - Calif.	8	302 (VV)	D8VZ 9A589-A *CM-2832	#D8VE 9A589-AA	1
77	F	8	351M, 400	D7AZ 9A589-C *CM-2402-A	#D7AE 9A589-AA,CA,EA,GA	1
78 79	F F	8 8	351M, 400 351M	★D8AZ 9A589-B *CM-2831	#D8AE 9A589-AA,BA r/b D8AZ 9A589-C (12/81)	1 1
79	F	8	351W	E0AY 9A589-A *CM-3545	#D9AE 9A589-CA,E0AE 9A589-BA,BB	1
	G (Monarch)					
75/76	G	6	200,250	D5DZ 9A589-A	#D5DE 9A589-BA,BB	1
75/76	G	8	302, 351W	D7PZ 9A589-S *CM-3037	#D50E 9A589-AB-Cast iron	1
77 77/	G G	6 6	200, 250	D8BZ 9A589-B *CM-2403-A	#D8BE 9A589-BA,BB	1 1
77	G	8	302, 351W	★D70Z 9A589-B *CM-2405-A	#D70E 9A589-AD,AB,DA r/b D70Z 9A589-C (12/81)	1

YEAR	MODEL/RESTRICTIONS	ENGINE CYL.	ENGINE C.I.D. (C.C.D.)	PART NUMBER	DESCRIPTION	QTY.
9A589	SPACER (CARBURETOR TO INTAKE MANIFOLD)-Also refer to group 9447 and 9C477 — Cont'd ⊕ 2800 cc @ 2300 cc					
	G (Monarch)					
78	G - - exc. Calif.	8	302	D70Z 9A589-C *CM-2405-B	#D70E 9A589-AD,DA-also incl. gaskets	1
78	G - - Calif.	8	302 (VV)	D8VZ 9A589-A *CM-2830	#D8VE 9A589-AA	1
79	G	8	302	E0AY 9A589-A *CM-3545	#D9AE 9A589-CA,E0AE 9A589-BA,BB	1
	J (Capri)					
73	J	6	All	★D2RY 9A589-A	#72TF 9A589-AA Lower	1
73	J	6	All	★D2RY 9A589-D	#72TF 9P697-AA Upper	1
74	J	6	All	D4RY 9A589-A	#74TF 9A589-BA,74TF 9P697-AB,BA	1
76	J	4	@140	D5FZ 9A589-AA	#D52E 9A589-AA	1
77	J	4	@140	★D7FZ 9A589-A *CM-2404	#D7EE 9P697-AA r/b D7FZ 9A589-B (12/79)	1
78	J	4	@140	D7FZ 9A589-B *CM-2404-A	#D7EE 9P697-AA-also incl. gaskets	1
75/76	J	6	⊕171	D5ZZ 9A589-B *CM-3100	#75TF 9A589-AB,76TF 9A589-AA Incl. (1) E650413-S72 plug	1
77/	J - - exc. Calif.	6	⊕171	D7ZZ 9A589-A *CM-2420	#77TF 9A589-AB	1
77/78	J - - A/T-Calif.	6	⊕171	★D7ZZ 9A589-B *CM-2421	#77TF 9A589-BA,BB	1
77/78	J - - M/T-Calif.	6	⊕171	★D7ZZ 9A589-C *CM-2955	#77TF 9A589-CA	1
79	J	6	200	D8BZ 9A589-B *CM-2403-A	#D8BE 9A589-BA,BB	1
79	J - - Calif.	6	⊕171	D9ZZ 9A589-B *CM-3299	#79TF 9A589-BB-Incl. (1) each D7VZ 9E464-A, D6RY 9447-B, and D7FZ 9C477-A	1
79	J	8	302	E0AY 9A589-A *CM-3545	#D9AE 9A589-CA,E0AE 9A589-BA,BB	1
	K (Mark IV, Mark V)					
73/74	K	8	429, 460	D7PZ 9A589-C *CM-2643	#D3VE 9A589-AC, D7PE 9A589-CA-cast iron	1
75/76	K	8	460	D7PZ 9A589-D *CM-3033	#D5VE 9A589-AD, D6VE 9A589-CC, D7PE 9A589-DA-Cast iron	1
77	K	8	400	D7AZ 9A589-C *CM-2402-A	#D7AE 9A589-AA,CA,EA,GA	1
77	K	8	460	D7VZ 9A589-H *CM-2419-B	#D7VE 9A589-BA,DA,FA,FB,HA-Cast iron	1
78/	K	8	400	★D8AZ 9A589-B *CM-2831	#D8AE 9A589-AA,BA r/b D8AZ 9A589-C (12/81)	1
78	K	8	460	D8VZ 9A589-D *CM-2832	#D8VE 9A589-DA	1
	L (Bobcat)					
74/76	L	4	@140	D5FZ 9A589-AA	#D52E 9A589-AA	1
75/76	L	6	⊕171	D5ZZ 9A589-B *CM-3100	#75TF 9A589-AB,76TF 9A589-AA Incl. (1) E650413-S72 plug	1
77	L	4	@140	★D7FZ 9A589-A *CM-2404	#D7EE 9P697-AA r/b D7FZ 9A589-B (12/81)	1
78/79	L	4	@140	D7FZ 9A589-B *CM-2404-A	#D7EE 9P697-AA-also incl. gaskets	1

COPYRIGHT © 1986 — FORD MOTOR COMPANY — DEARBORN, MICHIGAN

1973/79 LINCOLN-MERCURY CARS

YEAR	MODEL/RESTRICTIONS	ENGINE CYL.	ENGINE C.I.D. (C.C.D.)	PART NUMBER	DESCRIPTION	QTY.
9A589	SPACER (CARBURETOR TO INTAKE MANIFOLD)-Also refer to group 9447 and 9C477 — Cont'd ⊕ 2800 cc @ 2300 cc					
	L (Bobcat)					
77/	L - - exc. Calif.	6	⊕171	D7ZZ 9A589-A *CM-2420	#77TF 9A589-AB	1
77/78	L - - Calif.	6	⊕171	D7ZZ 9A589-B *CM-2421	#77TF 9A589-BA,BB	1
79	L - - Calif.	6	⊕171	D9ZZ 9A589-B *CM-3299	#79TF 9A589-BB, Incl. (1) each D7VZ 9E464-A, D6RY 9447-B, and D7FZ 9C477-A	1
75/	L	6	⊕ 171	E804296-S72	(AB-195-AA) Screw (spacer to manifold) M 8 x 35 socket head	5
	P (Comet)					
73/74	P - - without T/E	6	200	D3DZ 9A589-A	#D3DE 9A589-AE	1
74	P - - Calif.	6	200	★D4DZ 9A589-C	#D4DE 9A589-CA	1
73/74	P - - without T/E	6	250	D3DZ 9A589-B	#D3DE 9A589-BE	1
75/76	P	6	200,250	D5DZ 9A589-A	#D5DE 9A589-BA,BB	1
73/74	P	8	302	D7PZ 9A589-B *CM-2642	#D30E 9A589-BC, D3TE 9A589-DC, D4TE 9A589-JA, D7PE 9A589-BA-cast iron	1
75/76	P	8	302	D7PZ 9A589-S *CM-3037	#D50E 9A589-AB-Cast iron	1
77	P	6	200,250	D8BZ 9A589-B *CM-2403-A	#D8BE 9A589-BA,BB	1
77	P	8	302	★D70Z 9A589-B *CM-2405-A	#D70E 9A589-AB,AD,DA r/b D70Z 9A589-C (12/81)	1
77	P	8	302	D70Z 9A589-C *CM-2405-B	#D70E 9A589-AD,DA-also incl. gaskets	1
	P (Zephyr)					
78/	P	4	140 (2300)	D7FZ 9A589-B *CM-2404-A	#D7EE 9P697-AA	1
78/	P	6	200	D8BZ 9A589-B *CM-2403-A	#D8BE 9A589-BA,BB	1
78	P - - exc. Calif.	8	302	★D70Z 9A589-B *CM-2405-A	#D70E 9A589-AD,DA r/b D70Z 9A589-C (12/81)	1
79	P	8	302	D70Z 9A589-C *CM-2405-B	#D70E 9A589-AD,DA-also incl. gaskets	1
78	P - - Calif.	8	302 (VV)	D8VZ 9A589-A *CM-2830	#D8VE 9A589-AA	1
	V (Versailles)					
77	V	8	302, 351W	★D70Z 9A589-B *CM-2405-A	#D70E 9A589-AB,AD,DA r/b D70Z 9A589-C (12/81)	1
79	V - - without EEC-Calif.	8	302	D70Z 9A589-C *CM-2405-B	#D70E 9A589-AD,DA-also incl. gaskets	1
78	V	8	302	D8VZ 9A589-A *CM-2830	#D8VE 9A589-AA	1
79	V - - exc. Calif.	8	302			1
79	V - - with EEC-Calif.	8	302			1
	Y (Meteor)					
73/74	Y	8	351, 400	D7PZ 9A589-P *CM-2645	#D7PE 9A589-Cast iron	1
75/76	Y	8	351M, 400	D5AZ 9A589-B *CM-2324	#D5AE 9A589-AB,AC-aluminum	1
75/76	Y	8	351M, 400	D7PZ 9A589-R *CM-3036	#D7PE 9A589-RA-Cast iron	1

YEAR	MODEL/RESTRICTIONS	ENGINE CYL.	ENGINE C.I.D. (C.C.D.)	PART NUMBER	DESCRIPTION	QTY.
9A589	SPACER (CARBURETOR TO INTAKE MANIFOLD)-Also refer to group 9447 and 9C477 — Cont'd ⊕ 2800 cc @ 2300 cc					
	Y (Meteor)					
73/74	Y	8	429, 460	D7PZ 9A589-C *CM-2643	#D3VE 9A589-AC, D7PE 9A589-CA-cast iron	1
75/76	Y	8	460	D6VZ 9A589-C *CM-2322	#D5VE 9A589-AD, D6VE 9A589-CC-aluminum	1
75/76	Y	8	460	D7PZ 9A589-D *CM-3033	#D7PE 9A589-DA-cast iron	1
73/74	C,P	6	All	385728-S36	(II-153-AE)-elbow (EGR tube to carb spacer)-3/8" pipe-1/2" tube	1
75/76	G,P	6	All	386439-S36	(II-229-A)-elbow (EGR tube to carb spacer)-90°" - 1/2" - 14 x 5/8"	1
77/	G,P - - Calif.	6	250	387405-S36	(II-229-P)-elbow (EGR tube to carb. spacer)-3/4" x 3/4"	1
77/	G,P - - exc. Calif.	6	All	388081-S36	(II-229-M)-elbow (EGR tube to carb spacer)-3/4" - 14 x 5/8"	1
77/	G,P - - Calif.	6	All	387464-S36	(II-176-Z)-elbow (EGR tube to carb spacer)-35°-3/4" - 14 x 3/4" tube	1
73/	C,P	6	All	33925-S7	(M-33)-nut (carburetor to spacer)-3/8"-24	2
73/	C,P	6	All	88392-S8	(W-14)-stud (carburetor to spacer)-1 1/2"-16-9/16"-24 x 3/8"	2
73/74	J - - M/T	6	All	66806-GS	Gasket-ring flange to carburetor "O" ring use w/D2RY 9A589-A	2
73/74	J - - M/T	6	All	E804264-S	Stud (spacer to intake manifold)-M8-use w/D2RY 9A589-A	4
73/74	J	6	All	E804278-S72	Stud (carburetor to spacer)-M8-use w/D2RY 9A589-D	4
74/	J	6	⊕ 171	E804296-S72	(AB-195AA) Screw (spacer to manifold) M 8 x 35 socket head	5
74/ 75/76	J - - T/E L - - Calif.	6	⊕171	E804481-S72	(WW-147)-stud (carburetor to spacer)-M8 x 25	4
77	J,L	6	⊕171	E804610-S72	(AW-44-HA)-stud (carburetor to spacer)-M8-6X16-M8-6 x 20	4
74/	J,L	6	⊕171	N800103-S51	(AM-11) Nut (carb to manifold)-M8-12 point (Metric coarse)	4
74/	L	4	@140	N800120-S100	(AW-55-A)-stud (carburetor to spacer)-M8 x 50	4
73/	A,C,D,F,K	8	460	387544-S	(WW-14-BD)-Stud (carb. to manifold)-5/16 - 18 -24 - 2 13/32"	4
73/	A,C,D,F,K	8	460	387167-S2	(MM-295-AH)-nut (carb to manifold)-5/16 - 24 hex. flange	4
73/	A,C,D,F,G,K,P,Y	8	302,351, 400	376064-S8	(WW-14-CD)-Stud (carb. to manifold)-5/16-18-24 x 2 1/2"	4
73/	A,C,D,F,G,K,P,Y	8	302,351, 400	351089-S	(MM-20)-Nut (carb to manifold)-5/16-24 hex	4
9E589	VALVE ASSY. (CARBURETOR FLOAT BOWL VENT)					
78/	A,D,F,G,L,K,P	6&8	All	D8TZ 9E589-B *CX-233	#D8TE 9E589-B1A,B2A	1
9590-9592	Refer to group 9510 for Carburetor Parts List Instructions					
9B593	VALVE ASSY. (FUEL VAPOR)-Also refer to group 9B328					
74/75	C,D,F,G,K	6&8	250,302, 351,400, 460	★ D8AZ 9B593-A	R/b E2AZ 9B593-A(11/81)	1
75	P - - w/19 gal. tank	6&8	All			1
76/	All	4,6 &8	All			AR

COPYRIGHT © 1986 — FORD MOTOR COMPANY — DEARBORN, MICHIGAN

DESCRIPTION/RESTRICTIONS	PART NUMBER	CARB. PARTS LISTS 23A THRU 23M											
		A	B	C	D	E	F	G	H	J	K	L	M
NOTE: † Not a part of service carburetor													
GASKET SET – Refer to carburetor identification chart–Section 95	9502												
TUNE–UP KIT – Refer to carburetor identification chart–Section 95	9A586												
Screw (upper body)–fill. head–No. 10–32 x 5/8"	31628–S7(U–58)	4	4	4	4	4	4	4	4	4	4	4	4
Washer (upper body)–lock–No. 10	34803–S7(X–60)	4	4	4	4	4	4	4	4	4	4	4	4
Screw (fast idle speed)–fill. head–No. 8–32 x 1"	31125–S8(U–53)	A	B	C	D	E	F	G	H	J	K	L	M
LIMITER (IDLE ADJUSTING)	D6PZ 9J500–A *CM–747–B	†A	†B	C	D	E	†F	†G	H	J	K	L	M
BUSHING (THROTTLE SHAFT)	D1DZ 9B508–B *CM–1419	A	B	C	D	E	F	G	H	J	K	L	M
WEIGHT (PUMP DISCHARGE BALL)	D2DZ 9B511–A *CM–1473	A	B	C	D	E	F	G	H	J	K	L	M
GASKET (THROTTLE BODY TO MAIN BODY)	C8AZ 9516–A *CG–216	A	B	C	D	E	F	G	H	J	K	L	M
RESTRICTOR (JET)–low speed	9A521												
Tag code D3DF–BA	D0DZ 9A521–B *CM–1070	A		C									
Tag code D3DF–BB Tag code D3DF–FB	D1TZ 9A521–A *CM–1410			C		E		G	H				
	D3DZ 9A521–A *CM–1724		B		D								
	D3TZ 9A521–B *CM–1735									J	K	L	M
SCREEN (FUEL FILTER)	C4AZ 9F525–A	A	B	C	D	E	F	G	H	J	K	L	M
ROD (METERING)	9A526												
	D2DZ 9A526–B *CM–1475	A	B	C	D								
	D2DZ 9A526–C *CM–1538					E	F						
	D4DZ 9A526–A *CM–1825							G	H				
	D3TZ 9A526–C *CM–1728									J	K	L	M
COVER ASSY. (ACCELERATOR PUMP)	D3DZ 9528–A	A	B	C	D	E	F	G	H	J	K	L	M
Screw & washer (cover to carb.)–fill. head–No. 8–32 x 5/8"	43255–S8(U–74)	4	4	4	4	4	4	4	4	4	4	4	4
LINK (ACCELERATOR PUMP)	D0DZ 9529–A *CM–1324	A	B	C	D	E	F	G	H	J	K	L	M
SCREW & WASHER ASSY. (AIR HORN)–choke bracket–No. 12–28 x 9/16"	C8DZ 9F529–A	3	3	3	3	3	3	3	3	3	3	3	3
SCREW (THROTTLE BODY)–power lock	D2TZ 9F529–A	3	3	3	3	3	3	3	3	3	3	3	3
JET (MAIN METERING)	9533												
	C8AZ 9533–A *CJ–171	A		C				G	H				
	C8AZ 9533–B *CJ–179		B		D	E	F			J	K	L	M
SPRING (THROTTLE)	D1DZ 9A538–A *CM–1420	A	B	C	D	E	F	G	H	J	K	L	M
SCREW (FAST IDLE ADJUSTING)	D1DZ 9B538–D	A	B	C	D	E	F	G	H	J	K	L	M
BAFFLE (AUTOMATIC CHOKE PLATE)	9A539–A												
	C7DZ 9A539–A	A	B	C	D	E	F						
	D4DZ 9A539–A							G	H				
	D4DZ 9A539–B									J	K	L	M

COPYRIGHT © 1986 — FORD MOTOR COMPANY — DEARBORN, MICHIGAN

DESCRIPTION/RESTRICTIONS	PART NUMBER	CARB. PARTS LISTS 23A THRU 23M											
		A	B	C	D	E	F	G	H	J	K	L	M
NOTE: † Not a part of service carburetor													
NEEDLE (IDLE ADJUSTING)	C8AZ 9541-F *CM-1007	A	B	C	D	E	F	G	H	J	K	L	M
ROD (ACCELERATOR PUMP LINK TO OVERTRAVEL LEVER)	D8PZ 9B542-C *CM-2946-A	A	B	C	D	E	F	G	H	J	K	L	M
PLATE (CHOKE)	C7DZ 9545-A *CM-701	A	B	C	D	E	F	G	H	J	K	L	M
Screw (choke plate to choke shaft)-fill. head-No. 4-40 x 3/16"	31291-S(U-43)	2	2	2	2	2	2	2	2	2	2	2	2
SHAFT and LEVER ASSY. (CHOKE)	D5PZ 9546-A *CM-2174	A	B	C	D	E	F	G	H	J	K	L	M
DASHPOT ASSY.	D1DZ 9B549-A *CM-1432	†A	†B			E		†G			K	L	
Nut (dashpot to dashpot mounting bracket)-jam-5/16"	33923-S7(M-32)	A	B			E		G			K	L	
FLOAT ASSY.	D5TZ 9550-A *CM-703-A	A	B	C	D	E	F	G	H	J	K	L	M
BRACKET (DASHPOT MOUNTING)	★ D4DZ 9B550-A *CM-1434-A	†A	†B			E		†G		J	K	L	M
SHAFT (FLOAT LEVER)	★ C7DZ 9558-A	A	B	C	D	E	F	G	H	J	K	L	M
HUB (FAST IDLE CAM)	D1DZ 9D558-B *CM-1419	A	B	C	D	E	F	G	H	J	K	L	M
DIAPHRAGM ASSY. (ACCELERATOR PUMP)	C7DZ 9B559-A *CM-704	A	B	C	D	E	F	G	H	J	K	L	M
GASKET (FLOAT BOWL)	C7DZ 9561-A	A	B	C	D	E	F	G	H	J	K	L	M
VALVE and SEAT ASSY. (FUEL INLET)	9564												
	E4PZ 9564-A *CV-109-A	A	B	C	D	E	F	G	H	J	K	L	M
FILTER (ACCELERATOR PUMP CAVITY)	C8DZ 9F565-A	A	B	C		E	F			J	K		
GASKET (FUEL INLET NEEDLE SEAT)	C6VY 9569-A	A	B	C	D	E	F	G	H	J	K	L	M
BALL (PUMP DISCHARGE)	D2DZ 9576-A *CM-1476	A	B	C	D	E	F	G	H	J	K	L	M
SPRING (IDLE ADJUSTING NEEDLE)	9578												
	C8DZ 9578-A *CM-776	A	B	C	D	E	F	G	H	J	K	L	M
Spring (carb. speed screw)	C8VY 9578-A *CM-750	A	B	C	D	E	F	G	H	J	K	L	M
SPRING (FAST IDLE ADJUSTING SCREW)	B7A 9578-B	A	B	C	D	E	F	G	H	J	K	L	M
LEVER and SHAFT ASSY. (THROTTLE)	★ D4DZ 9581-D *CM-1415-A	A	B	C	D	E	F	G	H	J	K	L	M
SPACER (DIAPHRAGM)	D0DZ 9B581-A	A	B	C	D	E	F						
PLATE (THROTTLE)	C8AZ 9585-G *CM-798	A	B	C	D	E	F	G	H	J	K	L	M
Screw (plate to lever and shaft)-No. 4-40 x 3/16"	31291-S(U-43)	2	2	2	2	2	2	2	2	2	2	2	2
BRACKET (THROTTLE EMISSION CONTROL SOLENOID)	D4DZ 9J586-B			C	D		†F		H				M
Nut (solenoid bracket to carb.)-No. 10-32	34079-S7(M-163)			C	D		†F		H				M
LEVER (ACCELERATOR PUMP)	C7DZ 9D591-A	A	B	C	D	E	F	G	H	J	K	L	M
Screw (accel. lever to throttle lever)-No. 10-32 x 3/8"	50804-S8(U-157)	A	B	C	D	E	F	G	H	J	K	L	M

NOTICE: When the parts list suffix is shown in the quantity required column, the quantity is one (1).

DESCRIPTION/RESTRICTIONS	PART NUMBER	CARB. PARTS LISTS 23A THRU 23M											
		A	B	C	D	E	F	G	H	J	K	L	M
NOTE: † Not a part of service carburetor													
CAM KIT (FAST IDLE)	D1DZ 9597-D *CM-1417	A	B	C	D	E	F	G	H	J	K	L	M
SPRING (ACCELERATOR PUMP ROD)-upper	C7DZ 9D598-A	A	B	C	D	E	F	G	H	J	K	L	M
RETAINER (ACCELERATOR PUMP SPRING)-upper	C7DZ 9599-A	A	B	C	D	E	F	G	H	J	K	L	M
RETAINER (FAST IDLE CAM ROD)	D1DZ 9599-A *CM-1467	A	B	C	D	E	F	G	H	J	K	L	M
SCREW (AIR CLEANER RETAINER TO CARBURETOR)-slotted pan-No. 10-24 x 1/2" top tite	C8DZ 9C631-A	2	2	2	2	2	2	2	2	2	2	2	2
SPRING (ACCELERATOR PUMP)-LOWER	9636												
	★ ECZ 9636-B	A	B	C	D								
	C8UZ 9636-A *CM-785					E	F	G	H	J	K	L	M
RETAINER (AIR CLEANER TO CARBURETOR)	C8DZ 9B672-A	A	B	C	D	E	F	G	H	J	K	L	M
ARM ASSY. (METERING ROD)	D0DZ 9D819-A *CM-1325	A	B	C	D	E	F	G	H	J	K	L	M
PISTON ASSY. (CHOKE)	9840												
	D1TZ 9840-B *CM-1438	A		C						J	K		
	★ D1DZ 9840-C *CM-1436		B		D	E	F	G	H			L	M
CLAMP (THERMOSTATIC CHOKE HOUSING)	9842												
	D0ZZ 9842-A *CM-1234	3	3	3	3	3	3			3	3	3	3
	D4DZ 9842-B *CM-1829							G	H				
Screw (attach clamp to choke housing)-No. 8-32 x 1/4"	31032-S8(U-47)	3	3	3	3	3	3	3	3	3	3	3	3
HOUSING (THERMOSTATIC CHOKE)	9848												
	D0TZ 9848-A *CM-1137	A		C						J	K		
	D0DZ 9848-A *CM-1075		B		D	E	F					L	M
	D4DZ 9848-C *CM-1832							G	H				
SOLENOID ASSY. (THROTTLE EMISSION CONTROL)	9D856												
	D2AZ 9D856-E			C	D		†F		H				
	D4DZ 9D856-A									J			M
NUT (SOLENOID THROTTLE)-hex. 7/16" -20	45219-S(M-173)			C	D		F		H	J			M
GASKET (THERMOSTATIC CHOKE HOUSING)	B8A 9871-B	A	B	C	D	E	F	G	H	J	K	L	M

COPYRIGHT © 1986 — FORD MOTOR COMPANY — DEARBORN, MICHIGAN

DESCRIPTION/RESTRICTIONS	PART NUMBER	CARB. PARTS LISTS 23N THRU 23Z											
		N	P	Q	R	S	T	U	V	W	X	Y	Z
NOTE: † Not a part of service carburetor													
GASKET SET – Refer to carburetor identification chart–Section 95	9502												
TUNE-UP KIT – Refer to carburetor identification chart–Section 95	9A586												
Screw (upper body)–fill. head–No. 10–32 x 5/8"	31628-S7(U-58)	4	4	4	4	4	4	4	4				
Washer (upper body)–lock–No. 10	34803-S7(X-60)	4	4	4	4	4	4	4	4				
Screw (fast idle speed)–fill. head–No. 8–32 x 1"	31125-S8(U-53)	N	P	Q	R	S	T						
LIMITER (IDLE ADJUSTING)	9J500												
	D6PZ 9J500-A *CM-747-B	N	P	Q	†R	S	T	U	†V				
BUSHING (THROTTLE SHAFT)	9B508												
	D1DZ 9B508-B *CM-1419	N	P	Q	R	S	T						
	D5PZ 9B508-A *CM-2195							U	V				
WEIGHT (PUMP DISCHARGE BALL)	D2DZ 9B511-A *CM-1473	N	P	Q	R	S	T	U	V				
GASKET (THROTTLE BODY TO MAIN BODY)	C8AZ 9516-A *CG-216	N	P	Q	R	S	T						
GASKET (BODY FLANGE)	D5PZ 9516-B *CG-454							U	V				
RESTRICTOR (JET)–low speed	9A521												
	D3TZ 9A521-B *CM-1735	N	P	Q	R	S	T						
	D0DZ 9A521-B *CM-1070							U	V				
SCREEN (FUEL FILTER)	C4AZ 9F525-A	N	P	Q	R	S	T	U	V				
ROD (METERING)	9A526												
	D3TZ 9A526-C *CM-1728	N	P	Q	R	S	T						
	★ D5DZ 9A526-B *CM-2262							U					
	★ D5DZ 9A526-A *CM-2261								V				
COVER ASSY. (ACCELERATOR PUMP)	9528												
	D3DZ 9528-A	N	P	Q	R	S	T						
	D5DZ 9528-A *CM-2228							U	V				
Screw & washer (cover to carb.)–fill head–No. 8–32 x 5/8"	43255-S8(U-74)	4	4	4	4	4	4	4	4				
LINK (ACCELERATOR PUMP)	9529												
	D0DZ 9529-A *CM-1324	N	P	Q	R	S	T						
	D5PZ 9529-A *CM-2192							U	V				

NOTICE: When the parts list suffix is shown in the quantity required column, the quantity is one (1).

DESCRIPTION/RESTRICTIONS	PART NUMBER	CARB. PARTS LISTS 23N THRU 23Z											
		N	P	Q	R	S	T	U	V	W	X	Y	Z
NOTE: † Not a part of service carburetor													
SCREW & WASHER ASSY. (AIR HORN)–choke bracket–No. 12-28 x 9/16"	C8DZ 9F529-A	3	3	3	3	3	3	3	3				
SCREW (THROTTLE BODY)–power lock	D2TZ 9F529-A	3	3	3	3	3	3	3	3				
SCREW (CAM SET)	D5TZ 9F529-A							U	V				
ROD (FAST IDLE CAM)	D5DZ 9D530-A *CM-2270							U	V				
JET (MAIN METERING)	9533												
	C8AZ 9533-B *CJ-179	N	P	Q	R	S	T	U					
	C8AZ 9533-A *CJ-171								V				
SPRING (THROTTLE)	D1DZ 9A538-A *CM-1420	N	P	Q	R	S	T						
SCREW (FAST IDLE ADJUSTING)	9B538												
	D1DZ 9B538-D	N	P	Q	R	S	T						
	D5PZ 9B538-A *CM-2183							U	V				
Used for fast idle cam	D5DZ 9B538-A *CM-2232							U	V				
BAFFLE (AUTOMATIC CHOKE PLATE)	9A539												
	D4DZ 9A539-B	N	P	Q	R	S	T						
	D4DZ 9A539-A							U	V				
NEEDLE (IDLE ADJUSTING)	9541												
	C8AZ 9541-F *CM-1007	N	P	Q	R	S	T						
	D5PZ 9541-A *CM-2189							U	V				
ROD (ACCELERATOR PUMP LINK TO OVERTRAVEL LEVER)	9B542												
	D8PZ 9B542-C *CM-2946-A	N	P	Q	R	S	T						
	D5PZ 9B542-A *CM-2191							U	V				
TUBE (PUMP PASSAGE)	D5DZ 9544-A *CM-2230							U	V				
PLATE (CHOKE)	9545												
	C7DZ 9545-A *CM-701	N	P	Q	R	S	T	U					
	★ D5DZ 9545-A *CM-2263								V				
Screw (choke plate to choke shaft)–fill. head–No. 4-40 x 3/16"	31291-S(U-43)	2	2	2	2	2	2	2	2				
SHAFT and LEVER ASSY. (CHOKE)	D5PZ 9546-A *CM-2174	N	P	Q	R	S	T	U	V				
DASHPOT ASSY.	D1DZ 9B549-A *CM-1432	N	P										
Nut (dashpot to dashpot mounting bracket)–jam-5/16"	33923-S7(M-32)	N	P										

COPYRIGHT © 1986 — FORD MOTOR COMPANY — DEARBORN, MICHIGAN

DESCRIPTION/RESTRICTIONS	PART NUMBER	CARB. PARTS LISTS 23N THRU 23Z											
		N	P	Q	R	S	T	U	V	W	X	Y	Z
NOTE: † Not a part of service carburetor													
FLOAT ASSY.	D5TZ 9550-A *CM-703-A	N	P	Q	R	S	T	U	V				
BRACKET (DASHPOT MOUNTING)	★ D4DZ 9B550-A *CM-1434-A	N	P										
SHAFT (FLOAT LEVER)	★ C7DZ 9558-A	N	P	Q	R	S	T	U	V				
HUB (FAST IDLE CAM)	D1DZ 9D558-B *CM-1419	N	P	Q	R	S	T						
DIAPHRAGM ASSY. (ACCELERATOR PUMP)	C7DZ 9B559-A *CM-704	N	P	Q	R	S	T	U	V				
Screw (diaphragm housing)-No. 8-32 x 5/8"	43255-S8(U-74)	4	4	4	4	4	4	4	4				
GASKET (FLOAT BOWL)	C7DZ 9561-A	N	P	Q	R	S	T	U	V				
VALVE and SEAT ASSY. (FUEL INLET)	E4PZ 9564-A *CV-109-A	N	P	Q	R	S	T	U	V				
COLLAR (PUMP DIAPHRAGM)	D5PZ 9F565-A							U	V				
GASKET (FUEL INLET NEEDLE SEAT)	C6VY 9569-A	N	P	Q	R	S	T	U	V				
BALL (PUMP DISCHARGE)	D2DZ 9576-A *CM-1476	N	P	Q	R	S	T	U	V				
LEVER (CHOKE)	D5DZ 9F577-B *CM-2277							U	V				
SPRING (IDLE ADJUSTING NEEDLE)	9578												
	C8DZ 9578-A *CM-776	N	P	Q	R	S	T						
	D5PZ 9578-A *CM-2188							U	V				
Spring (carb. speed screw)	C8VY 9578-A *CM-750	N	P	Q	R	S	T	2	2				
SPRING (FAST IDLE ADJUSTING SCREW)	B7A 9578-B	N	P	Q	R	S	T						
LEVER and SHAFT ASSY. (THROTTLE)	9581												
	★ D4DZ 9581-D *CM-1415-A	N	P	Q	R	S	T						
	★ D5DZ 9581-C *CM-2264							U	V				
Retainer-spring (throttle shaft)-1/2"	353161-S(RR-3)							U	V				
Screw (throttle shaft)-No. 12-24 x 1/2"	378608-S8(UU-52-D)							U	V				
NOTE: † Not a part of service carburetor													
PLATE (THROTTLE)	9585												
	C8AZ 9585-G *CM-798	N	P	Q	R	S	T						
	D5PZ 9585-A *CM-2187							U	V				
Screw (plate to lever and shaft)-No. 4-40 x 3/16"	31291-S(U-43)	2	2	2	2	2	2	2	2				
BRACKET (THROTTLE EMISSION CONTROL SOLENOID)	D4DZ 9J586-B			Q	†R	S	T	U	†V				
Nut (solenoid bracket to carb.)-No. 10-32	34079-S7(M-163)			Q	†R	S	T	U	V				
LEVER (ACCELERATOR PUMP)	C7DZ 9D591-A	N	P	Q	R	S	T						
Screw (accel. lever to throttle lever)-No. 10-32 x 3/8"	50804-S8(U-157)	N	P	Q	R	S	T						

NOTICE: When the parts list suffix is shown in the quantity required column, the quantity is one (1).

DESCRIPTION/RESTRICTIONS	PART NUMBER	CARB. PARTS LISTS 23N THRU 23Z											
		N	P	Q	R	S	T	U	V	W	X	Y	Z
ARM (THROTTLE SHAFT)	D5PZ 9D591-B *CM-2185							U	V				
CAM KIT (FAST IDLE)	D1DZ 9597-D *CM-1417	N	P	Q	R	S	T	U	V				
SPRING (ACCELERATOR PUMP ROD)-upper	C7DZ 9D598-A	N	P	Q	R	S	T	U	V				
RETAINER (ACCELERATOR PUMP SPRING)-upper	C7DZ 9599-A	N	P	Q	R	S	T	U	V				
RETAINER (FAST IDLE CAM ROD)	D1DZ 9599-A *CM-1467	N	P	Q	R	S	T	U	V				
RETAINER (METERING ROD PLATE)	D5TZ 9599-A *CM-2226							U	V				
SCREW (AIR CLEANER RETAINER TO CARBURETOR)-slotted pan-No. 10-24 x 1/2" top tite	C8DZ 9C631-A	2	2	2	2	2	2	2	2				
SPRING (ACCELERATOR PUMP LEVER RETURN)	C8UZ 9636-A							U	V				
RETAINER (AIR CLEANER TO CARBURETOR)	C8DZ 9B672-A	N	P	Q	R	S	T	U	V				
FITTING (HEAT TUBE CHOKE)	D5TZ 9C786-A							U	V				
ARM ASSY. (METERING ROD)	D0DZ 9D819-A *CM-1325	N	P	Q	R	S	T	U	V				
LINK (CHOKE THERMOSTAT)	D5PZ 9834-A							U	V				
PISTON ASSY. (CHOKE)	9840												
	D1TZ 9840-B *CM-1438		P				T						
	D1DZ 9840-C *CM-1436	N		Q	R	S							
	D4TZ 9840-B *CM-1873							U	V				
CLAMP (THERMOSTATIC CHOKE HOUSING)	9842												
	D0ZZ 9842-A *CM-1234	N	P	Q	R	S	T						
	D4DZ 9842-B *CM-1829							U	V				
Screw (attach clamp to choke housing)-No. 8-32 x 1/4"	31032-S8(U-47)	3	3	3	3	3	3						
HOUSING (THERMOSTATIC CHOKE)	9848												
	D0DZ 9848-A *CM-1075	N		Q									
	D0TZ 9848-A *CM-1137		P		R	S	T						
	D4DZ 9848-C *CM-1832							U	V				
Screw (choke housing)-No. 8-32 x 1/2"	31037-S7(U-48)							3	3				
SOLENOID ASSY. (THROTTLE EMISSION CONTROL)	D4DZ 9D856-A	N	P	Q	†R	S	T	U	†V				
NUT (SOLENOID THROTTLE)-hex. 7/16" -20	45219-S(M-173)	N	P	Q			T	U	V				
GASKET (THERMOSTATIC CHOKE HOUSING)	B8A 9871-B	N	P	Q	R	S	T	U	V				

COPYRIGHT © 1986 — FORD MOTOR COMPANY — DEARBORN, MICHIGAN

DESCRIPTION/RESTRICTIONS	PART NUMBER	CARB. PARTS LISTS 24A THRU 24M											
		A	B	C	D	E	F	G	H	J	K	L	M
NOTE: † Not a part of service carburetor													
GASKET SET – Refer to carburetor identification chart–Section 95	9502												
TUNE-UP KIT – Refer to carburetor identification chart–Section 95	9A586												
Screw and washer assy. (air horn to main body)–No. 10-32 x 5/8"	43256-S8(U-77-F)	4	4	4	4	4	4	4	4	4	4	4	6
SPRING (TRANSMISSION KICKDOWN CONTROL LEVER RETRACTING)	D1AZ 7B146-A		B	C		E	F	G		J		L	M
Screw (transmission kickdown adjusting)–hex. hd.–No. 10-32 x 1"	379622-S8(UU-52-M)		B	C		E	F	G		J		L	M
LIMITER (IDLE ADJUSTING NEEDLE)	D6PZ 9J500-A *CM-747-B	2	2	2	2	2	2	†2	2	2	2	2	2
SEAL (FAST IDLE ROD)–1/8" I.D. x 1/2" O.D.–felt–use w/C4AZ 9C771-A washer	C7AZ 9B501-A	A	B	C	D	E	F	G	H	J	K	L	M
WEIGHT (PUMP DISCHARGE BALL)	C9AZ 9B511-A *CM-1126	A	B	C	D	E	F	G	H	J	K	L	M
Screw (vacuum break control assy. to carb.)–No. 8-18 x 1/2"	381797-S2(UU-89-J)	2	2										
Ball (accelerator pump inlet passage)–3/16"	371350-S(AA-4)												M
CONTROL ASSY. (VACUUM BREAK) R/b D8AZ 9S514-F(11/81)	★ D5DZ 9S514-A *CK-1986												M
Screw (control assy.)–No. 8-18 x 1/2"	56910-S2(U-413)												2
ROD (FLOAT BOWL VENT)	9A515												
Tag codes D4DE-UA, D4PE-YA,YC Tag codes D4PE-GA,GB	★ D2AZ 9A515-A *CM-1470				D	E	†F	†G				†L	
	D5AZ 9A515-B *CM-2281												M
BRACKET (FLOAT BOWL VENT)	9E520												
Tag codes D4DE-UA, D4PE-YA,YC Tag codes D4PE-GA,GB	★ D4AZ 9E520-A				D	E	†F	†G				†L	
	D5AZ 9E520-A												M
SUPPORT ASSY. (BOOSTER VENTURI)	9A523												
Tag codes D3AF-ABA, D3DE-AA, D3GF-BC, D3OF-FA, D3ZF-EA,EB,NA,NB Tag code D4OE-JA Tag code D4PE-CDA	★ D4PZ 9A523-B *CM-1880	A	B	C				G		J	K	L	
Tag code D4DE-NB Tag codes D4DE-UA,VA, D4PE-YC	D4DZ 9A523-A *CM-1988				D	E	F	G					
Tag codes D3GF-AE,AF,BA,BB	D1PZ 9A523-AB *CM-1464			C									
Tag codes D3PF-EA,EB	★ D4PZ 9A523-A *CM-1879			C									
Tag codes D3DF-EA, D3OF-EA,JA, D3ZF-GA	D3GY 9A523-C *CM-1781			C									
Tag code D4PE-YA Tag codes D4OE-GA, D4PE-GA	★ D4OZ 9A523-A *CM-1987						F					L	

COPYRIGHT © 1986 — FORD MOTOR COMPANY — DEARBORN, MICHIGAN

DESCRIPTION/RESTRICTIONS	PART NUMBER	CARB. PARTS LISTS 24A THRU 24M											
		A	B	C	D	E	F	G	H	J	K	L	M
NOTE: † Not a part of service carburetor													
SUPPORT ASSY. (BOOSTER VENTURI)	9A523 — Cont'd												
Tag code D4PE-GB Tag codes D4PE-CFA,CGA	★ D4PZ 9A523-R *CM-2362							G				L	
	★ D50Z 9A523-C *CM-2087												M
ROD (CHOKE PULL DOWN)	D5AZ 9E524-A *CM-2082												M
Ring (rod pull down)-1/8"	377918-S8B(XX-14-F)												M
SCREEN (FUEL FILTER)	C4AZ 9F525-A	A	B	C	D	E	F	G	H	J	K	L	M
COVER ASSY. (ACCELERATOR PUMP)	9528												
	D2AZ 9528-A *CM-648-B	2	2	2	D	E	F	G	H	J	K	L	
	D5AZ 9528-A *CM-2170												M
Screw (attaches accel. pump cover)-hex. head-No. 8-32 x 9/16"	376262-S (UU-52-AJ)	4	4	4	4	4	4	4	4	4	4	4	4
ROD (FAST IDLE CAM)	C3AZ 9D530-A	A	B	C	D	E	F	G	H	J	K	L	M
JET (MAIN METERING)	9533												
No. 48F Tag codes D3DF-EA, D3OF-EA,FA,JA, D3PF-EA, D3ZF-EA,EB,GA Tag codes D4OE-GA, D4PE-GB	C3UZ 9533-D *CJ-142	2		2								2	
No. 49F Tag codes D3AF-ABA, D3DE-AA, D3GF-AE,BA,BB Tag code D4DE-VA Tag code D4PE-GA	C3DZ 9533-D *CJ-137-A		2	2			2		2		2	2	
No. 51F Tag code D4DE-UA	C3DZ 9533-B *CJ-136				2	2	2						
No. 46F-Tag codes D3GF-AF, D3PF-EB Tag codes D4PE-CDA,CGA	C3AZ 9533-G *CJ-156			2				2					
No. 47F-Tag code D3GF-BC Tag code D4PE-YA Tag code D4OE-JA	C3UZ 9533-E *CJ-151			2			2					2	
No. 50F Tag codes D3ZF-NA,NB Tag codes D4DE-NB, D4PE-CPA Tag code D4PE-YC	C3UZ 9533-C *CJ-141			2			2	2		2			2
GASKET (BOOSTER VENTURI SUPPORT)	E1TZ 9A536-A	A	B	C	D	E	F	G	H	J	K	L	M
LEVER (FAST IDLE ADJUSTING)	E1AZ 9538-B *CM-3843	A	B	C	D	E	F	G	H	J	K	L	M
Nut (lever to throttle shaft)-hex.-No. 10-32	34079-S7(M-163)	A	B	C	D	E	F	G	H	J	K	L	M
Lockwasher-No. 10	34903-S8 (X-96)	A	B	C	D	E	F	G	H	J	K	L	M
NEEDLE (IDLE ADJUSTING)	C9AZ 9541-B *CM-955-A	2	2	2	2	2	2	2	2	2	2	2	2
ROD (ACCELERATOR PUMP LINK TO OVERTRAVEL LEVER)	9B542												
	★ D2AZ 9B542-B *CM-1526-A	A	B	C									
	★ D4AZ 9B542-A *CM-1810				D	E	F	G	H	J	K	L	
	D5AZ 9B542-A *CM-2088												M
PLATE (CHOKE)	D0AZ 9545-A *CM-1061	A	B	C	D	E	F	G	H	J	K	L	M
Screw (choke plate)-hex. head-No. 6-32 x 5/16"	375016-S2(UU-52-AK)	2	2	2	2	2	2	2	2	2	2	2	2
SHAFT and LEVER ASSY. (CHOKE)	D0AZ 9546-A *CM-1088	A	B	C	D	E	F	G	H	J	K	L	

NOTICE: When the parts list suffix is shown in the quantity required column, the quantity is one (1).

DESCRIPTION/RESTRICTIONS	PART NUMBER	CARB. PARTS LISTS 24A THRU 24M											
		A	B	C	D	E	F	G	H	J	K	L	M
NOTE: † Not a part of service carburetor													
SHAFT (CHOKE PLATE)	D5AZ 9547-A *CM-2089												M
DIAPHRAGM and RETAINER ASSY. (CHOKE CONTROL)	D0AZ 9J549-C *CK-1283	A	B	C			F	G	H	J	K	L	
Screw (diaphragm and retainer)-allen head-No. 8-32 x 7/16"	358544-S8(UU-28-C)	A	B	C									
FLOAT ASSY.	D4AZ 9550-A *CM-1062-A	A	B	C	D	E	F	G	H	J	K	L	M
Lever (choke shaft)	D8AZ 9551-A *CM-2953	A	B	C	D	E	F	G	H	J	K	L	M
Screw (choke lever shaft)-6-32 x 1/4"	50802-S7 (U-150)	A	B	C	D	E	F	G	H	J	K	L	M
PLATE (AIR DISTRIBUTION)	D0AZ 9F553-A	A	B	C	D	E	F	G	H	J	K	L	
LEVER (CHOKE CONTROL DIAPHRAGM)	D1AZ 9J553-A	A	B	C	D	E	F	G	H	J	K	L	
COVER (CHOKE CONTROL DIAPHRAGM)	★ D0AZ 9J554-A	A	B	C	D	E	F	G	H	J	K	L	
Screw (cover choke diaphragm)-No. 8-32 x 9/16"	376262-S7-8 (UU-52-AJ)	3	3	3	3	3	3	3	3	3	3	3	
SHAFT (FLOAT LEVER)	B8A 9558-A *CM-183	A	B	C	D	E	F	G	H	J	K	L	M
SWIVEL (CHOKE DIAPHRAGM ADJUSTING)	D2AZ 9F558-A	A	B	C									
DIAPHRAGM ASSY. (ACCELERATOR PUMP)	9B559												
	C4AZ 9B559-A *CM-463	A	B	C	D	E	F	G	H	J	K	L	
	D5AZ 9B559-A *CM-2092												M
SPRING (FLOAT BOWL VENT ROD)	9560												
Tag codes D4DE-UA, D4PE-YA	★ D2AZ 9560-B *CM-1471				D	E		†G					
Tag code D4PE-GA							†F					†L	
	D5AZ 9560-A *CM-2084												M
GASKET (FLOAT BOWL)	9561												
	D4AZ 9561-A *CG-406	A	B	C	D	E	F	G	H	J	K	L	
	D9AZ 9561-C *CG-545												M
GASKET (ECONOMIZER COVER)	E0TZ 9563-A *CG-589	A	B	C	D	E	F	G	H	J	K	L	M
VALVE KIT (FUEL INLET)-incl. (1) B7A 9569-A gasket & (1) B7AZ 9599-B retainer	D2AZ 9564-A *CV-54-A	A	B	C	D	E	F	G	H	J	K	L	M
ECONOMIZER KIT	9A565												
#Brown-incl. (1) B7A 9563-A gasket and (1) C2AZ 9A588-B gasket-	D5DZ 9A565-A *CE-112	A											
Tag codes D3GF-AF,BC, D3PF-EB, D3OF-EA, FA,JA, D3ZF-EB				C									
Tag code D4OE-JA												L	
#Green-incl. (1) B7A 9563-A gasket, (1) C2AZ 9A588-B gasket	D50Z 9A565-A *CE-109		B										
Tag code D3GF-BB				C									
#Black-incl. (1) B7A 9563-A gasket and (1) C2AZ 9A588-B gasket	D5AZ 9A565-A *CE-106								H	J			M
Tag Codes D3AF-ABA, D3DE-AA, D3DF-EA, D3GF-AE,BA, D3PF-EA, D3ZF-EA, GA,NA,NB				C									
Tag code D4PE-YA							F						
Tag codes D4PE-CDA,CFA,CGA								G					
Tag codes D4OE-GA, D4PE-GA,GB												L	

COPYRIGHT © 1986 — FORD MOTOR COMPANY — DEARBORN, MICHIGAN

DESCRIPTION/RESTRICTIONS	PART NUMBER	CARB. PARTS LISTS 24A THRU 24M											
		A	B	C	D	E	F	G	H	J	K	L	M
NOTE: † Not a part of service carburetor													
ECONOMIZER KIT	9A565 — Cont'd												
#White-incl. (1) B7A 9563-A gasket and (1) C2AZ 9A588-B gasket	D5DZ 9A565-B *CE-107				D	E					K		
Tag codes D4DE-UA,VA, D4PE-YC							F						
Tag code D4DE-NB								G					
#Silver-incl. (1) B7A 9563-A gasket and (1) C2AZ 9A588-B gasket-Tag code D3OF-EA	D3AZ 9A565-C *CE-100			C									
ROD (CHOKE DIAPHRAGM CONTROL)	★ D2AZ 9S567-C	A	B										
GASKET (FUEL INLET NEEDLE SEAT)	★ B7A 9569-A	A	B	C	D	E	F	G	H	J	K	L	
HOUSING ASSY. (CHOKE)	9A575												
	★ D3AZ 9A575-A *CC-78	A	B		D	E				J			
Tag codes D3AF-ABA, D3GF-AE,AF,BB,BC, D3PF-EA,EB, D3OF-EA,FA, D3ZF-NA,NB				C									
Tag code D4DE-VA							F						
Tag codes D4OE-GA, D4PE-GA												L	
Tag code D4PE-GB	D4PZ 9A575-E *CC-113											L	
Tag codes D4PE-CFA,CGA								G					
Tag code D4PE-NB	★ D3AZ 9A575-C *CC-79							G					
Tag codes D4DE-UA, D4PE-YA							F						
Tag code D4PE-CDA	D4PZ 9A575-G *CC-170							G					
	★ D4OZ 9A575-A *CC-90										K		
Tag code D4PE-YC							F						
Tag codes D3DF-EA, D3ZF-EA,EB	★ D3ZZ 9A575-B *CC-77			C									
Tag code D4OE-JA												L	
	D3ZZ 9A575-D *CC-84								H				
Tag codes D3DE-AA, D3ZF-GA, D3OF-JA				C									
	★ D5DZ 9A575-C *CC-95												M
Screw & washer assy. (choke housing to carb.)-No. 8-32 x 1 3/4"	378547-S-8 (BB-61-B)	3	3	3	3	3	3	3	3	3	3	3	3
VALVE (ACCELERATOR PUMP CHECK)-plastic	C4AZ 9576-A *CM-825	A	B	C	D	E	F	G	H	J	K	L	M
Ball (pump discharge check)	371350-S (AA-4)	A	B	C	D	E	F	G	H	J	K	L	M
SCREW (PUMP DISCHARGE NEEDLE)	9577												
	E1AZ 9577-B *CM-3703	A	B	C	D	E	F	G	H	J	K	L	
	E1AZ 9577-A *CM-3685												M
Washer-1/4"-flat (used under nozzle screw)	374370-S(XX-94-A)												M
LEVER (FAST IDLE CAM)-nylon	9F577												
	C4AZ 9F577-B *CM-492	A	B	C	D	E		G	H	J	K		
Tag codes D4DE-UA,VA, D4PE-YA							F						
Tag codes D4OE-GA,JA, D4PE-GA												L	
R/b D5PZ 9A753-A	★ D5DZ 9F577-A *CM-2090												M
Tag code D4PE-YC							F						
Tag code D4PE-GB												L	
Washer (retains fast idle cam lever)- "C"-3/16"	353862-S8(XX-10)				D	E	F	G	H	J	K	L	M
Screw (lever adjusting)-hex. head-No. 6-32 x 3/4"	372307-S(BB-527)	A	B	C									
SPRING (IDLE ADJUSTING NEEDLE)	★ 40 9578	2	2	2	2	2	2	2	2	2	2	2	2
Fast idle adjusting screw		A	B	C	D	E	F	G	H	J	K	L	M
Screw (normal idle adjusting)-special hex. head No. 10-32 x 1"	355107-S7 (BB-536)	A	B	C	D	E	F	G	H	J	K	L	M
SPRING (FAST IDLE ADJUSTING SCREW)	B8A 9578-B *CM-609	A	B	C	D	E	F	G	H	J	K	L	M

NOTICE: When the parts list suffix is shown in the quantity required column, the quantity is one (1).

DESCRIPTION/RESTRICTIONS	PART NUMBER	CARB. PARTS LISTS 24A THRU 24M											
		A	B	C	D	E	F	G	H	J	K	L	M
NOTE: † Not a part of service carburetor													
LEVER and SHAFT ASSY. (THROTTLE)	9581												
	D2AZ 9581-A *CM-1047-A	A	B	C									
Tag code D4OE-JA	★ D4OZ 9581-A *CM-1807				D				H			L	
	D4OZ 9581-B *CM-1990										K		
Tag code D4PE-YA Tag codes D4PE-CDA,CFA,CGA Tag codes D4OE-GA, D4PE-GA,GB	D4AZ 9581-A *CM-1808					E	F G			J		L	
Tag codes D4DE-UA,VA, D4PE-YC	★ D4OZ 9581-C *CM-1991						F						
Tag code D4DE-NB	★ D4DZ 9581-A *CM-1989							G					
	D5DZ 9581-A *CM-2093												M
PLATE (THROTTLE)	9585												
	B8A 9585-F	2	2	2									
Tag codes D4DE-VA, D4PE-YA	C9UZ 9585-A *CM-1900						2		2	2	2	2	
Tag codes D4DE-UA, D4PE-YC	E1AZ 9585-A *CM-2095-A				2	2	2	2					2
Screw (throttle plate)-fill. head-No. 5-40 x 3/8"	383253-S2 (BB-4-Z)	4	4	4	4	4	4	4	4	4	4	4	
Screw (throttle plate)-No. 5-40 x 9/32"	386022-S2 (BB-908)												4
BRACKET (THROTTLE EMISSION CONTROL SOLENOID)	C9AZ 9J586-A	A	B	C	D	E	†F	†G	H	J	K	†L	M
Screw (throttle emission control solenoid bracket)-No. 10-32 x 1/2"	50810-S8 (U-158)												M
Nut (throttle emission control solenoid bracket)	45219-S (M-173)												M
SPRING (CHOKE CONTROL)	★ D0AZ 9587-A *CM-1271	A	B	C	D	E	F	G	H	J	K	L	
GASKET (ECONOMIZER)	C2AZ 9A588-B *CM-533	A	B	C	D	E	F	G	H	J	K	L	M
CAM ASSY. (FAST IDLE) r/b D5AZ 9597-A (9/78)	D5AZ 9597-A *CM-2105	A	B	C	D	E	F	G	H	J	K	L	M
Retainer (fast idle cam)- "C" washer	351825-S (XX-9)	2	2	2	2	2	2	2	2	2	2	2	2
Screw (fast idle cam)-hex. head-No. 6-32 x 3/4"	372307-S (BB-527)	A	B	C	D	E	F	G	H	J	K	L	M
RETAINER (FLOAT LEVER SHAFT)	D2AZ 9599-A *CM-1469	A	B	C	D	E	F	G	H	J	K	L	M
ROD (CHOKE CONTROL)	9A599												
Tag code D4DE-VA	E1AZ 9A599-A *CM-3686	A	B	C	D	E	F		H	J	K	L	M
Tag codes D4DE-UA, D4PE-YA,YC	D1AZ 9A599-A *CM-1513						F	G					
Ring (rod to shaft)	377918-S8B (XX-14-F)	A	B	C	D	E	F	G	H	J	K	L	M
SPRING (ACCELERATOR PUMP LEVER RETURN)	9636												
	D4AZ 9636-A *CM-1527-A	A	B	C	D	E	F	G	H	J	K	L	M

COPYRIGHT © 1986 — FORD MOTOR COMPANY — DEARBORN, MICHIGAN

DESCRIPTION/RESTRICTIONS	PART NUMBER	CARB. PARTS LISTS 24A THRU 24M											
		A	B	C	D	E	F	G	H	J	K	L	M
NOTE: † Not a part of service carburetor													
SHAFT and LEVER ASSY. (CHOKE HOUSING)	9A753												
Tag codes D4DE-UA,VA, D4PE-YA Tag codes D4OE-GA,JA, D4PE-GA	D2AZ 9A753-A *CM-1510	A	B	C	D	E	F	G	H	J	K	L	
Tag code D4PE-YC Tag code D4PE-GB	D5PZ 9A753-A *CM-2201						F					L	M
LEVER (CHOKE THERMOSTAT)	D3AZ 9A754-D	A	B	C	D	E	F	G	H	J	K	L	M
Screw (choke lever shaft)-6-32 x 1/4"	50802-S7 (U-150)												M
CLIP (ACCELERATOR PUMP LINK ROD)	D2AZ 9825-A *CM-1695	A	B	C	D	E	F	G	H	J	K	L	M
CLAMP (THERMOSTATIC CHOKE HOUSING)	E2AZ 9842-B *CM-3840	A	B	C	D	E	F	G	H	J	K	L	M
Screw (clamp housing)-fill. head-No. 8-32 x 1/2"	31061-S8 (U-50)	3	3	3	3	3	3	3	3	3	3	3	3
SHIELD (FUEL INLET SEAT)	D4AZ 9E845-A				D	E	F	G	H	J	K	L	M
HOUSING ASSY. (CHOKE THERMOSTAT)	9848												
#2AB4 Tag codes D4DE-NB,D4PE-CFA,CGA Tag codes D4OE-GA,JA	D3AZ 9848-N *CM-1739	A	B	C	D	E		G	H	J	K	†L	
#TX-incl. (1) D0AZ 9871-A gasket- Tag code D4PE-CDA	D0AZ 9848-G *CM-1259							G					
#2EB4 or 2FB4-incl. (1) D1AZ 9871-A gasket- Tag codes D4DE-UA,VA, D4PE-YC Tag code D4PE-GB	D5AZ 9848-A *CM-2097						†F					L	
	D5OZ 9848-A *CM-2098												M
BUSHING (CHOKE THERMOSTATIC LEVER)	9851												
Tag codes D4DE-UA,VA, D4PE-YA Tag codes D4OE-GA,JA, D4PE-GA	C8AZ 9851-A *CM-751	A	B	C	D	E	F	G	H	J	K	L	
Tag code D4PE-YC Tag code D4PE-GB	D5DZ 9851-A *CM-2096						F					L	M
GASKET (THERMOSTATIC CHOKE CONTROL)	B8A 9853-A *CG-93	A	B	C	D	E	F	G	H	J	K	L	M
SOLENOID ASSY. (THROTTLE EMISSION CONTROL)	D3AZ 9D856-A	A	B	C	D	E	†F	†G	H	J	K	†L	M
Nut (solenoid to bracket)-hex.-7/16"-20	45219-S(M-173)	A	B	C	D	E	†F	†G	H	J	K	†L	M
SHIELD (CHOKE THERMOSTATIC)	9861												
Tag codes D3GF-AE,BA	C9ZZ 9861-A	A	B	C									
	E0UZ 9861-A				D	E	F	G	H	J	K	L	
Tag codes D3AF-ABA,D3DE-AA,D3DF-EA, D3GF-AF,BB,BC,D3OF-EA,FA,JA, D3PF-EA,EB,D3ZF-EA,EB,FA,GA,NA,NB	D5ZZ 9861-A			C									M
Screw (choke shield)-No. 8-32 x 9/16"	376262-S2 (UU-52-AJ)	2	2	2	2	2	2	2	2	2	2	2	M
GASKET (THERMOSTATIC CHOKE HOUSING)	D1AZ 9871-A *CG-317	A	B	C	D	E	†F	G	H	J	K	†L	M
COVER (ECONOMIZER VALVE)	C8AZ 9930-A *CM-728	A	B	C	D	E	F	G	H	J	K	L	M
Screw and washer (cover to carb.)-fill. head-No. 8-32 x 5/8"	357136-S(BB-56)	4	4	4	4	4	4	4	4	4	4	4	4
CAM (AIR BLEED METERING NEEDLE ROD)	D5AZ 9A965-A *CM-2106												M

NOTICE: When the parts list suffix is shown in the quantity required column, the quantity is one (1).

DESCRIPTION/RESTRICTIONS	PART NUMBER	CARB. PARTS LISTS 24N THRU 24Z											
		N	P	Q	R	S	T	U	V	W	X	Y	Z
NOTE: † Not a part of service carburetor													
GASKET SET – Refer to carburetor identification chart–Section 95	9502												
TUNE–UP KIT – Refer to carburetor identification chart–Section 95	9A586												
Screw and washer assy. (air horn to main body)–No. 10–32 x 5/8"	43256–S8(U–77–F)	6	6	6	6	6	6	6	6	6	6	6	6
SPRING (TRANSMISSION KICKDOWN CONTROL LEVER RETRACTING)	D1AZ 7B146–A		P	Q	R	S	T	†U	†V	†W	X	Y	Z
Screw (transmission kickdown adjusting)–hex. hd.–No. 10–32 x 1"	379622–S8(UU–52–M)		P	Q	R	S	T	U	V	W	X	Y	Z
LIMITER (IDLE ADJUSTING NEEDLE)	9J500												
	D6PZ 9J500–A *CM–747–B	†2	†2	†2	†2	†2	†2	2	2	2	2	2	2
SEAL (FAST IDLE ROD)–1/8" I.D. x 1/2" O.D.–felt–use w/C4AZ 9C771–A washer	C7AZ 9B501–A	N	P	Q	R	S	T	U	V	W	X	Y	Z
WEIGHT (PUMP DISCHARGE BALL)	C9AZ 9B511–A *CM–1126	N	P	Q	R	S	T	U	V	W	X	Y	Z
Ball (accel. pump inlet passage)–steel–3/16"	371350–S(AA–4)	N	P	Q	R	S	T	U	V	W	X	Y	Z
CONTROL and BRACKET ASSY. (VACUUM BREAK)	9S514												
R/b D8AZ 9S514–F(11/81) Tag codes D5DE–AFA, D5PE–BHA, D64E–DA	★ D5DZ 9S514–A *CK–1986	N	P	Q	R	S	T						
Tag code D5DE–AEA	D8AZ 9S514–G *CK–1989–A						T						
Tag codes D5WE–FA,D6PE–EA,GA	D8ZZ 9S514–B *CK–2061						T						
Tag code D8KE–DA,EA											X	Y	
Tag code D64E–AA	D8AZ 9S514–L *CK–1992–A						T						
Tag codes D7WE–EA,EB,D7PE–BZA	D8AZ 9S514–C *CK–2062							U					
Tag codes D7BE–JA,LA,PA,D7DE–KA,LA,D7PE–BSA	D8AZ 9S514–D *CK–2057							U	V	W			Z
Tag code D84E–EA,GA	D8AZ 9S514–P *CK–1993–A											Y	
Screw (control assy.)–No. 8–18 x 1/2"	380934–S10(UU–67–F)	2	2	2	2	2	2	2	2	2	2	2	2
ROD (FLOAT BOWL VENT)	9A515												
	D5AZ 9A515–B *CM–2881	N	P	Q	R	S	T		V		X		

COPYRIGHT © 1986 — FORD MOTOR COMPANY — DEARBORN, MICHIGAN

DESCRIPTION/RESTRICTIONS	PART NUMBER	CARB. PARTS LISTS 24N THRU 24Z											
		N	P	Q	R	S	T	U	V	W	X	Y	Z
NOTE: † Not a part of service carburetor													
BRACKET (FLOAT BOWL VENT) Tag code D7BE-YA,D7PE-BRA	D5AZ 9E520-A	N	P	Q	R	S	T		V		X		
SUPPORT ASSY. (BOOSTER VENTURI)	9A523												
Tag code D64E-DA	D5DZ 9A523-B *CM-2086	N					T						
Tag codes D5DE-AEA,D5WE-FA,D6PE-EA,GA,D64E-AA	★ D5OZ 9A523-C *CM-2087		P		R		T						
	D5DZ 9A523-A *CM-2085			Q		S							
Tag codes D5DE-AFA,D5PE-BHA	★ D5DZ 9A523-F *CM-2087						T						
Tag codes D7WE-EA,EB,D7PE-BZA	★ D7AZ 9A523-K *CM-2835							U					
Tag codes D7DE-KA	★ D7DZ 9A523-C *CM-2836							U					
Tag codes D7BE-LA,PA	★ D7ZZ 9A523-A *CM-2583							U					
Tag code D7DE-LA,D7PE-BSA	★ D7ZZ 9A523-B *CM-2584							U					
	★ D7ZZ 9A523-E *CM-2585								V				Z
Tag code D8KE-DA,EA	★ D7DZ 9A523-F *CM-2863									W		Y	
Tag code D84E-EA,GA	★ D8DZ 9A523-B *CM-2871										X	Y	
ROD (CHOKE PULL DOWN)	9E524												
	D5AZ 9E524-A *CM-2082	N	P	Q	R	S	T				X	Y	
	D7AZ 9E524-B *CM-2503							U	V	W			
	D8AZ-9E524-A *CM-2952												Z
Ring (rod pull down)-1/8"	377918-S8B(XX-14-F)	N	P	Q	R	S	T	U	V	W	X	Y	Z
SCREEN (FUEL FILTER)	C4AZ 9F525-A	N	P	Q	R	S	T	U	V	W	X	Y	Z
COVER ASSY. (ACCELERATOR PUMP)	9528												
	D5AZ 9528-A *CM-2170	N	P	Q	R	S	T	U	V	W	X		
	★ D7AZ 9528-B *CM-2865											Y	
	D8AZ 9528-E *CM-3052												Z
Screw (attaches accel. pump cover)-hex. hd.- No. 8-32 x 9/16"	376262-S(UU-52-AJ)	4	4	4	4	4	4	4	4	4	4	4	4
ROD (FAST IDLE CAM)	C3AZ 9D530-A	N	P	Q	R	S	T	U	V	W	X	Y	Z
JET (MAIN METERING)	9533												
No. 49F Tag codes D5DE-AFA,D5PE-BHA Tag codes D7BE-,LA,PA,D7DE-KA,LA,D7PE-BSA Tag code D84E-EA,GA	C3DZ 9533-D *CJ-137-A	2		2			2	2			2	2	
No. 51F Tag code D5DE-AEA Tag code D7WE-EA,EB,D7PE-BZA	C3DZ 9533-B *CJ-136		2				2	2	2				2
No. 50F Tag codes D5WE-FA,D6PE-EA,GA,D64E-AA,DA Tag code D8KE-DA,EA	C3UZ 9533-C *CJ-141				2	2	2			2		2	

NOTICE: When the parts list suffix is shown in the quantity required column, the quantity is one (1).

DESCRIPTION/RESTRICTIONS	PART NUMBER	CARB. PARTS LISTS 24N THRU 24Z											
		N	P	Q	R	S	T	U	V	W	X	Y	Z
NOTE: † Not a part of service carburetor													
GASKET (BOOSTER VENTURI SUPPORT)	E1TZ 9A536-A	N	P	Q	R	S	T	U	V	W	X	Y	Z
LEVER (FAST IDLE ADJUSTING)	9538												
	E1AZ 9538-B *CM-3843	N	P	Q	R	S	T	U	V	W	X		
	D7AZ 9538-A *CM-2547											Y	Z
Nut (lever to throttle shaft)-hex.-No. 10-32	34079-S7(M-163)	N	P	Q	R	S	T	U	V	W	X	Y	Z
Lockwasher-No. 10	34903-S8(X-96)	N	P	Q	R	S	T	U	V	W	X	Y	Z
NEEDLE (IDLE ADJUSTING)	C9AZ 9541-B *CM-955-A	2	2	2	2	2	2	2	2	2	2	2	2
ROD(ACCELERATOR PUMP LINK to OVERTRAVEL LEVER)	9B542												
	D5AZ 9B542-A *CM-2088	N	P	Q	R	S	T						
	D7AZ 9B542-C *CM-2543							U	V	W	X	Y	Z
PLATE (CHOKE)	D0AZ 9545-A *CM-1061	N	P	Q	R	S	T	U	V	W	X	Y	Z
Screw (choke plate)-hex. hd.-No. 6-32 x 5/16"	375016-S2 (UU-52-AK)	2	2	2	2	2	2	2	2	2	2	2	2
SHAFT and LEVER ASSY. (CHOKE)	D7AZ 9546-A *CM-2594								V				Z
SHAFT (CHOKE PLATE)	D5AZ 9547-A *CM-2089	N	P	Q	R	S	T	U		W	X	Y	
Dashpot-r/b D7ZZ 9B549-A(11/81) Tag code D7DE-LA	★ C8AZ 9B549-A *CD-15	†N						†U					
FLOAT ASSY.	D4AZ 9550-A *CM-1062-A	N	P	Q	R	S	T	U	V	W	X	Y	Z
BRACKET (DASHPOT) Tag code D7DE-LA	D0AZ 9B550-A *CM-1113	†N						†U			X		Z
LEVER (CHOKE SHAFT)	D8AZ 9551-A *CM-2953	N	P	Q	R	S	T	U	V	W	X	Y	Z
Screw (choke lever shaft)-6-32 x 1/4"	50802-S7(U-150)	N	P	Q	R	S	T	U	V	W	X	Y	Z
SHAFT (FLOAT LEVER)	B8A 9558-A *CM-183	N	P	Q	R	S	T	U	V	W	X	Y	Z
DIAPHRAGM ASSY. (ACCELERATOR PUMP)	D5AZ 9B559-A *CM-2092	N	P	Q	R	S	T	U	V	W	X	Y	Z
SPRING (FLOAT BOWL VENT ROD) Tag code D7BE-YA,D7PE-BRA	D5AZ 9560-A *CM-2084	N	P	Q	R	S	T		V		X		
GASKET (FLOAT BOWL	9561												
	D9AZ 9561-C *CG-545	N	P	Q	R	S	T	U	V	W			
	D9TZ 9561-B *CG-506-A										X	Y	Z

COPYRIGHT © 1986 — FORD MOTOR COMPANY — DEARBORN, MICHIGAN

DESCRIPTION/RESTRICTIONS	PART NUMBER	CARB. PARTS LISTS 24N THRU 24Z											
		N	P	Q	R	S	T	U	V	W	X	Y	Z
NOTE: † Not a part of service carburetor													
GASKET (ECONOMIZER COVER)	E0TZ 9563-A *CG-589	N	P	Q	R	S	T	U	V	W	X	Y	Z
VALUE KIT (FUEL INLET)	9564												
Consists of (1) D2AF 9566-AA needle, (1) D4AE 9567-AA seat, (1) D2AZ 9599-A retainer, (1) D8AE 9B546-AA retainer, (1)D4AZ 96845-A gasket, (1) D8AE 9B530-AA retainer	D8AZ 9564-A *CV-99-A	N	P	Q	R	S	T	U	V	W	X	Y	Z
ECONOMIZER KIT	9A565												
#Black-incl. (1) C2AZ 9A588-B and (1) B7A 9563-A gaskets Tag code D5WE-FA,D6PE-EA Tag code D7DE-KA	D5AZ 9A565-A *CE-106		P	Q	R		 T	 U		W	X	Y	Z
#Brown-incl. (1) C2AZ 9A588-B and (1) B7A 9563-A gaskets	D5DZ 9A565-A *CE-112					S							
#White-incl. (1) C2AZ 9A588-B and (1) B7A 9563-A gaskets	D5DZ 9A565-B *CE-107	N											
#Green-incl. (1) C2AZ 9A588-B and (1) B7A 9563-A gaskets Tag codes D5DE-AEA,AFA,D5PE-BHA,D6PE-GA, D64E-AA,DA Tag codes D7DE-LA,D7WE-EA,EB,D7PE-BSA,BZA	D50Z 9A565-A *CE-109						T	 U					
#Red-incl. (1) C2AZ 9A588-B and (1) B7A 9563-A gaskets Tag codes D7BE-LA,PA	D5TZ 9A565-B *CE-117							U					
#Yellow-incl. (1) C2AZ 9A588-B and (1) B7A 9563-A gaskets	D5ZZ 9A565-A *CE-113								V				
HOUSING ASSY. (CHOKE)	9A575												
Tag codes D5DE-AEA,AFA,D5WE-FA,D6PE-EA	★ D5DZ 9A575-C *CC-95	N	P	Q	R	S	 T						
Tag code D6PE-GA,D64E-AA	D6ZZ 9A575-C *CC-122						T						
Tag code D64E-DA	★ D5TZ 9A575-D *CC-100						T						
Tag codes D7BE-LA,PA,D7DE-KA,D7WE-EA,EB, D7PE-BZA	★ D7DZ 9A575-B *CC-150							U		 W			
Tag codes D7DE-LA,D7PE-BSA	★ D7DZ 9A575-C *CC-151							U					
	★ D7ZZ 9A575-E *CC-160								V				Z
	D8DZ 9A575-A *CC-186										X	Y	
Screw & washer assy. (choke housing to carb.)-No. 8-32 x 1 3/4"	378547-S8(BB-61-B)	3	3	3	3	3	3	3	3	3	3	3	3
Connector-3/8"-24-1/4" tube	386010-S8(II-28-S)	N	P	Q	R	S	T	U	V	W	X	Y	Z
VALVE (ACCELERATOR PUMP CHECK)-plastic	C4AZ 9576-A *CM-825	N	P	Q	R	S	T	U	V	W	X	Y	Z
SCREW (PUMP DISCHARGE NEEDLE)	E1AZ 9577-A *CM-3685	N	P	Q	R	S	T	U	V	W	X	Y	Z
Washer (used under nozzle screw)-1/4" flat	374370-S(XX-94-A)	N	P	Q	R	S	T	U	V	W	X	Y	Z
LEVER (FAST IDLE CAM)-nylon R/b D5PZ 9A753-A	★ D5DZ 9F577-A *CM-2090	N	P	Q	R	S	T						
Washer (retains fast idle cam lever)- "C"-3/16"	353862-S8(XX-10)	N	P	Q	R	S	T						
SPRING (FAST IDLE ADJUSTING SCREW)	B8A 9578-B *CM-609	N	P	Q	R	S	T	U	V	W	X	Y	Z
Screw (normal idle adjusting)-special hex. hd. No. 10-32 x 1"	355107-S7(BB-536)	N	P	Q	R	S	T	U	V	W	X	Y	Z

NOTICE: When the parts list suffix is shown in the quantity required column, the quantity is one (1).

DESCRIPTION/RESTRICTIONS	PART NUMBER	CARB. PARTS LISTS 24N THRU 24Z											
		N	P	Q	R	S	T	U	V	W	X	Y	Z
NOTE: † Not a part of service carburetor													
SPRING (IDLER ADJUSTING NEEDLE)	★ 40 9578	3	3	3	3	3	3	3	3	3	3		
LEVER and SHAFT ASSY. (THROTTLE)	9581												
Tag codes D5DE-AEA,D5WE-FA,D6PE-EA,GA,D64E-AA	D5DZ 9581-A *CM-2093		P	Q	R	S	T						
Tag codes D5DE-AFA,D64E-DA	★ D5DZ 9581-B *CM-2094	N					T						
	D7AZ 9581-K *CM-2587							U	V	W	X	Y	Z
PLATE (THROTTLE)	E1AZ 9585-A *CM-2095-A	2	2	2	2	2	2	2	2	2	2	2	2
Screw (throttle plate)-No. 5-40 x 9/32"	386022-S2(BB-908)	4	4	4	4	4	4	4	4	4	4	4	4
BRACKET (THROTTLE EMISSION CONTROL SOLENOID) Tag codes D5DE-AEA, D5WE-FA	C9AZ 9J586-A		†P	†Q	†R	S	†T						
Tag code D7BE-PA,D7WE-EA,EB	D7AZ 9J586-B							†U	V				
Tag code D8KE-DA,D84E-EA												Y	
Screw (throttle emission control solenoid bracket)-No. 10-32 x 1/2" Tag codes D5DE-AEA, D5WE-FA	50810-S8 (U-158)	†N	†P	Q	†R	S	T	†U	V		X	Y	
Nut (throttle emission control solenoid bracket) Tag codes D5DE-AEA, D5WE-FA	45219-S(M-173)	†N	†P	Q	†R	S	T	†U	V		X	Y	
GASKET (ECONOMIZER)	C2AZ 9A588-B *CM-533	N	P	Q	R	S	T	U	V	W	X	Y	Z
CAM ASSY. (FAST IDLE)	9597												
	D5AZ 9597-A *CM-2105	N	P	Q	R	S	T	U	V	W	X	Y	Z
Retainer (fast idle cam)- "C" washer	351825-S(XX-9)	2	2	2	2	2	2	2	2	2	2	2	2
Screw (fast idle cam)-hex. hd.-No. 6-32 x 3/4"	372307-S(BB-527)	N	P	Q	R	S	T	U	V	W	X	Y	Z
RETAINER (FLOAT LEVER SHAFT)	D2AZ 9599-A *CM-1469	N	P	Q	R	S	T	U	V	W	X	Y	Z
ROD (CHOKE CONTROL)	E1AZ 9A599-A *CM-3686	N	P	Q	R	S	T	U	V	W	X	Y	Z
Ring (rod to shaft)	377918-S8(XX-14-F)	N	P	Q	R	S	T	U	V	W	X	Y	Z
Cap (ACCELERATOR OR PUMP PLUNGER)	★ D8ZZ 9635-A *CM-2993												Z
"As listed in TSB No. 150, dated Jan. 4, 1978, article 3017"	★ D8ZZ 9635-A											Y	
SPRING (ACCELERATOR PUMP LEVER RETURN)	D4AZ 9636-A *CM-1527-A	N	P	Q	R	S	T	U	V	W	X	Y	Z
SHAFT and LEVER ASSY. (CHOKE HOUSING)	9A753												
	D5PZ 9A753-A *CM-2201	N	P	Q	R	S	T						
	D7PZ 9A753-A *CM-2592							U	V	W	X	Y	Z
Retainer-choke shaft-"C" washer	353862-S8(XX-10)	N	P	Q	R	S	T	U	V	W	X	Y	Z
Screw-choke shaft-No. 6-32 x 1/4"	50802-S2 (U-150)	N	P	Q	R	S	T	U	V	W	X	Y	Z
LEVER (CHOKE THERMOSTAT)	D3AZ 9A754-D	N	P	Q	R	S	T	U	V	W	X	Y	Z
Screw (choke lever shaft)-6-32 x 1/4"	50802-S7(U-150)	N	P	Q	R	S	T	U	V	W	X	Y	Z
CLIP (ACCELERATOR PUMP LINK ROD)	D2AZ 9825-A *CM-1695	N	P	Q	R	S	T	U	V	W	X	Y	Z
CLAMP (THERMOSTATIC CHOKE HOUSING)	E2AZ 9842-B *CM-3840	N	P	Q	R	S	T	U	V	W	X	Y	Z
Screw (clamp housing)-fill head-No. 8-32 x 1/2"	31061-S7(U-50)	3	3	3	3	3	3	3	3	3	3	3	3

COPYRIGHT © 1986 — FORD MOTOR COMPANY — DEARBORN, MICHIGAN

DESCRIPTION/RESTRICTIONS	PART NUMBER	CARB. PARTS LISTS 24N THRU 24Z											
		N	P	Q	R	S	T	U	V	W	X	Y	Z
NOTE: † Not a part of service carburetor													
SHIELD (FUEL INLET SEAT)	D4AZ 9E845-A	N	P	Q	R	S	T	U	V	X	X	Y	Z
HOUSING ASSY. (CHOKE THERMOSTAT)	9848												
#2GB4 or 2HB4-incl. (1) D1AZ 9871-A gasket Tag codes D5DE-AEA,D5WE-FA,D6PE-EA,D64E-DA	D50Z 9848-A *CM-2098	N		Q		S	T						
#2EB4 or 2FB4-incl. (1) D1AZ 9871-A gasket Tag codes D5DE-AFA,D6PE-GA,D64E-AA	D5AZ 9848-A *CM-2097		P		R		T				X		
#2-650D-incl. (1) D1AZ 9871-A gasket	D7AZ 9848-A *CM-2593								V				
#2-400D-incl. (1) D1AZ 9871-A gasket Tag codes D7BE-LA,PA,D7DE-LA,D7WE-EA,EB, D7PE-BSA,BZA	D7AZ 9848-D *CM-2589							U					
#2-500D-incl. (1) D1AZ 9871-A gasket Tag code D7DE-KA Tag codes D7PE-CBA	D7DZ 9848-A *CM-2546							U		W W			Z
#2-100 ME-incl (1) D1AZ 9871-A gasket	D84Z 9848-A *CM-2879											Y	
BUSHING (CHOKE THERMOSTATIC LEVER)	D5DZ 9851-A *CM-2096	N	P	Q	R	S	T	U	V	W	X	Y	Z
GASKET (THERMOSTATIC CHOKE CONTROL)	B8A 9853-A *CG-93	N	P	Q	R	S	T	U	V	W	X	Y	Z
SOLENOID ASSY. (THROTTLE EMISSION CONTROL) Tag codes D5DE-AEA,D5WE-FA	D3AZ 9D856-A		†P	† Q	†R	S	†T						
Tag codes D7BE-PA,D7WE-EA,EB Tag code D8KE-DA,D84E-EA	D7DZ 9D856-A *CS-4							†U	†V			Y	
SHIELD (CHOKE THERMOSTATIC)	D5ZZ 9861-A	N	P	Q	R	S	T	U	V	W	X	Y	Z
Screw (choke shield)-No. 8-32 x 9/16"	376262-S2(UU-52-AJ)	N	P	Q	R	S	T	U	V	W	X	Y	
GASKET (THERMOSTATIC CHOKE HOUSING)	D1AZ 9871-A *CG-317	N	P	Q	R	S	T	U	V	W	X	Y	Z
COVER (ECONOMIZER VALVE)	C8AZ 9930-A *CM-728	N	P	Q	R	S	T	U	V	W	X	Y	Z
Screw and washer (cover to carb.)- fill. head-No. 8-32 x 5/8"	357136-S(BB-56)	4	4	4	4	4	4	4	4	4	4	4	4
SHAFT and LEVER ASSY (AIR BY-PASS)	D7AZ 9A945-A *CM-2595								V				Z
COMPENSATOR ASSY. (ALTITUDE)	D7AZ 9A950-A *CM-2507								V				Z
Screw (compensator)-No. 8-32 x 3/4"	43395-S8 (U-75)								4				4
GASKET (ALTITUDE COMPENSATOR HOUSING)	D7AZ 9A953-A *CG-491								V				Z
CAM (AIR BLEED METERING NEEDLE ROD)	D5AZ 9A965-A *CM-2106	N	P	Q	R	S	T	U	V	W	X	Y	Z
PLATE (AIR BY-PASS)	★ D7AZ 9A972-A *CM-2597								V				Z
Screw (plate)-No. 4-40x	57000-S2(B-328)								2				2
ROD (AIR BY-PASS PLATE)	D7AZ 9A973-A *CM-2596								V				Z
Retainer (rod) 3/16 "C" type	97401-S2(Q-X-4)								V				Z

NOTICE: When the parts list suffix is shown in the quantity required column, the quantity is one (1).

DESCRIPTION/RESTRICTIONS	PART NUMBER	CARB. PARTS LISTS 24AA THRU 24AM											
		AA	AB	AC	AD	AE	AF	AG	AH	AJ	AK	AL	AM
GASKET SET - Refer to carburetor identification chart-Section 95	9502												
TUNE-UP KIT - Refer to carburetor identification chart-Section 95	9A586												
Screw and washer assy. (air horn to main body)-No. 10-32 x 5/8"	43256-S8(U-77-F)	6	6										
SPRING (TRANSMISSION KICKDOWN CONTROL LEVER RETRACTING)	D1AZ 7B146-A	AA	AB										
Screw (transmission kickdown adjusting)-hex. hd.-No. 10-32 x 1"	379622-S8(UU-52-M)	AA	AB										
LIMITER (IDLE ADJUSTMENT NEEDLE)	D6PZ 9J500-A *CM-747-B	2	2										
SEAL (FAST IDLE ROD)	C7AZ 9B501-A	AA	AB										
WEIGHT (PUMP DISCHARGE BALL)	C9AZ 9B511-A *CM-1126	AA	AB										
Ball (accel. pump inlet passage)-steel-3/16"	371350-S(AA-4)	AA	AB										
CONTROL and BRACKET ASSY. (VACUUM BREAK)	95514												
Tag code D8DE-HA	D8AZ 9S514-C *CK-2062	AA											
Tag code D80E-EA,TA Tag codes D9ME-BA,CA	D8AZ 9S514-D *CK-2057	AA	AB										
Tag codes D9DE-RA,RB,RD,SA,SC, D94E-KB,LB	D8ZZ 9S514-B *CK-2061		AB										
Tag codes D9BE-VB,YB,D9DE-NA,NB	D8WZ 9S514-A *CK-2056-A		AB										
Tag codes D9ZE-BFA,BFB,BGA,BGB,BHB,BJB	D9AZ 9S514-N *CK-2086		AB										
Screw (control assy.) No. 8-18 x 1/2"	380934-S101(44-67-F)	2	2										
BAFFLE (FLOAT BOWL)	D9AZ 9A517-B *CM-3119		AB										
SUPPORT ASSY. (BOOSTER VENTURI)	9A523												
Tag codes D80E-EA,TA	★ D7DZ 9A523-B *CM-2059	AA											
Tag code D8DE-HA	★ D7ZZ 9A523-B *CM-2584	AA											
Tag codes D9DE-RA,RB,RD,SA,SC,D9ZE-BFA,BFB, BGA,BGB,BHB,BJB, D94E-KB,LB	D9DZ 9A523-E *CM-3159		AB										
Tag codes D9BE-VB,YB,D9DE-NA,NB	★ D9ZZ 9A523-B *CM-3273		AB										
Tag codes D9ME-BA,CA	★ D7ZZ 9A523-E *CM-2585		AB										
ROD (CHOKE PULL DOWN)	9E524												
Tag codes D9ME-BA,CA	D8AZ 9E524-A *CM-2873	AA	AB										
Tag codes D9BE-VB,YB,D9DE-NA,NB,RA,RB,RD,SA,SC, D94E-KB,LB	D5AZ 9E524-A *CM-2082		AB										
Tag codes D9ZE-BFA,BFB,BGA,BGB,BHB,BJB	D9AZ 9E524-B *CM-3316		AB										
Ring (rod pull down)-1/8"	377918-S8B(XX-14-F)	AA	AB										
SCREEN (FUEL FILTER)	C4AZ 9F525-A	AA	AB										
COVER ASSY. (ACCELERATOR PUMP)	9528												
Tag codes D9DE-NA,NB,VB,YB	★ D7AZ 9528-B *CM-2865	AA	AB										
Tag codes D9DE-RA,RB,RD,SA,SC,D9ME-BA,CA, D9ZE-BFA,BFB,BGA,BGB,BHB,BJB, D94E-KB,LB	D8AZ 9528-E *CM-3052		AB										
Screw (attaches accel. pump cover)-hex.hd.-No. 8-32 x 9/16"	376262-S(UU-52-AJ)	4	4										

COPYRIGHT © 1986 — FORD MOTOR COMPANY — DEARBORN, MICHIGAN

DESCRIPTION/RESTRICTIONS	PART NUMBER	CARB. PARTS LISTS 24AA THRU 24AM											
		AA	AB	AC	AD	AE	AF	AG	AH	AJ	AK	AL	AM
ROD (FAST IDLE CAM)	C3AZ 9D530-A	AA	AB										
COMPENSATOR ASSY. (HOT IDLE) Tag codes D9ZE-BFA,BFB,BGA,BGB,BHB,BJB	D8AZ 9B532-A *CM-2952		AB										
JET (MAIN METERING)	9533												
No. 48F Tag code D8DE-HA	C3UZ 9533-D *CJ-142	2											
No. 51F Tag codes D80E-EA,TA Tag codes D9ME-BA,CA	C3DZ 9533-B *CJ-136	2	2										
No. 49F Tag codes D9DE-RA,RB,RD,SA,SC	C3DZ 9533-D *CJ-137-A		2										
No. 55F-Tag codes D9DE-NA,NB	C3UZ 9533-B *CJ-140		2										
No. 50F-Tag codes D9ZE-BFA,BFB,BGA,BGB,BHB,BJB	C3UZ 9533-C *CJ-141		2										
No. 56F-Tag codes D9BE-VB,YB	C3GY 9533-D *CJ-147		2										
#47F - Tag code D94E-KB,LB	C3UZ 9533-E *CJ-151		2										
GASKET (BOOSTER VENTURI SUPPORT)	E1TZ 9A536-A	AA	AB										
LEVER (FAST IDLE ADUSTING)	E1AZ 9538-B *CM-3843	AA	AB										
Nut (lever to throttle shaft)-hex. - No. 10-32	34079-S7(M-163)	AA	AB										
Lockwash-No. 10	34903-S8(X-96)	AA	AB										
NEEDLE (IDLE ADJUSTING)	C9AZ 9541-B *CM-955-A	2	2										
ROD (ACCELERATOR PUMP LINK to OVERTRAVEL LEVEL	9B542												
Tag codes D9DE-RA,RB,RD,SA,SC,D9ME-BA,CA,D9ZE-BFA,BFB,BGA,BGB,BHB,BJB, D94E-KB,LB	D7AZ 9B542-C *CM-2543	AA	AB										
Tag codes D9BE-VB,YB,D9DE-NA,NB	D7AZ 9B542-E *CM-2833		AB										
PLATE (CHOKE)	D0AZ 9545-A *CM-1061	AA	AB										
Screw (choke plate)-hex. hd-No. 6-32 x 5/16"	375016-S2(UU-52-AK)	2	2										
SHAFT and LEVER ASSY. (CHOKE)	D7AZ 9546-A *CM-2594		AB										
SHAFT (CHOKE PLATE)	D5AZ 9547-A *CM-2089	AA	AB										
DASHPOT ASSY.	9B549												
Tag codes D9DE-NA,NB	D7ZZ 9B549-A *CD-27		AB										
FLOAT ASSY.	9550												
Tag codes D94E-KB,LB	D4AZ 9550-A *CM-1062-A	AA	AB										
	D9AZ 9550-B *CM-3120		AB										
BRACKET (DASHPOT MOUNTING) Tag code D9DE-NA,NB,SA,SC,D9ME-BA,CA, D9ZE-BGA,BGB,BHB,BJB, D94E-KB	D0AZ 9B550-A *CM-1113		AB										
LEVER (CHOKE SHAFT)	D8AZ 9551-A *CM-2953	AA	AB										
Screw (choke lever shaft-6-32 x 1/4"	50802-S7(U-150)	AA	AB										
SHAFT (FLOAT LEVER)	B8A 9558-A *CM-183	AA	AB										
DIAPHRAGM ASSY. (ACCELERATOR PUMP)	D5AZ 9B559-A *CM-2092	AA	AB										

NOTICE: When the parts list suffix is shown in the quantity required column, the quantity is one (1).

DESCRIPTION/RESTRICTIONS	PART NUMBER	CARB. PARTS LISTS 24AA THRU 24AM											
		AA	AB	AC	AD	AE	AF	AG	AH	AJ	AK	AL	AM
GASKET (FLOAT BOWL)	9561												
	D9AZ 9561-C *CG-545	AA	AB										
GASKET (ECONOMIZER COVER)	E0TZ 9563-A *CG-589	AA	AB										
VALVE KIT (FUEL INLET)	9564												
Consists of (1) D2AF 9566-AA needle, (1) D4AE 9567-AA seat (1) D2AZ 9599-A retainer, (1) D8AE 9B546-AA retainer, (1) D4AZ 9E845-A gasket, (1) D8AE 9B530-AA retainer	D8AZ 9564-A *CV-99-A	AA	AB										
ECONOMIZER KIT	9A565												
# Green-incl. (1) C2AZ 9A588-B and (1) B7A 9563-A gaskets-Tag code D80E-EA,TA	D50Z 9A565-A *CE-109	AA											
Tag code D9DE-RA,RB,RD,SA,SC,D9ZE-BFA,BFB,BGA,BGB,BHB,BJB			AB										
# Red-incl. (1) C2AZ 9A588-B and (1) B7A 9563-A gaskets-	D5TZ 9A565-B *CE-117	AA											
Tag codes D8DE-HA													
Tag code D9BE-VB,YB,D9DE-NA,NB			AB										
Tag codes D9ME-BA,CA	D5AZ 9A565-A *CE-108		AB										
Tag codes D94E-KB,LB	D5ZZ 9A565-A *CE-113		AB										
HOUSING ASSY. (CHOKE)	9A575												
Tag code D8DE-HA	★ D7DZ 9A575-C *CC-151	AA											
Tag code D80E-EA	★ D8ZZ 9A575-A *CC-189	AA											
Tag code D80E-TA	★ D80Z 9A575-A *CC-200	AA											
Tag codes D9BE-VB,YB,D9DE-RA,RB,RD,SA,SC, D94E-KB,LB	D8DZ 9A575-A *CG-186		AB										
Tag codes D9DE-NA,NB	★ D9BZ 9A575-B *CC-210		AB										
Tag codes D9ME-BA,CA	★ D7ZZ 9A575-E *CC-160		AB										
Tag codes D9ZE-BFA,BFB,BGA,BGB,BHB,BJB	★ D9ZZ 9A575-C *CC-215		AB										
Screw & washer assy. (choke housing to carb.)-No. 8-32 x 1 3/4"	378547-S8(BB-61-B)	3	3										
Connector-3/8"-24-1/4" tube	386010-S8(11-28-S)	AA	AB										
VALVE (ACCELERATOR PUMP CHECK)- plastic	C4AZ 9576-A *CM-825	AA	AB										
SCREW (PUMP DISCHARGE NEEDLE)	D5AZ 9577-A *CM-2091	AA	AB										
Washer (used under nozzle screw)-1/4" flat	374370-S(XX-94-A)	AA	AB										
SPRING (FAST IDLE ADJUSTING SCREW)	B8A 9578-B *CM-609	AA	AB										
Screw (normal idle adjusting)-special hex. hd. No. 10-32 x 1"	355107-S7(BB-536)	AA	AB										
SPRING (IDLER ADJUSTING NEEDLE)	★ 40 9578	3	3										
LEVER and SHAFT ASSY. (THROTTLE)	9581												
Tag code D8DE-HA	★ D7AZ 9581-E *CM-2586	AA											
Tag codes D80E-EA,TA	D7AZ 9581-K *CM-2587	AA											
Tag codes D9BE-VB,YB,D9DE-RA,RB,RD,SA,SC, D9ME-BA,CA,D9ZE-BFA,BFB,BGA,BGB,BHB,BJB, D94E-KB,LB			AB										
Tag codes D9DE-NA,NB	★ D9BZ 9581-C *CM-3274		AB										
PLATE (THROTTLE)	E1AZ 9585-A *CM-2095-A	2	2										
Screw (throttle plate)- No. 5-40 x 9/32"	386022-S2(BB-908)	4	4										

COPYRIGHT © 1986 — FORD MOTOR COMPANY — DEARBORN, MICHIGAN

DESCRIPTION/RESTRICTIONS	PART NUMBER	CARB. PARTS LISTS 24AA THRU 24AM											
		AA	AB	AC	AD	AE	AF	AG	AH	AJ	AK	AL	AM
BRACKET (THROTTLE EMMISSION CONTROL SOLENOID)	9J586												
Tag codes D80E-EA,TA Tag codes D9BE-VB,D9DE,RA,RB,RD,D9ME-BA,D9ZE-BFA,BFB,BHB, D94E-LB	D7AZ 9J586-B	AA	AB										
Screw (throttle emmission control solenoid bracket)-No. 10-32 x 1/2"	50810-S8(U-158)	AA	AB										
Nut (throttle emmission control solenoid bracket)	45219-S(M-173)	AA	AB										
GASKET (ECONOMIZER	C2AZ 9A588-B *CM-533	AA											
CAM ASSY. (FAST IDLE)	9597												
	D5AZ 9597-A *CM-2105	AA	AB										
Retainer (fast idle cam)- "C" washer	351825-S(XX-9)	2	2										
Screw (fast idle cam)-hex. hd. - No. 6-32 x 3/4"	372307-S(BB-527)	AA	AB										
RETAINER (FLOAT LEVER SHAFT)	9599												
Tag codes D9DE-NA,NB,RA,RB,RD,SA,SC,D9ME-BA,CA, D9ZZ-BFA,BFB,BGA,BGB,BHB,BJB, D94E-KB,LB	D2AZ 9599-A *CM-1469		AB										
Tag codes D9BE-VB,YB	D9AZ 9599-A *CM-3315	AA	AB										
ROD (CHOKE CONTROL)	E1AZ 9A599-A *CM-3686	AA	AB										
Ring (rod to shaft)	377918-S8(XX-14-F)	AA	AB										
CAP (ACCELERATOR PUMP PISTON) "As listed in TSB No. 150, dated Jan. 4, 1978, article 3017"	★ D8ZZ 9635-A *CM-2993	AA											
SPRING (ACCELERATOR PUMP LEVER RETURN)	D4AZ 9636-A *CM-1527-A	AA											
SHAFT and LEVER ASSY. (CHOKE HOUSING)	D7PZ 9A753-A *CM-2592	AA											
Retainer-choke shaft-"C" washer	353862-S8(XX-10)	AA	AB										
Screw-choke shaft-No. 6-32 x 1/4"	50802-S2(U-150)	AA	AB										
LEVER (CHOKE THERMOSTAT)	D3AZ 9A754-D	AA											
Screw (choke lever shaft)-6-32 x 1/4"	50802-S7(U-150)	AA	AB										
CLIP (ACCELERATOR PUMP LINK ROD)	D2AZ 9825-A *CM-1695	AA	AB										
CLAMP (THERMOSTATIC CHOKE HOUSING)	E2AZ 9842-B *CM-3840	AA	AB										
Screw (clamp housing)-fill head-No. 8-32 x 1/2"	31061-S7(U-50)	3	3										
SHIELD (FUEL INLET SEAT)	D4AZ 9E845-A	AA	AB										
HOUSING ASSY. (CHOKE THERMOSTAT)	9848												
#2-400D-incl. (1) D1AZ 9871-A gasket Tag codes D8DE-HA, D80E-EA	D7AZ 9848-D *CM-2589	AA											
#2-100ME-Tag code D80E-TA Tag codes D9DE-RA,RB,RD,SA,SC, D94E-KB,LB	D84Z 9848-A *CM-2879	AA	AB										
#2-LB4-Tag codes D9BE-VB,YB,D9DE-NA,NB	D5AZ 9848-C *CM-2374		AB										
#2-500E-incl. (1) D1AZ 9871-A gasket Tag codes D9ME-BA,CA	D7DZ 9848-A *CM-2546		AB										
#2-65MF-incl. (1) D1AZ 9871-A gasket Tag codes D9ZE-BFA,BFB,BGA,BGB,BHB,BJB	D7TZ 9848-A *CM-2860		AB										
BUSHING (CHOKE THERMOSTATIC LEVER)	D5DZ 9851-A *CM-2096	AA	AB										
GASKET (THERMOSTATIC CHOKE CONTROL)	B8A 9853-A *CG-93	AA	AB										

NOTICE: When the parts list suffix is shown in the quantity required column, the quantity is one (1).

DESCRIPTION/RESTRICTIONS	PART NUMBER	CARB. PARTS LISTS 24AA THRU 24AM											
		AA	AB	AC	AD	AE	AF	AG	AH	AJ	AK	AL	AM
SOLENOID ASSY. (THROTTLE EMMISSION CONTROL)	9D856												
Tag code D80E-EA Tag codes D9BE-VB,D9DE,RA,RB,RD,D9ME-BA, D9ZE-BFA,BFB,BHB, D94E-LB	D7DZ 9D856-A *CS-4	AA	AB										
SHIELD (CHOKE THERMOSTATIC)	D5ZZ 9861-A	AA	AB										
Screw (choke shield)-No. 8-32 x 9/16"	376262-S2(UU-52-AJ)	AA	AB										
GASKET (THERMOSTATIC CHOKE HOUSING)	D1AZ 9871-A *CG-317	AA	AB										
COVER (ECONOMIZER VALVE)	C8AZ 9930-A *CM-728	AA	AB										
Screw and washer (cover to carb.)-fill. head-No. 8-32 x 5/8"	357136-S(BB-56)	4	4										
SHAFT & LEVER ASSY. (BY-PASS VALVE)	D7AZ 9A945-A *CM-2595		AB										
COMPENSATOR ASSY. (HI-ALTITUDE)	D7AZ 9A950-A *CM-2507		AB										
Screw (compensator) No. 8-32 x 3/4"	43395-S8(U-75)		4										
GASKET (ALTITUDE COMPENSATOR HSG.)	D7AZ 9A953-A *CG-491		AB										
CAM (AIR BLEED METERING NEEDLE ROD)	D5AZ 9A965-A *CM-2106	AA	AB										
PLATE (AIR BY-PASS VALVE)	★ D7AZ 9A972-A *CM-2597		AB										
Screw (plate) No. 4-40 x 1/4"	57000-S2(B-328)		2										
ROD (AIR BY-PASS PLATE)	D7AZ 9A973-A *CM-2596		AB										
Retainer (rob) 3/16" "C" type	97401-S2(Q-X-4)		AB										

COPYRIGHT © 1986 — FORD MOTOR COMPANY — DEARBORN, MICHIGAN

DESCRIPTION/RESTRICTIONS	PART NUMBER	CARB. PARTS LISTS 27A THRU 27M											
		A	B	C	D	E	F	G	H	J	K	L	M
NOTE: † Not a part of service carburetor													
GASKET SET – Refer to carburetor identification chart–Section 95	9502												
TUNE-UP KIT – Refer to carburetor identification chart–Section 95	9A586												
Screw & washer assy. (air horn to main body)–fill. hd.–No. 10–32 x 7/8"	381744–S(BB–80–H)	16	16	16	16	16	16	16	16	16			
Screw (fast idle adjusting)–set–No. 10–32 x 3/4"	382297–S(UU–26–L)	A	B	C	D	E	F	G	H	J			
Connector (used for choke inlet tube)–1/8" pipe–1/4" tube	382786–S(II–179)	A	B	C	D	E	F	G	H	J			
SPRING (TRANSMISSION KICKDOWN CONTROL LEVER RETRACTING)	D1AZ 7B146–A	A	B	C	D	E	F	G	H	J			
FILTER (FUEL)	D3AZ 9155–A *FG–14–A	A	B	C	D	E	F	G	H	J			
LIMITER (IDLE NEEDLE ADJUSTING)	D6PZ 9J500–A *CM–747–B	2	2	2	2	2	2	2	2	2			
SPRING (SECONDARY THROTTLE DIAPHRAGM RETURN)	C7AZ 9B504–A *CM–656	A	B	C	D	E	F	G	H	J			
ROD (SECONDARY THROTTLE CONTROL)	9C504												
	D1AZ 9C504–A	A	B	C	D	E							
	C7AZ 9C504–A						F	G	H	J			
Ring (rod to throttle shaft and lever–primary & secondary)–retaining–1/8"	377918–S8B(XX–14–F)	2	2	2	2	2	2	2	2	2			
BUSHING (THROTTLE SHAFT)	C7AZ 9B508–A	A	B	C	D	E	F	G	H	J			
CONTROL ASSY. (VACUUM BREAK) Tag codes D3AF–GA,D3PF–AA,NA	D2AZ 9S514–C *CK–1983	A	B	C	†D	E							
Nut (used on vacuum break control jam nut)–hex.–1/4" x 28 Tag codes D3AF–GA,D3PF–AA,NA	33796–S7(M–61)	A	B	C	†D	E							
Screw (attaches the vacuum break control to the carb.)–hex. head–1/4" –14 x 1/2" Tag codes D3AF–GA,D3PF–AA,NA	55981–S2(U–254–E)	A	B	C	†D	E							
GASKET (THROTTLE BODY)	★ D3AZ 9516–A *CG–375	A	B	C	D	E	F	G	H	J			
VALVE (ACCELERATOR PUMP DISCHARGE NEEDLE)	C7AZ 9A516–B *CM–676	A	B	C	D	E	F	G	H	J			
SEAL (AIR HORN)	★ C8AZ 9C527–A *CM–1682	A	B	C	D	E	F	G	H	J			
LINK (ACCELERATOR PUMP)	★ C7AZ 9529–B *CM–694	A	B	C	D	E	F	G	H	J			
Rivet (accelerator pump link)–button head–1/8" x 11/16"	383070–S(SS–10–E)						F	G	2	J			
COMPENSATOR ASSY. (HOT IDLE) Tag codes D3AF–LA,VA,D3PF–AA, D3VF–BB,CB,DA,EA,NA Tag codes D3AF–TA,ACA,ADA	C7AZ 9B532–A *CM–903			C	D	E		G	H				
Screw (hot idle compensator assy. to air horn) No. 8–32 x 3/8" fill. head Tag codes D3AF–LA,VA,D3PF–AA, D3VF–BB,CB,DA,EA,NA Tag code D3AF–TA,ACA,ADA	378361–S2(UU–43–D)			2	2	2		2	2				

COPYRIGHT © 1986 — FORD MOTOR COMPANY — DEARBORN, MICHIGAN

DESCRIPTION/RESTRICTIONS	PART NUMBER	CARB. PARTS LISTS 27A THRU 27M											
		A	B	C	D	E	F	G	H	J	K	L	M
NOTE: † Not a part of service carburetor													
JET (MAIN METERING)	9533												
No. 62F	C3AZ 9533-A	2						2					
Tag code D3AF-FA,ADA	*CJ-134					2							
Tag codes D3AF-GA,VA,D3PF-AA,D8PE-EA D3VF-EA					2								
Tag code D4PE-BA									2				
No. 61F	C3TZ 9533-C		2	2			2			2			
Tag codes D3AF-LA,D3VF-DA,	*CJ-138				2								
Tag code D3AF-TA,D3PF-CA						2							
Tag code D4AE-NA									2				
No. 60F-Tag codes D3AF-HB,D3PF-NA,D8PE-JA D3VF-BB,CB	C3GY 9533-B *CJ-145				2								
LEVER (THROTTLE SHAFT AUXILIARY)	D5VZ 9A537-A *CM-1477-A	A	B	C	D	E	F	G	H	J			
Screw (lever to carb.)-pan head shoulder- No. 8-32 x 3/8"	380808-S(BB-683-D)	A	B	C	D	E	F	G	H	J			
LEVER (IDLE ADJUSTING)	★ D1AZ 9538-A *CM-1323	A	B	C	D	E	F	G	H	J			
Nut (lever to throttle shaft)-No. 10-32	34079-S7(M-163)	A	B	C	D	E	F	G	H	J			
Lockwasher-No. 10	34903-S8(X-96)	A	B	C	D	E	F	G	H	J			
SPRING (THROTTLE RETURN)-1/2" dia.- 7-7/8" coils wound left hand	C7AZ 9A538-D	A	B	C	D	E	F	G	H	J			
SPRING (ACCELERATOR PUMP OVERTRAVEL)-9/32" dia. 1 3/8" long- 20 coils	C7AZ 9A538-C	A	B	C	D	E	F	G	H	J			
SCREW (FAST IDLE ADJUSTING)	★ D1AZ 9B538-A *CM-1523	A	B	C	D	E		G	H	J			
NEEDLE (IDLE ADJUSTING)	D0AZ 9541-A *CM-1087	2	2	2	2	2	2	2	2	2			
ROD (ACCELERATOR PUMP LINK TO OVERTRAVEL LEVER)	C7AZ 9B542-B *CM-695	A	B	C	D	E	F	G	H	J			
PISTON (ACCELERATOR PUMP)	C7AZ 9B544-B *CP-50	A	B	C	D	E	F	G	H	J			
PLATE (CHOKE)	D3AZ 9545-A *CM-1754	A	B	C	D	E	F	G	H	J			
Screw (choke plate)-hex. head-No. 6-32 x 5/16"	375016-S2(UU-52-AK)	2	2	2	2	2	2	2	2	2			
SHAFT (CHOKE PLATE)	D5VZ 9547-A *CM-2146	A	B	C	D	E	F	G	H	J			
DASHPOT ASSY.-tag codes D3PF-AA,CA,NA	C1AZ 9B549-A *CD-6				†D	†E							
Nut (dashpot to mounting bracket)-5/16" -24- tag codes D3PF-AA,CA,NA	33923-S8(M-32)				†D	†E							
FLOAT ASSY.	9550												
Tag codes D3AF-GA,HB,LA,VA,D3PF-AA, NA,D3VF-BB,CB,DA,EA	C7AZ 9550-A *CM-661	A		C	D			G	H				
	★ D2AZ 9550-A *CM-1468		B			E	F			J			
LEVER (CHOKE SHAFT)	★ C9AZ 9551-A *CM-1144	A	B	C	D	E	F	G	H	J			
Screw (lever to shaft)-hex. head- No. 6-32 x 5/16"	383547-S(BB-541-D)	A	B	C	D	E	F	G	H	J			
VALVE ASSY. (POWER)	C7AZ 9G551-A	A	B	C	D	E	F	G	H	J			
PISTON ASSY. (POWER VALVE) Tag code D4PE-BA	★ C8AZ 9G553-A	A	B	C	D	E	F	G	H	J			
Tag code D4AE-NA	C7AZ 9G553-A								H				

NOTICE: When the parts list suffix is shown in the quantity required column, the quantity is one (1).

DESCRIPTION/RESTRICTIONS	PART NUMBER	CARB. PARTS LISTS 27A THRU 27M											
		A	B	C	D	E	F	G	H	J	K	L	M
VALVE (AIR)	9H555												
R.H. Tag codes D3AF-GA,HB,LA,VA,D3PF-AA, NA,D3VF-BB,DA Tag codes D3AF-FA,TA,D3PF-CA	D0AZ 9H555-A *CM-1092	A	B	C	D	E							
L.H. Tag codes D3AF-GR,HB,LA,VA,D3PF-AA, NA,D3VF-BB,DA Tag codes D3AF-FA,TA,D3PF-CA	D0AZ 9H555-B *CM-1093	A	B	C	D	E							
R.H. Tag code D3VF-CB,EA Tag code D3AF-ACA,ADA	★ D3AZ 9H555-A *CM-1760				D	E	F	G	H	J			
L.H. Tag code D3VF-CB,EA Tag code D3AF-ACA,ADA	D3AZ 9H555-B *CM-1761				D	E	F	G	H	J			
Screw (valve to air valve shaft)-pan head- No. 6-32 x 5/16"	381761-S(UU-81-JA)	4	4	4	4	4	4	4	4	4			
SPRING (AIR VALVE)	★ D0AZ 9H556-A *CM-1270	A	B	C	D	E	F	G	H	J			
SHAFT (FLOAT LEVER)	C7AZ 9558-A *CM-663	A	B	C	D	E	F	G	H	J			
GASKET (FLOAT BOWL)	D3AZ 9561-B *CG-233-A	A	B	C	D	E	F	G	H	J			
VALVE KIT (FUEL INLET)	9564												
Primary-incl. (1) D0SF 9B528-A needle, (1) D0SF 9567-A seat, D0AF 9569-A gasket	D0AZ 9564-B *CV-58-A	A	B	C	D	E	F	G	H	J			
Supplementary	D2AZ 9564-B *CV-86-A	A	B	C	D	E	F	G	H	J			
GASKET (HOT IDLE COMPENSATOR)- Tag codes D3AF-HB,LA,VA,D3PF-AA,NA, D3VF-BB,CB,DA,EA Tag codes D3AF-TA,ADA Tag code D4AE-NA	★ C0LE 9B567-A			C	D	E		G	H				
ROD (CHOKE DIAPHRAGM CONTROL) Tag codes D3AF-GA,D3PF-AA,†NA Tag code D4PE-BA	D2AZ 9S567-B	A	B	C	D	E	F	G	H	J			
Nut (control rod to connector)-spring-1/16" Tag codes D3AF-GA,D3PF-AA,†NA	384912-S2(MM-259-V)	A	B	C	D	E							
GASKET (FUEL INLET NEEDLE SEAT)	9569												
Primary	C7AZ 9569-A	A	B	C	D	E	F	G	H	J			
Secondary	★ C7AZ 9569-B	A	B	C	D	E	F	G	H	J			
CONNECTOR (SECONDARY DIAPHRAGM CONTROL) Tag codes D3AF-GA,D3PF-AA,†NA	D2AZ 9S569-A	A	B	C	D	E	F	G		J			
CUP (PUMP PISTON)	C7AZ 9572-A *CM-651	A	B	C	D	E	F	G	H	J			
RETAINER (ACCELERATOR PUMP CHECK VALVE)	C7AZ 9575-A *CM-652	A	B	C	D	E	F	G	H	J			
Ball (accel. pump check)-steel-3/16"	371350-S(AA-4)	A	B	C	D	E	F	G	H	J			
Ball (accelerator pump check)-1/8" - Tag code D4AE-NA	357186-S(AA-1)								H				
SPRING (IDLE ADJUSTING NEEDLE) Fast idle adjusting	★ 40 9578	2 A	2 B	2 C	2 D	2 E	F	G	H	J			
PISTON and ROD ASSY. (AIR VALVE DAMPENER)	★ D2AZ 9H578-A *CM-1683-A	A	B	C	D	E	F	G	H				
Tag code D4AE-JA										J			

COPYRIGHT © 1986 — FORD MOTOR COMPANY — DEARBORN, MICHIGAN

DESCRIPTION/RESTRICTIONS	PART NUMBER	CARB. PARTS LISTS 27A THRU 27M											
		A	B	C	D	E	F	G	H	J	K	L	M
SHAFT (AIR VALVE)	C7AZ 9581-A *CM-654	A	B	C	D	E	F	G	H	J			
LEVER and SHAFT ASSY. (THROTTLE)	9581												
Tag code D3AF-FA,TA,ACA,ADA	D1AZ 9581-B *CM-1294	A		C	D	E	F	G	H				
Tag code D4AE-CA										J			
Tag code D3PF-CA	D10Z 9581-A *CM-1295					E							
	D0AZ 9581-B *CM-1095									J			
Screw (trans. kickdown adjusting)-hex. head-No. 10-32 x 1"	379622-S(BB-817-CN)	A	B	C	D	E	F	G	H	J			
LEVER (AIR VALVE DAMPENER)	C8AZ 9H582-A *CM-1692	A	B	C	D	E	F	G	H	J			
Rivet (button head-split)-1/8" -11/16"	383070-S(SS-10-E)	2	2	2	2	2	2	2	2	2			
LEVER (SECONDARY THROTTLE STOP)	★ C7AZ 9583-C	A	B	C	D	E	F	G	H	J			
Nut (lever to secondary throttle shaft)	34079-S7(M-163)	A	B	C	D	E	F	G	H	J			
Lockwasher-No. 10	34903-S8(X-96)	A	B	C	D	E	F	G	H	J			
LINK (AIR VALVE DAMPENER)	★ C8AZ 9H583-A *CM-1684	A	B	C	D	E	F	G	H	J			
PLATE (THROTTLE)	9585												
Primary	D00Z 9585-A *CM-1100	2	2	2	2	2	2	2	2	2			
Secondary	C9ZZ 9585-B *CM-1123	2	2	2	2	2	2	2	2	2			
Screw (throttle plate to shaft)-hex. washer head-No. 3-43 x 9/32"	383677-S(BB-542-A)	8	8	8	8	8	8	8	8	8			
BRACKET (THROTTLE EMISSION CONTROL SOLENOID)-tag code D4AE-NA	★ D0AZ 9J586-A	A	B	C	D	E	F	G	H	J			
Nut (bracket to carburetor)	34079-S7(M-163)	A	B	C	D	E	F	G	H	J			
Lockwasher (bracket to carburetor)	34903-S-8(X-96)	A	B	C	D	E	F	G	H	J			
Screw (bracket to carburetor)	50810-S8(U-158)	A	B	C	D	E	F	G	H	J			
LEVER and SHAFT ASSY. (SECONDARY THROTTLE PLATE)	★ C8SZ 9A592-B *CM-841	A	B	C	D	E	F	G	H	J			
CAM ASSY. (FAST IDLE)	D1SZ 9597-A *CM-1451	A	B	C	D	E	F	G	H	J			
Screw (fast idle cam)-set lock-slotted headless-No. 8-32 x 7/16"	384170-S(UU-26-K)	A	B	C	D	E	F	G	H	J			
SPRING (ACCELERATOR PUMP ROD)	★ C7AZ 9D598-A *CM-1037	A	B	C	D	E	F	G	H	J			
RETAINER (ACCELERATOR PUMP SPRING)	C7AZ 9599-A *CM-1038	A	B	C	D	E	F	G	H	J			
ROD (CHOKE CONTROL)	D3AZ 9A599-A *CM-1755	A	B	C	D	E	F	G	H	J			
Ring (rod to shaft and lever)-retaining-1/8"	377918-S8(XX-14-F)	2	2	2	2	2	2	2	2	2			
SHAFT and LEVER ASSY. (CHOKE HOUSING)	D2AZ 9A753-B *CM-817-A	A	B	C	D	E	F	G	H	J			
ADAPTER (CHOKE CONTROL TUBE)	C8VY 9C786-A	A	B	C	D	E	F	G	H	J			
PISTON ASSY. (CHOKE)	D3AZ 9840-A *CM-1287-B	A	B	C	D	E	F	G	H	J			
Screw (piston to shaft and lever)-pan head-No. 6-32 x 1/4"	50802-S(U-150)	A	B	C	D	E	F	G	H	J			

NOTICE: When the parts list suffix is shown in the quantity required column, the quantity is one (1).

DESCRIPTION/RESTRICTIONS	PART NUMBER	CARB. PARTS LISTS 27A THRU 27M											
		A	B	C	D	E	F	G	H	J	K	L	M
Note: † Not a part of service carburetor													
CLAMP (THERMOSTATIC CHOKE HOUSING)	9842												
Tag codes D3AF–GA,D3PF–AA,†NA	C8AZ 9842–B *CM–1045	A	B	C	D								
Tag codes D3AF–FA,D3PF–CA						E							
Tag codes D3AF–HB,LA,VA,D3VF–BB,CB,DA,EA, D5PE–EB, D8PE–EA,GA	E2AZ 9842–A *CM–3839				D								
Tag codes D3AF–TA,ACA,ADA						E							
	E2AZ 9842–B *CM–3840						F	G	H	J			
Screw (clamp to choke housing)–fill. head–No. 8–32 x 1/2"	31061–S8(U–50)	3	3	3	3	3	3	3	3	3			
HOUSING ASSY. (THERMOSTATIC CHOKE)	9848												
#4TY–incl. (1) C1AZ 9848–A and (1) D1VF 9871–AA gasket	D0AZ 9848–D *CM–1243	A											
Tag codes D3AF–GA, D3PF–AA, † NA, D5PE–EB, D8PE–EA,GA					D								
Tag code D4PE–BA, D5PE–AB									H				
#4TB2	D1AZ 9848–F		B										
Tag codes D3AF–FA,ACA,D3PF–CA	*CM–1504					E							
#4TB3	D1AZ 9848–G *CM–1505			C									
#4AB5–tag codes D3VF–BB,CB,DA,EA	D3AZ 9848–R				D								
Tag code D3AF–ADA	*CM–1762					E							
#4AY–tag code D3AF–HB,LA,VA	D3AZ 9848–A				D								
Tag code D3AF–TA	*CM–1763					E							
#2EB4 or 2FB4	D4AZ 9848–A						F						
Tag codes D4PE–CA,D5PE–BB	*CM–1806									J			
	D5VZ 9848–C							G					
Tag code D4AE–NA	*CM–2152								H				
Tag code D4AE–JA										J			
BUSHING (CHOKE HOUSING)	★ C7AZ 9851–A *CM–668	A	B	C	D	E	F	G	H	J			
SOLENOID ASSY. (THROTTLE EMISSION CONTROL)–tag code D4AE–NA	D3AZ 9D856–A	A	B	C	D	E	F	G	H	J			
Nut (solenoid to bracket) Tag code D4AE–NA	45219–S2(M–173)	A	B	C	D	E	F	G	H	J			
SHIELD (CHOKE THERMOSTATIC)	D00Z 9861–A	A	B	C	D	E	F	G	H	J			
GASKET (THERMOSTATIC CHOKE HOUSING)	9871												
	D2AZ 9871–A	A		C	D		F	G	H	J			
Tag codes D3AF–TA,ACA,ADA	*CG–336B					E							
	C1AZ 9871–A		B										
Tag codes D3AF–FA,D3PF–CA	*CG–102					E							
RETAINER (VACUUM TUBE)–tag codes D3AF–HB,LA,VA,D3VF–BB,CB,DA	★ D3AZ 9A939–A				D								
TUBE (VACUUM TRANSFER)–tag codes D3AF–HB,LA,VA,D3VF–BB,CB,DA	★ D3AZ 9996–B				D								
Screw (attaches retainer and tube)–No. 8–32 x 1/4"–tag codes D3AF–HB,LA,VA,D3VF–BB, CB,DA	353358–S(UU–52–U)				D								
Cap (vacuum transfer tube)–3/16" –tag codes D3AF–HB,LA,VA,D3PF–NA,D3VF–BB, CB,DA	380614–S(DD–3)				D								

COPYRIGHT © 1986 — FORD MOTOR COMPANY — DEARBORN, MICHIGAN

DESCRIPTION/RESTRICTIONS	PART NUMBER	CARB. PARTS LISTS 28A THRU 28M											
		A	B	C	D	E	F	G	H	J	K	L	M
GASKET SET - Refer to carburetor identification chart-Section 95	9502												
TUNE-UP KIT - Refer to carburetor identification chart-Section 95	9A586												
Screw and washer (horn and plugs to main body)-No. 10-32 x 5/8"	43256-S8(UU-77-F)	4	4	4	4	4	4	4	4	4	4	4	4
SPRING (TRANSMISSION KICK-DOWN CONTROL LEVER RETRACTING)	D1AZ 7B146-A	A	B	C	D	E	F	G	H	J	K	L	M
Screw (to adjust trans. kick-down)-hex. head-No. 10-32 x 1"	379622-S8(UU-52-M)	A	B	C	D	E	F	G	H	J	K	L	M
LIMITER (IDLE ADJUSTING NEEDLE)	D6PZ 9J500-A *CM-747-B	2	2	2	2	2	2	2	2	2	2	2	2
SEAL (FAST IDLE ROD)	C7AZ 9B501-A	A	B	C	D	E	F	G	H	J	K	L	M
WEIGHT (PUMP DISCHARGE BALL)	C9AZ 9B511-A *CM-1126	A	B	C	D		F	G	H	J			M
Ball (accel. pump discharge valve)-steel-3/16"	371350-S(AA-4)	A	B	C	D	E	F	G	H	J	K	L	M
CONTROL ASSY. (VACUUM BREAK)	D2AZ 9S514-H *CK-1985	A	B										
Screw (vacuum break control to carb.)-No. 8-18 x 1/2"	381797-S2(UU-89-J)	A	B										
ROD (FLOAT BOWL VENT)	★ D2AZ 9A515-A *CM-1470					E	F	G	H	J	K	L	
BRACKET (FLOAT BOWL VENT)	★ D4AZ 9E520-A					E	F	G	H	J	K	L	
SUPPORT ASSY. (BOOSTER VENTURI)	9A523												
#PZ or JJ Tag code D3PF-FA	D1PZ 9A523-AA		B		D								
Tag codes D3AF-CD,CE,DB,DC,JA,KA,NA PA,RA,RB,UA,XA,D3MF-AE,BA,CA,DA,EA,FA, GA,D3PF-FB,D3WF-CA,D3ZF-FA	★ D4PZ 9A523-A *CM-1879	A		C	D	E	F	G	H	J	K	L	M
SCREEN (FUEL FILTER)	C4AZ 9F525-A	A	B	C	D	E	F	G	H	J	K	L	M
COVER ASSY. (ACCELERATOR PUMP)	D2AZ 9528-A *CM-648-B	A	B	C	D	E	F	G	H	J	K	L	M
Screw (cover to carb.)-hex. head-No. 8-32 x 9/16"	376262-S(UU-52-AJ)	4	4	4	4	4	4	4	4	4	4	4	4
Pin (accel. pump link)-1/8" x 7/16"	★ 67516-S	A	B		D								
ROD (FAST IDLE CAM)	C3AZ 9D530-A	A	B	C	D	E	F	G	H	J	K	L	M
JET (MAIN METERING)	9533												
No. 55F Tag code D3AF-PA,RA,RB,UA,XA	C3UZ 9533-B *CJ-140	2			2		2	2	2	2			2
No. 54F Tag codes D3AF-DB,DC,KA,NA, D3MF-AE,BA, CA,DA,EA,FA,GA,D3PF-FA,FB,D3WF-CA, D3ZF-FA	C3GY 9533-C *CJ-146		2	2	2								
No. 53F-tag code D3AF-CE,JA	C3DZ 9533-A *CJ-128				2								

COPYRIGHT © 1986 — FORD MOTOR COMPANY — DEARBORN, MICHIGAN

DESCRIPTION/RESTRICTIONS	PART NUMBER	CARB. PARTS LISTS 28A THRU 28M											
		A	B	C	D	E	F	G	H	J	K	L	M
GASKET (BOOSTER VENTURI SUPPORT)	E1TZ 9A536-A	A	B	C	D	E	F	G	H	J	K	L	M
LEVER (FAST IDLE ADJUSTING)	9538												
Tag codes D3AF-DB,DC,KA,PA,UA,XA, D3MF-AE,BA,CA,DA,EA,FA,GA,D3PF-FA, FB, D3WF-CA, D3ZF-FA	D0AZ 9538-A *CM-1105		B		D								
Tag codes D3AF-CE,JA,NA,RA,RB	E1AZ 9538-B *CM-3843	A			D	E	F	G	H	J	K	L	M
	D1MY 9538-A *CM-1592			C									
Nut (lever to throttle shaft)-hex. head-No. 10-32	34079-S7(M-163)	A	B	C	D	E	F	G	H	J	K	L	M
Lockwasher-No. 10	34903-S8(X-96)	A	B	C	D	E	F	G	H	J	K	L	M
SCREW (FAST IDLE ADJUSTING)	9B538												
Tag codes D3AF-DB,DC,KA,PA,UA,XA, D3PF-FA,FB, D3WF-CA, D3ZF-FA	C3TZ 9B538-A		B		D								
Tag codes D3MF-AE,BA,CA,DA,EA,FA,GA	D1MY 9B538-B *CM-1593			C	D								
NEEDLE (IDLE ADJUSTING)	C9AZ 9541-B *CM-955-A	2	2	2	2	2	2	2	2	2	2	2	2
ROD (ACCELERATOR PUMP LINK TO OVERTRAVEL LEVER)	9B542												
	★ D2AZ 9B542-B *CM-1526-A	A	B	C	D								
	★ D4AZ 9B542-A *CM-1810					E	F	G	H	J	K	L	M
PLATE (CHOKE)	D0AZ 9545-A *CM-1061	A	B	C	D	E	F	G	H	J	K	L	M
Screw (choke plate)-hex. head-No. 6-32 x 5/16"	375016-S2(UU-52-AK)	2	2	2	2	2	2	2	2	2	2	2	2
SHAFT and LEVER ASSY. (CHOKE)	D0AZ 9546-A *CM-1088	A	B	C	D	E	F	G	H	J	K	L	M
DIAPHRAGM AND RETAINER ASSY. (CHOKE CONTROL)	D0AZ 9J549-C *CK-1283	A	B	C	D		F	G	H	J	K	L	M
Screw (diaphragm and retainer)-allen head- No. 8-32 x 7/16"	358544-S8(UU-28-C)	A	B	C	D	E	F	G	H	J	K	L	M
FLOAT ASSY.	D4AZ 9550-A *CM-1062-A	A	B	C	D	E	F	G	H	J	K	L	M
Screw assy. (dashpot mounting bracket)- No. 10-32 x 1/2"	43252-S8(U-77)	A											
LEVER(CHOKE SHAFT)	D8AZ 9551-A *CM-2953	A	B	C	D	E	F	G	H	J	K	L	M
Screw (lever-choke shaft)-pan head- No. 6-32 x 3/8"	50802-S7(U-150)	A	B	C	D	E	F	G	H	J	K	L	M
PLATE (AIR DISTRIBUTION)	D0AZ 9F553-A	A	B	C	D	E	F	G	H	J	K	L	M
LEVER (CHOKE CONTROL DIAPHRAGM)	D1AZ 9J553-A	A	B	C	D		F	G	H	J	K	L	M
COVER (CHOKE CONTROL DIAPHRAGM)	★ D0AZ 9J554-A	A	B	C	D	E	F	G	H	J	K	L	M
Screw (cover-choke diaphragm)- No. 8-32 x 9/16"	376262-S7-8(UU-52-AJ)	3	3	3	3	3	3	3	3	3	3	3	3

NOTICE: When the parts list suffix is shown in the quantity required column, the quantity is one (1).

DESCRIPTION/RESTRICTIONS	PART NUMBER	CARB. PARTS LISTS 28A THRU 28M											
		A	B	C	D	E	F	G	H	J	K	L	M
SHAFT (FLOAT LEVER)	B8A 9558-A *CM-183	A	B	C	D	E	F	G	H	J	K	L	M
SWIVEL (CHOKE DIAPHRAGM ADJUSTING)	D2AZ 9F558-A	A	B	C	D								
DIAPHRAGM ASSY. (ACCELERATOR PUMP)	C4AZ 9B559-A *CM-463	A	B	C	D	E	F	G	H	J	K	L	M
SPRING (FLOAT BOWL VENT)	★ D2AZ 9560-B *CM-1471					E	F	G	H	J	K	L	
GASKET (FLOAT BOWL)	D4AZ 9561-A *CG-406	A	B	C	D	E	F	G	H	J	K	L	M
GASKET (ECONOMIZER COVER)	E0TZ 9563-A *CG-589	A	B	C	D	E	F	G	H	J	K	L	M
VALVE KIT (FUEL INLET)	D2AZ 9564-A *CV-54-A	A	B	C	D	E	F	G	H	J	K	L	M
ECONOMIZER KIT	9A565												
#Green-incl. (1) B7A 9563-A gasket & (1) C2AZ 9A588-A gasket Tag codes D3MF-DA,EA,FA	D50Z 9A565-A *CE-75			C	D								
#Black-incl. (1) B7A 9563-A gasket, (1) C2AZ 9A588-B gasket Tag codes D3AF-DB,DC,NA,PA,RA,RB,UA, D3MF-AE,BA,GA, D3PF-FA,FB, D3WF-CA, D3ZA-FA	D5AZ 9A565-A *CE-106	A	B		D		F	G	H	J			M
#Brown-tag codes D3AF-CE,JA,KA,NA,XA, D3MF-CA	D5DZ 9A565-A *CE-112				D								
ROD (CHOKE DIAPHRAGM CONTROL) Tag codes D3AF-NA,RA,RB	★ D2AZ 9S567-C	A	B		D								
Ring (choke diaphragm control rod to vacuum break control assy.)-retaining-1/8"	377918-S8 (XX-14-F)	A	B										
GASKET (FUEL INLET NEEDLE SEAT)	★ B7A 9569-A	A	B	C	D	E	F	G	H	J	K	L	M
HOUSING ASSY. (CHOKE)	9A575												
Tag codes D3AF-DB,DC,KA,FA,FB,UA, D3PF-FA,FB, D3WF-CA, D3ZF-FA	★ D3ZZ 9A575-A *CC-73		B		D								
Tag codes D3AF-CE,JA,NA,RA,RB	★ D3AZ 9A575-C *CC-79	A			D								M
Tag codes D3AF-PA,XA	★ D3AZ 9A575-E *CC-86				D								
Tag codes D3MF-AE,BA,CA,DA,EA,FA,GA	★ D3TZ 9A575-E *CC-74			C	D						K	L	
	★ D3ZZ 9A575-B *CC-77						F	G	H	J			
Screw (choke housing to carb.)- No. 8-32 x 1 3/4"	378547-S7-8(BB-61-B)	3	3	3	3	3	3	3	3	3	3	3	3
VALVE (ACCELERATOR PUMP CHECK)- plastic	C4AZ 9576-A *CM-825	A	B	C	D	E	F	G	H	J	K	L	M
SCREW (PUMP DISCHARGE NOZZLE)	E1AZ 9577-B *CM-3703	A	B	C	D	E	F	G	H	J	K	L	M
LEVER (FAST IDLE CAM)	C4AZ 9F577-B	A	B	C	D	E	F	G	H	J	K	L	M
SPRING (IDLE ADJUSTING NEEDLE)	★ 40 9578	3	3	3	3	3	3	3	3	3	3	3	3
SPRING (IDLE ADJUSTING SCREW)	B8A 9578-B *CM-609	A	B	C	D	E	F	G	H	J	K	L	M
Screw (normal idle adjusting)-special hex. head slotted-No. 10-32 x 1"	355107-S7(BB-536)	A	B	C	D	E	F	G	H	J	K	L	M

COPYRIGHT © 1986 — FORD MOTOR COMPANY — DEARBORN, MICHIGAN

DESCRIPTION/RESTRICTIONS	PART NUMBER	CARB. PARTS LISTS 28A THRU 28M											
		A	B	C	D	E	F	G	H	J	K	L	M
LEVER AND SHAFT ASSY. (THROTTLE)	9581												
Tag codes D3AF-CE,JA,NA,RA,RB	D2AZ 9581-A *CM-1047-A	A			D								
Tag codes D3AF-DB,DC,KA,PA,UA,XA, D3MF-AE,BA,CA,DA,EA,FA,GA,D3PF-FA, FB, D3WF-CA, D3ZF-FA	★ D20Z 9581-C *CM-1098-B		B	C	D								
	D4AZ 9581-A *CM-1808					E	F	G	H	J	K	L	M
PLATE (THROTTLE)	9585												
	C4MY 9585-A	2	2	2	2								
	★ D4MY 9585-A *CM-1805					2	2	2	2	2	2	2	
	E1AZ 9585-A *CM-2095-A												2
Screw (attaches throttle plate)- No. 5-40 x 5/16"	383253-S2(BB-4-Z)	4	4	4	4	4	4	4	4	4	4	4	4
BRACKET (THROTTLE EMISSION CONTROL SOLENOID)	C9AZ 9J586-A	A	B	C	D	E	F	G	H	J	K	L	M
Screw & lockwasher assy. (bracket to carburetor)-No. 10-32 x 1/2" pan head	50810-S8(U-158)	A	B	C	D	E	F	G	H	J	K	L	M
SPRING (CHOKE CONTROL)	★ D0AZ 9587-A *CM-1271	A	B	C	D		F	G	H	J	K	L	M
GASKET (ECONOMIZER VALVE)	C2AZ 9A588-B *CM-533	A	B	C	D	E	F	G	H	J	K	L	M
CAM ASSY. (FAST IDLE)	D5AZ 9597-A *CM-2105	A	B	C	D		F	G	H	J	K	L	M
Screw (fast idle cam)-hex. head- No. 6-32 x 3/4"	372307-S(BB-527)	A	B	C	D	E	F	G	H	J	K	L	M
Retainer (fast idle cam)- "C" washer	351825-S(XX-9)	2	2	2	2	2	2	2	2	2	2	2	2
LEVER (DECHOKE OVERRIDE) Tag codes D3AF-DB,DC,KA,PA,UA,XA, D3MF-AE,BA,CA,DA,EA,FA,GA, D3PF-FA,FB, D3WF-CA, D3ZF-FA	D20Z 9J598-A		B	C	D								
Nut (lever-dechoke)-hex. head-No. 10-32 x 1/8"	34079-S7(M-163)	A	B	C	D	E	F	G	H	J			
Lockwasher (lever-dechoke)-No. 10	34903-S7(X-96)	A	B	C	D	E	F	G	H	J			
RETAINER (FLOAT LEVER SHAFT)	D2AZ 9599-A	A	B	C	D	E	F	G	H	J	K	L	M
ROD (CHOKE CONTROL)	9A599												
Tag codes D3AF-CE,DB,DC,JA,KA,NA, PA,RA,RB,UA,XA, D3PF-FA,FB, D3WF-CA, D3ZF-FA	E1AZ 9A599-A *CM-3686	A	B		D	E	F	G	H	J	K	L	M
Tag codes D3MF-AE,BA,CA,DA,EA,FA,GA	★ D1AZ 9A599-A *CM-1513			C	D								
Ring (rod to shaft)	377918-S8B(XX-14-F)	A	B	C	D	E	F	G	H	J	K	L	M
SPRING (ACCELERATOR PUMP LEVER RETURN)	9636												
	D4AZ 9636-A *CM-1527-A	A	B	C	D	E	F	G	H	J	K	L	M
SHAFT AND LEVER ASSY. (CHOKE HOUSING)	D2AZ 9A753-A	A	B	C	D	E	F	G	H	J	K	L	M
LEVER (CHOKE THERMOSTATIC)	9A754												
	D1AZ 9A754-C	A											
	D3AZ 9A754-D		B	C	D	E	F	G	H	J	K	L	M

NOTICE: When the parts list suffix is shown in the quantity required column, the quantity is one (1).

DESCRIPTION/RESTRICTIONS	PART NUMBER	CARB. PARTS LISTS 28A THRU 28M											
		A	B	C	D	E	F	G	H	J	K	L	M
CLIP (ACCELERATOR PUMP LINK ROD)	D2AZ 9825-A *CM-1695	A	B	C	D	E	F	G	H	J	K	L	M
CLAMP (THERMOSTATIC CHOKE HOUSING)	E2AZ 9842-B *CM-3840	A	B	C	D	E	F	G	H	J	K	L	M
Screw (clamp housing)-No. 8-32 x 1/2"	31061-S8(U-50)	3	3	3	3	3	3	3	3	3	3	3	3
SHIELD (FUEL INLET SEAT)	D4AZ 9E845-A					E	F	G	H	J	K	L	
HOUSING KIT (THERMOSTATIC CHOKE)	9848												
# "TB4"-incl. (1) D1AZ 9871-A gasket	D1AZ 9848-B *CM-1455	A											
#2AB4	D3AZ 9848-N *CM-1739		B	C	D								
	D5AZ 9848-A *CM-2097					E	F	G	H	J	K	L	M
BUSHING (CHOKE THERMOSTATIC LEVER)	C8AZ 9851-A *CM-751	A	B	C	D	E	F	G	H	J	K	L	M
GASKET (THERMOSTATIC CHOKE CONTROL)	B8A 9853-A *CG-93	A	B	C	D	E	F	G	H	J	K	L	M
SOLENOID ASSY. (THROTTLE EMISSION CONTROL)	D3AZ 9D856-A	A	B	C	D	E	F	G	H	J	K	L	M
Nut (solenoid-throttle emission)-hex.-7/16"-20	45219-S2(M-173)	A	B	C	D	E	F	G	H	J	K	L	M
SHIELD (CHOKE THERMOSTATIC)	9861												
Tag codes D3AF-DB,DC,KA,PA,UA,XA, D3PF-FA,FB, D3MF-AE,BA,CA,DA,EA, FA,GA, D3WF-CA, D3ZF-FA	D5ZZ 9861-A		B	C	D								
Tag codes D3AF-CE,JA,NA,RA,RB	E0UZ 9861-A	A			D	E	F	G	H	J	K	L	M
Screw (attaches choke thermostat shield)-hex. head-No. 8-32 x 1/2"	376262-S2(UU-52-AJ)	2	2	2	2	2	F	G	H	J	K	L	M
GASKET (THERMOSTATIC CHOKE HOUSING)	D1AZ 9871-A *CG-317	A	B	C	D	E	F	G	H	J	K	L	M
COVER (ECONOMIZER VALVE)	C8AZ 9930-A *CM-728	A	B	C	D	E	F	G	H	J	K	L	M
Screw and washer (cover to carb.)-No. 8-32 x 5/8"	357136-S(BB-56)	4	4	4	4	4	4	4	4	4	4	4	4

COPYRIGHT © 1986 — FORD MOTOR COMPANY — DEARBORN, MICHIGAN

DESCRIPTION/RESTRICTIONS	PART NUMBER	CARB. PARTS LISTS 28N THRU 28Z											
		N	P	Q	R	S	T	U	V	W	X	Y	Z
NOTE: † Not a part of service carburetor													
GASKET SET - Refer to carburetor identification chart-Section 95	9502												
TUNE-UP KIT - Refer to carburetor identification chart-Section 95	9A586												
Screw and washer (horn and plugs to main body)-No. 10-32 x 5/8"	43256-S8(UU-77-F)	4	4	4	4	4	4	4	6	6	6	6	6
SPRING (TRANSMISSION KICK-DOWN CONTROL LEVER RETRACTING)	D1AZ 7B146-A	N	P	Q	R	S		U	V	W	X	Y	Z
Tag code D4OE-FA							T						
Screw (to adjust trans. kick-down)-hex. head-No. 10-32 x 1"	379622-S8(UU-52-M)	N	P	Q	R	S		U	V	W	X	Y	Z
LIMITER (IDLE ADJUSTING NEEDLE)	D6PZ 9J500-A *CM-747-B	2	†2	2	2	2	2	2	†2	†2	2	2	2
SEAL (FAST IDLE ROD)	C7AZ 9B501-A	N	P	Q	R	S	T	U	V	W	X	Y	Z
WEIGHT (PUMP DISCHARGE BALL)	C9AZ 9B511-A *CM-1126	N	P	Q	R	S	T	U	V	W	X	Y	Z
Ball (accel. pump discharge valve)-steel-3/16"	371350-S(AA-4)	N	P	Q	R	S	T	U	V	W	X	Y	Z
CONTROL ASSY. (VACUUM BREAK)	9S514												
	D8AZ 9S514-G *CK-1989-A								V				
Tag code D5OE-BA	D5AZ 9S514-A *CK-1987									W	X		
Tag codes D5WE-EA,GA	D8AZ 9S514-M *CK-2015-A									W			
	D5AZ 9S514-B *CK-1988											Y	Z
ROD (FLOAT BOWL VENT)	9A515												
Tag code D4OE-FA	★ D2AZ 9A515-A *CM-1470					S	T	U					
	D5AZ 9A515-B *CM-2281								V	W	X	Y	Z
BRACKET (FLOAT BOWL VENT)	9E520												
Tag code D4OE-FA	★ D4AZ 9E520-A					S	T	U					
	D5AZ 9E520-A								V	W	X	Y	Z
Screw (bracket to cover)-No. 8-32 x 9/16"	376262-S(UU-52-AJ)									2	2	2	2
SUPPORT ASSY. (BOOSTER VENTURI)	9A523												
Tag code D4AE-GA	★ D4PZ 9A523-A *CM-1879	N		Q	R	S	T	U					
Tag code D4AE-CA			P										
Tag code D4PE-HB	D4PZ 9A523-N				R								
Tag code D4PE-CEA	*CM-2363		P										
Tag code D4PE-VB	D4PZ 9A523-P *CM-2364				R								
	★ D50Z 9A523-B *CM-2109								V				
Tag codes D5OE-BA,D5WE-GA	★ D5AZ 9A523-B *CM-2107									W			

NOTICE: When the parts list suffix is shown in the quantity required column, the quantity is one (1).

DESCRIPTION/RESTRICTIONS	PART NUMBER	CARB. PARTS LISTS 28N THRU 28Z											
		N	P	Q	R	S	T	U	V	W	X	Y	Z
NOTE: † Not a part of service carburetor													
SUPPORT ASSY. (BOOSTER VENTURI)	9A523 — Cont'd												
	D5AZ 9A523-E *CM-2108										X		
Tag code D5WE-EA	D5AZ 9A523-F *CM-2198									W		Y	
	★ D5AZ 9A523-C *CM-2100												Z
ROD (CHOKE PULL DOWN)	D5AZ 9E524-A *CM-2082								V	W	X	Y	Z
Ring (rod to shaft)-1/8"	377918-S8B(XX-14-A)								V	W	X	Y	Z
SCREEN (FUEL FILTER)	C4AZ 9F525-A	N	P	Q	R	S	T	U	V	W	X	Y	Z
COVER ASSY. (ACCELERATOR PUMP)	9528												
	D2AZ 9528-A *CM-648-B	N	P	Q	R	S	T	U					
	D5AZ 9528-A *CM-2170								V	W	X	Y	Z
Screw (cover to carb.)-hex. head-No. 8-32 x 9/16"	376262-S(UU-52-AJ)	4	4	4	4	4	4	4	4	4	4	4	4
Pin (accel. pump link)-1/8" x 7/16"	★ 67516-S	N											
ROD (FAST IDLE CAM)	C3AZ 9D530-A	N	P	Q	R	S	T	U	V	W	X	Y	Z
JET (MAIN METERING)	9533												
No. 55F	C3UZ 9533-B	2					2					2	
Tag code D4AE-CA	*CJ-140		2										
Tag code D4ME-CA								2					
No. 57F Tag code D4PE-CEA	C30Z 9533-A *CJ-129		2										
No. 54F	C3GY 9533-C			2									
Tag codes D4AE-GA,D4PE-HB	*CJ-146				2								
No. 56F	C3GY 9533-D					2			2	2	2	2	2
Tag codes D4ME-BA,D40E-FA,D4PE-VA	*CJ-147							2					
Tag codes D4PE-VB,BKA					2								
GASKET (BOOSTER VENTURI SUPPORT)	E1TZ 9A536-A	N	P	Q	R	S	T	U	V	W	X	Y	Z
LEVER (FAST IDLE ADJUSTING)	9538												
	E1AZ 9538-B *CM-3843	N				S			V	W	X	Y	Z
	D0AZ 9538-A *CM-1105		P	Q	R		T	U					
Nut (lever to throttle shaft)-hex. head-No. 10-32	34079-S7(M-163)	N	P	Q	R	S	T	U	V	W	X	Y	Z
Lockwasher-No. 10	34903-S8(X-96)	N	P	Q	R	S	T	U	V	W	X	Y	Z
SCREW (FAST IDLE ADJUSTING)	C3TZ 9B538-A		P	Q	R	S	T	U		W	X		
NEEDLE (IDLE ADJUSTING)	C9AZ 9541-B *CM-955-A	2	2	2	2	2	2	2	2	2	2	2	2
ROD (ACCELERATOR PUMP LINK TO OVERTRAVEL LEVER)	9B542												
	★ D4AZ 9B542-A *CM-1810	N	P	Q	R	S	T	U					
	D5AZ 9B542-A *CM-2088								V	W	X	Y	Z
PLATE (CHOKE)	D0AZ 9545-A *CM-1061	N	P	Q	R	S	T	U	V	W	X	Y	Z
Screw (choke plate)-hex. head-No. 6-32 x 5/16"	375016-S2(UU-52-AK)	2	2	2	2	2	2	2	2	2	2	2	2
SHAFT and LEVER ASSY. (CHOKE)	D0AZ 9546-A *CM-1088	N	P	Q	R	S	T	U					
SHAFT (CHOKE PLATE)	D5AZ 9547-A *CM-2089								V	W	X	Y	Z

COPYRIGHT © 1986 — FORD MOTOR COMPANY — DEARBORN, MICHIGAN

DESCRIPTION/RESTRICTIONS	PART NUMBER	CARB. PARTS LISTS 28N THRU 28Z											
		N	P	Q	R	S	T	U	V	W	X	Y	Z
NOTE: † Not a part of service carburetor													
DIAPHRAGM and RETAINER ASSY. (CHOKE CONTROL)	9J549												
	D0AZ 9J549-C *CK-1283	N	P	Q	R	S	T	U					
Screw (diaphragm and retainer)-Allen head- No. 8-32 x 7/16"	358544-S8(UU-28-C)	N	P	Q	R	S	T	U					
FLOAT ASSY.	D4AZ 9550-A *CM-1062-A	N	P	Q	R	S	T	U	V	W	X	Y	Z
LEVER (CHOKE SHAFT)	D8AZ 9551-A *CM-2953	N	P	Q	R	S	T	U	V	W	X	Y	Z
Screw (lever-choke shaft)-pan head- No. 6-32 x 3/8"	50802-S7(U-150)	N	P	Q	R	S	T	U	V	W	X	Y	Z
PLATE (AIR DISTRIBUTION)	D0AZ 9F553-A	N	P	Q	R	S	T	U					
LEVER (CHOKE CONTROL DIAPHRAGM)	D1AZ 9J553-A	N	P	Q	R	S	T	U					
COVER (CHOKE CONTROL DIAPHRAGM)	★ D0AZ 9J554-A	N	P	Q	R	S	T	U					
Screw (cover-choke diaphragm)- No. 8-32 x 9/16"	376262-S7-8(UU-52-AJ)	3	3	3	3	3	3	3					
SHAFT (FLOAT LEVER)	B8A 9558-A *CM-183	N	P	Q	R	S	T	U	V	W	X	Y	Z
DIAPHRAGM ASSY. (ACCELERATOR PUMP)	9B559												
	C4AZ 9B559-A *CM-463	N	P	Q	R	S	T	U					
	D5AZ 9B559-A *CM-2092								V	W	X	Y	Z
SPRING (FLOAT BOWL VENT)	9560												
Tag code D4OE-FA	★ D2AZ 9560-B *CM-1471					S	T						
	D5AZ 9560-A *CM-2084								V	W	X	Y	Z
GASKET (FLOAT BOWL)	9561												
	D4AZ 9561-A *CG-406	N	P	Q	R	S	T	U					
	D9AZ 9561-C *CG-545								V	W	X	Y	Z
GASKET (ECONOMIZER COVER)	E0TZ 9563-A *CG-589	N	P	Q	R	S	T	U	V	W	X	Y	Z
VALVE KIT (FUEL INLET)	D2AZ 9564-A *CV-54-A	N	P	Q	R	S	T	U	V	W	X	Y	Z
VALVE ASSY. (FUEL ENRICHMENT)	9A565												
#Green-incl. (1) C2AZ 9A588-B gasket and (1) B7A 9563-A gasket Tag code D5WE-GA	D50Z 9A565-A *CE-109			Q					V	W			
#White-incl. (1) C2AZ 9A588-B gasket and (1) B7A 9563-A gasket	D5AZ 9A565-B *CE-108										X		
#Black-incl. (1) C2AZ 9A588-B gasket and (1) B7A 9563-A gasket Tag codes D5OE-BA,D5WE-EA	D5AZ 9A565-A *CE-106	N	P		R	S	T	U		W		Y	Z
GASKET (FUEL INLET NEEDLE SEAT)	★ B7A 9569-A	N	P	Q	R	S	T						

NOTICE: When the parts list suffix is shown in the quantity required column, the quantity is one (1).

DESCRIPTION/RESTRICTIONS	PART NUMBER	CARB. PARTS LISTS 28N THRU 28Z											
		N	P	Q	R	S	T	U	V	W	X	Y	Z
NOTE: † Not a part of service carburetor													
HOUSING ASSY. (CHOKE)	9A575												
	★ D3AZ 9A575-F *CC-85	N											
Tag code D4PE-HA	★ D3ZZ 9A575-A *CC-73						T						
Tag code D4AE-GA	★ D3TZ 9A575-E *CC-74			Q	R	S		U					
Tag code D4AE-CA Tag code D4OE-FA	★ D3ZZ 9A575-B *CC-77		P				T						
Tag codes D4PE-VB,BKA	D4PZ 9A575-C *CC-115				R								
Tag code D4PE-HB	D4PZ 9A575-D *CC-116				R								
Tag code D4PE-CEA	D4PZ 9A575-F *CC-171		P										
	★ D50Z 9A575-A *CC-97								V				
Tag code D5OE-BA	★ D5AZ 9A575-A *CC-96									W	X	Y	Z
Tag codes D5WE-EA,GA	★ D5AZ 9A575-C *CC-95									W			
Screw (choke housing to carb.)-No. 8-32 x 1 3/4"	378547-S7-8(BB-61-B)	3	3	3	3	3	3	3	3	3	3	3	3
Tag codes D4PE-HB,VB,BKA	386010-S8(II-28-S)				R								
VALVE (ACCELERATOR PUMP CHECK)-plastic	C4AZ 9576-A *CM-825	N	P	Q	R	S	T	U	V	W	X	Y	Z
SCREW (PUMP DISCHARGE NOZZLE)	9577												
	E1AZ 9577-B	N	P	Q	R	S	T	U					
	E1AZ 9577-A *CM-3685								V	W	X	Y	Z
LEVER (FAST IDLE CAM)	9F577												
Tag code D4AE-GA	C4AZ 9F577-B *CM-607	N	P	Q	R	S	T	U					
R/b D5PZ 9A753-A Tag codes D4PE-HB,VB,BKA	★ D5DZ 9F577-A *CM-2090				R				V	W	X	Y	Z
SPRING (IDLE ADJUSTING NEEDLE)	★ 40 9578	2	2	3	3	3	3	3	3	3	3	3	3
SPRING (IDLE ADJUSTING SCREW)	B8A 9578-B *CM-609	N	P	Q	R	S	T	U	V	W	X	Y	Z
Screw (normal idle adjusting)-special hex. head slotted-No. 10-32 x 1"	355107-S7(BB-536)	N	P	Q	R	S	T	U	V	W	X	Y	Z
LEVER AND SHAFT ASSY. (THROTTLE)	9581												
	D2AZ 9581-A *CM-1047-A	N											
	★ D4AZ 9581-B *CM-1858		P	Q	R	S	T	U					
	D5DZ 9581-A *CM-2093								V	W	X	Y	Z
PLATE (THROTTLE)	9585												
	★ D4MY 9585-A *CM-1805			2	2	2		2					
	E1AZ 9585-A *CM-2095-A	2	2				2		2	2	2	2	2
Screw (attaches throttle plate)-No. 5-40	386022-S2(BB-908)								4	4	4	4	4
Screw (attaches throttle plate)-No. 5-40 x 5/16"	383253-S2(BB-4-Z)	4	4	4	4	4	4	4					

COPYRIGHT © 1986 — FORD MOTOR COMPANY — DEARBORN, MICHIGAN

DESCRIPTION/RESTRICTIONS	PART NUMBER	CARB. PARTS LISTS 28N THRU 28Z											
		N	P	Q	R	S	T	U	V	W	X	Y	Z
NOTE: † Not a part of service carburetor													
BRACKET (THROTTLE EMISSION CONTROL SOLENOID)	C9AZ 9J586-A	N	†P	Q	†R	S		U	†V	†W	X	Y	Z
Tag code D4OE-FA							T						
Screw & lockwasher assy. (bracket to carburetor)-No. 10-32 x 1/2" pan head	50810-S8(U-158)	N	†P	Q	†R	S	T	U	†V	W	X	Y	Z
SPRING (CHOKE CONTROL)	★ D0AZ 9587-A *CM-1271	N	P	Q	R	S	T	U					
GASKET (ECONOMIZER VALVE)	C2AZ 9A588-B *CM-533	N	P	Q	R	S	T	U	V	W	X	Y	Z
CAM ASSY. (FAST IDLE)	9597												
	D5AZ 9597-A *CM-2105	N	P	Q	R	S	T	U	V	W	X	Y	Z
Screw (fast idle cam)-hex. head-No. 6-32 x 3/4"	372307-S(BB-527)	N	P	Q	R	S	T	U	V	W	X	Y	
Retainer (fast idle cam)- "C" washer	351825-S(XX-9)	2	2	2	2	2	2	2	2	2	2	2	
LEVER (DECHOKE OVERRIDE)	D20Z 9J598-A		P	Q	R	S	T	U					
RETAINER (FLOAT LEVER SHAFT)	D2AZ 9599-A	N	P	Q	R	S	T	U					
ROD (CHOKE CONTROL)	9A599												
	E1AZ 9A599-A *CM-3686	N	P				T		V	W	X	Y	Z
	★ D1AZ 9A599-A *CM-1513			Q	R	S		U					
Ring (rod to shaft)	377918-S8B(XX-14-F)	N	P	Q	R	S	T	U	V	W	X	Y	Z
SPRING (ACCELERATOR PUMP LEVER RETURN)	D4AZ 9636-A *CM-1527-A	N	P	Q	R	S	T	U	V	W	X	Y	Z
SHAFT AND LEVER ASSY. (CHOKE HOUSING)	9A753												
	D2AZ 9A753-A *CM-1510	N	P	Q		S	T	U					
Tag code D4AE-GA					R								
	D5PZ 9A753-A *CM-2201								V	W	X		
Tag codes D4PE-HB,VB,BKA					R								
LEVER (CHOKE THERMOSTATIC)	D3AZ 9A754-D	N	P	Q	R	S	T	U	V	W	X	Y	Z
CLIP (ACCELERATOR PUMP LINK ROD)	D2AZ 9825-A *CM-1695	N	P	Q	R	S	T	U	V	W	X	Y	Z
CLAMP (THERMOSTATIC CHOKE HOUSING)	E2AZ 9842-B *CM-3840	N	P	Q	R	S			V	W	X	Y	Z
Tag code D4OE-FA							T						
Tag code D4ME-BA,CA								U					
Screw (clamp housing)-No. 8-32 x 1/2"	31061-S8(U-50)	3	3	3	3	3			3	3	3	3	3
Tag code D4OE-FA							3						
Tag code D4ME-BA,CA								3					
SHIELD (FUEL INLET SEAT)	D4AZ 9E845-A		P	Q	R	S	T	U	V	W	X	Y	Z
HOUSING KIT (THERMOSTATIC CHOKE)	9848												
#TX-Tag code D4PE-CEA	D0AZ 9848-G *CM-1259		P										
	D5AZ 9848-A *CM-2097	N		Q	R	S	T	U	V	W	X	Y	Z
Tag code D4AE-CA			P										
BUSHING (CHOKE THERMOSTATIC LEVER)	9851												
	C8AZ 9851-A *CM-751	N	P	Q		S	T	U					
Tag code D4AE-GA					R								
	D5DZ 9851-A *CM-2096								V	W	X	Y	Z
Tag codes D4PE-HB,VB,BKA					R								

NOTICE: When the parts list suffix is shown in the quantity required column, the quantity is one (1).

DESCRIPTION/RESTRICTIONS	PART NUMBER	CARB. PARTS LISTS 28N THRU 28Z											
		N	P	Q	R	S	T	U	V	W	X	Y	Z
Note: † Not a part of service carburetor													
GASKET (THERMOSTATIC CHOKE CONTROL)	B8A 9853–A *CG–93	N	P	Q	R	S	T	U	V	W	X	Y	Z
SOLENOID ASSY. (THROTTLE EMISSION CONTROL) Tag code D4OE–FA	D3AZ 9D856–A	N	†P	Q	†R	S	T	U	†V	†W	X	Y	Z
Nut (solenoid–throttle emission)–hex.–7/16"–20 Tag code D4OE–FA	45219–S2(M–173)	N	†P	Q	†R	S	T	U	V	W	X	Y	Z
SHIELD (CHOKE THERMOSTATIC)	9861												
	D5AZ 9861–A	N	P	Q	R	S	T	U				Y	Z
	D5ZZ 9861–A								V	W	X		
Screw (attaches choke thermostat shield)–hex. head–No. 8–32 x 1/2"	376262–S2(UU–52–AJ)	N	P	Q	R	S	T	U	V	W	X	Y	Z
GASKET (THERMOSTATIC CHOKE HOUSING)	D1AZ 9871–A *CG–317	N	P	Q	R	S	†T	†U	V	W	X	Y	Z
COVER (ECONOMIZER VALVE)	C8AZ 9930–A *CM–728	N	P	Q	R	S	T	U	V	W	X	Y	Z
Screw and washer (cover to carb.)–No. 8–32 x 5/8"	357136–S(BB–56)	4	4	4	4	4	4	4	4	4	4	4	4
CAM (AIR BLEED METERING NEEDLE ROD)	D5AZ 9A965–A *CM–2106								V	W	X	Y	Z

COPYRIGHT © 1986 — FORD MOTOR COMPANY — DEARBORN, MICHIGAN

DESCRIPTION/RESTRICTIONS	PART NUMBER	CARB. PARTS LISTS 28AA THRU 28AM											
		AA	AB	AC	AD	AE	AF	AG	AH	AJ	AK	AL	AM
NOTE: † Not a part of service carburetor													
GASKET SET – Refer to carburetor identification chart–Section 95	9502												
TUNE-UP KIT – Refer to carburetor identification chart–Section 95	9A586												
Screw and washer (horn and plugs to main body)–No. 10-32 x 5/8"	43256-S8(UU-77-F)	6	6	6	6	6	6	6	6	6	6	6	6
Fitting-5/16" hose x 1/8" pipe	376148-S8(II-191-AK)										AK	AL	
SPRING (TRANSMISSION KICK-DOWN CONTROL LEVER RETRACTING)	D1AZ 7B146-A	AA	AB	AC	AD	AE	AF	AG	†AH	†AJ	†AK	†AL	†AM
Screw (to adjust trans. kick-down)–hex.head–No. 10-32 x 1"	379622-S8(UU-52-M)	AA	AB	AC	AD	AE	AF	AG	AH	AJ	AK	AL	AM
LIMITER (IDLE ADJUSTING NEEDLE)	9J500												
	D6PZ 9J500-A *CM-747-B	2	†2	2	2	2	2	2	†2	†2	2	2	2
SEAL (FAST IDLE ROD)	C7AZ 9B501-A	AA	AB	AC	AD	AE	AF	AG	AH	AJ	AK	AL	AM
WEIGHT (PUMP DISCHARGE BALL)	C9AZ 9B511-A *CM-1126	AA	AB	AC	AD	AE	AF	AG	AH	AJ	AK	AL	AM
Ball (accelerator pump discharge valve)–steel-3/16"	371350-S(AA-4)	AA	AB	AC	AD	AE	AF	AG	AH	AJ	AK	AL	AM
CONTROL ASSY. (VACUUM BREAK)	9S514												
	D5AZ 9S514-A *CK-1987	AA	AB			AE							
	D8AZ 9S514-G *CK-1989-A			AC			AF	AG					
Tag codes D6AE-HA,JA,KA,D6ME-BA,CA,DA D6DE-LA,D6WE-BA,CA,EA,CB,FA	D8AZ 9S514-P *CK-1993-A				AD				AH				
Tag codes D6ME-AA,D6PE-KA,D6WE-AA	D8AZ 9S514-M *CK-2015-A								AH				
Tag codes D60E-AA,BA,D6PE-JA R/b D8AZ 9S514-F (11/81)	★ D5DZ 9S514-A *CK-1986								AH				
	D8DZ 9S514-A *CK-2014-A									AJ			
Tag code D7PE,BYA,D7SE-DA	D8AZ 9S514-C *CK-2062										AK	AL	
Tag code D70E-LA, D74E-DA													AM
Tag code D7AE-AHA,AHB,CA, D70E-CA,CB,NA, ND,RA,RB,D7PE-BNA	D8AZ 9S514-D *CK-2057										AK		
Tag codes D7DE-RA,RB,D7PE-BTA													AM
Tag codes D7WE-GA,GB	D7AZ 9S514-E *CK-2051										AK		
Ring (rod to shaft)	377918-S8B(XX-14-F)	AA	AB	AC	AD	AE	AF	AG	AH	AJ	AK	AL	AM
Screw (control assy. to main body)–self tapping pan hd.–No. 8-18 x 1/2"	380934-S101(UU-67-F)	AA	AB	AC	AD	AE	AF	AG	AH	AJ	AK	AL	AM
ROD (FLOAT BLOWL VENT)	9A515												
	D5AZ 9A515-B *CM-2281	AA	AB	AC	AD	AE	AF	AG	AH	AJ	AK	AL	

NOTICE: When the parts list suffix is shown in the quantity required column, the quantity is one (1).

DESCRIPTION/RESTRICTIONS	PART NUMBER	CARB. PARTS LISTS 28AA THRU 28AM											
		AA	AB	AC	AD	AE	AF	AG	AH	AJ	AK	AL	AM
NOTE: † Not a part of service carburetor													
BRACKET (FLOAT BOWL VENT)	D5AZ 9E520-A	AA	AB	AC	AD	AE	AF	AG	AH	AJ	AK	AL	
SUPPORT ASSY. (BOOSTER VENTURI)	9A523												
	D5AZ 9A523-A *CM-2099	AA											
	★ D5AZ 9A523-G *CM-2199		AB										
	D5DZ 9A523-D *CM-2182			AC				AG					
	★ D5DZ 9A523-C *CM-2181				AD								
	★ D5AZ 9A523-B *CM-2107					AE							
	D50Z 9A523-D *CM-2292						AF						
Tag codes D6PE-KA,LA,D6WE-AA,BA	★ D6AZ 9A523-A *CM-2370								AH				
Tag codes D60E-AA,BA,D6PE-JA	★ D6AZ 9A523-D *CM-2371								AH				
Tag codes D6AE-HA,JA,KA,D6ME-BA,CA,DA, D6WE-CA,EA,CB,FA	★ D6AZ 9A523-E *CM-2372								AH				
Tag code D7WE-GA,GB											AK		
Tag code D6ME-AA	D6AZ 9A523-F *CM-2373								AH				
	D6AZ 9A523-C *CM-2395									AJ			
Tag code D70E-CA,CB,NA,ND,RA,RB,D7PE-BYA, D7SE-DA	★ D7AZ 9A523-D *CM-2541										AK		
Tag code D7AE-CA,AHA,AHB,D7PE-BNA	D7AZ 9A523-G *CM-2542										AK		
	★ D7AZ 9A523-F *CM-2606											AL	
Tag codes D7DE-RA,RB,D7PE-BTA	★ D7DZ 9A523-A *CM-2638												AM
Tag code D70E-LA, D74E-DA	★ D7DZ 9A523-E *CM-2639												AM
ROD (CHOKE PULL DOWN)	9E524												
Tag code D7WE-GA,GB,D7PE-BYA,D7SE-DA	D5AZ 9E524-A *CM-2082	AA	AB	AC	AD	AE	AF	AG	AH	AJ	AK		
Tag codes D7AE-AHA,AHB,CA,D70E-CA,NA,RA,RB, D7PE-BNA	D7AZ 9E524-B *CM-2503										AK	AL	AM
Ring (rod to shaft)	377918-S8B(XX-14-F)	2	2	2	2	2	2	2	2	2	2	2	2
SCREEN (FUEL FILTER)	C4AZ 9F525-A	AA	AB	AC	AD	AE	AF	AG	AH	AJ	AK	AL	AM
COVER ASSY. (ACCELERATOR PUMP)	D5AZ 9528-A *CM-2170	AA	AB	AC	AD	AE	AF	AG	AH	AJ	AK	AL	AM
Screw (cover to carb.)-hex. hd.-No. 8-32 x 9/16"	376262-S(UU-52-AJ)	4	4	4	4	4	4	4	4	4	4	4	4
ROD (FAST IDLE CAM)	C3AZ 9D530-A	AA	AB	AC	AD	AE	AF	AG	AH	AJ	AK	AL	AM
JET (MAIN METERING)	9533												
No. 55F	C3UZ 9533-B *CJ-140			2									2
No. 56F	C3GY 9533-D *CJ-147	2				2	2	2				2	
No. 57F Tag codes D6AE-KA,D6ME-BA,DA,D60E-AA, D6PE-JA,KA,LA,D6WE-AA,BA,CA,EA,CB,FA	C30Z 9533-A *CJ-129		2		2				2				
Tag codes D7AE-CA,AHA,AHB,D70E-CA,CB,NA,ND, D7PE-BNA											2		
No. 58F-Tag codes D6AE-HA,JA, D6ME-AA,CA	C3GY 9533-A *CJ-144								2				

COPYRIGHT © 1986 — FORD MOTOR COMPANY — DEARBORN, MICHIGAN

DESCRIPTION/RESTRICTIONS	PART NUMBER	CARB. PARTS LISTS 28AA THRU 28AM											
		AA	AB	AC	AD	AE	AF	AG	AH	AJ	AK	AL	AM
NOTE: † Not a part of service carburetor													
JET (MAIN METERING)	9533 — Cont'd												
No. 59F	C30Z 9533-B									2			
Tag code D60E-BA	*CJ-130								2				
Tag code D70E-CA,NA,ND,RA,RB,D7PE-BYA,D7SE-DA											2		
GASKET (BOOSTER VENTURI SUPPORT)	E1TZ 9A536-A	AA	AB	AC	AD	AE	AF	AG	AH	AJ	AK	AL	AM
LEVER (FAST IDLE ADJUSTING)	9538												
	E1AZ 9538-B	AA	AB	AC	AD	AE	AF	AG	AH	AJ			
Tag code D7WE-GA,GB	*CM-3843										AK		
Tag codes D7AE-CA,AHA,AHB,D70E-CA,CB,NA,ND,	★ D7AZ 9538-A										AK		
RA,RB,D7PE-BNA,BYA,D7SE-DA	*CM-2547											AL	AM
Nut (lever to throttle shaft)-hex. head-No. 10-32	34079-S7(M-163)	AA	AB	AC	AD	AE	AF	AG	AH	AJ	AK	AL	AM
Lockwasher-No. 10	34903-S8(X-96)	AA	AB	AC	AD	AE	AF	AG	AH	AJ	AK	AL	AM
NEEDLE (IDLE ADJUSTING)	C9AZ 9541-B *CM-955-A	2	2	2	2	2	2	2	2	2	2	2	2
ROD (ACCELERATOR PUMP LINK to OVERTRAVEL LEVER)	9B542												
	D5AZ 9B542-A *CM-2088	AA	AB	AC	AD	AE	AF	AG	AH	AJ			
	D7AZ 9B542-C *CM-2543										AK	AL	
	D7AZ 9B542-E *CM-2833												AM
PLATE (CHOKE)	D0AZ 9545-A *CM-1061	AA	AB	AC	AD	AE	AF	AG	AH	AJ	AK	AL	AM
Screw (choke plate)-hex. head-No. 6-32 x 5/16"	375016-S2(UU-52-AK)	2	2	2	2	2	2	2	2	2	2	2	2
SHAFT and LEVER ASSY (CHOKE)	D7AZ 9546-A *CM-2594											AL	
SHAFT (CHOKE PLATE)	D5AZ 9547-A *CM-2089	AA	AB	AC	AD	AE	AF	AG	AH	AJ	AK		AM
FLOAT ASSY.	D4AZ 9550-A *CM-1062-A	AA	AB	AC	AD	AE	AF	AG	AH	AJ	AK	AL	AM
BRACKET (TRANS. KICKDOWN SPRING)	D0AZ 9B550-A												†AM
LEVER (CHOKE SHAFT)	D8AZ 9551-A *CM-2953	AA	AB	AC	AD	AE	AF	AG	AH	AJ	AK	AL	AM
Screw (lever-choke shaft)-pan head- No. 6-32 x 3/8"	50802-S7(U-150)	AA	AB	AC	AD	AE	AF	AG	AH	AJ	AK	AL	AM
SHAFT (FLOAT LEVER)	B8A 9558-A *CM-183	AA	AB	AC	AD	AE	AF	AG	AH	AJ	AK	AL	AM
DIAPHRAGM ASSY. (ACCELERATOR PUMP)	D5AZ 9B559-A *CM-2092	AA	AB	AC	AD	AE	AF	AG	AH	AJ	AK	AL	AM
SPRING (FLOAT BOWL VENT)	D5AZ 9560-A *CM-2084	AA	AB	AC	AD	AE	AF	AG	AH	AJ	AK	AL	
GASKET (FLOAT BOWL)	9561												
	D9AZ 9561-C *CG-545	AA	AB	AC	AD	AE	AF	AG	AH	AJ	AK	AL	AM
GASKET (ECONOMIZER COVER)	E0TZ 9563-A *CG-589	AA	AB	AC	AD	AE	AF	AG	AH	AJ	AK	AL	AM
VALVE KIT (FUEL INLET)	D5AZ 9564-A *CV-99	AA	AB	AC	AD	AE	AF	AG	AH	AJ	AK	AL	AM

NOTICE: When the parts list suffix is shown in the quantity required column, the quantity is one (1).

DESCRIPTION/RESTRICTIONS	PART NUMBER	CARB. PARTS LISTS 28AA THRU 28AM											
		AA	AB	AC	AD	AE	AF	AG	AH	AJ	AK	AL	AM
NOTE: † Not a part of service carburetor													
VALVE ASSY. (FUEL ENRICHMENT)	9A565												
#Black-incl. (1) C2AZ 9A588-B gasket and (1) B7A 9563-A gasket	D5AZ 9A565-A *CE-106	AA	AB									AL	
#Brown-incl. (1) C2AZ 9A588-B gasket and (1) B7A 9563-A gasket Tag codes D6OE-AA,BA,D6PE-JA,KA,LA	D5DZ 9A565-A *CE-112			AC	AD		AF	AG	AH				
#White-incl. (1) C2AZ 9A588-B gasket and (1) B7A 9563-A gasket	D5AZ 9A565-B *CE-108					AE							
#Green-incl. (1) C2AZ 9A588-B gasket and (1) B7A 9563-A gasket-Tag codes D6AE-KA, D6ME-AA,BA,DA,D6WE-AA,BA,CA,EA,CB,FA Tag codes D7OE-CA,NA,ND,RA,RB,D7WE-GA,GB,D7SE-DA, D7PE-BYA	D50Z 9A565-A *CE-109								AH		AK		
#Orange-incl. (1) C2AZ 9A588-B gasket and (1) B7A 9563-A gasket-Tag codes D6AE-HA,JA,JB, D6ME-CA Tag codes D7AE-CA,AHA,AHB,D7PE-BNA	D5UZ 9A565-A *CE-119								AH		AK		
#Red-incl. (1) C2AZ 9A588-B gasket and (1) B7A 9563-A gasket	D5TZ 9A565-B *CE-117									AJ			AM
HOUSING ASSY. (CHOKE)	9A575												
	★ D5AZ 9A575-B *CC-102		AB										
	★ D50Z 9A575-A *CC-97			AC	AD		AF	AG					
	★ D5AZ 9A575-A *CC-96					AE							
Tag codes D6AE-HA,JA,KA,D6ME-BA,CA,DA, D6PE-LA,D6WE-BA	★ D6WZ 9A575-A *CC-121								AH				
Tag codes D6ME-AA,D6OE-AA,BA,D6PE-JA,KA, D6WE-AA	★ D6AZ 9A575-A *CC-119								AH				
Tag code D6WE-CA Tag codes D7WE-GA,GB	D6AZ 9A575-B *CC-123								AH	AJ	AK		
Tag codes D6WE-EA,CB,FA	★ D6AZ 9A575-C *CC-124								AH				
Tag code D7OE-NA,ND,RA,RB,D7PE-BYA,D7SE-DA	★ D7AZ 9A575-E *CC-152										AK		
	★ D7AZ 9A575-F *CC-156											AL	
Tag codes D7AE-CA,AHA,AHB,D7OE-CA,CB,D7PE-BNA	★ D7AZ 9A575-G *CC-148										AK		
Tag code D7DE-RB,D7PE-BTA	★ D7AZ 9A575-P *CC-158												AM
Tag codes D7DE-RA,D7OE-LA, D74E-DA	★ D7DZ 9A575-A *CC-159												AM
Screw (choke housing to carb.)-No. 8-32 x 1 3/4"	378547-S7-8(BB-61-B)	3	3	3	3	3	3	3	3	3	3	3	3
Connector 3/8-24-1/4 tube	386010-S(II-28S)	AA	AB	AC	AD	AE	AF	AG	AH	AJ	AK	AL	AM
VALVE (ACCELERATOR PUMP CHECK)- plastic	C4AZ 9576-A *CM-825	AA	AB	AC	AD	AE	AF	AG	AH	AJ	AK	AL	AM
SCREW (PUMP DISCHARGE NOZZLE)	9577												
used with 9B511 weight	E1AZ 9577-A *CM-3685	AA	AB	AC	AD	AE	AF	AG	AH	AJ	AK	AL	AM
used without 9B511 weight	D7YZ 9577-A *CM-2515										AK	AL	AM
Washer (nozzle screw)-flat-1/4"	374370-S(XX-94-A)	AA	AB	AC	AD	AE	AF	AG	AH	AJ	AK	AL	AM

COPYRIGHT © 1986 — FORD MOTOR COMPANY — DEARBORN, MICHIGAN

DESCRIPTION/RESTRICTIONS	PART NUMBER	CARB. PARTS LISTS 28AA THRU 28AM											
		AA	AB	AC	AD	AE	AF	AG	AH	AJ	AK	AL	AM
NOTE: † Not a part of service carburetor													
LEVER (FAST IDLE CAM) R/b D5PZ 9A753-A	★ D5DZ 9F577-A *CM-2095	AA	AB	AC	AD	AE	AF	AG	AH	AJ			
Washer "C" (lever to choke shaft)	353862-S8(XX-10)	AA	AB	AC	AD	AE	AF	AG	AH	AJ	AK	AL	AM
Screw (lever to choke shaft)-No. 6-32 x 3/4"	372307-S(BB-527)	AA	AB	AC	AD	AE	AF	AG	AH	AJ	AK	AL	AM
SPRING (IDLE ADJUSTING NEEDLE) Fast idle adjusting screw	★ 40 9578	2 AA	2 AB	2 AC	2 AD	2 AE	2 AF	2 AG	2 AH	2 AJ	2 AK	2 AL	2 AM
SPRING (IDLE ADJUSTING SCREW)	B8A 9578-B *CM-609	AA	AB	AC	AD	AE	AF	AG	AH	AJ	AK	AL	AM
Screw (normal idle adjusting)-special hex. head slotted-No. 10-32 x 1"	355107-S7(BB-536)	AA	AB	AC	AD	AE	AF	AG	AH	AJ	AK	AL	AM
LEVER and SHAFT ASSY. (THROTTLE)	D5DZ 9581-A *CM-2093	AA	AB	AC	AD	AE	AF	AG	AH	AJ			
Tag codes D7AE-CA,AHA,AHB,D70E-CA,CB,NA,ND, RA,RB,D7PE-BNA,BYA, D7SE-DA	D7AZ 9581-H *CM-2544										AK	AL	
Tag code D7WE-GA,GB	D7AZ 9581-K *CM-2587										AK		
	★ D7AZ 9581-S *CM-2640												AM
PLATE (THROTTLE)	E1AZ 9585-A *CM-2095-A	2	2	2	2	2	2	2	2	2	2	2	2
Screw (attaches throttle plate)-No. 5-40	386022-S2(BB-908)	4	4	4	4	4	4	4	4	4	4	4	4
BRACKET (THROTTLE EMISSION CONTROL -SOLENOID)	9J586-A												
	C9AZ 9J586-A	AA	†AB	AC	AD	†AE	AF	AG	†AH				
Tag codes D7AE-CA,AHA,AHB,D7WE-GA,GB	D7AZ 9J586-B										AK		
Screw & lockwasher assy. (bracket to carburetor)-No. 10-32 x 1/2" pan head	50810-S8(U-158)	AA	†AB	AC	AD	AE	AF	AG	AH		AK		
GASKET (ECONOMIZER VALVE)	C2AZ 9A588-B *CM-533	AA	AB	AC	AD	AE	AF	AG	AH	AJ	AK	AL	AM
CAM ASSY. (FAST IDLE)	9597												
Tag code D7WE-GA,GB	D5AZ 9597-A *CM-2105		AB	AC	AD	AE	AF	AG	AH	AJ	AK	AL	
Tag codes D7AE-CA,AHA,AHB,D70E-CA,CB, NA,ND,RA,RB,D7PE-BNA,BYA, D7SE-DA	★ D7AZ 9597-B *CM-548										AK		AM
Screw (fast idle cam)-hex. head-No. 6-32 x 3/4"	372307-S(BB-527)	AA	AB	AC	AD	AE	AF	AG	AH	AJ	AK	AL	AM
Retainer (fast idle cam)- "C" washer	351825-S(XX-9)	2	2	2	2	2	2	2	2	2	2	2	2
RETAINER (FLOAT LEVER SHAFT)	D2AZ 9599-A *CM-1469	AA	AB	AC	AD	AE	AF	AG	AH	AJ	AK	AL	AM
ROD (CHOKE CONTROL)	E1AZ 9A599-A *CM-3686	AA	AB	AC	AD	AE	AF	AG	AH	AJ	AK	AL	AM
Ring (rod to shaft)	377918-S8B(XX-14-F)	AA	AB	AC	AD	AE	AF	AG	AH	AJ	AK	AL	AM
CAP (ACCELERATOR PUMP PISTON) "As listed in TSB No. 148, dated Dec. 5, 1977, article 2078"	★ D7AZ 9635-A *CM-2880										AK	AL	
SPRING (ACCELERATOR PUMP LEVER RETURN)	D4AZ 9636-A *CM-1527-A	AA	AB	AC	AD	AE	AF	AG	AH	AJ	AK	AL	AM
SHAFT and LEVER ASSY. (CHOKE HOUSING)	9A753												
Tag codes D7WE-GA,GB	D5PZ 9A753-A *CM-2201			AC	AD	AE	AF	AG	AH	AJ	AK		
Tag codes D7AE-CA,AHA,AHB,D70E-CA,CB,NA,ND, RA,RB,D7PE-BNA,BYA, D7SE-DA	D7PZ 9A753-A *CM-2592										AK	AL	AM
Washer "C" (lever to choke shaft)	353862-SA(XX-10)	AA	AB	AC	AD	AE	AF	AG	AH	AJ	AK	AL	AM
Screw (lever to choke shaft)-No. 6-32 x 3/4"	372307-S (BB-527)	AA	AB	AC	AD	AE	AF	AG	AH	AJ	AK	AL	AM

NOTICE: When the parts list suffix is shown in the quantity required column, the quantity is one (1).

DESCRIPTION/RESTRICTIONS	PART NUMBER	CARB. PARTS LISTS 28AA THRU 28AM											
		AA	AB	AC	AD	AE	AF	AG	AH	AJ	AK	AL	AM
NOTE: † Not a part of service carburetor													
LEVER (CHOKE THERMOSTATIC)	9A754												
Tag codes D6AE-HA,JA,KA,D6ME-AA,BA, D60E-AA,BA,D6WE-AA,BA,CA	D3AZ 9A754-D	AA	AB	AC	AD	AE	AF	AG	AH	AJ	AK	AL	
Tag codes D7DE-RA,D70E-LA,D74E-DA													AM
Tag code D7DE-RB,D7PE-BTA	D0AZ 9A754-A												AM
Tag code D6WE-EA,CB,FA	D1AZ 9A754-C								AH	AJ			
Screw (thermostat lever)-No. 6-32 x 3/8"	50802-S7(U-150)	AA	AB	AC	AD	AE	AF	AG	AH	AJ	AK	AL	AM
CLIP (ACCELERATOR PUMP LINK ROD)	D2AZ 9825-A *CM-1695	AA	AB	AC	AD	AE	AF	AG	AH	AJ	AK	AL	AM
CLAMP (THERMOSTATIC CHOKE HOUSING)	E2AZ 9842-B *CM-3840	AA	AB	AC	AD	AE	AF	AG	AH	AJ	AK	AL	AM
Screw (clamp housing)-No. 8-32 x 1/2"	31061-S8(U-50)	3	3	3	3	3	3	3	3	3	3	3	3
SHIELD (FUEL INLET SEAT)	D4AZ 9E845-A	AA	AB	AC	AD	AE	AF	AG	AH	AJ	AK	AL	AM
HOUSING ASSY. (THERMOSTATIC CHOKE)-ELECTRIC	9848												
#2EB4 or 2FB4-incl. (1) D1AZ 9871-A gasket Tag codes D6AE-HA,D60E-AA,BA,D6PE-JA,KA, D6WE-AA	D5AZ 9848-A *CM-2097	AA	AB	AC	AD	AE	AF	AG	AH	AJ			
#2LB4-incl. (1) D1AZ 9871-A gasket- Tag codes D6AE-HA,JA,KA,D6ME-BA,CA,DA, D6PE-LA,D6WE-BA,CA	D5AZ 9848-C *CM-2374								AH				
Tag codes D70E-CA,CB,ND,RA,RB, D7WE-GA,GB,D7SE-DA, D7PE-BYA											AK		
#2GB4 or 2HB4-incl. (1) D1AZ 9871-A gasket- Tag code D6ME-AA	D50Z 9848-A *CM-2098								AH				
#2-500E-Incl. (1)D1AZ 9871-A gasket Tag codes D7AE-CA,AHA,AHB,D7PE-BNA	D7DZ 9848-A *CM-2456										AK		
Tag codes D7DE-RA,D70E-LA,D74E-DA													AM
Non-electric #TB4-incl. (1) D1AZ 9871-A gasket-Tag code D6WE-EA,CB,FA	D1AZ 9848-B *CM-1455								AH				
#2-650D-incl. (1) D1AZ 9871-A gasket	D7AZ 9848-A *CM-2593											AL	
Tag code D7DE-RB,D7PE-BTA	D7AZ 9848-H *CM-2641												AM
BUSHING (CHOKE THERMOSTATIC LEVER)	D5DZ 9851-A *CM-2096		AB	AC	AD	AE	AF	AG	AH	AJ	AK	AL	AM
GASKET (THERMOSTATIC CHOKE CONTROL)	B8A 9853-A *CG-93	AA	AB	AC	AD	AE	AF	AG	AH	AJ	AK	AL	AM
SOLENOID ASSY. (THROTTLE EMISSION CONTROL)	9D856												
Tag codes D6AE-JA,KA,D6ME-AA,D6WE-AA,CA	D3AZ 9D856-A	AA	†AB	AC	AD	†AE	AF	AG	†AH				
Tag codes D7AE-CA,AHA,AHB,D7WE-GA,GB	D7DZ 9D856-A *CS-4										†AK		
Nut (solenoid-throttle emission)-hex.-7/16"-20	45219-S2(M-173)	AA	†AB	AC	AD	AE	AF	AG	AH		AK		
SHIELD (CHOKE THERMOSTATIC)	9861												
	D5AZ 9861-A	AA	AB	AC		AE	AF	AG	AH	AJ	AK	AL	AM
	D5ZZ 9861-A				AD								
Screw (attaches choke thermostat shield)- hex. head-No. 8-32 x 1/2"	376262-S2(UU-52-AJ)	AA	AB	AC	AD	AE	AF	AG	AH	AJ	AK	AL	AM
GASKET (THERMOSTATIC CHOKE HOUSING)	D1AZ 9871-A *CG-317	AA	AB	AC	AD	AE	AF	AG	AH	AJ	AK	AL	AM
COVER (ECONOMIZER VALVE)	C8AZ 9930-A *CM-728	AA	AB	AC	AD	AE	AF	AG	AH	AJ	AK	AL	AM
Screw & washer (cover to carb.)-fill. head- No. 8-32 x 5/8"	357136-S(BB-56)	4	4	4	4	4	4	4	4	4	4	4	4
SHAFT and LEVER ASSY (AIR BY-PASS)	D7AZ 9A945-A *CM-2595											AL	

COPYRIGHT © 1986 — FORD MOTOR COMPANY — DEARBORN, MICHIGAN

DESCRIPTION/RESTRICTIONS	PART NUMBER	CARB. PARTS LISTS 28AA THRU 28AM											
		AA	AB	AC	AD	AE	AF	AG	AH	AJ	AK	AL	AM
NOTE: † Not a part of service carburetor													
COMPENSATOR ASSY (ALTITUDE)	★ D7AZ 9A950-A *CM-2507											AL	
Screw (compensator) No. 8-32 x 3/4"	43395-S8(U-75)											4	
GASKET (ALTITUTE COMPENSATOR HOUSING)	D7AZ 9A953-A *CG-491											AL	
CAM (AIR BLEED METERING NEEDLE ROD)	9A965												
Tag codes D6ME-AA,CA,D60E-AA,BA,D6WE-AA	D5AZ 9A965-A *CM-2106	AA	AB	AC	AD	AE	AF	AG	AH	AJ			AM
Tag codes D6AE-HA,JA,KA,D6ME-BA,DA, D6WE-BA,CA,EA,CB "As listed in TSB No. 137 dated June 24, 1977, article 1773-S1"	D7AZ 9A965-A *CM-2375-A								AH AH		AK	AL	
PLATE (AIR BY-PASS PLATE)	★ D7AZ 9A972-A *CM-2597											AL	
Screw (plate) No. 4-40 x 1/4" hex head	57000-S2 (B-328)											2	
ROD (AIR BY-PASS PLATE)	D7AZ 9A973-A *CM-2596											AL	
Retainer (rod) 3/16" "C" type	97401-S2(Q-X-4)											AL	
RESTRICTOR "As listed in TSB No. 130, dated March 10, 1977, article 1780"	373119-S(USP-5)												AM

NOTICE: When the parts list suffix is shown in the quantity required column, the quantity is one (1).

DESCRIPTION/RESTRICTIONS	PART NUMBER	CARB. PARTS LISTS 28AN THRU 28AZ											
		AN	AP	AQ	AR	AS	AT	AU	AV	AW	AX	AY	AZ
GASKET SET – Refer to carburetor identification chart–Section 95	9502												
TUNE-UP KIT – Refer to carburetor identification chart–Section 95	9A586												
Screw and washer (air horn to main body)–No. 10-32 x 5/8"	43256-S8(UU-F)	6	6	6	6	6	6	6	6	6	6	6	
Fitting – 5/16 hose x 1/8 pipe	376148-S8(II-191-K)	AN	AP										
SPRING (TRANS. KICKDOWN CONTROL LEVER RETRACTING)	D1AZ 7B146-A	†AN	AP	†AQ	AR	AS	AT	AU	AV	AW	AX	AY	
Screw (adjust trans. kickdown) No. 10-32 x 1"	379622-S8(UU-52-M)	AN	AP	AQ	AR	AS	AT	AU	AV	AW	AX	AY	
LIMITER (IDLE ADJUSTING NEEDLE)	D6PZ 9J500-A *CM-747-B	2	2	2	2	2	2	2	2	2	2	2	
SEAL (FAST IDLE ROD)	C7AZ 9B501-A	AN	AP	AQ	AR	AS	AT	AU	AV	AW	AX	AY	
WEIGHT (PUMP DISCHARGE BALL) – used with D5AZ 9577-A SCREW	C9AZ 9B511-A *CM-1126	AN	AP	AQ	AR	AS	AT	AU	AV	AW	AX	AY	
Ball (accel pump inlet passage) steel – 3/16"	371350-S (AA-4)	AN	AP	AQ	AR	AS	AT	AU	AV	AW	AX	AY	
CONTROL ASSY. (VACUUM BREAK)	9S514												
	D5AZ 9S514-D *CK-1989		AP										
R/b D8AZ 9S514-F (11/81) Tag code D8SE-FA,GA	★ D5DZ 9S514-A *CK-1986			AQ	AR								
Tag code D8AE-JA,D80E-BA Tag codes D7AE-AKA,AKB,ASA, D7SE-AA	D8AZ 9S514-D *CK-2057	AN			AR								
Tag code D8AE-NA, D8PE-BTA	D8AZ 9S514-G *CK-1989-A				AR								
Tag codes D8AE-TA,UA	D8AZ 9S514-P *CK-1993-A				AR								
	D8WZ 9S514-A *CK-2056-A					AS							
Tag codes D80E-CA,HA,D8SE-DA,EA R/b E1AZ 9S514-C (11/81) Tag codes D9AE-ANB,APB,AVB,AYB,TB,UB, D9ME-EA, D9WE-EB,FB,MB,NB	★ D8AZ 9S514-F *CK-1986-A						AT		AV	AW	AX	AY	
Tag codes D80E-UA,VA Tag codes D70E-HA,HB,HC,HD,MA,MB,TA,TB Tag codes D9SE-GA, D9WE-JA	D8AZ 9S514-C *CK-2062	AN					AT	AU	AV				
Ring (rod to shaft) 1/8" "C" type	377918-S8B (XX-14-F)	AN	AP	AQ	AR	AS	AT	AU					
Screw (control to carb) No. 8-18 x 1/2"	380934-S101 (UU-64-F)	2	2	2	2	2	2	2	2	2	2	2	
ROD (FLOAT BOWL VENT)	D5AZ 9A515-B *CM-2281	AN	AP	AQ	AR					AW	AX	AY	
BAFFLE (FLOAT BOWL)	9A517												
	★ D8AZ 9A517-A *CM-2878					AS							
	D9AZ 9A517-B *CM-3119								AV	AW	AX		
BRACKET (FLOAT BOWL VENT)	D5AZ 9E520-A	AN	AP	AQ					AV	AW	AX	AY	
SUPPORT ASSY. (BOOSTER VENTURI)	9A523												
Tag code D7AE-AKA,AKB,D70E-HB,HD,TA,TB Tag code D80E-CA,HA,UA, D8PE-BRA	★ D70Z 9A523-B *CM-2623	AN					AT						
Tag code D7AE-ASA Tag code D8SE-FA,GA Tag codes D9AE-AHA,AJA	★ D70Z 9A523-C *CM-2837	AN			AR						AX		
Tag code D70E-HA,HC	★ D7AZ 9A523-E *CM-2590	AN	AP										
Tag code D70E-MA,MB,D7SE-AA	★ D7AZ 9A523-H *CM-2591	AN											

COPYRIGHT © 1986 — FORD MOTOR COMPANY — DEARBORN, MICHIGAN

DESCRIPTION/RESTRICTIONS	PART NUMBER	CARB. PARTS LISTS 28AN THRU 28AZ											
		AN	AP	AQ	AR	AS	AT	AU	AV	AW	AX	AY	AZ
SUPPORT ASSY. (BOOSTER VENTURI)	9A523 — Cont'd												
Tag code D8SE-DA,EA, D8PE-BNA	★ D7AZ 9A523-M *CM-2866			AQ			AT					AY	
Tag code D8AE-JA,D80E-BA	★ D7AZ 9A523-D *DM-2541				AR								
Tag code D8AE-NA, D8PE-BTA	D8AZ 9A523-C *CM-3059				AR								
Tag codes D8AE-TA,UA	★ D8AZ 9A523-D *CM-3097				AR								
	★ D8AZ 9A523-B *CM-2875					AS							
Tag code D8WE-CA Tag code D9WE-JA	★ D7AZ 9A523-F *CM-2606							AU	AV				
Tag code D8SE-CA, D8PE-BPA Tag code D9SE-GA	★ D8AZ 9A523-A *CM-2954							AU	AV				
Tag codes D90E-CB,DB Tag codes D9AE-ANB,APB,AVB,AYB,TB,UB D9WE-EB,FB,MB,NB, E2PE-AA	D9AZ 9A523-B *CM-3118								AV		AX		
Tag code D9ME-EA	★ D9AZ 9A523-A *CM-3491								AV				
	★ D9VY 9A523-A *CM-3122									AW			
ROD (CHOKE PULLDOWN)	9E524												
Tag code D8SE-FA	D7AZ 9E524-B *CM-2503	AN	AP	AQ	AR								
Tag codes D8AE-JA,NA,TA,UA, D8PE-BTA, D8SE-GA Tag code D8SE-CA, D8PE-BPA Tag codes D80E-CA,HA,D8SE-DA,EA, D8PE-BNA Tag codes D9AE-ANB,APB,AVB,AYB,TB,UB, D9ME-EA, D9WE-EB,FB,MB,NB	D5AZ 9E524-A *CM-2082				AR	AS	AT	AU	AV	AW	AX	AY	
Tag code D80E-BA Tag code D8WE-CA Tag codes D80E-UA,VA, D8PE-BRA Tag codes D9SE-GA, D9WE-JA	D8AZ 9E524-A *CM-2873				AR		AT	AU	AV				
RING (CHOKE PULLDOWN ROD) 1/8" "C" type	377918-S8B (XX-14-F)	AN	AP	AQ	AR	AS	AT	AU	AV	AW	AX	AY	
SCREEN (FUEL FILTER)	C4AZ 9F525-A	AN	AP	AQ	AR	AS	AT	AU	AV	AW	AX	AY	
COVER ASSY. (ACCELERATOR PUMP)	9528												
	D5AZ 9528-A *CM-2170	AN	AP			AS		AU					
Tag codes D9SE-GA, D9WE-JA	★ D7AZ 9528-B *CM-2865			AQ					AV				
	★ D8AZ 9528-D *CM-3051				AR		AT				AX	AY	
Tag codes D9AE-ANB,APB,AVB,AYB,TB,UB, D9ME-EA, D9WE-EB,FB,MB,NB	D8AZ 9528-E *CM-3052								AV	AW			
Screw (cover to carb)-No. 8-32 x 9/16"	376262-S (UU-52-AJ)	4	4	4	4	4	4	4	4	4	4	4	
ROD (FAST IDLE CAM)	C3AZ 9D530-A	AN	AP	AQ	AR	AS	AT	AU	AV	AW	AX	AY	
COMPENSATOR ASSY. (HOT IDLE) Tag codes D9AE-AVB,AYB	D8AZ 9B532-C *CM-2876					AS				AV			

NOTICE: When the parts list suffix is shown in the quantity required column, the quantity is one (1).

DESCRIPTION/RESTRICTIONS	PART NUMBER	CARB. PARTS LISTS 28AN THRU 28AZ											
		AN	AP	AQ	AR	AS	AT	AU	AV	AW	AX	AY	AZ
JET (MAIN METERING)	9533												
No. 57F	C30Z 9533-A			2								2	
Tag codes D7AE-ASA, D70E-MA,MB, D7SE-AA	*CJ-129	2											
Tag code D8SE-DA,EA, D8PE-BNA							2						
Tag code D8SE-CA, D8PE-BPA								2					
Tag codes D8AE-JA,D80E-BA,D8SE-FA,GA					2								
Tag codes D9AE-AHA,AJA											2		
Tag code D9SE-GA									2				
No. 56F-Tag codes D8AE-NA,TA,UA, D8PE-BTA	C3GY 9533-D *CJ-147				2								
No. 58F	C3GY 9533-A *CJ-144		2										
No. 59F - Tag code D7AE-AKA,AKB,D70E-HB,HD,TA,TB	C30Z 9533-B	2											
Tag code D80E-CA,HA	*CJ-130						2						
No. 60F - Tag code D70E-HA,HC	C3GY 9533-B	2											
Tag code D80E-UA,VA, D8PE-BRA	*CJ-145						2						
No. 55F	C3UZ 9533-B					2				2			
Tag code D8WE-CA	*CJ-140							2					
Tage code D9WE-JA									2				
No. 53F - Tag codes D9AE-ANB,APB,TB,UB, D9WE-EB,FB	C3DZ 9533-A								2				
Tag codes D90E-CB,DB	*CJ-128										2		
GASKET (BOOSTER VENTURI SUPORT)	E1TZ 9A536-A	AN	AP	AQ	AR	AS	AT	AU	AV	AW	AX	AY	
LEVER (FAST IDLE ADJUSTING)	★ D7AZ 9538-A *CM-2547	AN	AP	AQ	AR	AS	AT	AU		AW	AX	AY	
Tag codes D9AE-ANB,APB,AVB,AYB,TB,UB, D9ME-EA, D9SE-GA, D9WE-EB-FB,MB,NB									AV				
Tag codes D9WE-JA	E1AZ 9538-B *CM-3843								AV				
Nut (lever to throttle shaft)-No. 10-32	34079-S7 (M-163)	AN	AP	AQ	AR	AS	AT	AU	AV	AW	AX	AY	
Lockwasher-No. 10	34903-S8(X-96)	AN	AP	AQ	AR	AS	AT	AU	AV	AW	AX	AY	
NEEDLE (IDLE ADJUSTING)	9541												
	C9AZ 9541-B	2	2	2	2	2	2		2	2	2	2	
Tag code D8WE-CA, D8PE-BPA	*CM-955-A							2					
Tag code D8SE-CA	C7MY 9541-B *CM-749							2					
ROD (ACCELERATOR PUMP LINK to OVERTRAVEL LEVER)	9B542												
	D7AZ 9B542-C *CM-2543	AN	AP	AQ	AR		AT	AU		AW	AX	AY	
	D7AZ 9B542-E *CM-2833					AS			AV				
PLATE (CHOKE)	D0AZ 9545-A *CM-1061	AN	AP	AQ	AR	AS	AT	AU	AV	AW	AX	AY	
Screw (choke plate)-hex head-No. 6-32 x 5/16"	375016-S2(UU-52-AK)	2	2	2	2	2	2	2	2	2	2	2	
SHAFT and LEVER ASSY. (CHOKE)	D7AZ 9546-A							AU					
Tag codes D9ME-EA, D9SE-GA, D9WE-JA	*CM-2594								AV				
SHAFT (CHOKE PLATE)	D5AZ 9547-A *CM-2089	AN	AP	AQ	AR	AS	AT	AU	AV	AW	AX	AY	

COPYRIGHT © 1986 — FORD MOTOR COMPANY — DEARBORN, MICHIGAN

DESCRIPTION/RESTRICTIONS	PART NUMBER	CARB. PARTS LISTS 28AN THRU 28AZ											
		AN	AP	AQ	AR	AS	AT	AU	AV	AW	AX	AY	AZ
FLOAT ASSY.	9550												
Tag codes D9SE-GA, D9WE-JA	D4AZ 9550-A *CM-1062-A	AN	AP	AQ	AR		AT	AU	AV			AY	
	D8AZ 9550-D *CM-2877					AS							
Tag codes D9AE-ANB,APB,AVB,AYB,TB,UB, D9ME-EA, D9WE-EB,FB,MB,NB	D9AZ 9550-B *CM-3120								AV	AW	AX		
BRACKET (DASHPOT)-used as kickdown spring retainer	D0AZ 9B550-A *CM-1113	†AN			AR		AT		AV		AX		
Screw (bracket) No. 10-32 x 1/2" pan head	50810-S8 (U-158)	AN			AR					AW	AX	AY	
LEVER (CHOKE SHAFT)	9551												
	D8AZ 9551-A *CM-2953	AN	AP	AQ	AR	AS	AT	AU	AV		AX		
Screw (choke shaft lever) No. 6-32 x 3/8" pan head	50802-S7(U-150)	AN	AP	AQ	AR	AS	AT	AU					
SHAFT (FLOAT LEVER)	B8A 9558-A *CM-183	AN	AP	AQ	AR	AS	AT	AU	AV	AW	AX	AY	
DIAPHRAGM ASSY. (ACCELERATOR PUMP)	D5AZ 9B559-A *CM-2092	AN	AP	AQ	AR	AS	AT	AU	AV	AW	AX	AY	
SPRING (FLOAT BOWL VENT)	D5AZ 9560-A *CM-2084	AN	AP	AQ					AV	AW	AX	AY	
GASKET (FLOAT BOWL)	9561												
Tag code D9OE-CB,DB Tag code D9VE-LC Tag codes D9AE-ANB,APB,AVB,AYB,TB,UB, D9ME-EA, D9WE-EB,FB,MB,NB	D9AZ 9561-C *CG-545	AN	AP	AQ				AU	AV	AW	AX		
Tag code D9AE-AHA,AJA Tag code D9VE-VA,YB R/b D9AZ 9561-C (6/83) Tag codes D9SE-JA, D9WE-JA	D9TZ 9561-B *CG-506-A				AR		AT		AV	AW	AX	AY	
GASKET (ECONOMIZER COVER)	E0TZ 9563-A *CG-589	AN	AP	AQ	AR	AS	AT	AU	AV	AW	AX	AY	
VALVE KIT (FUEL INLET)	9564												
Consists of:(1) D2AF 9566-AA needle, (1) D4AE 9567-AA seat, (1) D2AZ 9599-A retainer, (1) D8AE 9B546-AB retainer, (1) D4AZ 9E845-A gasket, (1) D8AE 9B530-AA retainer	D8AZ 9564-A CV-99-A	AN	AP	AQ	AR	AS	AT	AU	AV	AW	AX	AY	
VALVE ASSY. (FUEL ENRICHMENT)	9A565												
#Orange-incl. (1) B7A 9563-A and (1) C2AZ 9A588-B gasket Tag code D8OE-CA,HA,UA, D8PE-BNA	D5UZ 9A565-A *CE-119	AN					AT						
#Green-incl. (1) B7A 9563-A and (1) C2AZ 9A588-B gasket Tag code D8AE-JA,D8OE-BA	D50Z 9A565-A *CE-109		AP		AR								

NOTICE: When the parts list suffix is shown in the quantity required column, the quantity is one (1).

DESCRIPTION/RESTRICTIONS	PART NUMBER	CARB. PARTS LISTS 28AN THRU 28AZ											
		AN	AP	AQ	AR	AS	AT	AU	AV	AW	AX	AY	AZ
VALVE ASSY. (FUEL ENRICHMENT)	9A565 — Cont'd												
#Red (2 stage)-incl.(1)B7A 9563-A & (1) C2AZ 9A588-B gasket Tag code D8SE-FA,GA Tag code D8SE-DA,EA, D8PE-BNA Tag codes D9AE-ANB,APB,AVB,AYB,TB,UB, D9ME-EA, D9WE-EB,FB,MB,NB	D7AZ 9A565-A *CE-126			AQ AR		 AT		 AV		AX	AY	
#Red-incl. (1) B7A 9563-A & (1) C2AZ 9A588-B gasket	D5TZ 9A565-B *CE-117					AS							
# Black-incl. (1) B7A 9563-A & (1) C2AZ 9A588-B gasket Tag code D8AE-NA, D8PE-BTA Tag codes D9SE-JA, D9WE-JA	D5AZ 9A565-A *CE-106				AR			AU	 AV				
#Black (2 stage)-incl.(1)B7A 9563-A & (1) C2AZ 9A588-B gaskets- Tag codes D8AE-TA,UA	D8AZ 9A565-A *CE-130				AR								
#Silver (2 stage)-incl. (1) B7A-9563-A & (1) C2AZ 9A588-B gaskets	D9AZ 9A565-A *CE-131									AW			
HOUSING ASSY. (CHOKE)	9A575												
Tag codes D7OE-HA,HB,HC,HD,TA,TB	★ D7AZ 9A575-E *CC-152	AN											
Tag codes D7AE-AKA,AKB,ASA	★ D7AZ 9A575-G *CC-148	AN											
Tag code D7OE-MA,MB,D7SE-AA	★ D7AZ 9A575-H *CC-153	AN											
	D7AZ 9A575-L *CC-157		AP										
Tag code D8SE-FA,GA Tag code D8SE-DA,EA, D8PE-BNA	★ D7AZ 9A575-T *CC-181			AQ	AR		AT						
Tag code D8AE-JA,D8OE-BA	★ D80Z 9A575-B *CC-191				AR								
Tag code D8AE-NA, D8PE-BTA	D8AZ 9A575-R *CC-198				AR								
Tag codes D8AE-TA,UA	★ D80Z 9A575-D *CC-199				AR								
	★ D8ZZ 9A575-A *CC-189					AS							
Tag code D8OE-CA,HA	★ D8AZ 9A575-B *CC-192						AT						
Tag codes D8OE-UA,VA, D8PE-BRA	★ D8AZ 9A575-C *CC-201						AT						
Tag code D8WE-CA Tag code D9WE-JA	★ D80Z 9A575-E *CC-197							AU	 AV				
Tag code D8SE-CA, D8PE-BPA Tag code D9SE-GA	★ D7AZ 9A575-F *CC-156							AU	 AV				
Tag code D9AE-ANB,APB,AVB,AYB,TB,UB, D9WE-MB,NB, D9ME-EA	D9AZ 9A575-D *CC-203								AV				
Tag code D9WE-EB,FB, E2PE-AA	★ D9SZ 9A575-C *CC-204								AV				
	★ D9VY 9A575-B *CY-209									AW			
Tag code D9AE-AHA,AJA	★ D90Z 9A575-G *CC-205										AX	 AY	
Tag codes D90E-CB,DB	★ D90Z 9A575-A *CC-223										AX		
Screw & washer assy. (choke housing to carb)- No. 8-32 x 3/4"	378547-S (BB-61-B)	3	3	3	3	3	3	3	3	3	3	3	
Connector 3/8-24-1/4 tube	386010-S8(II-28-S)	AN	AP	AQ	AR	AS	AT	AU	AV	AW	AX	AY	
VALVE (ACCELERATOR PUMP CHECK)	C4AZ 9576-A *CM-825	AN	AP	AQ	AR	AS	AT	AU	AV	AW	AX	AY	

COPYRIGHT © 1986 — FORD MOTOR COMPANY — DEARBORN, MICHIGAN

DESCRIPTION/RESTRICTIONS	PART NUMBER	CARB. PARTS LISTS 28AN THRU 28AZ											
		AN	AP	AQ	AR	AS	AT	AU	AV	AW	AX	AY	AZ
SCREW (PUMP DISCHARGE NOZZLE)	9577												
used with 9B511 weight	E1AZ 9577-A *CM-3685	AN	AP	AQ	AR	AS	AT	AU	AV	AW	AX	AY	
used without 9B511 weight	D7YZ 9577-A *CM-2515	AN	AP										
Washer (used with 9577)	374370-S(XX-94-A)	AN	AP	AQ	AR	AS	AT	AU	AV	AW	AX	AY	
SPRING (IDLE ADJUSING NEEDLE) Fast idle adjusting	★40 9578	3	3	3	3	3	3	3	3	3	3	3	
SPRING (FAST IDLE ADJUSTING SCREW)	B8A 9578-B *CM-609	AN	AP	AQ	AR	AS	AT	AU	AV	AW	AX	AY	
Screw (normal idle adjusting)-hex head Slotted-No. 10-32 x 1"	355107-S7 (BB-356)	AN	AP	AQ	AR	AS	AT	AU	AV	AW	AX	AY	
LEVER and SHAFT ASSY. (THROTTLE)	9581												
Tag code D9WE-EB,FB,MB,NB, E2PE-AA	D7AZ 9581-H *CM-2544	AN	AP	AQ	AR		AT		AV	AW	AX	AY	
	★ D7AZ 9581-S *CM-2640					AS							
Tag codes D9SE-GA, D9WE-JA	D7AZ 9581-K *CM-2587							AU	AV				
Tag code D9AE-ANB,APB,AVB,AYB,TB,UB	D9AZ 9581-H *CM-3117								AV				
Tag code D9ME-EA	★ D9AZ 9581-F *CM-3490								AV				
PLATE (THROTTLE)	9585												
Tag code D8WE-CA Tag codes D9AE-ANB,APB,AVB,AYB,TB,UB, D9ME-EA, D9SE-GA, D9WE-EB,FB,MB,NB	D7AZ 9585-A *CM-2545	2	2	2	2	2	2	2	2	2	2	2	
Tag code D8SE-CA Tag code D9WE-JA	E1AZ 9585-A *CM-2095-A							2	2				
Screw (throttle plate)-No. 5-40 x 9/32"	386022-S2 (BB-908)	4	4	4	4	4	4	4	4	4	4	4	
BRACKET (THROTTLE SOLENOID) Tag codes D7AE-AKA,AKB,ASA,D70E-MA,MB, D7SE-AA Tag codes D8AE-JA,NA,TA, D8PE-BTA, D8SE-FA Tag code D8WE-DA Tag codes D80E-HA,UA,D8SE-EA, D8PE-BNA,BRA Tag code D9AE-ANB,AVB,TB, D9WE-EB,JA,MB, D9ME-EA, E2PE-AA Tag code D9AE-AHA,D90E-CB	D7AZ 9J586-B	AN	AP	AQ	AR	AS	AT	AU	AV	AW	AX	AY	
GASKET (ECONOMIZER VALVE)	C2AZ 9A588-B *CM-533	AN	AP	AQ	AR	AS	AT	AU	AV	AW	AX	AY	
CAM ASSY. (FAST IDLE)	9597												
Tag code D8AE-JA, D80E-BA Tag code D80E-CA,HA, D8PE-BRA	★ D7AZ 9597-B *CM-2584		AP		AR		AT						
Tag code D8AE-NA,TA,UA, D8PE-BTA, D8SE-FA,GA Tag code D8SE-DA,EA	D5AZ 9597-A *CM-2105	AN		AQ	AR	AS	AT	AU	AV	AW	AX	AY	
Screw (fast idle cam)-No. 6-32 x 3/4" hex head	372307-S (BB-527)	AN	AP	AQ	AR	AS	AT	AU	AV	AW	AX	AY	
Retainer (fast idle cam)-"C" washer	351825-S (XX-9)	2	2	2	2	2	2	2	2	2	2	2	
RETAINER (FLOAT LEVER SHAFT)	D2AZ 9599-A *CM-1469	AN	AP	AQ	AR	AS	AT	AU		AW	AX	AY	
ROD (CHOKE CONTROL)	E1AZ 9A599-A *CM-3686	AN	AP	AQ	AR	AS	AT	AU	AV	AW	AX	AY	
Ring (rod to shaft)	377918-S8B(XX-14-F)	AN	AP	AQ	AR	AS	AT	AU	AV	AW	AX	AY	

NOTICE: When the parts list suffix is shown in the quantity required column, the quantity is one (1).

DESCRIPTION/RESTRICTIONS	PART NUMBER	CARB. PARTS LISTS 28AN THRU 28AZ											
		AN	AP	AQ	AR	AS	AT	AU	AV	AW	AX	AY	AZ
CAP (ACCELERATOR PUMP PISTON)	9635												
"As listed in TSB No. 148, dated Dec. 5, 1977, article 2078"	★ D7AZ 9635-A *CM-2880	AN											
"As listed in TSB No. 150, dated Jan. 4, 1978, article 3017"	★ D8ZZ 9635-A *CM-2993					AS							
SPRING (ACCELERATOR PUMP LEVER RETURN)	D4AZ 9636-A *CM-1527-A	AN	AP	AQ	AR	AS	AT		AV	AW	AX	AY	
SHAFT and LEVER ASSY. (CHOKE HOUSING)	9A753												
	D7PZ 9A753-A *CM-2592	AN	AP	AQ	AR	AS	AT	AU	AV				
Washer "C" (lever to choke shaft)	353862-S8 (XX-10)	AN	AP	AQ	AR	AS	AT	AU	AV	AW		AY	
Screw (lever to choke shaft) No. 6-32 x 3/4"	372307-S (BB-527)	AN	AP	AQ	AR	AS	AT	AU	AV	AW			
LEVER (CHOKE THERMOSTAT)	D3AZ 9A754-D	AN	AP	AQ	AR	AS	AT	AU		AW		AY	
Tag code D90E-CB,DB	D1AZ 9A754-C										AX		
Tag codes D9SE-GA, D9WE-JA									AV				
Screw (lever) No. 6-32 x 3/8" pan head	50802-S7 (U-150)	AN	AP	AQ	AR	AS	AT	AU	AV	AW	AX	AY	
CLIP (ACCELERATOR PUMP LINK ROD)	D2AZ 9825-A *CM-1695	AN	AP	AQ	AR	AS	AT	AU		AW	AX	AY	
CLAMP (THERMOSTATIC CHOKE HOUSING)	9842												
	E2AZ 9842-B *CM-3840	AN	AP	AQ	AR	AS	AT	AU	AV	AW	AX	AY	
Screw (choke housing)-No. 8-32 x 1/2"	31061-S8 (U-50)	3	3	3	3	3	3	3	3	3	3	3	
SHIELD (FUEL INLET SEAT)	D4AZ 9E845-A	AN	AP	AQ	AR	AS	AT	AU	AV	AW	AX	AY	
HOUSING ASSY. (THERMOSTATIC CHOKE)	9848												
#2LB4-incl. (1) D1AZ 9871-A gasket	D5AZ 9848-C		AP							AW			
Tag codes D8AE-JA,NA,TA,UA, D8PE-BTA	*CM-2374				AR								
Tag codes D80E-CA,HA,UA,VA, D8PE-BRA							AT						
#2-650D-incl. (1) D1AZ 9871-A gasket	D7AZ 9848-A *CM-2593	AN											
#2EB4 or 2FB4-incl. (1) D1AZ 9871-A gasket	D5AZ 9848-A			AQ								AY	
Tag code D80E-BA,D8SE-FA,GA	*CM-2097				AR								
Tag code D8SE-DA,EA, D8PE-BNA							AT						
Tag code D9AE-AHA,AJA											AX		
#2-100ME-incl. (1) D1AZ 9871-A gasket	D84Z 9848-A *CM-2879					AS							
# 2-500E-incl. (1) D1AZ 9871-A gasket	D7DZ 9848-A							AU					
Tag codes D9SE-GA, D9WE-JA	*CM-2546								AV				
#TB4	D1AZ 9848-B												
Tag codes D90E-CB,DB, D9PE-PA	*CM-1455										AX		
Tag codes D9AE-ANB,APB,AVB,AYB,TB,UB, D9ME-EA, D9WE-EB,FB,MB,NB									AV				
BUSHING (CHOKE TERMOSTAT LEVER)	D5DZ 9851-A *CM-2096	AN	AP	AQ	AR	AS	AT	AU	AV	AW	AX	AY	
GASKET (THERMOSTATIC CHOKE CONTROL)	B8A 9853-A *CG-93	AN	AP	AQ	AR	AS	AT	AU	AV	AW	AX	AY	
SOLENOID ASSY. (THROTTLE EMISSION CONTROL)	D7DZ 9D856-A		†AP	†AQ				AU		AW		AY	
Tag code D7AE-AKA,AKB,ASA,D70E-MA,MB, D7PE-BUA,BVA,D7SE-AA	*CS-4	†AN											
Tag codes D8AE-JA,NA,TA, D8PE-BTA, D8SE-FA					AR								
Tag code D8WE-DA						AS							
Tag codes D80E-HA,UA,D8SE-EA, D8PE-BNA,BRA							AT						
Tag code D9AE-ANB,AVB,TB, D9ME-EA, D9SE-GA, D9WE-EB,JA,MB, E2PE-AA									AV				
Tag codes D9AE-AHA,D90E-CB											AX		
Nut (solenoid)-hex 7/16"-20	45219-S2(M-173)	AN	AR	AQ	AR	AS	AT	AU	AV		AX	AY	
SHIELD (CHOKE THERMOSTAT)	D5AZ 9861-A	AN	AP	AQ	AR	AS	AT	AU	AV	AW	AX	AY	
Screw (shield)-No. 8-32 x 9/16" hex head	376262-S2 (UU-52-AS)	AN	AP	AQ	AR	AS	AT	AU	AV	AW	AX	AY	
GASKET (THERMOSTATIC CHOKE HOUSING)	D1AZ 9871-A *CG-317	AN	AP	AQ	AR	AS	AT	AU	AV	AW	AX	AY	

COPYRIGHT © 1986 — FORD MOTOR COMPANY — DEARBORN, MICHIGAN

DESCRIPTION/RESTRICTIONS	PART NUMBER	CARB. PARTS LISTS 28AN THRU 28AZ											
		AN	AP	AQ	AR	AS	AT	AU	AV	AW	AX	AY	AZ
COVER (ECONOMIZER VALVE)	9930												
Tag code D8AE-JA,D8OE-BA Tag code D8OE-CA,HA, D8PE-BRA Tag codes D9SE-JA, D9WE-JA	C8AZ 9930-A *CM-728	AN	AP		AR	AS	AT	AU	AV				
Tag code D8AE-TA,UA, D8SE-FA,GA Tag code D8SE-DA,EA, D8PE-BNA Tag codes D9AE-ANB,APB,AVB,AYB,TB,UB, D9ME-EA, D9WE-EB,FB,MB,NB	D7AZ 9930-A *CM-2864			AQ	AR		AT		AV	AW	AX	AY	
Screw & washer (cover)-No. 8-32 x 5/8"	357136-S(BB-56)	4	4	4	4	4	4	4	4	4	4	4	
SHAFT and LEVER ASSY. (AIR BY-PASS) Tag codes D9ME-EA, D9SE-GA, D9WE-JA	D7AZ 9A945-A *CM-2595							AU	AV				
COMPENSATOR ASSY. (ALTITUDE) Tag codes D9SE-GA, D9WE-JA	★ D7AZ 9A950-A *CM-2507							AU	AV				
Tag code D9ME-EA	E0UZ 9A950-A *CM-3353								AV				
Screw (compensator)-No. 8-32 x 3/4"	43395-S8 (U-75)							4	4				
GASKET (ALTITUDE COMPENSATOR HOUSING) Tag codes D9ME-EA, D9SE-GA, D9WE-JA	D7AZ 9A953-A *CG-491							AU	AV				
CAM (AIR BLEED METERING NEEDLE ROD)	9A965												
"As listed in TSB No. 130 dated March 10, 1977, article 1773"	D7AZ 9A965-A *CM-2375-A	AN AN	AP	AQ	AR			AU	AV	AW	AX	AY	
	D5AZ 9A965-A *CM-2106					AS							
PLATE (AIR BY-PASS PLATE) Tag codes D9ME-EA, D9SE-GA, D9WE-JA	★ D7AZ 9A972-A *CM-2597							AU	AV				
Screw (plate)-No. 4-40 x 1/4" hex. head	57000-S2(B-328)							2	2				
ROD (AIR BY-PASS PLATE) Tag codes D9ME-EA, D9SE-GA, D9WE-JA	D7AZ 9A973-A *CM-2596							AU	AV				
Retainer (rod) 3/16 "C" type	97401-S2(Q-X-4)							AU	AV				

NOTICE: When the parts list suffix is shown in the quantity required column, the quantity is one (1).

DESCRIPTION/RESTRICTIONS	PART NUMBER	CARB. PARTS LISTS 29A THRU 29M											
		A	B	C	D	E	F	G	H	J	K	L	M
NOTE: † Not a part of service carburetor													
GASKET SET – Refer to carburetor identification chart–Section 95	9502												
TUNE-UP KIT – Refer to carburetor identification chart–Section 95	9A586												
Screw (fast idle adjusting)–slotted headless–No. 10-32 x 3/4"	382297-S(UU-26)	A	B	C	D	E	F						
Connector (used for choke inlet tube)–1/8" pipe–1/4" tube	382786-S(II-179)	A	B	C									
SPRING (TRANSMISSION KICKDOWN CONTROL LEVER RETRACTING) Tag codes D3PF-BA,D3ZF-KA,MA	D1AZ 7B146-A	A	B	C	D	E	F						
Screw (adjust kickdown)–No. 10-32 x 1" Tag codes D3PF-BA,D3ZF-KA,MA	379622-S7-8(UU-52-M)	A		C	D		F						
FILTER ASSY. (FUEL)	D30Z 9155-A *FG-19-B	A	B	C	D	E	F						
GASKET (FUEL FILTER MOUNTING)	D1ZZ 9229-A	A	B	C	D	E	F						
LIMITER (IDLE ADJUSTING NEEDLE)	D6PZ 9J500-A *CM-747-B	2	2	2	2	2	2						
SPRING (SECONDARY THROTTLE DIAPHRAGM RETURN)–12 coils–.44" I.D.	D1AZ 9B504-A *CM-1288	A	B	C	D	E	F						
ROD (SECONDARY THROTTLE CONTROL)	D1AZ 9C504-A *CM-1289	A	B	C	D	E	F						
Ring (rod to throttle shaft & lever–primary & secondary)–retaining–1/8"	377918-S8B(XX-14-F)	2	2	2	2	2	2						
BUSHING (THROTTLE SHAFT)–nylon	C7AZ 9B508-A	A	B	C	D	E	F						
GASKET (THROTTLE BODY)	★ D3AZ 9516-B *CG-314-A	A	B	C	D	E	F						
VALVE (ACCELERATOR PUMP DISCHARGE NEEDLE)	C7AZ 9A516-B *CM-676	A	B	C	D	E	F						
Screw and washer (throttle body to main body)–fill. hd.–No. 10-32 x 7/8"	381744-S(BB-80-H)	15	15	15	16	16	16						
ROD (METERING)–secondary	D1AZ 9A526-F *CM-1466	2	2	2	2	2	2						
SEAL (AIR HORN)	★ C8AZ 9C527-A *CM-1682	A	B	C	D	E	F						
LINK (ACCELERATOR PUMP)	★ C7AZ 9529-B *CM-694	A	B	C	D	E	F						
Rivet (accelerator pump link)–button head–1/8" x 11/16"	383070-S(SS-10-E)	2	2	2	2	2	2						
JET (MAIN METERING)	9533												
No. 62F Tag code D3PF-BA	C3AZ 9533-A *CJ-134		2	2		2							
No. 63F	C3AZ 9533-B *CJ-135				2		2						
No. 52F	C3UZ 9533-A *CJ-133	2											
No. 60F–Tag codes D3ZF-JA,KA,LA,MA	C3GY 9533-B *CJ-145			2									
LEVER (THROTTLE SHAFT AUXILIARY)	D5VZ 9A537-A *CM-1477-A	A	B	C	D	E	F						
Screw (lever to carb.)–pan head shoulder–No. 8-32 x 3/8"	380808-S(BB-683-D)	A	B	C	D	E	F						
LEVER (IDLE ADJUSTING)	★ D1AZ 9538-A *CM-1323	A	B	C	D	E	F						
Screw–No. 8-32 x 1/4"	353358-S2(UU-52-U)	A	B	C	D	E	F						

COPYRIGHT © 1986 — FORD MOTOR COMPANY — DEARBORN, MICHIGAN

DESCRIPTION/RESTRICTIONS	PART NUMBER	CARB. PARTS LISTS 29A THRU 29M											
		A	B	C	D	E	F	G	H	J	K	L	M
NOTE: † Not a part of service carburetor													
SPRING (ACCELERATOR PUMP OVERTRAVEL)	C7AZ 9A538-C	A	B	C	D	E	F						
SPRING (THROTTLE CONTROL RETURN)	C7AZ 9A538-D	A	B	C	D	E	F						
SCREW (FAST IDLE ADJUSTING)	★ D1AZ 9B538-A *CM-1523	A	B	C	D	E	F						
NEEDLE (IDLE ADJUSTING)	D0AZ 9541-A *CM-1087	2	2	2	2	2	2						
ROD (ACCELERATOR PUMP LINK TO OVERTRAVEL LEVER)	C7AZ 9B542-B *CM-695	A	B	C	D	E	F						
PISTON (ACCELERATOR PUMP)-less retainer spring and cap	C7AZ 9B544-B *CP-50	A	B	C	D	E	F						
PLATE (CHOKE)	★ D3AZ 9545-A *CM-1754	A	B	C	D	E	F						
Screw (choke plate)-hex. head-No. 6-32 x 5/16"	375016-S2(UU-52-AK)	2	2	2	2	2	2						
SCREEN (MAIN WELL TUBE)	D1AZ 9S546-A	2	2		2	2	2						
SHAFT (CHOKE PLATE)	D5VZ 9547-A *CM-2146	A	B	C	D	E	F						
FLOAT ASSY.	C7AZ 9550-A *CM-661	A	B	C	D	E	F						
LEVER (CHOKE SHAFT)	★ C9AZ 9551-A *CM-1144	A	B	C	D	E	F						
Screw (lever to shaft)-No. 6-32 x 5/16"	383547-S(BB-541-D)	A	B	C	D	E	F						
VALVE ASSY. (POWER)	C7AZ 9G551-A	A	B	C	D	E	F						
PISTON ASSY. (POWER VALVE)	★ C8AZ 9G553-A				D	E	F						
VALVE (AIR)	D1AZ 9H555-A *CM-1291	A	B	C	D	E	F						
Screw (valve to air shaft)-hex. head-No. 6-32 x 1/3"	381761-S(UU-81-JA)	2	2	2	2	2	2						
SPRING (AIR VALVE)	★ D2AZ 9H556-A *CM-1292	A	B	C									
SHAFT (FLOAT LEVER)	C7AZ 9558-A *CM-663	A	B	C									
GASKET (FLOAT BOWL)	★ D3AZ 9561-A *CG-376	A	B	C	D	E	F						
VALVE KIT (FUEL INLET)-primary-incl. (1) D0SF 9B528-A needle, (1) D0SF 9567-A seat, (1) D0AF 9569-A gasket	D0AZ 9564-B *CV-58-A	A	B	C	D	E	F						
VALVE and SEAT ASSY. (FUEL INLET)-supplementary	D2AZ 9564-B *CV-86-A	A	B	C	D	E	F						
ROD (CHOKE DIAPHRAGM CONTROL)	D2AZ 9S567-B	A	B										
Nut (control rod to connector)-1/16" spring	384912-S2(MM-259-V)	A	B										
GASKET (FUEL INLET NEEDLE SEAT)	9569												
Primary	C7AZ 9569-A	A	B	C	D	E	F						
Secondary	C7AZ 9569-B	A	B	C	D	E	F						

NOTICE: When the parts list suffix is shown in the quantity required column, the quantity is one (1).

DESCRIPTION/RESTRICTIONS	PART NUMBER	CARB. PARTS LISTS 29A THRU 29M											
		A	B	C	D	E	F	G	H	J	K	L	M
NOTE: † Not a part of service carburetor													
CONNECTOR (SECONDARY DIAPHRAGM CONTROL)	D2AZ 9S569-A	A	B										
BAFFLE (AIR VALVE)	D2AZ 9S570-A	A	B	C	D	E	F						
Screw (air valve baffle to carb.)	381761-S(UU-81-JA)	2	2	2	2	2	2						
CUP (PUMP PISTON)	C7AZ 9572-A *CM-651	A	B	C	D	E	F						
RETAINER (ACCELERATOR PUMP CHECK VALVE)	9575												
	C7AZ 9575-A *CM-652	A	B	C									
	★ C7AZ 9575-B *CM-664				D	E	F						
Ball (accelerator pump check)-3/16" steel	371350-S(AA-4)	A	B	C	D	E	F						
Ball (pump check)-steel-1/8"	357186-S(AA-1)	A	B	C	D	E	F						
SPRING (IDLE ADJUSTING NEEDLE)	★ 40 9578				D	E	F						
PISTON and ROD ASSY. (AIR VALVE DAMPENER)	D2AZ 9H578-A *CM-1683	A	B	C	D	E	F						
SHAFT (AIR VALVE)	D1AZ 9581-A *CM-1293	A	B	C	D	E	F						
LEVER and SHAFT ASSY. (THROTTLE)	9581												
Tag codes D3PF-BA,D3ZF-LA,MA	D1AZ 9581-B *CM-1294	A		C	D		F						
Tag codes D3ZF-JA,KA	D10Z 9581-A *CM-1295		B	C		E							
LEVER (AIR VALVE DAMPENER)	D1AZ 9H582-A *CM-1296	A	B	C	D	E	F						
Rivet (air valve dampener lever)-button head-1/8" -11/16"	383070-S(SS-10-E)				D	E	F						
LEVER (SECONDARY THROTTLE STOP) Tag code D3PF-BA	D1AZ 9583-A *CM-1300	A	B	C	D	E	F						
Nut (lever to secondary throttle shaft)-No. 10-32	34079-S7(M-163)	A	B	C	D	E	F						
Lockwasher-No. 10	34803-S7(X-60)	A	B	C	D	E	F						
LINK (AIR VALVE DAMPENER)	★ D1AZ 9H583-B *CM-1297	A	B	C	D	E	F						
Retainer (air valve dampener pin)-retaining-1/8"	377918-S8B(XX-14-F)	A	B	C									
PLATE (THROTTLE)	9585												
Primary	D00Z 9585-A *CM-1100	2	2	2	2	2	2						
Secondary	★ D1AZ 9585-A *CM-1298	2	2	2	2	2	2						
Screw (primary & secondary plates to shaft)-No. 3-48 x 1/4"	383677-S(BB-542-A)	8	8	8	8	8	8						
BRACKET (THROTTLE EMISSION CONTROL SOLENOID)	★ D0AZ 9J586-A	A	B	†C	D	E							
LEVER AND SHAFT ASSY. (SECONDARY THROTTLE PLATE)	★ D1AZ 9A592-A	A	B	C	D	E	F						
CAM ASSY. (FAST IDLE)	D1SZ 9597-A *CM-1451	A	B	C	D	E	F						
SPRING (ACCELERATOR PUMP ROD)	C7AZ 9D598-A	A	B	C	D	E	F						
RETAINER (ACCELERATOR PUMP SPRING)	C7AZ 9599-A *CM-1038	A	B	C	D	E	F						
ROD (CHOKE CONTROL)	D3AZ 9A599-A *CM-1755	A	B	C	D	E	F						
Ring (rod to shaft and lever)-retaining-1/8"	377918-S8B(XX-14-F)	A	B	C	D	E	F						

COPYRIGHT © 1986 — FORD MOTOR COMPANY — DEARBORN, MICHIGAN

DESCRIPTION/RESTRICTIONS	PART NUMBER	CARB. PARTS LISTS 29A THRU 29M											
		A	B	C	D	E	F	G	H	J	K	L	M
NOTE: † Not a part of service carburetor													
SHAFT AND LEVER ASSY. (CHOKE HOUSING)	★ D2AZ 9A753-B *CM-817-A	A	B	C	D	E	F						
ADAPTER (CHOKE CONTROL TUBE)	C8VY 9C786-A	A	B	C	D	E	F						
PISTON ASSY. (CHOKE)	D3AZ 9840-A *CM-1287-B	A	B	C	D	E	F						
Screw (piston to shaft & lever)-pan head-No. 6-32 x 1/4"	50802-S7(U-150)	A	B	C	D	E	F						
CLAMP (THERMOSTATIC CHOKE HOUSING)	C8AZ 9842-B *CM-1045	A	B	C	D	E							
	E2AZ 9842-A *CM-3839						F						
Screw (clamp to choke housing)-No. 8-32 x 1/2"	31061-S8(U-50)	3	3	3	3	3	3						
HOUSING ASSY. (THERMOSTATIC CHOKE)	9848												
#4AP-incl. (1) C1AZ 9871-A gasket-Tag codes D3ZF-JA,KA,LA,MA	★ D3ZZ 9848-B *CM-1778				D								
	★ D40Z 9848-A *CM-1835					E							
#4TY	D0AZ 9848-D *CM-1243						F						
BUSHING (CHOKE HOUSING)	C7AZ 9851-A *CM-668	A	B	C	D	E	F						
SOLENOID ASSY. (THROTTLE EMISSION CONTROL)-Tag code D3PF-BA	D3AZ 9D856-A	A	B	†C	D	E							
Nut (solenoid to bracket)-hex.-7/16" -20	45219-S(M-173)				D	E							
SHIELD (CHOKE THERMOSTAT)	D00Z 9861-A	A	B	C	D	E	F						
GASKET (THERMOSTATIC CHOKE HOUSING)	D2AZ 9871-A *CG-336-A	A	B	C	D	E	F						

NOTICE: When the parts list suffix is shown in the quantity required column, the quantity is one (1).

DESCRIPTION/RESTRICTIONS	PART NUMBER	CARB. PARTS LISTS 31A THRU 31M											
		A	B	C	D	E	F	G	H	J	K	L	M
NOTE: † Not a part of service carburetor													
GASKET SET - Refer to carburetor identification chart-Section 95	9502												
TUNE-UP KIT - Refer to carburetor identification chart-Section 95	9A586												
LIMITER (IDLE ADJUSTING)	9J500												
	D6PZ 9J500-A *CM-747-B	A	B	†C	D	E	F	†G	H	J			
	D5AZ 9J500-B *CM-2195-A										K	L	M
BOWL AND PLUG ASSY. (FLOAT)	★ D0ZZ 9A507-B *CM-1206	A	B	C	D	E	F	G	H	J			
Screw and lockwasher assy. (bowl & plug assy.)-fill. head-No. 10-32 x 1/2"	43252-S8(U-77)	4	4	4	4	4	4	4	4	4			
Screw (upper body)-fill. head-No. 10-32 x 5/8"	31628-S7(U-58)										4	4	4
Lockwasher (upper body)-No. 10	34803-S7(X-60)										4	4	4
BUSHING (THROTTLE SHAFT)	D5PZ 9B508-A *CM-2194										K	L	M
WEIGHT (PUMP DISCHARGE BALL)	D2DZ 9B511-A *CM-1473										K	L	M
ROD (BOWL VENT)	9A515												
Tag code D4DE-AB	D4DZ 9A515-A			C		E				J			
	★ D5PZ 9A515-A *CM-2193										K	L	M
ARM (BOWL VENT)	★ D5DZ 9A515-A *CM-2274										K	L	M
GASKET (FLANGE BODY)	D5PZ 9516-B *CG-454										K	L	M
FITTING (FUEL INLET)	★ D0ZZ 9A520-A *CM-1209	A	B	C	D	E	F	G	H	J			
BRACKET (FLOAT BOWL VENT) Tag code D4DE-AB	D4DZ 9E520-A			C		E				J			
Screw (float bowl vent bracket)-No. 6-5/16"-32 Tag code D4DE-AB	370005-S(BB-6)			C		E				J			
RESTRICTOR (JET)	9A521												
	★ D20Z 9A521-A *CM-1521	A	B	C	D	E	F	G	H	J			
	D0DZ 9A521-A *CM-1069										K		
	D0DZ 9A521-B *CM-1070											L	M

COPYRIGHT © 1986 — FORD MOTOR COMPANY — DEARBORN, MICHIGAN

DESCRIPTION/RESTRICTIONS	PART NUMBER	CARB. PARTS LISTS 31A THRU 31M											
		A	B	C	D	E	F	G	H	J	K	L	M
NOTE: † Not a part of service carburetor													
SCREEN (FUEL FILTER)	C4AZ 9F525-A										K	L	M
ROD (METERING)	9A526												
Tag code D30F-BA	★ D30Z 9A526-C *CM-1737	A											
Tag code D30F-BC Tag code D4DE-SA	★ D30Z 9A526-A *CM-1744-A	A	B	C	D	E	F	G	H	J			
Tag code D4DE-SB	D30Z 9A526-B *CM-1744						F						
	★ D5PZ 9A526-B *CM-2184										K	L	
	★ D5DZ 9A526-C *CM-2275												M
COVER ASSY. (ACCELERATOR PUMP)	★ D0ZZ 9528-A *CM-1212	A	B	C	D	E	F	G	H	J			
	D5DZ 9528-A *CM-2228										K	L	M
LINK (ACCELERATOR PUMP)	9529												
	D0ZZ 9529-A *CM-1213	A	B	C	D	E	F	G	H	J			
	★ D5PZ 9529-A *CM-2192										K	L	M
SCREW and WASHER ASSY. (AIR HORN)-No. 12-28 x 9/16"	C8DZ 9F529-A										3	3	3
SCREW (THROTTLE BODY)-power lock	D2TZ 9F529-A										3	3	3
SCREW (FAST IDLE CAM)	D5TZ 9F529-A										K	L	M
ROD (FAST IDLE CAM)	★ D1ZZ 9D530-C *CM-1429	A	B	C	D	E	F	G	H	J			
JET (MAIN METERING)	C8AZ 9533-A *CJ-171										K	L	M
SPRING (THROTTLE RETURN)	★ D20Z 9A538-A *CM-1520	A	B	C	D	E	F	G	H	J			
SCREW (FAST IDLE ADJUSTING)	9B538												
	D20Z 9B538-B	A	B	C	D	E	F	G	H	J			
Curb idle	D20Z 9B538-C	A	B	C	D	E	F	G	H	J			
Fast idle adjusting	D5PZ 9B538-A *CM-2183										K	L	M
Fast idle cam	D5DZ 9B538-A *CM-2232										K	L	M
BAFFLE (AUTOMATIC CHOKE PLATE)	D4DZ 9A539-A										K	L	M
NEEDLE (IDLE ADJUSTING)	9541												
	★ D0ZZ 9541-A *CM-1214	A	B	C	D	E	F	G	H	J			
	D7PZ 9541-A *CM-2608										K	L	M
ROD (ACCELERATOR PUMP LINK TO OVERTRAVEL LEVER)	9B542												
	D0ZZ 9B542-A *CM-1215	A	B	C	D	E	F	G	H	J			
	D5PZ 9B542-A *CM-2191										K	L	M
Retainer (pump rod)	359734-S(RR-2)	2	2	2	2	2	2	2	2	2	2	2	2

NOTICE: When the parts list suffix is shown in the quantity required column, the quantity is one (1).

DESCRIPTION/RESTRICTIONS	PART NUMBER	CARB. PARTS LISTS 31A THRU 31M											
		A	B	C	D	E	F	G	H	J	K	L	M
NOTE: † Not a part of service carburetor													
TUBE (PUMP PASSAGE)	D5DZ 9544-A *CM-2330										K	L	M
PISTON (ACCELERATOR PUMP)	★ D0ZZ 9B544-A *CP-52	A	B	C	D	E	F	G	H	J			
PLATE (CHOKE)	9545												
	D0ZZ 9545-A *CM-1216	A	B	C	D	E	F	G	H	J			
	C7DZ 9545-A *CM-701										K	L	M
Screw (choke plate)-fill. hd.-No. 4-40 x 3/16"	31291-S(U-43)	2	2	2	2	2	2	2	2	2	2	2	2
SHAFT (CHOKE)	9546												
	★ D20Z 9546-B *CM-1217-A	A	B	C	D	E	F	G	H	J			
	D5PZ 9546-A *CM-2174										K	L	M
DASHPOT ASSY.	C1AZ 9B549-A *CD-6												M
Nut (dashpot mounting)-jam-5/16"	33923-S7(M-32)												M
FLOAT ASSY.	★ D0ZZ 9550-A *CM-1218	A	B	C	D	E	F	G	H	J			
	D5TZ 9550-A *CM-703-A										K	L	M
BRACKET (DASHPOT)	★ D5PZ 9B550-A *CM-2196										K	L	
Screw (att. bracket)-No. 12-24 x 1/2"	378608-S8(UU-52-D)										K	L	
SHAFT (FLOAT LEVER)	★ D0ZZ 9558-A *CM-1220	A	B	C	D	E	F	G	H	J			
	★ C7DZ 9558-A										K	L	M
HUB (FAST IDLE CAM)	D1DZ 9D558-B *CM-1419	A	B	C	D	E	F	G	H	J			
DIAPHRAGM ASSY. (ACCELERATOR PUMP)	C7DZ 9B559-A *CM-704										K	L	M
Screw (diaphragm housing)-No. 8-32 x 5/8"	43255-S8(U-74)										4	4	4
SPRING (BOWL VENT)	E0PZ 9560-A *CM-2229-A										K	L	M
GASKET (FLOAT BOWL)	★ D0ZZ 9561-A *CG-302	A	B	C	D	E	F	G	H	J			
	C7DZ 9561-A										K	L	M
GROMMET (SEAL BOWL VENT)	D5DZ 9562-A *CM-2268										K	L	M
VALVE AND SEAT ASSY. (FUEL INLET)	9564												
	D0ZZ 9564-A *CV-83	A	B	C	D	E	F	G	H	J			
	E4PZ 9564-A *CV-109-A										K	L	M
COLLAR (PUMP DIAPHRAGM)	D5PZ 9F565-A												M
RETAINER (PUMP OPERATING LEVER)	D0ZZ 9568-A	A	B	C	D	E	F	G	H	J			
GASKET (FUEL INLET NEEDLE SEAT)	9569												
	★ D0ZZ 9569-A *CG-300	A	B	C	D	E	F	G	H	J			
	C6VY 9569-A										K	L	M
VALVE (ACCELERATOR PUMP CHECK)	9576												
	★ D0ZZ 9576-A *CM-1221	A	B	C	D	E	F	G	H	J			
	D2DZ 9576-A *CM-1476										K	L	M

COPYRIGHT © 1986 — FORD MOTOR COMPANY — DEARBORN, MICHIGAN

DESCRIPTION/RESTRICTIONS	PART NUMBER	CARB. PARTS LISTS 31A THRU 31M											
		A	B	C	D	E	F	G	H	J	K	L	M
NOTE: † Not a part of service carburetor													
LEVER (CHOKE)	D5DZ 9F577-B *CM-2277										K	L	M
IDLE (FAST ADJUSTING SCREW)	B7A 9578-B	A	B	C	D	E	F	G	H	J			
SPRING (IDLE ADJUSTING NEEDLE)	9578												
	C8VY 9578-A *CM-750	A	B	C	D	E	F	G	H	J	2	2	2
	★ D0ZZ 9578-A *CM-1222	A	B	C	D	E	F	G	H	J			
	D5PZ 9578-A *CM-2188										K	L	M
LEVER and SHAFT ASSY. (THROTTLE)	9581												
	★ D4DZ 9581-E *CM-1416-A	A	B	C	D	E	F	G	H	J			
	★ D5PZ 9581-A *CM-2186										K	L	M
Retainer-spring (throttle shaft)-1/2"	353161-S(RR-3)										K	L	M
Screw (throttle shaft)-No. 12-24 x 1/2"	378608-S8(UU-52-D)										K	L	M
LEVER (BOWL VENT OPERATING)	★ D5DZ 9D583-A *CM-2273												M
PLATE (THROTTLE)	9585												
	D0ZZ 9585-A *CM-1224	A	B	C	D	E	F	G	H	J			
	D5PZ 9585-A *CM-2187										K	L	M
Screw (throttle plate)-fill. head-No. 4-40 x 3/16"	31291-S(U-43)	2	2	2	2	2	2	2	2	2	2	2	2
BRACKET (THROTTLE EMISSION CONTROL SOLENOID)	9J586												
Bracket & solenoid assy	★ D2DZ 9J586-A	A	B										
	★ D4DZ 9J586-A			†C	D	E	F	†G	H	J			
	★ D4DZ 9J586-B										K	L	M
Nut (bracket to carb.)-No. 10-32	34079-S7(M-165)										K	L	M
ARM (THROTTLE SHAFT)	D5PZ 9D591-B *CM-2185										K	L	M
LEVER (BOWL VENT)	★ D5DZ 9D591-A *CM-2279										K	L	M
LEVER (DASHPOT OPERATING)	★ D5DZ 9D593-A *CM-2272										K	L	
CAM ASSY. (FAST IDLE)	9597												
Tag code D4DE-AB	★ D30Z 9597-A *CM-1743	A		C	D	E	F						
Tag code D4DE-AA	★ D30Z 9597-B *CM-1736		B	C				G	H	J			
	E3PZ 9597-A *CM-3932										K	L	M
SPRING (ACCELERATOR PUMP ROD)-upper	C7DZ 9D598-A										K	L	M
RETAINER (ACCELERATOR PUMP SPRING)	9599												
	★ D0ZZ 9599-A *CM-1226	A	B	C	D	E	F	G	H	J			
	D1DZ 9599-A *CM-1467										K	L	M
	C7DZ 9599-A										K	L	M

NOTICE: When the parts list suffix is shown in the quantity required column, the quantity is one (1).

DESCRIPTION/RESTRICTIONS	PART NUMBER	CARB. PARTS LISTS 31A THRU 31M											
		A	B	C	D	E	F	G	H	J	K	L	M
NOTE: † Not a part of service carburetor													
WASHER (THROTTLE SHAFT)	D5DZ 9599-A *CM-2269										K	L	M
RETAINER (METERING ROD PLATE)	D5TZ 9599-A *CM-2226										K	L	M
SCREW (ACCELERATOR PUMP ARM RETAINER)	D0ZZ 9C631-A	A	B	C	D	E	F	G	H	J			
SCREW (SOLENOID BRACKET)-fill. head-No. 12-28 x 9/16"	D0ZZ 9C631-C	2	2	2	2	2	2	2	2	2			
	C8DZ 9C631-A										2	2	2
SPRING (ACCELERATOR PUMP LEVER RETURN)-lower	9636												
	D0ZZ 9636-B *CM-1230	A	B	C	D	E	F	G	H	J	K	L	
	C8UZ 9636-A *CM-785												M
RETAINER (AIR CLEANER TO CARBURETOR)	9B672												
	★ D0ZZ 9B672-A	A	B	C	D	E	F	G	H	J			
	C8DZ 9B672-A										K	L	M
Screw (air cleaner retainer)-fill. head-No. 6-32 x 1/4"	31031-S8(U-44)	2	2	2	2	2	2	2	2	2			
RETAINER (THROTTLE SHAFT)	D5DZ 9688-A *CM-2280										K	L	M
SHAFT and LEVER ASSY. (CHOKE HOUSING)	★ D0ZZ 9A753-A *CM-1232	A	B	C	D	E	F	G	H	J			
LEVER (CHOKE THERMOSTAT)	★ D0ZZ 9A754-A	A	B	C	D	E	F	G	H	J			
Screw (choke lever)-No. 6-32 x 1/4"	355027-S(BB-668)	A	B	C	D	E	F	G	H	J			
FITTING (HEAT TUBE CHOKE)	D5TZ 9C786-A										K	L	M
ARM ASSY. (METERING ROD)	D0DZ 9D819-A *CM-1325										K	L	M
LINK (CHOKE THERMOSTAT)	9834												
	D0ZZ 9834-A	A	B	C	D	E	F	G	H	J			
	★ D5PZ 9834-A										K	L	M
PISTON ASSY. (CHOKE)	9840												
	★ D1ZZ 9840-E *CM-1439	A			D	E	F						
	★ D0ZZ 9840-A *CM-1233		B	C				G	H	J			
	D1TZ 9840-B *CM-1438										K		
	D1DZ 9840-A *CM-1435											L	
	D4TZ 9840-B *CM-1873												M
CLAMP (THERMOSTATIC CHOKE HOUSING)	9842												
	D0ZZ 9842-A *CM-1234	3	3										
	★ D4DZ 9842-A *CM-1828			C	D	E	F	G	H	J			
	D4DZ 9842-B *CM-1829										K	L	M
Screw (clamp to choke housing)	31037-S7(U-48)										3	3	3

COPYRIGHT © 1986 — FORD MOTOR COMPANY — DEARBORN, MICHIGAN

DESCRIPTION/RESTRICTIONS	PART NUMBER	CARB. PARTS LISTS 31A THRU 31M											
		A	B	C	D	E	F	G	H	J	K	L	M
NOTE: † Not a part of service carburetor													
HOUSING (THERMOSTATIC CHOKE)	9848												
Incl. (1) D0ZZ 9871-A gasket	D1ZZ 9848-B *CM-1412		B					G	H				
Incl. (1) D0ZZ 9871-A gasket	★ D1ZZ 9848-D *CM-1414	A					F						
Incl. (1) D0ZZ 9871-A gasket	★ D4DZ 9848-A *CM-1830			C	D	E				J			
Incl. (1) D0ZZ 9871-A gasket	D4DZ 9848-C *CM-1832										K	L	M
Screw (choke housing)-pan hd.-No. 8-32 x 3/8"	39031-S(U-135)	3	3	3	3	3	3	3	3	3			
Screw (choke housing)-No. 8-32 x 1/2"	31037-S7(U-48)										3	3	3
SOLENOID ASSY. (THROTTLE EMISSION CONTROL)	9D856												
	D2AZ 9D856-E	A	B	†C	D	E	F	†G	H	J			
	D4DZ 9D856-A										K	L	M
Nut (throttle emission control solenoid assy.)-5/8"	45219-S(M-173)	A	B	†C	D	E	F	†G	H	J	K	L	M
GASKET (THERMOSTATIC CHOKE HOUSING)	9871												
	★ D0ZZ 9871-A *CG-301	A	B	C	D	E	F	G	H	J			
	B8A 9871-B										K	L	M
SCREW (FLOAT SHAFT)	D0RY 12230-A	2	2	2	2	2	2	2	2	2			

NOTICE: When the parts list suffix is shown in the quantity required column, the quantity is one (1).

DESCRIPTION/RESTRICTIONS	PART NUMBER	CARB. PARTS LISTS 31N THRU 31Z											
		N	P	Q	R	S	T	U	V	W	X	Y	Z
NOTE: † Not a part of service carburetor													
GASKET SET – Refer to carburetor identification chart–Section 95	9502												
TUNE-UP KIT – Refer to carburetor identification chart–Section 95	9A586												
Screw (upper body)–fill. head–fill. head–No. 10–32 x 5/8"	31628-S7(U-58)	4	4	4	4	4	4	4	4	4	4	4	4
Lockwasher (upper body)–No. 10	34803-S7(X-60)	4	4	4	4	4	4	4	4	4	4	4	4
LIMITER (IDLE ADJUSTING)	9J500												
Tag codes D7BE-AA,BA,BC,NA, D7DE-DA,DD	D5AZ 9J500-B *CM-2195-A	N	P	Q	R	S	T						
Tag codes D7BE-AB,HB,RA, D7DE-ABA,VA	D6PZ 9J500-A *CM-747-B						T	U	V	W	X	Y	Z
SEAL (ACCELERATOR PUMP LIFTER LINK)	D8PZ 9B501-A *CM-2891									4	4	4	4
BUSHING (THROTTLE SHAFT)	D5PZ 9B508-A *CM-2194	N	P	Q	R	S	T	U	V	W	X	Y	Z
WEIGHT (PUMP DISCHARGE BALL)	D2DZ 9B511-A *CM-1473	N	P	Q	R	S	T	U	V	W	X	Y	Z
CONTROL ASSY. (VACUUM BREAK)	9S514												
Tag code D8DE-BA,BB,EA,EB,D8KE-BA,BB	D8PZ 9S514-A *CK-2059									W	X	Y	
Tag code D8DE-DA,D8KE-AA	D8PZ 9S514-B *CK-2060									W			
Tag code D9DE-CA,CC,EA,EB,UA,VA	D9PZ 9S514-A *CK-2077												Z
Tag code D9DE-AA,AB,BA,BB	D9PZ 9S514-B *CK-2078												Z
Screw (control) No. 8-32 x 1/2"	376358-S(BB-637-XA)									2	2	2	2
ROD (BOWL VENT)	★ D5PZ 9A515-A *CM-2193	N	P	Q	R								
	D8PZ 9A515-B *CM-2888									W	X	Y	Z
ARM (BOWL VENT)	★ D5DZ 9A515-A *CM-2274	N			R								
LEVER (BOWL VENT)	9A515												
Inner	D8PZ 9A515-A *CM-2882									W	X	Y	Z
Outer tag code D8DE-BB,DA	D8PZ 9A515-C *CM-2895									W	X	Y	
Tag code D9DE-BA,BB,EA,EB,VA													Z
Outer-tag code D8DE-EA,EB	D8PZ 9A515-D *CM-2912									W			
Tag code D9DE-AA,AB,CA													Z
Outer-tag code D8KE-AA,BA,BB	★ D8PZ 9A515-E *CM-2913									W			
Tag code D9DE-AA,AB,CA,CC,UA													Z
GASKET (FLANGE BODY)	9516												
	D5PZ 9516-B *CG-454	N	P	Q	R	S	T	U	V				
	D8PZ 9516-A *CG-510									W	X	Y	Z

COPYRIGHT © 1986 — FORD MOTOR COMPANY — DEARBORN, MICHIGAN

DESCRIPTION/RESTRICTIONS	PART NUMBER	CARB. PARTS LISTS 31N THRU 31Z											
		N	P	Q	R	S	T	U	V	W	X	Y	Z
RESTRICTOR (JET)	9A521												
	D0DZ 9A521-B	N	P	Q	R							Y	
Tag codes D6DE-BB,EA, D6BE-CA,D6PE-PA	*CM-1070					S							
Tag code D7BE-RA,D7DE-VA							T						
Tag code D8DE-DA,D8KE-AA										W			
Tag code D9DE-AA,AB													Z
Tag codes D6DE-CA, D6BE-AA, BB, D6PE-MA,NA	D3DZ 9A521-A					S							
Tag codes D7BE-BA,BC,HB,NA, D7DE-DA,DD	*CM-1724						T						
									V		X		
Tag code D6DE-AB	D6PZ 9A521-A					S							
Tag code D7BE-AA,AB,D7DE-ABA	*CM-2377						T						
Tag code D8DE-EA										W			
Tag code D9DE-CA,CC,DA,DC													Z
Tag codes D8DE-BB,EB,D8KE-BA,BB	D1DZ 9A521-C									W			
Tag codes D9DE-UA,VA	*CM-1457												Z
	D1TZ 9A521-A							U					
	*CM-1410												
Tag code D9DE-BA,BB	★ D1TZ 9A521-B												Z
	*CM-1411												
Tag code D9DE-EA,EB	D9PZ 9A521-A												Z
	*CM-3110												
ROD (CHOKE PULLDOWN)	D8PZ 9E524-A									W	X	Y	Z
	*CM-2914												
SCREEN (FUEL FILTER)	C4AZ 9F525-A	N	P	Q	R	S	T	U	V	W	X	Y	Z
ROD (METERING)	9A526												
	★ D5DZ 9A526-D	N			R								
	*CM-2265												
Tag codes D5DE-YA,YB	★ D5DZ 9A526-E		P										
	*CM-2266												
	★ D5DZ 9A526-F			Q									
	*CM-2267												
Tag codes D5DE-AAA,AAB	D6PZ 9A526-A		P										
	*CM-2355												
Tag code D6DE-AB	★ D6PZ 9A526-B					S							
	*CM-2378												
Tag code D6DE-BB,EA,D6PE-PA	★ D6PZ 9A526-C					S							
Tag code D7BE-RA,D7DE-VA	*CM-2379						T						
Tag code D6DE-CA,D6PE-NA	D6PZ 9A526-D					S							
	*CM-2380												
Tag code D6BE-CA	★ D6PZ 9A526-E					S							
	*CM-2381												
Tag code D6BE-AA	★ D6DZ 9A526-F					S							
	*CM-2392												
Tag code D6BE-BB,D6PE-MA	★ D6PZ 9A526-G					S							
	*CM-2393												
Tag code D7BE-AA,AB,D7DE-ABA	★ D7PZ 9A526-A						T						
	*CM-2549										X	Y	
Tag codes D7BE-BA,BC,NA D7DE-DA,DD	★ D7PZ 9A526-B						T						
	*CM-2550												
	★ D7PZ 9A526-F								V				
Tag code D7BE-HB	*CM-2620						T						
Tag code D7BE-FA	★ D7PZ 9A526-E							U					
	*CM-2618												
Tag code D7BE-GA	★ D7PZ 9A526-D							U					
	*CM-2619												
Tag code D8DE-BB,EB,D8KE-BB	★ D8PZ 9A526-E									W			
Tag code D9DE-CA,CC,DA,DC,EA,EB	*CM-2901												Z

NOTICE: When the parts list suffix is shown in the quantity required column, the quantity is one (1).

DESCRIPTION/RESTRICTIONS	PART NUMBER	CARB. PARTS LISTS 31N THRU 31Z											
		N	P	Q	R	S	T	U	V	W	X	Y	Z
ROD (METERING)	9A526 — Cont'd												
Tag code D8DE-DA,D8KE-AA	D8PZ 9A526-F									W			
Tag code D9DE-AA,AB,BA,BB	*CM-2902												Z
Tag code D8DE-EA,D8KE-BA	★ D8PZ 9A526-D									W			
Tag code D9DE-UA,VA	*CM-2900												Z
SCREW (CHOKE LEVER)	D8PZ 9B527-A									W	X	Y	Z
No. 4-40 x .440"	*CM-2911												
COVER ASSY. (ACCELERATOR PUMP)	D5DZ 9528-A	N	P	Q	R	S	T	U	V	W	X	Y	Z
	*CM-2228												
Screw and washer assy. (pump cover)	43255-S8(U-74)	4	4	4	4	4	4	4	4	4	4	4	4
no. 8-32x5/8"													
LINK (ACCELERATOR PUMP)	9529												
	★ D5PZ 9529-A	N	P	Q	R	S	T	U	V				
	*CM-2192												
	D8PZ 9529-A									W	X	Y	Z
	*CM-2889												
SCREW and WASHER ASSY. (AIR HORN)-	C8DZ 9F529-A	3	3	3	3	3	3	3	3	3	3	3	3
No. 10-32 x 1 1/2"													
SCREW (THROTTLE BODY)-power lock	D2TZ 9F529-A	3	3	3	3	3	3	3	3	3	3	4	4
SCREW (CAM SET)	D5TZ 9F529-A	N	P	Q	R	S	T	U	V	W	X	Y	Z
ROD (FAST IDLE CAM)	D5DZ 9D530-A	N			R	S	T	U	V	W	X	Y	Z
	*CM-2270												
COMPENSATOR ASSY. (HOT IDLE)	9B532												
	D8PZ 9B532-A									W			
	*CM-2903												
	D9PZ 9B532-A												Z
	*CM-3111												
JET (MAIN METERING)	9533												
	C8AZ 9533-A	N			R	S	T	U	V		X	Y	
Tag codes D5DE-AAA,AAB	*CJ-171		P										
	D0TZ 9533-A			Q									
Tag codes D5DE-YA,YB	*CJ-183		P										
	C8AZ 9533-B									W			Z
	*CJ-179												
LEVER (IDLE SOLENOID)	★ D7PZ 9538-A								V				
	*CM-2622												
Screw (lever) No. 10-32 x 1/2" hex head	40919-S8(U-259)								V	W	X	Y	Z
SCREW (FAST IDLE ADJUSTING)	D5PZ 9B538-A	N	P	Q	R								
	*CM-2183												
SCREW (FAST IDLE CAM)	9B538												
Fast idle cam	D5DZ 9B538-A	N	P	Q	R	S	T	U	V	W	X	Y	Z
	*CM-2232												
BAFFLE (AUTOMATIC CHOKE PLATE)	9A539												
	D4DZ 9A539-A	N	P	Q	R	S			V				
Tag codes D7BE-BA,BC,HB,NA,D7DE-DA,DD							T						
Tag code D7BE-FA								U					
Tag code D7BE-AA,AB,D7DE-ABA	D4DZ 9A539-B						T						
Tag code D7BE-GA								U					
	D8PZ 9A539-A									W	X	Y	Z
	D7PZ 9541-A	N	P	Q	R	S	T	U	V	W	X	Y	Z
	*CM-2608												
ROD ACCELERATOR PUMP LINK TO	D5PZ 9B542-A	N	P	Q	R	S	T	U	V	W	X	Y	Z
OVERTRAVEL LEVER)	*CM-2191												
TUBE (PUMP PASSAGE)	D5DZ 9544-A	N	P	Q	R	S	T	U	V	W	X	Y	Z
	*CM-2230												

COPYRIGHT © 1986 — FORD MOTOR COMPANY — DEARBORN, MICHIGAN

DESCRIPTION/RESTRICTIONS	PART NUMBER	CARB. PARTS LISTS 31N THRU 31Z											
		N	P	Q	R	S	T	U	V	W	X	Y	Z
PLATE (CHOKE)	C7DZ 9545-A *CM-701	N	P	Q	R	S	T	U	V	W	X	Y	Z
Screw (choke plate)-fill. head-No. 4-40 x 3/16"	31291-S(U-43)	2	2	2	2	2	2	2	2	2	2	2	2
SPRING (ACCELERATOR PUMP-LOWER)	D7PZ 9B545-A *CM-3039												Z
SHAFT and LEVER ASSY. (CHOKE)	9546												
	D5PZ 9546-A *CM-2190	N	P	Q	R	S	T	U	V				
	D8PZ 9546-A *CM-2907									W			Z
DASHPOT ASSY.	C1AZ 9B549-A *CD-6				R								
Nut (dashpot mounting)-jam-5/16"	33923-S7(M-32)				R								
FLOAT ASSY.	9550												
	D5TZ 9550-A *CM-703-A	N	P	Q	R	S	T	U	V	W	X	Y	Z
BRACKET (DASHPOT)	★ D5PZ 9B550-A *CM-2196				R								
Screw (dashpot bracket)-No. 12-24 x 1/2"	378608-S8(UU-52-D)				R								
LEVER (CHOKE)	D8PZ 9551-A *CM-2908									W	X	Y	Z
Screw (lever) No. 6-32 x 1/4" special head	355027-S(BB-668)									W	X	Y	Z
SEAL (VENT ARM)	D8PZ 9557-A *CM-2892									W	X	Y	Z
PIN (FLOAT)	★ C7DZ 9558-A	N	P	Q	R	S	T	U	V	W	X	Y	Z
DIAPHRAGM ASSY. (ACCELERATOR PUMP)	C7DZ 9B559-A *CM-704	N	P	Q	R	S	T	U	V	W	X	Y	Z
Screw (diaphragm housing)-No. 8-32 x 5/8"	43255-S8(U-74)	4	4	4	4	4	4	4	4	4	4	4	4
SPRING (BOWL VENT) Tag code D9-ADE-BA,BB,UA,VA	E0PZ 9560-A *CM-2229-A	N			R					W	X	Y	Z
GASKET (FLOAT BOWL)	9561												
	C7DZ 9561-A	N	P	Q	R	S	T	U	V				
	D8PZ 9561-B *CG-514									W	X	Y	Z
GROMMET (SEAL BOWL VENT)	D5DZ 9562-A *CM-2268	N			R					W	X	Y	Z
VALVE and SEAT ASSY. (FUEL INLET)	E4PZ 9564-A *CV-109-A	N	P	Q	R	S	T	U	V	W	X	Y	Z
COLLAR (PUMP DIAPGRAGM)	9F565												
	D5PZ 9F565-A	N											
Tag code D7BE-HB	C8DZ 9F565-A						T		V				
GASKET (HOT IDLE COMPENSATOR)	D8PZ 9B567-A *CG-513									W			Z
GASKET (FUEL INLET NEEDLE SEAT)	C6VY 9569-A	N	P	Q	R	S	T	U	V	W	X	Y	Z
VALVE (ACCELERATOR PUMP CHECK)	D2DZ 9576-A *CM-1476	N	P	Q	R	S	T	U	V	W	X	Y	Z
LEVER (CHOKE)	D5DZ 9F577-B *CM-2277	N	P	Q	R	S	T	U	V				
SPRING (IDLE ADJUSTING NEEDLE)	C8VY 9578-A *CM-750	2	2	2	2	2	2	2	2	2	2	2	2
SPRING (IDLE MIXTURE)	D5PZ 9578-A *CM-2188	N	P	Q	R	S	T						
	C8DZ 9578-A *CM-776							U	V	W	X	Y	Z
GASKET (PUMP RELIEF)	D8PZ 9580-A *CG-512									W	X	Y	Z
LEVER and SHAFT ASSY. (THROTTLE)	★ D5PZ 9581-A *CM-2186	N			R								
	★ D5DZ 9581-C *CM-2264		P	Q		S							

NOTICE: When the parts list suffix is shown in the quantity required column, the quantity is one (1).

DESCRIPTION/RESTRICTIONS	PART NUMBER	CARB. PARTS LISTS 31N THRU 31Z											
		N	P	Q	R	S	T	U	V	W	X	Y	Z
LEVER and SHAFT ASSY. (THROTTLE)	9581 — Cont'd												
	★ D7PZ 9581-A *CM-2551						T	U					
	★ D7PZ 9581-C *CM-2621								V				
	★ D8PZ 9581-B *CM-2899									W	X	Y	Z
Retainer-spring (throttle shaft)-1/2"	353161-S(RR-3)	N	P	Q	R							Y	Z
Screw (throttle shaft)-No. 12-24 x 1/2"	378608-S8(UU-52-D)	N	P	Q	R					W	X	Y	Z
Screw (fast idle speed)-No. 8-32 x 1 3/16"	373681-S100(UU-72-B)					S	T	U	V	W	X	Y	Z
LEVER (BOWL VENT OPERATING)	★ D5DZ 9D583-A *CM-2273	N											
PLATE (THROTTLE)	D5PZ 9585-A *CM-2187	N	P	Q	R	S	T	U	V	W	X	Y	Z
Screw (throttle plate & choke plate)-fill. head-No. 4-40 x 3/16"	31291-S(U-43)	2	2	2	2	2	2	2	2	2	2	2	2
BRACKET (THROTTLE EMISSION CONTROL SOLENOID)	★ D4DZ 9J586-B	†N	P		R				V				
Tag codes D6DE-CA						S							
Tag code D7BE-HB, D7DE-DA,DD,ABA,VA							T						
Idle air-front	D7PZ 9J586-A								V				
Tag code D9DE-AA,AB,CA,CC,UA,VA													Z
	D8PZ 9J586-A									W			
Tag code D9DE-AA,AB,CA,CC													Z
Tag code D9DE-BA,BB,UA,VA	★ D9PZ 9J586-A												Z
Nut (bracket to carb.)-No. 10-32	34079-S7(M-163)	†N	P		R		T			W			Z
Tag codes D6DE-CA						S							
LEVER (BOWL VENT)	9D591												
	★ D5DZ 9D591-A *CM-2279	N			R								
	D8PZ 9D591-A *CM-2883									W	X	Y	Z
ARM (THROTTLE SHAFT)	D5PZ 9D591-B *CM-2185	N	P	Q	R	S	T	U	V	W	X	Y	Z
Screw (throttle arm)-No. 8-32 x 7/32"	359167-S8(BB-65-B)					S	T	U	V	W	X	Y	Z
BRACKET (CHOKE WIRE)	★ D5DZ 9595-A			Q				U			X	Y	
Tag code D7BE-BA,HB	*CM-2276						T						
Tag code D8DE-BB										W			
Tag code D9DE-EA,EB,UA,VA													Z
CAM (FAST IDLE)	E3PZ 9597-A	N	P	Q	R	S	T		V	W	X	Y	Z
Tag code D7BE-GA	*CM-3932							U					
Tag code D7BE-FA	D7PZ 9597-A *CM-2610							U					
SPRING (ACCELERATOR PUMP ROD)-upper	C7DZ 9D598-A	N	P	Q	R	S	T	U	V	W	X	Y	Z
RETAINER	9599												
Fast idle cam rod	D1DZ 9599-A *CM-1467	N	P	Q	R	S	T	U	V	W	X	Y	Z
Accelerator pump lever	C7DZ 9599-A	N	P	Q	R	S	T	U	V	W	X	Y	Z
Washer throttle shaft	D5DZ 9599-A *CM-2269	N			R					W	X	Y	Z
Metering rod plate	D5TZ 9599-A *CM-2226	N	P	Q	R	S	T	U	V	W	X	Y	Z
Pump lifter seal	D8PZ 9599-A *CM-2884									W	X	Y	Z
SCREW (ACCELERATOR PUMP ARM RETAINER)	C8DZ 9C631-A	2	2	2	2	2	2	2	2	2	2	2	2

COPYRIGHT © 1986 — FORD MOTOR COMPANY — DEARBORN, MICHIGAN

DESCRIPTION/RESTRICTIONS	PART NUMBER	CARB. PARTS LISTS 31N THRU 31Z											
		N	P	Q	R	S	T	U	V	W	X	Y	Z
NOTE: † Not a part of service carburetor													
SPRING (ACCELERATOR PUMP LEVER)	9636												
	C8UZ 9636-A *CM-785	N			R								
Tag codes D6BE-AA,BB,D6PE-MA	D0ZZ 9636-B *CM-1230		P			S		U			X	Y	
Tag codes D6DE-AB,BB,CA,EA, D6BE-CA,D6PE-NA,PA Tag code D8DE-BB,EA,EB,D8KE-BA,BB Tag code D9DE-CA,CC,DA,DC,EA,EB,UA,VA	D5DZ 9636-A *CM-2278			Q		S	T		V	W			Z
Tag code D8DE-DA,D8KE-AA Tag code D9DE-AA,AB,BA,BB	D3TZ 9636-A *CM-1821									W			Z
RETAINER (AIR CLEANER TO CARBURETOR	9B672												
	C8DZ 9B672-A	N	P	Q	R	S	T	U	V				
	D8PZ 9B672-A									W	X	Y	Z
RETAINER (THROTTLE SHAFT)	D5DZ 9688-A *CM-2280	N			R					W	X	Y	Z
SHAFT and LEVER ASSY. (CHOKE HOUSING)	D8PZ 9A753-A *CM-2909									W	X	Y	Z
FITTING (HEAT TUBE CHOKE)	D5TZ 9C786-A	N	P	Q	R	S	T	U	V	W	X	Y	Z
ARM ASSY. (METERING ROD)	9D819												
	D0DZ 9D819-A *CM-1325	N	P	Q	R	S							
	D7PZ 9D819-A *CM-2552						T	U	V				
	D7PZ 9D819-B *CM-2720									W	X	Y	Z
SPRING	★ D5PZ 9834-A	N	P	Q	R	S	T	U	V	W	X		Z
PISTON ASSY. (CHOKE)	9840												
Tag codes D6BE-CA, D6DE-AB Tag code D7BE-GA Tag codes D7BE-AA,AB,HB,D7DE-ABA	D4TZ 9840-B *CM-1873	N	P	Q	R	S	T	U	V				
Tag code D6DE-CA, D6BE-AA,BB,D6PE-MA,NA Tag codes D7BE-BA,BC,NA, D7DE-DA,DD Tag code D7BE-FA	D1DZ 9840-A *CM-1435					S	T	U					
Tag code D6DE-BB,EA,D6PE-PA Tag codes D7BE-AA,RA,D7DE-RA	D1TZ 9840-B *CM-1438					S	T						
CLAMP (THERMOSTATIC CHOKE HOUSING)	9842												
Tag codes D7BE-BA,BC,HB,NA, D7DE-DA,DD Tag code D7BE-FA	D4DZ 9842-B *CM-1829	N	P	Q	R	S	T	U	V	W	X	Y	Z
Tag code D7BE-AA,AB,D7DE-ABA Tag code D7BE-GA	D0ZZ 9842-A *CM-1234						3	3					
Screw (clamp to choke housing)	31037-S7	3	3	3	3	3	3	3	3	3	3	3	3
HOUSING (THERMOSTATIC CHOKE)	9848												
Tag codes D7BE-BA,BC,HB,NA D7DE-DA,DD Tag code D7BE-FA Tag code D8DE-EA	D4DZ 9848-C *CM-1832	N	P	Q	R		T	U	V	W			
Tag code D7BE-RA,D7DE-VA	D4TZ 9848-E *CM-1869					S	T						
Tag code D7BE-AA, D7DE-ABA, E0PE-AA Tag code D7BE-GA	D0DZ 9848-A *CM-1075						T	U					
Tag code D7BE-AB	D0TZ 9848-B *CM-1138						T						

NOTICE: When the parts list suffix is shown in the quantity required column, the quantity is one (1).

DESCRIPTION/RESTRICTIONS	PART NUMBER	CARB. PARTS LISTS 31N THRU 31Z											
		N	P	Q	R	S	T	U	V	W	X	Y	Z
NOTE: † Not a part of service carburetor													
HOUSING (THERMOSTATIC CHOKE)	9848 — Cont'd												
Tag code D8DE-EB, D8KE-AA,BA,BB R/b D9PZ 9848-A (11/81) Tag code D9BE-RA	★ D8PZ 9848-B *CM-2905									W	X	Y	
Tag code D9BE-UA Tag code D9DE-CA,CC	D9PZ 9848-A *CM-3109											Y	Z
Tag code D9DE-EA,EB Tag code D8DE-BB,DA	D9PZ 9848-B *CM-3112									W			Z
Tag code D9DE-AA,AB,BA,BB,DA,DC,UA,VA	D9PZ 9848-C *CM-3113												Z
SOLENOID ASSY. (THROTTLE EMISSION CONTROL)	9D856												
Tag code D7DE-ABA, E0PE-AA	D2AZ 9D856-E						†T						
Tag code D6DE-CA,EA Tag codes D7DE-DA,DD, D7PE-ASA	D4DZ 9D856-A	†N	P		R	S	†T						
Idle-vent Tag code D7BE-HB Tag code D8DE-BB,EA,EB,D8KE-AA,BA,BB Tag code D9DE-AA,AB,BA,BB,CA,CC,DA,DC,UA,VA	D7PZ 9D856-B *CS-11						†T		†V	W			Z
Idle air-front Tag code D8DE-DA,D8KE-AA,BA,BB Tag code D9DE-AA,AB,CA,CC,UA,VA	D7PZ 9D856-A *CS-10								†V	W			Z
	★ D9PZ 9D856-A *CS-31											Y	
Nut (solenoid throttle)-hex. 7/16"-20 Tag codes D6DE-CA,EA	45219-S(M-173)	†N	P		R	S	T		2	2			Z
GASKET (THERMOSTATIC CHOKE HOUSING)	B8A 9871-B	N	P	O	R	S	T	U	V	W	X	Y	Z
RETAINER (PUMP SPRING LOWER)	★ECZ 99704-A	N	P	Q	R	S	T	U	V	W	X	Y	Z

COPYRIGHT © 1986 — FORD MOTOR COMPANY — DEARBORN, MICHIGAN

DESCRIPTION/RESTRICTIONS	PART NUMBER	CARB. PARTS LISTS 34A THRU 34M											
		A	B	C	D	E	F	G	H	J	K	L	M
GASKET SET – Refer to carburetor identification chart–Section 95	9502												
TUNE-UP KIT – Refer to carburetor identification chart–Section 95	9A586												
Stud (air cleaner)–1/4"–20–20 x 2 21/64"	370970–S8(WW–7–L)			4	4								
FILTER ASSY. (FUEL)	D3AZ 9155–A *FG–14–A			C	D			G	H	J	K	L	M
LIMITER (IDLE ADJUSTING)	9J500												
	D6PZ 9J500–A *CM–747–B			C	D			G	H	J	K	L	M
	D1RY 9J500–A *CM–1472					E	F						
SEAL (AIR CLEANER AIR DUCT)	D1RY 9B501–A *CM–1480	A	B			E	F						
RETAINER (FAST IDLE SEAL)	9B501												
	D1FZ 9B501–B *CM–1328	A	B			E	F						
	D1FZ 9B501–A *CM–1327			C	D			G	H	J	K	L	M
LEVER (THROTTLE)	9C504												
Primary	D1RY 9C504–B *CM–1481	A	B			E	F						
Secondary	★ D1FZ 9C504–A *CM–1329	A	B	C	D	E	F	G	H	J	K	L	M
Washer (throttle lever secondary)–metric	112514–ES8	A	B			E	F						
Nut (throttle lever fixing secondary)–metric	114477–ES8	A	B			E	F						
BUSHING (THROTTLE SHAFT)	9B508												
	D1RY 9B508–B *CM–1482	A	B			E	F						
	★ D1FZ 9B508–A *CM–1330			C	D			G	H	J	K	L	M
SCREW and WASHER ASSY. (DIAPHRAGM COVER)	D1FZ 9S510–B	4	4	4	4	4	4	4	4	4	4	4	4
BAFFLE (FLOAT BOWL)	★ D4FZ 9A517–A *CM–2081										K	L	M
SCREEN (FUEL FILTER)	D1FZ 9F525–A	A	B	C	D	E	F	G	H	J	K	L	M
SPRING (FAST IDLE CAM)	9G526												
	★ D1RY 9G526–A *CM–1483	A	B			E	F						
	★ D1FZ 9G526–A *CM–1331			C	D								
NUT (THROTTLE LEVER and CHOKE SHAFT)–(1) retains 9C504 and (1) retains 9D541	D1FZ 9B527–A *CM–1400			2	2			2	2	2	2	2	2
COVER ASSY. (ACCELERATOR PUMP)	9528												
	★ D1RY 9528–A	A	B			E	F						
	★ D2FZ 9528–B *CM–1332–A			C	D			G	H	J	K	L	M

COPYRIGHT © 1986 — FORD MOTOR COMPANY — DEARBORN, MICHIGAN

1973/79 LINCOLN-MERCURY CARS

4 CYL. 2.0L(122 C.I.D.), 2.3L(140 C.I.D.)
6 CYL. 2.6L(159 C.I.D.), 2.8L(171 C.I.D.)

DESCRIPTION/RESTRICTIONS	PART NUMBER	CARB. PARTS LISTS 34A THRU 34M											
		A	B	C	D	E	F	G	H	J	K	L	M
SCREW and WASHER ASSY. (AIR HORN)	9F529												
	D4FZ 9F529-A							G		J	K	N	M
ROD (FAST IDLE CAM)	★ D1FZ 9D530-A *CM-1333							G	H	J	K	L	M
JET (MAIN METERING)	9533												
No. 135-Primary	D2RY 9533-B *CJ-229	A	B										
Primary	D1FZ 9533-A *CJ-196			C	D								
No. 160-Secondary	D2RY 9533-A *CJ-228	A	B			E							
Secondary	★ D2RY 9533-D *CJ-235			C	D			G	H	J	K		
No. 130-Primary	★ D2RY 9533-F *CJ-230						F						
Secondary	★ D1FZ 9533-D *CJ-201											L	M
No. 142-Primary Tag code 74TF-AA	D4FZ 9533-A *CJ-248							G	H			L	M
No. 140-Primary	D2RY 9533-C *CJ-215									J			
Primary Tag code 74TF-AB	D1FZ 9533-C *CJ-198							G			K		
LEVER (FAST IDLE ADJUSTING)	9538												
	D1RY 9538-B *CM-1703	A	B			E	F						
	★ D1FZ 9538-A *CM-1334			C	D								
	★ D4ZZ 9538-B *CM-1842							G	H	J	K		
	★ D4ZZ 9538-A *CM-1841											L	M
Screw and washer assy. (fast idle lever)-metric	220006-ES8	A	B			E	F						
Washer-spring (lever to 9D558)	356254-S2(XX-350)			C	D								
SPRING (THROTTLE RETURN)	9A538												
Primary	D1FZ 9A538-A *CM-1335	A	B	C	D	E	F						
Secondary	D7FZ 9A538-A *CM-2488	A	B	C	D	E	F	G	H	J	K	L	M
Primary	★ D4ZZ 9A538-A *CM-1846							G	H	J	K	L	M
SCREW (FAST IDLER ADJUSTING)	9B538												
	D1RY 9B538-A	A	B			E	F						
Screw-idle speed	D1FZ 9B538-C	A	B			E	F						
Screw-idle speed	D1FZ 9B538-A			C	D			G	H	J	K	L	M
	D7FZ 9B538-A			C	D			G	H	J	K	L	M
SCREW (SECONDARY IDLE and DIAPHRAGM ADJUSTING)	D5FZ 9B538-A *CM-2227			C	D			G	H	J	K	L	M
PLUG (FUEL FILTER-RETAINER)	★ D1FZ 9A540-A	A	B	C	D	E	F	G	H	J	K	L	M

NOTICE: When the parts list suffix is shown in the quantity required column, the quantity is one (1).

DESCRIPTION/RESTRICTIONS	PART NUMBER	CARB. PARTS LISTS 34A THRU 34M											
		A	B	C	D	E	F	G	H	J	K	L	M
TUBE (HI-SPEED AIR BLEED)	9G540												
No. 180–Primary	D1FZ 9G540–B	A	B	C	D			G	H	J	K		
No. 140–Secondary	★ D2RY 9G540–A	A	B			E							
No. 190–Secondary Primary	D2RY 9G540–D			C	D			G	H	J	K	L	M
No. 135–Secondary	D3RY 9G540–A						F						
No. 175–Primary	D3RY 9G540–B						F						
No. 195–Secondary	D2FZ 9G540–C											L	M
NEEDLE (IDLE ADJUSTING)	D4ZZ 9541–A *CM–1853	A	B	C	D	E	F	G	H	J	K	L	M
LEVER (CHOKE CONTROL)	★ D1FZ 9D541–A *CM–1348			C	D			G	H	J	K	L	M
Washer (use with choke control lever)	44718–S8			C	D			G	H	J	K	L	M
JET (IDLE)	9542												
Primary–No. 55 Secondary	★ D1FZ 9542–B *CJ–200	A		C	D	E	F			J		L	M
Primary–No. 65 Primary Primary–tag code 74TF–AA	★ D3RY 9542–D *CJ–237							G	H			L	M
Primary–No. 60 Primary–tag code 74TF–AB	D2FZ 9542–C *CJ–212							G			K		
Secondary–No.45	D2RY 9542–D *CJ–214									J			
Primary–No. 50 Secondary	D1FZ 9542–A *CJ–197	A	B			E	F	G	H		K K		
Secondary No. 70	★ D5PZ 9542–A *CJ–260			C	D								
DIAPHRAGM and SHAFT ASSY. (CHOKE)	★ D2RY 9L543–B	A	B			E	F						
PLATE (CHOKE)	9545												
	★ D1FZ 9545–B *CM–1379	2	2			2	2						
	★ D2FZ 9545–C *CM–1497–A			2	2								
Secondary	★ D4FZ 9545–A *CM–1857							G	H	2	K	2	2
Primary	★ D4ZZ 9545–A *CM–1849							G	H		K		
SHAFT and LEVER ASSY. (CHOKE)	9546												
	★ D1RY 9546–B *CM–1486	A	B			E	F						
	★ D2FZ 9546–A			C	D								
	★ D4ZZ 9546–A *CM–2001							G	H	J	K	L	M
RETAINER (CHOKE SHAFT ASSY.)	D1RY 9J548–A	A	B			E	F						
DIAPHRAGM and RETAINER ASSY. (CHOKE CONTROL)	9J549												
	★ D2RY 9J549–A *CK–1535			C	D								
	★ D3FZ 9J549–A *CK–1774							G	H	J	K		
	D1FZ 9J549–A *CK–1356											L	M

COPYRIGHT © 1986 — FORD MOTOR COMPANY — DEARBORN, MICHIGAN

1973/79 LINCOLN-MERCURY CARS

4 CYL. 2.0L(122 C.I.D.), 2.3L(140 C.I.D.)
6 CYL. 2.6L(159 C.I.D.), 2.8L(171 C.I.D.)

DESCRIPTION/RESTRICTIONS	PART NUMBER	CARB. PARTS LISTS 34A THRU 34M											
		A	B	C	D	E	F	G	H	J	K	L	M
FLOAT ASSY.	9550												
	D1FZ 9550-A *CM-1357	A	B	C	D			G	H	J	K	L	M
	★ D3RY 9550-A *CM-1780					E	F						
VALVE ASSY. (POWER)-Also refer to group 9594	9G551												
	D1RY 9G551-A *CE-93		B				F						
	★ D1RY 9G551-B *CE-94	A				E							
COVER (CHOKE CONTROL DIAPHRAGM)	D3FZ 9J554-A			C	D					J	K		
	★ D4FZ 9J554-A							G	H			L	M
SHAFT and LEVER ASSY. (AUTOMATIC CHOKE)-also refer to group 9A753	★ D1RY 9L554-A	A	B										
Circlip (choke shaft)-metric	E860041-S	A	B			E	F						
SHAFT (FLOAT LEVER)	D1FZ 9558-A *CM-1359	A	B	C	D	E	F	G	H	J	K	L	M
HUB (FAST IDLE CAM)	D1FZ 9D558-A *CM-1360			C	D							L	M
SCREW and WASHER ASSY. (FAST IDLE LEVER)	D1FZ 9D558-B *CM-1401			C	D			G	H	J	K	L	M
DIAPHRAGM ASSY. (ACCELERATOR PUMP)	9B559												
	D1FZ 9B559-A *CM-1361	A	B			E	F						
	D2FZ 9B559-A *CM-1503			C	D			G	H	J	K	L	M
GASKET (CARBURETOR AIR HORN THROTTLE BODY)	D1FZ 9561-A *CG-326	A	B	C	D	E	F	G	H	J	K	L	M
VALVE AND SEAT ASSY. (FUEL INLET)	9564												
	D1RY 9564-A *CV-89	A	B			E	F						
Incl. (1) D1FZ 9569-A gasket	E1PZ 9564-B *CV-125			C	D							L	M
	★ D4RY 9564-A *CV-94							G	H	J	K		
ECONOMIZER ASSY. - Also refer to group 9L543	9A565												
	★ D3FZ 9A565-C *CE-96			C	D								
Tag code D42E-AA Tag code D4PE-ANA,D42E-BA,MA,	D4FZ 9A565-A *CE-102											L	M
Tag code D42E-AC Tag code D42E-KA	D4FZ 9A565-D *CE-104											L	M
	D4ZZ 9A565-A *CE-103							G	H	J	K		
Screw and washer assy. (economizer)-No. 8-32 x 1/2"	43251-S8(U-73)			3	3			3	3	3	3	3	3
WASHER (THROTTLE SHAFT NUT LOCK PRIMARY)	9568												
	★ D1FZ 9568-B	A	B	C	D	E	F	G	H	J	K		
	D4ZZ 9568-A											L	M
WASHER (LEVELING SHAFT)-primary	D1FZ 9568-A *CG-327			C	D			G	H	J	K	L	M
GASKET (FUEL INLET NEEDLE SEAT)	D1FZ 9569-A	A	B	C	D	E	F	G	H	J	K	L	M
PUMP (DISCHARGE NOZZLE)-No. 50	★ D1RY 9A574-B	A	B			E	F						
RETAINER (IDLE JET)	D1FZ 9575-A *CM-1339-A	2	2	2	2	2	2	2	2	2	2	2	2

NOTICE: When the parts list suffix is shown in the quantity required column, the quantity is one (1).

DESCRIPTION/RESTRICTIONS	PART NUMBER	CARB. PARTS LISTS 34A THRU 34M											
		A	B	C	D	E	F	G	H	J	K	L	M
VALVE (ACCELERATOR PUMP CHECK)	D1FZ 9576-A	A	B			E	F						
BALL (ACCELERATOR PUMP CHECK)	EAA 9576-A			C	D			G	H	J	K	2	2
SCREW (PUMP DISCHARGE)	9577												
	★ D0RY 9577-B *CM-1350	A	B			E	F						
	D2FZ 9577-A *CM-1502			C	D			G	H	J	K	L	M
NOZZLE (PUMP DISCHARGE)	★ D3RY 9577-A *CM-1721			C	D					J		L	M
	D4ZZ 9577-A *CM-1850							G	H		K		
SPRING (IDLE ADJUSTING NEEDLE)	D1FZ 9578-A *CM-1364	A	B	2	2	E	F	2	2	2	2	2	2
SPRING (FAST IDLE ADJUSTING SCREW)	9578												
	★ D1RY 9578-A *CM-1704	A	B			E	F						
	B8A 9578-B *CM-609			C	D			G	H	J	K	L	M
GASKET (PUMP DISCHARGE NOZZLE)	D4FZ 9580-A							G	H	J	K	2	2
LEVER and SHAFT ASSY. (THROTTLE)	9581												
Primary	★ D1RY 9581-A *CM-1486	A	B			E	F						
Tag codes D42E-AA,BA,MA	★ D2FZ 9581-CA *CM-1525			C	D							L	M
	★ D4FZ 9581-A *CM-1845							G	H	J	K		
Tag code D42E-AC Tag code D42E-KA,MA	★ D4FZ 9581-C *CM-1847											L	M
LEVER ASSY. (THROTTLE)	D4RY 9581-A *CM-1848							G	H	J	K		
Washer (throttle shaft assy.)-primary (metric)	250001-ES	A	B			E	F						
LEVER (THROTTLE)	9583												
Primary	D1RY 9583-A *CM-1511	A	B										
Primary	★ D2RY 9583-A *CM-1536			C	D								
Secondary	D1RY 9583-B *CM-1705	A	B										
Primary-inner	★ D1FZ 9583-B *CM-1370			C	D			G	H	J	K	L	M
Secondary	★ D1FZ 9583-C *CM-1382			C	D			G	H	J	K	L	M
	★ D3RY 9583-A *CM-1753					E	F						
Washer-flat	379039-S(XX-112-H)			C	D							L	M
Washer-lock	34804-S8(X-61)			C	D							L	M
PLATE (THROTTLE)	9585												
Primary	D1FZ 9585-A *CM-1371	A	B	C	D	E	F	G	H	J	K	L	M
Secondary	★ D1FZ 9585-B *CM-1378	A	B	C	D	E	F	G	H	J	K	L	M
SCREW (THROTTLE PLATE)	★ D1FZ 9586-A *CME-1342	4	4	4	4	4	4	4	4	4	4	4	4
SCREW (CHOKE PLATE)	D1FZ 9586-B *CM-1385-A	4	4	4	4	4	4	4	4	4	4	4	4
SPRING (CHOKE CONTROL)	D3RY 9587-A			C				G	H	J	K		
SPRING (ACCELERATOR PUMP)	D3FZ 9587-A				D			G	H	J	K	L	M

COPYRIGHT © 1986 — FORD MOTOR COMPANY — DEARBORN, MICHIGAN

1973/79 LINCOLN-MERCURY CARS

4 CYL. 2.0L(122 C.I.D.), 2.3L(140 C.I.D.)
6 CYL. 2.6L(159 C.I.D.), 2.8L(171 C.I.D.)

DESCRIPTION/RESTRICTIONS	PART NUMBER	CARB. PARTS LISTS 34A THRU 34M											
		A	B	C	D	E	F	G	H	J	K	L	M
GASKET (POWER VALVE)	★ D1FZ 9A588-A *CM-1372	A	B			E	F						
BUSHING (FAST IDLE ADJUSTMENT LEVER)	★ D1RY 9L588-A	A	B			E	F						
Washer (fast idle cam)-(metric)	E630021-S82	A	B			E	F						
LEVER and SHAFT ASSY. (SECONDARY THROTTLE PLATE)	9A592												
	★ D1RY 9A592-A *CM-1488	A	B			E	F						
	★ D1FZ 9A592-A *CM-1374			C	D			G	H	J	K	L	M
VALVE ASSY. (POWER)-primary	C2DZ 9594-A			C	D			G	H	J	K	L	M
CAM ASSY. (FAST IDLE)	D4ZZ 9597-A *CM-1854							G	H	J	K	L	M
ROD (FAST IDLING)	★ D1RY 9598-D *CM-1489	A	B			E	F						
ROD (CHOKE CONTROL)	D1FZ 9A599-A *CM-1380			C	D								
	★ D4ZZ 9A599-B *CM-2038							G	H	J	K	L	M
Pin-cotter	353610-S8(NN-126)			2	2			2	2	2	2	2	2
NUT (THROTTLE LEVER RETAINING)	★ D1FZ 9618-A	A	B	C	D	E	F	G	H	J	K	L	M
SPRING (ACCELERATOR PUMP LEVER RETURN)	9636												
	D1FZ 9636-A *CM-1352	A	B			E	F					L	M
	D2FZ 9636-A *CM-1500			C	D								
SCREW (THROTTLE STOP)	★ D1RY 9P651-A	A	B			E	F						
SPRING (ECONOMIZER)	D1RY 9P652-A	A	B			E	F						
TUBE (EMULSION)-primary-No. F50	D1RY 9P653-A	2	2			2	2						
STUD (AIR CLEANER RETAINING)	9A659												
	D2RY 9A659-A	4	4			4	4						
	D4FZ 9A659-A							G	H	J	K	2	2
	★ D4FZ 9A659-B							G	H	J	K		
SCREW (CHOKE CONTROL ADJUSTING)	D3FZ 9E684-A			C	D			G	H	J	K	L	M
WATER CHAMBER (THERMOSTATIC CHOKE)	D1RY 9A705-A	A	B			E	F						
COVER (THERMOSTATIC CHOKE HEAT)	9A705												
	D3RY 9A705-A			C	D								
	D4ZZ 9A705-A							G	H	J	K		
	D5ZZ 9A705-A											L	M
Washer (water chamber screw)-metric	112515-ES	A	B			E	F						
SPACER (THERMOSTATIC CHOKE SHAFT)	9714												
	D1RY 9714-A	A	B			E	F						
	D1FZ 9714-A			C	D								
LEVER ASSY. (THERMOSTATIC CHOKE)	★ D1RY 9K737-B	A	B			E	F						
Washer-spring (automatic choke shaft)-metric	112511-ES8	2	2			2	2						
Nut (choke lever retaining)-metric	E620011-S82	A	B			E	F						
SHAFT and LEVER ASSY. (CHOKE HOUSING)-also refer to group 9L554	9A753												
	★ D3RY 9A753-A *CM-1722			C	D								
	★ D4ZZ 9A753-A *CM-1843							G	H	J	K	L	M
LEVER (CHOKE THROTTLE)-INTER. CONNECTOR	D1RY 9A794-BA	A	B										

NOTICE: When the parts list suffix is shown in the quantity required column, the quantity is one (1).

DESCRIPTION/RESTRICTIONS	PART NUMBER	CARB. PARTS LISTS 34A THRU 34M											
		A	B	C	D	E	F	G	H	J	K	L	M
RETAINER (CHOKE ROD SEAL and BUSHING SPRING)	★ D1FZ 9836-A *CM-1402			C	D								
CLAMP (THERMOSTATIC CHOKE HOUSING LOCKING)	9842												
	D1RY 9842-A *CM-1490	A	B			E	F						
	D1FZ 9842-A *CM-1384			C	D			G	H	J	K	L	M
HOUSING (THERMOSTATIC CHOKE)	9848												
	★ D1RY 9848-A *CM-1491	A	B			E	F						
	D3RY 9848-A *CM-1723			C	D			G	H	J	K	L	
	D2FZ 9848-B *CM-1499												M
Screw (thermostat to automatic choke body)-metric	111647-ES8	3	3			3	3						
HOUSING (ELECTRIC CHOKE ASSIST)	D4FZ 9848-D *CM-1851							G	H	J	K	L	M
HOUSING and PLUGS ASSY. (CHOKE)	9849												
	D1RY 9849-A *CM-1493	A	B			E	F						
	★ D3FZ 9849-A *CM-1717			C	D								
	★ D4FZ 9849-A *CM-1839							G	H	J	K	L	M
BUSHING (CHOKE SHAFT SPRING)	D1RY 9851-A *CM-1492	A	B			E	F						
Screw and washer assy. (automatic choke body to carburetor)-metric	111645-ES8	2	2			2	2						
"O" ring seal (automatic choke body)-metric	116620-ES	A	B			E	F						
GASKET (THERMOSTATIC CHOKE CONTROL)-1/8" I.D. x 9/32" O.D. x 5/64" thick	D1FZ 9853-A *CG-328			C	D			G	H	J	K	L	M
GASKET (THERMOSTATIC CHOKE HOUSING)	9871												
	★ D1RY 9871-A *CG-337	A	B			E	F						
Inner	★ D1FZ 9871-A *CG-331			C	D								
Center	D1FZ 9871-B *CG-330			C	D			G	H	J	K	L	M
Outer	D5FZ 9871-A *CG-457			C	D			G	H	J	K	L	M
GASKET (WATER CHAMBER THERMOSTAT ASSY.)	★ D1RY 9871-B *CG-338	A	B			E	F						
SCREW (WATER COVER RETAINER)	★ D1FZ 9B874-D	A	B			E	F	G	H	J	K		
SCREW (RETAINING RING)	D1FZ 9B874-A			3	3			3	3	3	3	3	3
SCREW and WASHER ASSY. (CHOKE HOUSING)	9B874												
M4 x 1 11/32" long	D1FZ 9B874-B			2	2			2	2	2	2	2	2
M4 x 2" long	D1FZ 9B874-C			C	D			G	H	J	K	L	M
SCREW (WATER COVER RETAINING)	★ D3FZ 9B874-A			C	D							L	M
VALVE ASSY. (ACCELERATOR PUMP DISCHARGE)	★ D0RY 9902-A	A	B			E	F						
GASKET (PUMP DISCHARGE NOZZLE)	★ D1FZ 9926-A *CM-1399	A	B			E	F						

COPYRIGHT © 1986 — FORD MOTOR COMPANY — DEARBORN, MICHIGAN

DESCRIPTION/RESTRICTIONS	PART NUMBER	CARB. PARTS LISTS 34A THRU 34M											
		A	B	C	D	E	F	G	H	J	K	L	M
COVER (ECONOMIZER VALVE)	★ D1RY 9930-A *CM-1494	A	B			E	F						
Screw and washer assy. (economy valve cover)-metric	111643-ES8	6	6			6	6						
TUBE (MAIN WELL)-also refer to group 9P653	9991												
Primary	D4FZ 9991-A											L	M
Secondary	★ D1FZ 9991-B			2	2			2	2	2	2	L	M

NOTICE: When the parts list suffix is shown in the quantity required column, the quantity is one (1).

DESCRIPTION/RESTRICTIONS	PART NUMBER	CARB. PARTS LISTS 34N THRU 34Z											
		N	P	Q	R	S	T	U	V	W	X	Y	Z
GASKET SET – Refer to carburetor identification chart–Section 95	9502												
TUNE-UP KIT – Refer to carburetor identification chart–Section 95	9A586												
FILTER ASSY. (FUEL)	D3AZ 9155-A *FG-14-A	N	P	Q	R	S	T	U	V	W	X	Y	Z
LIMITER (IDLE ADJUSTING)	D6PZ 9J500-A *CM-747-B	N	P	Q	R	S	T	U	V	W	X	Y	Z
RETAINER (FAST IDLE SEAL)	D1FZ 9B501-A *CM-1327	N	P	Q	R	S	T	U	V	W	X	Y	Z
PIN (THROTTLE RETAINING SPRING)	D5FZ 9B503-A *CM-2257									W	X	Y	Z
LEVER (THROTTLE)-SECONDARY	★ D1FZ 9C504-A *CM-1329	N	P	Q	R	S	T	U	V				
BUSHING (THROTTLE SHAFT)	★ D1FZ 9B508-A *CM-1330	N	P	Q	R	S	T	U	V				
SCREW and WASHER ASSY. (DIAPHRAGM COVER)-(4) retains 9528, (3) retains 9J554	D1FZ 9S510-B	7	7	7	7	7	7	7	7	7	7	7	7
BAFFLE (FLOAT BOWL)	★ D4FZ 9A517-A *CM-2081	N	P	Q	R	S	T	U	V				
SCREEN (FUEL FILTER)	D1FZ 9F525-A	N	P	Q	R	S	T	U	V	W	X	Y	Z
NUT (THROTTLE LEVER and CHOKE SHAFT)-(1) retains 9C504 and (1) retains 9D541	D1FZ 9B527-A *CM-1400	2	2	2	2	2	2	2	2	2	2	2	2
Washer (use with throttle lever nut)	44717-S8(X-16)									W	X	Y	Z
COVER ASSY. (ACCELERATOR PUMP)	★ D2FZ 9528-B *CM-1332-A	N	P	Q	R	S	T	U	V	W	X	Y	Z
SCREW and WASHER ASSY. (AIR HORN)	D1FZ 9F529-A	4	4	4	4	4	5	5	5	5	5	5	5
	D4FZ 9F529-A	1	1	1	1	1							
Choke housing	D5FZ 9F529-A									W	X	Y	Z
ROD (FAST IDLE CAM)	★ D1FZ 9D530-A *CM-1333	N	P	Q	R	S	T	U	V	W		Y	Z
	D5FZ 9D530-A *CM-2348										X		

COPYRIGHT © 1986 — FORD MOTOR COMPANY — DEARBORN, MICHIGAN

1973/79 LINCOLN-MERCURY CARS

4 CYL. 2.0L(122 C.I.D.), 2.3L(140 C.I.D.)
6 CYL. 2.6L(159 C.I.D.), 2.8L(171 C.I.D.)

DESCRIPTION/RESTRICTIONS	PART NUMBER	CARB. PARTS LISTS 34N THRU 34Z											
		N	P	Q	R	S	T	U	V	W	X	Y	Z
JET (MAIN METERING)	9533												
#140-Primary Secondary-tag codes D42E-CB,DB Secondary Secondary-tag code D52E-DB	D2RY 9533-C *CJ-215	N	P		R			U	V		X		Z
#142-Primary	D4FZ 9533-A *CJ-248								V			Y	
#132-Primary Secondary Primary-tag code D52E-BA Secondary-tag code D52E-DD Secondary-tag code D52E-CB	★ D2FZ 9533-A *CJ-204	N	P					U		W	X	Y	Z Z
#142-Primary	D1FZ 9533-C *CJ-198			Q		S							
#135-tag codes D42E-CA,DA Secondary Secondary-tag codes D52E-CA,CC Primary-tag code D52E-BB	★ D1FZ 9533-D *CJ-201	2	2	Q	R	S	2				X	Y	
#145-Primary	D1FZ 9533-B *CJ-199									W			
LEVER (FAST IDLE ADJUSTING)	9538												
	★ D4ZZ 9538-A *CM-1846	N	P					U	V	W	X	Y	Z
	★ D4ZZ 9538-B *CM-1842			Q	R	S	T						
SPRING (THROTTLE RETURN)	9A538												
Secondary	D7FZ 9A538-A *CM-2488	N	P	Q	R	S	T						
Primary	★ D4ZZ 9A538-A *CM-1846	N	P	Q	R	S	T	U	V				
	D1FZ 9A538-A *CM-1335									W	X	Y	Z
SCREW (FAST IDLER ADJUSTING)	9B538												
Screw-idle speed	D1FZ 9B538-A	N	P	Q	R	S	T	U	V	W	X	Y	Z
	D7FZ 9B538-A	N	P	Q	R	S	T	U	V				
SCREW (SECONDARY IDLE and DIAPHRAGM ADJUSTING)	D5FZ 9B538-A *CM-2227	N	P	Q	R	S	T	U	V	W	X	Y	Z
PLUG (FUEL FILTER-RETAINER)	★ D1FZ 9A540-A	N	P	Q	R	S	T	U	V	W	X	Y	Z
TUBE (HI-SPEED AIR BLEED)	9G540												
#180-Primary	D1FZ 9G540-B				R	S	T						
#170-Primary-tag codes D42E-CB,DB Primary Primary-tag code D52E-BA Secondary	D1FZ 9G540-A	N	P	Q	R	S		U	V		X		
#175-Primary-tag codes D42E-CA,DA Primary-tag code D52E-BB Primary-tag code D52E-DB	★ D4ZZ 9G540-A	N	P								X		Z
#199-Primary Secondary-tag code D42E-DA	D2RY 9G540-D		P	Q						W		Y	
#195-Secondary Secondary-tag code D42E-DB	D2FZ 9G540-C	N	P				T	U	V	W	X	Y	Z
#185-Primary-tag code D52E-DD	D5FZ 9G540-A												Z

NOTICE: When the parts list suffix is shown in the quantity required column, the quantity is one (1).

DESCRIPTION/RESTRICTIONS	PART NUMBER	CARB. PARTS LISTS 34N THRU 34Z											
		N	P	Q	R	S	T	U	V	W	X	Y	Z
NEEDLE (IDLE ADJUSTING)	D4ZZ 9541-A *CM-1853	N	P	Q	R	S	T	U	V	W	X	Y	Z
LEVER (CHOKE CONTROL)	9D541												
Tag code D42E-CB	★ D1FZ 9D541-A *CM-1348	N	P		R	S	T	U	V	W	X	Y	Z
Tag code D42E-CA	★ D4ZZ 9D541-A *CM-1840	N		Q									
Washer (use with choke control lever)	44717-S8(X-16)	N	P	Q	R	S	T	U	V	W	X	Y	Z
JET (IDLE)	9542												
#80-Secondary	★ D3FZ 9542-A *CJ-233			Q	R	S							
#50-Secondary	D1FZ 9542-A *CJ-197	N	P					U	V	W	X	Y	Z
#65-Primary	★ D3RY 9542-D *CJ-237	N	P		R		T						
#60-Primary Secondary	D2FZ 9542-C *CJ-212			Q		S	T						
#100-Primary-tag code D52E-AB	★ D5FZ 9542-A *CJ-268									W			
#90-Primary Tag codes D52E-AA,AC	D5ZZ 9542-A *CJ-269									W	X	Y	Z
PLATE (CHOKE)	★ D4FZ 9545-A *CM-1857	2	2	2	2	2	2	2	2	2	2	2	2
SHAFT and LEVER ASSY. (CHOKE)	★ D4ZZ 9546-A *CM-2001	N	P	Q	R	S	T	U	V	W	X	Y	Z
DIAPHRAGM and RETAINER ASSY. (CHOKE CONTROL)	9J549												
Tag code D42E-CA	★ D2RY 9J549-A *CK-1535	N											
Tag code D42E-CB	D1FZ 9J549-A *CK-1356	N	P	Q	R	S	T	U	V	W	X	Y	Z
FLOAT ASSY.	D1FZ 9550-A *CM-1357	N	P	Q	R	S	T	U	V	W	X	Y	Z
VALVE ASSY. (POWER)-Refer to group 9594	9G551												
COVER (CHOKE CONTROL DIAPHRAGM)- Tag codes D42E-CA,DA	D3FZ 9J554-A	N	P										
Tag codes D42E-CB,DB	★ D4FZ 9J554-A	N	P	Q	R	S	T	U	V	W	X	Y	Z
SHAFT (FLOAT LEVER)	D1FZ 9558-A *CM-1359	N	P	Q	R	S	T	U	V	W	X	Y	Z
HUB (FAST IDLE CAM)	D1FZ 9D558-A *CM-1360	N	P	Q	R	S	T	U	V	W	X	Y	Z
SCREW and WASHER ASSY. (FAST IDLE LEVER)	D1FZ 9D558-B *CM-1401	N	P	Q	R	S	T	U	V	W	X	Y	Z
DIAPHRAGM ASSY. (ACCELERATOR PUMP)	D2FZ 9B559-A *CM-1503	N	P	Q	R	S	T	U	V	W	X	Y	Z
GASKET (CARBURETOR AIR HORN THROTTLE BODY)	D1FZ 9561-A *CG-326	N	P	Q	R	S	T	U	V				
	D7FZ 9561-A *CG-490									W	X	Y	Z
VALVE and SEAT ASSY. (FUEL INLET)- incl. (1) D1FZ 9569-A gasket	E1PZ 9564-B *CV-125	N	P	Q	R	S	T	U	V	W	X	Y	Z

COPYRIGHT © 1986 — FORD MOTOR COMPANY — DEARBORN, MICHIGAN

1973/79 LINCOLN-MERCURY CARS

4 CYL. 2.0L(122 C.I.D.), 2.3L(140 C.I.D.)
6 CYL. 2.6L(159 C.I.D.), 2.8L(171 C.I.D.)

DESCRIPTION/RESTRICTIONS	PART NUMBER	CARB. PARTS LISTS 34N THRU 34Z											
		N	P	Q	R	S	T	U	V	W	X	Y	Z
ECONOMIZER ASSY.	9A565												
	D4FZ 9A565-A *CV-102	N	P	Q	R	S	T	U			X	Y	Z
	D4FZ 9A565-D *CE-104								V	W			
Screw and washer assy. (economizer)-No. 8-32 x 5/8"	357136-S(BB-56)	3	3	3	3	3	3	3	3	3	3	3	3
WASHER (THROTTLE SHAFT NUT LOCK PRIMARY)	9568												
	★ D1FZ 9568-B	N	P										
	D4ZZ 9568-A			Q	R	S	T	U	V				
WASHER (LEVELING SHAFT)-primary	D1FZ 9568-A *CG-327	N	P	Q	R	S	T	U	V				
GASKET (FUEL INLET NEEDLE SEAT)	D1FZ 9569-A	N	P	Q	R	S	T	U	V	W	X	Y	Z
RETAINER (IDLE JET)	D1FZ 9575-A *CM-1339-A	2	2	2	2	2	2	2	2	2	2	2	2
BALL (ACCELERATOR PUMP DISCHARGE)	EAA 9576-A	2	2	2	2	2	2	2	2	2	2	2	2
BALL (ACCELERATOR PUMP CHECK)	357186-S(AA-1)									W	X	Y	Z
SCREW (PUMP DISCHARGE)	D2FZ 9577-A *CM-1502	N	P	Q	R	S	T	U	V	W	X	Y	Z
NOZZLE (PUMP DISCHARGE)	★ D3RY 9577-A *CM-1721	N	P	Q	R	S	T	U	V				
	D3FZ 9577-A *CM-1719									W	X	Y	Z
SPRING (IDLE ADJUSTING NEEDLE)	D1FZ 9578-A *CM-1364	2	2	2	2	2	2	2	2	2	2	2	2
SPRING (FAST IDLE ADJUSTING SCREW)	B8A 9578-B *CM-609	N	P	Q	R	S	T	U	V				
GASKET (PUMP DISCHARGE NOZZLE)	D4FZ 9580-A	2	2	2	2	2	2	2	2	2	2	2	2
LEVER and SHAFT ASSY. (THROTTLE)	9581												
	★ D2FZ 9581-CA *CM-1525	N	P	Q	R	S	T						
	★ D4FZ 9581-C *CM-1847							U	V				
LEVER (THROTTLE)	9583												
Primary-inner	★ D1FZ 9583-B *CM-1370	N	P	Q	R	S	T	U	V				
Secondary	★ D1FZ 9583-C *CM-1382	N	P	Q	R	S	T	U	V				
Washer-flat	379039-S(XX-112-H)	N	P	Q	R	S	T	U	V	W	X	Y	Z
Washer-lock	34804-S8(X-61)	N	P	Q	R	S	T	U	V	W	X	Y	Z
PLATE (THROTTLE)	9585												
Primary	D1FZ 9585-A *CM-1371	N	P	Q	R	S	T	U	V				
Secondary	★ D1FZ 9585-B *CM-1378	N	P	Q	R	S	T	U	V				
SCREW (THROTTLE PLATE)	★ D1FZ 9586-A *CME-1342	4	4	4	4	4	4	4	4				
SCREW (CHOKE PLATE)	D1FZ 9586-B *CM-1385-A	4	4	4	4	4	4	4	4	4	4	4	4
SPRING (CHOKE CONTROL)	D3RY 9587-A	N		Q	R	S	T	U	V				
SPRING (ACCELERATOR PUMP)	D3FZ 9587-A	N	P	Q	R	S	T	U	V	W	X	Y	Z
CHOKE ASSIST	D5FZ 9587-A *CM-2256									W	X	Y	Z
LEVER and SHAFT ASSY. (SECONDARY THROTTLE PLATE)	★ D1FZ 9A592-A *CM-1374	N	P	Q	R	S	T	U	V				

NOTICE: When the parts list suffix is shown in the quantity required column, the quantity is one (1).

DESCRIPTION/RESTRICTIONS	PART NUMBER	CARB. PARTS LISTS 34N THRU 34Z											
		N	P	Q	R	S	T	U	V	W	X	Y	Z
VALVE ASSY. (POWER)	9594												
Primary	C2DZ 9594-A	N	P					U	V				
	D4FZ 9594-B *CJ-245			Q		S	T						
	★ D4FZ 9594-C *CJ-246				R								
CAM ASSY. (FAST IDLE)	D4ZZ 9597-A *CM-1854	N	P	Q	R	S	T	U	V				
	D6PZ 9597-A *CM-2353									W	X	Y	Z
ROD (CHOKE CONTROL)	★ D4ZZ 9A599-B	N	P	Q	R	S	T	U	V	W	X	Y	Z
Pin-cotter	353610-S8(NN-126)	2	2	2	2	2	2	2	2	2	2	2	2
NUT (THROTTLE LEVER RETAINING)	★ D1FZ 9618-A	N	P	Q	R	S	T	U	V				
SPRING (ACCELERATOR PUMP LEVER RETURN)-tag code D52E-CA	D1FZ 9636-A *CM-1352		P								X	Y	Z
Tag code D52E-AA	D2FZ 9636-A *CM-1500									W			
Tag codes D52E-AC,CC	★ D5ZZ 9636-A *CM-2293									W	X	Y	Z
STUD (AIR CLEANER TO CARBURETOR)	D4FZ 9A659-A	2	2	2	2	2	2	2	2	2	2	2	2
SCREW (CHOKE CONTROL ADJUSTING)	D3FZ 9E684-A	N	P	Q	R	S	T	U	V	W	X	Y	Z
COVER (THERMOSTATIC CHOKE HEAT)-	D5ZZ 9A705-A	N	P	Q	R	S	T	U	V				
	D5PZ 9A705-A									W	X	Y	Z
SHAFT and LEVER ASSY. (CHOKE HOUSING)	★ D4ZZ 9A753-A *CM-1843	N	P	Q	R	S	T	U	V				
	D5PZ 9A753-B *CM-2117									W	X	Y	Z
CLAMP (THERMOSTATIC CHOKE HOUSING LOCKING)	D1FZ 9842-A *CM-1384	N	P	Q	R	S	T	U	V	W	X	Y	Z
HOUSING (THERMOSTATIC CHOKE)	9848												
	D2FZ 9848-B *CM-1499		P	Q	R	S	T						
	D3RY 9848-A *CM-1723	N						U	V				
	D5PZ 9848-A *CM-2118									W	X	Y	Z
HOUSING (ELECTRIC CHOKE HEATER)	D4FZ 9848-D *CM-1851	N	P	Q	R	S	T	U	V				
	D5FZ 9848-A *CM-2255									W	X	Y	Z
HOUSING and PLUGS ASSY. (CHOKE)	★ D4FZ 9849-A *CM-1839	N	P	Q	R	S	T	U	V				
	★ D5FZ 9849-A *CM-2259									W	X	Y	Z
GASKET (THERMOSTATIC CHOKE CONTROL) -1/8" I.D. x 9/32" O.D. x 5/64" thick	D1FZ 9853-A *CG-328	N	P	Q	R	S	T	U	V	W	X	Y	Z
SOLENOID and BRACKET ASSY. (THROTTLE)	D5PZ 9D856-A *CS-1									W	X	Y	Z
GASKET (THERMOSTATIC CHOKE HOUSING)	9871												
Center	D1FZ 9871-B *CG-330	N	P	Q	R	S	T	U	V	W	X	Y	Z
Outer	D5FZ 9871-A *CG-457	N	P	Q	R	S	T	U	V	W	X	Y	Z

COPYRIGHT © 1986 — FORD MOTOR COMPANY — DEARBORN, MICHIGAN

1973/79 LINCOLN-MERCURY CARS

4 CYL. 2.0L(122 C.I.D.), 2.3L(140 C.I.D.)
6 CYL. 2.6L(159 C.I.D.), 2.8L(171 C.I.D.)

DESCRIPTION/RESTRICTIONS	PART NUMBER	CARB. PARTS LISTS 34N THRU 34Z											
		N	P	Q	R	S	T	U	V	W	X	Y	Z
SCREW (RETAINING RING)	D1FZ 9B874-A	3	3	3	3	3	3	3	3	3	3	3	3
SCREW and WASHER ASSY. (CHOKE HOUSING)	9B874												
M4 x 1 11/32" long	D1FZ 9B874-B	2	2	2	2	2	2	2	2	3	3	3	3
M4 x 2" long	D1FZ 9B874-C	N	P	Q	R	S	T	U	V				
SCREW (WATER COVER RETAINING)	★ D3FZ 9B874-A	N	P	Q	R	S	T	U	V	W	X	Y	Z
TUBE (MAIN WELL)	★ D1FZ 9991-B	2	2							W	X	Y	Z
Secondary	D1FZ 9991-A			2	2	2	T						
Primary	D4FZ 9991-A	N	P					U	V	W	X	Y	Z

NOTICE: When the parts list suffix is shown in the quantity required column, the quantity is one (1).

DESCRIPTION/RESTRICTIONS	PART NUMBER	CARB. PARTS LISTS 34AA THRU 34AM											
		AA	AB	AC	AD	AE	AF	AG	AH	AJ	AK	AL	AM
NOTE: † Not a part of service carburetor													
GASKET SET – Refer to carburetor identification chart–Section 95	9502												
TUNE-UP KIT – Refer to carburetor identification chart–Section 95	9A586												
FILTER ASSY. (FUEL)	D3AZ 9155-A *FG-14-A	AA	AB	AC					AH	AJ	AK	AL	
LIMITER (IDLE ADJUSTING)	D6PZ 9J500-A *CM-747-B	†AA	AB	AC					†AH	AJ	AK	†AL	
	D1RY 9J500-A *CM-1472				AD	AE	AF	AG					
SEAL (AIR CLEANER AIR DUCT)	D1RY 9B501-A *CM-1480				AD	AE	AF	AG					
RETAINER (FAST IDLE SEAL)	D1FZ 9B501-A *CM-1327	AA	AB	AC					AH	AJ	AK	AL	
	D1FZ 9B501-B *CM-1482				AD	AE	AF	AG					
PIN (THROTTLE RETAINING SPRING)	D5FZ 9B503-A *CM-2257								AH			AL	
LEVER (THROTTLE)-Secondary	★ D1FZ 9C504-A *CM-1329	AA	AB	AC	AD	AE	AF	AG	AH	AJ	AK		
Primary	D1RY 9C504-B *CM-1481				AD	AE	AF	AG					
Washer (throttle lever secondary)–metric	111514-ES8				AD	AE	AF	AG					
Nut (throttle lever fixing secondary)–metric	114477-ES8				AD	AE	AF	AG					
BUSHING (THROTTLE SHAFT)	★ D1FZ 9B508-A *CM-1330	AA	AB	AC					AH	AJ	AK		
	D1RY 9B508-B *CM-1482				AD	AE	AF	AG					
SCREW and WASHER ASSY. (DIAPHRAGM COVER)-(4) retainers 9528, (3) retainers 9J554	D1FZ 9S510-B	7	7	7	7	7	7	7	7	7	7	7	
BAFFLE (FLOAT BOWL)	★ D4FZ 9A517-A *CM-2081		AB							AJ	AK		
SCREEN (FUEL FILTER)	D1FZ 9F525-A	AA	AB	AC	AD	AE	AF	AG	AH	AJ	AK	AL	
SPRING (FAST IDLE CAM)	★ D1RY 9G526-A *CM-1483				AD	AE	AF	AG					
NUT (THROTTLE LEVER and CHOKE SHAFT)–(1) retains 9C504 and (1) retains 9D541	D1FZ 9B527-A *CM-1400	2	2	2					2	2	2	2	
COVER ASSY. (ACCELERATOR PUMP)	D6PZ 9528-A *CM-2384	AA	AB	AC					AH	AJ	AK	AL	
	D1RY 9528-A *CM-1482				AD	AE	AF	AG					
SCREW and WASHER ASSY. (AIR HORN)	D1FZ 9F529-A	5	5	5	5	5	5	5	5	5	5		
Air horn	D4FZ 9F529-A			AC					AH	AJ	AK		
	D5FZ 9F529-A											AL	

COPYRIGHT © 1986 — FORD MOTOR COMPANY — DEARBORN, MICHIGAN

1973/79 LINCOLN-MERCURY CARS

4 CYL. 2.0L(122 C.I.D.), 2.3L(140 C.I.D.)
6 CYL. 2.6L(159 C.I.D.), 2.8L(171 C.I.D.)

DESCRIPTION/RESTRICTIONS	PART NUMBER	CARB. PARTS LISTS 34AA THRU 34AM											
		AA	AB	AC	AD	AE	AF	AG	AH	AJ	AK	AL	AM
ROD (FAST IDLE CAM)	★ D1FZ 9D530-A *CM-1333	AA	AB	AC						AJ	AK		
	D5FZ 9D530-A *CM-2348								AH			AL	
JET (MAIN METERING)	9533												
#140-Secondary	D2RY 9533-C *CJ-215	AA											
#132-Primary Secondary	★ D2FZ 9533-A *CJ-204	AA							AH			AL	
#145-Primary Primary-tag codes D52E-FA,GA Primary-tag code D5PE-ADA	D1FZ 9533-B *CJ-199		AB		AD				AH			AL	
#137-Primary Primary-tag code D52E-EA	D1FZ 9533-C *CJ-198										AK	AL	
#135-Secondary Primary Primary-tag code D5PE-ACA Primary and Secondary	★ D1FZ 9533-D *CJ-201		AB	2		AE		AG	AH	2	AK		
#137-Primary	D1RY 9533-C *CJ-202						AF						
#160-Secondary	D2RY 9533-A *CJ-228					AE		AG					
#140-Secondary	D0RY 9533-D *CJ-192				AD		AF						
LEVER (FAST IDLE ADJUSTING)	9538												
	★ D4ZZ 9538-A *CM-1846	AA	AB									AL	
	★ D4ZZ 9538-B *CM-1842			AC					AH	AJ	AK		
	D1RY 9538-B *CM-1703				AD	AE	AF	AG					
Screw and washer assy. (fast idle lever)-metric	220006-ES8				AD	AE	AF	AG					
SPRING (THROTTLE RETURN)	9A538												
Secondary	D7FZ 9A538-A *CM-2488	AA	AB	AC	AD	AE	AF	AG	AH	AJ	AK	AL	
Primary	★ D4ZZ 9A538-A *CM-1846	AA	AB	AC					AH	AJ	AK		
Primary	D1FZ 9A538-A *CM-1335				AD	AE	AF	AG					
SCREW (FAST IDLER ADJUSTING)	9B538												
Screw-idle speed	D1FZ 9B538-A	AA	AB	AC					AH	AJ	AK	AL	
	D7FZ 9B538-A	AA	AB	AC						AJ	AK		
	D1RY 9B538-A				AD	AE	AF	AG					
Idle speed	D1FZ 9B538-C				AD	AE	AF	AG					
SCREW (SECONDARY IDLE and DIAPHRAGM ADJUSTING)	D5FZ 9B538-A *CM-2227	AA	AB	AC					AH	AJ	AK	AL	
PLUG (FUEL FILTER-RETAINER)	★ D1FZ 9A540-A	AA	AB	AC	AD	AE	AF	AG	AH	AJ	AK	AL	

NOTICE: When the parts list suffix is shown in the quantity required column, the quantity is one (1).

DESCRIPTION/RESTRICTIONS	PART NUMBER	CARB. PARTS LISTS 34AA THRU 34AM											
		AA	AB	AC	AD	AE	AF	AG	AH	AJ	AK	AL	AM
TUBE (HI-SPEED AIR BLEED)	9G540												
#165-Primary	D4RY 9G540-D				AD		AF						
#170-Primary Secondary	D1FZ 9G540-A	AA	AB							AJ	AK		
#180-Primary	D1FZ 9G540-B			AC		AE		AG	AH				
#190-Primary Primary-tag codes D52E-FA,GA	D2RY 9G540-D		AB							AJ	AK	AL	
#130-Secondary	D4RY 9G540-A				AD		AF						
#140-Secondary	★ D2RY 9G540-A					AE		AG					
#195-Secondary	D2FZ 9G540-C	AA		AC					AH			AL	
#185-Primary-tag code D52E-EA	D5FZ 9G540-A											AL	
NEEDLE (IDLE ADJUSTING)	D4ZZ 9541-A *CM-1853	AA	AB	AC					AH	AJ	AK	AL	
	D4RY 9541-A *CM-2004				AD	AE	AF	AG					
LEVER (CHOKE CONTROL)	9D541												
	★ D1FZ 9D541-A *CM-1348	AA	AB	AC					AH	AJ		AL	
	★ D4ZZ 9D541-A *CM-1840										AK		
Washer (use with choke control lever)	44717-S8(X-16)	AA	AB	AC					AH	AJ	AK	AL	
JET (IDLE)	9542												
#55-Secondary Primary	★ D1FZ 9542-B *CJ-200	AA	AB	AC	AD	AE		AG		AJ			
#50-Primary	D1FZ 9542-A *CJ-197				AD	AE	AF	AG	AH				
#60-Primary	D2FZ 9542-C *CJ-212						AF				AK		
#65-Primary	★ D3RY 9542-D *CJ-237		AB	AC									
#70-Primary	★ D5PZ 9542-A *CJ-260	AA											
#80-Secondary Primary-tag code D52E-EA	★ D3FZ 9542-A *CJ-233									AJ	AK	AL	
#90-Primary-tag codes D52E-FA,GA Secondary	D5ZZ 9542-A *CJ-269								AH			AL	
DIAPHRAGM and SHAFT ASSY. (ECONOMY)	★ D2RY 9L543-B				AD	AE	AF	AG					
PLATE (CHOKE)	★ D4FZ 9545-A *CM-1857	AA	AB	AC						2	2	2	
	D1FZ 9545-B *CM-1379				AD	AE	2	2	2				
SHAFT and LEVER ASSY. (CHOKE)	★ D4ZZ 9546-A *CM-2001	AA	AB	AC					AH	AJ	AK	AL	
	D1RY 9546-B *CM-1486				AD	AE	AF	AG					
RETAINER (CHOKE SHAFT ASSY.)	D1RY 9J548-A				AD	AE	AF	AG					
DIAPHRAGM and RETAINER ASSY. (CHOKE CONTROL)	D1FZ 9J549-A *CK-1356	AA	AB	AC					AH		AK	AL	
	★ D3FZ 9J549-A *CK-1774									AJ			
FLOAT ASSY.	D1FZ 9550-A *CM-1357	AA	AB						AH	AJ	AK	AL	
	D3RY 9550-A *CM-1780				AD	AE	AF	AG					

COPYRIGHT © 1986 — FORD MOTOR COMPANY — DEARBORN, MICHIGAN

DESCRIPTION/RESTRICTIONS	PART NUMBER	CARB. PARTS LISTS 34AA THRU 34AM											
		AA	AB	AC	AD	AE	AF	AG	AH	AJ	AK	AL	AM
VALVE ASSY. (POWER)-Also refer to group 9594	D1RY 9G551-A *CE-93				AD	AE	AF						
	D1RY 9G551-B *CE-94							AG					
COVER (CHOKE CONTROL DIAPHRAGM) Tag codes D42E-CB,DB	★ D4FZ 9J554-A	AA	AB	AC					AH	AJ	AK	AL	
SHAFT and LEVER ASSY. (AUTOMATIC CHOKE)-also refer to group 9A753	D4RY 9L554-A				AD	AE	AF	AG					
Clip (choke shaft)-metric	E860041-S				AD	AE	AF	AG					
SHAFT (FLOAT LEVER)	D1FZ 9558-A *CM-1359	AA	AB	AC	AD	AE	AF	AG	AH	AJ	AK	AL	
HUB (FAST IDLE CAM)	D1FZ 9D558-A *CM-1360	AA	AB	AC	AD	AE	AF	AG	AH	AJ	AK	AL	
SCREW and WASHER ASSY. (FAST IDLE LEVER)	D1FZ 9D558-B *CM-1401	AA	AB	AC						AJ	AK	AL	
DIAPHRAGM ASSY. (ACCELERATOR PUMP)	D2FZ 9B559-A *CM-1503	AA	AB	AC					AH	AJ	AK	AL	
	D1FZ 9B559-A *CM-1361				AD	AE	AF	AG					
GASKET (FLOAT BOWL)	9561												
	D1FZ 9561-A *CM-326	AA	AB	AC	AD	AE	AF	AG		AJ	AK		
	D7FZ 9561-A *CG-490								AH			AL	
VALVE and SEAT ASSY. (FUEL INLET)	9564												
Incl. (1) D1FZ 9569-A gasket	E1PZ 9564-B *CV-125	AA	AB	AC					AH	AJ	AK	AL	
	D1RY 9564-A *CV-89				AD	AE	AF	AG					
VALVE ASSY. (FUEL ENRICHMENT)-also refer to group 9L543	9A565												
	D4FZ 9A565-A *CE-102	AA	AB	AC							AK		
	D4FZ 9A565-B *CE-116									AJ			
	D4FZ 9A565-D *CE-104								AH			AL	
Screw and washer assy. (economizer)-No. 8-32 x 1/2"	43251-S8(U-73)	3	3	3						3	3	3	
WASHER (THROTTLE SHAFT NUT LOCK PRIMARY)	D4ZZ 9568-A	AA	AB	AC					AH	AJ	AK		
	★ D1FZ 9568-B				AD	AE	AF	AG		AJ	AK		
WASHER (LEVELING SHAFT)-primary	D1FZ 9568-A	AA	AB	AC					AH	2	2		
GASKET (FUEL INLET NEEDLE SEAT)	D1FZ 9569-A *CG-327	AA	AB	AC	AD	AE	AF	AG	AH	AJ	AK	AL	
PUMP (DISCHARGE NOZZLE)-No. 50	D4RY 9A574-A				AD	AE	AF	AG					
RETAINER (IDLE JET)	D1FZ 9575-A *CM-1339-A	2	2	2	2	2	2	2	2	2	2	2	
BALL (ACCELERATOR PUMP DISCHARGE)	EAA 9576-A	2	2	2	2	2	2	2	2	2	2	2	
VALVE (ACCELERATOR PUMP CHECK)	D1FZ 9576-A				AD	AE	AF	AG					
SCREW (PUMP DISCHARGE)	D2FZ 9577-A *CM-1502	AA	AB	AC					AH	AJ	AK	AL	
	★ D0RY 9577-B *CM-1350				AD	AE	AF	AG					

NOTICE: When the parts list suffix is shown in the quantity required column, the quantity is one (1).

DESCRIPTION/RESTRICTIONS	PART NUMBER	CARB. PARTS LISTS 34AA THRU 34AM											
		AA	AB	AC	AD	AE	AF	AG	AH	AJ	AK	AL	AM
NOZZLE (PUMP DISCHARGE)	9577												
	D3FZ 9577-A *CM-1719	AA	AB						AH			AL	
	★ D3RY 9577-A *CM-1721			AC						AJ	AK		
SPRING (IDLE ADJUSTING NEEDLE)	D1FZ 9578-A *CM-1364	2	2	2	AD	AE	AF	AG	AH	2	2	2	
SPRING (FAST IDLE ADJUSTING SCREW)	B8A 9578-B *CM-609	AA	AB	AC					AH	AJ	AK	AL	
	D1RY 9578-A *CM-1704				AD	AE	AF	AG					
GASKET (PUMP DISCHARGE NOZZLE)	D4FZ 9580-A	AA	AB	AC					AH	2	2	2	
LEVER and SHAFT ASSY. (THROTTLE)	9581												
	★ D2FZ 9581-CA *CM-1525		AB	AC						AJ	AK		
	★ D4FZ 9581-A *CM-1845	AA							AH				
	D1RY 9581-A *CM-1486				AD	AE	AF	AG					
Washer (throttle shaft)-metric	250001-ES				AD	AE	AF	AG					
LEVER (THROTTLE)	9583												
Primary-inner	D1FZ 9583-B *CM-1370	AA	AB	AC					AH	AJ	AK		
Secondary	D1FZ 9583-C *CM-1382	AA	AB	AC					AH	AJ	AK		
Primary	D4RY 9583-A *CM-2002				AD	AE	AF	AG					
Secondary	D1RY 9583-B *CM-1705				AD	AE	AF	AG					
Washer-flat	379039-S(XX-112-H)	AA	AB	AC					AH	AJ	AK		
Washer-lock	34804-S8(X-61)	AA	AB	AC					AH				
Washer-No. 12	44717-S8(X-16)									AJ	AK		
PLATE (THROTTLE)	9585												
Primary	D1FZ 9585-A *CM-1371	AA	AB	AC	AD	AE	AF	AG	AH	AJ	AK		
Secondary	★ D1FZ 9585-B *CM-1378	AA	AB	AC	AD	AE	AF	AG	AH	AJ	AK		
SCREW (THROTTLE PLATE)	★ D1FZ 9586-A *CME-1342	2	2	4	4	4	4	4	4	4	4		
SCREW (CHOKE PLATE)	D1FZ 9586-B *CM-1385-A	4	4	4	4	4	4	4	4	4	4	4	
SPRING (CHOKE CONTROL)	D3RY 9587-A *CM-1748		AB	AC					AH	AJ	AK		
SPRING (ACCELERATOR PUMP)	D3FZ 9587-A *CM-1718			AC					AH	AJ	AK	AL	
Choke assist Accelerator pump	D5FZ 9587-A *CM-2256											AL AL	
GASKET (POWER VALVE)	★ D1FZ 9A588-A *CM-1372				AD	AE	AF	AG	AH				
BUSHING (FAST IDLE ADJUSTMENT LEVER)	D1RY 9L588-A				AD	AE	AF	AG					
Washer (fast idle cam)-metric	E630021-S82				AD	AE	AF	AG					
LEVER and SHAFT ASSY. (SECONDARY THROTTLE PLATE)	★ D1FZ 9A592-A *CM-1374	AA	AB	AC					AH	AJ	AK		
	★ D1RY 9A592-A *CM-1488				AD	AE	AF	AG					

COPYRIGHT © 1986 — FORD MOTOR COMPANY — DEARBORN, MICHIGAN

1973/79 LINCOLN-MERCURY CARS

4 CYL. 2.0L(122 C.I.D.), 2.3L(140 C.I.D.)
6 CYL. 2.6L(159 C.I.D.), 2.8L(171 C.I.D.)

DESCRIPTION/RESTRICTIONS	PART NUMBER	CARB. PARTS LISTS 34AA THRU 34AM											
		AA	AB	AC	AD	AE	AF	AG	AH	AJ	AK	AL	AM
NOTE: † Not a part of service carburetor													
VALVE ASSY. (POWER)-Also refer to group 9G551	D4FZ 9594-B *CJ-245		AB	AC					AH		AK		
	C2DZ 9594-A *CJ-124									AJ			
CAM ASSY. (FAST IDLE)	D4ZZ 9597-A *CM-1854		AB	AC						AJ	AK		
	D6PZ 9597-A *CM-2353								AH			AL	
ROD (FAST IDLING)	D1RY 9598-D *CM-1489				AD	AE	AF	AG					
ROD (CHOKE CONTROL)	★ D4ZZ 9A599-B *CM-2038	AA	AB	AC					AH	AJ	AK	AL	
Pin-cotter	353610-S8(NN-126)	AA	AB	3					AH	2	2	2	
NUT (THROTTLE LEVER RETAINING)	★ D1FZ 9618-A	AA	AB	AC	AD	AE	AF	AG	AH	AJ	AK	AL	
SPRING (ACCELERATOR PUMP LEVER RETURN)	9636												
	D1FZ 9636-A *CM-1352	AA			AD	AE	AF	AG					
	D2FZ 9636-A *CM-1500	AA	AB										
SCREW (THROTTLE STOP)	D1RY 9P651-A				AD	AE	AF	AG					
SPRING (ECONOMIZER)	D1RY 9P652-A				AD	AE	AF	AG					
TUBE (EMULSION)-primary-No. F50	D1RY 9P653-A				AD	AE	AF	AG					
No. 66	D4RY 9P653-A				AD		AF						
STUD (AIR CLEANER TO CARBURETOR)	D4FZ 9A659-A	2	2						2	2	2	2	
	D2RY 9A659-A				4	4	4	4					
SCREW (CHOKE CONTROL ADJUSTING)	D3FZ 9E684-A	AA	AB	AC					AH	AJ	AK	AL	
WATER CHAMBER (THERMOSTATIC CHOKE)	D1RY 9A705-A				AD	AE	AF	AG					
Washer (water chamber screw)-metric	112515-ES				AD	AE	AF	AG					
COVER (THERMOSTATIC CHOKE HEAT)	D5ZZ 9A705-A	†AA	AB	AC					†AH	AJ	AK		
	D5PZ 9A705-A											†AL	
SPACER (THERMOSTATIC CHOKE SHAFT)	D1RY 9714-A				AD	AE	AF	AG					
LEVER ASSY. (THERMOSTATIC CHOKE)	D1RY 9K737-B				AD	AE	AF	AG					
Washer-spring (automatic choke shaft)-metric	112511-ES8				2	2	2	2					
Nut (choke lever retaining)-metric	E620011-S82				AD	AE	AF	AG					
SHAFT and LEVER ASSY. (CHOKE HOUSING) also refer to 9L554	★ D4ZZ 9A753-A *CM-1843	AA	AB	AC					AH	AJ	AK		
	D5PZ 9A753-B *CM-2117											AL	
LEVER (CHOKE THROTTLE)-INTER. CONNECTOR	D1RY 9A794-BA				AD	AE	AF	AG					
CLAMP (THERMOSTATIC CHOKE HOUSING LOCKING)	D1FZ 9842-A *CM-1384	AA	AB	AC					AH	AJ	AK	AL	
	D1RY 9842-A *CM-1490				AD	AE	AF	AG					
HOUSING (THERMOSTATIC CHOKE)	D2FZ 9848-B *CM-1499		AB	AC						AJ	AK		
	★ D1RY 9848-A *CM-1491						AF	AG					
	★ D4RY 9848-A *CM-2005				AD	AE							
	D5PZ 9848-A *CM-2118	AA							AH			AL	

NOTICE: When the parts list suffix is shown in the quantity required column, the quantity is one (1).

DESCRIPTION/RESTRICTIONS	PART NUMBER	CARB. PARTS LISTS 34AA THRU 34AM											
		AA	AB	AC	AD	AE	AF	AG	AH	AJ	AK	AL	AM
NOTE: † Not a part of service carburetor													
HOUSING (ELECTRIC CHOKE HEATER)	D4FZ 9848-D *CM-1851	AA	AB	AC						AJ	AK		
	★ D4RY 9848-B *CM-2006				AD	AE	AF	AG					
	D5FZ 9848-A *CM-2255								AH			AL	
Screw (thermostat to automatic choke body)-metric	111647-ES8				3	3	3	3					
HOUSING and PLUGS ASSY. (CHOKE)	★ D4FZ 9849-A *CM-1839	AA	AB	AC							AK		
	D4RY 9849-A *CM-2003				AD	AE	AF	AG					
	★ D5FZ 9849-A *CM-2259								AH			AL	
"O" Ring seal (automatic choke body)-metric	111620-ES				AD	AE	AF	AG					
Screw and washer	111645-ES8				2	2	2	2					
BUSHING (CHOKE SHAFT SPRING)	D1RY 9851-A *CM-1492				AD	AE	AF	AG					
GASKET (THERMOSTATIC CHOKE CONTROL) -1/8" I.D. x 9/32" O.D. x 5/64" thick	D1FZ 9853-A *CG-328	†AA	AB	AC					†AH	AJ	AK	AL	
SOLENOID and BRACKET ASSY. (THROTTLE) Tag code D5PE-AEA	D5PZ 9D856-A *CS-1	AA							AH			AL	
GASKET (THERMOSTATIC CHOKE HOUSING)	9871												
Center	D1FZ 9871-B *CG-330	†AA	AB	AC					†AH	AJ	AK	AL	
Outer	D5FZ 9871-A *CG-457	AA	AB	AC					AH	AJ	AK	AL	
	★ D1RY 9871-A *CM-337				AD	AE	AF	AG					
GASKET (WATER CHAMBER THERMOSTAT ASSY.)	★ D1RY 9871-B *CG-338				AD	AE	AF	AG					
SCREW and WASHER ASSY. (CHOKE HOUSING)	9B874												
M4 x 1 11/32" long	D1FZ 9B874-B	2	2	2						2	2	2	
M4 x 2" long	D1FZ 9B874-C	†AA	AB	AC					†AH	AJ	AK	AL	
	D1FZ 9B874-D	†AA	AB		AD	AE	AF	AG	†AH				
Screw (retaining ring)	D1FZ 9B874-A	†3	3	3					†AH	3	3	3	
Screw (water cover retaining)	★ D3FZ 9B874-A			AC						AJ	AK	AL	
VALVE ASSY. (ACCELERATOR PUMP DISCHARGE)	D0RY 9902-A				AD	AE	AF	AG					
GASKET (PUMP DISCHARGE NOZZLE)	D1FZ 9926-A *CM-1399				AD	AE	AF	AG					
COVER (ECONOMIZER VALVE)	D1RY 9930-A *CM-1494				AD	AE	AF	AG					
Screw and washer assy. (economizer valve cover)-metric	111643-ES8				6	6	6	6					
TUBE (MAIN WELL) - Also refer to 9P653	9991												
Secondary	★ D1FZ 9991-B	AA		AC					AH	AJ		AL	
Primary	D1FZ 9991-A		AB							AJ			
Secondary			AB	AC							2		
Primary	D4FZ 9991-A	AA							AH			AL	

COPYRIGHT © 1986 — FORD MOTOR COMPANY — DEARBORN, MICHIGAN

DESCRIPTION/RESTRICTIONS	PART NUMBER	CARB. PARTS LISTS 34AN THRU 34AZ											
		AN	AP	AQ	AR	AS	AT	AU	AV	AW	AX	AY	AZ
GASKET SET – Refer to carburetor identification chart–Section 95	9502												
TUNE-UP KIT – Refer to carburetor identification chart–Section 95	9A586												
FILTER ASSY. (FUEL)	9155												
Tag codes D7EE-AAA,AB,DA,FA,GA	D3AZ 9155-A *FG-14-A	AN	AP	AQ	AR	AS	AT	AU	AV	AW	AX	AY	
Tag codes D7PE-CA,DA	D7TZ 9155-B *FG-778								AV	AW			
LIMITER (IDLE ADJUSTING)	9J500												
	D6PZ 9J500-A *CM-747-B	AN	AP	AQ	AR	AS	AT	AU	AV	AW	AX	AY	AZ
RETAINER (FAST IDLE SEAL)	D1FZ 9B501-A *CM-1327	AN	AP	AQ	AR	AS	AT	AU	AV	AW	AX	AY	AZ
PIN (THROTTLE RETAINING SPRING)	D5FZ 9B503-A *CM-2257	AN	AP	AQ	AR	AS	AT	AU	AV	AW	AX	AY	AZ
LEVER and SWIVEL ASSY (ALTITUDE FUEL CONTROL)	★ D7FZ 9B509-A									AW			
SCREW and WASHER ASSY.– (4) retains 9528, (3) retains 9J554	D1FZ 9S510-B	7	7	7	7	7	7	7	7	7	7	7	7
FITTING (FUEL INLET)	D6RY 9A520-A *CM-2598												AZ
DASHPOT and SOLENOID ASSY (also refer to 95553 and 9D856	9S520												
Tag code D7EE-AA,DA	D7FZ 9S520-A *CD-26								AV				
Tag code D7EE-KA											AX		
SCREEN (FUEL FILTER)	D1FZ 9F525-A	AN	AP	AQ	AR	AS	AT	AU					
SPRING (ALTITUDE VALVE OUTER)	★ D7FZ 9G526-A *CM-2532									AW			
NUT (THROTTLE LEVER and CHOKE SHAFT)– (1) retains 9C504 and (1) retains 9D541	D1FZ 9B527-A *CM-1400	2	2	2	2	2	2	2	2	2	2	2	2
Washer (use with throttle lever nut)	44717-S8(X-16)	2	2	2	2	2	2	2	2	2	2	2	2
RETAINER (CHOKE ROD)–plastic	D7FZ 9B527-A *CM-2527								2	2	2	2	
COVER ASSY. (ACCELERATOR PUMP)	D6PZ 9528-A *CM-2384	AN	AP	AQ	AR	AS	AT	AU	AV	AW	AX	AY	AZ
SCREW and WASHER ASSY. (AIR HORN)	9F529												
	D1FZ 9F529-A	5	5	5	5	5	5	5	5	5	5	5	5
Choke housing	D5FZ 9F529-A	AN	AP	AQ	AR	AS	AT	AU	AV	AW	AX	AY	AZ
ROD (FAST IDLE CAM)	9D530												
	★ D1FZ 9D530-A *CM-1333			AQ	AR	AS	AT						
	D5FZ 9D530-A *CM-2348	AN	AP					AU	AV	AW	AX	AY	AZ

NOTICE: When the parts list suffix is shown in the quantity required column, the quantity is one (1).

DESCRIPTION/RESTRICTIONS	PART NUMBER	CARB. PARTS LISTS 34AN THRU 34AZ											
		AN	AP	AQ	AR	AS	AT	AU	AV	AW	AX	AY	AZ
JET (MAIN METERING)	9533												
#140-Primary	D2RY 9533-C					AS							
	*CJ-215												
Secondary					AR	AS							
#142-Primary	D4FZ 9533-A				AR								
Primary-tag code D6EE-HA			AP										
Primary-tag codes D6EE-AA,DA,D6PE-TA	*CJ-248	AN											
Primary tag codes 767F-AA,AB,AC,CA,CB, CC,DA,DB,DC								AU					
Primary-tag codes 767F-AE,CE,DE													AZ
#132-Primary tag codes D6EE-LA,MA,D6PE-VA	★ D2FZ 9533-A	AN					AT						
Secondary	*CJ-204	AN	AP					AU					AZ
#135-Secondary	★ D1FZ 9533-D			AQ									
Primary-tag code D6EE-HB,D6PE-YA			AP										
Primary-tag code D6EE-JA	*CJ-201	AN											
#145-Primary	D1FZ 9533-B			AQ									
	*CJ-199												
#147-Secondary	★ D5FZ 9533-A						AT						
	*CJ-275												
#137-Primary-tag codes D6EE-BA,GA,D6PE-SA	D1FZ 9533-C	AN											
Primary-tag code 767F-BA,BB,BC	*CJ-198							AU					
Primary-tag codes 767F-BE													AZ
#227 Secondary-Tag code D7EE-FA	D7FZ 9533-A								AV				
Secondary	*CJ-286									AW			
#239 Secondary-Tag code D7EE-DA	D7FZ 9533-B								AV				
Secondary-Tag codes D7EE-HA,JA	*CJ-287										AX		
#255 Primary-Tag code D7EE-DA	★ D7FZ 9533-C								AV				
Primary-Tag codes D7EE-HA,JA	*CJ-288										AX		
Secondary-Tag code D7EE-AA									AV				
Secondary-Tag code D7EE-KA											AX		
Secondary												AY	
#263 Primary	D7FZ 9533-D									AW			
Primary-Tag code D7PE-CA	*CJ-289								AV				
#247 Secondary-Tag code D7PE-CA	★ D7FZ 9533-F								AV				
	*CJ-295												
#275 Primary-Tag codes D7EE-AA,FA	★ D7FZ 9533-E								AV				
Primary-Tag code D7EE-KA	*CJ-290										AX		
Primary												AY	
SPRING (FUEL ENRICHMENT VALVE)	D7FZ 9E533-A								AV	AW	AX	AY	
	*CM-2519												
LEVER (FAST IDLE ADJUSTING)	9538												
	★ D4ZZ 9538-A	AN	AP	AQ	AR	AS	AT	AU					AZ
	*CM-1846												
SPRING (THROTTLE RETURN)	9A538												
	D7FZ 9A538-A	AN	AP	AQ	AR	AS	AT	AU	AV	AW	AX	AY	AZ
(used with 9b509)	*CM-2488									AW			
SCREW (FAST IDLER ADJUSTING)	9B538												
Screw-idle speed	D1FZ 9B538-A	AN	AP	AQ	AR	AS	AT	AU	AV	AW	AX	AY	AZ
SCREW (SECONDARY IDLE and DIAPHRAGM ADJUSTING)	D5FZ 9B538-A	AN	AP	AQ	AR	AS	AT	AU	AV	AW	AX	AY	AZ
	*CM-2227												
PLUG (FUEL FILTER-RETAINER)	★ D1FZ 9A540-A	AN	AP	AQ	AR	AS	AT	AU					

COPYRIGHT © 1986 — FORD MOTOR COMPANY — DEARBORN, MICHIGAN

DESCRIPTION/RESTRICTIONS	PART NUMBER	CARB. PARTS LISTS 34AN THRU 34AZ											
		AN	AP	AQ	AR	AS	AT	AU	AV	AW	AX	AY	AZ
TUBE (HI-SPEED AIR BLEED)	9G540												
#180-Primary	D1FZ 9G540-B				AR								
#190-Primary	D2RY 9G540-D			AQ		AS							
Primary-tag codes D6EE-BA,DA,D6PE-SA,TA		AN											
Primary-tag codes 767F-BE,DE													AZ
#170-Secondary	D1FZ 9G540-A			AQ	AR	AS	AT	AU					AZ
#185-Primary	D5FZ 9G540-A		AP				AT		AV	AW	AX	AY	
Primary-tag codes D6EE-AA,CA,JA,LA,MA,D6PE-VA		AN											
Primary-tag codes 767F-AA,AB,AC,CA,CB,CC								AU					
Primary-tag codes 767F-AE,CE													AZ
Primary-tag codes 767F-BA,BB,BC,DA,DB, DC	D2RY 9G540-A							AU					
#195-Secondary	D2FZ 9G540-C	AN	AP					AU	AV	AW	AX	AY	
NEEDLE (IDLE ADJUSTING)	D4ZZ 9541-A *CM-1853	AN	AP	AQ	AR	AS	AT	AU	AV	AW	AX	AY	AZ
LEVER (CHOKE CONTROL)	9D541												
	★ D1FZ 9D541-A *CM-1348			AQ	AR	AS	AT						
	D6PZ 9D541-A *CM-2352	AN	AP					AU					AZ
	D7FZ 9D541-A *CM-2521								AV	AW	AX	AY	
Washer (use with choke control lever)	44717-S8(X-16)	AN	AP	AQ	AR	AS	AT	AU	AV	AW	AX	AY	AZ
JET (IDLE)	9542												
#60-Primary	D2FZ 9542-C *CJ-212			AQ		AS				AW			
#70-Primary	D5PZ 9542-A *CJ-260				AR		AT						
#80-Secondary	D3FZ 9542-A *CJ-233			AQ	AR	AS	AT						
#50-Secondary	D1FZ 9542-A *CJ-197	AN	AP					AU	AV	AW	AX	AY	AZ
#90-Primary	D5ZZ 9542-A *CJ-269	AN	AP										
Primary-Tag codes 767F-AA,AB,AC,BA,BB,BC, CA,CB,CC								AU					
Primary-tag codes D7EE-HA,JA											AX		
Primary-tag codes 767F-AE,BE,CE													AZ
#120 Primary-Tag codes D7EE-AA,FA, D7PE-CA	D7FZ 9542-A *CJ-291								AV				
Primary-tag code D7EE-KA											AX		
Primary-tag code D7EE-LA												AY	
#100-Primary-tag codes 767F-DA,DB,DC	★ D5FZ 9542-A *CJ-268							AU					
Tag code 767F-DE													AZ
PLATE (CHOKE)	D4FZ 9545-A *CM-1857	2	2	2	2	2	2	2	2	2	2	2	2
SHAFT and LEVER ASSY. (CHOKE)	9546												
	★ D4ZZ 9546-A *CM-2001	AN	AP	AQ	AR	AS	AT	AU					AZ
	D7FZ 9546-A *CM-2489								AV	AW	AX	AY	
DIAPHRAGM and RETAINER ASSY. (CHOKE CONTROL)	9J549												
	D1FZ 9J549-A *CK-1356	AN	AP	AQ	AR	AS	AT	AU	AV	AW	AX	AY	AZ

NOTICE: When the parts list suffix is shown in the quantity required column, the quantity is one (1).

DESCRIPTION/RESTRICTIONS	PART NUMBER	CARB. PARTS LISTS 34AN THRU 34AZ											
		AN	AP	AQ	AR	AS	AT	AU	AV	AW	AX	AY	AZ
FLOAT ASSY.	D1FZ 9550-A *CM-1357	AN	AP	AQ	AR	AS	AT	AU	AV	AW	AX	AY	AZ
VALVE ASSY. (POWER)-Refer to group 9594	9G551												
POSITIONER ASSY (THROTTLE) also refer to 9S520 and 9D856	9S553												
Tag code D7EE-HA	D7FZ 9S553-A *CM-2526										AX		
COVER (CHOKE CONTROL DIAPHRAGM)	★ D4FZ 9J554-A	AN	AP	AQ	AR	AS	AT	AU					AZ
BRACKET (THROTTLE POSITIONER) Tag code D7EE-HA	★ D7FZ 9S555-A										AX		
Nut 5/16-24-jam - attach positioner	33923-S7(M-32)										AX		
SHAFT (FLOAT LEVER)	D1FZ 9558-A *CM-1359	AN	AP	AQ	AR	AS	AT	AU	AV	AW	AX	AY	AZ
HUB (FAST IDLE CAM)	D1FZ 9D558-A *CM-1360	AN	AP	AQ	AR	AS	AT	AU					
SCREW and WASHER ASSY. (FAST IDLE) LEVER)	D1FZ 9D558-B *CM-1401	AN	AP	AQ	AR	AS	AT	AU					
DIAPHRAGM ASSY. (ACCELERATOR PUMP)	D2FZ 9B559-A *CM-1503	AN	AP	AQ	AR	AS	AT	AU	AV	AW	AX	AY	AZ
GASKET (AIR HORN)	9561												
	D7FZ 9561-A *CG-490	AN	AP	AQ	AR	AS	AT	AU	AV	AW	AX	AY	AZ
VALVE and SEAT ASSY. (FUEL INLET)- incl. (1) D1FZ 9569-A gasket	E1PZ 9564-B *CV-125	AN	AP	AQ	AR	AS	AT	AU	AV	AW	AX	AY	AZ
VALVE ASSY. (FUEL ENRICHMENT)	9A565												
	D4FZ 9A565-A *CV-102			AQ	AR	AS	AT						
	D4FZ 9A565-D *CE-104	AN	AP					AU					AZ
	D7FZ 9A565-A *CE-121								AV	AW	AX	AY	
Screw and washer assy. (valve)- No. 8-32 x 5/8"	357136-S (BB-56)	3	3	3	3	3	3	3	3	3	3	3	3
GASKET (FUEL INLET)	C7AZ 9569-A												AZ
GASKET (FUEL INLET NEEDLE SEAT)	D1FZ 9569-A	AN	AP	AQ	AR	AS	AT	AU	AV	AW	AX	AY	AZ
RETAINER (IDLE JET)	D1FZ 9575-A *CM-1339-A	2	2	2	2	2	2	2	2	2	2	2	2
BALL (ACCELERATOR PUMP DISCHARGE)	EAA 9576-A	2	2	2	2	2	2	2	2	2	2	2	2
Ball (accelerator pump check)-1/8"	357186-S(AA-1)	AN	AP	AQ	AR	AS	AT	AU	AV	AW	AX	AY	AZ
SCREW (PUMP DISCHARGE)	D2FZ 9577-A *CM-1502	AN	AP	AQ	AR	AS	AT	AU	AV	AW	AX	AY	AZ
NOZZLE (PUMP DISCHARGE)	D3FZ 9577-A *CM-1719	AN	AP	AQ	AR	AS	AT	AU	AV	AW	AX	AY	AZ
SPRING (IDLE ADJUSTING NEEDLE)	9578												
used with 9541	D1FZ 9578-A *CM-1364	2	2	2	2	2	2	2	AV	AW	AX	AY	AZ
used with 9B538	B8A 9578-B *CM-609								AV	AW	AX	AY	AZ
used with 9D856	★ D7FZ 9578-A *CM-2525								AV	AW	AX	AY	AZ
used for fast idle	D7FZ 9578-B *CM-2534								AV	AW	AX	AY	AZ
GASKET (PUMP DISCHARGE NOZZLE)	D4FZ 9580-A	2	2	2	2	2	2	2	2	2	2	2	2
SHAFT ASSY (ALTITUDE VALVE OPERATING)	★ D7FZ 9581-A *CM-2533									AW			

COPYRIGHT © 1986 — FORD MOTOR COMPANY — DEARBORN, MICHIGAN

1973/79 LINCOLN-MERCURY CARS

4 CYL. 2.0L(122 C.I.D.), 2.3L(140 C.I.D.)
6 CYL. 2.6L(159 C.I.D.), 2.8L(171 C.I.D.)

DESCRIPTION/RESTRICTIONS	PART NUMBER	CARB. PARTS LISTS 34AN THRU 34AZ											
		AN	AP	AQ	AR	AS	AT	AU	AV	AW	AX	AY	AZ
NOTE: † Not a part of service carburetor													
SCREW (CHOKE PLATE)	D1FZ 9586-B *CM-1385-A	4	4	4	4	4	4	4	4	4	4	4	4
SPACER (SOLENOID BRACKET)	9J586												
Tag codes 767F-AA,AB,AC	★ D6PZ 9J586-A							AU					
Tag code D7EE-DA									AV				
Tag code D7EE-HA											AX		
Tag code 767F-AE													AZ
SPRING	9587												
Choke control	D3RY 9587-A			AQ	AR		AT	AU					AZ
Accelerator pump				AQ	AR		AT						
Choke assist	D5FZ 9587-A	AN	AP	AQ	AR	AS	AT		AV	AW	AX	AY	AZ
Accelerator pump	*CM-2256	AN	AP										
Accelerator pump	D3FZ 9587-A					AS							
Diaphragm	*CM-1718	AN	AP						AV	AW	AX	AY	
Accelerator pump	★ D6PZ 9587-A *CM-2385							AU	AV	AW	AX	AY	AZ
VALVE ASSY. (POWER)	9594												
	D4FZ 9594-B *CJ-245	AN	AP	AQ	AR	AS	AT	AU					AZ
	D7FZ 9594-A *CJ-292								AV	AW	AX	AY	
COVER (FUEL ENRICHMENT VALVE)	D7FZ 9F594-A *CM-2518								AV	AW	AX	AY	
BRACKET (ALTITUDE CLAMP and LEVER ASSY)	D7FZ 9595-A									AW			
Retainer "C"	372999-S(QQ-35)									AW			
Screw-no 10-32x1/2" fillister head	31612-S8(U-56)									3			
lockwasher no 10	34803-S7(X-60)									3			
CAM (FAST IDLE)	9597												
	D6PZ 9597-A *CM-2353	AN	AP					AU	AV	AW	AX	AY	AZ
	D5RY 9597-A *CM-2350			AQ	AR	AS	AT						
ROD (CHOKE CONTROL)	9A599												
	D4ZZ 9A599-B *CM-2038	AN	AP	AQ	AR	AS	AT	AU					AZ
	D7FZ 9A599-A *CM-2520								AV	AW	AX	AY	
Pin-cotter - also refer to 9B527	353610-S8(NN-126)	2	2	2	2	2	2	2					2
SPRING (ACCELERATOR PUMP LEVER RETURN)	D2FZ 9636-A *CM-1500			AQ	AR	AS	AT						
STUD (AIR CLEANER TO CARBURETOR)	9A659												
	D4FZ 9A659-A	2	2						2	2	2	2	
	★ D5RY 9A659-A			2	2	2	2	2					2
SCREW (CHOKE CONTROL ADJUSTING)	D3FZ 9E684-A			AQ	AR	AS	AT	AU	AV	AW	AX	AY	AZ
COVER (THERMOSTATIC CHOKE HEAT)	9A705												
	D5PZ 9A705-A	†AN	†AP	AQ		AS	AT						
	D5ZZ 9A705-A				AR			AU					AZ
	D7FZ 9A705-A								AV	AW	AX	AY	
SHAFT and LEVER ASSY. (CHOKE HOUSING)	9A753												
	D5PZ 9A753-B *CM-2117	AN	AP					AU	AV	AW	AX	AY	AZ
	★ D5RY 9A753-A *CM-2351			AQ	AR	AS	AT						
LATCH ASSY (ELECTRIC CHOKE CAM)	D7FZ 9A754-A								AV	AW	AX	AY	

NOTICE: When the parts list suffix is shown in the quantity required column, the quantity is one (1).

DESCRIPTION/RESTRICTIONS	PART NUMBER	CARB. PARTS LISTS 34AN THRU 34AZ											
		AN	AP	AQ	AR	AS	AT	AU	AV	AW	AX	AY	AZ
NOTE: † Not a part of service carburetor													
CLAMP (ALTITUDE CABLE)	8BA 9792									AW			
Screw no. 8-32 x 1/2" att clamp	31061-S8 (U-50)									AW			
Nut no 8-32 square	34126-S8B (M-146)									AW			
CLAMP (THERMOSTATIC CHOKE HOUSING)	9842												
	D1FZ 9842-A *CM-1384	AN	AP	AQ	AR	AS	AT	AU					AZ
	D7FZ 9842-B *CM-2522-A								AV	AW	AX	AY	
HOUSING (THERMOSTATIC CHOKE)	9848												
	D6PZ 9848-A *CM-2354	AN	AP					AU					AZ
	D2FZ 9848-B *CM-1499			AQ	AR	AS	AT						
HOUSING (ELECTRIC CHOKE HEATER)	9848												
#47R-484-A	D5FZ 9848-A *CM-2255	AN	AP					AU					AZ
	D4FZ 9848-D *CM-1851			AQ	AR	AS	AT						
#47R-495A Tag codes D7EE-HA,KA	D7FZ 9848-A *CM-2528								AV		AX	AY	
#47R-490A Tag code D7EE-JA	D7FZ 9848-B *CM-2529										AX		
#47R-510A	★ D7FZ 9848-C *CM-2530									AW			
HOUSING and PLUGS ASSY. (CHOKE)	9849												
Tag codes D6EE-EA,FA,HA	★ D5FZ 9849-A *CM-2259	AN	AP										
	D5RY 9849-A *CM-2347			AQ	AR	AS	AT						
Tag code D6EE-HB Tag code D7PE-CA	★ D6PZ 9849-A *CM-2386		AP					AU	AV				AZ
Tag codes D7EE-AA,DA	D7FZ 9849-A *CM-2532								AV	AW	AX		
Tag code D7EE-FA	★ D7FZ 9849-B *CM-2524								AV			AY	
GASKET (THERMOSTATIC CHOKE CONTROL) -1/8" I.D. x 9/32" O.D. x 5/64" thick	D1FZ 9853-A *CG-328	AN	AP	AQ	AR	AS	AT	AU	AV	AW	AX	AY	AZ
SOLENOID and BRACKET ASSY. (THROTTLE)- also refer to 9S520 and 9S553	9D856												
Tag codes 767F-BA,BB,BC,CA,CB,CC,DA,DB,DC tag codes 767F-BE,CE,DE	D5PZ 9D856-A *CS-1	AN	AP	AW	AR	AS	AT	AU					AZ
Tag code D7EE-JA Tag code D7EE-LA Tag code D7EE-GA,AAA	★ D7PZ 9D856-D *CS-5-A									AW	AX	AY	
Tag code D7EE-FA	D7FZ 9D856-C *CS-7								AV				
Screw no. 10-32 x 1" adjust solenoid	379622-S7-8(UU-52-M)								AV	AW	AX	AY	
GASKET (THERMOSTATIC CHOKE HOUSING)	9871												
Center	D1FZ 9871-B *CG-330	AN	AP	AQ	AR	AS	AT	AU					AZ
Outer	D5FZ 9871-A *CG-457	AN	AP	AQ	AR	AS	AT	AU					AZ

COPYRIGHT © 1986 — FORD MOTOR COMPANY — DEARBORN, MICHIGAN

DESCRIPTION/RESTRICTIONS	PART NUMBER	CARB. PARTS LISTS 34AN THRU 34AZ											
		AN	AP	AQ	AR	AS	AT	AU	AV	AW	AX	AY	AZ
NOTE: † Not a part of service carburetor													
SCREW (RETAINING RING)	D1FZ 9B874-A	3	3	3	3	3	3	3	3	3	3	3	3
SCREW and WASHER ASSY. (CHOKE HOUSING)	9B874												
M4 x 11/32" long	D1FZ 9B874-B	2	2	2	2	2	2	2	2	2	2	2	2
SCREW (WATER COVER RETAINING)	★ D3FZ 9B874-A	AN	AP	AQ	AR	AS	AT	AU					AZ
COMPENSATOR ASSY. (ALTITUDE)	★ D7FZ 9A950-A *CM-2531									AW			
TUBE (MAIN WELL)	9991												
	D1FZ 9991-A			2	2	2	2						
Secondary	★ D1FZ 9991-B	AN	AP					AU	AV	AW	AX	AY	AZ
Primary	D4FZ 9991-A	AN	AP					AU	AV	AW	AX	AY	AZ

NOTICE: When the parts list suffix is shown in the quantity required column, the quantity is one (1).

DESCRIPTION/RESTRICTIONS	PART NUMBER	CARB. PARTS LISTS 34AN THRU 34AZ											
		BA	BB	BC	BD	BE	BF	BG	BH	BJ	BK	BL	BM
NOTE: † Not a part of service carburetor													
GASKET SET – Refer to carburetor identification chart–Section 95	9502												
TUNE-UP KIT – Refer to carburetor identification chart–Section 95	9A586												
FILTER (FUEL)	9155												
	D3AZ 9155-A *CG-14-A			BC		BE						BL	BM
Tag code D7EE-BDA,UA,VA					BD								
	D7TZ 9155-B *FG-778							BG	BH	BJ	BK		
Tag code D7PE-BA					BD								
LIMITER (IDLE ADJUSTING)	D6PZ 9J500-A *CM-747-B	BA	BB	BC	BD	BE	BF	BG	BH	BJ	BK	BL	BM
PLUG (IDLE CONCEALMENT)	D9PZ 9J500-B												
Tag codes D9EE-AED,AFD,AGD,AHD,AJD,AKD	*CM-3483											BL	
RETAINER (FAST IDLE SEAL)	D1FZ 9B501-A *CM-1327	BA	BB	BC	BD	BE	BF	BG	BH	BJ	BK	BL	BM
PIN (THROTTLE RETAINING SPRING)	D5FZ 9B503-A *CM-2257	BA	BB	BC	BD	BE	BF	BG	BH	BJ	BK	BL	BM
SPRING (FEEDBACK PISTON and DIAPHRAGM)	D8PZ 9B504-A *CM-2926								BK			BL	
LEVER and SWIVEL (ALTITUDE CONTROL)	★ D7FZ 9B509-A						BF						
SCREW and WASHER ASSY. (4) retains 9528, (3) retains 9J554	D1FZ 9S510-B	7	7	7	7	7	7	7	7	7	7	7	7
LEVER (FLOAT BOWL VENT)	9A515												
	D9PZ 9A515-A *CM-3115							BG	BH	BJ	BK	BL	BM
FITTING (FUEL INLET)	D6RY 9A520-A *CM-2598	BA	BB				BF						
DASHPOT and SOLENOID ASSY.	D7FZ 9S520-A												
(also refer to 9S553 and 9D856) Tag code 777F-AA,AB	*CD-86	BA											
Tag code D7EE-SA,TA				BC									
Tag code D7EE-BDA, D7PE-BA					†BD								
Tag code D8BE-HA								BG					
CAM (ACCELERATING PUMP OPERATING)	D8PZ 9526-A *CM-2922							BG	BH	BJ	BK	BL	BM
NUT (CHOKE SHAFT)	D1FZ 9B527-A *CM-1400	BA	BB	BC	BD	BE	BF	BG	BH	BJ	BK	2	2
RETAINER (CHOKE ROD)–plastic	D7FZ 9B527-A *CM-2527	2	2	2	2	2	2	2	2	2	2	2	2
RETAINER (FLOAT BOWL VENT)	D8PZ 9B527-B *CM-2920							BG	BH	BJ	BK	BL	
SEAL ASSY. (FLOAT BOWL VENT)	D8PZ 9C527-A *CM-2916							BG	BH	BJ	BK	BL	BM
COVER ASSY. (ACCELERATOR PUMP)	9528												
	D6PZ 9528-A	BA	BB	BC	BD	BE	BF	BG	BH	BJ	BK		
Tag codes D9EE-AEC,AFC,AGC,AHC,AJC,AKC, D9PE-ANA,ALA,AMA	*CM-2384											BL	
Tag codes D9BE-AAA,ABA,ACA,ADA, D9EE-ALA AMA,ANA,APA,ARA,ASA,AVA,AYA, D9ZE-BCA,BDA													BM
Tag codes D9ZE-SB,TB	D9PZ 9528-A											BL	
Tag codes D9EE-MD,ND	*CM-3157												BM
SCREW and WASHER ASSY. (AIR HORN)	D1FZ 9F529-A	5	5	5	5	5	5	5	5	5	5	5	5
Choke housing	D5FZ 9F529-A	BA	BB	BC	BD	BE	BF	BG	BH	BJ	BK	BL	BM
ROD (FAST IDLE CAM)	D5FZ 9D530-A *CM-2348	BA	BB	BC	BD	BE	BF	BG	BH	BJ	BK	BL	BM

COPYRIGHT © 1986 — FORD MOTOR COMPANY — DEARBORN, MICHIGAN

DESCRIPTION/RESTRICTIONS	PART NUMBER	CARB. PARTS LISTS 34BA THRU 34BM											
		BA	BB	BC	BD	BE	BF	BG	BH	BJ	BK	BL	BM
JET (MAIN METERING)	9533												
#239-Secondary-Tag codes 777F-AA,AB,BA,BB,CB	D7FZ 9533-B	BA											
Secondary-Tag codes 777F-EA,EB,GA,GB,HA,HB	*CA-287		BB										
Secondary-Tag code D7EE-EA				BC									
Secondary-Tag code D7EE-BDA, D7PE-BA					BD								
Secondary						BE	BF						
#255-Secondary-Tag codes D7EE-SA,TA	★ D7FZ 9533-C			BC									
Primary-Tag code D7EE-EA,TA	*CJ-288			BC									
Primary & Secondary-Tag codes D7EE-UA,VA					2								
Primary						BE	BF						
Primary - Tag code D7PE-BA					BD								
Secondary - Tag codes D9ZE-SB,TB												BL	
#263-Primary-Tag code 777F-BA,BB	D7FZ 9533-D	BA											
Primary-Tag code 777F-GA,GB	*CJ-289		BB										
#275-Primary-Tag code 777F-DA,DB	★ D7FZ 9533-E	BA											
Primary-Tag code 777F-JA,JB	*CJ-290		BB										
Primary-Tag codes D7EE-SA				BC									
#247-Primary-Tag code D7EE-BDA	★ D7FZ 9533-F				BD								
	*CJ-295												
#287-Primary-Tag code 777F-AA,AB	★ D7FZ 9533-G	BA											
Primary-Tag code 777F-EA,EB	*CJ-296		BB										
#295-Primary-Tag code 777F-CA,CB	★ D7FZ 9533-H	BA											
Primary-Tag code 777F-HA,HB	*CJ-297		BB										
#227-Secondary-Tag code 777F-DA,DB	D7FZ 9533-A	BA											
Secondary-Tag code 777F-JA,JB	*CJ-286		BB										
Primary-Tag codes D9EE-AGC,AGD,AHC,AHD,												BL	
D9ZE-SB,TB, D9PE-ALA													
#147 Primary-Tag code D8BE-HA, D8PE-BGA	D8PZ 9533-A							BG					
Primary-Tag code D8EE-AA,BA,CA	*CJ-309								BH				
Primary-Tag code D8EE-ATA,LA,MA										BJ			
Primary-Tag codes D9EE-ANA,APA,ARA,ASA,AVA,AYA													BM
#163 Primary-Tag code D8EE-DA,JA	★ D8PZ 9533-C								BH				
Primary-Tag code D8EE-AUA,AVA,KA	*CJ-311									BJ			
Primary-Tag codes D9EE-ALA,AMA													BM
#167-Primary-Tag codes D9ZE-BCA,BDA	D8PZ 9533-D												BM
	*CJ-312												
#171 Primary-Tag codes D8BE-AJA,AKA,ANA,	★ D8PZ 9533-E							BG					
APA,FA,GA, D8PE-BJA	*CJ-313												
Primary-Tag codes D9BE-AAA,ABA,ADA													BM
Tag code D8PE-BEA										BJ			
#231 Primary	★ D8PZ 9533-K										BK		
Primary-Tag codes D9EE-AEC,AED,AFC,AFD,	*CJ-318											BL	
AJC,AJD,AKC,AKD, D9PE-ANA,AMA													
#199 Secondary-Tag codes D8BE-AJA,AKA,ANA,	D8PZ 9533-F							BG					
D8PE-BJA	*CJ-314												
Secondary										BJ			
Secondary-Tag codes D9BE-ABA, D9ZE-BCA,BDA													BM
#203 Secondary-Tag codes D8BE-APA,FA,GA	D8PZ 9533-G							BG					
Secondary	*CJ-315										BK		
Secondary-Tag codes D9EE-AGC,AGD,AHC,AHD,												BL	
D9PE-ALA													
Secondary-Tag codes D9BE-AAA,ADA													BM
#207 Secondary-Tag codes D9EE-AEC,AED,AFC,AFD,	D8FZ 9533-H											BL	
AJC,AJD,AKC,AKD, D9PE-ANA,AMA													
Secondary-Tag code D9BE-ACA	*CJ-316												BM

NOTICE: When the parts list suffix is shown in the quantity required column, the quantity is one (1).

DESCRIPTION/RESTRICTIONS	PART NUMBER	CARB. PARTS LISTS 34BA THRU 34BM											
		BA	BB	BC	BD	BE	BF	BG	BH	BJ	BK	BL	BM
JET (MAIN METERING)	9533 — Cont'd												
#219 Secondary-Tag code D8BE-HA	D8PZ 9533-J							BG					
Secondary	*CJ-317								BH				
Secondary - Tag code D8EE-ATA,AUA,AVA, D8PE-BEA,BGA										BJ			
Secondary-Tag codes D9EE-ALA,AMA,ANA,APA, ARA,ASA,AVA,AYA													BM
#175-Primary-Tag code D9BE-ACA	D9PZ 9533-D *CJ-347												BM
#259-Primary-Tag codes D9ZE-MD,MF,ND,NF	D9PZ 9533-E *CJ-348												BM
#283-Secondary-Tag codes D9ZE-MD,MF,ND,NF	★ D9PZ 9533-F *CJ-349												BM
SPRING (FUEL ENRICHMENT VALVE)	D7FZ 9E533-A *CM-2519	BA	BB	BC	BD	BE	BF	BG	BH	BJ	BK		BM
SPRING (THROTTLE RETURN)	D7FZ 9A538-A *CM-2488	BA	BB	BC	BD	BE	BF	BG	BH	BJ	BK	BL	BM
SCREW (FAST IDLE ADJUSTING)	9B538												
Idle speed	D7FZ 9B538-A	BA	BB	BC	BD	BE	BF	BG	BH	BJ	BK	BL	BM
Fast idle cam	D1FZ 9B538-A	BA	BB	BC	BD	BE	BF	BG	BH	BJ	BK	BL	BM
Secondary idle	D5FZ 9B538-A *CM-2227	BA	BB	BC	BD	BE	BF	BG	BH	BJ	BK	BL	BM
TUBE (HI-SPEED AIR)	9G540												
#185-Primary	D5FZ 9G540-A	BA	BB	BC	BD	BE	BF		BH	BJ			BM
Primary-Tag codes D8BE-AJA,AKA,ANA								BG					
#195-Secondary	D2FZ 9G540-C			BC	BD	BE	BF						
Secondary-Tag codes 777F-AA,AB,BA,BB,CA,CB		BA											
Secondary-Tag codes 777F-EA,GA,HA			BB										
Primary-Tag codes D8BE-APA,FA,GA								BG					
Secondary											BK	BL	BM
#200-Secondary-Tag code 777F-DA,DB	★ D7PZ 9G540-A	BA											
Secondary-Tag code 777F-JA,JB			BB										
#170 Secondary	D1FZ 9G540-A							BG	BH	BJ			
Primary											BK	BL	
#190-Primary-Tag code D8PE-BJA	D2RY 9G540-D							BG					
NEEDLE (IDLE ADJUSTING)	D4ZZ 9541-A *CM-1853	BA	BB	BC	BD	BE	BF	BG	BH	BJ	BK	BL	BM
Tag code D9PE-ALA,AMA,ANA	E0PZ 9541-A *CM-3374											BL	
LEVER (CHOKE CONTROL)	D7FZ 9D541-A *CM-2521	BA	BB	BC	BD	BE	BF	BG	BH	BJ	BK	BL	BM
Washer (use with choke control lever)	44717-S8(X-16)	BA	BB	BC	BD	BE	BF	BG	BH	BJ	BK		
JET (IDLE)	9542												
#50-Secondary	D1FZ 9542-A	BA	BB	BC	BD	BE	BF					BL	BM
	*CJ-197							BG	BH	BJ			
Primary-Tag code D8EE-EA,FA,GA,HA, D8PE-BFA,BHA											BK		
#70 Primary-Tag code D8EE-AMA,ANA, D8PE-BHA	★ D5PZ 9542-A										BK		
Tag codes D9EE-ACG,AHC, D9PE-ALA	*CJ-260											BL	
#80 Secondary-Tag code D8EE-EA,FA,GA,HA, D8PE-BFA	D3FZ 9542-A										BK		
Primary-Tag codes D9EE-AEC,AJC,AKC, D9PE-ANA, AMA	*CJ-233											BL	
#90-Primary-Tag codes 777F-AA,AB,BA,BB	D5ZZ 9542-A	BA											
Primary-Tag codes 777F-EA,EB,GA,GB	*CJ-269		BB										
Primary-Tag code D7EE-EA				BC									
Primary-Tag code D7EE-BDA, D7PE-BA					BD								
Primary						BE	BF						

COPYRIGHT © 1986 — FORD MOTOR COMPANY — DEARBORN, MICHIGAN

DESCRIPTION/RESTRICTIONS	PART NUMBER	CARB. PARTS LISTS 34BA THRU 34BM											
		BA	BB	BC	BD	BE	BF	BG	BH	BJ	BK	BL	BM
JET (IDLE)	9542 — Cont'd												
#100–Primary–Tag code 777F–CB	★ D5FZ 9542–A	BA											
Primary–Tag code 777F–HA,HB	*CJ–268		BB										
#120–Primary–Tag code 777F–DA,DB	D7FZ 9542–A	BA											
Primary–Tag code 777F–JA,JB	*CJ–291		BB										
Primary–Tag codes D7EE–SA,TA				BC									
Primary–Tag codes D7EE–UA,VA					BD								
PLATE (CHOKE)	★ D4FZ 9545–A *CM–1857	2	2	2	2	2	2	2	2	2	2	2	2
Tag code D8PE–BFA,BHA	E0PZ 9545–B										2		
Tag code D8PE–BJA	*CM–3529							2					
Tag code D8PE–BEA,BGA										2			
SHAFT and LEVER ASSY. (CHOKE)	D7FZ 9546–A *CM–2489	BA	BB	BC	BD	BE	BF	BG	BH	BJ	BK	BL	BM
DASHPOT ASSY.–Tag code D8EE–AMA,FA	★ D8PZ 9B549–B										BK		
Tag codes D9EE–AEC,AGC	*CD–34											BL	
DASHPOT KICKER ASSY.–Tag code D8EE–ANA,GA	★ D8PZ 9B549–A										BK		
Tag codes D9EE–AFC,AFD,AHC	*CD–33											BL	
DIAPHRAGM and RETAINER ASSY. (CHOKE CONTROL)	D1FZ 9J549–A	BA	BB	BC		BE	BF	BG	BH	BJ	BK		BM
Tag codes D7EE–UA,VA, D7PE–BA	*CK–1356				BD								
Tag code D7EE–BDA	★ D2RY 9J549–A *CK–1535				BD								
DIAPHRAGM and SHAFT ASSY. (CHOKE CONTROL)	D9PZ 9J549–A *CK–2084											BL	
FLOAT ASSY.	9550												
	D1FZ 9550–A	BA	BB	BC	BD	BE	BF	BG	BH	BJ	BK		
Tag codes D9EE–AEC,AFC,AGC,AHC,AJC,AKC,	*CM–1357											BL	
D9PE–ANA,ALA,AMA													
Tag codes D9BE–AAA,ABA,ACA,ADA, D9EE–ALA													BM
AMA,ANA,APA,ARA,ASA,AVA,AYA,													
D9ZE–BCA,BDA													
Tag codes D9ZE–SB,TB	D9PZ 9550–B											BL	
Tag codes D9ZE–MD,MF,ND,NF	*CM–3155												BM
POSITIONER ASSY (THROTTLE) also refer	D7FZ 9S553–A												
to 9S520 and 9D856–Tag code 777F–EA,EB	*CM–2526		BB										
Tag codes D8BE–APA,GA								BG					
Tag code D8EE–JA									BH				
Tag code D8EE–AVA										BJ			
Tag code D9BE–ADA ,D9EE–AMA, D9ZE–ND,NF													BM
Tag code D9ZE–TB	★ D9PZ 9S553–A *CM–3252											BL	
COVER (CHOKE CONTROL DIAPHRAGM)	9J554												
	★ D4FZ 9J554–A	BA	BB	BC	BD	BE	BF				BK		
	D8PZ 9J554–A							BG	BH	BJ		BL	
Tag codes D9BE–AAA,ABA,ACA,ADA, D9EE–ALA,													BM
AMA,ANA,APA,ARA,ASA,AVA,AYA,													
D9ZE–BCA,BDA													
Tag codes D9ZE–MD,MF,ND,NF	D9PZ 9J554–A												BM
BRACKET (THROTTLE POSITIONER) Tag code 777F–EA,EB	★ D7FZ 9S555–A		BB										
Tag codes D8BE–APA,GA								BG					
Tag code D8EE–JA									BH				
Tag code D8EE–AVA										BJ			
											BK		
Tag codes D9EE–AEC,AGC												BL	
Tag codes D9BE–ADA, D9EE–AMA, D9ZE–ND,NF													BM
NUT 5/16–Jam–attach positioner	33923–S7(M–32)							BG	BH	BJ		BL	BM
SHAFT (FLOAT LEVER)	D1FZ 9558–A *CM–1359	BA	BB	BC	BD	BE	BF	BG	BH	BJ	BK	BL	BM

NOTICE: When the parts list suffix is shown in the quantity required column, the quantity is one (1).

DESCRIPTION/RESTRICTIONS	PART NUMBER	CARB. PARTS LISTS 34BA THRU 34BM											
		BA	BB	BC	BD	BE	BF	BG	BH	BJ	BK	BL	BM
DIAPHRAGM ASSY. (ACCELERATOR PUMP)	D2FZ 9B559-A *CM-1503	BA	BB	BC	BD	BE	BF	BG	BH	BJ	BK	BL	BM
SPRING (FLOAT BOWL VENT)	D8PZ 9560-A *CM-2921											BL	BM
GASKET (AIR HORN)	9561												
	D7FZ 9561-A *CG-490	BA	BB	BC	BD	BE	BF						
	D8PZ 9561-G *CG-515-A							BG	BH	BJ	BK	BL	BM
VALVE and SEAT ASSY. (FUEL INLET)	9564												
Tag codes D9EE-AEC,AFC,AGC,AHC,AJC,AKC, D9PE-ANA,ALA,AMA	E1PZ 9564-B *CV-125	BA	BB	BC	BD	BE	BF	BG	BH	BJ	BK	BL	
Tag codes D9BE-AAA,ABA,ACA,ADA, D9EE-ALA, AMA,ANA,APA,ARA,ASA,AVA,AYA, D9ZE-BCA,BDA													BM
Tag codes D9ZE-SB,TB	D9PZ 9564-A *CV-117											BL	
Tag codes D9ZE-MD,MF,ND,NF													BM
VALVE ASSY. (FUEL ENRICHMENT)	9A565												
	D7FZ 9A565-A *CE-121	BA	BB	BC	BD	BE	BF						
	D8PZ 9A565-A *CE-127							BG	BH	BJ			BM
	D8PZ 9A565-B *CE-128										BK		
	E0PZ 9A565-A *CE-137											BL	
SOLENOID ASSY. (FLOAT BOWL VENT)	D8PZ 9A567-A *CM-2925											BL	BM
Screw and washer assy. (valve) No. 8-32 x 5/8"	357136-S(BB-56)	3	3	3	3	3	3	3	3	3	3	3	3
GASKET (FUEL INLET)	C7AZ 9569-A	BA	BB				BF						
GASKET (FUEL INLET NEEDLE SEAT)	D1FZ 9569-A *CG-327	BA	BB	BC	BD	BE	BF	BG	BH	BJ	BK	BL	BM
RETAINER (IDLE JET)	D1FZ 9575-A *CM-1339-A	2	2	2	2	2	2	BG	BH	BJ	2	2	BM
BALL (ACCELERATOR PUMP DISCHARGE)	EAA-9576-A	2	2	2	2	2	2	2	2	2	2	2	2
SCREW (PUMP DISCHARGE)	D2FZ 9577-A *CM-1502	BA	BB	BC	BD	BE	BF	BG	BH	BJ	BK	BL	BM
NOZZLE (PUMP DISCHARGE)	D3RY 9577-A *CM-1721	BA	BB										
Tag codes D9EE-AEC,AFC,AGC,AHC,AJC,AKC, D9PE-ANA	D3FZ 9577-A *CM-1719			BC	BD	BE	BF	BG	BH	BJ	BK	BL	
Tag codes D9BE-AAA,ABA,ACA,ADA, D9EE-ALA, AMA,ANA,APA,ARA,ASA,AVA,AYA, D9ZE-BCA,BDA													BM
Tag codes D9ZE-SB,TB	D9PZ 9577-A *CM-3156											BL	
Tag codes D9ZE-MD,MF,ND,NF													BM
SPRING (IDLE ADJUSTING NEEDLE)	9578												
used with 9B538	B8A 9578-B *CM-609	BA	BB	BC	BD	BE	BF	BG	BH	BJ	BK	BL	
used with 9541	D1FZ 9578-A *CM-1364	BA	BB	BC	BD	BE	BF	BG	BH	BJ	BK	BL	BM
used with 9D856 Tag code D9BE-AAA,ABA,ACA, D9ZE-BDA	★ D7FZ 9578-A *CM-2525	BA	BB	BC	BD	BE	BF	BG	BH	BJ	BK	BL	BM

COPYRIGHT © 1986 — FORD MOTOR COMPANY — DEARBORN, MICHIGAN

1973/79 LINCOLN-MERCURY CARS

4 CYL. 2.0L(122 C.I.D.), 2.3L (140 C.I.D.)
6 CYL. 2.6L(159 C.I.D.) 2.8L(171 C.I.D.)

DESCRIPTION/RESTRICTIONS	PART NUMBER	CARB. PARTS LISTS 34BA THRU 34BM											
		BA	BB	BC	BD	BE	BF	BG	BH	BJ	BK	BL	BM
SPRING (IDLE ADJUSTING NEEDLE)	9578 — Cont'd												
used for fast idle	D7FZ 9578-B *CM-2534	BA	BB	BC	BD	BE	BF	BG	BH	BJ	BK	BL	BM
Used with 9D856-Tag codes D9EE-ANA, APA,ARA,ASA,AVA,AYA	★ D6RY 9578-A *CM-2599												BM
GASKET (PUMP DISCHARGE NOZZLE)	D4FZ 9580-A	2	2	2	2	2	2	2	2	2	2	2	2
PIN (SWITCH VENT SOLENOID LEVER)	★ D8PZ 9H584-A *CM-2917							BG	BH	BJ	BK	BL	BM
SCREW (CHOKE PLATE)	D1FZ 9586-B *CM-1385-A	4	4	4	4	4	4	4	4	4	4	4	4
SPACER (SOLENOID BRACKET) Tag code 777F-AA,AB	★ D6PZ 9J586-A	BA											
Tag code 777F-EA,EB			BB										
Tag code D7EE-BDA					BD								
Tag code D8BE-FA								BG					
Tag code D8EE-DA									BH				
Tag code D8EE-ATA,AUA										BJ			
Tag codes D9BE-AAA, D9EE-ALA													BM
SPRING	9587												
Accelerator pump	★ D6PZ 9587-A *CM-2385	BA	BB	BC	BD	BE	BF	BG	BH	BJ	BK	BL	BM
Choke control	D5FZ 9587-A *CM-2256	BA	BB	BC	BD	BE	BF	BG	BH	BJ	BK	BL	BM
Diaphragm	D3RY 9587-A *CM-1748	BA	BB	BC	BD	BE	BF						
Diaphragm	D3FZ 9587-A *CM-1718							BG	BH	BJ	BK	BL	BM
VALVE ASSY. (FLOAT BOWL)	D8PZ 9E589-A *CM-2919							BG	BH	BJ	BK	BL	BM
VALVE ASSY. (POWER)	9594												
	D7FZ 9594-A *CJ-292	BA	BB	BC	BD	BE	BF	BG	BH	BJ			BM
	D8PZ 9594-A *CJ-319										BK	BL	
COVER (FUEL ENRICHMENT VALVE)	9F954												
	★ D7FZ 9F594-A *CM-2518	BA	BB	BC	BD	BE	BF						
	D8PZ 9F594-A *CM-2918							BG	BH	BJ			BM
BRACKET and PIN (ALTITUDE)	★ D7RY 9595-A						BF						
CAM (FAST IDLE)	9597												
	D6PZ 9597-A *CM-2353	BA	BB	BC	BD	BE	BF						
	D5RY 9597-A *CM-2350							BG	BH	BJ	BK	BL	BM
ROD (CHOKE CONTROL)	9A599												
	D7FZ 9A599-A *CM-2520	BA	BB	BC	BD	BE	BF						
	D9PZ 9A599-A *CM-3158							BG	BH	BJ	BK	BL	BM
STUD (AIR CLEANER TO CARBURETOR)	9A659												
	D4FZ 9A659-A			2	2	2		2	2	2	2	2	2
	★ D5RY 9A659-A	2	2				2						
SCREW (CHOKE CONTROL ADJUSTING)	D3FZ 9E684-A	BA	BB	BC	BD	BE	BF	BG	BH	BJ	BK	BL	BM
COVER (THERMOSTAT CHOKE)	D7FZ 9A705-A	BA	BB	BC	BD	BE	BF	BG	BH	BJ	BK	BL	BM
SHAFT and LEVER ASSY. (CHOKE HOUSING)	D5PZ 9A753-B *CM-2117	BA	BB	BC	BD	BE	BF	BG	BH	BJ	BK	BL	BM

NOTICE: When the parts list suffix is shown in the quantity required column, the quantity is one (1).

DESCRIPTION/RESTRICTIONS	PART NUMBER	CARB. PARTS LISTS 34BA THRU 34BM											
		BA	BB	BC	BD	BE	BF	BG	BH	BJ	BK	BL	BM
LATCH ASSY. (ELECTRIC CHOKE CAM) also refer to 9848	9A754												
#47R-485A Tag code D7EE-UA,VA	D7FZ 9A754-A			BC	BD						BK		
CLAMP (THERMOSTATIC CHOKE HOUSING)	9842												
	D7FZ 9842-B *CM-2522-A	BA	BB	BC	BD	BE	BF	BG	BH	BJ	BK	BL	BM
HOUSING (ELECTRIC CHOKE HEATER)	9848												
#47R-517A-Tag code 777F-AA,AB Tag code 777F-EA,EB Tag codes D9ZE-SB,TB Tag codes D9BE-AAA,ABA,ACA,ADA, D9EE-ALA,AMA, ANA,APA,ARA,ASA,AVA,AYA, D9ZE-BCA,BDA	D7PZ 9848-A *CM-2636	BA 	 BB 			BE 		BG	BH	BJ		 BL 	 BM
#47R-519A-Tag code 777F-BA,BB Tag code 777F-GA,GB Tag code D7PE-BA	D7PZ 9848-B *CM-2637	BA 	 BB 		 BD								
#47R-495A-Tag codes 777F-CB,DA,DB Tag codes 777F-HA,HB,JA,JB Tag codes D7EE-SA,TA Tag codes D7EE-BDA,UA,VA Tag code D9ZE-MD,MF,ND,NF	D7FZ 9848-A *CM-2528	BA 	 BB 	 BC 	 BD 								 BM
#47R-490A-Tag code D7EE-EA	D7FZ 9848-B *CM-2529			BC			 BF						
#47R-563A Tag codes D9EE-AEC,AFC,AGC,AHC,AJC,AKC, D9PE-ANA	D8PZ 9848-D *CM-2927										BK	 BL	
#47R-609-3A (47R-6083A) Tag code D9EE-AED,AFD,AGD,AHD,AJD,AKD, D9PE-ANA,ALA,AMA	★ D9PZ 9848-G *CM-4015											BL	
SPACER (CHOKE B1-METAL) also refer to 9A754	9848												
#47R-512 Tag code D7EE-BDA, D7PE-BA	D7FZ 9848-D *CM-2624	BA	BB		BD	BE	BF	BG	BH	BJ		BL	BM
Tag code tage code D9EE-AED,AFD, AGD,AHD,AJD,AKD, D9PE-ALA,AMA,ANA	D9PZ 9848-H *CM-4466											BL	
HOUSING and PLUGS ASSY (CHOKE)	9849												
Tag codes 777F-AA,AB,BA,BB,CB Tag codes 777F-EA,EB,GA,GB,HA,HB	D7FZ 9849-A *CM-2523	 BA	 BB	BC	BD	BE	BF	BG	BH	BJ	BK	BL	BM
Tag code D9PE-ALA,AMA,ANA	E0PZ 9849-C *CM-3383-A											BL	
Tag code 777F-DA,DB Tag code 777F-JA,JB	★ D7FZ 9849-B *CM-2524	BA	BB										
GASKET (THERMOSTATIC CHOKE CONTROL)	D1FZ 9853-A *CG-328	BA	BB	BC	BD	BE	BF	BG	BH	BJ	BK	BL	BM
SOLENOID and BRACKET ASSY (THROTTLE) also refer to 9S520 and 9S553	9D856												
Tag code D7EE-BGA	D7PZ 9D856-C *CS-12					BE							
Tag codes 777F-GA,GB,HA,HB,JA,JB Tag code D7EE-VA Tag code D7EE-BLA	★ D7PZ 9D856-D *CS-5-A		BB		 BD 	 BE							

COPYRIGHT © 1986 — FORD MOTOR COMPANY — DEARBORN, MICHIGAN

DESCRIPTION/RESTRICTIONS	PART NUMBER	CARB. PARTS LISTS 34BA THRU 34BM											
		BA	BB	BC	BD	BE	BF	BG	BH	BJ	BK	BL	BM
SOLENOID and BRACKET ASSY. (THROTTLE)	9D856 — Cont'd												
Also refer to 9S520 and 9S553													
Tag codes 777F-BA,BB,CB,DA,DB Tag code D7EE-EA Tag code D7EE-UA Tag codes D7EE-BHA,BMA,BTA Tag code D7RE-EA Tag code D8BE-AKA Tag code D8EE-AA,BA,CA Tag code D8EE-KA Tag code D8EE-EA Tag codes D9EE-AJC Tag codes D9BE-ABA, D9EE-ANA,ARA,AVA, D9ZE-BCA	D7FZ 9D856-C *CS-7	BA		BC	BD	BE	BF	BG	BH	BJ	BK	BL	BM
Tag code D7RE-LA Tag code D7EE-BUA Tag codes D8BE-AJA,ANA Tag codes D8EE-LA,MA Tag code D8EE-HA Tag code D9BE-ACA, D9EE-ASA,AYA	★ D7RY 9D856-A *CS-25					BE	BF	BG		BJ	BK		BM
Tag code D9EE-APA, D9ZE-BDA	D8PZ 9D856-B *CS-27											BM	
Tag code D9EE-AKC,AKD	E2PZ 9D856-C *CS-62											BL	
Screw no. 10-32 x 1" adjust solenoid	379622-S7-8(UU-52-M)	BA	BB	BC	BD	BE	BF	BG	BH	BJ	BK	BL	BM
SCREW (METRIC)	9B874												
Retains 9842	D7PZ 9B874-A	3	3	3	3	3	3	3	3	3	3	3	3
Retains 9849	D1FZ 9B874-B	2	2	2	2	2	2	2	2	2	2	2	2
TUBE (MAIN WELL)	9991												
Secondary	★ D1FZ 9991-B	BA	BB	BC	BD	BE	BF						
Secondary Secondary-Tag codes D9BE-AAA,ABA,ACA,ADA, D9EE-ALA, AMA,ANA,APA,ARA,ASA,AVA,AYA, D9ZE-BCA,BDA	★ D8PZ 9991-A							BG	BH	BJ	BK		BM
Primary-Tag code 777F-CB Primary-Tag code 777F-HA,HB	D1FZ 9991-A	BA	BB										
Primary-Tag codes 777F-AA,AB,BA,BB,DA,DB Primary-Tag codes 777F-EA,EB,GA,GB,JA,JB Primary Primary Tag codes D9BE-AAA,ABA,ACA,ADA, D9EE-ALA, AMA,ANA,APA,ARA,ASA,AVA,AYA, D9ZE-BCA,BDA	D4FZ 9991-A	BA	BB	BC	BD	BE	BF	BG	BH	BJ			BM
Primary Primary and Secondary Primary and Secondary-Tag codes D9ZE-MD,MF,ND,NF	★ D8PZ 9991-B										BK	2	2

NOTICE: When the parts list suffix is shown in the quantity required column, the quantity is one (1).

DESCRIPTION/RESTRICTIONS	PART NUMBER	CARB. PARTS LISTS 35A THRU 35M											
		A	B	C	D	E	F	G	H	J	K	L	M
GASKET SET – Refer to carburetor identification chart–Section 95	9502												
TUNE-UP KIT – Refer to carburetor identification chart–Section 95	9A586												
LIMITER (IDLE ADJUSTING NEEDLE)	★ D4AZ 9J500-A *CM-2031	2											
ROD (THROTTLE OPERATING)	D4PZ 9C504-A *CM-2069	A											
PISTON and LINK ASSY. (STEP-UP)	★ D4AZ 9B513-A *CM-2032	A											
LEVER (CHOKE SHAFT)	★ D4PZ 9A514-A *CM-2062	A											
Screw (choke valve assy.)–No. 4-40–9/16" x 23/64"	380365-S(BB-4-M)	A											
CONTROL and BRACKET ASSY. (VACUUM BREAK)	★ D4AZ 9S514-A	A											
NEEDLE (PUMP CHECK)	B7AZ 9A516-A	A											
ADAPTER (FUEL INLET)	D4AZ 9A520-A *CM-2024	A											
RESTRICTOR (JET)	★ D4AZ 9A521-A *CM-2022	A											
Screw (jet restrictor)–No. 6-32–1 7/16" x 9/16"	379769-S(BB-32)	A											
LEVER ASSY. (PUMP OPERATING)	D4PZ 9526-A *CM-2043	A											
ROD (METERING)	★ D4AZ 9A526-A *CM-2025	2											
LINK (PUMP CONNECTOR)	C6VY 9529-A *CM-625	A											
Screw (link)–No. 8-32 x 45/64"	370007-S7(UU-4)	A											
ARM (PUMP)	D4PZ 9529-A *CM-2065	A											
SCREW (MAIN BODY)	D4AZ 9F529-A	10											
ROD (FAST IDLE CONNECTOR)	★ D4PZ 9531-A *CM-2054	A											
COMPENSATOR ASSY. (HOT IDLE)	★ C7AZ 9B532-A *CM-903	A											
JET (MAIN METERING)–Primary	★ D4AZ 9533-A *CJ-258	2											
JET (MAIN METERING)–Secondary	★ D4AZ 9533-B *CJ-257	2											
KIT (AIR VALVE and SHAFT ASSY.)	D4AZ 9A534-A *CM-2034	A											
Screw (choke valve assy.)–No. 4-40–9/16" x 23/64"	380365-S(BB-4-M)	2											
ROD (CHOKE HOUSING TO CONTROL SHAFT CONNECTOR)	★ D4PZ 9535-A *CM-2070	A											
ARM ASSY. (FAST IDLE OPERATING)	D4PZ 9538-A *CM-2064	A											
SPRING (SECONDARY THROTTLE RETURN)	D4AZ 9A538-A *CM-2021	A											
SCREW (IDLE MIXTURE)	★ D4AZ 9541-A *CM-2029	2											

COPYRIGHT © 1986 — FORD MOTOR COMPANY — DEARBORN, MICHIGAN

DESCRIPTION/RESTRICTIONS	PART NUMBER	CARB. PARTS LISTS 35A THRU 35M											
		A	B	C	D	E	F	G	H	J	K	L	M
ROD (THROTTLE CONNECTOR)	9B542												
	D4PZ 9B542-A *CM-2052	A											
	D4PZ 9B542-B *CM-2053	A											
TUBE (PUMP PASSAGE)	★ D4PZ 9544-A *CM-2055	A											
PUMP SPRING (UPPER)	★ D4AZ 9B544-A *CP-56	A											
VALVE ASSY. (CHOKE)	★ D4PZ 9545-A *CM-2061	A											
Screw (choke valve assy.)-No. 4-40-9/16" x 23/64"	380365-S(BB-4-M)	2											
DIAPHRAGM and RETAINER ASSY. (CHOKE CONTROL)	★ D4AZ 9J549-A *CK-2013	A											
Screw (choke control)-No. 10-32-1/2" x 11/32"	370050-S2(BB-537)	2											
KIT (FLOAT)	★ D4AZ 9550-B *CM-2028	2											
KIT (FLOAT BOWL VENT VALVE)	★ D4AZ 9557-A *CM-2020	A											
SPRING (VACUUM PISTON)	★ D4PZ 9560-A *CM-2050	A											
KIT (VALVE and SEAT ASSY.)	★ D4AZ 9564-A *CV-95	2											
KIT (AIR VALVE SPRING and CAM)	★ D4AZ 9H566-A *CM-2033	A											
LEVER (DIAPHRAGM OPERATING)-Secondary	D4PZ 9S567-A	A											
KIT (CHOKE HOUSING)	D4AZ 9A575-A *CC-91	A											
Screw (choke housing)-No. 8-32 x 5/8"	40930-S2(U-259-A)	2											
SPRING (IDLE MIXTURE and TRANSMISSION ADJUSTING)	D5PZ 9578-A *CM-2188	3											
SPRING (CHOKE SHAFT)	★ D4PZ 9587-A *CM-2051	A											
SCREW (IDLE SPEED and TRANSMISSION ADJUSTMENT)	★ D4PZ 9589-A *CM-2057	A											
RETAINER (FAST IDLE CAM ROD)	D1DZ 9599-A *CM-1467	9											
KIT (CHOKE LINKAGE)	★ D4AZ 9A599-A *CM-2026	A											
SCREW (AIR CLEANER RETAINER)	C8DZ 9C631-A	2											
SCREW (IDLE SPEED)	D0ZZ 9C631-A	A											
ROD (CHOKE CONNECTOR)	★ D4PZ 9635-A *CM-2068	A											
COUNTERSHAFT and LEVER ASSY. (CHOKE)	D4PZ 9A753-C *CM-2067	A											
LEVER (CHOKE OUTER)	D4PZ 9A754-B	A											
ARM (METERING ROD)	★ D4PZ 9D819-A *CM-2066	A											
RETAINER (CHOKE THERMOSTAT)	D4DZ 9842-B *CM-1829	A											
HOUSING ASSY. (CHOKE THERMOSTAT)	D4AZ 9848-F *CM-2027	A											
Screw (choke housing)-No. 8-32 x 5/16"	31037-S7(U-48)	3											
GASKET (PISTON HOUSING)	B7A 9853-C	A											

NOTICE: When the parts list suffix is shown in the quantity required column, the quantity is one (1).

DESCRIPTION/RESTRICTIONS	PART NUMBER	CARB. PARTS LISTS 35A THRU 35M											
		A	B	C	D	E	F	G	H	J	K	L	M
SOLENOID ASSY. (THROTTLE EMISSION CONTROL)	★ D4AZ 9D856-B	A											
GASKET (CHOKE HOUSING	C3VY 9871-A *CG-135	A											
PLATE (STEP UP COVER)	9928												
R.H.	D4PZ 9928-B *CM-2060	A											
L.H.	★ D4PZ 9928-A *CM-2059	A											
Screw (pump jet housing)-No. 6-32 x 1/2"	26479-S7-8(U-166)	A											
Screw (piston housing)-No. 8-32 x 3/4"	31093-S7-8(U-52)	2											
Screw (throttle plate)-No. 4-40 x 3/16"	31291-S(U-43)	8											
Screw (diaphragm bracket)-No. 10-32 x 1/2"	50810-S8(U-158)	A											
Screw (hot idle compensator)-No. 8-32 x 1/2" x 1/2"	352526-S8(BB-8)	2											
Screw-No. 10-32 x 1 3/16" - (1) Idle speed and (1) solenoid	374468-S13(BB-26-G)	2											

COPYRIGHT © 1986 — FORD MOTOR COMPANY — DEARBORN, MICHIGAN

DESCRIPTION/RESTRICTIONS	PART NUMBER	CARB. PARTS LISTS 36A THRU 36M											
		A	B	C	D	E	F	G	H	J	K	L	M
GASKET SET – Refer to carburetor identification chart–Section 95	9502												
TUNE-UP KIT – Refer to carburetor identification chart–Section 95	9A586												
Screw and washer assy. (air horn to main body)–fill. head–No. 10–32 x 3/4"	381744-S(BB-80-H)	15	15	15	15	15	15	15	15	15	15	15	15
Screw (fast idle adjusting)–set–No. 10–3, x 3/4"	382297-S(UU-26-L)	A	B	C	D	E	F	G	H	J	K	L	M
Connector (used for choke inlet tube)–1/8" pipe–1/4" tube	382786-S(II-179)	A	B	C	D	E	F	G	H	J	K	L	M
Plug (fuel inlet) 1/8"–27	353054-S(PP-28)									J	K	L	M
SPRING (TRANSMISSION KICKDOWN CONTROL LEVER RETRACTING)	D1AZ 7B146-A	A	B	C	D	E	F	G	H	J	K	L	M
FILTER (FUEL)	D30Z 9155-A *FG-19-B	A	B	C	D	E	F	G	H	J	K	L	M
GASKET (FUEL FILTER)	D1ZZ 9229-A	A	B	C	D	E	F	G	H	J	K	L	M
LIMITER (IDLE ADJUSTING NEEDLE)	9J500												
	D6PZ 9J500-A *CM-747-B	2	2	2	2	2	2	2	2	2	2	2	2
ROD (SECONDARY THROTTLE CONTROL)	★ D5VZ 9C504-A *CM-2132	A	B	C	D	E	F	G	H	J	K	L	M
Ring (rod to throttle shaft & lever primary and secondary)–retaining–1/8"	377918-S8B(XX-14-F)	2	2	2	2	2	2	2	2	2	2	2	2
SPRING (POWER VALVE)	D5VZ 9E505-B *CM-2169	A	B	C	D	E	F	G	H	J	K	L	M
CONTROL ASSY. (VACUUM BREAK)–Also refer to group 9A977	9S514												
ROD (FLOAT BOWL VENT)	9A515												
	★ D5VZ 9A515-A *CM-2128	A	B	C	D	E	F	G	H				
	★ D7VZ 9A515-A *CM-2612									J	K	L	M
Screw (adjust vent rod)–No. 8–32 x 7/16"	358544-S8(UU-28-C)	A	B	C	D	E	F	G	H	J	K	L	M
GASKET (THROTTLE BODY)	D5VZ 9516-A *CG-449	A	B	C	D	E	F	G	H	J	K	L	M
VALVE (ACCELERATOR PUMP DISCHARGE NEEDLE)	C7AZ 9A516-B *CM-676	A	B	C	D	E	F	G	H	J	K	L	M
BRACKET (FLOAT BOWL VENT)	9E520												
	★ D5VZ 9E520-A	A	B	C	D	E	F	G	H				
	D7VZ 9E520-A									J	K	L	M
Screw (vent bracket)–No. 6–32 x 5/16"	375016-S2(UU-52-AK)	A	B	C	D	E	F	G	H	J	K	L	M
ROD (CHOKE PULLDOWN) Tag code D7PE-AA	★ D7PZ 9E524-A *CM-2659											L	

COPYRIGHT © 1986 — FORD MOTOR COMPANY — DEARBORN, MICHIGAN

DESCRIPTION/RESTRICTIONS	PART NUMBER	CARB. PARTS LISTS 36A THRU 36M											
		A	B	C	D	E	F	G	H	J	K	L	M
SPRING (POWER VALUE)	9E525												
Tag code D7VE-MA Tag codes D7PE-AA,D7VE-AAA	★ D5VZ 9E525-A *CM-2235	A	B	C	D	E	F	G	H		K	L	
Tag code D7VE-NA Tag code D7VE-SA	★ D5TZ 9E525-A *CM-2234									J	K	L	M
ROD (METERING PRIMARY)	9A526												
Tag codes D5PE-AGA, D6AE-DA, D6VE-EA	★ D5VZ 9A526-D *CM-2129	2	2	2	2	2	2	2					
Tag code D6LE-LA,MA,D6VE-KA	★ D6VZ 9A526-A *CM-2422							2			2		
Tag code D7PE-AA												2	
	★ D6AZ 9A526-D *CM-2428								2	2			
Tag codes D6VE-FA,GA,D6FE-TA	★ D6VZ 9A526-D *CM-2396							2					
Tag code D7VE-AAA,SA	D7VZ 9A526-A *CM-2655											2	
Tag code D8AE-DA													2
Tag code D7AE-ANA	★ D7AZ 9A526-A *CM-2838												2
Screw (metering rod adjust)-fill. head-No. 4-40 x 1/4"	356079-S2(BB-4-B)	2	2	2	2	2	2	2	2	2	2	2	2
ROD (METERING SECONDARY)	9A526												
Tag codes D6AE-DA,D6VE-EA,D5PE-AGA	★ D5VZ 9A526-F *CM-2339	2	2	2	2			2					
Tag codes D6AE-EA,FA	D5VZ 9A526-B *CM-2340					2	2						
Tag code D8AE-DA													2
Tag codes D6AE-BA,CA Tag codes D6VE-FA,GA,KA,D6FE-TA,D6LE-LA,MA	★ D5TZ 9A526-A *CM-2282						2	2	2	2	2		
Tag code D7PE-AAA												2	
Tag code D7AE-ANA													2
Tag code D7VE-AAA,SA	D7AZ 9A526-B *CM-2654											2	
SEAL (AIR HORN)	★ C8AZ 9C527-A *CM-1682	A	B	C	D	E	F	G	H	J	K	L	M
LEVER and SHAFT ASSY. (ACCELERATOR PUMP OUTER)	★ D5VZ 9528-A *CM-2310	A	B	C	D	E	F	G	H	J	K	L	M
LEVER and PIN ASSY. (ACCELERATOR PUMP INNER)	D5VZ 9528-B *CM-2311	A	B	C	D	E	F	G	H	J	K	L	M
Retainer (accelerator lever)-7/64 "C"	97404-S2(QQ-14-H)	A	B	C	D	E	F	G	H	J	K	L	M
LINK (ACCELERATOR PUMP)	9529												
	★ D5VZ 9529-A *CM-2125	A	B	C	D	E	F	G	H				
	★ D7AZ 9529-A *CM-2614									J	K	L	M
Screw (pump link) No. 8-32 x 1/4" socket set	375504-S8(UU-28-A)									J	K	L	M
COMPENSATOR ASSY (HOT IDLE)	D7VZ 9B532-B *CM-2634									J	K	L	M
Plug-compensator access	C8DZ 6026-C									J	K	L	M
Screw (compensator) No. 6-32 x 5/16 pan head	381761- S(UU-81-JA)									2	2	2	2
SHAFT (AIR VALVE)	★ D5VZ 9H532-A *CM-2130	A	B	C	D	E	F	G	H	J	K	L	M

NOTICE: When the parts list suffix is shown in the quantity required column, the quantity is one (1).

DESCRIPTION/RESTRICTIONS	PART NUMBER	CARB. PARTS LISTS 36A THRU 36M											
		A	B	C	D	E	F	G	H	J	K	L	M
JET (MAIN METERING)	9533												
#421 Tag code D6AE-DA,D6FE-TA	★ D5AZ 9533-A *CJ-261	2		2		2		2					
#429 Tag code D6VE-EA,D5PE-AGA	★ D5AZ 9533-B *CJ-262		2		2			2					
#192-tag codes D6AE-EA,FA Tag code D6LE-LA,MA,D6VE-KA Tag code D7VE-AAA,SA	★ D6VZ 9533-A *CJ-276						2	2				2	
#197-tag codes D6AE-BA,CA Tag code D8AE-DA	★ D6VZ 9533-C *CJ-277						2						2
#202 Tag code D7AE-ANA	★ D6VZ 9533-D *CJ-284								2	2			2
#207 Tag code D7PE-AA	★ D7VZ 9533-A *CJ-294										2	2	
LEVER (THROTTLE SHAFT AUXILIARY)	D5VZ 9A537-A *CM-1477-A	A	B	C	D	E	F	G	H	J	K	L	M
Screw (lever to carb.)-pan head-shoulder-No. 8-32 x 3/8"	380808-S(BB-683-D)	A	B	C	D	E	F	G	H	J	K	L	M
LEVER (FAST IDLE ADJUSTING)	9538												
	D5VZ 9538-A *CM-2153	A	B	C	D	E	F	G	H				
	D7VZ 9538-A *CM-2630									J	K	L	M
Screw (fast idle lever)-No. 8-32 x 3/8" hex. hd.	353358-S(UU-52-U)	A	B	C	D	E	F	G	H	J	K	L	M
SPRING (SECONDARY THROTTLE RETURN)-R.H.	★ D5VZ 9A538-A *CM-2149	A	B	C	D	E	F	G	H	J	K	L	M
Ref. T.S.B. #181 page 19, dated 4/12/79	D8FZ 9A538-A									J	K	L	M
SCREW (FAST IDLE ADJUSTING)	9B538												
	★ D5VZ 9B538-A *CM-2148	A	B	C	D	E	F	G	H				
	★ D1AZ 9B538-A *CM-1523									J	K	L	M
NEEDLE (IDLE ADJUSTING)	D0AZ 9541-A *CM-1087	2	2	2	2	2	2	2	2	2	2	2	2
ROD (ACCELERATOR PUMP LINK)	9B542												
	★ D5VZ 9B542-A *CM-2150	A	B	C	D	E	F	G	H				
	★ D7VZ 9B542-A *CM-2615									J	K	L	M
PISTON (ACCELERATOR PUMP)	D5VZ 9B544-A *CP-57	A	B	C	D	E	F	G	H				
PISTON ASSY (ACCELERATOR PUMP)	D7VZ 9B544-A *CP-59									J	K	L	M
PLATE (CHOKE)	9545												
Tag codes D6AE-DA,D6VE-EA,D6FE-TA,D6LE-LA Tag code D7AE-ANA	★ D3AZ 9545-A *CM-1754	A	B	C	D	E	F	G	H		K		M
Tag codes D6VE-FA,GA	★ D6VZ 9545-A *CM-2397-A							G		J			
Tag code D8AE-DA	★ D7AZ 9545-A *CM-2656											L	M
Screw (choke plate)-hex. head-No. 6-32 x 5/16"	375016-S2(UU-52-AK)	2	2	2	2	2	2	2	2	2	2	2	2
SHAFT (CHOKE PLATE)	D5VZ 9547-A *CM-2146	A	B	C	D	E	F	G	H	J	K	L	M

COPYRIGHT © 1986 — FORD MOTOR COMPANY — DEARBORN, MICHIGAN

DESCRIPTION/RESTRICTIONS	PART NUMBER	CARB. PARTS LISTS 36A THRU 36M											
		A	B	C	D	E	F	G	H	J	K	L	M
FLOAT ASSY.	9550												
	D5VZ 9550-A *CM-2145	A	B	C	D	E	F	G		J	K	L	
RH	★ D6AZ 9550-A *CM-2429								H				M
LH	D6AZ 9550-B *CM-2430								H				M
BRACKET (DASHPOT) used as trans. kickdown spring retainer-r/b D9ZZ 9S555-B	★ D0AZ 9B550-A					E	F	G	H				
Screw (dashpot bracket)-No. 10-32 x 1/2" pan hd.	50810-S8(U-158)					E	F	G	H				
LEVER (CHOKE SHAFT)	★ C9AZ 9551-A *CM-1144	A	B	C	D	E	F	G	H	J	K	L	M
Screw (lever to shaft)-No. 6-32 x 5/16" hex. hd.	383547-S(BB-541-D)	A	B	C	D	E	F	G	H	J	K	L	M
BODY (POWER VALVE)	D5VZ 9G552-A *CM-2154	A	B	C	D	E	F	G	H	J	K	L	M
VALVE (AIR)	★ D5VZ 9H555-A *CM-2126	A	B	C	D	E	F	G	H	J	K	L	M
Screw (valve to shaft)-No. 6-32 x 5/16" pan head	381761-S(UU-81-JA)	2	2	2	2	2	2	2	2	2	2	2	2
SPRING (AIR VALVE)	D5VZ 9H556-C *CM-2138	A	B	C	D	E	F	G	H	J	K	L	M
VALVE ASSY. (FLOAT BOWL VENT)	D5VZ 9557-A *CM-2312	A	B	C	D	E	F	G	H	J	K	L	M
Retainer (vent valve)-1/4 "C"	372999-S(QQ-35)	A	B	C	D	E	F	G	H	J	K	L	M
SHAFT (FLOAT LEVER)	C7AZ 9558-A *CM-663	A	B	C	D	E	F	G	H	J	K	L	M
SPRING (FLOAT BOWL VENT RETURN)	D5VZ 9560-A *CM-2127	A	B	C	D	E	F	G	H	J	K	L	M
GASKET (FLOAT BOWL) Tag code D7AE-ANA	D5VZ 9561-B *CG-450-A	A	B	C	D	E	F	G	H	J	K	L	M
Tag code D8AE-DA	D8AZ 9561-E *CG-508-A												M
VALVE KIT (FUEL INLET)	9564												
Supplementary	D2AZ 9564-B *CV-86-A	A	B			E							
Supplementary-incl. (1) C7AZ 9569-B gasket	D5AZ 9564-A *CV-96			C	D					J	K	L	
Supplementary-incl. (1) C7AZ 9569-B gasket	D6AZ 9564-B *CV-105						F	G	H				M
Primary-incl. (1) C7AF 9566-F valve, (1) D0FF 9567-A seat and (1) C7AZ 9569-A gasket	D5AZ 9564-B *CV-97	A	B			E							
Primary-incl. (1) C7AF 9566-F valve, (1) D5AE 9567-BA seat and (1) C7AZ 9569-A gasket	★ D5AZ 9564-C *CV-98			C	D	E							
Primary-incl. (1) D5VE 9566-AA valve, (1) D5VE 9567-AA seat and (1) C7AZ 9569-A gasket	D6AZ 9564-A *CV-104						F	G		J	K	L	
Primary-incl. (1) D6AE 9566-BA valve, (1) D6AE 9567-BA seat, (1) C7AZ 9569-A gasket	★ D6AZ 9564-C *CV-106								H				
Primary-incl. (1) D7AE 9566-AA valve, (1) D7AE 9567-BA seat,and (1) C7AZ 9569-A gasket- Tag code D7AE-ANA	★ D7AZ 9564A *CV-112												M
Primary-incl. (1) D7AE 9566-AA valve,(1) D6AE 9567-BA seat, and (1) C7AZ 9569-A gasket - Tag code D8AE-DA	★ D8AZ 9564-B *CV-116												M
NUT (CHOKE PLATE ADJUSTING)	D5VZ 9D564-A *CM-2144	A	B	C	D	E	F	G	H	J	K	L	M
GASKET (HOT IDLE COMPENSATOR)	D7VZ 9B567-A *CG-499									J	K	L	M

NOTICE: When the parts list suffix is shown in the quantity required column, the quantity is one (1).

DESCRIPTION/RESTRICTIONS	PART NUMBER	CARB. PARTS LISTS 36A THRU 36M											
		A	B	C	D	E	F	G	H	J	K	L	M
GASKET (FUEL INLET NEEDLE SEAT)	9569												
Primary-1/2" I.D. x 5/8" O.D.	C7AZ 9569-A	A	B	C	D	E	F	G	H	J	K	L	M
Secondary-3/8" I.D. x 1/2" O.D.	★ C7AZ 9569-B	A	B	C	D	E	F	G	H	J	K	L	M
STEM (ACCELERATOR PUMP PISTON)	★ D5VZ 9570-A *CM-2143	A	B	C	D	E	F	G	H				
BAFFLE (AIR VALVE)	D2AZ 9S570-A	A	B	C	D	E	F	G	H	J	K	L	M
CUP (PUMP PISTON)	9572												
	C7AZ 9572-A *CM-651	A	B	C	D	E	F	G	H				
	D7VZ 9572-A *CM-2613									J	K	L	M
RETAINER (ACCELERATOR PUMP CHECK VALVE)	C7AZ 9575-A *CM-652	A	B	C	D	E	F	G	H				
Ball (accelerator pump check)-steel-3/16"	371350-S(AA-4)	A	B	C	D	E	F	G	H	J	K	L	M
Ball (accelerator pump check)-1/8"	357186-S(AA-1)	A	B	C	D	E	F	G	H	J	K	L	M
SPRING (IDLE ADJUSTING NEEDLE)	★ 40 9578	2	2	2	2	2	2	2	2	2	2	2	2
Fast idle adjusting		A	B	C	D	E	F	G	H	J	K	L	M
PISTON ASSY (AIR VALVE DAMPENER)	9H578												
	★ D5AZ 9H578-A *CM-2137	A	B	C	D	E	F	G	H				
	★ D7PZ 9H578-A *CM-2617									J	K	L	M
LEVER and SHAFT ASSY. (THROTTLE)	9581												
	D5VZ 9581-A *CM-2140	A	B	C	D	E	F	G	H				
Tag code D8AE-DA	★ D7VZ 9581-B *CM-2628									J	K	L	M
Tag code D7AE-ANA	★ D7VZ 9781-C *CM-2839												M
LEVER (AIR VALVE DAMPENER)	★ D5VZ 9H582-A *CM-2136	A	B	C	D	E	F	G	H	J	K	L	M
LINK (AIR VALVE DAMPENER)	★ D5VZ 9H583-A *CM-2135	A	B	C	D	E	F	G	H	J	K	L	M
Retainer (link to air valve dampener lever)	377918-S8B(XX-14-F)	A	B	C	D	E	F	G	H	J	K	L	M
PIN (AIR VALVE DAMPENER LEVER)	D1AZ 9H584-A *CM-2134	A	B	C	D	E	F	G	H	J	K	L	M
PLATE (THROTTLE)	9585												
Primary	★ C8AZ 9585-F *CM-840	2	2	2	2	2	2	2	2				
Primary	D7VZ 9585-A *CM-2629									2	2	2	2
Secondary	★ D1AZ 9585-A *CM-1298	2	2	2	2	2	2	2	2	2	2	2	2
Screw (throttle plates)-hex. head No. 3-48 x 1/4" secondary	383677-S(BB-542-A)	8	8	8	8	8	8	8	8	4	4	4	4
Screw (throttle plates) No. 3-48 x 1/4" hex head primary	387270-S2(UU-52-UL)									4	4	4	4
BRACKET (THROTTLE EMISSION CONTROL SOLENOID)-Tag codes D6AE-DA,D6LE-LA	D2AZ 9J586-A	A	B	C	D	E		G	H	J	K	L	M
Nut (bracket to carb.)-hex. No. 10-32	34079-S7(M-163)	A	B	C	D	E		G	H	J	K	L	M
Lockwasher (bracket to carb.)-No. 10	34903-S8(X-96)	A	B	C	D	E		G	H	J	K	L	M
Screw & lockwasher assy. (bracket to carb.)-pan head-No. 10-32 x 1/2"	50810-S8(U-158)	A	B	C	D	E			H	J	K	L	M
LEVER ASSY. (ACCELERATOR PUMP)	★ D5VZ 9D591-A *CM-2401	A	B	C	D	E	F	G	H	J	K	L	M

COPYRIGHT © 1986 — FORD MOTOR COMPANY — DEARBORN, MICHIGAN

DESCRIPTION/RESTRICTIONS	PART NUMBER	CARB. PARTS LISTS 36A THRU 36M											
		A	B	C	D	E	F	G	H	J	K	L	M
LEVER and SHAFT ASSY. (SECONDARY THROTTLE)	9A592												
R.H.	D5VZ 9A592-A *CM-2314	A	B	C	D	E	F	G	H	J	K	L	M
L.H.	D5VZ 9A592-B *CM-2315	A	B	C	D	E	F	G	H	J	K	L	M
Screw (secondary throttle stop)-No. 10-32 x 3/4" set	382297-S(UU-266)	A	B	C	D	E	F	G	H	J	K	L	M
SWIVEL (ACCELERATOR PUMP LEVER)	★ D5VZ 9D592-A *CM-2158	A	B	C	D	E	F	G	H	J	K	L	M
PISTON (POWER VALVE)	★ D5VZ 9D596-A *CM-2155	A	B	C	D	E	F	G	H	J	K	L	M
CAM ASSY. (FAST IDLE)	D1SZ 9597-A *CM-1451	A	B	C	D	E	F	G	H	J	K	L	M
ROD (POWER VALVE)	★ D5VZ 9D597-A *CM-2156	A	B	C	D	E	F	G	H	J	K	L	M
SPRING (ACCELERATOR PUMP ROD)	★ D5VZ 9D598-A *CM-2131	A	B	C	D	E	F	G	H	J	K	L	M
ROD (CHOKE CONTROL)	★ D5VZ 9A599-A *CM-2157	A	B	C	D	E	F	G	H	J	K	L	M
Ring (rod to shaft-lever)-retaining-1/8"	377918-S8B(XX-14-F)	2	2	2	2	2	2	2	2	2	2	2	2
BUSHING (ACCELERATOR PUMP)	★ D5VZ 9682-A *CM-2139	A	B	C	D	E	F	G	H	J	K	L	M
RETAINER (PUMP SPRING)	D5VZ 9688-A *CM-2159	A	B	C	D	E	F	G	H	J	K	L	M
SHAFT and LEVER ASSY. (CHOKE HOUSING) Tag code D7VE-MA	★ D5VZ 9A753-A *CM-2316	A	B	C	D	E	F	G	H	J	K	L	M
ADAPTER (CHOKE CONTROL TUBE)	C8VY 9C786-A	A	B	C	D	E	F	G	H	J	K	L	M
SPRING (METERING ROD)	D5VZ 9D820-A	2	2	2	2	2	2	2	2	2	2	2	2
PISTON ASSY. (CHOKE THERMOSTAT)	9840												
	D5VZ 9840-A *CM-2313	A	B	C	D	E	F	G	H				
Tag code D7VE-NA Tag code D7VE-AAA,SA Tag code D8AE-DA	★ D7AZ 9840-A *CM-2631									J	K	L	M
Tag code D7VE-MA Tag code D7PE-AA Tag code D7AE-ANA	★ D3AZ 9840-A *CM-1287-B										K	L	M
Screw (choke piston)-No. 6-32 x 3/8" pan head	50802-S7(U-150)	A	B	C	D	E	F	G	H	J	K	L	M
CLAMP (THERMOSTATIC CHOKE HOUSING)	E2AZ 9842-A *CM-3839	A	B	C	D	E	F	G	H	J	K	L	M
Screw (clamp to choke housing)-fill. head-No. 8-32 x 1/2"	31061-S8(U-50) 3	3	3	3	3	3	3	3	3	3	3	3	3
HOUSING ASSY. (THERMOSTATIC CHOKE)	D5VZ 9848-A *CM-2151	A											
Tag codes-D5PE-AGA,D6AE-DA,D6FE-TA, D6VE-EA,KA,D6LE-LA	D5VZ 9848-C *CM-2152		B	C	D	E	F	G	H	J	K	L	M
Tag codes D6VE-FA,GA	★ D6VZ 9848-A *CM-2398							G					
BUSHING (CHOKE HOUSING)	★ D5VZ 9851-A *CM-2165	A	B	C	D	E	F	G	H	J	K	L	M

NOTICE: When the parts list suffix is shown in the quantity required column, the quantity is one (1).

DESCRIPTION/RESTRICTIONS	PART NUMBER	CARB. PARTS LISTS 36A THRU 36M											
		A	B	C	D	E	F	G	H	J	K	L	M
SOLENOID ASSY. (THROTTLE EMISSION CONTROL)	9D856												
Tag codes D6AE-DA, D6LE-LA	D5VZ 9D856-A *CS-2	A	B	C	D			G	H				
	D7VZ 9D856-A *CS-9									J	K	L	M
Nut (solenoid to bracket)-hex.-7/16"-20	45219-S2(M-173)	A	B	C	D			G	H	J	K	L	M
SHIELD (CHOKE THERMOSTAT)	9861												
Tag code D7VE-KA Tag code D7AE-ANA	D00Z 9861-A	A	B	C	D	E	F	G	H	J	K		M
Tag code D7VE-TA Tag code D8AE-DA	★ D7VZ 9861-A									J		L	M
GASKET (THERMOSTATIC CHOKE HOUSING)	D2AZ 9871-A *CG-336-B	A	B	C	D	E	F	G	H	J	K	L	M
SPRING (SECONDARY THROTTLE RETURN)-L.H.	★ D5VZ 9E873-A *CM-2168	A	B	C	D	E	F	G	H	J	K	L	M
LEVER (FUEL INLET NEEDLE CONTROL) Tag code D6LE-MA,D6VE-KA	D5VZ 9B904-A *CM-2487							G		J	K	L	M
SHAFT (AIR BY-PASS PLATE) Tag codes D6VE-FA,GA	D7VZ 9A948-A *CM-2627							G		J			
COMPENSATOR ASSY. (ALTITUDE)- Tag codes D6VE-FA,GA	★ D6VZ 9A950-A *CM-2399							G		J			
Screw (compensator)-No. 8-32 x 5/8" fillister hd.	43255-S8(U-74)							4		4			
GASKET (COMPENSATOR)- Tag codes D6VE-FA,GA	D6VZ 9A953-A *CG-472							G		J			
SPRING (CHOKE PISTON RETURN)	9B956												
Tag code D7VE-KA Tag code D7VE-NA	D7AZ 9B956-A *CM-2633									J	K		
Tag code D7PE-AA Tag code D7VE-TA Tag code D8AE-DA	D7AZ 9B956-C *CM-2657									J		L	M
Retainer-spring nut 3/16"	350841-S(MM-2630)									J	K	L	
LEVER (CAM PULLDOWN)	D5VZ 9A970-A *CM-2166	A	B	C	D	E	F	G	H	J	K	L	M
ROD (AIR BY-PASS PLATE) Tag codes D6VE-FA,GA	★ D6VZ 9A973-A *CM-2625							G		J			
RETAINER ASSY. (METERING ROD)	D5VZ 9A974-A *CM-2317	A	B	C	D	E	F	G	H	J	K	L	M
DIAPHRAGM and HOUSING (CHOKE)	9A977												
R/b D7VZ 9A977-B(11/81) Tag code D8AE-DA	★ D5VZ 9A977-A *CM-2167	A	B	C	D	E	F	G	H				M
Tag code D7VE-KA,TA Tag code D7VE-MA,NA Tag code D7VE-AAA,SA Tag code D7AE-ANA	D7VZ 9A977-B *CM-2632									J	K	L	M
Tag code D7PE-AA	D7PZ 9A977-A *CM-2658											L	
RETAINER (PISTON STOP)	D5VZ 9A978-A *CM-2164	A	B	C	D	E	F	G	H	J	K	L	M
GASKET (POWER VALVE BODY)	★ D5VZ 9A980-A *CG-451	A	B	C	D	E	F	G	H	J	K	L	M
PLATE (AIR BY-PASS) Tag codes D6VE-FA,GA	D7VZ 9A987-A *CM-2626							G		J			
Screw (plate) No. 4-40 x 1/4" hex head	57000-S2(B-328)							2		2			
CAP ASSY. (CHOKE HOUSING)	D5VZ 9A996-A *CM-2161	A	B	C	D	E	F	G	H	J	K	L	M

COPYRIGHT © 1986 — FORD MOTOR COMPANY — DEARBORN, MICHIGAN

DESCRIPTION/RESTRICTIONS	PART NUMBER	CARB. PARTS LISTS 36N THRU 36Z											
		N	P	Q	R	S	T	U	V	W	X	Y	Z
NOTE: † Not a part of service carburetor													
GASKET SET – Refer to carburetor identification chart–Section 95	9502												
TUNE-UP KIT – Refer to carburetor identification chart–Section 95	9A586												
Screw and washer assy. (air horn to main body)–fill head–No. 10–32 x 3/4"	381744-S(BB-80-H))	15	15										
Screw (fast idle adjusting)–set–No. 10–32 x 3/4"	382297-S(UU-26-L)	N	P										
Connector (used for choke inlet tube)–1/8" pipe–1/4" tube	382786-S(II-179)	N	P										
Plug (fuel inlet) 1/8"–27	353054-S(PP-28)	N	P										
SPRING (TRANSMISSION KICKDOWN CONTROL LEVER RETRACTING)	D1AZ 7B146-A	N	P										
FILTER (FUEL)	D30Z 9155-A *FG-19-B	N	P										
GASKET (FUEL FILTER)	D1ZZ 9229-A	N	P										
LIMITER (IDLE ADJUSTING NEEDLE)	D6PZ 9J500-A *CM-747-B	†2	2										
ROD (SECONDARY THROTTLE CONTROL)	★ D5VZ 9C504-A *CM-2132	N	P										
Ring (rod to throttle shaft & lever primary and secondary)–retaining–1/8"	377918-S8B(XX-14-F)	2	2										
SPRING (POWER VALVE)	D5VZ 9E505-B *CM-2169	N	P										
CONTROL ASSY. (VACUUM BREAK)–Also refer to group 9A977	9S514												
ROD (FLOAT BOWL VENT)	★ D7VZ 9A515-A *CM-2612	N											
Screw (adjust vent rod)–No. 8-32 x 7/16"	38544-S8 (UU-28-C)	N											
GASKET (THROTTLE BODY)	D5VZ 9516-A *CG-449	N	P										
VALVE (ACCELERATOR PUMP DISCHARGE NEEDLE)	C7AZ 9A516-B *CM-676	N	P										
BRACKET (FLOAT BOWL VENT)	D7VZ 9E520-A	N											
Screw (vent bracket)–No. 6-32 x 5/16"	375016-S2 (UU-52-AK)	N											
SPRING (POWER VALVE)	9E525												
Tag codes D6PE-AEA,AFA	★ D5TZ 9E525-A *CM-2234	N	P										
Tag codes D6PE-AGA,AHA	★ D5VZ 9E525-A *CM-2235	N											
ROD (METERING PRIMARY)	9A526												
Tag code D6PE-AEA	★ D5VZ 9A526-D *CM-2129	2											
Tag code D6PE-AEA	★ D6VZ 9A526-A *CM-2422	2											
Tag codes D6PE-AFA,AGA	★ D6VZ 9A526-D *CM-2396	2											
	D7VZ 9A526-A *CM-2655		2										
Screw (metering rod adjust)–fill. head–No. 4-40 x 1/4"	356079-S2 (BB-4-B)	2	2										

NOTICE: When the parts list suffix is shown in the quantity required column, the quantity is one (1).

DESCRIPTION/RESTRICTIONS	PART NUMBER	CARB. PARTS LISTS 36N THRU 36Z											
		N	P	Q	R	S	T	U	V	W	X	Y	Z
NOTE: † Not a part of service carburetor													
ROD (METERING SECONDARY)	9A526												
Tag code D6PE-AHA	★ D5VZ 9A526-F *CM-2339	2											
Tag codes D6PE-AEA,AFA,AGA	★ D5TZ 9A526-A *CM-2282	2											
	D7AZ 9A526-B *CM-2654		2										
SEAL (AIR HORN)	★ C8AZ 9C527-A *CM-1682	N	P										
LEVER and SHAFT ASSY. (ACCELERATOR PUMP OUTER)	★ D5VZ 9528-A *CM-2310	N	P										
LEVER and PIN ASSY. (ACCELERATOR PUMP INNER)	D5VZ 9528-B *CM-2311	N	P										
Retainer (accelerator Lever)-7/64 'C'	97404-S2 (QQ-14-H)	N	P										
LINK (ACCELERATOR PUMP)	★ D7AZ 9529-A *CM-2614	N	P										
Screw (pump link) No. 8-32 x 1/4" socket set	375504-S8 (UU-28-A)	N	P										
COMPENSATOR ASSY. (HOT IDLE)	D7VZ 9B532-B *CM-2634		P										
Plug-compensator access	C8DZ 6026-C		P										
Screw (compensator)-No. 6-32 x 5/16" pan head	381761-S (UU-81-JA)		2										
SHAFT (AIR VALVE)	★ D5VZ 9H532-A *CM-2130	N	P										
JET (MAIN METERING)	9533												
#421-Tag code D6PE-AGA	★ D5AZ 9533-A *CJ-261	2											
#429-Tag code D6PE-AHA	★ D5AZ 9533-B *CJ-262	2											
#197-Tag codes D6PE-AEA,AFA	★ D6VZ 9533-C *CJ-277	2											
#202	★ D6VZ 9533-D *CJ-284		2										
LEVER (THROTTLE SHAFT AUXILIARY)	D5VZ 9A537-A *CM-1477-A	N	P										
Screw (lever to carb.)-pan head-shoulder-No. 8-32 x 3/8"	380808-S (BB-683-D)	N	P										
LEVER (FAST IDLE ADJUSTING)	D7VZ 9538-A *CM-2630	N	P										
Screw (fast idle lever)-No. 8-32 x 3/8" hex. hd.	353358-S(UU-52-U)	N	P										
SPRING (SECONDARY THROTTLE RETURN)-R.H.	★ D5VZ 9A538-A *CM-2149	N	P										
Ref. T.S.B. #181 page 19, dated 4/17/79	D8FZ 9A538-A		P										
SCREW (FAST IDLE ADJUSTING)	★ D1AZ 9B538-A *CM-1523	N	P										
NEEDLE (IDLE ADJUSTING)	D0AZ 9541-A *CM-1087	2	2										
ROD (ACCELERATOR PUMP LINK)	★ D7VZ 9B542-A *CM-2615	N	P										
PISTON ASSY. (ACCELERATOR PUMP)	D7VZ 9B544-A *CP-59	N	P										
PLATE (CHOKE)	9545												
	★ D3AZ 9545-A *CM-1754	N											
	★ D7AZ 9545-A *CM-2656		P										
Screw (choke plate)-hex. head-No. 6-32 x 5/16"	375016-S2 (UU-52-AK)	2	2										
SHAFT (CHOKE PLATE)	D5VZ 9547-A *CM-2146	N	P										

COPYRIGHT © 1986 — FORD MOTOR COMPANY — DEARBORN, MICHIGAN

DESCRIPTION/RESTRICTIONS	PART NUMBER	CARB. PARTS LISTS 36N THRU 36Z											
		N	P	Q	R	S	T	U	V	W	X	Y	Z
NOTE: † Not a part of service carburetor													
FLOAT ASSY.	D5VZ 9550-A *CM-2145	N	P										
LEVER (CHOKE SHAFT)	★ C9AZ 9551-A *CM-1144	N	P										
Screw (lever to shaft)-No. 6-32 x 5/16" hex. hd.	383547-S (BB-541-D)	N	P										
BODY (POWER VALUE)	D5VZ 9G552-A *CM-2154	N	P										
VALVE (AIR)	★ D5VZ 9H555-A *CM-2126	N	P										
Screw (value to shaft)-No. 6-32 x 5/16" pan head	381761-S (UU-81-JA)	2	2										
SPRING (AIR VALVE)	D5VZ 9H556-C *CM-2138	N	P										
VALVE ASSY. (FLOAT BOWL VENT)	D5VZ 9557-A *CM-2312	N											
Retainer (vent valve)-1/4'C'	372999-S(QQ-35)	N											
SHAFT (FLOAT LEVER)	C7AZ 9558-A *CM-663	N	P										
SPRING (FLOAT BOWL VENT RETURN)	D5VZ 9560-A *CM-2127	N											
GASKET (FLOAT BOWL)	9561												
	D5VZ 9561-B *CG-450-A	N											
	D8AZ 9561-E *CG-508-A		P										
VALVE KIT (FUEL INLET)	9564												
Supplementary-incl. (1) C7AZ 9569-B gasket	D5AZ 9564-A *CV-96	N	P										
Primary-incl. (1) D5VE 9566-AA valve, (1) D5VE-9567-AA seat and (1) C7AZ 9569-A gasket	D6AZ 9564-A *CV-104	N	P										
NUT (CHOKE PLATE ADJUSTING)	D5VZ 9D564-A *CM-2144	N	P										
GASKET (HOT IDLE COMPENSATOR)	D7VZ 9B567-A *CG-499		P										
GASKET (FUEL INLET NEEDLE SEAT)	9569												
Primary-1/2" I.D. x 5/8" O.D.	C7AZ 9569-A	N	P										
Secondary-3/8" I.D. x 1/2" O.D.	★ C7AZ 9569-B	N	P										
BAFFLE (AIR VALVE)	D2AZ 9S570-A	N	P										
CUP (PUMP PISTON)	D7VZ 9572-A *CM-2613	N	P										
Ball (accelerator pump check)-steel-3/16"	371350-S(AA-4)	N	P										
Ball (accelerator pump check)-1/8"	357186-S(AA-1)	N	P										
RETAINER (ACCELERATOR PUMP CHECK VALVE)	C7AZ 9575-A *CM-652	N	P										
SPRING (IDLE ADJUSTING NEEDLE) Fast idle adjusting	★ 40 9578	2 N	2 P										
PISTON ASSY (AIR VALVE DAMPENER	★ D7PZ 9H578-A *CM-2617	N	P										
LEVER AND SHAFT ASSY. (THROTTLE)	9581												
	D5VZ 9581-A *CM-2140	N											
	★ D7VZ 9581-B *CM-2628		P										
LEVER (AIR VALVE DAMPENER)	★ D5VZ 9H582-A *CM-2136	N	P										

NOTICE: When the parts list suffix is shown in the quantity required column, the quantity is one (1).

DESCRIPTION/RESTRICTIONS	PART NUMBER	CARB. PARTS LISTS 36N THRU 36Z											
		N	P	Q	R	S	T	U	V	W	X	Y	Z
NOTE: † Not a part of service carburetor													
LINK (AIR VALVE DAMPENER)	★ D5VZ 9H583-A *CM-2135	N	P										
Retainer (link to air valve dampener lever)	377918-S8B(XX-14-F)	N	P										
PIN (AIR VALVE DAMPENER LEVER)	D1AZ 9H584-A *CM-2134	N	P										
PLATE (THROTTLE)	9585												
Primary	★ C8AZ 9585-F *CM-840	2											
Primary	D7VZ 9585-A *CM-2629		2										
Secondary	★ D1AZ 9585-A *CM-1298	2	2										
Screw (throttle plates)-hex. head No. 3-48 x 1/4" secondary	383677-S(BB-542-A)	8	4										
Screw (throttle plate) no. 3-48 x 1/4" primary	387270-S2 (UU-52-UL)		4										
BRACKET (THROTTLE SOLENOID)	D2AZ 9J586-A	†	P										
LEVER ASSY. (ACCELERATOR PUMP)	★ D5VZ 9D591-A *CM-2401	N	P										
LEVER and SHAFT ASSY. (SECONDARY THROTTLE)	9A592												
R.H.	D5VZ 9A592-A *CM-2314	N	P										
L.H.	D5VZ 9A592-B *CM-2315	N	P										
Screw (secondary throttle stop)-No. 10-32 x 3/4" set	382297-S(UU-266)	N	P										
SWIVEL (ACCELERATOR PUMP LEVER)	★ D5VZ 9D592-A *CM-2158	N	P										
PISTON (POWER VALVE)	★ D5VZ 9D596-A *CM-2155	N	P										
CAM ASSY. (FAST IDLE)	D1SZ 9597-A *CM-1451	N	P										
ROD (POWER VALVE)	★ D5VZ 9D597-A *CM-2156	N	P										
SPRING (ACCELERATOR PUMP ROD)	★ D5VZ 9D598-A *CM-2131	N	P										
ROD (CHOKE CONTROL)	★ D5VZ 9A599-A *CM-2157	N	P										
Ring (rod to shaft-lever)-retaining-1/8"	377918-S8B(XX-14-F)	2	2										
BUSHING (ACCELERATOR PUMP)	★ D5VZ 9682-A *CM-2139	N	P										
RETAINER (PUMP SPRING)	D5VZ 9688-A *CM-2159	N	P										
SHAFT and LEVER ASSY. (CHOKE HOUSING)	★ D5VZ 9A753-A *CM-2316	N	P										
ADAPTER (CHOKE CONTROL TUBE)	C8VY 9C786-A	N	P										
SPRING (METERING ROD)	D5VZ 9D820-A	N	P										
PISTON ASSY. (CHOKE THERMOSTAT)	★ D7AZ 9840-A *CM-2631	N	P										
Screw (choke piston)-No. 6-32 x 3/8" pan head	50802-S7(U-150)	N	P										
CLAMP (THERMOSTATIC CHOKE HOUSING)	E2AZ 9842-A *CM-3839	N	P										
Screw (clamp to choke housing)-fill head-No. 8-32 x 1/2"	31061-S8(U-50)3	3	3										
HOUSING ASSY. (THERMOSTATIC CHOKE)	D5VZ 9848-C *CM-2152	N	P										

COPYRIGHT © 1986 — FORD MOTOR COMPANY — DEARBORN, MICHIGAN

DESCRIPTION/RESTRICTIONS	PART NUMBER	CARB. PARTS LISTS 36N THRU 36Z											
		N	P	Q	R	S	T	U	V	W	X	Y	Z
NOTE: † Not a part of service carburetor													
BUSHING (CHOKE HOUSING)	★ D5VZ 9851-A *CM-2165	N	P										
SOLENOID ASSY. (THROTTLE CONTROL)	D7VZ 9D856-A *CS-9		P										
SHIELD (CHOKE THERMOSTAT)	9861												
	D00Z 9861-A	N											
	★ D7VZ 9861-A		P										
GASKET (THERMOSTATIC CHOKE HOUSING)	D2AZ 9871-A *CG-336-B	N	P										
SPRING (SECONDARY THROTTLE RETURN)-L.H.	★ D5VZ 9E873-A *CM-2168	N	P										
LEVER (FUEL INLET NEEDLE CONTROL)	D5VZ 9B904-A *CM-2487	N	P										
SPRING (CHOKE PISTON RETURN)	D7AZ 9B956-C *CM-2657		P										
Retainer-spring nut 3/16"	350481-S(MM-263-C)		P										
LEVER (CAM PULLDOWN)	D5VZ 9A970-A *CM-2166	N	P										
RETAINER ASSY. (METERING ROD)	D5VZ 9A974-A *CM-2317	N	P										
DIAPHRAGM and HOUSING (CHOKE)	9A977												
	D7VZ 9A977-B *CM-2632	N	P										
Screw (diaphragm) 1/4"-20 x 5/18" hex head	43263-S8 (U-3)	N	P										
RETAINER (PISTON STOP)	D5VZ 9A978-A *CM-2164	N	P										
GASKET (POWER VALVE BODY)	★ D5VZ 9A980-A *CG-451	N	P										
CAP ASSY. (CHOKE HOUSING)	D5VZ 9A996-A *CM-2161	N	P										

NOTICE: When the parts list suffix is shown in the quantity required column, the quantity is one (1).

DESCRIPTION/RESTRICTIONS	PART NUMBER	CARB. PARTS LISTS 37A THRU 37M											
		A	B	C	D	E	F	G	H	J	K	L	M
NOTE: † Not a part of service carburetor													
GASKET SET – Refer to carburetor identification chart–Section 95	9502												
TUNE-UP KIT – Refer to carburetor identification chart–Section 95	9A586												
Screw and washer (air horn to main body)–No. 10-32 x 5/8"	43256-S8(UU-77-F)	6	6	6	6	6	6	6	6	6	6	6	
SPRING (TRANSMISSION KICKDOWN CONTROL LEVER RETRACTING) Tag codes 75TF-BA,DA,76TF-BA,DA	D1AZ 7B146-A		B		D		†F	G	†H	J	K		
Screw (adjust trans. kickdown)-hex. head-No. 10-32 x 1" Tag codes 75TF-BA,DA,76TF-BA,DA	379622-S7(UU-S2-M)		B		D		F	G	H	J	K		
LIMITER (IDLER ADJUSTING NEEDLE)	9J500												
	D6PZ 9J500-A *CM-747-B	†2	†2	2	†2	†2	†2	†2	†2	2	2		
SEAL (FAST IDLE ROD)	C7AZ 9B501-A	A	B	C	D	E	F	G	H	J	K	L	
WEIGHT (PUMP DISCHARGE BALL)	C9AZ 9B511-A *CM-1126	A	B	C	D	E	F	G		J	K	L	
Ball (accel. pump inlet passage)-steel-3/16"	371350-S(AA-4)	A	B	C	D	E	F	G		J	K	L	
CONTROL ASSY. (VACUUM BREAK)	9S514												
R/b D8AZ 9S514-L (12/79)	★ D5ZZ 9S514-A *CK-1992	A	B	C									
	D8AZ 9S514-L *CK-1992-A						F	G					
R/b D8ZZ 9S514-L (12/79)	★ D5TZ 9S514-B *CK-1990				D								
	D8AZ 9S514-N *CK-2017-A					E							
	D8AZ 9S514-D *CK-2057								H	J	K	L	
Screw (vacuum break control to carb.)–No. 8-18 x 1/2"	380934-S101(44-67-F)	2	2	2	2	2	2	2	2	2	2	2	
Ring (retaining)	377918-S8B(XX-14-F)	A	B	C	D	E	F	G	H	J			
ROD (FLOAT BOWL VENT)	9A515												
	D5AZ 9A515-B *CM-2281									J			
	★ D2AZ 9A515-A *CM-1470											L	
BAFFLE (FLOAT BOWL)	D9AZ 9A517-B *CM-3119										K	L	
BRACKET (FLOAT BOWL VENT)	D5AZ 9E520-A									J	K	L	
DASHPOT and SOLENOID ASSY. Tag code D6ZA-DA,AAA	D5ZZ 9S520-A *CD-22	†A	†B	C	†D	†E	†F	†G					
Screw and washer (solenoid to carb.)–No. 10-32 x 1/2"	50810-S8(U-158)	A	B	C	D	E	F	G					

COPYRIGHT © 1986 — FORD MOTOR COMPANY — DEARBORN, MICHIGAN

DESCRIPTION/RESTRICTIONS	PART NUMBER	CARB. PARTS LISTS 37A THRU 37M											
		A	B	C	D	E	F	G	H	J	K	L	M
NOTE: † Not a part of service carburetor													
SUPPORT ASSY. (BOOSTER VENTURI)	9A523												
	★ D5ZZ 9A523-C *CM-2177		B										
	★ D5ZZ 9A523-D *CM-2178	A			D								
	D5ZZ 9A523-A *CM-2252			C									
Tag codes D6ZE-AA,VA	★ D6ZZ 9A523-B *CM-2366					E							
Tag code D6PE-ABA, D6ZE-CA	D6ZZ 9A523-C *CM-2367					E							
	★ D6ZZ 9A523-D *CM-2368						F	G					
Tag code D7PE-CAA, D7YE-AA,EA	★ D7ZZ 9A523-C *CM-2535								H				
Tag code D7YE-BA	★ D7ZZ 9A523-D *CM-2536								H				
	★ D8ZZ 9A523-D *CM-2948									J			
Tag codes D9YE-AB,BB	★ D9FZ 9A523-B *CM-3151										K		
Tag codes D9YE-CA,DA,EA,FA	★ D9FZ 9A523-A *CM-3304										K		
	★ D9ZZ 9A523-A *CM-3320											L	
ROD (CHOKE PULLDOWN)	9E524												
	D5AZ 9E524-A *CM-2082	A	B	C	D	E	F	G					
	D7AZ 9E524-B *CM-2503								H	J			
	D8AZ 9E524-A *CM-2873										K	L	
Retainer (choke rod pull down)	377918-S8(XX-14-F)	2	2	2	2	2	2	2	2	2			
SCREEN (FUEL FILTER)	C4AZ 9F525-A	A	B	C	D	E	F	G	H	J	K	L	
COVER ASSY. (ACCELERATOR PUMP)	9528												
	D2AZ 9528-A *CM-648-B	A	B	C	D	E	F	G					
Tag codes D8BE-MA, D8YE-AA	★ D7FZ 9528-A *CM-2514								H	J	K	L	
Tag codes D8BE-MB, D8YE-AB	★ D8ZZ 9528-A *CM-3053									J	K	L	
Screw (cover to carb.)-hex. head-No. 8-32 x 9/16"	376262-S(UU-52-AJ)	4	4	4	4	4	4	4	4	4	4	4	
ROD (FAST IDLE CAM)	C3AZ 9D530-A	A	B	C	D	E	F	G	H	J	K	L	
COMPENSATOR ASSY. (HOT IDLE)	D8AZ 9B532-C *CM-2876									J	K	L	
JET (MAIN METERING)	9533												
No. 49F-tag code D5ZE-YB Tag code 77TF-KA	C3DZ 9533-D *CJ-137-A				2				2				
No. 50F-tag code D5ZE-VA	C3UZ 9533-C *CJ-141			2						2			
No. 51F-tag codes D6PE-ABA, D6ZE-AA,CA	C3DZ 9533-B *CJ-136					2							
No. 52F Tag codes D5ZE-AD,AE Tag code D5ZE-BE Tag code D6PE-CA, D6ZE-BA Tag code D6ZE-VA	C3UZ 9533-A *CJ-133	2	2	2	2	2	2	2					

NOTICE: When the parts list suffix is shown in the quantity required column, the quantity is one (1).

DESCRIPTION/RESTRICTIONS	PART NUMBER	CARB. PARTS LISTS 37A THRU 37M											
		A	B	C	D	E	F	G	H	J	K	L	M
NOTE: † Not a part of service carburetor													
JET (MAIN METERING)	9533 — Cont'd												
No. 53F-tag code D6PE-DA, D6ZE-DA,AAA	C3DZ 9533-A *CJ-128						2						
No. 47F	C3UZ 9533-E *CJ-151										2		
No. 48F Tag codes D7PE-CAA,CCA, D7YE-AA,BA,EA, 77TF-LA	C3UZ 9533-D *CJ-142								2			2	
GASKET (BOOSTER VENTURI SUPPORT)	E1TZ 9A536-A	A	B	C	D	E	F	G	H	J	K	L	
LEVER (FAST IDLE ADJUSTING)	D0AZ 9538-A *CM-1105	A	B	C	D	E	F	G	H	J	K	L	
Nut (lever to throttle shaft)-hex. No. 10-32	34079-S7(M-163)	A	B	C	D	E	F	G	H	J	K	L	
Lockwasher-No. 10	34903-S8(X-96)	A	B	C	D	E	F	G	H	J	K	L	
SCREW (FAST IDLE ADJUSTING)	C3TZ 9B538-A	A	B	C	D	E	F	G	H	J	K	L	
NEEDLE (IDLE ADJUSTING)	9541												
Tag codes D7PE-CCA, 77TF-KA,LA	C9AZ 9541-B *CM-955-A	2	2	2	2	2	2	2	2	2	2	2	
Tag codes D7PE-CAA, D7YE-AA,BA,EA	C7MY 9541-B *CM-749								2				
ROD (ACCELERATOR PUMP LINK TO OVER TRAVEL LEVER)	9B542												
Tag codes D7PE-CCA, 77TF-KA,LA	★ D4AZ 9B542-A *CM-1810	A	B	C	D	E	F	G	H				
Tag codes D7PE-AAA, D7YE-AA,BA,EA	★ D7AZ 9B542-B *CM-2537								H	J	K	L	
PLATE (CHOKE)	D0AZ 9545-A *CM-1061	A	B	C	D	E	F	G	H	J	K	L	
Screw (choke plate)-No. 6-32 x 5/16"	375016-S2(UU-52-AK)	2	2	2	2	2	2	2	2	2	2	2	
SHAFT (CHOKE PLATE)	D5AZ 9547-A *CM-2089	A	B	C	D	E	F	G	H	J	K	L	
DASHPOT ASSY.	9B549												
Tag code D6ZE-BA-r/b D7ZZ 9B549-A(11/81) Tag code 77TF-KA	★ C8AZ 9B549-A *CD-15						†F		H				
Tag code D7YE-BA	D7ZZ 9B549-A *CD-27								H			L	
Nut (dashpot to mounting bracket)-5/16"-24	33923-S7(M-32)						F		H			L	
FLOAT ASSY.	9550												
	D4AZ 9550-A *CM-1062-A	A	B	C	D	E	F	G	H	J			
	D9AZ 9550-B *CM-3120										K	L	
BRACKET (DASHPOT MOUNTING)- Tag codes D8BE-MA,MB	D0AZ 9B550-A *CM-1113						†F		†H	J	K		
Screw and washer (dashpot bracket)- No. 10-32 x 1/2"	43252-S8(U-77)						F		H	J		L	
BRACKET (THROTTLE POSITIONER)	D9ZZ 9S555-B											L	
LEVER (CHOKE SHAFT)	D8AZ 9551-A *CM-2953	A	B	C	D	E	F	G	H	J	K		
Screw and lockwasher assy. (lever choke shaft)-pan head-No. 6-32 x 3/8"	50802-S7(U-150)	A	B	C	D	E	F	G	H	J	K		
SHAFT (FLOAT LEVER)	B8A 9558-A *CM-183	A	B	C	D	E	F	G	H	J	K	L	
DIAPHRAGM ASSY. (ACCELERATOR PUMP)	C4AZ 9B559-A *CM-463	A	B	C	D	E	F	G	H	J	K	L	
SPRING (FLOAT BOWL VENT ROD)	D5AZ 9560-A *CM-2084									J	K	L	

COPYRIGHT © 1986 — FORD MOTOR COMPANY — DEARBORN, MICHIGAN

DESCRIPTION/RESTRICTIONS	PART NUMBER	CARB. PARTS LISTS 37A THRU 37M											
		A	B	C	D	E	F	G	H	J	K	L	M
NOTE: † Not a part of service carburetor													
GASKET (FLOAT BOWL)	9561												
Tag codes D8BE-MA, D8YE-AA	D7AZ 9561-A *CG-498	A	B	C	D	E	F	G	H	J			
Tag code D8BE-MB, D8YE-AB	D9AZ 9561-C *CG-545									J	K	L	
GASKET (ECONOMIZER COVER)	E0TZ 9563-A *CG-589	A	B	C	D	E	F	G	H	J	K	L	
VALVE KIT (FUEL INLET)	9564												
Consists of (1) D2AF 9566-AA needle, (1) D4AE 9567-AA seat (1) D2AZ 9599-A retainer, (1) D8AE 9B546-AA retainer, (1) D4AZ 9E845-A gasket, (1) D8AE 9B530-AA retainer	D8AZ 9564-A *CV-99-A	A	B	C	D	E	F	G	H	J	K	L	
VALVE ASSY. (FUEL ENRICHMENT)	9A565												
#Brown-incl. (1) B7A 9563-A gasket and (1) C2AZ 9A588-B gasket	D5DZ 9A565-A *CE-112	A		C		E						L	
Tag codes D5ZE-BD,BE					D								
Tag codes 75TF-AA,CA								G					
Tag code D7PE-CAA,CCA, D7YE-BA,77TF-KA									H				
#Yellow-incl. (1) B7A 9563-A gasket and (1) C2AZ 9A588-B gasket	D5ZZ 9A565-A *CE-113		B										
Tag codes 75TF-BA,DA								G					
#White-incl. (1) B7A 9563-A gasket and (1) C2AZ 9A588-B gasket-tag code D6PE-DA, D6ZE-DA,AAA	D5DZ 9A565-B *CE-107						F						
#Black-incl. (1) B7A 9563-A gasket and (1) C2AZ 9A588-B gasket-tag code D6PE-CA, D6ZE-BA	D5AZ 9A565-A *CE-106						F						
#Green-incl. (1) B7A 9563-A gasket and (1) C2AZ 9A588-B gasket-tag code D5ZE-YB	D50Z 9A565-A *CE-109				D					J	K		
Tag Code D7YE-AA,EA,77TF-LA									†H				
HOUSING ASSY. (CHOKE)	9A575												
Tag code D5ZE-VA	★ D5ZZ 9A575-A *CC-101	A	B	C									
Tag codes D5ZE-AD,AE	D5ZZ 9A575-B *CC-105			C				G					
	★ D5ZZ 9A575-C *CC-106				D								
	★ D6ZZ 9A575-A *CC-117					E							
	★ D6ZZ 9A575-B *CC-118						F						
Tag code D7PE-CAA, D7YE-AA,EA	★ D7ZZ 9A575-C *CC-145								H				
Tag code D7YE-BA	★ D7ZZ 9A575-D *CC-146								H				
Tag code 77TF-KA	★ D7ZZ 9A575-F *CC-168								H				
Tag code D7PE-CCA, 77TF-LA	★ D7ZZ 9A575-G *CC-169								H	J	K		
	★ D9ZZ 9A575-A *CC-213											L	
Screw and washer assy. (choke housing to main body)-fill. head-No. 8-32 x 1 3/4"	378547-S7-8(BB-61-B)	3	3	3	3	3	3	3	3	3	3	3	
Connector tube-3/8"-24 x 1/4"	386009-S8(II-28-T)	A	B	C	D	E	F	G	H	J	K		
VALVE (ACCELERATOR PUMP CHECK)	C4AZ 9576-A *CM-825	A	B	C	D	E	F	G	H	J	K	L	

NOTICE: When the parts list suffix is shown in the quantity required column, the quantity is one (1).

DESCRIPTION/RESTRICTIONS	PART NUMBER	CARB. PARTS LISTS 37A THRU 37M											
		A	B	C	D	E	F	G	H	J	K	L	M
NOTE: † Not a part of service carburetor													
SCREW (PUMP DISCHARGE NOZZLE)	9577												
	E1AZ 9577-A *CM-3685	A	B	C	D	E	F	G					
	★ D7YZ 9577-A *CM-2515								H				
	E1AZ 9577-B *CM-3703									J	K	L	
LEVER (FAST IDLE CAM) R/b D5PZ 9A753-A (12/78)	★ D5DZ 9F577-A *CM-2090	A	B	C	D	E	F	G					
Washer-flat (used under 9577)-1/4"	347370-S(XX-94-A)	A	B	C	D	E	F	G	H	J	K	L	
SPRING (FAST IDLE ADJUSTING SCREW)-	9578												
4 1/2 coils-3/16" I.D.-1/2" long	B8A 9578-B *CM-609	A	B	C	D	E	F	G	H	J	K	L	
Idle adjusting needle Fast idle adjusting screw	★ 40 9578	2 A	2 B	2 C	2 D	2 E	2 F	2 G	2 H	2 J	2 K	2 L	
Screw (normal idle adjusting)-special hex. head slotted-No. 10-32 x 1"	355107-S7(BB-536)	A	B	C	D	E	F	G	H	J	K	L	
LEVER and SHAFT ASSY. (THROTTLE)	9581												
	★ D5ZZ 9581-A *CM-2179	A		C		E							
	D5ZZ 9581-B *CM-2180		B		D		F						
	★ D5PZ 9581-B *CM-2400							G					
Tag code 77TF-LA	★ D7RY 9581-C *CM-2842								H				
Tag code D7PE-CAA, D7YE-AA,EA	★ D7ZZ 9581-M *CM-2539								H				
Tag code D7YE-BA	★ D7ZZ 9581-L *CM-2538								H				
Tag code D7PE-CCA, 77TF-KA	★ D7PZ 9581-G *CM-3164								H				
	★ D8ZZ 9581-D *CA-2949									J	K		
	★ D8ZZ 9581-E *CM-2950											L	
PLATE (THROTTLE)	9585												
	E1AZ 9585-A *CM-2095-A	2	2	2	2	2	2	2	2	2	2	2	
Screw (throttle plate)-No. 5-40 x 9/32"	386022-S2(BB-908)	4	4	4	4	4	4	4	4	4	4	4	
BRACKET (THROTTLE SOLENOID)-Tag code D7YE-EA Tag codes D8YE-AA,AB	★ D7ZZ 9J586-B								H	J	K		
GASKET (ECONOMIZER VALVE)	C2AZ 9A588-B *CM-533	A	B	C	D	E	F	G	H	J	K		
	D5AZ 9597-A *CM-2105	A	B	C	D	E	F	G	H	J	K	L	
Retainer (fast idle cam)- "C" washer	351825-S(XX-9)	2	2	2	2	2	2	2	2	2	2	2	
Screw (fast idle cam)-hex. head-No. 6-32 x 3/4"	372307-S(BB-527)	A	B	C	D	E	F	G	H	J	K	L	
LEVER (DECHOKE OVERRIDE)	D20Z 9J598-A	A	B	C	D	E	F	G	H	J			
RETAINER (FLOAT LEVER SHAFT)	D2AZ 9599-A *CM-1469	A	B	C	D	E	F	G	H	J	K	L	
ROD (CHOKE CONTROL)	E1AZ 9A599-A *CM-3686	A	B	C	D	E	F	G	H	J	K	L	
Ring (rod to carburetor)	377918-S8(XX-14-F)	A	B	C	D	E	F	G	H	J	K	L	

COPYRIGHT © 1986 — FORD MOTOR COMPANY — DEARBORN, MICHIGAN

DESCRIPTION/RESTRICTIONS	PART NUMBER	CARB. PARTS LISTS 37A THRU 37M											
		A	B	C	D	E	F	G	H	J	K	L	M
NOTE: † Not a part of service carburetor													
SPRING (ACCELERATOR PUMP LEVER RETURN)	D4AZ 9636-A *CM-1527-A	A	B	C	D	E	F	G	H	J	K	L	
SHAFT and LEVER ASSY. (CHOKE HOUSING)	9A753												
	D5PZ 9A753-A *CM-2201	A	B	C	D	E	F	G					
	D7PZ 9A753-A *CM-2592								H	J			
Retainer (shaft to choke housing)- "C" washer	353862-S8(XX-10)	A	B	C	D	E	F	G	H	J	K	L	
LEVER (CHOKE THERMOSTAT)	D3AZ 9A754-D	A	B	C	D	E	F	G	H	J			
CLIP (ACCELERATOR PUMP LINK ROD)	D2AZ 9825-A *CM-1695	A	B	C	D	E	F	G	H	J	K	L	
CLAMP (THERMOSTATIC CHOKE HOUSING)	E2AZ 9842-B *CM-3840	A	B	C	D	E	F	G	H	J	K	L	
Screw (clamp housing)-No. 8-32 x 1/2"	31061-S8(U-50)	3	3	3	3	3	3	3	3	3	3	3	
SHIELD (FUEL INLET SEAT)	D4AZ 9E845-A	A	B	C	D	E	F	G	H	J	K	L	
HOUSING ASSY. (CHOKE THERMOSTAT) Tag code D6ZE-AA,VA	D5AZ 9848-A *CM-2097	A	B	C	D	E		G					
Tag code D6PE-ABA, D6ZE-CA	D5OZ 9848-A *CM-2098					E	F						
	D7FZ 9848-E *CM-3056								H			L	
	D5AZ 9848-C *CM-2374									J	K		
BUSHING (CHOKE THERMOSTAT LEVER)	D5DZ 9851-A *CM-2096	A	B	C	D	E	F	G	H	J	K	L	
GASKET (THERMOSTATIC CHOKE CONTROL)	B8A 9853-A *CG-93	A	B	C	D	E	F	G	H	J	K	L	
SOLENOID ASSY. (THROTTLE EMISSION CONTROL) - Also refer-Refer to group 9S520 in this parts list	9D856												
Tag code D7YE-EA	D7ZZ 9D856-A *CS-8								H				
Tag code D8YE-AA,AB										J	K		
SHIELD (CHOKE THERMOSTAT)	D5ZZ 9861-A	A	B	C	D	E	F	G	H	J	K		
Screw (choke thermostat shield)-hex. head-No. 8-32 x 9/16"	376262-S2(UU-52-AJ)	A	B	C	D	E	F	G	H	J	K	L	
GASKET (THERMOSTATIC CHOKE HOUSING)	D1AZ 9871-A *CG-317	A	B	C	D	E	F	G	H	J	K	L	
COVER (ECONOMIZER VALVE)	C8AZ 9930-A *CM-728	A	B	C	D	E	F	G	H	J	K	L	
Screw and washer (cover to carb.)-fill. head-No. 8-32 x 5/8"	357136-S(BB-56)	4	4	4	4	4	4	4	4	4	4	4	
GASKET (DECELERATION VALVE)	D5ZZ 9A940-A *CG-463	A											
CAM (AIR BLEED METERING NEEDLE ROD)	D5AZ 9A965-A *CM-2106	A	B	C	D	E	F	G					
BODY ASSY. (DECELERATION VALVE)	D5ZZ 9A967-A *CM-2319	A											
Screw (deceleration valve)-No. 6-32 x 3/4"	372307-S(BB-527)	3											

NOTICE: When the parts list suffix is shown in the quantity required column, the quantity is one (1).

DESCRIPTION/RESTRICTIONS	PART NUMBER	CARB. PARTS LISTS 38A THRU 38M											
		A	B	C	D	E	F	G	H	J	K	L	M
GASKET SET - Refer to carburetor identification chart- Section 95	9502												
TUNE-UP KIT - Refer to carburetor identification chart- Section 95	9A586												
Screw and washer assy. (air horn & throttle body) fill. head - No. 8-32 x 3/4"	43395-S8(U-75)	12	12	12	12	12	12						
Plug (fuel inlet) 1/8 hex socket head	87708-S(P-14)	A	B	C									
Connector-choke 1/8 pipe x 1/4 tube	382786-S(II-179)	A	B	C									
SPRING (TRANSMISSION KICKDOWN)	D1AZ 7B146-A	A	B	C	D	E	F						
FILTER ASSY. (FUEL)	D7ZZ 9155-A *FG-779	A	B	C	D	E	F						
GASKET (FUEL INLET)	D1ZZ 9229-A	A	B	C	D	E	F						
SPRING (FUEL FILTER RETAINING)	D7ZZ 9342-A	A	B	C	D	E	F						
SPRING (VENTURI VALVE DIAPHRAGM)	9K503												
Tag code D8ZE-YB	★D7ZZ 9K503-A *CM-2577	A		C									
Tag code D9ZE-LC							F						
Tag code D8BE-EB,D84E-DB,KA,VA	D7ZZ 9K503-B		B	C	D	E							
Tag code D9ZE-AZB,BEA							F						
WEIGHT (PUMP DISCHARGE)	D7ZZ 9B511-B *CM-2442	A	B	C	D	E	F						
BALL (ACEL PUMP INLET) 5/32" steel	353077-S (AA-2)	A	B	C	D	E	F						
PLUG (JET CHANNEL) 7/16" cup	D7ZZ 9E515-B *CM-2453	2	2	2	2	2	2						
GASKET (THROTTLE BODY)	9516												
	D8DZ 9516-A *CG-516	A	B	C	D	E	F						
FITTING (FUEL INLET)	9A520												
	★D7ZZ 9A520-A *CM-2443	A	B	C									
	E2AZ 9A520-A *CM-4359				D	E	F						
DASHPOT and SOLENOID ASSY.- also refer to 9D856	D7ZZ 9S520-A *CD-28	A											
Screw (attach 95520)no. 10-32 x 1/2"	50810-S8 (U-158)A	A											
ROD (CHOKE PULLDOWN)	9E524												
	D7ZZ 9E524-A *CM-2444	A	B	C									
	D9ZZ 9E524-A *CM-3134				D	E	F						
ROD (METERING)	9A526												
#156	D7FZ 9A526-A *CM-2445	2											
#144	★D7DZ 9A526-A *CM-2560		2										

COPYRIGHT © 1986 — FORD MOTOR COMPANY — DEARBORN, MICHIGAN

DESCRIPTION/RESTRICTIONS	PART NUMBER	CARB. PARTS LISTS 38A THRU 38M											
		A	B	C	D	E	F	G	H	J	K	L	M
ROD (METERING)	9A526 — Cont'd												
#157 Tag code D8ZE-YB	★D8ZZ 9A526-A *CM-2933			2									
#163 Tag code D8BE-EB,D84E-DB,KA,VA	★D8DZ 9A526-A *CM-2932			2									
Tag code D94E-AB,FA,JA					2								
Tag code D9ZE-AZB,BEA						2							
#178 Tag code D9AE-AZA,JB,YB							2						
#178 Tag code D9AE-AZA,JB,YB	D9AZ 9A526-A *CM-3145					2							
#177 Tag code D9AE-CB,ZB,D94E-EB,FA,GA	D9AZ 9A526-B *CM-3160					2							
Tag code D9ZE-LC	★D9ZZ 9A526-A *CM-3278						2						
SEAL (AIR HORN)	E2AZ 9C527-A *CM-3899	A	B	C	D	E	F						
LINK (ACEL PUMP)	D7ZZ 9529-B *CM-2448	A	B	C	D	E	F						
Rivet-1/8" - att. acel pump link	383070-S (SS-10-E)	A	B	C	D	E	F						
COMPENSATOR (HOT IDLE)	9B532												
Tag code D8ZE-YB	D8DZ 9B532-A *CM-2936			C									
Tag codes D9AE-AZA,CB,JB,YB,ZB						E							
Tag code D9ZE-LC							F						
Tag code D8BE-EB,D84E-DB,KA,VA	D8AZ 9B532-B *CM-2935			C									
					D								
Tag code D94E-AB,EB,FA,GA,JA						E							
Tag code D9ZE-AZB,BEA							F						
JET (MAIN METERING)	D7ZZ 9533-A *CJ-285	2	2	2	2	2	2						
"O" ring - used on main jet	387041-S96(KK-42-D)	2	2	2	2	2	2						
LEVER (FAST IDLE ADJUSTING)	★D7ZZ 9538-A *CM-2470	A	B	C	D	E	F						
LEVER (METERING ROD)	D7ZZ 9J538-A *CM-2449	A	B	C	D	E	F						
NEEDLE (IDLE ADJUSTING)	★D7ZZ 9541-A *CM-2450	2	2	2	2	2	2						
ROD (ACCEL. PUMP LINK TO OVERTRAVEL LEVER)	D7ZZ 9B542-A *CM-2451	A	B	C	D	E	F						
PISTON (ACCEL PUMP)	D7ZZ 9B544-A *CM-2454	A	B	C	D	E	F						
SPRING (CHOKE CONTROL MODULATOR)	9J547												
	★D7ZZ 9J547-A *CM-2452	A	B	C									
	★D9AZ 9J547-B *CM-3138				D	E	F						
DIAPHRAGM ASSY. (CHOKE PULLDOWN)	9J549												
	D7ZZ 9J549-A *CK-2049	A	B	C									
	D9PZ 9J549-B *CK-2249				D	E	F						
FLOAT ASSY.-r/b E0VZ 9550-A (6/82)	★D7ZZ 9550-A *CM-2455	A	B	C	D	E							
Tag code D9ZE-LC							F						
Tag code D9ZE-AZB,BEA	D9ZZ 9550-A *CM-3098						F						
BRACKET - used as kickdown spring retainer- Tag code D94E-AB	D0AZ 9B550-A *CM-1113					E							
POSITIONER ASSY. (THROTTLE)-also refer to 9D856 or 9S520													
Tag code D8BE-EB,D84E-KA,VA	D5TZ 9S553-C *CM-2205			C									
Tag code D9AE-AZA,JB,YB,ZB,D94E-EB,GA	D9AZ 9S553-A *CM-3141					E							
Tag code D9BE-AFA					D								
Tag code D9ZE-BEA							F						

NOTICE: When the parts list suffix is shown in the quantity required column, the quantity is one (1).

DESCRIPTION/RESTRICTIONS	PART NUMBER	CARB. PARTS LISTS 38A THRU 38M											
		A	B	C	D	E	F	G	H	J	K	L	M
BRACKET (THROTTLE POSITIONER)	9S555												
Tag code D8ZE-YB	★D8ZZ 9S555-C			C									
Tag code D9ZE-LC							F						
Tag code D8BE-EB, D84E-KA,VA	D84Y 9S555-B			C									
					D								
Tag code D9AE-CB,JB,YB,ZB, D94E-EB,GA,JA						E							
Tag code D9ZE-AZB,BEA							F						
Screw (bracket)-No. 10-32 x 1/2" pan head	50810-S8 (LL-158)			C									
SPRING (AIR VALVE)	D9AZ 9H556-A *CM-3146				D	E							
SHAFT (FLOAT LEVER)	D7ZZ 9558-A *CM-2456	A	B	C	D	E	F						
GASKET (FLOAT BOWL)	9561												
	D9AZ 9561-E *CG-517-B	A	B	C	D	E	F						
LEVER (FAST IDLE PICKUP)	D7ZZ 9B562-A *CM-2457	A	B	C	D	E	F						
SWIVEL (ACCEL PUMP ADJUSTMENT LEVER)	D7ZZ 9D563-A *CM-2458	A	B	C	D	E	F						
SWIVEL (ENRICHMENT ROD)	9D563-C												
	E0VZ 9D563-C *CM-3413	A	B	C	D	E	F						
Choke adjust													
VALVE and SEAT ASSY. (FUEL INLET)	9564												
	D8ZZ 9564-A *CV-114	A	B	C	D	E	F						
NUT	9D564												
Adjusting accel. pump	D7AZ 9D564-A	A	B	C		E	F						
Adjusting enrichment rod	*CM-2460	A	B	C	D	E	F						
Control vacuum regulator adjustment	D7DZ 9D564-A *CM-2844	A	B	C	D	E	F						
SPRING (ACCEL PUMP PISTON RETURN)	D7ZZ 9J564-A *CM-2462	A	B	C	D	E	F						
GASKET (FUEL INLET SEAT)	D7ZZ 9569-A *CG-485	A	B	C	D	E	F						
SPRING (THROTTLE RETURN)	D9AZ 9B569-A *CM-3142				D	E							
CUP (PUMP PISTON)	D7ZZ 9572-A *CM-2447	A	B	C	D	E	F						
SPRING (IDLE SCREW)	B8A 9578-B *CM-609				D	E	F						
COVER (DIAPHRAGM)	9B580												
	D7ZZ 9B580-A *CM-2579	A	B	C									
	E0AZ 9B580-B *CM-3414				D	E	F						

COPYRIGHT © 1986 — FORD MOTOR COMPANY — DEARBORN, MICHIGAN

DESCRIPTION/RESTRICTIONS	PART NUMBER	CARB. PARTS LISTS 38A THRU 38M											
		A	B	C	D	E	F	G	H	J	K	L	M
LEVER and SHAFT ASSY. (THROTTLE)	9581												
Tag code D7ZZ-BD	★D7ZZ 9581-G *CM-2463	A	B										
Tag code 77TF-MA,NA	★D7RY 9581-A *CM-2841	A											
Tag code D8PE-DBA	★D7PZ 9581-J *CM-3479	A											
Tag code D8ZE-YB Tag code D9ZE-LC	★D8ZZ 9581-F *CM-2938			C			F						
Tag code D8BE-EB	★D8ZZ 9581-A *CM-2937			C	D								
Tag code D94E-EB,FA,GA,JA Tag code D9ZE-AZB,BEA						E	F						
Tag code D84E-DB,KA,VA Tag code D94E-AB	★D84Z 9581-A *CM-2991			C		E							
Tag code D9AE-AZA,CB,JB,YB,ZB	★D9AZ 9581-D *CM-3133					E							
Screw (adjust kickdown) - No. 10-32 x 1"	379622-S7-8 (UU-52-M)	A	B	C	D	E	F						
Screw (fast idle adjusting) - No. 10-32 x 3/4" slotted headless	382297-S (UU-26)	A	B	C	D	E							
VALVE	9D583												
Internal vent External vent	D7ZZ 9D583-A *CM-2465	A	B	C	D	E E	 F						
Retainer (internal vent) "C" washer	351825-S (XX-9)	A	B	C	D	E							
External vent	★D7ZZ 9D583-B *CM-2464	A	B										
External vent Internal vent	D84Z 9D583-A *CM-2940			C		 E	 F						
PLATE (THROTTLE)	D7ZZ 9585-A *CM-2466	2	2	2	2	2	2						
Screw (throttle plate) No. 5-40 x 9/32"	386022-S2 (BB-908)	4	4	4	4	4	4						
BRACKET (THROTTLE EMISSION CONTROL) Tag code D94E-FA	D7ZZ 9J586-A		B			 E							
BRACKET & SPRING - Tag code D9AE-AZA,CB Tag code D9ZE-AZB	D7TZ 9J586-A					E	 F						
Screw (attach bracket) No. 10-32 x 1/2"	50810-S8(U-158)		B			E	F						
CAM (FAST IDLE)	9597												
Tag code D8ZE-YB Tag code D9ZE-LC	D7ZZ 9597-D *CM-2467	A		C			 F						
Tag code D8BE-EB, D84E-DB,KA,VA Tag code D9AE-AZA,JB,YB,D94E-AB,JA	D7ZZ 9597-A *CM-2561		B	C		 E							
Tag code D9AE-CB,ZB, D94E-EB,FA,GA Tag code D9ZE-AZB,BEA	★D9ZZ 9597-A *CM-3143				D	 E	 F						
SHAFT and LEVER ASSY (CHOKE)	★D7ZZ 9A753-A *CM-2573	A	B	C	D	E							
LEVER (CHOKE THERMOSTAT)	9A754												
	E0ZZ 9A754-A	A	B	C	D	E	F						
Screw (choke lever) No. 6-32 x 1/4"	50802-S7 (U-150)	A	B	C	D	E	F						
ROD (CHOKE SHAFT)	E1TZ 9A766-A *CM-3630	A	B	C	D	E	F						
Retainer (choke shaft rod) 1/8"	377918-S8B (XX-14-F)	A	B	C	D	E	F						
CLAMP (THERMOSTATIC CHOKE HOUSING)	9842												
	★D7ZZ 9842-B *CM-2469	A	B	C									
	E2AZ 9842-A *CM-3839				D	E	F						
Screw (choke clamp) No. 8-32 x 1/2" fill head	31061-S8 (U-50)	3	3	3	3	3	3						

NOTICE: When the parts list suffix is shown in the quantity required column, the quantity is one (1).

DESCRIPTION/RESTRICTIONS	PART NUMBER	CARB. PARTS LISTS 38A THRU 38M											
		A	B	C	D	E	F	G	H	J	K	L	M
HOUSING (THERMOSTATIC CHOKE)	9848												
#7-40MF	D7ZZ 9848-A		B		D								
Tag code D8BE-EB, D84E-KA	*CM-2540			C									
Tag code D9AE-CB,ZB, D94E-EB,GA,JA						E							
Tag code D9ZE-AZB,BEA							F						
#7-85MF	D7ZZ 9848-E	A											
Tag code D8ZE-YB	*CM-2563			C									
Tag code D9AE-AZA,JB,YB						E							
#B-3 Tag code D84E-DB	D8ZZ 9848-B			C									
Tag code D94E-AB	*CM-2989					E							
Tag code D9ZE-LC							F						
#7120 MF/D94E-AA Tag code D94E-FA	D94Y 9848-A					E							
Tag code D84E-VA	*CM-3268			C									
BUSHING (CHOKE HOUSING)	★D7ZZ 9851-A	A	B	C	D	E	F						
	*CM-2471												
SOLENOID ASSY. (THROTTLE EMISSION CONTROL) also refer to 9S520 or 9S553	9D856												
	D7DZ 9D856-A		B										
Tag code D94E-FA	*CS-4					E							
Tag code D8ZE-YB	D7ZZ 9D856-A			C									
Tag code D9ZE-LC	*CS-8						F						
Tag code D9DE-HB	D9ZZ 9D856-A				D								
Tag codes D9AE-CB,D94E-JA	*CS-30					E							
Tag code D9ZE-AZB							F						
Nut (solenoid to bracket) - hex. - 7/16"-20	45219-S (M-173)		B	C	D	E	F						
SHIELD (CHOKE THERMOSTAT)	9861												
	★D7ZZ 9861-B	A	B										
	★D8ZZ 9861-B			C	D	E	F						
Screw (choke shield) No. 6-32 x 5/16" pan head	381761-S (UU-81-JA)	A	B	C	D	E	F						
GASKET (THERMOSTAT CHOKE HOUSING)	C1AZ 9871-A	A	B	C	D	E	F						
	*CG-102												
DIAPHRAGM ASSY. (VENTURI VALVE ACTUATOR)	E3PZ 9A900-A	A	B	C	D	E	F						
	*CM-2476-A												
SPRING (VENTURI VALVE LIMITER LEVER RETURN)	★D7DZ 9A905-B		B										
	*CM-2553												
GUIDE (VENTURI VALVE DIAPHRAGM SPRING)	D7ZZ 9A906-A	A	B	C	D	E	F						
	*CM-2473												
Screw (venturi valve guide) 5/16-24 x 9/16" set	387814-S2(UU-37-DL)	A	B	C									
Screw (venturi valve guide) 5/16-24 x 1 1/16" set	388317-S2 (UU-38-E)				D	E							
LEVER ASSY (FAST IDLE ADJUSTING INTER-MEDIATE)	D7ZZ 9B912-A	A	B	C									
	*CM-2574												
Tag codes D9AE-AZA,JB,YB, D94E-AB						E							
Tag codes D9ZE-LC							F						
LEVER ASSY. (FAST IDLE CAM OVERTRAVEL)	★D9PZ 9B912-A				D								
Tag codes D9BE-AFA, D9DE-HB	*CM-3386												
Tag codes D9AE-CB,ZB, D94E-FA,JA						E							
Tag codes D9ZE-AZB,BEA							F						
BUSHING (VENTURI VALVE LIMITER)	★D7ZZ 9B913-A	A	B	C	D	E	F						
	*CM-2474												
Pin (position limiter bushing) 1/8" rolled	387388-S(NN-124-ZL)	A	B	C	D	E	F						
SPRING (METERING ROD TORSION)	D7ZZ 9A914-C	2	2	2	2	2	2						
	*CM-2475												
BEARING (VENTURI VALVE)	D7ZZ 9B914-A	2	2	2	2	2	2						
	*CM-2477												
PIN (METERING ROD PIVOT)	D7ZZ 9A915-A	2	2	2	2	2	2						
	*CM-2478												
ROD (METERING VACUUM)	9B915												
R/b D7DZ 9B915-A	★D7ZZ 9B915-B	A											
Tag code D7ZE-GD	*CM-2554		B										

COPYRIGHT © 1986 — FORD MOTOR COMPANY — DEARBORN, MICHIGAN

DESCRIPTION/RESTRICTIONS	PART NUMBER	CARB. PARTS LISTS 38A THRU 38M											
		A	B	C	D	E	F	G	H	J	K	L	M
ROD (METERING VACUUM)	9B915 — Cont'd												
Tag code D7DZ-GE	D7DZ 9B915-A *CM-2845		B	C	D		F						
Tag code D94E-AB,EB,FA,GA,JA						E							
Tag code D9AE-AZA,CB,JB,YB,ZB	D9AZ 9B915-A *CM-3147					E							
PIN (VENTURI VALVE)	D7ZZ 9A918-A *CM-2555	A	B		D	E	F						
PIN (METERING ROD LEVER)	D7ZZ 9B918-A *CM-2581	A	B	C	D	E	F						
Retainer (lever pin) 1/8"	377918-S8B (XX-14-F)	A	B	C	D	E							
BUSHING (VENTURI VALVE)	D7ZZ 9A919-A *CM-2479	2	2	2	2	2	2						
LEVER (VENTURI VALVE LIMITER)	9A926												
Tag code D9ZE-LC	★D7ZZ 9A926-F *CM-2480	A					F						
Tag code D8BE-EB, D8ZE-YB, D84E-DB,KA,VA	★D7ZZ 9A926-C *CM-2556		B	C	D	E							
Tag code D9ZE-AZB,BEA							F						
COVER (VENTURI VALVE DIAPHRAGM)	9A927												
	E0AZ 9A927-A *CM-3431	A	B	C									
	★D9AZ 9A927-A *CM-3132				D	E	F						
Screw (att. Cover) No. 8-32 x 1/2"	55589-S2 (U-1-P)	4	4	4	4	4	4						
PIVOT (VENTURI VALVE)	D7ZZ 9A928-A *CM-2481	2	2	2	2	2	2						
PLUG (VENTURI VALVE PIVOT)	D7ZZ 9A929-A *CM-2482	2	2	2	2	2	2						
COVER (VENTURI VALVE)	9A932												
Tag codes 77TF-MA,NA, D7ZE-BD,BE	★D7ZZ 9A932-B *CM-2558	A											
Tag codes D7ZE-GD,GE			B										
Tag codes D8PE-DBA,DCA	E1AZ 9A932-A *CM-3634	A		C									
Tag codes D8PE-CYA,CZA					D	E	F						
Tag code D8PE-DAA	★D7PZ 9A932-A *CM-3480		B										
Tag codes D8BE-EB, D8ZE-YB	★D7ZZ 9A932-A *CM-2557			C									
Tag code D84E-DB,KA	★D8DY 9A932-A *CM-3658			C									
GASKET (VENTURI VALVE COVER)	E0AZ 9A933-A *CG-544-A					E	F						
Screw and washer assy. (venturi valve cover) - fill head No. 8-32 x 3/4"	43395-S8 (U-75)	2	2	2	2	2	2						
VALVE (VENTURI AIR BY-PASS)	9A936												
	★D7ZZ 9A936-A *CM-2483	A	B	C									
	D9AZ 9A936-A *CM-3139				D	E	F						
VALVE (VENTURI)	9A938												
Tag code D94E-AB,FA,GA,JA	D7ZZ 9A938-A *CM-2559	A	B	C	D	E							
Tag code D9ZE-AZB,BEA							F						
Tag code D9AE-AZA,CB,JB,YB,ZB,D94E-EB	E0VZ 9A938-A *CM-3136-A					E							
Tag code D9ZE-LC							F						
Screw (venturi limiter stop) No. 8-32 x 1/2" set - headless hexagon socket	387813-S2(UU-28-CA)	A	B	C	D	E	F						

NOTICE: When the parts list suffix is shown in the quantity required column, the quantity is one (1).

DESCRIPTION/RESTRICTIONS	PART NUMBER	CARB. PARTS LISTS 38A THRU 38M											
		A	B	C	D	E	F	G	H	J	K	L	M
Screw (venturi valve wide open throttle stop) 5/16-24 x 9/16" set	387814-S2(UU-37-DL)	A	B	C									
Screw (venturi valve W.O.T. stop)5/16-24 x 1 1/16" set Screw (venturi valve adjust)	388317-S2(UU-38-E)				D D	E E	F F						
Plug (cover-screw for wide open throttle adjustment)	383191-S(PP-86-EH)	A	B	C									
Plug (venturi valve W.O.T. stop screw)	386064-S2(PP-86-G)				D	E	F						
GASKET (COMPENSATOR)	★A0AF 12410-C			C									
CONTROL ASSY. (FUEL)	D7ZZ 9B950-A *CM-2484	A	B	C	D	E	F						
SOLENOID ASSY. (CRANKING FUEL CONTROL)	D7ZZ 9A951-A *CS-3	A	B	C	D	E	F						
"O" ring (solenoid assy.)	87008-S91 (T-1-DB)	A	B	C	D	E							
SPRING (VENTURI VALVE ADJUSTING SCREW)	D9AZ 9C963-A *CM-3149				D	E	F						
POTENTIOMETER ASSY. (THROTTLE) Tag code D84E-DB,KA,VA	D84Y 9B989-A *CX-212			 C		E							
Screw (potentiometer) 6-32 x 1/2	51763-S8(U-362)			2		2							
BRACKET (POTENTIOMETER MOUNTING)	★D84Y 9B990-A *CM-3054			C		E							
Screw (potentiometer bracket) 1/4-20 x 5/8"	385242-S2 (BB-541-AF			2		2							
ROD (ENRICHMENT METERING)	9A993												
#5 Tag codes D9AE-AZA	D7ZZ 9A993-A *CM-2485	A				 E							
#7	D7DZ 9A993-A *CM-2562		B										
#40 Tag code D8BE-EB, D84E-DB Tag code D94E-AB	D8VZ 9A993-B *CM-2941-A			C		 E							
#19 Tag code D9AE-CA	★D9AZ 9A993-D *CM-3161					E							
#42 Tag code D8ZE-YB,D84E-KA,VA	★D8ZZ 9A993-B *CM-2942-A			C									
#20 Tag codes D9AE-JB,YB	D9PZ 9A993-A *CM-3806					E							
#5B Tag code D94E-EB,JA Tag code D9ZE-AZB,BEA	★D94Z 9A993-A *CM-3148				D	 E	 F						
#21-Tag code D9AE-CB,ZB	★D9AZ 9A993-F *CM-3275					E							
#39-Tag code D94E-FA,GA	★D94Y 9A993-B *CM-3277					E							
#38-Tag code D9ZE-LC	D9ZZ 9A993-A *CM-3276						F						

COPYRIGHT © 1986 — FORD MOTOR COMPANY — DEARBORN, MICHIGAN

DESCRIPTION/RESTRICTIONS	PART NUMBER	CARB. PARTS LISTS 40A THRU 40M											
		A	B	C	D	E	F	G	H	J	K	L	M
GASKET SET – Refer to carburetor identification chart–Section 95	9502												
TUNE-UP KIT – Refer to carburetor identification chart–Section 95	9A586												
FILTER (FUEL)	D3AZ 9155-A *FG-14-A	A	B	C	D	E	F						
LIMITER (IDLE ADJUSTING NEEDLE)	D6PZ 9J500-A *CM-747-B	A	B	C	D	E	F						
Screw (throttle body)–No. 12-24 x 13/16"	359736-S2 (BB-67)	3	3	3	3	3	3						
Screw (air horn)–No. 10-32 x 5/8"	359617-S100 (BB-626)	6	6	6	6	6	6						
Screw (air horn)–No. 10-32 x 1 3/8"	354730-S8 (BB-573-H)	A	B	C	D	E	F						
Fitting (choke hot air inlet)	87971-S(I-12)	A	B	C	D	E	F						
BUSHING (THROTTLE SHAFT)	D8PZ 9B508-A *CM-2961	A	B	C	D	E	F						
WEIGHT (PUMP DISCHARGE BALL)	★ D0PZ 9B511-A *CM-1160	A	B	C	D	E	F						
COVER (FUEL BOWL VENT)	★ D8PZ 9E511-A *CM-2965	A	B	C	D	E	F						
Screw (cover)–No. 6-32 x 1/4"	39010-S2 (U-148)	3	3	3	3	3	3						
CONTROL ASSY. (VACUUM BREAK)	9S514												
Tag code D9BE-AEA	D8PZ 9S514-C *CK-2063		B	C			F						
	D8PZ 9S514-D *CK-2064	A			D								
Tag code D9BE-LA,D9ZE-BKA	D9PZ 9S514-C *CK-2079						F						
Tag code D9BE-AMA	D9PZ 9S514-D *CK-2087						F						
Screw (control)–No. 10-24 x 5/8"	357182-S8(BB-639)	2	2	2	2	2	2						
GASKET (THROTTLE BODY)	D8PZ 9516-C *CG-521	A	B	C	D	E	F						
ROD (CHOKE PULLDOWN)	D8PZ 9E524-B *CM-2979	A	B	D	D	E	F						
PIN (CHOKE PULLDOWN)	D8PZ 9B527-C *CM-2986	A	B	C	D	E	F						
PLATE (ACCELERATOR PUMP SPRING)	D8PZ 9528-A *CM-2981	A	B	C	D	E	F						
Screw (plate)–No. 6-32x3/8"	50802-S7 (U-150)	A	B	C	D	E	F						
ROD (ACCELERATOR PUMP)	9529												
Tag code D8BE-AAA Tag code D8BE-RA	D8PZ 9529-C *CM-2977	A	B C		D	E	F						
Tag code D8BE-AHA Tag code D8BE-AGA	D8PZ 9529-D *CM-3040		B C										
ROD (FAST IDLE CAM)	D8PZ 9D530-A *CM-2970	A	B	C	D	E	F						
COMPENSATOTOR ASSY. (HOT IDLE)	D8PZ 9B532-B *CM-2972	A	B	C	D	E	F						
JET (MAIN)	9533												
#652	D4HZ 9533-B *CJ-250	A											
#662 Tag code D9BE-AMA,LA,D9ZE-BKA	D5TZ 9533-A *CJ-263		B	C			F						
#672–Tag code D9BE-AEA	D5TZ 9533-C *CJ-265						F						

COPYRIGHT © 1986 — FORD MOTOR COMPANY — DEARBORN, MICHIGAN

DESCRIPTION/RESTRICTIONS	PART NUMBER	CARB. PARTS LISTS 40A THRU 40M											
		A	B	C	D	E	F	G	H	J	K	L	M
JET (MAIN)	9533 — Cont'd.												
#692	D5TZ 9533-F *CJ-270				D	E							
SEAL (ACCELERATOR PUMP ROD)	★ D0PZ 9535-A *CM-1253	A	B	C	D	E	F						
SPRING (THROTTLE RETURN)	D8PZ 9A538-A *CM-2978	A	B	C	D	E	F						
SCREW (IDLE ADJUSTING)	D8PZ 9B538-A *CM-2963	A	B	C	D	E	F						
NEEDLE (IDLE ADJUSTING)	D8PZ 9541-A *CM-2962	A	B	C	D	E	F						
ROD (ACCELERATOR PUMP LINK) Tag code D9BE-AEA	★ D8PZ 9B542-B *CM-2969	A	B	C	D	E	F						
Tag code D9BE-AMA,LA,D9ZE-BKA	D9PZ 9B542-A *CM-3126						F						
PISTON (ACCELERATOR PUMP)	D8PZ 9B544-A *CM-2976	A	B	C	D								
PLATE (CHOKE)	9545												
	D8PZ 9545-A *CM-2956	A			D	E							
	★ D8PZ 9545-B *CM-2957		B	C			F						
Screw (plate)-No. 6-32 x 3/8"	50802-S7 (U-150)	2	2	2	2	2	2						
SHAFT and LEVER ASSY. (CHOKE)	D8PZ 9546-B *CM-2958	A	B	C	D	E	F						
FLOAT ASSY.	9550												
	D0PZ 9550-A *CM-1151	A	B	C	D								
	D9PZ 9550-A *CM-3125					E	F						
LEVER (CHOKE)	D8PZ 9551-B *CM-2959	A	B	C	D	E	F						
Nut (lever)-No. 8-367	355829-S7 (MM-15)	A	B	C	D	E	F						
Washer (lever)-No. 8 internal tooth	34902-S7 (X-95)	A	B	C	D	E	F						
SPRING (FUEL BOWL VENT)	★ D8PZ 9H556-A *CM-2967	A	B	C	D	E	F						
VALVE ASSY (FUEL BOWL VENT)	D8PZ 9557-B *CM-2983	A	B	C	D	E	F						
SHAFT (FLOAT LEVER)	★ D0PZ 9558-A *CM-1155	A	B	C	D	E	F						
SCREW (VENT VALVE HINGE RETAINER)	★ D8PZ 9D558-A *CM-2964	A	B	C	D	E	F						
GASKET (FLOAT BOWL)	D8PZ 9561-E *CG-522	A	B	C	D	E	F						
Valve and SEAT ASSY (FUEL INLET)	D8PZ 9564-A *CV-115	A	B	C	D	E	F						
CLAMP (PUMP ROD)	★ D0PZ 9565-A *CM-1165	A	B	C	D	E	F						
Screw (clamp)-No. 10-32 5/16"	355177-S (BB-77M)	A	B	C	D	E	F						
GASKET (HOT IDLE COMPENSATOR)	9B567												
Outer	D8PZ 9B567-B *CG-525	A	B	C	D	E	F						
Inner	★ D8PZ 9B567-C *CG-526	A	B	C	D	E	F						
GASKET (FUEL INLET SEAT)	C7AZ 9569-A	A	B	C	D	E	F						
CUP (ACCELERATOR PUMP PISTON)	D0PZ 9572-A *CM-1174	A	B	C	D	E	F						
VALVE (PUMP DISCHARGE)	78-9576	A	B	C	D	E	F						

NOTICE: When the parts list suffix is shown in the quantity required column, the quantity is one (1).

DESCRIPTION/RESTRICTIONS	PART NUMBER	CARB. PARTS LISTS 40A THRU 40M											
		A	B	C	D	E	F	G	H	J	K	L	M
LEVER (CHOKE)	D8PZ 9F577-A *CM-2985	A	B	C	D	E	F						
Screw (lever)-No. 6-32 x 3/8"	50802-S7 (U-150)	A	B	C	D	E	F						
SPRING (FAST IDLE ADJUSTING SCREW)	9578												
(1) regd. idle mixture adjust (1) regd. fast idle	B8A 9578-B *CM-609	2	2	2	2	2	2						
(1) regd. idle speed (1) reqd. solenoid adjusting	D8PZ 9578-A *CM-2966	2	2	2	2	2	2						
Screw (solenoid)-No. 10-32 x 1"	379622-S7-8 (UU-52M)	A	B	C	D	E	F						
Screw (idle speed)-No. 10-32 x 1"	355107-S7 (BB-536)	A	B	C	D	E	F						
HINGE PIN (VENT VALVE)	★ D8PZ 9H584-B *CM-2975	A	B	C	D	E	F						
LEVER (ACCELERATOR PUMP OPERATING)	E2PZ 9D591-A *CM-2984-A	A	B	C	D	E	F						
Nut (lever)-No. 10-32	34079-S7(M163)	A	B	C	D	E	F						
Washer (lever)-No. 10 internal tooth	34903-S8 (X-96)	A	B	C	D	E	F						
GASKET (VENT VALVE COVER)	D8PZ 9592-A *CM-2960	A	B	C	D	E	F						
VALVE ASSY. (POWER)	9594												
Tag code D9BE-AEA	D8PZ 9594-B *CJ-321			C			F						
	D8PZ 9594-C *CJ-322	A			D	E							
Tag code D9BE-AMA,LA,D9ZE-BKA	D8PZ 9594-D *CJ-323		B				F						
COVER (HOT IDLE COMPENSATOR)	D8PZ 9F594-B *CM-2980	A	B	C	D	E	F						
Screw (cover)-No. 6-32 x 5/16"	353851-S (BB-620)	2	2	2	2	2	2						
CAM ASSY. (FAST IDLE)	9597												
	★ D8PZ 9597-A *CM-2968	A											
Tag codes D9BE-AEA,LA,D9ZE-BKA	D8PZ 9597-B *CM-2974		B	C			F						
Tag code D9BE-AHA,AJA,KA	★ D8PZ 9597-C *CM-3041				D	E							
Tag code D9BE-AMA	D9PZ 9597-C *CM-3317						F						
Retainer (cam assy.)-"E" Ring 3/16"	353862-S8 (XX-10)	A	B	C	D	E	F						
SPRING (ACCELERATOR PUMP ROD)	★ D8PZ 9D598-A *CM-2982	A	B	C	D	E	F						
RETAINER (FLOAT LEVER SHAFT)	★ D0PZ 9599-A *CM-1170	A	B	C	D	E	F						
RETAINER (AIR CLEANER)	9B672												
Tag codes D9BE-AEA,AMA,LA	D8PZ 9B672-B	A	B	C	D	E	F						
Tag codes D9ZE-BKA	D9PZ 9B672-A						F						
Screw (retainer)-No. 8-32 x 5/16"	37037-S7 (U-48)	2	2	2	2	2	2						
GASKET (FUEL INLET) refer to 9569	★ B2A 9827-A	A	B	C	D								
CLAMP (THERMOSTATIC CHOKE HOUSING)	D8PZ 9842-A *CM-2973	A	B	C	D	E	F						
Screw (clamp)-No. 8-32 x 1/2"	31061-S8 (U-50)	3	3	3	3	3	3						
HOUSING (THERMOSTATIC CHOKE) Tag codes D9BE-AEA,AHA,AJA,KA,LA,MA,D9ZE-BKA	D8PZ 9848-E *CM-2971	A	B	C	D	E	F						
Tag code D9BE-AMA	D9PZ 9848-F *CM-3318						F						
SOLENOID and BRACKET ASSY. (THROTTLE)	D8PZ 9D856-D *CS-29	A	B	C	D		F						
Tag code D9BE-AJA,KA	D9PZ 9D856-B *CS-31					E							
Screw (solenoid)-no. 1/4-20 x 1/2"	373460-S7 (BB-629)	2	2	2	2								

COPYRIGHT © 1986 — FORD MOTOR COMPANY — DEARBORN, MICHIGAN

DESCRIPTION/RESTRICTIONS	PART NUMBER	CARB. PARTS LISTS 40A THRU 40M											
		A	B	C	D	E	F	G	H	J	K	L	M
GASKET (THERMOSTATIC CHOKE HOUSING)	9871												
	D8PZ 9871-A *CG-523		B	C	D	E	F						
	D8PZ 9871-B *CG-524	A											

NOTICE: When the parts list suffix is shown in the quantity required column, the quantity is one (1).

DESCRIPTION/RESTRICTIONS	PART NUMBER	CARB. PARTS LISTS 41A THRU 41M											
		A	B	C	D	E	F	G	H	J	K	L	M
GASKET SET - Refer to carburetor identification chart-Section 95	9502												
TUNE-UP KIT - Refer to carburetor identification chart-Section 95	9A586												
Screw and washer assy. (air horn & throttle body) fill head-No. 8-32 x 3/4"	43395-S8(U-75)	12											
Plug (fuel inlet) 1/8 hex socket head	87708-S(P-14)	A											
SPRING (TRANSMISSION KICKDOWN)	D1AZ 7B146-A	A											
FILTER ASSY. (FUEL)	D7ZZ 9155-A *FG-779	A											
GASKET (FUEL INLET)	D1ZZ 9229-A	A											
SPRING (FUEL FILTER RETAINING)	D7ZZ 9342-A	A											
SPRING (VENTURI VALVE DIAPHRAGM	9K503												
	D7ZZ 9K503-B *CM-2578	A											
WEIGHT (PUMP DISCHARGE)	D7ZZ 9B511-B *CM-2442	A											
BALL (ACEL PUMP INLET) 5/32" steel	353077-S(AA-2)	A											
PLUG (JET CHANNEL) 7/16" cup	D7ZZ 9E515-B *CM-2453	2											
GASKET (THROTTLE BODY)	9516												
	D8DZ 9516-A *CG-516	A											
FITTING (FUEL INLET)	9A520												
	D9AZ 9A520-A *CM-3150	A											
DASHPOT and SOLENOID ASSY.- also refer to 9D856 or 9S553 or 9B549	9S520												
Screw (attach 9S520)no 10-32 x 1/2"	508010-S8(U-158)	A											
ROD (CHOKE PULLDOWN)	9E524												
	D9AZ 9E524-A *CM-3135	A											
ROD (METERING)	9A526												
#176	★ D9MZ 9A526-A *CM-3179	2											
LINK (ACEL PUMP)	D7ZZ 9529-B *CM-2448	A											
Rivet-1/8" - att. acel pump link	383070-S (SS-10-E)	A											
COMPENSATOR ASSY. (HOT IDLE)	9B532												
	D8DZ 9B532-A *CM-2936	A											
JET (MAIN METERING)	D7ZZ 9533-A *CJ-285	2											
"O" ring-used on main jet	387041-S96 (KK-42-D)	2											
LEVER (FAST IDLE ADJUSTING)	D7ZZ 9538-A *CM-2470	A											
LEVER (METERING ROD)	D9AZ 9J538-A *CM-3181	A											
SPRING (METERING VALVE)	D9MZ 9N539-A *CM-3183	A											
ROD (ACCEL. PUMP LINK TO OVERTRAVEL LEVER)	D7ZZ 9B542-A *CM-2451	A											
VALVE ASSY. (METERING)	D9MZ 9N542-A *CM-3184	A											
PISTON (ACCEL PUMP)	D94Z 9B544-A *CM-3180	A											

COPYRIGHT © 1986 — FORD MOTOR COMPANY — DEARBORN, MICHIGAN

DESCRIPTION/RESTRICTIONS	PART NUMBER	CARB. PARTS LISTS 41A THRU 41M											
		A	B	C	D	E	F	G	H	J	K	L	M
SPRING (CHOKE CONTROL MODULATOR	9J547												
	D9AZ 9J547-C *CM-3185	A											
DASHPOT ASSY. (THROTTLE)-also refer to 9D856 or 9S520 or 9S583	9B549												
Tag code D9AE-ACA,BAA	D7ZZ 9B549-A *CD-27	A											
DIAPHRAGM ASSY. (CHOKE PULLDOWN)	9J549												
	D9PZ 9J549-B *CK-2249	A											
FLOAT ASSY. Tag codes D9AE-ACA, D9ME-AA	D7ZZ 9550-A *CM-2455	A											
Tag code D9AE-BAA	E0VZ 9550-B *CM-3098-A	A											
POSITIONER ASSY. (THROTTLE)-also refer to 9D856 or 9S520 or 9B549	9S553												
Tag code D9ME-AA	D9AZ 9S553-A *CM-3141	A											
BRACKET (THROTTLE POSITIONER)	9S555												
Tag code D9ME-AA	D84Y 9S555-B	A											
Screw (bracket) No. 10-32 x 1/2" pan head	50810-S8 (U-158)	A											
SPRING (AIR VALVE)	D9AZ 9H556-A *CM-3146	A											
SHAFT (FLOAT LEVER)	D7ZZ 9558-A *CM-2456	A											
GASKET (FLOAT BOWL)	9561												
	D9AZ 9561-D *CG-517-A	A											
SWIVEL (ACCEL PUMP ADJUSTMENT LEVER)	D7ZZ 9D563-A *CM-2458	A											
SWIVEL (ENRICHMENT ROD)	9D563												
Choke adjust	E0VZ 9D563-C *CM-3413	A											
VALVE and SEAT ASSY. (FUEL INLET)	9564												
	D8ZZ 9564-A *CV-114	A											
NUT	9D564												
Adjusting accel. pump Adjusting enrichment rod	D7AZ 9D564-A *CM-2460	A A											
	D7DZ 9D564-A *CM-2843	A											
SPRING (ACCEL PUMP PISTON RETURN)	D7ZZ 9J564-A *CM-2462	A											
GASKET (FUEL INLET SEAT)	D7ZZ 9569-A *CG-485	A											
SPRING (THROTTLE RETURN)	D9AZ 9B569-A *CM-3142	A											
CUP (PUMP PISTON)	D7ZZ 9572-A *CM-2447	A											
SPRING (IDLE SCREW)	B8A 9578-B *CM-609	A											
COVER (DIAPHRAGM)	9B580												
	E0AZ 9B580-B *CM-3414	A											
LEVER and SHAFT ASSY. (THROTTLE)	9581												
	★ D9AZ 9581-E *CM-3174	A											
Screw (fast idle adjusting)-No. 10-32 x 3/4" slotted headless	382297-S (UU-26)	A											
Screw (throttle plate) No. 5-40 x 9/32"	386022-S2 (BB-908)	4											

NOTICE: When the parts list suffix is shown in the quantity required column, the quantity is one (1).

DESCRIPTION/RESTRICTIONS	PART NUMBER	CARB. PARTS LISTS 41A THRU 41M											
		A	B	C	D	E	F	G	H	J	K	L	M
BRACKET (THROTTLE EMISSION CONTROL)	9J586												
Tag code D9AE-ACA,BAA	★ D7ZZ 9J586-B	A											
Screw (attach bracket) No. 10-32 x 1/2"	50810-S8(U-158)	A											
CAM (FAST IDLE)	9597												
	D9MZ 9597-A *CM-3176	A											
SHAFT and LEVER ASSY (CHOKE)	9A753												
	D9PZ 9A753-B *CM-3385	A											
LEVER (CHOKE THERMOSTAT)	9A754												
	E0ZZ 9A754-A	A											
Screw (choke lever) No. 6-32 x 1/4"	50802-S7 (U-150)	A											
ROD (CHOKE SHAFT)	D7ZZ 9A766-A *CM-2468	A											
Retainer (choke shaft rod) 1/8"	377918-S8B (XX-14-F)	A											
CLAMP (THERMOSTATIC CHOKE HOUSING)	9842												
	E2AZ 9842-A *CM-3839	A											
Screw (choke clamp) No. 8-32 x 1/2" fill head Tag code D9ME-AA	31061-S8 (U-50)	3											
Rivet (choke clamp)-blind oval head Tag code D9AE-ACA,BAA	388575-S7 (SS-44-HA)	3											
HOUSING (THERMOSTATIC CHOKE)	9848												
7060-KH-350 Incl. (1) C1AZ 9871-A Gasket	D9AZ 9848-D *CM-3163	A											
SOLENOID ASSY. (THROTTLE EMISSION CONTROL) also refer to 9S520 9S553 or 9B549	9D856												
Nut (solenoid to bracket)-hex-7/16"-20	45219-S (M-173)	A											
GASKET (THERMOSTAT CHOKE HOUSING)	C1AZ 9871-A *CG-102	A											
DIAPHRAGM ASSY. (VENTURI VALVE ACTUATOR)	E3PZ 9A900-A *CM-2476-A	A											
GUIDE (VENTURI VALVE DIAPHRAGM SPRING)	D7ZZ 9A906-A *CM-2473	A											
MOTOR ASSY (FEEDBACK ACTUATOR)- Incl. (1) D9AZ 9A953-A gasket	D9AZ 9C908-A *CM-3162	A											
LEVER ASSY (FAST IDLE ADJUSTING INTER-MEDIATE)	★ D9AZ 9B912-A *CM-3175	A											
SPRING (METERING ROD TORSION)	D7ZZ 9A914-C *CM-2475	2											
BEARING (VENTURI VALVE)	D7ZZ 9B914-A *CM-2477	2											
PIN (METERING ROD PIVOT)	D7ZZ 9A915-A *CM-2478	2											
ROD (METERING VACUUM)	D7DZ 9B915-A *CM-2845	A											
PIN (VENTURI VALVE)	D7ZZ 9A918-A *CM-2555	A											
PIN (METERING ROD LEVER)	D7ZZ 9B918-A *CM-2581	A											
Retainer (lever pin) 1/8"	377918-S8B(XX-14-F)	A											
BUSHING (VENTURI VALVE)	D7ZZ 9A919-A *CM-2479	2											
COVER (VENTURI VALVE DIAPHRAGM)	9A927												
	★ D9AZ 9A927-A *CM-3132	A											
Screw (att. Cover) No. 8-32 x 1/2"	55589-S2(U-1-P)	4											
PIVOT (VENTURI VALVE)	D7ZZ 9A928-A *CM-2481	2											

COPYRIGHT © 1986 — FORD MOTOR COMPANY — DEARBORN, MICHIGAN

DESCRIPTION/RESTRICTIONS	PART NUMBER	CARB. PARTS LISTS 41A THRU 41M											
		A	B	C	D	E	F	G	H	J	K	L	M
PLUG (VENTURI VALVE PIVOT)	D7ZZ 9A929-A *CM-2482	2											
COVER (VENTURI VALVE)	9A932												
	D9AZ 9A932-A *CM-3140	A											
Screw and washer assy. (venturi valve cover)-fill head No. 8-32 x 3/4"	43395-S8 (U-75)	2											
GASKET (VENTURI VALVE COVER)	E0AZ 9A933-A *CG-544-A	A											
VALVE (VENTURI AIR BY-PASS)	9A936												
	D9AZ 9A936-A *CM-3139	A											
VALVE (VENTURI)	9A938												
	D9AZ 9A938-A *CM-3136	A											
Screw (venturi limiter stop) No. 8-32 x 1/2"- set - headless hexagon socket	387813-S2 (UU-28-CA)	A											
Screw (venturi valve WOT stop) 5/16-24 x 1 1/16" set	388317-S2(UU-38-E)	A											
Screw (venturi valve adjust)		A											
Plug (venturi valve WOT stop screw)(VV adjust)	386064-S2(PP-86-G)	2											
SOLENOID ASSY. (CRANKING FUEL CONTROL)	D7ZZ 9A951-A *CS-3	A											
"O" ring (solenoid assy.)	87008-S91 (T-1-DB)	A											
GASKET (FEEDBACK ACTUATOR)	D9AZ 9A953-A *CG-564	A											
SPRING (VENTURI VALVE ADJUSTING SCREW)	D9AZ 9C963-A *CM-3149	A											
POTENTIOMETER ASSY. (THROTTLE)	D84Y 9B989-A *CX-212	A											
Screw (pontiometer) 6-32 x 1/2"	51763-S8(U-362)	2											
BRACKET (POTENTIOMETER MOUNTING)	D84Y 9B990-A *CM-3054	A											
Screw (potentiometer bracket) 1/4-20 x 5/8"	385242-S2(BB-541-AF)	2											
ROD (ENRICHMENT METERING)	9A993												
#75	D9AZ 9A993-B *CM-3182	A											

NOTICE: When the parts list suffix is shown in the quantity required column, the quantity is one (1).

DESCRIPTION/RESTRICTIONS	PART NUMBER	CARB. PARTS LISTS 42A THRU 42M											
		A	B	C	D	E	F	G	H	J	K	L	M
GASKET SET – Refer to carburetor identification chart–Section 95	9502												
TUNE-UP KIT – Refer to carburetor identification chart–Section 95	9A586												
Screw & washer assy. (throttle body) No. 12-24 x 13/16"	359736-S2(BB-67)	6	6	6	6	6	6	6	6	6	6	6	
FILTER ASSY. (FUEL INLET)	D30Z 9155-A *FG-19-B												M
"O" RING (FLOAT BOWL TUBE CONNECTOR SEAL)	B5A 9229-A	2	2	2	2	2	2	2	2	2	2	2	
Accelerator pump transfer	D4PZ 9229-A	2	2	2	2	2	2	2	2	2	2	2	2
	D7PZ 9229-A	A	B	C	D	E	F	G	H	J	K	L	
LIMITER (IDLE ADJUSTING NEEDLE)	C80Z 9J500-A *CM-942	2	2	2	2	2	2	2	2	2	2	2	2
DIAPHRAGM ASSY. (SECONDARY THROTTLE)	9501												
	B7A 9501-A	A					F		H	J	K	L	
	★ C80Z 9501-A		B	C	D	E		G					
	D5TZ 9501-M												M
Screw and washer assy. (secondary diaphragm housing assy.)–No. 8-32 x 1"	43407-S8(U-76)	3	3	3	3	3	3	3	3	3	3	3	3
TUBE (ACCELERATOR PUMP TRANSFER)	D5TZ 9A501-B *CM-2222	A	B	C	D	E	F	G	H	J	K	L	M
SEAL (CHOKE ROD)	C1AE 9B501-A	A	B	C	D	E	F	G	H	J	K	L	M
MODULATOR ASSY. (THROTTLE)	B8A 9503-A *CM-5	A	B	C	D	E	F	G	H	J	K	L	M
Washer (diaphragm link to lever–"C" retainer)	351825-S(XX-9)	2	2	2	2	2	2	2	2	2	2	2	2
SPRING (SECONDARY THROTTLE DIAPHRAGM RETURN)	9B504												
	B5AZ 9B504-A	A					F		H	J	K	L	
	B8MY 9B504-B		B	C	D	E		G					
	★ D8AZ 9B504-C												M
ROD (SECONDARY THROTTLE CONTROL)	C8AZ 9C504-A *CM-872	A	B	C	D	E	F	G	H	J	K	L	M
LEVER (ACCELERATOR PUMP OPERATING)	★ D7PZ 9A506-A *CM-3500	A	B	C	D	E	F	G	H	J	K	L	M
COVER (SECONDARY THROTTLE DIAPHRAGM)	B7A 9507-B	A	B	C	D	E	F	G	H	J	K	L	M
Screw and lockwasher assy. (secondary diaphragm cover)–fill. head–No. 8-32 x 5/8"	43255-S8(U-74)	4	4	4	4	4	4	4	4	4	4	4	4
BOWL and PLUGS ASSY. (FLOAT)–primary	9A507												
	★ D7PZ 9A507-A *CM-3498	A	B	C	D	E	F	G					
	D9PZ 9A507-C *CM-3219												M
Screw (fuel bowl and plugs assy. to carb. main body)–No. 12-24 x 2.56"	359747-S2(BB-809)	4	4	4	4	4	4	4	4	4	4	4	4
BOWL and PLUGS ASSY. (FLOAT)–secondary	9A508												
	★ D7PZ 9A508-A *CM-3496	A	B	C	D	E	F	G	H	J	K	L	
	D9PZ 9A508-A *CM-3218												M
Screw (sec. fuel bowl)–No. 12-24 x 1 3/4"	372238-S7-8(BB-811)	4	4	4	4	4	4	4	4	4	4	4	
BODY & PLUGS ASSY. (MAIN METERING) Primary	★ D8PZ 9A511-M *CM-3772	A					F		H	J	K	L	
	★ D8PZ 9A511-N *CM-4032												M

COPYRIGHT © 1986 — FORD MOTOR COMPANY — DEARBORN, MICHIGAN

DESCRIPTION/RESTRICTIONS	PART NUMBER	CARB. PARTS LISTS 42A THRU 42M											
		A	B	C	D	E	F	G	H	J	K	L	M
BODY and PLUGS ASSY. (MAIN METERING)–Secondary	D7PZ 9A513–A *CM–3495	A	B	C	D	E	F	G	H			L	
	★ D8PZ 9A513–E *CM–4031												M
Nut (lever and swivel to fast idle cam)–No. 8–32	355829–S7(MM–15)	A	B	C	D	E	F	G	H	J	K	L	M
ROD (FLOAT BOWL VENT)	D7PZ 9A515–A *CM–3537								H	J	K	L	
GASKET (THROTTLE BODY)	B8S 9516–A	A	B	C	D	E	F	G	H	J	K	L	M
VALVE (ACCELERATOR PUMP DISCHARGE NEEDLE)–.157" diameter–.50" long	B9TE 9A516–A *CM–22	A	B	C	D	E	F	G	H	J	K	L	M
PLATE (FUEL BOWL BAFFLE)	9A517												
Primary	C9HZ 9A517–B *CM–1018	A	B	C	D	E	F	G	H	J	K	L	M
Secondary	C9HZ 9A517–A *CM–1017	A	B	C	D	E	F	G	H	J	K	L	M
GASKET (METERING BODY PLATE)	D8AZ 9A518–A *CG–572	A	B	C	D	E	F	G	H	J	K	L	M
GASKET (MAIN METERING BODY)	9A518												
Primary	D9PZ 9A518–C *CG–584	A	B	C	D	E	F	G	H	J	K	L	M
Secondary	D9PZ 9A518–E *CG–581	A	B	C	D	E	F	G	H	J	K	L	M
SPRING (FLOAT)	B9TE 9A519–B	2	2	2	2	2	2	2	2	2	2	2	2
FITTING (FUEL INLET)	★ D7PZ 9A520–A *CM–3493	A	B	C	D	E	F	G	H	J	K	L	
	★ C4AZ 9A520–A												M
CLAMP ASSY. (FLOAT BOWL VENT VALVE)	★ D7PZ 9E520–A *CM–3538								H	J	K	L	
CLAMP (FLOAT BOWL VENT ROD)	D7PZ 9E520–B *CM–3539								H	J	K	L	
GASKET (NEEDLE & SEAT)	B9TE 9A522–B												M
CAM (ACCELERATOR PUMP DIAPHRAGM)	C4TZ 9526–B		B							J		L	
	B7AZ 9526–B *CM–143	A			D	E	F	G	H		K		M
COVER KIT (ACCELERATOR PUMP)	D2AZ 9528–B *CM–461–A	A	B	C	D	E	F	G	H	J	K	L	M
Screw & washer assy. (accelerator pump cover to float bowl)–fillister head–No. 8–32 x 3/8"	43248–S8 (U–72)	4	4	4	4	4	4	4	4	4	4	4	4
JET (MAIN METERING)–PRIMARY	9533												
	D6PZ 9533–A *CJ–293	2		2			2						
	D5TZ 9533–D *CJ–266					2		2					
	D5TZ 9533–B *CJ–264												2
TUBE (FLOAT BOWL CONNECTING)	B7A 9534–A	A	B	C	D	E	F	G	H	J	K	L	
LEVER (FAST IDLE ADJUSTING)	B8A 9538–B	A	B	C	D	E	F	G	H	J	K	L	M
NEEDLE (IDLE ADJUSTING)	★ D7PZ 9541–B *CM–3486	2	2	2	2	2	2	2	2	2	2	2	2
PLATE (CHOKE)	C3AZ 9545–B	A	B	C	D	E	F	G	H	J	K	L	M
SHAFT and LEVER ASSY. (CHOKE)	B7A 9546–B	A	B	C	D	E	F	G	H	J	K	L	M
DASHPOT ASSY.	C2DZ 9B549–A *CD–12	A											
FLOAT ASSY.	9550												
Primary	B9TZ 9550–A *CM–734	A	B	C	D	E	F	G	H	J	K	L	M
Secondary	D7PZ 9550–A *CM–3487	A	B	C	D	E	F	G	H	J	K	L	M
Retainer (float)	351826–S(XX–2)	2	2	2	2	2	2	2	2	2	2	2	2

NOTICE: When the parts list suffix is shown in the quantity required column, the quantity is one (1).

DESCRIPTION/RESTRICTIONS	PART NUMBER	CARB. PARTS LISTS 42A THRU 42M											
		A	B	C	D	E	F	G	H	J	K	L	M
BAFFLE (VENT)	B8A 9553-C	A	B	C	D	E	F	G	H	J	K	L	M
DIAPHRAGM ASSY. (ACCELERATOR PUMP)	9B559												
	D6PZ 9B559-A *CM-193-A	A	B	C	D	E	F	G	H	J	K	L	M
SPRING (FLOAT BOWL VENT VALVE)	★ D7PZ 9560-A *CM-3535								H	J	K	L	
SPRING (FLOAT BOWL VENT ROD)	D7PZ 9560-B *CM-3536								H	J	K	L	
GASKET (FUEL BOWL)-Primary	D9PZ 9561-B *CG-585	A	B	C	D	E	F	G	H	J	K	L	M
NEEDLE ASSY. (FUEL INLET)	9564												
	★ D7PZ 9564-K *CV-122	2	2	2	2		2	2	2	2	2	2	M
	D0AZ 9564-A *CV-84					2							M
ECONOMIZER ASSY.	9A565												
	D7PZ 9A565-C *CE-139	A	B	C	D		F		H	J		L	
	D7PZ 9A565-A *CE-123												M
	D7PZ 9A565-E *CE-221										K		
	★ D7PZ 9A565-F *CE-222					E		G					
GASKET (FUEL INLET NEEDLE & SEAT)-	★ D7PZ 9569-A *CG-602	2	2	2	2		2		2	2	2	2	2
Screw (choke adjusting)-No. 8-32 x 3/8"	359749-S(UU-17)	A	B	C	D	E	F	G	H	J	K	L	M
BALL (SECONDARY THROTTLE CHECK)	B5A 9576-A	A					F		H	J	K	L	M
NOZZLE ASSY. (PUMP DISCHARGE)	★ D00Z 9577-A	A			D	E	F	G	H	J	K	L	M
SCREW (PUMP DISCHARGE NOZZLE)	C8AZ 9577-A *CM-875	A	B	C	D	E	F	G	H	J	K	L	M
SPRING (FAST IDLE ADJUSTING SCREW)- 4 1/2 coils-.20" I.D.-.58" long	B8A 9578-B *CM-609	A	B	C	D	E	F	G	H	J	K	L	M
GASKET (DISCHARGE PUMP NOZZLE)	B7AE 9580-A	2	2	2	2	2	2	2	2	2	2	2	2
LEVER ASSY. (DIAPHRAGM)	B8A 9583-C	A	B	C	D	E	F	G	H	J	K	L	
VENT VALVE (BODY ASSY.)-	★ D7PZ 9D583-A *CM-3494								H	J	K	L	
SCREW	9586												
Choke plate-oval head-No. 6-32 x .31"	B9A 9586-A *CM-531	2	2	2	2	2	2	2	2	2	2	2	2
GASKET (ECONOMIZER VALVE)	B7AZ 9A588-A	A	B	C	D	E	F	G	H		K	L	M
GASKET (FLOAT BOWL SCREW)	B7A 9592-A	8	8	8	8	8	8	8	8	8	8	8	8
CAM ASSY. (FAST IDLE)	D4PZ 9597-A	A	B	C	D	E	F	G	H	J	K	L	
	D9PZ 9597-B *CM-3211												M
Screw (fast idle cam)-No. 8-32 x 3/4"	31093-S7-8(U-52)	A	B	C	D	E	F	G	H	J	K	L	M
ROD (CHOKE CONTROL)	B7AZ 9A599-B	A	B	C	D	E	F	G	H	J	K	L	M
"O" RING	9609												
SEAL (IDLE ADJUSTING NEEDLE)	B7A 9634-A	2	2	2	2	2	2	2	2	2	2	2	2
SPRING (ACCELERATOR PUMP DIAPHRAGM RETURN)	C9ZZ 9636-A	A	B	C	D	E	F	G	H	J	K	L	
	★ B7A 9636-B												M
SHAFT and LEVER ASSY. (CHOKE HOUSING)	B7AZ 9A753-B	A	B	C	D	E	F	G	H	J	K	L	M
SPACER (CHOKE LEVER)	★ B5AZ 9812-A	A	B	C	D	E	F	G	H	J	K	L	M
PISTON ASSY. (CHOKE)	D5PZ 9840-A *CM-2345		B	C									
	D7PZ 9840-A *CM-3482	A			D	E			H	J	K	L	M
CLAMP (THERMOSTATIC CHOKE HOUSING)	B6A 9842-A	A	B	C	D	E	F	G	H	J	K	L	M

COPYRIGHT © 1986 — FORD MOTOR COMPANY — DEARBORN, MICHIGAN

DESCRIPTION/RESTRICTIONS	PART NUMBER	CARB. PARTS LISTS 42A THRU 42M											
		A	B	C	D	E	F	G	H	J	K	L	M
HOUSING (THERMOSTATIC CHOKE)	9848												
	D9PZ 9848-E *CM-3208							G					M
	D7PZ 9848-C *CM-3497		B	C	D				H			L	
	D7PZ 9848-D *CM-3543						F			J	K		
Washer-lock (choke housing)-No. 10-21/64" O.D.	34803-S7(X-60)	3	3	3	3	3	3	3	3	3	3	3	3
Screw (choke housing)-No. 10-32 x 1 3/16"	374468-S13(BB-26-G)	3	3	3	3	3	3	3	3	3	3	3	3
HOUSING and PLUGS ASSY. (CHOKE)	9849												
	★ D7PZ 9849-A *CM-3499											L	M
GASKET (SECONDARY DIAPHRAGM HOUSING)	9853												
Choke housing	B7A 9853-B	2 A	2 B	2 C	2 D	2 E	2 F	2 G	2 H	2 J	2 K	2 L	2 M
GASKET (THERMOSTATIC CHOKE HOUSING)	★ C80Z 9871-B	A	B	C	D	E	F	G	H	J	K	L	M

NOTICE: When the parts list suffix is shown in the quantity required column, the quantity is one (1).

1973/79
LINCOLN-MERCURY CARS

Instructions for identifying Carburetor Assemblies and their related Parts Lists Numbers are shown at the beginning of Section 95.

For ready reference, kit part numbers are shown at the beginning of each parts list in Section 95.23 and up.

Included in Section 95A is a listing of components for each kit.

Parts Lists for new kits will be added at the end of this section, irrespective of part number.

Always refer to the following Index for page numbers on which components are listed.

INDEX

PART NUMBER	PAGE	PART NUMBER	PAGE
GASKET SETS–GROUP 9502			
D0DZ 9502-A	2	D7PZ 9502-D	3
D0ZZ 9502-A	2	D8PZ 9502-A	3
D1FZ 9502-A	2	D8PZ 9502-B	3
D3AZ 9502-A	2	D8PZ 9502-C	4
D30Z 9502-A	2	D8PZ 9502-D	4
D4AZ 9502-A	2	D8PZ 9501-HA	4
D4AZ 9502-B	3	D9PZ 9502-J	4
D4PZ 9502-D	3	E0PZ 9502-B	5
D5PZ 9502-E	3	E1PZ 9502-C	4
D7PZ 9502-C	3		
TUNE-UP KITS–GROUP 9A586			
D0DZ 9A586-B	5	D8PZ 9A586-E	9
D0ZZ 9A586-B	5	D8PZ 9A586-F	9
D1FZ 9A586-D	5	D8PZ 9A586-G	9
D3FZ 9A586-A	5	D8PZ 9A586-H	10
D30Z 9A586-A	6	D8PZ 9A586-U	11
D4AZ 9A586-A	6	D8PZ 9A586-V	14
D4AZ 9A586-B	6	D8PZ 9A586-JB	10
D4PZ 9A586-C	6	D8PZ 9A586-PA	10
D4PZ 9A586-D	6	D8PZ 9A586-RA	10
D4PZ 9A586-H	6	D8PZ 9A586-SA	11
D5PZ 9A586-D	7	D9PZ 9A586-A	11
D5PZ 9A586-E	7	D9PZ 9A586-B	12
D5PZ 9A586-F	7	D9PZ 9A586-BA	14
D6PZ 9A586-C	7	D9PZ 9A586-C	12
D7PZ 9A586-A	7	D9PZ 9A586-D	12
D7PZ 9A586-B	7	D9PZ 9A586-DB	14
D7PZ 9A586-E	8	D9PZ 9A586-E	12
D7PZ 9A586-BA	8	D9PZ 9A586-H	13
D7PZ 9A586-FB	8	D9PZ 9A586-J	13
D8PZ 9A586-A	8	D9PZ 9A586-K	13
D8PZ 9A586-B	8	D9PZ 9A586-M	13
D8PZ 9A586-C	8	D9PZ 9A586-N	13
D8PZ 9A586-D	9	D9PZ 9A586-S	14

COPYRIGHT © 1986 — FORD MOTOR COMPANY — DEARBORN, MICHIGAN

CARBURETOR KIT PARTS LISTS

QTY.	PART NUMBER		DESCRIPTION
	D0DZ	**9502-A**	
		*CG-257	
Consists of			
1	C7DZ	9447-A	Gasket (carb. to intake manifold)
1	C8AZ	9447-A	Gasket (carb. to intake manifold)
1	C7DZ	9516-A	Gasket (throttle body)
1	C8AZ	9516-A	Gasket (throttle body)
1	D0DZ	9516-A	Gasket (throttle body)
1	C7DZ	9561-A	Gasket (float)
1	C6VY	9569-A	Gasket (fuel inlet needle seat)
1	B7A	9871-C	Gasket (thermostatic choke)
			OR
			ALTERNATE KIT COMPONENTS
1			Gasket (choke cover)
2			Gasket (flange)
2			Gasket (bowl cover)
2			Gasket (throttle body)
2			Retainer (rod)
1			Gasket (fuel inlet seat)
	D0ZZ	**9502-A**	
		*CG-306	
Consists of			
1	D0DZ	9447-A	Gasket (carb. to intake manifold)
1	D0ZZ	9561-A	Gasket (float bowl)
1	D0ZZ	9569-A	Gasket (fuel inlet)
1	D0ZZ	9871-A	Gasket (thermostat choke housing)
			OR
			ALTERNATE KIT COMPONENTS
1			Cap (idle limiter)
1			Plug (pump passage)
1			Gasket (bowl cover)
1			Gasket (choke cover)
1			Gasket (flange)
6			Retainer (rod)
	D1FZ	**9502-A**	
		*CG-324	
Consists of			
1	D1FZ	9447-B	Gasket (carb. to intake manifold)
1	D0RY	9561-A	Gasket (float)
1	B7A	9569-A	Gasket (fuel inlet)
1	D0RY	9853-A	Gasket (choke)
			OR
			ALTERNATE KIT COMPONENTS
1			Cap (idle limiter)
1			Gasket (fuel return tube)
1			"O" ring (seal choke housing)
1			Gasket (power valve)
1			Gasket (bowl cover)
1			Gasket (choke water housing)
1			Gasket (water housing screw)
1			Gasket (flange)
1			Gasket (choke cover)
1			Gasket (pump discharge nozzle screw)
1			Gauge (float)

QTY.	PART NUMBER		DESCRIPTION
	D3AZ	**9502-A**	
		*CG-221-B	
Consists of			
1	C7AZ	9516-A	Gasket (throttle body)
1	D3AZ	9516-A	Gasket (throttle body)
1	D3AZ	9561-B	Gasket (float bowl)
1	C1AZ	9871-A	Gasket (thermostatic choke housing)
1	D2AZ	9871-A	Gasket (thermostatic choke housing)
1			Gasket (hot idle compensator)
1			Gasket (fuel inlet needle seat)
1			Gasket (fuel inlet needle seat-supplementary)
1			Gasket (carb. to intake manifold)
★	**D30Z**	**9502-A**	R/b None (3/83)
		*CG-335-B	
Consists of			
1	D3AZ	9516-B	Gasket (throttle body)
1	D3AZ	9561-A	Gasket (float bowl)
1	C1AZ	9871-A	Gasket (thermostatic choke housing)
1	D2AZ	9871-A	Gasket (thermostatic choke housing)
1			Gasket (fuel filter)
1			Gasket (fuel inlet needle seat)
1			Gasket (fuel inlet needle seat-supplementary)
1			Gasket (carb. to intake manifold)
	D4AZ	**9502-A**	
		*CG-264-C	
Consists of			
1	C3AZ	9447-B	Gasket (carb. to intake manifold)
1	C8AZ	9561-C	Gasket (float bowl)
1	D4AZ	9561-A	Gasket (float bowl)
1	C1AZ	9871-A	Gasket (thermostatic choke housing)
1	D0AZ	9871-A	Gasket (thermostatic choke housing)
1	D1AZ	9871-A	Gasket (thermostatic choke housing)
1			Gasket (fuel inlet adapter)
1			Gasket (fuel inlet needle seat)
1			Gasket (economizer body)
1			Gasket (booster venturi support)
1			Seal (fast idle rod)
1			Gasket (economizer cover)
1			Washer (used as pump discharge nozzle screw gasket)-1/4" flat
1			Washer (used as accelerator pump retainer gasket)-1/4" flat
1			Gasket (thermostatic control housing)

CARBURETOR KIT PARTS LISTS

QTY.	PART NUMBER		DESCRIPTION
★	D4AZ	9502-B	R/b None (3/82)
		*CG-431	
Consists of			
1	D4VY	9C477-A	Gasket (carb. to intake manifold)
1			Gasket (piston housing)
2			Gasket (needle seat)
1			Gasket (choke cover)
1			Gasket (pump jet housing)
1			Gasket (float bowl)
1			Gasket (throttle body)
1			Gasket (hot idle valve)
2			Quad X ring (primary well seal)
1			Gasket (fuel inlet fitting)
1			Retainer (pin spring)
3			Retainer (connector rod)
1			Tube (pump passage)
	D4PZ	9502-D	
		*CG-452	
Consists of			
1			Gasket (choke water housing)
1			Gasket (flange insulator)
1			Gasket (float bowl)
1			Gasket (fuel valve seat)
2			Gasket (pump discharge nozzle screw)
1			Gasket (water housing screw)
1			"O" ring (choke housing)
	D5PZ	9502-E	
		*CG-468	
Consists of			
1			Gasket (choke cover)
1			Gasket (inlet seat)
1			Gasket (float bowl)
1			Gasket (throttle body)
1			Gasket (flange)
1			Retainer (vent valve shaft)
1			Retainer (fast idle rod)
1			Tube (pump passage)
	D7PZ	9502-C	
		*CG-453-B	
Consists of			
1			"O"Ring (choke housing)
1			Gasket (choke water housing)
1			Gasket (flange insulator)
1			Gasket (float bowl)
1			Gasket (fuel valve seat)
2			Gasket (pump discharge needle screw)
1			Gasket
1			Gasket (fuel inlet)
1			Gasket (altitude valve shaft assy.)

QTY.	PART NUMBER		DESCRIPTION
	D7PZ	9502-D	
		*CG-531	
Consists of			
1	D1ZZ	9229-A	Gasket (filter)
1	D7FZ	9C477-A	Gasket (carb. to spacer)
2	D7ZZ	9E515-B	Plug (cup)
1	D7ZZ	9516-A	Gasket (throttle body)
1	D7ZZ	9561-A	Gasket (float bowl)
1	D7ZZ	9569-A	Gasket (inlet seat)
1	D7ZZ	9D583-A	Valve (vent)
1	D7PE	9M598-AA	Seal
1	C1AZ	9871-A	Gasket (choke cover)
2		387041-S96	O-ring
1		87008-S93	O-ring
2		377918-S8	Retainer (choke)
1		97407-S2	Retainer (pump)
1		383191-S	Plug
	D8PZ	9502-A	
		*CG-542	
Consists of			
1	C7AZ	9564-A	Gasket (fuel inlet)
1	D8PZ	9561-E	Gasket (main body)
1	D8PZ	9516-C	Gasket (throttle body)
1	D8PZ	9871-A	Gasket (choke cap)
1	D8PZ	9592-A	Gasket (ECS vent cover)
1	D8PZ	9B567-B	Gasket (HIC cover)
1	D8PZ	9557-B	Valve (ECS vent)
1	D0PZ	9535-A	Seal (pump rod)
1	D0PZ	9572-A	Cup (pump)
1	D8PZ	9B567-C	Seal (HIC)
1	D6PZ	9J500-A	Cap (idle limiter)
1	D7TZ	9C477-A	Gasket (flange)
	D8PZ	9502-B	
		*CG-530	
Consists of			
1	D1ZZ	9229-A	Gasket (filter)
1	D7AZ	9C477-A	Gasket (carb. to spacer)
2	D7ZZ	9E515-B	Plug (cup)
1	D8DZ	9516-A	Gasket (throttle body)
1	D8DZ	9561-A	Gasket (float bowl)
1	D7ZZ	9569-A	Gasket (inlet seat)
1	D7ZZ	9D583-A	Valve (vent)
1	D7PE	9M598-AA	Seal
1	C1AZ	9871-A	Gasket (choke)
2		387041-S96	O" ring
1		87008-S96	"O" ring
2		377918-S8B	Retainer (choke)
1		97407-S2	Retainer (pump)
1		383191-S	Plug
1		387328	O" ring

COPYRIGHT © 1986 — FORD MOTOR COMPANY — DEARBORN, MICHIGAN

CARBURETOR KIT PARTS LISTS

QTY.	PART NUMBER		DESCRIPTION
	D8PZ	9502-C	
		*CG-446-B	
Consists of			
1	D1ZZ	9229-A	Gasket (filter)
1	D2AZ	9871-A	Gasket (choke cover)
1	D5VZ	9516-A	Gasket (throttle body)
1	D5VZ	9A980-A	Gasket (power valve body)
1	C7AZ	9569-A	Gasket (inlet seat, pri.)
1	C7AZ	9569-B	Gasket (inlet seat, suppl.)
1	D6VZ	9A953-A	Gasket (alt. compensator, mtg.)
1	D5TE	9A955-A	Gasket (alt. compensator, hsg.)
1	D7VZ	9C477-A	Gasket (carb. to spacer)
1	D8AZ	9561-E	Gasket (float bowl)
1	D5VZ	9561-B	Gasket (float bowl)
1	D7VZ	9B567-A	Gasket (H.I.C.)
1		387328	Seal (O" ring, vac. piston)
	D8PZ	9502-D	
		*CG-532	
Consists of			
1	B8A	9871-B	Gasket (choke cover)
1	D8PZ	9B567-A	Gasket (H.I.C.)
1	D8PZ	9516-B	Gasket (Y.F. throttle body)
1	D8PZ	9516-A	Gasket (Y.F.A. throttle body)
1	D7TZ	9C477-A	Gasket (carb. to spacer)
1	D8PZ	9561-B	Gasket (float bowl)
1	D8PZ	9580-A	Gasket (pump relief valve)
1			Plug (pump relief v/v screw)
1	C6VY	9569-A	Gasket (needle seat)
1	D8PZ	9B501-A	Seal (lifter link)
1		353161-S	Retainer (vent v/v shaft)
1	D1DZ	9599-A	Retainer (fast idle cam)
1	D5DZ	9544-A	Tube (pump passage)
	E1PZ	9502-C	
		*CG-615	
Consists of			
1	D9AZ	9561-C	Gasket (float bowl)
3	E1AZ	9F671-A	Screw (breakaway)
1	D4AZ	9E845-A	Gasket (inlet seat)
1	C2AZ	9A588-B	Gasket (econo. body)
1	E0TZ	9871-A	Gasket (choke cover)
1	E1TZ	9871-B	Gasket (choke cover)
1	E1TZ	9A536-A	Gasket (booster support)
1	E0TZ	9563-A	Gasket (econo. cover)
1		374370-S	Washer
1	B8A	9853-A	Gasket (thermo control hsg.)
1	D5ZZ	9A940-A	Gasket (decel valve)
1	D7AZ	9A953-A	Gasket (alt. compensator)
1	D5AE	9A955-AA	Gasket (alt. compensator)
1	D7FZ	9C477-A	Gasket (carb. to spacer)
1	D7AZ	9C477-A	Gasket (carb. to spacer)
1	D6AE	9561-AA	Gasket (float bowl)
1	D4AZ	9561-A	Gasket (float bowl)

QTY.	PART NUMBER		DESCRIPTION
	D8PZ	9502-HA	
		*CG-617	
Consists of			
2			Gasket (needle seat)
2	B5A	9229-A	"O" ring (fuel line tube)
2	B6A	9609-A	"O" ring (fuel valve seat)
2	B7A	9853-B	Gasket (sec. diaph. hsg. & choke hsg.)
2	B7A	9634-A	Seal (idle adj. needle)
1	C8OZ	9871-B	Gasket (choke cover)
2	B9TE	9A522-B	Gasket (fuel valve seat nut)
2	B9TE	9A522-A	Gasket (fuel valve seat lock nut)
8	B7A	9592-A	Gasket (fuel bowl screw)
1	B8AZ	9A518-A	Gasket (met. body plate)
2	D4PZ	9229-A	"O" ring (pump transfer tube)
1	B8S	9516-A	Gasket (throttle body)
1	C2AZ	9A588-B	Gasket (enrichment valve)
1	D9TZ	9C477-B	Gasket (flange insulator)
1	D9PZ	9A518-E	Gasket (sec. metering body)
1	D9PZ	9561-B	Gasket (pri. fuel bowl)
1	D9PZ	9A518-C	Gasket (pri. metering body)
1			Gasket (fuel inlet fitting)
1		353610-S	Retainer (choke rod)
2		351826-S	Retainer (float)
1		97407-S2	Retainer (sec. diaph link)
2	B7A	9229-A	Gasket (fuel inlet fitting)
1			Vent valve
2	EAA	9569-A	Gasket (sight plug)
	D9PZ	9502-J	
		*CG-530-A	
Consists of			
1	D1ZZ	9229-A	Gasket (filter)
1	D7AZ	9C477-A	Gasket (carb. to spacer)-(2.8L)
2	D7ZZ	9E515-B	Plug (cup)
1	D8DZ	9516-A	Gasket (throttle body)
1	D9AZ	9561-A	Gasket (float bowl)
1	D7ZZ	9569-A	Gasket (inlet seat)
1	D7ZZ	9D583-A	Valve (vent)
1	D7PE	9M598-AA	Gasket (2700)
1	C1AZ	9871-A	Gasket (choke)
2		387041-S96	"O" ring
1		87008-S96	"O" ring
2		377918-S8B	Retainer (choke)
1		97407-S2	Retainer (pump)
2		386064-S	Plug
2		388573-S96	"O" ring
3		388575-S2	Rivet
2		388574-S	Plug
1	D9AE	9H517-AA	Plug
1		387155-S	Plug
1	E0AZ	9A933-A	Gasket
1	D9AZ	9A953-A	Gasket (7200)
1	D9PE	9M598-AA	Gasket (7200)
2			Gasket (302-351)

CARBURETOR KIT PARTS LISTS

E0PZ 9502–B
*CG–453–E

Consists of

QTY.	PART NUMBER		DESCRIPTION
1	A0A	9563–A	Gasket (economizer cover)
1	D1FZ	9853–A	"O" ring
1	D1FZ	9569–A	Gasket (inlet)
1	D1FZ	9871–C	Gasket (choke screw)
1	D1FZ	9871–B	Gasket (choke housing)
1	D8PZ	9561–C	Gasket (float bowl)
1	D7FZ	9561–A	Gasket (float bowl)
1	E0PZ	9561–B	Gasket (float bowl)
1			Plug
1	D4PZ	9229–A	"O" ring
2	D4FZ	9580–A	Gasket (pump)
1	C7AZ	9569–A	Gasket (inlet–1977 CAPRI)
1	D9FZ	9447–A	Gasket (carb. to spacer)
2	D7FZ	9B527–A	Retainers

D0DZ 9A586–B
*CT–842–A

Consists of

QTY.	PART NUMBER		DESCRIPTION
1			Cap (idle limiter)
2			Gasket (choke cover)
3			Gasket (flange)
1			Gasket (bowl cover)
2			Gasket (throttle body)
2			Retainer (rod)
1			Needle & seat assy.
1			Diaphragm assy. (pump)
2			Retainer (rod)
2			Float gauge

D0ZZ 9A586–B
*CT–224–A

Consists of

QTY.	PART NUMBER		DESCRIPTION
1			Cap (idle limiter)
1			Plug (pump passage)
1			Gasket (bowl cover)
1			Gasket (choke cover)
1			Gasket (flange)
6			Retainer (rod)
1			Needle & seat assy.
1			Retainer (pump)
1			Kit (step–up rod)
1			Plunger assy. (pump)
1			Ball (pump check)
4			Gauge (float)
1			Tool (step–up rod)
1			Check assy. (pump)
1			Cap (E.G.R. tube)

D1FZ 9A586–D
*CT–858–A

Consists of

QTY.	PART NUMBER		DESCRIPTION
1			Cap (idle limiter)
1			Gasket (fuel return tube)
1			"O" ring (seal choke housing)
1			Gasket (power valve)
1			Gasket (bowl cover)
1			Gasket (choke water housing)
1			Gasket (water housing screw)
1			Gasket (flange)
1			Gasket (choke cover)
1			Gasket (pump discharge nozzle screw)
1			Needle & seat assy.
1			Diaphragm assy. (pump)
1			Diaphragm assy. (choke control)
1			Economizer assy.

OR

ALTERNATE KIT COMPONENTS

QTY.	PART NUMBER		DESCRIPTION
1	C7AZ	9J500–D	Cap (idle limiter)
			Gasket (fuel return tube)
1	D1FZ	9853–A	"O" ring (choke housing)
1	D1FZ	9A588–A	Gasket (power valve)
1	D1FZ	9561–A	Gasket (bowl cover)
1	D1FZ	9871–B	Gasket (choke water housing)
1	D1FZ	9871–C	Gasket (water housing screw)
1	D1FZ	9447–E	Gasket (flange)
1	D1FZ	9871–A	Gasket (choke cover)
2			Gasket (pump discharge nozzle screw)
1	D2FZ	9564–A	Needle & seat assy.
1	D2FZ	9B559–A	Diaphragm assy. (pump)
1	D1FZ	9J549–A	Diaphragm assy. (choke control)
1	D3FZ	9A565–B	Economizer assy.

D3AZ 9A586–A
*CT–226–B

Consists of

QTY.	PART NUMBER		DESCRIPTION
1	D3AZ	9502–A	Gasket set
1	C7AZ	9572–A	Cup (pump piston)
1	C7AZ	9576–A	Disc (accelerator pump check valve)
1			Retainer (power valve closing spring)
1			Valve (fuel inlet needle)
1			Seat (needle valve)
1			Valve & seat assy. (fuel inlet–supplementary)
2			Limiter (idle adjusting needle)
1			Retainer (accelerator pump check valve disc)

COPYRIGHT © 1986 — FORD MOTOR COMPANY — DEARBORN, MICHIGAN

CARBURETOR KIT PARTS LISTS

D30Z 9A586–A
*CT–862–B

Consists of

QTY.	PART NUMBER		DESCRIPTION
1	D30Z	9502–A	Gasket set
1	C7AZ	9572–A	Cup (pump piston)
1	C7AZ	9576–A	Disc (accelerator pump check valve)
1			Retainer (power valve closing spring)
1			Valve (fuel inlet needle)
1			Seat (needle valve)
1			Valve & seat assy. (fuel inlet–supplementary)
2			Limiter (idle adjusting needle)
2			Float gauge
1			Retainer (accelerator pump check valve disc)

D4AZ 9A586–A
*CT–499–D

Consists of

QTY.	PART NUMBER		DESCRIPTION
1	D4AZ	9502–A	Gasket set
1	C4AZ	9B559–A	Diaphragm assy. (accelerator pump)
1	C0AZ	9A565–A	Valve assy. (carb. enrichment)
1	D2AF	9566–AA	Valve (fuel inlet needle)
1	D2AF	9567–BA	Seat (needle valve)
1			Pin (accelerator pump plunger)
2			Retainer (float lever shaft)
1			Valve (accelerator pump check)
2			Limiter (idle adjusting needle)
1			Clip (pump rod to lever)
1			Retainer (fuel inlet needle)

D4AZ 9A586–B
*CT–1062

Consists of

QTY.	PART NUMBER		DESCRIPTION
1	D4VY	9C477–A	Gasket (carb. to intake manifold)
1			Plug (bowl vent)
2			Cap (idle limiter)
1			Needle (pump check)
1			Gasket (piston housing)
1			Gasket (choke cover)
1			Gasket (pump jet housing)
1			Gasket (float bowl)
1			Gasket (throttle body)
1			Gasket (hot idle valve)
2			Quad X ring (primary well seal)
1			Gasket (fuel inlet fitting)
2			Needle & seat assy. (fuel inlet)
1			Retainer (pin spring)
3			Retainer (connector rod)
1			Check assy. (pump inlet)
1			Pump (plunger assy.)
1			Tube (pump passage)
1			Valve (vent)

D4PZ 9A586–C
*CT–1073

Consists of

QTY.	PART NUMBER		DESCRIPTION
1			Actuator (power valve)
1			Cap (idler limiter)
1			Diaphragm (choke control)
1			Diaphragm (pump)
1			Gasket (choke water housing)
1			Gasket (flange insulator)
1			Gasket (float bowl)
1			Gasket (pump discharge nozzle screw)
1			Gasket (water housing screw)
1			Gauge (float level)
1			Needle & seat assy.
1			"O" ring (choke housing)
1			Instruction sheet

D4PZ 9A586–D
*CT–1074

Consists of

QTY.	PART NUMBER		DESCRIPTION
1			Actuator (power valve)
1			Cap (idle limiter)
1			Diaphragm assy. (choke control)
1			Diaphragm assy. (pump)
1			Gasket (choke water housing)
1			Gasket (flange insulator)
1			Gasket (float bowl)
1			Gasket (pump discharge nozzle screw)
1			Gasket (water housing screw)
1			Gauge (float level)
1			Needle & seat assy.
1			"O" ring (choke housing)
1			Instruction sheet

D4PZ 9A586–H
*CT–1191

Consists of

QTY.	PART NUMBER		DESCRIPTION
1	D6PZ	9J500–A	Cap (idle limiter)
1	D4ZZ	9A565–A	Actuator (power valve)
1			Gasket (fuel return tube)
1	D1FZ	9853–A	"O" Ring (choke housing)
1	D1FZ	9A588–A	Gasket (power valve)
1	D1FZ	9871–B	Gasket (water choke housing)
1	D1FZ	9871–C	Gasket (water housing screw)
1	D1FZ	9871–A	Gasket (choke cover)
1	D1FZ	9447–E	Gasket (flange insulator)
1	D2RY	9447–B	Gasket (flange 1972 CAPRI)
1	D7FZ	9561–A	Gasket (float bowl)
1			Gauge (float level)
1	D2FZ	9564–A	Assembly (needle & seat)
3			Assembly (screw & lockwasher)
1	D1FZ	9J549–A	Diaphragm assy. (choke control)
1	D2RY	9J549–A	Diaphragm assy. (pump)
1	D4FZ	9580–A	Gasket (pump discharge nozzle screw)
1			Instruction sheet

CARBURETOR KIT PARTS LISTS

D5PZ 9A586–D
*CT–1110

Consists of

QTY.	DESCRIPTION
1	Cap (idle limiter)
1	Actuator (power valve)
1	"O" ring (choke housing)
1	Gasket (choke water housing)
1	Gasket (water housing screw)
1	Gasket (float bowl)
1	Gasket (flange insulator)
1	Gauge (float level)
1	Valve assy. (needle & seat)
1	Diaphragm assy. (choke control)
1	Diaphragm assy. (pump)
2	Gasket (pump discharge nozzle screw)
1	Instruction sheet

D5PZ 9A586–E
*CT–1075–A

Consists of

QTY.	DESCRIPTION
1	Cap (idle limiter)
1	Actuator (power valve)
1	"O" Ring (choke housing)
1	Gasket (choke water housing)
1	Gasket (water housing screw)
1	Gasket (float bowl)
1	Gasket (flange insulator)
1	Gauge (float level)
1	Needle & seat assy.
1	Diaphragm assy. (choke control)
1	Diaphragm assy. (pump)
2	Gasket (pump discharge nozzle screw)
1	Instruction sheet

D5PZ 9A586–F
*CT–1112

Consists of

QTY.	DESCRIPTION
1	Cap (idle limiter)
1	Gasket (choke cover)
1	Gasket (bowl cover)
1	Gasket (throttle body)
1	Cap (EGR tube)
1	Gasket (flange)
2	Gauge (float level)
1	Needle & seat assy.
1	Retainer (vent valve shaft)
1	Retainer (fast idle rod)
1	Diaphragm assy. (pump)
1	Ball (pump discharge check)
1	Tube (pump passage)
1	Grommet (vent valve)
1	Instruction sheet

D6PZ 9A586–C
*CT–1072–B

Consists of

QTY.	PART NUMBER	DESCRIPTION
2	D6PZ 9J500–A	Limiter
1	D6PZ 9502–B	Gasket kit
1	D7VZ 9B544–A	Piston assy.
1	D5AZ 9564–A	Valve assy.
1	D5VE 9566–AA	Valve
1	D5VE 9567–AA	Seat

D7PZ 9A586–A
*CT–1077–A

Consists of

QTY.	DESCRIPTION
1	Gasket kit
1	Valve (fuel inlet needle)
1	Seat (needle valve)
1	Valve assy. (enrichment)
1	Diaphragm assy. (accelerator pump)
2	Retainer (float lever shaft)
1	Valve (accelerator pump check)
2	Limiter (idle adjusting needle)
1	Clip (att. pump rod)
1	Gage (float level)
1	Retainer (fuel inlet needle)
1	Retainer (choke rod)
1	Ball (pump check)
1	Instruction Sheet

D7PZ 9A586–B
*CT–1076–A

QTY.	DESCRIPTION
1	Gasket kit
1	Valve (fuel inlet needle)
1	Seat (needle valve)
1	Valve assy. (enrichment)
1	Diaphragm assy. (accelerator pump)
2	Retainer (float lever shaft)
1	Valve (accelerator pump check)
2	Limiter (idle adjusting needle)
1	Clip (att. pump rod)
1	Gage (float level)
1	Retainer (fuel inlet needle)
1	Retainer (choke rod)
1	Ball (pump check)
1	Instruction sheet

COPYRIGHT © 1986 — FORD MOTOR COMPANY — DEARBORN, MICHIGAN

CARBURETOR KIT PARTS LIST

QTY.	PART NUMBER		DESCRIPTION
	D7PZ	9A586-BA	
		*CT-1076-B	
1			Gasket kit
1			Valve (fuel inlet needle)
1			Seat (needle valve)
1			Valve assy. (enrichment)
1			Diaphragm assy. (accelerator pump)
2			Retainer (float lever shaft)
1			Valve (accelerator pump check)
2			Limiter (idle adjusting needle)
1			Clip (att. pump rod)
1			Gage (float level)
1			Retainer (fuel inlet needle)
1			Retainer (choke rod)
1			Ball (pump check)
2			Gasket (carb. to spacer)
1			Instruction sheet
	D7PZ	9A586-E	
		*CT-1172	
Consists of			
1			Cap (idle limiter)
1			Actuator (power valve)
1			"O" Ring
1			Gasket (altitude valve shaft assy.)
1			Gasket (fuel inlet seat)
1			Gasket (flange insulator)
1			Gauge (Float level)
1			Needle & seat assy.
1			Diaphragm assy. (choke control)
1			Diaphragm assy. (pump)
1			Gasket (pump discharge nozzle screw)
1			Gasket (fuel inlet)
1			Instruction sheet
	★ D7PZ	9A586-FB	R/b D8PZ 9A586-V (12/84)
		*CT-1173-A	
Consists of			
2	D7ZZ	9E515-B	Plug
1	D7ZZ	9516-A	Gasket
1	D7ZZ	9572-A	Cup
1	D7ZZ	9561-A	Gasket
1	D7ZZ	9564-A	Needle & seat
1	D7ZZ	9D583-A	Valve
1	C1AZ	9871-A	Gasket
1	D7ZZ	9A900-A	Diaphragm
1	D7ZZ	9J549-A	Diaphragm
2	D7ZZ	9A919-A	Bushing
2	D7ZZ	9A928-A	Pivot
1	353077-S		Ball
2	387041-S96		"O"-ring
1	87008-S93		"O"-ring
2	377918-S8B		Retainer
1	97407-S2		Retainer
1	383191-S		Exp. plug
2			Gauges
1			Inst. sheet
1			Screw
1	D7FZ	9C477-A	Gasket
2	D7ZZ	9A929-A	Plug
1	D7ZZ	9B511-B	Weight
1	D7ZZ	9155-A	Filter
1	D7PE	9M598-AA	Gasket

QTY.	PART NUMBER		DESCRIPTION
	D8PZ	9A586-A	
		*CT-1199	
Consists of			
1	D8PZ	9502-A	Gasket kit
1	D8PZ	9541-A	Idle adj. needle
1	D8PZ	9564-A	Needle & seat
1	78-9576		Pump disch. valve
1		Inst. sheet	
	★ D8PZ	9A586-B	R/b D8PZ 9A586-V (12/84)
		*CT-1192	
Consists of			
1	D7ZZ	9155-A	Filter
1	D1ZZ	9229-A	Gasket, inlet
1	D7AZ	9C447-A	Gasket, flange
1	D7ZZ	9B511-B	Weight
2	D7ZZ	9E515-B	Cup plug
1	D8DZ	9516-A	Gasket, throttle body
1	D7ZZ	9572-A	Pump cup
1	D7ZZ	9J549-A	Diaphragm, high cam
1	D8DZ	9561-A	Gasket, float bowl
1	D8ZZ	9564-A	Seat, vlv. gskt. inlet
1	D7ZZ	9D583-A	Valve, vent
1	D7PE	9M598-AA	Seal, valve
1	C1AZ	9871-A	Gasket, choke
2	D7ZZ	9A919-A	Bushing, venturi
1	D7ZZ	9A900-A	Diaphragm assy., vent
2	D7ZZ	9A928-A	Pivot
2	D7ZZ	9A929-A	Plug, vent
1	353077-S		
2	387041-S96		"O" ring
1	87008-S96		"O" Ring
2	377918-S8B		Retainer
1	97407-S2		Retainer
1	383191-S		Expansion plug
1	387328		"O" Ring
1			Float gauge
1			Float gauge
1			Inst. sht.
	D8PZ	9A586-C	
		*CT-1193	
Consists of			
2	D6PZ	9J500-A	Limiters
1	D5TZ	9A565-B	Valve (enrichment)
1	374370-S		Gasket
1	B8A	9853-A	Gasket
1	B8AZ	9A536-A	Gasket
1	D1AZ	9871-A	Gasket
1	D7AZ	9C477-A	Gasket
1	D9AZ	9561-B	Gasket
1	D8AZ	9564-A	Kit (valve & seat)
1	377918-S8B		Retainer
1	D5AZ	9B559-A	Diaphragm
1	C4AZ	9576-A	Valve
1	D2AZ	9825-A	Retainer
1	371350-S		Ball
1			Float gauge
1			Inst. sheet

CARBURETOR KIT PARTS LISTS

D8PZ 9A586–D
*CT–1077–C

Consists of

QTY.	PART NUMBER	DESCRIPTION
2	D6PZ 9J500–A	Limiters
1	D50Z 9A565–A	Valve & gasket
1	374370–S	Gasket
1	B8A 9853–A	Gasket
1	B8AZ 9A536–A	Gasket
1	D1AZ 9871–A	Gasket
1	D5ZZ 9A940–A	Gasket
1	D7FZ 9C477–A	Gasket
1	D9AZ 9561–B	Gasket
1	D8AZ 9564–A	Needle & seat
1	377918–S8B	Retainer
1	C4AZ 9B559–A	Diaphragm
1	371350–S	Ball
1	C4AZ 9576–A	Valve
1	D2AZ 9825–A	Retainer
1		Float gauge
1		Inst. sheet

D8PZ 9A586–E
*CT–1072–C

Consists of

QTY.	PART NUMBER	DESCRIPTION
2	D6PZ 9J500–A	Limiters
1	D7VZ 9B544–A	Piston assy.
1	72775–S	Pin
1	D5VZ 9516–A	Gasket
1	D1ZZ 9229–A	Gasket
1	D8AZ 9561–E	Gasket
	D5VE 9561–AB	Gasket
1	D2AZ 9871–A	Gasket
1	D7VZ 9C477–A	Gasket
1	D5VZ 9A980–A	Gasket
1	387328	"O"–ring
1	D6VZ 9A953–A	Gasket
1	D5TE 9A955–AA	Gasket
1	D7VZ 9B567–A	Gasket
1	D5AZ 9564–A	Kit (valve & seat)
1	D6AZ 9564–A	Kit (valve & seat)
1		Float gauge
1		Inst. sheet

D8PZ 9A586–F
*CT–1195

Consists of

QTY.	PART NUMBER	DESCRIPTION
2	D6PZ 9J500–A	Limiter
1	D7AZ 9A565–A	Valve (enrichment)
1	374370–S	Gasket
1	B8A 9853–A	Gasket
1	B8AZ 9A536–A	Gasket
1	D1AZ 9871–A	Gasket
1	D7AZ 9C477–A	Gasket
1	D9AZ 9561–B	Gasket
1	D8AZ 9564–A	Kit (valve & seat)
1	377918–S8B	Retainer
1	D5AZ 9B559–A	Diaphragm
1	371350–S	Ball
1	C4AZ 9576–A	Valve
1	D2AZ 9825–A	Retainer
1		Float gauge
1		Inst. sheet

D8PZ 9A586–G
*CT–1196

Consists of

QTY.	PART NUMBER	DESCRIPTION
2	D6PZ 9J500–A	Limiters
1	D5ZZ 9A565–A	Valve (enrichment)
1	374370–S	Gasket
1	B8A 9853–A	Gasket
1	B8AZ 9A536–A	Gasket
1	D1AZ 9871–A	Gasket
1	D7AZ 9C477–A	Gasket
1	D7AZ 9A953–A	Gasket
1	D5AE 9A955–AA	Gasket
1	D9AZ 9561–C	Gasket
1	D8AZ 9564–A	Kit (valve & seat)
1	377918–S8B	Retainer
1	D5AZ 9B559–A	Diaphragm
1	371350–S	Ball
1	C4AZ 9576–A	Valve
1	D2AZ 9825–A	Retainer
1		Float gauge
1		Inst. sheet

COPYRIGHT © 1986 — FORD MOTOR COMPANY — DEARBORN, MICHIGAN

CARBURETOR KIT PARTS LISTS

QTY.	PART NUMBER		DESCRIPTION
	D8PZ	**9A586-JB**	
		*CT-1227	
Consists of			
1	D6PZ	9J500-A	Limiter
1	D1FZ	9853-A	"O"-ring
1	D8PZ	9A565-A	Valve
1	D1FZ	9569-A	Gasket
1	D4FZ	9447-A	Gasket
1	D8PZ	9561-C	Gasket
1	D2FZ	9564-A	Needle & seat
1	D1FZ	9J549-A	Choke diaph.
1	D2FZ	9B559-A	Diaphragm
2	D4FZ	9580-A	Gasket
2	EAA	9576-A	Ball
1	D8PZ	9E589-A	Vent diaph.
1	D8PZ	9C527-A	Seal
1	D8PZ	9B527-B	Retainer
2	D7FZ	9B527-A	Retainer
1			Float gauge
1			Inst. sheet
	D8PZ	**9A586-H**	
		*CT-1194	
Consists of			
1	D6PZ	9J500-A	Limiter
1	D8PZ	9B501-A	Seal
1	D7PZ	9564-A	Valve & seat
1	353161-S		Retainer
1	D1DZ	9599-A	Retainer
1	C7DZ	9B559-A	Diaphragm
1	D2DZ	9576-A	Ball
1	D5DZ	9544-A	Tube
1	D5DZ	9562-A	Grommet
1	B8A-	9871-B	Gasket
1	D8PZ	9B567-A	Gasket
1	D8PZ	9516-B	Gasket (YF)
1	D7TZ	9C477-A	Gasket
1	D8PZ	9580-A	Gasket
1	D8PZ	9516-A	Gasket (YFA)
1	D8PZ	9561-B	Gasket
1			Plug
1			Float gauge
1			Inst. sheet

QTY.	PART NUMBER		DESCRIPTION
	D8PZ	**9A586-PA**	
		*CT-1298	
Consists of			
2	C8OZ	9J500-A	Cap. (idle limiter)
1	D7PZ	9A565-A	Valve assy. (enrichment)
2	B5A	9229-A	"O" ring (fuel line tube)
2	B7A	9853-B	Gasket (sec. diaph. hsg. & choke hsg.)
2	B7A	9634-A	Seal (idle adj. needle)
1	C8OZ	9871-B	Gasket (choke cover)
2	B7AE	9580-A	Gasket (pump nozzle)
8	B7A	9592-A	Gasket (fuel bowl screw)
1	B8AZ	9A518-A	Gasket (met. body plate)
2	D4PZ	9229-A	"O" ring (pump transfer tube)
1	B8S	9516-A	Gasket (throttle body)
1	C2AZ	9A588-B	Gasket (enrichment valve)
1	D9TZ	9C477-B	Gasket (flange insulator)
1	D9PZ	9A518-E	Gasket (sec. metering body)
1	D9PZ	9561-B	Gasket (pri. fuel bowl)
1	D9PZ	9A518-C	Gasket (pri. metering body)
1			Gasket (fuel inlet fitting)
1			Assy. needle, seat & gasket
1		353610-S	Retainer (choke rod)
2		351826-S	Retainer (float)
1		97407	Retainer (sec. diaph. link)
1	B8A	9503-A	Diaphragm assy. (secondary)
1	D6PZ	9B559-A	Diaphragm assy. (pump)
1	B5A	9576-A	Ball (sec. diaph. check)
1			Inst. sht.
2	B7A	9229-A	Gasket (fuel inlet fitting)
1			Vent valve
1	EAA	9569-A	Gasket (sight plug)
	D8PZ	**9A586-RA**	
		*CT-1299	
Consists of			
2	C8OZ	9J500-A	Cap (idle limiter)
1			Valve assy. (enrichment)
2	B5A	9229-A	"O" ring (fuel line tube)
2	B7A	9853-B	Gasket (sec. diaph. hsg. & choke hsg.)
2	B7A	9634-A	Seal (idle adj. needle)
1	C8OZ	9871-B	Gasket (choke cover)
2	B7AE	9580-A	Gasket (pump nozzle)
8	B7A	9592-A	Gasket (fuel bowl screw)
1	B8AZ	9A518-A	Gasket (met. body plate)
2	D4PZ	9229-A	"O" ring (pump transfer tube)
1	B8S	9516-A	Gasket (throttle body)
1	C2AZ	9A588-B	Gasket (enrichment valve)
1	D9TZ	9C477-B	Gasket (flange insulator)
1	D9PZ	9A518-E	Gasket (sec. metering body)
1	D9PZ	9561-B	Gasket (pri. fuel bowl)
1	D9PZ	9A518-C	Gasket (pri. metering body)
1			Gasket (fuel inlet fitting)
2			Assy. needle, seat & gasket
1		353610-S	Retainer (choke rod)
2		351826-S	Retainer (float)
1		97407	Retainer (sec. diaph. link)
1	B8A	9503-A	Diaphragm assy. (secondary)
1	D6PZ	9B559-A	Diaphragm assy. (pump)
1	B5A	9576-A	Ball (sec. diaph. check)
1			Inst. sht.
1			Vent valve

CARBURETOR KIT PARTS LISTS

D8PZ 9A586-SA
*CT-1300

Consists of

QTY.	PART NUMBER		DESCRIPTION
2	C8OZ	9J500-A	Cap (idle limiter)
1			Valve assy. (enrichment)
2	B5A	9229-A	"O" ring (fuel line tube)
2	B7A	9853-B	Gasket (sec. diaph. hsg. & choke hsg.)
2	B7A	9634-A	Seal (idle adj. needle)
1	C8OZ	9871-B	Gasket (choke cover)
2	B7AE	9580-A	Gasket (pump nozzle)
8	B7A	9592-A	Gasket (fuel bowl screw)
1	B8AZ	9A518-A	Gasket (met. body plate)
2	D4PZ	9229-A	"O" ring (pump transfer tube)
1	B8S	9516-A	Gasket (throttle body)
1	C2AZ	9A588-B	Gasket (enrichment valve)
1	D9TZ	9C477-B	Gasket (flange insulator)
1	D9PZ	9A518-E	GAsket (sec. metering body)
1	D9PZ	9561-B	Gasket (pri. fuel bowl)
1	D9PZ	9A518-C	Gasket (pri. metering body)
1			Gasket (fuel inlet fitting)
2			Assy. needle, seat & gasket
1	353610-S		Retainer (choke rod)
2	351826-S		Retainer (float)
1	97407		Retainer (sec. diaph. link)
1	B8A	9503-A	Diaphragm assy. (secondary)
1	D6PZ	9B559-A	Diaphragm assy. (pump)
1	B5A	9576-A	Ball (sec. diaph. check
1			Inst. sht.
2	B7A	9229-A	Gasket (fuel inlet fitting)
1			Vent valve
1	EAA	9569-A	Gasket (sight plug)

D8PZ 9A586-U
*CT-1197-A

Consists of

QTY.	PART NUMBER		DESCRIPTION
1	D6PZ	9J500-A	Limiter
1	D8PZ	9A565-B	Feedback (Diaphragm)
1	D1FZ	9853-A	"O"-ring
1	D1FZ	9569-A	Gasket
1	D4FZ	9447-A	Gasket
1	D8PZ	9561-C	Gasket
1	D2FZ	9564-A	Needle & seat
1	D1FZ	9J549-A	Choke diaph.
1	D2FZ	9B559-A	Diaphragm
2	D4FZ	9580-A	Gasket
2	EAA	9576-A	Ball
1	D8PZ	9E589-A	Vent diaph.
1	D8PZ	9C527-A	Seal
1	D8PZ	9B527-B	Retainer
2	D7FZ	9B527-A	Retainer
1			Float gauge
1			Inst. sheet

D9PZ 9A586-A
*CT-1227-A

Consists of

QTY.	PART NUMBER		DESCRIPTION
1	D6PZ	9J500-A	Limiter
1	D1FZ	9853-A	"O" ring
1	D8PZ	9A565-A	Valve
1	D1FZ	9569-A	Gasket
1	D9FZ	9447-A	Gasket
1	D8PZ	9561-C	Gasket
1	D2FZ	9564-A	Needle & seat
1	D1FZ	9J549-A	Choke diaph.
1	D2FZ	9B559-A	Diaphragm
2	D4FZ	9580-A	Gasket
2	EAA	9576-A	Ball
1	D8PZ	9E589-A	Vent diaph.
1	D8PZ	9C527-A	Seal
1	D8PZ	9B527-B	Retainer
2	D7FZ	9B527-A	Retainer
1			Float gauge
1			Inst. sheet

COPYRIGHT © 1986 — FORD MOTOR COMPANY — DEARBORN, MICHIGAN

CARBURETOR KIT PARTS LISTS

QTY.	PART NUMBER		DESCRIPTION
	D9PZ	**9A586-B**	
		*CT-1254	
Consists of			
1	D6PZ	9J500-A	Limiter
1	D1FZ	9853-A	"O" ring
1	D8PZ	9A565-A	Valve
1	D1FZ	9569-A	Gasket
1	D9FZ	9447-A	Gasket
1	D8PZ	9561-C	Gasket
1	E0PZ	9564-A	Needle & seat
1	D1FZ	9J549-A	Choke diaph.
1	D9PZ	9B559-A	Diaphragm
2	D4FZ	9580-A	Gasket
2	EAA	9576-A	Ball
1	D8PZ	9E589-A	Vent diaph.
1	D8PZ	9C527-A	Seal
1	D8PZ	9B527-B	Retainer
2	D7FZ	9B527-A	Retainer
1	E0PZ	9A517-C	Baffle
1	E0PZ	9A517-D	Screen
1			Float gauge
1			Inst. sheet
	D9PZ	**9A586-C**	
		*CT-1255	
Consists of			
1	D6PZ	9J500-A	Limiter
1	D1FZ	9853-A	"O" ring
1	D8PZ	9A565-B	Valve
1	D1FZ	9569-A	Gasket
1	D9FZ	9447-A	Gasket
1	D8PZ	9561-C	Gasket
1	D2FZ	9564-A	Needle & seat
1	D1FZ	9J549-A	Choke diaph.
1	D2FZ	9B559-A	Diaphragm
2	D4FZ	9580-A	Gasket
2	EAA	9576-A	Ball
1	D8PZ	9E589-A	Vent diaph.
1	D8PZ	9C527-A	Seal
1	D8PZ	9B527-B	Retainer
2	D7FZ	9B527-A	Retainer
1	D4PZ	9229-A	"O" ring
1	D9PZ	9J500-B	Plug (idle con.)
1			Float gauge
1			Inst. sheet
★	**D9PZ**	**9A586-D**	R/b D9PZ 9A586-DB (4/84)
		*CT-1256	
Consists of			
1	D6PZ	9J500-A	Limiter
1	D1FZ	9853-A	"O" ring
1	D8PZ	9A565-B	Valve
1	D1FZ	9569-A	Gasket
1	D9FZ	9447-A	Gasket
1	D8PZ	9561-C	Gasket
	D9PZ	**9A586-D**	— Cont'd
		*CT-1256	
Consists of			
1	D9PZ	9564-A	Needle & seat
1	D9PZ	9J549-A	Choke diaph.
1	D2FZ	9B559-A	Diaphragm
2	D4FZ	9580-A	Gasket
2	EAA	9576-A	Ball
1	D8PZ	9E589-A	Vent diaph.
1	D8PZ	9C527-A	Seal
1	D8PZ	9B527-B	Retainer
2	D7FZ	9B527-A	Retainer
1			Float gauge
1			Inst. sheet
★	**D9PZ**	**9A586-E**	R/b E0PZ 9A586-W (12/84)
		*CT-1253	
Consists of			
1	D7ZZ	9155-A	Filter
1	D1ZZ	9229-A	Gasket, inlet
1	D7AZ	9C477-A	Gasket, flange-(2.8L)
1	D7ZZ	9B511-B	Weight
2	D7ZZ	9E515-B	Cup plug
1	D8DZ	9516-A	Gasket, throttle body
1	D7ZZ	9572-A	Pump cup
1	D9AZ	9J549-A	Diaphragm assy.
1	D9AZ	9561-D	Gasket, float bowl
1	D8ZZ	9564-A	Seat, vlv, gskt, inlet
1	D7ZZ	9D583-A	Valve, vent
1	D7PE	9M598-AA	Gasket (2700)
1	C1AZ	9871-A	Gasket, choke
2	D7ZZ	9A919-A	Bushing, venturi
1	D7ZZ	9A900-A	Diaphragm assy., vent
2	D7ZZ	9A928-A	Pivot
2	D7ZZ	9A929-A	Plug, vent
1		353077-S	Ball
2		387041-S96	"O" ring
1		87008-S96	"O" ring
2		377918-S8B	Retainer
1		97407-S2	Retainer
2		386064-S	Expansion plug
2		388573-S96	"O" ring
1			Float gauge
1			Idle gauge
1			Inst. sht.
3		388575-S2	Rivet
2		388574-S	Plug
1	D9AE	9H517-AA	Plug
1		387155-S	Plug
1	E0AZ	9A933-A	Gasket
1	D9AZ	9A953-A	Gasket (7200)
1	D9PE	9M598-AA	Gasket (7200)
2			Gasket (302-351)

CARBURETOR KIT PARTS LISTS

QTY.	PART NUMBER		DESCRIPTION
	D9PZ	**9A586-H**	
		*CT-1259	
Consists of			
2	D6PZ	9J500-A	Limiters
1	E0TZ	9A565-F	Valve (enrichment)
1		374370-S	Gasket
1	B8A	9853-A	Gasket
1	E1TZ	9A536-A	Gasket
1	D1AZ	9871-A	Gasket
1	D7AZ	9C477-A	Gasket
1	D9AZ	9561-C	Gasket
1	D8AZ	9564-A	Kit (valve & seat)
1		377918-S8B	Retainer
1	D5AZ	9B559-A	Diaphragm
1		371350-S	Ball
1	C4AZ	9576-A	Valve
1	D2AZ	9825-A	Retainer
1			Float gauge
2			Inst. sheet
1	E0TZ	9563-A	Gasket
1	C2AZ	9A588-B	Gasket
	D9PZ	**9A586-J**	
		*CT-1260	
Consists of			
2	D6PZ	9J500-A	Limiters
1	D7AZ	9A565-A	Valve (enrichment)
1		374370-S	Gasket
1	B8A	9853-A	Gasket
1	E1TZ	9A536-A	Gasket
1	D1AZ	9871-A	Gasket
1	D7AZ	9C477-A	Gasket
1	D7AZ	9A953-A	Gasket
1	D5AE	9A955-AA	Gasket
1	D9AZ	9561-C	Gasket
1	D8AZ	9564-A	Kit (valve & seat)
1		377918-S8B	Retainer
1	D5AZ	9B559-A	Diaphragm
1		371350-S	Ball
1	C4AZ	9576-A	Valve
1	D2AZ	9825-A	Retainer
1			Float gauge
2			Inst. sheet
1	E0TZ	9563-A	Gasket
1	C2AZ	9A588-B	Gasket
	D9PZ	**9A586-K**	
		*CT-1261	
Consists of			
2	D6PZ	9J500-A	Limiters
1	D5UZ	9A565-A	Valve (enrichment)
1		374370-S	Gasket
1	B8A	9853-A	Gasket
1	E1TZ	9A536-A	Gasket
1	D1AZ	9871-A	Gasket
1	D7AZ	9C477-A	Gasket
1	D9AZ	9561-C	Gasket
1	D8AZ	9564-A	Kit (valve & seat)
1		377918-S8B	Retainer
	D9PZ	**9A586-K**	— Cont'd
		*CT-1261	
Consists of			
1	D5AZ	9B559-A	Diaphragm
1		371350-S	Ball
1	C4AZ	9576-A	Valve
1	D2AZ	9825-A	Retainer
1			Float gauge
2			Inst. sheet
1	E0TZ	9563-A	Gasket
1	C2AZ	9A588-B	Gasket
	D9PZ	**9A586-M**	
		*CT-1263	
Consists of			
2	D6PZ	9J500-A	Limiters
1	D5AZ	9A565-B	Valve (enrichment)
1		374370-S	Gasket
1	B8A	9853-A	Gasket
1	E1TZ	9A536-A	Gasket
1	D1AZ	9871-A	Gasket
1	D7AZ	9C477-A	Gasket
1	D9AZ	9561-C	Gasket
1	D8AZ	9564-A	Kit (valve & seat)
1		377918-S8B	Retainer
1	D5AZ	9B559-A	Diaphragm
1		371350-S	Ball
1	C4AZ	9576-A	Valve
1	D2AZ	9825-A	Retainer
1			Float gauge
2			Inst. sheet
1	E0TZ	9563-A	Gasket
1	C2AZ	9A588-B	Gasket
	D9PZ	**9A586-N**	
		*CT-1264	
Consists of			
2	D6PZ	9J500-A	Limiters
1	D50Z	9A565-A	Valve (enrichment)
1		374370-S	Gasket
1	B8A	9853-A	Gasket
1	E1TZ	9A536-A	Gasket
1	D1AZ	9871-A	Gasket
1	D7FZ	9C477-A	Gasket
1	D7AZ	9C477-A	Gasket
1	D7AZ	9A953-A	Gasket
1	D5AE	9A955-AA	Gasket
1	D9AZ	9561-C	Gasket
1	D8AZ	9564-A	Kit (valve & seat)
1		377918-S8B	Retainer
1	D5AZ	9B559-A	Diaphragm
1	D2PF	9B559-BA	Diaphragm
1		371350-S	Ball
1	C4AZ	9576-A	Valve
1	D2AZ	9825-A	Retainer
1			Float gauge
2			Inst. sheet
1	E0TZ	9563-A	Gasket
1	C2AZ	9A588-B	Gasket

COPYRIGHT © 1986 — FORD MOTOR COMPANY — DEARBORN, MICHIGAN

CARBURETOR KIT PARTS LISTS

QTY.	PART NUMBER		DESCRIPTION
	D9PZ	9A586-S	
		*CT-1267	
Consists of			
2	D6PZ	9J500-A	Limiters
1	D5AZ	9A565-A	Valve (enrichment)
1		374370-S	Gasket
1	B8A	9853-A	Gasket
1	E1TZ	9A536-A	Gasket
1	D1AZ	9871-A	Gasket
1	D7FZ	9C477-A	Gasket
1	D7AZ	9C477-A	Gasket
1	D7AZ	9A953-A	Gasket
1	D5AE	9A955-AA	Gasket
1	D9AZ	9561-C	Gasket
1	D6AE	9561-AA	Gasket
1	D5ZZ	9A940-A	Gasket
1	D8AZ	9564-A	Kit (valve & seat)
1		377918-S8B	Retainer
1	D5AZ	9B559-A	Diaphragm
1	D2PF	9B559-BA	Diaphragm
1		371350-S	Ball
1	C4AZ	9576-A	Valve
1	D2AZ	9825-A	Retainer
1			Float gauge
2			Inst. sheet
1	E0TZ	9563-A	Gasket
1	C2AZ	9A588-B	Gasket
	D8PZ	9A586-V	
		*CT-1435	
Consists of			
2	D7ZZ	9E515-B	Plug
1	D8DZ	9516-A	Gasket
1	D7ZZ	9572-A	Cup
1	D9AZ	9561-A	Gasket
1	D8ZZ	9564-A	Needle & seat
1	D7ZZ	9D583-A	Valve
1	C1AZ	9871-A	Gasket
1	E3PZ	9A900-A	Diaphragm
1	D7ZZ	9J549-A	Diaphragm
2	D7ZZ	9A919-A	Bushing
2	D7ZZ	9A928-A	Pivot
1		353077-S	Ball
1		385327-S96	"O"-ring
1		87008-S96	"O"-ring
3		377918-S8B	Retainer
1		97407-S8	Retainer

QTY.	PART NUMBER		DESCRIPTION
	D8PZ	9A586-V	— Cont'd
		*CT-1435	
Consists of			
1		383191-S	Exp. plug
3			Gauges
1			Inst. sheet
1			Screw
1	D7AZ	9C477-A	Gasket
2	D7ZZ	9A929-A	Plug
1	D7ZZ	9B511-B	Weight
1	D7ZZ	9155-A	Filter
1	D7PE	9M598-AA	Gasket
1		387328	"O"-ring
	D9PZ	9A586-BA	
		*CT-1254-A	
Consists of			
1	D6PZ	9J500-A	Limiter
1	D1FZ	9853-A	"O" ring
1	D8PZ	9A565-A	Valve
1	D1FZ	9569-A	Gasket
1	D9FZ	9447-A	Gasket
1	D8PZ	9561-C	Gasket
1	E0PZ	9564-A	Needle & seat
1	D1FZ	9J549-A	Choke diaph.
1	D9PZ	9B559-A	Diaphragm
2	D4FZ	9580-A	Gasket
2	EAA	9576-A	Ball
2	D7FZ	9B527-A	Retainer
1	E0PZ	9A517-C	Baffle
1			Float gauge
1			Inst. sheet
	D9PZ	9A586-DB	
		*CT-1256-A	
Consists of			
1	D6PZ	9J500-A	Limiter
1	D1FZ	9853-A	"O" ring
1	D8PZ	9A565-A	Valve
1	D1FZ	9569-A	Gasket
1	D9FZ	9447-A	Gasket
1	D8PZ	9561-C	Gasket
1	D9PZ	9564-A	Needle & seat
1	D9PZ	9J549-A	Choke diaph.
1	D2FZ	9B559-A	Diaphragm
2	D4FZ	9580-A	Gasket
2	EAA	9576-A	Ball
2	D7FZ	98527-A	Retainer
1			Float gauge
1			Inst. sheet

9600 CLEANER ASSY. (CARBURETOR AIR)

To select the correct Air Cleaner by knowing the identification number only:

- Check the Air Cleaner, taken from the vehicle, for an identification part number.
- Refer to the Identification Chart below.
- Find the Air Cleaner identification part number (sequenced numerically) and find the service part number in the adjacent column.

For example:
The service part number for Air Cleaner Assy. identified D30F 9600-AB is D30Z 9600-A.

IDENTIFICATION CHART

IDENTIFICATION	SERVICE AIR CLEANER	SERVICE ELEMENT ASSY.	IDENTIFICATION	SERVICE AIR CLEANER	SERVICE ELEMENT ASSY.
9600 CLEANER ASSY. (CARBURETOR AIR)					
D2AF 9600-BC	★ D4AZ 9600-A Not replaced	D2AZ 9601-AR *FA-97-R	D3TF 9600-GB	★ D3TZ 9600-T Not replaced	C8TZ 9601-AR *FA-52-R
D3AF 9600-AA	★ D4AZ 9600-B Not replaced	D7AZ 9601-AR *FA-612-R	D3VF 9600-AA	★ D3VY 9600-A Not replaced	D7AZ 9601-BR *FA-613-R
D3AF 9600-AB	★ D4AZ 9600-B Not replaced	D7AZ 9601-AR *FA-612-R	D3ZF 9600-AA	★ D3ZZ 9600-A Not replaced	D3ZZ 9601-AR *FA-574-R
D3DF 9600-AA	★ D3TZ 9600-T Not replaced	C8TZ 9601-AR *FA-52-R	D3ZF 9600-BA	★ D40Z 9600-D Not replaced	D7AZ 9601-BR *FA-613-R
D3DF 9600-AB	★ D3TZ 9600-T Not replaced	C8TZ 9601-AR *FA-52-R	D3ZF 9600-BB	★ D40Z 9600-D Not replaced	D7AZ 9601-BR *FA-613-R
D3DF 9600-BA	★ D3DZ 9600-B Not replaced	D4ZZ 9601-AR *FA-584-R	D4AF 9600-AA	★ D4AZ 9600-A Not replaced	D2AZ 9601-AR *FA-97-R
D3DF 9600-BB	★ D3DZ 9600-B Not replaced	D4ZZ 9601-AR *FA-584-R	D4AF 9600-AB	★ D4AZ 9600-A Not replaced	D2AZ 9601-AR *FA-97-R
D3DF 9600-BC	★ D3DZ 9600-B Not replaced	D4ZZ 9601-AR *FA-584-R	D4AF 9600-BA	★ D4AZ 9600-B Not replaced	D7AZ 9601-AR *FA-612-R
D3DF 9600-CA	★ D3DZ 9600-C Not replaced	D4ZZ 9601-AR *FA-584-R	D4AF 9600-BB	★ D4AZ 9600-B Not replaced	D7AZ 9601-AR *FA-612-R
D3DF 9600-CC	★ D3DZ 9600-C Not replaced	D4ZZ 9601-AR *FA-584-R	D4DF 9600-BA	★ D4DZ 9600-B Not replaced	D4ZZ 9601-AR *FA-584-R
D30F 9600-AA	★ D30Z 9600-A Not replaced	D7AZ 9601-BR *FA-613-R	D4DF 9600-CA	★ D4DZ 9600-C Not replaced	D4ZZ 9601-AR *FA-584-R
D30F 9600-AB	★ D30Z 9600-A Not replaced	D7AZ 9601-BR *FA-613-R	★ D40F 9600-AA	★ D40Z 9600-A Not replaced	D7AZ 9601-BR *FA-613-R
D30F 9600-BA	★ D40Z 9600-B Not replaced	D7AZ 9601-BR *FA-613-R	★ D40Z 9600-AB	★ D40Z 9600-A Not replaced	D7AZ 9601-BR *FA-613-R
D30F 9600-CA	★ D40Z 9600-A Not replaced	D7AZ 9601-BR *FA-613-R	D40F 9600-BA	★ D40Z 9600-B Not replaced	D7AZ 9601-BR *FA-613-R
D30F 9600-CB	★ D40Z 9600-A Not replaced	D7AZ 9601-BR *FA-613-R	D40F 9600-CA	★ D40Z 9600-C Not replaced	D7AZ 9601-BR *FA-613-R
D30F 9600-CC	★ D40Z 9600-A Not replaced	D7AZ 9601-BR *FA-613-R	D40F 9600-CB	★ D40Z 9600-C Not replaced	D7AZ 9601-BR *FA-613-R
D30F 9600-DA	★ D30Z 9600-D Not replaced	D4ZZ 9601-AR *FA-584-R	D40F 9600-DA	★ D40Z 9600-D Not replaced	D7AZ 9601-BR *FA-613-R
D3TF 9600-GA	★ D3TZ 9600-T Not replaced	C8TZ 9601-AR *FA-52-R	D40F 9600-DB	★ D40Z 9600-D Not replaced	D7AZ 9601-BR *FA-613-R

COPYRIGHT © 1986 — FORD MOTOR COMPANY — DEARBORN, MICHIGAN

IDENTIFICATION CHART

IDENTIFICATION	SERVICE AIR CLEANER	SERVICE ELEMENT ASSY.	IDENTIFICATION	SERVICE AIR CLEANER	SERVICE ELEMENT ASSY.
9600	CLEANER ASSY. (CARBURETOR AIR) — Cont'd Refer to page 1 for Identification Instructions				
D4VF 9600-AA	★ D4VY 9600-A Not replaced	D7AZ 9601-BR *FA-613-R	D6AF 9600-EA	★ D6AZ 9600-E Not replaced	D7AZ 9601-BR *FA-613-R
D4VF 9600-AB	★ D4VY 9600-A Not replaced	D7AZ 9601-BR *FA-613-R	D6BF 9600-BA	★ D6DZ 9600-B Not replaced	C8TZ 9601-AR *FA-52-R
D4ZF 9600-BB	★ D4ZZ 9600-B Not replaced	D4ZZ 9601-AR *FA-584-R	D6BF 9600-BB	★ D6DZ 9600-D Not replaced	C8TZ 9601-AR *FA-52-R
D42F 9600-AA	★ D4FZ 9600-A Not replaced	C8TZ 9601-AR *FA-52-R	D6BF 9600-BC	★ D6DZ 9600-D Not replaced	C8TZ 9601-AR *FA-52-R
D42F 9600-AB	★ D4FZ 9600-A Not replaced	C8TZ 9601-AR *FA-52-R	D6EF 9600-AA	★ D7FZ 9600-C Not replaced	C8TZ 9601-AR *FA-52-R
D42F 9600-BA	★ D4FZ 9600-B Not replaced	C8TZ 9601-AR *FA-52-R	D60F 9600-BB	★ D60Z 9600-B Not replaced	D7AZ 9601-BR *FA-613-R
D42F 9600-CA	★ D4FZ 9600-C Not replaced	C8TZ 9601-AR *FA-52-R	D60F 9600-CB	★ D60Z 9600-C Not replaced	D7AZ 9601-BR *FA-613-R
D5AF 9600-HC	★ D5BZ 9600-A Not replaced	D2AZ 9601-AR *FA-97-R	D60F 9600-DA	★ D60Z 9600-D Not replaced	D2AZ 9601-AR *FA-97-R
D5AF 9600-LB	★ D5AZ 9600-L Not replaced	D7AZ 9601-BR *FA-613-R	D60F 9600-GA	★ D60Z 9600-G Not replaced	D7AZ 9601-BR *FA-613-R
D5AF 9600-NA	★ D5AZ 9600-S Not replaced	D2AZ 9601-AR *FA-97-R	D6VF 9600-BA	★ D6VY 9600-B Not replaced	D7AZ 9601-BR *FA-613-R
D5AF 9600-PA	★ D5AZ 9600-P Not replaced	D7AZ 9601-BR *FA-613-R	D6ZF 9600-AA	★ D6ZZ 9600-A Not replaced	D4ZZ 9601-AR *FA-584
D5AF 9600-RA	★ D5AZ 9600-B Not replaced	D7AZ 9601-AR *FA-612-R	D6ZF 9600-AB	★ D6ZZ 9600-B Not replaced	D4ZZ 9601-AR *FA-584
D5AF 9600-SA	★ D5AZ 9600-S Not replaced	D2AZ 9601-AR *FA-97-R	D7AE 9600-AA	★ D7AZ 9600-A Not replaced	D2AZ 9601-AR *FA-97-R
D5AF 9600-VA	★ D5AZ 9600-L Not replaced	D7AZ 9601-BR *FA-613-R	D7AE 9600-BB	★ D7AZ 9600-F Not replaced	D7AZ 9601-BR *FA-613-R
D5AF 9600-XA	★ D5AZ 9600-B Not replaced	D7AZ 9601-AR *FA-612-R	D7AE 9600-CA	★ D7AZ 9600-E Not replaced	D7AZ 9601-AR *FA-612-R
D5BF 9600-AA	★ D5BZ 9600-A Not replaced	D2AZ 9601-AR *FA-97-R	D7AE 9600-EA	★ D7AZ 9600-D Not replaced	D7AZ 9601-BR *FA-613-R
D5DF 9600-DA	★ D6DZ 9600-B Not replaced	C8TZ 9601-AR *FA-52-R	D7AE 9600-FA	★ D7AZ 9600-G Not replaced	D7AZ 9601-BR *FA-613-R
D5DF 9600-FA	★ D6DZ 9600-B Not replaced	C8TZ 9601-AR *FA-52-R	D7BE 9600-AA	★ D7DZ 9600-A Not replaced	C8TZ 9601-AR *FA-52-R
D50F 9600-GB	★ D50Z 9600-G Not replaced	D7AZ 9601-BR *FA-613-R	D7DE 9600-BA	★ D7DZ 9600-C Not replaced	D7ZZ 9601-AR *FA-640-R
D50F 9600-LA	★ D50Z 9600-L Not replaced	D7AZ 9601-BR *FA-613-R	D7DE 9600-CA	D7DZ 9600-B	D7ZZ 9601-AR *FA-640-R
D50F 9600-MA	★ D50Z 9600-D Not replaced	D7AZ 9601-BR *FA-613-R	D7DE 9600-DA	★ D7DZ 9600-D Not replaced	D2AZ 9601-AR *FA-97-R
D50F 9600-RA	★ D50Z 9600-G Not replaced	D7AZ 9601-BR *FA-613-R	D7DE 9600-EA	★ D7DZ 9600-E Not replaced	D2AZ 9601-AR *FA-97-R
D50F 9600-SA	★ D50Z 9600-D Not replaced	D7AZ 9601-BR *FA-613-R	D7DE 9600-FA	★ D7DZ 9600-F Not replaced	D2AZ 9601-AR *FA-97-R
D5ZF 9600-KA	★ D5ZZ 9600-D Not replaced	D4ZZ 9601-AR *FA-584-R	D7DF 9600-CA	★ D6DZ 9600-E Not replaced	D7ZZ 9601-AR *FA-640-R
D5ZF 9600-MA	★ D5ZZ 9600-D Not replaced	D4ZZ 9601-AR *FA-584-R	D7EE 9600-AC	★ D7FZ 9600-A Not replaced	D7FZ 9601-AR *FA-641-R
D52F 9600-CA	★ D5FZ 9600-B Not replaced	C8TZ 9601-AR *FA-52-R	D7EE 9600-BB	★ D7FZ 9600-B Not replaced	D7FZ 9601-AR *FA-641-R
D6AF 9600-BB	★ D6AZ 9600-B Not replaced	D7AZ 9601-AR *FA-612-R	D7EE 9600-CC	★ D7FZ 9600-C Not replaced	C8TZ 9601-AR *FA-52-R
D6AF 9600-CB	★ D6AZ 9600-C Not replaced	D7AZ 9601-BR *FA-613-R	D70E 9600-AA	D70Z 9600-AA	D2AZ 9601-AR *FA-97-R
D6AF 9600-DA	★ D6AZ 9600-D Not replaced	D2AZ 9601-AR *FA-97-R			

IDENTIFICATION CHART

IDENTIFICATION	SERVICE AIR CLEANER	SERVICE ELEMENT ASSY.	IDENTIFICATION	SERVICE AIR CLEANER	SERVICE ELEMENT ASSY.
9600	CLEANER ASSY. (CARBURETOR AIR) — Cont'd Refer to page 1 for Indentification Instructions				
D70E 9600-CA	★ D70Z 9600-B Not replaced	D2AZ 9601-AR *FA-97-R	D8BE 9600-EA	★ D8BZ 9600-H Not replaced	C8TZ 9601-AR *FA-52-R
D7VE 9600-AA	D7VY 9600-B	D7AZ 9601-BR *FA-613-R	D8BE 9600-GA	E0ZZ 9600-B	C8TZ 9601-AR *FA-52-R
D7VE 9600-CA	★ D7SZ 9600-A Not replaced	D7AZ 9601-BR *FA-613-R	D8BE 9600-KA	D8BZ 9600-F	D4ZZ 9601-AR *FA-584-R
D7VE 9600-DA	★ D7VY 9600-C Not replaced	D7AZ 9601-BR *FA-613-R	D8BE 9600-LA	★ D8BZ 9600-L Not replaced	D4ZZ 9601-AR *FA-584-R
D7VE 9600-EA	★ D74Y 9600-A Not replaced	D2AZ 9601-AR *FA-97-R	D8BE 9600-MA	★ D8BZ 9600-J Not replaced	D7ZZ 9601-AR *FA-640-R
D7VE 9600-FA	★ D74Y 9600-B Not replaced	D2AZ 9601-AR *FA-97-R	D8DE 9600-FB	E0DZ 9600-B	C8TZ 9601-AR *FA-97-R
D7VE 9600-GA	★ D74Y 9600-C Not replaced	D2AZ 9601-AR *FA-97-R	D8DE 9600-GC	★ D8BZ 9600-C Not replaced	D7ZZ 9601-AR *FA-640-R
71HF 9600-RB	★ D1RY 9600-A Not replaced	D1RY 9601-B *FA-98-A	D8DE 9600-HC	D8AZ 9600-B	D2AZ 9601-AR *FA-97-R
72HF 9600-HC	★ D4RY 9600-A Not replaced	D1RY 9601-B *FA-98-A	D8DE 9600-HD	D8AZ 9600-B	D2AZ 9601-AR *FA-97-R
73TF 9600-AA	★ D3RY 9600-A Not replaced	C8TZ 9601-AR *FA-52-R	D8DE 9600-JD	★ D8DZ 9600-A Not replaced	D2AZ 9601-AR *FA-97-R
74TF 9600-AA	★ D4RY 9600-B Not replaced	D4ZZ 9601-AR *FA-584-R	D8DE 9600-JE	★ D8DZ 9600-A Not replaced	D2AZ 9601-AR *FA-97-R
74TF 9600-CA	★ D4ZZ 9600-B Not replaced	D4ZZ 9601-AR *FA-584-R	D8DE 9600-KC	D8DZ 9600-B	D2AZ 9601-AR *FA-97-R
75TF 9600-SA	★ D5ZZ 9600-D Not replaced	D4ZZ 9601-AR *FA-584-R	D8DE 9600-KD	D8DZ 9600-B	D2AZ 9601-AR *FA-97-R
76TF 9600-AA	★ D6ZZ 9600-A Not replaced	D4ZZ 9601-AR *FA-584-R	D8DE 9600-KF	D9DZ 9600-A	D2AZ 9601-AR *FA-97-R
77TF 9600-AA	★ D7FZ 9600-A Not replaced	D7FZ 9601-AR *FA-641-R	D8EE 9600-AD	D8BZ 9600-H	C8TZ 9601-AR *FA-52-R
77TF 9600-BA	★ D7FZ 9600-B Not replaced	D7FZ 9601-AR *FA-641-R	D8EE 9600-BB	★ D8FZ 9600-B Not replaced	D7FZ 9601-AR *FA-641-R
757F 9600-AA	★ D5RY 9600-A Not replaced	D5RY 9601-A *FA-606	D8EE 9600-CB	★ D8FZ 9600-C Not replaced	D7FZ 9601-AR *FA-641-R
757F 9600-BA	★ D5RY 9600-B Not replaced	D5RY 9601-A *FA-606	D80E 9600-AD	★ D80Z 9600-A Not replaced	D2AZ 9601-AR *FA-97-R
767F 9600-BA	★ D6RY 9600-A Not replaced	D5RY 9601-A *FA-606	D80E 9600-AE	★ D80Z 9600-A Not replaced	D2AZ 9601-AR *FA-97-R
777F 9600-AA	★ D6RY 9600-B Not replaced	D5RY 9601-A *FA-606	D8VE 9600-AB	★ D8VY 9600-A Not replaced	D7AZ 9601-BR *FA-613-R
D8AE 9600-CB	★ D8AZ 9600-C Not replaced	D7AZ 9601-BR *FA-613-R	D8ZE 9600-BA	★ D8BZ 9600-B Not replaced	D7ZZ 9601-AR *FA-640-R
D8AE 9600-DB	★ D8AZ 9600-D Not replaced	D7AZ 9601-AR *FA-612-R	D84E 9600-BB	★ D84Y 9600-A Not replaced	D2AZ 9601-AR *FA-97-R
D8AE 9600-FA	★ D8AZ 9600-E Not replaced	D2AZ 9601-AR *FA-97-R	D9AE 9600-CB	★ D9AZ 9600-C Not replaced	D2AZ 9601-AR *FA-97-R
D8AE 9600-FB	★ D8AZ 9600-E Not replaced	D2AZ 9601-AR *FA-97-R	D9AE 9600-FA	D9AZ 9600-F	D2AZ 9601-AR *FA-97-R
D8AE 9600-GA	D8AZ 9600-F	D2AZ 9601-AR *FA-97-R	D9AE 9600-GA	★ D9AZ 9600-G Not replaced	D2AZ 9601-AR *FA-97-R
D8AE 9600-GB	D8AZ 9600-F	D2AZ 9601-AR *FA-97-R	D9AE 9600-HA	★ D9AZ 9600-E Not replaced	D2AZ 9601-AR *FA-97-R
D8BE 9600-DD	D8BZ 9600-E	D4ZZ 9601-AR *FA-584-R	D9AE 9600-KA	D9AZ 9600-H	D2AZ 9601-AR *FA-97-R

COPYRIGHT © 1986 — FORD MOTOR COMPANY — DEARBORN, MICHIGAN

IDENTIFICATION CHART

IDENTIFICATION	SERVICE AIR CLEANER	SERVICE ELEMENT ASSY.	IDENTIFICATION	SERVICE AIR CLEANER	SERVICE ELEMENT ASSY.
9600	CLEANER ASSY. (CARBURETOR AIR) — Cont'd Refer to page 1 for Identification Instructions				
D9BE 9600-EA	D9BZ 9600-E	D7ZZ 9601-AR *FA-640-R	D9ZE 9600-EA	★ D9ZZ 9600-D Not replaced	D7FZ 9601-AR *FA-641-R
D9BE 9600-LA	★ D9BZ 9600-F Not replaced	C8TZ 9601-AR *FA-52-R	D9ZE 9600-GA	D9ZZ 9600-G	D7ZZ 9601-AR *FA-640-R
D9BE 9600-MA	★ D9BZ 9600-F Not replaced	C8TZ 9601-AR *FA-52-R	D9ZE 9600-LA	D9FZ 9600-A	C8TZ 9601-AR *FA-52-R
D9DE 9600-AA	★ D9DZ 9600-B Not replaced	D2AZ 9601-AR *FA-97-R	D9ZE 9600-NA	E0ZZ 9600-D	C8TZ 9601-AR *FA-52-R
D9EE 9600-AD	D9FZ 9600-A	C8TZ 9601-AR *FA-52-R	D9ZE 9600-PA	E0ZZ 9600-D	C8TZ 9601-AR *FA-52-R
D9EE 9600-CA	★ D9FZ 9600-C Not replaced	C8TZ 9601-AR *FA-52-R	D9ZE 9600-SA	E0ZZ 9600-B	D4ZZ 9601-AR *FA-584-R
D9EE 9600-DA	★ D9FZ 9600-C Not replaced	C8TZ 9601-AR *FA-52-R	D9ZE 9600-TA	D9ZZ 9600-J	D4ZZ 9601-AR *FA-584-R
D9EE 9600-EA	E1BZ 9600-A	C8TZ 9601-AR *FA-52-R	D94E 9600-BA	★ D94Y 9600-A Not replaced	D2AZ 9601-AR *FA-97-R
D9EE 9600-FA	E1BZ 9600-A	C8TZ 9601-AR *FA-52-R	D94E 9600-CA	★ D94Y 9600-C Not replaced	D2AZ 9601-AR *FA-97-R
D9EE 9600-GA	D9FZ 9600-D	C8TZ 9601-AR *FA-52-R	E0EE 9600-FA	E1BZ 9600-A	C8TZ 9601-AR *FA-52-R
D9EE 9600-HA	D9FZ 9600-D	C8TZ 9601-AR *FA-52-R	E0ZE 9600-SA	E0ZZ 9600-D	C8TZ 9601-AR *FA-52-R
D90E 9600-BA	D90Z 9600-A	D2AZ 9601-AR *FA-97-R	E0ZE 9600-ABA	E0ZZ 9600-D	C8TZ 9601-AR *FA-52-R
D9ZE 9600-DA	★ D9ZZ 9600-E Not replaced	D7FZ 9601-AR *FA-641-R	E1BE 9600-AB	E1BZ 9600-A	C8TZ 9601-AR *FA-52-R

9600 CLEANER ASSY. (CARBURETOR AIR) — Cont'd

HOW TO FIND AN AIR CLEANER ASSY.

To select the correct Air Cleaner the following information must be known and utilized–

- Year
- Car line (Mercury, Capri, Lincoln, Etc.)
- Engine (4 cyl. 2.3L, 6 cyl. 4.1L–250 C.I.D., 8 CYL. 5.8L–351 C.I.D., etc.)
- Transmission (manual, automatic, etc.)
- Other factors (California, hi–altitude, etc.)
- In some cases, more than one service Air Cleaner may be specified in the catalog based on the above information. In these cases the identification part number shown on the Air Cleaner is also required

For example:

If an Air Cleaner is required for a 1976 Bobcat with a 6 cylinder 2.8L (171 C.I.D.) engine

- Refer to 1976 L (Bobcat)
- Read down to find L 6(cyl.) 171(C.I.D.)".

The service part numbers listed for this application are D6ZZ 9600–A and D6ZZ 9600–B. Therefore, to select the correct service part number, the identification part number shown on the Air Cleaner taken from the vehicle, must be used.

If the Air Cleaner identification is D6ZF 9600–AA the service part number is D6ZZ 9600–A. If the Air Cleaner identification is D6ZF 9600–AB the service part number is D6ZZ 9600–B.

YEAR	MODEL/RESTRICTIONS	ENGINE CYL.	ENGINE C.I.D. (C.C.D.)	PART NUMBER AIR CLEANER ASSY.	PART NUMBER ELEMENT	DESCRIPTION
9600	CLEANER ASSY. (CARBURETOR AIR) — Cont'd ▲ 2000cc @ 2300cc ♦ 2600 cc ⊕ 2800 cc					
	APPLICATION CHART					
	4 CYLINDER					
	J (Capri)					
73	J	4	▲122	★D1RY 9600–A Not replaced	D1RY 9601–B *FA–98–A	
74	J	4	▲122	★D4RY 9600–A Not replaced	D1RY 9601–B *FA–98–A	
76	J – – exc. Calif.– "Before 8/1/75"	4	@140	★D5RY 9600–A Not replaced	D5RY 9601–A *FA–606	
76 76/78	J – – Calif.– "Before 8/1/75" J "From 8/1/75"	4	@140	★D6RY 9600–B Not replaced	D5RY 9601–A *FA–606	
79 79 79	J – – M/T without Hi–altitude carb. J – – A/T "Before 11/13/78" J – – A/T – Calif. "From 11/13/78"	4 4 4	@140 exc. TC @140 @140	D9FZ 9600–A	C8TZ 9601–AR *FA–52–R	
79	J – – A/T exc. Calif. "From 11/13/78"	4	@140	E1BZ 9600–A	C8TZ 9601–AR *FA–52–R	

COPYRIGHT © 1986 — FORD MOTOR COMPANY — DEARBORN, MICHIGAN

YEAR	MODEL/RESTRICTIONS	ENGINE CYL.	ENGINE C.I.D. (C.C.D.)	PART NUMBER AIR CLEANER ASSY.	PART NUMBER ELEMENT	DESCRIPTION
9600	CLEANER ASSY. (CARBURETOR AIR) — Cont'd ▲ 2000cc @ 2300cc ♦ 2600 cc ⊕ 2800 cc					

APPLICATION CHART

Refer to page 5 for Application Instructions

4 CYLINDER

J (Capri)

79	J - - M/T with Hi-altitude carb.- "Before 3/12/79"	4	@140 exc. TC	★ D9FZ 9600-C Not replaced	C8TZ 9601-AR *FA-52-R	
79	J - - M/T with Hi-altitude carb. "From 3/12/79"	4	⊕140 exc. TC	★ D9BZ 9600-F Not replaced	C8TZ 9601-AR *FA-52-R	
79	J	4	@140 TC	E0ZZ 9600-D	C8TZ 9601-AR *FA-52-R	

L (Bobcat)

74	L	4	▲122	★ D4FZ 9600-B Not replaced	C8TZ 9601-AR *FA-52-R	
74	L - - T/E	4	@140	★ D4FZ 9600-A Not replaced	C8TZ 9601-AR *FA-52-R	
74	L - - without T/E	4	@140	★ D4FZ 9600-C Not replaced	C8TZ 9601-AR *FA-52-R	
75	L	4	@140	★ D5FZ 9600-B Not replaced	C8TZ 9601-AR *FA-52-R	
76/77 78	L "Before 6/27/77" L - - A/T-Canada	4	@140	★ D7FZ 9600-C Not replaced	C8TZ 9601-AR *FA-52-R	
77/78 77/78	L - - A/T-exc. Canada "From 6/27/77" L - - M/T "From 6/27/77"	4 4	@140 @140	★ D8BZ 9600-H Not replaced	C8TZ 9601-AR *FA-52-R	
79 79 79 79 79 79	L - - A/T-exc. Calif.- "Before 11/13/78" L(62,64) - - M/T with 2.73 rear axle-Calif.- "Before 11/13/78" L(62,64) - - M/T with 3.08 rear axle - exc. Calif.- "Before 11/13/78" L(73) - - M/T-exc. Calif. "Before 11/13/78" L - - M/T with Hi-altitude carb. "From 11/13/78"	4 4 4 4 4	@140 @140 @140 @140 @140	D9FZ 9600-A	C8TZ 9601-AR *FA-52-R	
79	L(62,64) - - M/T with 2.73 rear axle - exc. Calif.- "Before 11/13/78"	4	@140	★ D9FZ 9600-C Not replaced	C8TZ 9601-AR *FA-52-R	
79 79	L - - A/T-Calif. "Before 11/13/78" L - - A/T "From 11/13/78"	4 4	@140 @140	E1BZ 9600-A	C8TZ 9601-AR *FA-52-R	
79 79 79	L(62,64) - - M/T with 3.08 rear axle-Calif.- "Before 11/13/78" L(73) - - M/T-Calif.- "Before 11/13/78" L - - M/T-without Hi-altitude carb. "From 11/13/78"	4 4 4	@140 @140 @140	D9FZ 9600-D	C8TZ 9601-AR *FA-52-R	

YEAR	MODEL/RESTRICTIONS	ENGINE CYL.	ENGINE C.I.D. (C.C.D.)	PART NUMBER AIR CLEANER ASSY.	PART NUMBER ELEMENT	DESCRIPTION
9600	CLEANER ASSY. (CARBURETOR AIR) — Cont'd ▲ 2000cc @ 2300cc ♦ 2600cc ⊕ 2800cc					

APPLICATION CHART

Refer to page 5 for Application Instructions

4 CYLINDER

P (Zephyr)

78	P	4	@140	★ D8BZ 9600-H Not replaced	C8TZ 9601-AR *FA-52-R	
79	P - - M/T	4	@140	D9FZ 9600-A	C8TZ 9601-AR *FA-52-R	
79	P - - A/T "Before 11/13/78"	4	@140			
79	P - - A/T-Calif.- "From 11/13/78"	4	@140			
79	P - - A/T-exc. Calif.- "From 11/13/78"	4	@140	E1BZ 9600-A	C8TZ 9601-AR *FA-52-R	

6 CYLINDER

C (Montego)

73	C - - A/T "Before 3/12/73"	6	250	★ D3DZ 9600-B Not replaced	D4ZZ 9601-AR *FA-584-R	
73	C - - M/T "Before 2/1/73"	6	250			
73	C - - A/T "From 3/12/73"	6	250	★ D3DZ 9600-C Not replaced	D4ZZ 9601-AR *FA-584-R	
73	C - - M/T "From 2/1/73"	6	250	★ D30Z 9600-D Not replaced	D4ZZ 9601-AR *FA-584-R	

G (Monarch)

75	G	6	200,250	★ D6DZ 9600-B Not replaced	C8TZ 9601-AR *FA-52-R	
76	G	6	200,250	★ D6DZ 9600-D Not replaced	C8TZ 9601-AR *FA-52-R	
77	G	6	200,250	★ D7DZ 9600-A Not replaced	C8TZ 9601-AR *FA-52-R	
78/	G	6	250	E0DZ 9600-B	C8TZ 9601-AR *FA-52-R	

J (Capri)

73	J	6	♦ 159	★ D3RY 9600-A Not replaced	C8TZ 9601-AR *FA-52-R	
74	J - - A/T	6	⊕ 171	★ D4RY 9600-B Not replaced	D4ZZ 9601-AR *FA-584-R	
74	J - - M/T	6	⊕ 171	★ D4ZZ 9600-B Not replaced	D4ZZ 9601-AR *FA-584-R	
76	J "Before 8/1/75"	6	⊕ 171	★ D5ZZ 9600-D Not replaced	D4ZZ 9601-AR *FA-584-R	
76	J "From 8/1/75"	6	⊕ 171	★ D6ZZ 9600-A Not replaced	D4ZZ 9601-AR *FA-584-R	
77/78	J - - Calif.	6	⊕ 171	★ D7FZ 9600-A Not replaced	D7FZ 9601-AR *FA-641-R	
77/78	J - - exc. Calif.	6	⊕ 171	★ D7FZ 9600-B Not replaced	D7FZ 9601-AR *FA-641-R	

COPYRIGHT © 1986 — FORD MOTOR COMPANY — DEARBORN, MICHIGAN

1973/79 LINCOLN-MERCURY CARS

YEAR	MODEL/RESTRICTIONS	ENGINE CYL.	ENGINE C.I.D. (C.C.D.)	PART NUMBER AIR CLEANER ASSY.	PART NUMBER ELEMENT	DESCRIPTION
9600	CLEANER ASSY. (CARBURETOR AIR) — Cont'd ▲ 2000cc @ 2300cc ♦ 2600 cc ⊕ 2800 cc					

APPLICATION CHART

Refer to page 5 for Application Instructions

6 CYLINDER

J (Capri) — Cont'd

79	J - - exc. Calif.	6	⊕ 171	★ D9ZZ 9600-E Not replaced	D7FZ 9601-AR *FA-641-R	
79	J - - Calif.	6	⊕ 171	★ D9ZZ 9600-D Not replaced	D7FZ 9601-AR *FA-641-R	
79	J	6	200	D9ZZ 9600-J	D4ZZ 9601-AR *FA-584-R	

L (Bobcat)

75	L	6	⊕ 171	★ D5ZZ 9600-D Not replaced	D4ZZ 9601-AR *FA-584-R	
76	L	6	⊕ 171	★ D6ZZ 9600-A Not replaced	D4ZZ 9601-AR *FA-584-R	
76	L	6	⊕ 171	★ D6ZZ 9600-B Not replaced	D4ZZ 9601-AR *FA-584-R	
77	L - - Calif. - "Before 6/27/77"	6	⊕ 171	★ D7FZ 9600-A Not replaced	D7FZ 9601-AR *FA-641-R	
77	L - - exc. Calif. - "Before 6/27/77"	6	⊕ 171	★ D7FZ 9600-B Not replaced	D7FZ 9601-AR *FA-641-R	
77/78	L - - exc. Calif.- "From 6/27/77"	6	⊕171	★ D8FZ 9600-B Not replaced	D7FZ 9601-AR *FA-641-R	
77/78	L - - Calif.- "From 6/27/77"	6	⊕171	★ D8FZ 9600-C Not replaced	D7FZ 9601-AR *FA-641-R	
79	L - - exc. Calif.	6	⊕ 171	★ D9ZZ 9600-E Not replaced	D7FZ 9601-AR *FA-641-R	
79	L - - Calif.	6	⊕ 171	★ D9ZZ 9600-D Not replaced	D7FZ 9601-AR *FA-641-R	

P (Comet)

73/74	P	6	200	★ D3TZ 9600-T Not replaced	C8TZ 9601-AR *FA-52-R	
73	P - - A/T "Before 3/12/73"	6	250	★ D3DZ 9600-B Not replaced	D4ZZ 9601-AR *FA-584-R	
73	P - - A/T "From 3/12/73"	6	250	★ D3DZ 9600-C Not replaced	D4ZZ 9601-AR *FA-584-R	
74	P - - M/T	6	250	★ D4DZ 9600-B Not replaced	D4ZZ 9601-AR *FA-584-R	
74	P - - A/T	6	250	★ D4DZ 9600-C Not replaced	D4ZZ 9601-AR *FA-584-R	
75	P	6	200,250	★ D6DZ 9600-B Not replaced	C8TZ 9601-AR *FA-52-R	
76 77	P P - - Canada	6 6	200,250 250	★ D6DZ 9600-D Not replaced	C8TZ 9601-AR *FA-52-R	
77 77	P P - - exc. Canada	6 6	200 250	★ D7DZ 9600-A Not replaced	C8TZ 9601-AR *FA-52-R	

YEAR	MODEL/RESTRICTIONS	ENGINE CYL.	ENGINE C.I.D. (C.C.D.)	PART NUMBER AIR CLEANER ASSY.	PART NUMBER ELEMENT	DESCRIPTION
9600	CLEANER ASSY. (CARBURETOR AIR) — Cont'd ▲ 2000cc @ 2300cc ♦ 2600 cc ⊕ 2800 cc					

APPLICATION CHART

Refer to page 5 for Application Instructions

6 CYLINDER

P (Zephyr)

78/	P - - A/T and T/E-Pulsed air type-exc. Calif. or Hi-altitude carb.	6	200	D8BZ 9600-E	D4ZZ 9601-AR *FA-584-R	
78	P - - A/T and T/E-Air pump type-exc. Calif. or Hi-altitude	8	200	★ D8BZ 9600-L Not replaced	D4ZZ 9601-AR *FA-584-R	
79	P - - A/T and T/E-Air pump type-exc. Hi-altitude carb.	6	200			
78	P - - A/T-Calif. or Hi-altitude carb.	6	200	D8BZ 9600-F	D4ZZ 9601-AR *FA-584-R	
79	P - - A/T with Hi-altitude carb.	6	200			
78/	P - - M/T	6	200	E0ZZ 9600-B	C8TZ 9601-AR *FA-52-R	

8 CYLINDER

A (Mercury)

73	A	8	351	★ D4AZ 9600-A Not replaced	D2AZ 9601-AR *FA-97-R	
73/74	A	8	400	★ D40Z 9600-B Not replaced	D7AZ 9601-BR *FA-613-R	
73	A	8	429,460 exc. P/C	★ D30Z 9600-A Not replaced	D7AZ 9601-BR *FA-613-R	
73/74	A	8	460 P/C	★ D4AZ 9600-B Not replaced	D7AZ 9601-AR *FA-612-R	
74	A	8	460 exc. P/C	★ D40Z 9600-C Not replaced	D7AZ 9601-BR *FA-613-R	
75	A	8	400	★ D5AZ 9600-P Not replaced	D7AZ 9601-BR *FA-613-R	
75	A	8	460 exc. P/C	★ D5AZ 9600-L Not replaced	D7AZ 9601-BR *FA-613-R	
75	A	8	460 P/C	★ D5AZ 9600-B Not replaced	D7AZ 9601-AR *FA-612-R	
76	A	8	400	★ D6AZ 9600-D Not replaced	D2AZ 9601-AR *FA-97-R	
76	A - - exc. Calif.	8	460 exc. P/C	★ D6AZ 9600-C Not replaced	D7AZ 9601-BR *FA-613-R	
76	A - - Calif.	8	460 exc. P/C	★ D6AZ 9600-E Not replaced	D7AZ 9601-BR *FA-613-R	
76	A	8	460 P/C	★ D6AZ 9600-B Not replaced	D7AZ 9601-AR *FA-612-R	
77	A - - exc. Calif. or Hi-altitude carb. "Before 9/13/76"	8	400	★ D7AZ 9600-A Not replaced	D2AZ 9601-AR *FA-97-R	
77	A	8	351M	D70Z 9600-AA	D2AZ 9601-AR *FA-97-R	
77	A - - Calif. "Before 9/13/76"	8	400			
77	A - - w/o Hi-altitude carb. "From 9/13/76"	8	400			
77	A - - w/Hi-altitude carb.	8	400	★ D70Z 9600-B Not replaced	D2AZ 9601-AR *FA-97-R	

COPYRIGHT © 1986 — FORD MOTOR COMPANY — DEARBORN, MICHIGAN

1973/79 LINCOLN-MERCURY CARS

YEAR	MODEL/RESTRICTIONS	ENGINE CYL.	ENGINE C.I.D. (C.C.D.)	PART NUMBER AIR CLEANER ASSY.	PART NUMBER ELEMENT	DESCRIPTION
9600	CLEANER ASSY. (CARBURETOR AIR) — Cont'd ▲ 2000cc @ 2300cc ♦ 2600 cc ⊕ 2800 cc					

APPLICATION CHART

Refer to page 5 for Application Instructions

8 CYLINDER

A (Mercury) — Cont'd

77	A - - w/o Hi-altitude carb.	8	460 exc. P/C	★ D7AZ 9600-F Not replaced	D7AZ 9601-BR *FA-613-R	
77	A - - w/Hi-altitude carb. "Before 10/1/76"	8	460 exc. P/C	★ D7AZ 9600-D Not replaced	D7AZ 9601-BR *FA-613-R	
77	A - - w/Hi-altitude carb. "From 10/1/76"	8	460 exc. P/C	★ D7AZ 9600-G Not replaced	D7AZ 9601-BR *FA-613-R	
77	A	8	460 P/C	★ D7AZ 9600-E Not replaced	D7AZ 9601-AR *FA-612-R	
78	A - - exc. Canada	8	351M	D8AZ 9600-F	D2AZ 9601-AR *FA-97-R	
78	A - - w/o Hi-altitude carb.	8	400			
78	A - - Canada	8	351M	★ D8AZ 9600-E Not replaced	D2AZ 9601-AR *FA-97-R	
78	A - - w/Hi-altitude carb.	8	400	★ D80Z 9600-A Not replaced	D2AZ 9601-AR *FA-97-R	
78	A	8	460 exc. P/C	★ D8AZ 9600-C Not replaced	D7AZ 9601-BR *FA-613-R	
78	A	8	460 P/C	★ D8AZ 9600-D Not replaced	D7AZ 9601-AR *FA-612-R	
79	A(54,66) - - exc. Calif.	8	302	D9AZ 9600-F	D2AZ 9601-AR *FA-97-R	
79	A(74)	8	302			
79	A(54,66) - - Calif.	8	302	★ D9AZ 9600-G Not replaced	D2AZ 9601-AR *FA-97-R	
79	A - - with E.E.C..	8	351W	★ D9AZ 9600-C Not replaced	D2AZ 9601-AR *FA-97-R	
79	A - - without E.E.C. "Before 1/15/79"	8	351W	★ D9AZ 9600-E Not replaced	D2AZ 9601-AR *FA-97-R	
79	A - - w/Hi-altitude carb.- "From 1/15/79 to 3/5/79"	8	351W			
79	A - - Without E.E.C. or Hi-altitude carb.- "From 1/15/79 to 3/5/79"	8	351W	D9AZ 9600-H	D2AZ 9601-AR *FA-97-R	
79	A - - without E.E.C.- "From 3/5/79"	8	351W			

C (Montego)

73/74	C	8	351-4/B	★ D40Z 9600-D Not replaced	D7AZ 9601-BR *FA-613-R	
73	C	8	351-2/B	★ D4AZ 9600-A Not replaced	D2AZ 9601-AR *FA-97-R	
73/74	C	8	302			
74	C - - without T/E	8	351C-2/B			
74	C	8	351W			
73/74	C	8	400	★ D40Z 9600-B Not replaced	D7AZ 9601-BR *FA-613-R	
73	C	8	429,460 exc. P/C	★ D3VY 9600-A Not replaced	D7AZ 9601-BR *FA-613-R	
73/74	C	8	460 P/C	★ D40Z 9600-A Not replaced	D7AZ 9601-BR *FA-613-R	

YEAR	MODEL/RESTRICTIONS	ENGINE CYL.	ENGINE C.I.D. (C.C.D.)	PART NUMBER AIR CLEANER ASSY.	PART NUMBER ELEMENT	DESCRIPTION
9600	CLEANER ASSY. (CARBURETOR AIR) — Cont'd ▲ 2000cc @ 2300cc ♦ 2600 cc ⊕ 2800 cc					

APPLICATION CHART

Refer to page 5 for Application Instructions

8 CYLINDER

C (Montego) — Cont'd

74	C - - T/E	8	351C-2/B	★ D40Z 9600-B Not replaced	D7AZ 9601-BR *FA-613-R	
74	C	8	460 exc. P/C	★ D4VY 9600-A Not replaced	D7AZ 9601-BR *FA-613-R	
75	C	8	351M	★ D50Z 9600-L Not replaced	D7AZ 9601-BR *FA-613-R	
75	C	8	351W	★ D5BZ 9600-A Not replaced	D2AZ 9601-AR *FA-97-R	
75	C	8	400	★ D5AZ 9600-P Not replaced	D7AZ 9601-BR *FA-613-R	
75	C	8	460 exc. P/C	★ D50Z 9600-G Not replaced	D7AZ 9601-BR *FA-613-R	
75	C	8	460 P/C	★ D50Z 9600-D Not replaced	D7AZ 9601-BR *FA-613-R	
76	C	8	351W	★ D60Z 9600-D Not replaced	D2AZ 9601-AR *FA-97-R	
76	C "Before 11/10/75"	8	351M, 400	★ D60Z 9600-G Not replaced	D7AZ 9601-BR *FA-613-R	
76	C "From 11/10/75"	8	351M, 400	★ D6AZ 9600-D Not replaced	D2AZ 9601-AR *FA-97-R	
76	C(71) - - exc. Calif.	8	460 exc. P/C	★ D6AZ 9600-C Not replaced	D7AZ 9601-BR *FA-613-R	
76	C(53,65)	8	460 exc. P/C			
76	C(71) - - Calif.	8	460 exc. P/C	★ D6AZ 9600-E Not replaced	D7AZ 9601-BR *FA-613-R	
76	C	8	460P/C	★ D60Z 9600-B Not replaced	D7AZ 9601-BR *FA-613-R	

D (Lincoln)

73	D	8	460	★ D3VY 9600-A Not replaced	D7AZ 9601-BR *FA-613-R	
74	D	8	460	★ D4VY 9600-A Not replaced	D7AZ 9601-BR *FA-613-R	
75	D	8	460	★ D50Z 9600-G Not replaced	D7AZ 9601-BR *FA-613-R	
76	D - - exc. Calif.	8	460	★ D60Z 9600-C Not replaced	D7AZ 9601-BR *FA-613-R	
76	D - - Calif.	8	460	★ D6VY 9600-B Not replaced	D7AZ 9601-BR *FA-613-R	
77	D	8	400	D70Z 9600-AA	D2AZ 9601-AR *FA-97-R	
77	D - - w/o Hi-altitude carb.	8	460	D7VY 9600-B	D7AZ 9601-BR *FA-613-R	
77	D - - w/Hi-altitude carb. "Before 9/13/76"	8	460	★ D7SZ 9600-A Not replaced	D7AZ 9601-BR *FA-613-R	
77	D - - w/Hi-altitude carb. "From 9/13/76"	8	460	★ D7VY 9600-C Not replaced	D7AZ 9601-BR *FA-613-R	
78/	D - - w/o Hi-altitude carb.	8	400	D8AZ 9600-F	D2AZ 9601-AR *FA-97-R	

COPYRIGHT © 1986 — FORD MOTOR COMPANY — DEARBORN, MICHIGAN

1973/79 LINCOLN-MERCURY CARS

YEAR	MODEL/RESTRICTIONS	ENGINE CYL.	ENGINE C.I.D. (C.C.D.)	PART NUMBER AIR CLEANER ASSY.	PART NUMBER ELEMENT	DESCRIPTION
9600	CLEANER ASSY. (CARBURETOR AIR) — Cont'd ▲ 2000cc @ 2300cc ♦ 2600 cc ⊕ 2800 cc					

APPLICATION CHART

Refer to page 5 for Application Instructions

8 CYLINDER

D (Lincoln)

78/	D – – w/Hi-altitude carb.	8	400	★ D80Z 9600-A Not replaced	D2AZ 9601-AR *FA-97-R	
78	D	8	460	★ D8VY 9600-A Not replaced	D7AZ 9601-BR *FA-613-R	

F (Cougar)

73	F	8	351-2/B	★ D3ZZ 9600-A Not replaced	D3ZZ 9601-AR *FA-574-R	
73 74	F F	8 8	351-4/B 400	★ D40Z 9600-B Not replaced	D7AZ 9601-BR *FA-613-R	
74	F	8	302, 351-2/B	★ D4AZ 9600-A Not replaced	D2AZ 9601-AR *FA-97-R	
74	F	8	351-4/B	★ D40Z 9600-D Not replaced	D7AZ 9601-BR *FA-613-R	
74	F	8	460	★ D4VY 9600-A Not replaced	D7AZ 9601-BR *FA-613-R	
75	F	8	351M	★ D50Z 9600-L Not replaced	D7AZ 9601-BR *FA-613-R	
75	F	8	351W	★ D5BZ 9600-A Not replaced	D2AZ 9601-AR *FA-97-R	
75	F	8	400	★ D5AZ 9600-P Not replaced	D7AZ 9601-BR *FA-613-R	
75	F	8	460	★ D50Z 9600-G Not replaced	D7AZ 9601-BR *FA-613-R	
76	F "Before 11/10/75"	8	351M, 400	★ D60Z 9600-G Not replaced	D7AZ 9601-BR *FA-613-R	
76	F "From 11/10/75"	8	351M, 400	★ D6AZ 9600-D Not replaced	D2AZ 9601-AR *FA-97-R	
76	F	8	460	★ D6AZ 9600-C Not replaced	D7AZ 9601-BR *FA-613-R	
77	F	8	302	D7DZ 9600-B	D7ZZ 9601-AR *FA-640-R	
77	F – – w/o Hi-altitude carb.	8	351M, 400	D70Z 9600-AA	D2AZ 9601-AR *FA-97-R	
77	F – – w/Hi-altitude carb.	8	351M, 400	★ D70Z 9600-B Not replaced	D2AZ 9601-AR *FA-97-R	
77	F	8	351W	★ D7DZ 9600-D Not replaced	D2AZ 9601-AR *FA-97-R	
78	F	8	302	D8DZ 9600-B	D2AZ 9601-AR *FA-97-R	
79	F	8	302	D9DZ 9600-A	D2AZ 9601-AR *FA-97-R	
78	F	8	351W	D8AZ 9600-B	D2AZ 9601-AR *FA-97-R	
78 78 79 79	F – – w/o Hi-altitude carb. –exc. Canada F – – w/o Hi-altitude carb. F – – exc. Calif. or Hi-altitude carb.– "Before 3/5/79" F(65L)	8 8 8 8	351M 400 351M 351W	D8AZ 9600-F	D2AZ 9601-AR *FA-97-R	

YEAR	MODEL/RESTRICTIONS	ENGINE CYL.	ENGINE C.I.D. (C.C.D.)	PART NUMBER AIR CLEANER ASSY.	PART NUMBER ELEMENT	DESCRIPTION
9600	CLEANER ASSY. (CARBURETOR AIR) — Cont'd ▲ 2000cc @ 2300cc ♦ 2600 cc ⊕ 2800 cc					

APPLICATION CHART

Refer to page 5 for Application Instructions

8 CYLINDER

F (Cougar)

78	F - - Canada	8	351M	★ D8AZ 9600-E Not replaced	D2AZ 9601-AR *FA-97-R	
78/ 78	F - - w/Hi-altitude carb. F - - w/Hi-altitude carb.	8 8	351M 400	★ D80Z 9600-A Not replaced	D2AZ 9601-AR *FA-97-R	
79 79	F - - Calif.- "Before 3/5/79" F - - w/o Hi-altitude carb. "From 3/5/79"	8 8	351M 351M	D90Z 9600-A	D2AZ 9601-AR *FA-97-R	
79	F(53D,65D)	8	351W			

G (Monarch)

75	G	8	302, 351W	★ D5BZ 9600-A Not replaced	D2AZ 9601-AR *FA-97-R	
76 76 76	G "Before 3/1/76" G - - speed control and/or A/C "From 3/1/76" G	8 8 8	302 302 351W	★ D60Z 9600-D Not replaced	D2AZ 9601-AR *FA-97-R	
76	G - - w/o speed control and/or A/C "From 3/1/76"	8	302	★ D6DZ 9600-E Not replaced	D7ZZ 9601-AR *FA-640-R	
77	G - - exc. Calif. or Hi-altitude carb.	8	302	D7DZ 9600-B	D7ZZ 9601-AR *FA-640-R	
77	G - - w/Hi-altitude carb.	8	302	★ D7DZ 9600-F Not replaced	D2AZ 9601-AR *FA-97-R	
77	G - - Calif.	8	302	★ D7DZ 9600-C Not replaced	D7ZZ 9601-AR *FA-640-R	
78	G - - Calif.	8	302	★ D8DZ 9600-A Not replaced	D2AZ 9601-AR *FA-97-R	
78 79	G - - exc. Calif. G - - A/T with Hi-altitude carb.	8 8	302 302	D8DZ 9600-B	D2AZ 9601-AR *FA-97-R	
79 79	G - - M/T G - - A/T - - exc. Calif. or Hi-altitude carb.	8 8	302 302	D9DZ 9600-A	D2AZ 9601-AR *FA-97-R	
79	G - - A/T-Calif.	8	302	★ D9DZ 9600-B Not replaced	D2AZ 9601-AR *FA-97-R	
77	G "Before 12/1/76"	8	351W	★ D7DZ 9600-E Not replaced	D2AZ 9601-AR *FA-97-R	
77	G "From 12/1/76"	8	351W	★ D7DZ 9600-D Not replaced	D2AZ 9601-AR *FA-97-R	

J (Capri)

79 79	J - - M/T J - - A/T - - exc. Calif.	8 8	302 302	D9BZ 9600-E	D7ZZ 9601-AR *FA-640-R	
79	J - - A/T-Calif.	8	302	D9ZZ 9600-G	D7ZZ 9601-AR *FA-640-R	

K (Mark IV, Mark V)

73	K	8	460	★ D3VY 9600-A Not replaced	D7AZ 9601-BR *FA-613-R	

COPYRIGHT © 1986 — FORD MOTOR COMPANY — DEARBORN, MICHIGAN

1973/79 LINCOLN-MERCURY CARS

YEAR	MODEL/RESTRICTIONS	ENGINE CYL.	ENGINE C.I.D. (C.C.D.)	PART NUMBER AIR CLEANER ASSY.	PART NUMBER ELEMENT	DESCRIPTION
9600	CLEANER ASSY. (CARBURETOR AIR) — Cont'd ▲ 2000cc @ 2300cc ♦ 2600 cc ⊕ 2800 cc					

APPLICATION CHART

Refer to page 5 for Application Instructions

8 CYLINDER

K (Mark IV, Mark V)

74	K	8	460	★ D4VY 9600-A Not replaced	D7AZ 9601-BR *FA-613-R	
75	K	8	460	★ D50Z 9600-G Not replaced	D7AZ 9601-BR *FA-613-R	
76	K - - exc. Calif.	8	460	★ D60Z 9600-C Not replaced	D7AZ 9601-BR *FA-613-R	
76	K - - Calif.	8	460	★ D6VY 9600-B Not replaced	D7AZ 9601-BR *FA-613-R	
77	K	8	400	D70Z 9600-AA	D2AZ 9601-AR *FA-97-R	
77	K - - w/o Hi-altitude carb.	8	460	D7VY 9600-B	D7AZ 9601-BR *FA-613-R	
77	K - - w/Hi-altitude carb. "Before 9/13/76"	8	460	★ D7SZ 9600-A Not replaced	D7AZ 9601-BR *FA-613-R	
77	K - - w/Hi-altitude carb. "From 9/13/76"	8	460	★ D7VY 9600-C Not replaced	D7AZ 9601-BR *FA-613-R	
78/	K - - w/o Hi-altitude carb.	8	400	D8AZ 9600-F	D2AZ 9601-AR *FA-97-R	
78/	K - - w/Hi-altitude carb.	8	400	★ D80Z 9600-A Not replaced	D2AZ 9601-AR *FA-97-R	
78	K	8	460	★ D8VY 9600-A Not replaced	D7AZ 9601-BR *FA-613-R	

P (Comet)

73/74	P	8	302	★ D4AZ 9600-A Not replaced	D2AZ 9601-AR *FA-97-R	
75	P	8	302	★ D5BZ 9600-A Not replaced	D2AZ 9601-AR *FA-97-R	
76	P	8	302	★ D60Z 9600-D Not replaced	D2AZ 9601-AR *FA-97-R	
77	P - - exc. Calif. or Hi-altitude carb.	8	302	D7DZ 9600-B	D7ZZ 9601-AR *FA-640-R	
77	P - - Calif.	8	302	★ D7DZ 9600-C Not replaced	D7ZZ 9601-AR *FA-640-R	
77	P - - w/Hi-altitude carb.	8	302	★ D7DZ 9600-F Not replaced	D2AZ 9601-AR *FA-97-R	

P (Zephyr)

78	P - - Calif.	8	302	★ D8BZ 9600-B Not replaced	D7ZZ 9601-AR *FA-640-R	
78	P - - exc. Calif.	8	302	★ D8BZ 9600-J Not replaced	D7ZZ 9601-AR *FA-640	
79 79	P - - M/T P - - A/T - - exc. Calif. or Hi-altitude carb.	8 8	302 302	D9BZ 9600-E	D7ZZ 9601-AR *FA-640-R	
79	P - - A/T with Hi-altitude carb.	8	302	★ D8BZ 9600-C Not replaced	D7ZZ 9601-AR *FA-640-R	
79	P - - A/T-Calif.	8	302	D9ZZ 9600-G	D7ZZ 9601-AR *FA-640-R	

YEAR	MODEL/RESTRICTIONS	ENGINE CYL.	ENGINE C.I.D. (C.C.D.)	PART NUMBER AIR CLEANER ASSY.	PART NUMBER ELEMENT	DESCRIPTION
9600	CLEANER ASSY. (CARBURETOR AIR) — Cont'd ▲ 2000cc @ 2300cc ♦ 2600 cc ⊕ 2800 cc					

APPLICATION CHART

Refer to page 5 for Application Instructions

8 CYLINDER

V (Versailles)

77	V – – w/o Hi-altitude carb.	8	302	★ D74Y 9600-A Not replaced	D2AZ 9601-AR *FA-97-R	
77	V – – w/Hi-altitude carb.	8	302	★ D74Y 9600-C Not replaced	D2AZ 9601-AR *FA-97-R	
77	V	8	351W	★ D74Y 9600-B Not replaced	D2AZ 9601-AR *FA-97-R	
78	V	8	302	★ D84Y 9600-A Not replaced	D2AZ 9601-AR *FA-97-R	
79	V – – with E.E.C.	8	302	★ D94Y 9600-A Not replaced	D2AZ 9601-AR *FA-97-R	
79	V – – Without E.E.C.-Calif.	8	302	★ D94Y 9600-C Not replaced	D2AZ 9601-AR *FA-97-R	

Y (Meteor)

73/74	Y	8	351	★ D4AZ 9600-A Not replaced	D2AZ 9601-AR *FA-97-R	
73/74	Y	8	400	★ D40Z 9600-B Not replaced	D7AZ 9601-BR *FA-613-R	
73	Y	8	429,460 exc. P/C	★ D30Z 9600-A Not replaced	D7AZ 9601-BR *FA-613-R	
73/74	Y	8	460 P/C	★ D4AZ 9600-B Not replaced	D7AZ 9601-AR *FA-612-R	
74	Y	8	460 exc. P/C	★ D40Z 9600-C Not replaced	D7AZ 9601-BR *FA-613-R	
75	Y	8	351M	★ D5AZ 9600-S Not replaced	D2AZ 9601-AR *FA-97-R	
75	Y	8	400	★ D5AZ 9600-P Not replaced	D7AZ 9601-BR *FA-613-R	
75	Y	8	460 exc. P/C	★ D5AZ 9600-L Not replaced	D7AZ 9601-BR *FA-613-R	
75	Y	8	460 P/C	★ D5AZ 9600-B Not replaced	D7AZ 9601-AR *FA-612-R	
76	Y	8	351M, 400	★ D6AZ 9600-D Not replaced	D2AZ 9601-AR *FA-97-R	
76	Y	8	460 exc. P/C	★ D6AZ 9600-C Not replaced	D7AZ 9601-BR *FA-613-R	
76	Y	8	460 P/C	★ D6AZ 9600-B Not replaced	D7AZ 9601-AR *FA-612-R	

YEAR	MODEL/RESTRICTIONS	ENGINE CYL.	ENGINE C.I.D. (C.C.D.)	PART NUMBER	DESCRIPTION	QTY.
9600	CLEANER ASSY. (CARBURETOR AIR) — Cont'd ▲ 2000cc @ 2300cc ♦ 2600 cc ⊕ 2800 cc					
73/	G,P	6	200,250	382461-S9	(BB-830-A) Wing nut stud (ATT 9600) 1/4"-20 x 3/4"	1
73	A,C,D,F,K,P,Y	6&8	All	★ 378529-S	Stud (air cleaner to carburetor)-locking-1/4"-20-20 x 1 13/16"	1
73/	A,C,D,F,K,P,Y	6&8	All	384411-S	(II-187-CF)-elbow (crankcase vent hose)-nylon-5/8"-3/4"-90	1
73/ 73/78	A,C,D,F,K,P,Y J	8 6	All All	358871-S8B	(MM-297-A)-nut (air cleaner to carburetor)-wing-1/4"-20	1 4

COPYRIGHT © 1986 — FORD MOTOR COMPANY — DEARBORN, MICHIGAN

1973/79 LINCOLN-MERCURY CARS

YEAR	MODEL/RESTRICTIONS	ENGINE CYL.	ENGINE C.I.D. (C.C.D.)	PART NUMBER	DESCRIPTION	QTY.
9600	**CLEANER ASSY. (CARBURETOR AIR) — Cont'd** ▲ 2000 cc @ 2300 cc ♦ 2600 cc ⊕ 2800 cc					
73/76	A,C,F,P,Y	8	302, 351-2/B	386330-S2	(WW-100)-stud (air cleaner to carburetor)-1/4"-20 x 5/16"-18 x 3 3/4"	1
				373706-S	(WW-121-A)-stud-1/4"-20 x 3 1/2"	
75	A,C,F,Y	8	351M	386141-S2	(WW-152)-stud (air cleaner to carburetor)-1/4"-20-20 x 2.31-hex.	1
75	C,F,G,P	8	302, 351W	386142-S2	(WW-152-A)-stud (air cleaner to carburetor)-1/4"-20-20 x 2.90-hex.	1
73/76	C,F	8	351-4/B	380958-S2	(WW-97-B)-stud (air cleaner to carburetor)-1/4"-20-20 x 4 5/32"	1
73/74	J	4	▲122	E890064-S	(AK-7H)-grommet (use with 9A659)	4
77	L - - exc. Calif.	6	⊕171	387424-S8	(WW-97-AM) - stud (air cleaner to carb.) - 1/4" - 20-20 x 1 31/32"	1
77 79	L - - Calif. J,P - - Calif.	6 8	⊕171 302	387423-S8	(WW-97-AQ) - stud (air cleaner to carb.)-1/4" - 20 - 20 x 2 13/64"	1
77	F,G,P	8	302	387490-S2	(WW-97-AP)-stud (air cleaner to carb.)-1/4" - 20-20 x 2 11/64"	1
77	D,K	8	460	386056-S2	(WW-152-BB)-stud (air cleaner to carb.) - 1/4" - 20-20 x 4"	1
75/77	L	4	@140	386285-S	(MM-303)-nut (air cleaner to carburetor)-1/4" wing-type 3	1
78/	J,L,P	4	@140	388796-S	(MM-303-F)-nut (air cleaner to carburetor) 1/4"-wing	1
9601	**ELEMENT ASSY. (CARBURETOR AIR CLEANER) - Refer to group 9600**					
9E602	**CAP (FUEL VAPOR STORAGE CANISTER)**					
73/	A,C,D,F,G,J,K,L,P,V,Y	4,6, &8	All	D1AZ 9E602-B	1 1/4" O.D. -Blue	AR
9A603	**SHROUD and TUBE ASSY. (CARBURETOR AIR CLEANER AIR DUCT)**					
	A (Mercury)					
73/74	A	8	351C-2/B,400	★ D2AZ 9A603-B	Inner-not replaced	1
73/74	A	8	351C-2/B,400	★ D2AZ 9A603-D	Outer-not replaced	1
75/76	A	8	400	D50Z 9A603-C	Inner	1
75/76	A	8	400	D50Z 9A603-A	Outer	1
77/78	A	8	351M, 400	D50Z 9A603-C	Inner	1
77/78	A	8	351M, 400	D50Z 9A603-A	Outer	1
73	A	8	429,460 exc. P/C	★ D3AZ 9A603-A	Not replaced	1
73	A	8	460 P/C	★ D30Z 9A603-A	Not replaced	1
74	A	8	460	★ D4SZ 9A603-A	Not replaced	1
75/78	A	8	460, 460P/C	D5AZ 9A603-A		1
79	A	8	302, 351W	D9AZ 9A603-A		1
	C (Montego)					
73/74	C	6	All	D9TZ 9A603-A		1
73	C	8	302	D1DZ 9A603-A		1
74	C(exc. 71)	8	302			1

YEAR	MODEL/RESTRICTIONS	ENGINE CYL.	ENGINE C.I.D. (C.C.D.)	PART NUMBER	DESCRIPTION	QTY.
9A603	SHROUD and TUBE ASSY. (CARBURETOR AIR CLEANER AIR DUCT) — Cont'd ▲ 2000 cc @ 2300 cc ♦ 2600 cc ⊕ 2800 cc					
	C (Montego)					
74	C(71)	8	302	★ D4DZ 9A603-A	Not replaced	1
73/74	C	8	351C-2/B,400	★ D2AZ 9A603-B	Inner-not replaced	1
73/74	C	8	351-4/B	★ D2AZ 9A603-C	Inner-not replaced	1
73/74	C	8	351C-2/B,400, 351-4/B	★ D2AZ 9A603-D	Outer-not replaced	1
73/74	C	8	351W	★ D0AZ 9A603-C	Upper-not replaced	1
				★ D0AZ 9A603-A	Lower-not replaced	1
75/76	C	8	351M, 400	D50Z 9A603-C	Inner	1
				D50Z 9A603-A	Outer	1
75/76	C	8	351W	D50Z 9A603-B		1
73	C	8	429, 460 P/C	★ D30Z 9A603-A	Not replaced	1
74	C	8	460	★ D4SZ 9A603-A	Not replaced	1
75/76	C	8	460, 460 P/C	D5AZ 9A603-A		1
	D (Lincoln)					
73	D	8	429,460	★ D3AZ 9A603-A	Not replaced	1
74	D	8	460	★ D4SZ 9A603-A	Not replaced	1
75/78	D	8	460	D5AZ 9A603-A		1
77/	D	8	400	D50Z 9A603-C	Inner	1
77/	D	8	400	D50Z 9A603-A	Outer	1
	F (Cougar)					
77	F	8	302	D70Z 9A603-A		1
78/	F	8	302	D8BZ 9A603-A		1
73/74	F	8	351C-2/B,400	★ D2AZ 9A603-B	Inner-not replaced	1
73/74	F	8	351-4/B	★ D2AZ 9A603-C	Inner-not replaced	1
73/74	F	8	351C-2/B,400, 351-4/B	★ D2AZ 9A603-D	Outer-not replaced	1
73/74	F	8	351W	★ D0AZ 9A603-C	Upper-not replaced	1
				★ D0AZ 9A603-A	Lower-not replaced	1
75/	F	8	351M	D50Z 9A603-C	Inner	1
75/78	F	8	400			
75/	F	8	351M	D50Z 9A603-A	Outer	1
75/78	F	8	400			
75/	F	8	351W	D50Z 9A603-B		1
74	F	8	460	★ D4SZ 9A603-A	Not replaced	1
75/76	F	8	460	D5AZ 9A603-A		1
	G (Monarch)					
75	G	6	All	★ D3BZ 9A603-A	Not replaced	1
76/	G	6	All	D6DZ 9A603-A		1
75/76	G	8	302	D5DZ 9A603-B		1
77/78	G – – exc. Calif.	8	302			1
79	G	8	302			1
77	G – – Calif.	8	302	D7DZ 9A603-C		1
78	G – – Calif.	8	302	D8DZ 9A603-A		1
75/77	G	8	351W	D7DZ 9A603-B		1

COPYRIGHT © 1986 — FORD MOTOR COMPANY — DEARBORN, MICHIGAN

1973/79 LINCOLN-MERCURY CARS

YEAR	MODEL/RESTRICTIONS	ENGINE CYL.	ENGINE C.I.D. (C.C.D.)	PART NUMBER	DESCRIPTION	QTY.
9A603	SHROUD and TUBE ASSY. (CARBURETOR AIR CLEANER AIR DUCT) — Cont'd ▲ 2000 cc @ 2300 cc ♦ 2600 cc ⊕ 2800 cc					
	J (Capri)					
73	J	4	▲122	★ D1RY 9A603-A	Not replaced	1
74	J	4	▲122	★ D4RY 9A603-B	Not replaced	1
76	J "Before 8/30/76"	4	@140	★ D5RY 9A603-B	Upper-not replaced	1
				D5RY 9A603-A	Lower	1
76/78	J "From 8/30/76"	4	@140	★ D6RY 9A603-A	Upper and lower-1 piece design-not repl.	1
79	J	4	@140	D8FZ 9A603-A		1
73	J	6	♦159	★ D2RY 9A603-A	Upper-not replaced	1
				★ D2RY 9A603-B	Lower-not replaced	1
74	J	6	⊕171	★ D4RY 9A603-A	Upper-not replaced	1
76/78	J	6	⊕171	★ D5RY 9A603-C	Outer-not replaced	1
				D5RY 9A603-D	Inner-#75TF 9A676-AA	1
				★ D4ZZ 9A603-A	Not replaced	1
79	J	6	⊕ 171	D5FZ 9A603-A	Inner	1
79	J	6	⊕ 171	D5FZ 9A603-B	Outer	1
79	J	6	200	D6DZ 9A603-A		1
79	J	8	302	D8BZ 9A603-A		1
	K (Mark IV, Mark V)					
73	K	8	429,460	★ D3AZ 9A603-A	Not replaced	1
74	K	8	460	★ D4SZ 9A603-A	Not replaced	1
75/78	K	8	460	D5AZ 9A603-A		1
77/	K	8	400	D50Z 9A603-C	Inner	1
77/	K	8	400	D50Z 9A603-A	Outer	1
	L (Bobcat)					
74	L	4	▲122	★ D4FZ 9A603-B	Not replaced	1
74/76	L	4	@140	D4FZ 9A603-A	Outer	1
				E0FZ 9A603-B	Inner	1
77	L "Before 6/27/77"	4	@140	D7FZ 9A603-A		1
77/	L "From 6/27/77"	4	@140	D8FZ 9A603-A		1
75/	L	6	⊕171	D5FZ 9A603-A	Inner	1
75/	L	6	⊕171	D5FZ 9A603-B	Outer	1
	P (Comet)					
73/74	P	6	All	D9TZ 9A603-A		1
75	P	6	200,250	★ D3BZ 9A603-A	Not replaced	1
76/77	P	6	200,250	D6DZ 9A603-A		1
73/74	P	8	302	D3DZ 9A603-C	Inner	1
74	P - - T/E	8	302	★ D4DZ 9A603-A	Outer-not replaced	1
75/77	P	8	302	D5DZ 9A603-C		1
	P (Zephyr)					
78/	P	4	@140	D8FZ 9A603-A		1
78/	P	6	200	D6DZ 9A603-A		1
78/	P	8	302	D8BZ 9A603-A		1
	V (Versailles)					
77	V - - exc. Calif.	8	302	D5DZ 9A603-B		1
77	V - - Calif.	8	302	D7DZ 9A603-C		1
77	V	8	351W	D7DZ 9A603-B		1
78/	V	8	302	D8DZ 9A603-A		1

YEAR	MODEL/RESTRICTIONS	ENGINE CYL.	ENGINE C.I.D. (C.C.D.)	PART NUMBER	DESCRIPTION	QTY.
9A603	SHROUD and TUBE ASSY. (CARBURETOR AIR CLEANER AIR DUCT) — Cont'd ▲ 2000 cc @ 2300 cc ♦ 2600 cc ⊕ 2800 cc					
	Y (Meteor)					
73/74	Y	8	351C-2/B,400	★D2AZ 9A603-B	Inner-not replaced	1
				★D2AZ 9A603-D	Outer-not replaced	
75/76	Y	8	351M, 400	D50Z 9A603-C	Inner	1
				D50Z 9A603-A	Outer	1
73	Y	8	429,460 exc. P/C	★D3AZ 9A603-A	Not replaced	1
73	Y	8	460 P/C	★D30Z 9A603-A	Not replaced	1
74	Y	8	460	★D4SZ 9A603-A	Not replaced	1
75/76	Y	8	460, 460 P/C	D5AZ 9A603-A		1
74	L	4	▲122	44719-S8	(X-17)-washer (shroud to manifold)-flat-1/4"	2
73/77	P	6	All	34661-S8	(M-107-F)-nut & washer assy. (shroud to exhaust manifold)-5/16" x 18	2
73/77	C,P	6	All	382574-S	(WW-132-B)-stud & washer assy. (heat shroud and exhaust manifold to cyl. head)-hex.-3/8"-16 x 3 3/16"	2
73/76	C	8	302	376785-S2	(MM-292-H)-nut & washer (shroud to exhaust manifold)-3/8"-16	1
73/78	A,Y	8	351	34394-S7	(M-93-A)-nut & washer assy. (shroud to exhaust manifold)-3/8"-16	AR
73/78	A,C,D,K,Y	8	429,460	381733-S	(WW-132)-stud & washer assy. (heat shroud and exhaust manifold to cyl. head)-hex.-3/8"-16 x 2 3/16"	2
9E606	ADAPTER (CARBURETOR AIR CLEANER INLET HOSE) @ 2300 cc					
79	J,L,P	4	@140	E0ZZ 9E606-A		AR
9E607	SENSOR ASSY. (CARBURETOR AIR CLEANER AIR TEMPERATURE CONTROL) ⊕ 2800 cc @ 2300 cc					
73	A,C,F,P	8	302, 351,400	D0ZZ 9E607-B	Temperature calibration 105°F- Incl. (1) 385277-S2 retainer and (1)	1
73	P "Before 2/1/73"	6	200		E1AE 9E608-AA gasket	1
74/75	J	6	⊕171			1
74/76	A,C,D,F,G,K,P,Y	8	302,351, 400,460			1
77/78	F	8	302			1
77	P,V	8	302			1
77/78	A,D,K	8	460			1
77/78	A	8	460P/C			1
78/	P - - Calif. or Hi-altitude carb.	8	302			1
79	A(54,66) - - exc. Calif.	8	302			1
77/78	G	8	302			1
79	G - - Calif.	8	302			1
73	A,C,D,K,Y	8	429,460	D1VY 9E607-A	Temperature calibration 75°F - Incl. (1) 385277-S2 retainer and (1) E1AE 9E608-AA gasket	1

COPYRIGHT © 1986 — FORD MOTOR COMPANY — DEARBORN, MICHIGAN

1973/79 LINCOLN-MERCURY CARS

YEAR	MODEL/RESTRICTIONS	ENGINE CYL.	ENGINE C.I.D. (C.C.D.)	PART NUMBER	DESCRIPTION	QTY.
9E607	SENSOR ASSY. (CARBURETOR AIR CLEANER AIR TEMPERATURE CONTROL) — Cont'd ⊕ 2800 cc @ 2300 cc					
74/76	L	4	@140	D4FZ 9E607-A	Temperature Calibration 105°F -incl. (1) E1AE 9E608-AA	1
76	J	4	@140		gasket and (1) 385277-S2 retainer	1
76/78	J	6	⊕171	D4ZZ 9E607-A	Temperature Calibration 105°F-Incl.	1
74/76	L	6	⊕171		(1) 385277-S2 nut and (1) E1AE 9E608-AA gasket	1
79	J	6	200			1
73/	P "From 2/1/73"	6	200			1
73	C	6	250			1
75/	G	6	200,250			1
78	A	8	351M			1
78/	F	8	351M			1
79	A - - Canada	8	351W			1
79	F	8	351W			1
78	A,F	8	400			1
78/	D,K	8	400			1
77/	L	4	@140	D7FZ 9E607-A	*CX-109-Temperature Calibration 75°F-	1
78	P - - M/T-Calif.	4	@140		Incl. (1) E1AE 9E608-AA gasket and	1
79	J	4	@140 TC		(1) 385277-S2 retainer	1
79	J - - exc. Calif.	4	@140 exc. TC			1
79	L,P	4	@140			1
77/78	J	4	@140	★ D7RY 9E607-B Not replaced	*CX-210-Temperature Calibration 75°F	1
77/78	L	6	⊕171	D7FZ 9E607-B	*CX-122-Temperature Calibration 90°F-	1
77/	G,P	6	All		Incl. (1) E1AE 9E608-AA gasket and	1
78	P - - M/T-exc. Calif.	4	@140		(1) 385277-S2 retainer	1
79	P	4	@140			1
77	G,V	8	351W	D7DZ 9E607-A	*CX-146-Temperature Calibration 90°F-	1
77/78	F	8	351W		Incl. (1) E1AE 9E608-AA gasket and	1
79	A(54,66) - - Calif.	8	302		(1) 385277-S2 retainer	1
79	F	8	302			1
79	G - - exc. Calif.	8	302			1
79	J - - A/T exc. Calif.	8	302			1
78/	V	8	302			1
78/	P - - exc. Calif. or Hi-altitude carb.	8	302			1
79	A - - exc. Canada	8	351W	D9AZ 9E607-A	*CX-328-Temperature Calibration 90° F Incl. (1) 385277-S2 retainer and (1) E1AE 9E608-AA gasket	1
76/78	J	4	@140	383741-S	(GG-232-D)-clip (sensor to carb. cleaner)	AR
9D608	ADAPTER (CARBURETOR AIR CLEANER TO INTAKE TUBE)					
78/	P	4	@140	E1ZZ 9D608-A		1
79	J - - M/T	4	@140			1
9609	Refer to group 9510 for Carburetor Parts List Instructions					
9D612	VACUUM MOTOR ASSY. (CARBURETOR AIR CLEANER) - Also refer to group 9A626					
73/74	C	8	351-4/B	★ C80Z 9D612-C	W/door-attaches to air cleaner	1
73/74	A,C,Y	8	460 P/C	Not replaced		1
9618	Refer to group 9510 for Carburetor Parts List Instructions					

YEAR	MODEL/RESTRICTIONS	ENGINE CYL.	ENGINE C.I.D. (C.C.D.)	PART NUMBER	DESCRIPTION	QTY.
9A624	TUBE ASSY. (CARBURETOR AIR CLEANER INTAKE) @ 2300 cc ⊕ 2800 cc					
73/	All	All	All	D30Z 9A624-B	2 5/16" x 3 11/16" x 11" long-cut to size -to service flex portion of tube assy.	AR
73/	All	All	All	D5UZ 9A624-B	2 5/16" x 3 11/16" x 18 1/4" long-cut to size -to service flex portion of tube assy.	AR
73/	All	All	All	D7UZ 9A624-A	2 5/16" x 3 11/16" x 25 3/4" long-cut to size -to service flex portion of tube assy.	AR
	A (Mercury)					
73/74	A	8	All	D4AZ 9C675-B	w/flex tube	1
75/76	A	8	351M, 400			1
77/78	A "Before 11/7/77"	8	351M, 400	D7AZ 9C675-B		1
78	A "From 11/7/77"	8	351M, 400	D8AZ 9C675-C		1
75/76	A	8	460, 460 P/C	D5AZ 9C675-A		1
77/78	A	8	460, 460P/C	D8AZ 9C675-B		1
79	A	8	302, 351W	D9AZ 9C675-B		1
	C (Montego)					
73	C	6&8	All	D30Z 9A624-A	W/o flex tube	1
74	C	6&8	250,302	★ D40Z 9A624-A	W/flex tube-not replaced	1
74	C	8	351-2/B			1
74	C	8	351-4/B, 400,460, 460 P/C	★ D40Z 9A624-B	W/flex tube-not replaced	1
75/76	C	8	All	D8SZ 9C675-A		1
	D (Lincoln)					
73	D	8	460	★ D3VY 9A624-A	W/o flex tube-not replaced	1
74/77	D	8	460	D4VY 9A624-A	W/flex tube	1
77	D	8	400	D7VY 9C675-A		1
78/	D	8	All	D8VY 9C675-A		1
	F (Cougar)					
73	F	8	351	★ D3ZZ 9A624-A	W/o flex tube-not replaced	1
74	F	8	351-2/B	★ D40Z 9A624-A	W/flex tube-not replaced	1
74	F	8	351-4/B, 400,460	★ D40Z 9A624-B	W/flex tube-not replaced	1
75/	F	8	All	D8SZ 9A624-A	Front	1
75/	F	8	All	D8SZ 9C675-A		1
	G (Monarch)					
75/77	G "Before 2/23/77"	6&8	All	D5DZ 9C675-A		1
77/	G "From 2/23/77"	6&8	All	D74Y 9C675-A		1
	J (Capri)					
76/78	J	4	@140	★ D5RY 9A624-E	Flex tube-not replaced	1
76/78	J	4	@140	★ D5RY 9A624-C	W/o flex tube-not replaced	1
74	J	6	⊕171	★ D4ZZ 9A624-A	W/o flex tube-not replaced	1

COPYRIGHT © 1986 — FORD MOTOR COMPANY — DEARBORN, MICHIGAN

1973/79 LINCOLN-MERCURY CARS

YEAR	MODEL/RESTRICTIONS	ENGINE CYL.	ENGINE C.I.D. (C.C.D.)	PART NUMBER	DESCRIPTION	QTY.
9A624	TUBE ASSY. (CARBURETOR AIR CLEANER INTAKE) — Cont'd @ 2300 cc ⊕ 2800 cc					
	J (Capri)					
76/78	J	6	⊕171	D5RY 9A624-D		1
79	J	6	⊕171	D9ZZ 9A624-A	Flex tube	1
79	J	6	200	D9LZ 9A624-A	Flex tube	1
79	J	8	302	E3ZZ 9A624-D	Flex tube	1
79	J	All	All	D9ZZ 9C675-A	Without flex tube	1
	K (Mark IV, Mark V)					
73	K	8	All	★ D3SZ 9A624-A	W/o flex tube-not replaced	1
74	K	8	460	★ D4SZ 9A624-A	W/flex tube-attaches to 9A626-not replaced	1
74	K	8	460	D4SZ 9A624-B	W/o flex tube-front-attaches to fender apron	1
75/76	K	8	460	D5SZ 9C675-A		1
77	K	8	400	D7LY 9C675-B		1
77	K	8	460	D7LY 9C675-A		1
78/	K	8	All	D8LY 9C675-A		1
	L (Bobcat)					
74	L	4	All	★ D4FZ 9A624-B	W/o flex tube-not replaced	1
75/78	L	4	@140	D5FZ 9A624-A	W/o flex tube	1
79	L	4	@140	D9FZ 9A624-A	Front	1
79	L	4	@140	E0FZ 9A624-A	Rear	1
77/79	L	6	⊕171	★ D9FZ 9C675-A	Not replaced	1
	P (Comet)					
73/74	P	6&8	All	D4DZ 9A624-A	W/flex tube	1
75/77	P	6&8	All	D5DZ 9C675-B		1
	P (Zephyr)					
78/	P	4,6, 8	All	D8BZ 9C675-A	Without flex tube	1
78/	P	6&8	200,302	E3ZZ 9A624-D	Flex tube	1
	V (Versailles)					
77/	V	8	All	D74Y 9C675-A		1
	Y (Meteor)					
73/74	Y	8	All	D4AZ 9C675-B	W/flex tube	1
75/76	Y	8	351M, 400			1

YEAR	MODEL/RESTRICTIONS	ENGINE CYL.	ENGINE C.I.D. (C.C.D.)	PART NUMBER: DUCT AND VALVE ASSY.	PART NUMBER: VALVE	DESCRIPTION
9A626	DUCT and VALVE ASSY. (CARBURETOR AIR CLEANER) ▲ 2000cc @ 2300cc ♦ 2600cc ⊕ 2800cc					
	A (Mercury)					
73	A "Before 2/1/73"	8	351	★ D3AZ 9A626-C Not replaced	D7AZ 9D612-C *CX-149	
73	A "From 2/1/73"	8	351	★ D3AZ 9A626-B Not replaced	D7AZ 9D612-C *CX-149	
73	A	8	429,460 exc. P/C	★ D3SZ 9A626-B Not replaced	D7AZ 9D612-C *CX-149	
73	A "Before 2/1/73"	8	400, 460 P/C			
73	A "From 2/1/73"	8	400, 460 P/C	★ D3ZZ 9A626-E Not replaced	D7AZ 9D612-C *CX-149	
74/75	A	8	400, 460 P/C	★ D4AZ 9A626-A Not replaced	D7AZ 9D612-C *CX-149	

YEAR	MODEL/RESTRICTIONS	ENGINE CYL.	ENGINE C.I.D. (C.C.D.)	PART NUMBER DUCT AND VALVE ASSY.	PART NUMBER VALVE	DESCRIPTION
9A626	DUCT and VALVE ASSY. (CARBURETOR AIR CLEANER) — Cont'd ▲ 2000cc @ 2300cc ♦ 2600cc ⊕ 2800cc					
	A (Mercury)					
74	A	8	460 exc. P/C	★ D4AZ 9A626-C Not replaced	D7AZ 9D612-C *CX-149	
76	A	8	400	★ D4DZ 9A626-C Not replaced	D7AZ 9D612-C *CX-149	
75/76 76	A A	8 8	460 exc. P/C 460 P/C	★ D5AZ 9A626-A Not replaced	D5AZ 9D612-A *CX-59	
77	A - - exc. Calif. or Hi-altitude "Before 9/13/76"	8	400	D7AZ 9A626-B	D7AZ 9D612-C *CX-149	
77/78	A	8	351M	D7TZ 9A626-E	D7TZ 9D612-A *CX-106	
77 77/78	A - - Calif. "Before 9/13/76" A - - w/o Hi-altitude carb. "From 9/13/76"	8 8	400 400			
77/78	A - - w/Hi-altitude carb.	8	400	D7TZ 9A626-F	D7TZ 9D612-B *CX-120	
77	A - - w/Hi-altitude carb.	8	460	★ D7AZ 9A626-F Not replaced	D7AZ 9D612-B *CX-119	
77 78 77/78	A - - w/o Hi-altitude carb. A A	8 8 8	460 460 460 P/C	D7AZ 9A626-E	D7AZ 9D612-C *CX-149	
79	A	8	302	D9AZ 9A626-A	D7AZ 9D612-B *CX-119	
79	A - - exc. Canada	8	351W	E3AZ 9A626-A	D7TZ 9D612-B *CX-120	
79	A - - Canada	8	351W	D9AZ 9A626-E	D7TZ 9D612-A *CX-106	
	C (Montego)					
73	C	6	250	★ D3ZZ 9A626-F Not replaced	★ D3DF 9D604-AA	
73	C	8	302, 351-2/B	★ D3AZ 9A626-C Not replaced	D7AZ 9D612-C *CX-149	
74 76	C - - without T/E C "From 11/10/75"	8 8	302, 351-2/B 351M, 400	★ D4DZ 9A626-C Not replaced	D7AZ 9D612-C *CX-149	
73	C	8	351-4/B, 400,429, 460 P/C	★ D3SZ 9A626-B Not replaced	D7AZ 9D612-C *CX-149	
74	C	8	351-4/B, 400, 460 P/C	★ D4AZ 9A626-A Not replaced	D7AZ 9D612-C *CX-149	
75	C	8	351M	★ D50Z 9A626-B Not replaced	D5AZ 9D612-A *CX-59	
75/76	C	8	351W	★ D50Z 9A626-A Not replaced	D5AZ 9D612-A *CX-59	
75 76	C C "Before 11/10/75"	8 8	400 351M, 400	D4TZ 9A626-H	★ D3DF 9D604-AA	
74	C	8	460 exc. P/C	★ D4AZ 9A626-C Not replaced	D7AZ 9D612-C *CX-149	

COPYRIGHT © 1986 — FORD MOTOR COMPANY — DEARBORN, MICHIGAN

1973/79 LINCOLN-MERCURY CARS

YEAR	MODEL/RESTRICTIONS	ENGINE CYL.	ENGINE C.I.D. (C.C.D.)	PART NUMBER DUCT AND VALVE ASSY.	PART NUMBER VALVE	DESCRIPTION
9A626	DUCT and VALVE ASSY. (CARBURETOR AIR CLEANER) — Cont'd ▲ 2000cc @ 2300cc ♦ 2600cc ⊕ 2800cc					
	C (Montego)					
75/76	C	8	460, 460 P/C	★ D5TZ 9A626-F Not replaced	D5AZ 9D612-A *CX-59	
	D (Lincoln)					
73	D	8	All	★ D3SZ 9A626-B Not replaced	D7AZ 9D612-C *CX-149	
74	D - - without T/E	8	460	★ D4AZ 9A626-A Not replaced	D7AZ 9D612-C *CX-149	
74	D - - with T/E	8	460	★ D4AZ 9A626-C Not replaced	D7AZ 9D612-C *CX-149	
75/76	D	8	460	★ D5AZ 9A626-A Not replaced	D5AZ 9D612-A *CX-59	
77	D	8	400	D7TZ 9A626-E	D7TZ 9D612-A *CX-106	
78/	D - - w/o Hi-altitude carb.	8	400			
78/	D - - w/Hi-altitude carb.	8	400	D7TZ 9A626-F	D7TZ 9D612-B *CX-120	
77	D - - w/Hi-altitude carb.	8	460	D7AZ 9A626-C	D7AZ 9D612-B *CX-119	
77	D - - w/o Hi-altitude carb.	8	460	★ D7AZ 9A626-D Not replaced	D7AZ 9D612-B *CX-119	
78	D	8	460	D7AZ 9A626-E	D7AZ 9D612-C *CX-149	
	F (Cougar)					
73	F	8	351-2/B	★ D3AZ 9A626-C Not replaced	D7AZ 9D612-C *CX-149	
74	F	8	351-2/B	★ D4DZ 9A626-C Not replaced	D7AZ 9D612-C *CX-149	
76	F "From 11/10/75"	8	351M, 400			
73	F	8	351-4/B	★ D3SZ 9A626-B Not replaced	D7AZ 9D612-C *CX-149	
74	F	8	351-4/B, 400	★ D4AZ 9A626-A Not replaced	D7AZ 9D612-C *CX-149	
75	F	8	351M	★ D50Z 9A626-B Not replaced	D5AZ 9D612-A *CX-59	
75/76	F	8	351W	★ D50Z 9A626-A Not replaced	D5AZ 9D612-A *CX-59	
75	F	8	400	D4TZ 9A626-H	★ D3DF 9D604-AA	
76	F "Before 11/10/75"	8	351M, 400			
74	F	8	460	★ D4AZ 9A626-C Not replaced	D7AZ 9D612-C *CX-149	
75/76	F	8	460	★ D5TZ 9A626-F Not replaced	D5AZ 9D612-A *CX-59	
77/78	F	8	302, 351W	D7AZ 9A626-A	D7AZ 9D612-B *CX-119	
77/	F - - w/o Hi-altitude carb.	8	351M	D7TZ 9A626-E	D7TZ 9D612-A *CX-106	
77/78	F - - w/o Hi-altitude carb.	8	400			
79	F	8	351W			

YEAR	MODEL/RESTRICTIONS	ENGINE CYL.	ENGINE C.I.D. (C.C.D.)	PART NUMBER DUCT AND VALVE ASSY.	PART NUMBER VALVE	DESCRIPTION
9A626	DUCT and VALVE ASSY. (CARBURETOR AIR CLEANER) — Cont'd ▲ 2000cc @ 2300cc ♦ 2600cc ⊕ 2800cc					
	F (Cougar)					
77/ 77/78	F - - w/Hi-altitude carb. F - - w/Hi-altitude carb.	8 8	351M 400	D7TZ 9A626-F	D7TZ 9D612-B *CX-120	
79	F	8	302	D9DZ 9A626-A	D7AZ 9D612-B *CX-119	
	G (Monarch)					
75/76	G	6	200	★ D5ZZ 9A626-D Not replaced	D5DZ 9D612-A *CX-60	
77	G	6	200	D7ZZ 9A626-A	D7AZ 9D612-B *CX-119	
75/76	G	6	250	★ D5DZ 9A626-C Not replaced	D5DZ 9D612-A *CX-60	
77	G	6	250	D7DZ 9A626-A	D7DZ 9D612-B *CX-105	
78/	G	6	250	★ D8DZ 9A626-B Not replaced	D7DZ 9D612-B *CX-105	
75/76 76 75/76	G "Before 3/1/76" G - - speed control and or A/C "From 3/1/76" G	8 8 8	302 302 351W	★ D50Z 9A626-A Not replaced	D5AZ 9D612-A *CX-59	
76	G - - w/o speed control and/or A/C "From 3/1/76"	8	302	★ D6DZ 9A626-A Not replaced	D5AZ 9D612-A *CX-59	
77/78 77 79	G G G - - A/T-Calif. or Hi-altitude carb.	8 8 8	302 351W 302	D7AZ 9A626-A	D7AZ 9D612-B *CX-119	
79 79	G - - A/T exc. Calif. or Hi-altitude carb. G - - M/T	8 8	302 302	D9DZ 9A626-A	D7AZ 9D612-B *CX-119	
	J (Capri)					
73/74	J	4	▲ 122	★ D1RY 9A626-A	NONE	Not replaced
73	J	6	♦159	★ D2RY 9A626-A	NONE	Not replaced
74	J	6	⊕171	★ D4DZ 9A626-A Not replaced	★ D3DF 9D604-AA	
76	J	6	⊕171	★ D5RY 9A626-B	★ D6RY 9D612-A *CX-95	Not replaced
77/78	J	6	⊕171	★ D6RY 9A626-A	★ D6RY 9D612-A *CX-95	Not replaced
79	J - - w/o Hi-altitude carb.	4	@140 exc. TC	E2ZZ 9A626-A	NONE	Inner
79	J	4	@140 TC	E2ZZ 9A626-B	NONE	Inner
79 79 79	J - - M/T without Hi-altitude carb. J - - A/T "Before 11/13/78" J - - A/T - Calif. "From 11/13/78"	4 4 4	@140 exc. TC @140 @140	D9FZ 9A626-A	D4FZ 9D612-A	Outer
79 79 79	J J - - M/T with Hi-altitude carb. J - - A/T exc. Calif.- "From 11/13/78"	4 4 4	@140 TC @140 exc. TC @140	D9ZZ 9A626-A	D9FZ 9D612-A *CX-361	

COPYRIGHT © 1986 — FORD MOTOR COMPANY — DEARBORN, MICHIGAN

1973/79 LINCOLN-MERCURY CARS

YEAR	MODEL/RESTRICTIONS	ENGINE CYL.	ENGINE C.I.D. (C.C.D.)	PART NUMBER DUCT AND VALVE ASSY.	PART NUMBER VALVE	DESCRIPTION
9A626	DUCT and VALVE ASSY. (CARBURETOR AIR CLEANER) — Cont'd ▲ 2000cc @ 2300cc ♦ 2600cc ⊕ 2800cc					
	J (Capri)					
79	J	6	⊕171	★ D7ZZ 9A626-A Not replaced	D7AZ 9D612-B *CX-119	
79	J	6	200	D7DZ 9A626-A	D7DZ 9D612-B *CX-105	
79 79	J - - A/T exc. Calif. J - - M/T	8	302	★ D9BZ 9A626-A Not replaced	D7AZ 9D612-B *CX-119	
79	J - - A/T Calif.	8	302	D7ZZ 9A626-B	D7AZ 9D612-B *CX-119	
	K (Mark IV, Mark V)					
73	K	8	All	★ D3SZ 9A626-B Not replaced	D7AZ 9D612-C *CX-149	
74	K - - T/E	8	All	★ D4AZ 9A626-A Not replaced	D7AZ 9D612-C *CX-149	
74	K - - without T/E	8	All	★ D4AZ 9A626-C Not replaced	D7AZ 9D612-C *CX-149	
75/76	K	8	All	★ D5AZ 9A626-A Not replaced	D5AZ 9D612-A *CX-59	
77 78/	K K - - w/o Hi-altitude carb.	8 8	400 400	D7TZ 9A626-E	D7TZ 9D612-A *CX-106	
78/	K - - w/Hi-altitude carb.	8	400	D7TZ 9A626-F	D7TZ 9D612-B *CX-120	
77	K - - w/o Hi-altitude carb.	8	460	★ D7AZ 9A626-D Not replaced	D7AZ 9D612-B *CX-119	
77	K - - w/Hi-altitude carb.	8	460	D7AZ 9A626-C	D7AZ 9D612-B *CX-119	
78	K	8	460	D7AZ 9A626-E	D7AZ 9D612-C *CX-149	
	L (Bobcat)					
73	L - - A/T	4	▲122	★ D3FZ 9A626-B	NONE	Not replaced
74	L	4	▲122	★ D3FZ 9A626-A	NONE	Not replaced
74	L	4	@140	D4FZ 9A626-B	NONE	Inner
75/	L	4	@140	E0FZ 9A626-B	NONE	Inner
79 79 79	L - - A/T-exc. Calif.- "Before 11/13/78" L(62,64) - - M/T with 3.08 rear axle-exc. Calif.- "Before 11/13/78" L(73) - - M/T-exc. Calif.- "Before 11/13/78"	4 4 4	@140 @140 @140	D9FZ 9A626-A	D4FZ 9D612-A	Outer
74/78 79 79 79 79 79 79	L L - - A/T-Calif.- "Before 11/13/78" L - - A/T "From 11/13/78" L(62,64) - - M/T with 2.73 rear axle- "Before 11/13/78" L(62,64) - - M/T with 3.08 rear axle-Calif.- "Before 11/13/78" L(73) - - M/T-Calif.- "Before 11/13/78" L - - M/T "From 11/13/78"	4 4 4 4 4 4 4	@140 @140 @140 @140 @140 @140 @140	D9ZZ 9A626-A	D9FZ 9D612-A *CX-361	Outer

YEAR	MODEL/RESTRICTIONS	ENGINE CYL.	ENGINE C.I.D. (C.C.D.)	PART NUMBER DUCT AND VALVE ASSY.	PART NUMBER VALVE	DESCRIPTION
9A626	DUCT and VALVE ASSY. (CARBURETOR AIR CLEANER) — Cont'd ▲ 2000cc @ 2300cc ♦ 2600cc ⊕ 2800cc					
	L (Bobcat)					
75/76	L	6	⊕171	D5FZ 9A626-C	D5DZ 9D612-A *CX-60	
77/	L	6	⊕171	★ D7ZZ 9A626-A Not replaced	D7AZ 9D612-B *CX-119	
	P (Comet)					
73	P	6	All	★ D3DZ 9A626-D Not replaced	★ D3DF 9D604-AA	
74	P	6	All	★ D4DZ 9A626-A Not replaced	★ D3DF 9D604-AA	
75/76	P	6	200	★ D5ZZ 9A626-D Not replaced	D5DZ 9D612-A *CX-60	
77	P	6	200	★ D7ZZ 9A626-A Not replaced	D7AZ 9D612-B *CX-119	
75/76	P	6	250	★ D5DZ 9A626-C Not replaced	D5DZ 9D612-A *CX-60	
77	P - - Canada	6	250			
77	P - - exc. Canada	6	250	D7DZ 9A626-A	D7DZ 9A612-B *CX-105	
73	P	8	302	★ D3DZ 9A626-E Not replaced	D7AZ 9D612-C *CX-149	
74	P	8	302	★ D4DZ 9A626-C Not replaced	D7AZ 9D612-C *CX-149	
75/76	P	8	302	★ D50Z 9A626-A Not replaced	D5AZ 9D612-A *CX-59	
77	P	8	302	D7AZ 9A626-A	D7AZ 9D612-B *CX-119	
	P (Zephyr)					
78/79	P - - M/T	4	@140	D9FZ 9A626-A	D4FZ 9D612-A	Outer
78/79	P - - A/T "Before 11/13/78"	4	@140			
78/79	P - - A/T-Calif. "From 11/13/78"	4	@140			
79	P - - A/T exc. Calif.- "From 11/13/78"	4	@140	D9ZZ 9A626-A	D9FZ 9D612-A	Outer
78/79	P "Before 10/2/78"	4	@140	E2ZZ 9A626-B	NONE	Inner
79	P "From 10/2/78"	4	@140	E2ZZ 9A626-A	NONE	Inner
78/	P	6	200	D7DZ 9A626-A	D7DZ 9D612-B *CX-105	
78	P	8	302	D7ZZ 9A626-B	D7AZ 9D612-B *CX-119	
79	P - - Calif. or Hi-altitude carb.	8	302			
79	P - - exc. Calif. or Hi-altitude carb.	8	302	★ D9BZ 9A626-A Not replaced	D7AZ 9D612-B *CX-119	
	V (Versailles)					
77	V	8	302, 351W	D7AZ 9A626-A	D7AZ 9D612-B *CX-119	
79	V - - without E.E.C.	8	302			
78	V	8	302	★ D8DZ 9A626-A Not replaced	D7AZ 9D612-B *CX-119	
79	V - - with E.E.C.	8	302			

COPYRIGHT © 1986 — FORD MOTOR COMPANY — DEARBORN, MICHIGAN

1973/79 LINCOLN-MERCURY CARS

YEAR	MODEL/RESTRICTIONS	ENGINE CYL.	ENGINE C.I.D. (C.C.D.)	PART NUMBER DUCT AND VALVE ASSY.	PART NUMBER VALVE	DESCRIPTION
9A626	DUCT and VALVE ASSY. (CARBURETOR AIR CLEANER) — Cont'd ▲ 2000cc @ 2300cc ♦ 2600cc ⊕ 2800cc					
	Y (Meteor)					
73	Y "Before 2/1/73"	8	351	★ D3AZ 9A626-C Not replaced	D7AZ 9D612-C *CX-149	
73	Y "From 2/1/73"	8	351	★ D3AZ 9D626-B Not replaced	D7AZ 9D612-C *CX-149	
74	Y	8	351	★ D4DZ 9A626-C Not replaced	D7AZ 9D612-C *CX-149	
76	Y	8	351M, 400			
75	Y	8	351M	★ D5AZ 9A626-B Not replaced	D7AZ 9D612-C *CX-149	
73	Y "From 2/1/73"	8	400	★ D3ZZ 9A626-E Not replaced	D7AZ 9D612-C *CX-149	
74/75	Y	8	400, 460 P/C	★ D4AZ 9D626-A Not replaced	D7AZ 9D612-C *CX-149	
73	Y	8	429,460 exc. P/C	★ D3SZ 9A626-B Not replaced	D7AZ 9D612-C *CX-149	
73	Y "Before 2/1/73"	8	400, 460 P/C			
74	Y	8	460 exc. P/C	★ D4AZ 9A626-C Not replaced	D7AZ 9D612-C *CX-149	
75/76	Y	8	460 exc. P/C	★ D5AZ 9A626-A Not replaced	D5AZ 9D612-A *CX-59	
76	Y	8	460 P/C			

YEAR	MODEL/RESTRICTIONS	ENGINE CYL.	ENGINE C.I.D. (C.C.D.)	PART NUMBER	DESCRIPTION	QTY.
9A627	BRACKET (CARBURETOR AIR CLEANER SUPPORT) ▲ 2000 cc @ 2300 cc ⊕ 2800 cc					
73/74	J	4	▲122	D1RY 9A627-A	Front	1
				★ D2RY 9A627-A	Rear-not replaced	1
76/78	J	4	@140	★ D5RY 9A627-A	Not replaced	1
73/74	J	4	▲122	E602165-S82	(AB-16)-bolt (bracket to air cleaner and manifold)-M6 x 20 (Metric coarse)	4
73/74	J	4	▲122	E630025-S71	(AX-10-A)-washer (bracket to air cleaner)-flat-M6 (Metric)	2
73/74	J	4	▲122	E890050-S	(AK-10)-grommet (bracket to air cleaner)	2
9E628	RETAINER (CRANKCASE EMISSION FILTER)					
73/	A,C,D,F,G,J,K,L,P,V,Y	4,6 &8	All	D1AZ 9E628-A		1
9E629	SLEEVE (FUEL VAPOR STORAGE CANISTER PURGE INLET) @2300cc ⊕2800cc					
78/	P	4	@140	D9BZ 9E629-A	Units built prior 10/3/77 must also use D8AZ 9D653-C canister	1
78/	P	8	302			1
77/	L	4	@140			1
77/	L	6	⊕171			1
79	J	8	302			1
9C631	Refer to group 9510 for Carburetor Parts List Instructions					
9B632	TUBE (CARBURETOR AIR CLEANER INLET)-Improvise from C9UZ 9652-A					
9634-9645	Refer to group 9510 for Carburetor Parts List Instructions					
9E645	TEE (FUEL VAPOR STORAGE CANISTER)					
77	G,P - - w/Hi-altitude carb.	8	302	D7AZ 9E645-A		1
77	F - - w/Hi-altitude carb.	8	351M			1
77	A,F - - w/Hi-altitude carb.	8	400			1
77	A,D,K - - w/Hi-altitude carb.	8	460			1

YEAR	MODEL/RESTRICTIONS	ENGINE CYL.	ENGINE C.I.D. (C.C.D.)	PART NUMBER	DESCRIPTION	QTY.
9E645	TEE (FUEL VAPOR STORAGE CANISTER) — Cont'd					
78	A,F	8	351M	D8AZ 9E645-A		1
78	A,D,F,K	8	400			1
78	G	6	250			1
78	P	6	200			1
78	G - - M/T-exc. Calif.	8	302			1
79	A	8	302			2
79	A	8	351W			1
79	F	8	302, 351W	D9OZ 9E645-A		1
9646-9650	Refer to group 9510 for Carburetor Parts List Instructions					
9B650	THERMOSTAT (CARBURETOR AIR CLEANER AIR DUCT) ▲ 2000 cc					
73	J	4	▲122	★ D1RY 9B650-A	Not replaced	1
9P651	Refer to group 9510 for Carburetor Parts List Instructions					
9652	TUBE ASSY. (CARBURETOR AIR CLEANER) ▲ 2000 cc @ 2300 cc ♦ 2600 cc ⊕ 2800 cc					
73/	A,C,D,F,K,G,L,P,Y	6&8	All	C9UZ 9652-A	Paper and aluminum-2" I.D. x 18" long-cut to required length	1
78/	P	4	@140			1
73/74	J	6	♦159			1
74/76	J	6	⊕171			1
77/	V	8	All			1
79	J	All	All			1
73/74	J	4	▲122	D0RY 9652-A		1
74/78	J	4	@140	D4FZ 9652-C	2 1/16" I.D. x 9" long	1
74/	L	4	@140			1
9P652	Refer to group 9510 for Carburetor Parts List Instructions					
9D653	CANISTER ASSY. (FUEL VAPOR STORAGE) ▲ 2000 cc @ 2300 cc ⊕ 2800 cc					
73	A,C,D,F,K,P,Y	6&8	All	★ D3AZ 9D653-C Not replaced	Kit consists of (1) D3BZ 9D653-B canister, (1) D1AZ 9E602-A cap and (1) IS 4498	1
74/75	A,C,D,F,K,P,Y	6&8	All	D4AZ 9D653-B	#D4AF 9D653-AA, D4DF 9D653 AA,BA D5DF 9D653-AA-Kit consists of (1) D5DF 9D653-AA Canister, (1) 380613-S Cap & (1) I.S.-4499	1
75	G "Before 6/2/75"	6&8	All			1
76	L "From 11/10/75"	4&6	All	★ D6FZ 9D653-B	*CX-74-#D6EF 9D653-BA-not replaced	1
73/74	J	4&6	All	★ D4RY 9D653-A	#74EB 9D653-AA-not replaced	1
74	L	4	▲122	★ D4FZ 9D653-B	#D42B 9D653-BA	1
74	L - - without T/E	4	@140	Not replaced		1
74	L - - T/E	4	@140	★ D4FZ 9D653-A	#D42F 9D653-AA,AB	1
75	L	4	@140	Not replaced		1
76	J "Before 8/1/75"	4	@140			1
75	L	6	⊕171	★ D5ZZ 9D653-A	#D52F 9D653-AA	1
76	J "Before 8/1/75"	6	⊕171	Not replaced		1
77	K	8	400	★ D7AZ 9D653-A	*CX-86-#D7AF 9D653-AA	1
77	G,P,V - - Calif.	8	302	Not replaced		1
77	A,D,K - - w/o Hi-altitude carb.	8	460	★ D7AZ 9D653-B	*CX-159 - #D7AE 9D653-AA	1
77	A	8	460P/C	Not replaced		1

COPYRIGHT © 1986 — FORD MOTOR COMPANY — DEARBORN, MICHIGAN

1973/79 LINCOLN-MERCURY CARS

YEAR	MODEL/RESTRICTIONS	ENGINE CYL.	ENGINE C.I.D. (C.C.D.)	PART NUMBER	DESCRIPTION	QTY.
9D653	CANISTER ASSY. (FUEL VAPOR STORAGE) — Cont'd ▲ 2000 cc @ 2300 cc ⊕ 2800 cc					
76/78	J "From 8/1/75"	4&6	All	D7VY 9D653-A	*CX-87 #D6EF 9D653-AA,AB,	1
76	L "Before 11/10/75"	4&6	All		D64F 9D653-AA,AB, D7EE 9D653-AA,BA,	1
77	L "Before 6/27/77"	4&6	All		D7VF 9D653-AA, 76EB 9D633-AA	1
75/76	G "From 6/2/75 to 11/10/75"	6&8	All			1
76	K,P "Before 11/10/75"	All	All			1
77	G,P	6	200,250			1
77	G,P,V - - exc. Calif. or Hi-altitude carb.	8	302			1
77	F	8	302			1
77	F,G,V	8	351W			1
77	A	8	351M			1
77	A - - w/o-Hi-altitude carb.	8	400			1
77	D	8	400			1
77	G,P,V - - w/Hi-altitude carb.	8	302	★ D7AZ 9D653-C	*CX-195 #D7AE 9D653-BA-not replaced	1
77	F - - w/Hi-altitude carb.	8	351M			1
77	A,F - - w/Hi-altitude carb.	8	400			1
77	A,D,K - - w/Hi-altitude carb.	8	460			1
77/78	L - - A/T-exc. Canada "From 6/27/77"	4	@140	D8AZ 9D653-C	*CX-232-A #D8AE 9D653-BA,BB, D9AE 9C985-BB,BC-Black-w/tab slot	1
77/78	L - - M/T- "From 6/27/77"	4	@140			1
79	J,L	4	@140			1
78/	P	4	@140			1
77/	L "From 6/27/77"	6	⊕ 171			1
79	J	6	⊕ 171			1
78/	G,P	6	All			1
78/	G,P	8	302			1
78/79	V "Before 12/4/78"	8	302			1
79	V - - w/o E.E.C. "From 12/4/78"	8	302			1
79	V - - w/Hi-altitude carb.	8	302			1
78/	F	8	302			2
79	A,J	8	302			1
78/	A,F	8	351W			2
78	A - - exc. Canada	8	351M			1
78	F - - w/o Hi-altitude Carb.	8	351M			1
78	F - - w/Hi-altitude Carb.	8	351M			2
79	F	8	351M		Primary Canister	1
79	F - - Calif. or Hi-altitude carb.- "Before 3/5/79"	8	351M		Secondary canister	1
79	F "From 3/5/79"	8	351M		Secondary canister	1
78	A,D,F,K	8	400		Primary canister	1
78	A,F - - w/Hi-altitude Carb.	8	400		Secondary canister	1
78	A,D,K	8	460			2
78	A	8	460P/C			2
79	D,K	8	400		Primary Canister	1
79	D,K - - w/Hi-altitude carb.	8	400		Secondary Canister	1

YEAR	MODEL/RESTRICTIONS	ENGINE CYL.	ENGINE C.I.D. (C.C.D.)	PART NUMBER	DESCRIPTION	QTY.
9D653	CANISTER ASSY. (FUEL VAPOR STORAGE) - Cont'd ▲ 2000cc @ 2300cc ⊕ 2800cc					
76	A,C,D,F,Y	8	All	D80Z 9D653-A	*CX-274-A #D6VF 9D653-AA, D8AE 9D653-DA, D80E 9D653-AA-Natural	1
76	G,K,P "From 11/10/75"	6&8	All			1
77	F - - w/o Hi-altitude carb.	8	351M, 400			1
77	D - - exc. Calif.	8	400			1
78	L - - A/T-Canada	4	@140			1
78	A	8	351M			1
78	A - - w/o Hi-altitude Carb.	8	400		Secondary canister	1
78/	D,K - - w/o Hi-altitude carb.	8	400		Secondary canister	1
78	F - - w/o Hi-altitude carb.	8	351M, 400			1
79	F - - exc. Calif. or Hi-altitude carb. "Before 3/5/79"	8	351M		Secondary canister	1
79	F	8	351W		Secondary canister	1
79	A - - Canada "Before 1/15/79"	8	351W		Secondary canister-framed mounted	1
79	A - - w/Hi-altitude carb. "From 1/15/79 to 3/5/79"	8	351W		Secondary canister-frame mounted	1
79	A - - Canada- "Before 1/15/79"	8	351W	D9AZ 9D653-C	*CX-370-#D9AE 9C985-CB,CC-Primary canister-fender mounted	1
79	A - - w/Hi-altitude carb. "From 1/15/79 to 3/5/79"	8	351W		Primary canister-fender mounted	1
79	V - - with E.E.C. without Hi-altitude carb. "From 12/4/78"	8	302	★ D94Y 9D653-A Not replaced	*CX-401-#D94E 9C985-AA	1
73/78	J	4&6	All	E602164-S72	Bolt (canister assy.)-M6 x 12 (Metric coarse)	2
73/78	J	4&6	All	E620013-S72	Nut (canister assy.)-M6 (Metric coarse)	AR
73/77	P	6&8	All	33795-S7	(M-49)-nut & washer assy. (canister assy. to R.H. fender apron)-1/4"-20	3
9P653	Refer to group 9510 for Carburetor Parts List Instructions					
9654	GASKET (CARBURETOR AIR CLEANER BOTTOM) ▲ 2000 cc @ 2300 cc ⊕ 2800 cc					
73	A,C,D,F,K,P,Y	8	All	C5ZZ 9654-C	Fiber-5 1/8" I.D. x 5 3/8" O.D. x 3/16" thick	1
74	A,C,D,F,K,Y	8	302,351, 400			1
74	A,C,D,F,K,Y - - without T/E	8	460		Used w/o Carter carb.	1

COPYRIGHT © 1986 — FORD MOTOR COMPANY — DEARBORN, MICHIGAN

1973/79 LINCOLN-MERCURY CARS

YEAR	MODEL/RESTRICTIONS	ENGINE CYL.	ENGINE C.I.D. (C.C.D.)	PART NUMBER	DESCRIPTION	QTY.
9654	GASKET (CARBURETOR AIR CLEANER BOTTOM) — Cont'd ▲ 2000 cc @ 2300 cc ⊕ 2800 cc					
75/78	A	8	All	D8AZ 9654-B		1
75/76	C,Y	8	All			1
76	J "Before 8/30/76"	6	⊕ 171			1
75/77	G	8	351W			1
75/76	G,P	8	302			1
77/79	G,P,V - - exc. Calif.	8	302			1
75/76	L	6	⊕171			1
77/79	L - - exc. Calif.	6	⊕ 171			1
79	A - - Canada	8	351W			1
75/79	D,F,K	8	All			1
79	J - - exc. Calif.	6	⊕171			1
79	J - - exc. Calif.	8	302			1
74	A,C,D,F,K,Y - - T/E	8	460	★ D40Z 9654-A Not replaced	5" I.D. x 5 1/2" O.D. x 3/32" thick-used w/ Carter 4/B carb.	1
73/74	C,P	6	250	E43Z 9654-A	Fiber-2 3/8" I.D. x 2 3/4" O.D. x 1/16" thick	1
78/	P - - A/T	6	200			1
79	J	6	200			1
73/74	J	4	▲122	D2RY 9654-A		1
73/74	J	6	All	D1FZ 9654-B		1
76/78	J	4	@140	★ D5RY 9654-A	Not replaced	1
74	L	4	▲122	D1FZ 9654-B		1
74/77	L "Before 6/27/77"	4	@140			1
73/77	P	6	All	C8DZ 9654-A	2 5/8" I.D. x 3 1/8" O.D. x 1/32" thick	1
75/	G	6	All			1
78/	P - - M/T	6	200			1
76/	J - - Calif. "From 8/30/76	6	⊕171	D8ZZ 9654-A		1
77/	L - - Calif.	6	⊕171			1
77/	G,P - - Calif.	8	302			1
77	V - - Calif.	8	302			1
79	A,V	8	302			1
79	J - - A/T-Calif.	8	302			1
79	A - - exc. Canada	8	351W			1
77/	L "From 6/27/77"	4	@140	E0FZ 9654-A		1
78/	P	4	@140			1
79	J	4	@140			1
9A659	NUT (CARBURETOR AIR CLEANER MOUNTING) ▲ 2000 cc					
73/74	J	4	▲122	★ D1RY 9A659-A Not replaced	Nut-hex. head-M5 x 45mm long internal thread (Metric)	4
73/74	J	4	▲122	E830256-S100	(AX-13-A)-washer (use w/air cleaner mounting nut to retain air cleaner to carb.)-flat (Metric)	4
73/74	J	4	▲122	E890064-S	(AK-7-H)-grommet (use w/air cleaner mounting nut to retain air cleaner to carb.) (Metric)	4
9A659	STUD (CARBURETOR AIR CLEANER RETAINING)-Also refer to group 9510 for Carburetor Parts List Instructions ▲ 2000 cc					
73/74	J	4	▲122	★ D0RY 9A659-C	Not replaced	4
9A659	STUD (AIR CLEANER TO CARBURETOR)-Also refer to group 9510 for Carburetor Parts Lists Instructions ⊕ 2800 cc					
74	J	6	⊕171	★ D4FZ 9A659-B	Not replaced	1

YEAR	MODEL/RESTRICTIONS	ENGINE CYL.	ENGINE C.I.D. (C.C.D.)	PART NUMBER	DESCRIPTION	QTY.
9D664-5	BRACKET and STRAP ASSY. (FUEL VAPOR STORAGE CANISTER) ▲ 2000 cc @ 2300cc					
73	A,C,D,K,Y	6&8	All	★ D0AZ 9D664-A	Not replaced	1
73	F,P	6&8	All	★ D3DZ 9D664-A	Not replaced	1
74/75	A,D,Y	8	All	D4AZ 9D664-A		1
77	A - - w/Hi-altitude carb.	8	400			1
77	A,D - - w/Hi-altitude carb.	8	460			1
77	A	8	460P/C			1
74/75	C,F,K	6&8	All	★ D40Z 9D664-A	Not replaced	1
77/78	F - - w/Hi-altitude carb.	8	351M, 400			1
77	K - - w/Hi-altitude carb.	8	460			1
75	G	6&8	All	★ D5DZ 9D664-A	Steel-Not replaced	1
77	G,V - - w/Hi-altitude carb.	8	302			1
75/76	G	6&8	All	D64Z 9D664-A	Nylon	1
77	G	6	200,250			1
77	G,V - - w/o Hi-altitude carb.	8	All			1
78/	D	8	All			1
76	L	4&6	All			1
77/	G	6&8	All	★ D7DZ 9D665-A	Not replaced	1
77/	L	4&6	All	★ D7FZ 9D664-A	Not replaced	1
76	A,D,Y	8	All	★ D9AZ 9D665-C	Not replaced	1
77	A	8	351M			1
77	A - - w/o Hi-altitude carb.	8	400			1
77	D	8	400			1
77	A,D, - - w/o Hi-altitude carb.	8	460			1
78/79	A	8	All			1
78/	D	8	All			1
76	C,F	8	All	★ D8DZ 9D664-A	Not replaced	1
77	F	8	302			1
77	F	8	351W			1
77	F - - w/o Hi-altitude carb.	8	351M, 400			1
78	F,K,P	8	All			1
79	F	8	All			2
79	J,P	4	@140			1
79	J,P	8	302			1
79	K	8	400			1
79	J	6	⊕ 171			1
73/74	J - - w/o hang-on A/C	4	▲122	★ D2RY 9D664-A	Not replaced	1
73/74	J - - w/hang-on A/C	4	▲122	★ D3FZ 9D664-B	Not replaced	1
74	L - - w/hang-on A/C	4	▲122			1
76	J "Before 8/1/75"	4&6	All	★ D5RY 9D664-A	Not replaced	1
76/78	J "From 8/1/75"	4&6	All	★ D6RY 9D664-A	Not replaced	1
73/74	J	6	All	★ D1RY 9D664-A	Not replaced	1
74	L - - w/o hang-on A/C	4	▲122	★ D4FZ 9D664-A	Not replaced	1
74	L	4	@140			1
75	L	4&6	All	★ D5FZ 9D664-A	Not replaced	1
74/75	P	6&8	All	★ D4DZ 9D664-A	Not replaced	1
76	P	6&8	All	★ D6DZ 9D664-A	Not replaced	1
77	P	6	200,250			1
77	P - - w/o Hi-altitude carb.	8	302			1
77	P - - w/Hi-altitude carb.	8	302	★ D3TZ 9D664-A	Not replaced	1
79	A	8	All	E0AZ 9D665-A	Attaches primary canister	1
73/78	A,C,D,K,Y	6&8	All	40923-S8	(U-264)-screw (bracket and strap assy. to R.H. frame)-5/16"-18	2

COPYRIGHT © 1986 — FORD MOTOR COMPANY — DEARBORN, MICHIGAN

1973/79 LINCOLN-MERCURY CARS

YEAR	MODEL/RESTRICTIONS	ENGINE CYL.	ENGINE C.I.D. (C.C.D.)	PART NUMBER	DESCRIPTION	QTY.
9D664-5	BRACKET and STRAP ASSY. (FUEL VAPOR STORAGE CANISTER) — Cont'd ▲ 2000 cc @ 2300cc					
73/74	J	6	All	E602164-S72	Bolt (bracket and strap assy.)-M6 x 12 (Metric coarse)	2
76/78	J	6	All	350754-S8	(UU-86)-screw-No. 10-16	2
73/74	J	6	All	E630172-S71	Washer (bracket and strap assy.)-M6 (Metric)	2
9P664	WIRING ASSY. (CARBURETOR EMISSION CONTROL SOLENOID GROUND)-Improvise from bulk wire (14296)					
9D667	TUBE ASSY. (FUEL VAPOR STORAGE) ▲ 2000 cc ♦ 2600 cc ⊕ 2800 cc					
73/	A,C,D,F,G,K,L,P,Y	All	All	D4ZZ 9D667-A	Cut to size	1
76	J	4&6	All			1
77/	V	8	All			1
73/74	J	4	▲122	★ D1RY 9D667-A	Cut from D1PZ 9324-E	1
73	J	6	♦159	★ D2RY 9D667-A	Not replaced	1
74	J	6	⊕171	D1AZ 9D667-A	*FA-105	1
9D668	TUBE ASSY. (FUEL VAPOR STORAGE CANISTER PURGE OUTLET)-Improvise from D4ZZ 9D667-A					
73/	A,C,K	6&8	All	382932-S	(GG-338-C)-clip (tube assy. to fender apron)	1
9673	GASKET (CARBURETOR AIR CLEANER INTERNAL) ▲ 2000 cc					
73/74	J	4	▲122	★ D1RY 9673-A	Upper to lower body-Not replaced	1
9C675	Refer to group 9A624					
9677	BRACKET (THROTTLE CONTROL MOUNTING) ▲ 2000 cc					
73/74	J - - A/T	4	▲122	★ D3RY 9677-A	Not replaced	1
74	J	4	▲122	E603185-S72	(AB-3-E)-screw (bracket to manifold)-M8 x 14 (Metric)	2
9C685	BRACKET (AIR CLEANER INTAKE VALVE)					
76/78	J	4&6	All	★ D5RY 9C685-D	Upper-att. 9A624-not replaced	1
				★ D5RY 9C685-C	Lower-att. 9A624-not replaced	1
9E690	INSERT (CARBURETOR TO INTAKE MANIFOLD SPACER)					
73/74	A,C,D,F,K,Y - - without T/E	8	429,460	★ D3VY 9E690-A	Not replaced	1
9E691	GASKET (CARBURETOR AIR CLEANER TO DUCT and VALVE ASSY.)-Unless listed improvise					
79	A - - exc. Canada	8	351W	D9AZ 9E691-A		1
9D692	ADAPTER (FUEL VAPOR PURGE TUBE TO AIR CLEANER)					
73/75	A,C,D,F,G,J,K,L,P,Y	All	All	D0AZ 9D692-B		1
76/77	A,C,D,F,J,K,L,Y	All	All			1
76/77	G,P	8	All			1
77	V	8	All			1
76/77	G,P	6	200,250	D6DZ 9D692-A		1
9E692	WIRE ASSY. (CARBURETOR CHOKE) @ 2300 cc					
73	A,Y	8	351,400, 429,460	★ D3AZ 9E692-A	Not replaced	1
77/78	L	4	@140	★ D6ZZ 9E692-A	Not replaced	1
79	J,P - - A/T	6	200	★ D9BZ 9E692-A	#D9BB 9E692-AA-not replaced	1
9D695	FILTER ASSY. (CRANKCASE AIR CLEANER) ⊕ 2800 cc					
74/	L	4	@140	D3FZ 9D695-A	*FA-576-#FA-576 on housing	1
78/	P	4	@140			1
79	J	4	@140 exc. TC			1
73/76	C,G,J,L,P	6	All	D1AZ 9D695-A	*FA-88-#FA-88 on housing	1
77/	G,P	6	200,250			1
79	J	6	200			1

YEAR	MODEL/RESTRICTIONS	ENGINE CYL.	ENGINE C.I.D. (C.C.D.)	PART NUMBER	DESCRIPTION	QTY.
9D695	FILTER ASSY. (CRANKCASE AIR CLEANER) — Cont'd ⊕ 2800 cc					
73/77	A,C,D,F,G,K,P,Y	8	All	D1ZZ 9D695-A	*FA-87-#FA-87 on housing	1
77	V	8	All			1
78	A,D,K	8	460			1
78	A	8	460 P/C			1
77/	L	6	⊕171	D7FZ 9D695-A	*FA-642-#FA-642 on housing	1
79	J	6	⊕ 171			1
78/	F,G,P,V	8	302	D8AZ 9D695-A	*FA-675-#FA-675 on housing	1
79	J	8	302			1
78/	F	8	351W			1
78/	A,F	8	351M			1
78/	A,D,F,K	8	400			1
9697	GROMMET (CARBURETOR AIR CLEANER)					
73/78	J	6	All	C6TZ 9697-A	1/4" I.D. x 1" O.D. x 1/8" thick	1
74	L	4	All			2
76	G	6&8	All			1
77/	A,D,F,G,J,K,P,V	8	All			1
79	J	6	200			1
9D697	FILTER (CRANKCASE EMISSION) ⊕ 2800 cc					
73/	J,L	4	All	D3FZ 9D697-A	*FA-643	1
78/	P	4	@140			1
77/	L	6	⊕171	D7FZ 9D697-A	*FA-645	1
76/	J "From 8/30/76"	6	⊕171			1
73/76	C	6	All	D1AZ 9D697-A	*FA-105	1
73/	G,P	6	200,250			1
73/76	L	6	⊕171			1
73/76	J "Before 8/30/76"	6	⊕171			1
79	J	6	200			1
73/77	A,C,D,F,G,K,P,Y	8	All	D00Z 9D697-A	*FA-104	1
77	V	8	All			1
78	A,D,K	8	460			1
78	A	8	460 P/C			1
78/	F,G,P,V	8	302	D8AZ 9D697-A	*FA-678	1
79	J	8	302			1
78/	F	8	351W			1
78/	A,F	8	351M			1
78/	A,D,F,K	8	400			1
9D698	GROMMET (FUEL TANK VENT EXPANSION FUEL VAPOR TUBE) @ 2300cc ⊕ 2800cc					
79	L	4	@140	D9FZ 9D698-A		1
79	L	4	@140	D9FZ 9D698-C		1
79	J,L	6	⊕ 171			1
79	J	8	302			1

COPYRIGHT © 1986 — FORD MOTOR COMPANY — DEARBORN, MICHIGAN

1973/79
LINCOLN-MERCURY CARS

YEAR	MODEL/RESTRICTIONS	ENGINE CYL.	ENGINE C.I.D. (C.C.D.)	PART NUMBER	DESCRIPTION	QTY.
9B700	TUBE ASSY. (THERMOSTATIC CHOKE CONTROL INLET)-Improvise from bulk tubing (9291)					
9P701	SEAT (THROTTLE CONTROL CABLE ADJUSTMENT)					
74/78	J	4&6	All	★ D4RY 9P701-A	Not replaced	1
74/78	J	4&6	All	E864439-S81	Clip	1
9C704	CONNECTOR (CARBURETOR AIR CLEANER TO THERMOSTATIC CHOKE CONTROL INLET TUBE)-Improvise from bulk hose (17543)					
9A705	Refer to group 9510 for Carburetor Parts List Instructions					
9B705	CONNECTOR (ACCELERATOR SHAFT TO SPEED CONTROL SHAFT)					
73/	A,C,D,F,K,Y	8	All	D2AZ 9B705-A	No. 10 chain-17" long	1
76/	G	6&8	All			1
77/	V	8	All			1
79	J,P	All	All			1
9P706	PLUG (DECELERATION VALVE SEALING)					
73/74	J,L	4&6	All	D1FZ 9P706-B		1
9C708	CONNECTOR (CHOKE CONTROL INLET) ▲ 2000 cc					
74	J	4	▲122	★ D4RY 9C708-A	Not replaced	1
9A709	LEVER (ACCELERATOR PEDAL)					
73/78	J	4&6	All	D0RY 9A709-A		1
9B711	SHAFT and LEVER (SPEED CONTROL)					
73	A,Y	8	429,460	★ D4AZ 9B711-B	Not replaced	1
73/76	A,Y	8	351,400	★ D4AZ 9B711-A	Not replaced	1
74	A,Y - - without T/E	8	460			1
74	A,Y - - T/E	8	460	D4AZ 9B711-C		1
75/76	A,Y	8	460	★ D5AZ 9B711-A	Not replaced	1
9C711-9714	Refer to group 9510 for Carburetor Parts List Instructions					
9A714	INSERT (THERMOSTATIC CHOKE CONTROL)					
73	C	6	All	D3DZ 9A714-A		1
75/	G,P	6	All			1
73/76	C,G,P	8	302	D3TZ 9A714-A	Aluminum-39/64" dia. x 2 3/4" long	1
77/	F,G,P,V	8	302			1
79	A,J	8	302			1
73/76	C,G	8	351W	★ D30Z 9A714-A	5/8" I.D. x 1 1/2" long	1
75/77	G	8	351W	Not replaced		1
77/78	F	8	351W			1
77	V	8	351W			1
9E717	WIRING ASSY. (THROTTLE MODULATOR VALVE GROUND)					
73	A,Y - - C4	8	351	★ D2AZ 9E717-C	#D2AB 9E717-CA or CB-not replaced	1
73	C - - M/T	6	All	★ D30Z 9E717-A	#D30B 9E717-AA-not replaced	1
73	C - - M/T	8	302	★ D2BZ 9E717-A	#D2BB 9E717-AA-not replaced	1
9E719	BRACKET (SPEED SENSOR MOUNTING)-Also refer to group 9E730 ▲ 2000 cc					
76/	G - - A/T	6&8	All	★ D6DZ 9E719-A	Not replaced	1
77/	V	8	All			1
73/74	J	4	▲122	★ D2RY 9E719-A	Not replaced	1

COPYRIGHT © 1986 — FORD MOTOR COMPANY — DEARBORN, MICHIGAN

1973/79 LINCOLN-MERCURY CARS

YEAR	MODEL/RESTRICTIONS	ENGINE CYL.	ENGINE C.I.D. (C.C.D.)	PART NUMBER	DESCRIPTION	QTY.
9E720	COUPLING ASSY. (SPEED CONTROL SENSOR)					
73	A,D,K,Y	8	All	★ D0AZ 9E720-A	Not replaced	AR
9P721	LEVER (THROTTLE CONTROL SHAFT TRANSMISSION KICKDOWN)					
76/78	J - - A/T	4&6	All	★ D5RY 9P721-A	Not replaced	1
9E723	HOSE ASSY. (SPEED CONTROL REGULATOR TO VACUUM SUPPLY)-Improvise from bulk hose (17543)					
9E724	WIRING ASSY. (CARBURETOR THROTTLE ACTUATOR) @ 2300cc					
77/78	L - - Calif.	4	@140	★ D8FZ 9E724-A	# D8EB 9E724-AB,AC,AD,AE-not replaced	1
79	J - - Calif.	4	@140 TC	★ D9ZZ 9E724-A	# D9ZB 9E724-AA-not replaced	1
79	L - - Calif.	4	@140	★ D9FZ 9E724-A	# D9EB 9E724-AH-not replaced	
9E724	WIRING ASSY. (THROTTLE MODULATOR CONTROL)					
73	C	6&8	All	★ D2BZ 9E724-A	# D2BB 9E724-AC-not replaced	1
9725	ACCELERATOR ASSY.-Also refer to group 9919					
	A (Mercury)					
73/74	A	8	All	★ D4AZ 9725-B	Incl. chrome pedal-not replaced	1
75/76	A	8	All	★ D5AZ 9725-B	Incl. chrome pedal-not replaced	1
77/78	A	8	All	D7AZ 9725-A	Incl. pedal	1
79	A	8	All	D9AZ 9725-A	Incl. pedal	1
	C (Montego)					
73	C	6&8	All	D4SZ 9725-A	Incl. pedal	1
74	C	8	302, 351C-2/B	★ D40Z 9725-B	Incl. pedal-Not replaced	1
74	C	8	351W, 351-4/B, 400,460	★ D40Z 9725-A	Incl. pedal-Not replaced	1
75/76	C	8	All	D5SZ 9725-A	Incl. pedal	1
	D (Lincoln)					
73/74	D	8	All	★ D4AZ 9725-B	Incl. chrome pedal-not replaced	1
75/76	D	8	All	★ D5AZ 9725-B	Incl. chrome pedal-not replaced	1
77/	D	8	All	D7AZ 9725-A	Incl. pedal	1
	F (Cougar)					
73	F	8	All	★ D3ZZ 9725-A	Incl. pedal-Not replaced	1
74	F	8	302, 351C-2/B	★ D40Z 9725-B	Incl. pedal-Not replaced	1
74	F	8	351W, 351-4/B, 400,460	★ D40Z 9725-A	Incl. pedal-Not replaced	1
75/76	F	8	All	D5SZ 9725-A	Incl. pedal	1
77/	F	8	All	D70Z 9725-B	Incl. pedal	1
	G (Monarch)					
75/	G	6&8	All	D7DZ 9725-C	Incl. pedal	1
	J (Capri)					
73/78	J	4&6	All	★ D3RY 9725-A	Pedal to lever-not replaced	1
79	J	All	All	D8BZ 9725-A	Incl. pedal	1
	K (Mark IV, Mark V)					
73/74	K			★ D4SZ 9725-A	Incl. pedal-not replaced	1
75/76	K			D5SZ 9725-A	Incl. pedal	1
77/	K			D70Z 9725-B	Incl. pedal	1

1973/79 LINCOLN-MERCURY CARS

YEAR	MODEL/RESTRICTIONS	ENGINE CYL.	ENGINE C.I.D. (C.C.D.)	PART NUMBER	DESCRIPTION	QTY.
9725	ACCELERATOR ASSY.-Also refer to group 9919 — Cont'd.					
	L (Bobcat)					
74	L	4	All	★ D4FZ 9725-A	Incl. pedal-not replaced	1
75/	L	4&6	All	D7FZ 9725-A	Incl. pedal	1
	P (Comet)					
73/74	P	6&8	All	★ D4DZ 9725-A	Incl. pedal-not replaced	1
75/77	P	6&8	All	★ D7DZ 9725-A	Incl. pedal-not replaced	1
	P (Zephyr)					
78/	P	All	All	D8BZ 9725-A	Incl. pedal	1
	V (Versailles)					
77/	V	8	All	D7DZ 9725-C	Incl. pedal	1
	Y (Meteor)					
73/74	Y	8	All	★ D4AZ 9725-B	Incl. chrome pedal-not replaced	1
75/76	Y	8	All	★ D5AZ 9725-B	Incl. chrome pedal-not replaced	1
9D726	CLIP (SPEED CONTROL CABLE RETAINER)					
79	A	8	All	D9AZ 9D726-B		1
79	J,P	4&6	All			1
9C727	VALVE ASSY. (SPEED CONTROL METERING)					
79	A,J,P	All	All	D9AZ 9C727-B	Dump valve	1
9728	BRACKET (ACCELERATOR SHAFT) ▲ 2000 cc @ 2300 cc ♦ 2600 cc ⊕ 2800 cc					
	A (Mercury)					
73	A	8	351	D3AZ 9728-A		1
73/74	A - - without T/E	8	400	D4AZ 9728-J		1
74	A - - T/E	8	400	D4AZ 9728-A		1
75/76	A	8	400	D60Z 9728-B		1
77/78	A	8	351M, 400			1
73	A	8	429,460	D4AZ 9728-K		1
74	A - - without T/E	8	460			1
74	A - - T/E	8	460	D4AZ 9728-B		1
75/78	A	8	460, 460 P/C	★ D5AZ 9728-A	Not replaced	1
79	A - - w/aluminum manifold	8	302	D9AZ 9728-A		1
79	A - - w/cast iron manifold	8	302	D9AZ 9728-C		1
79	A	8	351W	D9AZ 9728-B		1

COPYRIGHT © 1986 — FORD MOTOR COMPANY — DEARBORN, MICHIGAN

1973/79 LINCOLN-MERCURY CARS

YEAR	MODEL/RESTRICTIONS	ENGINE CYL.	ENGINE C.I.D. (C.C.D.)	PART NUMBER	DESCRIPTION	QTY.
9728	BRACKET (ACCELERATOR SHAFT) — Cont'd ▲ 2000 cc @ 2300 cc ♦ 2600 cc ⊕ 2800 cc					
	C (Montego)					
73/74	C	6	250	★D40Z 9728-B	Not replaced	1
73	C	8	302	D30Z 9728-A		1
74	C	8	302	★D40Z 9728-C	Not replaced	1
73	C	8	351C	D3AZ 9728-A		1
74	C – – without T/E	8	351C	D4AZ 9728-H		1
74	C – – T/E	8	351C-2/B	D4AZ 9728-C		1
75/76	C	8	351M, 400	D60Z 9728-B		1
73/76	C	8	351W	★D60Z 9728-A	Not replaced	1
73/74	C – – without T/E	8	400	D4AZ 9728-J		1
74	C – – T/E	8	400	D4AZ 9728-A		1
73	C	8	429,460	D4AZ 9728-K		1
74	C – – without T/E	8	460			1
74	C – – T/E	8	460	D4AZ 9728-B		1
75/76	C	8	460	★D5AZ 9728-A	Not replaced	1
	D (Lincoln)					
73/74	D – – without T/E	8	460	D4AZ 9728-K		1
74	D – – T/E	8	460	D4AZ 9728-B		1
75/78	D	8	460	★D5AZ 9728-A	Not replaced	1
77/	D	8	400	D60Z 9728-B		1
	F (Cougar)					
77/	F	8	302	D70Z 9728-A		1
73	F	8	351	D3AZ 9728-A		1
74	F – – without T/E	8	351C	D4AZ 9728-H		1
74	F – – T/E	8	351C-2/B	D4AZ 9728-C		1
75/	F	8	351M	D60Z 9728-B		1
75/78	F	8	400			1
74/76	F	8	351W	★D60Z 9728-A	Not replaced	1
77/78	F	8	351W	★D70Z 9728-B	Not replaced	1
79	F	8	351W	D9WY 9728-A		1
74	F – – without T/E	8	400	D4AZ 9728-J		1
74	F – – T/E	8	400	D4AZ 9728-A		1
74	F – – without T/E	8	460	D4AZ 9728-K		1
74	F – – T/E	8	460	D4AZ 9728-B		1
75/76	F	8	460	★D5AZ 9728-A	Not replaced	1
	G (Monarch)					
75/77	G	6	200	D9BZ 9728-D		1
75/	G	6	250	★D5DZ 9728-B	Not replaced	1
75	G	8	302	★D5DZ 9728-C	Not replaced	1
76	G – – w/speed control	8	302	★D6DZ 9728-B	Not replaced	1

YEAR	MODEL/RESTRICTIONS	ENGINE CYL.	ENGINE C.I.D. (C.C.D.)	PART NUMBER	DESCRIPTION	QTY.
9728	BRACKET (ACCELERATOR SHAFT) — Cont'd ▲ 2000 cc @ 2300 cc ♦ 2600 cc ⊕ 2800 cc					
	G (Monarch)					
76/78	G – – w/o speed control	8	302	★D7DZ 9728-A	Not replaced	1
79	G – – w/cast iron manifold	8	302			1
79	G – – w/aluminum manifold	8	302	D9DZ 9728-A		1
75/76	G	8	351W	★D7DZ 9728-B	Not replaced	1
77	G – – w/o speed control	8	351W			1
	J (Capri)					
73/74	J – – M/T	4	▲122	★D3RY 9728-A	Not replaced	1
73	J – – A/T	4	▲122	★D1RY 9728-B	Not replaced	1
74	J – – A/T	4	▲122	★D4RY 9728-C	Not replaced	1
76/78	J	4	@140	★D7RY 9728-C	Not replaced	1
73	J	6	♦159	★D2RY 9728-C	Rear-not replaced	1
				★D2RY 9728-D	Front-Not replaced	1
74	J	6	⊕171	★D5RY 9728-C	Rear-not replaced	1
				★D2RY 9728-D	Front-Not replaced	1
76	J "Before 8/30/76"	6	⊕171	★D5RY 9728-C	Not replaced	1
76/78	J – – Calif "From 8/30/76"	6	⊕171	★D6RY 9728-A	Not replaced	1
76/78	J – – exc Calif "From 8/30/76"	6	⊕171	★D6RY 9728-B	Not replaced	1
79	J – – A/T without speed control	4	@140	D8BZ 9728-A		1
79	J – – A/T with speed control	4	@140	D9BZ 9728-C		1
79	J – – M/T without speed control	4	@140	D8FZ 9728-A		1
79	J – – M/T with speed control	4	@140	D9BZ 9728-B		1
79	J – – w/o speed control	6	⊕171	★D8FZ 9728-B	Not replaced	1
79	J – – w/speed control	6	⊕171	D9ZZ 9728-B		1
79	J – – A/T	6	200	★E1SZ 9728-A	Not replaced	1
79	J	8	302	★D9ZZ 9728-A	Not replaced	1
	K (Mark IV,Mark V)					
77/	K	8	400	D60Z 9728-B		1
74	K – – T/E	8	460	D4AZ 9728-B		1
73/74	K – – without T/E	8	460	D4AZ 9728-K		1
75	K	8	460	★D5AZ 9728-A	Used w/9A758 cable-w/o grommet	1
75/78	K	8	460	★D5SZ 9728-A	Used w/9A758 cable-w/grommet	1
	L (Bobcat)					
74	L – – M/T	4	▲122	D4FZ 9728-B		1
74	L – – A/T	4	▲122	D4FZ 9728-A		1
74	L – – A/T	4	@140	★D5ZZ 9728-C	Not replaced	1
75/	L – – A/T	4	@140	D8BZ 9728-A		1
74/	L – – M/T	4	@140	D8FZ 9728-A		1
75/76	L	6	⊕171	★D5FZ 9728-C	Not replaced	1
77/78	L "Before 11/14/77"	6	⊕171	★D7FZ 9728-A	Not replaced	1
78/	L "From 11/14/77"	6	⊕171	★D8FZ 9728-B	Not replaced	1
	P (Comet)					
73/74	P	6	200	D4DZ 9728-C		1
75/77	P	6	200	D9BZ 9728-D		1
73/74	P	6	250	★D40Z 9728-B	Not replaced	1
75/77	P	6	250	★D5DZ 9728-B	Not replaced	1

COPYRIGHT © 1986 — FORD MOTOR COMPANY — DEARBORN, MICHIGAN

1973/79 LINCOLN-MERCURY CARS

YEAR	MODEL/RESTRICTIONS	ENGINE CYL.	ENGINE C.I.D. (C.C.D.)	PART NUMBER	DESCRIPTION	QTY.
9728	BRACKET (ACCELERATOR SHAFT) — Cont'd ▲ 2000 cc @ 2300 cc ♦ 2600 cc ⊕ 2800 cc					
	P (Comet)					
73/75	P	8	302	★D5DZ 9728-C	Not replaced	1
76/77	P	8	302	★D7DZ 9728-A	Not replaced	1
	P (Zephyr)					
78	P - - A/T	4	@140	D8BZ 9728-A		1
79	P - - A/T without speed control	4	@140			1
79	P - - A/T with speed control	4	@140	D9BZ 9728-B		1
78	P - - M/T	4	@140	D8FZ 9728-A		1
79	P - - M/T without speed control	4	@140			1
79	P - - M/T with speed control	4	@140	D9BZ 9728-B		1
78	P	6	200	★E1SZ 9728-A	Not replaced	1
79	P - - A/T	6	200			1
79	P - - M/T	6	200	D9BZ 9728-D		1
78/	P	8	302	D74Y 9728-A		1
	V (Versailles)					
77/	V	8	302	D74Y 9728-A		1
77	V	8	351W	★D70Z 9728-B	Not replaced	1
	Y (Meteor)					
73	Y	8	351	D3AZ 9728-A		1
73	Y	8	429,460	D4AZ 9728-K		1
74	Y - - without T/E	8	460			1
74	Y - - without T/E	8	351C	D4AZ 9728-H		1
74	Y - - T/E	8	351C	D4AZ 9728-C		1
73/74	Y - - without T/E	8	400	★D4AZ 9728-J		1
74	Y - - T/E	8	400	D4AZ 9728-A		1
74	Y - - T/E	8	460	D4AZ 9728-B		1
75/76	Y	8	351M, 400	D60Z 9728-B		1
75/76	Y	8	460	★D5AZ 9728-A	Not replaced	1
73/74	J	4	▲122	E800116-S72	Screw-hex. hd.-M6 x 15 (Metric coarse)	1
73	J	6	♦159	E602186-S72	Bolt (bracket)-M8 x 16 (Metric coarse)	2
73	J	6	♦159	E630153-S71	Lockwasher (bracket)-M8 (Metric)	2
73	A,Y	8	All	42789-S8	(U-10)-screw & washer assy. (bracket to intake manifold)-5/16"-18 x 5/8"	2
74	L	4	▲122	★N800001-S51	Screw (bracket to manifold)-M8 x 14 (Metric fine)	2
9E728	RETAINER (ACCELERATOR CABLE)					
75/	A,C,D,F,G,J,K,L,P,V,Y	4,6 &8	All	D5AZ 9E728-A	Retains dash panel insulation to 9A758	1
9E730	BRACKET (THROTTLE MODULAR MOUNTING)-Also refer to group 9E719 ♦ 2600 cc					
73	J	6	♦159	D2RY 9E730-A		1
73/76	D	8	All	★D2VY 9E730-A	Not replaced	1
9E731	SENSOR ASSY. (SPEED)-Also refer to group 9D842					
73/	All - - w/dealer installed electronic speed control kit	All	All	D9AZ 9E731-A	Road speed pick-up coil	1
73/	All - - w/dealer installed electronic speed control kit	All	All	D9AZ 9E731-B	Driveshaft magnet kit-includes (2) magnets, glue and tape-used on units with D9AZ 9D757-A regulator assy. (color-black)	1
73/	All - - w/dealer installed electronic speed control kit	All	All	E2AZ 9E731-A	Driveshaft magnet kit-includes (1) magnet, glue and tape-used on units with E2AZ 9D757-A regulator assy. (color-blue)	1

YEAR	MODEL/RESTRICTIONS	ENGINE CYL.	ENGINE C.I.D. (C.C.D.)	PART NUMBER	DESCRIPTION	QTY.
9E731	SENSOR ASSY. (SPEED)-Also refer to group 9D842 — Cont'd					
74/	A	8	All	D4AZ 9E731-A	*DY-144-#D4AF 9E731-AA	1
76/	G	6&8	All			1
77/	V	8	All			1
74/76	Y	8	All			1
73	C	8	351,400, 429,460, 460 P/C	★ D2AZ 9E731-C	*DY-111-#D2AF 9E731-CA-not replaced	1
74/76	C,F	8	All	D4AZ 9E731-C	*DY-146-#D4AF 9E731-CA	1
77/	F	8	All			1
74/	D	8	All	D4AZ 9E731-B	*DY-145-#D4AF 9E731-BA	1
74/	K	8	All		Speed Control	1
78/	K	8	All		Miles to empty fuel indicator	1
79	J,P	4,6 &8	All			1
73	F	8	351	★ D2AZ 9E731-A	*DY-110-#D2AF 9E731-AA-not replaced	1
73/74	J	4&6	All	★ D2AZ 9E731-B	*DY-108-#D2AF 9E731-BA-not replaced	1
73	A,D,Y	8	All			1
73	K	8	All	★ D2AZ 9E731-D	*DY-140-#D2AF 9E731-DA-not replaced	1
9C734	SERVO and BRACKET ASSY. (SPEED CONTROL)					
75/76	D,K	8	460	★ D5SZ 9C734-B	R/b D7LY 9C734-A(5/81)	1
77/78	D,K	8	460	D7LY 9C734-A		1
9735	COVER (ACCELERATOR PEDAL PAD)					
73/76	A,K,Y	8	All	★ D20Z 9735-A		1
74/75	F	6&8	All	Not replaced		1
75/76	D	8	All			1
73/75	C	6&8	All			1
73	F	8	All	D1ZZ 9735-B		1
77/	V	8	All	D74Y 9735-A		1
78/	K	8	All			1
9735	PEDAL ASSY. (ACCELERATOR)-Also refer to group 9725					
73/78	J	4&6	All	★ D0RY 9735-A	Pedal assy.-not replaced	1
9C735	SERVO ASSY. (SPEED CONTROL)					
73/78	A,C,D,F,G,J,K,L,P - - A/T- exc. electronic speed control	All	All	D4AZ 9C735-C	Use w/dealer installed speed control kit	1
73/	A,C,D,F,G,J,K,L,P - - with electronic speed control	4,6 8	All	D9AZ 9C735-B	Use with dealer installed speed control kit	1
73	A,Y	8	All	★ D3AZ 9C735-B	#D3AA 9C735-AB-not replaced	1
74/76	A,Y	8	All	D5AZ 9C735-A	#D4AA 9C735-BA,D5AA 9C735-AB-BA, D6AA 9C735-AA	1
77/78	A	8	All	D7AZ 9C735-A	#D7AF 9C735-AA	1
74	C,F	6 & 8	250,302, 351,400	D50Z 9C735-A	#D40A 9C735-AB, D50A 9C735-AC,BA, D60A 9C735-AA	1
74	C,F - - without T/E	8	460			1
75/76	C,F	8	All			1
77/	F	8	351,400			1
74	C,F - - T/E	8	460	D6UZ 9C735-A	#D3SA 9C735-AA or AB, D4SA 9C735-AB D5SA 9C735-AC,BA,D6SA 9C735-AA	1
73/76	D,K	8	460			1
76/	G	6 & 8	All			1
77/	D,K,V	8	All			1
77/	F	8	302			1
79	A,J,P	All	All	E2FZ 9C735-A	#D9AF 9C735-AB	1
9C736	BRACKET (SPEED CONTROL SERVO) @ 2300cc ⊕ 2800cc					
73/76	A,Y	8	All	D1AZ 9C736-A		1
79	A	8	302, 351W	★ D9AZ 9C736-A	Not replaced	1
79	A - - w/o speed control	8	351W		Use to attach 9E453 EGR vacuum reservoir to fender apron	1

COPYRIGHT © 1986 — FORD MOTOR COMPANY — DEARBORN, MICHIGAN

1973/79 LINCOLN-MERCURY CARS

YEAR	MODEL/RESTRICTIONS	ENGINE CYL.	ENGINE C.I.D. (C.C.D.)	PART NUMBER	DESCRIPTION	QTY.
9C736	BRACKET (SPEED CONTROL SERVO) — Cont'd @2300 cc ⊕ 2800 cc					
79	J,P	4	@140	★ D9BZ 9C736-D	Incl. (2) N620480-S2 Nuts	1
79	J	6	⊕171	Not replaced		1
79	J,P	6	200			1
9737	SPRING (ACCELERATOR RETRACTING) ▲ 2000 cc @ 2300 cc ⊕ 2800 cc					
73	J	4	▲122	★ D0RY 9737-A	Not replaced	1
74	J	4	▲122	★ D4RY 9737-C	Not replaced	1
74	J	6	⊕171			1
76/78	J	4	@140	★ D5RY 9737-B	Not replaced	1
76/78	J	4&6	All	D5RY 9737-A	Free length-3 21/32"	1
74/78	J	6	⊕171	★ D4RY 9737-B	Not replaced	1
9K737	Refer to group 9510 for Carburetor Parts List Instructions					
9C740	ROD (SPEED CONTROL PIVOT ARM TO CARBURETOR)					
73	A,Y	8	All	★ D3AZ 9C740-A	Not replaced	1
74/76	A,Y	8	351,400	★ D4AZ 9C740-A	Not replaced	1
74	A,Y - - without T/E	8	460			1
74	A,Y - - T/E	8	460	★ D4AZ 9C740-B	Not replaced	1
9E740	SWITCH ASSY. (SPARK CONTROL) ▲ 2000 cc					
73/74	J	4	▲122	★ D2AZ 9E740-B	#White-not replaced	1
73	P - - A/T	6	200			1
9A745	SHIELD (CARBURETOR THERMOSTATIC CHOKE HEAT TUBE INLET)					
73	C,P	6	All	★ C1KE 9A745-A	Use w/carb. having thermostatic choke	1
74	C,P	6	250	Not replaced		1
75/77	G,P	6	250			1
9746	LINK (THROTTLE CONTROL) ▲ 2000 cc @ 2300 cc ♦ 2600 cc ⊕ 2800 cc					
73	J "Before 3/1/73"	4	▲122	★ D3RY 9746-A	Not replaced	1
73	J "From 3/1/73"	4	▲122	★ D3RY 9746-B	Incl. (1) E864408-S32 clip-not replaced	1
74	J	4	▲122	★ D4RY 9746-B	#74EB 9746-BB-not replaced	1
76/78	J	4	@140			1
73	J	6	♦159	★ D2RY 9746-A	Not replaced	1
74	J	6	⊕171	★ D4RY 9746-A	Not replaced	1
76/78	J	6	⊕171	★ D5RY 9746-B	#75EB 9746-CC-not replaced	1
73	J	4	▲122	· 120196-ES	Clip-connector	2
74	J	4&6	All	E864408-S82	(AG-28)-clip (throttle link to throttle shaft)	2
9C746	HOSE (SPEED CONTROL REGULATOR TO SERVO)-Improvise from bulk hose (17543)					
9E747	BRACKET (SPARK CONTROL SWITCH HOUSING)					
76	J - - M/T	6	⊕171	★ D5RY 9E747-A	Not replaced	1
9C748	HOSE (SPEED CONTROL METERING VALVE TO VACUUM SUPPLY)-Improvise from bulk hose (17543)					
9A751-53	Refer to group 9510 for Carburetor Parts List Instructions					
9P753	ADAPTER (EXHAUST GAS RECIRCULATING VALVE) ⊕ 2800cc					
73/74	A,C,D,F,K,Y	8	429,460	D3AZ 9P753-A		1
76	A,C,D,F,K - - Calif.	8	460 exc. P/C	D5TZ 9P753-A		1
78	A,D,F,K	8	400	★ D8AZ 9P753-A Not replaced	As listed in TSB No. 158, dated 5/23/78, article 3199	1
79	J,L	6	⊕171	★ D9ZZ 9P753-A	Not replaced	1

YEAR	MODEL/RESTRICTIONS	ENGINE CYL.	ENGINE C.I.D. (C.C.D.)	PART NUMBER	DESCRIPTION	QTY.
9A754	Refer to group 9510 for Carburetor Parts List Instructions					
9D757	REGULATOR ASSY. (SPEED CONTROL)					
73/78	A,C,D,F,G,J,K,L,P - - A/T exc. electronic speed control	All	All	★ D4AZ 9D757-A Not replaced	Use w/dealer installed speed control kit	1
73/	All - - w/dealer installed electronic speed control kit	All	All	D9AZ 9D757-A	Black box	1
73/	All - - w/dealer installed electronic speed control kit	All	All	E2AZ 9D757-A	Blue box	1
9A758	CABLE ASSY. (ACCELERATOR PEDAL TO CARBURETOR THROTTLE) ▲ 2000 cc ♦ 2600 cc ⊕ 2800 cc @2300 cc					
	A (Mercury)					
73/74	A	8	351,400	D4AZ 9A758-F	24" long	1
73	A	8	429,460	★ D4AZ 9A758-G	25 1/2" long-not replaced	1
74	A - - without T/E	8	460			1
74	A - - T/E	8	460	★ D4AZ 9A758-E	24 3/4" long-not replaced	1
77/78	A	8	351M	D7AZ 9A758-A	23 13/32" long	1
75/78	A	8	400			
75/78	A	8	460, 460P/C	D7AZ 9A758-B	24 27/32" long	1
79	A	8	302, 351W	E0AZ 9A758-A	21 1/2" long	1
	C (Montego)					
73	C	6	250	★ D30Z 9A758-B	30 1/2" long-not replaced	1
73/74	C	8	302,351-2/B,400	D40Z 9A758-J	21" long	1
74	C	8	351-4/B	D40Z 9A758-L	21" long	1
75/76	C	8	351, 400	D70Z 9A758-C	20 1/4" long must also replace (9725) accelerator assy.	1
73	C	8	429, 460 P/C	★ D40Z 9A758-K	22 1/2" long-not replaced	1
74	C - - without T/E	8	460			1
74	C - - T/E	8	460	★ D40Z 9A758-H	22 1/4" long-Not replaced	1
75/76	C	8	460, 460 P/C	★ D50Z 9A758-B	22 3/4" long-not replaced	1
	D (Lincoln)					
73	D	8	460	★ D4VY 9A758-B	26 1/2" long-not replaced	1
74	D - - T/E	8	460			1
74	D - - without T/E	8	460	★ D4VY 9A758-C	27" long-not replaced	1
77/	D	8	400	D7AZ 9A758-B	24 27/32" long	1
75/78	D	8	460	D7VY 9A758-A	26 5/16" long	1
	F (Cougar)					
74	F	8	302,351-2/B,400	D40Z 9A758-J	21" long	1
73	F	8	351-2/B	D3ZZ 9A758-B	23" long	1
73	F	8	351-4/B	★ D3ZZ 9A758-C	23 1/4" long-not replaced	1
74	F	8	351-4/B	D40Z 9A758-L	21" long	1
75/76	F	8	351,400	D70Z 9A758-C	20 1/4" long-on units built prior 3/1/77	1
77/	F	8	All		must also replace (9725) accelerator assy.	1
74	F - - without T/E	8	460	★ D40Z 9A758-K	22 1/2" long-not replaced	1
74	F - - T/E	8	460	★ D40Z 9A758-H	22 1/4" long-Not replaced	1
75/76	F	8	460	★ D50Z 9A758-B	22 3/4" long-not replaced	1

COPYRIGHT © 1986 — FORD MOTOR COMPANY — DEARBORN, MICHIGAN

1973/79 LINCOLN-MERCURY CARS

YEAR	MODEL/RESTRICTIONS	ENGINE CYL.	ENGINE C.I.D. (C.C.D.)	PART NUMBER	DESCRIPTION	QTY.
9A758	CABLE ASSY. (ACCELERATOR PEDAL TO CARBURETOR THROTTLE) — Cont'd ▲ 2000 cc ♦ 2600 cc ⊕ 2800 cc @2300 cc					
	G (Monarch)					
75/	G	6	All	E0DZ 9A758-A	27 3/8" long-on units built prior 2/15/77 must also replace (9725) accelerator assy.	1
75/	G	8	302	E0DZ 9A758-B	19 7/8" long-on units built prior 2/15/77 must also replace (9725) accelerator assy.	1
75/77	G	8	351W	★ D7DZ 9A758-H Not replaced	19 7/8" long-on units built prior 2/15/77 must also replace(9725)accelerator assy.	1
	J (Capri)					
73	J	4	▲122	D3RY 9A758-A		1
74	J	4	▲122	★ D4RY 9A758-C	Not replaced	1
76/78	J	4	@140	D5RY 9A758-A		1
73	J	6	♦159	D3RY 9A758-F		1
74	J	6	⊕171			1
76/78	J	6	⊕171	D5RY 9A758-C	#75EB 9C799-BA,BB	1
79	J	4	@140 exc. TC	E0BZ 9A758-D	21 7/8" long	1
79	J	4	@140 TC	E0BZ 9A758-C	22 7/8" long	1
79	J	6	⊕171	D9ZZ 9A758-C	17 11/16" long	1
79	J	6	200	E0BZ 9A758-B	27 1/4" long	1
79	J	8	302	D9BZ 9A758-B	19 3/8" long	1
	K (Mark IV, Mark V)					
73	K	8	460	D4SZ 9A758-D	26 1/2" long	1
74	K - - without T/E	8	460			1
74	K - - T/E	8	460	★ D4SZ 9A758-C	26" long-not replaced	1
77/	K	8	400	D7LY 9A758-D	24 5/16" long-on units built prior 3/1/77 must also replace (9725) accelerator shaft assy.	1
75/78	K	8	460	D7LY 9A758-C	25 11/16" long-on units built prior 3/1/77 must also replace (9725) accelerator shaft assy.	1
	L (Bobcat)					
74	L	4	▲122	D4FZ 9A758-D		1
74	L	4	@140	D4FZ 9A758-C	22 1/2" long	1
75/76	L	4	@140	D5FZ 9A758-B	22 3/16" long	1

YEAR	MODEL/RESTRICTIONS	ENGINE CYL.	ENGINE C.I.D. (C.C.D.)	PART NUMBER	DESCRIPTION	QTY.
9A758	CABLE ASSY. (ACCELERATOR PEDAL TO CARBURETOR THROTTLE) — Cont'd ▲ 2000 cc ♦ 2600 cc ⊕ 2800 cc @2300 cc					
	L (Bobcat)					
77/	L	4	@140	E0FZ 9A758-A	22 1/4" long	1
75/79	L	6	⊕171	D9FZ 9A758-A	20 1/2" long	1
	P (Comet)					
73/74	P	6	All	D4DZ 9A758-D	28 1/2" long	1
73/74	P	8	302	D4DZ 9A758-E	21" long	1
75/77	P	6	200,250	D7DZ 9A758-A	27 17/32" long	1
75/77	P	8	302	D7DZ 9A758-B	20" long	1
	P (Zephyr)					
78/79	P	4	@140	E0BZ 9A758-D	21 7/8" long	1
78/	P	6	200	E0BZ 9A758-B	27 1/4" long	1
78/	P	8	302	D9BZ 9A758-B	19 3/8" long	1
	V (Versailles)					
77/	V	8	302	E04Y 9A758-A	19 11/16" long	1
77	V	8	351W	★D74Y 9A758-B	19 7/8" long-not replaced	1
	Y (Meteor)					
73/74	Y	8	351,400	D4AZ 9A758-F	24" long	1
73	Y	8	429,460	★D4AZ 9A758-G	25 1/2" long-not replaced	1
74	Y - - without T/E	8	460			1
74	Y - - T/E	8	460	★D4AZ 9A758-E	24 3/4" long-not replaced	1
75/76	Y	8	351M, 400	D5AZ 9A758-B	24" long	1
75/76	Y	8	460, 460 P/C	D7AZ 9A758-B	24 27/32" long	1
73	J	4	▲122	120367-ES2	(AG-4)-clip (throttle control cable to shaft) (Metric)	1
73/78	J	4 & 6	All	E864224-S82	Clip (2 req'd throttle cable-2 req'd link) (Metric)	AR
73/78	J	4 & 6	All	E464033-S81	(AG-12)-clip (cable to air cleaner)-6.35M (Metric)	1
74	J	4 & 6	All	E864408-S82	(AG-28)-clip (cable assy. to throttle shaft assy.)	1
74	J	4 & 6	All	E864439-S81	(AG-25)-clip (used on cable assy.)-special 10" dia. cable	1
9D760	LEVER ASSY (SPEED CONTROL)					
77/78	A	8	351M	D8AZ 9D760-A		1
77/78	A	8	400			1
77/	F,G,V	8	All			1
77/	D,K	8	400			1
77/78	A,D,K	8	460	★D7AZ 9D760-B	Not replaced	1
77/	G	6	250	D7DZ 9D760-A		1

COPYRIGHT © 1986 — FORD MOTOR COMPANY — DEARBORN, MICHIGAN

1973/79 LINCOLN-MERCURY CARS

YEAR	MODEL/RESTRICTIONS	ENGINE CYL.	ENGINE C.I.D. (C.C.D.)	PART NUMBER	DESCRIPTION	QTY.
9A762	BRACKET (ACCELERATOR SHAFT TO DASH)					
73/74	A,Y	8	All	★ C9AZ 9A762-A	Not replaced	1
73	D	8	All	★ D0VY 9A762-A	Not replaced	1
73	F	6 & 8	All	★ D3ZZ 9A762-A	Not replaced	1
79	A	8	All	D9AZ 9A762-A		1
9B762	HOSE (EXHAUST GAS RECIRCULATION VACUUM CONTROL TO CARBURETOR)					
73/74	J	6	All	★ D3RY 9B762-A	Not replaced	1
9764	BRACKET ASSY. (THROTTLE CONTROL) ▲ 2000 cc ⊕ 2800 cc					
73	J	4	▲122	D3RY 9764-A		1
74	J - - M/T	4	▲122	★ D4RY 9764-A	Not replaced	1
76	J - - M/T	6	⊕171	★ D5RY 9764-C	#75EB 9677-BA,BB-not replaced	1
9B768	Refer to group 9510 for Carburetor Parts List Instructions					
9D770	HOSE (SPEED CONTROL REGULATOR TO VALVE SUPPLY) - Improvise from bulk hose (17543)					
9C771	Refer to group 9510 for Carburetor Parts List Instructions					
9772	ROD and SPRING ASSY. (ACCELERATOR CONTROL RETURN) ♦ 2600 cc					
73	J	6	♦159	★ D2RY 9772-A	Not replaced	1
74/78	J	4&6	All	D4RY 9772-A		1
9P780	Refer to group 9B450					
9P784	CONNECTOR (EXHAUST GAS RECIRCULATION VALVE) ▲ 2000 cc					
74	J,L	4	▲122	★ D4FZ 9P784-A	Not replaced	1
9C786	ADAPTER (THERMOSTATIC CHOKE CONTROL INLET TUBE)-Also refer to group 9510 for Carburetor Parts List Instructions ▲ 2000 cc					
73/	C,F,G,P	8	302	C4AZ 9C786-A	Steel-with (1) 31/64" opening and (1) 1/4" opening-located in R.H. exhaust manifold assy.	1
73/78	C,F,G	8	351W			1
77/	V	8	302			1
77	V	8	351W			1
73/74	J	4	▲122	D1FZ 9C786-A		1
73/74	P - - without T/E	6	200,250	C9DZ 9C786-A	Inlet-45 degree-7/32" I.D.-1/4" large I.D. x 7/32" O.D.	1
75/	G,P	6	200,250			1
74	P - - T/E	6	All	★ D4DZ 9C786-A	Not replaced	1
9C787	BRACKET ASSY. (SPEED CONTROL)					
74	C,F	6&8	250,302, 351,400	★ D50Z 9C787-B	Not replaced	1
74	C,F - - without T/E	8	460			1
74/76	C,F	8	All			1
77/	F	8	351,400			1
77/78	A	8	All	★ D7AZ 9C787-A	Not replaced	1
74	C,D,F,K - - T/E	8	460	★ D40Z 9C787-C	Use w/servo-not replaced	1
73	D,K	8	All	★ D3SZ 9C787-A	Not replaced	1
74	D,K - - without T/E	8	460	★ D4SZ 9C787-B	Use w/servo-Not replaced	1
77/	F	8	302	★ D70Z 9C787-A	Not replaced	1
76/	G	6	250	★ D7DZ 9C787-C	Not replaced	1
76	G "Before 1/5/76"	8	302	★ D6DZ 9C787-B	Not replaced	1
76	G "From 1/5/76"	8	302	★ D6DZ 9C787-D	Not replaced	1
77/79	G,V	8	302	★ D9DZ 9C787-A	Not replaced	1

YEAR	MODEL/RESTRICTIONS	ENGINE CYL.	ENGINE C.I.D. (C.C.D.)	PART NUMBER	DESCRIPTION	QTY.
9C787	BRACKET ASSY. (SPEED CONTROL) — Cont'd					
76	G	8	351W	★ D6DZ 9C787-E	Not replaced	1
77	G	8	351W	★ D7DZ 9C787-A	Not replaced	1
77	V	8	351W	★ D74Y 9C787-A	Not replaced	1
77/	D,K	8	400	D7LY 9C787-B		1
74	K - - w/o auto/lamp system	8	460	★ D4SZ 9C787-A	Use w/amplifier -not replaced	1
75/78	K	8	460			1
79	J,P	8	302	E35Y 9C787-A		1
9792	CLIP (OIL PIPE) ▲ 2000 cc ♦ 2600 cc					
73/74	J	4	▲122	★ D3RY 9792-A	Not replaced	1
76/78	J	4&6	All			1
73	J	6	♦159	★ D0RY 9792-A	Not replaced	1
9C792	RELAY and BRACKET ASSY. (SPEED CONTROL)					
73/78	A,C,D,F,G,J,K,L,P - - A/T	4,6 &8	All	D4AZ 9C792-B	Use w/dealer installed speed control kit	1
73	A,D,K	8	All	D3AZ 9C792-A	#D3AA 9C792-AA	1
74	A,C,D,F,K,Y	8	All	D4AZ 9C792-A	#D4AA 9C792-AA	1
75/78	A	8	All	D8AZ 9C792-A	#D5AA 9C792-AA, D7AF 9C792-AA	1
75/76	C,Y	8	All			1
75/	D,F	8	All			1
76/	G	6&8	All	D8DZ 9C792-A	#D6DZ 9C792-AA, D7DF 9C792-AA	1
77/	V	8	All			1
75/	K	8	All	D8LY 9C792-A	#D7LF 9C792-AA, D5SA 9C792-AA	1
9793	SEAL (ACCELERATOR PEDAL ROD)					
73/78	J	4&6	All	D0RY 9793-A	Choke control cable	1
73/74	J	4&6	All	★ D0RY 9793-B	Use with group 9919 shafts-not replaced	1
9C793	VALVE ASSY. (SPEED CONTROL VACUUM)					
73/	A,D,K	All	All	D80Z 9C793-B		1
73/76	C,Y	All	All			1
74/	F	All	All			1
76/	G	All	All			1
77/	V	All	All			1
9K793	VALVE ASSY. (DECELERATION) ▲ 2000 cc @ 2300 cc ♦ 2600 cc ⊕ 2800 cc					
73	J	4	▲122	D2RY 9K793-C		1
74	J,L - - without T/E	4	▲122			1
73	J - - M/T	6	♦159			1
74	J - - T/E	4	▲122	★ D4RY 9K793-A	Not replaced	1
75/76	J,L - - M/T-Calif.	4	@140	★ D5FZ 9K793-C	#D52E 9K793-CA-not replaced	1
74	J - - T/E	6	⊕171	D2RY 9K793-B		1
74	J - - without T/E	6	⊕171	★ D4FZ 9K793-A		1
74	L - - M/T without T/E	4	@140	Not replaced		1
74	L	4	▲122			1
75	L - - M/T exc. Calif.	4	@140	★ D5FZ 9K793-B	#D52E 9K793-BA	1
76/78	J - - M/T exc. Calif.	4	@140	Not replaced		1
76/77	L - - M/T-Canada	4	@140			1
75/76	L - - with A/C	4	@140	★ D5ZZ 9K793-A	#D5ZE 9K793-AA	1
77	L - - M/T with A/C-Calif.	4	@140	Not replaced		1
76/78	J - - A/T	4	@140			1
76	L - - M/T-Calif.	4	@140	D4FZ 9K793-B	#D42E 9K793-BA	1
76	L - - M/T exc. Calif. and Canada	4	@140	★ D6FZ 9K793-B	*CM-2369-#D6EE 9K793-BA,CA-not replaced	1
74/77	L	4	@140	385613-S36	(II-62-G)-nut (adapter to deceleration valve)-1"-12	1
76/78	J	4	@140	386683-S	(II-230)-elbow-90° 3/8" pipe	1

COPYRIGHT © 1986 — FORD MOTOR COMPANY — DEARBORN, MICHIGAN

1973/79 LINCOLN-MERCURY CARS

YEAR	MODEL/RESTRICTIONS	ENGINE CYL.	ENGINE C.I.D. (C.C.D.)	PART NUMBER	DESCRIPTION	QTY.
9E795	Refer to group 9C477					
9E799	RESERVOIR and BRACKET ASSY. (SPEED CONTROL VACUUM)					
73/	All - - w/dealer installed electronic speed control kit	All	All	E2AZ 9E799-A		1
73/76	A,D	8	All	D6AZ 9E799-A		1
74/76	C,F,K	6&8	All			1
77/78	A,D,F	8	All			1
77/	D,F	8	All			1
77/	K	8	All	D7LY 9E799-A		1
76/	G	6&8	All	D6DZ 9E799-A		1
77/	V	8	All			1
73	K	8	All	★ D3SZ 9E799-A	Not replaced	1
73/76	K	8	All	359160-S2	(RR-21)-retainer (speed control vacuum reservoir)	2
9K799	DIAPHRAGM ASSY. (DECELERATION VALVE) ▲ 2000 cc @ 2300 cc ♦ 2600 cc ⊕ 2800 cc					
73/74	J	4	▲122	D1FZ 9K799-B	*CM-2204	1
73	J	6	♦159			1
74	J - - T/E	6	⊕171			1
74	L	4	All			1
75	L	4&6	All			1
9800	Refer to group 9510 for Carburetor Parts List Instructions					
9E802	VALVE and HOSE ASSY. (SPEED CONTROL)-Improvise from bulk hose (17543) and (1) C8SZ 13B064-A					
9C804	SPRING (ACCELERATOR PEDAL PIVOT)					
73/76	A,D,Y	8	All	★ D3AZ 9C804-A	Not replaced	1
77/78	A	8	All			1
77/	D	8	All			1
73/76	C,K	8	All	D30Z 9C804-A		1
77/	K,V	8	All			1
77	P	6&8	All			1
74/	F,G	8	All			1
79	A	8	All			1
73	F,P	6&8	All	★ D3ZZ 9C804-A	Not replaced	1
74/76	P	6&8	All			1
73/78	J	4&6	All	D0RY 9C804-A		1
74/	L	4&6	All	D3FZ 9C804-A		1
78/	P	All	All			1
79	J	All	All			1
9C805	BUSHING (ACCELERATOR PEDAL LEVER PIVOT)					
73/	A,C,D,F,G,K,Y	6&8	All	C5AZ 9C805-A	Nylon-13/32" x 19/64" with 1/4" dia. bore-5/32" thick	AR
77/	V	8	All			AR
79	J	All	All			AR
73/78	J	4&6	All	D0RY 9C805-A	R.H. & L.H.	2
73	A,C,D,F,K,Y	6&8	All	353862-S8	(XX-10)-washer- "C"-13/64"	AR
		6&8	All	380340-S32	(GG-240)-clip	1
9D805	BRACKET ASSY. (SPEED CONTROL ACTUATOR MOUNTING)-also refer to group 9C876 @ 2300cc ⊕ 2800cc					
79	J,P	4	@140	D9BZ 9D805-C		1
79	J	6	⊕171	D9ZZ 9D805-B		1
79	J,P	6	200	D9BZ 9D805-D		1

1973/79 LINCOLN-MERCURY CARS

YEAR	MODEL/RESTRICTIONS	ENGINE CYL.	ENGINE C.I.D. (C.C.D.)	PART NUMBER	DESCRIPTION	QTY.
9E805	**CHAMBER and BRACKET ASSY. (CARBURETOR AIR CLEANER RESONANCE)**					
74/75	C,D,F,K	8	460 exc. P/C	★ D4VY 9E805-B	Not replaced	1
76/78	D,K	8	460			1
73	D,K	8	All	★ D3VY 9E805-A	Not replaced	1
73	C	8	429			1
9C809	**PLATE ASSY. (SPEED CONTROL BRACKET)**					
79	A	8	All	D9AZ 9C809-A		1
79	A - - w/o speed control	8	351W		Use to attach 9E453 EGR vacuum reservoir to fender apron	1
9816	**STOP (ACCELERATOR PEDAL)**					
73/78	J	4&6	All	★ D0RY 9816-A	Not replaced	1
9817	**Refer to group 9819**					
9A818	**SPEED CONTROL KIT**					
73/	All	All	All	★ E2AZ 9A818-A Not replaced	Electronic-use w/9E799 reservoir kit and appropriate 9A819 kit	1

Includes the following details which are available as loose service items

1-D9AZ 9E731-A	Sensor assy.	1-E2AZ 9D757-A	Regulator	1-D9AZ 9A840-B	Wiring harness assy.
1-E2AZ 9E731-A	Sensor assy.	1-E2AZ 9A837-A	Switch (release)	1-E2AZ 9C888-A	Engagement switch
1-D9AZ 9C735-B	Servo				

Balance of components are to be improvised, or if unable, procure from Perfect Circle Division, Dana Corp.

9819	**TUBE (CARBURETOR THERMOSTATIC CHOKE CONTROL OUTLET)-Unless listed improvise from bulk tubing (9291)** ▲ 2000 cc ♦ 2600 cc ⊕ 2800 cc					
73/74	A,C,F,Y	8	351C-2/B	★ D4AZ 9819-D	*CM-1813-A-not replaced	1
75/76	A,C,F,Y "From 5/1/75"	8	351M, 400	D5AZ 9819-B	*CM-2321	1
77/78	A,F	8	351M			1
77/78	A,D,F,K	8	400			1
74	A,C,F,Y - - T/E	8	400	★ D4AZ 9819-A	5 7/8" long-not replaced	1
75	A,C,F,Y "Before 5/1/75"	8	351M, 400			1
74	A,C,F,Y - - without T/E	8	400	★ D4AZ 9819-C	7 3/8" long-not replaced	1
74	A,D,K,Y - - T/E	8	460	D4VY 9819-A	6" long-use w/Carter Thermo Quad carb.	1
73	C,P	6	250	★ D3DZ 9819-B	Not replaced	1

COPYRIGHT © 1986 — FORD MOTOR COMPANY — DEARBORN, MICHIGAN

1973/79 LINCOLN-MERCURY CARS

YEAR	MODEL/RESTRICTIONS	ENGINE CYL.	ENGINE C.I.D. (C.C.D.)	PART NUMBER	DESCRIPTION	QTY.
9819	TUBE (CARBURETOR THERMOSTATIC CHOKE CONTROL OUTLET)-Unless listed improvise from bulk tubing (9291) — Cont'd					
73	C,P	8	302	C80Z 9819-D	*CM-1716-incl. (1) C80Z 9819-C tube, (1) C1AE 9865-A insulator (1) 357940-S sleeve and (1) 357980-S nut	1
75/76	C,G	8	351W	D5AZ 9819-A	*CM-2071	1
73/74	J	4	▲122	★ D1FZ 9819-B	Not replaced	1
73	J	6	♦159	★ D3RY 9819-A	*CM-1802-not replaced	1
76	J "Before 8/30/76"	6	⊕171	★ D5RY 9819-A	*CM-2242-not replaced	1
76/78	J - - exc Calif "From 8/30/76"	6	⊕171			1
76/78	J - - Calif "From 8/30/76"	6	⊕171	★ D6RY 9819-A	*CM-2427-not replaced	1
77/78	L - - A/T - Calif.	6	⊕ 171	★ D7ZZ 9819-B	*CM-2409-not replaced	1
79	J,L - - Calif.	6	⊕171	★ D9ZZ 9819-A	*CM-3114-not replaced	1
73	P	6	200	★ D3DZ 9819-A	Not replaced	1
77	G,P	6	200,250	D7DZ 9819-G	*CM-2441-A	1
78	P - - A/T	6	200	D8BZ 9819-C	*CM-2652	1
78	P - - M/T-Canada	6	200			1
78	P - - M/T-exc. Canada	6	200	D8DZ 9819-B	*CM-2728	1
78	G	6	250			1
77	F	8	302	D70Z 9819-A	*CM-2432	1
77	G,V - - Calif.	8	302	D7DZ 9819-C	*CM-2413	1
77	P,V - - exc. Calif.	8	302	D7DZ 9819-B	*CM-2412	1
77/78	G - - exc. Calif.	8	302			1
77	P - - Calif.	8	302	★ D7DZ 9819-A	*CM-2411-not replaced	1
78	P - - Calif.	8	302	★ D8BZ 9819-A	*CM-2649-not replaced	1
78	P - - exc. Calif.	8	302	D8BZ 9819-B	*CM-2650	1
78	F	8	302			1
78	G - - Calif.	8	302	D8DZ 9819-A	*CM-2653	1
78	V	8	302			1
79	A,G,J,P,V - - w/2700 carb.	8	302	D9AZ 9819-A	*CM-3549-7/32" silicone tube	1
79	F	8	302	D9BZ 9819-A	*CM-3057	1
79	J,P - - exc. Calif.	8	302			1
79	G - - exc. Calif.	8	302	D9DZ 9819-A	*CM-3058	1
79	G - - Calif.	8	302	★ D9DZ 9819-B	*CM-3045-not replaced	1
79	J,P - - Calif.	8	302	D90Z 9819-A	*CM-3044	1
79	V	8	302	D94Y 9819-A	*CM-3046	1
77	G,V	8	351W	D7DZ 9819-D	*CM-2414	1
77/	F	8	351W			1
79	A - - Canada	8	351W	D9AZ 9819-B	*CM-3043	1
73/78	C,P	6&8	All	357940-S	(II-54-X)-sleeve (outlet tube to carb.)-brass-1/4"	1
79	J,L - - exc. Calif.	6	⊕171			1
78/	P - - A/T	8	302	372223-S2	(GG-256-A)Clip 5/16"-snap-on	1
79	G,J - - exc. Calif.	8	302			1
79	J,L	6	⊕171			2
73/78	A,C,D,F,K,P,Y	6&8	All	357980-S	(MM-111)-nut (outlet tube to carb.)-brass-7/16"-24	1
9D819	Refer to group 9510 for Carburetor Parts List Instructions					

1973/79 LINCOLN-MERCURY CARS

YEAR	MODEL/RESTRICTIONS	ENGINE CYL.	ENGINE C.I.D. (C.C.D.)	PART NUMBER	DESCRIPTION	QTY.
9820	TUBE (THERMOSTATIC CHOKE CONTROL INLET)-Unless listed improvise from bulk tubing (9291) ▲ 2000 cc @ 2300 cc ♦ 2600 cc ⊕ 2800 cc					
73/74	J	4	▲122	D1RY 9820-A		1
76/78	J	4	@140	★ D5RY 9820-C	Not replaced	1
73	J	6	♦159	D3RY 9820-A		1
76/78	J	6	⊕171	★ D5RY 9820-A	Not replaced	1
74	J	6	⊕171	D4ZZ 9820-A		1
74	L	4	▲122	D1FZ 9820-A	Rubber-13 1/16" long	1
74/76	L	4	@140	D4FZ 9820-A	#D42E 9E737-AA-5/8" I.D. x 4 5/8" long	1
76/78	J	4	@140			1
78	P - - exc. Calif.	8	302	D9BZ 9820-A		1
79	F	8	302			1
79	J,P - - exc. Calif.	8	302			1
78	F	8	302	D8DZ 9820-A		1
78/79	G - - Calif.	8	302	★ D9DZ 9820-B	Not replaced	1
78	V	8	302			1
79	G - - exc. Calif.	8	302	D9DZ 9820-A		1
79	A	8	302	D90Z 9820-A		1
78/79	J,P - - Calif.	8	302			1
79	V "Before 5/21/79"	8	302	★ D94Y 9820-A	Not replaced	1
79	V "From 5/21/79"	8	302	D94Y 9820-B		1
9A820	SPEEDOMETER CABLE KIT (SPEED CONTROL) ⊕ 2800 cc					
73/74	C,F,P - - A/T	8	All	D4AZ 9A820-D	Use w/speed control kit (9A818)	1
73/78	A - - A/T	8	All			1
75/76	C,F,G - - A/T	8	All	D5DZ 9A820-G	Use w/speed control kit (9A818)	1
77/78	F,G	8	All			1
75/78	G - - A/T	6	All			1
74	L - - A/T	4&6	All	D4TZ 9A820-C	Use w/speed control kit (9A818)	1
74	P - - A/T	6	200,250			1
78	P - - A/T	6&8	All			1
9A820	CABLE and MODULATOR ASSY.-SPEED CONTROL)-Also refer to group 17260 @ 2300cc ⊕ 2800cc					
	LOWER					
74	A,Y "Before 6/3/74"	8	400, 460 exc. P/C	★ D4AZ 9A820-B Not replaced	34" long-use B9AZ 17262-A for service core-	1
74/76	Y "From 6/3/74"	8	400, 460 exc. P/C	D5AZ 9A820-B	34" long-use B9AZ 17262-A for service core	1
74/78	A	8	All			1
73	A,Y	8	460 P/C	★ D2AZ 9A820-A	42 1/4" long-not replaced	1
73	A,Y	8	All exc. 460 P/C	D0AZ 9A820-B	Use with EGR system and/or speed control-1/8" dia. x 33 1/4" long-use B9AZ 17262-A for service core	1
74	A,Y	8	460 P/C	★ D4AZ 9A820-C	34" long-not replaced	1
73	C - - C4 and CM	8	351C-2/B	★ D20Z 9A820-B	51 1/2" long-not replaced	1
74	C,F - - C4,CM	8	351-2/B			1
73	C - - C6	8	351C, 400,429	★ D20Z 9A820-C	54" long-not replaced	1
74	C,F - - C6	8	351-2/B			1
74	C,F	8	400,460			1

COPYRIGHT © 1986 — FORD MOTOR COMPANY — DEARBORN, MICHIGAN

1973/79 LINCOLN-MERCURY CARS

YEAR	MODEL/RESTRICTIONS	ENGINE CYL.	ENGINE C.I.D. (C.C.D.)	PART NUMBER	DESCRIPTION	QTY.
9A820	CABLE and MODULATOR ASSY.-SPEED CONTROL)-Also refer to group 17260 — Cont'd @ 2300cc ⊕ 2800cc					
	LOWER					
73	C - - M/T	8	All	★ D30Z 9A820-A	#D30F 9A820-AA-57 1/2" long -not replaced	1
75/76	C - - C/4,C/M	8	All	D50Z 9A820-A	59" long-use B9AZ 17262-A for service core	1
75/	F - - C/4,C/M	8	All			1
75/76	C - - C/6	8	All	D50Z 9A820-B	61" long-use B9AZ 17262-A for service core	1
75/78	F - - C6	8	All			1
73/74	D,K	8	All	D2SZ 9A820-B	40" long-use B9AZ 17262-A for service core	1
75/	D	8	All	D5VY 9A820-B	43 1/2" long-use B9AZ 17262-A for service core	1
73	F - - A/T	8	All	★ D2ZZ 9A820-A	49 1/2" long-not replaced	1
73	F - - M/T	8	351-4/B	★ D3ZZ 9A820-A	#D3ZF 9A820-AA-56" long -not replaced	1
76/	G	6&8	All	D5DZ 9A820-B	41 1/2" long-use D4AZ 17262-A for service core	1
77/	V	8	All			1
75/76	K	8	460	D5SZ 9A820-A	49" long-use B9AZ 17262-A for service core	1
77/79	K	8	All	D9LY 9A820-A	46 1/2" long-Speed control	1
78/79	K	8	All		Miles to empty fuel indicator	1
73/74	P - - A/T	6	200	★ D0DZ 9A820-A Not replaced	Use with EGR system-1/4" dia. x 46 1/2" long-use B9AZ 17262-A for service core	1
79	A	8	All	E0AZ 9A820-B	55" long	1
79	P - - M/T	6	200	E2BZ 9A820-B	39 3/4" long	1
79	J,P - - M/T	8	302			1
79	J - - M/T	6	⊕171			1
79	J,P	4	@140	E1BZ 9A820-A	41 3/4" long	1
79	J - - A/T	6	⊕171			1
79	J,P - - A/T	6	200			1
79	J,P - - A/T	8	302			1
	UPPER					
73	A,Y	8	All	★ D1AZ 9A820-A Not replaced	25 1/2" long-use B9AZ 17262-A for service core	1
74	A,Y "Before 6/3/74"	8	400,460, 460 P/C	★ D4AZ 9A820-A Not replaced	16" long-use B9AZ 17262A for service core	1
74/76	Y "From 6/3/74"	8	All	D5AZ 9A820-A	16" long-use B9AZ 17262-A for service core	1
74/78	A	8	All			1
73	C	8	351,400, 429,460 P/C	★ D20Z 9A820-A	13 1/2" long-not replaced	1
75	C,F "Before 3/5/75"	8	All			1
74	C,F	8	351-2/B			1
74	C,F	8	400,460			1
75/76	C "From 3/5/75"	8	All	D50Z 9A820-C	13 1/2" long-use D4AZ 17262-A for service	1
75/	F	8	All			1
73/74	D	8	All	★ D1VY 9A820-A Not replaced	26" long-use B9AZ 17262-A for service core	1
75/77	D	8	All	D5VY 9A820-A	27" long-use B9AZ 17262-A for service	1

YEAR	MODEL/RESTRICTIONS	ENGINE CYL.	ENGINE C.I.D. (C.C.D.)	PART NUMBER	DESCRIPTION	QTY.
9A820	CABLE and MODULATOR ASSY.-SPEED CONTROL)-Also refer to group 17260 — Cont'd @ 2300cc ⊕ 2800cc					
	UPPER					
73	F	8	All	★ D0ZZ 9A820-H	10 1/2" long-not replaced	1
76/	G	6&8	All	D5DZ 9A820-A	18" long-use D4AZ 17262-A for service core	1
77/	V	8	All			1
73/76	K	8	460	D2SZ 9A820-A	20 1/4" long-use B9AZ 17262-A for service core	1
77/	K	8	All	D7LY 9A820-A	24" long-Speed Control	1
78/	K	8	All		Miles to empty fuel indicator	1
73/74	P - - A/T	6	200	★ D0DZ 9A820-B Not replaced	Use with EGR system-7" long-use B9AZ 17262-A for service core	1
78/	D	8	All	D8VY 9A820-A	26" long	1
79	A	8	All	E2MY 9A820-A	11" long	1
79	J	4	@140 exc. TC	E2SZ 9A820-D	31" long	1
79	P	4	@140			1
79	J	6	⊕171			1
79	J,P	6	200			1
79	J,P	8	302			1
79	J	4	@140 TC	D9ZZ 9A820-A	36" long	1
9D820	Refer to group 9510 for Carburetor Parts List Instructions					
9E824	REINFORCEMENT (SPEED CONTROL COWL MOUNTING)					
74	C,F	8	302,351, 400	D40Z 9E824-A		1
74	C,F - - without T/E	8	460			1
75/76	C	8	All			1
75/	F	8	All			1
9825	CLIP (ROD END CLEVIS)-Also refer to group 9510 for Carburetor Parts List Instructions					
73/78	J	4&6	All	D0RY 9825-A	Retainer accel. cable to valve cover bracket	1
73	J	4&6	All	D0RY 9825-B	Accel. cable to throttle lever and shaft	1
74/78	J	4&6	All	D3FZ 9825-A	Accel. cable to throttle lever and shaft	1
9A825	ACTUATOR ASSY. (SPEED CONTROL) @ 2300cc ⊕ 2800cc					
79	A - - w/electronic speed control	All	All	D9AZ 9A825-C	Use with dealer installed speed control kit	1
74/	J,L - - w/electronic speed control	4	@140	D9ZZ 9A825-C	Use with dealer installed speed control kit	1
78/	P - - w/electronic speed control	4	@140			1
74/	J,L - - w/electronic speed control	6	⊕171			
79	A	8	All	E0VY 9A825-A	Use with factory installed speed control	1
79	J	4	@140 exc. TC	E0BZ 9A825-B	Use with factory installed speed control	1
79	P	4	@140			1
79	J	4	@140 TC	E0BZ 9A825-C	Use with factory installed speed control	1
79	J	6	⊕171	D9ZZ 9A825-A	Use with factory installed speed control	1
79	J,P	6	200	E0BZ 9A825-A	Use with factory installed speed control	1
9K828	GUIDE (THROTTLE RETURN SPRING)					
74/78	J	4&6	All	D4RY 9K828-B		1
9829-9836	Refer to group 9510 for Carburetor Parts List Instructions					
9A837	SWITCH ASSY. (SPEED CONTROL RELEASE)					
73/	All - - w/dealer installed electronic speed control kit	All	All	D9AZ 9A837-A	Used on units with D9AZ 9D757-A regulator assy. (color-black)	1
73/	All - - w/dealer installed electronic speed control kit	All	All	E2AZ 9A837-A	Used on units with E2AZ 9D757-A regulator assy. (color-black)	1
79	J,P - - M/T	All	All	D9ZZ 9A837-A	# D9ZB 9A837-AA,AB	1

COPYRIGHT © 1986 — FORD MOTOR COMPANY — DEARBORN, MICHIGAN

1973/79 LINCOLN-MERCURY CARS

YEAR	MODEL/RESTRICTIONS	ENGINE CYL.	ENGINE C.I.D. (C.C.D.)	PART NUMBER	DESCRIPTION	QTY.
9A839	WIRE ASSY. (SPEED CONTROL FEED)					
73	A,Y	8	All	★ D3AZ 9A839-A	#D3AB 9A839-AA,AB-Not replaced	1
79	A	8	302	★ D9AZ 9A839-A	#D9AB 9A839-AE,AF,AG-not replaced	1
79	A	8	351W	★ D9AZ 9A839-B	#D9AB 9A839-BD,BE-not replaced	1
74	C,F - - T/E	8	460	★ D40Z 9A839-A	#D40B 9A839-AA-Not replaced	1
76	G	6&8	All	★ D6DZ 9A839-A	#D6DB 9A839-AB,AC-not replaced	1
77/	G,V	6&8	All	★ D8DZ 9A839-A	#D7DB 9A839-AA,AB, D8DB 9A839-AB,AC-not replaced	1
79	F,P	All	All	D9ZZ 9A839-A	#D9ZB 9A839-AB	1
9A840	WIRE ASSY. (SPEED CONTROL) @ 2300cc ⊕ 2800cc					
73/78	A,C,D,F,G,J,K,L,P - - A/T-exc. electronic speed control	All	All	★ D4AZ 9A840-B Not replaced	Use w/dealer installed speed control kit	1
73/	A,D,F,G,J,K,L,P,V - - with electronic speed control	All	All	D9AZ 9A840-B	Use with dealer installed speed control kit	1
73/	A,D,F,G,J,K,L,P,V - - with electronic speed control	All	All	D9AZ 9A840-C	Tester-use with dealer installed speed control kit	1
74/76	Y	8	All	★ D4AZ 9A840-A	#D4AB 9A840-AC, D5AB 9A840-BA	1
74/78	A	8	All	Not replaced		1
79	A	8	All	E1AZ 9A840-A	#D9AB 9A840-AF,AG, E0AE 9A840-AA,AB, E1AB 9A840-AA	1
74/76	C,F	8	All	★ D40Z 9A840-A	#D40B 9A840-AC, D5AB 9A840-CA	1
77/	F	8	351M-W	Not replaced		1
77/78	F	8	400			1
77/	F	8	302	★ D70Z 9A840-A	#D70B 9A840-AA-not replaced	1
73	D	8	460	★ D3VY 9A840-A	#D3VB 9A840-AA-not replaced	1
74	D	8	460	★ D4VY 9A840-A	#D4VB 9A840-AB,AC,AF-not replaced	1
75/76	D	8	460	★ D5VY 9A840-A	#D5VB 9A840-AA,AB-not replaced	1
73/76	K	8	460	★ D5SZ 9A840-B Not replaced	#D5SB 9A840-BA,BB	1
79	J,P	4	@140	D9ZZ 9A840-A	#D9ZB 9A840-AC	1
79	J	6	@171			1
79	P	6	200			1
79	J,P	8	302	★ E0BZ 9A840-B	#D9ZB 9A840-BC, E0BB 9A840-BB-not replaced	1
9841	Refer to group 9510 for Carburetor Parts List Instructions					
9D841	PIN (SPEED CONTROL SERVO CLEVIS)					
73/76	A,Y	8	All	★ C9AZ 9D841-A	Servo to bracket-not replaced	2
73/74	A,Y	8	All	D3AZ 9D841-A	Speed control rod to throttle pivot	1
75/76	Y	8	351,400			1
75/77	A	8	351,400			1
74	A,Y - - T/E	8	460	★ D4AZ 9D841-A	Used w/connector (9B705)-not replaced	1
74	A,Y - - T/E	8	460	★ D4AZ 9D841-B	Attaches 9B711 to the 9C740 - not replaced	1
75/76	Y	8	460	★ D5AZ 9D841-A	Speed control rod to throttle pivot-not replaced	1
75/77	A	8	460			1
73/76	D,K	8	All	D2SZ 9D841-A		1
74/76	C,F	8	All			1
73/76	A,D,K,Y	8	All	352358-S	(NN-127-B)-pin (pin to bracket)-self locking	2
9842	Refer to group 9510 for Carburetor Parts List Instructions					
9D842	SENSOR ASSY. (SPEED CONTROL)-Also refer to group 9E731					
73	A,D,K,Y	8	All	★ D0AZ 9D842-C Not replaced	#D0AA 9D842-A,D1AA 9D842-A or D2AA 9D842-AA	1
9D843	AMPLIFIER ASSY. (SPEED CONTROL)					
73	A,D,K,Y	8	All	★ D1AZ 9D843-A	Not replced	1
74/	All	6&8	All	E0AZ 9D843-A		1

1973/79 LINCOLN-MERCURY CARS

YEAR	MODEL/RESTRICTIONS	ENGINE CYL.	ENGINE C.I.D. (C.C.D.)	PART NUMBER	DESCRIPTION	QTY.
9E843	GUIDE (CARBURETOR CABLE)					
77/78	A - - w/Speed control	8	All	★ D7AZ 9E843-A	carb cable to 9C787 bracket-not replaced	1
9844	Refer to group 9510 for Carburetor Parts List Instructions					
9D845	BRACKET (SPEED CONTROL AMPLIFIER MOUNTING)					
73	A,Y	8	All	C9AZ 9D845-A		1
74/76	Y	8	All	★ D4AZ 9D845-A	Not replaced	1
74/78	A	8	All			1
79	A	8	All	D9AZ 9D845-B		1
74/76	C	8	All	D40Z 9D845-A		1
74/	F	8	All			1
73	D	8	All	★ D2VY 9D845-B	Not replaced	1
74/	D	8	All	D4VY 9D845-A		1
76/	G	6&8	All	★ D6DZ 9D845-A	Not replaced	1
77/	V	8	All			1
73	K	8	All	★ D2SZ 9D845-A	Not replaced	1
79	J,P	All	All	D9BZ 9D845-A		1
9846-9D856	Refer to group 9510 for Carburetor Parts List Instructions					
9E856	GUIDE (SPEED CONTROL CONNECTOR)					
79	J,P	8	302	D9BZ 9E856-A	Incl. (2) N620480-S2 Nuts	1
9D857	WIRING ASSY. (CARBURETOR THROTTLE EMISSION CONTROL SOLENOID)-Unless listed improvise from bulk wire (14296)-use B9A 14294-K and B7A 14488-C terminals as required @ 2300 cc ⊕ 2800 cc					
73	P	6	250	D2DZ 9D857-A	#D2DB 9D857-AA	1
76	G - - A/T	6	250	★ D6DZ 9D857-A	#D6DB 9D863-AA-not replaced	1
77/78	G - - with A/C	6	250	★ D7DZ 9D857-A	#D7DB 9D863-AA,D8DB 9D863-A-not repl.	1
77/78	L - - with A/C	4	@140	★ D7FZ 9D857-A	#D7EB 9D863-AA-not replaced	1
77/	L - - A/T with A/C - exc. Calif.	6	⊕ 171	D7ZZ 9D857-A	#D7ZB 9D863-AA	1
78	F - - with A/C	8	351W			1
9B862	INSULATOR (ACCELERATOR SHAFT TO DASH BRACKET)-Improvise					
9E862	VALVE ASSY. (CARBURETOR AIR CLEANER TEMPERATURE SENSOR OVERRIDE) ⊕ 2800 cc @ 2300 cc					
74	A,C,D,F,K,Y	8	460	★ D4VY 9E862-A	#D4VF 9E862-AA-not replaced	1
75/76	A,C,D,F,G,J,K,L,P,Y	All	All	D5DZ 9E862-A	#D5DF 9E862-AA	1
77	G,P,V - - exc. Calif	8	302			1
77	G,V	8	351W			1
77/78	F	8	351W			1
78/	F,G,P,V	8	302			1
77/78	L "From 6/27/77"	6	⊕171		Used on air cleaner	1
78/	G	6	250			1
79	L - - M/T with 2.73 axle exc. Calif.	4	@140			1
79	J - - exc. Calif.	8	302			1
79	J - - w/Hi-altitude carb.	4	@140 exc. TC			1
79	J	6	200			1

COPYRIGHT © 1986 — FORD MOTOR COMPANY — DEARBORN, MICHIGAN

1973/79 LINCOLN-MERCURY CARS

YEAR	MODEL/RESTRICTIONS	ENGINE CYL.	ENGINE C.I.D. (C.C.D.)	PART NUMBER	DESCRIPTION	QTY.
9E862	VALVE ASSY. (CARBURETOR AIR CLEANER TEMPERATURE SENSOR OCERRIDE) — Cont'd ⊕ 2800 cc @ 2300 cc					
77	L "Before 6/27/77"	6	⊕171	D7ZZ 9E862-A	*CX-150 #D7ZE 9E862-AA,77TF 9E862-AA	1
77/	G	6	All			1
77/	L "From 6/27/77"	6	⊕171		Used in E.G.R. system and thermactor system	2
77/78	L - - exc. Calif. and Canada -w/o Hi-altitude Carb. "From 6/27/77"	4	@140			1
77	P	6	200,250			1
78	P - - exc. Calif.	6	200			1
78/	P - - w/Thermactor-Air pump	6	200			1
78/	P - - A/T	4	@140			1
79	P - - M/T with A/C-exc. Calif.	4	@140			1
77/	J	6	⊕171			1
79	P	4	@140			1
79	P - - M/T	6	200			1
79	P - - A/T Calif. or Hi-altitude carb.	6	200			1
79	L - - A/T exc. Calif.	4	@140			1
79	L - - A/T-Calif.	4	@140			2
79	J	4	@140 TC		EGR. out-off and Thermactor cut-off	2
79	J - - A/T exc. Calif. or Hi-altitude carb.	4	@140 exc. TC			1
79	J - - M/T with A/C-exc. Calif. or Hi-altitude carb.	4	@140 exc. TC			1
78	P - - Calif.	6	All	D8BZ 9E862-A	#CX-243 #D8BE 9E862-AA	1
9E863	HOUSING (CARBURETOR AIR CLEANER TEMPERATURE SENSOR OVERRIDE VALVE)					
74	A,C,D,F,K,Y	8	460	D4VY 9E863-A		1
9865	INSULATOR (THERMOSTATIC CHOKE CONTROL OUTLET TUBE)-Unless listed improvise from C1AE 9865-A ⊕ 2800 cc					
76/78	J	6	⊕171	★ D5RY 9865-A	Not replaced	1
73	P	8	302	C8WZ 9865-B		1
73/74	C,F - - without T/E	8	302, 351W			1
77	G,P,V	8	302			1
9D866	WIRING ASSY. (CARBURETOR EMISSION CONTROL SOLENOID)					
75/76	G - - A/T w/column shift	6	250	★ D5DZ 9D866-A	#D5DB 9D866-AA-not replaced	1
76	G - - M/T-Calif.	6	250			1
75/76	G - - A/T w/column shift	8	302			1
75/76	P - - A/T w/column shift	6	250	★ D5DZ 9D866-B	#D5BB 9D866-AA-not replaced	1
76	P - - M/T-Calif.	6	250			1
75/76	P - - A/T w/column shift	8	302			1
77	P - - A/T-Canada	6	250	★ D7DZ 9D866-A	#D7BB 9D866-AA-not replaced	1
9C869	TUBE ASSY. (THERMOSTATIC CHOKE HEATER)					
73/74	A,C,F,Y	8	351C-2/B	★ D0AZ 9C869-B	3 loop design-not replaced	1
73	A,C,Y	8	400	★ D2AZ 9C869-A	Not replaced	1
73	A,C,D,F,K,Y	8	429,460	C8VY 9C869-A	4 1/2" formed length w/formed tube and	1
74	F	8	460		square flange on one end located in R.H. side	1
74/76	C,Y	8	460		intake manifold-use with 9903 gasket	1
74/78	A,D,K	8	460			1
73/74	C,F	8	351-4/B	★ D1ZZ 9C869-A	Not replaced	1
75/76	C,G	8	351W	D40Z 9C869-A		1
74/76	A,C,F,Y	8	351M, 400	D5AZ 9C869-A		1
77/78	A		351M, 400			1
77/	D,F,K	8	400			1
77/	F	8	351M			1

YEAR	MODEL/RESTRICTIONS	ENGINE CYL.	ENGINE C.I.D. (C.C.D.)	PART NUMBER	DESCRIPTION	QTY.
9C869	TUBE ASSY. (THERMOSTATIC CHOKE HEATER) — Cont'd					
74	A,C,D,F,K - - T/E	8	460	★ D4VY 9C869-A	Not replaced	1
77	G,V	8	351W	D7DZ 9C869-A		1
77/	F	8	351W			1
79	A	8	351W			1
73/74	C,F	8	351-4/B	56131-S	(B-93-X)-bolt (tube assy. to intake manifold)-5/16"-18 x 3 1/4"	2
73/74	A,C,F,Y	8	351C-2/B	56133-S	(B-319-S)-bolt (tube assy. to intake manifold)-5/16"-18 x 3 3/4"	2
73/74	A,C,F,Y	8	351C-2/B,400	370519-S	(BB-125)-screw and washer assy. (tube assy. to intake manifold)-1/4"-20 x 3/4"	2
74/78	A,C,D,F,K,Y	8	460	356748-S	(BB-124) screw & washer assy. (tube assy. to manifold)-1/4"-20 x 5/8"	2
9C870-9872	Refer to group 9510 for Carburetor Parts List Instructions					
9873	BUSHING (ACCELERATOR PEDAL HINGE) ▲ 2000 cc ♦ 2600 cc ⊕ 2800 cc					
73/74	J	4	▲122	D3RY 9873-A		1
74/78	J	6	⊕171			1
73	J	6	♦159	D2RY 9873-A		3
74/78	J	4&6	All			AR
9874-9875	Refer to group 9510 for Carburetor Parts List Instructions					
9C876	ADJUSTER (SPEED CONTROL CONNECTOR)-also refer to group 9D805					
79	A	8	All	D9AZ 9C876-B		1
75/76	C,F	8	All	D50Z 9C876-A		1
73/76	D,K	8	460	D5SZ 9C876-B		1
74	C,F	8	All			1
76	G	6&8	All			1
77/	G,V - - Canada	8	302			1
79	J,P	8	302	D9BZ 9C876-A		1
9E879	TUB and SHIELD ASSY. (VAPOR STORAGE CANISTER) ⊕ 2800 cc @ 2300 cc					
75	G	6&8	All	★ D5DZ 9E879-A		1
77	G	6	200,250	Not replaced		1
77	G,V	8	351W			1
77	G,V - - w/o Hi-altitude carb.	8	302			1
77	G,V - - w/Hi-altitude carb.	8	302	★ D7DZ 9E879-A	Not replaced	1
75/76	L	4	@140	★ D5FZ 9E879-A	Not replaced	1
75/76	L	6	⊕171	★ D5ZZ 9E879-A	Not replaced	1
9C887	WIRING ASSY. (SPEED CONTROL EXTENSION) @(2300)					
79	J - - M/T	4	@140 TC	D9ZZ 9C887-A	#D9ZB 9C887-AA	1
9C888	SWITCH and BUTTON ASSY. (SPEED CONTROL ACTUATOR)					
73/	All - - w/dealer installed speed control kit	All	All	D4AZ 9C888-A	Used on units with D9AZ 9D757-A regulator assy. (color-black)	1
73/	All - - w/dealer installed speed control kit	All	All	E2AZ 9C888-A	Used on units with E2AZ 9D757-A regulator assy. (color-blue)	1
73/74	A,D,K,Y	8	All	D0AZ 9C888-A	Dual switch assy.-L.H. lettered "OFF-ON"-	1
74	C,F	8	All		R.H. lettered "SET-ACC-COAST"	1
75/77	A,C,D,F,G,K,Y	6&8	All	D5AZ 9C888-A	Dual switch assy.-L.H. lettered "OFF-ON"-	1
77	V	8	All		R.H. lettered "SET ACCEL-COAST"	1
78	A	6&8	All	D8AZ 9C888-A	Dual switch assy.-L.H. lettered "OFF-ON"- R.H. lettered "SET-ACCEL-COAST"	1
78/	D,F,G,K,V	6&8	All			1

COPYRIGHT © 1986 — FORD MOTOR COMPANY — DEARBORN, MICHIGAN

1973/79 LINCOLN-MERCURY CARS

YEAR	MODEL/RESTRICTIONS	ENGINE CYL.	ENGINE C.I.D. (C.C.D.)	PART NUMBER	DESCRIPTION	QTY.
9C888	**SWITCH and BUTTON ASSY. (SPEED CONTROL ACTUATOR) — Cont'd**					
79	A,J,P - - w/factory installed speed control	All	All	E2AZ 9C888-B	Chrome and argent-Dual switch assy. L.H.-lettered "OFF-ON"-R.H. lettered "RESUME-SET ACCEL-COAST"-use to service all production color-keyed switches	1
9E890	**Refer to group 9B532**					
9C892	**CLAMP (SPEED CONTROL ENGAGEMENT SWITCH)**					
73/78	A,C,D,F,G,J,K,L,P - - w/o turn signal mounted wiper switch	All	All	D6AZ 9C892-A	Use with dealer installed speed control kit	1
79	D,F,K,L				-not replaced	1
75/77	G - - w/turn signal mounted wiper switch	All	All	★ D6AZ 9C892-B Not replaced	Use with dealer installed speed control kit	1
78	G,P					1
79	A,G,J,P					1
9C893	**SWITCH (SPEED CONTROL DECELERATION)**					
73/78	A,C,D,F,G,J,K,L,P	All	All	D6AZ 9C893-A	Use with dealer installed speed control kit	1
9D896	**Refer to group 9510 for Carburetor Parts List Instructions**					
9E896	**Refer to group 9B532**					
9E897	**VALVE ASSY. (AIR CLEANER VACUUM CONTROL DELAY) @ 2300 cc ⊕ 2800 cc**					
78/79	L,P	4	@140	D8AZ 9E897-B	Red/white #D5AE-AA,D6AE-A1A, 77TF-A1A, D8AE-B1A,B2A	1
79	J - - w/o Hi-altitude carb.	4	@140			1
76/79	J,L	6	⊕171			1
78/79	P - - M/T	6	200			1
75/79	G,P	8	302			1
77/78	F,V	8	302			1
79	F,J	8	302			1
75/76	G	8	351W			1
75/76	A,C,F,Y	8	351M, 400			1
77/78	A,F	8	351M			1
79	F - - w/Hi-altitude carb.	8	351M			1
77/78	A,D,F,K	8	400			1
79	D,K - - w/Hi-altitude carb.	8	400			1
77/78	A,D,K	8	460			1
76/77	G,P	6	200,250	D8AZ 9E897-A	Blue/white #D6AE-A1A, B2A, D5VE-AA, D8AE-A1A,A2A	
78/79	P - - A/T	6	200			1
78/79	G	6	250			1
78	G,P	8	302			1
79	G,V	8	302			1
76	A,C,F,Y	8	351M, 400			1
77/78	A,F	8	351M			1
79	F	8	351W			1
79	F - - w/o Hi-altitude carb.	8	351M			1
79	A - - Canada	8	351W			
77/78	A,D,F,K	8	400			1
79	D,K - - w/o Hi-altitude carb.	8	400			
75/76	C,F,Y	8	460			1
75/78	A,D,K	8	460			1
79	J - - w/Hi-altitude carb.	4	@140			

YEAR	MODEL/RESTRICTIONS	ENGINE CYL.	ENGINE C.I.D. (C.C.D.)	PART NUMBER	DESCRIPTION	QTY.
9C899	BRUSH ASSY. (SPEED CONTROL)					
73/78	A,Y	8	All	D0AZ 9C899-A		1
74/76	C	8	All			1
73/	D,K	8	All			1
76/	G	6&8	All			1
77/	F,V	8	All			1
79	A,J,P - - w/fixed column	All	All	D9AZ 9C899-C		1
79	A,J,P - - w/tilt column	All	All	D9AZ 9C899-D		1
9902	Refer to group 9510 for Carburetor Parts List Instructions					
9903	GASKET (THERMOSTATIC CHOKE HEAT SUPPLY)					
73/74	A,C,F,Y	8	400	D1AZ 9903-A	*CG-312 Reinforced asbestos-.063" thick	1
75/76	A,C,F,Y	8	351M, 400			1 1
77/78	A,F	8	351M, 400			1
79	F	8	351M			1
77/	D,K	8	400			1
73/74	A,C,D,F,K,Y - - without T/E	8	429,460	C8SZ 9903-A	Reinforced asbestos-.062" thick-use with	1
75/76	A,C,D,F,K,Y	8	460, 460P/C		9C869 thermostatic choke heater assy.	1
77/78	A,D,K	8	460			1
74	A,C,D,F,K - - T/E	8	460	★ D4VY 9903-A	*CG-408-not replaced	1
9C908	Refer to group 9510 for Carburetor Parts List					
9C915	VALVE ASSY. (FUEL VAPOR STORAGE CANISTER PURGE REGULATOR)					
78	A,D,K	8	460	★ D8VY 9C915-A	*CX-276 #D8VE 9C915-AA-not replaced	1
79	A - - exc. Canada	8	351W	D9AZ 9C915-A	*CX-348-#D9AE 9C915-A1B,A2B	1
9C917	HOSE AND SOLENOID ASSY. (CARBURETOR FLOAT BOWL VENT) -Refer to 9B982					
9919	SHAFT ASSY. (THROTTLE OPERATING)-Also refer to group 9510 for Carburetor Parts List Instructions ▲ 2000 cc ♦ 2600 cc ⊕ 2800 cc @ 2300 cc					
73	J - - A/T	4	▲122	D3RY 9919-A	*CM-1751 Attach to bracket (9728)	1
73	J - - M/T	4	▲122	★ D3RY 9919-B	*CM-1750 Attach to bracket (9728)-not replaced	1
73	J - - A/T	6	♦159	★ D2RY 9919-B	Not replaced	1
73	J - - M/T	6	♦159	D2RY 9919-A		1
74	J	6	⊕171	★ D4RY 9919-A	Not replaced	1
74	J - - A/T	4	▲122	★ D4RY 9919-H	Not replaced	1
74	J - - M/T	4	▲122	★ D4RY 9919-J	Not replaced	1
76/78	J	4	@140	★ D5RY 9919-A	*CM-2247-not replaced	1
76	J "Before 8/30/76"	6	⊕171	D5RY 9919-C	*CM-2288-#75EB 9919-DA,DB	1
76/78	J "From 8/30/76"	6	⊕171	D6RY 9919-A	*CM-2433	1
73/74	J	4	▲122	116424-ES2	Pin (shaft assy. to engine)-self-locking	1
74	J	4&6	All	E663206-S71	(AQ-5)-retainer ring (shaft assy. to bracket)-"E" type	2
9926-9956	Refer to group 9510 for Carburetor Parts List Instructions					
9C957	ELBOW (SPEED CONTROL SERVO DISCHARGE)					
79	A,J,P	All	All	D9AZ 9C957-A		1
				N800362-S	(AP-41-B)-Grommet 8.2mm x 13.5mm	1
9B960	CONTROL ASSY. (CARBURETOR AIR) @ 2300 cc					
77/78	L - - A/T with Hi-altitude Carb.	4	@140	★ D7FZ 9B960-AA	47 1/2" long-includes knob-not replaced	1
78	P - - A/T with Hi-altitude Carb.	6&8	200,302	★ D8BZ 9B960-A	52" long-includes knob-not replaced	1
9961	Refer to group 9510 for Carburetor Parts Lists Instructions					

COPYRIGHT © 1986 — FORD MOTOR COMPANY — DEARBORN, MICHIGAN

1973/79 LINCOLN-MERCURY CARS

YEAR	MODEL/RESTRICTIONS	ENGINE CYL.	ENGINE C.I.D. (C.C.D.)	PART NUMBER	DESCRIPTION	QTY.
9C961	BRACKET (SPEED CONTROL VACUUM VALVE MOUNTING)					
79	A	8	All	E0AZ 9C961-A		1
79	J,P	All	All	D9BZ 9C961-A		1
9C962	ADAPTER (SPEED CONTROL VACUUM VALVE ACTUATOR)					
79	A	8	All	D9AZ 9C962-A		1
79	J,P	All	All	E6SZ 9C962-A		1
9B963	VALVE ASSY. (FUEL VAPOR STORAGE CANISTER)					
78	A,D,F,G,K,P,V	All	All	D8FZ 9B963-B	*CX-203-A-with locking tab-on units built	1
79	D,F,G,J,K,P	All	All		prior 11/7/77 must also use D8AZ 9D653-C	1
79	V "Before 12/4/78"	8	302		canister	1
79	V - - w/o E.E.C. "From 12/4/78"	8	302			1
79	V - - w/Hi-altitude carb.	8	302			1
77/	L "From 6/27/77"	All	All			
79	A	8	302	D9AZ 9B963-B	*CX-330	1
79	A - - Canada	8	351W			1
79	V - - w/E.E.C. "From 12/4/78"	8	302			1
9964-66	Refer to group 9510 for Carburetor Parts Lists Instructions					
9C966	CLIP (SPEED CONTROL VACUUM VALVE)					
79	A,J,P	All	All	D9AZ 9C966-A		1
9967-70	Refer to group 9510 for Carburetor Parts Lists Instructions					
9B971	BRACKET ASSY. (CARBURETOR AIR CONTROL) @ 2300 cc					
77/78	L - - A/T with Hi-altitude Carb.	4	@140	★ D7FZ 9B971-A	Not replaced	1
78	P - - w/Hi-altitude Carb.	6&8	200,302	★ D8BZ 9B971-A	Not replaced	1
9972	Refer to group 9510 for Carburetor Parts List Instructions					
9C972	RELAY ASSY. (CARBURETOR CHOKE CONTROL)					
79	A - - exc. Canada	8	351W	D9AZ 9C972-A	*SW-1540-#D9AB 9C972-AA	1
9973-9981	Refer to group 9510 for Carburetor Parts List Instructions					
9B981	VALVE ASSY. (E.G.R. SOLENOID PRESSURE)					
78/	V	8	302	D84Y 9B981-A	*CX-216 #D8VE 9B981 A2A	1
9B982	SOLENOID ASSY. (CARBURETOR FLOAT BOWL VENT)					
77/78	L "From 6/27/77"	4&6	All	D8TZ 9B982-A	*CX-239 #D8TE 9B982-AA	1
78	P	4	@140			1
78	G,P	6	All			1
78/	G,P - - exc. Calif.	8	302			1
78/	A,D,F,K	8	All			1
78/	G,P - - Calif.	8	302	D84Y 9B982-A	*275 #D84E 9B982-AA	1
79	V	8	302			1
9983-9995	Refer to 9510 for Carburetor Parts List Instructions					

YEAR	MODEL/RESTRICTIONS	ENGINE CYL.	ENGINE C.I.D. (C.C.D.)	PART NUMBER	DESCRIPTION	QTY.
9A995	VALVE ASSY. (CARBURETOR AIR CLEANER VACUUM CONTROL)-Also refer to group 12A164 @ 2300 cc					
75/78	A,C,D,F,G,K,Y	8	All	D5AZ 9A995-A	#D5AF-CA,777F 9A995-AA-TVS valve	1
76/77	G,L,P	6	All			1
77/78	V	8	All			1
77	J	4	@140			1
78	P - - M/T-Calif.	4	@140			1
77/	L - - Calif.	4	@140			1
78	P - - exc. Calif.	8	302			1
79	A - - exc. Calif.	8	302			1
79	A - - Calif.	8	302			2
79	A - - Canada	8	351W			1
79	F,D,J,K	8	All			1
79	J - - M/T Calif.	4	@140 TC			1
79	J - - M/T	4	@140 exc. TC			1
79	J - - A/T-Calif. w/o A/C	4	@140			1
79	P	4	@140			1
79	G,J,P	8	302			1
79	V - - without E.E.C.	8	302			1
77/78	J	4	@140	D7FZ 9A995-A	#D7EE-AA,777F 9A995-BA-TVS valve-red	1
77/78	L - - exc. Calif.	4	@140			1
79	J - - M/T exc. Calif.	4	@140 TC			2
79	J - - M/T Calif.	4	@140 TC			1
79	J	4	@140 exc. TC			1
79	L	4	@140			1
79	P - - Calif.	4	@140			1
9996-9997	Refer to group 9510 for Carburetor Parts List Instructions					
9B998	VALVE ASSY. (CARBURETOR SOLENOID VACUUM)					
77/	L - - Calif. "From 6/27/77"	4	@140	E2ZZ 9B998-A	*CX-504-A #D8EE 9B998-BA, E2ZE 9B998-AA	1
79	J - - M/T-Calif.	4	@140 TC			1
9B999	HOSE ASSY. (FUEL VAPOR RETURN CONNECTOR)- Improvise from 12226 bulk hose					
				383003-S	(II-191-VF)-Connector-3/16" x 3/16"- 1 23/64"	AR
				383005-S	(II-191-VD)-Connector-1/4" x 1/4"-1 33/64"	AR

COPYRIGHT © 1986 — FORD MOTOR COMPANY — DEARBORN, MICHIGAN

1973/79
LINCOLN-MERCURY CARS

YEAR	MODEL/RESTRICTIONS	ENGINE CYL.	ENGINE C.I.D. (C.C.D.)	PART NUMBER	DESCRIPTION	QTY.
10094	BEARING ASSY. (BELT IDLER PULLEY) ▲ 2000 cc					
74	J - - A/C	4	▲122	C9ZZ 10094-A		1
10145	Refer to group 10A313					
10156	Refer to group 10A313					
10300	ALTERNATOR ASSY.-Refer to group 10346					
10N300	ADAPTER ASSY. (ALTERNATOR REGULATOR)					
76/78	C - - with gauges, F	8	All	★ D6WY 10N300-A	# D6CB 10N300-AA	1
10B301-6	Refer to group 10346 for Alternator Parts List Instructions					
10C307	WIRING ASSY. (ALTERNATOR)-Aslo refer group 14398 Note 1-copper-shielded wiring to correct alt. whine in radio. Refer TSB 53 (9/21/73) & TSB 62 (2/8/74) for installation instructions.					
73	K - - Note 1	8	All	★ D3SZ 10C307-A	Use with Ford 61 amp. alternator-from alternator regulator to electric choke	1
73	K - - Note 1	8	All	★ D3SZ 10C307-B	Use with Ford 70 amp. alternator-from alternator regulator to electric choke	1
74	D - - Note 1				use with Ford 70 or 90 amp. alternator	1
73	D - - Note 1	8	All	★ D3VY 10C307-A	Use with Ford 61 amp. alternator-from alternator regulator to electric choke	1
10308-10	Refer to group 10346 for Alternator Parts List Instructions					

YEAR	MODEL/RESTRICTIONS	ENGINE CYL.	ENGINE C.I.D. (C.C.D.)	PART NUMBER	△ MAKE	AMP.	DESCRIPTION	QTY.
10A310	FAN (ALTERNATOR) △ B-Bosch, L-Lucas, M-Motorcraft ▲ 2000 cc @ 2300 cc ♦ 2600 cc ⊕ 2800 cc							
73/74	J	4	▲122	★ D2RY 10A310-A	B	35	*GPE-514	1
73	J	6	♦159		B	35		1
74/78	J	6	⊕171			35,55		1
76/78	J	4	@140			35,		1
76/78	J	6	⊕171	★ D1RY 10A310-A	B	35,55	*GPE-503	1
73/79	A,C,D,F,G,K,L,P,V,Y	4,6	All	D9AZ 10A310-A	M	70,100	*GP-602	1
73/79	A,C,D,F,G,K,L,P,V,Y	4,6 &8	All	D9ZZ 10A310-A	M	40,60, 65	*GP-601	1

YEAR	MODEL/RESTRICTIONS	ENGINE CYL.	ENGINE C.I.D. (C.C.D.)	PART NUMBER	DESCRIPTION	QTY.
10B310	BUSHING (ALTERNATOR MOUNTING) ⊕ 2800cc					
78	J	6	⊕171	★ D8RZ 10B310-A	Use w/Bosch alt.	1

COPYRIGHT © 1986 — FORD MOTOR COMPANY — DEARBORN, MICHIGAN

Alternator mounting parts are listed in chart form following the illustration below. Refer to the illustration to determine the name of the part required. Refer to the chart to select the appropriate part number. The chart is listed by year, model, engine and alternator make and amperage. Attaching parts such as bolts, nuts, etc. are listed by code number. A listing of the code numbers and their corresponding part numbers and descriptions appears at the end of the chart.

10A313 ALTERNATOR MOUNTING PARTS

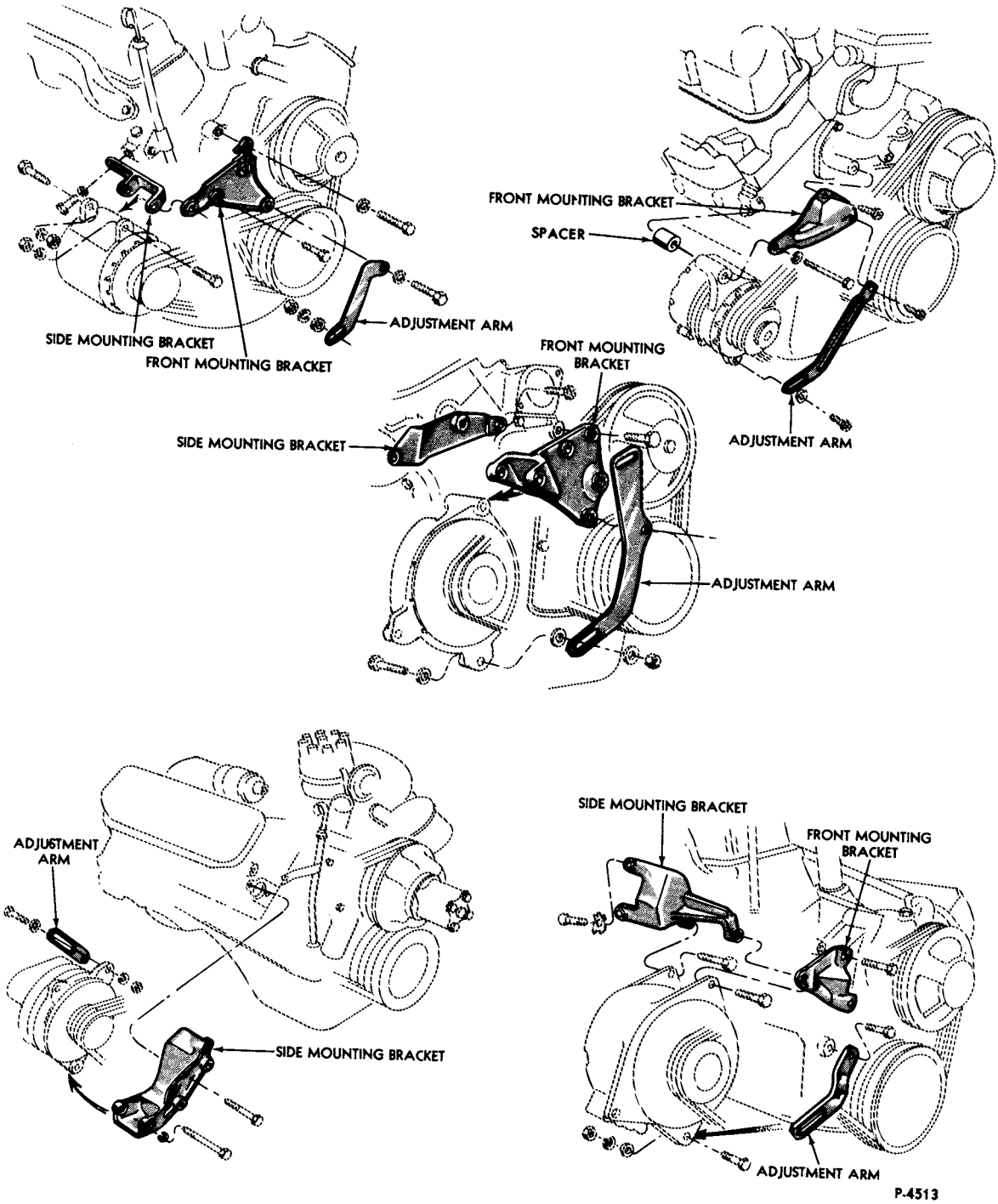

MODEL	ALTERNATOR		ADJUSTMENT ARM		MOUNTING BRACKETS			
					FRONT		SIDE	
	Δ MAKE	AMP.	PART NUMBER	●NUTS, BOLTS, ETC.	PART NUMBER	●NUTS, BOLTS, ETC.	PART NUMBER	●NUTS, BOLTS, ETC.

Δ B-Bosch, L-Lucas, M-Motorcraft

● REFER TO HARDWARE LISTING AT END OF CHART FOR NUMBER SHOWN IN THIS COLUMN

10A313 ALTERNATOR MOUNTING PARTS

APPLICATION CHART

1973

4 CYL. 2.0L (2000 cc or 122 C.I.D.)

J	L	28	★D2RY 10145-C	15,40	★D3RY 10156-A		★D1RY 10A313-C	4,5,12, 38
J	B	35	★D1RY 10145-B				D1RY 10A313-B	

6 CYL. 2.6L (2600 cc or 159 C.I.D.)

J "Before 4/1/73"	B	35	★D2RY 10145-A	19,20			D2RY 10A313-A	5,12,23, 26,27
J "From 4/1/73"	B	35	★D3RY 10145-A	19,20			★D2RY 10A313-A	5,12,23, 26,27

6 CYL. 3.3L (200 C.I.D.)

P	M	42,55	C5TZ 10145-H	1,18,21			C5TZ 10A313-D	9,15, 33,37

6 CYL. 4.1L (250 C.I.D.)

C,P	M	42,61	C9ZZ 10145-A *GY-917	13,16,21			★C9ZZ 10A313-A *GY-918	15,16, 37
C	M	70	★D2DZ 10145-A	13,16,17			★C9ZZ 10A313-A *GY-918	15,16, 37

8 CYL. 5.0L (302 C.I.D.)

C,P	M	42,55, 61	D3AZ 10145-C	11,13,21	D4AZ 10156-A & D1AZ 8A652-A (Spacer)	8,10,11, 45	★D10Z 10A336-B r/bD7UZ 10A336-A (11/81)	
C	M	70	D20Z 10145-B	33,39	D4AZ 10156-A & D2SZ 10A370-A (Spacer)	8,38, 39	★D10Z 10A336-B r/bD7UZ 10A336-A (11/81)	44

8 CYL. 5.8L (351 C.I.D.)-C,CJ

A,C,F,Y	M	42,55, 61	D3AZ 10145-C	10,33	D4AZ 10156-A & D2SZ 10A370-A (Spacer)	10,45		
A,C,F,Y	M	70	D20Z 10145-B	33,38	D4AZ 10156-A & D2SZ 10A370-A (Spacer)	38,39,		

8 CYL. 5.8L (351 C.I.D.)-W

C	M	42,55, 61	D3AZ 10145-C	33,37	D4AZ 10156-A & D2SZ 10A370-A (Spacer)	8,38, 39	★D10Z 10A336-B r/bD7UZ 10A336-A (11/81)	44
C	M	70	D20Z 10145-B	33,38	D4AZ 10156-A & D1AZ 8A652-A (Spacer)	38,45	★D10Z 10A336-B r/bD7UZ 10A336-A (11/81)	44

COPYRIGHT © 1986 — FORD MOTOR COMPANY — DEARBORN, MICHIGAN

1973/79 LINCOLN-MERCURY CARS

MODEL	ALTERNATOR		ADJUSTMENT ARM		MOUNTING BRACKETS			
					FRONT		SIDE	
	Δ MAKE	AMP.	PART NUMBER	●NUTS, BOLTS, ETC.	PART NUMBER	●NUTS, BOLTS, ETC.	PART NUMBER	●NUTS, BOLTS, ETC.

Δ B-Bosch, L-Lucas, M-Motorcraft

● REFER TO HARDWARE LISTING AT END OF CHART FOR NUMBER SHOWN IN THIS COLUMN

10A313 ALTERNATOR MOUNTING PARTS — Cont'd

APPLICATION CHART

1973

8 CYL. 6.6L (400 C.I.D.)

A,C,Y		M	42,55, 61	D3AZ 10145-D	33,38	★D1AZ 10156-A *GY-993 & D3AZ 10A370-A (Spacer)	38		
A,C,Y		M	70	★D20Z 10145-A	33,38	D4AZ 10156-B & D3AZ 10A370-A (Spacer)	38		

8 CYL. 7.0L (429 C.I.D.)

A,C,Y	"Before 2/15/73"	M	42,55, 61	D0SZ 10145-A *GY-989	25,33	D0VY 9B450-A & D3AZ 10A370-A (Spacer)	6,24, 25		
A,C,Y	"From 2/15/73"	M	42,55, 61	D0SZ 10145-A *GY-989 D0VY 10A370-A *GY-947 (Spacer)	25,33	D0VY 9B450-A & D4VY 10A314-A (Strap) & D3AZ 10A370-A (Spacer)	6,24, 25		
A,C,Y	"Before 2/15/73"	M	70	D2SZ 10145-A	25,33	D0VY 9B450-A & D0VY 10A370-A (Spacer)	6,24,		
A,C,Y	"From 2/15/73"	M	70	D2SZ 10145-A & D0VY 10A370-A *GY-947 (Spacer)	25,33	D0VY 9B450-A & D4VY 10A314-A (Strap) & D3AZ 10A370-A (Spacer)	6,24, 25		

8 CYL. 7.5L (460 C.I.D.)

D,K	"Before 2/15/73"	M	61	D0VY 9B450-A *GY-989	21,25	D0VY 9B450-A & D3AZ 10A370-A (Spacer)	6,24,		
D,K	"From 2/15/73"	M	61	D0SZ 10145-A *GY-989 & D0VY 10A370-A *GY-947 (Spacer)	21,25	D0VY 9B450-A & D3AZ 10A370-A (Spacer)	6,24, 25		
A,C,D,K,Y	"Before 2/15/73"	M	70,90	D2SZ 10145-A &	21,25	D0VY 9B450-A D3AZ 10A370-A (Spacer)			
A,C,D,K,Y	"From 2/15/73"	M	70,90	D2SZ 10145-A & D0VY 10A370-A *GY-947 (Spacer)	21,25	D0VY 9B450-A & D3AZ 10A370-A (Spacer)	6,24, 25		

MODEL	ALTERNATOR		ADJUSTMENT ARM		MOUNTING BRACKETS			
					FRONT		SIDE	
	Δ MAKE	AMP.	PART NUMBER	●NUTS, BOLTS, ETC.	PART NUMBER	●NUTS, BOLTS, ETC.	PART NUMBER	●NUTS, BOLTS, ETC.

Δ B-Bosch, L-Lucas, M-Motorcraft

● REFER TO HARDWARE LISTING AT END OF CHART FOR NUMBER SHOWN IN THIS COLUMN

10A313 ALTERNATOR MOUNTING PARTS — Cont'd

APPLICATION CHART

1974

4 CYL. 2.0L (2000 cc or 122 C.I.D.)

J - - without T/E			★ D2RY 10145-C	15,40	★ D3RY 10156-A		★ D1RY 10A313-C	4,5,12, 38
J - - with T/E			★ D4RY 10145-C				★ D4RY 10A313-E	
L	M	38,61	★ D2FZ 10145-B	33,42,53	★ D1FZ 10156-A *GY-998	33,43		

4 CYL. 2.3L (2300 cc or 140 C.I.D.)

L	M	38,61	D4FZ 10145-B	29,42			D9FZ 10A313-A	15,31,43

6 CYL. 2.8L (2800 cc or 171 C.I.D.)

J - - T/E without A/C			★ D4RY 10145-A				★ D4RY 10A313-B	28
J - - T/E and integral A/C			★ D4RY 10145-D	68			D5RY 10A313-B & ★ D4RY 10A370-A (Spacer) & ★ D4RY 10A370-B (Spacer)	
J - - w/hang-on A/C			★ D4ZZ 10145-C				★ D4ZZ 10A313-B	
J - - without T/E							★ D4RY 10A313-A	

6 CYL. 3.3L (200 C.I.D.)

P	M	42,55	C5TZ 10145-H	1,18,21			C5TZ 10A313-D	9,15, 33,37

6 CYL. 4.1L (250 C.I.D.)

P	M	42,61	C9ZZ 10145-A *GY-917	13,16,21			★ C9ZZ 10A313-A *GY-918	15,16,37

8 CYL. 5.0L (302 C.I.D.)

C,P	M	42,55 61	D3AZ 10145-C	11,13,21	D4AZ 10156-A & D1AZ 8A652-A (Spacer)	8,10, 11,45	★ D10Z 10A336-B r/b D7UZ 10A336-A (11/81)	
C	M	70	D20Z 10145-B	21,39	D4AZ 10156-A & D3AZ 10A370-A (Spacer)	8,38,39	★ D10Z 10A336-B r/b D7UZ 10A336-A (11/81)	44

COPYRIGHT © 1986 — FORD MOTOR COMPANY — DEARBORN, MICHIGAN

1973/79 LINCOLN-MERCURY CARS

MODEL	ALTERNATOR		ADJUSTMENT ARM		MOUNTING BRACKETS			
					FRONT		SIDE	
	Δ MAKE	AMP.	PART NUMBER	●NUTS, BOLTS, ETC.	PART NUMBER	●NUTS, BOLTS, ETC.	PART NUMBER	●NUTS, BOLTS, ETC.

Δ B-Bosch, L-Lucas, M-Motorcraft

● REFER TO HARDWARE LISTING AT END OF CHART FOR NUMBER SHOWN IN THIS COLUMN

10A313 ALTERNATOR MOUNTING PARTS — Cont'd

APPLICATION CHART

1974

8 CYL. 5.8L (351 C.I.D.)-W

C,F	M	42,55, 61	D3AZ 10145-C	21,39	D4AZ 10156-A & D3AZ 10A370-A (Spacer)	8,38, 39	★ D10Z 10A336-B ★/bD7UZ 10A336-A (11/81)	
C,F	M	70	D20Z 10145-B	33,39	D4AZ 10156-A & D3AZ 10A370-A (Spacer)		★ D10Z 10A336-B ★/bD7UZ 10A336-A (11/81)	

8 CYL. 5.8L (351 C.I.D.)-C

C,F,Y - - without T/E	M	42,55, 61	D3AZ 10145-C	10,21	D4AZ 10156-A & D3AZ 10A370-A (Spacer)	10,49		
C,F,Y - - with T/E	M	42,55, 61	D4AZ 10145-A	10,21	D4AZ 10156-A & D3AZ 10A370-A (Spacer)	38,49		
C,F,Y - - without T/E	M	70,90	D20Z 10145-B	10,21	D4AZ 10156-A & D3AZ 10A370-A (Spacer)	38,49		
C,F,Y - - with T/E	M	70,90	D3AZ 10145-B	21,38	D4AZ 10156-B & D3AZ 10A370-A (Spacer)	38,49		

8 CYL. 6.6L (400 C.I.D.)

A,C,F,Y - - without T/E	M	42,55, 61	D3AZ 10145-D	33,38	★ D1AZ 10156-A *GY-993 & D3AZ 10A370-A (Spacer)	38,49		
A,C,F,Y - - without T/E	M	70,90	★ D20Z 10145-A	21,38	D4AZ 10156-B & D3AZ 10A370-A (Spacer)	38,49		
A,C,F,Y - - T/E	M	42, 55, 61	D3AZ 10145-D	33,38	D4AZ 10156-B & D3AZ 10A370-A (Spacer)	38,49		
A,C,F,Y - - T/E	M	70,90	D3AZ 10145-B	21,38	D4AZ 10156-B & D3AZ 10A370-A (Spacer)	38,49		

MODEL	ALTERNATOR		ADJUSTMENT ARM		MOUNTING BRACKETS FRONT		MOUNTING BRACKETS SIDE	
	Δ MAKE	AMP.	PART NUMBER	●NUTS, BOLTS, ETC.	PART NUMBER	●NUTS, BOLTS, ETC.	PART NUMBER	●NUTS, BOLTS, ETC.
Δ B-Bosch, L-Lucas, M-Motorcraft								
● REFER TO HARDWARE LISTING AT END OF CHART FOR NUMBER SHOWN IN THIS COLUMN								
10A313 ALTERNATOR MOUNTING PARTS — Cont'd								
APPLICATION CHART								
1974								
8 CYL. 7.5L (460 C.I.D.)								
A,C,F,Y	M	42, 55, 61	D0SZ 10145-A *GY-989	21,25,52	D0VY 9B450-A & D0VY 10A370-A (Spacer)	6,24 25		
A,C,F,Y	M	70,90	D2SZ 10145-A	21,25,52	D0VY 9B450-A & D0VY 10A370-A (Spacer)	6,24, 25		
D	M	61	D0SZ 10145-A *GY-989	6,21	D0VY 9B450-A & D3AZ 10A370-A (Spacer)	6,24, 25		
D	M	70,90	D2SZ 10145-A	21,25	D0VY 9B450-A & D4VY 10A314-A (Strap) & D0VY 10A370-A (Spacer)	6,24,25		
K	M	55,61	D0SZ 10145-A *GY-989	6,21	D0VY 9B450-A & D3AZ 10A370-A (Spacer)	6,24, 25		
K	M	70,90	D2SZ 10145-A	21,25	D0VY 9B450-A & D4VY 10A314-A (Strap) & D0VY 10A370-A (Spacer)	6,24,25		
K - - w/heated w/s and back window (aux. alt. used w/ Sierracin system	M	55, 61	★ D4SZ 10145-A (upper) D2SZ 10145-A (lower)				D4SZ 10A313-A	
1975								
4 CYL. 2.3L (2300 cc or 140 C.I.D.)								
L - - without P/S	M	38,40, 42,60, 61	D4FZ 10145-B	29,42			D9FZ 10A313-A	15,31,43
L - - P/S	M	38,40, 42,60, 61	D4FZ 10145-B	29,42			★ D4FZ 10A313-C	31,43
L - - without P/S	M	70	★ D4FZ 10145-A	29,42			D9FZ 10A313-A	15,50,51
L - - P/S	M	70	★ D4FZ 10145-A	29,42			★ D4FZ 10A313-B	15,50,51

COPYRIGHT © 1986 — FORD MOTOR COMPANY — DEARBORN, MICHIGAN

1973/79 LINCOLN-MERCURY CARS

MODEL	ALTERNATOR Δ MAKE	ALTERNATOR AMP.	ADJUSTMENT ARM PART NUMBER	ADJUSTMENT ARM ●NUTS, BOLTS, ETC.	MOUNTING BRACKETS FRONT PART NUMBER	MOUNTING BRACKETS FRONT ●NUTS, BOLTS, ETC.	MOUNTING BRACKETS SIDE PART NUMBER	MOUNTING BRACKETS SIDE ●NUTS, BOLTS, ETC.
Δ B-Bosch, L-Lucas, M-Motorcraft								
● REFER TO HARDWARE LISTING AT END OF CHART FOR NUMBER SHOWN IN THIS COLUMN								
10A313 ALTERNATOR MOUNTING PARTS — Cont'd								

APPLICATION CHART

1975 — Cont'd

6 CYL. 2.8L (2800 cc or 171 C.I.D.)

L	M	38,40, 42,61	D5ZZ 10145-C	21,60			★D5ZZ 10A313-A	42,59
L	M	70	D5ZZ 10145-E	21,60			★D5ZZ 10A313-A	42,59

6 CYL. 3.3L (200 C.I.D.)

G,P - - A/C	M	All	D5DZ 10145-C	1,18			C5TZ 10A313-D	16, 33,37
G,P - - without A/C	M	All	C5TZ 10145-H	1,18			C5TZ 10A313-D	16, 33,37

6 CYL. 4.1L (250 C.I.D.)

G,P - - without A/C- "Before 7/28/75"	M	38,40, 42,60, 61	C9ZZ 10145-A *GY-917	16,21			★C9ZZ 10A313-A *GY-918	15,16, 37
G,P - - without A/C- "From 7/28/75"	M	All	C9ZZ 10145-A *GY-917	16,21			D6DZ 10A313-B	
G,P - - A/C	M	55,60, 61	★D5DZ 10145-A				★C9ZZ 10A313-A *GY-918	15,16, 37

8 CYL. 5.0L (302 C.I.D.)

G,P	M	38,40, 42,55, 60,61	D30Z 10145-A	11,21	D4AZ 10156-A & D1AZ 8A652-A (Spacer)	11,13, 61	★D10Z 10A336-B r/bD7UZ 10A336-A (11/81)	

8 CYL. 5.8L (351 C.I.D.)-W

C,F	M	40,42, 55,60, 61	D3AZ 10145-C	21,39	D4AZ 10156-A & D3AZ 10A370-A (Spacer)	39,57, 61	★D10Z 10A336-B r/bD7UZ 10A336-A (11/81)	21
G	M	40,42, 55,60	D3AZ 10145-C	73,74	D4AZ 10156-A & D1AZ 8A652-A (Spacer)	61,74, 75,76	★D10Z 10A336-B r/bD7UZ 10A336-A (11/81)	21
G	M	61	D8TZ 10145-A	11,21	D4AZ 10156-A & D1AZ 8A652-A (Spacer)	11,13, 61	★D10Z 10A336-B r/bD7UZ 10A336-A (11/81)	21
C,F,G	M	70,90	D8TZ 10145-A	21,39	D4AZ 10156-A & D1AZ 8A652-A (Spacer)	39,57, 61	★D10Z 10A336-B r/bD7UZ 10A336-A (11/81)	61

MODEL	ALTERNATOR		ADJUSTMENT ARM		MOUNTING BRACKETS			
					FRONT		SIDE	
	Δ MAKE	AMP.	PART NUMBER	●NUTS, BOLTS, ETC.	PART NUMBER	●NUTS, BOLTS, ETC.	PART NUMBER	●NUTS, BOLTS, ETC.

Δ B-Bosch, L-Lucas, M-Motorcraft

● REFER TO HARDWARE LISTING AT END OF CHART FOR NUMBER SHOWN IN THIS COLUMN

10A313 ALTERNATOR MOUNTING PARTS — Cont'd

APPLICATION CHART

1975 — Cont'd

8 CYL. 5.8L (351 C.I.D.)-M, 6.6L (400 C.I.D.)

A,Y - - without A/C C,F	M M	40,42, 55,60 40,42, 55,60, 61	D3AZ 10145-D	21,57	D4AZ 10156-B & D1AZ 8A652-A (Spacer)	49,57		
A,Y - - without A/C C,F	M M	70,90 70,90	D3AZ 10145-B	21,62	D4AZ 10156-B & D2SZ 10A370-A (Spacer)	49,57		
A,Y - - A/C	M	55,60, 61	D7AZ 10145-B	21,63	D7AZ 10156-A	41,63		
A,Y - - A/C	M	70,90	D7AZ 10145-A	21,63	D7AZ 10156-A	41,63		

8 CYL. 7.5L (460 C.I.D.)

A,C,F,Y	M	40,42, 55,60, 61	D0SZ 10145-A & D0VY 10A370-A (Spacer)	21,25	D0VY 9B450-A & 385049-S100 (Spacer)	6,17,25, 33,81		
D,K	M	60,61	D0SZ 10145-A	21,25	D0VY 9B450-A & D0VY 10A370-A (Spacer)	6,25, 33,81		
K - - w/heated w/shield and back window (aux. alt. with Sierracin System)	M	60,61, 70	★ D5VY 10145-A (upper) D2SZ 10145-A (lower) & D0VY 10A370-A (Spacer)	21,33 21,33	D4SZ 9B450-A	17,65	D4SZ 10A313-A & D1AZ 8A652-A (Spacer)	58,62 67
A,C,D,F,Y	M	70,90	D2SZ 10145-A & D0VY 10A370-A (Spacer)	21,25	D0VY 9B450-A & 385049-S100 (Spacer)	6,25, 33,81		

1976

4 CYL. 2.3L (2300 cc or 140 C.I.D.)

J "Before 8/1/76"	B	All	★ D5RY 10145-C		D6RY 10156-A		D6RY 10A313-A (w/gromments)	69
J "From 8/1/76"	B	All	★ D6RY 10145-B		D5RY 10156-A		D6RY 10A313-A (w/grommets)	
L - - without P/S	M	40,60	D4FZ 10145-B	72,94			D9FZ 10A313-A	50,51
L - - P/S	M	60	D4ZZ 3C511-A	83,84, 85,94			★ D4FZ 10A313-C	72,83,94
L - - without P/S	M	70	★ D4FZ 10145-A	72,94			D9FZ 10A313-A	50,51
L - - P/S	M	70					★ D4FZ 10A313-B	72,94

COPYRIGHT © 1986 — FORD MOTOR COMPANY — DEARBORN, MICHIGAN

MODEL	ALTERNATOR		ADJUSTMENT ARM		MOUNTING BRACKETS			
					FRONT		SIDE	
	Δ MAKE	AMP.	PART NUMBER	●NUTS, BOLTS, ETC.	PART NUMBER	●NUTS, BOLTS, ETC.	PART NUMBER	●NUTS, BOLTS, ETC.

Δ B–Bosch, L–Lucas, M–Motorcraft

● REFER TO HARDWARE LISTING AT END OF CHART FOR NUMBER SHOWN IN THIS COLUMN

10A313 ALTERNATOR MOUNTING PARTS — Cont'd

APPLICATION CHART

1976 — Cont'd

6 CYL. 2.8L (2800 cc or 171 C.I.D.)

J – – without A/C	B	All	D4RY 10145–B				★ D4RY 10A313–B	86,87
J – – integral A/C	B	All	★ D5RY 10145–A				★ D5RY 10A313–B	
J – – hang–on A/C	B	All	D4ZZ 10145–C				★ D4ZZ 10A313–B	
L	M	40,60	D5ZZ 10145–C	60,94			★ D5ZZ 10A313–A	42,59
L	M	70	D5ZZ 10145–E	60,94			★ D5ZZ 10A313–A	42,59

6 CYL. 3.3L (200 C.I.D.)

G,P – – without A/C	M	All	C5TZ 10145–H	37,82,94			C5TZ 10A313–D	37,64
P – – A/C	M	All	D5DZ 10145–C	94			D5DZ 2882–C	83,94, 102

6 CYL. 4.1L (250 C.I.D.)

NOTE 1: Approx. 300 units, 1976 Maverick & Comet – A/T – Calif. used C9ZZ 10A313—A in November 1975 prod.

G,P – – without A/C	M	40,60	C9ZZ 10145–A *GY–917				D6DZ 10A313–B NOTE 1	
G – – A/C	M	60	D6DZ 10145–A	77,94			★ D6DZ 10A313–A	78,79, 80
P – – A/C	M	60	★ D5DZ 10145–A				D6DZ 2882–C	

8 CYL. 5.0L (302 C.I.D.)

G,P	M	40,60	D3AZ 10145–C	74,94	D4AZ 10156–A & D1AZ 8A652–A (Spacer)	61,75, 76	★ D10Z 10A336–B r/bD7UZ 10A336–A (11/81)	
G	M	70	D30Z 10145–A	39,94	D4AZ 10156–A & D1AZ 8A652–A (Spacer)	57,61 75		

8 CYL. 5.8L (351 C.I.D.)–W

C,F,G	M	40,60	D3AZ 10145–C	74,94	D4AZ 10156–A & D1AZ 8A652–A (Spacer)	61,74, 75	★ D10Z 10A336–B r/bD7UZ 10A336–A (11/81)	73,88
C,F	M	70,90	D8TZ 10145–A	39,94	D4AZ 10156–A & D1AZ 8A652–A (Spacer)	39,57, 61,75	★ D10Z 10A336–B r/bD7UZ 10A336–A (11/81)	73,88
G	M	70,90	D8TZ 10145–A	39,94	D4AZ 10156–A & D1AZ 8A652–A (Spacer)	39,57, 61,75	★ D10Z 10A336–B r/bD7UZ 10A336–A (11/81)	73,88

MODEL	ALTERNATOR Δ MAKE	ALTERNATOR AMP.	ADJUSTMENT ARM PART NUMBER	ADJUSTMENT ARM ●NUTS, BOLTS, ETC.	MOUNTING BRACKETS FRONT PART NUMBER	MOUNTING BRACKETS FRONT ●NUTS, BOLTS, ETC.	MOUNTING BRACKETS SIDE PART NUMBER	MOUNTING BRACKETS SIDE ●NUTS, BOLTS, ETC.
Δ B-Bosch, L-Lucas, M-Motorcraft								
● REFER TO HARDWARE LISTING AT END OF CHART FOR NUMBER SHOWN IN THIS COLUMN								
10A313 ALTERNATOR MOUNTING PARTS — Cont'd								

APPLICATION CHART

1976 — Cont'd

8 CYL. 5.8L (351 C.I.D.)-M, 6.6L (400 C.I.D.)

A,Y - - without A/C C,F	M M	40,60 40,60	D3AZ 10145-D	57,94	D4AZ 10156-B & D1AZ 8A652-A (Spacer)	49,57, 75		
A,Y - - without A/C C,F	M M	70,90 70,90	D3AZ 10145-B	62,94	D4AZ 10156-B & D1AZ 8A652-A (Spacer)	49,57, 75		
A,Y - - A/C	M	60	D7AZ 10145-B	57,94	D7AZ 10156-A	49,57,75		
A,Y - - A/C	M	70,90	D7AZ 10145-A	62,94	D7AZ 10156-A	49,57,75		

8 CYL. 7.5L (460 C.I.D.)

A,C,F,Y D,K	M M	40,60 60	D0SZ 10145-A & D0VY 10A370-A (Spacer)	25,94	D0VY 9B450-A & 385049-S100, D0VY 10A370-A	6,17, 81		
K - - w/heated w/shield and back window (aux. alt. w/ w/Sierracin System)	M	60,70	★ D5VY 10145-A (upper) D2SZ 10145-A (lower) & D0VY 10A370-A (Spacer)	21,33 21,33	D4SZ 9B450-A	17,65	D4SZ 10A313-A & D1AZ 8A652-A (Spacer)	58,62 67

1977

4 CYL. 2.3L (2300 cc or 140 C.I.D.)

J "Before 2/1/77"	B	All	★ D6RY 10145-B		D6RY 10156-A		★ D6RY 10A313-A (w/grommets) #757F 10A313-AA	
J "From 2/1/77"	B	All	★ D6RY 10145-B		D6RY 10156-A		★ D6RY 10A313-A (w/grommets) #777F 10A313-AB	
L - - without P/S	M	40,60, 65	D4FZ 10145-B	72,73			D9FZ 10A313-A	51,89, 98
L - - P/S- "Before 6/27/77"	M	40,60	D7FZ 3C511-A	84,95			D7FZ 10A313-B	90,91, 98
L - - P/S "From 6/27/77"	M	40,60, 65	None				D7FZ 10A313-B	91,98
L - - without P/S	M	70	★ D4FZ 10145-A	72,73			D7FZ 10A313-B	90,91, 98
L - - P/S	M	70	D7FZ 3C511-A	84,95			D7FZ 10A313-B	90,91, 98

COPYRIGHT © 1986 — FORD MOTOR COMPANY — DEARBORN, MICHIGAN

1973/79 LINCOLN-MERCURY CARS

MODEL	ALTERNATOR Δ MAKE	ALTERNATOR AMP.	ADJUSTMENT ARM PART NUMBER	ADJUSTMENT ARM ●NUTS, BOLTS, ETC.	MOUNTING BRACKETS FRONT PART NUMBER	MOUNTING BRACKETS FRONT ●NUTS, BOLTS, ETC.	MOUNTING BRACKETS SIDE PART NUMBER	MOUNTING BRACKETS SIDE ●NUTS, BOLTS, ETC.
Δ B-Bosch, L-Lucas, M-Motorcraft								
● REFER TO HARDWARE LISTING AT END OF CHART FOR NUMBER SHOWN IN THIS COLUMN								
10A313 ALTERNATOR MOUNTING PARTS — Cont'd								

APPLICATION CHART

1977 — Cont'd

6 CYL. 2.8L (2800 cc or 171 C.I.D.)

J - - without A/C	B	All	D4RY 10145-B				★D4RY 10A313-B	86,87
J - - integral A/C	B	All	D5RY 10145-A				★D5RY 10A313-B	
J - - hang-on A/C	B	All	★D4ZZ 10145-C				★D4ZZ 10A313-B	
L	M	40,60	D5ZZ 10145-C	94,101			★D5ZZ 10A313-A	59,83,92, 102,103
L	M	70	D5ZZ 10145-E	94,101			★D5ZZ 10A313-A	59,83,92, 102,103

6 CYL. 3.3L (200 C.I.D.)

G,P - - without A/C	M	All	C5TZ 10145-H	37,82,94			C5TZ 10A313-D	37,64
P - - A/C	M	All	D5DZ 10145-C	94			D5DZ 2882-C	73,83,94 96,97,102

6 CYL. 4.1L (250 C.I.D.)

G,P - - without A/C	M	40,60	C9ZZ 10145-A *GY-917	16,94			D6DZ 10A313-B	37
G - - A/C	M	60	D6DZ 10145-A				★D7DZ 10A313-A	98
G - - A/C	M	70	★D7DZ 10145-A				D7DZ 10A313-B	98,99
P - - A/C	M	60	★D5DZ 10145-A	94			D6DZ 2882-C	83,94,96, 97,102

8 CYL. 5.0L (302 C.I.D.)

F,G,P,V	M	40,60	D3AZ 10145-C	74,94	D4AZ 10156-A & D1AZ 8A652-A (Spacer)	61,74, 75,93	D7UZ 10A336-A	73
F	M	70,90	D8TZ 10145-A	74,94	D4AZ 10156-A & D1AZ 8A652-A (Spacer)	61,74 75,93	D7UZ 10A336-A	61,73
G "Before 4/15/77"	M	70,90	D8TZ 10145-A	74,94	D4AZ 10156-A & D1AZ 8A652-A (Spacer)	61,74, 75,93	D7UZ 10A336-A	61,73
G- "From 4/15/77"	M	70,90	D7DZ 10145-B& ★387825-S (Spacer)	104	D7VZ 10156-A		D7UZ 10A336-A	61,73
V	M	70,90						

MODEL	ALTERNATOR △ MAKE	ALTERNATOR AMP.	ADJUSTMENT ARM PART NUMBER	ADJUSTMENT ARM ●NUTS, BOLTS, ETC.	MOUNTING BRACKETS FRONT PART NUMBER	MOUNTING BRACKETS FRONT ●NUTS, BOLTS, ETC.	MOUNTING BRACKETS SIDE PART NUMBER	MOUNTING BRACKETS SIDE ●NUTS, BOLTS, ETC.

△ B–Bosch, L–Lucas, M–Motorcraft

● REFER TO HARDWARE LISTING AT END OF CHART FOR NUMBER SHOWN IN THIS COLUMN

10A313 ALTERNATOR MOUNTING PARTS — Cont'd

APPLICATION CHART

1977 — Cont'd

8 CYL. 5.8L (351 C.I.D.)–W

F,G,V	M	40,60	D3AZ 10145–C	74,94	D4AZ 10156–A & D1AZ 8A652–A (Spacer)	61,74, 75,93	D7UZ 10A336–A	61,73
F	M	70	D8TZ 10145–A	74,94	D4AZ 10156–A & D1AZ 8A652–A (Spacer)	61,74, 75,93	D7UZ 10A336–A	61,73
G "Before 4/15/77"	M	70,90	D8TZ 10145–A	74,94	D4AZ 10156–A & D1AZ 8A652–A (Spacer)	61,74, 75,93	D7UZ 10A336–A	73
G– "From 4/15/77"	M	70,90	D7DZ 10145–B& ★387825–S (Spacer)	104	D7VZ 10156–A		D7UZ 10A336–A	73
V	M	70,90						

8 CYL. 5.8L (351 C.I.D.)–M, 6.6L (400 C.I.D.)

A – – without A/C F	M M	40,60 40,60	D3AZ 10145–D	93,94	D4AZ 10156–B & D1AZ 8A652–A (Spacer)	49,75, 93		
A – – without A/C F	M M	70,90 70,90	D3AZ 10145–B	93,94	D4AZ 10156–B & D1AZ 8A652–A (Spacer)	49,75, 93		
A – – A/C D,K	M M	60 60	D7AZ 10145–B	94	D7AZ 10156–A & D1AZ 8A652–A (Spacer)	93,100		
A – – A/C D,K	M M	70,90 70,90	D7AZ 10145–A	94	D7AZ 10156–A & D1AZ 8A652–A (Spacer)	93,100		

8 CYL. 7.5L (460 C.I.D.)

A,D,K	M	40,60	D0SZ 10145–A & D0VY 10A370–A (Spacer)	25,94	D0VY 9B450–A & 385049–S100, D0VY 10A370–A (Spacers)	6,17, 25,81		
A,D,K	M	70,90	D2SZ 10145–A & D0VY 10A370–A (Spacer)	25,94	D0VY 9B450–A & 385049–S100, D0VY 10A370–A (Spacers)	6,17, 25,81		

COPYRIGHT © 1986 — FORD MOTOR COMPANY — DEARBORN, MICHIGAN

1973/79 LINCOLN-MERCURY CARS

MODEL	ALTERNATOR		ADJUSTMENT ARM		MOUNTING BRACKETS			
					FRONT		SIDE	
	Δ MAKE	AMP.	PART NUMBER	●NUTS, BOLTS, ETC.	PART NUMBER	●NUTS, BOLTS, ETC.	PART NUMBER	●NUTS, BOLTS, ETC.

Δ B–Bosch, L–Lucas, M–Motorcraft

● REFER TO HARDWARE LISTING AT END OF CHART FOR NUMBER SHOWN IN THIS COLUMN

10A313 ALTERNATOR MOUNTING PARTS — Cont'd

APPLICATION CHART

1978

4 CYL. 2.3L (2300 cc or 140 C.I.D.)

J	B	All	★D6RY 10145–B		D6RY 10156–A		★D6RY 10A313–A (w/grommets)	
L,P – – without P/S	M	40,60, 65	D4FZ 10145–B	72,73			D9FZ 10A313–A	51,98
L,P – – P/S	M	40,60 65	None				D7FZ 10A313–B	91,98
P	M	70	★D4FZ 10145–A	72,73			D9FZ 10A313–A	51,98

6 CYL. 2.8L (2800 cc or 171 C.I.D.)

J – – without A/C	B	All	D4RY 10145–B				★D4RY 10A313–B	86,87
J – – integral A/C	B	All	D5RY 10145–A				★D5RY 10A313–B	
J – – hang–on A/C	B	All	★D4ZZ 10145–C				★D4ZZ 10A313–B	
L	M	40	D5ZZ 10145–C	94,101			★D5ZZ 10A313–A	42,59, 101
L	M	70	D5ZZ 10145–E	94,101			★D5ZZ 10A313–A	42,59, 101

6 CYL. 3.3L (200 C.I.D.)

P – – A/C	M	60	D8BZ 10145–B	94			C5TZ 10A313–D	97
P – – A/C	M	70	D8BZ 10145–A	94			C5TZ 10A313–D	97
P – – without A/C–w/heated back window	M	All	D8DZ 10145–A	94			C5TZ 10A313–D	97
P – – without A/C–w/o heated back window	M	All	C5TZ 10145–H	94			C5TZ 10A313–D	97

6 CYL. 4.1L (250 C.I.D.)

G – – without A/C – without P/S	M	40,60	C9ZZ 10145–A *GY–917	16,94			D6DZ 10A313–B	16
G – – A/C G – – P/S – without A/C	M M	60,65 60,65	D8DZ 10145–B	77,94			D7DZ 10A313–B	18
G	M	70	D8DZ 10145–C				D8DZ 10A313–A	

MODEL	ALTERNATOR △ MAKE	ALTERNATOR AMP.	ADJUSTMENT ARM PART NUMBER	ADJUSTMENT ARM ●NUTS, BOLTS, ETC.	MOUNTING BRACKETS FRONT PART NUMBER	MOUNTING BRACKETS FRONT ●NUTS, BOLTS, ETC.	MOUNTING BRACKETS SIDE PART NUMBER	MOUNTING BRACKETS SIDE ●NUTS, BOLTS, ETC.

△ B–Bosch, L–Lucas, M–Motorcraft

● REFER TO HARDWARE LISTING AT END OF CHART FOR NUMBER SHOWN IN THIS COLUMN

10A313 ALTERNATOR MOUNTING PARTS — Cont'd

APPLICATION CHART

1978 — Cont'd

8 CYL. 5.0L (302 C.I.D.)

F,G,V	M	40,60, 65	D3AZ 10145–C	74,94	D4AZ 10156–A& D1AZ 8A652–A (spacer)	61,74, 93	D7UZ 10A336–A	61
F– "Before 1/5/78"	M	70,90	D8TZ 10145–A	74,94	D4AZ 10156–A & D1AZ 8A652–A (spacer)	61,74, 93	D7UZ 10A336–A	61
F– "From 1/5/78"	M	70,90	D8TZ 10145–A	74,94	D4AZ 10156–A& D1AZ 8A652–A (spacer)	61,74, 93	D7UZ 10A336–A	61
P	M	40,60, 65	D5ZZ 10145–B	74,94	D5ZZ 10156–A	61,74, 93	D8ZZ 10A336–A & D1AZ 8A652–A (spacer)	108
P	M	70,90	D5ZZ 10145–A	81,94	D5ZZ 10156–A	61,74, 93	D8ZZ 10A336–A & D1AZ 8A652–A (spacer)	61
G,V	M	70,90	D7DZ 10145–B	104,105	D00Z 10156–A	61,93	D7UZ 10A336–A & D1AZ 8A652–A (spacer)	61,93

8 CYL. 5.8L (351 C.I.D.)–W

F	M	40,60, 65	D3AZ 10145–C	73,94	D4AZ 10156–A & D1AZ 8A652–A (spacer)	61,75, 93	D7UZ 10A336–A	61
F– "Before 1/5/78"	M	70,90	D8TZ 10145–A	73,94	D4AZ 10156–A & D1AZ 8A652–A (spacer)	61,75, 93	D7UZ 10A336–A	61
F– "From 1/5/78"	M	70,90	D8TZ 10145–A	73,94	D4AZ 10156–A& D1AZ 8A652–A (spacer)	61,75, 93	D7UZ 10A336–A	61

8 CYL. 5.8L (351 C.I.D.)–M, 6.6L (400 C.I.D.)

A – – without A/C F	M M	40,60, 65 60	D3AZ 10145–D	73	D4AZ 10156–B & D1AZ 8A652–A (spacer)	49,75, 93		
A – – without A/C F – – T/E	M M	70,90 70,90	D3AZ 10145–B	62,94	D4AZ 10156–B& D1AZ 8A652–A (spacer)	49,75, 93		
F – – without T/E	M	70,90	D20Z 10145–A		D4AZ 10156–B& D1AZ 8A652–A (spacer)	49,75, 93		
A – – A/C D,K	M M	60,65 60	D7AZ 10145–B	94	D7AZ 10156–A & D1AZ 8A652–A (spacer)	75,93, 100		
A – – A/C D,K,	M M	70,90 90	D7AZ 10145–A	94	D7AZ 10156–A& D1AZ 8A652–A (spacer)	75,93, 100		

COPYRIGHT © 1986 — FORD MOTOR COMPANY — DEARBORN, MICHIGAN

1973/79 LINCOLN-MERCURY CARS

MODEL	ALTERNATOR		ADJUSTMENT ARM		MOUNTING BRACKETS			
					FRONT		SIDE	
	Δ MAKE	AMP.	PART NUMBER	●NUTS, BOLTS, ETC.	PART NUMBER	●NUTS, BOLTS, ETC.	PART NUMBER	●NUTS, BOLTS, ETC.

Δ B-Bosch, L-Lucas, M-Motorcraft

● REFER TO HARDWARE LISTING AT END OF CHART FOR NUMBER SHOWN IN THIS COLUMN

10A313 ALTERNATOR MOUNTING PARTS — Cont'd

APPLICATION CHART

1978 — Cont'd

8 CYL. 7.5L (460 C.I.D.)

A,D,K	M	40,60, 65	D0SZ 10145-A & D0VY 10A370-A (spacer)	6,94	D0VY 9B450-A & 385049-S100, D0VY 10A370-A (spacers)	6,17, 25,81		
A,D,K	M	70,90	D2SZ 10145-A & D0VY 10A370-A (spacer)	6,94	D0VY 9B450-A & 385049-S100, D0VY 10A370-A (spacers)	6,17, 25,81		

1979

4 CYL. 2.3L (2300cc or 140 C.I.D.)

J,L,P - - with P/S	M	All	★D9FZ 10145-A r/bE0BZ 10145-A (11/81)	94			E0FZ 10A313-B	51
J,L,P - - without P/S	M	All	D4FZ 10145-B	72,73			D9FZ 10A313-A	51

6 CYL. 2.8L (2800cc or 171 C.I.D.)

J,L	M	40,60, 65	D5ZZ 10145-C	94,101			★D5ZZ 10A313-A	42,59, 101
J,L	M	70	D5ZZ 10145-E	94,101			★D5ZZ 10A313-A	42,59, 101

6 CYL. 3.3L (200 C.I.D.)

J - - A/C-without heated back window	M	60,65	D8BZ 10145-B	93			C5TZ 10A313-D	64
P - - A/C	M	60						
J - - A/C-with heated back window	M	70	D8BZ 10145-A	93			C5TZ 10A313-D	64
P - - A/C	M	70,100						
J - - w/heated back window-without A/C	M	70	D8DZ 10145-A	93			C5TZ 10A313-D	64
P - - w/heated back window-without A/C	M	All						
J - - w/o heated back window-without A/C	M	60,65	C5TZ 10145-H	93			C5TZ 10A313-D	64
P - - w/o heated back window-without A/C	M	All						

6 CYL. 4.1L (250 C.I.D.)

G - - without A/C-without P/S	M	40,60, 65	C9ZZ 10145-A *GY-917	16,94			D6DZ 10A313-B	
G - - A/C	M	60,65	★D9DZ 10145-A	94			D9DZ 3C511-A	
G - - P/S-without A/C	M	60,65						
G	M	70	★D9DZ 10145-B				D9DZ 3C511-A	

MODEL	ALTERNATOR		ADJUSTMENT ARM		MOUNTING BRACKETS			
					FRONT		SIDE	
	Δ MAKE	AMP.	PART NUMBER	●NUTS, BOLTS, ETC.	PART NUMBER	●NUTS, BOLTS, ETC.	PART NUMBER	●NUTS, BOLTS, ETC.

Δ B–Bosch, L–Lucas, M–Motorcraft

● REFER TO HARDWARE LISTING AT END OF CHART FOR NUMBER SHOWN IN THIS COLUMN

10A313 ALTERNATOR MOUNTING PARTS — Cont'd

APPLICATION CHART

1979 — Cont'd

8 CYL. 5.0L (302 C.I.D.)

A	M	60,65	E3AZ 10145-A				D9AZ 10A313-B	
A	M	70,100	D9AZ 10145-B				D9AZ 10A313-B	
F,G,V	M	40,60, 65	D3AZ 10145-C	74,94	D4AZ 10156-A & D1AZ 8A652-A (Spacer)	61,74, 93	D7UZ 10A336-A	61
F	M	70,100	D8TZ 10145-A	74,94	D4AZ 10156-A & D1AZ 8A652-A (Spacer)	61,74 93	D7UZ 10A336-A	61
J	M	All	D9ZZ 9B450-A	106	D9ZZ 10156-A	103,106, 107		
P	M	40,60, 65	D5ZZ 10145-B	74,94	D5ZZ 10156-A	61,74, 93	D8ZZ 10A336-A & D1AZ 8A652-A (Spacer)	108
P	M	70,100	D5ZZ 10145-A		D5ZZ 10156-A	61,74, 93	D8ZZ 10A336-A & D1AZ 8A652-A (Spacer)	61

8 CYL. 5.8L (351 C.I.D.)-W

A	M	60,65	E3AZ 10145-A				D9AZ 10A313-A	
A	M	70,100	D9AZ 10145-B				D9AZ 10A313-A	
F	M	40,60, 65	D3AZ 10145-C	73,94	D4AZ 10156-A & D1AZ 8A652-A (Spacer)	61,75, 93	D7UZ 10A336-A	61
F	M	70,100	D8TZ 10145-A	73,94	D4AZ 10156-A & D1AZ 8A652-A (Spacer)	61,75, 93	D7UZ 10A336-A	61

8 CYL. 5.8L (351 C.I.D.)-M

F	M	40,60	D3AZ 10145-D	94	D4AZ 10156-B & D1AZ 8A652-A (Spacer)	49,75, 93		
F	M	70,100	D3AZ 10145-B	62,94	D4AZ 10156-B & D1AZ 8A652-A (Spacer)	49,75, 93		

8 CYL. 6.6L (400 C.I.D.)

D,K	M	60,65	D7AZ 10145-B	94	D7AZ 10156-A & D1AZ 8A652-A (Spacer)	75,93, 100		
D,K	M	70	D7AZ 10145-A	94	D7AZ 10156-A & D1AZ 8A652-A (Spacer)	75,93, 100		

COPYRIGHT © 1986 — FORD MOTOR COMPANY — DEARBORN, MICHIGAN

CODE NUMBER TO PART NUMBER LISTING—Quantity As Required

10A313 ALTERNATOR MOUNTING PARTS

CODE NO.	PART NUMBER	DESCRIPTION
1	20520-S8(B-63)	Bolt-hex. hd.-5/16"-18 x 2"
4	354193-S(XX-141)	Washer-flat-3/8"
5	E602208-S72 (AB-27)	Bolt M10 x 25mm (Metric coarse)
6	385307-S36 (BB-546-BK)	Bolt-hex. hd.-7/16"-14 x 5"
8	375860-S2 (BB-405-CE)	Bolt-hex. hd.-7/16"-14 x 5 1/4"
9	20534-S8(B-90)	Bolt-hex. hd.-3/8"-16 x 2 1/4"
10	45532-S7-8(B-65)	Bolt-hex. hd.-5/16"-18 x 3"
11	355432-S(BB-149)	Bolt-hex. hd.-5/16"-18 x 5 1/2"
12	E600215-S72	Bolt M8 x 35mm (Metric coarse)
13	45566-S7(B-117)	Bolt-7/16"-14 x 4"
14	E630174-S71 (AX-32)	Lockwasher-B10 (Metric)
15	351989-S8(BB-188)	Bolt-hex. hd.-7/16"-14 x 4 5/8"
16	42996-S7-8 (B-251-F)	Bolt-hex. hd.-3/8"-16 x 3/4"
17	42998-S(B-252-A)	Bolt-hex. hd.-3/8"-16 x 1"
18	359266-S8(BB-157)	Bolt-hex. hd.-3/8"-16 x 1 1/4"
19	E600212-S71	Bolt M8 x 35mm (Metric coarse)
20	E602188-S72 (AB-20)	Bolt M8 x 25mm (Metric coarse)
21	373162-S (BB-563-A)	Bolt-hex. hd.-3/8"-16 x 1 1/8"
23	E602550-S82 (AB-62)	Bolt M8 x 25mm (Metric coarse)
24	56138-S4(B-319-V)	Bolt-3/8"-16 x 3/4"
25	370584-S(BB-420)	Bolt-3/8"-16 x 4"
26	E620013-S72	Nut-hex. M8 (Metric)
27	E630027-S71 (AX-13)	Washer-M8 (Metric)
28	E602070-S72 (AB-33)	Bolt-M10 x 35mm (Metric coarse)
29	N800052-S51 (AB-118-E)	Bolt-hex. hd.-M8 x 25mm (Metric fine)
31	E620014-S72 (AM-12)	Nut-M10 (Metric coarse)
32	E804063-S72 (AW-6)	Stud M10 x 40mm (Metric coarse)
33	20388-S(B-80)	Bolt-hex. hd.-3/8"-16 x 1"
37	382469-S (UU-52-AN)	Screw-7/16"-14 x 4 1/8"
38	300890-S(BB-66)	Bolt-5/16"-18 x 3"
39	383969-S (BB-545-DD)	Bolt-5/16"-18 x 5 1/16"
40	383722-S (BB-518-K)	Bolt-7/16"-14 x 6 3/16"
41	384861-S (BB-892)	Bolt-7/16"-14 x 7 5/8"
42	N800013-S51M (AB-118)	Bolt-hex. hd.-M8 x 19 (Metric fine)
43	N800014-S51M (AB-119)	Bolt-hex. hd.-M10 x 22.22 (Metric fine)
44	384185-S (BB-545-W)	Bolt-7/16"-14 x 1"
45	384631-S36 (BB-191-A)	Bolt-7/16"-14 x 6 1/4"
48	N601314-S51 (AB-33-C)	Bolt-hex. hd.-M10 x 45mm (Metric coarse)
49	385306-S (BB-191-AA)	Bolt-7/16"-14 x 6"
50	N800079-S (AB-120-D)	Bolt-M10 x 45 (Metric coarse)
51	N800080-S (AB-119-E)	Bolt-M10 x 30 (Metric coarse)
53	N800103-S51 (AM-11)	Nut-M8
56	384630-S (BB-546-BU)	Bolt-7/16"-14 x 5 1/4"
57	56130-S (B-319-N)	Bolt-5/16"-18 x 3"
58	381695-S (BB-391-F)	Bolt-7/16"-14 x 5 3/8"
59	N800048-S (AB-33-CE)	Bolt-M10 x 55mm (Metric coarse)
60	N800005-S (AB-88)	Bolt-M12 x 35mm (Metric coarse)
61	58669-S (B-117-H)	Bolt-7/16"-14 x 5 1/2"
62	383273-S (BB-552-CC)	Bolt-3/8"-16 x 5"
63	384860-S (BB-545-CD)	Bolt-5/16"-18 x 3 3/4"
64	382016-S (BB-151-M)	Bolt-3/8"-16 x 7/8"
65	371502-S (B-419)	Bolt-3/8"-16 x 3 3/4"
66	385664-S (BB-170-H)	Bolt-3/8"-16 x 5 3/16"
67	383497-S (BB-187-E)	Bolt-7/16"-14 x 4 1/4"
68	E804302-S72 (AW-59)	Stud-M10 x 40 (Metric coarse)
69	E602189-S72 (AB-36-J)	Bolt-M8 x 30mm (Metric coarse)
72	N800089-S (AB-17-K)	Bolt-M8 x 20mm (Metric coarse)
73	381649-S2 (BB-563-AH)	Screw & washer-3/8"-16 x 1"
74	300958-S (B-73-B)	Bolt-5/16"-24 x 5"-hex. head
75	34793-S (X-67-A)	Washer-lock-7/8"
76	383963-S (BB-545-BE)	Bolt-5/16"-18 x 2 7/8"-hex. washer head
77	376838-S2 (MM-296-AF)	Nut & washer-5/16"-18

CODE NUMBER TO PART NUMBER LISTING–Quantity As Required

CODE NO.	PART NUMBER	DESCRIPTION	CODE NO.	PART NUMBER	DESCRIPTION
10A313	ALTERNATOR MOUNTING PARTS — Cont'd				
78	359099-S (BB-417)	Bolt-3/8"-16 x 3 1/16" hex. head	94	57494-S36 (B-330)	Screw & washer-3/8"-16 x 7/8"
79	★351485-S100	Nut-3/8"-24 hex. head locking	95	384094-S2 (BB-563-BJ)	Screw & washer-7/16"-14 x 1 1/4"
80	371041-S2 (BB-575-B)	Bolt-3/8"-16 x 7/8" hex. head w/lockwasher	96	377379-S2 (BB-563-B)	Screw & washer-3/8"-16 x 1 1/4"
81	56356-S4 (B-318-G)	Bolt-3/8"-16 x 5 11/16" hex. washer head	97	382010-S2 (BB-545-E)	Screw & washer-5/16"-18 x 2 1/4"
82	379862-S7-8 (BB-429-H)	Bolt-5/16"-18 x 2" locking	98	58666-S36 (B-117-EA)	Bolt-7/16"-14 x 4 1/4-grade 8
83	58665-S36 (B-117-E)	Bolt-7/16"-14 x 4"-grade 8	99	34988-S2 (M-89-EA)	Nut-7/16"-14 lock
84	N800056-S51M (AB-119-C)	Bolt-M10 x 25mm (Metric coarse)	100	384533-S36 (BB-191-C)	Bolt-7/16"-14 x 7"
85	N800057-S (AB-119-CK)	Bolt-M10 x 40mm (Metric coarse)	101	N602592-S100 (AB-88-AA)	Bolt & washer-M12 x 35 mm-metric coarse
86	E600218-S72 (AB-20-D)	Bolt-M8 x 65mm (Metric coarse)-grade 8.8	102	380079-S2 (XX-173-C)	Washer-flat-7/16"
87	E601211-S72 (AB-20-C)	Bolt-M8 x 30mm (Metric coarse)-grade 10.9	103	383272-S2 (BB-552-BC)	Bolt & washer-3/8-16 x 4 1/4"
88	56160-S4 (B-320-T)	Bolt - 7/16"-14 x 1"	104	381907-S2 (BB-563-BB)	Bolt & washer-3/8-16 x 1 1/2"
89	N606063-S2 (AB-111-E)	Bolt-M10 x 55 hex flange hd shoulder	105	387823-S2 (BB-171-J)	Bolt-3/8"-16 x 7 1/4"
90	N800161-S100 (AB-20-CA)	Bolt-M8 x 30 hex hd locking	106	★57647-S2	Screw & washer assy. 3/8"-16 x 1 1/4"
91	N601213-S51 (AB-158-AA)	Bolt-M8 x 40 hex hd- grade 8	107	304815-S36 (BB-158-B)	Bolt-7/16"-14 x 1 7/8"
92	E600313-S72 (AB-33-BG)	Bolt-M10 x 40 hex hd	108	387859-S36 (BB-187-N)	Bolt-7/16"-14 x 5 3/8"
93	56530-S36	Bolt-5/16"-18 x 3" UBS- grade 5			

YEAR	MODEL/RESTRICTIONS	ENGINE CYL.	ENGINE C.I.D. (C.C.D.)	PART NUMBER	DESCRIPTION	QTY.
10A314	Refer to group 10A313					
10316	REGULATOR ASSY. (ALTERNATOR) ▲ 2000 cc @ 2300 cc ♦ 2600 cc ⊕ 2800 cc					
73/79	A,C,D,F,G,K,L,P,V,Y	All	All	E2PZ 10316-A	*GR-540-A	1
73/74	J	4	▲122	D4RY 10316-A	*GRE-389-A-#37558,37561 or 37565-Lucas	1

COPYRIGHT © 1986 — FORD MOTOR COMPANY — DEARBORN, MICHIGAN

1973/79 LINCOLN-MERCURY CARS

YEAR	MODEL/RESTRICTIONS	ENGINE CYL.	ENGINE C.I.D. (C.C.D.)	PART NUMBER	DESCRIPTION	QTY.
10316	REGULATOR ASSY. (ALTERNATOR) — Cont'd ▲ 2000 cc @ 2300 cc ♦ 2600 cc ⊕ 2800 cc					
73/74	J	4&6	▲122, ♦159	★ D1RY 10316-C r/b D6RY 10316-A(3/86)	*GRE-388-A-Bosch-#0190601006, 0192052004, #EGR-200	1
74	J	6	⊕171			1
76/78	J - - w/integral regulator "From 3/1/76"	4	@140			1
76/78	J - - w/integral regulator- "From 3/1/76"	6	⊕171		Used with 35 or 55 amp alternator	1
76	J - - w/remote-mtd. regulator & radio "Before 8/1/75"	4	@140	★ D5RY 10316-A r/b D6RY 10316-A(3/86)	*GRE-520-Bosch-#01 90600016	1
76	J - - w/remote-mtd. regulator & radio "Before 2/1/75"	6	⊕171			1
76	J - - w/remote-mtd. regulator w/o radio "From 11/1/74 to 8/1/75"	4	@ 140	D6RY 10316-A	*GR-787-use w/D3RY 19A095-A suppresor bond for cars w/radios	1
76	J - - w/integral regulator- "Before 3/1/76"	4	@140	D5RY 10316-B	*GRE-521-Bosch- #0192052005	1
76/78	J - - w/integral regulator	6	⊕171		Used with 45 amp. alternator	1
76	J - - w/integral regulator- "Before 3/1/76"	6	⊕171		Used with 35 or 55 amp. alternator	1
73/	A,C,D,F,K,L,P,Y	6&8	All	381922-S2	(UU-52-A)-screw-1/4"-14 x 5/8"	2
10317	SHIELD (ALTERNATOR SPLASH)-If not listed improvise					
73/75	A,Y "Before 7/2/75"	8	429,460	D3VY 10317-A	Rubber	1
75/77	A,Y "From 7/2/75"	8	460	D5AZ 10317-A	Rubber	1
78	A	8	All			1
74/75	C,F	8	All	★ D40Z 10317-A	Rubber	1
76/77	C,F	8	351,400	D60Z 10317-A	Rubber-for low mtd. thermactor air pump	1
78/	F	8	All			1
73/75	D	8	460	★ D3VY 10317-A	Rubber	1
76/78	D	8	460	D5AZ 10317-A	Rubber	1
73/76	K	8	460	★ D2SZ 10317-A	Rubber	1
77	K	8	400			1
77/78	K	8	460	D60Z 10317-A	Rubber	1
79	K	8	All			1
73/77	P	6	200,250	★ D1DZ 10317-A	Rubber	1
78	P - - A/C	6	All	D8BZ 10317-A	Rubber - incl. 4 drive pins	1
73/78	K,P	6&8	All	42134-S	(U-249)-screw-No. 10-12 x 5/8"-attach shield to frame	AR
74	D	8	All	385228-S	(GG-383)-clip-attach shield to frame	AR
10320-36	Refer to group 10346 for Alternator Parts List Instructions					
10A336	Refer to group 10A313					
10A340-43	Refer to group 10346 for Alternator Parts List Instructions					

10344 PULLEY (ALTERNATOR)

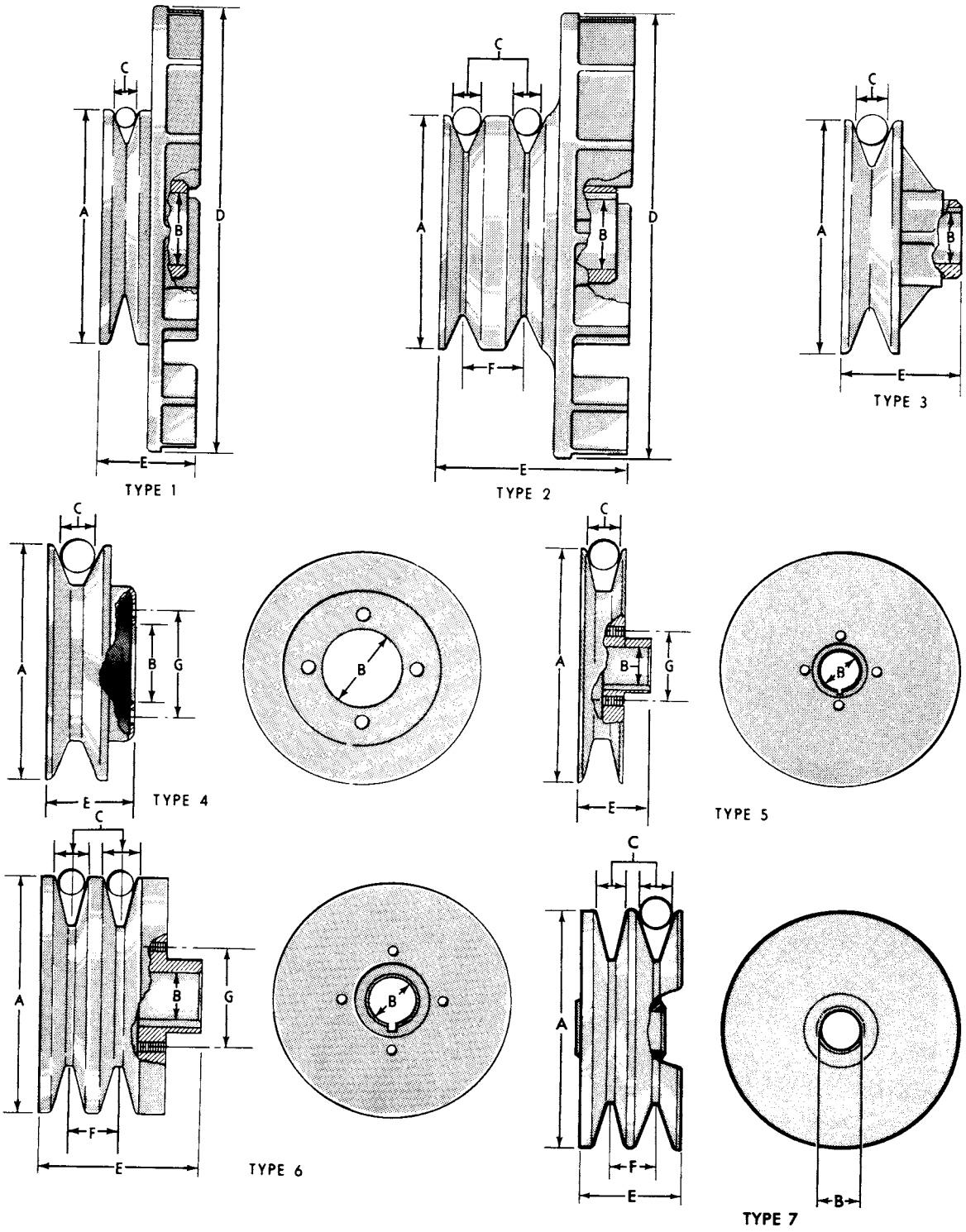

P-2915

COPYRIGHT © 1986 — FORD MOTOR COMPANY — DEARBORN, MICHIGAN

1973/79 LINCOLN-MERCURY CARS

NOTE: △ B-Bosch, L-Lucas, M-Motorcraft

10344 PULLEY (ALTERNATOR) — Cont'd

1973/

4 CYL. 2.0L (2000 cc or 122 C.I.D.)

MODEL	IDENTIFICATION	TYPE	A	B	C	D	E	F	G	△ MAKE	AMP.	PART NUMBER
J - - without A/C(1973/74)												D1RY 10344-A *GPE-504
J - - A/C(1973/74)												★ D1RY 10344-B *GPE-512
L (1973/74)	C9AF 10A352-A	3	2.84	.670	.38		1.0			M	38,42, 61	C5AZ 10344-K *GP-493
L (1973/74)	D2OF 10A352-AA	3	3.15	.670	.38		.91			M	70	D2OZ 10344-A *GP-511

4 CYL. 2.3L (2300 cc or 140 C.I.D.)

MODEL	IDENTIFICATION	TYPE	A	B	C	D	E	F	G	△ MAKE	AMP.	PART NUMBER
J - - double sheave												D5RY 10344-B *GP-587
L,P	D2OF 10A352-AA	3	3.15	.670	.38		.91			M	70	D2OZ 10344-A *GP-511
J,L,P	C9AF 10A352-C	6	2.84	.670	.38		1.40	.64		M	38,60	C5AZ 10344-L *GP-494
J,L,P	C9AF 10A352-A	3	2.84	.670	.38		1.0			M	38,40, 42,60, 70	C5AZ 10344-K *GP-493
J,L,P	D2AF 10A352-AA	6	3.15	.670	.36		1.49	.64		M	70	D2AZ 10344-A *GP-578
J,P	D9ZF 10A352-AA									M	60,65	D9ZZ 10344-A *GP-600

6 CYL. 2.6L (2600 cc or 159 C.I.D.)

MODEL	IDENTIFICATION	TYPE	A	B	C	D	E	F	G	△ MAKE	AMP.	PART NUMBER
J												D1RY 10344-A *GPE-504

6 CYL. 2.8L (2800 cc or 171 C.I.D.)

NOTE 1: Kit contains (2) pulley halves and (2) spacers

MODEL	IDENTIFICATION	TYPE	A	B	C	D	E	F	G	△ MAKE	AMP.	PART NUMBER
J - - with T/E												D4RY 10344-A
J "Before 3/1/76"												D5RY 10344-A NOTE 1
J "From 3/1/76"												★ D6RY 10344-A *GPE-590 NOTE 1
J,L	C9AF 10A351-A	3	2.84	.670	.38		1			M	38,40, 42,60, 70,90	C5AZ 10344-K *GP-493
J,L	C9AF 10A352-C	6	2.84	.670	.38		1.40	.64		M	60	C5AZ 10344-L *GP-494
J	D9ZF 10A352-AA									M	60,65	D9ZZ 10344-A *GP-600

6 CYL. 3.3L (200 C.I.D.)

MODEL	IDENTIFICATION	TYPE	A	B	C	D	E	F	G	△ MAKE	AMP.	PART NUMBER
G,J,P	C9AF 10A352-A	3	2.84	.670	.38		1			M	38,40 42,60, 61,70	C5AZ 10344-K *GP-493
G,J,P	C9AF 10A352-C	6	2.84	.670	.38		1.40	.64		M	55,60 61	C5AZ 10344-L *GP-494
G,J,P - - w/hang-on A/C												D2OZ 10344-B *GP-573

NOTE: △ B–Bosch, L–Lucas, M–Motorcraft

10344 PULLEY (ALTERNATOR) — Cont'd

1973/

MODEL	IDENTIFICATION	TYPE	A	B	C	D	E	F	G	△ MAKE	AMP.	PART NUMBER
6 CYL. 4.1L (250 C.I.D.)												
C,G,P	C9AF 10A352–A	3	2.84	.670	.38		1			M	38,40, 60,70	C5AZ 10344–K *GP–493
C,G,P	C5AF 10A352–J, C9AF 10A352–C	6	2.84	.670	.38		1.40	.64		M	55,60	C5AZ 10344–L *GP–494
8 CYL. 5.0L (302 C.I.D.)												
C	D2AF 10A352–AA	6	3.15	.670	.38		1.49	.64		M	70	D2AZ 10344–A *GP–578
C	D2OF 10A352–AA	3	3.15	.670	.38		.91			M	70	D20Z 10344–A *GP–511
C,P – – w/hang–on A/C												D20Z 10344–B *GP–573
C,F,G,P,V	C9AF 10A352–A	3	2.84	.670	.38		1			M	40,42, 60,61, 70,90	C5AZ 10344–K *GP–493
C,G	D2OF 10A352–AA	3	3.15	.670	.38		.91			M	70	D20Z 10344–A *GP–511
G,P	C9AF 10A352–C	6	2.84	.670	.38		1.40	.64		M	38,60	C5AZ 10344–L *GP–494
A	D9AF 10A352–AA									M	70,100	D9AZ 10344–A *GP–599
A,J	D9ZF 10A352–A									M	60,65	D9ZZ 10344–A *GP–600
8 CYL. 5.8L (351 C.I.D.)												
A,C,F,G,V,Y	C9AF 10A352–A	3	2.84	.670	.38		1			M	40,42, 55,60, 61,70, 90	C5AZ 10344–K *GP–493
G	C9AF 10A352–C	6	2.84	.670	.38		1.40	.64		M	60	C5AZ 10344–L *GP–494
C,F	D1ZF 10A352–AA	5	3	.670	.38		.91			M	55	D1ZZ 10344–A *GP–465–A
A,C,F,G,Y	D2OF 10A352–AA	3	3.15	.670	.38		.91			M	70	D20Z 10344–A *GP–511
A	D9AF 10A352–AA									M	70,100	D9AZ 10344–A *GP–599
A	D9ZF 10A352–AA									M	60,65	D9ZZ 10344–A *GP–600
8 CYL. 6.6L (400 C.I.D.)												
A,C,D,F,K,Y	C9AF 10A352–A	3	2.84	.670	.38		1			M	40,42, 60,61, 70,90	C5AZ 10344–K *GP–493
A,C,F,Y	C9AF 10A352–C	6	2.84	.670	.38		1.40	.64		M	55	C5AZ 10344–L *GP–494
A,C,F,Y	D2OF 10A352–AA	3	3.15	.670	.38		.91			M	70	D20Z 10344–A *GP–511
A,C,F,Y	D2AF 10A352–AA	6	3.15	.670	.36		1.49	.64		M	70	D2AZ 10344–A *GP–578

COPYRIGHT © 1986 — FORD MOTOR COMPANY — DEARBORN, MICHIGAN

MODEL	IDENTIFICATION	TYPE	A	B	C	D	E	F	G	△ MAKE	AMP.	PART NUMBER
NOTE:	△ B–Bosch, L–Lucas, M–Motorcraft											
10344	PULLEY (ALTERNATOR) — Cont'd											
	1973/											
8 CYL. 7.0L (429 C.I.D)												
A,C,Y	C9AZ 10A352–A	3	2.84	.670	.38		1			M	42,61	C5AZ 10344–K *GP–493
C	D1ZF 10A352–A	5	3	.670	.38		.91			M	55	D1ZZ 10344–A *GP–465–A
A,C,Y	D20F 10A352–AA	3	3.15	.670	.38		.91			M	70	D20Z 10344–A *GP–511
A,C	D2AF 10A352–AA	6	3.15	.670	.38		1.49	.64		M	70	D2AZ 10344–A *GP–578
8 CYL. 7.5L (460 C.I.D.)												
A,C,D,F,K,Y	C9AF 10A352–A	3	2.84	.670	.38		1			M	40,60, 70,90	C5AZ 10344–K
K	C9AF 10A352–C	6	2.84	.670	.38		1.40	.64		M	60	C5AZ 10344–L
A,C,D,F,K,Y	D20F 10A352–AA	3	3.15	.670	.38		.91			M	70,90	D20Z 10344–A *GP–511
K – – w/heated W/S and back window (aux. alt. used w/ Sierracin system)	C9AF 10A352–A	3	2.84	.670	.38		1.0			M	70	C5AZ 10344–K *GP–493
K	C9AF 10A352–A	3	2.84	.670	.38		1			M	61	C5AZ 10344–K

YEAR	MODEL/RESTRICTIONS	ENGINE CYL.	ENGINE C.I.D. (C.C.D.)	PART NUMBER	△ MAKE	AMP.	DESCRIPTION	QTY.
10A344	**SPACER (ALTERNATOR FAN OR PULLEY)**							
73/	A,C,D,F,G,K,L,P,V,Y	4,6 &8	All	C5AZ 10A344–B *GY–808	M	38,40,42, 55,60,61,70	11/16" I.D. x 7/8" O.D. x 5/16" thick	1
73/	A,C,D,F,G,K,L,P,V,Y	4,6 &8	All	D20Z 10A344–A	M	70,90, 100	43/64" I.D. x 7/8" O.D. x 5/16" thick	1

10346 ALTERNATOR ASSY.

HOW TO FIND ALTERNATORS AND COMPONENTS

By IDENTIFICATION:

1. Refer to Identification Chart below.
2. Check marking (on alternator housing) against Identification numbers to determine part numbers of service alternator, pulley, fan and spacer.

By MODEL APPLICATION

1. Refer to Model Application Chart beginning on page 32.
2. Refer to appropriate Year, Model, and Engine.

3. Select and refer to appropriate Parts List Section and Number.
4. If basic number is not known refer to Illustration Page shown, or to the Index following the General Information Section of this Catalog.
5. Select part number shown for affected Parts List. If more than one part number is shown refer to Description and Restrictions for clarification.
6. Quantity of parts shown in columns A, B, or C etc. The appropriate parts list suffix A,B,C etc. is shown in the quantity required column when the quantity is one (1).
7. Parts are listed numerically.

IDENTIFICATION EXAMPLE: D2DF 10300-AC is listed in Parts List Section 103.1 Column E.
MODEL APPLICATION EXAMPLE: 1973 Montego (8 cyl.) uses 61 amp. alternator (D2TZ 10346-B). Internal parts of this alternator are listed in Parts List Section 103.1,

IDENTIFICATION CHART

IDENTIFICATION	PARTS LIST SECTION & NO.	Δ MAKE	AMP.	PART NUMBER ALTERNATOR	PULLEY	FAN	SPACER	ILLUS. SEC. 103 PAGE
NOTE:	Δ B-Bosch, L-Lucas, M-Motorcraft							
10346	ALTERNATOR ASSY.							
D2AF 10300-EA	103.2A	M	70	D70Z 10346-A *GL-101-A	D2AZ 10344-A *GP-578	D9AZ 10A310-A *GP-602	D20Z 10A344-A	4
D2DF 10300-AC	103.1E	M	61	D7AZ 10346-B *GL-167-A	C5AZ 10344-L *GP-494	D9ZZ 10A310-A *GP-601	C5AZ 10A344-B *GY-808	3
D20F 10300-AA	103.2A	M	70	D70Z 10346-A *GL-101-A	D20Z 10344-A *GP-511	D9AZ 10A310-A *GP-602	D20Z 10A344-A	4
D20F 10300-BB	103.1D	M	55	D2AZ 10346-D *GL-88-A	C5AZ 10344-L *GP-494	D9ZZ 10A310-A *GP-601	C5AZ 10A344-B *GY-808	3
D20F 10300-CB	103.1E	M	61	D7AZ 10346-B *GL-167-A	C5AZ 10344-K *GP-493	D9ZZ 10A310-A *GP-601	C5AZ 10A344-B *GY-808	3
D20F 10300-DB	103.1F	M	42	D7AZ 10346-C *GL-168-A	C5AZ 10344-K *GP-493	D9ZZ 10A310-A *GP-601	C5AZ 10A344-B *GY-808	3
D20F 10300-EB	103.1D	M	55	D7AZ 10346-B *GL-167-A	C5AZ 10344-K *GP-493	D9ZZ 10A310-A *GP-601	C5AZ 10A344-B *GY-808	3
D20F 10300-FB	103.1G	M	60	D7AZ 10346-A *GL-169-A	D1ZZ 10344-A *GP-465-A	D9ZZ 10A310-A *GP-601	C5AZ 10A344-B *GY-808	3
D20F 10300-GA	103.2A	M	70	D70Z 10346-A *GL-101-A	D2AZ 10344-A *CP-578	D9AZ 10A310-A *GP-602	D20Z 10A344-A	4
D2ZF 10300-AB	103.1B	M	38	D7AZ 10346-C *GL-168-A	C5AZ 10344-K *GP-493	D9ZZ 10A310-A *GP-601	C5AZ 10A344-B *GY-808	3
D2ZF 10300-AC	103.1F	M	38	D7AZ 10346-C *GL-168-A	C5AZ 10344-K *GP-493	D9ZZ 10A310-A *GP-601	C5AZ 10A344-B *GY-808	3
D3DF 10300-AA	103.1E	M	61	D7AZ 10346-B *GL-167-A	C5AZ 10344-L *GP-494	D9ZZ 10A310-A *GP-601	C5AZ 10A344-B *GY-808	3
D30F 10300-AA	103.2A	M	70	D70Z 10346-A *GL-101-A	D20Z 10344-A *GP-511	D9AZ 10A310-A *GP-602	D20Z 10A344-A	4
D30F 10300-BA	103.1D	M	55	D7AZ 10346-B *GL-167-A	C5AZ 10344-K *GP-493	D9ZZ 10A310-A *GP-601	C5AZ 10A344-B *GY-808	3

COPYRIGHT © 1986 — FORD MOTOR COMPANY — DEARBORN, MICHIGAN

IDENTIFICATION CHART

IDENTIFICATION	PARTS LIST SECTION & NO.	Δ MAKE	AMP.	PART NUMBER ALTERNATOR	PULLEY	FAN	SPACER	ILLUS. SEC. 103 PAGE
NOTE:	Δ B-Bosch, L-Lucas, M-Motorcraft							
10346	ALTERNATOR ASSY. — Cont'd							
D30F 10300-CA	103.1D	M	55	D7AZ 10346-B *GL-167-A	C5AZ 10344-L *GP-494	D9ZZ 10A310-A *GP-601	C5AZ 10A344-B *GY-808	3
D30F 10300-DA	103.1G	M	60	D7AZ 10346-A *GL-169-A	D1ZZ 10344-A *GP-465-A	D9ZZ 10A310-A *GP-601	C5AZ 10A344-B *GY-808	3
D30F 10300-EA	103.1E	M	61	D7AZ 10346-B *GL-167-A	C5AZ 10344-K *GP-493	D9ZZ 10A310-A *GP-601	C5AZ 10A344-B *GY-808	3
D30F 10300-FA	103.1F	M	42	D7AZ 10346-C *GL-168-A	C5AZ 10344-K *GP-493	D9ZZ 10A310-A *GP-601	C5AZ 10A344-B *GY-808	3
D3TF 10300-CA	103.1F	M	42	D7AZ 10346-C *GL-168-A	C5AZ 10344-L *GP-494	D9ZZ 10A310-A *GP-601	C5AZ 10A344-B *GY-808	3
D3UF 10300-AA	103.1E	M	61	D7AZ 10346-B *GL-167-A	C5AZ 10344-L *GP-494	D9ZZ 10A310-A *GP-601	C5AZ 10A344-B *GY-808	3
D3VF 10300-AA	103.2B	M	90	D7VZ 10346-A *GL-108-A	D9AZ 10344-A *GP-511	D9AZ 10A310-A *GP-602	D9AZ 10A344-A	4
D3VF 10300-AB	103.2B	M	90	D7VZ 10346-A *GL-108-A	D9AZ 10344-A *GP-511	D9AZ 10A310-A *GP-602	D9AZ 10A344-A	4
D3ZF 10300-AA	103.1F	M	38	D7AZ 10346-C *GL-168-A	C5AZ 10344-K *GP-493	D9ZZ 10A310-A *GP-601	C5AZ 10A344-B *GY-808	3
D32F 10300-AA	103.2A	M	70	D70Z 10346-A *GL-101-A	D9AZ 10344-A *GP-511	D9AZ 10A310-A *GP-602	D9AZ 10A344-A	4
D32F 10300-BA	103.1E	M	61	D7AZ 10346-B *GL-167-A	C5AZ 10344-K *GP-493	D9ZZ 10A310-A *GP-601	C5AZ 10A344-B *GY-808	3
D4DF 10300-AA	103.1K	M	61	D7AZ 10346-A *GL-169-A	C5AZ 10344-L *GP-494	D9ZZ 10A310-A *GP-601	C5AZ 10A344-B *GY-808	3
D4LF 10300-AA	103.1J	M	60	D7AZ 10346-A *GL-169-A	D1ZZ 10344-A *GP-465-A	D9ZZ 10A310-A *GP-601	C5AZ 10A344-B *GY-808	3
D4LF 10300-BA	103.1J	M	60	D7AZ 10346-A *GL-169-A	C5AZ 10344-L *GP-494	D9ZZ 10A310-A *GP-601	C5AZ 10A344-B *GY-808	3
D4LF 10300-CA	103.1J	M	60	D7AZ 10346-A *GL-169-A	D1ZZ 10344-A *GP-465-A	D9ZZ 10A310-A *GP-601	C5AZ 10A344-B *GY-808	3
D4LF 10300-DA	103.1J	M	60	D7AZ 10346-A *GL-169-A	C5AZ 10344-L *GP-494	D9ZZ 10A310-A *GP-601	C5AZ 10A344-B *GY-808	3
D4OF 10300-AA	103.1H	M	42	D4OZ 10346-C *GL-151	C5AZ 10344-K *GP-493	D9ZZ 10A310-A *GP-601	C5AZ 10A344-B *GY-808	3
D4OF 10300-BA	103.1J	M	60	D7AZ 10346-A *GL-169-A	C5AZ 10344-K *GP-493	D9ZZ 10A310-A *GP-601	C5AZ 10A344-B *GY-808	3
D4OF 10300-CA	103.1J	M	60	D7AZ 10346-A *GL-169-A	C5AZ 10344-L *GP-494	D9ZZ 10A310-A *GP-601	C5AZ 10A344-B *GY-808	3
D4OF 10300-DA	103.1K	M	61	D7AZ 10346-A *GL-169-A	C5AZ 10344-K *GP-493	D9ZZ 10A310-A *GP-601	C5AZ 10A344-B *GY-808	3
D4OF 10300-EA	103.2C	M	70	D70Z 10346-B *GL-154-A	D9AZ 10344-A *GP-511	D9AZ 10A310-A *GP-602	D9AZ 10A344-A	4
D4OF 10300-FA	103.1J	M	60	D7AZ 10346-A *GL-169-A	D1ZZ 10344-A *GP-465-A	D9ZZ 10A310-A *GP-601	C5AZ 10A344-B *GY-808	3
D4SF 10300-AA	103.5A	M	70	D4SZ 10346-A *GL-150	C5AZ 10344-K *GP-493	D9ZZ 10A310-A *GP-601	C5AZ 10A344-B *GY-808	
D4TF 10300-AA	103.1H	M	42	D4OZ 10346-C *GL-151	C5AZ 10344-L *GP-494	D9ZZ 10A310-A *GP-601	C5AZ 10A344-B *GY-808	3
D4ZF 10300-AA	103.2C	M	70	D70Z 10346-B *GL-154-A	D2AZ 10344-A *GP-578	D9AZ 10A310-A *GP-602	D9AZ 10A344-A	4
D4ZF 10300-BA	103.1H	M	38	D4OZ 10346-C *GL-151	C5AZ 10344-L *GP-494	D9ZZ 10A310-A *GP-601	C5AZ 10A344-B *GY-808	3

IDENTIFICATION CHART

IDENTIFICATION	PARTS LIST SECTION & NO.	Δ MAKE	AMP.	PART NUMBER ALTERNATOR	PULLEY	FAN	SPACER	ILLUS. SEC. 103 PAGE
NOTE:	Δ B-Bosch, L-Lucas, M-Motorcraft							
10346	ALTERNATOR ASSY. — Cont'd							
D4ZF 10300-CA	103.2C	M	70	D70Z 10346-B *GL-154-A	D2AZ 10344-A *GP-578	D9AZ 10A310-A *GP-602	D9AZ 10A344-A	4
D42F 10300-BA	103.1K	M	61	D7AZ 10346-A *GL-169-A	C5AZ 10344-K *GP-493	D9ZZ 10A310-A *GP-601	C5AZ 10A344-B *GY-808	3
D42F 10300-CA	103.2C	M	70	D70Z 10346-B *GL-154-A	D9AZ 10344-A *GP-511	D9AZ 10A310-A *GP-602	D9AZ 10A344-A	4
D42F 10300-EA	103.1H	M	38	D7AZ 10346-C *GL-168-A	C5AZ 10344-K *GP-493	D9ZZ 10A310-A *GP-601	C5AZ 10A344-B *GY-808	3
D42F 10300-FA	103.1H	M	38	D40Z 10346-C *GL-151	C5AZ 10344-K *GP-493	D9ZZ 10A310-A *GP-601	C5AZ 10A344-B *GY-808	3
D5AF 10300-AA	103.1N	M	40	D7AZ 10346-C *GL-168-A	C5AZ 10344-K *GP-493	D9ZZ 10A310-A *GP-601	C5AZ 10A344-B *GY-808	3
D5AF 10300-BA	103.1N	M	40	D7AZ 10346-C *GL-168-A	C5AZ 10344-K *GP-493	D9ZZ 10A310-A *GP-601	C5AZ 10A344-B *GY-808	3
D5AF 10300-CA	103.1M	M	60	D7AZ 10346-B *GL-167-A	C5AZ 10344-K *GP-493	D9ZZ 10A310-A *GP-601	C5AZ 10A344-B *GY-808	3
D5AF 10300-DA	103.1M	M	60	D7AZ 10346-B *GL-167-A	C5AZ 10344-K *GP-493	D9ZZ 10A310-A *GP-601	C5AZ 10A344-B *GY-808	3
D5AF 10300-EA	103.1L	M	60	D7AZ 10346-A *GL-169-A	C5AZ 10344-K *GP-493	D9ZZ 10A310-A *GP-601	C5AZ 10A344-B *GY-808	3
D5AF 10300-FA	103.1L	M	60	D7AZ 10346-A *GL-169-A	C5AZ 10344-K *GP-493	D9ZZ 10A310-A *GP-601	C5AZ 10A344-B *GY-808	3
D5AF 10300-GA	103.1L	M	60	D7AZ 10346-A *GL-169-A	C5AZ 10344-L *GP-494	D9ZZ 10A310-A *GP-601	C5AZ 10A344-B *GY-808	3
D5AF 10300-JA	103.1N	M	40	D7AZ 10346-C *GL-168-A	C5AZ 10344-L *GP-494	D9ZZ 10A310-A *GP-601	C5AZ 10A344-B *GY-808	3
D5AF 10300-KA	103.1M	M	60	D7AZ 10346-B *GL-167-A	C5AZ 10344-L *GP-494	D9ZZ 10A310-A *GP-601	C5AZ 10A344-B *GY-808	3
D5AF 10300-LA	103.1M	M	60	D7AZ 10346-B *GL-167-A	C5AZ 10344-L *GP-494	D9ZZ 10A310-A *GP-601	C5AZ 10A344-B *GY-808	3
D5DF 10300-AA	103.2A	M	70	D70Z 10346-A *GL-101-A	D2AZ 10344-A *GP-578	D9AZ 10A310-A *GP-602	D9AZ 10A344-A	4
D5OF 10300-AA	103.2C	M	70	D70Z 10346-B *GL-154-A	C5AZ 10344-K *GP-493	D9AZ 10A310-A *GP-602	D9AZ 10A344-A	4
D5OF 10300-BA	103.2B	M	90	D7VZ 10346-A *GL-108-A	C5AZ 10344-K *GP-493	D9AZ 10A310-A *GP-602	D9AZ 10A344-A	4
D5OF 10300-CA	103.2A	M	70	D70Z 10346-A *GL-101-A	C5AZ 10344-K *GP-493	D9AZ 10A310-A *GP-602	D9AZ 10A344-A	4
D5ZF 10300-AA	103.2B	M	90	D7VZ 10346-A *GL-108-A	D9AZ 10344-A *GP-511	D9AZ 10A310-A *GP-602	D9AZ 10A344-A	4
D5ZF 10300-BA	103.2B	M	90	D7VZ 10346-A *GL-108-A	C5AZ 10344-K *GP-493	D9AZ 10A310-A *GP-602	D9AZ 10A344-A	
D52F 10300-AA	103.1F	M	38	D7AZ 10346-C *GL-168	C5AZ 10344-K *GP-493	D9ZZ 10A310-A *GP-601	C5AZ 10A344-B *GY-808	3
D52F 10300-BA	103.2A	M	70	D70Z 10346-A *GL-101-A	C5AZ 10344-K *GP-493	D9AZ 10A310-A *GP-602	D9AZ 10A344-A	
D7AF 10300-AA	103.1R	M	40	D7AZ 10346-C *GL-168-A	C5AZ 10344-K *GP-493	D9ZZ 104310-B *GP-601	C5AZ 10A344-B *GY-808	3
D7AF 10300-BA	103.1R	M	40	D7AZ 10346-C *GL-168-A	C5AZ 10344-K *GP-493	D9ZZ 10A310-A *GP-601	C5AZ 10A344-B *GY-808	3
D7AF 10300-CA	103.1Q	M	60	D7AZ 10346-B *GL-167-A	C5AZ 10344-K *GP-493	D9ZZ 10A310-A *GP-601	C5AZ 10A344-B *GY-808	3

COPYRIGHT © 1986 — FORD MOTOR COMPANY — DEARBORN, MICHIGAN

IDENTIFICATION CHART

IDENTIFICATION	PARTS LIST SECTION & NO.	Δ MAKE	AMP.	PART NUMBER ALTERNATOR	PULLEY	FAN	SPACER	ILLUS. SEC. 103 PAGE
NOTE:	Δ B-Bosch, L-Lucas, M-Motorcraft							
10346	ALTERNATOR ASSY. — Cont'd							
D7AF 10300-DA	103.1Q	M	60	D7AZ 10346-B *GL-167-A	C5AZ 10344-K *GP-493	D9ZZ 10A310-A *GP-601	C5AZ 10A344-B *GY-808	3
D7AF 10300-EA	103.1P	M	60	D7AZ 10346-A *GL-169-A	C5AZ 10344-K *GP-493	D9ZZ 10A310-A *GP-601	C5AZ 10A344-B *GY-808	3
D7AF 10300-FA	103.1P	M	60	D7AZ 10346-A *GL-169-A	C5AZ 10344-K *GP-493	D9ZZ 10A310-A *GP-601	C5AZ 10A344-B *GY-808	3
D7AF 10300-GA	103.1P	M	60	D7AZ 10346-A *GL-169-A	C5AZ 10344-L *GP-494	D9ZZ 10A310-A *GP-601	C5AZ 10A344-B *GY-808	3
D7AF 10300-HA	103.1P	M	60	D7AZ 10346-A *GL-169-A	C5AZ 10344-L *GP-494	D9ZZ 10A310-A *GP-601	C5AZ 10A344-B *GY-808	3
D7AF 10300-JA	103.1R	M	40	D7AZ 10346-C *GL-168-A	C5AZ 10344-L *GP-494	D9ZZ 10A310-A *GP-601	C5AZ 10A344-B *GY-808	3
D7AF 10300-KA	103.1Q	M	60	D7AZ 10346-B *GL-167-A	C5AZ 10344-L *GP-494	D9ZZ 10A310-A *GP-601	C5AZ 10A344-B *GY-808	3
D7AF 10300-LA	103.1Q	M	60	D7AZ 10346-B *GL-167-A	C5AZ 10344-L *GP-494	D9ZZ 10A310-A *GP-601	C5AZ 10A344-B *GY-808	3
D7EF 10300-AA	103.2D	M	70	D70Z 10346-A *GL-101-A	C5AZ 10344-L *GP-494	D9AZ 10A310-A *GP-602	D9AZ 10A344-A	4
D7EF 10300-BA	103.2D	M	70	D70Z 10346-A *GL-101-A	C5AZ 10344-K *GP-493	D9AZ 10A310-A *GP-602	D9AZ 10A344-A	4
D70F 10300-AA	103.2E	M	70	D70Z 10346-B *GL-154-A	C5AZ 10344-K *GP-493	D9AZ 10A310-A *GP-602	D9AZ 10A344-A	4
D70F 10300-BA	103.2F	M	100	D7VZ 10346-A *GL-108-A	C5AZ 10344-K *GP-493	D9AZ 10A310-A *GP-602	D9AZ 10A344-A	4
D70F 10300-CA	103.2D	M	70	D70Z 10346-A *GL-101-A	C5AZ 10344-K *GP-493	D9AZ 10A310-A *GP-602	D9AZ 10A344-A	4
D70F 10300-DA	103.2D	M	70	D70Z 10346-A *GL-101-A	D9AZ 10344-A *GP-578	D9AZ 10A310-A *GP-602	D9AZ 10A344-A	4
D7TF 10300-AA	103.1S	M	65	D8ZZ 10346-A *GL-183	C5AZ 10344-L *GP-494	D9ZZ 10A310-A *GP-601	C5AZ 10A344-B *GY-808	3
D7ZF 10300-AA	103.1S	M	65	D8ZZ 10346-A *GL-183	C5AZ 10344-L *GP-494	D9ZZ 10A310-A *GP-601	C5AZ 10A344-B *GY-808	3
D8BF 10300-CA	103.1W	M	65	D9BZ 10346-B *GL-198	C5AZ 10344-L *GP-494	D9ZZ 10A310-A *GP-601	C5AZ 10A344-B *GY-808	3
D8BF 10300-DA	103.2G	M	70	D9BZ 10346-C *GL-199	C5AZ 10344-L *GP-494	D9AZ 10A310-A *GP-602	D20Z 10A344-A	4
D8VF 10300-AA	103.1P	M	60	D7AZ 10346-A *GL-169-A	C5AZ 10344-K *GP-493	D9ZZ 10A310-A *GP-601	C5AZ 10A344-B *GY-808	3
D8VF 10300-BA	103.2J	M	100	D9VY 10346-D *GL-203	C5AZ 10344-K *GP-493	D9AZ 10A310-A *GP-602	D20Z 10A344-A	4
D8VF 10300-CA	103.2H	M	70	D9VY 10346-C *GL-202	C5AZ 10344-K *GP-493	D9AZ 10A310-A *GP-602	D20Z 10A344-A	4
D8ZF 10300-AA	103.1T	M	40	D9ZZ 10346-A *GL-204	C5AZ 10344-K *GP-493	D9ZZ 10A310-A *GP-601	C5AZ 10A344-B *GY-808	3
D8ZF 10300-BA	103.1U	M	60	D9BZ 10346-A *GL-197	C5AZ 10344-L *GP-494	D9ZZ 10A310-A *GP-601	C5AZ 10A344-B *GY-808	3
D8ZF 10300-CA	103.1U	M	60	D9BZ 10346-A *GL-197	C5AZ 10344-K *GP-493	D9ZZ 10A310-A *GP-601	C5AZ 10A344-B *GY-808	3
D8ZF 10300-EA	103.1T	M	40	D9ZZ 10346-A *GL-204	C5AZ 10344-L *GP-494	D9ZZ 10A310-A *GP-601	C5AZ 10A344-B *GY-808	3
D8ZF 10300-FA	103.2G	M	70	D9BZ 10346-C *GL-199	C5AZ 10344-K *GP-493	D9AZ 10A310-A *GP-602	D20Z 10A344-A	4

IDENTIFICATION CHART

IDENTIFICATION	PARTS LIST SECTION & NO.	△ MAKE	AMP.	PART NUMBER ALTERNATOR	PULLEY	FAN	SPACER	ILLUS. SEC. 103 PAGE
NOTE:	△ B–Bosch, L–Lucas, M–Motorcraft							
10346	ALTERNATOR ASSY. — Cont'd							
D8ZF 10300–HA	103.1W	M	65	D9BZ 10346–B *GL–198	C5AZ 10344–L *GP–494	D9ZZ 10A310–A *GP–601	C5AZ 10A344–B *GY–808	3
D9AF 10300–AA	103.2J	M	100	D9VY 10346–D *GL–203	D9AZ 10344–A *GP–599	D9AZ 10A310–A *GP–602	D20Z 10A344–A	4
D9AF 10300–BA	103.1W	M	65	D9BZ 10346–B *GL–198	D9ZZ 10344–A *GP–600	D9ZZ 10A310–A *GP–601	C5AZ 10A344–B *GY–808	3
D9AF 10300–CA	103.2G	M	70	D9BZ 10346–C *GL–199	D9AZ 10344–A *GP–599	D9AZ 10A310–A *GP–602	D20Z 10A344–A	4
D9BF 10300–AA	103.2J	M	100	D9VY 10346–D *GL–203	C5AZ 10344–K *GP–493	D9AZ 10A310–A *GP–602	D20Z 10A344–A	4
D9DF 10300–AA	103.2G	M	70	D9BZ 10346–C *GL–199	C5AZ 10344–L *GP–494	D9AZ 10A310–A *GP–602	D20Z 10A344–A	4
D9OF 10300–AA	103.2G	M	70	D9BZ 10346–C *GL–199	C5AZ 10344–K *GP–493	D9AZ 10A310–A *GP–602	D20Z 10A344–A	4
D9UF 10300–BA	103.1V	M	60	D9VY 10346–A *GL–200	C5AZ 10344–K *GP–493	D9ZZ 10A310–A *GP–601	C5AZ 10A344–B *GY–808	3
D9UF 10300–GA	103.2J	M	100	D9VY 10346–D *GL–203	C5AZ 10344–L *GP–494	D9AZ 10A310–A *GP–602	D20Z 10A344–A	4
D9VF 10300–AA	103.1X	M	65	D9VY 10346–B *GL–201	C5AZ 10344–K *GP–493	D9ZZ 10A310–A *GP–601	C5AZ 10A344–B *GY–808	3
D9ZF 10300–AA	103.1U	M	60	D9BZ 10346–A *GL–197	D9ZZ 10344–A *GP–600	D9ZZ 10A310–A *GP–601	C5AZ 10A344–B *GY–808	3
D94F 10300–AA	103.1X	M	65	D9VY 10346–B *GL–201	C5AZ 10344–K *GP–493	D9ZZ 10A310–A *GP–601	C5AZ 10A344–B *GY–808	3
D2AF 10346–CA	103.1A	M	42	D5AZ 10346–C *GL–168				3
D2AF 10346–DA	103.1B	M	55	D7AZ 10346–B *GL–167–A				3
D20F 10346–BA	103.2A	M	70	D70Z 10346–A *GL–101–A				4
D20F 10346–GA	103.1F	M	42	D7AZ 10346–C *GL–168–A				3
D20F 10346–HA	103.1D	M	55	D7AZ 10346–B *GL–167–A				3
D20F 10346–JA	103.1G	M	60	D7AZ 10346–A *GL–169–A				3
D20F 10346–KA	103.1E	M	61	D7AZ 10346–B *GL–167–A				3
D2TF 10346–BA	103.1E	M	61	D7AZ 10346–B *GL–167–A				3
D2ZF 10346–BA	103.1C	M	60	D7AZ 10346–A *GL–169–A				3
D3VF 10346–BA	103.2B	M	90	D7VZ 10346–A *GL–108–A				4
D40F 10346–AA	103.1K	M	61	D7AZ 10346–A *GL–169–A				
D40F 10346–BA	103.1J	M	60	D7AZ 10346–A *GL–169–A				
D40F 10346–CA	103.1H	M	42	D40Z 10346–C *GL–151				
D40F 10346–DA	103.2C	M	70	D70Z 10346–B *GL–154–A				

COPYRIGHT © 1986 — FORD MOTOR COMPANY — DEARBORN, MICHIGAN

IDENTIFICATION CHART

IDENTIFICATION	PARTS LIST SECTION & NO.	△ MAKE	AMP.	PART NUMBER ALTERNATOR	PULLEY	FAN	SPACER	ILLUS. SEC. 103 PAGE
NOTE:	△ B–Bosch, L–Lucas, M–Motorcraft							
10346	ALTERNATOR ASSY. — Cont'd							
D4SF 10346–AA	103.5A	M	70	D4SZ 10346–A *GL–150				
D5AF 10346–AA	103.1L	M	60	D7AZ 10346–A *GL–169–A				
D5AF 10346–BA	103.1M	M	60	D7AZ 10346–B *GL–167–A				
D5AF 10346–CA	103.1N	M	40	D7AZ 10346–C *GL–168–A				3
D7AF 10346–AA	103.1P	M	60	D7AZ 10346–A *GL–169–A				
D7AF 10346–BA	103.1Q	M	60	D7AZ 10346–B *GL–167–A				
D7AF 10346–CA	103.1R	M	40	D7AZ 10346–C *GL–168–A				
D70F 10346–AA	103.2D	M	70	D70Z 10346–A *GL–101–A				
D70F 10346–BA	103.2E	M	70	D70Z 10346–B *GL–154–A				
D7VF 10346–AA	103.2F	M	100	D7VZ 10346–A *GL–108–A				
D7ZF 10346–AA	103.1S	M	65	D8ZZ 10346–A *GL–183				3
D8BF 10346–AA	103.1U	M	60	D9BZ 10346–A *GL–197				3
D8BF 10346–BA	103.1W	M	65	D9BZ 10346–B *GL–198				3
D8BF 10346–CA	103.2G	M	70	D9BZ 10346–C *GL–199				4
D8VF 10346–AA	103.1V	M	60	D9VY 10346–A *GL–200				3
D8VF 10346–BA	103.2J	M	100	D9VY 10346–D *GL–203				4
D8VF 10346–CA	103.2H	M	70	D9VY 10346–C *GL–202				4
D8ZF 10346–AA	103.1T	M	40	D9ZZ 10346–A *GL–204				3
D9VF 10346–AA	103.1X	M	65	D9VY 10346–B *GL–201				3
23653–A	103.4A	L	35	D1RY 10346–D *GLE–102	D0RY 10344–A *GPE–501	D0RY 10A310–A *GPE–502		1
0120400704	103.3H	B	35	D2RY 10346–C *GLE–172	D5RY 10344–A *GP–586	D2RY 10A310–A *GPE–514		1
0120400705	103.3H	B	35	D2RY 10346–C *GLE–172	D5RY 10344–A *GP–586	D2RY 10A310–A *GPE–514		1
0120400807	103.3J	B	55	D5RY 10346–D *GL–171	D5RY 10344–A *GP–586	D2RY 10A310–A *GPE–514		1
0120400861	103.3M	B	35	D4RY 10346–B *GL–159	D5RY 10344–A *GPE–586	D2RY 10A310–A *GPE–514		1
0120400868	103.3L	B	35	D2RY 10346–C *GLE–172	D4RY 10344–A *GP–583	D2RY 10A310–A *GPE–514		1
0120400869	103.3C	B	55	D4RY 10346–D *GL–157	D4RY 10344–A *GP–583	D2RY 10A310–A *GPE–514		1
0120400872/3	103.3N	B	55	D4RY 10346–C *GL–158	D5RY 10344–A *GPE–586	D2RY 10A310–A *GPE–514		1

IDENTIFICATION CHART

IDENTIFICATION	PARTS LIST SECTION & NO.	△ MAKE	AMP.	PART NUMBER ALTERNATOR	PULLEY	FAN	SPACER	ILLUS. SEC. 103 PAGE
NOTE:	△ B–Bosch, L–Lucas, M–Motorcraft							
10346	ALTERNATOR ASSY. — Cont'd							
0120400898	103.3F	B	35	D5RY 10346–B *GL–165	D5RY 10344–B *GP–587	D2RY 10A310–A *GPE–514		1
0120400899	103.3G	B	55	D5RY 10346–C *GL–166	D5RY 10344–B *GP–587	D2RY 10A310–A *GPE–514		1
0120489562	103.3D	B	35	D5RY 10346–F *GLE–174	D5RY 10344–A *GP–586	D2RY 10A310–A *GPE–514		1
0120489588	103.3AA	B	45	D1RY 10346–E *GLE–196		D2RY 10A310–A *GPE–514		1
0120489590	103.3W	B	45	D6RY 10346–H *GLE–184	D6RY 10344–A *GPE–590	D2RY 10A310–A *GPE–514		1
0120489595	103.3E	B	55	D5RY 10346–E *GLE–173	D5RY 10344–A *GP–586	D2RY 10A310–A *GPE–514		1
0120489601	103.3P	B	35	D7RY 10346–A *GL–186	D5RY 10344–B *GP–587	D2RY 10A310–A *GPE–514		1
0120489616	103.3R	B	35	D6RY 10346–C *GLE–178				
Not available	103.3AE	B	35	D6RY 10346–L *GLE–178–A		D2RY 10A310–A *GPE–514		1
0120489617	103.3S	B	55	D6RY 10346–D *GLE–179	D6RY 10344–A *GPE–590	D2RY 10A310–A *GPE–514		1
0120489665	103.3X	B	35	D7RY 10346–A *GLE–186	D5RY 10344–B *GP–587	D2RY 10A310–A *GPE–514		1
0120489669	103.3Y	B	45	D7RY 10346–B *GLE–180–A	D5RY 10344–B *GP–587	D2RY 10A310–A *GPE–514		1
0120489706	103.3AB	B	45	D6RY 10346–H *GLE–184		D2RY 10A310–A *GPE–514		1
0120489842/96	103.3AC	B	45	D6RY 10346–N *GLE–184–A		D2RY 10A310–A *GPE–514		1
0120489671	103.3Z	B	55	D7RY 10346–D *GLE–193	D5RY 10344–B *GP–587	D2RY 10A310–A *GPE–514		1
400758759	103.3A	B	35	D5RY 10346–C *GLE–100	D5RY 10344–A *GPE–586	D2RY 10A310–A *GPE–514		1
Not available	103.3B	B	35	D2RY 10346–C *GLE–172	D5RY 10344–A *GPE–586	D2RY 10A310–A *GPE–514		1
Not available	103.3Q	B	35	D7RY 10346–D *GLE–193	D5RY 10344–B *GP–587	D2RY 10A310–A *GPE–514		1
Not available	103.3R	B	35	D6RY 10346–C *GLE–178	D6RY 10344–A *GPE–590	D2RY 10A310–A *GPE–514		1
Not available	103.3T	B	45	D6RY 10346–E *GLE–180	D5RY 10344–B *GP–587	D2RY 10A310–A *GPE–514		1
Not available	103.3U	B	35	D7RY 10346–A *GLE–186	D5RY 10344–B *GP–587	D2RY 10A310–A *GPE–514		1
Not available	103.3V	B	55	D7RY 10346–D *GLE–193	D5RY 10344–B *GP–587	D2RY 10A310–A *GPE–514		1
0120489801	103.3S	B	55	D6RY 10346–D *GLE–179				1
0120489843/4	103.3AD	B	55	D6RY 10346–M *GLE–179–A		D2RY 10A310–A *GPE–514		1
0120489048	103.3AF	B	55	D6RY 10346–P *GLE–179–B	D5RY 10344–A *GPE–586	D2RY 10A310–A *CPE–514		1

COPYRIGHT © 1986 — FORD MOTOR COMPANY — DEARBORN, MICHIGAN

APPLICATION CHART

MODEL	ENGINE CYL.	ENGINE C.I.D. (C.C.D.)	△ MAKE	AMP	REMARKS	PARTS LIST SEC. & NO.	PART NUMBER ALTERNATOR	PART NUMBER REGULATOR	ILLUS. SEC. 103 PAGE
NOTE:	△ B-Bosch, L-Lucas, M-Motorcraft, ▲ 2000 cc, @ 2300 cc, ♦ 2600 cc, ⊕ 2800 cc AMP.								
10346 NOTE 2-	ALTERNATOR ASSY. Also use suppressor D3RY 18832-B for cars with radios.								
1973									
A,C,F,P,Y	6&8	All	M	38, 42		103.1F	★D2AZ 10346-C *GL-89-A r/bD7AZ 10346-C	E2PZ 10316-A *GR-540-A	3
A,C,F,P,Y	6&8	All	M	55		103.1D	★D2AZ 10346-D *GL-88-A r/bD7AZ 10346-B	E2PZ 10316-A *GR-540-A	3
A,C,D,F,K,P,Y	6&8	All	M	61		103.1E	★D2TZ 10346-B *GL-95-A r/bD7AZ 10346-B	E2PZ 10316-A *GR-540-A	3
A,C,D,F,K,Y	8	All	M	70		103.2A	★D20Z 10346-B *GL-101 r/bD70Z 10346-A	E2PZ 10316-A *GR-540-A	4
J	4	▲122	B	35		103.3A	★D1RY 10346-C *GLE-100 r/bD1RY 10346-E	D1RY 10316-C *GRE-388-A	1
J	4	▲122	L	35		103.4A	★D1RY 10346-D *GLE-102	★D1RY 10316-B *GRE-389 r/bD4RY 10316-A	
J	4	▲122	B	45		103.3AA	★D1RY 10346-E *GLE-146	D1RY 10316-C *GRE-388-A	1
J	6	♦159	B	35		103.3B	★D2RY 10346-B *GLE-106 r/bD2RY 10346-C	D1RY 10316-C *GRE-388-A	1
C,F - - hi temp	8	All	M	55		103.1C	★D2ZZ 10346-B *GL-92-A r/bD7AZ 10346-A	E2PZ 10316-A *GR-540-A	3
A,C,D,Y	8	460	M	90		103.2B	★D3VY 10346-A *GL-108 r/bD7VZ 10346-A	E2PZ 10316-A *GR-540-A	4
1974									
A,C,F,L,P,Y - - without T/E	4, 6&8	All	M	38, 42		103.1F	★D2AZ 10346-C *GL-89-A r/bD7AZ 10346-C	E2PZ 10316-A *GR-540-A	3
A,C,L,P,Y - - T/E	4, 6&8	All	M	42	High temp. alt.	103.1H	★D40Z 10346-C *GL-151 r/bD7AZ 10346-C	E2PZ 10316-A *GR-540-A	
A,C,F,P,Y - - without T/E	6&8	All	M	55		103.1D	★D2AZ 10346-D *GL-88-A r/bD7AZ 10346-B	E2PZ 10316-A *GR-540-A	3
A,C,F,K,P,Y - - T/E	6&8	All	M	55	High temp. alt.	103.1J	★D40Z 10346-B *GL-152 r/bD7AZ 10346-A	E2PZ 10316-A *GR-540-A	
A,C,D,F,K,L,P,Y - - without T/E	4, 6&8	All	M	61		103.1E	★D2TZ 10346-B *GL-95-A r/bD7AZ 10346-B	E2PZ 10316-A *GR-540-A	3

APPLICATION CHART

MODEL	ENGINE CYL.	ENGINE C.I.D. (C.C.D.)	Δ MAKE	AMP	REMARKS	PARTS LIST SEC. & NO.	PART NUMBER ALTERNATOR	PART NUMBER REGULATOR	ILLUS. SEC. 103 PAGE
NOTE:	Δ B-Bosch, L-Lucas, M-Motorcraft, ▲ 2000 cc, @ 2300 cc, ♦ 2600 cc, ⊕ 2800 cc AMP.								
10346 NOTE 2-	ALTERNATOR ASSY. — Cont'd Also use suppressor D3RY 18832-B for cars with radios.								
1974 — Cont'd									
A,C,D,F,K,L,P,Y - - T/E	4, 6&8	All	M	61	High temp. alt.	103.1K	D40Z 10346-A *GL-153	E2PZ 10316-A *GR-540-A	
A,C,D,F,K,Y - - without T/E	6&8	All	M	70		103.2A	★ D20Z 10346-B *GL-101 r/bD70Z 10346-A	E2PZ 10316-A *GR-540-A	4
A,C,D,F,K,L,Y - - T/E	4, 6&8	All	M	70	High temp. alt.	103.2C	★ D40Z 10346-D *GL-154 r/bD70Z 10346-B	E2PZ 10316-A *GR-540-A	
A,C,D,K,Y	6&8	All	M	90		103.2B	★ D3VY 10346-A *GL-108 r/bD7VZ 10346-A	E2PZ 10316-A *GR-540-A	4
J - - without A/C	4	▲122	B	35		103.3M	★ D4RY 10346-B *GL-159 r/bD4RY 10346-C	D1RY 10316-C *GRE-388-A	
J - - A/C	4	▲ 122	B	55		103.3N	★ D4RY 10346-C *GL-158	D1RY 10316-C *GRE-388-A	
J - - T/E without A/C	6	⊕171	B	35		103.3L	★ D4RY 10346-A *GL-155 r/bD2RY 10346-C	D1RY 10316-C *GRE-388-A	
J - - T/E and A/C	6	⊕171	B	55		103.3C	D4RY 10346-D *GL-157	D1RY 10316-C *GRE-388-A	
K - - w/heated W/S and back window	8	460	M	70	Aux. alt.-used w/ Sierracin system	103.5A	★ D4SZ 10346-A *GL-150	E2PZ 10316-A *GR-540-A	
1975									
A,C,F,G,L,P,Y	4, 6&8	All	M	38, 42		103.1F	★ D2AZ 10346-C *GL-89-A r/bD7AZ 10346-C	E2PZ 10316-A *GR-540-A	3
A,C,F,G,L,P,Y	4,6 &8	All	M	40		103.1N	★ D5AZ 10346-C *GL-168 r/bD7AZ 10346-C	E2PZ 10316-A *GR-540-A	3
A,C,F,G,P,Y	6&8	All	M	55		103.1D	★ D2AZ 10346-D *GL-88-A r/bD7AZ 10346-B	E2PZ 10316-A *GR-540-A	3
A,G,Y	8	All	M	55	High temp. alt.	103.1J	★ D40Z 10346-B *GL-152 r/bD7AZ 10346-A	E2PZ 10316-A *GR-540-A	3
A,C,F,G,L,P,Y	4, 6&8	All	M	60		103.1M	★ D5AZ 10346-B *GL-167 r/bD7AZ 10346-B	E2PZ 10316-A *GR-540-A	3
A,C,D,F,G,K,Y	6&8	All	M	60	High temp. alt.	103.1L	★ D5AZ 10346-A *GL-169 r/bD7AZ 10346-A	E2PZ 10316-A *GR-540-A	3
A,C,F,G,L,P,Y	4, 6&8	All	M	61		103.1E	★ D2TZ 10346-B *GL-95-A r/bD7AZ 10346-B	E2PZ 10316-A *GR-540-A	3

COPYRIGHT © 1986 — FORD MOTOR COMPANY — DEARBORN, MICHIGAN

APPLICATION CHART

MODEL	ENGINE CYL.	ENGINE C.I.D. (C.C.D.)	Δ MAKE	AMP	REMARKS	PARTS LIST SEC. & NO.	PART NUMBER ALTERNATOR	PART NUMBER REGULATOR	ILLUS. SEC. 103 PAGE
NOTE:	Δ B-Bosch, L-Lucas, M-Motorcraft, ▲ 2000 cc, @ 2300 cc, ♦ 2600 cc, ⊕ 2800 cc AMP.								
10346 NOTE 2-	ALTERNATOR ASSY. — Cont'd Also use suppressor D3RY 18832-B for cars with radios.								
1975 — Cont'd									
A,C,D,F,G,K,Y	8	All	M	61	High temp. alt.	103.1K	D40Z 10346-A *GL-153	E2PZ 10316-A *GR-510-A	3
A,C,F,G,L,Y	4, 6&8	All	M	70		103.2A	★ D20Z 10346-B *GL-101 r/b D70Z 10346-A	E2PZ 10316-A *GR-540-A	4
A,C,F,G,K,L,Y	4&8	All	M	70	High temp. alt.	103.2C	★ D40Z 10346-D *GL-154 r/b D70Z 10346-B	E2PZ 10316-A *GR-540-A	4
K – – w/heated w/shield and back window	8	All	M	70	Aux. alt.–used w/ Sierracin system	103.5A	★ D4SZ 10346-A *GL-150	E2PZ 10310-A *GR-540-A	
A,C,D,F,Y	8	All	M	90		103.2B	D3VY 10346-A *GL-108	E2PZ 10316-A *GR-540-A	4
1976									
A,C,F,G,L,P,Y "Before 6/10/76"	4,6 &8	All	M	40		103.1N	★ D5AZ 10346-C *GL-168 r/b D7AZ 10346-C	E2PZ 10316-A *GR-540-A	3
A,C,F,G,L,P,Y "From 6/10/76"	4,6 &8	All	M	40		103.1R	D7AZ 10346-C *GL-168-A	E2PZ 10316-A *GR-540-A	3
A,C,F,G,L,P,Y "Before 6/10/76"	4,6 &8	All	M	60		103.1M	★ D5AZ 10346-B *GL-167 r/b D7AZ 10346-B	E2PZ 10316-A *GR-540-A	3
A,C,F,G,L,P,Y "From 6/10/76"	4,6 &8	All	M	60		103.1Q	D7AZ 10346-B *GL-167-A	E2PZ 10316-A *GR-540-A	3
A,D,F,G,K,Y "Before 6/10/76"	6&8	All	M	60	High temp. alt.	103.1L	★ D5AZ 10346-A *GL-167 r/b D7AZ 10346-A	E2PZ 10316-A *GR-540-A	3
A,D,G,K,Y "From 6/10/76"	6&8	All	M	60	High temp. alt.	103.1P	D7AZ 10346-A *GL-169-A	E2PZ 10316-A *GR-540-A	3
A,C,G,L,Y "Before 6/10/76"	4,6 &8	All	M	70		103.2A	★ D20Z 10346-B *GL-101 r/b D70Z 10346-A	E2PZ 10316-A *GR-540-A	4
A,C,F,G,L,Y "From 6/10/76"	4,6 &8	All	M	70		103.2D	★ D70Z 10346-A *GL-101-A r/b D70Z 10346-B	E2PZ 10316-A *GR-540-A	4
A,L,Y "Before 6/10/76"	8	All	M	70	High temp. alt.	103.2C	★ D40Z 10346-D *GL-154 r/b D70Z 10346-B	E2PZ 10316-A *GR-540-A	4
A,G,K,Y "From 6/10/76"	6&8	All	M	70	High temp. alt.	103.2E	D70Z 10346-B *GL-154-A	E2PZ 10316-A *GR-540-A	4
A,C,D,F,L,Y "Before 6/10/76"	8	All	M	90		103.2B	★ D3VY 10346-A *GL-108 r/b D7VZ 10346-A	E2PZ 10316-A *GR-540-A	4
A,C,D,F,Y "From 6/10/76"	6&8	All	M	90		103.2F	D7VZ 10346-A *GL-108-A	E2PZ 10316-A *GR-540-A	4
J "Before 8/1/75"	4	@140	B	35	w/remote-mtd. reg.	103.3F	D5RY 10346-B *GL-165	D5RY 10316-A *GRE-520	1

APPLICATION CHART

MODEL	ENGINE CYL.	ENGINE C.I.D. (C.C.D.)	Δ MAKE	AMP	REMARKS	PARTS LIST SEC. & NO.	PART NUMBER ALTERNATOR	PART NUMBER REGULATOR	ILLUS. SEC. 103 PAGE
NOTE:	Δ B-Bosch, L-Lucas, M-Motorcraft, ▲ 2000 cc, @ 2300 cc, ♦ 2600 cc, ⊕ 2800 cc AMP.								
10346 NOTE 2-	ALTERNATOR ASSY. — Cont'd Also use suppressor D3RY 18832-B for cars with radios.								

1976 — Cont'd

J	"From 8/1/75 to 3/1/76"	4	@140	B	35	w/integral regulator	103.3P	★ D6RY 10346-A *GL-176 r/bD6RY 10346-F	D5RY 10316-B *GRE-521	1
J	"From 3/1/76"	4	@140	B	35	w/integral regulator	103.3U	★ D6RY 10346-F *GLE-181 r/bD7RY 10346-A	D1RY 10316-C *GRE-388-A	1
J		4	@140	B	45	w/integral regulator NOTE 2	103.3T	D6RY 10346-E *GLE-180	D1RY 10316-C *GRE-388-A	1
J	"Before 8/1/75"	4	@140	B	55	w/remote-mtd. reg.	103.3G	★ D5RY 10346-C *GL-166	D5RY 10316-A *GRE-520	1
J	"From 8/1/75 to 3/1/76"	4	@140	B	55	w/integral regulator	103.3Q	★ D6RY 10346-B *GL-177 r/bD7RY 10346-D	D5RY 10316-B *GRE-521	1
J	"From 3/1/76"	4	@140	B	55	w/integral regulator	103.3V	D7RY 10346-D *GLE-193	D1RY 10316-C *GRE-388-A	1
J	"Before 2/1/75"	6	⊕171	B	35	w/remote-mtd. reg.	103.3H	★ D2RY 10346-C *GLE-172 r/bD6RY 10346-C	D5RY 10316-A *GRE-520	1
J	"From 2/1/75 to 3/1/76"	6	⊕171	B	35	w/integral regulator	103.3D	★ D5RY 10346-F *GLE-174 r/bD6RY 10346-L	D5RY 10316-B *GRE-521	1
J	"From 3/1/76"	6	⊕171	B	35	w/integral regulator	103.3R	★ D6RY 10346-C *GLE-178 r/bD6RY 10346-L	D1RY 10316-C *GRE-388-A	1
J		6	⊕171	B	45	w/integral regulator	103.3W	★ D6RY 10346-H *GLE-184 r/bD6RY 10346-N	D5RY 10316-B *GRE-521	1
J	"Before 2/1/75"	6	⊕171	B	55	w/remote-mtd. reg.	103.3J	D5RY 10346-D *GL-171	D5RY 10316-A *GRE-520	1
J	"From 2/1/75 to 3/1/76"	6	⊕ 171	B	55	w/integral regulator	103.3E	D5RY 10346-E *GLE-173	D5RY 10316-B *GRE-521	1
J	"From 3/1/76"	6	⊕171	B	55	w/integral regulator	103.3S	★ D6RY 10346-D *GLE-179 r/bD6RY 10346-P	D5RY 10316-B *GRE-521	1
K - - w/heated w/shield and back window		8	All	M	70	Aux. alt.-used w/ Sierracin system	103.5A	★ D4SZ 10346-A *GL-150	E2PZ 10316-A *GR-540-A	

1977

A,F,G,L,P	4,6, &8	All	M	40		103.1R	D7AZ 10346-C *GL-168-A	E2PZ 10316-A *GR-540-A	3
A,F,G,L,P	4,6, &8	All	M	60		103.1Q	D7AZ 10346-B *GL-167-A	E2PZ 10316-A *GR-540-A	3
A,D,G,K,V	6&8	All	M	60	High temp. alt.	103.1P	D7AZ 10346-A *GL-169-A	E2PZ 10316-A *GR-540-A	3
A,F,G,L	4,6, &8	All	M	70		103.2D	★ D70Z 10346-A *GL-101-A r/bD70Z 10316-B	E2PZ 10316-A *GR-540-A	4

COPYRIGHT © 1986 — FORD MOTOR COMPANY — DEARBORN, MICHIGAN

APPLICATION CHART

MODEL	ENGINE CYL.	ENGINE C.I.D. (C.C.D.)	△ MAKE	AMP	REMARKS	PARTS LIST SEC. & NO.	PART NUMBER ALTERNATOR	PART NUMBER REGULATOR	ILLUS. SEC. 103 PAGE
NOTE: △ B-Bosch, L-Lucas, M-Motorcraft, ▲ 2000 cc, @ 2300 cc, ♦ 2600 cc, ⊕ 2800 cc									
10346 ALTERNATOR ASSY. — Cont'd NOTE 2- Also use suppressor D3RY 18832-B for cars with radios.									
1977 — Cont'd									
A,D,G,K	6&8	All	M	70	High temp. alt.	103.2E	D70Z 10346-B *GL-154-A	E2PZ 10316-A *GR-540-A	
A,D,F,K,V	6&8	All	M	90		103.2F	D7VZ 10346-A *GL-108-A	E2PZ 10316-A *GR-540-A	4
J	4	@140	B	35	w/integral regulator Note 2	103.3X	★ D7RY 10346-A *GLE-186	D1RY 10316-C *GRE-388-A	1
J	4	@140	B	45	w/integral regulator Note 2	103.3Y	★ D7RY 10346-B *GLE-180-A	D1RY 10316-C *GRE-388-A	1
J	4	@140	B	55	w/integral regulator Note 2	103.3Z	★ D7RY 10346-C *GLE-182-A r/bD7RY 10346-D	D1RY 10316-C *GRE-388-A	1
J	6	⊕171	B	35	w/integral regulator	103.3R	★ D6RY 10346-C *GLE-178 r/bD6RY 10346-L	D1RY 10316-C *GRE-388-A	1
J	6	⊕171	B	45	w/integral regulator	103.3W	★ D6RY 10346-H *GLE-184 r/bD6RY 10346-N	D5RY 10316-B *GRE-521	1
J	6	⊕171	B	55	w/integral regulator	103.3S	★ D6RY 10346-D *GLE-179 r/bD6RY 10346-P	D5RY 10316-B *GRE-521	1
1978									
A,G,L,P,V	4,6 &8	All	M	40		103.1R	D7AZ 10346-C *GL-168-A	E2PZ 10316-A *GR-540-A	3
A,F,G,P,V	6&8	All	M	60		103.1Q	D7AZ 10346-B *GL-167-A	E2PZ 10316-A *GR-540-A	3
D,K	8	All	M	60	High temp. alt.	103.1P	D7AZ 10346-A *GL-169-A	E2PZ 10316-A *GR-540-A	3
A,G,P,V	6&8	All	M	65		103.1S	★ D8ZZ 10346-A *GL-183	E2PZ 10316-A *GR-540-A	3
A,F,G,L,P,V	4,6 &8	All	M	70		103.2D	★ D70Z 10346-A *GL-101-A r/bD70Z 10346-A	E2PZ 10316-A *GR-540-A	4
A,D,F,K,P,V	6&8	All	M	100		103.2F	D7VZ 10346-A *GL-108-A	E2PZ 10316-A *GR-540-A	4
J	4	@140	B	35	w/integral regulator Note 2	103.3X	★ D7RY 10346-A *GLE-186	D1RY 10316-C *GRE-388-A	1

APPLICATION CHART

MODEL	ENGINE CYL.	ENGINE C.I.D. (C.C.D.)	△ MAKE	AMP	REMARKS	PARTS LIST SEC. & NO.	PART NUMBER ALTERNATOR	PART NUMBER REGULATOR	ILLUS. SEC. 103 PAGE

NOTE: △ B-Bosch, L-Lucas, M-Motorcraft, ▲ 2000 cc, @ 2300 cc, ♦ 2600 cc, ⊕ 2800 cc

10346 ALTERNATOR ASSY. — Cont'd
NOTE 2- Also use suppressor D3RY 18832-B for cars with radios.

1978 — Cont'd

J	4	@140	B	45	w/integral regulator Note 2	103.3Y	★ D7RY 10346-B *GLE-180-A	D1RY 10316-C *GRE-388-A	1
J	4	@140	B	55	w/integral regulator Note 2	103.3Z	★ D7RY 10346-D *GLE-193	D1RY 10316-C *GRE-388-A	1
J	6	⊕171	B	35	w/integral regulator	103.3R	★ D6RY 10346-C *GLE-178 r/bD6RY 10346-L	D1RY 10316-C *GRE-388-A	1
J	6	⊕171	B	35	w/integral regulator	103.3AE	★ D6RY 10346-L *GLE-178-A	D5RY 10316-B *GRE-521	1
J	6	⊕171	B	45	w/integral regulator	103.3W	★ D6RY 10346-H *GLE-184 r/bD6RY 10346-N	D5RY 10316-B *GRE-521	1
J	6	⊕171	B	45	w/integral regulator	103.3AC	★ D6RY 10346-N *GLE-184-A	D5RY 10316-B *GRE-521	1
J	6	⊕171	B	55	w/integral regulator	103.3S	★ D6RY 10346-D *GLE-179 r/bD6RY 10346-P	D5RY 10316-B *GRE-521	1
J	6	⊕171	B	55	w/integral regulator	103.3AD	★ D6RY 10346-M *GLE-179-A r/bD6RY 10346-P	D5RY 10316-B *GRE-521	1
J	6	⊕171	B	55	w/integral regulator	103.3AF	★ D6RY 10346-P *GLE-179-B	D5RY 10316-B *GRE-521	1

1979

F,G,J,L,P	4,6 &8	All	M	40		103.1T	★ D9ZZ 10346-A *GL-204 r/bE1ZZ 10346-A	E2PZ 10316-A *GR-540-A	3
A,F,G,J,L,P	4,6 &8	All	M	60		103.1U	★ D9BZ 10346-A *GL-197 r/bE2GZ 10346-C	E2PZ 10316-A *GR-540-A	3
V	8	All	M	60	High temp. alt.	103.1V	D9VY 10346-A *GL-200	E2PZ 10316-A *GR-540-A	3
A,F,G,J,L,P	4,6 &8	All	M	65		103.1W	★ D9BZ 10346-B *GL-198 r/bE1BZ 10346-B	E2PZ 10316-A *GR-540-A	3
D,K,V	8	All	M	65	High temp. alt.	103.1X	D9VY 10346-B *GL-201	E2PZ 10316-A *GR-540-A	3
A,D,F,G,J,L,P	4,6 &8	All	M	70		103.2G	★ D9BZ 10346-C *GL-199 r/bE1BZ 10346-A	E2PZ 10316-A *GR-540-A	4
K	8	All	M	70	High temp. alt.	103.2H	D9VY 10346-C *GL-202	E2PZ 10316-A *GR-540-A	4
A,F,P	6&8	All	M	100		103.2J	★ D9VY 10346-D *GL-203 r/bE1VZ 10346-A	E2PZ 10316-A *GR-540-A	4

COPYRIGHT © 1986 — FORD MOTOR COMPANY — DEARBORN, MICHIGAN

1973/79 LINCOLN-MERCURY CARS

YEAR	MODEL/RESTRICTIONS	PART NUMBER	DESCRIPTION	QTY.
10C346	RESISTOR ASSY. (ALTERNATOR WARNING LAMP SHUNT)			
78/	D,P	D8BZ 10C346-A	500 ohms resistance	1
79	A,G,V			1
79	F,L - - w/o tachometer			1
10K346-70	Refer to group 10346 for Alternator Parts List Instructions			
10A370	SPACER (ALTERNATOR BRACKET) Refer to group 10A313			
10A370	SPACER (FUSE PANEL MOUNTING)			
73/78	J	★ D3RY 10A370-A		2
10B371-4	Refer to group 10346 for Alternator Parts List Instructions			
10377-96	Refer to group 10346 for Alternator Parts List Instructions			
10A506	SHIELD (ALTERNATOR REGULATOR SPLASH)			
73/77	K	★ D2SF 10A506-AA	On rad. support -rubber-5" wide x 9 1/4" long x 1/16" thick-improvise.	1
10A596	ALTERNATOR REGULATOR MOUNTING KIT			
73/78	J	D1RY 10A596-A		1
10632	RESISTOR ASSY. (ALTERNATOR VOLTAGE BALLAST)			
73/76	K	★ D0SZ 10632-A	68 ohms-located on rear of instrument cluster at 18A952 choke	1

10653-5 BATTERY CHART
NOTE 2- Not to be used for warranty replacement for 1977 Models
NOTE 3- Not to be used for warranty replacement for 1977 Models-except Versailles

YEAR	MODEL	ENGINE CYL.	ENGINE C.I.D. (C.C.D.)	MOTOR-CRAFT GROUP NO.	CASE SIZE (INCHES) WIDTH	CASE SIZE (INCHES) LENGTH AT TOP	CASE SIZE (INCHES) HEIGHT	TYPE	AMP.	PLATES	MOTORCRAFT SALES NUMBER
74/78	A,F,G,L,P,Y	All	All	22F	6 7/8	9 7/16	8 5/16	Premium	53	66	R-22-FCA
74/78	A,F,G,L,P,Y	All	All	22F	6 7/8	9 7/16	8 5/16	Premium	41	54	R-22-FC
74/	A,C,F,G,L,P,V,Y	All	All	22FC	6 13/16	9 1/2	8 3/8	Maintenance free-wet	53	66	MF-22-FC Note 3
					6 13/16	9	8 1/4	Maintenance free-wet			MFR-22-FC
73/78	A,C,D,F,K,L, P,Y - - top terminal	6&8	All	22HF	6 7/8	9 7/16	8 29/32	Premium	45	54	R-22FC
					6 7/8	9 7/16	8 29/32	Premium	54	66	R-22-FCA
				24F	6 27/32	10 25/32	8 13/16	Premium	55	66	R-24F
					6 27/32	10 25/32	8 13/16	Premium	68	78	R-24FA
73/	A,C,D,F,K,L,P,Y	6&8	All	24F	6 27/32	10 25/32	8 13/16	Premium H/D	81	78	G-24-F
					6 13/16	10 3/4	9 1/16	Maintenance free-wet	68	78	MF-24-F Note 2
					6 13/16	10 1/4	8 13/16	Maintenance free-wet			MFR-24-F
73/78	A,C,D,F,K,L,P,Y	6&8	All	27F	6 27/32	12 17/32	8 13/16	Premium	68	78	R-27F
					6 27/32	12 17/32	8 13/16	Premium	77	78	R-27FA
					6 27/32	12 17/32	8 13/16	Premium H/D	94	90	G-27F
					6 13/16	12 1/2	9 1/16	Maintenance free-wet	80	90	MF-27-F Note 2
					6 13/16	12	8 13/16	Maintenance free-wet			MFR-27-F
77	A,D,K - - exc. Canada	8	400	23	6 5/8	10 1/16	8 7/16	Premium	63	78	R-23
73/78	J	All	All	42F	6 7/8	9 13/16	7 1/4	Premium- dry	54	78	E-42-F
73/74	D,K - - side terminal	8	All	74	7 9/32	10 9/32	8 3/4	Premium	77	78	R-74A
					7 9/32	10 9/32	8 3/4	Premium	60	66	R-74
					7 9/32	10 9/32	8 3/4	Premium H/D	81	78	G-74
78/	A,F,G,L,P	4,6&8	All	54	6	7 3/8	7 1/2	Premium-Low Maintenance	36	54	R-54
79	J	4,6&8	All								

YEAR	MODEL	ENGINE CYL.	ENGINE C.I.D. (C.C.D.)	MOTORCRAFT GROUP NO.	CASE SIZE (INCHES) WIDTH	CASE SIZE (INCHES) LENGTH AT TOP	CASE SIZE (INCHES) HEIGHT	TYPE	AMP.	PLATES	MOTORCRAFT SALES NUMBER
10653-5	BATTERY CHART — Cont'd										
NOTE 2-	Not to be used for warranty replacement for 1977 Models										
NOTE 3-	Not to be used for warranty replacement for 1977 Models-except Versailles										
78/ 79	A,F,G,L,P J	6&8 4,6&8	All All	55	6	8 1/2	7 1/2	Premium-Low Maintenance	45	66	R-55
78/ 79	A,F,G,P D,L	6&8 4,6&8	All All	56	6	10	7 1/2	Premium-Low Maintenance	54	78	R-56
79	A	8	All	64	6 1/3	11 5/8	8	Premium		71	R-64
79 79 79	A P G	8 6&8 6	302 All All	61	6 5/16	7 1/2	8 1/16	Maintenance free-wet	36		MF-61
79 79	A P	8 4,6&8	All All	62	6 5/16	8 7/8	8 1/16	Maintenance free-wet	45		MF-62
79 79	P G	4,6&8 6&8	All All	63	6 5/16	10 1/8	8 1/16	Maintenance free-wet	54		MF-63

YEAR	MODEL/RESTRICTIONS	PART NUMBER	DESCRIPTION	QTY.
10656	SPACER (BATTERY)			
79	A(74) - - 71 amp. battery	D9MZ 10656-A	Plastic	1
77/	V	★ D74Y 10656-A	Plastic	1
77/ 79	V A(74) - - 71 amp. battery	383927-S	(NN-167)-pin-1/4" x 5/8"	1 1
10656	ELECTROLYTE (BATTERY)			
73/	All	BB 14	5 gallon container incl. hose	AR
73/	All	BB 16	6 quart container incl. hose	AR
10B659	BOLT (BATTERY CABLE)			
73/74	D,K	★ D3SZ 10B659-A	With side terminal battery	2
10A665	WIRING ASSY. (CHARGE INDICATOR)			
73	A,C,D,F,K,P,Y	C3AZ 10A665-C	#C3AB 10A665-C-15 ohms resistance-60" long-used w/indicator light	1
73	A,C,D,F,K,P,Y	★ C3MY 10A665-A Not replaced	#C3MB 10A665-C-10 ohms-used w/ammeter	1
73/78	A,Y	★ D5AZ 10A665-A	#D5AB 10A665-AA-resistor wire for repair of voltage regulator or fuel gauge-8.5 ohms	1
73/77 73/78	C,F,G,K,Y A	★ D7AZ 10A665-A	#D7AB 10A665-AA-15 ohms resistance-90" 24 ga. wire & 8" 18 ga. wire-for damaged circuits in 14401 wire-as listed in T.S.B. No. 131 dated 3/25/77 article #1791	1
10A665	WIRING ASSY. (FUEL GAUGE INDICATOR)			
73/	A,B,F,G,L,P,S,U	D9AZ 10A665-A	#D9AB 14A407-AA-Replaces damaged resistor assemblies (13 to 17 OHMS) that may occur in the 14401 main wiring assy.	1
10B678	PLATE (BATTERY HOLD DOWN ANCHOR)			
79	P (Police & Taxi)	D9BZ 10B678-A		1
10A682	SHIELD (BATTERY HEAT)			
73 74/77 78	A,Y - - 8 cyl. 400,429,460 and A/C A,Y - - 8 cyl. 400,460 A - - (P/C)	★ D6MZ 10A682-A	Plastic	1 1 1
78 78	A(exc. Police) - - 8 cyl. 400 F - - 8 cyl. 351, 400 - with A/C	D9AZ 10A682-A		1 1
75 76 77 77/78 79	C,D,F,K C,D,F,K - - 8 cyl. 351,400,460 D,K - - 8 cyl 460 F(P/C) - - 8 cyl. A(P/C),F	D5VY 10A682-A	Plastic - 2 sides Use with 80 amp. battery	1 1 1 1 1

COPYRIGHT © 1986 — FORD MOTOR COMPANY — DEARBORN, MICHIGAN

1973/79 LINCOLN-MERCURY CARS

YEAR	MODEL/RESTRICTIONS	PART NUMBER	DESCRIPTION	QTY.
73/74	C - - 8 cyl. 351CJ	D5VY 10A682-A	Plastic	1
73	D	★ D2VY 10A682-B		1
77	D,K - - 8 cyl 400	★ D7AZ 10A682-A		1
78	D,K	★ D8VY 10A682-A		1
79	D	D9AZ 10A682-A	Use with 54 amp. battery	1
73	F - - A/C	D00Z 10A682-A		1
79	F	D9AZ 10A682-A	Use with std. battery	1
78/	G - - 8 cyl. 302,351- with A/C	D8DZ 10A682-A		1
79	P (Police & taxi)			1
79	J	D9ZZ 10A682-A		1
73	K	D5VY 10A682-A	Plastic	1
74	K - - exc. maintenance free battery			1
74	K - - maintenance free battery	★ D4SZ 10A682-A	Plastic	1
74/77	P - - 8 cyl. 302	★ D4DZ 10A682-A	Plastic	1
75/77	G - - 8 cyl. 302,351			1
74/78	L - - 4 cyl. 140 (2300 cc)	D6FZ 10A682-B		1
75/78	L - - 6 cyl. 171 (2800cc)			1
79	L	D9AZ 10A682-A		1
77/	V	D8DZ 10A682-A	Plastic	1
74/78	A,D	373927-S	(NN-167)-pin(shield to fender support)-1/4" x 5/8"	AR

10A705 Refer to group 10732

10718 Refer to group 10732

10720 CAP (BATTERY)

73/78	J	★ D3RY 10720-A	Covers all openings	AR
73/78	J	★ D3RY 10720-B	17MM	AR
73	J	★ D3RY 10720-C	27MM	AR
74	J	★ D4RY 10720-A	55 amp. battery	6

10A723 SPACER (BATTERY TO FENDER APRON)

73/75	K	★ D3SZ 10A723-A	Plastic	1
74/76	D	★ D4VY 10A723-A	Plastic	1
73/75	K	383927-S	(NN-167)-pin-1/4" x 5/8"	AR
74/	D			2

10732 **BATTERY MOUNTING PARTS**

Battery mounting parts are listed in chart form following the illustration below. Refer to the illustration to determine the name of the part required. Refer to the chart to select appropriate part number. The chart is listed by year, model and amperage of battery.

Attaching parts such as bolts, nuts, etc., are listed by code number. A listing of the code numbers and their corresponding part numbers and descriptions appears at the end of the chart.

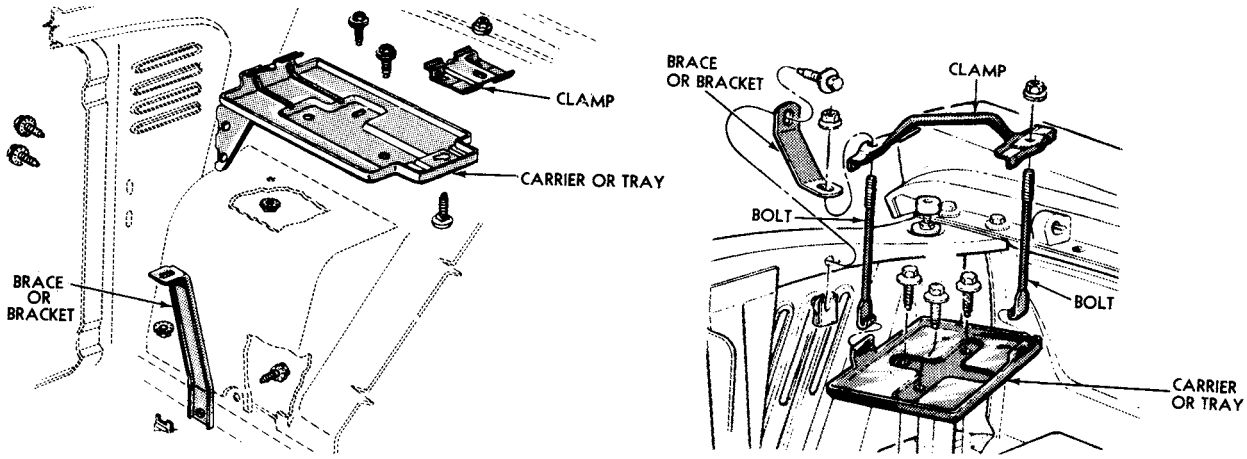

P-4609

1973 TYPICAL BATTERY SUPPORT and CARRIER INSTALLATIONS

MODEL	AMP. HRS.	BOLT-CLAMP PART NUMBER	●NUTS, BOLTS, ETC.	CARRIER OR TRAY PART NUMBER	●NUTS, BOLTS, ETC.	CLAMP-HOLD DOWN PART NUMBER	●NUTS, BOLTS, ETC.	BRACE OR BRACKET PART NUMBER	●NUTS, BOLTS, ETC.
NOTE:	●REFER TO HARDWARE LISTING AT END OF CHART FOR NUMBER SHOWN IN THIS COLUMN								
10732	BATTERY MOUNTING PARTS — Cont'd								
NOTE 1-	Part of basic 16054 apron, NOTE 2- Part of 10A682 shield								
NOTE 3-	Refer T.S.B. 62, (2/8/74) & T.S.B. 106, (2/25/76). Use (2) D0RY 10718-A & (2) WXC 5432								
NOTE 4-	D7AZ 10756-A (8 3/8")-Before 2/1/77 or D7AZ 10756-C (8 11/16")-From 2/1/77								
NOTE 5-	D2SZ 10718-A (1/16" thick tabs)-Before 11/22/76 or D7LY 10718-A (1/8" thick tabs)-From 11/22/76								

1973

A,Y	All	D4SZ 10756-A	40	D3AZ 10764-A	42	D0DZ 10718-B	40	D4AZ 10769-A and D3MY 10741-A	
C- "Before 6/1/73"	All	D4SZ 10756-A	40	D20Z 10732-A	42	D00Z 10718-A	40	★D30Z 10741-A and ★D20Z 10757-A	42
C- "From 6/1/73"	All	D4SZ 10756-A	40	D20Z 10732-A	42	D30Z 10718-B	40	★D30Z 10741-A and ★D20Z 10757-A	42
D	All	D4SZ 10756-A	40	NOTE 1		D3SZ 10718-B (upper) and D0VY 10718-A (lower)	40		
F "Before 6/1/73"	42,45	D4SZ 10756-A	27,40	D00Z 10732-A r/bD00Z 10732-B (10/78)	19,24	D00Z 10718-A	40	★D00Z 10A705-A	41
F "From 6/1/73"	42,55	D4SZ 10756-A	27,40	D00Z 10732-A r/bD00Z 10732-B (10/78)	19,24	D30Z 10718-B	40	★D00Z 10A705-B	41
F	68,77	D4SZ 10756-A	27,40	D00Z 10732-B	19,24	D00Z 10718-A	40	★D00Z 10A705-A	41

COPYRIGHT © 1986 — FORD MOTOR COMPANY — DEARBORN, MICHIGAN

1973/79 LINCOLN-MERCURY CARS

MODEL	AMP. HRS.	BOLT-CLAMP		CARRIER OR TRAY		CLAMP-HOLD DOWN		BRACE OR BRACKET	
		PART NUMBER	●NUTS, BOLTS, ETC.	PART NUMBER	●NUTS, BOLTS, ETC.	PART NUMBER	●NUTS, BOLTS, ETC.	PART NUMBER	●NUTS, BOLTS, ETC.

NOTE: ●REFER TO HARDWARE LISTING AT END OF CHART FOR NUMBER SHOWN IN THIS COLUMN

10732 BATTERY MOUNTING PARTS — Cont'd
NOTE 1– Part of basic 16054 apron, NOTE 2– Part of 10A682 shield
NOTE 3– Refer T.S.B. 62, (2/8/74) & T.S.B. 106, (2/25/76). Use (2) D0RY 10718-A & (2) WXC 5432
NOTE 4– D7AZ 10756-A (8 3/8")-Before 2/1/77 or D7AZ 10756-C (8 11/16")-From 2/1/77
NOTE 5– D2SZ 10718-A (1/16" thick tabs)-Before 11/22/76 or D7LY 10718-A (1/8" thick tabs)-From 11/22/76

1973 — Cont'd

J "Before 2/20/73"	All			★D1RY 10732-B		★D0RY 10718-A		★D0RY 10741-B (4 cyl.) or ★D3RY 10741-A (6 cyl.)	
J "From 2/20/73"	All			D3RY 10732-A		D3RY 10718-A (O.E. only) NOTE 3		★D0RY 10741-B (4 cyl.) or ★D3RY 10741-A (6 cyl.)	
K	All	D4SZ 10756-A	40	NOTE 1		D3SZ 10718-B (upper) and D7LY 10718-A (lower)	40	D7LY 10741-A	42
P	All	D4SZ 10756-A	40	D7DZ 10732-A	24,45	D0DZ 10718-B	40	D0DZ 10A705-B	41

1974

A,Y - - 8 cyl. 400	53 68, 77	D4SZ 10756-A	40	D3AZ 10764-A	42	D4MY 10718-A	40	D3MY 10741-A and D4AZ 10769-A	42
A,Y - - 8 cyl. 400, 460	55, 70, 80	D4SZ 10756-A	40	D3AZ 10764-A	42	D0DZ 10718-B	40	D3MY 10741-A and D4AZ 10769-A	
C,F - - 8 cyl.	All	D4SZ 10756-A	40	D20Z 10732-A	38,45	D30Z 10718-B	40	★D30Z 10741-A	42
D	All	D4SZ 10756-A	40	NOTE 1		D3SZ 10718-B (upper)	40		
J	All			D3RY 10732-A		D3RY 10718-A (O.E. only) NOTE 3		★D0RY 10741-B (4 cyl.) or D3RY 10741-A (6 cyl.)	
K	All	D4SZ 10756-A	40,42	NOTE 1		D3SZ 10718-A (upper) and D7LY 10718-A (lower)	40	★D4SZ 10741-A	42
L	All	NOTE 2	42	D8FZ 10764-B	12,24,45	D4FZ 10718-A	40		
P	All	D4SZ 10756-A	40	D7DZ 10732-A	24,42, 45	D4MY 10718-A	40	D0DZ 10A705-B	41

1975

A	53 68, 77	D4SZ 10756-A	40	D3AZ 10764-A	45	D0DZ 10718-B	40	D3MY 10741-A and D4AZ 10769-A	40,45
C,F	All	D4SZ 10756-A	40	D20Z 10732-A	45	D30Z 10718-B	40	★D30Z 10741-A	40
D	All	D4SZ 10756-A	40	NOTE 1		D3SZ 10718-B (upper) and D0VY 10718-A (lower)	40		

MODEL	AMP. HRS.	BOLT-CLAMP PART NUMBER	●NUTS, BOLTS, ETC.	CARRIER OR TRAY PART NUMBER	●NUTS, BOLTS, ETC.	CLAMP-HOLD DOWN PART NUMBER	●NUTS, BOLTS, ETC.	BRACE OR BRACKET PART NUMBER	●NUTS, BOLTS, ETC.
NOTE:	●REFER TO HARDWARE LISTING AT END OF CHART FOR NUMBER SHOWN IN THIS COLUMN								
10732	BATTERY MOUNTING PARTS — Cont'd								
NOTE 1-	Part of basic 16054 apron, NOTE 2- Part of 10A682 shield								
NOTE 3-	Refer T.S.B. 62, (2/8/74) & T.S.B. 106, (2/25/76). Use (2) DORY 10718-A & (2) WXC 5432								
NOTE 4-	D7AZ 10756-A (8 3/8")-Before 2/1/77 or D7AZ 10756-C (8 11/16")-From 2/1/77								
NOTE 5-	D2SZ 10718-A (1/16" thick tabs)-Before 11/22/76 or D7LY 10718-A (1/8" thick tabs)-From 11/22/76								
1975 — Cont'd									
G	All	D9FZ 10756-A and D4ZZ 10756-A	40	D8DZ 10732-A		D4MY 10718-A	40		
K	All	D4SZ 10756-A	40,42	NOTE 1		D3SZ 10718-B (upper) and D7LY 10718-A (lower)	40	★ D4SZ 10741-A	42
L	All	NOTE 1	42	D8FZ 10764-B	12,24 45	D4FZ 10718-A	40		
P	All	D9FZ 10756-A and D4ZZ 10756-A	40	D7DZ 10732-A	24,42, 45	D4MY 10718-A	40	DODZ 10A705-B	41
Y - - 8 cyl. 351	53, 68, 77	D4SZ 10756-A	40	D3AZ 10764-A	45	D4MY 10718-A	40	★ D4AZ 10741-A and D4AZ 10769-A	40,45
Y - - 8 cyl. 400,460	55, 70, 80	D4SZ 10756-A	40	D3AZ 10764-A	45	DODZ 10718-B	40	D3MY 10741-A and D4AZ 10769-A	40,45
1976									
A	53	D4SZ 10756-A "Before 5/17/76" E1TZ 10756-B "From 5/17/76"	40	D3AZ 10764-A	45	D4MY 10718-A (Black)	40	D3MY 10741-A and D4AZ 10769-A	40,45
A	68, 77	D4SZ 10756-A	40	D3AZ 10764-A	45	D4MY 10718-A (Black)	40	D3MY 10741-A and D4AZ 10769-A	40,45
A	55, 70, 80	D4SZ 10756-A	40	D3AZ 10764-A	45	DODZ 10718-B (Gray)	40	D3MY 10741-A and D4AZ 10769-A	40,45
C,F "Before 5/17/76"	53	D4SZ 10756-A	40	D20Z 10732-A	45	D30Z 10718-B	40	★ D30Z 10741-A	40
C,F "From 5/17/76"	53	E1TZ 10756-B	40	D20Z 10732-A	45	D30Z 10718-B	40	★ D70Z 10741-A	40
C,F "Before 5/17/76"	68, 77	D4SZ 10756-A	40	D20Z 10732-A	45	D30Z 10718-B	40	★ D30Z 10741-A	40
C,F "From 5/17/76"	68, 77	E1TZ 10756-B	40	D20Z 10732-A	45	D30Z 10718-B	40	★ D70Z 10741-B	40
C,F	All	D4SZ 10756-A	40	D20Z 10732-A	45	D30Z 10718-B	40	★ D30Z 10741-B	40
D	All	D4SZ 10756-A "Before 5/17/76" E1TZ 10756-B "From 5/17/76"	40	NOTE 1		D3SZ 10718-B (upper) and DOVY 10718-A (lower)	40		
G	All	D9FZ 10756-A and D4ZZ 10756-A	40	D8DZ 10732-A		D4MY 10718-A	40		
J	All			★ D3RY 10732-A		D3RY 10718-A (O.E. only) NOTE 3		★ D5RY 10741-A (4 cyl.) or ★ D3RY 10741-A (6 cyl.)	

COPYRIGHT © 1986 — FORD MOTOR COMPANY — DEARBORN, MICHIGAN

1973/79 LINCOLN-MERCURY CARS

MODEL	AMP. HRS.	BOLT-CLAMP PART NUMBER	BOLT-CLAMP ●NUTS, BOLTS, ETC.	CARRIER OR TRAY PART NUMBER	CARRIER OR TRAY ●NUTS, BOLTS, ETC.	CLAMP-HOLD DOWN PART NUMBER	CLAMP-HOLD DOWN ●NUTS, BOLTS, ETC.	BRACE OR BRACKET PART NUMBER	BRACE OR BRACKET ●NUTS, BOLTS, ETC.
NOTE:	●REFER TO HARDWARE LISTING AT END OF CHART FOR NUMBER SHOWN IN THIS COLUMN								
10732	BATTERY MOUNTING PARTS — Cont'd								
NOTE 1-	Part of basic 16054 apron, NOTE 2- Part of 10A682 shield								
NOTE 3-	Refer T.S.B. 62, (2/8/74) & T.S.B. 106, (2/25/76). Use (2) DORY 10718-A & (2) WXC 5432								
NOTE 4-	D7AZ 10756-A (8 3/8")-Before 2/1/77 or D7AZ 10756-C (8 11/16")-From 2/1/77								
NOTE 5-	D2SZ 10718-A (1/16" thick tabs)-Before 11/22/76 or D7LY 10718-A (1/8" thick tabs)-From 11/22/76								
1976 — Cont'd									
K	All	D4SZ 10756-A "Before 5/17/76" E1TZ 10756-B "From 5/17/76"	46	NOTE 1		D3SZ 10718-B (upper) and D7LY 10718-A (lower)	46 48	★ D3SZ 10741-A r/b D7LY 10741-A	46,49
L	All	NOTE 2	42	D8FZ 10764-B	12,24, 45	D4FZ 10718-A	40		
P- "Before 5/17/76"	All	D4SZ 10756-A	46	D7DZ 10732-A	45,47	D4MY 10718-A	46	D0DZ 10A705-B	41,46
P "From 5/17/76"	All	E1TZ 10756-B	46	D7DZ 10732-A	45,47	D4MY 10718-A	46	★ D7DZ 10A705-A	41,46
Y - - 8 cyl. 351	53	D4SZ 10756-A "Before 5/17/76" E1TZ 10756-B "From 5/17/76"	40	D3AZ 10764-A	45	D4MY 10718-A	40	★ D4AZ 10741-A and D4AZ 10769-A	40,45
Y - - 8 cyl. 351	68, 71	D4SZ 10756-A	40	D3AZ 10764-A	45	D4MY 10718-A	40	★ D4AZ 10741-A and D4AZ 10769-A	40,45
Y - - 8 cyl. 400,460	55, 70, 80	D4SZ 10756-A	40	D3AZ 10764-A	45	D0DZ 10718-B	40	D3MY 10741-A and D4AZ 10769-A	40,45
1977									
A	53, 63, 68	E1TZ 10756-B	46	D3AZ 10764-A	45	D4MY 10718-A	46	★ D4AZ 10741-A & D4AZ 10769-A	45,46
A	77, 80	E1TZ 10756-B	46	D3AZ 10764-A	45	D4MY 10718-A	46	D3MY 10741-A & D4AZ 10769-A	45,46
D	All	E1TZ 10756-B	52	NOTE 1		D3SZ 10718-A (upper) and D0VY 10718-A (lower)	52		
F	41, 53	E1TZ 10756-B	52	D20Z 10732-A	45	D30Z 10718-B	52	★ D70Z 10741-A (1/2" bend)	52,53
F	68, 77	E1TZ 10756-B	52	D20Z 10732-A	45	D30Z 10718-B	52	★ D70Z 10741-B (1/8" bend)	52,53
G	All	D9FZ 10756-A & D4ZZ 10756-A		D8DZ 10732-A		D4MY 10718-A			
J				★ D3RY 10732-A		D3RY 10718-A		D5RY 10741-A (4 cyl.) or D3RY 10741-A (6 cyl.)	
K	All	E1TZ 10756-B	52	NOTE 1		D3SZ 10718-B (upper) and NOTE 5 (lower)	52	★ D7LY 10741-A	49,52
L	All	NOTE 2		D8FZ 10764-B	12,45, 46	D4FZ 10718-A	46,48		
P	All	E1TZ 10756-B	52	D7DZ 10732-A	45,47	D4MY 10718-A	52	★ D7DZ 10A705-A	41

1973/79 LINCOLN-MERCURY CARS

MODEL	AMP. HRS.	BOLT-CLAMP PART NUMBER	BOLT-CLAMP ●NUTS, BOLTS, ETC.	CARRIER OR TRAY PART NUMBER	CARRIER OR TRAY ●NUTS, BOLTS, ETC.	CLAMP-HOLD DOWN PART NUMBER	CLAMP-HOLD DOWN ●NUTS, BOLTS, ETC.	BRACE OR BRACKET PART NUMBER	BRACE OR BRACKET ●NUTS, BOLTS, ETC.
NOTE:	●REFER TO HARDWARE LISTING AT END OF CHART FOR NUMBER SHOWN IN THIS COLUMN								
10732	BATTERY MOUNTING PARTS — Cont'd								
NOTE 1-	Part of basic 16054 apron, NOTE 2- Part of 10A682 shield								
NOTE 3-	Refer T.S.B. 62, (2/8/74) & T.S.B. 106, (2/25/76). Use (2) DORY 10718-A & (2) WXC 5432								
NOTE 4-	D7AZ 10756-A (8 3/8")-Before 2/1/77 or D7AZ 10756-C (8 11/16")-From 2/1/77								
NOTE 5-	D2SZ 10718-A (1/16" thick tabs)-Before 11/22/76 or D7LY 10718-A (1/8" thick tabs)-From 11/22/76								
1977 — Cont'd									
V	All	D9FZ 10756-A& D4ZZ 10756-A	40,47, 55			D74Y 10718-A	40		
1978									
A	36,45, 53,54, 55,56	E1TZ 10756-B	46	D3AZ 10764-A	45	D8AZ 10718-A	46	★ D4AZ 10741-A& D4AZ 10769-A	45,46
A	68,80	E1TZ 10756-B	46	D3AZ 10764-A	45	D4MY 10718-A	46	D3MY 10741-A& D4AZ 10769-A	45,46
D	All	E1TZ 10756-B		NOTE 1		D8VY 10718-A			
F- "Before 1/16/78"	41,45, 54,55, 56	E1TZ 10756-B	52	D20Z 10732-A	45	D30Z 10718-B	52	★ D70Z 10741-A	52,53
F- "From 1/16/78"	36,45, 54	E1TZ 10756-B	52	D80Z 10732-A	45	D80Z 10718-A (upper) D80Z 10718-B (lower)	52	D80Z 10741-A	
F- "Before 1/16/78"	68,80	E1TZ 10756-B	52	D20Z 10732-A	45	D30Z 10718-B	52	★ D70Z 10741-B	52,53
F- "From 1/16/78"	68,80	E1TZ 10756-B	52	D80Z 10732-A	45	D30Z 10718-B (upper) D80Z 10718-B (lower)	52	★ D80Z 10741-B	52,53
G	All	D9FZ 10756-A& D4ZZ 10756-A	55	D8DZ 10732-A	46	D8AZ 10718-A	46		
J	All			★ D3RY 10732-A		D3RY 10718-A		★ D5RY 10741-A (4 cyl.) or ★ D3RY 10741-A (6 cyl.)	
K	All	E1TZ 10756-B		Note 1		D8VY 10718-A (upper) D7LY 10718-A (lower)		★ D8LY 10741-A	
L- "Before 6/1/78"	All	Note 2		D8FZ 10764-B	12,45, 46	D8FZ 10718-A	46		
L- "From 6/1/78"		D9FZ 10756-A		D8FZ 10764-B	12,45 46	D8FZ 10718-A	46		
P	All			D9ZZ 10732-A		D8BZ 10718-A			
V	All	D9FZ 10756-A& D4ZZ 10756-A	40,47, 55			D74Y 10718-A	40		
1979									
A "Before 2/15/79" w/"R" Series battery	36,45 54	E1TZ 10756-B	52			D9AZ 10718-B	60	D9AZ 10A705-A	58
A -- "From 2/15/79" with "MF" series battery	36,45 54	E1TZ 10756-B	52			D9AZ 10718-D	60	D9AZ 10A705-A	58
A	70,80	E1TZ 10756-B	52			D9AZ 10718-D	60	D9AZ 10A705-A	58
D	54	E1TZ 10756-B		NOTE 1		D8ZZ 10718-A			
D	68	E1TZ 10756-B		NOTE 1		D8VY 10718-A			

COPYRIGHT © 1986 — FORD MOTOR COMPANY — DEARBORN, MICHIGAN

1973/79 LINCOLN-MERCURY CARS

MODEL	AMP. HRS.	BOLT-CLAMP PART NUMBER	BOLT-CLAMP ●NUTS, BOLTS, ETC.	CARRIER OR TRAY PART NUMBER	CARRIER OR TRAY ●NUTS, BOLTS, ETC.	CLAMP-HOLD DOWN PART NUMBER	CLAMP-HOLD DOWN ●NUTS, BOLTS, ETC.	BRACE OR BRACKET PART NUMBER	BRACE OR BRACKET ●NUTS, BOLTS, ETC.
NOTE:	●REFER TO HARDWARE LISTING AT END OF CHART FOR NUMBER SHOWN IN THIS COLUMN								
10732	BATTERY MOUNTING PARTS — Cont'd								
NOTE 1-	Part of basic 16054 apron, NOTE 2- Part of 10A682 shield								
NOTE 3-	Refer T.S.B. 62, (2/8/74) & T.S.B. 106, (2/25/76). Use (2) DORY 10718-A & (2) WXC 5432								
NOTE 4-	D7AZ 10756-A (8 3/8")-Before 2/1/77 or D7AZ 10756-C (8 11/16")-From 2/1/77								
NOTE 5-	D2SZ 10718-A (1/16" thick tabs)-Before 11/22/76 or D7LY 10718-A (1/8" thick tabs)-From 11/22/76								

1979 — Cont'd

F	36,45, 54	E1TZ 10756-B (2)		D80Z 10732-A		D80Z 10718-A (upper) D80Z 10718-B (lower)		D80Z 10741-A	
F	80	E1TZ 10756-B (2)		D80Z 10732-A		D30Z 10718-B (upper) D80Z 10718-B (lower)		★D80Z 10741-B	
G	All	D9FZ 10756-A & D4ZZ 10756-A	47,55	D8DZ 10732-A	46	D9DZ 10718-A	46		
J	All	None		D9ZZ 10732-A	56	D8BZ 10718-A	57	None	
K	All	E1TZ 10756-B		NOTE 1		D8VY 10718-A (upper) D7LY 10718-A (lower)		★D8LY 10741-A	
L	All	D9FZ 10756-A	46	D8FZ 10764-B	12,45, 46	D8FZ 10718-A	46		
P(exc. Police & taxi)	All	D9FZ 10756-A		D9ZZ 10732-A	56	D8BZ 10718-A	57		
P (Police & taxi)	All	D9PZ 10756-A		E1BZ 10732-A	56	E1BZ 10718-A	57		
V	All	D9FZ 10756-A & D4ZZ 10756-A	40,47, 55			D74Y 10718-A	40		

CODE NUMBER TO PART NUMBER LISTING-Quantity As Required

CODE NO.	PART NUMBER	DESCRIPTION	CODE NO.	PART NUMBER	DESCRIPTION
12	378782-S (BB-543-D)	Screw & washer-5/16"-18 x 1/2"	49	384931-S36 (BB-867-K)	Screw & washer-5/16"-18 x 1 1/16"
19	372590-S (BB-581)	Bolt & lockwasher-5/16"-18 x 1 1/8"	52	55734-S2 (M-96-EJ)	Nut & washer-1/4"-20
24	378680-S (MM-192-AA)	Nut & retainer-5/16"-18	53	★57030-S2	Bolt & washer-1/4"-20 x 29/32" w/pilot-grade 5
27	34956-S7-8 (X-82)	Lockwasher-external tooth 5/16"	54	★379351-S2	Nut and retainer assy.
38	379156-S2 (MM-192-AE)	Nut & retainer-5/16"-18	55	57093-S36 (B-310-G)	Screw and washer-5/16"-18 x 3/4"
40	3768368-S2 (MM-296-AF)	Nut & washer-5/16"-18	56	57032-S2 (B-340)	Screw & washer-1/4"-20 x 1"
41	55981-S2 (U-254-E)	Screw & washer-1/4"-14 x 1/2"	57	57033-S36 (B-340-A)	Screw & washer-1/4"-20 x 1 1/4"
42	376256-S (BB-545-A)	Screw & washer-5/16"-18 x 1"	58	N800502-S36 (AB-3-M)	Screw-M6 x 1 x 18 1/2"
45	384930-(BB-867-H)	Screw & washer-5/16"-18 x 15/16"	59	N623332-S100 (AM-S8E)	Nut - M6 x 1.0 spring "U"
46	55736-S2 (M-96-F)	Nut-lock-5/16"-18	60	N606678-S36	Screw & washer assy.-M6 x 1 x 30
47	45264-S101 (M-141-H)	Nut-spring-5/16"-18			
48	385865-S36 (BB-569-DC)	Screw & washer-5/16"-18 x 1 1/4"			

YEAR	MODEL/RESTRICTIONS	PART NUMBER	DESCRIPTION	QTY.
10741-69	Refer to group 10732			

YEAR	MODEL/RESTRICTIONS	PART NUMBER	DESCRIPTION	QTY.
10804	REGULATOR (INSTRUMENT CLUSTER VOLTAGE)			
73/78	A	C9AZ 10804-A	*GR-512	1
73/76	C - - w/Rallye instrument group			1
73/	D			1
73/76	F,Y			1
77/	F - - w/tachometer			1
75/	G			1
77/78	L - - w/tachometer			1
79	L			1
73/77	P			1
77/	V			1
73/	K	D1AZ 10804-A	*GR-513	1
73/76	C - - w/o Rallye instrument group			1
74/76	L			1
77/78	F,L - - w/o tachometer			1
78/	P			1
79	A,J			1
79	F - - w/o tachometer			1
73/74	J	D2RY 10804-B		1
76/78	J	D5RY 10804-A		1
73/74	J	381654-S36	(UU-52-X)-screw-hex. head-No. 8-15 x 1/2"	1
76/78	J	51768-S8	(U-373)-screw-pan head (attach regulator to cluster)-1/4"-20 x 1/2"	1
10817	WIRING ASSY. (INSTRUMENT CLUSTER FEED)			
73	C - - w/Rallye instrument group	D30Z 10817-A		1
74	C - - w/Rallye instrument group	D40Z 10817-A	#D40B 10817-AA	1
74	F			1
75/76	C,F	★ D50Z 10817-A	#D50B 10817-A-has 4-way multiple connectors to 14289 & 14398 wires	1
77/78	F - - w/tachometer-exc. Calif.	★ D90Z 10817-A	#D70C 10817-AE,-AF D90E 10817-AA-has 6-way multiple connectors to 14289 & 14398 wires	1
79	F - - w/tachometer			1
77/78	F - - w/tachometer-Calif.	★ D70Z 10817-B	#D70B 10817-BA,-BD-has 8-way multiple connectors to 14289 & 14398 wires	1
79	A	★ D9AZ 10817-A	#D9AB 10817-AD-use with side interior lights	1
79	A - - with w/s washer fluid level warning	★ D9AZ 10817-B	#D9AB 10817-BE-use without side interior lights	1
10A818	TUBE (BATTERY VENTILATION)			
74/78	L - - 4 cyl. 140 (2300 cc)	★ D4FZ 10A818-A	Plastic	1
75/78	L - - 6 cyl. 171 (2800 cc)	★ D5FZ 10A818-B	Plastic	1
74/78	L	383927-S	(NN-167)-drive pin-att. tube to finder apron	AR
10838	HOUSING (INSTRUMENT CLUSTER)			
73	D	★ D0VY 10838-A		1
74	D	★ D4VY 10838-A		1
75/77	D	★ D5VY 10838-A		1
73/74	J - - w/warning lights	★ D3RY 10838-A		1
73/74	J - - w/gauges	★ D3RY 10838-B		1
76/78	J			1
74/78	L - - w/o tachometer	★ D5FZ 10838-B	#D52F 10841-less strg. col. opening	1
79	L - - w/o tachometer	★ D9FZ 10838-A	Blue	1
		★ D9FZ 10838-B	Red	1
		★ D9FZ 10838-C	Chamois	1
		D9FZ 10838-D	Black	1
77/	L - - w/tachometer	D7FZ 10838-A	#D7EF 10841-A -with strg. col. opening	1
73	P	★ D3DZ 10838-D	Avocado	1
		★ D3DZ 10838-A	Black	1
		★ D3DZ 10838-B	Blue	1
		D2DZ 10838-C	Dark beige	1
		D3DZ 10838-C	Ginger	1
		★ D3DZ 10838-E	Orange	1
		D2DZ 10838-D	Tan	1

COPYRIGHT © 1986 — FORD MOTOR COMPANY — DEARBORN, MICHIGAN

1973/79 LINCOLN-MERCURY CARS

YEAR	MODEL/RESTRICTIONS	PART NUMBER	DESCRIPTION	QTY.
10838	**HOUSING (INSTRUMENT CLUSTER) — Cont'd**			
74	P	D3DZ 10838-D	Avocado	1
		★ D3DZ 10838-A	Black	1
		★ D3DZ 10838-B	Blue	1
		★ D3DZ 10838-E	Orange	1
		D4DZ 10838-C	Silver blue	1
		★ D4DZ 10838-B	Tan	1
75/76	P	★ D3DZ 10838-A	Black	1
		★ D3DZ 10838-B	Blue	1
		★ D5DZ 10838-C	Light green	1
		★ D5DZ 10838-B	Tan	1
77	P	★ D3DZ 10838-A	Black	1
		★ D3DZ 10838-B	Blue	1
		★ D5DZ 10838-C	Light green	1
		★ D7DZ 10838-B	Red	1
		★ D5DZ 10838-B	Tan	1
74	C,L,P	55928-S	(U-380-A)-screw (attach housing to instrument cluster)-No. 8-18 x 3/4"	AR
74	C,L,P	45174-S	(M-138)-spring nut (attach housing to instrument cluster)-No. 8-18	AR
74	D	34653-S	(M-106-X)-nut (attach housing to instrument panel)-No. 8-32	AR
73/78	J	E826005-S	(AM-15-D)-nut (housing to bezel)-11mm x 9mm (Metric)	AR
10C838	**RELAY ASSY. (WARNING LAMP INDICATOR)**			
73/78	C,D,F	D1AZ 10C838-A	#D1AB 10C838-AA-Lights on	1
74/	L		Lights on	1
75/78	A,G,Y			1
77/78	V		Lights on	1
77/	K		Lights on	1
79	D,G			1
73/75	K	★ D2SZ 10C838-A	#D2SB 10C838-AA-Lights on	1
73/	C,D,F	55981-S	(U-254-E)-screw (relay to panel)-1/4"-14 x 1/2"	AR
77	K		As listed in T.S.B. No. 142 dated Sept. 7, 1977, article 1962	AR
10D838	**RETAINER (INSTRUMENT CLUSTER JEWEL)**			
73	C - - w/Rallye instrument group	D2GY 10D838-A	Fuel	1
		D2GY 10D838-B	Temperature	1
		D2GY 10D838-C	Oil and amps.	1
10D839	**WIRING & SOCKET ASSY (WINDSHIELD WIPER SWITCH)**			
77/	K	D7LY 10D839-A	#D7LB 17D432-AB-includes one B8AZ 13466-A bulb	1
10D840	**CHIME ASSY. (SEAT BELT WARNING)**			
77/	V	D74Y 10D840-A	#D74B 10D840-AA	1
78/	K			1
79	A,D,F			1
10K843	**CIRCUIT ASSY. (INSTRUMENT CLUSTER PRINTED)**			
73	A,Y	★ D3AZ 10K843-A	#D3AF 10C956-BA	1
74/75	A,Y	★ D4AZ 10K843-A		1
76/78	A,Y	D6AZ 10K843-A		1
79	A	D9MY 10K843-A		1
74/75	C - - w/o Rallye instrument group	★ D4GY 10K843-A		1
76	C - - w/o Rallye instrument group	★ D60Z 10K843-B		1
76	F - - w/o tachometer			1
74/75	C - - w/Rallye instrument group	★ D4GY 10K843-B		1
74/75	F			1
76	C - - w/Rallye instrument group	D60Z 10K843-C		1
76/78	F - - w/tachometer			1
79	F - - w/tachometer	D8SZ 10K843-A		1
77/78	F - - w/o tachometer	★ D7SZ 10K843-A	R/b D9SZ 10K843-A 11/81	1

YEAR	MODEL/RESTRICTIONS	PART NUMBER	DESCRIPTION	QTY.
10K843	CIRCUIT ASSY. (INSTRUMENT CLUSTER PRINTED) — Cont'd			
79	F - - w/o tachometer	D9SZ 10K843-A	#D9SF 10C956-AA	1
73/74	D	★ D1VY 10K843-A	Upper	1
		D0VY 10K843-A	Lower	1
75/77	D	D5VY 10K843-A	Lower OBS	1
		★ D5VY 10K843-B	Upper	1
78	D	★ D8VY 10K843-A		1
79	D	★ D9VY 10K843-A		1
75	G	D5DZ 10K843-A	#D5DF 10C956-AA	1
76	G	★ D6DZ 10K843-A	#D6DF 10C956-AA	1
77	G "Before 12/1/76"		Use with leaded fuel cluster	1
77	G	D74Z 10K843-B	#D74F 10C956-BA-Use with unleaded fuel cluster	1
77	G "From 12/1/76"		Use with leaded fuel cluster	1
78	G - - U.S.			1
78	G - - Canada	★ D74Y 10K843-A	#D74F 10C956-AA	1
79	G - - Canada	★ D94Y 10K843-A		1
79	G - - U.S.	★ D94Y 10K843-B		1
73/74	J - - w/warning lights	★ D3RY 10K843-A		1
73/74	J - - w/gauges	D4RY 10K843-B		1
76/78	J			1
79	J	E0ZZ 10K843-A	#E0ZF 10C956-A-primary	1
79	J	E0ZZ 10K843-B	#E0ZF 10K843-B-secondary	1
73/76	K	★ D2LY 10K843-A		1
77/	K	D7LY 10K843-A		1
74/75	L	★ D4FZ 10K843-A	#D42F 10C956	1
76/78	L - - w/o tachometer	D6FZ 10K843-A	Use on fuel gauge-speedo cluster	1
79	L - - w/o tachometer	★ D9FZ 10K843-A		1
77/	L - - w/tachometer	★ D7FZ 10K843-A	Use on tach-speedo cluster	1
77/	L - - w/tachometer	D7FZ 10K843-B	Use on fuel-alt-temp gauge cluster	1
73	P	D0DZ 10K843-A	#D0DF 10C956-A	1
74/75	P	★ D4DZ 10K843-A		1
76/77	P	D6DZ 10K843-B		1
78/	P - - w/o tachometer	D8BZ 10K843-A	#D8BF 10C956-AA	1
79	P - - w/tachometer	E0ZZ 10K843-A	#E0ZF 10C956-A-primary	1
79	P - - w/tachometer	E0ZZ 10K843-B	#E0ZF 10C956-B-secondary	1
77/78	V	★ D74Y 10K843-A	#D74F 10C956-AA	1
79	V	★ D94Y 10K843-A		1
10K844	LAMP ASSY. (EMERGENCY WARNING FLASHER)			
73/74	J	★ D3RY 10K844-A	Green	1
10845	BRACKET (INSTRUMENT CLUSTER MOUNTING)			
74/78	L	D1FZ 10845-A		1
10848	PLATE (INSTRUMENT CLUSTER BACK)			
73/78	A,Y	D3AZ 10848-A		1
79	A	D9MY 10848-A		1
73	C - - w/o Rallye instrument group	D3GY 10848-A		1
73	C - - w/Rallye instrument group	D3GY 10848-B		1
76	C - - w/o Rallye instrument group	D9SZ 10848-A		1

COPYRIGHT © 1986 — FORD MOTOR COMPANY — DEARBORN, MICHIGAN

1973/79 LINCOLN-MERCURY CARS

YEAR	MODEL/RESTRICTIONS	PART NUMBER	DESCRIPTION	QTY.
10848	PLATE (INSTRUMENT CLUSTER BACK) — Cont'd			
74/76	C - - w/Rallye instrument group	D4GY 10848-B		1
74/	F - - w/tachometer			1
78/	D	★ D8VY 10848-A		1
73	F (65D,76D)	D1WY 10848-A		1
73	F (65F,76F)	D1WY 10848-C		1
73	F (65F,76F) - - w/auxiliary cluster	D1WY 10848-B	Located in auxiliary cluster	1
77/79	F - - w/o tachometer & w/o tripodometer	D9SZ 10848-A		1
77/79	F - - w/o tachometer & with tripodometer	D9SZ 10848-B		1
75/79	G	D94Y 10848-A		1
76/78	J	★ D5RY 10848-A		1
79	J	E2ZZ 10848-A		1
77/	K	D7LY 10848-A		1
74	L	D4FZ 10848-A		1
75/78	L - - w/o tachometer	D5FZ 10848-A	Use on speedo -fuel gauge cluster	1
79	L - - w/o tachometer	D9FZ 10848-A		1
77/	L - - w/tachometer	D7FZ 10848-A	Use on speedo- tach cluster	1
73	P	D1DZ 10848-A		1
75/77	P	D5DZ 10848-B		1
78/	P - - w/o tachometer	D8BZ 10848-A		1
79	P - - w/tachometer	E2ZZ 10848-A		1
77/79	V	D94Y 10848-A		1
77/	F	384816-S100	(MM-319) Nut-spring (attach back plate to inst. panel)-No. 8-18	1
10850	AMMETER (INSTRUMENT CLUSTER)			
73	C - - w/Rallye instrument group	★ D2GY 10850-A		1
74/76	C - - w/Rallye instrument group	★ D4GY 10850-A		1
73/74	D	★ D1VY 10850-A		1
75/77	D	D5VY 10850-A	"D-C-ALT" -red pointer	1
74/76	F	★ D4GY 10850-A		1
77/	F - - with tachometer	D7SZ 10850-A	"AMPS 65-0-65"	1
73/74	J - - w/warning lights	★ D0RY 10850-B		1
73/74	J - - w/gauges	★ D3RY 10850-A		1
		★ 45245-S8	Nut-stamped-No. 8-32	2
		E620310-S72	(M-4)-nut hex. (Metric)	AR
76/78	J	★ D5RY 10850-A		1
79	J	E1ZZ 10850-A		1

YEAR	MODEL/RESTRICTIONS	PART NUMBER	DESCRIPTION	QTY.
10850	AMMETER (INSTRUMENT CLUSTER) — Cont'd			
77	L - - w/tachometer "Before 12/1/76"	★ D7FZ 10850-A	Use on fuel -alt-temp gauge cluster "D-C-ALT"-has white pointer	1
77/	L - - w/tachometer "From 12/1/76"	D7FZ 10850-B	Use on fuel-alt-temp gauge cluster- "D-C-ALT"-has orange pointer	1
79	P - - w/tachometer	E1ZZ 10850-A		1
10852	BEZEL (INSTRUMENT CLUSTER CONTROL)			
73/	A,C,F,G,L,P,Y	★ C8AZ 10852-A	Defogger	1
73/78	A,Y - - w/o intermittent wipers	★ D3MY 10852-A	Wiper- "Off Lo Hi"	1
73/78	A,Y - - w/intermittent wipers	★ D3MY 10852-B	Wiper- "Off Intermittent Lo Hi"	1
73/78	A,Y	D6AZ 10852-A	Light switch	1
79	A	★ D9AZ 10852-A	Light switch	1
73/76	C	D50Z 10852-A	Lights	1
73/76	C	★ D20Z 10852-B	Wiper	1
74/77	D - - w/autolamp system	D4VY 10852-A	Outer - incl. clip	1
		D4VY 10852-B	Inner	1
78/	D - - w/autolamp system	D8VY 10852-A	Outer	1
		D8VY 10852-B	Inner	1
78/	D	D7LY 10852-A	Lighter - chrome	1
78/	D	D70Z 10852-B	Wiper	1
78/	D - - w/o auto lamp system		Lights	1
73	F	★ D1WY 10852-B	Heater- "Vent"-inner	1
		★ D3ZZ 10852-B	Lights	1
		D3ZZ 10852-A	Wiper washer	1
74/76	F	D50Z 10852-A	Lights	1
74/76	F	★ D20Z 10852-B	Wiper	1
77/	F	D70Z 10852-B	Wiper	1
77/	F	D70Z 10852-A	Lights	1
75/	G	D7ZZ 10852-A	Lights	1
79	J	D8BZ 10852-A	Lights	1
73/76	K	★ D2LY 10852-B	Wiper	1
73/76	K - - w/o auto./headlamp dimmer		Lights	1
74/76	K - - w/autolamp system	★ D4LY 10852-A	Auto. headlamp dimmer switch-outer ring	1
74/76	K - - w/autolamp system	★ D4LY 10852-B	Autolamp switch-inner ring	1
77/	K	D7LY 10852-A	Lighter-chrome	1
77/	K - - w/auto. head lamp dimmer	D7LY 10852-B	Autolamp switch-inner ring	1
77/	K - - w/auto. headlamp dimmer	D7LY 10852-C	Auto. head lamp dimmer switch-outer ring	1
77/	K	D70Z 10852-B	Wiper	1
77/	K - - w/o auto. head lamp dimmer		Lights	1
74/	L	D3FZ 10852-A	Lights- "LIGHTS"	1
		D3FZ 10852-B	Wiper-washer- "WIPER-WASHER"	1
73	P	D0DZ 10852-B1A	Lights-black	1
		D0DZ 10852-B1B	Lights-blue	1
		D0DZ 10852-B1E	Lights-gray	1
		★ D2DZ 10852-C	Lights-beige - not replaced	1
		★ D3DZ 10852-C	Lights-orange - not replaced	1
		D3DZ 10852-D	Lights-ginger	1
73	P	D3DZ 10852-A	Wiper-washer	1
74/77	P	★ D4DZ 10852-C	Lights-chrome	1
78/	P	E3ZZ 10852-A	Lights	1
77/	V	D70Z 10852-B	Lights	1
76	K	386269-S2	(XX-350-D)-washer (between bezel and switch)- 5/16" spring	1

COPYRIGHT © 1986 — FORD MOTOR COMPANY — DEARBORN, MICHIGAN

1973/79 LINCOLN-MERCURY CARS

YEAR	MODEL/RESTRICTIONS	PART NUMBER	DESCRIPTION	QTY.
10A860	**PLATE (INSTRUMENT CLUSTER CONTROL MOUNTING)**			
73/78	A,Y	D9VY 10A860-B	Used with Philco chassis	1
79	A - - w/Electronic quad. tape player	D9AZ 10A860-A	#D9AF 19A179-AA	1
79	A - - w/o Electronic quad. tape player	D9AZ 10A860-B	#D9AF 19A179-BA	1
73/76	C	D20Z 10A860-A	Radio	1
74/	F			1
73/77	D	★ D3VY 10A860-A	Radio	1
78/	D	D9VY 10A860-B	#D9VF 19A004-BA,BB-use w/o electronic radio	1
78/79	D	D9VY 10A860-A	#D9VF 19A004-AA-use w/electronic radio	1
76/78	J - - without A/C	★ D5RY 10A860-A	Radio-#75EB 19A004-AA	2
	J - - A/C	★ D5RY 10A860-C	R.H.-radio-#75EB 19A004-CA	1
		★ D5RY 10A860-B	L.H.-radio-#75EB 19A004-BA	1
78/	K	D9LY 10A860-A	#D9LF 19A004-AA- use w/o electronic radio	1
79	K	D9LY 10A860-B	#D9LF 19A004-BA-use w/electronic radio	1
77/	L - - w/tachometer	★ D7FZ 10A860-A	Use for cluster w/fuel-alt-temp gauges	1
79	V	★ D94Y 10A860-A		1
73/76	C	383938-S2	(UU-52-V)-screw (attach cover to instrument panel)-No. 8-12 x 1/2"	AR
78/	K	384816-S100	(MM-319)-nut-spring (Plate to instrument panel)	3
10A861	**PLATE (INSTRUMENT CLUSTER TRIM)**			
77/78	F - - with tachometer	★ D7SZ 10A861-A	Gray (engine turn) finish	1
78/	F(53D,65D) - - w/tachometer	★ D80Z 10A861-A	Rosewood finish	1
78/	F(65L) - - w/tachometer	D8SZ 10A861-A	Dark burl walnut finish	1
10A862	**PLATE (SWITCH OPENING COVER)**			
73/78	J	★ D3RY 10A862-A	Plug	1
10C865	**WIRE ASSY (DOOR OPEN WARNING SWITCH GROUND)**			
77/78	F	★ D70B 10C865-BA or -BB	#D70B 10C865-BA,-BB-for frt door switch-make from 20 ga. bulk wire & add (1) C70Z 14A309-A conn., (1) D3AZ 14489-P conn., (1) D20Z 14474-F terminal, (1) D20Z 14474-A terminal, (5) C5AZ 13A506-B retainer & elec. tape as needed.	1
10C867	**HUB ASSY. (INSTRUMENT CLUSTER LENS)**			
73	F(65D,76D)	D1WY 10C867-A		AR
73	F(65F,76F)	D1WY 10C867-B		AR
10B870	**FILTER (INSTRUMENT CLUSTER LIGHT)**			
73/78	A	D1AZ 10B870-A	Blue plastic (only)	AR
73/76	C,Y			1
74/	F			AR
75/78	G			AR
75/	D			6
73/	K			AR
77/	P - - w/o tachometer			AR
77/78	V			1
73/78	A,Y	★ D3MY 10B870-A	Blue-for headlamp switch	1
73/76	C	D3SZ 10B870-A	For climate control switch	1
74/	F		For climate control switch	1
75/76	K		For heated backlite switch	1
73/77	D	★ C4VY 10B870-A	Blue	AR
73	F	★ D1WY 10B870-A	Blue	5
76/78	J	D5RY 10B870-A	Instrument cluster	4
77	K - - A.T.C.	D7LY 10B870-A	#D7LB 13B793-AA-for ATC control	1
79	A,G,J,V	D9AZ 10B870-A	Blue	AR
79	P - - w/tachometer			AR

YEAR	MODEL/RESTRICTIONS	PART NUMBER	DESCRIPTION	QTY.
10C872	SWITCH ASSY. (LUGGAGE COMPARTMENT OPENING WARNING)			
74/76	L(64)	★ D42B 10C872-AB	#D42B 10C872-AB-use next assy. (D4FZ 14018-C)	1
10C874	BAFFLE (INSTRUMENT CLUSTER INDICATOR)			
75/78	L - - w/o tachometer	★ D5FZ 10C874-A	"Lift gate open"-refer to 10A936 for jewel used on units w/tachometer	1
10876	BEZEL (INSTRUMENT CLUSTER)			
73/74	J - - w/warning lights	★ D3RY 10876-C	Deluxe	1
73/74	J - - w/gauges without A/C	★ D4RY 10876-A		1
73/74	J - - w/gauges and A/C	★ D4RY 10876-B		1
76/78	J(64D) - - without A/C	★ D6RY 10876-G	Black	1
		★ D6RY 10876-K	Saddle (Trim code LE)	1
		★ D6RY 10876-J	Tan (Trim code KE)	1
		★ D6RY 10876-H	Chocolate (Trim code JE)	1
	J(64D) - - A/C	★ D6RY 10876-M	Black	1
		★ D5RY 10876-E	Saddle (Trim code LE)	1
		★ D6RY 10876-F	Tan (Trim code KE)	1
		★ D6RY 10876-E	Chocolate (Trim code JE)-r/b D6RY 10876-M	1
76	J(64P,T) - - without A/C "Before 10/1/76"	★ D5RY 10876-G	Wood grain	1
76/78	J(64P,T) - - A/C	★ D5RY 10876-H	Black grain	1
76/78	J(64P,T) - - without A/C "From 10/1/76"	★ D6RY 10876-N	Gray grain	1
76/78	J(64P,T) - - without A/C "From 10/1/76"	★ D6RY 10876-P	Woodgrain	1
76/78	J(64S) - - without A/C	★ D6RY 10876-A	Black	1
76/78	J(64S) - - A/C	★ D6RY 10876-B	Black	1
73/78	J	E464034-S	Clip-attach bezel to instrument panel	AR
10C876	BEZEL and LENS (WARNING INDICATOR PANEL LAMP)			
73	F	D2WY 10C876-A	Seat belt	1
10C876	HOUSING (SEAT BELT WARNING LAMP)			
73	P	D2DZ 10C876-A	Belts	1
10C876	HOUSING ASSY. (WARNING INDICATOR)			
76/	G - - w/console	★ D6DZ 10C876-B	#D6DB 10C876-AB-in console	1
77/	V - - w/console		in console	1
79	J,P	D9ZZ 10C876-A	"QUARTZ"	1
10D876	BRACKET (SEAT BELT WARNING CHIME)			
77/	V	D74Y 10D876-A	Attaches to inst. panel lwr. flange reinforcement	1
78/	K	D8LY 10D876-A		1
79	A	D9AZ 10D876-A		1
79	D	D9VY 10D876-A		1
79	F	D8SZ 10D876-A		1
10883	GAUGE (INSTRUMENT CLUSTER TEMPERATURE)			
73	C - - w/o Rallye instrument group	★ D2GY 10883-A		1
74/76	C - - w/o Rallye instrument group	★ D4GY 10883-A		1
74/75	C - - w/Rallye instrument group	D4GY 10883-B		1
76	C - - w/Rallye instrument group	D60Z 10883-B	"C-H TEMP"	1
73/74	D	★ D1VY 10883-A		1
75/77	D "Before 12/1/76"	D5VY 10883-A	"C-NORMAL-H TEMP"-red pointer	
77	D "From 12/1/76"	D7VY 10883-A	"C-NORMAL- H TEMP"-orange pointer	1
74/75	F	★ D4GY 10883-B		1
76	F	★ D60Z 10883-B	"C-H TEMP"	1
77/	F - - w/o tachometer	D7SZ 10883-A	"C-H"- has continuous visor	1
77/	F - - w/tachometer	D7SZ 10883-B	"C-H TEMP"-has break in visor	1
73/74	J - - w/gauges	★ D3RY 10883-B	"72EB-TEMP"	1
76/78	J	D5RY 10883-A	"74EB-TEMP"-white pointer	1
79	J	D9ZZ 10883-A		1
77/	L - - w/tachometer	D7FZ 10883-B	"C-NORMAL-H TEMP"-use on cluster w/fuel-alt-temp gauges-has orange pointer	1
79	P - - w/tachometer	D9ZZ 10883-A		1

COPYRIGHT © 1986 — FORD MOTOR COMPANY — DEARBORN, MICHIGAN

1973/79 LINCOLN-MERCURY CARS

YEAR	MODEL/RESTRICTIONS	PART NUMBER	DESCRIPTION	QTY.
10B883	COVER ASSY. (INSTRUMENT CLUSTER TRIM)			
73	C - - w/o Rallye instrument group	D2GY 10B883-D	5 openings-valino leather grain finish	1
73 74/75	C - - w/o Rallye instrument group C(53D,K,65D,K,71D,K) - - w/o Rallye instrument group- "Before 1/2/75"	★ D2GY 10B883-B	5 openings-cherry woodgrain finish- incl. trim plate	1 1
73 74/76	C - - w/o Rallye instrument group C(53B,65B) - - w/o Rallye instrument group	★ D2GY 10B883-A	5 openings-camera case finish	1 1
74/75	C(53K,65K,71K) - - w/o Rallye instrument group- "Before 1/2/75"	D40Z 10B883-A	5 openings-cherry woodgrain finish-incl. trim plate	1
75/76	C - - w/o Rallye instrument group- "From 1/2/75"	★ D5GY 10B883-C	5 openings-baby burl walnut finish-incl. trim plate	1
75/76	C - - w/Rallye instrument group	★ D5GY 10B883-B	8 openings-camera case finish	1
74/76 77/	F F - - w/tachometer	D4WY 10B883-A	8 openings-less (10A861) trim plate	1 1
77	F - - w/o tachometer	★ D7SZ 10B883-A	5 openings -burl walnut trim	1
77/	F - - w/o tachometer	★ D70Z 10B883-B	5 openings -rosewood trim	1
77/78	F - - w/o tachometer	★ D70Z 10B883-A	5 openings-black camera case finish	1
78/	F - - w/o tachometer	D8SZ 10B883-A	5 openings-dark burl walnut trim	1
77/	L - - w/tachometer	★ D7FZ 10B883-A	3 holes- camera case finish- use on cluster w/fuel-alt-temp gauges	1
73	C	381863-S	(MM-275-J)-nut (attach cover assy. to 10838)-spring-No. 8-18	AR
77/	F	384816-S100	(MM-319)-Nut (10B883 to upper panel-outboard)-No. 8-18	2
77/	F	387555-S100	(MM-268-XF)-Nut (10B883 to lower panel)-No. 8-18	4
10D883	SWITCH ASSY. (MANIFOLD PRESSURE WARNING INDICATOR)			
79	J - - 4 cyl. 140 TC (2300cc)	D9ZZ 10D883-A	*SW-1532 - #D9ZF 10D883-AB	1
10884	SENDER (WATER TEMPERATURE INDICATOR ENGINE UNIT)-Also refer to group 10B921			

A (Mercury)

73/75	A - - without A.T.C.	C8GY 10884-A	*SW-663-(1) contact-white insulator-2 5/16" long	1
76/78 79	A - - without A.T.C. A - - without EEC-II	E43Z 10884-A	*SW-(1)1344-A-(1) contact-red insulator	1 1
73/75	A - - A.T.C.	C5AZ 10884-B	*SW-626-(2) contacts-gray insulator-2 11/16" long	1
76/78 79	A - - A.T.C. A - - with EEC-II	D6LZ 10884-A	*SW-1345-(2) contacts-brown insulator-2 11/16" long	1 1

C (Montego)

73/74 73 74/76	C - - 6 cyl. 250 C - - 8 cyl. C - - 8 cyl. - without A.T.C.	★ D0ZZ 10884-A	*SW-925-(1) contact-red insulator-1 1/2" long r/b D0WY 10884-A (11/81)	1 1 1
74/75	C - - 8 cyl. 302,351W with A.T.C.	C9SZ 10884-A	*SW-889-(2) contacts-green insulator-(2) 11/16" long	1
74/76 76	C - - 8 cyl. 351C,351M, , 400,460 with A.T.C. C - - 8 cyl. 351W with A.T.C.	D40Z 10884-A	*SW-1222-(2) contacts-yellow insulator-2 11/16" long	1 1

YEAR	MODEL/RESTRICTIONS	PART NUMBER	DESCRIPTION	QTY.
10884	SENDER (WATER TEMPERATURE INDICATOR ENGINE UNIT) — Cont'd			
	D (Lincoln)			
73/76	D "Before 8/18/75"	C9SZ 10884-A	*SW-889-(2) contacts-green insulator-2 11/16" long	1
76/77	D "From 8/18/75"	D40Z 10884-A	*SW-1222-(2) contacts-yellow insulator-2 11/16" long	1
78/	D	D6LZ 10884-A	*SW-1345-(2) contacts-brown insulator-2 11/16" long	1
	F (Cougar)			
73	F	★ D0ZZ 10884-A	*SW-925 (1) contact-red insulator -1 1/2" long	1
74/	F - - 8 cyl. without A.T.C.		r/b D0WY 10884-A (11/81)	1
74	F - - 8 cyl. 351W with A.T.C.	C9SZ 10884-A	*SW-889-(2) contacts-green insulator-2 11/16" long	1
74	F - - 8 cyl. 302,351C,351M, 400,460 - - with A.T.C.	D40Z 10884-A	*SW-1222-(2) contacts-yellow insulator-2 11/16" long	1
75/	F - - with A.T.C.			1
	G (Monarch)			
75	G	C8GY 10884-A	*SW-663-(1) contact-white insulator-2 5/16" long	1
76	G	E43Z 10884-A	*SW-1344-A-(1) contact-red insulator	1
77/	G - - exc. ATC or VV carb.			1
77/	G - - with ATC or VV carb.	D6LZ 10884-A	*SW- 1345-(2) contacts-brown insulator-2 11/16" long	1
	J (Capri)			
73/78	J	D1FZ 10884-B	*SWE-1012-(1) contact-white insulator-(1) 11/16" long-use with D5RY 10911-A adaptor for 6 cyl. 171 (2800 cc) engine	1
79	J - - 4 cyl. 140 (2300cc)	★ D0ZZ 10884-A	*SW-925 (1) contact-red or green insulator-1/2" long-r/b D0WY 10884-A (11/81)	1
79	J - - 6 cyl. 171 (2800cc) - w/o VV carb.			1
79	J - - 8 cyl. 302-without VV carb. or Hi altitude carb.			1
79	J - - 6 cyl. 200-w/tachometer			1
79	J - - 6 cyl. 171 (2800cc) with VV carb.	D40Z 10884-A	*SW-1222-(2) contacts-yellow insulator-2 11/16" long	1
79	J - - 8 cyl. 302 with VV carb. or Hi altitude carb.			1
79	J - - 6 cyl. 200-w/o tachometer	E43Z 10884-A	*SW-1344-A(1) contact-red insulator	1
	K (Mark IV,Mark V)			
73/75	K	C5AZ 10884-B	*SW-626-(2) contacts-gray insulator-(2) 11/16" long	1
76/	K	D6LZ 10884-A	*SW-1345-(2) contacts-brown insulator-(2) 11/16" long-on L.H. side of engine	1
	L (Bobcat)			
74/76	L	C8GY 10884-A	*SW-663-(1) contact-white insulator-2 5/16" long	1
77/	L - - 4 cyl 140 (2300cc) w/o tachometer			1
77/	L - - 6 cyl. 171 (2800 cc) w/o tachometer & w/o VV carb.			1
77/	L - - 4 cyl. 140(2300cc) w/tachometer	★ D0ZZ 10884-A	*SW-925-(1) contact-red insulator 1 1/2" long-r/b D0WY 10884-A (11/81)	1
77/	L - - 6 cyl. 171 (2800 cc) w/tachometer & w/o VV carb.			1
77/	L - - 6 cyl. 171 (2800 cc) w/o tachometer & with VV carb.	C5AZ 10884-B	*SW-626-(2) contacts-gray insulator-2 11/16" long	1
77/	L - - 6 cyl. 171 (2800 cc) w/tachometer & with VV carb.	D40Z 10884-A	*SW-1222-(2) contacts-yellow insulator-2 11/16" long	1

COPYRIGHT © 1986 — FORD MOTOR COMPANY — DEARBORN, MICHIGAN

1973/79 LINCOLN-MERCURY CARS

YEAR	MODEL/RESTRICTIONS	PART NUMBER	DESCRIPTION	QTY.
	P (Comet)			
73/76 77	P P - - 6 cyl. 200,250, 8 cyl. 302-exc. with VV carb.	C8GY 10884-A	*SW-663-(1) contact-white insulator-2 5/16" long	1 1
77	P - - 8 cyl. 302 with VV carb.	C5AZ 10884-B	*SW-626-(2) contacts-gray insulator-2 11/16" long	1
	P (Zephyr)			
78/	P - - 4 cyl. 140 (2300cc)-w/o tachometer	C8GY 10884-A	*SW-663 -(1) contact-white insulator-2 5/16" long	1
79 79	P - - 4&6 cyl.-w/tachometer P - - 8 cyl.-w/tachometer-exc. Calif.	★ D0ZZ 10884-A	*SW-925- (1) contact-red or green insulator-1 1/2" long-r/b D0WY 10884-A (11/81)	1 1
78/ 78/	P - - 6 cyl.-w/o tachometer P - - 8 cyl.-w/o tachometer exc. Calif.	E43Z 10884-A	*SW-1344-A-(1) contact-red insulator	1 1
78/	P - - 8 cyl.-w/o tachometer-Calif.	D6LZ 10884-A	*SW-1345-(2) contacts-brown insulator-2 11/16" long	1
79	P - - 8 cyl.-w/tachometer Calif.	D40Z 10884-A	*SW-1222-(2) contacts - yellow insulator-2 11/16" long	1
	V (Versailles)			
77	V - - w/o ATC or VV carb.	E43Z 10884-A	*SW-1344-A-1 contact-red insulator	1
77 78/	V - - with A.T.C. or VV carb. V	D6LZ 10884-A	*SW-1345-2 contacts-brown insulator-2 11/16" long	1 1
	Y (Meteor)			
73/75	Y - - without A.T.C.	C8GY 10884-A	*SW-663-1 contact-white insulator-2 5/16" long	1
73/75	Y - - A.T.C.	C5AZ 10884-B	*SW-626-2 contacts-gray insulator-2 11/16" long	1
76	Y - - without A.T.C.	E43Z 10884-A	*SW-1344-A-1 contact-red insulator	1
76	Y - - A.T.C.	D6LZ 10884-A	*SW-1345-2 contacts-brown insulator-2 11/16" long	1
	10887 LENS (INSTRUMENT CLUSTER MAIN)			
73/78	A,Y	D3AZ 10887-B		1
73/76	C - - w/o Rallye instrument group	★ D2GY 10887-A	1 piece-3 lens	1
73/76	C - - w/Rallye instrument group	D2GY 10887-B	1 piece-2 lens-incl. reset knob	1
73/76	C - - w/Rallye instrument group	D2GY 10887-C	1 piece-5 lens	1
77	D - - Canada	★ D7VY 10887-F	Miles & Kilometers (0-80 mph & 0-120 km/h)	1
75/76	D	★ D5VY 10887-F	Fuel and alt.-lens assy.-incl. housing-use w/unleaded fuel-not replaced (11/81)	1
75/76	D	★ D5VY 10887-D	Fuel and alt.-lens assy.-incl. housing-use w/leaded fuel	1
75/76	D	★ D5VY 10887-E	Temperature and clock-lens assy.-incl. housing-not replaced (11/81)	1
77	D	★ D7VY 10887-C	Incl. housing, mask & lens-temperature & clock	1
78/	D	★ D8VY 10887-A	Incl. tripodometer knob, sleeve, shaft & spring	1
74/76 77/	F F - - w/tachometer	D2GY 10887-B	1 piece-2 lens-incl. reset knob	1 1
74/76 77/	F F - - w/tachometer	D2GY 10887-C	1 piece-5 lens	1 1
77/	F - - w/o tachometer	★	Refer to group 10890	
75/	G	D5DZ 10887-A		1
73/74	J - - w/gauges	★ D3RY 10887-B	(2) large and (4) small lens-1 piece design	1

YEAR	MODEL/RESTRICTIONS	PART NUMBER	DESCRIPTION	QTY.
10887	LENS (INSTRUMENT CLUSTER MAIN) — Cont'd			
76/78	J	★ D5RY 10887-B	Use w/unleaded fuel- "UNLEADED GASOLINE ONLY"	1
79	J	★	Refer to group 10890	1
77/	K	★ D7LY 10887-A	Incl. tripodometer knob, sleeve, shaft & spring	1
74/78	L - - w/o tachometer	★ D1FZ 10887-A	Blue tint plastic w/bowed lenses	1
79	L - - w/o tachometer	★ D9FZ 10887-A	Blue tint	1
77/	L - - w/tachometer	★ D7FZ 10887-A	Clear plastic w/flat lenses	1
73/77	P	C9ZZ 10887-A		1
78/	P - - w/o tachometer	D8BZ 10887-A	(1) used for speedometer (1) used for fuel gauge w/o clock	1
78/	P - - w/o tachometer	D8BZ 10887-B	Use for fuel gauge w/clock	1
77/	V	D5DZ 10887-A		1
10887	DIAL (INSTRUMENT CLUSTER MAIN)			
73	F (65F,76F)	D1WY 10887-E	"Fuel"	1
73	F (65F,76F)	D1WY 10887-F	"Temp"	1
10890	MASK (INSTRUMENT CLUSTER)			
73/78	A,Y	★ D3AZ 10890-A		1
79	A	E5MY 10890-A		1
73/76	C - - w/o Rallye instrument group	★ D2GY 10890-A		1
73	C - - w/Rallye instrument group	D2GY 10890-B		1
77	F - - w/o tachometer & w/o tripodometer	D7SZ 10890-A	Incl. lens	1
77	F - - w/o tachometer & w/tripodometer	★ D7SZ 10890-B	Incl. lens & odometer knob, sleeve, shaft & spring	1
77/	F - - w/tachometer	★ D7SZ 10890-C	"Unleaded fuel only"	1
78/	F - - w/o tachometer & w/o tripodometer	★ D8SZ 10890-A	Incl. lens	1
78/	F - - w/o tachometer & w/tripodometer	★ D8SZ 10890-B	Incl. lens	1
78/	D	D8VY 10890-A		1
73	F	D1WY 10890-A		1
73	F - - w/auxiliary instrument cluster	D1WY 10890-B	Located in auxiliary cluster	1
75/	G	★ D5DZ 10890-A		1
76/78	J (exc. 64S)	★ D5RY 10890-A		1
76/78	J (64S)	★ D6RY 10890-A		1
79	J	D9ZZ 10890-A	Incl. lens	1
77/	K	D7LY 10890-A	"Unleaded fuel only"	1
		D7LY 10890-B	Clock-shift-speedo	1
74/78	L - - w/o tachometer	★ D4FZ 10890-A	Gray plastic w/hooded pods	1
77/	L - - w/tachometer	★ D7FZ 10890-A	Use on tach-speedo cluster-blue plastic w/o hooded pods-has two openings	1
		★ D7FZ 10890-B	Use on fuel-alt-temp gauge cluster-incl. lens-has three openings	1
78/	P - - w/o tachometer	D8BZ 10890-A		1
79	P - - w/tachometer	D9ZZ 10890-A		1
77/	V	★ D5DZ 10890-A		1
10892	SHIELD (INDICATOR LAMP)			
73	F	D1WY 10892-A		AR
10B898	WIRE ASSY. (INSTRUMENT CLUSTER LAMP)			
73	F	D1WY 10B898-A		1
73	F	383938-S	(UU-52-V)-No. 8-12 x 1/2"	3
10B899	HUB (INSTRUMENT CLUSTER DIAL)			
78/	P	D8BZ 10B899-A	Use on fuel gauge	1
10911	ADAPTOR (WATER TEMPERATURE SENDER)			
76/78	J - - 6 cyl. 171 (2800 cc)	★ D5RY 10911-A		1

COPYRIGHT © 1986 — FORD MOTOR COMPANY — DEARBORN, MICHIGAN

1973/79 LINCOLN-MERCURY CARS

YEAR	MODEL/RESTRICTIONS	PART NUMBER	DESCRIPTION	QTY.
10C912	DIODE ASSY. (LAMP FAIL INDICATOR)			
74	A,Y - - A.T.C.	D4AZ 10C912-A	#D4AB 10C912-AA-6 amp.-in 14289 wire	AR
76/	A,Y - - with A.T.C.	D6AZ 10C912-A	#D6AB 10C912-AA,-BA- "DIODE"-in main wire (14401) behind glove box - 1 amp.	1
77/	F(65) - - w/auto seat back latch			1
76/	G - - w/auto seat back latch			AR
79	J - - 4 cyl. 140TC (2300 cc)		In wire assy. (13A705)	2
79	K - - w/auto seat back latch			1
74/	D	C7SZ 10C912-A	#C8SB 10C912-A-2 1/2" long-for 14631 wire	AR
74/76	K		In 14401-for blower	1
75	G		Used for wiper motor	1
76/78	A - - 8 cyl. 460 P/C			2
76	K	D3AZ 10C912-A	In main wire (14401) for A.T.C. control	1
75	A,Y - - A.T.C.			1
10C914	INSULATOR (INSTRUMENT CLUSTER)			
73	F,P	C9ZZ 10C914-A	For ammeter	1
73/77	D		For ammeter	1
77/	L - - w/tachometer		For ammeter	1
77	D	D7VY 10C914-A	For clock	1
10918	RETAINER (WARNING INDICATOR PANEL LAMP)			
78/	K	★ D8LY 10918-A		1
10B921	SWITCH ASSY. (OIL TEMPERATURE WARNING)			
79	J - - 4 cyl. 140 TC (2300)	E1ZZ 10B921-A		1
10A922	SWITCH ASSY. (LOW VACUUM WARNING INDICATOR)			
75/76	A - - 8 cyl. 400 exc. Calif.	★ D6AZ 10A922-A	*SW-1288-A-#D5AF 10A922-AC,BC,D6AF 10A922-AA natural-incl. 5" pigtail wire-remove wire where not needed	1
75/76	C,F,Y - - 8 cyl. 400			1
75/76	A,C,D,F,K,Y - - 8 cyl. 460			1
75/76	G,P - - 6 cyl. 250 M/T			1
75/76	G - - 8 cyl. 351W			1
76	G,P - - 8 cyl. 302 M/T			1
75/76	A - - 8 cyl. 400 Calif.-	D5TZ 10A922-D	*SW-1351-#D5AF 10A922-CC D5TF 10A922-DA-blue-inc. 1.5" pigtail wire-remove wire where not needed	1
75/76	C,F,Y - - 8 cyl. 351-			1
75/76	G,P - - 6 cyl. 200			1
75/76	G,P - - 6 cyl. 250 A/T-			1
75/76	G,P - - 8 cyl. 302 A/T-			1
75/76	L - - 4 & 6 cyl.			1

YEAR	MODEL/RESTRICTIONS	PART NUMBER	DESCRIPTION	QTY.
10B923	WIRING (WARNING LAMP INDICATOR PANEL)			
77/	K - - w/brake skid control	D7LY 10B923-A	#D7LB 10B923-AB-114 1/2" long-from 14401 to 2B430	1
78	P(Taxi)	★ D8BZ 10B923-A	#D8BB 10C923-AB	1
78	P(Police)	★ D8BZ 10B923-B	#D8BB 10B923-BA	1
79	P(Taxi)	D9BZ 10B923-B	#D9BB 10B923-BB	1
79	P(74) w/tachometer	★ D9BZ 10B923-C	#D9BB 10B923-CA	1
10B924	SWITCH (SEAT BELT WARNING INDICATOR)			
75	A,C,D,F,G,K,L,P,Y	D5AZ 10B924-A	*SW-1304-#D5AB 10B924-B1A,B2A,B3A	1
77/	V			1
78/	K - - w/seat belt chime			1
79	D,F - - w/seat belt chime			1
76/77	D,G,J,K,L,P	D6AZ 10B924-A	*SW-1342-#D6AB 10B924-A1A,-A2A -incl. buzzer	1
76	A,C,F,Y "Before 7/1/76"			1
78	A,D,F,G,J,L,P			1
78/	D,K - - w/seat belt buzzer			1
79	F,G,L			1
76	A,C,F,Y "From 7/1/76"	D6AZ 10B924-B	*SW-1387-#green paint or D7AB 10B924-A1A-incl. buzzer	1
77	A,F			1
79	A,J,P	★ D9AZ 10B924-A	*SW-1518-#D9AB 10B924-AA-incl. buzzer-r/b E4TZ 10B924-A(11/84)	1
73/78	J	E802123-S71	Screw round head-attach switch to instrument panel	2
10B925	LAMP ASSY. (SEAT BELT WARNING)			
74/78	J - - without A/C	★ D3RY 10B925-A	"Fasten seat belt"	1
74/78	J - - A/C	★ D4RY 10B925-A		1
10B926	RELAY (WARNING INDICATOR)			
73	J	D2RY 10B926-A	Seat belt warning	1
76/78	J	★	Seat belt warning-refer to group 10B924	1
10B927	LENS (SEAT BELT WARNING LAMP)			
73/76	J	★ D3RY 10B927-A	Red- "Fasten seat belt"-r/b D3RY 10B925-A	1
10C935	BRACKET (INSTRUMENT PANEL CONTROL)			
76/	G	★ D6DZ 10C935-A	Without reinf. ridges-for units w/o black paint in warning jewel area	1
77/	V	D74Y 10C935-A	For mounting light switch to inst. panel	1
10A936	LENS (INSTRUMENT CLUSTER WARNING LAMP)			
73	A,Y "Before 6/15/73"	D3AZ 10A936-A	"Oil-fasten seat belt-temp"	1
		D3AZ 10A936-B	"Hi-beam-brake system-alt."	1
73/74	A,Y "From 6/15/73"	D4AZ 10A936-A	"Oil-fasten belts-temp." and R.H. turn indicator	1
		★ D4AZ 10A936-B	"Hi-beam-brake-alt." and L.H. turn indicator -not replaced (11/81)	1 *
75	A,Y	★	"Hi-beam-brake-alt."-serviced only in assy.-body group 044D70	1
75	A,Y	★	"Engine-fasten belts-low fuel economy"-serviced only in assy.-body group 044D70	1
76/78	A,Y	★	"Hi-beam-fasten belts-alt. engine-brake"-serviced only in assy.-body group 044D70	1
79	A	★ D9MY 10A936-A	#D9MF 10A936-AE-"WASHER FLUID-OIL-BRAKE-LOW FUEL-FASTEN BELTS-ALT.-TEMP." and L.H. turn indicator	1
73	C - - w/o Rallye instrument group	D2GY 10A936-D	"Alt.-hi-beam"	1
		D2GY 10A936-E	"Brakes-oil"	1
		D2GY 10A936-G	"Park"	1
73/76	C - - w/o Rallye instrument group	D2GY 10A936-F	"Turn signal"	2
74	C - - w/o Rallye instrument group	D4GY 10A936-A	"Alt.-park"	1

COPYRIGHT © 1986 — FORD MOTOR COMPANY — DEARBORN, MICHIGAN

1973/79 LINCOLN-MERCURY CARS

YEAR	MODEL/RESTRICTIONS	PART NUMBER	DESCRIPTION	QTY.
10A936	LENS (INSTRUMENT CLUSTER WARNING LAMP) — Cont'd			
73	C - - w/Rallye instrument group	D2GY 10A936-A	"Fuel"	1
		D2GY 10A936-C	"Oil-amps"	1
		D2GY 10A936-B	"Temperature"	1
74	C - - w/Rallye instrument group	D40Z 10A936-A	"Park-fasten belts"	1
73	F(65D,76D) - - w/o tachometer	D1WY 10A936-H	"Brakes-oil"	1
		D1WY 10A936-D	Hi-beam	1
73	F(65D,76D) - - w/tachometer	D1WY 10A936-N	"Brakes-oil"	1
		D1WY 10A936-A	Hi-beam	1
73	F(65D,76D)	D1WY 10A936-E	"Turn signal"	1
		★ D2WY 10A936-A	"Alternator"	1
		★ D2WY 10A936-B	"Belts"	1
		★ D2WY 10A936-D	Red	1
73	F (65F,76F)	D1WY 10A936-A	Hi-beam	1
		C9WY 10A936-B	"Turn signal"	2
		D1WY 10A936-K	"Door"	1
		D1WY 10A936-P	"Brakes-park"	1
		D2WY 10A936-C	"Low fuel"	1
73	F - - w/auxiliary cluster	D1WY 10A936-L	"Oil"-located in auxiliary cluster	1
		★ D1WY 10A936-M	"Amp"	1
77/	F	D2GY 10A936-F	"Turn signal"	2
77/	F - - w/o tachometer	D7SZ 10A936-A	"Alt-door ajar"-red	1
77/	F - - w/o tachometer	D7SZ 10A936-B	"Brake"-red	1
77/	F - - w/o tachometer	D7SZ 10A936-C	"Hi beam"-blue	1
77/	F - - w/tachometer	★ D7SZ 10A936-D	"Fasten belts" on front surface; "Door ajar" on rear surface	1
77/	F - - w/o tachometer	★	"TEMP"-refer to gp 10B966	1
77/	F - - w/o tachometer	D7SZ 10A936-E	"Oil-fasten belts"	1
75/	G	★ D5DZ 10A936-B	Green-round turn signal	1
75/76	G	★	"Alt.-engine-hi beam-brake-fasten belts-low fuel economy"-serviced only in assy.-body group 044D70	1
76/	G - - w/console	D6DZ 10A936-A	#D6DB 10D843-AA- "Trunk-Headlights - Door Ajar -Low Fuel"-in console	1
77/	G	★	"Alt-engine-hi beam-brake-fasten belts"-serviced only in assy-body group 044D70	1
79	J	★	"Hi-beam"-blue/Turn signal-green serviced only in assy.-body group (044D70)	1
77/	K	★ D8LY 10A936-B	"Low fuel"- incl. hsg., filter, dial, jewel, mask and lens	1
78/	K	D8LY 10A936-A	"Fasten belts-door ajar-brakes-washer fluid-temp.-oil-alt"	1
74	L	D1FZ 10A936-C	Hi beam (red)	1
74/78	L - - w/o tachometer	★ D1FZ 10A936-B	Turn signals (green)-w/o holes	1
		★ D5FZ 10A936-A	"Fasten belts-engine-brake-alt"	1
75/78	L - - w/o tachometer	★	"Liftgate open"-serviced only in assy.-group 10C874	1
77/	L - - w/tachometer	★ D7FZ 10A936-A	Turn signals (green)-w/two holes	1
		★ D7FZ 10A936-B	"Oil-fasten belts-brake"	1
		★ D7FZ 10A936-C	"Liftgate open"-station wagons	1
79	L - - w/o tachometer	★ D9FZ 10A936-C	Hi beam-blue	1
		★ D9FZ 10A936-B	"ENGINE-ALT-FASTEN BELTS-BRAKE-LIFTGATE AJAR"-red and green	1
		★ D9FZ 10A936-A	Turn signal-green	1
73	P	D0DZ 10A936-C	Hi-beam	1
73/74	P	D3DZ 10A936-A	"Temperature" "Oil" "Fasten seat belts" "Alternator" "Brakes"	1
76/77	P	★	Refer to group 10B966	1
78/	P - - w/o tachometer	D8BZ 10A936-A	"Engine-BRAKE"	1
		D8BZ 10A936-B	"Fasten BELTS-ALT."	1
		D8BZ 10A936-C	"LIFTGATE AJAR"	1
78/	P	★	"HI-BEAM"/Turn signal-refer to group 13340	1
77/	V - - w/console	★ D74Y 10A936-A	"Wash fluid-Head lights-Door ajar-Low fuel"-in console	1

YEAR	MODEL/RESTRICTIONS	PART NUMBER	DESCRIPTION	QTY.
10B942	WIRING (INSTRUMENT CLUSTER)			
77/	F - - w/tachometer	D70Z 10B942-A	#D70B 10B942-AA -14" long-from clock to tachometer	1
79	J,P - - w/tachometer- "Before 6/1/79"	★ D9ZZ 10B942-A	#D9ZB 10B942-AA	1
79	J,P - - w/tachometer "From 6/1/79"	D9BZ 10B942-A	#D9BB 10B942-AA	1
10C942	HUB ASSY. (INSTRUMENT CLUSTER DIAL)			
73	C - - w/Rallye instrument group	D2GY 10C942-A	Fuel and temperature gauge	2
73/75	P	D0DZ 10C942-A	#D0DF 10B899	1
10B966	DIAL (INSTRUMENT CLUSTER INDICATOR)			
73	C - - w/o Rallye instrument group	D2GY 10B966-A	"Fuel"	1
		D2GY 10B966-B	"Temperature"	1
73	C - - w/Rallye instrument group	D2GY 10B966-E	"Oil-amp"	1
73/74	C - - w/Rallye instrument group	D2GY 10B966-D	"Temperature"	1
74	F			1
73	F(65D,76D)	D1WY 10B966-A	"Brakes-oil"	1
77/	F - - w/o tachometer	D7SZ 10B966-B	"TEMP"	1
77/	F - - w/o tachometer	D7SZ 10B966-A	"UNLEADED FUEL ONLY"	1
77/	F - - w/o tachometer	★ D7SZ 10B966-C	"FUEL"	1
73/78	J	★ D3RY 10B966-A	Fuel and temp.	1
73/74	P	D0DZ 10B966-A	Fuel, temp., oil, alt., brakes	1
75	P - - leaded gas	★ D5DZ 10B966-D		1
76	P - - leaded gas-Canada	★ D6DZ 10B966-B	#D6BF 10B966-B- "Fasten Belts"- "Engine"-"Alt."- "Lo Fuel Econ"- "Brake"	1
		42138-S7	(U-245-A)-screw (attach 10B966 to 10848)- No. 6-18 x 3/4"	8
10B978	PLATE (INSTRUMENT CLUSTER MOUNTING INDICATOR)			
75/76	D "Before 9/29/75"	★ D5VY 10B978-B	Repl. by (1) D6VY 10B978-A and (1) D6VY 7E363-A	1
76/77	D "From 9/29/75"	★ D6VY 10B978-A	#D6VF 10B978-A	1
10A985	GASKET (INSTRUMENT CLUSTER CONTROL)			
73	D	D0VY 10A985-A	1-lights and 1-wipers	2
74/77	D	D4VY 10A985-A	1-lights and 1-wipers	2
10B985	SHIELD (DOOR OPEN WARNING SWITCH)			
78/	D,F,K,V	★ D80Z 10B985-A		1
10B987	PANEL ASSY. (WARNING INDICATOR)			
79	J	D9ZZ 10B987-A	#D9ZB 10B987-AA	1
10A990	BAFFLE (INSTRUMENT CLUSTER LAMP)			
73	F	C9WY 10A990-A	Hi-beam-turn signal	3
		C9WY 10A990-D	Tachometer	1
10A995	GASKET (INSTRUMENT CLUSTER WARNING LAMP)			
73/78	A,Y	★ D3AZ 10A995-A	R.H.	1
		★ D3AZ 10A995-B	L.H.	1
73/74	C - - w/Rallye instrument group	D2GY 10A995-B	Park-belts	1
74	F			1
75/76	C - - w/Rallye instrument group	D5GZ 10A995-A	Fuel economy-belts	1
73	F	C9WY 10A995-A	Turn signal and hi-beam	3
		C9WY 10A995-C	Fuel and temperature	2
		C9WY 10A995-D	Tachometer	1
73	F(65D,76D)	D1WY 10A995-A	Turn signal-belts-brakes	4
73	F(65D,76D)	D1WY 10A995-B	Warning lamps	AR
75/76	F	D5GZ 10A995-A	Fuel economy-belts	1
77/	F - - w/tachometer		Fasten belts-door ajar	1
77/	F - - w/o tachometer	D7SZ 10A995-A	Alt-door ajar	1
74/78	L	★ D4FZ 10A995-A	Fasten belts-engine-brake-alt.	1
75/78	L	★ D1FZ 10A995-B	Turn signals	1

COPYRIGHT © 1986 — FORD MOTOR COMPANY — DEARBORN, MICHIGAN

DESCRIPTION/RESTRICTIONS	PART NUMBER	ALTERNATOR PARTS LISTS 1A THRU 1M											
		A	B	C	D	E	F	G	H	J	K	L	M
Refer to 10346 in Section 103 for ALTERNATOR COMPONENT INFORMATION													
BOARD KIT (PRINTED CIRCUIT)	D0AZ 10B301-A	A	B	C	D	E	F	G		J		L	M
Consists of													
1-C8AF 10B301-A Board	2-383255-S					Nut-No. 10-24							
9-C9AF 10B306-A Ring	2-383758-S					Screw-No. 10-24							
2-374412-S100 Washer-1/4"													
BEARING (FRONT)	10A303												
	C9ZZ 10094-A *GE-21	A	B	C	D	E	F	G	H	J	K	L	M
RECTIFIER ASSY.	10304												
	★ D4AZ 10304-A *GY-1054										K		
	r/b D6AZ 10304-A & D5AZ 10336-A												
Rectifier kit	D0AZ 10304-B *GY-991					E							
Consists of													
1-D0AF 10304-D Rectifier	1-383255-S					Nut and washer-No. 10-24							
1-D0TZ 10A383-A Insulator	1-383256-S					Nut and washer-1/4"-20							
1-354276-S8B Bolt-No. 10-24 x 1 3/8"													
Rectifier kit	D0ZZ 10304-A *GY-980			C				G		J			
Consists of													
1-D0ZF 10304-A Rectifier	1-383255-S8					Nut & washer No. 10-24							
	1-383256-S8					Nut & washer 1/4" x 20							
Rectifier Kit	D6AZ 10304-A *GY-1306-A	A	B		D		F		H			L	M
Consists of													
1-D0ZF 10304-B Rectifier	6-383255-S8 or-S36					Nut- No. 10-24							
1-C7AZ 10A383-A Insulator	2-383256-S8 or-S36					Nut-1/4"-20							
1-D0AF 10A383-A Insulator	2-383758-S8B					Screw							
2-374412-S100 Washer													
Screw-oval head-No. 10-24 x 1 1/2"	383758-S(BB-817-CE)	2	2	2	2	2	2	2	2	2	2	2	2
Screw-No. 10-24 x 29/32"	383759-S(BB-390-JY)	2	2	2	2	2	2	2	2	2	2	2	2
Bolt-swage-1/4"-20 x 61/64"	★ 383760-S	2	2	2	2	2	2	2					
BEARING (REAR)	10A304												
	★ C9ZZ 10A304-A *GE-22			C				G					
	D20Z 10A304-A *GE-31	A	B		D	E	F		H	J	K	L	M
RING (ROTOR SLIP)	C3SZ 10328-A			C	D	E	F	G	H	J	K	L	M
INSULATOR (TERMINAL)	10329												
Approx. 1/16" x 3/4" x 1"	C5AZ 10329-C	A	B	C	D	E	F	G	H	J	K	L	M
White-9/32" I.D. x 5/8" O.D. x 1/4" thick	C5AZ 10329-D	A	B	C	D	E	F	G	H	J	K	L	M
SHAFT (ROTOR)	C5AZ 10330-A	A	B	C	D	E	F	G	H	J	K	L	M
HOUSING (FRONT)	10333												
	D30Z 10333-B *GD-324-B	A	B	C	D	E	F	G	H	J	K	L	M
HOUSING (REAR)	10334												
	C9ZZ 10334-A *GH-307	A	B	C	D	E	F	G	H	J	K		
	D7ZZ 10334-A *GH-318-A											L	
	D7AZ 10334-A *GH-317-A												M
Bolt-hex. head-No. 10-24 x 2 1/8"	378466-S100(BB-550-D)	3	3	3	3	3	3	3	3	3	3		

COPYRIGHT © 1986 — FORD MOTOR COMPANY — DEARBORN, MICHIGAN

DESCRIPTION/RESTRICTIONS	PART NUMBER	ALTERNATOR PARTS LISTS 1A THRU 1M											
		A	B	C	D	E	F	G	H	J	K	L	M
Refer to 10346 in Section 103 for ALTERNATOR COMPONENT INFORMATION													
ROTOR ASSY.	10335												
Incl. stop ring	D8ZZ 10335-A *GM-455	A	B	C	D	E	F	G	H	J	K	L	M
STATOR ASSY.	10336												
	★ C4SZ 10336-A					E							
Incl. coil	E43Z 10336-A *GC-375	A					F		H				
Incl. coil	E3FZ 10336-A *GC-374		B	C	D	E		G		J	K	L	M
BRUSH and TERMINAL SET	C6VY 10347-A *GB-111	A	B	C	D	E	F	G	H	J	K	L	M
Consists of 1-C6VF 10A357-A Brush and terminal	1-C6VF 10A367-B Brush and terminal												
Screw-No. 10-24 x 5/8"	383757-S(BB-841-A)	A	B	C	D	E	F					L	M
Nut-No. 10-24 (terminal)	383255-S(MM-296-AC)						F						
Bolt-No. 10-24 x 1"	383704-S(BB-705-A)	2	2									L	M
SPRING (BRUSH)	C5AZ 10349-A	2	2	2	2	2	2	2	2	2	2	2	2
HOLDER (BRUSH)	C5AZ 10351-A	A	B	C	D	E	F	G	H	J	K	L	M
Screw hex. hd.-No. 6-32 x 1/2"	377284-S(UU-52-TH)	2	2	2	2	2	2	2	2	2	2	2	2
RETAINER (FRONT BEARING)	10A355												
	★ C5AZ 10A355-A	A	B	C									
	D20Z 10A355-A				D	E	F	G	H	J	K	L	M
Screw-hex. head-No. 10-32 x 3/8"	379201-S(UU-52-E)	3	3	3	3	3	3	3	3	3	3	3	3
STOP (ROTOR)	C5AZ 10A360-A	A	B	C	D	E	F	G	H	J	K	L	M
INSULATOR (STATOR END)	★ C3SZ 10A361-A	2	2	2	2	2	2	2			2		
RING (ROTOR STOP)	C3SZ 10370-A *GY-612	A	B										
SPACER (RECTIFIER MOUNTING) 1 9/64" I.D. x 1/2" O.D. x 17/64" thick	D0TZ 10A382-A *GY-989					E					K		
INSULATOR KIT (TERMINAL)	C9SZ 10A383-A *GY-937	A	B	C	D	E	F	G		J		L	M
Consists of 1-C7AF 10329-D Insulator; 1-C9SF 10A383-A Insulator	1-C7AF 10A383-A Insulator												
INSULATOR KIT (BATTERY TERMINAL)	D1AZ 10A383-A *GY-816-A	A	B	C	D	E	F	G			K		
Consists of 1-D0AF 10329-A Insulator	1-D0AZ 10A383-A Insulator												
INSULATOR (DIODE PLATE)	D0TZ 10A383-A					E					K		
BOLT (THRU)	10A396												
Hex. head-No. 10-24 x 2 1/8" long	378466-S100(BB-550-D)	3	3	3	3	3	3	3	3	3	3	3	3
CAPACITOR (RADIO)	C6AZ 18827-A	A	B	C	D	E	F	G	H	J	K	L	M

DESCRIPTION/RESTRICTIONS	PART NUMBER	ALTERNATOR PARTS LISTS 1N THRU 1Z											
		N	P	Q	R	S	T	U	V	W	X	Y	Z
Refer to group 10346 in Section 103 for ALTERNATOR COMPONENT INFORMATION													
BOARD KIT (PRINTED CIRCUIT)	D0AZ 10B301-A	N	P	Q	R	S	T	U	V		X		
Consists of 1-D0AF 10B301-A Board; 1-C9AF 10B306-A Ring; 2-374412-S Washer-1/4"	2-383255-S Nut-No. 10-24; 2-383758-S Screw-No. 10-24 x 29/32"												
BEARING (FRONT)	10A303												
	C9ZZ 10094-A *GE-21	N	P	Q	R	S	T	U	V	W	X		

NOTICE: When the parts list suffix is shown in the quantity required column, the quantity is one (1).

DESCRIPTION/RESTRICTIONS	PART NUMBER	ALTERNATOR PARTS LISTS 1N THRU 1Z											
		N	P	Q	R	S	T	U	V	W	X	Y	Z
Refer to group 10346 in Section 103 for ALTERNATOR COMPONENT INFORMATION													
RECTIFIER ASSY.	10304												
	D6AZ 10304-A *GY-1306-A	N	P	Q	R	S	T	U	V	W			
Consists of 1-D0ZF 10304-B Rectifier 1-C7AZ 10A383-A Insulator 1-D0AF 10A383-A Insulator 2-374412-S100 Washer 6-383255-S8 or-S36 Nut - No 10-24 2-383256-S8 or-S36 Nut - 1/4" - 20 2-383758-S8B Screw													
	D9VY 10304-A *GY-1327										X		
BEARING (REAR)	10A304												
	D20Z 10A304-A *GE-31	N	P	Q	R	S	T	U	V	W	X		
RING (ROTOR SLIP)	C3SZ 10328-A	N	P	Q	R	S	T	U	V	W	X		
INSULATOR (TERMINAL)	10329												
Orange	C5AZ 10329-D	N	P	Q	R	S	T	U	V	W	X		
1/16" x 3/4" x 1"	C5AZ 10329-C	N	P	Q	R	S	T	U	V	W	X		
SHAFT (ROTOR)	C5AZ 10330-A	N	P	Q	R	S	T	U	V	W	X		
HOUSING (FRONT)	10333												
	D30Z 10333-B *GD-324-B	N	P	Q	R	S	T	U	V	W	X		
HOUSING (REAR)	10334												
	C9ZZ 10334-A *GH-307	N											
	D7ZZ 10334-A *GH-318-A		P				T		V				
	D7AZ 10334-A *GH-317-A			Q	R	S		U		W	X		
Bolt-hex. hd.-No. 10-24 x 2 1/8"	378466-S(BB-550-D)	3	3	3	3	3	3	3	3	3	3		
ROTOR ASSY.	10335												
	D8ZZ 10335-A *GM-455	N	P	Q	R	S							
	E1ZZ 10335-A *GM-465-A						T						
R/b E1ZZ 10335-B (11/82)	★ D9ZZ 10335-A *GM-464							U	V	W	X		
STATOR ASSY.	10336												
Incl. coil	D5AZ 10336-A *GC-357	N	P	Q	R			U	V				
	D8ZZ 10336-A *GC-360					S				W	X		
	E43Z 10336-A *GC-375						T						
BRUSH and TERMINAL SET	C6VY 10347-A *GB-111	N	P	Q	R	S	T	U	V	W	X		
Consists of 1-C6VF 10A367-A Brush and terminal 1-C6VF 10A367-B Brush and terminal													
Screw-No. 10-24 x 5/8"	383757-S(BB-841-A)	N	P	Q	R	S	T	U	V	W	X		
Bolt-No. 10-24 x 1"	383704-S(BB-705-A)	2											
Screw & washer (brush holder)-No. 6-32 x 1/2"	377284-S7 (UU-52-TH)		2	2	2	2	2	2	2	2	2		
Nut-No. 10-24 (terminal)	383255-S (MM-296-AC)		P	Q	R	S	T	U	V	W	X		

COPYRIGHT © 1986 — FORD MOTOR COMPANY — DEARBORN, MICHIGAN

DESCRIPTION/RESTRICTIONS	PART NUMBER	ALTERNATOR PARTS LISTS 1N THRU 1Z											
		N	P	Q	R	S	T	U	V	W	X	Y	Z
Refer to group 10346 in Section 103 for ALTERNATOR COMPONENT INFORMATION													
SPRING (BRUSH)	C5AZ 10349-A	2	2	2	2	2	2	2	2		2		
HOLDER (BRUSH)	C5AZ 10351-A	N	P	Q	R	S	T	U	V	W	X		
RETAINER (FRONT BEARING)	D20Z 10A355-A	N	P	Q	R	S	T	U	V		X		
Screw-hex. hd.-No. 6-32 x 1/2"	379201-S(UU-52-E)	3	3	3	3	3	3	3	3		3		
STOP (ROTOR)	C5AZ 10A360-A	N	P	Q	R	S	T	U	V	W	X		
INSULATOR KIT (TERMINAL)	10A383												
	C9SZ 10A383-A	N	P	Q	R	S	T	U	V	W	X		
Consists of 1-C7AF 10329-D Insulator	1-C9SF 10A383-A Insulator					1-C7AF 10A383-A Insulator							
BOLT (THRU)	10A396												
Bolt-hex. hd.-No. 10-24 x 2 1/8"	378466-S(BB-550-D)	3	3	3	3	3							
CAPACITOR (RADIO)	C6AZ 18827-A	N	P	Q	R	S	T	U	V	W	X		

NOTICE: When the parts list suffix is shown in the quantity required column, the quantity is one (1).

DESCRIPTION/RESTRICTIONS	PART NUMBER	ALTERNATOR PARTS LISTS 2A THRU 2M											
		A	B	C	D	E	F	G	H	J	K	L	M
Refer to group 10346 in Section 103 for ALTERNATOR COMPONENT INFORMATION													
BOARD ASSY. (ALTERNATOR CIRCUIT)	D20Z 10B301-A *GY-1025	A	B	C	D	E	F	G	H	J			
Pin-3/32" x 7/16"	384758-S(NN-124-ZA)	A	B				2						
BEARING (FRONT)	10A303												
	C9ZZ 10094-A *GE-21	A	B	C	D	E	F	G	H	J			
Screw & washer (retain bearing in housing)	384757-S2(UU-52-P)	3	3	3	3	3	3	3	3	3			
RECTIFIER ASSY.	10304												
	D20Z 10304-A *GY-1026	A			D			G	H				
	D4VY 10304-A *GY-1302-A		B	C		E	F			J			
Bolt-swage-1/4"-20 x 61/64"	★ 383760-S				D	E	F	G	H	J			
Bolt-No. 6 x 3/16"	384279-S7-8(BB-541-CX)				D	E	F	G	H	J			
Nut-1/4"-20 (terminal)	383256-S (MM-296-AE)				D	E	F	G	H	J			
Nut-No. 10-24 (terminal)	383255-S (MM-296-AC				D	E	F	G	H				
Screw & washer (rectifier to rear housing)-No. 8-32 x 7/8"	384756-S2(UU-52-AR)	4		4	4	4	4	4	4	4			
Bolt-swage-No. 10-24 x 11/16"	384753-S8B(BB-390-JX)	A	B	C	D	E	F	G	H	J			
BEARING (REAR)	D20Z 10A304-A *GE-31	A	B	C	D	E	F	G		J			
WIRE ASSY. (ALTERNATOR)-2 1/2" long	D20Z 10C307-A	A	B	C	D	E	F	G	H	J			
RING (ROTOR SLIP)	D20Z 10328-A	A	B	C	D	E	F	G	H	J			
HOUSING and BEARING (FRONT)	10333												
	D3VY 10333-A *GD-323-A	A	B	C	D	E	F	G	H	J			
HOUSING and BEARING (REAR)	10334												
	★ D3VY 10334-C *GH-312-A	A											
	D7VZ 10334-A *GH-314-B		B	C	D	E	F	G	H	J			
ROTOR ASSY.	10335												
	D30Z 10335-A *GM-446	A	B	C	D	E	F						
	D9ZZ 10335-B *GM-462							G	H				
	E1VZ 10335-A *GM-463-A									J			
STATOR and COIL ASSY.	10336												
	D20Z 10336-A *GC-311	A		C	D	E		G	H				
	D3VY 10336-A *GC-312		B				F						
BRUSH SET	D20Z 10347-B	A	B	C	D	E	F	G	H	J			
Consists of 1-D20F 10260-AA Holder	2-C5AZ 10349-A Spring					2-D20F 10A367-BB Terminal & bearings							
Screw-No. 8-32 x 5/8"	384755-S(UU-51-DA)		2	2	2	2	2	2	2				
SPRING (BRUSH)	C5AZ 10349-A	2	2	2	2	2	2	2	2	2			
HOLDER (BRUSH)-incl. 10C307 wire	★ D20Z 10351-A r/b D20Z 10347-B	A											
Screw (holder to rear housing)-No. 8-32 x 5/8"	384755-S2(UU-52-DA)	2			2	2	2	2	2	2			
RETAINER (FRONT BEARING) Refer to group 10A303 in this parts list	10A355												
ROTOR (STOP)	C5AZ 10A360-A	A	B	C	D	E	F	G	H	J			

COPYRIGHT © 1986 — FORD MOTOR COMPANY — DEARBORN, MICHIGAN

DESCRIPTION/RESTRICTIONS	PART NUMBER	ALTERNATOR PARTS LISTS 2A THRU 2M											
		A	B	C	D	E	F	G	H	J	K	L	M
Refer to group 10346 in Section 103 for ALTERNATOR COMPONENT INFORMATION													
TERMINAL (STATOR)	10383												
	D20Z 10383-A	3		3	3	3		3	3				
	★ D3VZ 10383-A		3										
TERMINAL KIT (ALTERNATOR)	D1AZ 10A383-A	A	B		D	E	F	G	H	J			
Consists of 1-D0AF 10329-A Insulator	1-D0AF 10A383-A Insulator												
INSULATOR (DIODE PLATE)	10A383												
	D20Z 10A383-A	2	2	2									
	D3VY 10A383-A *GY-1301		2		2	2	2	2	2	2			
BOLT (THRU)-hex. head-1/4"-20 x 2"	D20Z 10A396-A	4	4	4	4	4	4	4	4	4			
CAPACITOR (RADIO)	18827												
Internal	D20Z 18827-A	A	B	C	D	E	F	G	H	J			
Inside	C6AZ 18827-A	A	B	C									
Screw (capacitor to hsg.)-No. 8-32 x 1/4"	384754-S2 8(UU-51-CX)				D	E	F	G	H	J			

NOTICE: When the parts list suffix is shown in the quantity required column, the quantity is one (1).

DESCRIPTION/RESTRICTIONS	PART NUMBER	ALTERNATOR PARTS LISTS 3A THRU 3M											
		A	B	C	D	E	F	G	H	J	K	L	M
Refer to 10346 in Section 103 For ALTERNATOR COMPONENT INFORMATION													
BEARING (FRONT)	D1RY 10A303-A *GEE-28	A	B	C	D	E	F	G	H	J	K	L	M
RECTIFIER ASSY.	10304												
	D1RY 10304-B *GYE-1024	A	B						H				
	★ D6RY 10304-A *GYE-1312				D								
Without A/C	★ D4RY 10304-A *GYE-1056						F				K	L	M
	D5RY 10304-A *GYE-1307			C		E		G		J			
BEARING ASSY. (REAR)	10A304												
	D2RY 10A304-A *GEE-307	A	B	C	D	E	F	G	H	J	K	L	M
MOUNTING PARTS KIT (PULLEY)	D1RY 10B304-A	A	B										
REGULATOR	D5RY 10316-B *GRE-521				D	E							
HOLDER ASSY. (BRUSH)	D1RY 10320-A	A	B	C			F	G	H	J	K	L	M
HOUSING ASSY. (FRONT)	10333												
	D1RY 10333-B *GDE-322	A					F	G			K		M
	★ D6RY 10333-A *GDE-326-A		B	C	D	E			H	J		L	
HOUSING ASSY. (REAR)	★ D1RY 10334-B *GHE-311	A	B		D	E	F	G	H	J	K	L	
ROTOR ASSY.	10335												
	★ D1RY 10335-C *GME-442-A	A	B				F		H		K	L	M
	★ D4RY 10335-A *GME-447			C				G		J			
	★ D5RY 10335-A *GME-453				D								
	★ D5RY 10335-B *GME-454					E							
STATOR ASSY.	10336												
	D1RY 10336-B *GCE-310	A	B		D		F		H		K	L	M
	★ D4RY 10336-A *GCE-354			C		E		G		J			
CLAMP (CABLE CONNECTOR)	★ D2RY 10K343-A	A	B	C	D	E	F	G	H	J	2	2	2
MOUNTING KIT (RECTIFIER)	D1RY 10K346-A	A	B										
BRUSH and TERMINAL SET	D1RY 10347-A *GBE-125	A	B	C	D	E	F	G	H	J	K	L	M
SPRING (BRUSH)	★ D1RY 10349-A	2	2	2	2	2	2	2	2	2	2	2	2
BUSHING (ADJUSTMENT)	D1RY 10K350-A	A											
BOLT KIT (THRU)	10A396												
Consists of 4 bolts, washers & lockwashers	D1RY 10A396-A	A	B		D		F		H				
	★ D4RY 10A396-A			C		E		G		J			

COPYRIGHT © 1986 — FORD MOTOR COMPANY — DEARBORN, MICHIGAN

DESCRIPTION/RESTRICTIONS	PART NUMBER	ALTERNATOR PARTS LISTS 3N THRU 3Z											
		N	P	Q	R	S	T	U	V	W	X	Y	Z
Refer to group 10346 in Section 103 For ALTERNATOR COMPONENT INFORMATION													
BEARING (FRONT)	D1RY 10A303-A *GEE-28	N	P	Q	R	S	T	U	V	W	X	Y	Z
RECTIFIER ASSY.	10304												
	★ D4RY 10304-A *GYE-1056	N											
	★ D6RY 10304-A *GYE-1312		P										
	D1RY 10304-B *GYE-1024				R			U			X		
	D5RY 10304-A *GYE-1307			Q		S			V				Z
	D6RY 10304-C *GYE-1314						T			W		Y	
BEARING ASSY. (REAR)	D2RY 10A304-A *GEE-307	N	P	Q	R	S	T	U	V	W	X	Y	Z
MOUNTING PARTS KIT (PULLEY)	D1RY 10B304-A					S				W			
REGULATOR	10316												
	D5RY 10316-B *GRE-521		P	Q		S				W			
	D1RY 10316-C *GRE-388-A				R		T	U	V		X	Y	Z
HOLDER ASSY. (BRUSH)	10320												
	D1RY 10320-A	N											
	★ D6RY 10320-A									W			
HOUSING ASSY. (FRONT)	10333												
	D1RY 10333-B *GDE-322	N	P	Q			T	U	V		X	Y	Z
	D2RY 10333-A *GDE-326				R	S				W			
HOUSING ASSY. (REAR)	10334												
	D1RY 10334-B *GHE-311	N	P	Q	R		T	U	V	W			
	D7RY 10334-A *GHE-354					S					X	Y	Z
ROTOR ASSY.	10335												
	★ D4RY 10335-A *GME-447	N											
	★ D5RY 10335-A *GME-453		P		R			U			X		
	D5RY 10335-B *GME-454			Q		S			V				Z
	★ D6RY 10335-A *GME-456						T			W		Y	
STATOR ASSY.	10336												
	D4RY 10336-A *GCE-354	N		Q		S			V				Z
	D1RY 10336-B *GCE-310		P		R			U			X		
	★ D6RY 10336-A *GCE-361						T			W		Y	
CLAMP (CABLE CONNECTOR)	D2RY 10K343-A	2	2	2	R	S	T	U	V	W	X	Y	Z
MOUNTING KIT (RECTIFIER)	D1RY 10K346-A					S				W			
BRUSH and TERMINAL SET	D1RY 10347-A *GBE-125	N	P	Q	R	S	T	U	V	W	X	Y	Z
SPRING (BRUSH)	D1RY 10349-A	2	2	2	2	2	2	2	2	2	2	2	2
BOLT KIT (THRU)	10A396												
	★ D4RY 10A396-A	N		Q		S	T		V	W		Y	Z
Consists of 4 bolts, washers & lockwashers	D1RY 10A396-A										X		
MOUNTING KIT (REGULATOR)	D1RY 10A596-A					S				W			

NOTICE: When the parts list suffix is shown in the quantity required column, the quantity is one (1).

DESCRIPTION/RESTRICTIONS	PART NUMBER	ALTERNATOR PARTS LISTS 3AA THRU 3AM											
		AA	AB	AC	AD	AE	AF	AG	AH	AJ	AK	AL	AM
BEARING (FRONT)	D1RY 10A303-A *GEE-28	AA	AB	AC	AD	AE	AF						
RECTIFIER ASSY.	D6RY 10304-C *GYE-1314	AA	AB	AC			AF						
	D5RY 10304-A *GYE-1307				AD								
	D1RY 10304-B *GYE-1024					AE							
BEARING ASSY. (REAR)	D2RY 10A304-A *GEE-307	AA	AB	AC	AD	AE	AF						
MOUNTING KIT (PULLEY)	D1RY 10B304-A						AF						
REGULATOR	10316												
	D1RY 10316-C *GRE-388-A	AA											
	D5RY 10316-B *GRE-521		AB	AC	AD		AF						
HOUSING ASSY. (FRONT)	10333												
	D1RY 10333-B *GDE-322	AA											
	D6RY 10333-A *GDE-326-A		AB	AC	AD	AE	AF						
HOUSING ASSY. (REAR)	10334												
	D1RY 10334-B *GHE-311	AA											
	D7RY 10334-A *GHE-354		AB										
	★ D6RY 10334-B *GHE-363			AC	AD								
	★ D6RY 10334-A *GHE-362					AE							
	D6RY 10334-C *GHE-366						AF						
ROTOR ASSY.	★ D6RY 10335-A *GME-456	AA	AB	AC									
	D5RY 10335-B *GME-454				AD		AF						
	★ D5RY 10335-A *GME-453					AE							
STATOR ASSY.	D6RY 10336-A *GCE-361	AA	AB	AC									
	D4RY 10336-A *GCE-354				AD		AF						
	D1RY 10336-B *GCE-310					AE							
CLAMP (CABLE CONNECTOR)	D2RY 10K343-A	AA	AB	AC	AD	AE	AF						
MOUNTING KIT (RECTIFIER)	D1RY 10K346-A						AF						
BRUSH and TERMINAL KIT	D1RY 10347-A *GBE-125						AF						
SPRING (BRUSH)	D1RY 10349-A	2	2	2	2	2	2						
"O" RING (BRACKET)	D6RY 10K358-A *GHE-367						AF						
BOLT (THRU)	★ D4RY 10A396-A	AA	AB	AC	AD		AF						
MOUNTING KIT (REGULATOR)	D1RY 10A596-A						AF						

COPYRIGHT © 1986 — FORD MOTOR COMPANY — DEARBORN, MICHIGAN

DESCRIPTION/RESTRICTIONS	PART NUMBER	ALTERNATOR PARTS LIST 4A THRU 4M											
		A	B	C	D	E	F	G	H	J	K	L	M
Refer to group 10346 in Section 103 for ALTERNATOR COMPONENT INFORMATION													
BEARING (FRONT)	★ DORY 10A303-A *GEE-26	A											
RECTIFIER ASSY.	★ DORY 10304-A *GYE-1004	A											
BEARING (REAR)	★ DORY 10A304-A *GEE-27	A											
COVER (REAR END)	DORY 10325-A *GYE-1005	A											
RING (ROTOR SLIP)	★ DORY 10328-A *GYE-1008	A											
HOUSING (FRONT)	★ DORY 10333-A *GDE-319	A											
HOUSING (REAR)	DORY 10334-A *GHE-308	A											
ROTOR ASSY.	★ DORY 10335-A *GME-342	A											
STATOR ASSY.	★ DORY 10336-A *GCE-306	A											
BRUSH SET and SPRING ASSY.	DORY 10347-A *GBE-122	A											
HOLDER (BRUSH)	★ DORY 10351-A *GYE-1007	A											
REPAIR KIT	★ DORY 10A383-A *GEE-25	A											
BOLT (THRU)	DORY 10A396-A *GYE-1006	3											

COPYRIGHT © 1986 — FORD MOTOR COMPANY — DEARBORN, MICHIGAN

DESCRIPTION/RESTRICTIONS	PART NUMBER	ALTERNATOR PARTS LISTS 5A THRU 5M											
		A	B	C	D	E	F	G	H	J	K	L	M
Refer to group 10346 in Section 103 for ALTERNATOR COMPONENT IN													
BEARING (FRONT)	10A303												
	C9ZZ 10094-A *GE-21	A											
BEARING (REAR)	D20Z 10A304-A *GE-31	A											
CONNECTOR	★ D4SZ 10B311-A	A											
INSULATOR (TERMINAL)	10329												
	C5AZ 10329-C	A											
Orange	C5AZ 10329-D *GY-912	A											
HOUSING (FRONT)	D30Z 10333-B *GD-324-B	A											
HOUSING (REAR)	★ D4SZ 10334-A *GH-350	A											
ROTOR ASSY.	★ D8ZZ 10335-A *GM-455	A											
STATOR and COIL ASSY.	★ D4SZ 10336-A *GC-350	A											
BRUSH AND TERMINAL SET	C6VY 10347-A *GB-111	A											
Consists of 1-C6VF 16A367-A Brush and terminal	1-C6VF 10A367-B Brush and terminal												
SPRING (BRUSH)	C5AZ 10349-A	2											
HOLDER (BRUSH)	C5AZ 10351-A	A											
RETAINER (FRONT BEARING)	C5AZ 10A360-A	A											
INSULATOR (STATOR END)	★ C3SZ 10A361-A	2											

COPYRIGHT © 1986 — FORD MOTOR COMPANY — DEARBORN, MICHIGAN

11001–2 STARTER MOTOR

HOW TO FIND STARTERS and COMPONENTS

By IDENTIFICATION:

1. Refer to Identification Chart below
2. Check marking (on starter housing) against identification numbers

By MODEL APPLICATION:

1. Refer to Model Application Chart beginning on next page
2. Refer to appropriate Year, Model and Engine

3. Select and refer to appropriate Parts List Section and Number
4. If basic number is not known refer to Illustration Page shown, or to the Alphabetical Index.
5. Select part number shown for affected Parts List. If more than one part number is shown refer to Description and Restrictions for clarification
6. Quantity of parts shown in columns A, B or C etc. The appropriate parts list suffix A,B,C etc. is shown on the quantity required column when the quantity is one (1).
7. Parts are listed numerically

Identification Example — D2AF 11001–DA is listed in Parts List Section 110.1, Column 1A

Model Application Example — 1973 Montego (8 cyl.) uses starter C5TZ 11002–D, Internal parts for this starter are listed in Parts List Section 110.1, Column 1A

IDENTIFICATION CHART

IDENTIFICATION	MAKE	PARTS LIST SEC. & NO.	TYPE	PART NUMBER SERVICE STARTER ASSEMBLY	PART NUMBER REPLACED BY	ILLUS Sec. 110 PAGE
11001–2	**STARTER MOTOR — Cont'd**					
	● Details not available					
D2VF 11000–AA	Ford	110.3A	12 volt positive engagement	★ D0VY 11002–A	D4VY 11002–B	3
D4VF 11000–AA	Ford	110.3C	12 volt positive engagement	★ D4VY 11002–A	D4VY 11002–B	3
D4VF 11000–BA	Ford	110.3C	12 volt positive engagement	★ D4VY 11002–A	D4VY 11002–B	3
D5VF 11000–AB	Ford	110.3H	12 volt positive engagement	★ D4VY 11002–B	D4VY 11002–C	
D7VJ 11000–AA	I.P.M.	●	12 volt positive engagement	D4VY 11002–C		3
D2AF 11001–AA	Ford	110.1C	12 volt positive engagement	★ D1AZ 11002–A	D7AZ 11002–A	2
D2AF 11001–CA	Ford	110.1E	12 volt positive engagement	★ C20Z 11002–B	D70Z 11002–A	2
D2AF 11001–DA	Ford	110.1A	12 volt positive engagement	C5TZ 11002–D		2
D2AF 11001–EA	Ford	110.3A	12 volt positive engagement	★ C8VY 11002–C	D7AZ 11002–B	3
D2AF 11001–HA	Ford	110.1E	12 volt positive engagement	★ D40Z 11002–A	D70Z 11002–A	2
D2AF 11001–JA	Ford	110.1C	12 volt positive engagement	★ D1AZ 11002–A	D7AZ 11002–A	2
D20F 11001–AA	Ford	110.1B	12 volt positive engagement	★ C30Z 11002–C	D7DZ 11002–B	2
D20F 11001–BA	Ford	110.1B	12 volt positive engagement	★ C30Z 11002–C	D7DZ 11002–B	2
D2ZF 11001–BA	Ford	110.1D	12 volt positive engagement	★ C60Z 11002–A	D6DZ 11002–A	2
D2ZF 11001–CA	Ford	110.1D	12 volt positive engagement	★ C60Z 11002–A	D6DZ 11002–A	2
D4AF 11001–AA	Ford	110.3D	12 volt positive engagement	D4AZ 11002–A		3
D4AF 11001–BA	Ford	110.3D	12 volt positive engagement	D4AZ 11002–A		3
D40F 11001–AA	Ford	110.3B	12 volt positive engagement	★ D30Z 11002–A	D7AZ 11002–B	3
D40F 11001–BA	Ford	110.3B	12 volt positive engagement	★ D30Z 11002–A	D7AZ 11002–B	3
D4ZF 11001–AB	Ford	110.5B	12 volt positive engagement	D4ZZ 11002–A		2
D42F 11001–AB	Ford	110.5A	12 volt positive engagement	★ D4FZ 11002–B	D6FZ 11002–B	2
D42F 11001–BA	Ford	110.5A	12 volt positive engagement	★ D4FZ 11002–B	D6FZ 11002–B	2
D5AF 11001–AB	Ford	110.3G	12 volt positive engagement	★ D5AZ 11002–A	D7AZ 11002–B	2
D5AF 11001–BB	Ford	110.3E	12 volt positive engagement	★ D5AZ 11002–B	D7AZ 11002–A	
D5AF 11001–EA	Ford	110.1H	12 volt positive engagement	★ D5AZ 11002–C	D7AZ 11002–A	2
D50F 11001–AA	Ford	110.1G	12 volt positive engagement	★ D40Z 11002–A	D70Z 11002–A	2
D50F 11001–BA	Ford	110.1G	12 volt positive engagement	★ D40Z 11002–A	D70Z 11002–A	2
D5TF 11001–AA	Ford	110.1F	12 volt positive engagement	★ D4TZ 11002–D	D7TZ 11002–A	
D5TF 11001–DA	Ford	110.1F	12 volt positive engagement	★ D4TZ 11002–D	D7TZ 11002–A	

COPYRIGHT © 1986 — FORD MOTOR COMPANY — DEARBORN, MICHIGAN

IDENTIFICATION CHART

IDENTIFICATION	MAKE	PARTS LIST SEC. & NO.	TYPE	PART NUMBER SERVICE STARTER ASSEMBLY	PART NUMBER REPLACED BY	ILLUS Sec. 110 PAGE
11001-2 STARTER MOTOR — Cont'd						
D6AF 11001-AA	Ford	110.3J	12 volt positive engagement	★ D6AZ 11002-A	D7AZ 11002-B	3
D6BF 11001-AA	Ford	110.1J	12 volt positive engagement	★ D6DZ 11002-A	D7DZ 11002-A	2
D6BF 11001-BA	Ford	110.1K	12 volt positive engagement	★ D6DZ 11002-B	D7DZ 11002-B	2
D6EF 11001-AA	Ford	110.5D	12 volt positive engagement	★ D6FZ 11002-A	D7ZZ 11002-A	2
D6EF 11001-BA	Ford	110.5C	12 volt positive engagement	★ D6FZ 11002-B	D8FZ 11002-A	2
D60F 11001-AA	Ford	110.1L	12 volt positive engagement	★ D60Z 11002-A	D70Z 11002-A	2
D8AF 11001-AA	Ford	110.1N	12 volt positive engagement	★ D7AZ 11002-A	E1TZ 11002-B	4
D8AF 11001-BA	Ford	110.1S	12 volt positive engagement	★ D7AZ 11002-B	E1TZ 11002-C	4
D8BF 11001-AA	Ford	110.1R	12 volt positive engagement	★ D7DZ 11002-A	E1BZ 11002-A	4
D8BF 11001-BA	Ford	110.1P	12 volt positive engagement	★ D7DZ 11002-B	E1BZ 11002-B	4
D8BF 11001-CA	Ford	110.1T	12 volt positive engagement	★ D8BZ 11002-A	E1BZ 11002-B	4
D8EF 11001-AA	Ford	110.5G	12 volt positive engagement	★ D8FZ 11002-B	E1ZZ 11002-A	4
D8JL 11001-B	Prestolite	None	(Order parts from ELTRA Corp.	B6A 11002-B		None
D80F 11001-AA	Ford	110.1Q	12 volt positive engagement	D70Z 11002-A		4
D8ZF 11001-AA	Ford	110.5F	12 volt positive engagement	D7ZZ 11002-A		4
EDD6EF 11001-BA	Ford	110.5C	12 volt positive engagement	★ D8FZ 11002-A	D8FZ 11002-B	2
25204	Lucas	110.2A	12 volt positive engagement	★ D1RY 11002-B	D3RY 11002-A	1
1208049	Bosch	110.4B	12 volt positive engagement	★ D1RY 11002-B	D3RY 11002-A	1
1211113	Bosch	110.4H	12 volt positive engagement	D1RY 11002-A		1
1211206	Bosch	110.4D	12 volt positive engagement	★ D3RY 11002-A	None	1
1211228	Bosch	110.4D	12 volt positive engagement	★ D3RY 11002-A	None	1
1211513	Bosch	110.4L	12 volt positiove engagement	★ D3RY 11002-A	None	1
1211989	Bosch	110.4B	12 volt positive engagement	★ D1RY 11002-B	D3RY 11002-A	1
1311033	Bosch	110.4C	12 volt positive engagement	★ D2RY 11002-A	D6RY 11002-A	1
1311038	Bosch	110.4A	12 volt positive engagement	D1RY 11002-A		1
1311046	Bosch	110.4E	12 volt positive engagement	★ D4RY 11002-B	D5RY 11002-B	1
1311048	Bosch		12 volt positive engagement	★ D4RY 11002-A	D1RY 11002-A	1
1311049	Bosch	110.4F	12 volt positive engagement	D5RY 11002-B		1
1311107	Bosch	110.4G	12 volt positive engagement	★ D5RY 11002-C	D6RY 11002-B	1
1311120	Bosch	110.4K	12 volt positive engagement	D6RY 11002-A		1
1311121	Bosch	110.4J	12 volt positive engagement	D6RY 11002-B		1

11001-2 STARTER MOTOR

Determine year, model, engine and/or identification. Find service Starter as well as Armature, Brushes, Drive and Bearings in adjacent columns.

(Also refer to page 1 of this section for PARTS LIST instructions and STARTER IDENTIFICATION CHART)

APPLICATION CHART

MODEL	ENGINE CYL.	ENGINE C.I.D. C.C.D.	IDENT.	PARTS LIST SECT. & NO.	SERVICE STARTER ASSEMBLY	STARTER COMPONENTS ARMATURE	BRUSH SET	DRIVE	BEARING FRT.	BEARING REAR	ILLUS. SECT. 110 PAGE
11001-2 (STARTER MOTOR) — Cont'd											
a-Use D3AZ 11052-A b-Use D0AZ 11135-B c-Use-C2DF 11052-A g-Use C6VY 11135-A j-Use D1RY 11052-A k-Use D0RY 11135-A m-Use D0RY 11135-B n-Use D6AZ 11135-A p-See Parts List ▲ 2000 cc ♦ 2600 cc											
1973											
J	4	▲122	Lucas 25204	110.2A	★ D1RY 11002-B *SAE-673 r/b D3RY 11002-A	D1RY 11005-A *SME-338	★ D1RY 11057-A *SBE-158	D1RY 11350-B *SDE-191		j	1
J	4	▲122	Bosch 1311038	110.4A	D1RY 11002-A *SAE-672	D1RY 11005-B *SME-340	D3RY 11057-A *SBE-155-A	D2RY 11350-B *SDE-193-A		k	1

APPLICATION CHART

MODEL	ENGINE CYL.	ENGINE C.I.D. C.C.D.	IDENT.	PARTS LIST SECT. & NO.	SERVICE STARTER ASSEMBLY	STARTER COMPONENTS ARMATURE	BRUSH SET	DRIVE	BEARING FRT.	BEARING REAR	ILLUS. SECT. 110 PAGE
11001-2	(STARTER MOTOR) — Cont'd a-Use D3AZ 11052-A b-Use D0AZ 11135-B Use C-C2DF 11052-A g-Use C6VY 11135-A j-Use D1RY 11052-A k-Use D0RY 11135-A m-Use D0RY 11135-B n-Use D6AZ 11135-A p-See Parts List ▲ 2000 cc ♦ 2600 cc										
1973											
J	4	▲122	Bosch 1211989	110.4B	★D1RY 11002-B *SAE-673 r/bD3RY 11002-A	D0RY 11005-A *SME-339	D3RY 11057-A *SBE-155-A	D1RY 11350-C *SDE-192		k	1
J	6	♦159	Bosch 1311033	110.4C	★D2RY 11002-A *SAE-675 r/bD6RY 11002-A	★D1RY 11005-B *SME-340	D1RY 11057-B *SBE-159	D2RY 11350-A *SDE-199		k	1
P - - M/T	6	200	D2ZF 11001-BA, CA	110.1D	★C60Z 11002-A *SA-633 r/bD6DZ 11002-A	★D0AZ 11005-A *SM-335 r/bD7AZ 11005-A	★C0DZ 11057-B *SB-134	★C6VY 11350-A *SD-175 r/bD6PZ 11350-B	a	b	2
P - - A/T	6	200	D20F 11001-AA, BA	110.1B	★C30Z 11002-C *SA-628 r/bD7DZ 11002-B	★D0AZ 11005-A *SM-335 r/bD7AZ 11005-A	★C0DZ 11057-B *SB-134	★C6VY 11350-A *SD-175 r/bD6PZ 11350-B	a	b	2
C,P C - - A/T P	6 8 8	250 302 302	D2AF 11001-CA	110.1E	★C20Z 11002-B *SA-660 r/bD70Z 11002-A	★D0AZ 11005-A *SM-335 r/bD7AZ 11005-A	C0DZ 11057-B *SB-134	★C6VY 11350-A *SD-175 r/bD6PZ 11350-B	a	b	2
C,P C - - A/T P A,Y C,F - - A/T	6 8 8 8 8	250 302 302 351 351	D50F 11001-AA, BA	110.1G	★D40Z 11002-A *SA-660-A r/bD70Z 11002-A	★D0AZ 11005-A *SM-335 r/bD7AZ 11005-A	C0DZ 11057-B *SB-134	★C6VY 11350-A *SD-175 r/bD6PZ 11350-B	a	b	2
C,F - - M/T	8	302, 351	D2AF 11001-DA	110.1A	★C5TZ 11002-D *SA-661 r/bE4TZ 11002-A	★D0AZ 11005-A *SM-335 r/bD7AZ 11005-A	C0DZ 11057-B *SB-134	★C6VY 11350-A *SD-175 r/bD6PZ 11350-B	a	b	2
A,Y C,F - - A/T	8 8	351 351	D2AF 11001-CA	110.1E	★C20Z 11002-B *SA-660 r/bD70Z 11002-A	★D0AZ 11005-A *SM-335 r/bD7AZ 11005-A	C0DZ 11057-B *SB-134	★C6VY 11350-A *SD-175 r/bD6PZ 11350-B	a	b	2
A,C,Y	8	400	D2AF 11001-AA	110.1C	★D1AZ 11002-A *SA-671 r/bD7AZ 11002-A	★D0AZ 11005-A *SM-335 r/bD7AZ 11005-A	C0DZ 11057-B *SB-134	★C6VY 11350-A *SD-175 r/bD6PZ 11350-B	a	b	2
A,C,Y	8	429, 460	D40F 11001-AA	110.3B	★D30Z 11002-A *SA-682 r/bD7AZ 11002-B	★D0AZ 11005-A *SM-335 r/bD7AZ 11005-A	C0DZ 11057-B *SB-134	★C8VY 11350-A *SD-176 r/bD6PZ 11350-C	a	g	3
D,K	8	460	D4VF 11000-AA, BA	110.3C	★D4VY 11002-A *SA-683 r/bD4VY 11002-B	D0AZ 11005-A *SM-335 r/bD7AZ 11005-A	C0DZ 11057-B *SB-134	★C8VY 11350-A *SD-176 r/bD6PZ 11350-B	a	g	3
1974											
● Details not available											
J	4	▲122	Bosch 1311048		★D4RY 11002-A *SA-680 r/bD1RY 11002-A						1
J	4	▲122	Bosch 1311038	110.4A	D1RY 11002-A *SAE-672	D1RY 11005-B *SME-340	D3RY 11057-A *SBE-155-A	D2RY 11350-B *SDE-193-A		k	1

COPYRIGHT © 1986 — FORD MOTOR COMPANY — DEARBORN, MICHIGAN

APPLICATION CHART

MODEL	ENGINE CYL.	ENGINE C.I.D. C.C.D.	IDENT.	PARTS LIST SECT. & NO.	SERVICE STARTER ASSEMBLY	STARTER COMPONENTS ARMATURE	BRUSH SET	DRIVE	BEARING FRT.	BEARING REAR	ILLUS. SECT. 110 PAGE
11001-2	(STARTER MOTOR) — Cont'd a-Use D3AZ 11052-A b-Use D0AZ 11135-B Use C-C2DF 11052-A g-Use C6VY 11135-A j-Use D1RY 11052-A k-Use D0RY 11135-A m-Use D0RY 11135-B n-Use D6AZ 11135-A p-See Parts List ▲ 2000 cc ♦ 2600 cc										

1974

● Details not available

J	4	▲122	Bosch 1211206, 1211228	110.4D	★D3RY 11002-A *SAE-673-A	D3RY 11005-A *SME-442	D3RY 11057-A *SBE-155-A	D1RY 11350-C *SDE-192			
J	4	▲122	1211513	110.4L	★D3RY 11002-A *SAE-673-A	E0RZ 11005-A *SME-467	E0RZ 11057-AA *SBE-321	E0RZ 11350-A *SDE-328	p	p	1
L	4	All	D42F 11001-BA	110.5A	★D4FZ 11002-B *SA-700 r/bD6FZ 11002-B	D2FZ 11005-A *SM-333-A	D1FZ 11057-A *SB-164	★C4DZ 11350-B *SD-165 r/bD6PZ 11350-A			
J	6	⊕171	Bosch 1311046	110.4E	★D4RY 11002-B *SA-681 r/bD5RY 11002-B	D4RY 11005-A *SME-443	D1RY 11057-B *SBE-159	D4RY 11350-A *SDE-6317			1
J	6	⊕171	Bosch 1311033	110.4C	★D2RY 11002-A r/bD6RY 11002-A *SAE-675	D1RY 11005-B *SME-340	D1RY 11057-B *SBE-159	D2RY 11350-A *SDE-199		k	1
P - - A/T	6	200	D20F 11001-AA, BA	110.1B	★C30Z 11002-C *SA-628 r/bD7DZ 11002-B	★D0AZ 11005-A *SM-335 r/bD7AZ 11005-A	C0DZ 11057-B *SB-134	★C6VY 11350-A *SD-175 r/bD6PZ 11350-B	a	b	2
P - - M/T	6	200	D2ZF 11001-BA, CA	110.1D	★C60Z 11002-A *SA-633 r/bD6DZ 11002-A	★D0AZ 11005-A *SM-335 r/bD7AZ 11005-A	C0DZ 11057-B *SB-134	★C6VY 11350-A *SD-175 r/bD6PZ 11350-B	a	b	2
C,P P C - - A/T C,F,Y	6 8 8 8	250 302 302 351	D2AF 11001-CA	110.1E	★C20Z 11002-B *SA-660 r/bD70Z 11002-A	★D0AZ 11005-A *SM-335 r/bD7AZ 11005-A	C0DZ 11057-B *SB-134	★C6VY 11350-A *SD-175 r/bD6PZ 11350-B	a	b	2
C,P C - - A/T P C,F,Y	6 8 8 8	250 302 302 351	D50F 11001-AA, BA	110.1G	★D40Z 11002-A *SA-660-A r/bD70Z 11002-A	★D0AZ 11005-A *SM-335 r/bD7AZ 11005-A	C0DZ 11057-B *SB-134	★C6VY 11350-A *SD-175 r/bD6PZ 11350-B	a	b	2
C - - M/T	8	302	D2AF 11001-DA	110.1A	★C5TZ 11002-D *SA-661 r/bE4TZ 11002-A	★D0AZ 11005-A *SM-335 r/bD7AZ 11005-A	C0DZ 11057-B *SB-134	★C6VY 11350-A *SD-175 r/bD6PZ 11350-B	a	b	2
C - - M/T	8	302	D5TF 11001-DA	110.1F	★D4TZ 11002-D *SA-661-A r/bD7TZ 11002-A	★D0AZ 11005-A *SM-335 r/bD7AZ 11005-A	C0DZ 11057-B *SB-134	C6VY 11350-A *SD-175 r/bD6PZ 11350-B	a	b	2
A,Y	8	400	D4AF 11001-AA, BA	110.3D	D4AZ 11002-A *SA-687	★D0AZ 11005-A *SM-335 r/bD7AZ 11005-A	C0DZ 11057-B *SB-134	★C8VY 11350-A *SD-176 r/bD6PZ 11350-C	a	g	3
C,F	8	400	D2AF 11001-AA	110.1C	★D1AZ 11002-A *SA-671 r/bD7AZ 11002-A	★D0AZ 11005-A *SM-335 r/bD7AZ 11005-A	C0DZ 11057-B *SB-134	★C6VY 11350-A *SD-175 r/bD6PZ 11350-B	a	b	2
A,C,Y	8	460	D40F 11001-AA	110.3B	D30Z 11002-A *SA-682 r/bD7AZ 11002-B	★D0AZ 11005-A *SM-335 r/bD7AZ 11005-A	C0DZ 11057-B *SB-134	★C6VY 11350-A *SD-175 r/bD6PZ 11350-B	a	b	3

APPLICATION CHART

MODEL	ENGINE CYL.	ENGINE C.I.D. C.C.D.	IDENT.	PARTS LIST SECT. & NO.	SERVICE STARTER ASSEMBLY	STARTER COMPONENTS ARMATURE	BRUSH SET	DRIVE	BEARING FRT.	BEARING REAR	ILLUS. SECT. 110 PAGE
11001-2	(STARTER MOTOR) — Cont'd a-Use D3AZ 11052-A b-Use D0AZ 11135-B Use C-C2DF 11052-A g-Use C6VY 11135-A j-Use D1RY 11052-A k-Use D0RY 11135-A m-Use D0RY 11135-B n-Use D6AZ 11135-A ▲ 2000 cc ◆ 2600 cc										
1974											
● Details not available											
D,K	8	460	D4VF 11000-AA, BA	110.3C	★D4VY 11002-A *SA-683 r/bD4VY 11002-B	★D0AZ 11005-A *SM-335 r/bD7AZ 11005-A	C0DZ 11057-B *SB-134	★C8VY 11350-A *SD-176 r/bD6PZ 11350-C	a	g	3
D	8	460	D5VF 11000-AB	110.3H	★D4VY 11002-B *SA-703 r/bD4VY 11002-C	★D0AZ 11005-A *SM-335 r/bD7AZ 11005-A	C0DZ 11057-B *SB-134	★C8VY 11350-A *SD-176 r/bD6PZ 11350-C	a	g	3
K	8	460	D7VJ 11000-AA	●	D4VY 11002-C *SA 703-A	D7AZ 11005-A *SM 335-A	‡	D6VY 11350-C *SD 303	‡	‡	3
1975											
L - - "Before 5/1/75"	4	@140	D42F 11001-BA	110.5A	★D4FZ 11002-B *SA-700 r/bD6FZ 11002-B	D2FZ 11005-A *SM-333-A	D1FZ 11057-A *SB-164	★C4DZ 11350-B *SD-165 r/bD6PZ 11350-A	c	b	2
L - - "From 5/1/75"	4	@140	D6EF 11001-BA	110.5C	★D6FZ 11002-B *SA-708 r/bD8FZ 11002-A	D2FZ 11005-A *SM-333-A	D1FZ 11057-A *SB-164	D6PZ 11350-A *SD-301	c	b	2
L - - "Before 5/1/75"	6	⊕171	D4ZF 11001-AB	110.5B	D4ZZ 11002-A *SA-678	D2FZ 11005-A *SM-333-A	D4ZZ 11057-A *SB-170	★C4DZ 11350-B *SD-165 r/bD6PZ 11350-A	a	b	2
L - - "From 5/1/75"	6	⊕171	D6EF 11001-AA	110.5D	★D6FZ 11002-A *SA-707 r/bD7ZZ 11002-A	D2FZ 11005-A *SM-333-A	D4ZZ 11057-A *SB-170	D6PZ 11350-A *SD-301	a	b	2
G,P - - M/T	6	200	D2ZF 11001-CA	110.1D	★C60Z 11002-A *SA-633 r/bD6DZ 11002-A	★D0AZ 11005-A *SM-335 r/bD7AZ 11005-A	C0DZ 11057-B *SB-134	★C6VY 11350-A *SD-175 r/bD6PZ 11350-B	a	b	2
P - - A/T	6	200	D20F 11001-BA	110.1B	★C30Z 11002-C *SA-628 r/bD7DZ 11002-B	★D0AZ 11005-A *SM-335 r/bD7AZ 11005-A	C0DZ 11057-B *SB-134	★C6VY 11350-A *SD-175 r/bD6PZ 11350-B	a	b	2
G,P C,F,G,P	6 8	250 302, 351W	D50F 11001-BA	110.1G	★D40Z 11002-A *SA-660-A r/bD70Z 11002-A	★D0AZ 11005-A *SM-335 r/bD7AZ 11005-A	C0DZ 11057-B *SB-134	★C6VY 11350-A *SD-175 r/bD6PZ 11350-B	a	b	2
C,F,Y - - "Before 5/1/75"	8	351M	D2AF 11001-JA	110.1C	★D1AZ 11002-A *SA-671 r/bD7AZ 11002-A	★D0AZ 11005-A *SM-335 r/bD7AZ 11005-A	C0DZ 11057-B *SB-134	★C6VY 11350-A *SD-175 r/bD6PZ 11350-B	a	b	2
C,F,Y - - "From 5/1/75" A,Y - - Note 1	8 8	351M 400	D5AF 11001-EA	110.1H	★D5AZ 11002-C *SA-701 r/bD7AZ 11002-A	★D0AZ 11005-A *SM-335 r/bD7AZ 11005-A	C0DZ 11057-B *SB-134	★C6VY 11350-A *SD-175 r/bD6PZ 11350-B	a	b	2
A,C,F,Y - - Note 2	8	400	D5AF 11001-BB	110.3E	★D5AZ 11002-B *SA-692 r/bD7AZ 11002-A	★D0AZ 11005-A *SM-335 r/bD7AZ 11005-A	C0DZ 11057-B *SB-134	★C8VY 11350-A *SD-176 r/bD6PZ 11350-C	a	b	3
A,C,D,F,K,Y "Before 6/5/75"	8	460	D5AF 11001-AB	110.3G	★D5AZ 11002-A *SA-693 r/bD7AZ 11002-B	D7AZ 11005-A *SM-335-A	C0DZ 11057-B *SB-134	★C8VY 11350-A *SD-176 r/bD6PZ 11350-C	a	g	3
A,C,D,F,K,Y "From 6/5/75"	8	460	D6AF 11001-AA	110.3J	D6AZ 11002-A *SA-704	D7AZ 11005-A *SM-335-A	C0DZ 11057-B *SB-134	D6PZ 11350-C *SD-303	a	g	3

COPYRIGHT © 1986 — FORD MOTOR COMPANY — DEARBORN, MICHIGAN

APPLICATION CHART

MODEL	ENGINE CYL.	ENGINE C.I.D. C.C.D.	IDENT.	PARTS LIST SECT. & NO.	SERVICE STARTER ASSEMBLY	STARTER COMPONENTS ARMATURE	BRUSH SET	DRIVE	BEARING FRT.	BEARING REAR	ILLUS. SECT. 110 PAGE
11001-2	(STARTER MOTOR) — Cont'd a-Use D3AZ 11052-A b-Use D0AZ 11135-B Use C-C2DF 11052-A g-Use C6VY 11135-A j-Use D1RY 11052-A k-Use D0RY 11135-A m-Use D0RY 11135-B n-Use D6AZ 11135-A ▲ 2000 cc ♦ 2600 cc										
1976											
J "Before 6/1/76"	4	@140	1311107	110.4G	★D5RY 11002-C *SA-702 r/bD6RY 11002-B	D6RY 11005-A *SM-447	D6RY 11057-A *SBE-174	D6RY 11350-A *SDE-304	k	m	1
J "From 6/1/76"	4	@140	1311121	110.4J	D6RY 11002-B *SA-702-A	D6RY 11005-A *SM-447	D6RY 11057-B *SBE-175	D6RY 11350-B *SDE-305	k	m	1
L	4	@140	D6EF 11001-BA	110.5C	★D6FZ 11002-B *SA-708 r/bD7DZ 11002-A	D2FZ 11005-A *SM-333-A	D1FZ 11057-A *SB-164	D6PZ 11350-A *SD-301	c	b	2
J -- "Before 12/1/75"	6	⊕171	1311049	110.4F	D5RY 11002-B *SA-699	D1RY 11005-B *SME-340	D1RY 11057-B *SBE-159	D2RY 11350-A *SDE-199	k	m	1
J -- "From 12/1/75"	6	⊕171	1311120	110.4K	D6RY 11002-A *SA-699-A	D6RY 11005-A *SM-447	D6RY 11057-A *SBE-174	D6RY 11350-C *SDE-306	k	m	1
L	6	⊕171	D6EF 11001-AA	110.5D	★D6FZ 11002-A *SA-707 r/bD7ZZ 11002-A	D2FZ 11005-A *SM-333-A	D4ZZ 11057-A *SB-170	★D6PZ 11350-A *SD-301 r/bE1PZ 11350-B	a	b	2
G,P -- M/T	6	200	D6BF 11001-AA	110.1J	★D6DZ 11002-A *SA-705 r/bD7DZ 11002-A	★D0AZ 11005-A *SM-335 r/bD7AZ 11005-A	C0DZ 11057-B *SB-134	D6PZ 11350-B *SD-302	a	b	2
P -- A/T	6	200	D6BF 11001-BA	110.1K	★D6DZ 11002-B *SA-706 r/bD7DZ 11002-B	★D0AZ 11005-A *SM-335 r/bD7AZ 11005-A	C0DZ 11057-B *SB-134	D6PZ 11350-B *SD-302	a	b	2
G,P G,P C,F,G	6 8 8	250 302 351W	D60F 11001-AA	110.1L	★D60Z 11002-A *SA-709 r/bD70Z 11002-A	★D0AZ 11005-A *SM-335 r/bD7AZ 11005-A	C0DZ 11057-B *SB-134	D6PZ 11350-B *SD-302	a	b	2
A,C,F,Y	8	351M, 400	D5AF 11001-EA	110.1H	★D5AZ 11002-C *SA-701 r/bD7AZ 11002-A	★D0AZ 11005-A *SM-335 r/bD7AZ 11005-A	C0DZ 11057-B *SB-134	★C6VY 11350-A *SD-175 r/bD6PZ 11350-B	a	b	2
A,C,D,F,K,Y	8	460	D6AF 11001-AA	110.3J	★D6AZ 11002-A *SA-704 r/bD7AZ 11002-B	D7AZ 11005-A *SM-335-A	C0DZ 11057-B *SB-134	D6PZ 11350-C *SD-303	a	b	3
1977											
L	4	@140	D6EF 11001-BA	110.5C	★D6FZ 11002-B *SA-708 r/bD7DZ 11002-A	D2FZ 11005-A *SM-333-A	D1FZ 11057-A *SB-164	★D6PZ 11350-A *SD-301 r/bE1PZ 11350-B	c	b	2
L	6	⊕171	D6EF 11001-AA	110.5D	★D6FZ 11002-A *SA-707 r/bD7ZZ 11002-A	D2FZ 11005-A *SM-333-A	D4ZZ 11057-A *SB-170	★D6PZ 11350-A *SD-301 r/bE1PZ 11350-B	a	b	2
G,P -- M/T "Before 12/13/76"	6	200	D6BF 11001-AA	110.1J	★D6DZ 11002-A *SA-705 r/bD7DZ 11002-A	★D0AZ 11005-A *SM-335 r/bD7AZ 11005-A	C0DZ 11057-B *SB-134	D6PZ 11350-B *SD-302	a	b	2
G,P -- M/T "From 12/13/76"	6	200	D8BF 11001-AA	110.1R	★D7DZ 11002-A *SA-705-A r/bE1BZ 11002-A	★D0AZ 11005-A *SM-335 r/bD7AZ 11005-A	D7AZ 11057-A *SB-176	D6PZ 11350-B *SD-302	a	b	4
P -- A/T "Before 12/13/76"	6	200	D6BF 11001-BA	110.1K	★D6DZ 11002-B *SA-706 r/bD7DZ 11002-B	★D0AZ 11005-A *SM-335 r/bD7AZ 11005-A	C0DZ 11057-B *SB-134	D6PZ 11350-B *SD-302	a	b	2

APPLICATION CHART

MODEL	ENGINE CYL.	ENGINE C.I.D. C.C.D.	IDENT.	PARTS LIST SECT. & NO.	SERVICE STARTER ASSEMBLY	STARTER COMPONENTS ARMATURE	BRUSH SET	DRIVE	BEARING FRT.	BEARING REAR	ILLUS. SECT. 110 PAGE
11001-2	(STARTER MOTOR) — Cont'd a-Use D3AZ 11052-A b-Use D0AZ 11135-B Use C-C2DF 11052-A g-Use C6VY 11135-A j-Use D1RY 11052-A k-Use D0RY 11135-A m-Use D0RY 11135-B n-Use D6AZ 11135-A p-See Parts List ▲ 2000 cc ♦ 2600 cc										
1977											
P - - A/T "From 12/13/76"	6	200	D8BF 11001-BA	110.1P	★D7DZ 11002-B *SA-706-A r/bE1BZ 11002-B	D7AZ 11005-A *SM-335-A	D7AZ 11057-A *SB-176	D6PZ 11350-B *SD-302	a	b	4
G,P "Before 2/1/77" F,G,P "Before 2/1/77" F,G "Before 2/1/77"	6 8 8	250 302 351W	D60F 11001-AA	110.1L	★D60Z 11002-A *SA-709 r/bD70Z 11002-A	★D0AZ 11005-A *SM-335 r/bD7AZ 11005-A	C0DZ 11057-B *SB-134	D6PZ 11350-B *SD-302	a	b	2
G,P "From 2/1/77" F,G,P "From 2/1/77" F,G "From 2/1/77" V	6 8 8 8	250 302 351W 302, 351W	D80F 11001-AA	110.1Q	D70Z 11002-A *SA-709-A	D7AZ 11005-A *SM-335-A	D7AZ 11057-A *SB-176	D6PZ 11350-B *SD-302	a	b	4
A,D,F,K "Before 12/13/76"	8	351M, 400	D5AF 11001-EA	110.1H	★D5AZ 11002-C *SM-335 r/bD7AZ 11002-A	★D0AZ 11005-A *SM-335 r/bD7AZ 11005-A	C0DZ 11057-B *SB-134	★C6VY 11350-A *SD-303 r/bD6PZ 11350-B	a	b	2
A,D,F,K "From 12/13/76"	8	351M, 400	D8AF 11001-AA	110.1N	★D7AZ 11002-A *SA-701-A r/bE1TZ 11002-B	★D0AZ 11005-A *SM-335 r/bD7AZ 11005-A	D7AZ 11057-A *SB-176	D6PZ 11350-B *SD-302	a	b	4
A,D,K "Before 2/21/77"	8	460	D6AF 11001-AA	110.3J	★D6AZ 11002-A *SA-704 r/bD7AZ 11002-B	D7AZ 11005-A *SM-335-A	C0DZ 11057-B *SB-134	D6PZ 11350-C *SD-303	a	b	3
A,D,K "From 2/21/77"	8	460	D8AF 11001-BA	110.1S	★D7AZ 11002-B *SA-717 r/bE1TZ 11002-C	D7AZ 11005-A *SM-335-A	D7AZ 11057-A *SB-176	D6PZ 11350-B *SD-305	a	n	4
J	4	@140	1311121	110.4J	D6RY 11002-B *SA-702-A	D6RY 11005-A *SM-447	D6RY 11057-B *SBE-175	D6RY 11350-B *SDE-305	k	m	1
J	6	⊕171	1311120	110.4K	D6RY 11002-A *SA-699-A	D6RY 11005-A *SM-447	D6RY 11057-A *SBE-174	D6RY 11350-C *SDE-306	k	m	1
1978											
L,P	4	@140	EDD6EF 11001-BA	110.5C	★D8FZ 11002-A *SA-724 r/bD8FZ 11002-B	D2FZ 11005-A *SM-333-A	D1FZ 11057-A *SB-164	★D6PZ 11350-A *SD-301 r/bE1PZ 11350-B	c	b	2
J	4	@140	1311121	110.4J	D6RY 11002-B *SA-702-A	D6RY 11005-A *SM-447	D6RY 11057-B *SBE-175	D6RY 11350-B *SDE-305	k	m	1
L	6	⊕171	D8ZF 11001-AA	110.5F	D7ZZ 11002-A *SA-707-A	D7FZ 11005-A *SM-448	D7AZ 11057-A *SB-176	★D6PZ 11350-A *SD-301	a	b	4
J	6	⊕171	131120	110.4K	D6RY 11002-A *SA-699-A	D5RY 11005-A *SM-447	D6RY 11057-A *SBE-174	D6RY 11350-C *SDE-306	k	m	1
P - - A/T	6	200	D8BF 11001-CA	110.1T	★D8BZ 11002-A *SA-720 r/bE1BZ 11002-B	D7AZ 11005-A *SM-335-A	D7AZ 11057-A *SB-176	D6PZ 11350-B *SD-302	a	b	4

COPYRIGHT © 1986 — FORD MOTOR COMPANY — DEARBORN, MICHIGAN

APPLICATION CHART

MODEL	ENGINE CYL.	ENGINE C.I.D. C.C.D.	IDENT.	PARTS LIST SECT. & NO.	SERVICE STARTER ASSEMBLY	STARTER COMPONENTS ARMATURE	BRUSH SET	DRIVE	BEARING FRT.	BEARING REAR	ILLUS. SECT. 110 PAGE
11001-2	(STARTER MOTOR) — Cont'd a-Use D3AZ 11052-A b-Use D0AZ 11135-B Use C-C2DF 11052-A g-Use C6VY 11135-A j-Use D1RY 11052-A k-Use D0RY 11135-A m-Use D0RY 11135-B n-Use D6AZ 11135-A p-See Parts List ▲ 2000 cc ♦ 2600 cc										
1978											
P - - M/T	6	200	D8BF 11001-AA	110.1R	★D7DZ 11002-A *SA-705-A r/bE1BZ 11002-A	★D0AZ 11005-A *SM-335 r/bD7AZ 11005-A	D7AZ 11057-A *SB-176	D6PZ 11350-B *SD-302	a	b	4
G,V F,P	6&8 8	All 302, 351W	D80F 11001-AA	110.1Q	D70Z 11002-A *SA-709-A	D7AZ 11005-A *SM-335-A	D7AZ 11057-A *SB-176	D6PZ 11350-B *SD-302	a	b	4
A,D,F,K	8	351M, 400	D8AF 11001-AA	110.1N	★D7AZ 11002-A *SA-701-A r/bE1TZ 1102-B	★D0AZ 11005-A *SM-335 r/bD7AZ 11005-A	D7AZ 11057-A *SB-176	D6PZ 11350-B *SD-302	a	b	4
A,D,K	8	460	D8AF 11001-BA	110.1S	★D7AZ 11002-B *SA-717 r/bE1TZ 11002-C	D7AZ 11005-A *SM-335-A	D7AZ 11057-A *SB-176	D6PZ 11350-B *SD-305	a	n	4
1979											
J,L,P	4	@140	D8EF 11001-AA	110.5G	★D8FZ 11002-B *SA-729 r/bE1ZZ 11002-A	D7FZ 11005-A *SA-448	D7AZ 11057-A *SB-176	★D6PZ 11350-A *SD-301 r/bE1PZ 11350-B	a	b	4
J,L	6	⊕171	D8ZF 11001-AA	110.5F	D7ZZ 11002-A *SA-707-A	D7FZ 11005-A *SM-448	D7AZ 11057-A *SB-176	D6PZ 11350-A *SD-301	a	b	4
J,P - - A/T	6	200	D8BF 11001-CA	110.1T	★D8BZ 11002-A *SA-720 r/bE1BZ 11002-B	D7AZ 11005-A *SM-335-A	D7AZ 11057-A *SB-176	D6PZ 11350-B *SD-302	a	b	4
P - - M/T	6	200	D8BF 11001-AA	110.1R	★D7DZ 11002-A *SA-705-A r/bE1BZ 11002-A	★D0AZ 11005-A *SM-335 r/bD7AZ 11005-A	D7AZ 11057-A *SB-176	D6PZ 11350-B *SD-302	a	b	4
G,V A,F,J,P	6&8 8	All 302, 351W	D80F 11001-AA	110.1Q	D70Z 11002-A *SA-709-A	D7AZ 11005-A *SM-335-A	D7AZ 11057-A *SB-176	D6PZ 11350-B *SD-302	a	b	4
F D,K	8 8	351M 400	D8AF 11001-AA	110.1N	★D7AZ 11002-A *SA-701-A r/bE1TZ 11002-B	★D0AZ 11005-A *SM-335 r/bD7AZ 11005-A	D7AZ 11057-A *SB-176	D6PZ 11350-B *SD-302	a	b	4

YEAR	MODEL/RESTRICTIONS	ENGINE CYL.	ENGINE C.I.D. (C.C.D.)	PART NUMBER	DESCRIPTION	QTY.
11001-2	STARTER MOTOR — Cont'd					
73/ 73/	A,Y C,F,P	8 6&8	All All	378487-S	(BB-545-F)-bolt-3/8"-16 x 1 1/4"	2 2
73/	A,C,F	8	All	378488-S2	(BB-545-M)-bolt-3/8"-16 x 2 3/8"	1
73/	C,D,F,K	6&8	All	380209-S	(BB-545-H)-screw-3/8"-16 x 1 9/16"	2
73/	P	6	All	352464-S	(BB-139)	3
76	J	4&6	All	E800209-S72	(AB-182-G)-bolt-hex. hd. flange (starter to clutch converter)-M10 x 28 (Metric coarse)	3
11A001	WIRE ASSY. (STARTER RELAY JUMPER)					
75	A,C,D,F,G,K,L,P,Y - - exc. Canada	4,6 &8	All	D5AZ 11A001-A	#D5AB 11A001-AA-used when deleting 11A138 switch	1
11A003	Refer to group 11001-2 for Starter Parts List instructions					

YEAR	MODEL/RESTRICTIONS	ENGINE CYL.	ENGINE C.I.D. (C.C.D.)	PART NUMBER	DESCRIPTION	QTY.
11A004	WIRE ASSY. (STARTER MOTOR RELAY TO SOLENOID)					
73	A,Y	8	460 P/C	D3AZ 11A004-A	#D3AB 11A004-AB	1
73	A(65), Y(65) - - w/sun roof	8	All	★ D2AZ 11A004-E	#D2AB 11A004-AC - not replaced	1
74	A,Y	8	460 P/C	D4AZ 11A004-A	#D4AB 11A004-AA	1
75	A	8	400,460, 460 P/C	★ D5AZ 11A004-A	#D5AB 11A004-AA- for units w/eng.-mtd mechanical fuel pump	1
75/76	Y	8	400,460, 460 P/C			1
76/78	A	8	400,460, exc. 460 P/C	★ D7MY 11A004-A	#D7MB 11A004-AA- for units w/eng.-mtd mechanical fuel pump	1
75/78	A	8	460 P/C	★ D7MY 11A004-B	#D7MB 11A004-BA-for units w/elec. in-tank fuel pump & eng-mtd. fuel line shut-off v/v.-refer to T.S.B. 141-article 1951-Aug. 23, 1977	1
75/76	Y	8	460 P/C			1
79	A(Police)	8	All	E1AZ 11A004-A	#D9AB 11A004-AB, E1AB 11A004-AA	1
79	A(Police)	8	All	D9AZ 11A004-B	#D9AB 11A004-BA-use w/trailer tow pkg.	
11005	Refer to group 11001-2 for Starter Parts List instructions					
11006	SHIELD (STARTER MOTOR RELAY)-Also refer to group 11001-2 for Starter Parts List instructions ⊕ 2800 cc					
73	A,C,D,K,Y	8	429,460	D0VY 11006-B	Kit	1
76/78	J	6	⊕171	★ D5RY 11006-C		1
11K013-103	Refer to group 11001-2 for Starter Parts List instructions					
11A103	WIRE ASSY. (STARTER MOTOR CIRCUIT JUMPER EXTENSION)					
73	C - - M/T	6&8	All	D30Z 11A103-A	#D30B 11A103-AB	1
74	F - - A/T-floor shift- "Before 1/2/74"	8	All	D40Z 11A103-A	#D40B 11A103-AA	1
76/	F - - A/T-floor shift	8	All	D60Z 11A103-A	#D60B 11A103-AA	1
77/	F(65L) - - w/o tilt col.	8	All		With 6-way driver bucket seat	1
76/	G - - M/T-floor shift	6&8	All	★ D6DZ 11A103-E	#D6DB 11A103-AB, D8DB 11A103-AA	1
77/	G - - A/T-floor shift	6&8	All	★ D7DZ 11A103-B	#D7DB 11A103-AB, D8DB 11A103-BA	1
73	P - - M/T-floor shift	6&8	All	D2DZ 11A103-D	#D3DB 11A103-CA	1
73	P - - A/T-floor shift	6&8	All	D2DZ 11A103-C	#D3DB 11A103-BA	1
74	P - - A/T-floor shift	6&8	All	D4DZ 11A103-A	#D4DB 11A103-AB	1
77	V - - A/T-floor shift- "Before 5/16/77"	8	All	D7DZ 11A103-A	#D7DB 11A103-AA	1
77/79	V - - A/T-floor shift- "From 5/16/77 to 10/31/78"	8	All	D7DZ 11A103-B	#D7DB 11A103-AB -not req'd. after 10/31/78	1
11104-26	Refer to group 11001-2 for Starter Parts List instructions					
11A127	SWITCH ASSY. (IGNITION KEY WARNING)					
73/78	C,Y	6&8	All	D2AZ 11A127-B		1
73/78	A "Before 4/21/78"	8	All			1
73/	D,F,G,K,L	4,6 &8	All			1
73/77	P	6&8	All			1
77/	V	8	All			1
78/	P	4,6 &8	All	D8BZ 11A127-A		1
78/	A "From 4/21/78"	8	All			1
79	J	4,6 &8	All			1
11A128	TERMINAL and WIRE ASSY. (IGNITION KEY WARNING SWITCH)					
73	A,F,Y - - w/tilt column	8	All	D1AZ 11A128-C	#D3AA 11A128-BA	1
73	A,D,F,P,Y - - w/fixed column	6&8	All	D3AZ 11A128-A	#D3AA 11A128-AA or AB	1
73	C,K - - w/fixed column	6&8	All	D20Z 11A128-A	#D20A 11A128-AB or D30A 11A128-AA	1
73	A,C,D,P,Y	6&8	All	52554-S	(U-230)-screw (wiring to steering column flange)-No. 8-15 x 5/8"	AR

COPYRIGHT © 1986 — FORD MOTOR COMPANY — DEARBORN, MICHIGAN

1973/79 LINCOLN-MERCURY CARS

YEAR	MODEL/RESTRICTIONS	ENGINE CYL.	ENGINE C.I.D. (C.C.D.)	PART NUMBER	DESCRIPTION	QTY.
11130-11137	Refer to group 11001-2 for Starter Parts List instructions					
11A138	SWITCH ASSY. (STARTER OVERRIDE) RESET					
74/75	A,C,F,G,J,L,P - - U.S.	6&8	All	★ D4AZ 11A138-A	*SW-1244-#D4AB 11A138-AA,CA,DA-refer article 985,TSB 82, 1/24/75	1
74/75	A,C,F,G,L,P,Y - - Canada	6&8	All	★ D4AZ 11A138-B	*SW-1243-#D4AB 11A138-BA-refer article 985, TSB 82, 1/24/75	1
74	D,K - - Canada	8	All			1
73	P - - U.S.	6&8	All			1
74/75	D,K - - U.S.	8	All	★ D4SZ 11A138-A	*SW-1242-#D4SB 11A138-AA	1
11139-11140	Refer to Group 11001-2 for Starter Parts List instructions					
11141-11431	Refer to group 11001-2 for Starter Parts List instructions					
11450	SWITCH (STARTER MOTOR RELAY SOLENOID)					
73/78	A	6&8	All	★ D20Z 11450-A	*SW-1080-#D2SF 11450-AB	1
73/76	C,Y	6&8	All		R/b D8DZ 11450-B (6/83)	1
74/	F	8	All			1
75/76	G	6&8	All			1
75/	L	4&6	All			1
77	G	6&8	200,250, 351			1
77	G - - exc. with VV carb or Hi-altitude carb.	8	302			1
77	V	8	351			1
78/	P	4,6 &8	All			1
79	J	4,6 &8	All			1
79	A - - exc. Calif	8	351W			1
75/77	D,K	8	All	★ D2DZ 11450-A	*SW-1162-r/b D8DZ 11450-B (6/83)	1
75/77	P	6&8	All			1
77	V - - with VV carb.	8	302			1
73	F	6&8	All	B6AZ 11450-A	*SW-3-#D2AF 11450-AA	1
77	G - - with VV carb or Hi-altitude carb.	8	302			1
74	L	4	All			1
73/74	P	6&8	All			1
73/78	J	4&6	All	D7RY 11450-A	*SWE-1506-also used as horn relay	AR
78/	D,G,V	4,6 &8	All	★ D8DZ 11450-A r/bD8DZ 11450-B(11/84)	*SW-1507-#D8DF 11450-AA	1
79	A	8	302			1
79	A - - Calif.	8	351W			1
78/	K	8	All			1
73/	A,C,F,P,Y			381922-S7	(UU-52-A)-screw-1/4"-14 x 1/2"	AR
73/	A,C,F,P,Y			381561-S	(MM-295-AD)-nut-5/16"-18	2
11509	BRACKET (STARTING MOTOR RELAY MOUNTING)					
74/	L	4&6	All	★ D5FZ 11509-A		1
11572	SWITCH ASSY. (IGNITION)					
73/76	A,Y	8	All	D3AZ 11572-A	*SW-1149-#D3AB 11572-A	1
77/78	A	8	All	D7AZ 11572-A	#D7AA 11572-AA	1
73/76	C,K	6&8	All	D20Z 11572-A	*SW-1079-#D20B 11572-AB	1
74/76	F	8	All			1
75/76	G,L	6&8	All			1
77/	F,G,K,L	4,6, &8	All	D70Z 11572-A	#D70A 11572-AA	1
73/	D	8	All	D4DZ 11572-A	*SW-992-A-#D4DW 11572-AA	1
73/77	P	6&8	All			1
73	F	8	All	D1AZ 11572-B	*SW-1038-#D1AB 11572-BB	1

YEAR	MODEL/RESTRICTIONS	ENGINE CYL.	ENGINE C.I.D. (C.C.D.)	PART NUMBER	DESCRIPTION	QTY.
11572	SWITCH ASSY. (IGNITION) — Cont'd					
73	J	4&6	All	D3RY 11572-A	*SWE-1151	1
74	J	4&6	All	D4RY 11572-A	*SW-1200	1
76	J "Before 11/1/75"	4&6	All	D5RY 11572-A	4 terminals in connector	1
76/78	J "From 11/1/75"	4&6	All	D6RY 11572-A	*SWE-1364-6 terminals in connector	1
74	L	4	All	D4FZ 11572-A	*SW-979-B-#D42W 11572-AA	1
77/	V	8	All	D70Z 11572-A	*SW-1380 #D70A 11572-AA	1
78/	P	4,6 &8	All	★ E0AZ 11572-A	*SW-1471-A-#D8BC 11572-AC, E0AC 11572-AA -incl. attaching bolts-N800207-S100	1
79	A,J	4,6 &8	All		R/b E4FZ 11572-A (12/83)	1
73/	A,D,K,P,Y	6&8	All	383256-S	(MM-296-AE)-nut (switch to steering column)-1/4"-20	2
73/77	P	6&8	All	33795-S	(M-49)-nut (switch to steering column)-1/4"-20	3
78/	P	4,6 &8	All	N800207-S100	(AB-360-D)-bolt (ign. switch to steering column) - torx flange hd.-M6 x 1.0" x 10	2
79	A	8	All			2
11582	CYLINDER and KEYS ASSY. (IGNITION SWITCH LOCK)					
73	A,C,F,P,Y "Before 5/14/73"	6&8	All	D2AZ 11582-B	*SW-1114	1
73/76	A,C,F,G,P,Y- "From 5/14/73 to 2/2/76"	6&8	All	D4AZ 11582-A	*SW-1191 - if flange (3511) has D6 prefix, refer article 1460, TSB 111, 5/6/76	1
74/76	L "Before 2/2/76"	4	All			1
76/78	A,C,F,G,L,Y- "From 2/2/76 to 7/5/78"	All	All	★ D6AZ 11582-A	*SW-1362 R/b D8FZ 11582-A (12/79)	1
76/77	P	6&8	All			1
78	A,F,G,L- "From 7/5/78"	4,6 &8	All	D8FZ 11582-A	*SW-1523	1
79	F,G,L	4,6 &8	All			1
79	A,J,P	4,6 &8	All	D9AZ 11582-A	*SW-1543	1
73	D,K "Before 5/14/73"	8	All	D2VY 11582-B	*SW-1113	1
73/76	D,K- "From 5/14/73 to 2/2/76"	8	All	D4VY 11582-A	*SW-1190 - if flange (3511) has D6 prefix, refer article 1460, TSB 111, 5/6/76	1
76/	D,K,V - - "From 2/2/76"	8	All	D8LY 11582-A	*SW-1524	1
73/74	J	4&6	All		Refer to group 3675	
76/78	J	4&6	All	★ D5RY 11582-B /bD9RZ 3675-A	*SW-1527-Barrel w/springs & tumblers-also refer to groups 3B658 (plate), 3675 (cyl.) & 22053 (key)	1
78	P	4,6 &8	All	D8AZ 11582-A	*SW-1525	1
11584	BEZEL (IGNITION SWITCH)					
73/78	J	4&6	All	★ D3RY 11584-A		1
11A599	ROD (IGNITION SWITCH ACTUATING)					
73/78	A,Y - - w/fixed column	8	All	★ D3AZ 11A599-A		1
73	A,Y - - w/tilt column	8	All	D3AZ 11A599-B		1
74/78	A,Y - - w/tilt column	8	All	★ D4AZ 11A599-A		1
73/	C,K - - w/fixed column	6&8	All	D20Z 11A599-A		1
74/	C,F,K - - w/tilt column	8	All	D40Z 11A599-A		1
75/	G,V - - w/tilt column					1
73	D - - w/tilt column- "Before 7/5/73"	8	All	D0SZ 11A599-A		1
73	F - - w/tilt column					1
73/	D - - w/tilt column- "From 7/5/73"	8	All	D4VY 11A599-A		1
76/	D - - w/fixed column			D6VY 11A599-A	Overall length 6 15/16"	1

COPYRIGHT © 1986 — FORD MOTOR COMPANY — DEARBORN, MICHIGAN

1973/79 LINCOLN-MERCURY CARS

YEAR	MODEL/RESTRICTIONS	ENGINE CYL.	ENGINE C.I.D. (C.C.D.)	PART NUMBER	DESCRIPTION	QTY.
11A599	**ROD (IGNITION SWITCH ACTUATING) — Cont'd**					
74/	F - - w/fixed column	8	All	D20Z 11A599-A		1
75/	G,V - - w/fixed column	6&8	All			1
75/	L	4&6	All			1
74	L	4	All	★ D1FZ 11A599-A		1
76/78	J	4&6	All			1
73	P	6&8	All	D0DZ 11A599-A		1
74/77	P	6&8	All	★ D4DZ 11A599-A		1
11A601	**PIN (IGNITION SWITCH ACTUATING ROD)**					
73/75	D,K - - w/fixed column	6&8	All	D0AZ 11A601-A	1/2" long	1
73/75	A,C,F,P,Y - - w/fixed column					
75	G	6&8	All			1
74/75	L	4	All			1
11A647-8	**BLOCK (HEADLAMP SWITCH JUNCTION)**					
73/78	A,Y	8	All	★ C5AZ 11A647-A		1
75/76	K	8	All			1
76	P	8	All			1
76/78	L	8	All			1
77/	A,F	All	All	D3TZ 11A648-A	#D3TB 11A648-AA, D9AB 11A648-AA	1
11650	**NUT (HEADLAMP SWITCH)- Also refer to group 10852**					
73/78	A,Y	8	All	D3AZ 11650-A		1
75/	G	6&8	All			1
77	V	8	All			1
79	A	8	All	E0AZ 11650-A		1
75/77	D - - w/o auto. headlamp dimmer	8	All	★ D5VY 11650-A		1
75/	D - - w/auto. headlamp dimmer	8	All		Refer to group 17512	1
73/77	K - - w/o auto. headlamp dimmer	8	All	D2LY 11650-A		1
78/	D,K	8	All			1
74/76	L "Before 6/15/76"	4&6	All	D3FZ 11650-A	Metal	1
79	L	4&6	All			1
76/78	L "From 6/15/76"	4&6	All	★ D6FZ 11650-A	Plastic-r/b D3FZ 11650-A(11/81)	1
73/77	P	6&8	All	★ D0DZ 11650-A		1
11654	**SWITCH (HEADLAMP ON INSTRUMENT PANEL)**					
73/74	A(53H,K,X,57H,K,X, 65H,K,X,71H,K)	8	All	C8AZ 11654-A	*SW-644	1
75/78	A	8	All			1
73/74	A(53B,F,65B,F,71B)	8	All	D3AZ 11654-A	*SW-1226	1
73/76	C,F,Y	6&8	All			1
74/	G,L	4,6 &8	All			1
74/77	P	6&8	All			1
73	D - - w/auto. headlamp dimmer	8	All	D2VY 11654-B	*SW-1103	1
73/74	D,K - - w/o auto. headlamp dimmer	8	All	D2VY 11654-A	*SW-1102	1
75/	D - - w/o auto. headlamp dimmer	8	All	D5VY 11654-A	*SW-1284-#D4VB 11654-CA	1
74/	D,K - - w/auto. headlamp dimmer	8	All	D8LY 11654-A	*SW-1192-B-use with (11691) resistor (potentiometer) to repl. prod. assy. D8VB 11654-AA	1
77/78	F,V	8	All	D70Z 11654-A	*SW-1369-#D70B 11654-AA,D9AB 11654-BA	1
78/	P	4,6 &8	All			1
79	J	4,6 &8	All			1
79	A,F - - w/o visibility light group	8	All			1
79	A,F - - w/visibility light group	8	All	D90Z 11654-A	*SW-1528-#D90B 11654-AA,AB	1
79	V	8	All			1

YEAR	MODEL/RESTRICTIONS	ENGINE CYL.	ENGINE C.I.D. (C.C.D.)	PART NUMBER	DESCRIPTION	QTY.
11654	SWITCH (HEADLAMP ON INSTRUMENT PANEL) — Cont'd					
73	J	4&6	All	D3RY 11654-B	*SWE-1152-A-#73EG 11654-AB- "PK LIGHTS, HD LIGHTS"-push-button type	1
74/76	J "Before 5/1/76"	4&6	All	D4RY 11654-A	*SWE-1237-#73EG 11654-AC- "PK LIGHTS, HD LIGHTS"-push-button type-instrument panel-mounted	1
76/78	J - - w/intermittent wipers "From 5/1/76"	4&6	All	D6RY 11654-A	*SWE-1358- #76EG 11K665-FA-column mounted-lever type	1
76/78	J - - w/o intermittent-wipers "From 5/1/76"	4&6	All	★ D6RY 11654-B	*SW-1474-#76EG 11K665-AA-column mounted-lever type	1
73	K - - w/auto. headlamp dimmer	8	All	D2LY 11654-A	*SW-1062	1
75	K - - w/o auto. headlamp dimmer "Before 2/10/75"	8	All	D5VY 11654-A	*SW-1284-#D4VB 11654-CA	1
75	K - - w/o auto. headlamp dimmer "From 2/10/75"	8	All	D5LY 11654-A	*SW-1305-#D5LB 11654-AA,AB	1
76/	K - - w/o auto. headlamp dimmer	8	All		Use with D5SZ 11663-A shaft and D7LY 11666-A knob	1
73/	D	8	All	382086-S	(UU-89-F)-screw (switch to housing)-No. 8-18 x 1/2"	1
73/	K	8	All	351038-S	(MM-41)-nut (switch to bracket)-7/16"-28	1
11661	KNOB and SHAFT ASSY. (HEADLAMP SWITCH)					
73	A,Y "Before 4/6/73"	8	All	★ D3AZ 11661-A		1
73/78	A,Y "From 4/6/73"	8	All	D3AZ 11661-B		1
79	A	8	All	D9AZ 11661-A		1
73/76	C	6&8	All	★ D30Z 11661-A		1
73/74	D - - w/o auto. headlamp dimmer	8	All	D0VY 11661-A		1
75/76	D - - w/o auto. headlamp dimmer "Before 1/5/76"	8	All	★ D5VY 11661-A		1
76/77	D - - w/o auto. headlamp dimmer "From 1/5/76"	8	All	D1MY 11661-A		1
76/77	D - - w/auto. headlamp dimmer	8	All	D4LY 11661-A		1
78/	D - - w/auto. headlamp dimmer	8	All	D8VY 11661-A		1
78/	D - - w/o auto. headlamp dimmer	8	All	D8VY 11661-B		1
74/76	F	8	All	★ D30Z 11661-A		1
77/	F	8	All	D70Z 11661-B		1
75/	G	6&8	All	D5DZ 11661-B		1
73/74	K - - w/o auto. headlamp dimmer	8	All	D2LY 11661-A		1
75	K - - w/o auto. headlamp dimmer "Before 2/10/75"	8	All	D3TZ 11661-A		1
75	K - - w/o auto. headlamp dimmer "From 2/10/75"	8	All	D2LY 11661-A		1
76	K - - w/o auto. headlamp dimmer	8	All		Refer to group 17513 for knob, refer to group 11663 for shaft	1
74/76	K - - w/auto. headlamp dimmer	8	All	D4LY 11661-A		1
77	K - - w/auto. headlamp dimmer	8	All	D7LY 11661-A		1
78	K (exc. Diamond Jubilee) - - w/auto. headlamp dimmer	8	All			1
79	K (exc. Collector's series)-w/auto. headlamp dimmer	8	All			1
78	K (Diamond Jubilee) - - w/auto. headlamp dimmer	8	All	D8LY 11661-A		1
79	K (Collector's series)-w/auto. headlamp dimmer	8	All			1
77/	K - - w/o auto. headlamp dimmer	8	All		Refer to group 11666 for knob, refer to group 11663 for shaft	1
74/	L	4	All	D4FZ 11661-A		1
73/77	P	6&8	All	★ D2DZ 11661-A		1
78/	P	All	All	D8BZ 11661-A		1
79	J	All	All			1
77/	V	8	All	D74Y 11661-A		1

COPYRIGHT © 1986 — FORD MOTOR COMPANY — DEARBORN, MICHIGAN

1973/79 LINCOLN-MERCURY CARS

YEAR	MODEL/RESTRICTIONS	ENGINE CYL.	ENGINE C.I.D. (C.C.D.)	PART NUMBER	DESCRIPTION	QTY.
11663	**SHAFT (HEADLAMP SWITCH KNOB)**					
76/	K - - w/o auto. headlamp dimmer	8	All	D5SZ 11663-A	Also serviced in D6LY 11654-B switch. Use with 17513 knob (1976) or 11666 knob (1977/)	1
11666	**KNOB ASSY. (HEADLAMP SWITCH)**					
77/	K - - w/o auto. headlamp dimmer	8	All	D7LY 11666-B	Knob only	1
11A668	**BRACKET (HEADLAMP SWITCH)**					
73/78	A,Y	8	All	★ D3MY 11A668-A		1
79/	A	8	All	D9MY 11A668-A		1
11A678	**BRACKET (LIGHT SWITCH)**					
77/	K - - w/o auto. headlamp dimmer	8	All	D7LY 11A678-A	Incl. D7LY 13A719-B socket & wire	1
77/	K - - w/auto. headlamp dimmer	8	All	D7LY 11A678-B	Incl. D7LY 13A719-C socket & wire	1
78/	D - - w/o auto. headlamp dimmer	8	All	D8VY 11A678-A	Incl. D8VY 13A719-A socket & wire	1
78/	D - - w/auto. headlamp dimmer	8	All	★ D8VY 11A678-B	Incl. D8VY 13A719-B socket & wire	1
11691	**RESISTOR ASSY. (LIGHT SWITCH RHEOSTAT)**					
74/	D,K - w/auto headlamp dimmer	8	All	D7LY 11691-A	Use with (11654) switch - incl. (1) 34908-S36 washer & (1) 351038-S2 nut	1

DESCRIPTION/RESTRICTIONS	PART NUMBER	STARTER PARTS LISTS 1A THRU 1M											
		A	B	C	D	E	F	G	H	J	K	L	M
Refer to Section 110, PAGE 1 for PARTS LISTS INSTRUCTIONS													
ARMATURE	D7AZ 11005-A *SM-335-A	A	B	C	D	E	F	G	H	J	K	L	
SEAL (REAR HOUSING BEARING)	D0AZ 11K013-A	A	B	C	D	E	F	G	H	J	K	L	
WASHER (ARMATURE THRUST)	11036												
Asbestos-5/8" I.D. x 1 1/4" O.D. x 3/32" thick	C0DZ 11036-A *SZ-628	A	B	C	D	E	F	G	H	J	K	L	
Steel-1/2" I.D. x 23/32" O.D. x 1/32" thick	C6VY 11036-A *SZ-640	A					F	G	H	J	K	L	
PLATE and BUSHING (BRUSH END)	C4TZ 11049-A *SH-172	A	B	C	D	E	F	G	H	J	K	L	
BUSHING (BRUSH END PLATE)-5/8" I.D. x 3/4" O.D. x 9/16" long	D3AZ 11052-A *MC-220	A	B	C	D	E	F	G	H	J	K	L	
BRUSH ASSY.-ground	18 11056	A	B	C	D	E	F	G	H	J	K	L	
BRUSH SET	C0DZ 11057-B *SB-134	A	B	C	D	E	F	G	H	J	K	L	
Consists of 1-C5AF 11055-A Brush 1-C0DF 11056-B Brush 1-18 11056 Brush 1-25247-S7 Screw													
SPRING (BRUSH)	D1AZ 11059-A	4	4	4	4	4	4	4	4	4	4	4	
COVER (PLUNGER)	D8AZ 11060-A	A	B	C	D	E	F	G	H	J	K	L	
INSULATOR (BRUSH HOLDER)	11062												
Not replaced	★ C9AZ 11062-A	2	2										
	C4TZ 11062-A		2										
GASKET (PLUNGER COVER)	C0DF 11065-A *SZ-591	A		C	D	E	F	G	H	J	K	L	
LEVER (DRIVE)	C0DF 11067-B *SZ-593	A	B	C	D	E	F	G	H	J	K	L	
Pin-dowel-1/4" x 11/16"	73266-S(N-84-A)	A	B	C	D	E	F	G	H				
INSULATOR (SWITCH)-3/16" I.D. x 3/8" O.D. x 5/32" thick	C2DZ 11068-A	A	B	C	D	E	F	G	H	J	K	L	
COIL (FIELD)	11082-3												
Complete	C6VY 11082-B *SC-534	A	B	C	D	E	F	G	H	J	K	L	
Frame and coil assy.	★ C8AZ 11083-A			C									
BOLT (THRU)	11091												
Bolt-hex. head-1/4"-20 x 6 9/16"	C3AZ 10120-A *GY-740	2	2	2	2	2	2	2	2	2	2	2	
Lockwasher	34905-S7(X-97)	2	2	2	2	2	2	2	2				
WASHER (FIELD TERMINAL)	★ B5A 11093-A	A	B	C	D	E	F	G	H	J	K		
	B5A 11093-B											L	
TERMINAL KIT (FIELD)	C0DZ 11102-C *SZ-656	A	B	C	D	E	F	G	H	J	K	L	
Consists of 1-B5A 11093-A Washer 1-384661-S Washer 1-44722-S Washer 1-34791-S36 Washer 1-D8PF 11102-AA terminal 1-18 11107-B Bushing 2-384660-S Nut													

COPYRIGHT © 1986 — FORD MOTOR COMPANY — DEARBORN, MICHIGAN

DESCRIPTION/RESTRICTIONS	PART NUMBER	STARTER PARTS LISTS 1A THRU 1M											
		A	B	C	D	E	F	G	H	J	K	L	M
Refer to Section 110, PAGE 1 for PARTS LISTS INSTRUCTIONS													
SPRING (PLUNGER RETURN)	C1VF 11103-A *SZ-630	A	B	C	D	E	F	G	H	J	K	L	
SLEEVE (COIL RETAINING)	C0DF 11105-A	A	B	C	D	E	F	G	H	J	K	L	
FLANGE (COIL RETAINING)	C0DF 11106-A	A	B	C	D	E	F	G	H	J	K	L	
BAND (COVER)	★ C20Z 11126-A	A	B	C	D	E	F	G	H	J	K	L	
Screw-round head-slotted-No. 10-32 x 1 5/8"	27185-S2(U-177-A)	A	B	C	D	E	F	G	H				
Nut-hex.-No. 10-32	34079-S7(M-163)	A	B	C	D	E	F	G	H				
Nut-square-No. 10-32	34141-S8(M-147)									J	K	L	
HOUSING KIT (DRIVE END)	11130												
	★ D00Z 11130-B *SE-115-A				D					J			

Consists of
1-D0AZ 11K013-A Seal
1-D00F 11130-B Housing
1-D1PF 11A130-AA Lubricant
1-C2DZ 11222-A Ring
1-C2DZ 11223-A Retainer
1-C6VF 11383-A Washer
1-Instruction sheet

	D1AZ 11130-A *SE-133			C					H				

Consists of
1-D0AZ 11K013-A Seal
1-D2AF 11130-GA Housing
1-D1PF 11A130-AA Lubricant
1-C2DZ 11222-A Ring
1-C2DZ 11223-A Retainer
1-C6VF 11383-A Washer
1-Instruction sheet

	D1AZ 11130-D *SE-130-A	A					F						

Consists of
1-D0AZ 11K013-A Seal
1-D0AF 11130-F Housing
1-C2DZ 11222-A Ring
1-C2DZ 11223-A Retainer
1-D1PF 11A130-AA Lubricant
1-C6VF 11383-A Washer
1-Instruction sheet

	D1AZ 11130-C *SE-73-B					E		G				L	

Consists of
1-D0AZ 11K013-A Seal
1-C2DZ 11223-A Retainer
1-D0AF 11130-G Housing
1-D1PF 11A130-AA Lubricant
1-C2DZ 11222-A Ring
1-C6VF 11383-A Washer
1-Instruction sheet

	D1AZ 11130-B *SE-129-A		B								K		

Consists of
1-D0AZ 11K013-A Seal
1-C2DZ 11222-A Ring
1-D1PF 11A130-AA Lubricant
1-D0AF 11130-A
1-C2DZ 11223-A Retainer
1-C6VF 11383-A Washer
1-Instruction sheet

POINT KIT (CONTACT)	C20Z 11134-C *SZ-750	A	B	C	D	E	F	G	H	J	K	L	

Consists of
1-C2DZ 11068-A Insulator
1-C20F 11116-B Spring
1-C20Z 11176-B Post
1-C20Z 11181-A Insulator
1-57013-S Screw-No. 8-32 x 3/8"
1-Instruction sheet

BEARING or BUSHING (DRIVE HOUSING)	★ D0AZ 11135-B *MC-209	A	B	C	D	E	F	G	H	J	K	L	
INSULATOR (SWITCH SPRING)	C20Z 11181-B	A	B	C	D	E	F	G	H	J	K	L	
RING (DRIVE STOP)	C2DZ 11222-A *SZ-604	A	B	C	D	E	F	G	H	J	K	L	

NOTICE: When the parts list suffix is shown in the quantity required column, the quantity is one (1).

DESCRIPTION/RESTRICTIONS	PART NUMBER	STARTER PARTS LISTS 1A THRU 1M											
		A	B	C	D	E	F	G	H	J	K	L	M
Refer to Section 110, PAGE 1 for PARTS LISTS INSTRUCTIONS													
RETAINER (DRIVE STOP RING)	11223												
	D6AZ 11223–A *SZ–730	A	B	C	D	E	F	G	H	J	K	L	
DRIVE ASSY. (Incl. attaching parts)	11350												
	D6PZ 11350–B *SD–302	A	B	C	D	E	F	G	H	J	K	L	
SCREW (POLE PIECE)	11415												
Screw–flat head, socket–7/16"–14 x 15/32"	C2DF 11415–A	3	3	3	3	3	3	3	3	3	3	3	

COPYRIGHT © 1986 — FORD MOTOR COMPANY — DEARBORN, MICHIGAN

DESCRIPTION/RESTRICTIONS	PART NUMBER	STARTER PARTS LISTS 1N THRU 1Z											
		N	P	Q	R	S	T	U	V	W	X	Y	Z
ARMATURE	11005												
	D7AZ 11005–A *SM–335–A	N	P	Q	R	S	T						
WASHER (DRIVE THRUST)	C6VY 11036–A *SZ–640	N	P	Q	R	S	T						
PLATE & BUSHING (BRUSH END)	D7AZ 11049–A *SH–183	N	P	Q	R	S	T						
Screw and washer (cable to plate) 1/4"–20 x 5/8" w/pilot	385022–S100 (BB–551–DB)	N	P	Q	R		T						
BUSHING (BRUSH END PLATE)–5/8" I.D. x 3/4" O.D. x 9/16" Long	D3AZ 11052–A *MC–220	N	P	Q	R	S	T						
BRUSH SET	D7AZ 11057–A *SB–176	N	P	Q	R	S	T						
Consists of 1–D8AF 11055–BA Brush; 2–D8AF 11056–AA Brush; 2—50399–S36 Screw; 1–Instruction sheet													
SPRING (BRUSH)	D7AZ 11059–A *MS–519	4	4	4	4	4	4						
COVER (PLUNGER)	11060												
	D8AZ 11060–A *SZ–749	N	P	Q	R	S	T						
HOLDER (BRUSH)	D7AZ 11061–A *SB–177	N	P	Q	R	S	T						
INSULATOR (BRUSH HOLDER)	D7AZ 11062–A *SZ–737	N	P	Q	R	S	T						
GASKET (PLUNGER COVER)	C0DF 11065–A *SZ–591	N	P	Q	R	S	T						
LEVER (DRIVE)	D7AZ 11067–A *SZ–736	N	P	Q	R	S	T						
Pin (lever to hsg.) Flat hd solid	378962–S (NN–62–A)	N	P	Q	R	S	T						
COIL (FIELD)–complete	11082												
	D7AZ 11082–A *SC–523	N	P		R		T						
	D70Z 11082–A *SC–526			Q									
	D7AZ 11082–B *SC–528					S							
BOLT (THRU)	11091												
	C3AZ 10120–A *GY–740	2	2	2	2	2	2						

NOTICE: When the parts list suffix is shown in the quantity required column, the quantity is one (1).

DESCRIPTION/RESTRICTIONS	PART NUMBER	STARTER PARTS LISTS 1N THRU 1Z											
		N	P	Q	R	S	T	U	V	W	X	Y	Z
SPRING (PLUNGER RETURN)	C1VF 11103-A *SZ-630	N	P	Q	R	S	T						
SLEEVE (COIL RETAINING)	C0DF 11105-A	N	P	Q	R	S	T						
FLANGE (COIL RETAINING)	C0DF 11106-A	N	P	Q	R	S	T						
GROMMET	D7AZ 11A120-A *SZ-742	N	P	Q	R	S	T						
HOUSING KIT (DRIVE END)	11130												
	D1AZ 11130-A *SE-133	N											
Consists of 1-D0AZ 11K013-A Seal 1-D2AF 11130-GA Housing 1-D1PF 11A130-AA Lubricant 1-Instructions sheet	1-C2DZ 11222-A Ring 1-D6AZ 11223-A Retainer 1-C6VY 11036-A Washer												
	D1AZ 11130-B *SE-129-A		P										
Consists of 1-D0AZ 11K013-A Seal 1-D2AF 11130-AA Housing 1-D1PF 11A130-AA Lubricant 1-C2DZ 11222-A Ring	1-D6AZ 11223-A Retainer 1-C6VY 11036-A Washer 1-Instruction sheet												
	D1AZ 11130-C *SE-73-B			Q									
Consists of 1-D0AZ 11K013-A Seal 1-D2AF 11130-EA Housing 1-D1PF 11A130-AA Lubricant 1-C2DZ 11222-A Ring	1-D6AZ 11223-A Retainer 1-C6VY 11036-A Washer 1-Instruction sheet												
	★ D00Z 11130-B *SE-115-A				R								
Consists of 1-D0AZ 11K013-A Seal 1-D00F 11130-B Housing 1-D1PF 11A130-AA Lubricant 1-C2DZ 11222-A Ring	1-D6AZ 11223-A Retainer 1-C6VY 11036-A Washer 1-Instruction sheet												
	D8BZ 11130-A *SE-254						T						
Consists of 1-D8AZ 11K013-A Seal 1-C6VY 11036-A Washer 1-D8BF 11130-AA Housing 1-D1PF 11A130-AA Lubricant	1-C2DZ 11222-A Ring 1-D6AZ 11223-A Retainer 1-Instruction sheet												
HOUSING ASSY.	D7AZ 11130-B *SE-253					S							
POINT KIT (CONTACT)	D7AZ 11134-A	N	P	Q	R	S	T						
Consists of 1-D8AF 11068-AA Insulator 1-D8AF 11071-AA Terminal 1-D8AF 11116-AA Spring	1-D8AF 11177-AA Post 1-D8AF 11181-AA Insulator			1-387446-S 1-387447-S2					Rivet Rivet				
BEARING or BUSHING (DRIVE HOUSING)	11135												
	★ D0AZ 11135-B *MC-209	N	P	Q	R		T						
	D6AZ 11135-A *MC-189-A					S							

COPYRIGHT © 1986 — FORD MOTOR COMPANY — DEARBORN, MICHIGAN

DESCRIPTION/RESTRICTIONS	PART NUMBER	STARTER PARTS LISTS 1N THRU 1Z											
		N	P	Q	R	S	T	U	V	W	X	Y	Z
RETAINER ASSY (COVER)	11A143	N	P	Q	R	S	T						
Screw–10–32 x 5/8"– hex. washer head	388015–S100 (UU–52–AT)	N	P	Q	R	S	T						
RING (DRIVE STOP)	C2DZ 11222–A *SZ–604	N	P	Q	R	S	T						
RETAINER (STOP RING)	D6AZ 11223–A *SZ–730	N	P	Q	R	S	T						
DRIVE ASSY.	D6PZ 11350–B *SD–302	N	P	Q	R	S	T						
SCREW (POLE PIECE)–flat head (socket)–7/16"–14 x 15/32"	C2DF 11415–A	3	3	3	3	3	3						

NOTICE: When the parts list suffix is shown in the quantity required column, the quantity is one (1).

DESCRIPTION/RESTRICTIONS	PART NUMBER	STARTER PARTS LISTS 2A THRU 2M											
		A	B	C	D	E	F	G	H	J	K	L	M
Refer to Section 110, PAGE 1 For PARTS LISTS INSTRUCTIONS													
GASKET (HOUSING END PLATE)	★ D1RY 11003-A	A											
ARMATURE	★ D1RY 11005-A *SME-338	A											
Washer	120843-ES	A											
BRACKET ASSY.	★ D1RY 11K008-A	A											
BEARING (BRUSH END PLATE)	★ D1RY 11052-A *MCE-215	A											
BRUSH KIT	★ D1RY 11057-A *SBE-155-A	A											
LEVER ASSY.	D1RY 11077-A *SYE-36	A											
COIL ASSY. (FIELD)	★ D1RY 11082-A *SCE-394	A											
RING	★ D1RY 11K093-A	A											
TERMINAL (FIELD)	★ D1RY 11102-A r/b D1RY 11082-A	A											
SPRING (PLUNGER)	★ D1RY 11103-A	A											
INSULATOR (TERMINAL FIELD)	★ D1RY 11107-A	A											
SWITCH KIT (HARDWARE)	D1RY 11K119-A	A											
GROMMET	D1RY 11A120-A *SZE-683	A											
HOUSING (DRIVE END)	★ D1RY 11130-A *SEE-134	A											
PLUG (LEVER)	★ D1RY 11K168-A	A											
DRIVE SPRING KIT	★ D1RY 11198-A	A											
RING (COLLAR RETAINING)	D1RY 11222-A	A											
COLLAR (DRIVE RING)	★ D1RY 11223-A *SZE-679	A											
DRIVE ASSY.	11350												
Less drive spring-10 teeth	★ D1RY 11350-B *SDE-191	A											
SOLENOID ASSY.	D1RY 11390-B *SWE-1056	A											
SEAL (RELAY MOUNTING)	D1RY 11440-A	A											

COPYRIGHT © 1984— FORD MOTOR COMPANY —DEARBORN, MICHIGAN

DESCRIPTION/RESTRICTIONS	PART NUMBER	STARTER PARTS LISTS 3A THRU 3M											
		A	B	C	D	E	F	G	H	J	K	L	M
Refer to SECTION 110, PAGE 1 for PARTS LIST INSTRUCTIONS													
GASKET (DRIVE HOUSING)	C8VY 11003-A	A	B	C	D	E	F	G	H	J	K		
ARMATURE	11005												
	D7AZ 11005-A *SM-335-A	A	B	C	D	E	F	G	H	J			
SHIELD (HEAT)	D5AZ 11006-A					E		G	H	J			
Screw (heat shield)-1/4"-20 x 1/4"	386096-S8					E		G	H	J			
WASHER (ARMATURE THRUST)	11036												
	C0DZ 11036-A *SZ-628	A	B	C	D								
Drive pinion thrust	C6VY 11036-A *SZ-640	A	B	C	D								
PLATE ASSY (BRUSH END)	11049												
	C4TZ 11049-A *SH-172	A	B	C	D	E	F	G	H	J			
BUSHING (BRUSH END PLATE)	11052												
	D3AZ 11052-A *MC-220	A	B	C	D	E	F	G	H	J			
BRUSH SET	11057												
	C0DZ 11057-B *SB-134	A	B	C	D	E	F	G	H	J			
Consists of 1-C5AF 11055-A Brush	1-C0DF 11056-B Brush			1-18 11056 Brush 1-24242-S Screw									
SPRING (BRUSH)	11059												
	D1AZ 11059-A	4	4	4	4	4	4	4	4	4			
INSULATOR (BRUSH HOLDER)	11062												
Not replaced	★ C9AZ 11062-A	2	2	2	2	2	2	2	2	2			
LEVER ASSY. (DRIVE)	11067												
	★ C8VY 11067-A *SZ-647	A	B	C	D	E	F	G	H				
	★ D5AZ 11067-A *SZ-728									J			
CONNECTOR (SOLENOID)	11072												
Steel	C8VY 11072-A *SZ-654		B		D	E	F	G		J			
Nut (conn. to solenoid)-No. 8-32	382560-S(MM-150-F)					E		G		J			
COIL (FIELD)	11082												
Complete	★ D3AZ 11082-C *SC-535	A	B	C	D	E	F	G	H	J			

COPYRIGHT © 1986 — FORD MOTOR COMPANY — DEARBORN, MICHIGAN

DESCRIPTION/RESTRICTIONS	PART NUMBER	STARTER PARTS LISTS 3A THRU 3M											
		A	B	C	D	E	F	G	H	J	K	L	M
Refer to SECTION 110, PAGE 1 for PARTS LIST INSTRUCTIONS													
BOLT (THRU)	11091												
Bolt-hex. head-1/4"-20 x 6 9/16"	C3AZ 10120-A *GY-740	2	2	2	2	2	2	2	2	2			
Lockwasher-1/4"	34805-S8(X-62)	2	2	2	2	2	2	2	2	2			
STUD (FIELD TERMINAL)	C8VY 11102-A *SZ-648	A	B	C	D	E	F	G	H	J			
SPRING (PLUNGER RETURN)	C8VY 11103-B *SZ-655	A	B	C	D	E	F	G	H	J			
GROMMET (TERMINAL INSULATOR)	11A120												
	C8VY 11A120-A *SZ-651	A	B	C	D	E	F	G	H	J			
SPACER (SOLENOID)	C8VY 11A122-A	A	B	C	D	E	F	G	H	J			
BAND (STARTING MOTOR)	11126												
	C8VY 11126-A	A	B	C	D	E	F	G	H	J			
Screw-No. 10-32 x 1 5/8"	27185-S(U-177-A)	A	B	C	D	E	F	G	H	J			
Nut-No. 10-32	34141-S(M-147)	A	B	C	D	E	F	G	H	J			
HOUSING ASSY. (DRIVE END)	11130												
	★ D3AZ 11130-A *SE-127-A	A	B	C				G	H				
	★ D4AZ 11130-B *SE-239				D	E	F						
HOUSING KIT (DRIVE END)	★ D7AZ 11130-A *SE-251									J			
Consists of 1-D4AF 11130-AA Housing 1-D1PF 11A130-AA Lubricant	1-C6VY 11036-A Washer 1-Instruction sheet												
Drive screw	375605-S(UU-16)				D	E	F	G	H	J			
BEARING (DRIVE HOUSING)	11135												
	★ D0AZ 11135-B *MC-209				D	E	F						
	★ D6AZ 11135-A *MC-189-A	A	B	C				G	H	J			
RIVET (PIN LEVER)	★ C8VY 11139-A	A	B	C	D	E	F	G	H	J			
RETAINER (DRIVE STOP)	C2DZ 11222-A *SZ-604	A	B	C	D	E	F	G	H	J			
RETAINER (DRIVE STOP RING)	11223												
	D6AZ 11223-A *SZ-730	A	B	C	D	E	F	G	H	J			
DRIVE ASSY.	11350												
	D6PZ 11350-C *SD-303	A	B	C	D	E	F	G	H	J			

NOTICE: When the parts list suffix is shown in the quantity required column, the quantity is one (1).

DESCRIPTION/RESTRICTIONS	PART NUMBER	STARTER PARTS LISTS 3A THRU 3M											
		A	B	C	D	E	F	G	H	J	K	L	M
Refer to SECTION 110, PAGE 1 for PARTS LIST INSTRUCTIONS													
SOLENOID ASSY.	11390												
	D6VZ 11390–A *SW–1219–B	A	B	C	D	E	F	G	H	J			
Screw & washer (attach solonoid to housing)– 1/4"–20 x 3/4"	382790–S(BB–84–B)	2			2								
PLUNGER ASSY. (SOLENOID)	C8VY 11393–A *SZ–653	A	B	C	D	E	F	G	H	J			
SCREW (POLE PIECE)– flat head–socket–7/16"–14 x 15/32"	C2DF 11415–A	4	4	4	4	4	4						

COPYRIGHT © 1986 — FORD MOTOR COMPANY — DEARBORN, MICHIGAN

DESCRIPTION/RESTRICTIONS	PART NUMBER	STARTER PARTS LISTS 4A THRU 4M											
		A	B	C	D	E	F	G	H	J	K	L	M
Note: Refer to SECTION 110, PAGE 1 for PARTS LISTS INSTRUCTIONS													
ARMATURE	11005												
	★ D1RY 11005-B *SME-340	A		C			F						
	D0RY 11005-A *SME-339		B										
Use w/assy. #1211206	D3RY 11005-A *SME-442				D								
Use w/assy. #1211228	D8RZ 11005-A *SME-450				D								
	D4RY 11005-A *SME-443					E							
	D6RY 11005-A *SM-447							G		J	K		
	E0RZ 11005-A *SME-467											L	
PLATE (BRUSH END)	11049												
	★ D2RY 11049-A *SHE-153-A	A		C			F	G		J			
	★ D3RY 11049-A *SHE-178				D								
	★ D4RY 11049-A *SHE-179					E					K		
	E0RZ 11049-A *SHE-211											L	
BRUSH KIT	11057												
"From 10/72"	D3RY 11057-A *SBE-155-A	A	B		D								
	D1RY 11057-B *SBE-159			C		E	F						
"Before 10/72"	D6RY 11057-A *SBE-174	A	B					G			K		
	D6RY 11057-B *SBE-175									J			
	E0RZ 11057-A *SBE-321											L	
SPRING (BRUSH)	11059												
Use w/assy. #1211206	★ D0RY 11059-A *MSE-497	4	4	4	4	4	4						
Use w/assay. #1211228	★ D6RY 11059-A *MSE-516				4			4		4	4		
	E0RZ 11059-A *MSE-531											4	
HOLDER (BRUSH)	11061												
	★ D2RY 11061-A *SBE-160-A	A		C			F	G		J	K		
	★ D0RY 11061-A *SBE-156		B		D								
	D4RY 11061-A *SBE-171					E							
	E0RZ 11061-A *SBE-322											L	

COPYRIGHT © 1986 — FORD MOTOR COMPANY — DEARBORN, MICHIGAN

DESCRIPTION/RESTRICTIONS	PART NUMBER	STARTER PARTS LISTS 4A THRU 4M											
		A	B	C	D	E	F	G	H	J	K	L	M
Note: Refer to SECTION 110, PAGE 1 for PARTS LISTS INSTRUCTIONS													
LEVER (MOTOR DRIVE)	11067												
	★ D2RY 11067-A *SZE-686-A	A		C			F						
	★ D0RY 11067-A *SZE-675		B		D	E		G			K		
	★ D6RY 11067-A *SZE-733									J			
	E0RZ 11067-A *SZE-816											L	
COIL (FIELD)	11082												
	★ D1RY 11082-C *SCE-396	A		C			F						
	★ D0RY 11082-A *SCE-393		B										
	D3RY 11082-A *SCE-513				D								
	★ D4RY 11082-A *SCE-514					E							
	★ D6RY 11082-A *SCE-521							G			K		
	★ D6RY 11082-B *SCE-522									J			
	E0RZ 11082-A *SCE-560											L	
THRU BOLT KIT	11091												
Not replaced-use w/assy. #1211206	★ D3RY 11091-A *SZE-720				D								
Use w/assy. #1211228	★ D8RZ 11091-A *SZE-747				D								
	★ D6RY 11091-A *SZE-731							G			K		
	E0RZ 11091-A *SZE-817											L	
SEAL (GEAR)	★ D1RY 11A101-A	A		C			F						
SWITCH KIT (HARDWARE)	11K119												
	D1RY 11K119-A	A											
Not replaced	★ D3RY 11K119-A *SKE-14				D								
	★ D6RY 11K119-A *SKE-333							G			K		
	★ D6RY 11K119-B *SKE-334				D					J			
Use w/assy. #1211228	E0RZ 11K119-A *SKE-338											L	
BAND (COVER) - not replaced	★ D0RY 11126-A		B										
ARMATURE KIT (HARDWARE)	11K126												
	★ D1RY 11K126-A *SKE-12	A				E	F	G			K		
	D0RY 11K126-A *SKE-6		B	C	D								
	E0RZ 11K126-A *SKE-337											L	

NOTICE: When the parts list suffix is shown in the quantity required column, the quantity is one (1).

DESCRIPTION/RESTRICTIONS	PART NUMBER	STARTER PARTS LISTS 4A THRU 4M											
		A	B	C	D	E	F	G	H	J	K	L	M
Note: Refer to SECTION 110, PAGE 1 for PARTS LISTS INSTRUCTIONS													
HOUSING (DRIVE END)	11130												
	★ D1RY 11130-B *SEE-135	A											
	★ D0RY 11130-A *SEE-132		B										
	★ D2RY 11130-A *SEE-139			C			F						
	D3RY 11130-A *SEE-240				D								
	D4RY 11130-A *SEE-241					E							
	★ D6RY 11130-A *SEE-248										K		
	★ D6RY 11130-B *SEE-250							G		J			
	D4RY 11130-B *SEE-292											L	
BEARING	11135												
Drive end	D1RY 11395-B	A		C		E							
Drive end	D0RY 11135-A *MCE-214		B				F	G	H	J	K		
Drive end	D3RY 11135-A *MCE-222				D							L	
Commutator end	D0RY 11135-B	A	B	C	D	E	F	G	H	J	K		
Commutator end	E0RZ 11135-A *MCE-433											L	
KIT (COMMUTATOR COVER)	E0RZ 11K136-A *SKE-339											L	
SCREW (POLE SHOES TO YOKE)	11K140												
Use to retain actuating lever	★ D0RY 11K140-A *SKE-8	A	B		D	E	F				K		
Kit (field hardware)–use pole shoes to yoke	D4RY 11K140-A *SKE-15					E				J			
Consists of 4 screws	★ D6RY 11K140-A *SK-331							G					
	E0RZ 11K140-A *SKE-340											L	
BRACKET (DRIVE RETURN STOP)	11K167												
	★ D0RY 11K167-A *SKE-10		B										
	D4RY 11K167-A *SKE-16					E							
RING (DRIVE STOP) Use w/assy. #1211228	★ D1RY 11222-B	A			D		F	G			K		
DRIVE ASSY.	11350												
	D2RY 11350-B *SDE-193-A	A											
10 teeth–use w/assy. #1211206	★ D1RY 11350-C *SDE-192		B		D								
Use w/assy. #1211228	D8RZ 11350-A *SDE-308				D								
9 teeth	D2RY 11350-A *SDE-199			C			F						
9 teeth	★ D4RY 11350-A *SDE-6317					E							

COPYRIGHT © 1986 — FORD MOTOR COMPANY — DEARBORN, MICHIGAN

DESCRIPTION/RESTRICTIONS	PART NUMBER	STARTER PARTS LISTS 4A THRU 4M											
		A	B	C	D	E	F	G	H	J	K	L	M
Note: Refer to SECTION 110, PAGE 1 for PARTS LISTS INSTRUCTIONS													
DRIVE ASSY.	11350 — Cont'd												
	D6RY 11350-A *SDE-304							G					
	D6RY 11350-B *SDE-305									J			
	D6RY 11350-C *SDE-306										K		
	E0RZ 11350-A *SDE-328											L	
SOLENOID ASSY.	11390												
	★ D1RY 11390-F *SWE-1093	A		C									
	★ D1RY 11390-C *SWE-1057		B			E					K		
#0331303005	D3RY 11390-A *SWE-1228				D			G			L		
	★ D1RY 11390-D *SWE-1058						F						
#0331303016	★ D6RY 11390-B *SWE-1395									J			
BUSHING (DRIVE HOUSING)-refer to gp 11135 in this parts list	11395												
COVER (SOLENOID SWITCH)- not replaced	★ D0RY 11401-A *SZE-678		B										
SEAL (RELAY MOUNTING)-not replaced	★ D0RY 11440-A		B		D		F						

NOTICE: When the parts list suffix is shown in the quantity required column, the quantity is one (1).

DESCRIPTION/RESTRICTIONS	PART NUMBER	STARTER PARTS LISTS 5A THRU 5M											
		A	B	C	D	E	F	G	H	J	K	L	M
Note: Refer to SECTION 110, PAGE 1 for PARTS LIST INSTRUCTIONS													
ARMATURE	11005												
	D2FZ 11005-A *SM-333-A	A	B	C	D								
R/b one each of E1ZZ 11005-A, E1FZ 11067-A & E1PZ 11350-B	★ D7FZ 11005-A *SM-448					E	F	G					
SEAL (REAR HOUSING BEARING)	D0AZ 11K013-A	A	B	C	D								
WASHER (ARMATURE THRUST)	C6VY 11036-A *SZ-640	A	B	C	D	E	F	G					
PLATE and BUSHING (BRUSH END)	11049												
	★ D4FZ 11049-A *SH-176	A		C									
	★ D4ZZ 11049-B *SH-177-A		B		D								
	D7AZ 11049-A *SH-183					E							
	D7ZZ 11049-A *SH-186						F						
	★ D7FZ 11049-A *SH-184							G					
Screw and washer (cable to plate)- 1/4"-20 x 5/8" w/pilot	385022-S100 (BB-551-DB)					E	F	G					
BUSHING (BRUSH END PLATE)	11052												
	★ C2DF 11052-A *MC-93	A		C									
	D3AZ 11052-A *MC-220		B		D	E	F	G					
BRUSH SET	11057												
	D1FZ 11057-A *SB-164	A		C									
Consists of 1-D12F 11055-BA Brush; 1-D12F 11056-A Brush; 1-D12F 11056-CA Brush; 1-25247-S Screw													
	D4ZZ 11057-A *SB-170		B		D								
Consists of 1-C2DF 11056-A Brush; 1-D32F 11055-BA Brush; 2-25231-S Screws													
	D7AZ 11057-A *SB-176					E	F	G					
Consists of 1-D8AF 11055-BA Brush; 1-Instruction Sheet; 2-D8AF 11056-AA Brush; 2- 50399-S36 Screw													
SPRING (BRUSH)	C2DZ 11059-A	4	4	4	4								
	D7AZ 11059-A							4					
COVER (PLUNGER)	11060												
	★ C2DF 11060-A	A	B	C	D								
	E1FZ 11060-A *SZ-766					E	F	G					
HOLDER (BRUSH)	D7AZ 11061-A *SB-177					E	F	G					
INSULATOR (BRUSH HOLDER)	11062												
	D6ZZ 11062-A	2	2	2	2								
	D7AZ 11062-A *SZ-737					E	F	G					

COPYRIGHT © 1986 — FORD MOTOR COMPANY — DEARBORN, MICHIGAN

DESCRIPTION/RESTRICTIONS	PART NUMBER	STARTER PARTS LISTS 5A THRU 5M											
		A	B	C	D	E	F	G	H	J	K	L	M
Note: Refer to SECTION 110, PAGE 1 for PARTS LIST INSTRUCTIONS													
GASKET (PLUNGER COVER)	★ C2DF 11065-A *SZ-592	A	B	C	D	E	F						
LEVER and PIN KIT (DRIVE)	E1FZ 11067-A *SZ-694-A	A	B	C	D	E	F	G					
Consists of 1-D42F 11067-AA Lever; 1-306308-S Pin													
INSULATOR (SWITCH)	C2DZ 11068-A	A	B	C	D								
Screw-pan head-No. 5-40 x 1/2"	373805-S7(BB-636-C)	A											
Nut-hex.-No. 5-40	373804-S7(MM-151-C)	A											
COIL (FIELD)-Complete	11082												
	★ D2FZ 11082-B *SC-348-B	A		C									
	★ D6ZZ 11082-A *SC-532		B		D								
	D7FZ 11082-A *SC-524					E		G					
	★ D7ZZ 11082-A *SC-527						F						
BOLT (THRU)-hex. head-1/4"-20 x 5 9/16"	C2DF 11091-A	2	2	2	2	2	2	2					
TERMINAL KIT (FIELD)	C6DZ 11102-B	A		C	D								
Consists of 1-C2DZ 11093-A Washer; 1-18 11094-B Washer; ‡1-B5A 11095-A Washer; ‡1-7RA 11095-A Washer; 1-C7AF 11102-A Terminal; 1-C2DZ 11107-A Insulator; 1-33922-S Nut; 1-381561-S Nut; ‡Alternate													
SPRING (PLUNGER RETURN)	C2DF 11103-A *SZ-629	A	B	C	D	E	F	G					
SLEEVE (COIL RETAINING)	C2DZ 11105-A	A	B	C	D	E	F	G					
GROMMET	D7FZ 11A120-A *SZ-743					E	F	G					
BAND (COVER)	11126												
	★ D1FZ 11126-A	A											
Use w/assy. #D6EF 11001-BA				C									
Use w/assy. #EDD6EF 11001-BA	★ D8DZ 11126-A			C									
	★ D4ZZ 11126-A		B		D								
HOUSING KIT (DRIVE END)	11130												
	D1FZ 11130-B *SE-131-A	A		C		E		G					
Consists of 1-D0AZ 11K013-A Seal; 1-D42F 11130-AA Housing; 1-D1PF 11A130-AA Lubricant; 1-C2DZ 11222-A Ring; 1-D6AZ 11223-A Retainer; 1-C6VY 11036-A Washer													
	★ D4ZZ 11130-A *SE-238		B		D		F						
Consists of 1-D0AZ 11K013-A Seal; 1-D4ZF 11130-AA Housing; 1-D1PF 11A130-AA Lubricant; 1-C6VY 11036-A Washer													
POINT KIT (CONTACT)	11134												
	D1FZ 11134-A *SZ-693	A		C									
Consists of 1-D8PF 11068-A Insulator; 1-D12F 11116-BA Spring; 1-D8PF 11176-AA Post; 1-D8PF 11181-CA Insulator; 1-D2PF 11460-AA Screw													

NOTICE: When the parts list suffix is shown in the quantity required column, the quantity is one (1).

DESCRIPTION/RESTRICTIONS	PART NUMBER	STARTER PARTS LISTS 5A THRU 5M											
		A	B	C	D	E	F	G	H	J	K	L	M
Note: Refer to SECTION 110, PAGE 1 for PARTS LIST INSTRUCTIONS													
POINT KIT (CONTACT)	11134 — Cont'd												
	★ D4ZZ 11134-A *SZ-718		B		D								
Consists of 1-C2DZ 11068-A Insulator 1-D4ZF 11116-AA Spring	1-C2DF 11176-B Post 1-C2DF 11181-A Insulator	1-51755-S Screw 1-60024-S Rivet											
	D7FZ 11134-A *SZ-741					E	F	G					
Consists of 1-8BA 11048-B Insulator 1-D8AF 11071-AA Terminal 1-D8EF 11116-AA Spring	1-D8EF 11177-AA Post 1-D8EF 11181-AA Insulator	1-387446-S Rivet 1-358755-S7 Rivet											
BEARING (DRIVE HOUSING)	★ D0AZ 11135-B *MC-209	A	B	C	D	E	F	G					
RING (DRIVE STOP)	C2DZ 11222-A *SZ-604	A	B	C	D			G					
RETAINER (DRIVE STOP RING)	11223												
	D6AZ 11223-A *SZ-730	A	B	C	D			G					
DRIVE ASSY. (STARTER MOTOR)-incl. attaching parts	11350												
R/b E1PZ 11350-B (6/83)	★ D6PZ 11350-A *SD-301	A	B	C	D	E	F	G					
SCREW (POLE PIECE)-flat head (socket)-7/16"-14 x 15/32"	C2DF 11415-A	3	3	3	3	3	3	3					
INSULATOR (FRONT END PLATE)	★ D1FZ 11431-A	2	2	2	2								

COPYRIGHT © 1986 — FORD MOTOR COMPANY — DEARBORN, MICHIGAN

YEAR	MODEL/RESTRICTIONS	ENGINE CYL.	ENGINE C.I.D. (C.C.D.)	PART NUMBER	DESCRIPTION	QTY.
12K000	COVER ASSY. (DISTRIBUTOR SUPPRESSOR) ⊕ 2800 cc					
76/78	J	6	⊕171	★ D5RY 12K000-A	Not replaced	1
12A012	SUPPRESSOR PLUG (DISTRIBUTOR) ⊕ 2800 cc					
76/78	J	6	⊕171	★ D5RY 12A012-A	1 ohm-not replaced	1
12A019	SUPPRESSOR (IGNITION COIL)					
73/78	J	4&6	All	D3RY 12A019-A	#71HM 12A019-AA	1
12A024	IGNITION CABLE (HIGH TENSION RADIO RESISTANCE)					
73/74	A,C,D,F,K,P,Y	6&8	All	★ C3AZ 12A024-A	Linen core-25 foot roll-not replaced	AR
73/74	A,C,D,F,K,P,Y	6&8	All	★ C3AZ 12A024-B	Steel core-25 foot roll-r/b 8A-14296-B	AR
12029	COIL ASSY. (IGNITION LESS MOUNTING STRAP) ▲ 2000 cc ♦ 2600 cc ⊕ 2800 cc					
73/74	A,C,D,F,K,P,Y - - w/o breakerless ignition	6&8	All	B6A 12029-B	*DG-5	1
74	L	4	All			1
75/76	A,C,D,F,G,J,K,L,P,Y - - w/breakerless ign.	4,6 &8	All	D5AZ 12029-A	*DG-314	1
77	A,D,F,K - - exc. Calif.	6&8	All			1
77/	J,L	4&6	All			1
77	G,P - - exc. Calif	6	200,250			1
77/	G,P,V - - exc. Calif.	8	302			1
77	G,V - - exc. Calif.	8	351W			1
78/	G	6	All			1
78/	P	4&6	All			1
78/	D,F,K	8	All			1
78	A	8	All			1
79	A,J - - exc. Calif.	8	302			1
79	A	8	351W			1
77	A,D,F,K - - Calif.	6&8	All	D7AZ 12029-A	*DG-316	1
77	G,P - - Calif.	6	200,250			1
77/	G,P,V - - Calif.	8	302			1
77	G,V - - Calif	8	351W			1
79	A,J - - Calif.	8	302			1
73/74	J	4&6	▲122, ♦159	★ D1RY 12029-A	*DGE-49-not replaced	1
74	J	6	⊕171			1
73/74	K - - w/breakerless ignition	8	All	D5PZ 12029-A	*DG-313-A	1
74	A,C,D,F,P,Y - - w/breakerless ign.	6&8	All			1
73/74	J	4	▲122	52737-ES40	Screw (coil to block)-No. 14-10 x 5/8"- (Metric)	2
76/78	J	4&6	All	E610887-S71	(AU-4-R)-screw (coil to body)	2
12043	STRAP (IGNITION COIL MOUNTING) @ 2300 cc					
73/74	C	6	200,250	C0AF 12043-A	*DY-50	1
73/76	G,P	6	200,250			1
76/	J	4&6	All			1
74	L	4	@140			1
76/	L "From 12/8/75"	4&6	All			1
78/	P	4	@140			1
75/76	L "Before 12/8/75"	4&6	All	D5FZ 12043-A	*DY-170	1
77/	G,P	6	200,250	B8S 12043-B	*DY-52	1
79	J	6	200			1
73/76	G,P	8	302	★ D00Z 12043-A	*DY-89-not replaced	1
73/74	C	8	302			1
77	F,G,P,V	8	302	D70Z 12043-A	*DY-202	1

COPYRIGHT © 1986 — FORD MOTOR COMPANY — DEARBORN, MICHIGAN

1973/79 LINCOLN-MERCURY CARS

YEAR	MODEL/RESTRICTIONS	ENGINE CYL.	ENGINE C.I.D. (C.C.D.)	PART NUMBER	DESCRIPTION	QTY.
12043	**STRAP (IGNITION COIL MOUNTING) — Cont'd @ 2300 cc**					
73/74	C,F	8	351C, 400	★ D1AZ 12043-A	*DY-95-not replaced	1
73	A,Y	8	351C, 400			1
74	A,Y	8	351C, 400	★ D2SZ 12043-A	*DY-107-not replaced	1
75/76	A,C,F,Y "Before 4/1/76"	8	351M, 400	★ D5AZ 12043-A	*DY-175-not replaced	1
76	A,C,F,Y "From 4/1/76"	8	351M, 400	★ D60Z 12043-A	*DY-175-A -not replaced	1
77/78	A	8	351M	D7VY 12043-A	*DY-206	1
77/	F	8	351M			1
77/78	A	8	400			1
77/	D,F,K	8	400			1
73	C	8	351W	C8TZ 12043-A	*DY-70	1
74/76	C,F,G,Y	8	351W	D3TZ 12043-A	*DY-124	1
77	G,V	8	351W	D70Z 12043-B	*DY-203	1
77/	F	8	351W			1
73/74	D	8	429,460	★ D3VY 12043-A	*DY-123-not replaced	1
73	A,C,Y	8	429,460			1
74	C - - without T/E	8	460 exc. P/C			1
74	C - - T/E	8	460	★ D40Z 12043-A	*DY-147-not replaced	1
75/76	A,C,D,F,Y	8	460			1
73/76	K	8	460	D6SZ 12043-A	*DY-192	1
74	A,Y	8	460			1
74	C	8	460 P/C			1
77/78	A,D,K	8	460	D7SZ 12043-B	*DY-210	1
78/	F,G,P,V	8	302	D8AZ 12043-A	*DY-236	1
79	J	8	302			1
79	A	8	302, 351W	D9AZ 12043-A	*DY-254	1
12060	**WIRING ASSY. (IGNITION COIL JUMPER)**					
77	P	8	302	D7ZZ 12060-A	#D7ZB 12060-AA-Ignition coil to 14289 wiring	1
77	F,G,V - - exc. Calif. or Hi-altitude carb.	8	302			1
77	F,G,V	8	351W			1
79	F	8	351W			1
77	G,P,V - - Calif. or Hi-altitude	8	302	★ D7ZZ 12060-B	#D7ZB 12060-BA-Ignition coil to 14289 wiring	1
78	F,G,P - - exc. Calif.	8	302	D8AZ 12060-A	#D8AB 12060-AA- Ignition coil to fuel vapor solenoid to 14289 wire	1
78	F	8	351W			1
79	F,G,J - - exc. Calif.	8	302			1
79	P - - with T/E exc. Calif.	8	302			1
79	P - - A/T-with Hi-altitude carb.	8	302			1
78/79	G,P - - A/T-Calif.	9	302	D94Y 12060-A	#D84B 12060-AC, D94B 12060-AA	
79	J - - A/T - Calif.	8	302			1
78/	V	8	302	D84Y 12060-B	#D84B 12060-BA,BB-Ignition coil to fuel vapor solenoid to 14289 wire	1
12A075	**Refer to group 12127 for Distributor Parts List Instructions**					

12A091 VALVE ASSY. (DISTRIBUTOR VACUUM CONTROL)–Also refer to groups 8A564 and 9D473

To select the correct vacuum control valve by knowing the identification number only:

- Check the vacuum control valve, taken from the vehicle, for an identification part number.
- Refer to the Identification Chart below.
- Find the vacuum control valve identification part number (sequenced numerically) and find the service part number in the adjacent column.

For example:

The service part number for vacuum control valve identified D3AE–BA is D3AZ 12A091–B.

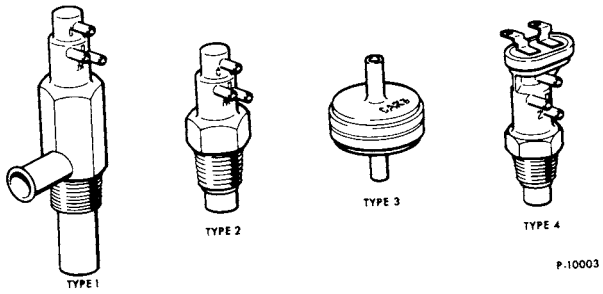

IDENTIFICATION CHART

TYPE	IDENTIFICATION	SERVICE PART NUMBER	COLOR	TYPE	IDENTIFICATION	SERVICE PART NUMBER	COLOR
2	D0AE–A	D5VY 12A091–A *DY–165		3	D3DE–AA	D3DZ 12A091–B *DY–139–A	black and brown
2	D12E–AA	D7AZ 12A091–A *DY–165–A		3	D3DE–AB	D3DZ 12A091–B *DY–139–A	black and brown
2	D5VE–AA	D5VY 12A091–A *DY–165		3	D30E–AA	D30Z 12A091–A *DY–129–A	black and blue
2	D52E–AA	D5FZ 12A091–A *DY–161		3	D30E–BA	D30Z 12A091–B *DY–137–A	black and orange
2	D7AE–A1A	D5VY 12A091–A *DY–165		3	D3TE–AA	D3TZ 12A091–C *DY–138–A	black and gray
2	D7AE–B1A	D7AZ 12A091–A *DY–165–A		3	D3TE–AB	D3TZ 12A091–C *DY–138–A	black and gray
2	74TF–BA	D5VY 12A091–A *DY–165–A		3	D32E–AA	D3FZ 12A091–A *DY–135	black and white
3	D12E–B	D1FZ 12A091–B *DY–128	black and red	3	D32E–BA	D3FZ 12A091–B *DY–136	black and green
3	D2DE–AA	D3AZ 12A091–A *DY–116–A	black and yellow	3	D5TE–BA	D5TZ 12A091–A *DY–181	black and green
3	D20E–AA	D3FZ 12A091–A *DY–135	black and white	3	D8AE–CA	D8AZ 12A091–A *DY–239	white and white
3	D20E–BA	D20Z 12A091–B *DY–115–A	black and green	3	767F–AA	D3TZ 12A091–C *DY–138–A	black and gray
3	D20E–CA	D3AZ 12A091–B *DY–120–A	black and red	3	77TF–AA	D7RY 12A091–A *DY–245	black and white
3	D3AE–AA	D3AZ 12A091–A *DY–116–A	black and yellow	4	D2SE–AA	D2SZ 12A091–A *DY–122	
3	D3AE–BA	D3AZ 12A091–B *DY–120–A	black and red	4	D50E–AA	D50Z 12A091–A *DY–167	

COPYRIGHT © 1986 — FORD MOTOR COMPANY — DEARBORN, MICHIGAN

12A091 VALVE ASSY. (DISTRIBUTOR VACUUM CONTROL)—Also refer to groups 8A564 and 9D473

HOW TO FIND VACUUM CONTROL VALVES

To select the correct VACUUM CONTROL valve the following information must be known and utilized–

- Year
- Car line (Mercury, Capri, Lincoln, etc.)
- Engine (4 cyl. 2.3L, 6 cyl. 4.1L–250 C.I.D., 8 cyl. 5.8L–351 C.I.D., etc.)
- Transmission (manual, automatic, etc.)
- Other factors (California, hi–altitude, etc.)
- In some cases, more than one service VACUUM CONTROL valve may be specified in the catalog based on the above information. In these cases the identification part number shown on the VACUUM CONTROL valve is also required.

For example:

If a VACUUM CONTROL valve is required for a 1975 Lincoln with an 8 cylinder 7.5L (460 C.I.D.) engine–

- Refer to 1975 D (Lincoln)
- Read down to find "D 8 (cyl.) 460 (C.I.D.)".

The service part numbers listed for this application are D3OZ 12A091–A and D3AZ 12A091–A. Therefore, to select the correct service part number, the identification part number shown on the VACUUM CONTROL valve taken from the vehicle, must be used.

If the VACUUM CONTROL valve identification is D3OE–AA the service part number is D3OZ 12A091–A. If the VACUUM CONTROL valve identification is D3AE–AA the service part number is D3AZ 12A091–A

YEAR	MODEL/RESTRICTIONS	ENGINE CYL.	ENGINE C.I.D. (C.C.D.)	PART NUMBER	DESCRIPTION	QTY.
12A091	VALVE ASSY. (DISTRIBUTOR VACUUM CONTROL)—Also refer to groups 8A564 and 9D473 @ 2300 cc ▲ 2000 cc ⊕ 2800 cc					
	APPLICATION CHART					
	TYPE 2					
	1973					
	A (Mercury)					
73	A	8	All	D5VY 12A091–A	*DY–165–#DOAE–A,D5VE–AA–located in water jacket	1
	C (Montego)					
73	C	8	All	D5VY 12A091–A	*DY–165–#DOAE–A,D5VE–AA–located in water jacket	1
	D (Lincoln)					
73	D	8	All	D5VY 12A091–A	*DY–165–#DOAE–A,D5VE–AA–located in water jacket	1
	F (Cougar)					
73	F	8	All	D5VY 12A091–A	*DY–165–#DOAE–A,D5VE–AA–located in water jacket	1

YEAR	MODEL/RESTRICTIONS	ENGINE CYL.	ENGINE C.I.D. (C.C.D.)	PART NUMBER	DESCRIPTION	QTY.
12A091	VALVE ASSY. (DISTRIBUTOR VACUUM CONTROL)–Also refer to groups 8A564 and 9D473 — Cont'd @ 2300 cc ▲ 2000 cc ⊕ 2800 cc					

APPLICATION CHART

Refer to page 4 for Application Instructions

TYPE 2

1973

K (Mark IV)

73	K	8	All	D5VY 12A091–A	*DY–165–#D0AE–A,D5VE–AA–located in water jacket	1

P (Comet)

73	P	8	302	D5VY 12A091–A	*DY–165–#D0AE–A,D5VE–AA–located in water jacket	1

Y (Meteor)

73	Y	8	All	D5VY 12A091–A	*DY–165–#D0AE–A,D5VE–AA–located in water jacket	1

1974

A (Mercury)

74	A	8	All	D5VY 12A091–A	*DY–165–#D0AE–AA,D5VE–AA–located in water jacket	1

C (Montego)

74	C	8	All	D5VY 12A091–A	*DY–165–#D0AE–AA,D5VE–AA–located in water jacket	1

D (Lincoln)

74	D	8	All	D5VY 12A091–A	*DY–165–#D0AE–AA,D5VE–AA–located in water jacket	1

F (Cougar)

74	F	8	All	D5VY 12A091–A	*DY–165–#D0AE–AA,D5VE–AA–located in water jacket	1

J (Capri)

74	J	4	▲122	D7AZ 12A091–A	*DY–165–A–#D12E–AA–located in engine block	1
74	J	6	⊕171			1

K (Mark IV)

74	K	8	All	D5VY 12A091–A	*DY–165–#D0AE–AA,D5VE–AA–located in water jacket	1

L (Bobcat)

74	L	4	@140	D7AZ 12A091–A	*DY–165–A–#D12E–AA–located in engine block	1

P (Comet)

74	P	8	302	D5VY 12A091–A	*DY–165–#D0AE–AA,D5VE–AA–located in water jacket	1

Y (Meteor)

74	Y	8	All	D5VY 12A091–A	*DY–165–#D0AE–AA,D5VE–AA–located in water jacket	1

COPYRIGHT © 1986 — FORD MOTOR COMPANY — DEARBORN, MICHIGAN

YEAR	MODEL/RESTRICTIONS	ENGINE CYL.	ENGINE C.I.D. (C.C.D.)	PART NUMBER	DESCRIPTION	QTY.
12A091	VALVE ASSY. (DISTRIBUTOR VACUUM CONTROL)—Also refer to groups 8A564 and 9D473 — Cont'd @ 2300 cc ▲ 2000 cc ⊕ 2800 cc					

APPLICATION CHART

Refer to page 4 for Application Instructions

TYPE 2

1975

A (Mercury)

75	A	8	All	D5VY 12A091-A	*DY-165-#D5VE-AA-located in water jacket	1

C (Montego)

75	C	8	All	D5VY 12A091-A	*DY-165-#D5VE-AA-located in water jacket	1

D (Lincoln)

75	D	8	All	D5VY 12A091-A	*DY-165-#D5VE-AA-located in water jacket	1

F (Cougar)

75	F	8	All	D5VY 12A091-A	*DY-165-#D5VE-AA-located in water jacket	1

G (Monarch)

75	G	6	200,250	D5VY 12A091-A	*DY-165-#D5VE-AA-located in water jacket	1
75	G	8	All			1

J (Capri)

75	J - - A/C	4	@140	D5FZ 12A091-A	*DY-161-#D52E-AA	1

K (Mark IV)

75	K	8	All	D5VY 12A091-A	*DY-165-#D5VE-AA-located in water jacket	1

L (Bobcat)

75	L - - A/C	4	@140	D5FZ 12A091-A	*DY-161-#D52E-AA	1
75	L	6	⊕171	D5VY 12A091-A	*DY-165-#D5VE-AA	1

P (Comet)

75	P	6	200,250	D5VY 12A091-A	*DY-165-#D5VE-AA-located in water jacket	1
75	P	8	302			1

Y (Meteor)

75	Y	8	All	D5VY 12A091-A	*DY-165-#D5VE-AA-located in water jacket	1

1976

A (Mercury)

76	A	8	All	D5VY 12A091-A	*DY-165-#D5VE-AA-located in water jacket	1

C (Montego)

76	C	8	All	D5VY 12A091-A	*DY-165-#D5VE-AA-located in water jacket	1

D (Lincoln)

76	D	8	All	D5VY 12A091-A	*DY-165-#D5VE-AA-located in water jacket	1

F (Cougar)

76	F	8	All	D5VY 12A091-A	*DY-165-#D5VE-AA-located in water jacket	1

G (Monarch)

76	G	6	200,250	D5VY 12A091-A	*DY-165-#D5VE-AA-located in water jacket	1
76	G	8	All			1

YEAR	MODEL/RESTRICTIONS	ENGINE CYL.	ENGINE C.I.D. (C.C.D.)	PART NUMBER	DESCRIPTION	QTY.
12A091	VALVE ASSY. (DISTRIBUTOR VACUUM CONTROL)—Also refer to groups 8A564 and 9D473 — Cont'd @ 2300 cc ▲ 2000 cc ⊕ 2800 cc					

APPLICATION CHART

Refer to page 4 for Application Instructions

TYPE 2

1976

J (Capri)

76	J – – A/C	4	@140	D5FZ 12A091–A	*DY–161–#D52E–AA	1
76	J	6	⊕171	D5VY 12A091–A	*DY–165–#D5VE–AA	1

K (Mark IV)

76	K	8	All	D5VY 12A091–A	*DY–165–#D5VE–AA–located in water jacket	1

L (Bobcat)

76	L – – A/C	4	@140	D5FZ 12A091–A	*DY–161–#D52E–AA	1

P (Comet)

76	P	6	200,250	D5VY 12A091–A	*DY–165–#D5VE–AA–located in water jacket	1
76	P	8	302			1

Y (Meteor)

76	Y	8	All	D5VY 12A091–A	*DY–165–#D5VE–AA–located in water jacket	1

1977

A (Mercury)

77	A	8	All	D5VY 12A091–A	*DY–165–#D5VE–AA,D7AE–A1A–located in water jacket	1

D (Lincoln)

77	D	8	All	D5VY 12A091–A	*DY–165–#D5VE–AA,D7AE–A1A–located in water jacket	1

F (Cougar)

77	F	8	All	D5VY 12A091–A	*DY–165–#D5VE–AA,D7AE–A1A–located in water jacket	1

G (Monarch)

77	G	8	302	D5VY 12A091–A	*DY–165–#D5VE–AA,D7AE–A1A–located in water jacket	1

J (Capri)

77	J – – A/C	4	@140	D5FZ 12A091–A	*DY–161–#D52E–AA	1

K (Mark V)

77	K	8	All	D5VY 12A091–A	*DY–165–#D5VE–AA,D7AE–A1A–located in water jacket	1

L (Bobcat)

77	L – – A/C	4	@140	D5FZ 12A091–A	*DY–161–#D52E–AA	1

P (Comet)

77	P	8	302	D5VY 12A091–A	*DY–165–#D5VE–AA,D7AE–A1A–located in water jacket	1

V (Versailles)

77	V	8	All	D5VY 12A091–A	*DY–165–#D5VE–AA,D7AE–A1A–located in water jacket	1

COPYRIGHT © 1986 — FORD MOTOR COMPANY — DEARBORN, MICHIGAN

YEAR	MODEL/RESTRICTIONS	ENGINE CYL.	ENGINE C.I.D. (C.C.D.)	PART NUMBER	DESCRIPTION	QTY.
12A091	VALVE ASSY. (DISTRIBUTOR VACUUM CONTROL)—Also refer to groups 8A564 and 9D473 — Cont'd @ 2300 cc ▲ 2000 cc ⊕ 2800 cc					

APPLICATION CHART

Refer to page 4 for Application Instructions

TYPE 2

1978

A (Mercury)

78	A	8	All	D7AZ 12A091-A	*DY-165-A-#D7AE-B1A	1

D (Lincoln)

78	D	8	400,460	D7AZ 12A091-A	*DY-165-A-#D7AE-B1A	1

F (Cougar)

78	F	8	All	D7AZ 12A091-A	*DY-165-A-#D7AE-B1A	1

G (Monarch)

78	G	8	302	D7AZ 12A091-A	*DY-165-A-#D7AE-B1A	1

K (Mark V)

78	K	8	400,460	D7AZ 12A091-A	*DY-165-A-#D7AE-B1A	1

P (Zephyr)

78	P	6	200	D7AZ 12A091-A	*DY-165-A-#D7AE-B1A	1
78	P	8	302			1

V (Versailles)

78	V	8	302	D7AZ 12A091-A	*DY-165-A-#D7AE-B1A	1

1979

A (Mercury)

79	A	8	302	D7AZ 12A091-A	*DY-165-A-#D7AE-B1A	1

D (Lincoln)

79	D	8	400	D7AZ 12A091-A	*DY-165-A-#D7AE-B1A	1

F (Cougar)

79	F	8	351M	D7AZ 12A091-A	*DY-165-A-#D7AE-B1A	1

J (Capri)

79	J — — A/T—Calif.	6	⊕171	D7AZ 12A091-A	*DY-165-A-#D7AE-B1A	1
79	J — — M/T—exc. Calif.	8	302	D7AZ 12A091-A	*DY-165-A-#D7AE-B1A	1

K (Mark V)

79	K	8	400	D7AZ 12A091-A	*DY-165-A-#D7AE-B1A	1

L (Bobcat)

79	L — — A/T—Calif.	6	⊕171	D7AZ 12A091-A	*DY-165-A-#D7AE-B1A	1

P (Zephyr)

79	P	6	200	D7AZ 12A091-A	*DY-165-A-#D7AE-B1A	1
79	P — — w/Hi-altitude carb.	8	302			1

V (Versailles)

79	V	8	302	D7AZ 12A091-A	*DY-165-A-#D7AE-B1A	1

YEAR	MODEL/RESTRICTIONS	ENGINE CYL.	ENGINE C.I.D. (C.C.D.)	PART NUMBER	DESCRIPTION	QTY.
12A091	VALVE ASSY. (DISTRIBUTOR VACUUM CONTROL)—Also refer to groups 8A564 and 9D473 — Cont'd @ 2300 cc ▲ 2000 cc ⊕ 2800 cc					

APPLICATION CHART

Refer to page 4 for Application Instructions

TYPE 3

1973

A (Mercury)

73	A	8	351C	D3FZ 12A091-B	*DY-136-#D32E-BA-black and green	1
73	A(71)	8	400			1
73	A(exc. 71) - - with 2.75 axle	8	400	D3AZ 12A091-A	*DY-116-A-#D3AE-AA-black and yellow	1
73	A(exc. 71) - - with 3.25 axle	8	400	D30Z 12A091-B	*DY-137-A-#D30E-BA,D3TE-BA-black and orange	1
73	A - - with 3.25 axle	8	429	D3AZ 12A091-A	*DY-116-A-#D3AE-AA-black and yellow	1
73	A	8	429,460	D30Z 12A091-A	*DY-129-A-#D30E-AA-black and blue	1
73	A	8	429,460	D3FZ 12A091-B	*DY-136-#D32E-BA-black and green	1
73	A(exc. 71) - - with 2.75 axle	8	460	D3AZ 12A091-A	*DY-116-A-#D3AE-AA-black and yellow	1
73	A	8	460, 460 P/C	D3AZ 12A091-B	*DY-120-A-#D20E-CA,D3AE-BA-black and red	1

C (Montego)

73	C	6	250	D3FZ 12A091-A	*DY-135-#D20E-AA,D32E-AA-black and white	2
73	C(71)	6	250	D3FZ 12A091-B	*DY-136-#D32E-BA-black and green	1
73	C - - A/T	6	250	D3DZ 12A091-B	*DY-139-A-#D3DE-AB-black and brown	1
73	C - - A/T	6	250	D3AZ 12A091-A	*DY-116-A-#D3AE-AA-black and yellow	1
73	C - - A/T - exc. Calif.	6	250	D3TZ 12A091-C	*DY-138-A-#D3TE-AA,AB-black and gray	1
73	C - - M/T exc. Calif.	8	302	D3FZ 12A091-A	*DY-135-#D20E-AA,D32E-AA-black and white	1
73	C - - Calif.	8	302	D30Z 12A091-A	*DY-129-A-#D30E-AA-black and blue	1
73	C(71)	8	302	D3FZ 12A091-B	*DY-136-#D32E-BA-black and green	1
73	C	8	351C			1
73	C	8	351W	D3AZ 12A091-B	*DY-120-A-#D20E-CA,D3AE-BA-black and red	1
73	C - - Calif.	8	400	D3FZ 12A091-A	*DY-135-#D20E-AA,D32E-AA-black and white	1
73	C - - with 2.75 axle	8	400	D3FZ 12A091-B	*DY-136-#D32E-BA-black and green	1
73	C(exc. 71) - - with 2.75 axle	8	400	D3AZ 12A091-A	*DY-116-A - #D3AE-AA-black and yellow	1
73	C	8	400	D30Z 12A091-B	*DY-137-A-#D30E-BA,D3TE-BA-black and orange	1
73	C	8	429,460	D30Z 12A091-A	*DY-129-A-#D30E-AA-black and blue	1
73	C	8	429,460	D3FZ 12A091-B	*DY-136-#D32E-BA-black and green	1
73	C	8	460, 460P/C	D3AZ 12A091-B	*DY-120-A-#D20E-CA,D3AE-BA-black and red	1

D (Lincoln)

73	D	8	429,460	D30Z 12A091-A	*DY-129-A-#D30E-AA-black and blue	1
73	D	8	429,460	D3FZ 12A091-B	*DY-136-#D32E-BA-black and green	1
73	D	8	460	D3AZ 12A091-A	*DY-116-A-#D3AE-AA-black and yellow	1

F (Cougar)

73	F	8	351C	D3FZ 12A091-B	*DY-136-#D32E-BA-black and green	1

COPYRIGHT © 1986 — FORD MOTOR COMPANY — DEARBORN, MICHIGAN

YEAR	MODEL/RESTRICTIONS	ENGINE CYL.	ENGINE C.I.D. (C.C.D.)	PART NUMBER	DESCRIPTION	QTY.
12A091	VALVE ASSY. (DISTRIBUTOR VACUUM CONTROL)—Also refer to groups 8A564 and 9D473 — Cont'd @ 2300 cc ▲ 2000 cc ⊕ 2800 cc					

APPLICATION CHART

Refer to page 4 for Application Instructions

TYPE 3

1973

J (Capri)

73	J	4&6	All	D3AZ 12A091-B	*DY-120-A-#D20E-CA,D3AE-BA-black and red	1

K (Mark IV)

73	K	8	429,460	D30Z 12A091-A	*DY-129-A-#D30E-AA-black and blue	1
73	K	8	429,460	D3FZ 12A091-B	*DY-136-#D32E-BA-black and green	1
73	K	8	460	D3AZ 12A091-A	*DY-116-A-#D3AE-AA-black and yellow	1

P (Comet)

73	P	6	200	D3FZ 12A091-A	*DY-135-#D20E-AA,D32E-AA-black and white	1
73	P	6	200	D3TZ 12A091-C	*DY-138-A-#D3TE-AA,AB-black and gray	1
73	P	6	200	D3FZ 12A091-B	*DY-136-#D32E-BA-black and green	1
73	P – – M/T	6	200	D3AZ 12A091-B	*DY-120-A-#D2DE-CA-black and red	1
73	P	6	250	D3TZ 12A091-C	*DY-138-A-#D3TE-AA,AB-black and gray	1
73	P	6	250	D3FZ 12A091-A	*DY-135-#D20E-AA,D32E-AA-black and white	1
73	P – – A/T	6	250	D30Z 12A091-A	*DY-129-A-#D30E-AA-black and blue	1
73	P – – A/T	6	250	D3DZ 12A091-B	*DY-139-A-#D3DE-AB-black and brown	1
73	P – – A/T	6	250	D3FZ 12A091-B	*DY-136-#D32E-BA-black and green	1
73	P	8	302			1
73	P – – Calif.	8	302	D30Z 12A091-A	*DY-129-A-#D30E-AA-black and blue	1
73	P – – M/T exc. Calif.	8	302	D3FZ 12A091-A	*DY-135-#D20E-AA,D32E-AA-black and white	1
73	P – – M/T	8	302	D3AZ 12A091-A	*DY-116-A-#D3AE-AA-black and yellow	1

Y (Meteor)

73	Y(exc. 71) – – w/2.75 axle	8	400	D3AZ 12A091-A	*DY-116-A-#D3AE-AA-black and yellow	1
73	Y(exc. 71) – – w/3.25 axle	8	400	D30Z 12A091-B	*DY-137-A-#D30E-BA,D3TE-BA-black and orange	1
73	Y(71)	8	400	D3FZ 12A091-B	*DY-136-#D32E-BA-black and green	1
73	Y – – w/3.25 axle	8	429	D3AZ 12A091-A	*DY-116-A-#D3AE-AA-black and yellow	1
73	Y	8	429,460	D30Z 12A091-A	*DY-129-A-#D30E-AA-black and blue	1
73	Y	8	429,460	D3FZ 12A091-B	*DY-136-#D32E-BA-black and green	1
73	Y – – w/2.75 axle	8	460	D3AZ 12A091-A	*DY-116-A-#D3AE-AA – #D3AE-AA-black and yellow	1
73	Y	8	460, 460 P/C	D3AZ 12A091-B	*DY-120-A-#D20E-CA,D3AE-BA-black and red	1

1974

A (Mercury)

74	A – – exc. Calif.	8	400	D3AZ 12A091-A	*DY-116-A-#D3AE-AA-black and yellow	1
74	A(71) – – Calif.	8	400	D3FZ 12A091-A	*DY-135-#D32E-AA-black and white	1
74	A	8	460	D3FZ 12A091-B	*DY-136-#D32E-BA-black and green	1
74	A	8	460, 460 P/C	D3AZ 12A091-B	*DY-120-A-#D20E-CA,D3AE-BA-black and red	1

YEAR	MODEL/RESTRICTIONS	ENGINE CYL.	ENGINE C.I.D. (C.C.D.)	PART NUMBER	DESCRIPTION	QTY.
12A091	VALVE ASSY. (DISTRIBUTOR VACUUM CONTROL)—Also refer to groups 8A564 and 9D473 — Cont'd @ 2300 cc ▲ 2000 cc ⊕ 2800 cc					

APPLICATION CHART

Refer to page 4 for Application Instructions

TYPE 3

1974

C (Montego)

74	C – – A/T	6	250	D3DZ 12A091–B	*DY–139–A– # D3DE–AB–black and brown	1
74	C – – A/T	6	250	D3FZ 12A091–B	*DY–136– # D32E–BA–black and green	1
74	C – – A/T – exc. Calif.	6	250	D3TZ 12A091–C	*DY–138–A– # D3TE–AA,AB–black and gray	1
74	C	8	351–2/B	D3AZ 12A091–B	*DY–120–A– # D3AE–BA–black and red	1
74	C – – exc. Calif.	8	351C–2/B	D3FZ 12A091–B	*DY–136– # D32E–BA–black and green	1
74	C	8	351W			1
74	C	8	460, 460 P/C	D3AZ 12A091–B	*DY–120–A– # D20E–CA,D32E–BA–black and red	1
74	C	8	460	D3FZ 12A091–B	*DY–136– # D32E–BA–black and green	1

D (Lincoln)

74	D	8	460	D3FZ 12A091–B	*DY–136– # D32E–BA–black and green	1
74	D	8	460	D3AZ 12A091–B	*DY–120–A– # D3AE–BA–black and red	1

F (Cougar)

74	F	8	351–2/B	D3AZ 12A091–B	*DY–120–A– # D3AE–BA–black and red	1
74	F – – exc. Calif.	8	351C–2/B	D3FZ 12A091–B	*DY–136– # D32E–BA–black and green	1
74	F	8	351W			1

J (Capri)

74	J – – A/T	6	⊕171	D3FZ 12A091–B	*DY–136– # D32E–BA–black and green	1
74	J – – M/T	6	⊕171	D3FZ 12A091–A	*DY–135– # D32E–AA–black and white	1
74	J – – M/T exc. Calif.	6	⊕171	D3AZ 12A091–A	*DY–116–A– # D3AE–AA–black and yellow	1

K (Mark IV)

74	K	8	460	D3AZ 12A091–B	*DY–120–A– # D3AE–BA–black and red	1

L (Bobcat)

74	L – – M/T–exc. Calif.	4	▲122	D3FZ 12A091–A	*DY–135– # D32E–AA–black and white	1
74	L – – A/T – Calif.	4	@140	D3FZ 12A091–B	*DY–136– # D32E–BA–black and green	1
74	L – – M/T – Calif.	4	@140	D3AZ 12A091–B	*DY–120–A– # D3AE–BA – black and red	1

P (Comet)

74	P – – A/T – Calif.	6	200	D30Z 12A091–A	*DY–129–A– # D30E–AA–black and blue	1
74	P – – A/T–Calif.	6	200	D3AZ 12A091–A	*DY–116–A– # D3AE–AA – black and yellow	1
74	P – – A/T	6	200	D3DZ 12A091–B	*DY–139–A– # D3DE–AB–black and brown	1
74	P – – A/T "Before 4/1/74"	6	250			1
74	P – – A/T	6	250	D3FZ 12A091–B	*DY–136– # D32E–BA–black and green	1
74	P – – A/T "From 4/1/74"	6	250	D3FZ 12A091–A	*DY–135– # D32E–AA–black and white	1
74	P – – MT/ exc. Calif.	6	250			1
74	P – – M/T "From 4/1/74"	6	250	D3TZ 12A091–C	*DY–138–A– # D3TE–AA,AB–black and gray	1

COPYRIGHT © 1986 — FORD MOTOR COMPANY — DEARBORN, MICHIGAN

YEAR	MODEL/RESTRICTIONS	ENGINE CYL.	ENGINE C.I.D. (C.C.D.)	PART NUMBER	DESCRIPTION	QTY.
12A091	VALVE ASSY. (DISTRIBUTOR VACUUM CONTROL)—Also refer to groups 8A564 and 9D473 — Cont'd @ 2300 cc ▲ 2000 cc ⊕ 2800 cc					

APPLICATION CHART

Refer to page 4 for Application Instructions

TYPE 3

1974

Y (Meteor)

74	Y	8	351C-2/B	D3FZ 12A091-B	*DY-136-#D32E-BA-black and green	1
74	Y	8	400	D3AZ 12A091-A	*DY-116-A-#D3AE-AA-black and yellow	1
74	Y	8	460	D3FZ 12A091-B	*DY-136-#D32E-BA-black and green	1
74	Y	8	460, 460 P/C	D3AZ 12A091-B	*DY-120-A-#D20E-CA,D3AE-BA-black and red	1

1975

A (Mercury)

75	A	8	460	D30Z 12A091-A	*DY-129-A-#D30E-AA-black and blue	1
75	A	8	460	D3AZ 12A091-A	*DY-116-A-#D3AE-AA-black and yellow	1
75	A	8	460 P/C	D3AZ 12A091-B	*DY-120-A-#D3AE-BA-black and red	1

C (Montego)

75	C - - A/T	6	250	D3DZ 12A091-B	*DY-139-A-#D3DE-AB-black and brown	1
75	C	8	460	D30Z 12A091-A	*DY-129-A-#D30E-AA-black and blue	1
75	C	8	460	D3AZ 12A091-A	*DY-116-A-#D3AE-AA-black and yellow	1
75	C	8	460 P/C	D3AZ 12A091-B	*DY-120-A-#D3AE-BA-black and red	1

D (Lincoln)

75	D	8	460	D30Z 12A091-A	*DY-129-A-#D30E-AA-black and blue	1
75	D	8	460	D3AZ 12A091-A	*DY-116-A-#D3AE-AA-black and yellow	1

F (Cougar)

75	F	8	460	D30Z 12A091-A	*DY-129-A-#D30E-AA-black and blue	1
75	F	8	460	D3AZ 12A091-A	*DY-116-A-#D3AE-AA-black and yellow	1

G (Monarch)

75	G - - M/T - Canada	6	200	D3DZ 12A091-B	*DY-139-A-#D3DE-AB-black and brown	1
75	G - - exc. Calif.	6	250	D3FZ 12A091-A	*DY-135-#D32E-AA-black and white	1
75	G - - M/T	6	250	D3TZ 12A091-C	*DY-138-A-#D3TE-AA,AB-black and gray	1
75	G - - A/T	8	302	D3DZ 12A091-B	*DY-139-A-#D3DE-AB-black and brown	1
75	G - - A/T - Canada	8	302	D3FZ 12A091-B	*DY-136-#D32E-BA-black and green	1
75	G - - M/T	8	302			1

K (Mark IV)

75	K	8	460	D3AZ 12A091-A	*DY-116-A-#D3AE-AA-black and yellow	1

L (Bobcat)

75	L - - A/T	4	@140	D3FZ 12A091-B	*DY-136-#D32E-BA-black and green	1
75	L - - A/T - Calif.	4	@140			1
75	L - - M/T - exc. Calif.	4	@140			1
75	L - - M/T - Calif.	4	@140	D3AZ 12A091-B	*DY-120-A-#D3AE-BA-black and red	1
75	L - - M/T - Calif.	4	@140	D3FZ 12A091-A	*DY-135-#D32E-AA-black and white	1
75	L - - A/T - Calif.	6	⊕171			1
75	L - - A/T	6	⊕171	D3AZ 12A091-A	*DY-116-A-#D3AE-AA-black and yellow	1

YEAR	MODEL/RESTRICTIONS	ENGINE CYL.	ENGINE C.I.D. (C.C.D.)	PART NUMBER	DESCRIPTION	QTY.
12A091	VALVE ASSY. (DISTRIBUTOR VACUUM CONTROL)—Also refer to groups 8A564 and 9D473 — Cont'd @ 2300 cc ▲ 2000 cc ⊕ 2800 cc					

APPLICATION CHART

Refer to page 4 for Application Instructions

TYPE 3

1975

P (Comet)

75	P – – M/T – Canada	6	200	D3DZ 12A091–B	*DY–139–A–#D3DE–AB–black and brown	1
75	P – – exc. Calif.	6	250	D3FZ 12A091–A	*DY–135–#D32E–AA–black and white	1
75	P – – M/T	6	250	D3TZ 12A091–C	*DY–138–A–#D3TE–AA,AB–black and gray	1
75	P – – A/T	8	302	D3DZ 12A091–B	*DY–139–A–#D3DE–AB–black and brown	1
75	P – – A/T – Canada	8	302	D3FZ 12A091–B	*DY–136–#D32E–BA–black and green	1
75	P – – M/T	8	302			1

Y (Meteor)

75	Y	8	460	D30Z 12A091–A	*DY–129–A–#D30E–AA–black and blue	1
75	Y	8	460	D3AZ 12A091–A	*DY–116–A–#D3AE–AA–black and yellow	1
75	Y	8	460 P/C	D3AZ 12A091–B	*DY–120–A–#D3AE–BA–black and red	1

1976

A (Mercury)

76	A – – Calif.	8	400	D3FZ 12A091–A	*DY–135–#D32E–AA–black and white	1
76	A	8	400	D3AZ 12A091–A	*DY–116–A–#D3AE–AA–black and yellow	1
76	A – – Calif.	8	460	D3DZ 12A091–B	*DY–139–A–#D3DE–AB–black and brown	1
76	A – – Calif.	8	460	D3AZ 12A091–B	*DY–120–A–#D3AE–BA–black and red	1
76	A – – exc. Calif.	8	460	D3AZ 12A091–A	*DY–116–A–#D3AE–AA – black and yellow	1
76	A – – Canada	8	460	D3FZ 12A091–B	*DY–136–#D32E–BA–black and green	1
76	A	8	460 P/C	D3AZ 12A091–B	*DY–120–A–#D3AE–BA–black and red	1

C (Montego)

76	C – – A/T	6	250	D3DZ 12A091–B	*DY–139–A – #D3DE–AB–black and brown	1
76	C	8	400	D3AZ 12A091–A	*DY–116–A–#D3AE–AA–black and yellow	1
76	C – – Calif.	8	400	D3FZ 12A091–A	*DY–135–#D32E–AA–black and white	1
76	C – – Calif.	8	460			1
76	C – – Calif.	8	460	D3DZ 12A091–B	*DY–139–A–#D3DE–AB–black and brown	1
76	C – – Calif.	8	460	D3AZ 12A091–B	*DY–120–A–#D3AE–BA–black and red	1
76	C – – Canada	8	460	D3FZ 12A091–B	*DY–136–#D32E–BA–black and green	1
76	C	8	460 P/C	D3AZ 12A091–B	*DY–120–A–#D3AE–BA–black and red	1

D (Lincoln)

76	D – – exc. Canada	8	460	D30Z 12A091–A	*DY–129–A–#D30E–AA – black and blue	1
76	D – – exc. Calif.	8	460	D3AZ 12A091–A	*DY–116–A–#D3AE–AA – black and yellow	1
76	D – – Calif.	8	460	D3DZ 12A091–B	*DY–139–A–#D3DE–AB–black and brown	1
76	D – – Calif.	8	460	D3FZ 12A091–A	*DY–135–#D32E–AA–black and white	1

F (Cougar)

76	F	8	400	D3AZ 12A091–A	*DY–116–A–#D3AE–AA–black and yellow	1
76	F – – Calif.	8	400	D3FZ 12A091–A	*DY–135–#D32E–AA–black and white	1
76	F	8	460			1
76	F – – Canada	8	460	D3FZ 12A091–B	*DY–136–#D32E–BA–black and green	1
76	F – – Calif.	8	460	D3AZ 12A091–B	*DY–120–A–#D3AE–BA–black and red	1
76	F – – Calif.	8	460	D3DZ 12A091–B	*DY–139–A–#D3DE–AB–black and brown	1

COPYRIGHT © 1986 — FORD MOTOR COMPANY — DEARBORN, MICHIGAN

YEAR	MODEL/RESTRICTIONS	ENGINE CYL.	ENGINE C.I.D. (C.C.D.)	PART NUMBER	DESCRIPTION	QTY.
12A091	VALVE ASSY. (DISTRIBUTOR VACUUM CONTROL)—Also refer to groups 8A564 and 9D473 — Cont'd @ 2300 cc ▲ 2000 cc ⊕ 2800 cc					

APPLICATION CHART

Refer to page 4 for Application Instructions

TYPE 3

1976

G (Monarch)

76	G – – M/T – Canada	6	200	D3FZ 12A091–A	*DY–135– # D32E–AA–black and white	1
76	G – – M/T – Canada	6	200	D3DZ 12A091–B	*DY–139–A– # D3DE–AB–black and brown	1
76	G – – A/T – Calif.	6	250	D3FZ 12A091–B	*DY–136– # D32E–BA–black and green	1
76	G – – M/T – Calif.	6	250	D3FZ 12A091–A	*DY–135– # D32E–AA–black and white	1
76	G – – M/T	6	250	D3TZ 12A091–C	*DY–138–A– # D3TE–AA,AB–black and gray	1
76	G – – A/T – Canada	8	302	D30Z 12A091–A	*DY–129–A– # D30E–AA – black and blue	1

J (Capri)

76	J	4	@140	D3DZ 12A091–B	*DY–139–A– # D3DE–AB–black and brown	1
76	J – – A/C	4	@140	D3FZ 12A091–A	*DY–135– # D32E–AA–black and white	1
76	J – – A/T – Calif.	4	@140	D3AZ 12A091–A	*DY–116–A– # D3AE–AA –black and yellow	1
76	J	4	@140	D3TZ 12A091–C	*DY–138–A– # D3TE–AA,AB,767F–AA–black and gray	1
76	J	6	⊕171	D3AZ 12A091–A	*DY–116–A– # D3AE–AA–black and yellow	1
76	J – – M/T	6	⊕171	D3FZ 12A091–A	*DY–135– # D32E–AA–black and white	1

K (Mark IV)

76	K – – exc. Canada	8	460	D30Z 12A091–A	*DY–129–A– # D30E–AA– black and blue	1
76	K – – exc. Calif.	8	460	D3AZ 12A091–A	*DY–116–A– # D3AE–AA–black and yellow	1
76	K – – Calif.	8	460	D3DZ 12A091–B	*DY–139–A– # D3DE–AB–black and brown	1
76	K – – Calif.	8	460	D3FZ 12A091–A	*DY–135– # D32E–AA–black and white	1
76	K – – Calif.	8	460	D3AZ 12A091–B	*DY–120–A– # D3AE–BA–black and red	1

L (Bobcat)

76	L – – A/T	4	@140	D3FZ 12A091–B	*DY–136– # D32E–BA–black and green	1
76	L – – A/T – Calif.	4	@140	D3FZ 12A091–A	*DY–135– # D32E–AA –black and white	1
76	L – – A/T exc. Calif.	4	@140	D3TZ 12A091–C	*DY–138–A– # D3TE–AA,AB, 767F–AA–black and gray	1
76	L – – M/T	4	@140			1
76	L – – M/T – Calif./Canada	4	@140	D3DZ 12A091–B	*DY–139–A– # D3DE–AB–black and brown	1

P (Comet)

76	P – – M/T – Canada	6	200	D3DZ 12A091–B	*DY–139–A– # D3DE–AB– black and brown	1
76	P – – M/T – Canada	6	200	D3FZ 12A091–A	*DY–135– # D32E–AA– black and white	1
76	P – – A/T – Calif.	6	250	D3FZ 12A091–B	*DY–136– # D32E–BA– black and green	1
76	P – – M/T	6	250	D3TZ 12A091–C	*DY–138–A– # D3TE–AA,AB–black and gray	1
76	P – – M/T – Calif.	6	250	D3FZ 12A091–A	*DY–135– # D32E–AA–black and white	1
76	P – – A/T – Canada	8	302	D30Z 12A091–A	*DY–129–A– # D30E–AA– black and blue	1

Y (Meteor)

76	Y	8	400	D3AZ 12A091–A	*DY–116–A– # D3AE–AA–black and yellow	1
76	Y	8	460			1
76	Y	8	460	D3FZ 12A091–B	*DY–136– # D32E–BA–black and green	1
76	Y	8	460 P/C	D3AZ 12A091–B	*DY–120–A– # D3AE–BA–black and red	1

YEAR	MODEL/RESTRICTIONS	ENGINE CYL.	ENGINE C.I.D. (C.C.D.)	PART NUMBER	DESCRIPTION	QTY.
12A091	VALVE ASSY. (DISTRIBUTOR VACUUM CONTROL)—Also refer to groups 8A564 and 9D473 — Cont'd @ 2300 cc ▲ 2000 cc ⊕ 2800 cc					

APPLICATION CHART

Refer to page 4 for Application Instructions

TYPE 3

1977

A (Mercury)

77	A	8	351M, 400	D3FZ 12A091-A	*DY-135-#D32E-AA-black and white	1
77	A	8	351M, 400	D3AZ 12A091-A	*DY-116-A-#D3AE-AA-black and yellow	1
77	A	8	400	D3DZ 12A091-B	*DY-139-A-#D3DE-AB-black and brown	1
77	A	8	460	D3FZ 12A091-A	*DY-135-#D32E-AA-black and white	1

D (Lincoln)

77	D	8	400	D3FZ 12A091-A	*DY-135-#D32E-AA-black and white	1

F (Cougar)

77	F	8	351M, 351W, 400	D3FZ 12A091-A	*DY-135-#D32E-AA-black and white	1
77	F	8	351M, 400	D3AZ 12A091-A	*DY-116-A-#D3AE-AA-black and yellow	1
77	F	8	400	D3DZ 12A091-B	*DY-139-A-#D3DE-AB-black and brown	1

G (Monarch)

77	G - - M/T	6	250	D3TZ 12A091-C	*DY-138-A-#D3TE-AA,AB-black and gray	1

J (Capri)

77	J	4	@140	D3DZ 12A091-B	*DY-139-A-#D3DE-AB-black and brown	1
77	J	4	@140	D3TZ 12A091-C	*DY-138-A-#D3TE-AA,AB,767F-AA-black and gray	1
77	J - - A/C	4	@140	D3FZ 12A091-A	*DY-135-#D32E-AA-black and white	1
77	J - - A/T - Calif.	4	@140	D3AZ 12A091-A	*DY-116-A-#D3AE-AA-black and yellow	1
77	J - - A/T - Calif.	6	⊕171			1
77	J - - M/T	6	⊕171	D3FZ 12A091-A	*DY-135-#D32E-AA-black and white	1
77	J	6	⊕171	D7RY 12A091-A	*DY-245-#77TF-AA-black and white	1

K (Mark V)

77	K	8	400	D3FZ 12A091-A	*DY-135-#D32E-AA-black and white	1

L (Bobcat)

77	L - - A/T	4	@140	D3FZ 12A091-A	*DY-135-#D32E-AA-black and white	1
77	L - - M/T - exc. Calif.	4	@140			1
77	L - - M/T	4	@140	D3TZ 12A091-C	*DY-138-A-#D3TE-AA,AB,767F-AA-black and gray	1
77	L - - M/T - Calif.	6	⊕171	D3AZ 12A091-A	*DY-116-A-#D3AE-AA-black and yellow	1

P (Comet)

77	P - - M/T	6	250	D3TZ 12A091-C	*DY-138-A-#D3TE-AA,AB-black and gray	1

V (Versailles)

77	V	8	351W	D3TZ 12A091-C	*DY-138-A-#D3TE-AA,AB-black and gray As listed in TSB No. 143, dated 9/20/77, article 1977	1

COPYRIGHT © 1986 — FORD MOTOR COMPANY — DEARBORN, MICHIGAN

YEAR	MODEL/RESTRICTIONS	ENGINE CYL.	ENGINE C.I.D. (C.C.D.)	PART NUMBER	DESCRIPTION	QTY.
12A091	VALVE ASSY. (DISTRIBUTOR VACUUM CONTROL)—Also refer to groups 8A564 and 9D473 — Cont'd @ 2300 cc ▲ 2000 cc ⊕ 2800 cc					

APPLICATION CHART

Refer to page 4 for Applications Instructions

TYPE 3

1978

A (Mercury)

78	A – – Canada	8	351M	D3TZ 12A091–C	*DY–138–A– # D3TE–AA,AB–black and gray	1
78	A	8	351M, 400	D3AZ 12A091–A	*DY–116–A– # D3AE–AA–black and yellow	1
78	A	8	351M, 400, 460	D3FZ 12A091–A	*DY–135– # D32E–AA–black and white	1
78	A	8	460 P/C	D3DZ 12A091–B	*DY–139–A– # D3DE–AB–black and brown	1

D (Lincoln)

78	D	8	400	D3FZ 12A091–A	*DY–135– # D32E–AA–black and white	1

F (Cougar)

78	F – – Canada	8	351M	D3TZ 12A091–C	*DY–138–A– # D3TE–AA,AB–black and gray	1
78	F – – Calif.	8	351M	D3DZ 12A091–B	*DY–139–A– # D3DE–AB–black and brown	1
78	F	8	351M, 400	D3AZ 12A091–A	*DY–116–A– # D3AE–AA–black and yellow	1
78	F	8	351M, 351W, 400	D3FZ 12A091–A	*DY–135– # D32E–AA–black and white	1

J (Capri)

78	J	4	@140	D3DZ 12A091–B	*DY–139–A– # D3DE–AB–black and brown	1
78	J	4	@140	D3TZ 12A091–C	*DY–138–A– # D3TE–AA,AB,767F–AA–black and gray	1
78	J – – A/C	4	@140	D3FZ 12A091–A	*DY–135– # D32E–AA–black and white	1
78	J – – A/T – Calif.	4	@140	D3AZ 12A091–A	*DY–116–A– # D3AE–AA –black and yellow	1
78	J	6	⊕171	D7RY 12A091–A	*DY–245– # 77TF–AA–black and white	1
78	J – – A/T – Calif.	6	⊕171	D3AZ 12A091–A	*DY–116–A– # D3AE–AA–black and yellow	1
78	J – – M/T	6	⊕171	D3FZ 12A091–A	*DY–135– # D32E–AA–black and white	1

K (Mark V)

78	K	8	400	D3FZ 12A091–A	*DY–135– # D32E–AA–black and white	1

L (Bobcat)

78	L – – A/T	4	@140	D3FZ 12A091–A	*DY–135– # D32E–AA–black and white	1
78	L – – M/T – exc. Calif.	4	@140			1

P (Zephyr)

78	P – – M/T – Calif.	4	@140	D3DZ 12A091–B	*DY–139–A– # D3DE–AB –black and brown	1
78	P – – M/T exc. Calif.	4	@140	D3FZ 12A091–A	*DY–135– # D3DE–AA –black and white	1
78	P – – A/T exc. Calif. w/thermactor	6	200			1
78	P – – A/T	8	302			1
78	P – – A/T	4	@140			1
78	P – – A/T with A/C exc. Calif.	4	@140	D3TZ 12A091–C	*DY–138–A– # D3TE–AA, AB–black and brown	1

YEAR	MODEL/RESTRICTIONS	ENGINE CYL.	ENGINE C.I.D. (C.C.D.)	PART NUMBER	DESCRIPTION	QTY.
12A091	VALVE ASSY. (DISTRIBUTOR VACUUM CONTROL)–Also refer to groups 8A564 and 9D473 — Cont'd @ 2300 cc ▲ 2000 cc ⊕ 2800 cc					

APPLICATION CHART

Refer to page 4 for Applications Instructions

TYPE 3

1979

A (Mercury)

79	A – – w/3.08 rear axle–exc. Calif.	8	302	D3AZ 12A091–B	*DY–120–A–#D3AE–BA–black and red	1
79	A – – Canada	8	351W	D3FZ 12A091–A	*DY–135–#D32E–AA–black and white	1
79	A – – Without E.E.C.	8	351W	D8AZ 12A091–A	*DY–239–#D8AE–CA–white and white	1

D (Lincoln)

79	D – – exc. Calif.	8	400	D3DZ 12A091–B	*DY–139–A–#D3DE–AB– black and brown	1
79	D – – Calif.	8	400	D3FZ 12A091–A	*DY–135–#D32E–AA–black and white	1

F (Cougar)

79	F – – exc. Calif.	8	302	D5TZ 12A091–A	*DY–181–#D5TE–BA–black and green	1
79	F	8	351M	D3FZ 12A091–A	*DY–135–#D32E–AA–black and white	1
79	F	8	351W			1
79	F	8	351M	D3DZ 12A091–B	*DY–139–A–#D3DE–AB–black and brown	2
79	F – – exc. Calif.	8	351M	D8AZ 12A091–A	*DY–239 –#D8AE–CA–white and white	1
79	F – – Calif.	8	351M	D9TZ 12A091–A	*DY–257–#D9TE–BA–pink and pink	1

J (Capri)

79	J – – M/T with A/C – Calif.	4	@140 exc. TC	D3FZ 12A091–A	*DY–135–#D32E–AA–black and white	1
79	J – – A/T exc. Calif.	4	@140 exc. TC			1
79	J – – M/T exc. Calif.	4	@140			2
79	J – – M/T – Calif.	4	@140			1
79	J – – M/T – Calif.	4	@140	D3DZ 12A091–B	*DY–139–A–#D3DE–AB–black and brown	1
79	J – – A/T – Calif.	8	302	D3FZ 12A091–A	*DY–135–#D32E–AA–black and white	1

K (Mark V)

79	K – – exc. Calif.	8	400	D3DZ 12A091–B	*DY–139–A–#D3DE–AB –black and brown	1
79	K – – Calif.	8	400	D3FZ 12A091–A	*DY–135–#D32E–AA–black and white	1

L (Bobcat)

79	L – – A/T exc. Calif.	4	@140	D3DZ 12A091–B	*DY–139–A–#D3DE–AB–black and brown	1
79	L – – A/T	4	@140	D3FZ 12A091–A	*DY–135–#D32E–AA–black and white	1
79	L – – M/T with A/C	4	@140			1
79	L – – M/T exc. Calif.	4	@140			2
79	L – – M/T – Calif.	4	@140			1

P (Zephyr)

79	P – – M/T–Calif.	4	@140	D3DZ 12A091–B	*DY–139–A–#D3DE–AA,AB–black and brown	1
79	P – – A/T exc. Calif.	4	@140	D3FZ 12A091–A	*DY–135–#D32E–AA –black and white	2
79	P – – M/T	4	@140			1
79	P – – exc. Calif.	4	@140			1
79	P – – without A/C – Calif.	4	@140			1
79	P – – M/T – Calif.	4	@140	D3DZ 12A091–B	*DY–139–A–#D3DE–AB –black and brown	1

V (Versailles)

79	V – – without E.E.C.–Calif.	8	302	D3FZ 12A091–A	*DY–135–#D32E–AA–black and white	1

COPYRIGHT © 1986 — FORD MOTOR COMPANY — DEARBORN, MICHIGAN

1973/79 LINCOLN-MERCURY CARS

YEAR	MODEL/RESTRICTIONS	ENGINE CYL.	ENGINE C.I.D. (C.C.D.)	PART NUMBER	DESCRIPTION	QTY.
12A091	VALVE ASSY. (DISTRIBUTOR VACUUM CONTROL)-Also refer to groups 8A564 and 9D473 — Cont'd @ 2300 cc ▲ 2000 cc ⊕ 2800 cc					

APPLICATION CHART

Refer to page 4 for Applications Instructions

TYPE 4

73	C	8	429	D50Z 12A091-A	*DY-164-#D2SE-AA,D50E-AA	1
75	G,P	6	250			1
75	C,F	8	400			1
12A092-106	Refer to group 12127 for Distributor Parts List Instructions					
12A111	VALVE and BRACKET ASSY. (DISTRIBUTOR VACUUM ADVANCE CONTROL)					
73/74	C,F	8	351-4/B	★ D2ZZ 12A111-A	Not replaced	1
73/74	C,F	8	351-4/B	★ 356685-S	Bolt-3/8"-16 x 7/8"	AR
12112	CLIP (COIL RESISTANCE WIRE)-also refer to group 12298 ▲ 2000 cc ♦ 2600 cc ⊕ 2800 cc					
73/74	J	4&6	▲122, ♦159	D1RY 12112-A		1
74/76	J,L	6	⊕171			1
73/74	J	4	▲122	D1RY 12112-B		1
74/78	J	6	⊕171			1
75	L	6	⊕171			1
12113	SEAL (WIRE TERMINAL WEATHER)					
73	All	6&8	All	A9AZ 12113-H		AR
73	All	4,6 &8	All	A9AZ 12113-G	2 1/2" long-straight	AR
74/76	All	4,6 &8	All	★ D4AZ 12113-E Not replaced	*WT-5563-2 55/64" long-straight	AR
74/76	All	4,6 &8	All	★ D4AZ 12113-F Not replaced	*WT-5564-110°-1 43/64" long	AR
74/76	All	6&8	All	★ D4AZ 12113-A	*WT-5561-180°-3 1/2" long-not replaced	AR
74/75	All	6&8	All	★ D4AZ 12113-C	*WT-5560-180°-2 1/4" long-not replaced	AR
74/76	All	6&8	All	★ D4AZ 12113-B	*WT-5558-110°-1 7/8" long-not replaced	AR
74/75	All	6&8	All	★ D4AZ 12113-D	*WT-5561-110°-1 5/8" long-not replaced	AR
77/	All	4,6 &8	All	E3PZ 12113-A	*WT-5618-A-180°-3 29/32" long	AR
77/	All	4,6 &8	All	E3PZ 12113-B	*WT-5619-A-180°-3 1/4" long	AR
77/	All	4,6 &8	All	E3PZ 12113-C	*WT-5620-A-115°-2 1/8" long	AR
77/	All	4,6 &8	All	E3PZ 12113-D	*WT-5621-A-115°-1 31/32" long	AR
12114-19	Refer to group 12127 for Distributor Parts List Instructions					
12120	BUSHING (CYLINDER BLOCK REPAIR) DISTRIBUTOR @ 2300 cc					
73/74	A,C,D,F,K,Y	8	All	C8SZ 12120-A	*MC-201-cast iron-upper	1
73/74	A,C,D,F,K,Y	8	All	C8VY 12120-A	*MC-202-cast iron-upper	1
74/78	L	4	@140	D4FZ 12120-A	*MC-225-cast iron-upper-w/o flange	AR
74/78	L	4	@140	D4FZ 12120-B	*MC-224-cast iron-upper-w/flange	AR
12120	BUSHING (DISTRIBUTOR HOUSING)-Refer to group 12127 for Distributor Parts List Instruction					
12A120	FILTER (DISTRIBUTOR VACUUM CONTROL VALVE) ▲ 2000 cc @ 2300 cc					
73/75	A,C,D,F,K,P,Y	6&8	All	★ C8AZ 12A120-A	Not replaced	AR
76	G - - Canada	8	351W			1
74	J	4	▲122	★ D4RY 12A120-A	Not replaced	AR
76/78	J	4	@140			1

12127 DISTRIBUTOR ASSY.

HOW TO FIND DISTRIBUTOR and COMPONENTS

To find Distributor (other than Calibration) Parts:
(Calibration Parts are listed by Code Number on Page 24 and 25 of this section)

By IDENTIFICATION:

1. Refer to Identification Chart below.
2. Check marking (located on top side of distributor housing) against identification numbers.

By MODEL APPLICATION:

1. Refer to Model Application Chart beginning on page 26 of this section
2. Refer to appropriate Engine, Year and Model.

3. Select and refer to appropriate Parts List Section and Number.
4. If group number is not known refer to illustration page shown or the Alphabetical Index which follows the General Information Section of this catalog.
5. Select part number shown from appropriate Parts List. If more than one part number is shown, refer to Description and Restrictions for clarification.
6. Quantity of parts shown in columns A,B,C etc.
7. Part numbers are listed numerically.

IDENTIFICATION EXAMPLE: D3AF 12127-AA is listed in Parts List Section 120.2, Column B. Calibration parts are listed by code number on page 24 and 25 of this section. (Cam-group 12210, Springs-group 12191-2 and Diaphragm-group 12370) are listed by Code Number, etc.

MODEL APPLICATION EXAMPLE: For an 8 cyl. 351 engine on a 1973 Montego use distributor D3AZ 12127-A (identified D3AF 12127-AA). Internal parts for this distributor are listed in Parts List Section 120.2, Column B.

IDENTIFICATION CHART

IDENTIFICATION		DISTRIBUTOR PARTS LIST SECTION & NUMBER	SERVICE REPLACEMENT DISTRIBUTOR		MOTORCRAFT SALES NO.	CALIBRATION CODE NUMBER: DIA-PHRAGM ASSY. 12370	CAM 12210	SPRINGS (12191-2): PRIMARY	SECONDARY		SLEEVE & PLATE ASSY. 12A096	ILLUS. SEC. 120 PAGE
12127		DISTRIBUTOR ASSY.										
		Δ Internal parts not serviced										
		● Reconditioners only – per Federal Standards not for dealer use for 1975/ applications										
72TF	12100-AB	Δ	★ D2RY /bD2RY	12127-D 12127-K	*DAE-1229	325						5
72TF	12100-ADB	Δ	★ D2RY /bD2RY	12127-E 12127-J	*DAE-1228	326						5
73HF	12100-CA	Δ	★ D3RY	12127-A	*DAE-1241	355						1
73HF	12100-DA	Δ	★ D3RY	12127-B	*DAE-1245	356						1
73TF	12100-AA	Δ	D2RY	12127-K	*DAE-1244	334						1
73TF	12100-BA	Δ	★ D2RY	12127-J	*DAE-1243	335						1
74HF	12100-CA	Δ	★ D4RY	12127-G	*DA-1327	355						1
74HF	12100-EA	Δ	★ D4FZ	12127-A	*DA-1341	351						1
74HF	12100-JA	Δ	★ D4RY	12127-L	*DA-1335	377						1
74HF	12100-LA	Δ	★ D4FZ	12127-B	*DA-1338	340						1
74TF	12100-MA	Δ	D4ZZ	12127-M	*DA-1339	335						5
74TF	12100-NA	Δ	★ D4RY	12127-K	*DA-1337	334						5
74TF	12100-RA	Δ	★ D4RY	12127-J	*DA-1336	335						5
74TF	12100-TA	Δ	★ D4RY	12127-T	*DA-1366	374						5
75TF	12100-BA	Δ	★ D5RY	12127-F	*DAE-1465							10
75TF	12100-EA	120.7A	★ D5ZZ	12127-C	*DA-1455	372		●225	●220		●513	10
75TF	12100-HA	Δ	★ D5RY	12127-E	*DAE-1464							10
75TF	12100-JA	Δ	★ D5RY	12127-F	*DAE-1465							10

COPYRIGHT © 1986 — FORD MOTOR COMPANY — DEARBORN, MICHIGAN

IDENTIFICATION CHART

IDENTIFICATION		DISTRIBUTOR PARTS LIST SECTION & NUMBER	SERVICE REPLACEMENT DISTRIBUTOR		MOTORCRAFT SALES NO.	CALIBRATION CODE NUMBER: DIA-PHRAGM ASSY. 12370	CAM 12210	SPRINGS (12191-2): PRIMARY	SECONDARY		SLEEVE & PLATE ASSY. 12A096	ILLUS. SEC. 120 PAGE
12127		DISTRIBUTOR ASSY. — Cont'd										
		Δ Internal parts not serviced ■r/b D6RY 12127-A & D7PZ 12259-B, ‡ r/b D7ZZ 12127-C & D7PZ 12259-B										
		● Reconditioners only – per Federal Standards not for dealer use for 1975/ applications										
75TF	12100-NA	120.7B	D5ZZ	12127-D	*DA-1475	390		●223	●222		●513	10
76TF	12100-EA	120.7A	D6ZZ	12127-C	*DA-1529	390		●223	●222		●513	10
76TF	12100-KA	120.7B	★ D6ZZ	12127-D	*DA-1530	393		●225	●221		●513	10
77TF	12100-AA	120.7C	D6RY	12127-A	*DA-1545	398		●225	●222		●513	10
77TF	12100-CA	120.7D	D7ZZ	12127-C	*DA-1579	397		●223	●222		●513	10
77TF	12100-DA	120.7C	★ D6RY	12127-B	*DA-1546	397		●224	●222		●513	10
77TF	12100-EA	120.7C	★ D8ZZ	12127-C	*DA-1661	314		●224	●222		●513	10
77TF	12100-HA	120.7E	★ D8ZZ	12127-D	*DA-1662	397		●227	●226		●513	10
79TF	12100-EA	Δ	D9ZZ	12127-E	*DA-1730							10
A73SX	12100-ACA	Δ	★ D4FZ	12127-C	*DA-1435	378						1
A73SX	12100-AEA	Δ	★ D4RY r/b D1RY	12127-U 12127-C	*DA-1417	373						1
D77TF	12100-AA	Δ	■ D9ZZ	12127-F	*DA-1735							10
D77TF	12100-CA	Δ	‡ D9ZZ	12127-G	*DA-1736							10
D3AF	12127-AA	120.2B	★ D3AZ	12127-A	*DA-1257	309	101	204	204			4
D3AF	12127-BA	120.2A	★ D3AZ	12127-B	*DA-1248	301	102	211	210			4
D3AF	12127-GA	120.2A	★ D3AZ	12127-G	*DA-1321	316	101	209	201			4
D3BF	12127-BA	120.2C	★ D3BZ	12127-B	*DA-1261	307	101	205	213			4
D3BF	12127-DA	120.2C	★ D3BZ	12127-D	*DA-1287	307	102	205	216			4
D3DF	12127-AA	120.1A	★ D3DZ	12127-A	*DA-1272	303	103	204	213			3
D3DF	12127-BA	120.1A	★ D3DZ	12127-B	*DA-1273	304	104	204	208			3
D3DF	12127-FA	120.1A	★ D4DZ	12127-A	*DA-1372	327	104	215	103			3
D3DF	12127-HA	120.1A	★ D4DZ	12127-H	*DA-1377	304	104	206	203			3
D3DF	12127-KA	120.1A	★ D4DZ	12127-K	*DA-1368	303	112	206	213			3
D3MF	12127-CA	120.2A	★ D3MY	12127-C	*DA-1280	320	101	204	208			4
D3MF	12127-GA	120.2A	D3MY	12127-G	*DA-1284	332	102	210	206			4
D30F	12127-AA	120.1A	★ D30Z	12127-A	*DA-1274	331	104	211	213			3
D30F	12127-BA	120.1A	★ D30Z	12127-B	*DA-1304	331	104	204	201			3
D30F	12127-DA	120.2C	D30Z	12127-D	*DA-1264	306	101	204	213			4
D30F	12127-FA	120.2D	★ D3PZ	12127-P	*DA-1254-A	318	106	205	206			4
D30F	12127-GA	120.2A	★ D30Z	12127-G	*DA-1253	302	101	205	206			4
D30F	12127-HB	120.2C	★ D30Z	12127-H	*DA-1279	319	102	206	210			4
D30F	12127-JA	120.2C	★ D30Z	12127-J	*DA-1286	321	102	215	206			4
D30F	12127-KA	120.2C	★ D30Z	12127-K	*DA-1278	319	101	215	215			4
D30F	12127-LA	120.1A	★ D30Z	12127-L	*DA-1291	331	104	204	213			3
D30F	12127-MA	120.2C	★ D30Z	12127-M	*DA-1358	321	102	215	215			4
D30F	12127-RA	120.1A	★ D30Z	12127-R	*DA-1295	331	103	205	219			3
D30F	12127-VA	120.2C	D30Z	12127-V	*DA-1311	328	102	215	215			4
D30F	12127-XA	120.2A	★ D30Z	12127-X	*DA-1312	330	102	209	213			4
D3PE	12127-DA	120.1A	★ D3PZ	12127-D	*DA-1372-A	327	104	215	203			3
D3PE	12127-GA	120.1A	★ D3PZ	12127-G	*DA-1272-A	303	103	204	213			3
D3PE	12127-MA	120.2C	★ D3PZ	12127-M	*DA-1146-A	306	101	204	213			4
D3UF	12127-EA	120.2C	D3UZ	12127-E	*DA-1260	315	102	205	210			4
D3VF	12127-AA	120.2A	★ D3VY	12127-A	*DA-1276	316	102	204	219			4
D3VF	12127-CA	120.2A	★ D3VY	12127-A	*DA-1276	316	102	204	213			4
D3ZF	12127-CA	120.2A	★ D3ZZ	12127-B	*DA-1256	309	102	202	208			4
D3ZF	12127-GA	120.2A	★ D3ZZ	12127-G	*DA-1285	301	102	215	210			4
D4AE	12127-AA	120.4A	★ D4AZ	12127-A	*DA-1349	337		205	217		501	7
D4AE	12127-CA	120.4C	★ D4AZ	12127-C	*DA-1397	342		205	212		502	7
D4AE	12127-HA	120.4A	★ D4AZ	12127-H	*DA-1333	338		202	216		502	7
D4DE	12127-FA	120.5A	★ D4DZ r/b D4PZ	12127-F 12127-A	*DA-1344	339		202	208		504	7

IDENTIFICATION CHART

IDENTIFICATION		DISTRIBUTOR PARTS LIST SECTION & NUMBER	SERVICE REPLACEMENT DISTRIBUTOR		MOTORCRAFT SALES NO.	CALIBRATION CODE NUMBER: DIA-PHRAGM ASSY. 12370	CAM 12210	SPRINGS (12191-2) PRIMARY	SECONDARY		SLEEVE & PLATE ASSY. 12A096	ILLUS. SEC. 120 PAGE
12127		DISTRIBUTOR ASSY. — Cont'd										
		Δ Internal parts not serviced										
		● Reconditioners only - per Federal Standards not for dealer use for 1975/ applications										
D4DE	12127-LA	120.5A	★ D4DZ r/bD8PZ	12127-L 12127-A	*DA-1343	341		202	208		505	7
D4DE	12127-MA	120.4B	★ D4DZ	12127-M	*DA-1353	349		205	218		501	7
D4DE	12127-RA	120.5A	★ D4PZ	12127-B	*DA-1370-A	359		209	208		505	7
D40E	12127-CA	120.4A	★ D40Z	12127-C	*DA-1350	342		206	217		501	7
D40E	12127-DA	120.4A	★ D40Z	12127-D	*DA-1421	365		205	205		501	7
D40E	12127-KA	120.4B	★ D40Z	12127-K	*DA-1398	324		209	201		502	7
D4VE	12127-AA	120.4A	★ D3VY	12127-C	*DA-1323	333		209	208		501	7
D4VE	12127-CA	120.4A	D4VY	12127-C	*DA-1334	333		204	201		502	7
D4ZE	12127-AA	120.3A	★ D4ZZ	12127-A	*DA-1352	353	110	215	208			8
D4ZE	12127-KA	120.3A	★ D4ZZ	12127-K	*DA-1378	353	111	204	201			8
D4ZF	12127-DA	120.3A	★ D4ZZ	12127-D	*DA-1331	350	110	204	208			8
D5AE	12127-BA	120.4F	D5AZ	12127-B	*DA-1387	379		●215	●206		●501	7
D5AE	12127-DA	120.4F	★ D5AZ	12127-D	*DA-1416	360		●215	●206		●501	7
D5AE	12127-EA	120.4F	★ D5AZ	12127-E	*DA-1470	379		●215	●206		●501	7
D5AE	12127-KA	120.4F	★ D5AZ	12127-K	*DA-1502	360		●202	●208		●501	7
D5DE	12127-DA	102.5C	★ D5DZ	12127-D	*DA-1432	367		●204	●213		●511	9
D5DE	12127-FA	120.5C	★ D5DZ	12127-A	*DA-1386	366		●209	●207		●510	9
D5DE	12127-HA	102.4E	★ D5DZ	12127-H	*DA-1429	362		●202	●210		●502	7
D5DE	12127-JA	120.4D	D5DZ	12127-J	*DA-1430	363		●204	●208		●501	7
D5DE	12127-KA	102.4D	★ D5DZ	12127-K	*DA-1433	363		●204	●208		●501	7
D5DE	12127-LA	120.4D	★ D5DZ	12127-L	*DA-1431	361		●215	●216		●502	7
D5DE	12127-MA	120.4E	★ D5DZ	12127-M	*DA-1426	368		●215	●217		●501	7
D5DE	12127-NA	120.4D	★ D5DZ	12127-B	*DA-1410	349		●209	●208		●506	7
D5DE	12127-RA	120.5C	D5DZ	12127-R	*DA-1460	388		●205	●201		●512	9
D5DE	12127-SA	120.4E	D5DZ	12127-N	*DA-1457	342		●202	●210		●502	7
D5DE	12127-UA	120.5C	★ D5DZ	12127-U	*DA-1467	375		●205	●201		●512	9
D5DE	12127-VA	120.5C	★ D5DZ	12127-R	*DA-1460	375		●205	●210		●511	9
D5DE	12127-YA	120.5C	★ D5DZ	12127-T	*DA-1468	376		●205	●201		●512	9
D5DE	12127-ZA	102.4D	★ D5DZ	12127-S	*DA-1461	333		●204	●208		●501	7
D5DE	12127-ACA	120.5C	★ D5DZ	12127-V	*DA-1479	382		●209	●210		●512	9
D5DE	12127-AFA	120.4D	★ D5DZ	12127-X	*DA-1499	379		●202	●208		●506	7
D5DE	12127-AGA	120.4D	★ D5DZ	12127-W	*DA-1498	360		●206	●201		●502	7
D50E	12127-FA	120.4F	★ D50Z	12127-F	*DA-1501	342		●202	●201		●502	7
D5VE	12127-BA	120.4F	★ D5VY	12127-A	*DA-1477	342		●204	●207		●502	7
D5VE	12127-CA	120.4F	★ D5VY	12127-B	*DA-1480	342		●205	●207		●501	7
D5ZE	12127-AA	120.6B	★ D5ZZ	12127-A	*DA-1447	370		●209	●207		●509	9
D5ZE	12127-EA	120.6A	★ D5ZZ	12127-F	*DA-1489	383		●207	●207		●507	9
D5ZE	12127-FA	120.6A	★ D5ZZ	12127-G	*DA-1490	383		●202	●208		●509	9
D5ZE	12127-GA	120.6B	★ D5FZ	12127-F	*DA-1392-A	370		●209	●207		●507	9
D5ZE	12127-HA	120.6B	★ D5FZ	12127-F	*DA-1392-A	383		●204	●210		●509	9
D52E	12127-EA	120.6B	★ D5FZ	12127-F	*DA-1392-A	370		●205	●216		●509	9
D52E	12127-FA	120.6B	D5FZ	12127-E	*DA-1451	369		●205	●210		●509	9
D52E	12127-NA	120.6B	★ D5FZ	12127-F	*DA-1392-A	384		●202	●207		●507	9
D52E	12127-PA	120.6B	D5FZ	12127-G	*DA-1351-A	386		●205	●217		●509	9
D52E	12127-RA	120.6B	★ D5FZ	12127-F	*DA-1392-A	370		●205	●216		●509	9
D52E	12127-SA	120.6B	★ D5FZ	12127-G	*DA-1351-A	369		●205	●210		●509	9
D58E	12127-FA	120.6B	★ D5RY	12127-D	*DAE-1454	350		●206	●217		●508	9
D58E	12127-GA	120.6B	★ D5RY	12127-C	*DAE-1453	353		●206	●210		●508	9
D6AE	12127-AA	120.4F	★ D6AZ	12127-A	*DA-1488	360		●209	●207		●501	7
D6AE	12127-BA	120.4F	★ D6AZ	12127-B	*DA-1482	337		●202	●210		●502	7
D6AE	12127-CA	120.4F	★ D6AZ	12127-C	*DA-1497	360		●202	●201		●502	7

COPYRIGHT © 1986 — FORD MOTOR COMPANY — DEARBORN, MICHIGAN

IDENTIFICATION CHART

IDENTIFICATION		DISTRIBUTOR PARTS LIST SECTION & NUMBER	SERVICE REPLACEMENT DISTRIBUTOR		MOTORCRAFT SALES NO.	CALIBRATION CODE NUMBER: DIA-PHRAGM ASSY. 12370	CAM 12210	SPRINGS (12191-2): PRIMARY	SECONDARY		SLEEVE & PLATE ASSY. 12A096	ILLUS. SEC. 120 PAGE
12127		DISTRIBUTOR ASSY. — Cont'd										
		Δ Internal parts not serviced, ▲ Illustration to follow in subsequent change ■ Parts list to follow in subsequent change										
		● Reconditioners only-per Federal Standards not for dealer use for 1975/ applications										
D6AE	12127-DA	120.4F	★ D6AZ	12127-D	*DA-1515	360		●202	●208		●501	7
D6BE	12127-BA	120.5B	★ D6DZ	12127-D	*DA-1505	387		●202	●216		●511	9
D6DE	12127-AA	120.5B	★ D6DZ	12127-A	*DA-1487	386		●204	●208		●510	9
D6DE	12127-BA	120.5B	★ D6DZ	12127-B	*DA-1481	385		●204	●207		●512	9
D6DE	12127-CA	120.4E	★ D6DZ	12127-F	*DA-1519	379		●202	●216		●501	7
D6DE	12127-EA	120.4E	★ D6DZ	12127-C	*DA-1486	379		●202	●216		●502	7
D6DE	12127-GA	120.5B	★ D6DZ	12127-G	*DA-1484	386		●209	●208		●511	9
D6DE	12127-JA	120.4D	★ D6DZ	12127-J	*DA-1510	379		●202	●212		●502	7
D6DE	12127-KA	120.5C	★ D6DZ	12127-K	*DA-1523	289		●209	●207		●510	7
D6EE	12127-AA	120.6B	★ D6FZ	12127-A	*DA-1491	383		●205	●217		●509	9
D6EE	12127-BA	120.6A	★ D6FZ	12127-B	*DA-1492	384		●207	●207		●507	9
D6EE	12127-DA	120.6B	★ D6FZ	12127-D	*DA-1493	383		●202	●207		●507	9
D60E	12127-AA	120.4E	★ D60Z	12127-A	*DA-1504	360		●215	●212		●501	7
D6VE	12127-AA	120.4F	★ D6VY	12127-A	*DA-1485	379		●209	●207		●501	7
D6VE	12127-BA	120.4F	★ D6VY	12127-B	*DA-1494	379		●202	●216		●501	7
D6VE	12127-CA	120.4F	★ D6VY	12127-C	*DA-1539	379		●202	●201		●502	7
D7AE	12127-BA	120.4G	D7AZ	12127-A	*DA-1555	360		●209	●216		●502	6
D7AE	12127-DA	120.4G	★ D7AZ	12127-D	*DA-1575	379		●209	●207		●501	6
D7AE	12127-KA	120.4H	★ D7AZ	12127-F	*DA-1595	360		●211	●207		●502	6
D7AE	12127-NA	120.4G	★ D7AZ	12127-J	*DA-1607	360		●202	●201		●506	6
D7AE	12127-PA	120.4G	★ D7AZ	12127-H	*DA-1606	360		●209	●216		●502	6
D7AE	12127-UA	120.4G	D7AZ	12127-K	*DA-1635	379		●202	●216		●502	6
D7AE	12127-VA	120.4G	★ D7AZ	12127-L	*DA-1636	360		●209	●213		●501	6
D7BE	12127-CA	120.5D	★ D7DZ	12127-C	*DA-1552	376		●205	●207		●512	9
D7BE	12127-DA	120.5E	★ D7DZ	12127-D	*DA-1553	386		●211	●213		●510	9
D7BE	12127-EA	120.5E	★ D7DZ	12127-E	*DA-1551	385		●206	●216		●512	9
D7BE	12127-GA	120.5D	★ D7DZ	12127-M	*DA-1593	389		●202	●201		●510	9
D7DE	12127-AA	120.4J	★ D8DZ	12127-F	*DA-1734	360		●205	●207		●502	6
D7DE	12127-CA	120.4J	★ D7DZ	12127-G	*DA-1557	360		●202	●207		●502	6
D7DE	12127-DA	120.4J	★ D7DZ	12127-A	*DA-1554	360		●206	●208		●501	6
D7DE	12127-FA	120.4H	★ D7DZ	12127-K	*DA-1566	360		●211	●207		●501	6
D7DE	12127-GA	120.4J	★ D7DZ	12127-H	*DA-1560	395		●209	●219		●501	6
D7DE	12127-HA	120.4J	★ D7DZ	12127-L	*DA-1586	360		●205	●203		●506	6
D7DE	12127-JA	120.4J	D7ZZ	12127-F	*DA-1655	362		●202	●201		●506	6
D7EE	12127-BA	120.6C	★ D7FZ	12127-B	*DA-1544	410		●207	●207		●507	9
D7EE	12127-CA	120.6C	D7FZ	12127-C	*DA-1542	409		●207	●207		●507	9
D7EE	12127-DA	120.6C	D7FZ	12127-D	*DA-1543	410		●202	●207		●507	9
D7EE	12127-EA	120.6D	D7FZ	12127-E	*DA-1541	409		●202	●207		●507	9
D7EE	12127-FA	120.6D	D7FZ	12127-D	*DA-1543	383		●211	●207		●509	9
D7EE	12127-GA	120.6C	★ D7FZ	12127-H	*DA-1592	396		●209	●207		●507	9
D7EE	12127-HA	120.6C	★ D7FZ	12127-J	*DA-1594	394		●207	●207		●507	9
D70E	12127-DA	120.4J	★ D70Z	12127-B	*DA-1605	360		●206	●206		●502	6
D7VE	12127-CA	120.4G	★ D7VY	12127-C	*DA-1588	379		●209	●213		●501	6
D7VE	12127-DA	120.4G	★ D7VY	12127-B	*DA-1567	352		●209	●201		●501	6
D8AE	12127-BA	120.4G	★ D8AZ	12127-B	*DA-1629	400		●209	●207		●501	6
D8AE	12127-HA	120.4G	★ D8AZ	12127-E	*DA-1657	400		●204	●210		●501	6
D8AE	12127-JA	120.4H	★ D8AZ	12127-C	*DA-1638	400		●210	●210		●506	6
D8AE	12127-LA	120.4J	★ D8AZ	12127-D	*DA-1641	400		●215	●201		●501	6
D8AE	12127-MA	120.4G	★ D8AZ	12127-G	*DA-1672	400		●202	●208		●502	6
D8AE	12127-NA	120.4G	★ D8AZ	12127-F	*DA-1663	403		●209	●207		●501	6
D8BE	12127-CA	120.5E	★ D8DZ	12127-A	*DA-1630	386		●201	●201		●510	9

IDENTIFICATION CHART

IDENTIFICATION		DISTRIBUTOR PARTS LIST SECTION & NUMBER	SERVICE REPLACEMENT DISTRIBUTOR		MOTORCRAFT SALES NO.	CALIBRATION CODE NUMBER: DIA-PHRAGM ASSY. 12370	CAM 12210	SPRINGS (12191-2) PRIMARY	SECONDARY		SLEEVE & PLATE ASSY. 12A096	ILLUS. SEC. 120 PAGE
12127		DISTRIBUTOR ASSY. — Cont'd										
		Δ Internal parts not serviced, ▲ Illustration to follow in subsequent change ■ Parts list to follow in subsequent change ● Reconditioners only-per Federal Standards not for dealer use for 1975/ applications										
D8BE	12127-EA	120.5E	D8BZ	12127-A	*DA-1634	386		●215	●201		●510	9
D8BE	12127-FA	120.5E	★ D8BZ	12127-C	*DA-1639	401		●202	●201		●510	9
D8BE	12127-HA	120.5E	★ D8BZ	12127-D	*DA-1671	384		●215	●201		●510	9
D8BE	12127-JA	120.5E	D8DZ	12127-E	*DA-1658	376		●205	●213		●510	9
D8BE	12127-KA	120.5E	★ D8BZ	12127-E	*DA-1673	383		●202	●201		●511	9
D8DE	12127-AA	120.8A	D84Y	12127-B	*DA-1618-A	None		None	None		None	11
D8DE	12127-CA	120.5E	★ D8DZ	12127-C	*DA-1643	402		●202	●201		●510	9
D8DE	12127-EA	120.4J	D8DZ	12127-D	*DA-1656	404		●211	●208		●502	6
D8OE	12127-AA	120.4J	★ D8OZ	12127-A	*DA-1642	360		●211	●207		●501	6
D8PE	12127-AA	120.5E	D8PZ	12127-A	*DA-1343-A	405		●209	●201		●511	6
D8ZE	12127-DA	120.4J	★ D8ZZ	12127-B	*DA-1640	400		●205	●201		●506	6
D9AE	12127-BA	120.8C	D9AZ	12127-C	*DA-1706-A	None		None	None		None	11
D9AE	12127-PA	120.4G	D9OZ	12127-B	*DA-1708	400		●202	●208		●502	6
D9AE	12127-YA	120.4G	D9AZ	12127-Y	*DA-1701	400		●204	●228		●501	6
D9AE	12127-ZA	120.4J	★ D9AZ	12127-Z	*DA-1713	400		●202	●207		●501	6
D9AE	12127-AAA	120.4J	★ D9AZ	12127-K	*DA-1682	360		●202	●207		●501	6
D9AE	12127-ABA	120.4J	★ D9AZ	12127-A	*DA-1712	411		●206	●208		●502	6
D9AE	12127-ACA	120.4G	★ D9AZ	12127-H	*DA-1718	352		●202	●208		●501	6
D9AE	12127-AEA	120.4J	D9AZ	12127-BA	*DA-1775	415		●202	●207		●501	6
D9AE	12127-AGA	120.4J	★ D9AZ	12127-AA	*DA-1744	412		●204	●208		●502	6
D9BE	12127-CA	120.4J	★ D9ZZ	12127-D	*DA-1710	379		●206	●213		●502	6
D9BE	12127-DA	120.5E	D9BZ	12127-C	*DA-1731	406		●206	●201		●510	9
D9BE	12127-EA	120.5E	D9BZ	12127-D	*DA-1745	383		●215	●214		●511	9
D9BE	12127-FA	120.4J	★ D9BZ	12127-F	*DA-1781	400		●202	●207		●501	6
D9DE	12127-CA	120.5E	D9DZ	12127-C	*DA-1679	401		●205	●213		●510	9
D9EE	12127-AA	120.6C	★ D9FZ	12127-A	*DA-1716	407		●202	●207		●507	9
D9PE	12127-BA	120.5B	★ D4PZ	12127-A	*DA-1344-A	414		●209	●201		●510	6
D9PE	12127-CA	120.5B	★ D4PZ	12127-B	*DA-1370-A	405		●204	●201		●512	6
D9PE	12127-EA	120.5B	★ D4PZ	12127-C	*DA-1343-B	405		●209	●201		●512	6
D9SE	12127-AA	120.4H	★ D9SZ	12127-A	*DA-1711	400		●209	●203		●506	6
D9SE	12127-BA	120.4H	★ D9OZ	12127-C	*DA-1739	400		●211	●216		●506	6
D9ZE	12127-CA	120.4J	D9ZZ	12127-C	*DA-1709	400		●202	●208		●506	6
D9ZE	12127-EA	120.6C	★ D9ZZ	12127-A	*DA-1683	409		●211	●208		●509	9
D9ZE	12127-FA	120.6C	★ D9ZZ	12127-B	*DA-1684	408		●211	●208		●509	9
D9ZE	12127-GA	120.6C	D9ZZ	12127-J	*DA-1738	413		●211	●208		●509	9

COPYRIGHT © 1986 — FORD MOTOR COMPANY — DEARBORN, MICHIGAN

12127 DISTRIBUTOR ASSY. — Cont'd

CALIBRATION PARTS CHART

HOW TO FIND DISTRIBUTOR CALIBRATION PARTS

(Diaphragm Assy., Primary, Secondary, Vacuum Springs, Cam, Sleeve & Plate Assy.)

You must know the Distributor Identification Number–

1. Refer to Identification Chart beginning on page 19 of this section.
2. Check distributor for marking or identification number and locate same in chart.
3. Find Calibration parts listed by code number in adjacent columns.
4. Refer to Calibration Code and Part Number Cross Reference listed below for appropriate part number.

Example– Calibration parts for Distributor identified D3AF 12127–AA are–
PRIMARY SPRING–204–C5AZ 12192–D,SECONDARY SPRING–204–C5AZ 12192–D
CAM–101–C5AZ 12210–A and DIAPHRAGM ASSY.–309–D2TZ 12370–J

DISTRIBUTOR CALIBRATION PARTS CROSS REFERENCE LIST

12127 DISTRIBUTOR ASSY. — Cont'd

12210 CAMS–Codes 101 thru 199

CODE	PART NUMBER	MOTORCRAFT SALES NO.	DESCRIPTION	CODE	PART NUMBER	MOTORCRAFT SALES NO.	DESCRIPTION
101	C5AZ 12210–A	*DF–342		106	★C9AZ 12210–B	*DF–379	Not replaced
102	C5AZ 12210–B	*DF–343		109	★D2FZ 12210–A	*DFE–398–C	Not replaced
103	C5TZ 12210–A	*DF–344		110	★D4ZZ 12210–A	*DF–403	Not replaced
104	★C6TZ 12210–B	*DF–352	Not replaced	111	★D4ZZ 12210–B	*DF–404	Not replaced
				112	C6TZ 12210–A	*DF–352	

12191–2 SPRINGS–Codes 201 thru 299

CODE	PART NUMBER	MOTORCRAFT SALES NO.	DESCRIPTION	CODE	PART NUMBER	MOTORCRAFT SALES NO.	DESCRIPTION
201	C5AZ 12192–A	*MS–467		215	D00Z 12192–A	*MS–492	
202	C5AZ 12192–B	*MS–468		216	★D2WY 12192–A	*MS–506	Not replaced
203	C5AZ 12192–C	*MS–469		217	★C8AZ 12192–B	*MS–488	
204	C5AZ 12192–D	*MS–470		218	★B7AZ 12192–D	*MS–479	Not replaced
205	C5AZ 12192–E	*MS–471		219	★D3AZ 12192–A	*MS–510	Not replaced
206	C5AZ 12192–F	*MS–472		220	D6ZZ 12192–A		
207	C5AZ 12192–H	*MS–475		221	★D6ZZ 12192–B		Not replaced
208	C5AZ 12192–J	*MS–473		222	★D6ZZ 12192–C		Not replaced
209	C5AZ 12192–K	*MS–474		223	★D6ZZ 12192–D		Not replaced
210	C5AZ 12192–L	*MS–484		224	★D6ZZ 12192–E		Not replaced
211	C5AZ 12192–M	*MS–483		225	D6ZZ 12192–F		
212	C5AZ 12192–N	*MS–493		226	★D8ZZ 12192–A		Not replaced
213	C5VY 12192–A	*MS–476		227	★D8ZZ 12192–B		Not replaced
214	★C9AZ 12192–A	*MS–494	Not replaced	228	D9TZ 12192–A		

12370 DIAPHRAGM ASSY.–Codes 301 thru 499

CODE	PART NUMBER	MOTORCRAFT SALES NO.	DESCRIPTION	CODE	PART NUMBER	MOTORCRAFT SALES NO.	DESCRIPTION
301	D2VY 12370–B	*DD–341		311	D2FZ 12370–B	*DDE–403	
302	D3AZ 12370–A	*DD–648		312	★D2FZ 12370–C	*DDE–276	Not replaced
303	★D3DZ 12370–A	*DD–637	Not replaced	313	D7TZ 12370–C	*DD–782	
304	★D3DZ 12370–B	*DD–638	Not replaced	314	D8ZZ 12370–A	*DD–799	Not replaced
305	★D30Z 12370–A	*DD–646	Not replaced	315	★D2TZ 12370–E	*DD–360	Not replaced
306	D30Z 12370–B	*DD–645		316	D3VY 12370–A	*DD–660	
307	★D30Z 12370–C	*DD–644	Not replaced	317	D2TZ 12370–F	*DD–340	
308	★D3SZ 12370–A	*DD–647	Not replaced	318	★D2ZZ 12370–F	*DD–659	Not replaced
309	D2TZ 12370–J	*DD–338		319	D30Z 12370–E	*DD–652	
310	D2FZ 12370–A	*DDE–402		320	★D3MY 12370–A	*DD–657	Not replaced

DISTRIBUTOR CALIBRATION PARTS CROSS REFERENCE LIST

CODE	PART NUMBER	MOTORCRAFT SALES NO.	DESCRIPTION	CODE	PART NUMBER	MOTORCRAFT SALES NO.	DESCRIPTION
12127	DISTRIBUTOR ASSY. — Cont'd						

12370 DIAPHRAGM ASSY.–Codes 301 thru 499

321	★ D3AZ	12370–B	*DD–651	Not replaced	368	★ D5DZ	12370–C	*DD–733	Not replaced
322	★ D3VY	12370–B	*DD–658	Not replaced	369	★ D5FZ	12370–A	*DD–731	Not replaced
323	★ D3SZ	12370–B	*DD–653	Not replaced	370	★ D5FZ	12370–B	*DD–737	Not replaced
324	D40Z	12370–G	*DD–708		371	★ D5ZZ	12370–A	*DD–732	Not replaced
325	★ D2RY	12370–E	*DDE–274	Not replaced	372	★ D5ZZ	12370–B	*DD–741	Not replaced
326	D2RY	12370–F	*DDE–275		373	D4RY	12370–C	*DD–710	
327	D20Z	12370–D	*DD–348		374	★ D4ZZ	12370–D	*DD–745	Not replaced
328	★ D30Z	12370–K	*DD–667	Not replaced	375	★ D5DZ	12370–G	*DD–746	Not replaced
329	D3UZ	12370–D	*DD–654		376	D5DZ	12370–H	*DD–747	
330	★ D30Z	12370–L	*DD–670	Not replaced	377	★ D4RY	12370–D	*DD–711	Not replaced
331	★ D3DZ	12370–C	*DD–672	Not replaced	378	★ D4FZ	12370–B	*DD–754	Not replaced
332	D3MY	12370–C	*DD–664		379	D5AZ	12370–B	*DD–755	
333	D3AZ	12370–C	*DD–675		380	D5TZ	12370–L	*DD–736	
334	★ D3RY	12370–A	*DD–674	Not replaced	381	★ D3FZ	12370–C	*DD–757	Not replaced
335	D3RY	12370–B	*DD–673		382	D5TZ	12370–K	*DD–729	
336	★ D4AZ	12370–A	*DD–684	Not replaced	383	D5FZ	12370–C	*DD–763	
337	★ D4AZ	12370–C	*DD–689	Not replaced	384	D5ZZ	12370–C	*DD–758	
338	★ D4AZ	12370–D	*DD–683	Not replaced	385	★ D6DZ	12370–A	*DD–761	Not replaced
339	★ D4DZ	12370–D	*DD–687	Not replaced	386	D6FZ	12370–A	*DD–759	
340	D3FZ	12370–B	*DD–650		387	D6DZ	12370–B	*DD–764	
341	★ D4DZ	12370–F	*DD–685	Not replaced	388	D5TZ	12370–G	*DD–738	
342	D40Z	12370–A	*DD–692		389	D6DZ	12370–C	*DD–769	
343	D4TZ	12370–B	*DD–690		390	★ D6ZZ	12370–A	*DD–774	Not replaced
344	D4TZ	12370–C	*DD–697		391	★ D6ZZ	12370–B	*DD–775	Not replaced
345	D4TZ	12370–D	*DD–688		392	★ D6ZZ	12370–C	*DD–776	Not replaced
346	D4TZ	12370–F	*DD–682		393	★ D6ZZ	12370–D	*DD–777	Not replaced
347	D4TZ	12370–G	*DD–695		394	★ D7FZ	12370–C	*DD–787	Not replaced
348	D4UZ	12370–A	*DD–681		395	D7DZ	12370–A	*DD–781	
349	★ D4VY	12370–A	*DD–691	Not replaced	396	★ D7FZ	12370–A	*DD–784	Not replaced
350	★ D4ZZ	12370–B	*DD–676	Not replaced	397	D6ZZ	12370–A	*DD–774	
351	★ D4FZ	12370–A	*DD–680	Not replaced	398	D7ZZ	12370–A	*DD–785	
352	★ D5TZ	12370–C	*DD–718	Not replaced	399	D7TZ	12370–B	*DD–780	
353	D4ZZ	12370–C	*DD–693		400	D8AZ	12370–A	*DD–794	
354	D4AZ	12370–E	*DD–696		401	D8BZ	12370–A	*DD–795	
355	D4RY	12370–A	*DD–679		402	★ D8DZ	12370–A	*DD–796	Not replaced
356	★ D4RY	12370–B	*DD–678	Not replaced	403	★ D8AZ	12370–B	*DD–831	Not replaced
357	D4MY	12370–B	*DD–698		404	D8AZ	12370–C	*DD–832	
358	★ D4DZ	12370–G	*DD–700	Not replaced	405	★ D8PZ	12370–A	*DD–836	Not replaced
359	★ D4DZ	12370–A	*DD–701	Not replaced	406	★ D6TZ	12370–B	*DD–768	Not replaced
360	D5AZ	12370–A	*DD–714		407	★ D9BZ	12370–B	*DD–839	Not replaced
361	★ D5DZ	12370–E	*DD–723	Not replaced	408	★ D9BZ	12370–C	*DD–840	Not replaced
362	D5DZ	12370–D	*DD–722		409	D9ZZ	12370–A	*DD–841	
363	★ D50Z	12370–A	*DD–724	Not replaced	410	D9ZZ	12370–B	*DD–842	
364	★ D5TZ	12370–F	*DD–725	Not replaced	411	★ D9AZ	12370–A	*DD–843	Not replaced
365	D40Z	12370–D	*DD–719		412	D9AZ	12370–B	*DD–845	
366	D5DZ	12370–A	*DD–735		413	★ D9ZZ	12370–C	*DD–846	Not replaced
367	D5DZ	12370–B	*DD–734		414	★ D4PZ	12370–A	*DD–853	Not replaced
					415	D9AZ	12370–C	*DD–859	

12A096 SLEEVE and PLATE ASSY. Codes 501 thru 599

501	D3AZ	12A096–A	*DB–195		508	D5FZ	12A096–B		
502	D4AZ	12A096–C	*DB–197		509	D5FZ	12A096–C		
503	D4DZ	12A096–A	*DB–199		510	★ D5TZ	12A096–A		Not replaced
504	★ D4DZ	12A096–B	*DB–198	Not replaced	511	★ D5TZ	12A096–B		Not replaced
505	★ D4DZ	12A096–C	*DB–200	Not replaced	512	D5TZ	12A096–C		
506	★ D5AZ	12A096–A		Not replaced	513	D6ZZ	12A096–A		
507	★ D5FZ	12A096–A		Not replaced					

COPYRIGHT © 1986 — FORD MOTOR COMPANY — DEARBORN, MICHIGAN

12127 DISTRIBUTOR ASSY. — Cont'd

APPLICATION CHART

HOW TO FIND A DISTRIBUTOR ASSY.

To select the correct DISTRIBUTOR the following information must be known and utilized–

- Year
- Car line (Mercury, Capri, Lincoln, etc.)
- Engine (4 cyl. 2.3L, 6 cyl. 4.1L–250 C.I.D., 8 cyl. 5.8L–351 C.I.D., etc.)
- Transmission (manual, automatic, etc.)
- Other factors (California, hi–altitude, etc.)
- In some cases, more than one service DISTRIBUTOR may be specified in the catalog based on the above information. In these cases the identification part number shown on the DISTRIBUTOR ASSY. is also required

For example:
If a DISTRIBUTOR ASSY. is required for a 1974 Capri with a 6 cylinder 2.8L (171 C.I.D.) engine, automatic transmission–

- Refer to 1974 J (CAPRI)
- Read down to fine "J – – A/T 6(cyl.) 171 (C.I.D.)".

The service part numbers listed for this application are D4RY 12127–J and D4ZZ 12127–M. Therefore, to select the correct service part number, the identification part number shown on the DISTRIBUTOR taken from the vehicle, must be used.

If the DISTRIBUTOR identification is 74TF 12100–RA, the service part number is D4RY 12127–J. If the DISTRIBUTOR identification is 74TF 12100–MA the service part number is D4ZZ 12127–M.

Determine engine (number of cylinder and C.I.D.), year, model and/or identification. Find service Distributor as well as Cap, Condenser, Points, Repair kit and Rotor in adjacent columns.

(Also see pages 19 thru 23 of this section for Parts Lists instructions and DISTRIBUTOR IDENTIFICATION CHART)

YEAR	MODEL/ RESTRICTIONS	PARTS LIST SECTION & NO.	SERVICE REPLACEMENT DISTRIBUTOR	DISTRIBUTOR COMPONENTS					ILLUS. SEC. 120 PAGE
				CAP	CON-DEN-SER	POINTS	REPAIR KIT	ROTOR	
12127 DISTRIBUTOR ASSY. — Cont'd									
4 CYL. 2.0L (2000 cc or 122 C.I.D.)									
d–D1FZ 12106–A *DH–157 l–D4FZ 12300–A *DC–404 r–D3RY 12300–A *DC–263									
△ Internal parts not serviced, ● Replaced by D1FZ 12171–A (12/79)									
73	J – – M/T	△	★ D3RY 12127–A *DA–1241	d	r	D1FZ 12171–A *DP–124		D1FZ 12200–A *DR–92	1
73	J – – A/T	△	★ D3RY 12127–B *DAE–1245	d	r	D1FZ 12171–A *DP–124		D1FZ 12200–A *DR–92	1
74	J – – M/T	△	★ D4RY 12127–G *DA–1327	d	r	●★ D4FZ 12171–A *DP–304		D1FZ 12200–A *DR–92	1
74	J – – A/T–exc. Calif.	△	★ D4RY 12127–L *DA–1335	d	r	●★ D4FZ 12171–A *DP–304		D1FZ 12200–A *DR–92	1
74	J – – A/T Calif.	△	★ D4FZ 12127–C *DA–1435	d	l	●★ D4FZ 12171–A *DP–304		D1FZ 12200–A *DR–92	1
74	L – – M/T	△	★ D4FZ 12127–A *DA–1341	d	l	●★ D4FZ 12171–A *DP–304		D1FZ 12200–A *DR–92	1
74	L – – A/T	△	★ D4FZ 12127–B *DA–1338	d	l	●★ D4FZ 12171–A *DP–304		D1FZ 12200–A *DR–92	1

YEAR	MODEL/ RESTRICTIONS	PARTS LIST SECTION & NO.	SERVICE REPLACEMENT DISTRIBUTOR	DISTRIBUTOR COMPONENTS CAP	CON-DEN-SER	POINTS	REPAIR KIT	ROTOR	ILLUS. SEC. 120 PAGE
12127	DISTRIBUTOR ASSY. — Cont'd								

APPLICATION CHART

Refer to page 26 for Application Instructions

4 CYL. 2.3L (2300 cc or 140 C.I.D.) — exc. TC

k-E5BZ 12106-A *DH-368-B s-D4ZZ 12300-A *DC-401 y-D5FZ 12106-A *DH-352

76	J - - A/T without A/C	120.6B	★ D5RY 12127-C *DAE-1453	y	none	None	None	D5FZ 12200-A *DR-220-A	9
76	J - - M/T-without A/C	120.6B	★ D5RY 12127-D *DAE-1454	y	none	None	None	D5FZ 12200-A *DR-220-A	9
74	L	120.3A	★ D4ZZ 12127-K *DA-1378	y	s	D4ZZ 12171-B *DP-302-A	D4ZZ 12000-A *DK-17	D5FZ 12200-A *DR-220-A	8
75	L - - A/T Calif.- "Before 5/19/75"	120.6B	★ D5ZZ 12127-A *DA-1447	y	none	None	None	D5FZ 12200-A *DR-220-A	9
75	L - - M/T Calif.- "Before 5/19/75"	120.6B	D5FZ 12127-E *DA-1451	y	none	None	None	D5FZ 12200-A *DR-220-A	9
75 75	L - - M/T exc. Calif. L - - A/T- "From 5/19/75"	120.6B	★ D5FZ 12127-F *DA-1392-A	y	none	None	None	D5FZ 12200-A *DR-220-A	9
75	L - - M/T Calif.- "From 5/19/75"	120.6B	★ D5FZ 12127-G *DA-1351-A	y	none	None	None	D5FZ 12200-A *DR-220-A	9
75	L - - A/T Calif.	120.6A	★ D5ZZ 12127-F *DA-1489	y	none	None	None	D5FZ 12200-A *DR-220-A	9
75	L - - M/T exc. Calif.	120.6A	★ D5ZZ 12127-G *DA-1440	y	none	None	None	D5FZ 12200-A *DR-220-A	9
76	L - - M/T Calif.	120.6B	★ D6FZ 12127-A *DA-1491	y	none	None	None	D5FZ 12200-A *DR-220-A	9
76	L - - M/T exc. Calif.	120.6B	★ D6FZ 12127-D *DA-1493	y	none	None	None	D5FZ 12200-A *DR-220-A	9
76	J,L - - A/T	120.6A	★ D6FZ 12127-B *DA-1492	y	none	None	None	D5FZ 12200-A *DR-220-A	9
77/	L - - A/T with Hi-altitude Carb	120.6C	★ D7FZ 12127-B *DA-1544	k	none	None	None	D7FZ 12200-C *DR-308	9
77/78 78 79 79	J,L - - A/T - w/o Hi-altitude Carb- exc. Calif P - - A/T L - - A/T-w/o Hi-altitude carb. P - - A/T exc. Calif.	120.6C	D7FZ 12127-C *DA-1542	k	none	None	None	D7FZ 12200-C *DR-308	9
77/78 79	L(62,64) - - A/T- Calif J,P - - A/T - Calif.	120.6C	★ D7FZ 12127-J *DA-1594	k	none	None	None	D7FZ 12200-C *DR-308	9
77/ 78/	J,L - - M/T exc. Calif. P - - M/T-exc. Calif.	120.6C	D7FZ 12127-D *DA-1543	k	none	None	None	D7FZ 12200-C *DR-308	9
77 78/ 78 79	J,L(73) - - M/T-Calif L - - M/T-Calif. P - - M/T-Calif. J,P - - M/T with A/C Calif.	120.6D	D7FZ 12127-E *DA-1541	k	none	None	None	D7FZ 12200-C *DR-308	9
79	J,P - - M/T w/o A/C-Calif.	120.6C	★ D9FZ 12127-A *DA-1716	k	none	None	None	D7FZ 12200-C *DR-308	9
77	L(62,64) - - M/T -Calif	120.6C	★ D7FZ 12127-H *DA-1592	k	none	None	None	D7FZ 12200-C *DR-308	9

COPYRIGHT © 1986 — FORD MOTOR COMPANY — DEARBORN, MICHIGAN

YEAR	MODEL/ RESTRICTIONS	PARTS LIST SECTION & NO.	SERVICE REPLACEMENT DISTRIBUTOR	DISTRIBUTOR COMPONENTS CAP	CON-DEN-SER	POINTS	REPAIR KIT	ROTOR	ILLUS. SEC. 120 PAGE
12127	DISTRIBUTOR ASSY. — Cont'd								

APPLICATION CHART

Refer to page 26 for Application Instructions

4 CYL. 2.3L (2300 cc or 140 C.I.D.) – TC

k–E5BZ 12106–A *DH–368–B

79	J – – exc. Calif. "Before 9/29/78"	120.6C	★ D9ZZ 12127–A *DA–1683	k	none	None	None	D7FZ 12200–C *DR–308	9
79	J – – exc. Calif. "From 9/29/78"	120.6C	D9ZZ 12127–J	K	none	None	None	D7FZ 12200–C *DR–308	9
79	J – – Calif.	120.6C	★ D9ZZ 12127–B *DA–1684	k	none	None	None	D7FZ 12200–C *DR–308	9

6 CYL. 2.6L (2600 cc or 159 C.I.D.)

f–D2RY 12106–A *DHE–309 n–D2RY 12300–B *DCE–262 △ Internal parts not serviced

73	J – – M/T	△	D2RY 12127–K *DAE–1244	f	n	D4RY 12171–B *DP–303–A		D2RY 12200–A *DRE–103	5
73	J – – A/T	△	★ D2RY 12127–J *DAE–1243	f	n	D4RY 12171–B *DP–303–A		D2RY 12200–A *DRE–103	5

6 CYL. 2.8L (2800 cc or 171 C.I.D.)

f–D2RY 12106–A *DHE–309 g–D7DZ 12106–A *DH–367 (cap) and E3DZ 12A217–A *DJ–1–A (adapter)
u–D4ZZ 12300–B *DC–403 v–D4RY 12300–A *DC–402 x–D7TZ 12106–B *DH–353
aa–D9ZZ 12106–A *DH–387, △ Internal parts not serviced ■ r/b D6RY 12127–A & D7PZ 12259–B

74	J – – M/T Calif.	△	★ D4RY 12127–K *DA–1337	f	v	D4RY 12171–B *DP–303–A		D2RY 12200–A *DRE–103	5
74	J – – A/T	△	★ D4RY 12127–J *DA–1336	f	v	D4RY 12171–B *DP–303–A		D2RY 12200–A *DRE–103	5
74	J – – A/T	△	D4ZZ 12127–M *DA–1339	f	u	D4RY 12171–B *DP–303–A		D4RY 12200–A *DRE–229	5
74	J – – M/T exc. Calif.	△	★ D4RY 12127–T *DA–1366	f	v	D4RY 12171–B *DP–303–A		D4RY 12200–A *DRE–229	5
75	L – – Calif.	120.7A	★ D5ZZ 12127–C *DA–1455	x	none	None	None	D5FZ 12200–B *DR–221	10
75	L – – exc. Calif.	120.7B	D5ZZ 12127–D *DA–1475	x	none	None	None	D5FZ 12200–B *DR–221	10
76	L – – exc. Calif.	120.7A	D6ZZ 12127–C *DA–1529	x	none	None	None	D5FZ 12200–B *DR–221	10
76	L – – Calif.	120.7B	★ D6ZZ 12127–D *DA–1530	x	none	None	None	D5FZ 12200–B *DR–221	10
76	J – – M/T "Before 8/30/76"	△	★ D5RY 12127–E *DAE–1464	x	none	None	None	D5FZ 12200–B *DR–221	10
76/	J – – M/T– –Ford Distributor "From 8/30/76"	120.7C	D6RY 12127–A *DA–1545	g	none	None	None	E3DZ 12200–A *DR–314–B	10
79	J – – M/T Bosch Distributor– exc. Calif.	△	■★ D9ZZ 12127–F *DA–1735	aa	none	None	None	D9ZZ 12200–A *DR–330	10
78	J – – M/T	120.7C	★ D8ZZ 12127–C *DA–1661	g	none	None	None	D7DZ 12200–A *DR–314	10
76	J – – A/T "Before 8/30/76"	△	★ D5RY 12127–F *DAE–1465	x	none	None	None	D5FZ 12200–B *DR–221	10
76/ 77/	J – – A/T–Ford distributors–exc. Calif. "From 8/30/76" L – – A/T–Ford distributors–exc. Calif. "From 8/30/76"	120.7D	D7ZZ 12127–C *DA–1579	g	none	None	None	E3DZ 12200–A *DR–314–B	10

YEAR	MODEL/ RESTRICTIONS	PARTS LIST SECTION & NO.	SERVICE REPLACEMENT DISTRIBUTOR	DISTRIBUTOR COMPONENTS CAP	CON-DEN-SER	POINTS	REPAIR KIT	ROTOR	ILLUS. SEC. 120 PAGE
12127	DISTRIBUTOR ASSY. — Cont'd.								

APPLICATION CHART

Refer to page 26 for Application Instructions

6 cyl. 2.8L (2800cc or 171 C.I.D.)

f-D2RY 12106-A *DHE-309 g-D7DZ 12106-A *DH-367 (cap) and E3DZ 12A217-A *DJ-1-A(adapter)
u-D4ZZ 12300-B *DC-403 v-D4RY 12300-A *DC-402 x-D7TZ 12106-B *DH-369
aa-D9ZZ 12106-A *DH-387, △ Internal parts not serviced. ‡ r/b D7ZZ 12127-C & D7PZ 12259-B

79	J,L - - A/T Bosch Distributor- exc. Calif.	△	‡★D9ZZ 12127-G *DA-1736	aa	none	None	None	D9ZZ 12200-A *DR-330	10
76/78 77	J - - A/T - Calif "From 8/30/76" L - - A/T-Calif "Before 6/27/77"	120.7C	★ D6RY 12127-B *DA-1546	g	none	None	None	E3DZ 12200-A *DR-314-B	10
77/78	L - - A/T-Calif.- "From 6/27/77"	120.7E	★ D8ZZ 12127-D *DA-1662	g	none	None	None	E3DZ 12200-A *DR-314-B	10
79	J,L - - A/T Calif.	△	D9ZZ 12127-E *DA-1730	g	none	None	None	E3DZ 12200-A *DR-314-B	10

6 CYL. 3.3L (200 C.I.D.)

b-C9AZ 12300-A *DC-13-A c-7HA 12106-A *DH-4 g-D7DZ 12106-A *DH-367 (cap) and
E3DZ 12A217-A *DJ-1-A (adapter) x-D7TZ 12106-B *DH-369

73	P - - A/T	120.1A	★ D3DZ 12127-A *DA-1272	c	b	C9AZ 12171-B *DP-3	C5AZ 12000-D *DK-16	D5PZ 12200-B *DR-87-B	3
73	P - - A/T	120.1A	★ D3PZ 12127-G *DA-1272-A	c	b	C9AZ 12171-B *DP-3	C5AZ 12000-D *DK-16	D5PZ 12200-B *DR-87-B	3
73	P - - M/T	120.1A	★ D3DZ 12127-B *DA-1273	c	b	C9AZ 12171-B *DP-3	C5AZ 12000-D *DK-16	D5PZ 12200-B *DR-87-B	3
74	P - - A/T with breakerless ign.	120.4A	★ D4DZ 12127-F *DA-1344 r/bD4PZ 12127-A	c	none	None	None	D5PZ 12200-B *DR-87-B	7
74	P - - A/T with breakerless ign.	120.5B	★ D4PZ 12127-A *DA-1344-A	x	none	None	None	D7TZ 12200-C *DR-312	7
74	P - - A/T without breakerless ign.	120.1B	★ D4DZ 12127-K *DA-1368	c	b	D4DZ 12171-A *DP-305	None	D5PZ 12200-B *DR-87-B	3
74	P - - M/T	120.1B	★ D4DZ 12127-H *DA-1377	c	b	D4DZ 12171-A *DP-305	None	D5PZ 12200-B *DR-87-B	3
75	G,P - - M/T	120.5C	★ D5DZ 12127-U *DA-1467	x	none	None	None	D5PZ 12200-B *DR-87-B	9
75	P - - A/T	120.5C	★ D5DZ 12127-R *DA-1460	x	none	None	None	D5PZ 12200-B *DR-87-B	9
76	G,P - - M/T	120.5B	★ D6DZ 12127-B *DA-1481	x	none	None	None	D5PZ 12200-B *DR-87-B	9
76	P - - A/T exc. Calif.	120.5B	★ D6DZ 12127-D *DA-1505	x	none	None	None	D5PZ 12200-B *DR-87-B	9
77 78/	G,P P - - A/T-with Hi-altitude carb.	120.5E	★ D7DZ 12127-E *DA-1551	g	none	None	None	E3DZ 12200-A *DR-314-B	9
78 79	P - - without fuel economy carb.- exc. Hi-altitude carb. -exc. Calif. P - - A/T with pulse air-Canada	120.5E	★ D8BZ 12127-C *DA-1639	g	none	None	None	E3DZ 12200-A *DR-314-B	9

COPYRIGHT © 1986 — FORD MOTOR COMPANY — DEARBORN, MICHIGAN

YEAR	MODEL/ RESTRICTIONS	PARTS LIST SECTION & NO.	SERVICE REPLACEMENT DISTRIBUTOR	DISTRIBUTOR COMPONENTS					ILLUS. SEC. 120 PAGE
				CAP	CON-DEN-SER	POINTS	REPAIR KIT	ROTOR	
12127	DISTRIBUTOR ASSY. — Cont'd								

APPLICATION CHART

Refer to page 26 for Application Instructions

6 CYL. 3.3L (200 C.I.D.)

b-C9AZ 12300-A *DC-13-A c-7HA 12106-A *DH-4
g-D7DZ 12106-A *DH-367 (cap) and E3DZ 12A217-A *DJ-1-A (adapter) x-D7TZ 12106-B *DH-369

78	P - - C3 with fuel economy carb.	120.5E	★ D8BZ 12127-E *DA-1673	g	none	None	None	E3DZ 12200-A *DR-314-B	9
78 79	P - - A/T-Calif. P - - Calif.	120.5D	D7DZ 12127-M *DA-1593	g	none	None	None	E3DZ 12200-A *DR-314-B	9
78 78 79 79 79	P - - M/T-3500 # I.W. P - - C4 with fuel economy carb. P - - M/T-exc. Calif. P - - A/T w/o pulse air-exc. Calif. J	120.5E	D8BZ 12127-A *DA-1634	g	none	None	None	E3DZ 12200-A *DR-314-B	9
79	P - - A/T-w/ pulse air-exc. Calif. or Canada-"Before 3/26/79"	120.5E	D9BZ 12127-C *DA-1731	g	none	None	None	E3DZ 12200-A *DR-314-B	9
79	P - - A/T-w/ pulse air-exc. Calif. or Canada "From 3/26/79"	120.5E	D9BZ 12127-D *DA-1745	g	none	None	None	E3DZ 12200-A *DR-314-B	9
78	P - - M/T-3000 # I.W.	120.5E	★ D8BZ 12127-D *DA-1671	g	none	None	None	E3DZ 12200-A *DR-314-B	9

6 CYL. 4.1L (250 C.I.D.)

b-C9AZ 12300-A *DC-13-A c-7HA 12106-A *DH-4
g-D7DZ 12106-A *DH-367 (cap) and E3DZ 12A217-A *DJ-1-A (adapter) x-D7TZ 12106-B *DH-369

73	C (P/C, Taxi) - - A/T	120.1A	★ D30Z 12127-A *DA-1274	c	b	C9AZ 12171-B *DP-3	C5AZ 12000-D *DK-16	D5PZ 12200-B *DR-87-B	3
73	C,P - - M/T	120.1A	★ D30Z 12127-B *DA-1304	c	b	C9AZ 12171-B *DP-3	C5AZ 12000-D *DK-16	D5PZ 12200-B *DR-87-B	3
73 73 74	C - - A/T P (exc. Calif.) - - A/T P - - A/T without breakerless ign.	120.1A	★ D30Z 12127-R *DA-1295	c	b	C9AZ 12171-B *DP-3 (1973) D4DZ 12171-A *DP-305 (1974)	C5AZ 12000-D *DK-16 (1973)	D5PZ 12200-B *DR-87-B	3
73	P (Calif.) - - A/T	120.1A	★ D30Z 12127-L *DA-1291	c	b	C9AZ 12171-A *DP-3	C5AZ 12000-D *DK-16	D5PZ 12200-B *DR-87-B	3
74	P - - A/T with breakerless ign.	120.5A	★ D4PZ 12127-B *DA-1370-A	c	none	None	None	D5PZ 12200-B *DR-87-B	7
74	P - - M/T with breakerless ign.	120.5A	★ D4DZ 12127-L *DA-1343 r/bD8PZ 12127-A	c	none	None	None	D5PZ 12200-B *DR-87-B	7
74	P - - M/T with breakerless ign.	120.5E	D8PZ 12127-A *DA-1343-A	x	none	None	None	D7TZ 12200-C *DR-312	6
74	P - - M/T without breakerless ign.	120.1B	★ D4DZ 12127-A *DA-1372	c	b	D4DZ 12171-A *DP-305	None	D5PZ 12200-B *DR-87-B	3
75	G,P - - M/T w/o catalyst	120.5C	★ D5DZ 12127-D *DA-1432	x	none	None	None	D5PZ 12200-B *DR-87-B	9
75 76	G,P - - A/T G,P - - A/T Canada	120.5C	★ D5DZ 12127-A *DA-1386	x	none	None	None	D5PZ 12200-B *DR-87-B	9

YEAR	MODEL/ RESTRICTIONS	PARTS LIST SECTION & NO.	SERVICE REPLACEMENT DISTRIBUTOR	DISTRIBUTOR COMPONENTS CAP	CON-DEN-SER	POINTS	REPAIR KIT	ROTOR	ILLUS. SEC. 120 PAGE
12127	DISTRIBUTOR ASSY. — Cont'd								

APPLICATION CHART

Refer to page 26 for Application Instructions

6 CYL. 4.1L (250 C.I.D.)

b–C9AZ 12300–A *DC–13–A c–7HA 12106–A *DH–4
g–D7DZ 12106–A *DH–367 (cap) and E3DZ 12A217–A *DJ–1–A (adapter) x–D7TZ 12106–B *DH–369

75	G,P – – M/T w/ catalyst	120.5C	★ D5DZ 12127–T *DA–1468	x	none	None	None	D5PZ 12200–B *DR–87–B	9
75	G,P – – A/T exc. Calif.	120.5C	★ D5DZ 12127–V *DA–1479	x	none	None	None	D5PZ 12200–B *DR–87–B	9
76	G,P – – M/T exc. Calif.	120.5B	★ D6DZ 12127–A *DA–1487	x	none	None	None	D5PZ 12200–B *DR–87–B	9
76	G,P – – A/T exc. Canada	120.5B	★ D6DZ 12127–G *DA–1484	x	none	None	None	D5PZ 12200–B *DR–87–B	9
76	G,P – – M/T–Calif.	120.5C	★ D6DZ 12127–K *DA–1523	x	none	None	None	D5PZ 12200–B *DR–87–B	9
77	G,P – – A/T–exc Calif	120.5E	★ D7DZ 12127–D *DA–1553	g	none	None	None	E3DZ 12200–A *DR–314–B	9
77	G,P – – M/T	120.5D	★ D7DZ 12127–C *DA–1552	g	none	None	None	E3DZ 12200–A *DR–314–B	9
77	G,P – – A/T–Calif	120.5D	★ D7DZ 12127–M	g	none	None	None	E3DZ 12200–A *DR–314–B	9
78/	G – – M/T	120.5E	D8DZ 12127–E *DA–1658	g	none	None	None	E3DZ 12200–A *DR–314–B	9
78 79	G – – A/T exc. Calif. G – – A/T–exc. Calif. with T/E	120.5E	★ D8DZ 12127–A *DA–1630	g	none	None	None	E3DZ 12200–A *DR–314–B	9
78/	G – – A/T–Calif.	120.5E	★ D8DZ 12127–C *DA–1643	g	none	None	None	E3DZ 12200–A *DR–314–B	9
79	G – – A/T – exc. Calif. with T/E	120.5E	D9DZ 12127–C *DA–1679	g	none	None	None	E3DZ 12200–A *DR–314–B	9

8 CYL. 5.0L (302 C.I.D.)

a–B7A 12106–A *DH–6 b–C9AZ 12300–A *DC–13–A ■ Parts list to follow in subsequent change
h–E2ZZ 12106–A *DH–411 (cap) and E2ZZ 12A217–B *DJ–6 (adapter)
o–D84Y 12106–A *DH–377 (cap) and D84Y 12A217–A *DJ–3 (adapter) w–D5AZ 12106–A *DH–354
z–D9AZ 12106–A *DH–384 (cap) and D9AZ 12A217–A *DJ–4 (adapter)

73	C – – A/T	120.2C	★ D30Z 12127–K *DA–1278	a	b	B8Q 12171–A *DP–12	C0TZ 12000–A *DK–10	B7A 12200–A *DR–5	4
73	C – – A/T	120.2C	★ D3BZ 12127–B *DA–1261	a	b	B8Q 12171–A *DP–12	C0TZ 12000–A *DK–10	B7A 12200–A *DR–5	4
73	C – – A/T	120.2C	★ D30Z 12127–M *DA–1358	a	b	B8Q 12171–A *DP–12	C0TZ 12000–A *DK–10	B7A 12200–A *DR–5	4
73	C(71) – – M/T	120.2C	D30Z 12127–V *DA–1311	a	b	B8Q 12171–A *DP–12	C0TZ 12000–A *DK–10	B7A 12200–A *DR–5	4
73 73 74	C (exc. 71) – – M/T P – – M/T C(P/C,Taxi) – – M/T –without breakerless ign.	120.2C	D30Z 12127–D *DA–1264	a	b	B8Q 12171–A *DP–12(1973) D40Z 12171–A *DP–306 (1974)	C0TZ 12000–A *DK–10(1973)	B7A 12200–A *DR–5	4
73	C,P – – M/T	120.2C	★ D3PZ 12127–M *DA–1146–A	a	b	B8Q 12171–A *DP–12	C0TZ 12000–A *DK–10	B7A 12200–A *DR–5	4
73 73 74	P – – A/T C – – A/T C,P – – A/T without breakerless ign.	120.2C	★ D30Z 12127–H *DA–1279	a	b	B8Q 12171–A *DP–12(1973) D40Z 12171–A *DP–306 (1974)	C0TZ 12000–A *DK–10	B7A 12200–A *DR–5	4

COPYRIGHT © 1986 — FORD MOTOR COMPANY — DEARBORN, MICHIGAN

1973/79 LINCOLN-MERCURY CARS

YEAR	MODEL/ RESTRICTIONS	PARTS LIST SECTION & NO.	SERVICE REPLACEMENT DISTRIBUTOR	DISTRIBUTOR COMPONENTS CAP	CON-DEN-SER	POINTS	REPAIR KIT	ROTOR	ILLUS. SEC. 120 PAGE
12127	DISTRIBUTOR ASSY. — Cont'd								

APPLICATION CHART

Refer to page 26 for Application Instructions

8 CYL. 5.0L (302 C.I.D.)

a–B7A 12106–A *DH–6 b–C9AZ 12300–A *DC–13–A ■ Parts list to follow in subsequent change
h–E2ZZ 12106–A *DH–411 (cap) and E2ZZ 12A217–B *DJ–6 (adapter)
o–D84Y 12106–A *DH–377 (cap) and D84Y 12A217–A *DJ–3 (adapter) w–D5AZ 12106–A *DH–354
z–D9AZ 12106–A *DH–384 (cap) and D9AZ 12A217–A *DJ–4 (adapter)

73	P – – A/T with 2.79, 3.00 axle ratio	120.2C	★ D30Z 12127–J *DA–1286	a	b	B8Q 12171–A *DP–12	C0TZ 12000–A *DK–10	B7A 12200–A *DR–5	4
74	C,P – – A/T with breakerless ign.	120.4B	★ D4DZ 12127–M *DA–1353	a	none	None	None	B7A 12200–A *DR–5	7
74	C(exc. P/C, Taxi) – – M/T without breakerless ign.	120.2C	★ D3BZ 12127–D *DA–1287	a	b	D40Z 12171–A *DP–306		B7A 12200–A *DR–5	4
74	C(P/C, Taxi) – – M/T with breakerless ign.	120.4B	★ D40Z 12127–K *DA–1398	a	none	None	None	B7A 12200–A *DR–5	7
74	C – – M/T without breakerless ign.	120.2C	D3UZ 12127–E *DA–1260	a	b	D40Z 12171–A *DP–306	None	B7A 12200–A *DR–5	4
75	G,P – – M/T	120.4D	★ D5DZ 12127–L *DA–1431	w	none	None	None	D5PZ 12200–A *DR–5–B	7
75/76	G,P – – M/T	120.4D	★ D5DZ 12127–W *DA–1498	w	none	None	None	D5PZ 12200–A *DR–5–B	7
75	P – – A/T exc. Calif. "Before 12/2/74"	120.4D	★ D5DZ 12127–K *DA–1433	w	none	None	None	D5PZ 12200–A *DR–5–B	7
75 75	G – – A/T exc. Calif. P – – A/T exc. Calif. "From 12/2/74"	120.4D	★ D5DZ 12127–S *DA–1461	w	none	None	None	D5PZ 12200–A *DR–5–B	7
75	G,P – – A/T–Calif.	120.4D	★ D5DZ 12127–B *DA–1410	w	none	None	None	D5PZ 12200–A *DR–5–B	7
75 76	G,P – – A/T G,P – – A/T Calif. and Canada	120.4D	★ D5DZ 12127–X *DA–1499	w	none	None	None	D5PZ 12200–A *DR–5–B	7
75	G – – A/T Canada	120.4D	D5DZ 12127–J *DA–1430	w	none	None	None	D5PZ 12200–A *DR–5–B	7
76	G,P – – A/T exc. Calif. and Canada	120.4D	★ D6DZ 12127–J *DA–1510	w	none	None	None	D5PZ 12200–A *DR–5–B	7
77	G – – M/T	120.4J	★ D7DZ 12127–A *DA–1554	h	none	None	None	E4HZ 12200–A *DR–323–A	6
77 77 78	F "Before 2/1/77" G,P,V – – A/T without Hi–altitude Carb –exc. Calif G,P – – A/T–without Hi–altitude carb. –exc. Calif.	120.4J	★ D7DZ 12127–G *DA–1557	h	none	None	None	E4HZ 12200–A *DR–323–A	6
77	F "From 2/1/77"	120.4J	★ D70Z 12127–B *DA–1605	h	none	None	None	E4HZ 12200–A *DR–323–A	6
77	G,P,V – – A/T–Calif	120.4J	★ D7DZ 12127–H *DA–1560	h	none	None	None	E4HZ 12200–A *DR–323–A	6
77	G,P,V – – A/T with Hi–altitude Carb	120.4J	★ D7DZ 12127–L *DA–1586	h	none	None	None	E4HZ 12200–A *DR–323–A	6
78/	G,P – – A/T–with Hi–altitude carb.	120.4J	★ D8DZ 12127–F *DA–1734	h	none	None	None	E4HZ 12200–A *DR–323–A	6
78	F	120.4J	★ D8AZ 12127–D *DA–1641	h	none	None	None	E4HZ 12200–A *DR–323–A	6
78/ 79	G,P – – A/T – Calif. A,V – – Calif.	120.4J	D8DZ 12127–D *DA–1656	h	none	None	None	E4HZ 12200–A *DR–323–A	6

YEAR	MODEL/ RESTRICTIONS	PARTS LIST SECTION & NO.	SERVICE REPLACEMENT DISTRIBUTOR	DISTRIBUTOR COMPONENTS CAP	CON-DEN-SER	POINTS	REPAIR KIT	ROTOR	ILLUS. SEC. 120 PAGE
12127	DISTRIBUTOR ASSY. — Cont'd								

APPLICATION CHART

Refer to page 26 for Application Instructions

8 CYL. 5.0L (302 C.I.D.)

a-B7A 12106-A *DH-6 b-C9AZ 12300-A *DC-13-A ■ Parts list to follow in subsequent change
h-E2ZZ 12106-A *DH-411 (cap) and E2ZZ 12A217-B *DJ-6 (adapter)
o-D84Y 12106-A *DH-377 (cap) and D84Y 12A217-A *DJ-3 (adapter) w-D5AZ 12106-A *DH-354

78	G - - M/T	120.4J	★ D8ZZ 12127-B *DA-1640	h	none	None	None	E4HZ 12200-A *DR-323-A	6
78/	V - - w/E.E.C.	120.8A	D84Y 12127-B *DA-1618-A	o	none	None	None	D84Y 12200-A *DR-319	11
79	J - - A/T - Calif.	120.4J	D7ZZ 12127-F *DA-1655	h	none	None	None	E4HZ 12200-A *DR-323-A	6
79 79	A - - w/2.26 rear axle-exc. Calif. "Before 5/26/79" F - - A/T exc. Calif.	120.4J	★ D9AZ 12127-K *DA-1682	h	none	None	None	E4HZ 12200-A *DR-323-A	6
79	A - - w/2.26 axle -exc. Calif. "From 5/26/79"	120.4J	D9AZ 12127-BA *DA-1775	h	none	None	None	E4HZ 12200-A *DR-323-A	6
79	A - - w/2.26 rear axle-Calif.- "Before 3/26/79"	120.4J	★ D9AZ 12127-A *DA-1712	h	none	None	None	E4HZ 12200-A *DR-323-A	6
79	A - - w/2.26 axle -Calif. "From 3/26/79"	120.4J	★ D9AZ 12127-AA *DA-1744	h	none	None	None	E4HZ 12200-A *DR-323-A	6
79	A - - w/3.08 rear axle-exc. Calif.	120.4J	★ D9AZ 12127-Z *DA-1713	h	none	None	None	E4HZ 12200-A *DR-323-A	6
79 79 79	F,J - - A/T exc. Calif. G - - A/T-exc. Calif. or Hi-altitude carb. P - - A/T exc. Calif. or Hi-altitude carb. "Before 3/26/79"	120.4J	D9ZZ 12127-C *DA-1709	h	none	None	None	E4HZ 12200-A *DR-323-A	6
78	P - - A/T exc. Calif. or Hi-altitude carb. "From 3/26/79"	120.4J	★ D9BZ 12127-F *DA-1781	h	none	None	None	E4HZ 12200-A *DR-323-A	6
79	G,J - - M/T- exc. Calif.	120.4J	★ D9ZZ 12127-D *DA-1710	h	none	None	None	E4HZ 12200-A *DR-323-A	6

8 CYL. 5.8L (351 C.I.D.)-C-2/B

a-B7A 12106-A *DH-6 b-C9AZ 12300-A *DC-13-A

73	F	120.2A	★ D3ZZ 12127-B *DA-1256	a	b	B8Q 12171-A *DP-12	C0TZ 12000-A *DK-10	B7A 12200-A *DR-5	4
73 74	A C,F,Y - - without breakerless ign.	120.2A	★ D3ZZ 12127-G *DA-1285	a	b	B8Q 12171-A *DP-12(1973) D40Z 12171-A *DP-306(1974)	C0TZ 12000-A *DK-10(1973)	B7A 12200-A *DR-5	4
74	C,F,Y - - with breakerless ign.	120.4A	★ D4AZ 12127-A *DA-1349	a	none	None	None	B7A 12200-A *DR-5	7

COPYRIGHT © 1986 — FORD MOTOR COMPANY — DEARBORN, MICHIGAN

YEAR	MODEL/ RESTRICTIONS	PARTS LIST SECTION & NO.	SERVICE REPLACEMENT DISTRIBUTOR	DISTRIBUTOR COMPONENTS CAP	CON-DEN-SER	POINTS	REPAIR KIT	ROTOR	ILLUS. SEC. 120 PAGE
12127	DISTRIBUTOR ASSY. — Cont'd								

APPLICATION CHART

Refer to page 26 for Application Instructions

8 CYL. 5.8L (351 C.I.D.)–C 4/B

a–B7A 12106–A *DH–6 b–C9AZ 12300–A *DC–13–A

73	C,F – – M/T	120.2D	★ D3PZ 12127–P *DA–1254–A	a	b	C9AZ 12171–A *DP–5		B7A 12200–A *DR–5	6
73 74	C,F – – A/T C,F – – without breakerless ign.	120.2A	★ D30Z 12127–G *DA–1253	a	b	B8Q 12171–A *DP–12(1973) D40Z 12171–A *DP–306(1974)	C0TZ 12000–A *DK–10(1973)	B7A 12200–A *DR–5	4
74	C,F – – with breakerless ign.	120.4A	★ D40Z 12127–D	a	none	None	None	B7A 12200–A *DR–5	7

8 CYL. 5.8L (351 C.I.D.)–M

h–E2ZZ 12106–A *DH–411 (cap) and E2ZZ 12A217–B *DJ–6 (adapter) w–D5AZ 12106–A *DH–354

75	C,F,Y – – exc. Calif.	120.4F	D5AZ 12127–B *DA–1387	w	none	None	None	D5PZ 12200–A *DR–5–B	7
75	C,F – – Calif.	120.4F	★ D5AZ 12127–E *DA–1470	w	none	None	None	D5PZ 12200–A *DR–5–B	7
75 76 75/76	C,F – – exc. Calif. C,F – – Calif. Y	120.4F	★ D50Z 12127–F *DA–1501	w	none	None	None	D5PZ 12200–A *DR–5–B	7
76	C,F – – Calif.	120.4F	★ D6AZ 12127–B *DA–1482	w	none	None	None	D5PZ 12200–A *DR–5–B	7
76 77	C,F,Y – – exc. Calif. "Before 9/2/75" A,F – – Canada	120.4F	★ D6AZ 12127–C *DA–1497	w	none	None	None	D5PZ 12200–A *DR–5–B	7
76	C,F,Y – – exc. Calif. "From 9/2/75"	120.4F	★ D6AZ 12127–D *DA–1515	w	none	None	None	D5PZ 12200–A *DR–5–B	7
77 78	F – – Calif A,F – – Canada	120.4G	★ D7AZ 12127–D *DA–1575	h	none	None	None	E4HZ 12200–A *DR–323–A	6
77	A,F – – w/o Hi–altitude carb –exc. Calif/Canada "Before 2/1/77"	120.4G	D7AZ 12127–A *DA–1555	h	none	None	None	E4HZ 12200–A *DR–323–A	6
77	A,F – – with Hi–altitude Carb	120.4F	★ D6AZ 12127–A *DA–1488	h	none	None	None	E4HZ 12200–A *DR–323–A	6
77	A,F – – w/o Hi–altitude Carb.–exc Calif and Canada "From 2/1/77"	120.4G	★ D7AZ 12127–H *DA–1606	h	none	None	None	E4HZ 12200–A *DR–323–A	6
77	A,F – – with Hi–altitude Carb	120.4F	★ D6AZ 12127–A *DA–1488	h	none	None	None	E4HZ 12200–A *DR–323–A	6
78 78	A – – exc. Canada or Calif.– "Before 10/10/77" F – – without Hi–altitude carb. –exc. Calif. or Canada	120.4G	D8AZ 12127–E *DA–1657	h	none	None	None	E4HZ 12200–A *DR–323–A	6
78	A – – exc. Canada or Calif.– "From 10/10/77"	120.4G	★ D8AZ 12127–G *DA–1672	h	none	None	None	E4HZ 12200–A *DR–323–A	6
78/	F – – with Hi–altitude carb.	120.4J	★ D80Z 12127–A *DA–1642	h	none	None	None	E4HZ 12200–A *DR–323–A	6
78/	F – – Calif.	120.4G	D7AZ 12127–K *DA–1635	h	none	None	None	E4HZ 12200–A *DR–323–A	6
79	F – – exc. Calif. or Hi–altitude carb.	120.4G	D90Z 12127–B	h	none	None	None	E4HZ 12200–A *DR–323–A	6

YEAR	MODEL/ RESTRICTIONS	PARTS LIST SECTION & NO.	SERVICE REPLACEMENT DISTRIBUTOR	DISTRIBUTOR COMPONENTS CAP	CON-DEN-SER	POINTS	REPAIR KIT	ROTOR	ILLUS. SEC. 120 PAGE
12127	DISTRIBUTOR ASSY. — Cont'd								

APPLICATION CHART

Refer to page 26 for Application Instructions

8 CYL. 5.8L (351 C.I.D.)-W

a-B7A 12106-A *DH-6 b-C9AZ 12300-A *DC-13-A
h-E2ZZ 12106-A *DH-411 (cap) and E2ZZ 12A217-B *DJ-6 (adapter) w-D5AZ 12106-A *DH-354
o-D84Y 12106-A *DH-377 (cap) and D84Y 12A217-A *DJ-3 (adapter)
■ Parts list to follow in subsequent change

73 74	C C,F - - without breakerless ign.	120.2B	★ D3AZ 12127-A *DA-1257	a	b	B8Q 12171-A *DP-12(1973) D40Z 12171-A *DP-306(1974)	C0TZ 12000-A *DK-10(1973)	B7A 12200-A *DR-5	4
74	C,F - - with breakerless ign.	120.4C	★ D4AZ 12127-C *DA-1397	w	none	None	None	D5PZ 12200-A *DR-5-B	7
75 76	C - - exc. Calif. G - - Canada	120.4E	D5DZ 12127-N *DA-1457	w	none	None	None	D5PZ 12200-A *DR-5-B	7
75	G - - exc. Calif.	120.4E	★ D5DZ 12127-H *DA-1429	w	none	None	None	D5PZ 12200-A *DR-5-B	7
75	G - - Calif.	120.4E	★ D5DZ 12127-M *DA-1426	w	none	None	None	D5PZ 12200-A *DR-5-B	7
76	G - - exc. Calif. and Canada	120.4E	★ D6DZ 12127-C *DA-1486	w	none	None	None	D5PZ 12200-A *DR-5-B	7
76	C	120.4E	★ D60Z 12127-A *DA-1504	w	none	None	None	D5PZ 12200-A *DR-5-B	7
76	G - - Calif.	120.4E	★ D6DZ 12127-F *DA-1519	w	none	None	None	D5PZ 12200-A *DR-5-B	7
77	F	120.4H	★ D7AZ 12127-F *DA-1595	h	none	None	None	E4HZ 12200-A *DR-323-A	6
77	G,V	120.4H	★ D7DZ 12127-K *DA-1566	h	none	None	None	E4HZ 12200-A *DR-323-A	6
78	F	120.4H	★ D8AZ 12127-C *DA-1638	h	none	None	None	E4HZ 12200-A *DR-323-A	6
79	A - - exc. Canada	120.8C	D9AZ 12127-C *DA-1706-A	o	none	None	None	D84Y 12200-A *DR-319	11
79 79	A - - Canada F(65L)	120.4H	★ D9SZ 12127-A *DA-1711	h	none	None	None	E4HZ 12200-A *DR-323-A	6
79	F(53,65D)	120.4H	★ D90Z 12127-C *DA-1739	h	none	None	None	E4HZ 12200-A *DR-323-A	6

8 CYL. 6.6L (400 C.I.D.)

a-B7A 12106-A *DH-6 b-C9AZ 12300-A *DC-13-A
h-E2ZZ 12106-A *DH-411 (cap) and E2ZZ 12A217-B *DJ-6 (adapter) w-D5AZ 12106-A *DH-354

73	A,C,Y	120.2A	★ D3AZ 12127-B *DA-1248	a	b	B8Q 12171-A *DP-12	C0TZ 12000-A *DK-10	B7A 12200-A *DR-5	4
73	A,C,Y	120.2A	D3MY 12127-G *DA-1284	a	b	B8Q 12171-A *DP-12	C0TZ 12000-A *DK-10	B7A 12200-A *DR-5	4
74	A,C,F,Y	120.4A	★ D40Z 12127-C *DA-1350	a	none	None	None	B7A 12200-A *DR-5	7
75	A,C,F,Y - - Calif.	120.4F	★ D5AZ 12127-D *DA-1416	w	none	None	None	D5PZ 12200-A *DR-5-B	7
75	A,C,F,Y - - exc. Calif.	120.4F	D5AZ 12127-B *DA-1387	w	none	None	None	D5PZ 12200-A *DR-5-B	7
75	A,C,F,Y - - exc. Calif.	120.4F	★ D5AZ 12127-K *DA-1502	w	none	None	None	D5PZ 12200-A *DR-5-B	7

COPYRIGHT © 1986 — FORD MOTOR COMPANY — DEARBORN, MICHIGAN

YEAR	MODEL/ RESTRICTIONS	PARTS LIST SECTION & NO.	SERVICE REPLACEMENT DISTRIBUTOR	DISTRIBUTOR COMPONENTS CAP	CON-DEN-SER	POINTS	REPAIR KIT	ROTOR	ILLUS. SEC. 120 PAGE
12127	DISTRIBUTOR ASSY. — Cont'd								

APPLICATION CHART

Refer to page 26 for Application Instructions

8 CYL. 6.6L (400 C.I.D.)

a–B7A 12106–A *DH–6 b–C9AZ 12300–A *DC–13–A
h–E2ZZ 12106–A *DH–411 (cap) and E2ZZ 12A217–B *DJ–6 (adapter) w–D5AZ 12106–A *DH–354

76	A,C,F,Y	120.4F	★ D6AZ 12127–A *DA–1488	w	none	None	None	D5PZ 12200–A *DR–5–B	7
77 77	A,F – – exc. Calif.– "Before 2/1/77" D,K – – exc Calif	120.4F	★ D6AZ 12127–A *DA–1488	h	none	None	None	E4HZ 12200–A *DR–323–A	6
77	A,F – – exc. Calif. "From 2/1/77"	120.4G	★ D7AZ 12127–J *DA–1607	h	none	None	None	E4HZ 12200–A *DR–323–A	6
77	A,D,F,K – – Calif "Before 4/1/77"	120.4G	★ D7AZ 12127–L *DA–1636	h	none	None	None	E4HZ 12200–A *DR–323–A	6
77/78	A,D,F,K – – Calif. "From 4/1/77"	120.4G	D7AZ 12127–K *DA–1635	h	none	None	None	E4HZ 12200–A *DR–323–A	6
78	A,D,F,K – – without Hi–altitude carb. –exc. Calif.	120.4G	★ D8AZ 12127–B *DA–1629	h	none	None	None	E4HZ 12200–A *DR–323–A	6
78 78/	A,F – – with Hi–altitude carb. D,K – – with Hi–altitude carb.	120.4J	★ D80Z 12127–A *DA–1642	h	none	None	None	E4HZ 12200–A *DR–323–A	6
79	D,K – – Calif.	120.4G	★ D9AZ 12127–H *DA–1718	h	none	None	None	E4HZ 12200–A *DR–323–A	6
79	D,K – – exc. Calif. or Hi–altitude carb.	120.4G	D9AZ 12127–Y *DA–1701	h	none	None	None	E4HZ 12200–A *DR–323–A	6

8 CYL. 7.0L (429 C.I.D.)

a–B7A 12106–A *DH–6 b–C9AZ 12300–A *DC–13–A

73	A,C,Y	120.2A	★ D3VY 12127–A *DA–1246	a	b	B8Q 12171–A *DP–12	C0TZ 12000–A *DK–10	B7A 12200–A *DR–5	4

8 CYL. 7.5L (460 C.I.D.) exc. P/C

a–B7A 12106–A *DH–6 b–C9AZ 12300–A *DC–13–A
h–E2ZZ 12106–A *DH–411 (cap) and E2ZZ 12A217–B *DJ–6 (adapter) w–D5AZ 12106–A *DH–354

73 73 73	A,Y D K – – w/o breakerless ignition	120.2A	★ D3VY 12127–A *DA–1246	a	b	B8Q 12171–A *DP–12	C0TZ 12000–A *DK–10	B7A 12200–A *DR–5	4
73	D	120.2A	★ D3AZ 12127–G *DA–1321	a	b	B8Q 12171–A *DP–12	C0TZ 12000–A *DK–10	B7A 12200–A *DR–5	4
73	K – – w/breakerless ignition	120.4A	★ D3VY 12127–C *DA–1323	a	none	None	None	B7A 12200–A *DR–5	7
74	A,C,D,F,K,Y	120.4A	D4VY 12127–C *DA–1334	a	none	None	None	B7A 12200–A *DR–5	7
75 76	A,C,D,F,K,Y– "Before 3/1/75" A,C,D,F,K,Y – – Canada	120.4A 120.4F	D4VY 12127–C *DA–1334	w	none	None	None	D5PZ 12200–A *DR–5–B	7
75	A,C,D,F,K – – Calif.– "From 3/1/75"	120.4F	★ D5VY 12127–A	w	none	None	None	D5PZ 12200–A *DR–5–B	7
75	A,C,D,F,K,Y – – exc. Calif.– "From 3/1/75"	120.4F	★ D5VY 12127–B *DA–1480	w	none	None	None	D5PZ 12200–A *DR–5–B	7

YEAR	MODEL/ RESTRICTIONS	PARTS LIST SECTION & NO.	SERVICE REPLACEMENT DISTRIBUTOR	DISTRIBUTOR COMPONENTS CAP	CON-DEN-SER	POINTS	REPAIR KIT	ROTOR	ILLUS. SEC. 120 PAGE

12127 DISTRIBUTOR ASSY. — Cont'd

APPLICATION CHART

Refer to page 26 for Application Instructions

8 CYL. 7.5L (460 C.I.D.) exc. P/C

a–B7A 12106–A *DH–6 b–C9AZ 12300–A *DC–13–A
h–E2ZZ 12106–A *DH–411 (cap) and E2ZZ 12A217–B *DJ–6 (adapter) w–D5AZ 12106–A *DH–354

76	A,C,D,F,K,Y – – exc. Calif. and Canada– "Before 1/5/76"	120.4F	★ D6VY 12127–B *DA–1494	w	none	None	None	D5PZ 12200–A *DR–5–B	7
76	A,C,D,F,K,Y – – exc. Calif. "From 1/5/76"	120,4F	★ D6VY 12127–C *DA–1539	w	none	None	None	D5PZ 12200–A *DR–5–B	7
76	A,C,D,F,K,Y – – Calif.	120.4F	★ D6VY 12127–A *DA–1485	w	none	None	None	D5PZ 12200–A *DR–5–B	7
77	A,D,K – – with Hi–altitude Carb	120.4G	★ D7VY 12127–B *DA–1567	h	none	None	None	E4HZ 12200–A *DR–323–A	6
77/78	A,D,K – – w/o Hi–altitude carb.	120.4G	★ D7VY 12127–C *DA–1588	h	none	None	None	E4HZ 12200–A *DR–323–A	6

8 CYL. 7.5L (460 C.I.D.) – P/C

a–B7A 12106–A *DH–6 b–C9AZ 12300–A *DC–13–A
h–E2ZZ 12106–A *DH–411 (cap) and E2ZZ 12A217–B *DJ–6 (adapter) w–D5AZ 12106–A *DH–354

73	A,Y	120.2A	★ D3MY 12127–C *DA–1280	a	b	B8Q 12171–A *DP–12	C0TZ 12000–A *DK–10	B7A 12200–A *DR–5	4
73	A,C,Y	120.2A	★ D30Z 12127–X *DA–1312	a	b	B8Q 12171–A *DP–12	C0TZ 12000–A *DK–10	B7A 12200–A *DR–5	4
74	A,C,Y	120.4A	★ D4AZ 12127–H *DA–1333	a	none	None	None	B7A 12200–A *DR–5	7
75	A,C,Y– "Before 3/1/75"	120.4F	D4VY 12127–C *DA–1334	w	none	None	None	D5PZ 12200–A *DR–5–B	7
76	A,C,Y								
75	A,C,Y – – exc. Calif.– "From 3/1/75"	120.4F	★ D5VY 12127–B *DA–1480	w	none	None	None	D5PZ 12200–A *DR–5–B	7
75	A,C – – Calif.– "From 3/1/75"	120.4F	★ D5VY 12127–A *DA–1477	w	none	None	None	D5PZ 12200–A *DR–5–B	7
77/78	A– "Before 11/21/77"	120.4G	★ D7VY 12127–A *DA–1565	h	none	None	None	E4HZ 12200–A *DR–323–A	6
78	A– "From 11/21/77"	120.4G	★ D8AZ 12127–F *DR–1663	h	none	None	None	E4HZ 12200–A *DR–323–A	6

YEAR	MODEL/RESTRICTIONS	ENGINE CYL.	C.I.D. (C.C.D.)	PART NUMBER	DESCRIPTION	QTY.

12132 BUSHING (CYLINDER BLOCK REPAIR) DISTRIBUTOR
@ 2300 cc

73/74	C,F	8	351W	★ D00Z 12132–B	Lower	AR
73/74	A,C,D,F,K,Y	8	All	★ C8SZ 12132–A	*MC–203–cast iron–w/o flange–lower	1
73/74	A,C,D,F,K,Y	8	All	★ C8VY 12132–A	*MC–204–cast iron w/flange–lower	1
74	C,F	8	351W	★ D4AZ 12132–A	*MC–228–cast iron–w/flange–lower	AR
74	L	4	@140	D4FZ 12132–A	*MC–226–cast iron–w/flange–lower	AR
74	L	4	@140	★ D4FZ 12132–B	*MC–227–cast iron–w/o flange–lower	AR

12132 BUSHING (DISTRIBUTOR HOUSING)–Refer to group 12127 for Distributor Parts List Instructions

12144–52 Refer to group 12127 for Distributor Parts List Instructions

COPYRIGHT © 1986 — FORD MOTOR COMPANY — DEARBORN, MICHIGAN

1973/79 LINCOLN-MERCURY CARS

YEAR	MODEL/RESTRICTIONS	ENGINE CYL.	ENGINE C.I.D. (C.C.D.)	PART NUMBER	DESCRIPTION	QTY.
12A164	SWITCH ASSY. (DISTRIBUTOR MODULATOR AMBIENT)-Also refer to group 9A995 @ 2300 cc ♦ 2600 cc ⊕ 2800 cc					
73	A,D,F,K,Y	6&8	All	★ D2AZ 12A164-D	*SW-1065-located at door pillar	1
73/74	C,P - - M/T	6	250	Not replaced		1
73	J - - A/T	6	♦159			1
73/74	C,P - - A/T	6	250	★ D3AZ 12A164-G Not replaced	*SW-1197-located inside carb. air cleaner	1
75	G,P - - w/o catalyst	6	250	D5DZ 12A164-A	*SW-1271-located inside carb. air cleaner	1
75	G,P - - w/catalyst	6	250	D5AZ 12A164-A	*SW-1249-located inside carb. air cleaner	1
75	A,C,F,Y	8	400	D5AZ 12A164-B	*SW-1250-located inside carb. air cleaner-T.A.V. valve-round connector	1
75/76	L	4	@140			1
76/78	J	4	@140			1
75/76	L	6	⊕171			1
76	G,P - - A/T-Calif.	6	250			1
75	P - - A/T-exc. Calif.	8	302			1
75/76	G - - M/T	8	302			1
75	G - - Canada	8	351W			1
75/76	D,K	8	All			1
75/76	A,Y	8	460			1
75/76	A	8	460	D5AZ 12A164-C	*SW-1282-located inside carb. air cleaner-T.A.V. valve-rectangular connector	1
75/76	C,F	8	All			1
76/78	J	6	171			1
75/76	G - - M/T Calif.	8	302			1
75/76	G	8	302			1
75/76	P	8	302			1
75/76	Y	8	351M, 460			1
77	P - - Canada	6	250			1
75	C,P - - A/T	6	250	★ D4AZ 12A164-F Not replaced	*SW-1296-located inside carb. air cleaner	1
73/74	A,C,D,F,K,P,Y	6&8	All	376389-S101	(UU-82-D)-screw (attach switch to pillar)-No. 8-18" x 3/4"	2
12A168	BLEED ASSY. (DISTRIBUTOR VACUUM AIR)					
73/75	C,G,P	6	250	D3DZ 12A168-A		1
76	G,P - - A/T Canada	6	250			1
77/78	G,P - - A/T-Calif	6	250			1
12A170	VALVE ASSY. (DISTRIBUTOR MODULATOR)-Also refer to group 9D474 ▲ 2000 cc @ 2300 cc ♦ 2600 cc ⊕ 2800 cc					
73	A,C,F,Y - - A/T with E.G.R. system	8	351C, 400	D2AZ 12A170-B		1
73	A,C,F,Y - - A/T with delay valve by-pass system	8	351C, 400	★ D2AZ 12A170-D Not replaced		1
73	C,F - - S/T with E.G.R. system	8	351C 400			1
73/74	D,K	8	429,460	★ D2SZ 12A170-A Not replaced		1
74	A,C,Y	8	460			1
73	A,C,D,K,Y	8	429,460 exc. P/C	★ D2FZ 12A170-A Not replaced		1
73	J	4&6	▲122, ♦159			1
74/75	A,C,D,F,K,Y	8	460			1
76	D,K - - exc. Canada	8	460			1
76	A,C - - Calif.	8	460 P/C			1
75	C,F	8	351M, 400	★ D5AZ 12A170-A Not replaced	*DY-169	1

YEAR	MODEL/RESTRICTIONS	ENGINE CYL.	ENGINE C.I.D. (C.C.D.)	PART NUMBER	DESCRIPTION	QTY.
12A170	VALVE ASSY. (DISTRIBUTOR MODULATOR)-Also refer to group 9D474 — Cont'd ▲ 2000 cc @ 2300 cc ♦ 2600 cc ⊕ 2800 cc					
73	C,P	8	302	D2AZ 12A170-B		1
75	G,P - - A/T	6	250			1
75	G	8	302			1
73	C	8	351W			1
75	C,G	8	351W			1
77	G,V - - A/T	8	302			1
77	P - - A/T	6	250			1
73/75	G,P - - A/T	6	All	★ D3DZ 12A170-A		1
73/74	C - - A/T	6	250	Not replaced		1
76	G,P - - A/T Canada	6	250			1
74/76	G,P - - A/T Calif.	6	200,250	★ D4DZ 12A170-A	Not replaced	1
75	L	6	⊕171	★ D5FZ 12A170-B	*DY-172-A	1
76	L - - Calif.	6	⊕171	Not replaced		1
75/76	L - - Calif.	4	@140			1
73/76	A,C,F,P,Y	6&8	All	33795-S7	(M-49)-nut-1/4"-20 hex.	1
73/76	A,C,F,P,Y	6&8	All	383210-S	(WW-128-A)-stud- 1/4"-20 x 1 1/2"-1/4"-20 x 5/8"	1
12171-12182	Refer to group 12127 for Distributor Parts List Instructions					
12A182	SWITCH ASSY. (DISTRIBUTOR MODULATOR VALVE)-also refer to group 12A265 @ 2300 cc					
74	P - - A/T Calif.	6	250	★ D4DZ 12A182-A	#D4DE 12A182-AA-not replaced	1
77/78	A	8	460 P/C	★ D7AZ 12A182-A	*SW-1448 #D7AE 12A182-AA-not replaced	1
77/	L - - Calif.	4	@140	D8FZ 12A182-A	*SW-1501-#D8EE 12A182-BA	1
79	J - - M/T - Calif.	4	@140TC	D9ZZ 12A182-A	*SW-1531 - #D9ZE 12A182-AA	1
12183-12195	Refer to group 12127 for Distributor Parts Lists Instructions					
12A195	BRACKET (DISTRIBUTOR VACUUM CONTROL VALVE) @ 2300cc ⊕ 2800cc					
73/75	A,C,D,K,Y	8	429,460	★ D3AZ 12A195-A	Not replaced	1
76	A,C,D,F,K,Y - - exc. Canada	8	460			1
76	A,C,Y	8	460 P/C			1
77	G,P,V - - A/T-Calif	8	302	★ D7DZ 12A195-A	Used w/ 12A226 vacuum delay valve-not replaced	1
77/	G,P - - A/T-Calif.	8	302	★ D7DZ 12A195-B	Used w/ 9H301 Thermactor vacuum vent valve	1
79	G,P - - A/T with Hi-altitude carb.	8	302	Not replaced		1
79	J - - A/T - Calif.	8	302			1
79	A	8	302			1
77	V - - A/T-CAlif.	8	302			1
77/78	J	6	⊕171			1
79	L - - A/T - Calif.	6	⊕171	D9FZ 12A195-A		1
79	J - - A/T - Calif.	6	⊕171	D9ZZ 12A195-A		1
12A197	VALVE ASSY. (DISTRIBUTOR VACUUM CONTROL CHECK) @ 2300 cc					
73/75	A,C,D,F,K,P,Y	6&8	All	D3VY 12A197-A	Black and white nylon	1
75/	L	4	@140			1
76/78	J	4&6	All			1
77	G,P - - A/T-Canada	6	250			1
77	V - - Calif.	8	302			1
78/	J,P - - Calif.	6	200			1
78	V	8	302		Backup switch vacuum control check	1
79	A - - w/2.26 rear axle-exc. Calif.	8	302			2
79	A - - w/2.26 rear axle-Calif.	8	302			1
79	A - - w/3.08 rear axle-exc. Calif.	8	302			1
79	F	8	302			1
79	G,J,P - - A/T Calif.	8	302			1
79	A - - exc. Calif.	8	351W			1
79	J,P	4	@140			1

COPYRIGHT © 1986 — FORD MOTOR COMPANY — DEARBORN, MICHIGAN

1973/79 LINCOLN-MERCURY CARS

YEAR	MODEL/RESTRICTIONS	ENGINE CYL.	ENGINE C.I.D. (C.C.D.)	PART NUMBER	DESCRIPTION	QTY.
12A197	VALVE ASSY. (DISTRIBUTOR VACUUM CONTROL CHECK) — Cont'd @ 2300 cc					
78/	G - - A/T-Calif.	6	250	D8DZ 12A197-A	#D8DE 12A197-AA black and white	1
79	J - - M/T - Calif.	4	@140			1
79	A - - w/3.08 rear axle-Calif.	8	302	D9AZ 12A197-A	*DY-260-black and blue	1
79	J	4	@140 TC	D9ZZ 12A197-A	*DY-272-Black and white	1

IDENTIFICATION CHART

IDENTIFICATION	PART NUMBER	IDENTIFICATION	PART NUMBER
12A199 MODULATOR ASSY. (IGNITION)			
D4AE 12A199-A1A	D4AZ 12A199-C *DY-157-B	D7AE 12A199-A1B	D7AZ 12A199-A *DY-204
D4AE 12A199-A2C	D4AZ 12A199-C *DY-157-B	D7AE 12A199-A2B	D7AZ 12A199-A *DY-204
D4AE 12A199-A1D	D4AZ 12A199-C *DY-157-B	D8VE 12A199-A1B	D9VZ 12A199-A *DY-184-C
D4AE 12A199-A2D	D4AZ 12A199-C *DY-157-B	D8VE 12A199-A2B	D9VZ 12A199-A *DY-184-C
D5AE 12A199-A1A	D5AZ 12A199-C *DY-166-B	D8VE 12A199-A1C	D9VZ 12A199-A *DY-184-C
D5AE 12A199-A2A	D5AZ 12A199-C *DY-166-B	D8VE 12A199-A2C	D9VZ 12A199-A *DY-184-C
D5AE 12A199-A1B	D5AZ 12A199-C *DY-166-B	D9DE 12A199-B1A	D9AZ 12A199-B *DY-249-A
D5AE 12A199-A2B	D5AZ 12A199-C *DY-166-B	D9DE 12A199-B2A	D9AZ 12A199-B *DY-249-A
D5AE 12A199-A2C	D5AZ 12A199-C *DY-166-B	D9DE 12A199-B1B	D9AZ 12A199-B *DY-249-A
D5AE 12A199-A1D	D5AZ 12A199-C *DY-166-B	D9DE 12A199-B2B	D9AZ 12A199-B *DY-249-A
D5AE 12A199-A2D	D5AZ 12A199-C *DY-166-B	D9DE 12A199-B1C	D9AZ 12A199-B *DY-249-A
D6AE 12A199-A1A	D9VZ 12A199-A *DY-184-C	D9DE 12A199-B2C	D9AZ 12A199-B *DY-249-A
D6AE 12A199-A2A	D9VZ 12A199-A *DY-184-C	D8AE 12A244-AA	D9AZ 12A199-C *DY-237-A
D6AE 12A199-A1B	D9VZ 12A199-A *DY-184-C	D8AE 12A244-AB	D9AZ 12A199-C *DY-237-A
D6AE 12A199-A2B	D9VZ 12A199-A *DY-184-C	D84E 12A244-AA	D84Y 12A199-B *DY-246
D6AE 12A199-A1C	D84Y 12A199-A *DY-241	D9EE 12A244-A1A	D9FZ 12A199-A *DY-250
D6AE 12A199-A2C	D84Y 12A199-A *DY-241	D9EE 12A244-A2A	D9FZ 12A199-A *DY-250

YEAR	MODEL/RESTRICTIONS	ENGINE CYL.	ENGINE C.I.D. (C.C.D.)	PART NUMBER	DESCRIPTION	QTY.
12A199	MODULATOR ASSY. IGNITION (BREAKERLESS) @ 2300cc ⊕ 2800cc					
73/74	K	8	All	D4AZ 12A199-C	*DY-157-B #D4AE 12A199-AA,A2C,A1D,A2D	1
74	A,C,D,F,P,Y	6&8	All			1
75	A,C,D,F,G,K,L,P,Y	All	All	D5AZ 12A199-C	*DY-166-B #D5AE 12A199-A1A,A2A,A1B, A2C,A1D,A2D	1

YEAR	MODEL/RESTRICTIONS	ENGINE CYL.	ENGINE C.I.D. (C.C.D.)	PART NUMBER	DESCRIPTION	QTY.
12A199	MODULATOR ASSY. IGNITION (BREAKERLESS) @ 2300cc ⊕ 2800cc					
76	A,C,D,F,G,J,K,L,P,Y	All	All	D9VZ 12A199-A	*DY-184-C #D6AE 12A199-A1A,A2A,	1
77	A,D,F,G,P,K,V – – exc. Calif.	6&8	All		A1B,A2B,D8VE 12A199 A1A,A2A,A1C,A2C	1
77/78	J,L	4&6	All			1
78	P	4	@140			1
78	G	6	250			1
78	F – – exc. Calif.	8	302			1
78	G,P – – w/o Hi-altitude carb. –exc. Calif.	8	302			1
78	A – – exc. Canada	8	351M			1
78	F – – exc. Canada or Hi-altitude carb.	8	351M			1
78	F – – Calif.	8	400			1
78	A,D,K	8	460			1
78	A	8	460 P/C			1
78	P – – w/o Hi-altitude carb.	6	200			1
79	J,L,P – – A/T-Calif.	4	@140			1
79	L,P – – M/T	4	@140			1
79	J – – M/T	4	@140 exc. TC			1
79	J,L	6	⊕171			1
79	P – – w/o Hi-altitude carb.	6	200			1
79	J	6	200			
79	G – – A/T-Calif.	6	250			1
79	G – – M/T	6	250			1
79	G – – A/T exc. Calif. or Hi-altitude carb.	8	302			1
						1
79	P – – A/T exc. Calif. or Hi-altitude carb.	8	302			1
	"Before 3/26/79"					
79	A,J – – A/T exc. Calif.	8	302			1
79	G,J,P – – M/T	8	302			1
79	F	8	302			1
79	F – – w/o Hi-altitude carb.	8	351M			1
79	K – – Calif. or Hi-altitude carb.	8	400			1
79	D – – Calif. or Hi-altitude carb.	8	400			1
	"Before 2/5/79"					
79	D "From 2/5/79"	8	400			1
79	A(54,66) – – w/3.08 rear axle-Canada	8	351W			1
79	A(74) – – exc. Canada	8	351W			1
77	A,D,F,G,P,K,V – – Calif.	6&8	All	D7AZ 12A199-A	*DY-204 #D7AE 12A199-A1B, A2B	1
78	G,P – – Calif.	8	302			1
79	A,G,J,P – – A/T – Calif.	8	302			1
79	V – – Calif. w/o E.E.C.	8	302			1
78	P – – w/Hi-altitude carb.	6	200	D9AZ 12A199-C	*DY-237-A #D8AE 12A244-AA,AB	1
78	G,P – – w/Hi-altitude carb.	8	302			1
78	F	8	351W			1
78	A,F – – Canada	8	351M			1
78	F – – exc. Calif.	8	400			1
78	A,D,K	8	400			1
78	F – – w/Hi-altitude carb.	8	351M			1

COPYRIGHT © 1986 — FORD MOTOR COMPANY — DEARBORN, MICHIGAN

1973/79 LINCOLN-MERCURY CARS

YEAR	MODEL/RESTRICTIONS	ENGINE CYL.	ENGINE C.I.D. (C.C.D.)	PART NUMBER	DESCRIPTION	QTY.
12A199	MODULATOR ASSY. IGNITION (BREAKERLESS) — Cont'd @ 2300cc ⊕ 2800cc					
79	J - - M/T	4	@140 TC	D9AZ 12A199-C cont'd	*DY-237-A #D8AE 12A244-AB	1
79	P - - w/Hi-altitude carb.	6	200			1
79	G - - A/T exc. Calif.	6	250			1
79	G - - A/T with Hi-altitude carb.	8	302			1
79	P - - A/T-w/Hi-altitude carb.- "Before 3/26/79"	8	302			1
79	P - - A/T-exc. Calif.- "From 3/26/79"	8	302			1
79	F - - w/Hi-altitude carb.	8	351M			1
79	A - - w/2.26 or 2.73 rear axle -Canada	8	351W			1
79	F	8	351W			1
79	K - - exc. Calif. or Hi-altitude carb.	8	400			1
79	D - - exc. Calif. or Hi-altitude carb.- "Before 2/5/79"	4	400			1
79	A - - exc. Canada	8	351W	D9AZ 12A199-B	*DY-249-A #D9DE 12A199-B1A,B2A,B1B,B2B, B1C,B2C	1
79	J,L,P - - A/T exc. Calif.	4	@140	D9FZ 12A199-A	*DY-250-#D9EE 12A244-A1A,A2A	1
78/	V - - exc. Calif.	8	302	D84Y 12A199-A	*DY-241 #D6AE 12A199-A1C,A2C	1
79	V - - Calif.-w/E.E.C.	8	302			1
78	V - - Calif.	8	302	D84Y 12A199-B	*DY-246 #D84E 12A244-AA	1
12A200	WIRING ASSY. (IGNITION MODULE)					
74/75	C,F	8	302,351, 400,460	★ D40Z 12A200-A Not replaced	*DY-156-#ED-D40B 12A200-AC,AD,AF	1
74	D	8	460	★ D4VY 12A200-A	*DY-155-#D4VB 12A200-BA-not replaced	1
12A206	LUBRICATOR ASSY. (DISTRIBUTOR CAM)-Also refer to Distributor Parts List ⊕ 2800 cc					
74/78	J	6	⊕171	D4ZZ 12A206-A		1
12A208	VALVE ASSY. (DISTRIBUTOR RETARD CONTROL) ⊕ 2800 cc					
75	A,C,D,F,K,Y	8	460	D5VY 12A208-A	Color code green/white	1
76	A,C,F,Y - - Calif.	8	351M, 400			1
76	A,C,D,F,K,Y - - Canada	8	460			1
76	A,C,Y	8	460 P/C			1
77	A,F - - w/Hi-altitude carb.	8	351M, 400-2/B			1
77	A,F - - exc Calif	8	351M, 400	D7AZ 12A208-A	*DY-207-color code pink/white	1
78	G,P - - Calif.	8	302			1
78	A - - exc. Calif.	8	351M			1
78	F - - exc. Calif.	8	400			1
78	A,D,K - - Calif.	8	400			1
79	G - - exc. Calif.	6	250			1
79	A,G,J,P,V - - Calif.	8	302			1
79	A,F	8	351W			1
79	F - - exc. Calif. or Hi-altitude carb.	8	351M			1
79	D,K - - w/o Hi-altitude carb.	8	400			1

YEAR	MODEL/RESTRICTIONS	ENGINE CYL.	ENGINE C.I.D. (C.C.D.)	PART NUMBER	DESCRIPTION	QTY.
12A208	VALVE ASSY. (DISTRIBUTOR RETARD CONTROL) — Cont'd. ⊕ 2800cc					
75/76	G,P - - M/T	6	250	D4HZ 12A208-A	Color code brown/white	1
77	F - - Calif	8	400			1
77/78	A,D,K	8	460			1
77/78	A	8	460 P/C			1
78/	F - - w/Hi-altitude carb.	8	351M			1
78	F - - w/Hi-altitude carb.	8	400			
78	G,P - - w/Hi-altitude carb.	8	302			1
77/78	J	6	⊕171			1
78/	D,K - - w/Hi-altitude Carb.	8	400			1
79	F,G,J,P - - exc. Calif.	8	302			1
79	F - - w/Hi-altitude carb.	8	351M	D5HZ 12A208-A	Color code gray/white	1
79	D,K - - w/Hi-altitude carb.	8	400			1
78	V	8	302	D8AZ 12A208-A	*DY-242-color code yellow/white	1
12A209	WIRING ASSY. (IGNITION MODULE) JUMPER					
74	A,C,D,F,K,P,Y	6&8	All	★ D4AZ 12A209-A	Not replaced	1
12A217	Refer to group 12127 for Distributor Parts List Instructions					
12224	CONNECTOR (DISTRIBUTOR VACUUM) ▲ 2000 cc ⊕ 2800 cc @ 2300 cc					
74	J	4&6	▲122, ⊕171	★ D4RY 12224-A	"T" shaped-nylon-not replaced	AR
74	J	4&6	▲122, ⊕171	★ D4RY 12224-D	"T" shaped-nylon-not replaced	1
76/78	J	6	⊕171	★ D5RY 12224-A	"T" shaped-nylon-not replaced	AR
76/78	J	4	@140	★ D5RY 12224-B	"Straight"-spark delay valve-not replaced	1
76/78	J	4&6	All	★ D5RY 12224-C	Nylon- "Straight"-exhaust emission valve-not replaced	1
76/78	J	6	⊕171	★ D5RY 12224-D	Incl. restrictor-not replaced	1
12A225	RESTRICTOR ASSY. (DISTRIBUTOR VACUUM) @ 2300 cc ⊕ 2800 cc					
76/77	G	6	200,250	D6DZ 12A225-B	Red	1
77	G,P - - w/Hi-altitude carb.	8	302			1
77	A,F	8	351M			1
77	A,D,F,K	8	400			1
79	A - - exc. Calif.	8	302			1
79	A,F	8	351W			1
79	F	8	351M			1
79	J	4	@140 TC			1
77/78	A,F	8	351M	D7AZ 12A225-B	Light blue	1
77/78	A,D,F,K	8	400			1
77	A,D,K	8	460			1
79	F	8	351M			1
79	D,K	8	400			1
79	J,L - - A/T-exc. Calif.	6	⊕171			1
79	A - - w/Hi-altitude carb.	8	351W			1
79	J - - exc. Calif.	4	@140 TC	D9ZZ 12A225-A	Yellow	1
12226	TUBE (DISTRIBUTOR VACUUM)-RUBBER ▲ 2000 cc ♦ 2600 cc ⊕ 2800 cc					
73/	All	All	All	D0PZ 12226-A	*KDV-1-7/64"-50 ft. long roll	AR
73/	All	All	All	D0PZ 12226-B	*KDV-2-5/32"-50 ft. long roll	AR
73/	All	All	All	D0PZ 12226-C	*KDV-3-3-7/32"-50 ft. long roll	AR
78/	All	All	All	D8PZ 12226-B	*KDV-7-11/32" I.D. x 50 ft. long roll	1

COPYRIGHT © 1986 — FORD MOTOR COMPANY — DEARBORN, MICHIGAN

1973/79 LINCOLN-MERCURY CARS

YEAR	MODEL/RESTRICTIONS	ENGINE CYL.	ENGINE C.I.D. (C.C.D.)	PART NUMBER	DESCRIPTION	QTY.
12226	TUBE (DISTRIBUTOR VACUUM)-RUBBER — Cont'd ▲ 2000 cc ♦ 2600 cc ⊕ 2800 cc					
73/74	J	4	▲122	★ D1FZ 12226-B	Not replaced	1
73/74	J	4	▲122	★ D2RY 12226-G	Tube assy.-not replaced	1
74	J - - A/T	4	▲122	★ D4RY 12226-B	Rubber-36 1/4" long-not replaced	AR
74	J	6	⊕171			AR
73	J - - A/T	6	♦159	★ D2RY 12226-B	Not replaced	1
74	J	6	⊕171			1
73	J - - M/T	6	♦159	★ D2RY 12226-C	Not replaced	1
74	J	6	⊕171			1
76/78	J	4&6	All	★ D5RY 12226-C	Cut to size-not replaced	AR
76/78	A,C,D,F,G,K,L,P,V,Y	All	All	D6DZ 12226-A	1/4" I.D. x 20 1/4" long-cut to size	AR
73/78	A,C,F	6&8	All	378830-S	(II-106-H)-tee (3 way)-3/16" tube	1
73/78	A,C,D,F	6&8	All	382488-S	(II-2H)-nipple distributor vacuum	1
73/78	C,F	8	All	383004-S	(II-191-VC) connector	1
77	A,D,F,K	8	400	373846-S	(II-191-Q)-Three way tee	1
75/	All	All	All	387065-S	(II-187-AJ)-elbow-3/16" x 3/16" tube 90°	AR
75/	All	All	All	387074-S	(II-246-H)-elbow-1/4" X 1/4" tube 90°	AR
12A226	VALVE ASSY. (DISTRIBUTOR VACUUM AND VENT CONTROL) @ 2300 cc ⊕ 2800 cc					
77/78	G - - A/T-Calif	8	302	D7DZ 12A226-A	*DY-208 #D7BE-AA, D8BE-AA	1
78/	F - - w/Hi-altitude carb.	8	351M			1
77	V - - A/T-Calif.	8	302			1
78/	P - - w/Hi-altitude carb.	8	302			1
79	G - - A/T with Hi-altitude carb.	8	302			1
77/78	J	6	⊕171			1
78	A,F - - w/Hi-altitude Carb.	8	400			1
78/	D,K - - w/Hi-altitude carb.	8	400			1
77/78	L - - exc. Calif. or Canada	4	@140	D8BZ 12A226-A	*DY-240 #D8DE-AB	1
78/	P	4	@140			1
79	J	4	@140 exc. TC			1
79	L - - exc. Calif.	4	@140			1
79	J,L - - A/T-Calif.	6	⊕171	D9BZ 12A226-A	*DY-261 #D7BE-BA, D8BE-BA	1
77	P - - A/T-Calif.	8	302			1
12230	Refer to group 12127 for Distributor Parts List Instructions					
12A241	LABEL (DISTRIBUTOR VACUUM CONTROL VALVE TEMPERATURE IDENTIFICATION)					
77	A,D,F,G,K,L,P,V	All	All	D7PZ 12A241-A	As listed in TSB No. 134 dated 5/9/77, article 1835	AR
12A243	SWITCH ASSY. (IGNITION BAROMETRIC PRESSURE)					
78	V - - w/Hi-altitude carb.	8	302	D8TZ 12A243-A	*DY-238 #D8TE 12A243-AA	1
78/	G,P - - A/T with Hi-altitude carb.	8	302			1
78/	F - - w/Hi-altitude carb.	8	351M			1
78/	P - - w/Hi-altitude Carb.	6	200	★ D8TZ 12A243-B	*DY-244 #D8TE 12A243-BA-not replaced	1
12A244	Refer to group 12A199					

YEAR	MODEL/RESTRICTIONS	ENGINE CYL.	ENGINE C.I.D. (C.C.D.)	PART NUMBER	DESCRIPTION	QTY.
12250	RESISTOR ASSY. (IGNITION COIL)-Also refer to group 10A665					
73/	All	All	All	C0LF 12250-A	*DY-37-Circuit #16-color code pink-1.30 to 1.40 ohms-61" long	AR
				C90Z 12250-A	*DY-85-Circuit #16-color code pink-1.30 to 1.40 ohms-57" long	AR
				D1AZ 12250-A	*DY-84-A-Circuit #16-color code red with green stripes-1.30 to 1A0 ohms-60" long	AR
				D7AZ 12250-A	*DY-213-Circuit #16 color code red with green stripes-1.05 to 1.15 ohms-49" long	AR
73/78	J	4&6	All	D0RY 12250-A		AR
12259	WIRE SET (SPARK PLUG)					
	Note: Important-wire sets are to be used only for years and models as cataloged. ▲ 2000 cc ♦ 2600 cc ⊕ 2800 cc @ 2300 cc					
73	J	4	▲122	D3FZ 12259-AR	*WR-3818-AR	1
74	J	4	▲122	D6PZ 12259-X	*WR-3872-A	1
74	L	4	▲122	D4PZ 12259-N	*WR-3873-A	1
74	L	4	@140	D6PZ 12259-APR	*WR-3867-BR	1
76	J,L	4	@140			1
75	L	4	@140	D5PZ 12259-H	*WR-3887	1
73	J	6	♦159	D6PZ 12259-M	*WR-3870-A	1
74	J	6	⊕171			1
73	C,P	6	200,250	E5PZ 12259-MR	*WR-3802-BR	1
74	C	6	200,250	D4PZ 12259-G	*WR-3877	1
74	P	6	200,250	D6PZ 12259-Z	*WR-3877-A	1
75	G,P	6	200,250	D5PZ 12259-K	*WR-3889	1
73	C	8	302	D6PZ 12259-J	*WR-3850-A	1
74	C - - without T/E	8	302	D4PZ 12259-M	*WR-3874	1
74	C	8	351W			1
73	P	8	302			1
74	C - - with T/E	8	302	D4PZ 12259-L	*WR-3869	1
75	G,P	8	302	D5PZ 12259-L	*WR-3890	1
74	P	8	302	D4PZ 12259-H	*WR-3868	1
73	A,C,F,Y	8	351C, 400	D3AZ 12259-A	*WR-3856	1
74	C,F,Y	8	351C	D6PZ 12259-SR	*WR-3856-BR	1
74	A,C,F,Y	8	400			1
73	C	8	351W	D3AZ 12259-C	*WR-3854	1
74	F	8	351W	D6PZ 12259-N	*WR-3874-A	1
73	A,C,D,K,Y	8	429,460	D6PZ 12259-KR	*WR-3866-AR	1
74	A,C,D,F,K,Y	8	460			1
75/76	L	6	⊕ 171	D6PZ 12259-AH	*WR-3888-A	1
76	J	6	⊕ 171			1
76	G,P	6	200,250	D6PZ 12259-AJ	*WR-3889-A	1
76	G,P	8	302	D6PZ 12259-AKR	*WR-3890-AR	1
75/76	A,C,F,Y	8	351M, 400	E5PZ 12259-SR	*WR-3881-CR	1
75/76	A,C,D,F,K,Y	8	460	D6PZ 12259-AFR	*WR-3886-AR	1
75/76	C,F,G	8	351W			
77/78	J	4	@140	D7PZ 12259-A	*WR-3924	1
77	L "Before 6/27/77"	4	@140			1
77/	L "From 6/27/77"	4	@140	E3PZ 12259-DR	*WR-3936-BR	1
78/	P	4	@140			1
79	J	4	@140			1

COPYRIGHT © 1986 — FORD MOTOR COMPANY — DEARBORN, MICHIGAN

1973/79 LINCOLN-MERCURY CARS

YEAR	MODEL/RESTRICTIONS	ENGINE CYL.	ENGINE C.I.D. (C.C.D.)	PART NUMBER	DESCRIPTION	QTY.
12259	WIRE SET (SPARK PLUG) — Cont'd Note: Important-wire sets are to be used only for years and models as cataloged. ▲ 2000 cc ♦ 2600 cc ⊕ 2800 cc @ 2300 cc					
77/	J,L - - w/Ford distributor	6	⊕171	D7PZ 12259-B	*WR-3925	1
79	J,L - - w/Bosch distributor	6	⊕171	E5PZ 12259-J	*WR-3870-B	1
77	G,P	6	200,250	E3PZ 12259-ER	*WR-3927-AR	1
78/	G	6	250			1
78/	P	6	200			1
79	J	6	200			1
77	F,G,P,V	8	302	E3PZ 12259-AER	*WR-3929-AR	1
77/78	F	8	351W			1
77	G,V	8	351W			1
79	A,F,G,J,P,V	8	302	E3PZ 12259-ADR	*WR-3946-BR	1
78	F,G,P,V	8	302			1
79	A,F	8	351W	E4PZ 12259-G	*WR-3958-C	1
77/78	A,F	8	351M	D7PZ 12259-CR	*WR-3926-R	1
77/78	A,D,F,K	8	400			1
79	F	8	351M			1
79	D,K	8	400			1
77/78	A,D,K	8	460	E3PZ 12259-AJR	*WR-3931-AR	1
12264	Refer to group 12127 for Distributor Parts List Instructions					
12A265	SWITCH ASSY. (IGNITION TIMING VACUUM)					
78	A,D,F,K - - exc. Calif. or Hi-altitude Carb.	8	400	D8AZ 12A265-A	*SW-1473-A-Color code Black	1
79	P - - A/T-exc. Calif. or Hi-altitude carb.	8	302			1
78	F	8	351W	D8AZ 12A265-B	*SW-1495-A-Color code Blue	1
79	A - - exc. Canada	8	351W			1
78	V - - Calif.	8	302	D84Y 12A265-A	*SW-1510-Color code Blue	1
79	A(66) - - C4 w/2.26 rear axle-Canada	8	351W	D9AZ 12A265-A	*SW-1541-color code Natural	1
79	F	8	351W	D9AZ 12A265-B	*SW-1542-color code Natural	1
79	D,K - - exc. Calif. or Hi-altitude carb.	8	400			1
79	G - - A/T-exc Calif.	6	250	★ D9DZ 12A265-A	*SW-1589-color code Natural-not replaced	1
12266-75	Refer to group 12127 for Distribution Parts List Instructions					
12A268	SWITCH ASSY. (IGNITION TIMING PRESSURE)					
79	J - - Calif.	4	@140 TC	D9ZZ 12A268-A	*SW-1521	1
79	J - - exc. Calif.	4	@140 TC	D9ZZ 12A268-B	*SW-1548	1
12276	COVER (DISTRIBUTOR BREAKER) ▲ 2000 cc ⊕ 2800 cc @ 2300 cc					
73	A,K,Y	8	400,429, 460	★ D0SZ 12276-A Not replaced	Located in distributor housing	1
74	A,Y	8	351			1
74	J,L	4	▲122	D4FZ 12276-A	Located in distributor housing	1
74/78	J	6	⊕171	★ D4ZZ 12276-A	Located in distributor housing-not replaced	1
12A277	BRACKET (IGNITION TIMING AND WARNING INDICATOR SWITCH) @ 2300 cc					
79	J	4	@140 TC	★ D9ZZ 12A277-A Not replaced	Attaches 10D883 warning ind. & 12A268 ignition timing switch	1
12286	WIRE ASSY. (DISTRIBUTOR TO SPARK PLUG RADIO RESISTANCE) Note: Important-wire assy's are to be used only for years and models as cataloged. @ 2300 cc ⊕ 2800 cc					
73	A,C,D,F,K,P,Y	8	All	D2AZ 12286-A	Rayon core-180° moulded boot at spark plug end-26" long	AR

YEAR	MODEL/RESTRICTIONS	ENGINE CYL.	ENGINE C.I.D. (C.C.D.)	PART NUMBER	DESCRIPTION	QTY.
12286	WIRE ASSY. (DISTRIBUTOR TO SPARK PLUG RADIO RESISTANCE) — Cont'd Note: Important-wire assy's are to be used only for years and models as cataloged. @ 2300 cc ⊕ 2800 cc					
73	A,C,D,F,K,P,Y	8	All	D2AZ 12286-B	Rayon core-180° moulded boot at spark plug end-28 1/2" long	AR
73	A,C,D,F,K,P,Y	8	All	D2AZ 12286-C	Rayon core-180° moulded boot at spark plug end-31 1/2" long	AR
73	A,C,D,F,K,P,Y	8	All	★ D2AZ 12286-D Not replaced	Rayon core-110° moulded boot at spark plug end-25 1/2" long	AR
73	A,C,D,F,K,P,Y	8	All	D2AZ 12286-E	Rayon core-110° moulded boot at spark plug end-29" long	AR
73	C,P	6	All	★ D2AZ 12286-F Not replaced	Rayon core-180° moulded boot at spark plug end-10" long	AR
73	C,P	6	All	★ D2AZ 12286-G Not replaced	Rayon core-180° moulded boot at spark plug end-14 1/2" long	AR
73	C,P	6	All	★ D2AZ 12286-H Not replaced	Rayon core-180° moulded boot at spark plug end-17 1/4" long	AR
73	C,P	6	All	★ D2AZ 12286-J Not replaced	Rayon core-180° moulded boot at spark plug end-24 3/4" long	AR
74	C,P	6	200,250	D4PZ 12286-G	*WR-1015-10 1/4" long	AR
74	C,P	6	200,250	D4PZ 12286-H	*WR-1016-15" long	AR
74	C,P	6	200,250	D4PZ 12286-J	*WR-1017-25" long	AR
74	C,P	8	302	D4PZ 12286-C	*WR-1011-30 1/4" long	AR
73	A,C,D,F,K,P,Y	6&8	All	D3PZ 12286-A	31 1/4" long-180° spark plug moulded boot	AR
73	A,C,D,F,K,P,Y	6&8	All	D3PZ 12286-B	26" long-180° spark plug moulded boot	AR
73	A,C,D,F,K,P,Y	6&8	All	D3PZ 12286-C	27 1/4" long-110° spark plug moulded boot	AR
74 75/76	A,C,D,F,K,Y Y	8	351W,	D4PZ 12286-D	*WR-1012-30 3/4" long	AR
74	A,C,F,Y	8	351C, 400	D4PZ 12286-A	*WR-1009-30 5/8" long	AR
74	L	4	@140	D4PZ 12286-F	*WR-1014-31 1/4" long	AR
75/76 76	L J	4 4	@140 @140	D5PZ 12286-A	*WR-1001-27 3/4" long	AR AR
75/76 76	L J	6 6	⊕171 ⊕171	D5PZ 12286-C	*WR-1003-22 3/4" long	AR AR
75/76	G,P	6	200,250	D5PZ 12286-E	*WR-1005-9 3/4" long	AR
75/76	G,P	6	200,250	D5PZ 12286-F	*WR-1006-14 1/4" long	AR
75/76	G,P	6	200,250	★ D5PZ 12286-G	*WR-1007-22" long-not replaced	AR
75/76	A,C,F,Y	8	351M, 400	D5PZ 12286-B	*WR-1002-30 7/8" long	AR
75/76 75/76 75/76	A,C,D,F,K,Y C,F,G G,P	8 8 8	460 351W 302	D5PZ 12286-H	*WR-1008-29 1/4" long	AR AR AR
77/ 78/	J,L P	4 4	@140 @140	E1PZ 12286-E	*WR-1111-26 1/2" long	AR AR
77/ 78/	J,L P	4 4	@140 @140	E3PZ 12286-F	*WR-1027-A-28 1/2" long	AR AR
77/ 78/	J,L P	4 4	@140 @140	E3PZ 12286-G	*WR-1026-A 31 1/2" long	AR AR
79	J,L - - w/Bosch distributor	6	⊕171	★ D9PZ 12286-G	*WR-1060-19 1/2" long-not replaced	AR
79	J,L - - w/Bosch distributor	6	⊕171	★ D9PZ 12286-H	*WR-1061-25 1/2" long-not replaced	AR
79	J,L - - w/Bosch distributor	6	⊕171	★ D9PZ 12286-J	*WR-1062-28 1/2" long-not replaced	AR
77/	J,L - - w/Ford distributor	6	⊕171	E3PZ 12286-F	*WR-1027-A 28 1/2" long	AR

COPYRIGHT © 1986 — FORD MOTOR COMPANY — DEARBORN, MICHIGAN

1973/79 LINCOLN-MERCURY CARS

YEAR	MODEL/RESTRICTIONS	ENGINE CYL.	ENGINE C.I.D. (C.C.D.)	PART NUMBER	DESCRIPTION	QTY.
12286	WIRE ASSY. (DISTRIBUTOR TO SPARK PLUG RADIO RESISTANCE) — Cont'd Note: Important-wire assy's are to be used only for years and models as cataloged. @ 2300 cc ⊕ 2800 cc					
77/	G,P	6	200,250	E3PZ 12286-J	*WR-1028-A 13 1/2" long	AR
79	J	6	200			AR
77/	G,P	6	200,250	E3PZ 12286-NA	*WR-1029-A 17 1/2" long	AR
79	J	6	200			AR
77/	G,P	6	200,250	E3PZ 12286-L	*WR-1030-A 22 1/2" long	AR
79	J	6	200			AR
77/78	A,F	8	351M	D7PZ 12286-C	*WR-1025 31 1/2" long	AR
79	F	8	351M			AR
77/78	A,D,F,K	8	400			AR
79	D,K	8	400			AR
77/	F,G,P,V	8	302	E3PZ 12286-U	*WR-1032-A 25 1/2" long	AR
77	G,V	8	351W			AR
77/	F	8	351W			AR
77/78	A,D,K	8	460			AR
79	A	8	302			AR
77/	J,L - - w/Ford distributor	6	⊕171			AR
79	A	8	351W			AR
77	F,G,P	8	302	E3PZ 12286-S	*WR-1067-A 31 1/2" long	AR
77	G	8	351W			AR
77/	F	8	351W			AR
79	A	8	351W			AR
77/78	A,D,K	8	460			AR
78/	F,G,P,V	8	302	E3PZ 12286-N	*WR-1040-A 19 1/2" long	AR
79	A,J	8	302			AR
78/	F,G,P,V	8	302	D8PZ 12286-C	*WR-1041 28 1/2" long	AR
79	A,J	8	302			AR
78/	F,G,P,V	8	302	E3PZ 12286-V	*WR-1042-A 34 1/2" long	AR
79	A,J	8	302			AR
79	A,F	8	351W			AR
79	A,F	8	351W	E3PZ 12286-R	*WR-1041-A - 28 1/2" long	AR
79	A,F	8	351W	D9PZ 12286-C	*WR-1050 - 22 1/2" long	AR
79	A,F	8	351W	D9PZ 12286-D	*WR-1051 - 19 1/2" long	AR
79	A,F,G,J,P,V	8	302	E3PZ 12286-P	*WR-1052-A - 22 1/2" long	AR
73	A,C,D,F,K,P,Y	6&8	All	373846-S	(II-191-W)-fitting "Y"-3/16" hose	AR
12297	SEPARATOR (IGNITION WIRES) ♦ 2600 cc @ 2300 cc					
73/76	A,C,D,F,G,K,L,P,Y	All	All	B6A 12297-A	(4) slotted holes	AR
76	J	4	@140			1
73	J	6	♦159	D1FZ 12297-A		2
74	J	6	♦159	★ D4RY 12297-A	Not replaced	2
76	J	4	@140	B8Q 12297-A		2
77/	A,D,F,G,J,K,L,P,V	All	All	D7AZ 12297-A	Loose on wires	AR
77/	A,D,F,G,J,K,L,P,V	All	All	D7AZ 12297-B	attaches to rocker arm cover	AR
78/	F,G,P,V	8	302	D8BZ 12297-B	3 slots-Black-use to service blue or white seperators	AR
78/	A,F,G,J,P,G,V	8	302	D9AZ 12297-B	4 slots-Black-use to service blue or white seperators	AR
12298	WIRING ASSY. (IGNITION COIL TO DISTRIBUTOR HIGH TENSION) Note: Important-wire assy's are to be used only for years and models as cataloged. ▲ 2000 cc ♦ 2600 cc ⊕ 2800 cc @ 2300 cc					
73	J	4	▲122	★ D3RY 12298-B	Not replaced	1
74	J	4	▲122	★ D4RY 12298-B	15" long-not replaced	1
74	L	4	▲122, @140	D4FZ 12298-A	15 1/4" long	1

YEAR	MODEL/RESTRICTIONS	ENGINE CYL.	ENGINE C.I.D. (C.C.D.)	PART NUMBER	DESCRIPTION	QTY.
12298	**WIRING ASSY. (IGNITION COIL TO DISTRIBUTOR HIGH TENSION)**					
	Note: Important-wire assy's are to be used only for years and models as cataloged.					
	▲ 2000 cc ♦ 2600 cc ⊕ 2800 cc @ 2300 cc					
76	J	4	@140	★ D5RY 12298-B	Not replaced	1
75/76	L	4	@140	D6ZZ 12298-A	18 1/2" long	1
77/79	J,L	4	@140	E3PZ 12298-G	*WR-1055-A 16 1/2" long	1
78/79	P	4	@140			1
73	J	6	♦159	D3RY 12298-A		1
74	J	6	⊕171	★ D4RY 12298-A	18 1/2" long-not replaced	1
76	J	6	⊕171	★ D5RY 12298-A	Not replaced	1
75/76	L	6	⊕171	D6ZZ 12298-B	30" long	1
79	J,L - - with Bosch Distributor	6	⊕171			1
73/74	C,P	6	200,250	★ D4DZ 12298-A	11 1/2" long-not replaced	1
75/76	G,P	6	200,250	D6DZ 12298-A	11 1/4" long	1
73	A,C,F,Y	8	351C, 400	C7TZ 12298-A		1
73	C	8	351W			1
74	A,C,F,P,Y	8	302,351, 400	D4AZ 12298-A	10 1/4" long	1
73	C,P	8	302			1
75/76	A,C,D,F,G,K,P,Y	8	All	D6TZ 12298-A	9 1/4" long	1
77/78	A,F - - Canada	8	351M, 400			1
73/74	A,C,D,F,K,Y	8	460	D4VY 12298-B	9 1/4" long	1
73	A,C,Y	8	429			1
77/	A,F,G,J,P	8	302	E3PZ 12298-D	*WR-1056-A-8 1/2" long	1
77/	A,F,	8	351W			1
77	V	8	351W			1
77/78	A,F - - exc. Canada	8	351M, 400			1
77/	D,K	8	400			1
77/78	A,D,K	8	460			1
77/78	A	8	460P/C			1
77/79	J,L - - w/Ford distributor	6	⊕171	D7PZ 12298-H	*WR-1054	1
77/79	J,P	6	200	E3PZ 12298-F	*WR-1058-A	1
77/79	G	6	250			1
12299	**SHIELD (SPARK PLUG IGNITION WIRING) HEAT**					
	▲ 2000 cc					
74	J	4	▲122	D4FZ 12299-A		1
74	L	4	▲122		Steel located on R.H. side of engine	1
12300-90	**Refer to group 12127 for Distributor Parts List Instructions**					

COPYRIGHT © 1986 — FORD MOTOR COMPANY — DEARBORN, MICHIGAN

1973/79 LINCOLN-MERCURY CARS

YEAR	MODEL/RESTRICTIONS	ENGINE CYL.	ENGINE C.I.D. (C.C.D.)	PART NUMBER	DESCRIPTION	QTY.
12405	SPARK PLUG ASSY.					

NOTE: IMPORTANT
"Canadian regulations require that vehicles and other devices (other than aircraft) equipped with internal combustion engines using spark ignition systems and manufactured in or imported into Canada on or after September 1, 1976 be operated in conformance with restrictions on radio frequency interference. Use of non-resistor or non-inclusive type spark plugs may cause such vehicles or devices to be out of compliance with these regulations."
▲ 2000 cc ♦ 2600 cc ⊕ 2800 cc @ 2300 cc

4 CYLINDER ENGINES

YEAR	MODEL/RESTRICTIONS	CYL.	C.I.D. (C.C.D.)	PART NUMBER	DESCRIPTION	QTY.
73	J	4	▲122	*BRF-42		4
74	L	4	▲122			4
74	J	4	▲122	*BRF-32		4
74/76	L	4	@140	*AGRF-52		4
76	J	4	@140			4
77/78	J,L "Before 9/1/77"	4	@140	*AWRF-42		4
78	P "Before 9/1/77"	4	@140			4
78/	L,P "From 9/1/77"	4	@140	*AWSF-42		4
79	J	4	@140 exc. TC			4
79	J	4	@140 TC	*AWSF-32		4

6 CYLINDER ENGINES

YEAR	MODEL/RESTRICTIONS	CYL.	C.I.D. (C.C.D.)	PART NUMBER	DESCRIPTION	QTY.
73	J	6	♦159	*AGR-32		6
74/76	J	6	⊕171			6
75/76	L	6	⊕171	*AGR-42		6
77/	J,L	6	⊕171	*AWSF-42		6
73/74	C,P	6	200,250	*BRF-82		6
75/77	G,P	6	200,250			6
78/	P	6	200	*BSF-82		6
78/	G	6	250			6
79	J	6	200			6

8 CYLINDER ENGINES

YEAR	MODEL/RESTRICTIONS	CYL.	C.I.D. (C.C.D.)	PART NUMBER	DESCRIPTION	QTY.
73/74	C,P	8	302, 351W	*BRF-42		8
74	F	8	351W			8
73/74	A,C,F,Y	8	351C	*ARF-42		8
75/76	G,P "Before 11/24/75"	8	302			8
76	C,P – – Canada– "From 11/24/75"	8	302			8
75	C,F,Y	8	351M			8
75	C,G	8	351W			8
76	G – – Canada	8	351W			8
73/75	A,C,F,Y		400			8
76	A,C,F,Y – – Calif.	8	351M, 400			8
73	A,C,D,F,K,Y	8	429,460			8
73/75	A,C,F,Y	8	460 P/C			8

YEAR	MODEL/RESTRICTIONS	ENGINE CYL.	ENGINE C.I.D. (C.C.D.)	PART NUMBER	DESCRIPTION	QTY.

12405 SPARK PLUG ASSY. — Cont'd

NOTE: IMPORTANT

"Canadian regulations require that vehicles and other devices (other than aircraft) equipped with internal combustion engines using spark ignition systems and manufactured in or imported into Canada on or after September 1, 1976 be operated in conformance with restrictions on radio frequency interference. Use of non–resistor or non–inclusive type spark plugs may cause such vehicles or devices to be out of compliance with these regulations."

▲ 2000 cc ♦ 2600 cc ⊕ 2800 cc @ 2300 cc

8 CYLINDER ENGINES

YEAR	MODEL/RESTRICTIONS	CYL.	C.I.D. (C.C.D.)	PART NUMBER	DESCRIPTION	QTY.
74/75	A,C,D,F,K,Y	8	460 exc. P/C	*ARF–52		8
76	G,P – – exc. Canada– "From 11/24/75"	8	302			8
76	G – – exc. Canada	8	351W			8
76	C,F	8	351W			8
76	A,C,F,Y – – exc. Calif.	8	351M, 400			8
76	A,C,D,F,K,Y	8	460			8
76	A,C,Y	8	460 P/C			8
77/78	F,G,P,V – – exc. Calif.	8	302			8
77	F,G,V	8	351W			8
77	A,F – – exc. Calif.	8	351M			8
77	A,F,K – – exc. Calif.	8	400			8
77/78	A,D,K	8	460			8
77/78	A	8	460 P/C			8
78	F	8	351W			8
77/78	G,P,V – – Calif.	8	302	*ARF–52–6		8
77	A,F – – Calif.	8	351M			8
77	A,D,F,K – – Calif.	8	400			8
78	A,F	8	351M	*ASF–52		8
78	A,D,F,K	8	400			8
79	A – – exc. Calif.	8	302			8
79	F,V	8	302			8
79	G,J,P "Before 2/1/79"	8	302			8
79	A,F	8	351W			8
79	F	8	351M			8
79	D,K	8	400			8
79	A – – Calif.	8	302	*ASF–52–6		8
79	G,J,P "From 2/1/79"	8	302			8

12405 TUNE UP KIT (IGNITION)

NOTE: IMPORTANT

"Canadian regulations require that vehicles and other devices (other than aircraft) equipped with internal combusiton engines using spark ignitions systems and manufactured in or imported into Canada on or after Semptember 1, 1976 be operated in conformance with restrictions on radio frequency interference. Use of non–resistor or non–inductive type spark plugs may cause such vehicles or devices to be out of compliance with these regulations."

▲ 2000 CC @ 2300 CC

YEAR	MODEL/RESTRICTIONS	CYL.	C.I.D. (C.C.D.)	PART NUMBER	DESCRIPTION	QTY.
74	L	4	▲122	TKF 26		1

Consists of

1–D4FZ 12171–A	*DP–304–Points	1–D3AF 19D530–AA	Wick
1–D4FZ 12300–A	*DC–404–Condenser	1–	Feeler gauge
4–	*BRF–42–Spark plugs		

YEAR	MODEL/RESTRICTIONS	CYL.	C.I.D. (C.C.D.)	PART NUMBER	DESCRIPTION	QTY.
74	L	4	@140	TKF 27		1

Consists of

1–D4ZZ 12171–A	*DP–302–Points	1–D3AF 19D530–AA	Wick
1–D4ZZ 12300–A	*DC–401–Condenser	1–	Feeler gauge
4–	*AGRF–52–Spark plugs		

COPYRIGHT © 1986 — FORD MOTOR COMPANY — DEARBORN, MICHIGAN

YEAR	MODEL/RESTRICTIONS	ENGINE CYL.	ENGINE C.I.D. (C.C.D.)	PART NUMBER	DESCRIPTION	QTY.
12405	TUNE UP KIT (IGNITION) — Cont'd					
	▲ 2000 CC @ 2300 CC					
73	C,P	6	200,250	★ TKF 19	Not replaced	1
	Consists of					
	1-C9AZ 12171-B	*DP3-Points		1-	Feeler gauge	
	1-C9AZ 12300-A	*DC-13-A-Condenser		1-	Lubricant	
	6-	*BRF-82-Spark plugs				
74	P	6	250	TKF 29		1
	Consists of					
	1-C9AZ 12171-A	*DP-3-Points		1-D3AF 19D530-AA	Wick	
	1-C9AZ 12300-A	*DC-13-A-Condenser		1-D3PF 12A205-AA	Applicator	
	6-	*BRF-82-Spark plugs		1-	Feeler gauge	
73	C,P	8	302, 351W	★ TKF 17	Not replaced	1
	Consists of					
	1-B8Q 12171-A	*DP-12-Points		1-	Feeler gauge	
	1-C9AZ 12300-A	*DC-13-A-Condenser		1-	Lubricant	
	8-	*BRF-42-Spark plugs				
74	C,F,P	8	302, 351W	TKF 30		1
	Consists of					
	1-B8Q 12171-A	*DP-12-Points		1-D3AF 19D530-AA	Wick	
	1-C9AZ 12300-A	*DC-13-A-Condenser		1-D3PF 12A205-AA	Applicator	
	8-	*BRF-42-Spark plugs		1-	Feeler gauge	
73	A,C,D,F,K,Y	8	351C,400, 429,460	TKF 22		1
	Consists of					
	1-B8Q 12171-A	*DP-12-Points		1-	Feeler gauge	
	1-C9AZ 12300-A	*DC-13-A-Condenser		1-	Lubricant	
	8-	*ARF-42-Spark plugs				
74	C,F	8	351C	TKF 31		1
	Consists of					
	1-B8Q 12171-A	*DP-12-Points		1-D3AF 19D530-AA	Wick	
	1-C9AZ 12300-A	*DC-13-A-Condenser		1-D3AF 12A205-AA	Applicator	
	8-	*ARF-42-Spark plugs		1-	Feeler gauge	
12A406	SHIELD ASSY. (SPARK PLUG HEAT)					
74	A,C,F,Y	8	400	★ D4AZ 12A406-A	Not replaced	2
74	C,F,Y	8	351C			2
74	C,F,Y	8	351W	★ D40Z 12A406-A	R.H.-not replaced	1
				★ D40Z 12A406-B	L.H.-not replaced	1
74/76	C,G,P	8	302	★ D4DZ 12A406-A	Not replaced	2
75/78	A,C,F,Y	8	351M, 400	D5AZ 12A406-A	R.H. and L.H.	2
79	F	8	351M			2
79	D,K	8	400			2
75/76	C,G	8	351W	★ D50Z 12A406-A	R.H. and L.H.-not replaced	2
77/78	F,G,P,V	8	302	D7DZ 12A406-A		2
78	F	8	351W			2
79	G,J	8	302			2
12K454	WIRE ASSY. (ENGINE GOVERNOR CONTROL VALVE EXTENSION)					
73	A,Y	8	351C, 400,429, 460	★ D3AZ 12K454-D	#D3AB 12K454-DA,DC-not replaced	1
74	A,Y	8	460 P/C	★ D4AZ 12K454-B	#D4AB 12K454-BA-not replaced	1
75	A,Y	8	351,460	D5AZ 12K454-A	#D5AB 12K454-AA	1
76	Y	8	351M			1
76	A,Y - - exc. Calif. and Canada	8	460 P/C			1
73	C - - A/T	6	250	★ D20Z 12K454-C	#D20B 12K454-AA,AB-not replaced	1

YEAR	MODEL/RESTRICTIONS	ENGINE CYL.	ENGINE C.I.D. (C.C.D.)	PART NUMBER	DESCRIPTION	QTY.
12K454	WIRE ASSY. (ENGINE GOVERNOR CONTROL VALVE EXTENSION) — Cont'd					
73	C - - A/T "Before 3/28/73"	8	351C,400, 429,460	★ D30Z 12K454-B	#D30B 12K454-BA-not replaced	1
73	C - - A/T "From 3/28/73"	8	351C,400, 429,460	★ D30Z 12K454-D	#D30B 12K454-BC,BD-not replaced	1
73/75	C - - 4/M/T	8	351	★ D30Z 12K454-C	#D30B 12K454-CB,CC-not replaced	1
74	C	8	460 P/C	★ D40Z 12K454-C	#D40B 12K454-CA-not replaced	1
75	C,F - - w/o low vacuum warning	8	All	★ D50Z 12K454-A	#D50B 12K454-AA-not replaced	1
76	C - - exc. Calif. and Canada	8	460 P/C			1
73	D	8	460	★ D3VY 12K454-A	#D3VB 12K454-AA-not replaced	1
73	F	8	351	★ D3ZZ 12K454-D	#D3ZB 12K454-DA,DB-not replaced	1
73	F - - A/T	8	351	★ D3ZZ 12K454-A	#D3ZB 12K454-AB-not replaced	1
75/76	L	4&6	All	★ D5FZ 12K454-A	#D52B 12K454-BA-not replaced	1
75	L	4&6	All	★ D5FZ 12K454-B	#D52B 12K452-AA-not replaced	1
76	L	4&6	All	★ D6FZ 12K454-A	#D6EE 12K452-AC-59" long-solenoid to extension wire-not replaced	1
73/76	A			42367-S36	(U-269-B)-attach wire to instrument panel-No. 10-16 x 1/2"	1
12A581	WIRING ASSY. (ENGINE ELECTRONIC CONTROL SENSOR)					
79	A	8	351W	★ D9AZ 12A581-A Not replaced	#ED D9AB 12A581-AN, D9AB 12A581-AN,AR	1
78	V	8	302	★ D84Y 12A581-A	#D84B 12A581-AC,AE-not replaced	1
79	V "Before 11/6/78"	8	302	★ D94Y 12A581-A	#D94B 12A581-AF-not replaced	1
79	V "From 11/6/78"	8	302	★ D94Y 12A581-B	#D94B 12A581-AH-not replaced	1
12638	WIRING (STARTER CIRCUIT JUMPER)					
73	C - - A/T w/console	6&8	All	★ D30Z 12638-A	#D30B 12638-AA-not replaced	1
74	C - - A/T w/console- "Before 1/2/74"	6&8	All	★ D40Z 12638-A	#D40B 12638-AA-not replaced	1
74	C,F - - A/T w/console- "From 1/2/74"	6&8	All	★ D50Z 12638-A	#D40B 12638-AB, D50B 12638-AA-not replaced	1
75	F - - w/fixed column	8	All			1
73	D "Before 6/15/73"	8	460	★ D1SZ 12638-A	#D1SB 12638-AA-not replaced	1
73	K	8	460			1
73	D "From 6/15/73"	8	460	★ D3VY 12638-A	#D3VB 12638-AA-not replaced	1
76/	F - - w/fixed column	8	All	★ D60Z 12638-A	#D60B 12638-AA-not relaced	1
74	P	6&8	All	D4DZ 12638-A	Incl. IS. 4628	1
74	L	4&6	All	D4ZZ 12638-A	Incl. IS. 4629	1
12A644	SENSOR ASSY. (ENGINE ELECTRONIC CONTROL BAROMETRIC PRESSURE)					
78/79	V "Before 11/6/78"	8	302	★ D84Y 12A644-A	*DY-229-#D8VE 12A644-AA-r/b E1AZ 12A680-B	1
79	V "From 11/6/78"	8	302		refer to group 12A680	
12A646	RELAY ASSY. (ENGINE ELECTRONIC CONTROL)					
78/	V	8	302	D84Y 12A646-A	*DY-226-#D84B 12A646-AA	1
79	A	8	351W			1
12A647	SENSOR ASSY. (ENGINE ELECTRONIC CONTROL AIR TEMPERATURE)					
78/	V	8	302	D84Y 12A647-A	*DY-225-#D8VE 12A647-AA	1
12A648	SENSOR ASSY. (ENGINE ELECTRONIC CONTROL COOLANT TEMPERATURE)					
78/	V	8	302	D84Y 12A648-A	*DY-228-#D8VE 12A648-AA	1
79	A	8	351W	D94Y 12A648-A	*DY-253-#D94E 12A648-AA	1
12A649	CALIBRATOR ASSY. (ENGINE ELECTRONIC CONTROL)					
79	A(54,74) - - C4 - Calif.- "Before 1/2/79"	8	351W	D9AZ 12A649-G	#D9AE 12A649 B1C,B3C,B1D,B3D	1
79	A - - C6 - Calif.- "Before 1/2/79"	8	351W			1
79	A(66) - - C4 and 3.08 axle-Calif.	8	351W			1
79	A(74) - - Calif. "From 1/2/79"	8	351W			1

COPYRIGHT © 1986 — FORD MOTOR COMPANY — DEARBORN, MICHIGAN

1973/79 LINCOLN-MERCURY CARS

YEAR	MODEL/RESTRICTIONS	ENGINE CYL.	ENGINE C.I.D. (C.C.D.)	PART NUMBER	DESCRIPTION	QTY.
12A649	CALIBRATOR ASSY. (ENGINE ELECTRONIC CONTROL) — Cont'd					
79	A(66) - - C4 and 2.26 axle-Calif.- "Before 1/2/79"	8	351W	D9AZ 12A649-C	#D9AE 12A649-C1C,C3C	1
79	A(54,66) - - w/2.26 axle-Calif. "From 1/2/79"	8	351W			1
79	A(54,66) - - C4-exc. Calif.	8	351W	D9AZ 12A649-E	#D9AE 12A649-E1C,E3C	1
79	A - - C6 exc. Calif.	8	351W	D9AZ 12A649-F	#D9AE 12A649-F1B,F3B	1
79	A(54,66) - - C4 and 3.08 axle exc. Calif.	8	351W			1
79	A(54) - - C4 and 2.73 axle exc. Calif.	8	351W			1
79	A(74) - - C4 exc. Calif.	8	351W			1
78	V - - exc. Calif.	8	302	D84Y 12A649-A	#D8VE 12A649-A1B,A2B,A3B	1
79	V - - w/Hi-altitude carb.	8	302			1
78	V - - Calif.	8	302	D84Y 12A649-D	#D8VE 12A649-B1E,B2E,B3E	1
79	V - - exc. Calif. "Before 11/6/78"	8	302			1
79	V - - exc. Calif. or Hi-altitude carb. "From 11/6/78"	8	302	D94Y 12A649-B	#D8VE 12A649-A1C	1
79	V - - Calif.	8	302	D94Y 12A649-A	#D8VE 12A649-B1F	1
12A650	PROCESSOR ASSY. (ENGINE ELECTRONIC CONTROL)					
78/	V	8	302	D84Y 12A650-A	#D8VE 12A650 A1A,A2A,A3A	1
79	A - - Calif.	8	351W	D9AZ 12A650-E	#D9AE 12A650-A1B,A3B	1
79	A - - exc. Calif.	8	351W	D9AZ 12A650-C		1
12A651	CONTROL ASSY. (ENGINE AIR FUEL RATIO)					
79	J - - Calif.	4	@140 TC	D9FZ 12A651-A	*DY-233-A-#D8EE 12A651 A1A,A2B,D9EE 12A651 B1B,B2B	1
77/79	L - - Calif.	4	@140			1
12A659	BRACKET (ENGINE ELECTRONIC PROCESSOR ASSY.)					
79	A	8	351W	★ D9AZ YEAR	Not replaced	1
79	A	8	351W	★ D9AZ 12A659-B	Reinforcement bracket-not replaced	1
78/	V	8	302	★ D84Y 12A659-A	Not replaced	1
12A680	SENSOR ASSY. (BAROMETRIC AND MANIFOLD ABSOLUTE PRESSURE)					
79	A	8	351W	E1AZ 12A680-B	*DY-299-A-#D9AE 12A680-A1A,A2A, E0AE 12A680-B1A,B2A, E1AE 12A680-A1A,A2A-BMAP "Before 11/6/78" refer to groups 9F479 and 12A648	1
79	V "From 11/6/78"	8	302			1
12A690	WIRING ASSY. (ENGINE CONTROL SENSOR EXTENSION)					
79	A	8	351W	★ D9AZ 12A690-A	#D9AE 12A690-AC-not replaced	1
12A696	SEAL (ENGINE ELECTRONIC CONTROL)					
79	A	8	351W	★ D9AZ 12A696-A	Not replaced	1
12A698	BRACKET ASSY. (BAROMETRIC AND MANIFOLD PRESSURE SENSOR)					
79	A	8	351W	★ D9AZ 12A698-A	Not replaced	1

DESCRIPTION/RESTRICTIONS	PART NUMBER	DISTRIBUTOR PARTS LIST 1A THRU 1M											
		A	B	C	D	E	F	G	H	J	K	L	M
Refer to group 12127, SECTION 120 for PARTS LIST & INSTRUCTIONS													
● Reconditioners only													
CUP (OIL)	B6A 10141-A	A	B										
REPAIR KIT (1973)	C5AZ 12000-D *DK-16	A											
Consists of 1-C9AZ 12171-B Points 1-D5DZ 12200-A Rotor 1-C9AZ 12300-A Condenser													
BUTTON (BREAKER PLATE SUPPORT)	★●D2AZ 12072-A	3	3										
SLEEVE (SHAFT PLATE)	★ C2AZ 12A075-A	A	B										
HOUSING (CAP)	7HA 12106 *DH-4	A	B										
BUSHING (HOUSING UPPER)	C5AZ 12120-A *MC-175	A	B										
GASKET (BASE)	C0DF 12143-A *DZ-4	A	B										
CLAMP (TERMINAL HOUSING HOLD DOWN,	7RA 12144	2	2										
RIVET (TERMINAL HOUSING)	★ B 12145	2	2										
RETAINER (BREAKER PLATE)	★●D2AZ 12146-A	A	B										
PLATE ASSY. (BREAKER)	12151												
	D2PZ 12151-B *DP-186-A	A	B										
Upper plate onyl	● D2TZ 12151-C	A	B										
Lower plate only	● D2TZ 12151-B	A	B										
POINT SET (ALARM and BREAKER	12171												
	C9AZ 12171-B *DP-3	A	B										
Washer-No. 8	34802-S7 (X-59)	2	2										
Screw & washer-No. 8"-32 x 5/16"	355067-S7 (BB-53)	2	2										
SHAFT-incl. weights	★ D3DZ 12175-A *DF-393	A	B										
RETAINER (CAM)	B7A 12177-A	A	B										
WASHER (SHAFT THRUST UPPER)	C8AZ 12179-A *DZ-413	A	B										
LINK (BREAKER PLATE)	● D2AZ 12A186-A	A	B										
SPRING (BREAKER PLATE)	12A187												
Use on breaker plate w/o spring hole	● D2AZ 12A187-A	A	B										
Use on breaker plate with spring hole	★●D3AZ 12A187-C	A	B										
CLIP (DISTRIBUTOR SPRING RETAINING)	★ D3AZ 12A187-B	A	B										
SPRING-Refer to Distributor Identification Charts for Calibration Codes	12191-2												
ROTOR ASSY.	D5PZ 12200-B *DR-87-B	A	B										
DISTRIBUTOR CAM LUBRICATION KIT - Consists of: sleeve, lubricator, and instr. sht.	★ D3PZ 12A206-B	A	B										
CAM-Refer to Distributor Identification Charts for Calibration Codes	12210												

COPYRIGHT © 1986 — FORD MOTOR COMPANY — DEARBORN, MICHIGAN

DESCRIPTION/RESTRICTIONS	PART NUMBER	DISTRIBUTOR PARTS LIST 1A THRU 1M											
		A	B	C	D	E	F	G	H	J	K	L	M
Refer to group 12127, SECTION 120 for PARTS LIST INSTRUCTIONS													
● Reconditioners only													
WIRE ASSY. (PRIMARY TERMINAL)	12216												
W/out diagnostic system	C7VY 12216–A *DW–34	A	B										
W/diagnostic system	D3TZ 12216–A *DW–48	A											
Nut–No. 6–32	34051–S7 (M–154)	A	B										
Lockwasher–No. 6	34801–S7 (X–58)	A	B										
Screw–No. 6–18 x 3/8"	32923–S8 (U–338)	A	B										
SCREW (POINT)	D0RY 12230–A	3	3										
WIRE ASSY. (BREAKER GROUND)	D2AZ 12264–A *ML–291	A	B										
Screw–No. 8–32 x 5/16"	31037–S7 (U–48)	A	B										
Lockwasher–No. 8	34802–S7 (X–59)	A	B										
Screw & lockwasher–No. 8–32 x 5/16"	355067–S7 (BB–53)	A	B										
CLAMP (DISTRIBUTOR TO CYLINDER HEAD)	C3AZ 12270–A *DZ–410	A	B										
Screw–5/16"–18 x 1"	20386–S8 (B–53)	A	B										
Lockwasher–5/16"	34806–S7 (X–64)	A	B										
CONDENSER ASSY.	C9AZ 12300–A *DC–13–A	A	B										
Screw–No. 8–32 x 5/16"	355067–S7 (BB–53)	A	B										
DIAPHRAGM ASSY.–Refer to Distributor Identification Charts for Calibration Codes	12370												
Retainer– "C" type–diaphragm rod	351826–S (XX–2)	A	B										
Connector (vacuum tube to distributor)–3/16"	359546–S8B (II–67)	A	B										
Screw (diaphragm to distributor)– No. 8–32 x 1"	★ 382331–S2	A	B										
GEAR (DRIVEN)	C4DZ 12390–A	A	B										
Rivet (gear to shaft)–1/8" x 13/16"	61489–S (S–10)	A	B										

NOTICE: When the parts list suffix is shown in the quantity required column, the quantity is one (1).

DESCRIPTION/RESTRICTIONS	PART NUMBER	DISTRIBUTOR PARTS LIST 2A THRU 2M											
		A	B	C	D	E	F	G	H	J	K	L	M
Refer to group 12127, SECTION 120 for PARTS LISTING INSTRUCTIONS ● Reconditioners only													
REPAIR KIT (1973)	C0TZ 12000-A *DK-10	A	B	C									
Consists of 1-B8Q 12171-A Points 1-B7A 12200-A Rotor 1-C9AZ 12300-A Condenser													
BUTTON (BREAKER PLATE SUPPORT)	★●D2AZ 12072-A	3	3	3	3								
SLEEVE (SHAFT PLATE)	★ C2AZ 12A075-A	A	B	C	D								
HOUSING (CAP)	B7A 12106-A *DH-6	A	B	C	D								
BUSHING (HOUSING UPPER)	12120												
	C5AZ 12120-A *MC-175	A	B		D								
	B8QH 12120-A *MC-148			C									
GASKET (BASE)	B9TF 12143-A *DZ-3	A	B	C	D								
CLAMP (TERMINAL HOUSING HOLD DOWN)	7RA 12144	2	2	2	2								
RIVET (TERMINAL HOUSING HOLD DOWN CLAMP)	★ B 12145	2	2	2	2								
RETAINER (BREAKER PLATE)	★●D2AZ 12146-A	A	B	C									
PLATE ASSY. (BREAKER)	12151												
	D2PZ 12151-A *DB-187-A	A	B	C									
	★ C9AZ 12151-A *DB-181				D								
Screw-pan hd.-No. 8-32 x 3/8"	★ 50507-S8				2								
Washer- "C" type	351825-S(XX-9)				D								
Washer-spring-3/16"	372395-S(XX-368)				D								
Washer-flat-3/16"	372396-S8(XX-78)				D								
POINT SET (ARM and BREAKER)	12171												
Pivot	B8Q 12171-A *DP-12	A	B	C									
Pivot	C9AZ 12171-A *DP-5				2								
Screw-fill hd.-No. 8-32	31037-S7(U-48)	2	2		2								
Lockwasher-No. 8	34802-S7(X-59)	2	2		2								
Nut-No. 6-32	34051-S7(M-154)	A	B		D								
Lockwasher-No. 6	34801-S7(X-58)	A	B		D								
SHAFT	12175												
Incl. weights	D30Z 12175-A *DF-396			C									
Incl. weights	D3AZ 12175-A *DF-395	A	B		D								
RETAINER (CAM)	B7A 12177-A	A	B	C	D								
WASHER (SHAFT THRUST UPPER)	C8AZ 12179-A *DZ-413	A	B	C	D								
LINK (BREAKER PLATE)	● D2AZ 12A186-A	A	B	C									

COPYRIGHT © 1986 — FORD MOTOR COMPANY — DEARBORN, MICHIGAN

DESCRIPTION/RESTRICTIONS	PART NUMBER	DISTRIBUTOR PARTS LIST 2A THRU 2M											
		A	B	C	D	E	F	G	H	J	K	L	M
Refer to group 12127, SECTION 120 for PARTS LIST & INSTRUCTIONS													
● Reconditioners only													
SPRING (BREAKER PLATE)	12A187												
Use on breaker plate w/o spring hole	● D2AZ 12A187-A	A	B	C									
Use on breaker plate with spring hole	★●D3AZ 12A187-C	A	B	C									
CLIP (DISTRIBUTOR SPRING RETAINING)	D3AZ 12A187-A	A	B	C									
SPRING-Refer to Distributor Identification Charts for Calibration Codes	12191-2												
COLLAR (SHAFT)	12195												
	C8VY 12195-A	A	B		D								
	★ 7HA 12195			C									
Rivet-1/8" x 13/16"	61489-S(S-10)	A	B	C	D								
ROTOR ASSY.	B7A 12200-A *DR-5	A	B	C	D								
DISTRIBUTOR CAM LUBRICATION KIT-Consists of: sleeve, lubricator, and instr.sht.	D3PZ 12A206-A	A	B	C	D								
CAM-Refer to Distributor Identification Charts for Calibration Codes	12210												
WIRE ASSY. (PRIMARY TERMINAL)	12216												
W/out diagnostic system	C7VY 12216-A *DW-34	A	B	C									
W/diagnostic system	D3TZ 12216-A *DW-48	A	B	C									
	D4AZ 12216-A *DW-38-A				D								
Nut-No. 6"-32	34051-S7(M-154)	A	B	C	D								
Lockwasher-No. 6	34801-S7(X-58)	A	B	C	D								
SCREW (POINT)	D0RY 12230-A	3	3	5	3								
WIRE ASSY. (BREAKER GROUND)	12264												
	D2AZ 12264-A *ML-291	A	B	C									
	7RA 12264 *ML-290				D								
CLAMP (DISTRIBUTOR TO CYLINDER HEAD)	C3AZ 12270-A *DZ-410	A	B	C	D								
Screw & washer (distributor to block)-	42846-S13(U-13)	A	B	C	D								
CONDENSER ASSY.	C9AZ 12300-A *DC-13-A	A	B	C	D								
Screw & washer-No. 8"-32 x 5/16"	355067-S7(BB-53)	A	B	C	D								
GASKET (DIAPHRAGM VACUUM CONNECTOR)	★ B7A 12320-A	A	B	C	D								
DIAPHRAGM ASSY.-Refer to Distributor Identification Charts for Calibration Codes	12370												
Screw-No. 8"-32 x 1"	★ 382331-S	2	2	2	2								
GEAR (DRIVEN)	12390												
	C4TZ 12390-A	A			D								
	C9ZZ 12390-A *DZ-412		B										
	C20F 12390-A *DZ-362			C									
Rivet-1/8" x 13/16"	61489-S(S-10)	A	B	C	D								

NOTICE: When the parts list suffix is shown in the quantity required column, the quantity is one (1).

DESCRIPTION/RESTRICTIONS	PART NUMBER	DISTRIBUTOR PARTS LISTS 3A THRU 3M											
		A	B	C	D	E	F	G	H	J	K	L	M
Refer to group 12127, SECTION 120 for PARTS LIST & INSTRUCTIONS													
REPAIR (KIT)	D4ZZ 12000-A *DK-17	A											
Consists of 1-D4ZZ 12171-A Points 1-D4ZZ 12200-A Rotor 1-D4ZZ 12300-A Condenser													
BUTTON (BREAKER PLATE SUPPORT)	★ D4ZZ 12072-A	3											
SLEEVE (SHAFT PLATE)	★ D4ZZ 12A075-A *DZ-473	A											
HOUSING (CAP)	D5FZ 12106-A *DH-352	A											
BUSHING (HOUSING UPPER)	D4ZZ 12120-A *MC-221	A											
GASKET (BASE)	C0DF 12143-A	A											
RETAINER (BREAKER PLATE)	D4AZ 12146-A	A											
PLATE ASSY. (BREAKER)	D4PZ 12151-A *DB-196	A											
POINT SET (ARM and BREAKER)	D4ZZ 12171-B *DP-302-A	A											
SHAFT	D4ZZ 12175-A *DF-405	A											
RETAINER (CAM)	B7A 12177-A	A											
WASHER (GEAR LOWER THRUST)	C8AZ 12179-A *DZ-413	A											
LINK (BREAKER PLATE)	D4AZ 12A186-A	A											
SPRING (BREAKER PLATE)	★ D3AZ 12A187-C	A											
SPRING-Refer to Distributor Identification Charts for Calibration codes	12191-2												
ROTOR ASSY.	D5FZ 12200-A *DR-220-A	A											
LUBRICATOR (CAM)-KIT	D3PZ 12A206-B	A											
CAM-Refer to Distributor Identification Charts for Calibration Codes	12210												
WIRE ASSY. (PRIMARY TERMINAL)	D4ZZ 12216-A *DW-46	A											
SCREW (POINTS)	D0RY 12230-A	3											
WIRE ASSY. (BREAKER GROUND)	D2AZ 12264-A	A											
CLAMP (DISTRIBUTOR TO CYLINDER HEAD)	D9ZZ 12270-A *DZ-468-A	A											
CONDENSER	D4ZZ 12300-A *DC-401	A											
DIAPHRAGM ASSY.-Refer to Distributor Identification Charts for Calibration Codes	12370												
Screw-No. 8-32 x 1"	★ 382331-S	2											
GEAR	D4ZZ 12390-A *DZ-472	A											
Rivet-1/8"-13/16"	61489-S(S-10)	A											

COPYRIGHT © 1986 — FORD MOTOR COMPANY — DEARBORN, MICHIGAN

DESCRIPTION/RESTRICTIONS	PART NUMBER	DISTRIBUTOR PARTS LISTS 4A THRU 4M											
		A	B	C	D	E	F	G	H	J	K	L	M
Refer to group 12127, SECTION 120 for PARTS LIST & INSTRUCTIONS													
● Reconditioners only-per Federal Standards, not for dealer use for 1975/ application													
SLEEVE and PLATE ASSY.-Refer to Distributor Identification Chart for Calibration Codes	12A096												
ARMATURE	D3AZ 12A099-A *DT-1	A	B	C	D	E	F	G	H	J			
Pin-roll-3/32" x 5/16"	305015-S(NN-84-G)	A	B	C	D	E	F	G	H	J			
HOUSING (TERMINAL CAP)	12106												
	B7A 12106-A *DH-6	A	B										
1975/76	D5AZ 12106-A *DH-354			C	D	E	F						
1977	D7AZ 12106-A *DH-366						F	G	H	J			
STATOR ASSY.	D4PZ 12A112-A *DU-1-A	A	B	C	D	E	F	G	H	J			
Washer- "C" type	351826-S(XX-2)	A	B	C	D	E	F	G	H	J			
Screw-No. 8-32-cross recess	★ 384911-S8M	2	2	2	2	2	2	2	2	2			
BUSHING (HOUSING UPPER)	12120												
	C5AZ 12120-A *MC-175	A		C		●E	●F	●G	●H				
	B8QH 12120-A		B		●D					●J			
GASKET (BASE)	B9TF 12143-A *DZ-3	A	B	C	D	E	F	G	H	J			
CLAMP (TERMINAL HOUSING HOLD DOWN)	7RA 12144	2	2	2	2	2	2	2	2	2			
RIVET (TERMINAL HOUSING HOLD DOWN CLAMP)	★ B 12145	2	2	2	2	2	2	2	2	2			
RETAINER (BREAKER PLATE)	D3AZ 12146-A *DZ-470	A	B	C	●D	●E	●F	●G	●H	●J			
PLATE ASSY. (BREAKER)	D3AZ 12151-A *DB-194	A	B	C	●D	●E	●F	●G	●H	●J			
SHAFT	12175												
	D3AZ 12175-A *DF-395	A		C			●F	●G					
	D30Z 12175-A *DF-396		B		●D					●J			
	D2AZ 12175-J *DF-380-B			C		●E			●H				
RETAINER (CAM)	B7A 12177-A	A	B	C	●D	●E	●F	●G	●H	●J			
WASHER (SHAFT THRUST UPPER)	C8AZ 12179-A *DZ-413	A	B	C	●D	●E	●F	●G	●H	●J			
SPRING-Refer to Distributor Identification Chart for Calibration Codes	12191-2												
COLLAR (SHAFT)	12195												
	C8VY 12195-A	A		C		●E	●F	●G	●H				
	★ 7HA 12195		B		●D					●J			
Pin-1/8" x 13/16"	67555-S(N-100-E)	A	B	C	●D	●E	●F	●G	●H	●J			
ROTOR ASSY.	12200												
	B7A 12200-A *DR-5	A	B	C									
1975/76	D5PZ 12200-P *DR-5-B				D	E	F						
1977/	E4HZ 12200-A *DR-323-A						F	G	H	J			
RING (ARMATURE STOP-not required on units built "From 10/1/73"	D3AZ 12A203-A *DZ-471	A		C									
ADAPTER (BASE) 1977	E2ZZ 12A217-B *DJ-6						F	G	H	J			

COPYRIGHT © 1986 — FORD MOTOR COMPANY — DEARBORN, MICHIGAN

1973/79 LINCOLN–MERCURY CARS

ALL 8 CYL. ENGINES
BREAKERLESS DISTRIBUTOR

DESCRIPTION/RESTRICTIONS	PART NUMBER	DISTRIBUTOR PARTS LISTS 4A THRU 4M											
		A	B	C	D	E	F	G	H	J	K	L	M
Refer to group 12127, SECTION 120 for PARTS LIST INSTRUCTIONS													
● Reconditioners only–per Federal Standards, not for dealer use for 1975/ applications													
CLAMP (CYLINDER HEAD)	C3AZ 12270–A *DZ–410	A	B	C	D	E	F	G	H	J			
DIAPHRAGM ASSY.–Refer to Distributor Identification Chart for Calibration Codes	12370												
Screw–No. 8–32 x 13/16"	354988–S8(BB–635)	2	2	2	2	2	2	2	2	2			
GEAR (DRIVEN)	12390												
	C4TZ 12390–A *DZ–365	A					F	G					
	C20F 12390–A *DZ–362		B		D					J			
	C9ZZ 12390–A *DZ–412			C		E			H				
Pin–1/8" x 13/16"	67555–S(N–100–E)	A	B	C	D	E	F	G	H	J			

NOTICE: When the parts list suffix is shown in the quantity required column, the quantity is one (1).

DESCRIPTION/RESTRICTIONS	PART NUMBER	DISTRIBUTOR PARTS LISTS 5A THRU 5M											
		A	B	C	D	E	F	G	H	J	K	L	M
Refer to group 12127, SECTION 120 for PARTS LIST INSTRUCTIONS													
● Reconditioners only–per Federal Standards, not for dealer use for 1975/ applications.													
SLEEVE and PLATE ASSY.–Refer to Distributor Identification Charts for Calibration Codes	12A096												
ARMATURE	12A099												
	D4DZ 12A099-A *DT-2	A											
	D5DZ 12A099-A *DT-6		B	C	D	E							
Pin–roll–3/32" x 5/16"	305015-S(NN-84-G)	A	B	C	D	E							
HOUSING (TERMINAL CAP)	12106												
	7HA 12106 *DH-4	A											
	D7TZ 12106-B *DH-369		B	C									
	D7DZ 12106-A *DH-367				D	E							
STATOR ASSY.	12A112												
	D4PZ 12A112-A *DU-1A	A											
	D5TZ 12A112-A *DU-5		B	C	D	E							
Washer– "C" type	351826-S(XX-2)	A											
Screw–No. 8–32 x 5/8"	57357-S2 (U-121-G)		2	2	2	2							
BUSHING (HOUSING UPPER)	D4ZZ 12120-A *MC-221	A	●B	●C	●D	●E							
GASKET (DIST. BASE)	12143												
	C0DF 12143-A	A	B	C	D	E							
CLAMP (TERMINAL HOUSING HOLD DOWN)	7RA 12144	2											
RIVET (TERMINAL HOUSING HOLD DOWN CLAMP)	★ B 12145	2											
RETAINER (BREAKER PLATE)	D3AZ 12146-A	A											
PLATE ASSY. (BREAKER)	D4DZ 12151-A *DB-201	A											
SHAFT	★ D3DZ 12175-A *DF-393	A	●B			●E							
	D2DZ 12175-A *DF-366-A			●C	●D								
RETAINER (CAM)	B7A 12177-A	A	●B	●C	●D	●E							
WASHER (SHAFT THRUST UPPER)	C8AZ 12179-A *DZ-413	A	●B	●C	●D	●E							
SPRING–Refer to Distributor Identification Charts for Calibration Codes	12191-2												
ROTOR ASSY.	12200												
	D5PZ 12200-B *DR-87-B	A	B	C									
	E3DZ 12200-A *DR-314-B				D	E							
ADAPTER (BASE)	D7DZ 12A217-A *DJ-1				D	E							
CLAMP (DISTRIBUTOR TO CYL. HEAD)	C3AZ 12270-A	A	B			E							
DIAPHRAGM ASSY.–Refer to Distributor Identification Charts for Calibration Codes	12370												
Screw–No. 8–32 x 3/4"	57016-S2 (B-39-G)		2	2	2	2							

COPYRIGHT © 1986 — FORD MOTOR COMPANY — DEARBORN, MICHIGAN

DESCRIPTION/RESTRICTIONS	PART NUMBER	DISTRIBUTOR PARTS LISTS 5A THRU 5M											
		A	B	C	D	E	F	G	H	J	K	L	M
Refer to group 12127, SECTION 120 for PARTS LIST INSTRUCTIONS													
● Reconditioners only–per Federal Standards, not for dealer use for 1975/ applications.													
GEAR (DRIVEN)	C4DZ 12390–A	A	B	C	D	E							
Rivet–1/8" x 13/16"	61489–S(S–10)	A											
Pin	67555–S(N–100–E)		B	C	D	E							

NOTICE: When the parts list suffix is shown in the quantity required column, the quantity is one (1).

DESCRIPTION/RESTRICTIONS	PART NUMBER	DIST. PARTS LISTS 6A THRU 6M											
		A	B	C	D	E	F	G	H	J	K	L	M
Refer to group 12127, SECTION 120 for PARTS LIST INSTRUCTIONS													
● Reconditioners only-per Federal Standards, not for dealer use for 1975/ applications.													
SLEEVE and PLATE ASSY.-Refer to Distributor Identification Chart for Calibration Codes	12A096												
ARMATURE	D5FZ 12A099-A *DT-5	A	B		D								
	D7FZ 12A099-A *DT-7			C									
Pin-roll-3/32" x 5/16"	305015-S(NN-84G)	A	B	C	D								
HOUSING (TERMINAL CAP)	D5FZ 12106-A *DH-352	A	B										
	E3BZ 12106-A *DH-368-A			C	D								
STATOR ASSY.	D5TZ 12A112-A *DU-5	A	B	C	D								
Washer- "C" type	351826-S(XX-2)	A	B	C	D								
Screw-No. 8-32 x 5/8"	57357-S2 (U-121-G)	2	2	2	2								
BUSHING (HOUSING UPPER)	D4ZZ 12120-A *MC-221	●A	●B	●C	●D								
GASKET (BASE)	C0DF 12143-A	A	B	C	D								
SHAFT	D5FZ 12175-A	●A			●D								
	D4ZZ 12175-A		●B	●C									
RETAINER (CAM)	B7A 12177-A	●A	●B	●C	●D								
WASHER (SHAFT THRUST UPPER)	C8AZ 12179-A *DZ-413	●A	●B	●C	●D								
SPRING-Refer to Distributor Identification Chart for Calibration Codes	12191-2												
ROTOR ASSY.	D5FZ 12200-A *DR-220-A	A	B										
	D7FZ 12200-C *DR-308			C	D								
CLAMP (DISTRIBUTOR TO CYLINDER HEAD)	D9ZZ 12270-A *DZ-468-A	A	B	C	D								
DIAPHRAGM ASSY.-Refer to Distributor Identification Chart for Calibration Codes	12370												
Screw-No. 8-32 x 3/4"	57016-S2 (B-39-G)	2	2	2	2								
GEAR (DRIVEN)	D4ZZ 12390-A *DZ-472	A	B	C	D								
Pin-1/8" x 13/16"	67555-S(N-100-E)	A	B	C	D								

COPYRIGHT © 1986 — FORD MOTOR COMPANY — DEARBORN, MICHIGAN

DESCRIPTION/RESTRICTIONS	PART NUMBER	DIST. PARTS LISTS 7A THRU 7M											
		A	B	C	D	E	F	G	H	J	K	L	M
NOTE: Refer to group 12127, SECTION 120 for PARTS LIST INSTRUCTIONS ● Reconditioners only – per Federal Standards not for dealer use for 1975/ applications													
SLEEVE and PLATE ASSY. – Refer to Distributor Identification Charts for calibration codes	12A096												
ARMATURE	D5DZ 12A099-A *DT-6	A	B	C	D	E							
Pin-roll -3/32" x 5/16"	305015-S(NN-846)	A	B	C	D	E							
HOUSING (TERMINAL CAP)	D5DZ 12106-A *DH-353	A	B										
	D7DZ 12106-A *DH-367			C	D	E							
STATOR ASSY.	D6ZZ 12A112-B *DU-6-A	A	B	C	D	E							
Screw-#8-32 x 5/8"	57357-S2(U-121-G)	2	2	2	2	2							
WICK (CAM)	★ D0RY 12133-A	A	B	C	D	E							
SHAFT	12175												
	★ D6ZZ 12175-A	●A		●C									
	★ D6ZZ 12175-B		●B		●D								
	★ D8ZZ 12175-A					●E							
RETAINER	★ C8GH 12177-A	A	B	C	D	E							
Ring-3/16"	379039-S(XX-112-H)	A	B	C	D	E							
WEIGHT ASSY.	★ D6ZZ 12188-A	●2	●2	●2	●2	●2							
SPRING –Refer to Distributor Identification Charts for calibration codes	12192												
ROTOR ASSY.	D5FZ 12200-B *DR-221	A	B										
	E3DZ 12200-A *DR-314-B			C	D	E							
ADAPTER (BASE)	D7DZ 12A217-A *DJ-1			C	D	E							
CLAMP (DISTRIBUTOR TO CYLINDER HEAD)	C3AZ 12270-A *DZ-410	A	B	C	D	E							
Screw – M8-25mm x 13mm (Metric)	N602550-S2 (AB-62)	A	B	C	D	E							
DIAPHRAGM ASSY.–Refer to Distributor Identification Charts for Calibration codes	12370												
Screw	57016-S2 (B-39-G)	2	2	2	2	2							
GEAR (DRIVEN)	D1FZ 12390-A *DZ-439	A	B	C	D	E							
Pin 1/8" x 13/16"	67555-S (N-100-E)	A	B	C	D	E							

COPYRIGHT © 1986 — FORD MOTOR COMPANY — DEARBORN, MICHIGAN

DESCRIPTION/RESTRICTIONS	PART NUMBER	DIST. PARTS LISTS 8A THRU 8M											
		A	B	C	D	E	F	G	H	J	K	L	M
Refer to group 12127, SECTION 120 FOR PARTS LIST INSTRUCTIONS													
HOUSING (TERMINAL CAP)	12106												
	D84Y 12106-A *DH-377	A		C									
BUSHING (HOUSING UPPER)	12120												
	C5AZ 12120-A *MC-175	A											
	D4ZZ 12120-A *MC-221			C									
"O" RING (DISTRIBUTOR BASE)	B9TF 12143-A *DZ-3	A		C									
CLAMP (TERMINAL HOUSING HOLD DOWN)	D8DZ 12144-A *DZ-505	A		C									
SHAFT	12175												
	D84Y 12175-A *DF-415	A											
	D9AZ 12175-A *DF-417			C									
COLLAR (DISTRIBUTOR SHAFT)	C8VY 12195-A	A		C									
Pin-1/8" x 13/16"	67555-S(N-100-E)	A		C									
ROTOR ASSY.	12200												
	D84Y 12200-A *DR-319	A		C									
Screw	57014-S36(B-39-D)	2		2									
ADAPTER	12A217												
	D84Y 12A217-A *DJ-3	A		C									
CLAMP (DISTRIBUTOR TO CYL. HEAD)	D8DZ 12270-A *DZ-493	A		C									
GEAR (DRIVEN)	C9ZZ 12390-A *DZ-412	A		C									
Pin-1/8" x 13/16"	67555-S (N-100-E)	A		C									

COPYRIGHT © 1986 — FORD MOTOR COMPANY — DEARBORN, MICHIGAN

1973/79
LINCOLN-MERCURY CARS

YEAR	MODEL/RESTRICTIONS	PART NUMBER	DESCRIPTION		QTY.
13A004-5	PLATE (HEADLAMP MOUNTING)				
73/74	A(53B,F,65B,F,71B)	(RH) ★ D3MY 13A004-A	(LH) ★ D3MY 13A005-A	Not replaced	1
73	C	(RH) ★ D3GY 13A004-A	(LH) ★ D3GY 13A005-A	Not replaced	1
73	D	(RH) ★ D0VY 13A004-A	(LH) ★ D0VY 13A004-A	Not replaced	1
74/76	F	(RH) ★ D4WY 13A004-A	(LH) ★ D4WY 13A005-A	Not replaced	1
77/	F(65L)	(RH) ★ D7WY 13A004-A	(LH) D7WY 13A005-A		1
73/74	J	(RH) ★ D3RY 13A004-A	(LH) ★ D3RY 13A005-A	Not replaced	1
73/76	K	(RH) ★ D2LY 13A004-A	(LH) ★ D2LY 13A005-A	Not replaced	1
77	K	(RH) ★ D7LY 13A004-A	(LH) ★ D7LY 13A004-A	L-shaped-not replaced	1
77/	K	(RH) D7SZ 13A004-A	(LH) D7SZ 13A004-A	straight-inner	1
79	L	(RH) D9FZ 13A004-A	(LH) D9FZ 13A005-A		1
78/	P	(RH) D8KY 13A004-A	(LH) D8KY 13A005-A		1
73/76	Y	(RH) D3MY 13A004-A	(LH) D3MY 13A005-A		1
73/76	K	379114-S2	(MM-192-AD)-nut & retainer-5/16"-18 x 1"		AR
		384931-S36	(BB-867-K)-screw-hex. hd. (attach plate to fender)-5/16"-18 x 1 1/16"		AR
73/76	A,C,F,K,Y	57472-S40	(B-339-V)-screw-1/4"-20 x 49/64"		4
13007	BULB (HEADLAMP)				
	▲ U.S. only ● Canada only-unique Canadian Motorcraft Part number				
73/76	C,F,Y	▲ D2AZ 13007-A	Trade No. 4000-low beam		2
73/	D,K	● CLH 4000			2
73/78	A,J				2
73/76	C,D,F,Y	▲ D2AZ 13007-B	Trade No. 4001-high beam		2
73/	D,K	● CLH 4001			2
73/78	A,J				2
73/77	G,P	▲ D2ZZ 13007-A	Trade No. 6014		2
74/78	L	● CLH 6014			2
77/	F	▲ D70Z 13007-A	Trade No. 4652-low beam		2
78/	P	● CLH 4652			2
77/78	V				2
79	A,J				2
77/	F	▲ D70Z 13007-B	Trade No 4651-high beam		2
78/	P	● CLH 4651			2
77/78	V				2
79	A,J				2
78/	G	▲ D8BZ 13007-A	Trade No. 6052		2
79	L	● CLH 6052			2
79	V	▲ D94Y 13007-A ● CLH H4656	Trade No. H4656-low beam		2
79	V	▲ D94Y 13007-C ● CLH H4651	Trade No.H4651-high beam		2
13008	HEADLAMP KIT				

A (Mercury)

73/74	A(53B,F,65B,F,71B)	★ D3MY 13008-L	R.H.-kit-not replaced			1
	Consists of					
	2-D3AZ 13015-A	Ring	1-D4MB 13099-AB	Housing	6-D40Z 13B160-A	Bearing
	2-D3MY 13031-A	Spring	1-D3MY 13118-A	Ring-low beam	8-56928-S36	Screw
	4-D7SZ 13032-A	Screw & nut	1-D3MY 13118-B	Ring-high beam	6-385324-S	Screw
73/74	A(53B,F,65B,F,71B)	★ D3MY 13008-M	L.H.-kit-not replaced			1
	Consists of					
	2-D3AZ 13015-A	Ring	1-D4MB 13101-AB	Housing	6-D40Z 13B160-A	Bearing
	2-D3MY 13031-A	Spring	1-D3MY 13119-A	Ring-low beam	8-56928-S36	Screw
	4-D7SZ 13032-A	Screw & nut	1-D3MY 13119-B	Ring-high beam	6-385324-S	Screw
73/74	A(53H,X,57H,X,65H,X,71H)	★ D3MY 13008-G	R.H. kit-not replaced			1
	Consists of					
	2-D3AZ 13015-A	Ring adj.	1-D4MB 13099-BA	Housing	6-D40Z 13B160-A	Bearing
	2-D3MY 13031-A	Spring	1-D3MY 13118-A	Ring-low beam	14-385324-S	Screw
	4-D7SZ 13032-A	Screw & nut	1-D3MY 13119-B	Ring-high beam		

COPYRIGHT © 1986— FORD MOTOR COMPANY —DEARBORN, MICHIGAN

1973/79 LINCOLN-MERCURY CARS

YEAR	MODEL/RESTRICTIONS	PART NUMBER	DESCRIPTION	QTY.
13008	HEADLAMP KIT — Cont'd			

A (Mercury)

73/74	A(53H,X,57H,X,65H,X,71H)	★D3MY 13008-H	L.H. kit-not replaced	1

Consists of

2-D3AZ 13015-A	Ring adj.	1-D4MB 13101-BA	Housing	6-D40Z 13B160-A	Bearing
2-D3MY 13031-A	Spring	1-D3MY 13118-B	Ring-high beam	14-385324-S	Screw
4-D7SZ 13032-A	Screw & nut	1-D3MY 13119-A	Ring-low beam		

73/74	A(53K,57K,65K,71K)	★D3MY 13008-J	R.H. kit-not replaced	1

Consists of

2-D3AZ 13015-A	Ring adj.	1-D4MB 13099-CA	Housing	6-D40Z 13B160-A	Bearing
2-D3MY 13031-A	Spring	1-D3MY 13118-A	Ring-low beam	14-385324-S	Screw
4-D7SZ 13032-A	Screw & nut	1-D3MY 13119-B	Ring-high beam		

73/74	A(53K,57K,65K,71K)	★D3MY 13008-K	L.H. kit-not replaced	1

Consists of

2-D3AZ 13015-A	Ring adj.	1-D4MB 13101-CA	Housing	6-D40Z 13B160-A	Bearing
2-D3MY 13031-A	Spring	1-D3MY 13118-B	Ring-high beam	14-385324-S	Screw
4-D7SZ 13032-A	Screw & nut	1-D3MY 13119-A	Ring-low beam		

75/78	A	★D5MY 13008-C	R.H. kit-not replaced	1

Consists of

2-D3AZ 13015-A	Ring adj.	1-D3MY 13118-A	Ring-low beam	4-55998-S45	Screw
2-D3MY 13031-A	Spring	1-D3MY 13118-B	Ring-high beam	8-56928-S36M	Screw
4-D7SZ 13032-A	Screw & nut	6-E25Y 13B160-B	Bearing	2-383356-S	Nut
1-D5MY 13064-C	Door	2-55948-S45	Screw	6-385324-S	Screw

75/78	A	D5MY 13008-D	L.H. kit	1

Consists of

2-D3AZ 13015-A	Ring adj.	1-D3MY 13119-A	Ring-low beam	4-55998-S45	Screw
2-D3MY 13031-A	Spring	1-D3MY 13119-B	Ring-high beam	8-56928-S36M	Screw
4-D7SZ 13032-A	Screw & nut	6-E25Y 13B160-B	Bearing	2-383356-S	Nut
1-D5MY 13064-D	Door	2-55948-S45	Screw	6-385324-S	Screw

79	A	D9MY 13008-C	R.H.-kit	1

Consists of

1-D70Z 13007-A	Sealed beam-low	2-D4ZZ 13031-A	Spring	1-D70Z 13119-B	Ring-high beam
1-D70Z 13007-B	Sealed beam-high	4-D9ZZ 13032-A	Screw & nut	6-E25Y 13B160-B	Bearing
2-D70Z 13015-A	Ring-Ret.	1-D70Z 13118-A	Ring-low beam	8-385324-S	Screw

79	A	D9MY 13008-D	L.H.-kit	1

Consists of

1-D70Z 13007-A	Sealed beam-low	2-D4ZZ 13031-A	Spring	1-D70Z 13119-A	Ring-low beam
1-D70Z 13007-B	Sealed beam-high	4-D9ZZ 13032-A	Screw & nut	6-E25Y 13B160-B	Bearing
2-D70Z 13015-A	Ring-Ret.	1-D70Z 13118-B	Ring-high beam	8-385324-S	Screw

C (Montego)

73	C	(RH) ★D3GY 13008-A Not replaced	(LH) ★D3GY 13008-B Not replaced	Incl. (2) D3AZ 13015-A rings and attaching parts	1
74/76	C	D4GY 13008-A	R.H. kit		1

Consists of

2-D3AZ 13015-A	Ring adj.	1-D4GB 13099-AH	Housing	6-D4ZZ 13B160-A	Bearing
2-D4ZZ 13031-A	Spring	1-D3MY 13119-A	Ring-low beam	8-56928-S36M	Screw
4-D7SZ 13032-A	Screw & nut	1-D3MY 13119-B	Ring-high beam	6-385324-S	Screw

YEAR	MODEL/RESTRICTIONS	PART NUMBER	DESCRIPTION	QTY.
13008	HEADLAMP KIT — Cont'd			

C (Montego)

74/76	C		D4GY 13008-B	L.H. kit			1
	Consists of						
	2-D3AZ 13015-A	Ring adj.	1-D4GB 13101-AH	Housing	6-D4ZZ 13B160-A	Bearing	
	2-D4ZZ 13031-A	Spring	1-D3MY 13118-A	Ring-low beam	8-56928-S36M	Screw	
	4-D7SZ 13032-A	Screw & nut	1-D3MY 13118-B	Ring-high beam	6-385324-S	Screw	

D (Lincoln)

73	D		★ D1VY 13008-A	R.H. kit-not replaced			1
	Consists of						
	2-C7AZ 13015-B	Ring adj.	1-D2VB 13099-AA	Housing	1-C80Z 13119-B	Ring-high beam	
	2-C6AZ 13031-C	Spring	1-C80Z 13119-A	Ring-low beam			
73	D		★ D1VY 13008-B	L.H. kit-not replaced			1
	Consists of						
	2-C7AZ 13015-B	Ring adj.	1-D2VB 13101-AA	Housing	1-C80Z 13118-B	Ring-high beam	
	2-C6AZ 13031-C	Spring	1-C80Z 13118-A	Ring-low beam			
74/	D		D4VY 13008-C	R.H.-kit			1
	Consists of						
	2-D3AZ 13015-A	Ring	1-D3MY 13118-A	Ring-low beam	8-56929-S36M	Screw	
	2-D3MY 13031-A	Spring	1-D3MY 13118-B	Ring-high beam	6-385324-S	Screw	
	4-D7SZ 13032-A	Screw & nut	6-D4ZZ 13B160-A	Bearing			
74/	D		D4VY 13008-D	L.H.-kit			1
	Consists of						
	2-D3AZ 13015-A	Ring	1-D3MY 13119-A	Ring-low beam	8-56929-S36M	Screw	
	2-D3MY 13031-A	Spring	1-D3MY 13119-B	Ring-high beam	6-385324-S	Screw	
	4-D7SZ 13032-A	Screw & nut	6-D4ZZ 13B160-A	Bearing			

F (Cougar)

73	F		★ D3WY 13008-A	R.H. kit-not replaced			1
	Consists of						
	2-C7AZ 13015-B	Ring	1-C80Z 13119-A	Ring-low beam	2-56314-S	Screw	
	2-C6AZ 13031-C	Spring	1-C80Z 13119-B	Ring-high beam	4-385324-S	Screw	
	1-D3WB 13099-AE	Housing	4-45263-S	Nut & retainer			
73	F		★ D3WY 13008-B	L.H. kit-not replaced			1
	Consists of						
	2-C7AZ 13015-B	Ring adj.	1-C80Z 13118-A	Ring-low beam	1-56314-S	Screw	
	2-C6AZ 13031-C	Spring	1-C80Z 13118-B	Ring-high beam	4-385324-S	Screw	
	1-D3WB 13101-AE	Housing	4-45263-S	Nut & retainer			
74/76	F		(RH) ★ D4WY 13008-A Not replaced	(LH) ★ D4WY 13008-B Not replaced	Incl. (2) D3AZ 13015-A rings and attaching parts		1
77/	F		D7WY 13008-E	R.H.- kit			1
	Consists of						
	1-D70Z 13007-A	Sealed beam-low	4-D70Z 13032-A	Screw & nut	6-E25Y 13B160-B	Bearing	
	1-D70Z 13007-B	Sealed beam-high	1-D70Z 13118-A	Ring-low beam	8-56929-S36M	Screw	
	2-D70Z 13015-A	Ring	1-D70Z 13119-B	Ring-high beam	8-385324-S	Screw	
	2-D4ZZ 13031-A	Spring					

COPYRIGHT © 1986— FORD MOTOR COMPANY —DEARBORN, MICHIGAN

YEAR	MODEL/RESTRICTIONS	PART NUMBER	DESCRIPTION	QTY.
13008	HEADLAMP KIT — Cont'd			

F (Cougar)

77/	F	D7WY 13008-F	L.H.-kit	1

Consists of

1-D70Z 13007-A	Sealed beam-low	4-D70Z 13032-A	Screw & nut	6-E25Y 13B160-B	Bearing
1-D70Z 13007-B	Sealed beam-high	1-D70Z 13118-B	Ring-high beam	8-56929-S36M	Screw
2-D70Z 13015-A	Ring	1-D70Z 13119-A	Ring-low beam	8-385324-S	Screw
2-D4ZZ 13031-A	Spring				

G (Monarch)

75/77	G	D5DZ 13008-G	R.H.-kit	1

Consists of

1-D2ZZ 13007-A	Sealed beam	2-D0DZ 13032-A	Screw & nut	4-42380-S2	Screw
1-D3TZ 13015-A	Ring-Ret.	1-D4ZZ 13118-A	Ring-adj.	3-385324-S	Screw
1-D4ZZ 13031-A	Spring	3-E25Y 13B160-B	Bearing		

75/77	G	D5DZ 13008-H	L.H.-kit	

Consists of

1-D2ZZ 13007-A	Sealed beam	2-D0DZ 13032-A	Screw & nut	4-42380-S2	Screw
1-D3TZ 13015-A	Ring-Ret.	1-D4ZZ 13119-A	Ring-adj.	3-385324-S	Screw
1-D4ZZ 13031-B	Spring	3-E25Y 13B160-B	Bearing		

78/	G	D8DZ 13008-E	R.H.-kit	1

Consists of

1-D8BZ 13007-A	Sealed beam	2-D70Z 13032-A	Screw & nut	4-56929-S36M	Screw
1-D9UZ 13015-A	Ring-Ret.	1-D8BZ 13118-A	Ring-adj.	4-385324-S	Screw
1-D4ZZ 13031-A	Spring	3-E25Y 13B160-B	Bearing		

78/	G	D9AZ 13008-H	L.H.-kit	

Consists of

1-D8BZ 13007-A	Sealed beam	2-D70Z 13032-A	Screw & nut	4-56929-S36M	Screw
1-D9UZ 13015-A	Ring-Ret.	1-D8BZ 13119-A	Ring-adj.	4-385324-S	Screw
1-D4ZZ 13031-A	Spring	3-E25Y 13B160-B	Bearing	1-IS 5378	

J (Capri)

73/74	J	(RH) ★ D3RY 13008-A Not replaced	(LH) ★ D3RY 13008-B Not replaced	Incl. (2) 13015 rings and 13A004-5 plate	1
76/78	J(exc. 64S)	(RH) D5RY 13008-B	(LH) D5RY 13008-A	Incl. (2) 13015 rings	1
76/78	J(64S)	(RH) ★ D6RY 13008-A	(LH) ★ D6RY 13008-B	Incl. (2) 13015	1
79	J	D9AZ 13008-E	R.H.-kit		1

Consists of

1-D70Z 13007-A	Sealed beam-low	2-D4ZZ 13031-A	Spring	1-D70Z 13119-B	Ring-high beam
1-D70Z 13007-B	Sealed beam-high	4-D8BZ 13032-A	Screw & nut	6-D40Z 13B160-B	Bearing
2-D70Z 13015-A	Ring-Ret.	1-D70Z 13118-A	Ring-low beam	8-385324-S	Screw

79	J	D9AZ 13008-F	L.H.-kit	1

Consists of

1-D70Z 13007-A	Sealed beam-low	2-D4ZZ 13031-A	Spring	1-D70Z 13119-A	Ring-low beam
1-D70Z 13007-B	Sealed beam-high	4-D8BZ 13032-A	Screw & nut	6-D40Z 13B160-B	Bearing
2-D70Z 13015-A	Ring-Ret.	1-D70Z 13118-B	Ring-high beam	8-365324-S	Screw

K (Mark IV, Mark V)

73/76	K	★ D5LY 13008-A	R.H. kit-not replaced	1

Consists of

2-C7AZ 13015-B	Ring	1-D5LB 13099-AB	Housing	1-C8AZ 13118-B	Ring-high beam
2-C6AZ 13031-C	Spring	1-C8AZ 13118-A	Ring-low beam	4-385324-S	Screw

YEAR	MODEL/RESTRICTIONS	PART NUMBER	DESCRIPTION	QTY.
13008	HEADLAMP KIT — Cont'd			

K (Mark IV, Mark V)

73/76	K	★D5LY 13008-B	L.H. kit-not replaced			1
	Consists of					
	2-C7AZ 13015-B	Ring	1-D5LB 13101-AB	Housing	1-C8AZ 13119-B	Ring-high beam
	2-C6AZ 13031-C	Spring	1-C8AZ 13119-A	Ring-low beam	4-385324-S	Screw
77/	K	D7LY 13008-A	R.H.-kit			1
	Consists of					
	2-D3AZ 13015-A	Ring-Ret.	1-D3MY 13118-A	Ring-low beam	8-56929-S36M	Screw
	2-D4ZZ 13031-A	Spring	1-D3MY 13118-B	Ring-high beam	6-385324-S	Screw
	4-D7SZ 13032-A	Screw & Nut	6-E25Y 13B160-B	Bearing		
77/	K	D7LY 13008-B	L.H.-kit			1
	Consists of					
	2-D3AZ 13015-A	Ring Ret.	1-D3MY 13119-A	Ring-low beam	8-56929-S36M	Screw
	2-D4ZZ 13031-A	Spring	1-D3MY 13119-B	Ring-high beam	6-385324-S	Screw
	4-D7SZ 13032-A	Screw & Nut	6-E25Y 13B160-B	Bearing		

L (Bobcat)

79	L	D9FZ 13008-C	R.H.-kit			1
	Consists of					
	1-D8BZ 13007-A	Sealed beam	1-D9EB 13099-AF	Housing	4-385324-S	Screw
	1-D9UZ 13015-A	Ring Ret.	1-D8BZ 13118-A	Ring-Adj.	5-45263-S101	Nut & Retainer
	1-D8BZ 13031-A	Spring	3-E25Y 13B160-B	Bearing	5-57032-S36	Screw & Washer
79	L	D9FZ 13008-D	L.H.-kit			1
	Consists of					
	1-D8BZ 13007-A	Sealed beam	1-D9EB 13101-AF	Housing	4-385324-S	Screw
	1-D9UZ 13015-A	Ring Ret.	1-D8BZ 13119-A	Ring-Adj.	5-45263-S101	Nut & Retainer
	1-D8BZ 13031-A	Spring	3-E25Y 13B160-B	Bearing	5-57032-S36	Screw & Washer

P (Comet)

75/77	P	D5DZ 13008-J	R.H.-kit			1
	Consists of					
	1-D2ZZ 13007-A	Sealed beam	2-D1TZ 13032-B	Screw & nut	3-385324-S	Screw
	1-D3TZ 13015-A	Ring-Ret.	1-D4ZZ 13118-A	Ring-adj.	2-386749-S2	Screw
	1-D5UZ 13031-A	Spring	3-D5UZ 13B160-A	Bearing		
75/77	P	D5DZ 13008-K	L.H.-kit			1
	Consists of					
	1-D2ZZ 13007-A	Sealed beam	2-D1TZ 13032-B	Screw & nut	3-385324-S	Screw
	1-D3TZ 13015-A	Ring-Ret.	1-D4ZZ 13119-A	Ring-adj.	2-386749-S2	Screw
	1-D5UZ 13031-A	Spring	3-D5UZ 13B160-A	Bearing		

P (Zephyr)

78/	P	D8KY 13008-E	R.H.-kit			1
	Consists of					
	1-D70Z 13007-A	Sealed beam-low	1-E2BB 13099-AA	Housing	2-45263-S101	Nut
	1-D70Z 13007-B	Sealed beam-high	1-D70Z 13118-A	Ring-low beam	2-57032-S36	Screw & washer
	2-D70Z 13015-A	Ring-Ret.	1-D70Z 13119-B	Ring-high beam	8-385324-S	Screw
	2-D8BZ 13031-A	Spring	6-E25Y 13B160-B	Bearing		

COPYRIGHT © 1986— FORD MOTOR COMPANY —DEARBORN, MICHIGAN

1973/79 LINCOLN-MERCURY CARS

YEAR	MODEL/RESTRICTIONS	PART NUMBER	DESCRIPTION	QTY.
13008	HEADLAMP KIT — Cont'd			

P (Zephyr)

78/	P	D8KY 13008-F	L.H.-kit	

Consists of

1-D70Z 13007-A	Sealed beam-low	1-E2BB 13101-AA	Housing	2-45263-S101	Nut
1-D70Z 13007-B	Sealed beam-high	1-D70Z 13118-B	Ring-high beam	2-57032-S36	Screw & washer
2-D70Z 13015-A	Ring-Ret.	1-D70Z 13119-B	Ring-low beam	8-385324-S	Screw
2-D8BZ 13031-A	Spring	6-E25Y 13B160-B	Bearing		

V (Versailles)

77/78	V	D7WY 13008-E	R.H.-kit	1

Consists of

1-D70Z 13007-A	Sealed beam-low	2-D4ZZ 13031-A	Spring	1-D70Z 13119-B	Ring-high beam
1-D70Z 13007-B	Sealed beam-high	4-D70Z 13032-A	Screw & Nut	6-D40Z 13B160-B	Bearing
1-D70Z 13015-A	Ring	1-D70Z 13118-A	Ring-low beam	8-56929-S36M	Screw
				8-385324-S	Screw

77/78	V	D7WY 13008-F	L.H.-kit	1

Consists of

1-D70Z 13007-A	Sealed beam-low	2-D4ZZ 13031-A	Spring	1-D70Z 13119-A	Ring-low beam
1-D70Z 13007-B	Sealed beam-high	4-D70Z 13032-A	Screw & Nut	6-D40Z 13B160-B	Bearing
2-D70Z 13015-A	Ring	1-D70Z 13118-B	Ring-high beam	8-56929-S36M	Screw
				8-385324-S	Screw

79	V	D94Y 13008-A	R.H.-kit	1

Consists of

1-D94Y 13007-A	Sealed beam-low	4-D70Z 13032-A	Screw & nut	6-E25Y 13B160-B	Bearing
1-D94Y 13007-C	Sealed beam-high	1-D70Z 13118-A	Ring-low beam	8-56929-S36M	Screw
2-D70Z 13015-A	Ring-Ret.	1-D70Z 13119-B	Ring-high beam	8-385324-S	Screw
2-D4ZZ 13031-A	Spring				

79	V	D94Y 13008-B	L.H.-kit	1

Consists of

1-D94Y 13007-A	Sealed beam-low	4-D70Z 13032-A	Screw & nut	6-E25Y 13B160-B	Bearing
1-D94Y 13007-C	Sealed beam-high	1-D70Z 13118-B	Ring-high beam	8-56929-S36M	Screw
2-D70Z 13015-A	Ring-Ret.	1-D70Z 13119-A	Ring-low beam	8-385324-S	Screw
2-D4ZZ 13031-A	Spring				

Y (Meteor)

73/74	Y	★D3MY 13008-L	R.H.-kit-not replaced	1

Consists of

2-D3AZ 13015-A	Ring	1-D4MB 13099-AB	Housing	6-D40Z 13B160-A	Bearing
2-D3MY 13031-A	Spring	1-D3MY 13118-A	Ring-low beam	8-56928-S36	Screw
4-D7SZ 13032-A	Screw-nut	1-D3MY 13118-B	Ring-high beam	6-385324-S	Screw

73/74	Y	★D3MY 13008-M	L.H.-kit-not replaced	1

Consists of

2-D3AZ 13015-A	Ring	1-D4MB 13101-AB	Housing	6-D40Z 13B160-A	Bearing
2-D3MY 13031-A	Spring	1-D3MY 13119-A	Ring-low beam	8-56928-S36	Screw
4-D7SZ 13032-A	Screw & nut	1-D3MY 13119-B	Ring-high beam	6-385324-S	Screw

75/76	Y	★D5MY 13008-A	R.H. kit-not replaced	1

Consists of

2-D3AZ 13015-A	Ring adj.	1-D5MB 13099-AC	Housing	5-55975-S46	Screw
2-D3MY 13031-A	Spring	1-D3MY 13118-A	Ring-low beam	8-56928-S36M	Screw
4-D7SZ 13032-A	Screw & nut	1-D3MY 13118-B	Ring-high beam	5-383356-S	Nut
1-D5MY 13064-A	Door	6-D40Z 13B160-A	Bearing	6-385324-S	Screw

YEAR	MODEL/RESTRICTIONS	PART NUMBER	DESCRIPTION	QTY.
13008	HEADLAMP KIT — Cont'd			
	Y (Meteor)			
75/76	Y	★ D5MY 13008-B	L.H. kit-not replaced	1

Consists of

2-D3AZ 13015-A	Ring	1-D5MB 13101-AC	Housing	5-55975-S46	Screw
2-D3MY 13031-A	Spring	1-D3MY 13119-A	Ring-low beam	8-56928-S36M	Screw
4-D7SZ 13032-A	Screw adj.	1-D3MY 13119-B	Ring-high beam	5-383356-S	Nut
1-D5MY 13064-B	Door	6-D40Z 13B160-A	Bearing	6-385324-S	Screw

73/78	A,Y	384338-S	(HH-8-L)-pin-1/4" x 1/2"	AR
73/78	A,Y	385324-S	(UU-81-WN)-screw (attach headlamp assy. to fender)-No. 8-32 x 3/8"	AR
73/74	A,C,F,P,Y	383356-S	(MM-216-PA)-nut (attach headlamp to fender)-No. 8 or 10	AR
73/76	K	384931-S36	(BB-867-K)-screw-hex. hd. (attach headlamp to fender)-5/16"-18 x 1 1/16"	AR
13B013-4	SHAFT ASSY. (HEADLAMP COVER)			
73	D	★ D1VY 13B013-A	Center-not replaced	1
73	D	★ D1VY 13B014-B	R.H. and L.H.-not replaced	2
73/76	K	★ D2LY 13B013-B	Center-not replaced	1
73/76	K	★ D2LY 13B014-A	R.H.-not replaced	1
		★ D2LY 13B014-B	L.H.-not replaced	1
73	D	374845-S7	(NN-12-A)-pin (attach shaft to 8183)	1
73/76	K			1
13015	RING (HEADLAMP BULB RETAINING)			
73/76	C,Y	D3AZ 13015-A		4
73/78	A			4
74/76	D,F			4
77/	D,K			4
73	D,F	C7AZ 13015-B		4
73/76	K			4
73/74	J	D3RY 13015-A	Metal	4
76/78	J(exc. 64S)		Outer	4
76/78	J(64S)	D6RY 13015-A	Outer-metal	4
76/78	J	D5RY 13015-A	Inner-rubber	4
73/77	P	D3TZ 13015-A		2
74/77	G			2
74/78	L			2
77/	F,V	D70Z 13015-A		4
78/	P			4
79	A,J			4
78/	G	D9UZ 13015-A		2
79	L			2
73/	A,C,D,F,G,K,L,P,Y	385324-S	(UU-81-WN)-screw (attach ring to headlamp body)-No. 8-32 x 3/8"	AR
13C016	BRACKET (LIGHT SENSOR AMPLIFIER MOUNTING)			
74/77	D - - w/autolamp system and auto. headlamp dimmer	★ D5VY 13C016-A	Not replaced	1
78/	D - - w/auto lamp system and auto head lamp dimmer	D8VY 13C016-A		1
74/75	K - - w/autolamp system and auto. headlamp dimmer	★ D4LY 13C016-A	Not replaced	1
76	K - - w/autolamp system and auto. headlamp dimmer	★ D5SZ 13C016-A	Not replaced	1
77/	K - - w/auto lamp system and auto. headlamp dimmer	★ D7LY 13C016-A	Not replaced	1

COPYRIGHT © 1986 — FORD MOTOR COMPANY — DEARBORN, MICHIGAN

1973/79 LINCOLN-MERCURY CARS

YEAR	MODEL/RESTRICTIONS	PART NUMBER	DESCRIPTION	QTY.
13C017	SENSOR ASSY. (LIGHT PHOTOCELL)			
78/	D,K	D8LY 13C017-A	To be used with D8LY 13A018-A (D5SB 14A597-A3B) Amplifier only	1
13A018	AMPLIFIER ASSY.(LIGHT SENSOR)			
74/75	D,K - - w/autolamp system	★ D4VY 13A018-A	#D4SB 14A597-AA,AB,A1B or A2B-incl. photocell	1
76/	D,K - - w/autolamp system	D8LY 13A018-A	#D5SB 14A597 A1B,A3B-incl. photocell	1
13A019	SENSOR (HEADLAMP DIMMER)			
73/	D,K - - w/auto. headlamp dimmer	D7LY 13A019-B	Must also use D7SZ 13A106-A jumper wire	1
13B019	PIVOT (HEADLAMP COVER HINGE)			
73	D	★ D1MY 13B019-A	Not replaced	2
13C019	TRANSFER (HEADLAMP HOUSING STRIPE)			
73/74	A(53F,65F)	★ D3MY 13C019-B	"Brown"-Not replaced	AR
73	Y(53B,65B)			AR
73/74	A(53F,65F)	★ D3MY 13C019-A	"Gold"-Not replaced	AR
73	Y(53B,65B)			AR
74	A(53F,65F)	★ D4MY 13C019-A	"White"-Not replaced	AR
75	A(53H,65H)			2
75	A(53H,65H)	★ D5MY 13C019-A	Black-Not replaced	2
		★ D5MY 13C019-J	Blue-Not replaced	2
		★ D5MY 13C019-G	Bright red-Not replaced	2
		★ D5MY 13C019-E	Brown-Not replaced	2
		★ D5MY 13C019-D	Gold-Not replaced	2
		★ D5MY 13C019-B	Red-Not replaced	2
		★ D5MY 13C019-F	Silver-Not replaced	2
		★ D5MY 13C019-H	Tan-Not replaced	2
		★ D5MY 13C019-C	Yellow-Not replaced	2
13021	BRACKET ASSY. (HEADLAMP ADJUSTING NUT)			
73	C	D3AZ 13021-A		8
74/76	F			8
13A021	BRACKET (LIGHT SENSOR MOUNTING)			
74/	K - - w/autolamp system and auto. headlamp dimmer	★ D4LY 13A021-A	Not replaced	1
78/	D - - w/auto lamp system and auto head lamp dimmer	D8VY 13A021-A		1
13A021	BRACKET (HEADLAMP DIMMER SENSOR MOUNTING)			
76	D,K - - w/Autolamp system	★ D6LY 13A021-A	Not replaced	1
73/	D - - w/auto. headlamp dimmer	D2VY 13A021-A		1
72/76	K - - w/auto headlamp dimmer			1
77/	K - - w/auto headlamp dimmer	★ D7LY 13A021-A	Not replaced	1
13C021	HOUSING (HEADLAMP COVER SOLENOID)			
74/	D - - w/autolamp system and auto headlamp dimmer	D4VY 13C021-A		1
13C022	BRACKET ASSY. (HEADLAMP COVER SOLENOID)			
74/	K - - w/autolamp system and auto. headlamp dimmer	D5LY 13C022-A		1
13C023	ADJUSTER (HEADLAMP COVER)			
74/	D	D4VY 13C023-A		AR
		★385863-S100	Bolt (attach adjuster to headlamp cover)-1/4"-20 x 1/4"	2
13A024	SWITCH (HEADLAMP DIMMER)			
73/78	A,C,	C0TZ 13A024-A	*SW-263-foot operated	1
73/	F,G,L			1
73/77	P			1
73/	D,K - - w/o auto. headlamp dimmer			1
77/	V			1
73/	D,K - - w/auto. headlamp dimmer	C5MY 13A024-A	*SW-432	1
73/	A,C,D,F,K,L,P,Y	42141-S8	(U-250)-screw-hex. washer head-No. 10-16 x 3/4"	2
73/78	A,Y	34653-S36M	(M-106-X)-nut and washer-No. 8-32	AR
73/78	A,Y	380663-S2	(RR-40-A)-retainer-No. 8-32 x 5/8"	2

YEAR	MODEL/RESTRICTIONS	PART NUMBER	DESCRIPTION	QTY.
13A025	RELAY (AUTOMATIC HEADLAMP DIMMER)			
73/	D,K - - w/auto. headlamp dimmer	C8VY 13A025-A		1
13B029	BAR (HEADLAMP COVER)			
73	A(53H,K,X,57H,K,X,65H,K,X,71H,K)	★ D3MY 13B029-A	R.H. and L.H.-not replaced	2
74	A(53H,K,X,57H,K,X,65H,K,X,71H,K)	★ D4MY 13B029-A	R.H. and L.H.-not replaced	2
13031	SPRING (HEADLAMP RING)			
73/78	A	★ D3MY 13031-A	Not replaced	4
74/	D			4
73/76	Y			4
73	C	★ D2AZ 13031-A	Not replaced	4
74/76	F			2
74/76	C	D4ZZ 13031-A		4
75/77	G			4
78/	G			2
77/	F,K,V			4
79	A,J			4
73	D,F	C6AZ 13031-C		4
73/76	K			4
73	F	D0ZZ 13031-A		AR
73/74	P	C20Z 13031-A		2
74	L			2
75/78	L	D5UZ 13031-A		2
75/77	P			2
78/	P	D8BZ 13031-A		4
79	L			2
13032	SCREW (HEADLAMP ADJUSTING)			
73/78	A	D10Z 13032-A	Screw only	8
73	F			8
77/	D,K			8
75/77	G			8
73/76	Y			8
73	C	D3ZZ 13032-A		8
74/76	F			AR
73/78	A	D7SZ 13032-A	Screw and nut assy.	8
74/76	C,D			8
73/76	Y			8
77/78	L "From 3/1/77 to 5/15/78"			4
77/	D,K			8
78	L "From 5/15/78"	D7AZ 13032-A	Screw and nut assy.	4
73	D	★ D1VY 13032-A	Screw and nut assy.-Not replaced	8
73	F	D0DZ 13032-A	Screw and nut assy.	8
73/74	L,P			4
75/77	G			4
75/77	P	D1TZ 13032-B		4
75/77	L "Before 3/1/77"			4
74	J	★ D2RY 13032-A	Not replaced	2
73/76	K	★ D00Z 13032-A	Screw and nut assy.-not replaced	8
77/	F,V	D70Z 13032-A	Screw and steel nut assy.	8
78/	G			4
78	P "Before 12/15/77"			8
78/	P "From 12/15/77"	D8BZ 13032-A	Screw and nylon push-in nut assy.	8
79	J,L			AR
79	A	D9ZZ 13032-A	Screw & nut assy.	8
73/	A,C,D,F,G,K,L,P,V	385324-S	(UU-81-WN)-screw (attach screw and nut to headlamp body)-No. 8-32 x 3/8"	AR
13B033	SUPPORT (HEADLAMP COVER MOTOR)			
73/76	K	★ D3LY 13B033-A	Not replaced	1
73/76	K	384931-S36	(BB-867-K)-screw-hex. hd. (attach support to hood lock support)-5/16"-18 x 1 1/16"	2

COPYRIGHT © 1986— FORD MOTOR COMPANY —DEARBORN, MICHIGAN

1973/79 LINCOLN-MERCURY CARS

YEAR	MODEL/RESTRICTIONS	PART NUMBER	DESCRIPTION		QTY.
13B041	SHIELD ASSY. (HEADLAMP OPENING LOWER)				
73/76	K	(RH) ★ D3LY 13B041-A	(LH) ★ D3LY 13B041-B	Not replaced	1
13044	SEAL (HEADLAMP HOUSING)				
73/78	J	★ D3RY 13044-A	Not replaced		4
13C046	RETAINER (EXTERIOR LAMP WARNING BUZZER)				
74	A,C,F,Y	D4AZ 13C046-A	Used with D4AZ 13150-B buzzer		1
13C050	REINFORCEMENT ASSY. (HEADLAMP COVER HINGE)				
74	D	(RH) ★ D4VY 13C050-A Not replaced	(LH) ★ D4VY 13C050-B Not replaced	Outer-paint to match	1
		351362-S2	(XX-118)-washer-flat-5/16"		AR
		★359289-S	Bolt-1/4"-20 x 3/4"		AR
13064	DOOR (HEADLAMP)				
73	A(53B,F,65B,F,71B)	(RH) ★ D3MY 13064-A	(LH) ★ D3MY 13064-B	Not replaced	1
74	A(53B,F,65B,F,71B)	(RH) ★ D4MY 13064-A	(LH) ★ D4MY 13064-B	Not replaced	1
75/78	A	(RH) D5MY 13064-C	(LH) D5MY 13064-D		1
79	A	(RH) D9MY 13064-A	(LH) D9MY 13064-B		1
73	C	(RH) ★ D3GY 13064-A	(LH) ★ D3GY 13064-B	Not replaced	1
74/76	C	(RH) ★ D4GY 13064-A	(LH) ★ D4GY 13064-B	Not replaced	1
73	F	(RH) ★ D3WY 13064-A	(LH) ★ D3WY 13064-B	Not replaced	1
74/76	F	(RH) D4WY 13064-A	(LH) D4WY 13064-B		1
77/	F	(RH) D7WY 13064-A	(LH) D7WY 13064-B		1
75/76	G	(RH) D54Y 13064-A	(LH) D54Y 13064-B	Incl. mldg.-paint to match	1
77	G	(RH) D7DZ 13064-A	(LH) D7DZ 13064-B		1
78/	G	(RH) D8DZ 13064-A	(LH) D8DZ 13064-B		1
73/74	J "Before 10/1/73"	(RH) ★ D3RY 13064-A	(LH) ★ D3RY 13064-B	Not replaced	1
74	J "From 10/1/73"	(RH) ★ D4RY 13064-A	(LH) ★ D4RY 13064-B	Not replaced	1
76/78	J	(RH) D5RY 13064-A	(LH) D5RY 13064-B		1
79	J	(RH) D9CY 13064-A	(LH) D9CY 13064-B	Chrome	1
79	J	(RH) D9CY 13064-C	(LH) D9CY 13064-D	Black	1
74	L	(RH) D4FZ 13064-A	(LH) D4FZ 13064-B	Inner	1
		(RH) D4FZ 13064-C	(LH) D4FZ 13064-D	Outer	1
75/78	L	(RH) D5YY 13064-A	(LH) D5YY 13064-B		1
79	L	(RH) D9FZ 13064-E	(LH) D9FZ 13064-F	Chrome	1
79	L	(RH) D9FZ 13064-A	(LH) D9FZ 13064-B	Paint to match	1
73/74	P	(RH) D0DZ 13064-A	(LH) D0DZ 13064-B	Bright finish	1
		(RH) ★ D0DZ 13064-C	(LH) ★ D0DZ 13064-D	Black finish	1
75	P	(RH) D5DZ 13064-C	(LH) D5DZ 13064-D	Argent	1
76/77	P	(RH) D5DZ 13064-E	(LH) D5DZ 13064-F	Black/Chrome	1
78/	P	(RH) D8KY 13064-A	(LH) D8KY 13064-B		1
77/	V	(RH) D74Y 13064-A	(LH) D74Y 13064-B		1
73	Y	(RH) D3MY 13064-A	(LH) D3MY 13064-B		1
74	Y	(RH) D4MY 13064-A	(LH) D4MY 13064-B		1
75/76	Y	(RH) ★ D5MY 13064-A	(LH) D5MY 13064-B		1
74	C	376290-S100	(UU-56-D)-screw (attach door to radiator grille)-No. 8-18 x 1 1/2"		AR
73/	A,C,F,P,Y	383356-S	(MM-216-PA)-nut (attach door to headlamp body)-No. 8		AR
74	K				AR
73	F	★376382-S	Screw (attach door to headlamp body)-No.10-16 x 3/4"		AR
75/	G	386450-S100	(GG-397-E)-clip-att. 13064 to 8190		4
73/78	J	E620012-S72	(AM-3)-nut (attach bezel to fender)-hex.-M6-(Metric)		AR
		E630025-S71	(AX-10-A)-washer (Metric)		AR
73	J	45130-S	(M-123)-nut-spring		4
76/78	J	E804121-S100	(AB-3-P)-screw (M5 x 15mm)-att. 13064 to grille		AR
76/78	J	E826110-S	(AM-15-B)-nut-special-att. 13064 to grille		AR

YEAR	MODEL/RESTRICTIONS	PART NUMBER	DESCRIPTION	QTY.
13B064	VALVE ASSY. (VACUUM CHECK)-also refer to group 9C793			
73/76	A,D,K,Y	★ C8SZ 13B064-A	Used as speed control check valve	1
74/76	C,F	r/b D80Z 9C793-A	Used as speed control check valve	1
76/78	G "Before 5/25/78"	(12/78)	Used as speed control check valve	1
76/78	A		Used as headlamp cover check valve	1
77/78	A,D,F,K,V "Before 5/25/78"		Used as speed control check valve	1
78	A,D,F,G,K,V "From 5/25/78"	D80Z 9C793-A	Used for speed control check valve	1
76/	D,K	E0LY 13B064-A	*YG-35-A-used as headlamp cover check valve	1
13B065-6	SUPPORT (HEADLAMP HOUSING)			
73/74	A(53H,K,X,57H,K,X,65H,K,X,71H,K),Y	(RH) ★ D3MY 13B065-A	(LH) ★ D3MY 13B065-B Not replaced	1
75/78	A	(RH) D7AZ 13B065-A	(LH) D7AZ 13B066-A	1
73	F	(RH) ★ D1WY 13B065-A	(LH) ★ D1WY 13B065-A Not replaced	1
74/76	F	(RH) D4WY 13B065-A	(LH) D4WY 13B065-B Inner	1
13067	CLIP (HEADLAMP BEZEL RETAINING)-Also refer to group 8408			
73/74	J	★ D3RY 13067-A	Not replaced	4
13B067	BUMPER (HEADLAMP COVER HANGER)			
75/76	D	★ D5VY 13B067-A	Not replaced	4
73/76	K	★ C8LY 13B067-A	Not replaced	4
13076	WIRING (HEADLAMP LEADS)			
74/76	D "Before 6/1/76"	★ D4VY 13076-A	L.H. only-not replaced	1
76/	D "From 6/1/76"	D7VY 13076-A	L.H.-side - #D7VB 13076-AA	1
73	F	★ D1WY 13076-A	R.H. and L.H.-not replaced	2
73/74	J	D0RY 13076-C	R.H. and L.H.	2
76/78	J	★ D5RY 13076-A	R.H. and L.H.-not replaced	2
13C076	PLATE (HEADLAMP COVER MOULDING BACK)			
75/76	A	★ D6MY 13C076-A Not replaced	To be used with D7MY 13B088-A moulding	2
13C077	SEAL (HEADLAMP DIMMER SENSOR)			
73/	D,K - - w/auto. headlamp dimmer	D7LY 13C077-A		1
13B088	MOULDING (HEADLAMP COVER)			
75/78	A	(RH) D7MY 13B088-A	(LH) D7MY 13B088-A	1
73	D	(RH) ★ D1VY 13B088-A	(LH) ★ D1VY 13B088-A Not replaced	1
74	D	(RH) ★ D4VY 13B088-A	(LH) ★ D4VY 13B088-A Not replaced	1
75/	D	(RH) D5VY 13B088-A	(LH) D5VY 13B088-A	1
13A091-2	BRACKET (HEADLAMP HOUSING MOUNTING)			
73	D	(RH) ★ D0VY 13A091-A	(LH) ★ D0VY 13A092-A Outer-not replaced	1
73/76	K	(RH) ★ D2LY 13A091-A	(LH) ★ D2LY 13A091-A Outer-not replaced	1
73/76	K	384931-S36	(BB-867-K)-screw-hex. head (attach bracket to fender)-5/16"-18 x 1 1/18"	2
13099-101	Refer to group 13008			
13B104	BUSHING (HEADLAMP COVER SHAFT)			
73	D	★ C9MY 13B104-A		2
73/76	K	Not replaced		2
13A106	WIRE (HEADLAMP DIMMER SENSOR TO AMPLIFIER)			
73	D - - w/auto. headlamp dimmer	★ D0VY 13A106-A	#D0VB 13A090-C,AA -Not replaced	1
74	D - - w/autolamp system and auto. headlamp dimmer	★ D4VY 13A106-A	#D4VB 13A090-AB -Not replaced	1
75/77	D - - w/autolamp system and auto. headlamp dimmer	★ D5VY 13A106-A	#D5VB 13A090-AA-not replaced	1
78/	D - - w/auto lamp system and auto. head lamp dimmer	★ D8VY 13A106-A Not replaced	#D8VB 13A090-AA,AB-to dimmer switch	1
74/75	D - - w/autolamp system and auto. headlamp dimmer	★ D4VY 13A106-B	#D4VB 11A677-AB-to light sensor-Not replaced	1
76/77	D - - w/autolamp system and auto. headlamp dimmer	★ D5VY 13A106-B	#D5VB 11A677-AB-to light sensor-not replaced	1
78/	D - - w/auto lamp system and auto. head lamp dimmer	★ D8VY 13A106-B Not replaced	#D8VB 11A677-AA-to amplifier	1
73	K - - w/auto. headlamp dimmer	★ D3LY 13A106-A	#D3LB 13A090-AA -Not replaced	1
74/	K - - w/autolamp system and auto. headlamp dimmer	D4LY 13A106-A	#D4LB 13A090-AA,AB,D6LB 13A090-AA	1
73/76	D,K - - w/auto headlamp dimmer	D7SZ 13A106-A	Jumper wire-must be used when installing D7LY 13A019-B Sensor	1

COPYRIGHT © 1986— FORD MOTOR COMPANY —DEARBORN, MICHIGAN

1973/79 LINCOLN-MERCURY CARS

YEAR	MODEL/RESTRICTIONS	PART NUMBER	DESCRIPTION		QTY.
13A106	WIRE ASSY. (TEMPERATURE SENSOR TO MAIN WIRING)				
76/78	J	★ D5RY 13A106-A	75" long-not replaced		1
13A109	SPACER (HEADLAMP HOUSING)				
73/76	K	★ D2LY 13A109-A	Use to adjust headlamp cover		AR
74	D	Not replaced	Use to adjust headlamp cover		AR
13B109	RETAINER (HEADLAMP COVER GUIDE ROD)				
73	D	★ D0VY 13B109-B	Not replaced		2
13A112	MOULDING (HEADLAMP DOOR)				
73	F	(RH) ★ D1WY 13A112-A	(LH) ★ D1WY 13A112-B	Inner-not replaced	1
73	F	383356-S	(MM-216-PA)-nut-1/8" (attach moulding to 13B116)		AR
13A114	BRACKET (HEADLAMP HOUSING MOUNTING)				
73/74	A(53B,F,65B,F,71B)	★ D3MY 13A114-A	Not replaced		2
73/76	Y				2
78/	K	★ D8LY 13A114-A	Used on L.H. side only-not replaced		1
13B116	EXTENSION (HEADLAMP HOUSING)				
73	F	(RH) ★ D1WY 13B116-A	(LH) ★ D1WY 13B116-B	Not replaced	1
13118-9	RING (HEADLAMP ADJUSTING)				
73/74	A(53B,F,65B,F,71B)	(RH) D3MY 13118-B	(LH) D3MY 13119-B	High beam	1
		(RH) D3MY 13118-A	(LH) D3MY 13119-A	Low beam	1
73/74	A(53H,K,X,57H,K,X,65H,K,X,71H,K)	(RH) D3MY 13119-B	(LH) D3MY 13118-B	High beam	1
		(RH) D3MY 13118-A	(LH) D3MY 13119-A	Low beam	1
75/78	A	(RH) D3MY 13118-A	(LH) D3MY 13119-A	Low beam	1
		(RH) D3MY 13118-B	(LH) D3MY 13119-B	High beam	1
79	A	(RH) D70Z 13118-A	(LH) D70Z 13119-A	Low beam	1
		(RH) D70Z 13119-B	(LH) D70Z 13118-B	High beam	1
73	C	(RH) D3MY 13118-B	(LH) D3MY 13119-B	High beam	1
		(RH) D3MY 13118-A	(LH) D3MY 13119-A	Low beam	1
74/76	C	(RH) D3MY 13119-A	(LH) D3MY 13118-A	Low beam	1
		(RH) D3MY 13119-B	(LH) D3MY 13118-B	High beam	1
73	D	(RH) ★ C8OZ 13119-B	(LH) ★ C8OZ 13118-B	High beam	1
		(RH) ★ C8OZ 13119-A	(LH) ★ C8OZ 13118-A	Low beam	1
74/	D	(RH) D3MY 13118-A	(LH) D3MY 13119-A	Low beam	1
		(RH) D3MY 13118-B	(LH) D3MY 13119-B	High beam	1
73	F	(RH) ★ C8OZ 13119-B	(LH) ★ C8OZ 13118-B	High beam	1
		(RH) ★ C8OZ 13119-A	(LH) ★ C8OZ 13118-A	Low beam	1
74/76	F	(RH) D3MY 13119-A	(LH) D3MY 13118-A	Low beam	1
		(RH) D3MY 13119-B	(LH) D3MY 13118-B	High beam	1
77/	F	(RH) D70Z 13118-A	(LH) D70Z 13119-A	Low beam	1
		(RH) D70Z 13119-B	(LH) D70Z 13118-B	High beam	1
75/77	G	(RH) D4ZZ 13118-A	(LH) D4ZZ 13119-A		1
78/	G	(RH) D8BZ 13118-A	(LH) D8BZ 13119-A		1
79	J	(RH) D70Z 13118-A	(LH) D70Z 13119-A	Low beam	1
		(RH) D70Z 13119-B	(LH) D70Z 13118-B	High beam	1
73/76	K	(RH) C8AZ 13118-A	(LH) C8AZ 13119-A	Low beam	1
		(RH) C8AZ 13118-B	(LH) ★ C8AZ 13119-B	High beam	1
77/	K	(RH) D3MY 13118-A	(LH) D3MY 13119-A	Low beam	1
		(RH) D3MY 13118-B	(LH) D3MY 13119-B	High beam	1
74	L	(RH) D1FZ 13118-A	(LH) D1FZ 13119-A		1
75/78	L	(RH) D4ZZ 13118-A	(LH) D4ZZ 13119-A		1
79	L	(RH) D8BZ 13118-A	(LH) D8BZ 13119-A		1
73/74	P	(RH) C9TZ 13119-A	(LH) C9TZ 13118-B		1
75/77	P	(RH) D4ZZ 13118-A	(LH) D4ZZ 13119-A		1
78/	P	(RH) D70Z 13118-A	(LH) D70Z 13119-A	Low beam	1
		(RH) D70Z 13119-B	(LH) D70Z 13118-B	High beam	1
77/	V	(RH) D70Z 13118-A	(LH) D70Z 13119-A	Low beam	1
		(RH) D70Z 13119-B	(LH) D70Z 13118-B	High beam	1
73/76	Y	(RH) D3MY 13119-A	(LH) D3MY 13118-A	Low beam	1
		(RH) D3MY 13119-B	(LH) D3MY 13118-B	High beam	1
73/74	A,K	384338-S	(HH-8-L)-pin (used for support of ring to headlamp body)-1/4" x 1/2"		AR

YEAR	MODEL/RESTRICTIONS	PART NUMBER	DESCRIPTION		QTY.
13B123	BRACE (HEADLAMP HOUSING)				
73	A(53B,F,65B,F,71B)	(RH) ★ D3MY 13B123-A	(LH) ★ D3MY 13B123-B	Not replaced	1
74	A(53B,F,65B,F,71B)	(RH) ★ D4MY 13B123-A	(LH) ★ D4MY 13B123-B	Not replaced	1
73	Y	(RH) D3MY 13B123-A	(LH) D3MY 13B123-B		1
74	Y	(RH) ★ D4MY 13B123-A	(LH) ★ D4MY 13B123-B	Not replaced	1
75/76	Y	(RH) ★ D5MY 13B123-A	(LH) ★ D5MY 13B123-B	Not replaced	1
13A136-7	COVER (HEADLAMP)				
73	A(53H,K,X,57H,K,X,65H,K,X,71H,K)	(RH) ★ D3MY 13A136-A	(LH) ★ D3MY 13A137-A	Not replaced	1
74	A(53H,K,X,57H,K,X,65H,K,X,71H,K)	(RH) ★ D4MY 13A136-A	(LH) ★ D4MY 13A137-A	Not replaced	1
75/78	A	(RH) D5MY 13A136-A	(LH) D5MY 13A137-A	Paint to match	1
73	D	(RH) ★ D2VY 13A136-A	(LH) ★ D2VY 13A137-A	Not replaced	1
74	D	(RH) D4VY 13A136-A	(LH) ★ D4VY 13A137-A		1
75/	D	(RH) D4VY 13A136-A	(LH) D5VY 13A137-A		1
73/76	K	(RH) D2LY 13A136-A	(LH) D2LY 13A137-A		1
77/	K	(RH) D7LY 13A136-A	(LH) D7LY 13A137-A		1
73	A	383356-S	(MM-216-PA)-nut-No. 8 or 10		4
73/	A,D,K	★351139-S	Bumper		4
73/	D	34653-S36M	(M-106-X)-nut and washer-No. 8-32 (attach cover to hinge)		AR
75/	A,D,K	385830-S100	(BB-445-HA)-bolt-shoulder-1/4"-20 x 1 1/8"		2
13A136	COVER (HEADLAMP ACCESS HOLE)				
76/78	J	D5RY 13A136-A	Inner-located above headlamp body		2
13150	BUZZER ASSY. (WARNING)-Also refer to 10B924, 10D840				
73/	A,C,D,F,G,K,L,P,Y	D4AZ 13150-B	#D2AB 13150-A1A,D3AB 13150-BA,D4AB 13150-A1A, D5AB 13150-AA, D5ZB 13150-AA-ign. key reminder, seat belts and lights-on		AR
73/75	A,C,D,F,G,K,P,Y - - w/radio	D2AZ 13150-D	#D2AB 13150-BA,#D3AB 13150- AA-ign. key reminder and seat belt warning to correct radio interference		2
76/	D,G,K,P - - w/radio				1
77/	V - - w/radio				1
79	F,L				1
73	J	★ D0RY 13150-A	Ign. key reminder-not replaced		1
74/78	J	★ D4RY 13150-A	#3SB-0026S600 Ign. key reminder and seat belt warning		1
79	J - - 4 cyl. 140-TC (2300 cc)	D9ZZ 13150-A	#D9ZB 13150-AA-turbo-charge overboost		1
73/74	K "Before 4/1/74"	★ D2LY 13150-A	#D2LB-10D850-AA-engine temperature warning-Not replaced		1
74/75	K "From 4/1/74"	★ D5LY 13150-A	#D5LB 10D850-AA-engine temperature warning-Not replaced		1
76/	K	D6LY 13150-A	#D6LB 10D850-AA-engine temperature warning		1
13A154-5	HINGE (HEADLAMP COVER)				
73	A(53H,K,X,57H,K,X,65H,K,X,71H,K)	(RH) ★ D3MY 13A154-A	(LH) ★ D3MY 13A155-A	Not replaced	1
74	A(53H,K,X,57H,K,X,65H,K,X,71H,K)	(RH) ★ D4MY 13A154-A	(LH) ★ D4MY 13A155-A	Not replaced	1
73	D	(RH) ★ D1VY 13A154-A	(LH) ★ D1VY 13A155-A	Not replaced	1
73/76	K	(RH) D2LY 13A154-A	(LH) D2LY 13A155-A		1
13B159	SHIELD (HEADLAMP SPLASH)				
73/74	C	★ D4GY 13B159-A	Not replaced		1
74/76	F				1
73/74	J	(RH) ★ D3RY 13B159-A	(LH) ★ D3RY 13B159-B	Not replaced	1
76/78	J	(RH) ★ D5RY 13B159-A	(LH) ★ D5RY 13B159-B	Not replaced	1
74	C,F	57472-S40	(BB-339-V)-screw (attach shield to front fender support)-1/4-20 x 49/64"		AR
13B160	BEARING (HEADLAMP ADJUSTING RING)				
74	A,P	D40Z 13B160-A			AR
74/76	K,Y				AR
75/	A	E25Y 13B160-B			12
75/	G				6
77/	F,K				12
77/	V				12
78/	P				12
79	J				12
79	L				6

COPYRIGHT © 1986— FORD MOTOR COMPANY —DEARBORN, MICHIGAN

1973/79 LINCOLN-MERCURY CARS

YEAR	MODEL/RESTRICTIONS	PART NUMBER	DESCRIPTION	QTY.
13B160	BEARING (HEADLAMP ADJUSTING RING) — Cont'd			
74/76	C,D	D4ZZ 13B160-A		12
74/	D			12
75/78	L	D5UZ 13B160-A		6
75/77	P			6
13A161	SOLENOID and VALVE (HEADLAMP COVER)			
74/	D,K - - w/autolamp system and auto. headlamp dimmer	D5LY 13A161-A	Control assy.	1
13A163	SPRING (HEADLAMP COVER HINGE)			
73	D	D0VY 13A163-A		1
73/76	K	★ D2LY 13A163-A	Not replaced	2
13A164	BUSHING (HEADLAMP COVER HINGE)			
73	D	C9AZ 13A164-A	Inner	2
73/76	K		Inner	2
73	D	C9AZ 13A164-B	Outer	2
73/	K		Outer	4
73/78	A		Inner and outer	4
74/75	D		Inner and outer	4
13A165	PIN (HEADLAMP COVER HINGE)			
73/74	A,D,K	C7SZ 13A165-A	1/4"-20 x 3/4" shoulder bolt	2
75/	A,D,K	385830-S100	(BB-445-HA)-bolt (shoulder)-1/4" -20 x 1 1/8"	2
13A166	RETAINER (HEADLAMP COVER HINGE)			
73	D	★ D0VY 13A166-A		2
73/76	K	Not replaced		2
13B166-7	MOULDING (HEADLAMP HOUSING)			
73/74	A(53B,F,65B,F,71B)	(RH) ★ D3MY 13B166-A	(LH) ★ D3MY 13B166-B — Not replaced	1
73/74	A(53H,K,X,57H,K,X,65H,K,X,71H,K)	(RH) ★ D3MY 13B166-C	(LH) ★ D3MY 13B166-D — Not replaced	1
73	F	(RH) ★ D3WY 13B166-A	(LH) D3WY 13B166-B — Upper	1
73	F	(RH) ★ D3WY 13B166-C	(LH) ★ D3WY 13B166-D — Lower-not replaced	1
74/76	F	(RH) D4WY 13B166-A	(LH) D4WY 13B166-B	1
73/76	K	(RH) D3LY 13B166-A	(LH) D3LY 13B166-B — Lower	1
73/74	Y	(RH) D3MY 13B166-A	(LH) D3MY 13B166-B — Lower	1
75/76	Y	(RH) ★ D5MY 13B166-A	(LH) ★ D5MY 13B167-A — Not replaced	1
73/74	A	374566-S	(MM-284-Z)-nut (attach moulding to headlamp body)-self-thread-5/32"	AR
73	F	370713-S100	(MM-292)-nut (attach moulding to headlamp body)-self-thread-1/8"	AR
74/76	F	45174-S8	(M-138)-nut (attach moulding to headlamp body)-No. 8-15 x 17/32"	AR
74/76	F	52012-S8	(U-202)-screw (attach moulding to radiator grille)-No. 8-15 x 1/2"	AR
73/76	K	373888-S7	(MM-290)-nut (attach moulding to fender)-self-thread-1/8"	AR
13A167	MOTOR (HEADLAMP COVER CONTROL)			
73	D	D1VY 13A167-A		1
74/79	D	(RH) D9VY 13A167-A	(LH) D9VY 13A167-B	1
73/76	K	D6LY 13A167-A		1
77/79	K	(RH) D9LY 13A167-A	(LH) D9LY 13A167-B	1
73/78	A			1
73	D	376838-S2	(MM-296-AF)-nut (attach motor to radiator support)-5/16"-18	2
13A169	CONNECTOR (HEADLAMP COVER CONTROL)HOSE			
73	D	★ D0AZ 13A169-A	Not replaced	1
73/	K	E0LY 13A169-A	4-way black plastic	1
73/74	A(53H,K,X,57H,K,X,65H,K,X,71H,K)			1
74/	D			1
75/78	A			1
73/78	A,K	383005-S	(II-191-VB)-connector-1/4"	AR
73/78	A	383774-S	(II-106-D)-"Y" connector-1/4"	AR
		383014-S	(II-106-DE)-"Y" connector-1/4" x 1/4" x 1/4"	AR
		383009-S	(II-106-U)-"T" connector-1/4" x 1/4" x 1/4"	AR

YEAR	MODEL/RESTRICTIONS	PART NUMBER	DESCRIPTION	QTY.
13181	NUT (HEADLAMP ADJUSTING SCREW)			
73/78	J	★ D3RY 13181-A	Not replaced	8
13B182	CHAMBER (HEADLAMP DIMMER SENSOR)			
77/	K - - auto. headlamp dimmer	D7LY 13B182-A	Front	1
73/	D - - auto. headlamp dimmer	D7VY 13B182-A	Front	1
73/76	K - - w/auto. head lamp dimmer			1
73	D - - w/auto. headlamp dimmer	★ D1VY 13B182-B	Rear-Not replaced	1
76	K - - w/auto headlamp dimmer	★ D6LY 13B182-A	Rear-not replaced	1
74/	D - - w/auto. headlamp dimmer	★ D4VY 13B182-A	Rear-not replaced	1
73	D	42151-S8	(U-247)-screw (attach chamber to headlamp body)-No. 8-15 x 1"	AR
13A185	RESERVOIR ASSY. (HEADLAMP COVER CONTROL)-Also refer to group 3E547 or 9E799			
73/74	A(53H,K,X,57H,K,X,65H,K,X,71H,K)	★ D3MY 13A185-A	Not replaced	1
75/78	A	D5AZ 13A185-A		1
73	D	★ D0VY 13A185-A	Not replaced	1
73/	K	D2LY 13A185-C		1
74/	D			1
13A186	ORNAMENT ASSY. (HEADLAMP COVER)			
73	D	(RH) ★ D2VY 13A186-A	(LH) ★ D2VY 13A186-B Not replaced	1
74	D	D6LY 13A186-A		1
73/	K			1
75/	D	D5VY 13A186-A		1
13B195	COVER (HEADLAMP DIMMER SENSOR) ACCESS			
73/76	K	★ D2LY 13B195-A Not replaced	Plastic-"Access Cover for Servicing Dimmer Sensor"	1
13200-1	LAMP ASSY. (PARKING)			
	A (Mercury)			
73/74	A(53B,F,65B,F,71B)	(RH) ★ D3MY 13200-A	(LH) ★ D3MY 13201-A Not replaced	1
73	A(53H,K,X,57H,K,X,65H,K,X,71H,K)	(RH) ★ D3MY 13200-B	(LH) ★ D3MY 13201-B Not replaced	1
74	A(53H,K,X,57H,K,X,65H,K,X,71H,K)	(RH) ★ D4MY 13200-A	(LH) ★ D4MY 13201-A Not replaced	1
75/78	A	(RH) D5MY 13200-A	(LH) D5MY 13201-A	1
79	A	(RH) D9MY 13200-A	(LH) D9MY 13201-A	1
	C (Montego)			
73	C	(RH) ★ D3GY 13200-A	(LH) ★ D3GY 13201-A Not replaced	1
74/76	C	(RH) D4GY 13200-A	(LH) D4GY 13200-A	1
	D (Lincoln)			
73	D	(RH) ★ D3VY 13200-A	(LH) ★ D3VY 13201-A Not replaced	1
74/79	D	(RH) D8VY 13200-A	(LH) D8VY 13200-A	1
	F (Cougar)			
73	F	(RH) ★ D3WY 13200-A	(LH) ★ D3WY 13201-A Not replaced	1
74/76	F	(RH) D4WY 13200-A	(LH) D4WY 13201-A	1
77/78	F "Before 12/1/77"	(RH) D7WY 13200-A	(LH) D7WY 13201-A	1
78/	F "From 12/1/77"	(RH) D8WY 13200-A	(LH) D8WY 13201-A	1
	G (Monarch)			
75/77	G	(RH) D54Y 13200-A	(LH) D54Y 13201-A	1
78/	G	(RH) D84Y 13200-A	(LH) D84Y 13200-A	1
	J (Capri)			
73/74	J "Before 1/1/74"	(RH) D0RY 13200-A	(LH) D0RY 13200-A	1
74	J "From 1/1/74"	(RH) ★ D4RY 13200-A	(LH) ★ D4RY 13200-A Not replaced	1
76/78	J	(RH) D5RY 13200-A	(LH) D5RY 13200-A	1
79	J	(RH) E5ZZ 13200-A	(LH) E5ZZ 13200-A	1

COPYRIGHT © 1986— FORD MOTOR COMPANY —DEARBORN, MICHIGAN

1973/79 LINCOLN-MERCURY CARS

YEAR	MODEL/RESTRICTIONS	PART NUMBER	DESCRIPTION	QTY.
13200-1	LAMP ASSY. (PARKING) — Cont'd			
	K (Mark IV, Mark V)			
73	K	(RH) D3LY 13200-A	(LH) D3LY 13201-A	1
74/76	K	(RH) D5LY 13200-A	(LH) D5LY 13201-A	1
77/	K	(RH) D7LY 13200-B	(LH) D7LY 13201-B	1
	L (Bobcat)			
74	L "Before 2/15/75"	(RH) ★ D4ZZ 13200-A	(LH) ★ D4ZZ 13201-A — Not replaced	1
74	L "From 2/15/75"	(RH) ★ D4FZ 13200-A	(LH) D4FZ 13201-A	1
75/78	L	(RH) D5YY 13200-A	(LH) D5YY 13201-A	1
79	L	(RH) D9BZ 13200-A	(LH) D9BZ 13201-A — Amber lens	1
	P (Comet)			
73/74	P	(RH) ★ D24Y 13200-A Not replaced	(LH) ★ D24Y 13201-A Not replaced — Consists of body & wiring, lens, bezel & gasket	1
75	P	(RH) ★ D54Y 13200-B Not replaced	(LH) ★ D54Y 13201-B Not replaced — One piece design-incl. lens and body-less wiring & bezel	1
76/77	P	(RH) ★ D64Y 13200-B	(LH) D64Y 13201-B — clear lens	1
	P (Zephyr)			
78	P	(RH) D8KY 13200-A	(LH) D8KY 13201-A — Clear lens	1
79	P	(RH) D9KY 13200-A	(LH) D9KY 13201-A — Amber lens	1
	V (Versailles)			
77/	V	(RH) D74Y 13200-A	(LH) D74Y 13201-A — Outer	1
77/	V	(RH) D74Y 13200-B	(LH) D74Y 13201-B — Inner	1
	Y (Meteor)			
73/76	Y	(RH) ★ D3MY 13200-A	(LH) ★ D3MY 13201-A — Not replaced	1
74	A	★382079-S101	Screw (attach lamp to fender)-No. 8-18 x 3 1/8"	4
73/74 74	C A	40917-S8	(U-257)-screw (attach lamp to headlamp body)-No. 8-32 x 1/2"	8 AR
74	C	383356-S	(MM-216-PA)-nut (attach lamp to fender)-No. 8 or 10	AR
74	F	382078-S45	(UU-81-QF)-screw (attach lamp to grill moulding)-No. 8-18 x 2 5/16"	4
74	K	373556-S100	(MM-291-F)-nut (attach lamp to fender)-No. 1/4"-20	4
73/77	P	★382423-S	Nut (attach lamp to grille)-No. 8-32	4
13A206	REINFORCEMENT (PARKING LAMP BODY)			
74/77	P	(RH) D5DZ 13A206-A	(LH) D5DZ 13A206-B	1
13208-9	LENS (PARKING LAMP)			
73/74	A(53H,K,X,57H,K,X,65H,K,X,71H,K)	(RH) ★ D3MY 13208-B	(LH) ★ D3MY 13209-B — Not replaced	1
73	C	(RH) ★ D3GY 13208-A	(LH) ★ D3GY 13208-A — Not replaced	1
73	D	(RH) D0VY 13208-A	(LH) D0VY 13208-A — Clear	1
74/	D	(RH) D8VY 13208-A	(LH) D8VY 13208-A	1
73	F	(RH) D3WY 13208-A	(LH) ★ D3WY 13209-A	1
73/74	J	(RH) D4RY 13208-A	(LH) D4RY 13208-A	1
76/78	J	(RH) ★ D5RY 13208-A	(LH) ★ D5RY 13208-A — Not replaced	1
73/76	K	(RH) D3LY 13208-C	(LH) D3LY 13209-C — Inner & outer-one piece design	1

YEAR	MODEL/RESTRICTIONS	PART NUMBER	DESCRIPTION		QTY.
13208-9	LENS (PARKING LAMP) — Cont'd				
77/	K	(RH) D7LY 13208-A	(LH) D7LY 13209-A		1
73/74	P	(RH) ★ D14Z 13208-A	(LH) ★ D14Z 13209-A	Not replaced	1
73/74	A(53H,K,X,57H,K,X,65H,K,X,71H,K)	★382079-S	Screw-attach lens to lamp body-No. 8-18 x 3 1/8"		AR
73	D	378374-S100	(UU-81-E)-screw-attach lens to lamp body-No. 8-18 x 1 1/8"		AR
74	D	386006-S47	(UU-81-FR)-screw-attach lens to lamp-No. 8-18 x 3 1/2"		AR
13210	DOOR ASSY. (PARKING LAMP)				
73	A(53H,K,X,57H,K,X,65H,K,X,71H,K)	(RH) ★ D3MY 13210-A	(LH) ★ D3MY 13212-A	Not replaced	1
74	A(53H,K,X,57H,K,X,65H,K,X,71H,K)	(RH) ★ D4MY 13210-A	(LH) ★ D4MY 13212-A	Not replaced	1
74/	D	(RH) D4VY 13210-A	(LH) D4VY 13210-A		1
73	F	(RH) ★ D3WY 13210-A	(LH) ★ D3WY 13212-A	Not replaced	1
75/77	G	(RH) D54Y 13210-B	(LH) D54Y 13212-B		1
73/78	J	(RH) D0RY 13210-B	(LH) D0RY 13210-B		1
73	K	(RH) D3LY 13210-A	(LH) D3LY 13212-A		1
74/76	K	(RH) D5LY 13210-A	(LH) D5LY 13212-A		1
77/	K	(RH) D7LY 13210-B	(LH) D7LY 13212-B		1
75/78	L	(RH) ★ D5YY 13210-A	(LH) D5YY 13212-A		1
73/74	P	(RH) ★ C9WY 13210-A	(LH) ★ C9WY 13212-A	Not replaced	1
75	P	(RH) ★ D54Y 13210-A	(LH) D54Y 13212-A		1
76/77	P	(RH) ★ D64Y 13210-A	(LH) ★ D64Y 13212-A	Not replaced	1
73	F	376370-S101	(U-56-F)-screw (attach bezel to headlamp body)-No. 10-16 x 3/4"		8
73	F	383356-S	(MM-216-PA)-nut (attach bezel to headlamp body)-No. 8 insert		8
73/74	P	52445-S13	(U-317)-screw (attach bezel to lamp)- No. 8-18 x 1"		AR
13210	BEZEL (PARKING LAMP)				
73/74	P	(RH) ★ D2DZ 13210-A	(LH) ★ D2DZ 13212-A	Chrome-not replaced	1
13211	GASKET (PARKING LAMP LENS)				
73/74	A(53H,K,X,57H,K,X,65H,K,X,71,H,K)	★ D3MY 13211-A	Not replaced		2
73	C	★ D2GY 13211-A	Not replaced		2
73	D	★ D0VY 13211-A	Not replaced		2
74/	D	D4VY 13211-A			2
73	F	★ D1WY 13211-A	Not replaced		2
74/78	J	★ D4RY 13211-A	Not replaced		2
73/76	K	★ D3LY 13211-B	Not replaced		2
73/74	P	★ C9WY 13211-A	Not replaced		2
13212	Refer to group 13210				
13220-1	RETAINER (PARKING LAMP)				
73/74	P	(RH) ★ D0DZ 13220-A	(LH) ★ D0DZ 13221-A	Not replaced	1
73/74	P	57472-S40	(B-339-V)-screw (attach retainer to grille)-No. 1/4"-20 x 49/64"		AR
73/74	P	45267-S101	(M-141-F)-nut-spring (attach retainer to grille)-No. 1/4"-20		AR
13234-5	SOCKET and WIRE ASSY. (PARKING LAMP) - Refer to group 13410				
13245	PLATE (PARKING LAMP MOUNTING)				
77/	K	★ D7LY 13245-A	Not replaced		2
13A253	RELAY ASSY. (PARKING LAMP)				
73/78	J	D3RY 13A253-A	For headlamps		1
		E610267-S74	(AU-8-G)-screw (attach relay to fender)-4.80mm x 16mm (Metric)		1
74/78	J - - A/C	★ D4RY 13A253-A	#A002566-05,A002566-13-not replaced		1
73/78	J - - w/heated backlite	D5RY 13A253-A	#4RA-001846-H		1
13256	BRACKET (PARKING LAMP) MOUNTING				
74	L	(RH) ★ D4FZ 13256-A	(LH) ★ D4FZ 13256-B	Not replaced	1
73/74	P	★ D3DZ 13256-A	R.H. and L.H.-not replaced		2
73/74	P	384157-S2	(UU-89-FB)-screw (attach bracket to retainer) No. 8-18 x 3/4"		4

COPYRIGHT © 1986— FORD MOTOR COMPANY —DEARBORN, MICHIGAN

1973/79 LINCOLN-MERCURY CARS

YEAR	MODEL/RESTRICTIONS	PART NUMBER	DESCRIPTION		QTY.
13A272-3	**HOUSING (PARKING LAMP)**				
75/78	L	(RH) D5YY 13A272-A	(LH) D5YY 13A273-A		1
13B301	**BUSHING (TURN INDICATOR CONTROL)**				
73/78	A,Y - - w/tilt column	D1AZ 13B301-A			1
73/	D,F,K - - w/tilt column				1
13B302	**SWITCH ASSY. (TURN AND EMERGENCY WARNING INDICATOR) - Refer to group 13341**				
13305	**LEVER ASSY. (TURN INDICATOR)**				
73/76	C,F,L,P,Y	D0AZ 13305-A	Chrome finish		1
75	G - - w/instrument panel mounted wiper switch				1
73/	D,K				1
73/78	A				1
79	A	E1AZ 13305-C	"HORN-DIM-TURN"		1
76	C	D60Z 13305-A	Black finish		1
76/	F,L				1
76/77	P				1
78/	P	D8BZ 13305-A	HORN-DIM-TURN		1
79	J				1
75/	G - - w/column mounted wiper switch		Refer to group 17A553		
13318	**CAM (TURN INDICATOR TURN-OFF)**				
73/74	A,C,D,F,K,L,P,Y	★ D0AZ 13318-A	Not replaced		1
73/78	J	★ D3RY 13318-A	Not replaced		1
78/	P	★	Service in (3524) shaft assy. only-also refer to 13B368 repair sleeve		1
79	A,J				1
13B328-9	**LENS ASSY. (REAR TURN SIGNAL LAMP)**				
78/	P(36R)	(RH) D8KY 13B328-B	(LH) D8KY 13B329-B	Red lens-incl. (2) D6DZ 13W520-A seal and I.S. 4697	1
13340	**LENS (INSTRUMENT PANEL TURN INDICATOR LAMP)**				
73/	D	★ D0VY 13340-A	Not replaced		2
73/76	K	★ D2LY 13340-A	Not replaced		2
78/	P	D8BZ 13340-A	Blue-High beam/Green-turn signal		1
13341	**SWITCH and MOUNTING PLATE ASSY. (TURN INDICATOR)**				
	NOTE: Extreme caution must be exercised to assure that the speed control brushed assembly (basic 9C899) is reinstalled correctly before installation of switch on units equipped with speed control.				
73/78	A - - w/fixed column	D6AZ 13341-B	#D3AA 13B302-AB, D6AW 13B302-BA		1
73/76	Y - - w/fixed column				1
73	F - - w/fixed column				1
73/78	A - - w/tilt column	D6AZ 13341-A	#D3AA 13B302-BA, D6AA 13B302-AA, D7AC 13B302-AA		1
73	F - - w/tilt column				1
73/76	Y - - w/tilt column				1
78/79	P	E0AZ 13341-A	#D8BC 13B302-AB, D9AC 13B302-AA, E0AC 13B302-AA		1
79	A,J				1
73	C	D60Z 13341-B	#D20A 13B302-CB,D30A 13B302-AA,AB, D60W 13B302-BA,CA		1
74/76	C - - w/fixed column				1
74/	F - - w/fixed column				1
75	G - - w/instrument panel mounted w/shield wiper switch				1
74/	L				1
74/76	C - - w/tilt column	D60Z 13341-A	#D40W 13B302-AA, D60W 13B302-AA, D70C 13B302-AA		1
74/	F - - w/tilt column				1
73/	D - - w/fixed column	D7VY 13341-A	#D2VA 13B302-AC, D3VA 13D302-AA, D6VW 13B302-BA, D7VC 133302-AA		1
73/	D - - w/tilt column	D7VY 13341-B	#D2VA 13B302-BC, D6VW 13B302-AA, #D7VC 13B302-BA,BB		1
75	G - - w/steering column mounted w/shield wiper switch with fixed column	D6DZ 13341-C	#D5DW 13B302-AB, D6DW 13B302-BA		1
76/	G - - w/fixed column				1
77/	V - - w/fixed column				1

YEAR	MODEL/RESTRICTIONS	PART NUMBER	DESCRIPTION	QTY.
13341	SWITCH and MOUNTING PLATE ASSY. (TURN INDICATOR) — Cont'd			
76/	G - - w/tilt column	D6DZ 13341-A	#D6DW 13B302-AA, D7DC 13B302-AA	1
77/	V - - w/tilt column			1
73/76	J(exc. 64S) "Before 5/1/76"	D3RY 13341-A		1
76/78	J(exc. 64S) "From 5/1/76"	D6RY 13341-B	#76EG 13335-AA, BA	1
76/78	J(64S)	D6RY 13341-A	#72EB 13335-BA	1
73/	K - - w/fixed column	D7LY 13341-A	#D2SA 13B302-CB, D3SA 13B302-AA, D6SW 13B302-BA,D7LC 13B302-AA	1
73/	K - - w/tilt column	D7LY 13341-B	#D2SA 13B302-AF, D6SW 13B302-AA, D7LC 13B302-BA,BB	1
73/77	P	D6DZ 13341-B	#D3DA 13B302-BB, D4DW 13B302-AA,BA, D6BW 13B302-AA,BA	1
73/	A,C,D,F,K,P,Y	379203-S2	(UU-81-M)-screw (attach switch to steering column flange)-No. 8-18 x 1/2"	3
73/	C,F,K	52554-S8	(U-230)-screw (attach switch to steering column flange)- No. 8-15 x 5 1/8"	1
73/78	J	E602144-S72	(AB-4-B)-screw-hex hd. (attach switch to 13351 bracket)-5mm x 12mm (Metric)	2
13350	FLASHER ASSY. (TURN SIGNAL)			
73/	A,D,K	C6AZ 13350-B	*SF-323-Turn signal	1
74/	F		Turn signal	1
73/76	C,Y		Turn signal	1
75/	G		Turn signal	1
78/	P(36,54,66)		Turn signal	1
77/	V		Turn signal	1
79	J		Turn signal	1
73/78	A,D,K,L,P	D1FZ 13350-A	*SF-552-B-Emergency flasher	1
73/76	C,Y		Emergency flasher	1
75/78	F,G		Emergency flasher	1
79	G,J,L,P,V		Emergency flasher	1
73	F	D0WY 13350-A	*SF-113-Turn signal	1
73	F	D3AZ 13350-A	*SF-575-Emergency flasher	1
73/78	J	D9RZ 13350-A	*SFE-363-Turn signal-color blue or yellow	1
73/	L	C5AZ 13350-B	*SF-224-Turn signal	1
74	F		Emergency flasher	1
73/77	P		Turn signal	1
78/	P(74)		Turn signal	1
79	A,D,F,K		Emergency flasher	1
13A350	SWITCH and BRACKET (WARNING INDICATOR)			
73/78	J	D3RY 13A350-A	Incl. red lense	1
13351	BRACKET (TURN and EMERGENCY SIGNAL FLASHER)MOUNTING			
73	F	★ D1ZZ 13351-A	Emergency flasher-Not replaced	1
73/76	J "Before 5/1/76"	★ D3RY 13351-A	Located at steering column-not replaced	1
76/78	J "From 5/1/76"	★ D6RY 13351-A	Not replaced	1
73/78	L - - built-in A/C-dealer installed	★ D4FZ 13351-A	Not replaced	1
77/	V	★ D74Y 13351-A	Located in luggage compt lower back panel -not replaced	1
13355	SPRING (TURN INDICATOR SWITCH HUB)			
73/78	A,Y - - w/tilt column	C7SZ 13355-A		1
73/	D,F,K - - w/tilt column			1
74/76	C - - w/tilt column			1
13A364	BRACKET (PARKING LAMP)			
73/74	J	(RH) ★ D3RY 13A364-A	(LH) ★ D3RY 13A364-B Not replaced	1
13A366	RELAY ASSY. (TURN SIGNAL)			
73	F	D1WY 13A366-A	#D1WB 13B331-AA-consists of (1) switch and (4) relays	1
77/	V	D74Y 13A366-A	#D74B 13A366 A1A,A2A	1
13B368	SLEEVE (TURN SIGNAL TURN OFF CAM)			
78/	P	E1AZ 13B368-A	Incl. I.S. 4984-to repair 13318 cam	1
79	A,J			1

COPYRIGHT © 1986 — FORD MOTOR COMPANY — DEARBORN, MICHIGAN

1973/79 LINCOLN-MERCURY CARS

YEAR	MODEL/RESTRICTIONS	PART NUMBER	DESCRIPTION	QTY.
13376	COVER ASSY. (TURN INDICATOR SWITCH WIRING)			
75	A,Y - - w/tilt column	★ C8MY 13376-B	Not replaced	AR
13377	CLIP (TURN SIGNAL SWITCH WIRE COVER)			
73/78	A,Y	★ D3AZ 13377-A	Not replaced	1
73/	A,D,Y - - w/tilt column	★ D1AZ 13377-A	Not replaced	1
75/	K - - w/tilt column			1
73	F - - w/tilt column	★ D1ZZ 13377-A	Not replaced	1
73/	K - - w/tilt column	★ D2SZ 13377-A	Not replaced	1
74/	C,F			1
74	L	D1FZ 13377-A		1
73/	A,D,F,K,Y	52792-S	(U-361-F)-screw (attach clip to steering column)- No. 6-20 x 1/2"	2
73/78	A,Y	52720-S8	(U-380)-screw (attach clip to steering column)- No. 8-20 x 1/2"	1
13404-5	LAMP ASSY. (REAR)			
	A (Mercury)			
73	A(exc. 71)	(RH) D3MY 13404-A	(LH) ★ D3MY 13405-A	1
74	A(53B,F,65B,F)	(RH) ★ D4MY 13404-A	(LH) ★ D4MY 13405-A Not replaced	1
75/78	A(exc. 71)	(RH) D5MY 13404-A	(LH) D5MY 13405-A	1
73/78	A(71)	(RH) ★ D3MY 13404-B	(LH) ★ D3MY 13405-B Not replaced	1
79	A (exc. 74)	(RH) E0MY 13404-A	(LH) E0MY 13405-A	1
79	A(74)	(RH) D9MY 13404-D	(LH) D9MY 13405-D	1
	C (Montego)			
73	C(exc. 71)	(RH) ★ D3GY 13404-A	(LH) ★ D3GY 13405-A Not replaced	1
74/76	C(exc. 71)	(RH) ★ D4GY 13404-C	(LH) ★ D4GY 13405-C Not replaced	1
73/75	C(71) "Before 6/23/75"	(RH) ★ D20Z 13404-B	(LH) ★ D20Z 13405-B Not replaced	1
75/76	C(71) "From 6/23/75"	(RH) D60Z 13404-A	(LH) D60Z 13405-A	1
	D (Lincoln)			
73	D	(RH) ★ D3VY 13404-A	(LH) ★ D3VY 13405-A Not replaced	1
74	D	(RH) ★ D4VY 13404-A	(LH) ★ D4VY 13405-A Not replaced	1
75/	D	(RH) D8VY 13404-A	(LH) D8VY 13405-A	1
	F (Cougar)			
73	F	(RH) D3WY 13404-A	(LH) ★ D3WY 13405-A	1
74/76	F	(RH) ★ D4WY 13404-B	(LH) D4WY 13405-B	1
77/	F(53,65D,K)	(RH) D7WY 13404-B	(LH) D7WY 13405-B	1
77/78	F(65L)	(RH) D8WY 13404-A	(LH) D8WY 13405-A	1
79	F(65L)	(RH) D9WY 13404-A	(LH) D9WY 13405-A	1
77	F(71)	(RH) D60Z 13404-A	(LH) D60Z 13405-A	1
	G (Monarch)			
75/76	G	(RH) ★ D54Y 13404-C	(LH) ★ D54Y 13405-C W/ornament on lens	1
75/76	G	(RH) D74Y 13404-B	(LH) D74Y 13405-B Plain lens	1
77	G(54,66K)			1
77	G(66H) - - exc. w/Sport Coupe Opt.			1
77	G(66H) - - w/Sports coupe opt.	(RH) ★ D74Y 13404-C	(LH) ★ D74Y 13405-C Not replaced	1
78	G	(RH) D84Y 13404-A	(LH) D84Y 13405-A	1
79	G	(RH) D94Y 13404-A	(LH) D94Y 13405-A	1
	J (Capri)			
73/74	J	(RH) D3RY 13404-A	(LH) D3RY 13405-A	1
76/78	J(exc. 64S)	(RH) ★ D5RY 13404-A	(LH) ★ D5RY 13405-A Not replaced	1
76/78	J(64S)	(RH) ★ D6RY 13404-A	(LH) D6RY 13405-A	1
79	J	(RH) D9CY 13404-A	(LH) D9CY 13405-A	1

YEAR	MODEL/RESTRICTIONS	PART NUMBER	DESCRIPTION		QTY.
13404-5	LAMP ASSY. (REAR) — Cont'd				
	K (Mark IV, Mark V)				
73	K	(RH) ★ D3LY 13404-A Not replaced	(LH) ★ D3LY 13405-A Not replaced		1
74/76	K	(RH) D4LY 13404-A	(LH) D4LY 13405-A		1
77	K "Before 10/1/76"	(RH) D7LY 13404-A	(LH) D7LY 13405-A	Black	1
77/	K "From 10/1/76"	(RH) D7LY 13404-B	(LH) D7LY 13405-B	Red	1
	L (Bobcat)				
74	L(62,64) "Before 11/5/73"	(RH) D4FZ 13404-B	(LH) D4FZ 13405-B		1
74/78	L(62,64) "From 11/5/73 to 3/13/78"	(RH) ★ D4FZ 13404-C	(LH) ★ D4FZ 13405-C	Not replaced	1
78	L(62,64) "From 3/13/78"	(RH) ★ D7YY 13404-A	(LH) ★ D7YY 13405-A	Not replaced	1
79	L(62,64)	(RH) D9YY 13404-A	(LH) D9YY 13405-A		1
74/76	L(73) "Before 9/8/75"	(RH) ★ D4FZ 13404-A	(LH) ★ D4FZ 13405-A	Not replaced	1
76/	L(73) "From 9/8/75"	(RH) D6FZ 13404-A	(LH) D6FZ 13405-A		1
	P (Comet)				
73/77	P	(RH) ★ D54Y 13404-B	(LH) ★ D54Y 13405-B	Not replaced	1
	P (Zephyr)				
78/	P(54,66)	(RH) D8KY 13404-A	(LH) D8KY 13405-A	Bright finish trim lines	1
78/	P(54,66)	(RH) D8KY 13404-B	(LH) D8KY 13405-B	All Black trim lines	1
78/	P(74)	(RH) D8BZ 13404-E	(LH) D8BZ 13405-D		1
78	P(36R)	D8KY 13404-D	Assembly-incl. R.H. and L.H. lamps		1
79	P(36R)	D9KY 13404-A	Assembly-incl. R.H. and L.H. lamps		1
	V (Versailles)				
77/79	V	(RH) D94Y 13404-D	(LH) D94Y 13405-D		1
	Y (Meteor)				
73	Y(exc. 71)	(RH) D3MY 13404-A	(LH) ★ D3MY 13405-A		1
74	Y(exc. 71)	(RH) ★ D4MY 13404-A	(LH) ★ D4MY 13405-A	Not replaced	1
75/76	Y(exc. 71)	(RH) D5MY 13404-A	(LH) D5MY 13405-A		1
73/76	Y(71)	(RH) ★ D3MY 13404-B	(LH) D3MY 13405-B		1
74	A(exc. 71),Y(exc. 71),C,F	373556-S100	(MM-291-F)-nut (attach lamp to back panel)-1/4"-20		AR
73/76	C(71)	55974-S45X	(U-316-D)-screw (attach lamp to back panel)-No. 8-18 x 3/4"		AR
73/76	C(71)	383356-S	(MM-216-PA)-nut-No. 8 or 10 insert		AR

COPYRIGHT © 1986— FORD MOTOR COMPANY —DEARBORN, MICHIGAN

YEAR	MODEL/RESTRICTIONS	PART NUMBER	DESCRIPTION	QTY.
13404-5	LAMP ASSY. (REAR) — Cont'd			
		Y (Meteor)		
73	C(exc. 71)	376331-S36	(MM-292-B)-nut (attach lamp to back panel)-1/4"-20	8
73	D	52012-S8	(U-202)-screw (attach lamp to back panel)-No. 8-15 x 1/2"	6
73	F	376838-S2	(MM-296-AF)-nut (attach lamp assy. to rear bumper bar)-5/16"-18	8
73/78	J	114191-ES82	Nut-speed (attach lamp at rear quarter)	2
13406	BRACKET (REAR LICENSE PLATE)			
73/76	Y(exc. 71)	D3AZ 13406-A		1
73/78	A(exc.71)			1
74/76	C(exc. 71),F	D40Z 13406-A		1
77/	F(53,65)			1
75/	D	D5VY 13406-A		1
75/	G	D5DZ 13406-A		1
77/	V			1
73	J	★ D0RY 13406-A	Support-not replaced	2
73/74	J	★ D3RY 13406-A	Not replaced	1
76/78	J	★ D5RY 13406-A	Not replaced	2
74/76	L	★ D4FZ 13406-A	Not replaced	1
77/78	L	★ D7FZ 13406-A	Not replaced	1
79	L	D9FZ 13406-A		1
74/77	P	D4DZ 13406-A		1
73/78	A	33799-S2	(M-52)-nut(attach bracket to rear bumper)-3/8"-16	2
73/78	A	358159-A2S	(CC-9-A)-bumper anti-rattler bar)-3/8"-16 x 1 7/32"	2
74/78	A	385131-S2	(UU-52-BE)-screw(attach support to bumper	AR
73/78	J	33562-GS40	Nut	2
		★113233-GS	Seal	2
		★111430-ES	Rivet-plastic	4
		★E603166-S72	Screw	2
		E630025-S71	(AX-10-A)-washer-flat-M6.4(Metric)	2
74/78	L	384370-S40	(UU-52-BC)-screw(attach support to bumper bar)-1/4"-14 x 5/8"	AR
74	J	E610666-S71	(AU-25)-screw-4.8 x 13mm-attach bracket to bumper bar	2

CODE CROSS-REFERENCE CHART AS LISTED ON ILLUSTRATIONS

13410 SOCKET and WIRING ASSY. (LAMP) – also refer to group 15A434, 15536, 15A442

CODE NO.	PART NUMBER	DESCRIPTION		CODE NO.	PART NUMBER	DESCRIPTION	
		LENGTH (INCHES)	CONDUCTOR			LENGTH (INCHES)	CONDUCTOR
E37	D0WY 13410-A	6 in.	2	E112	D4ZZ 13234-A	8 in.	3
E50	D0AZ 13410-B	6 in.	2	E113	D4LY 13410-A	8 in.	3
E67	D20Z 13410-B	6 in.	2	E119B	D4SZ 13410-C	8 in.	2
E71A	D1GY 13410-B	6 in.	2	E119C	D9AZ 13410-A	8 in.	2
E79	D1FZ 13234-A	8 in.	3	E123	D4SZ 13410-E	8 in.	2
E83	D3AZ 13410-A	6 in.	2	E131	D5AZ 13234-A	8 in.	2
E84	D3AZ 13410-B	6 in.	3	E135	E1FZ 13234-A	8 in.	3
E87	D3MY 13410-A	6 in.	3	E137	D5VY 13410-A	8 in.	3
E88	D3AZ 13410-E	6 in.	2	E138	D5DZ 13410-A	8 in.	3
E89	D3AZ 13410-G	6 in.	3	E140	D70Z 13410-A	8 in.	3
E97B	D40Z 13410-E	8 in.	2	E146	D84Y 13234-A	8 in.	2
E99	D4SZ 13410-A	4 in.	2	E148	D9AZ 13234-B	8 in.	2
E111	D40Z 13234-A	8 in.	3				

YEAR	MODEL/RESTRICTIONS	PART NUMBER	DESCRIPTION	QTY.
13410	SOCKET and WIRING ASSY. (LAMPS) - also refer to group 15536, 15A442, 15A434 — Cont'd			
	APPLICATION CHART			
	A (Mercury)			
73/74	A	D3MY 13410-A	E87-Parking lamp	2
73/78	A(71)	D3AZ 13410-A	E83-Back-up lamp	2
73/78	A(71)	D3AZ 13410-B	E84-Rear lamp	2
73/74	A(exc. 71)	D3AZ 13410-B	E84-Rear lamp	6
75/78	A(exc. 71)	D4LY 13410-A	E113-Rear lamp	6
75/78	A	D4SZ 13410-C	E119B-Rear side marker	2
73/78	A	D3AZ 13410-E	E88-Cornering lamp	2
75/78	A	D5AZ 13234-A	E131-Parking lamp (upper)	2
75/78	A	D4ZZ 13234-A	E112-Parking lamp (lower)	2
79	A(exc. 74)	D3AZ 13410-G	E89-Rear lamp (Tail/stop/turn/side marker)	4
79	A(exc. 74)	D9AZ 13410-A	E119C-Rear lamp (running)	2
79	A(74)	D70Z 13410-A	E140-Rear lamp	4
79	A	D4ZZ 13234-A	E112-Parking lamp	2
79	A	D40Z 13410-E	E97B-Coach lamp	2
	C (Montego)			
74/76	C	D3AZ 13410-G	E89-Rear lamp (outer)	2
74/76	C	D3AZ 13410-B	E84-Rear lamp (inner)	2
	D (Lincoln)			
74/	D	D3AZ 13410-E	E88-Cornering lamp	2
74	D	D4SZ 13410-A	E99-Rear lamp	4
75/	D	D5VY 13410-A	E137-Rear lamp	4
75/	D	D40Z 13410-E	E97B-Coach lamp	2
	F (Cougar)			
73	F	★D0WY 13410-A	E37-Rear lamp-not replaced	6
74/76	F	D3MY 13410-A	E87-Parking lamp	2
74/76	F	D3AZ 13410-G	E89-Rear lamp (outer)	2
74/76	F	D3AZ 13410-B	E84-Rear lamp (inner)	2
76/78	F	E1FZ 13234-A	E135-Parking lamp	2
77	F(71)	D20Z 13410-B	E67-Rear lamp-Stop/Turn/Running	2
77	F(71)	D0AZ 13410-B	E50-Rear lamp-Turn/Running	2
77/	F(53,65D)	D70Z 13410-A	E140-Rear lamp	4
77/	F(65L)	D3AZ 13410-G	E89-Rear lamp	4
79	F	D40Z 13234-A	E111-Parking lamp	2
	G (Monarch)			
75/77	G - - w/o skid control	D3MY 13410-A	E87-Parking lamp	2
75/77	G - - w/skid control	★D54Y 13234-A	Not replaced	2
75/77	G	D5DZ 13410-A	E138-Rear lamp (inner)	2
75/77	G	D4SZ 13410-E	E123-Rear lamp (outer)	2
78/	G	E1FZ 13234-A	E135-Parking lamp	2
78/	G	D3AZ 13410-G	E89-Rear lamp (Tail/stop/turn/side marker)	4
78/	G	D4SZ 13410-E	E123-Rear lamp (running)	2

COPYRIGHT © 1986 — FORD MOTOR COMPANY — DEARBORN, MICHIGAN

1973/79 LINCOLN-MERCURY CARS

YEAR	MODEL/RESTRICTIONS	PART NUMBER	DESCRIPTION	QTY.
13410	SOCKET and WIRING ASSY. (LAMPS) - also refer to group 15536, 15A442, 15A434 — Cont'd			
	APPLICATION CHART			
	J (Capri)			
79	J	E1FZ 13234-A	Parking lamp	2
79	J	D4SZ 13410-E	E123-Rear lamp	4
	K (Mark IV, Mark V)			
74/	K	D4LY 13410-A	E113-Rear lamp	2
	L (Bobcat)			
74/	L(73)	D3AZ 13410-B	E84-Rear lamp	2
74/	L(73)	D3AZ 13410-A	E83-Backup lamp	2
75/76	L	D1FZ 13234-A	E79-Parking lamp	2
76/	L(62,64)	D0AZ 13410-B	E50-Rear lamp	2
77	L "Before 12/1/76"	★D7FZ 13234-A	Parking lamp (incl. plug)-not replaced	2
77/78	L "From 12/1/76"	★D7FZ 13234-C	Parking lamp (incl. plug)-not replaced	2
79	L	E1FZ 13234-A	E135-Parking lamp	2
79	L	D40Z 13410-E	E97B-Rear side marker	
	P (Comet)			
73/77	P	D1GY 13410-B	E71A-Rear lamps	2
74/77	P	D4DZ 13234-A	Parking lamp (incl. plug)	2
	P (Zephyr)			
78/	P(54,66)	D4SZ 13410-E	E123-Rear lamp	4
78/	P(36)	D3AZ 13410-G	E89-Rear lamp (Tail/stop/turn)	4
78/	P(36)	D9AZ 13410-A	E119C-Rear lamp (running)	2
78/	P(36)	D40Z 13410-E	E97B-Rear license lamp	2
78/	P(exc. 74)	D40Z 13410-E	E97B-Rear side marker	2
78/	P(74)	D3AZ 13410-G	E89-Rear lamp	4
78/	P(74)	D3AZ 13410-E	E88-Backup lamp	2
78/	P	D40Z 13234-A	E111-Park and Turn lamp	2
78/	P	D84Y 13234-A	E146-Parking lamp	2
	V (Versailles)			
77/	V	E1FZ 13234-A	E135-Parking lamp (Park/Turn)	2
77/	V	D84Y 13234-A	E146-Parking lamp (Inner)	2
77/	V	D3AZ 13410-G	E89-Rear lamp (Tail/stop/Turn/side marker)	4
77/	V	D4SZ 13410-E	E123-Rear lamp (running)	2
77/	V	D40Z 13410-E	E97B-Coach lamp	2
	Y (Meteor)			
73/74	Y	D3MY 13410-A	E87-Parking lamp	2
73/76	Y(71)	D3AZ 13410-A	E83-Back-up lamp	2
73/76	Y(71)	D3AZ 13410-B	E84-Rear lamp	2
13411	SOCKET (REAR LAMP)			
73/78	J	D3RY 13411-A	Single contact	2
		D3RY 13411-B	Double contact	2

YEAR	MODEL/RESTRICTIONS	PART NUMBER	DESCRIPTION	QTY.
13A411	WIRE ASSY. (STOP LAMP SWITCH)			
73/76	C	D30Z 13A411-A		1
74/	F			1
73/	K			1
13412	WIRING and SOCKET ASSY. (REAR LICENSE LAMP)			
74/76	A(exc. 71),Y(exc. 71)	★ D4AZ 13412-A	# D4MB 13412-AC-not replaced	1
74/76	A(71),Y(71)	★ D6AZ 13412-A	# D4AB 13412-BA, D6AB 13412-BA-not replaced	1
77/78	A(exc.71)	D7MY 13412-A	# D7MB 13412-AA	1
79	A(54,66)-w/o luggage compt. lamp	D9MY 13412-A	# D9MB 13412-AA, AB	1
79	A(54,66)-w/luggage compt. lamp	D9MY 13412-B	# D9MB 13412-BA, BB	1
77/	D	★ D7VY 13412-A	# D7VB 13412-AA-not replaced	1
76	C,F	★ D40Z 13412-B	# D40B 13412-BB-not replaced	1
77/	F(53,65)	D70Z 13412-A	# D70B 13412-AA	1
77/	G,V	E0DZ 13412-B	# D7DB 13412-AA, E0BB 13412-AB	1
79	J	★ D9ZZ 13412-B	# D9ZB 13412-BB-not replaced	1
74/76	K	★ D4SZ 13412-A	# D4SB 13412-AB-not replaced	1
77/	K	★ D7LY 13412-A	# D7LB 13412-AA-not replaced	1
74/76	L,P	★ D4FZ 13412-A	# D42B 13412-AC-not replaced	1
77/78	L	★ D7FZ 13412-A	# D7EB 13412-AA,AB-not replaced	1
77	P			1
78/	P(74)	D8BZ 13412-A	# D8BB 13412-BA, D9BB 13412-AA	1
78/	P(exc. 74)	D8BZ 13412-B	# D8BB 13412-AB,AD	1
13A412	WIRING ASSY. (REAR LAMP JUMPER)			
77/	F,P	★ D8BZ 13A412-A	To repair open circuits in 14405 wiring assembly	AR
13A415-6	SHIELD (REAR LAMP)			
74/76	C(exc. 71),F	★ D40Z 13A415-A	R.H. and L.H.-not replaced	2
73/78	J	(RH) D3RY 13A415-A	(LH) ★ D3RY 13A415-B	1
77/78	V	(RH) ★ D74Y 13A415-A	(LH) ★ D74Y 13A415-A Not replaced	1
13B417	MOULDING (REAR REFLECTOR)			
75/	D	D5VY 13B417-A		1
13A418	BRACKET (REAR LAMP MOUNTING)			
73/78	J	(RH) ★ D3RY 13A418-A	(LH) ★ D3RY 13A418-B Not replaced	1
		34653-S36M	(M-106-X)-nut and washer assy.-hex.-No. 8-32	4
13420	PAD (REAR LAMP MOUNTING)			
74/76	C(exc. 71)	★ D4GY 13420-A	Not replaced	4
74/76	F			2
75/	G	★ D54Y 13420-A	R.H. and L.H.-not replaced	2
79	J	(RH) ★ D9CY 13420-A	(LH) ★ D9CY 13420-A Not replaced	1
74/78	L(62,64)	D0DZ 13420-B	R.H. & L.H.	2
78/	P(36R)	(RH) ★ D8BZ 13420-A	(LH) ★ D8BZ 13421-A Not replaced	1
13422	SUPPORT (REAR LICENSE PLATE BRACKET)			
73	C(exc.71)	D30Z 13422-B	Incl. I.S. 4530	1
73	K			1
73	F	★ D1WY 13422-A	Not replaced	1
73	K	57032-S2	(B-340)-screw & washer(attach support to rear bumper)-1/4"-20 x 1 5/32"	2
13423	BRACKET (REAR LICENSE LAMP)			
77/78	L	★ D7FZ 13423-A	Not replaced	1
77/	D	D7VY 13423-A		1
78/	P(exc. 74)	D8BZ 13423-A		1

COPYRIGHT © 1986— FORD MOTOR COMPANY —DEARBORN, MICHIGAN

1973/79 LINCOLN-MERCURY CARS

YEAR	MODEL/RESTRICTIONS	PART NUMBER	DESCRIPTION	QTY.
13A424	CLIP (REAR LAMP DOOR RETAINER)			
73/74	P	★ D0DZ 13A424-A	Not replaced	16
77/78	L			24
13A427	WIRING ASSY. (STOP LAMP SWITCH JUMPER)			
75	G	★ D54Y 13A427-A	Not replaced	1
79	J,P - - A/T with speed control	D9ZZ 13A427-A	#D9ZB 13A427-AB	1
79	J,P - - M/T with speed control	★ D9ZZ 13A427-B	#D9ZB 13A427-BA-not replaced	1
13A435	RELAY (TRAILER LIGHT)			
73/	A,C,F,G,J,K,L,P,V,Y	D3SZ 13A435-A		AR
73/76	C	42134-S8	(U-249)-screw (attach relay to floor pan)- No. 10-12 x 5/8"	3
73/	A,Y	42367-S36	(U-269-B)-screw (attach relay to floor pan)- No. 10-16 x 1/2"	AR
13440	BODY (REAR LAMP)			
74	A(exc. 71),Y(exc. 71)	★ D4MY 13440-A	Not replaced	2
13B440	WIRING ASSY. (REAR LICENSE LAMP FEED)			
79	J	D9ZZ 13B440-A	#D9ZB 13B440-AE,BE,BF On units w/o heated back lite - Tape back circuit #687	1
13450-1	LENS (REAR LAMPS)			

A (Mercury)

73	A(exc. 71)	(RH) ★ D3MY 13450-A	(LH) ★ D3MY 13450-A	Not replaced	1
74	A(53B,F,65B,F)	(RH) ★ D4MY 13450-A	(LH) ★ D4MY 13450-B	Not replaced	1
74	A(53H,K,X,57,65H,K,X)	(RH) ★ D4MY 13450-AG	(LH) ★ D4MY 13450-AH	Beige-Not replaced	1
		(RH) ★ D4MY 13450-AJ	(LH) ★ D4MY 13450-AK	Black-Not replaced	1
		(RH) ★ D4MY 13450-Y	(LH) ★ D4MY 13450-Z	Blue-Not replaced	1
		(RH) ★ D4MY 13450-V	(LH) ★ D4MY 13450-W	Brown-Not replaced	1
		(RH) ★ D4MY 13450-AE	(LH) ★ D4MY 13450-AF	Gold-Not replaced	1
		(RH) ★ D4MY 13450-AC	(LH) ★ D4MY 13450-AD	Green-Not replaced	1
		(RH) ★ D4MY 13450-AA	(LH) ★ D4MY 13450-AB	Tan-Not replaced	1
75/78	A(53,65)	(RH) D5MY 13450-A	(LH) D5MY 13450-B		1
73/78	A(71)	(RH) D3MY 13450-B	(LH) D3MY 13451-A		1
79	A(54,66)	(RH) D9MY 13450-A	(LH) D9MY 13451-A	Incl. (2) D9AZ 13W520-B Seal	1

C (Montego)

73	C(exc. 71)	(RH) ★ D2GY 13450-A	(LH) ★ D2GY 13450-B	Not replaced	1
74/76	C(exc.71)	(RH) ★ D4GY 13450-E	(LH) ★ D4GY 13450-F	Inner-not replaced	1
74/76	C(exc. 71)	(RH) D4GY 13450-G	(LH) D4GY 13450-H	Outer	1
73/76	C(71)	(RH) D20Z 13450-C	(LH) D20Z 13450-D	Incl. attaching parts	1

D (Lincoln)

73	D	(RH) D2VY 13450-A	(LH) D2VY 13450-B	Incl. attaching parts	1
74	D	(RH) D4VY 13450-A	(LH) D4VY 13450-B		1

F (Cougar)

73	F	(RH) ★ D3WY 13450-A	(LH) ★ D3WY 13450-B	Not replaced	1
74/76	F	(RH) D4WY 13450-A	(LH) D4WY 13450-B	Inner-incl. attaching parts	1
74/76	F	(RH) D4WY 13450-C	(LH) D4WY 13450-D	Outer	1
77/	F(53,65D,K)	(RH) D7WY 13450-B	(LH) D7WY 13451-B		1
77/78	F(65L)	(RH) D7WY 13450-A	(LH) D7WY 13451-A		1
79	F(65L)	(RH) D9WY 13450-A	(LH) D9WY 13451-A	Incl. (2) D9AZ 13W520-B Seal	1
77	F(71)	(RH) D20Z 13450-C	(LH) D20Z 13450-D		1

YEAR	MODEL/RESTRICTIONS	PART NUMBER		DESCRIPTION	QTY.
13450-1	LENS (REAR LAMPS) — Cont'd				
	G (Monarch)				
75/76	G	(RH) D54Y 13450-E Not replaced	(LH) ★ D54Y 13451-A Not replaced	Incl. body and lens, ultrasonically welded, w/emblem on lens	1
75/76	G	(RH) D64Y 13450-B	(LH) D64Y 13451-B	Lens only-w/emblem on lens-incl. (2) D6DZ 13W520-A Seal and I.S. 4568	1
75/77	G	(RH) D74Y 13450-B	(LH) D74Y 13451-B	Incl. body and lens, utrosonically welded w/o emblem on lens	1
75/77	G	(RH) D64Y 13450-A	(LH) D64Y 13451-A	Lens only-w/o emblem on lens-incl. (2) D6DZ 13W520-A Seal and I.S. 4568	1
78	G	(RH) D84Y 13450-A	(LH) D84Y 13451-A	Incl (1) I.S. 4665 and (2) D6DZ 13W520-A seal	1
79	G	(RH) D94Y 13450-A	(LH) D94Y 13451-A	Incl. (1) I.S. 4665 and (2) D6DZ 13W520-A Seal	1
	J (Capri)				
76/78	J(exc. 64S)	(RH) D5RY 13450-B	(LH) D5RY 13451-B		1
76/78	J(64S)	(RH) ★ D6RY 13450-B	(LH) ★ D6RY 13451-B	Not replaced	1
79	J	(RH) D9CY 13450-AA	(LH) D9CY 13451-AA	Incl. (4) 389611-S100 Clips, (1) E1FZ 13W520-A Seal & IS 5287	1
	K (Mark IV, Mark V)				
73	K	(RH) D2LY 13450-A	(LH) D2LY 13450-B	Incl. attaching parts	1
74/76	K	(RH) D4LY 13450-A	(LH) D4LY 13450-B	Incl. attaching parts	1
77/	K	(RH) D7LY 13450-A	(LH) D7LY 13451-A		1
	L (Bobcat)				
74/78	L(62,64)	(RH) D1DZ 13450-C	(LH) D1DZ 13450-D		1
79	L(62,64)	(RH) D9YY 13450-A	(LH) D9YY 13451-A	Incl. (1) D9FZ 13W520-A Seal	1
74/	L(73)	(RH) D2FZ 13450-A	(LH) D2FZ 13450-B		1
	P (Comet)				
73/77	P	(RH) ★ D54Y 13450-C	(LH) ★ D54Y 13450-D	Not replaced	1
	P (Zephyr)				
78/	P(54,66)	(RH) D8KY 13450-A	(LH) D8KY 13451-A	Incl. (1) I.S. 4652 and (2) D6DZ 13W520-A seal	1
78	P(36R)	(RH) D8KY 13450-D	(LH) D8KY 13451-D	Lens and body	1
79	P(36R)	(RH) D9KY 13450-A	(LH) D9KY 13451-A	Lens and body	1
78/	P(36R)	(RH) D8KY 13450-E	(LH) D8KY 13451-E	Lens only-incl. (2) D6DZ 13W520-A seal and I.S. 4697	1

COPYRIGHT © 1986— FORD MOTOR COMPANY —DEARBORN, MICHIGAN

YEAR	MODEL/RESTRICTIONS	PART NUMBER	DESCRIPTION		QTY.
13450-1	LENS (REAR LAMPS) — Cont'd				
	V (Versailles)				
77/79	V	(RH) D94Y 13450-B	(LH) D94Y 13451-B	Incl. (1) I.S. 4661-A (2) 380559-52 Clip, (1) 55923-S2 Screw and (2) E1FZ 13W520-A Seal	1
	Y (Meteor)				
73	Y(exc. 71)	(RH) ★ D3MY 13450-A	(LH) ★ D3MY 13450-A	Not replaced	1
74	Y(exc. 71)	(RH) D4MY 13450-A	(LH) D4MY 13450-B		1
75/76	Y(exc. 71)	(RH) D5MY 13450-A	(LH) D5MY 13450-B		1
73/76	Y(71)	(RH) D3MY 13450-B	(LH) D3MY 13451-A		1
13455	SPRING (REAR LICENSE PLATE SUPPORT)				
73	F	(RH) ★ C7WY 13455-A	(LH) ★ C7WY 13455-B	NOT REPLACED	1
13A455	WIRE ASSY. (PARKING LAMP GROUND)				
73/78	J	★ D3RY 13A455-A	Not replaced		2
13461	GASKET (REAR LAMP LENS)				
73/74	A(exc. 71)	★ D3MY 13461-A	R.H. and L.H.-Not replaced		2
75/78	A(exc.71)	★ D5MY 13461-A	R.H. and L.H.-not replaced		2
73/78	A(71)	★ D3AZ 13461-B	R.H. and L.H.-not replaced		2
73	C(exc. 71)	★ D2GY 13461-A	R.H. and L.H.-Not replaced		2
74/76	C(exc. 71)	★ D4GY 13461-A	R.H. and L.H.-inner-not replaced		2
74/76	C(exc. 71)	★ D4GY 13461-B	R.H. and L.H.-outer-Not replaced		2
73/76	C(71)	D20Z 13461-B	R.H. and L.H.		2
73	D	★ D0VY 13461-A	R.H. and L.H.-Not replaced		2
74	D	★ D4VY 13461-A	R.H. and L.H.-Not replaced		2
73	F	D3WY 13461-A	R.H. and L.H.		2
74/76	F	D4GY 13461-A	R.H. and L.H.-inner		2
74/76	F	D4GY 13461-B	R.H. and L.H.-outer		2
77/78	F(65L)	D7WY 13461-A	R.H. and L.H.		2
77	F(71)	D20Z 13461-B	R.H. and L.H.		2
73	K	★ D2LY 13461-A	R.H. and L.H.-Not replaced		2
74/76	K	★ D4LY 13461-A	R.H. and L.H.-Not replaced		2
77/	K	D7LY 13461-A	R.H. and L.H.		2
74/78	L(62,64)	★ D0DZ 13461-B	R.H. and L.H.-not replaced		2
74/	L(73)	★ D2FZ 13461-A	R.H. and L.H.-not replaced		2
73/77	P	★ D0GY 13461-B	R.H. and L.H.-Not replaced		2
73/74	Y(exc. 71)	★ D3MY 13461-A	R.H. and L.H.-Not replaced		2
75/76	Y(exc. 71)	★ D5MY 13461-A	R.H. and L.H.-not replaced		2
73/76	Y(71)	D3AZ 13461-B	R.H. and L.H.		2
13463	LENS (REAR LAMP OPTIC) INNER				
73/78	A(71)	(RH) ★ D3AZ 13463-B	(LH) ★ D3AZ 13463-C		1
73/76	Y(71)	Not replaced	Not replaced		1
77/	K	(RH) ★ D7LY 13463-A Not replaced	(LH) D7LY 13463-B		1

13466 BULB (MINIATURE)

INDUSTRY NUMBER to SERVICE PART NUMBER GUIDE

IDENTIFICATION CHART

IND. NO.	BASE	C/PWR	PART NUMBER U.S.		PART NUMBER CANADA	IND. NO.	BASE	C/PWR	PART NUMBER U.S.		PART NUMBER CANADA
37	Wedge	.5	D4AZ	13466-A	*CLB-37	1076	Double	32	C1TB	13465-A	*CLB-1076
89	Single	6	B5AZ	13466-A	*CLB-89	1142	Double	21	C5ZZ	13466-A	*CLB-1142
90	Double	6	C6SZ	13466-A	*CLB-90	1155	Single	4	C3AZ	13466-G	*CLB-1155
97	Single	4	C3AZ	13466-G	*CLB-97	1156	Single	32	C3DZ	13466-A	*CLB-1156
97NA	Single	4	C8MY	13466-A	*CLB-97-NA	1157	Double	32.3	C8TZ	13466-A	*CLB-1157
105	Single	12	D0AZ	13466-A	*CLB-105	1157NA	Double	32.3	C9MY	13466-A	*CLB-1157-NA
161	Wedge	1	C3AZ	13466-D	*CLB-161	1178	Double	4	C5TZ	13466-A	*CLB-1178
168	Single	3	C7SZ	13466-B	*CLB-168	1178A	Double	4	C8ZZ	13466-A	*CLB-1178-A
194	Wedge	2	C2AZ	13466-C	*CLB-194	1196	Double	50	C6MY	13466-A	*CLB-1196
194A	Wedge	2	C9DZ	13466-A	*CLB-194-A	1295	Single	50	D3AZ	13466-A	*CLB-1295
211-2	Double	12	D1FZ	13466-B	*CLB-211-2	1445	Single	1	D8TZ	13466-A	*CLB-1445
212-1	Double	6	D4MY	13466-A	*CLB-212-1	1445H/D	Single	1	D8TZ	13466-A	*CLB-1445
212-2	Double	6	D4MY	13466-A	*CLB-212-2	1815	Single	1.4	D2TZ	13466-A	*CLB-1815
214-2	Double	6	D2SZ	13466-A	*CLB-214-2	1816	Single	2.6	B8AZ	13466-A	*CLB-1816
561	Double	12	D1AZ	13466-A	*CLB-561	1891	Single	1.9	B9SZ	13466-A	*CLB-1891
562	Single	6	★ D0ZZ	13466-A	*CLB-562	1892	Wedge	1.3	B9MY	13466-A	*CLB-1892
631	Single	6	C3VY	13466-A	*CLB-631	1893	Single	1.9	C1VY	13466-A	*CLB-1893
906	Wedge	6	D8BZ	13466-A	*CLB-904	1895	Single	2	C4SZ	13466-B	*CLB-1895
912	Single	12	D7TZ	13466-A		1895(57)	Single	2	C3AZ	13466-B	

MINIATURE BULB APPLICATION CHART

● For unique Canadian Motorcraft part numbers, refer to Identification Chart which precedes this Application Chart

13466 BULB (MINIATURE)

A (MERCURY)

FUNCTION	YEAR	INDUSTRY NO.	U.S. ● PART NUMBER
Air conditioner control panel	75/	161	C3AZ 13466-D
Alternator warning lamp	73/	194	C2AZ 13466-C
Ash receptacle	73/78	161	C3AZ 13466-D
	79	1892	B9MY 13466-A
Backup lamp	73-75/	1156	C3DZ 13466-A
	74	1295	D3AZ 13466-A
Brake system-master cylinder warning lamp	73/	194	C2AZ 13466-C
Cargo lamp	73/78	105	D0AZ 13466-A
	79	906	D8BZ 13466-A
Clock	73/	194	C2AZ 13466-C
Coach lamp	79	161	C3AZ 13466-D
Cornering lamp	73/78	1295	D3AZ 13466-A
	79	1156	C3DZ 13466-A
Courtesy lamp			
-door mounted	73/77	214-2	D2SZ 13466-A
	79	906	D8BZ 13466-A
-instrument panel	73/75	631	C3VY 13466-A
	76/	89	B5AZ 13466-A
-pillar	73/	105	D0AZ 13466-A
Dome lamp	73/78	561	D1AZ 13466-A
	79	906	D8BZ 13466-A
Dome/map lamp			
-dome	74/78	211-2	D1FZ 13466-B
	79	912	D7TZ 13466-A
-map	74/	105	D0AZ 13466-A
Engine compartment	73/75	631	C3VY 13466-A
	76/	89	B5AZ 13466-A
Fuel economy	75/77	194	C2AZ 13466-C
Fuel gage	79	194	C2AZ 13466-C
Glove compartment lamp	73/	194	C2AZ 13466-C
Headlamp switch	73	161	C3AZ 13466-D
	74/	1815	D2TZ 13466-A
Heater control	73/	161	C3AZ 13466-D
High beam indicator	73/	194	C2AZ 13466-C
Instrument cluster illumination	73/	194	C2AZ 13466-C
License plate lamp			
-exc. 71	73/74	90	C6SZ 13466-A
-71	73/74	1178	C5TZ 13466-A
-exc. 71	75/76	1178	C5TZ 13466-A
-71	75/78	194	C2AZ 13466-C
-74	79	168	C7SZ 13466-B
-exc. 71,74	77/	168	C7SZ 13466-B
Low fuel warning	79	194	C2AZ 13466-C
Luggage compartment	73/75	631	C3VY 13466-A
	76/	89	B5AZ 13466-A
Marker lamp			
-body side	73/74	194	C2AZ 13466-C
-body side-exc. 71	75/78	168	C7SZ 13466-B
-body side-71	75/78	194	C2AZ 13466-C
-front side	73/74	194	C2AZ 13466-C
-front side	75/78	97NA	C8MY 13466-A

COPYRIGHT © 1986 — FORD MOTOR COMPANY — DEARBORN, MICHIGAN

MINIATURE BULB APPLICATION CHART

● For unique Canadian Motorcraft part numbers, refer to Identification Chart which precedes this Application Chart

13466 BULB (MINIATURE) — Cont'd

A (MERCURY)

FUNCTION	YEAR	INDUSTRY NO.	U.S. ● PART NUMBER
Oil pressure-warning lamp	73/78	194	C2AZ 13466-C
Parking lamp	73/	1157NA	C9MY 13466-A
Radio dial			
-AM/FM tape	74/76	37	D4AZ 13466-A
-AM,AM/FM	73/76	1893	C1VY 13466-A
Radio pilot light			
AM	77/	1893	CIVY 13466-A
AM/FM/MPX	77/	1893	CIVY 13466-A
AM/FM/MPX/Tape	77/	37	D4AZ 13466-A
AM/FM/MPX/Search	77/	37	D4AZ 13466-A
AM/FM/MPX/Quad Tape	77/	37	D4AZ 13466-A
Radio stereo light			
AM/FM/MPX	77/	1892	B9MY 13466-A
AM/FM/MPX/Search	77/	1892	B9MY 13466-A
Rear lamp	73/78	1157	C8TZ 13466-A
	79	168	C7SZ 13466-B
	79	1157	C8TZ 13466-A
Seat belt warning	73/	194	C2AZ 13466-C
Speedometer dial	73/	194	C2AZ 13466-C
Stereo lamp			
-AM/FM	73/76	1892	B9MY 13466-A
-AM/FM tape	74/76	37	D4AZ 13466-A
Temperature warning lamp-hot/cold	73/	194	C2AZ 13466-C
Turn signal indicator	73/	194	C2AZ 13466-C
Visor-vanity mirror	74/	212-2	D4MY 13466-A
Windshield wiper-washer	73	161	C3AZ 13466-D
	74/78	1815	D2TZ 13466-A
	79	194	C2AZ 13466-C

C (MONTEGO)

FUNCTION	YEAR	INDUSTRY NO.	U.S. ● PART NUMBER
A/C control	76	161	C3AZ 13466-D
Alternator warning lamp	73/76	194	C2AZ 13466-C
Ash receptacle	73/76	161	C3AZ 13466-D
Automatic trans. indicator	74	37	D4AZ 13466-A
Backup lamp	73/76	1156	C3DZ 13466-A
Brake system master cylinder warning lamp	73/76	194	C2AZ 13466-C
Cargo lamp	73/76	105	D0AZ 13466-A
Clock	73/76	194	C2AZ 13466-C
Courtesy lamp			
-instrument panel	73/75	631	C3VY 13466-A
	76	89	B5AZ 13466-A
Dome and map lamp	73/76	211-2	D1FZ 13466-B
	73/76	105	D0AZ 13466-A
Dome lamp	73/76	561	D1AZ 13466-A
Engine compartment light	73/75	631	C3VY 13466-A
	76	89	B5AZ 13466-A
Engine vacuum gauge	74/76	1895	C3AZ 13466-B
Floor console	76	1895	C3AZ 13466-B
Fuel economy	75	194	C2AZ 13466-C
Glove compartment lamp	73/76	1816	B8AZ 13466-A
Headlamp switch	73/74	1895	C3AZ 13466-B
	75/76	1815	D2TZ 13466-A
Heater control	73/76	161	C3AZ 13466-D
High beam indicator	73/76	194	C2AZ 13466-C
Instrument cluster illumination	73/76	194	C2AZ 13466-C
License plate lamp			
-exc. 71	73	97	C3AZ 13466-G
-exc. 71	74	631	C3VY 13466-A
-71	73/74	631	C3VY 13466-A
-All	75/76	1178	C5TZ 13466-A
Luggage compartment light	73/75	631	C3VY 13466-A
	76	89	B5AZ 13466-A
Marker lamp			
-body side	73/74	194	C2AZ 13466-C
-body side-71	75/76	194	C2AZ 13466-C
-front fender	73/76	194	C2AZ 13466-C
Oil pressure warning lamp	73/76	194	C2AZ 13466-C
Parking brake warning lamp	73/76	194	C2AZ 13466-C
Parking lamp	73/76	1157NA	C9MY 13466-A
Radio dial			
-AM,AM/FM(Mono)	73/76	1893	C1VY 13466-A
-AM/FM tape	74/76	37	D4AZ 13466-A
Rear lamp	73/76	1157	C8TZ 13466-A
Seat belt warning	74/76	194	C2AZ 13466-C
Stereo lamp			
-AM/FM	74/76	1892	B9MY 13466-A
-AM/FM tape	74/76	37	D4AZ 13466-A
Temperature indicator	73/75	194	C2AZ 13466-C
Transmission selector dial	73/75	1445	D8TZ 13466-A
-fix column	75/76	1445	D8TZ 13466-A
-tilt column	75/76	37	D4AZ 13466-A
-floor shift	75/76	1445	D8TZ 13466-A
Turn signal indicator	73/76	194	C2AZ 13466-C
Visor-vanity mirror	75/76	212-2	D4MY 13466-A
Windshield wiper	73/74	1895	C3AZ 13466-B
	75/76	1815	D2TZ 13466-A

MINIATURE BULB APPLICATION CHART

● For unique Canadian Motorcraft part numbers, refer to Identification Chart which precedes this Application Chart

13466 BULB (MINIATURE) — Cont'd

D (LINCOLN)

FUNCTION	YEAR	INDUSTRY NO.	U.S. ● PART NUMBER
Alternator warning lamp	78/	194	C2AZ 13466-C
Ash receptacle lamp			
-door	73	1445	D8TZ 13466-A
-door	74/	1893	C1VY 13466-A
-instrument panel	73/78	1445	D8TZ 13466-A
	79	194	C2AZ 13466-C
A.T.C. control panel	74/75	161	C3AZ 13466-D
	76/77	194	C2AZ 13466-C
	78/	161	C3AZ 13466-D
Antenna	75/78	1445	D8TZ 13466-A
Backup lamp	74/	1156	C3DZ 13466-A
	73	1076	C1TB 13465-A
Brake system warning	73/	194	C2AZ 13466-C
Cigar lighter lamp	74/	1445	D8TZ 13466-A
Clock	73/	194	C2AZ 13466-C
Coach lamp	75/78	194	C2AZ 13466-C
	79	161	C3AZ 13466-D
Cornering lamp	73/74	1196	C6MY 13466-A
	75/	1295	D3AZ 13466-A
Courtesy lamp			
-doors	73	212-1	D4MY 13466-A
-doors	75/	212-2	D4MY 13466-A
-instrument panel	79	89	B5AZ 13466-A
-pillar	73/	105	D0AZ 13466-A
Dome/map lamp			
-dome	74/78	211-2	D1FZ 13466-B
	79	912	D7TZ 13466-A
-map	74/	105	D0AZ 13466-A
Door ajar	73/	194	C2AZ 13466-C
Engine warning	79	194	C2AZ 13466-C
Fuel gage	79	194	C2AZ 13466-C
Fuel economy	75/77	194	C2AZ 13466-C
Glove compartment lamp	73/78	1895	C3AZ 13466-B
	79	194	C2AZ 13466-C
Headlamp-on warning lamp	73/	194	C2AZ 13466-C
Headlamp switch	73/	194	C2AZ 13466-C
Heater control	73/74	194	C2AZ 13466-C
High beam indicator	73/	194	C2AZ 13466-C
Instrument cluster illumination	73/78	194	C2AZ 13466-C
License plate lamp	73	631	C3VY 13466-A
	74-77/	168	C7SZ 13466-B
	75/76	90	C6SZ 13466-A
Low fuel warning	73/	194	C2AZ 13466-C
Luggage compartment	73/75	631	C3VY 13466-A
	76/	89	B5AZ 13466-A
Marker lamp			
-front side	73	194A	C9DZ 13466-A
-front side	74/	194	C2AZ 13466-C
-rear side	73	194	C2AZ 13466-C
-rear side	74	168	C7SZ 13466-B
Oil pressure warning	76/	194	C2AZ 13466-C
Odometer	79	194	C2AZ 13466-C
Opera window-reading lamp	77/	211-2	D1FZ 13466-B
Parking lamp	73/	1157NA	C9MY 13466-A
PRNDL	79	194	C2AZ 13466-C
Radio dial			
-AM,AM/FM	73/76	1893	C1VY 13466-A
-AM/FM tape	74/76	37	D4AZ 13466-A
Radio Pilot Light			
-AM	79	1893	C1VY 13466-A
AM/FM/MPX	77/	1893	C1VY 13466-A
AM/FM/MPX/Tape	77/	1893	C1VY 13466-A
AM/FM/MPX/Search	77/	37	D4AZ 13466-A
AM/FM/MPX/Quad Tape	77/78	37	D4AZ 13466-A
Radio Stereo Light			
AM/FM/MPX	77/	1892	B9MY 13466-A
AM/FM/MPX Search	77/	1892	B9MY 13466-A
Reading lamp	73/74	562	D0ZZ 13466-A
Rear lamp			
-stop & turn	73/	1157	C8TZ 13466-A
-tail	73	1157	C8TZ 13466-A
-tail	74	168	C7SZ 13466-B
Seat belts warning	79	194	C2AZ 13466-C
Stereo lamp			
-AM/FM	74/76	1892	B9MY 13466-A
-AM/FM tape	74/76	37	D4AZ 13466-A
Sure track warning	76/	194	C2AZ 13466-C
Turn signal indicator	73/	194	C2AZ 13466-C
Visor-vanity mirror	74/	212-2	D4MY 13466-A
Windshield wiper-washer switch	73/	194	C2AZ 13466-C

F (COUGAR)

FUNCTION	YEAR	INDUSTRY NO.	U.S. ● PART NUMBER
A/C control	73	1445	D8TZ 13466-A
	74/	161	C3AZ 13466-D
Alternator warning lamp	73/	194	C2AZ 13466-C
Ash receptacle			
-console	73	1892	B9MY 13466-A
-console	74	161	C3AZ 13466-D
-instrument panel	75/	161	C3AZ 13466-D
Automatic transmission-floor shift indicator	73/75	1445	D8TZ 13466-A
	76	1895	C3AZ 13466-B
Auxiliary cluster	73	194	C2AZ 13466-C
Backup lamp	73	1076	C1TB 13465-A
	74/	1156	C3DZ 13466-A
Brake system-warning lamp	73/	194	C2AZ 13466-C
Clock	73/	194	C2AZ 13466-C
Cornering lamp	77/78	1295	D3AZ 13466-A
	79	1156	C3DZ 13466-A

COPYRIGHT © 1986 — FORD MOTOR COMPANY — DEARBORN, MICHIGAN

MINIATURE BULB APPLICATION CHART

● For unique Canadian Motorcraft part numbers, refer to Identification Chart which precedes this Application Chart

13466 BULB (MINIATURE) — Cont'd

F (COUGAR)

FUNCTION	YEAR	INDUSTRY NO.	U.S. ● PART NUMBER
Courtesy lamp			
–instrument panel	73/75	631	C3VY 13466-A
	76/	89	B5AZ 13466-A
–pillar	73/74	105	D0AZ 13466-A
–cargo (71)	77	105	D0AZ 13466-A
–Door	79	212-2	D4MY 13466-A
Dome lamp	73/	561	D1AZ 13466-A
Dome/map lamp			
–dome	74/78	211-2	D1FZ 13466-B
	79	912	D7TZ 13466-A
–map	74/	105	D0AZ 13466-A
Door ajar	73	194	C2AZ 13466-C
	77/	194	C2AZ 13466-C
Engine compartment	73/75	631	C3VY 13466-A
	76/	89	B5AZ 13466-A
Fan control	76/	1892	B9MY 13466-A
Fuel economy	75	194	C2AZ 13466-C
Fuel gage	79	194	C2AZ 13466-C
Glove compartment			
–console	74/	1895	C3AZ 13466-B
–instrument panel	73	1895	C3AZ 13466-B
–instrument panel	74/	1816	B8AZ 13466-A
Headlamp switch	73/74	1895	C3AZ 13466-B
	75/78	1815	D2TZ 13466-A
Heater control	73	1445	D8TZ 13466-A
	74/	161	C3AZ 13466-D
High beam indicator	73/	194	C2AZ 13466-C
Instrument cluster illumination	73/78	194	C2AZ 13466-C
License plate lamp	73	97	C3AZ 13466-G
	74	631	C3VY 13466-A
	75/76	1178	C5TZ 13466-A
	77/	168	C7SZ 13466-B
Low fuel warning	73	194	C2AZ 13466-C
Luggage compartment	73/75	631	C3VY 13466-A
	76/	89	B5AZ 13466-A
Map lamp (instrument panel)	73	212-1	D4MY 13466-A
Marker lamp			
–front side	74/76	194	C2AZ 13466-C
–front side	77/	194A	C9DZ 13466-A
–rear side	73	194	C2AZ 13466-C
–rear side (71)	77	194	C2AZ 13466-C
Odometer	79	194	C2AZ 13466-C
Oil pressure warning lamp	73/	194	C2AZ 13466-C
Parking brake warning	73/78	194	C2AZ 13466-C
Parking lamp	73/	1157NA	C9MY 13466-A
PRNDL lamp	74	37	D4AZ 13466-A
–fix column	75/	1445	D8TZ 13466-A
–tilt column	75/	37	D4AZ 13466-A
–floor shift	75/	1445	D8TZ 13466-A
Radio pilot light			
–AM	73/	1893	C1VY 13466-A
–AM/FM/Mono	79	1893	C1VY 13466-A
–AM/FM	73	1892	B9MY 13466-A
–AM/FM/MPX	74/	1893	C1VY 13466-A
–AM/FM/MPX/Tape	74/	37	D4AZ 13466-A
–AM/FM/MPX/Search	77/	37	D4AZ 13466-A
–AM/FM/MPX/Quad Tape	79	37	D4AZ 13466-A
Rear lamp	73/	1157	C8TZ 13466-A
Seat belt warning	73/	194	C2AZ 13466-C
Stereo lamp			
–AM/FM/MPX	74/78	1892	B9MY 13466-A
–AM/FM/MPX/Tape	74/	37	D4AZ 13466-A
–AM/FM/MPX/Search	77/78	1892	B9MY 13466-A
–AM/FM/Mono	77/78	1893	C1VY 13466-A
–AM/FM/MPX/Quad tape	77/78	37	D4AZ 13466-A
Tachometer	79	194	C2AZ 13466-C
Temperature warning	79	194	C2AZ 13466-C
Turn signal indicator	73/	194	C2AZ 13466-C
Visor vanity mirror	75/	212-2	D4MY 13466-A
Windshield wiper-washer switch	73/74	1895	C3AZ 13466-B
	75/	1815	D2TZ 13466-A

G (MONARCH)

FUNCTION	YEAR	INDUSTRY NO.	U.S. ● PART NUMBER
A/C control	75/	161	C3AZ 13466-D
Alternator warning lamp	75/78	194	C2AZ 13466-C
Ash tray	75/77	1892	B9MY 13466-A
	78/	1816	B8AZ 13466-A
Automatic trans. lamp	75/76	194	C2AZ 13466-C
Backup lamp	75/	1156	C3DZ 13466-A
Brake warning lamp	75/	194	C2AZ 13466-C
Clock	75/	194	C2AZ 13466-C
Cornering lamp	77/78	1295	D3AZ 13466-A
	79	1156	C3DZ 13466-A
Console warning lamps	77/78	194	C2AZ 13466-C
Courtesy lamp			
–instrument panel	75	631	C3VY 13466-A
	76/	89	B5AZ 13466-A
–door	79	214-2	D2SZ 13466-A
Dome lamp	75/	561	D1AZ 13466-A
Dome/map lamp			
–dome	75/78	211-2	D1FZ 13466-B
	79	912	D7TZ 13466-A
–map	75/	105	D0AZ 13466-A
Door ajar	79	1816	B8AZ 13466-A
Engine compartment lamp	75	631	C3VY 13466-A
	76/	89	B5AZ 13466-A
Engine warning	79	194	C2AZ 13466-C
Fuel economy gauge	75	194	C2AZ 13466-C
Fuel gage	79	194	C24Z 13466-C
Floor shift	78/	1893	C1VY 13466-A
Glove compartment	75/	1816	B8AZ 13466-A
Heater control	75/	161	C3AZ 13466-D
High beam indicator	75/	194	C2AZ 13466-C

MINIATURE BULB APPLICATION CHART

● For unique Canadian Motorcraft part numbers, refer to Identification Chart which precedes this Application Chart

13466 BULB (MINIATURE) — Cont'd

G (MONARCH)

FUNCTION	YEAR	INDUSTRY NO.	U.S. ● PART NUMBER
Instrument cluster	75/78	194	C2AZ 13466-C
License plate lamp	75/76	1178	C5TZ 13466-A
	77/	168	C7SZ 13466-B
Low fuel	79	194	C2AZ 13466-C
Luggage compartment lamp	75	631	C3VY 13466-A
	76/	89	B5AZ 13466-A
Marker lamp			
-front side	78	194	C2AZ 13466-C
	79	168	C7SZ 13466-B
Oil pressure warning	75/78	194	C2AZ 13466-C
Odometer	79	194	C2AZ 13466-C
Parking lamps	75/	1157NA	C9MY 13466-A
Radio Pilot Light			
AM	75/	1893	C1VY 13466-A
AM/FM/Mono	75/	1893	C1VY 13466-A
AM/FM/MPX	75/	1893	C1VY 13466-A
AM/FM/MPX/Tape	75/	37	D4AZ 13466-A
Radio Stereo Light			
AM/FM/MPX	75/	1892	B9MY 13466-A
AM/Stereo Tape	75/	1893	C1VY 13466-A
AM/FM/MPX/Cassette	78/	37	D4AZ 13466-A
Rear lamp			
- - Stop and turn	75/	1157	D8TZ 13466-A
-parking	79	168	C7SZ 13466-B
Seat belt warning	75/	194	C2AZ 13466-C
Temperature warning	75/78	194	C2AZ 13466-C
Turn indicator	75/	194	C2AZ 13466-C
Visor vanity mirror	75/78	212-2	D4MY 13466-A
Wiper washer lamp	75	1816	B8AZ 13466-A

J (CAPRI)

FUNCTION	YEAR	INDUSTRY NO.	U.S. ● PART NUMBER
A/C control	79	161	C3AZ 13466-D
Ash tray receptacle	79	1892	B9MY 13466-A
Alternator warning lamp	79	194	C2AZ 13466-C
Backup lamp	73/78		★ D3RY 13466-F
	79	1156	C3DZ 13466-A
Body side lamp rear	73/78		D1RY 13466-J
Brake system-dual test	73/78		D1RY 13466-J
Brake warning lamp	79	194	C2AZ 13466-C
Cigar lighter	73/78		D3RY 13466-G
Clock	73/78		D3RY 13466-G
	79	194	C2AZ 13466-C
Courtesy lamp			
-instrument panel	73/78		★ D3RY 13466-C
-door	79	214-2	D2SZ 13466-A
Dome lamp	73/78	97	C3AZ 13466-G
	79	906	D8BZ 13466-A
Dome/map lamp			
-dome	79	212-2	D1FZ 13466-B
-map	79	1816	B8AZ 13466-A
Door Ajar	79	194	C2AZ 13466-A
Emergency flasher	73/78		D1RY 13466-C
Engine compartment	73/78		D3RY 13466-B
	79	89	B5AZ 13466-A
Fender side lamp	73/78		D1RY 13466-J
Floor Shift	79	1893	C1VY 13466-A
Fuel gage	79	194	C2AZ 13466-C
Glove compartment	73/78		D3RY 13466-D
	79	1816	B8AZ 13466-A
Hazard switch	73		D1RY 13466-C
	74		D2RY 13466-H
Headlamp switch	73/78		D1RY 13466-C
Head lamp-"ON" warning	79	194	C2AZ 13466-C
Heater Control	73/78		D2RY 13466-H
	79	161	C3AZ 13466-D
High beam indicator	79	194	C2AZ 13466-C
Instrument cluster	73/78		D3RY 13466-A
Luggage Compartment lamp	79	89	B5AZ 13466-A
Map lamp	73/78		★ D3RY 13466-B
Marker lamps			
-front side	79	194	C2AZ 13466-C
Oil pressure warning	79	194	C2AZ 13466-C
Parking lamp	73/	1157	C8TZ 13466-A
PRNDL Lamp	73/78		D3RY 13466-G
Odometer	79	194	C2AZ 13466-C
Oil pressure lamp	79	194	C2AZ 13466-C
Radio	73/78	1892	B9MY 13466-A
Radio Pilot Light:			
-AM	79	1893	C1VY 13466-A
-AM STEREO TAPE	79	1893	C1VY 13466-A
-AM/FM/MONO	79	1893	C1VY 13466-A
-AM/FM/MPX	79	1893	C1VY 13466-A
-AM/FM/MPX/TAPE	79	37	D4AZ 13466-A
Radio Stereo Light:			
-AM/FM/MPX	79	1892	B9MY 13466-A
Rear lamp	73/78	1156	C3DZ 13466-A
	73/78	1155	C3AZ 13466-G
	79	1157	C8TZ 13466-A
Rear license lamp	73/74		D3RY 13466-B
	76/78	1816	B8AZ 13466-A
	79	168	C7SZ 13466-B
Seat belt lamp	73/78		D2RY 13466-H
	79	194	C2AZ 13466-C
Tail lamp(inner)	76/78	1155	C3AZ 13466-G
Tachometer	79	194	C2AZ 13466-C
Temperature warning	79	194	C2AZ 13466-C
Turn signal indicator	79	194	C2AZ 13466-C
Warning lamp(emergency)	73/78		D1RY 13466-C
Windshield wiper switch	73/78		D1RY 13466-C
Visor vanity mirror	79	212-2	D4MY 13466-A

COPYRIGHT © 1986-- FORD MOTOR COMPANY --DEARBORN, MICHIGAN

MINIATURE BULB APPLICATION CHART

● For unique Canadian Motorcraft part numbers, refer to Identification Chart which precedes this Application Chart

13466 BULB (MINIATURE) — Cont'd

K (MARK IV, MARK V)

FUNCTION	YEAR	INDUSTRY NO.	U.S. ● PART NUMBER
Alternator charge indicator	73/	194	C2AZ 13466-C
Ash receptacle lamp			
-door arm rest	73	1445	D8TZ 13466-A
-door arm rest	74/	1893	C1VY 13466-A
-instrument panel	73/	161	C3AZ 13466-D
A.T.C.	75/	161	C3AZ 13466-D
Autolamp system	75/	1816	B8AZ 13466-A
Backup lamp	73/	1156	C3DZ 13466-A
Brake warning lamp	73/	194	C2AZ 13466-C
Cigar lighter	73/74	1891	B9SZ 13466-A
	75/78	1445	D8TZ 13466-A
	79	1815	D2TZ 13466-A
Clock	75/	194	C2AZ 13466-C
Coach lamp	79	161	C3AZ 13466-D
Cornering lamp	73/76	1196	C6MY 13466-A
	77/	1295	D3AZ 13466-A
Courtesy lamp			
-door mount	73/	214-2	D2SZ 13466-A
-instrument panel	73/75	631	C3VY 13466-A
	76/	89	B5AZ 13466-A
-pillar	73	105	D0AZ 13466-A
Dome lamp	79	561	D1AZ 13466-A
Dome and map lamp comb.			
-dome	73/78	211-2	D1FZ 13466-B
	79	912	D7TZ 13466-A
-map	73/	105	D0AZ 13466-A
Door ajar	73/	194	C2AZ 13466-C
Engine compartment lamp	73/75	631	C3VY 13466-A
	76/	89	B5AZ 13466-A
Fan control	75/	1892	B9MY 13466-A
Fuel gage	76/	194	C2AZ 13466-C
Glove compartment lamp	73/	194	C2AZ 13466-C
Headlamp switch	73	1816	B8AZ 13466-A
	74	1893	C1VY 13466-A
	75/78	1816	B8AZ 13466-A
Head lamp nomenclature			
-standard	79	1816	B8AZ 13466-A
-automatic	79	1893	C1VY 13466-A
Heater control	73/74	161	C3AZ 13466-D
High beam indicator	73/	194	C2AZ 13466-C
Instrument cluster illumination	73/78	194	C2AZ 13466-C
License plate lamp	73	97	C3AZ 13466-G
	74/76	1178	C5TZ 13466-A
	77/	168	C7SZ 13466-B
Low fuel warning	73/	194	C2AZ 13466-C
Luggage compartment	73	631	C3VY 13466-A
	74/75	90	C6SZ 13466-A
	76/	89	B5AZ 13466-A
Marker lamp			
-front fender	73/	194	C2AZ 13466-C
-rear side	73	194	C2AZ 13466-C
-rear side	74/78	168	C7SZ 13466-B
	79	194	C2AZ 13466-C
Oil pressure warning-lamps or gauges	73/	194	C2AZ 13466-C
Opera window-reading lamp	73/	211-2	D1FZ 13466-B
Parking brake warning lamp	73	194	C2AZ 13466-C
Parking lamp	73/	1157NA	C9MY 13466-A
Radio Pilot Light			
AM	73/	1893	C1VY 13466-A
AM/FM/MPX	73/	1893	C1VY 13466-A
AM/FM/MPX/Tape	74/	37	D4AZ 13466-A
AM/FM/MPX/Search	75/	37	D4AZ 13466-A
AM/FM/MPX/Quad Tape	77/	37	D4AZ 13466-A
Radio Stereo Light			
AM/FM/MPX	74/	1892	B9MY 13466-A
AM/FM/MPX/Search	74/	1892	B9MY 13466-A
Rear lamp	73/	1157	C8TZ 13466-A
Rear window defrost	73/75	1891	B9SZ 13466-A
Seat belt warning	74/	194	C2AZ 13466-C
Speedometer dial lamp	73/	194	C2AZ 13466-C
Temperature indicator	73/	194	C2AZ 13466-C
Turn signal indicator	73/	194	C2AZ 13466-C
Visor vanity mirror	74/	212-2	D4MY 13466-A
Windshield wiper-washer switch	73/	1891	B9SZ 13466-A

L (BOBCAT)

FUNCTION	YEAR	INDUSTRY NO.	U.S. ● PART NUMBER
A/C control panel	74	1445	D8TZ 13466-A
	75/	161	C3AZ 13466-D
Alternator warning lamp	74/	194	C2AZ 13466-C
Ash receptacle	74/	161	C3AZ 13466-D
Automatic transmission-floor shift indicator	74/	1445	D8TZ 13466-A
Backup lamp	74/	1156	C3DZ 13466-A
Brake warning lamp	74/	194	C2AZ 13466-C
Cargo lamp	74/76	212-1	D4MY 13466-A
	77/	212-2	D4MY 13466-A
Clock	74	1895	C4SZ 13466-B
	77	161	C3AZ 13466-D
Courtesy Lamp			
-instrument panel	78/	89	B5AZ 13466-A
Dome lamp	74	211-2	D1FZ 13466-B
	75/	212-2	D4MY 13466-A
Dome/map lamp	76/78	1816	B8AZ 13466-A
-dome	79	212-2	D4MY 13466-A
-map	79	1816	B8AZ 13466-A

MINIATURE BULB APPLICATION CHART

● For unique Canadian Motorcraft part numbers, refer to Identification Chart which precedes this Application Chart

13466 BULB (MINIATURE) — Cont'd

L (BOBCAT)

FUNCTION	YEAR	INDUSTRY NO.	U.S. ● PART NUMBER
Engine compartment lamp	74/75	631	C3VY 13466-A
	76/	89	B5AZ 13466-A
Engine warning	79	194	C2AZ 13466-C
Fuel gage	79	194	C2AZ 13466-C
Glove compartment lamp	74/	1816	B8AZ 13466-A
Heater control	74/	1445	D8TZ 13466-A
High beam indicator	74/	194	C2AZ 13466-C
Instrument cluster	74/	194	C2AZ 13466-C
License plate lamp	74	631	C3VY 13466-A
	75/76	1178	C5TZ 13466-A
	77/	168	C7SZ 13466-B
Lift gate open	75/	194	C2AZ 13466-C
Luggage compartment lamp	74/75	631	C3VY 13466-A
	76/	89	B5AZ 13466-A
Marker lamp			
-body side	74/	194	C2AZ 13466-C
-front side	74/	194	C2AZ 13466-C
Odometer	79	194	C2AZ 13466-C
Oil pressure warning lamp	74/	194	C2AZ 13466-C
Parking lamp	74/	1157NA	C9MY 13466-A
Radio pilot light			
-AM	74/	1893	C1VY 13466-A
-AM stereo tape	79	1893	C1VY 13466-A
-AM/FM/MPX	74/	1893	C1VY 13466-A
-AM/FM/Mono	74/75	1892	B9MY 13466-A
	76/	1893	C1VY 13466-A
Rear lamp	74/	1157	C8TZ 13466-A
Seat belt warning	74/	194	C2AZ 13466-C
Stereo lamp			
-AM/FM/MPX	74/	1892	B9MY 13466-A
Tachometer	79	194	C2AZ 13466-C
Temperature warning	79	194	C2AZ 13466-C
Transmission selector dial	75/77	1445	D8TZ 13466-A
Turn signal indicator	74/	194	C2AZ 13466-C
Windshield wiper washer switch	74/78	1895	C3AZ 13466-B
	79	194	C2AZ 13466-C

P (COMET)

FUNCTION	YEAR	INDUSTRY NO.	U.S. ● PART NUMBER
A/C control panel	75/77	1445	D8TZ 13466-A
Alternator warning lamp	73/77	194	C2AZ 13466-C
Ash receptacle lamp	73/77	1445	D8TZ 13466-A
Backup lamp	73	1076	C1TB 13465-A
	74/75	1156	C3DZ 13466-A
	76/77	1076	C1TB 13465-A
Brake warning lamp	73/77	194	C2AZ 13466-C
Clock	73	1895	C3AZ 13466-B
Courtesy lamp			
-instrument panel	75	631	C3VY 13466-A
	76/77	89	B5AZ 13466-A
Dome lamp	73/77	561	D1AZ 13466-A
Dome/map lamp	74/77	211-2	D1FZ 13466-B
	74/77	105	D0AZ 13466-A
Engine compartment	75	631	C3VY 13466-A
	76/77	89	B5AZ 13466-A
Fan	76/77	1892	B9MY 13466-A
Fuel economy	75	194	C2AZ 13466-C
Glove compartment	73/77	1816	B8AZ 13466-A
Heater control	73/77	1445	D8TZ 13466-A
High beam indicator	73/77	194	C2AZ 13466-C
Instrument cluster	73/77	194	C2AZ 13466-C
License plate lamp	73	97	C3AZ 13466-G
	74/76	1178	C5TZ 13466-A
	77	168	C7SZ 13466-B
Luggage compartment lamp	73/75	631	C3VY 13466-A
	76/77	89	B5AZ 13466-A
Marker lamp			
-body side	73/74	161	C3AZ 13466-D
-body side	75/77	194	C2AZ 13466-C
-fender side	73/74	161	C3AZ 13466-D
-front side	75/77	194	C2AZ 13466-C
Parking lamps	73/75	1157	C8TZ 13466-A
	76/77	1157NA	C9MY 13466-A
Radio dial	73/77	1893	C1VY 13466-A
Rear lamp	73/77	1157	C8TZ 13466-A
Seat belt warning	73/76	194	C2AZ 13466-C
Stereo lamp	74/77	1892	B9MY 13466-A
Temperature warning	73/77	194	C2AZ 13466-C
Transmission shift indicator	73/77	1445	D8TZ 13466-A
Turn signal indicator	73/77	194	C2AZ 13466-C
Windshield wiper-washer switch	73	194	C2AZ 13466-C
	74/77	168	C7SZ 13466-B

P (ZEPHYR)

FUNCTION	YEAR	INDUSTRY NO.	U.S. ● PART NUMBER
A/C controls	78/	161	C3AZ 13466-D
Alternator warning lamp	78/	194	C2AZ 13466-C
Ash receptacle			
- - exc. 36R	78/	1892	B9MY 13466-A
- - 36R	78/	161	C3AZ 13466-D
	79	1892	B9MY 13466-A
Backup lamp	78/	1156	C3DZ 13466-A
Brake warning lamp	78/	194	C2AZ 13466-C
Cargo lamp (74)	78/	906	D8BZ 13466-A
Clock	78/	194	C2AZ 13466-C
Courtesy lamp			
-Instrument panel	78	89	B5AZ 13466-A
-door	79	214-2	D2SZ 13466-A
Console (36R)	78/	1895	C4SZ 13466-B
Dome lamp	78/	906	D8BZ 13466-A

COPYRIGHT © 1986 — FORD MOTOR COMPANY — DEARBORN, MICHIGAN

MINIATURE BULB APPLICATION CHART

● For unique Canadian Motorcraft part numbers, refer to Identification Chart which precedes this Application Chart

13466 BULB (MINIATURE) — Cont'd

P (ZEPHYR)

FUNCTION	YEAR	INDUSTRY NO.	U.S. ● PART NUMBER
Dome/map lamp comb.			
–dome	78/	906	D8BZ 13466–A
–map–exc. 36R	78/	1816	B8AZ 13466–A
–map–36R	78/	105	D0AZ 13466–A
Door Ajar	79	194	C2AZ 13466–C
Engine compartment lamp	78/	89	B5AZ 13466–A
Fan nomenclature	78/	1892	B9MY 13466–A
Floor shift	78/	1445	D8TZ 13466–A
	79	1893	C1VY 13466–A
Fuel gage	79	194	C2AZ 13466–C
Glove compartment lamp	78/	1816	B8AZ 13466–A
Heater control	78/	161	C3AZ 13466–D
Headlamp switch	78	1815	D2TZ 13466–A
High beam indicator	78/	194	C2AZ 13466–C
Instrument cluster	78	194	C2AZ 13466–C
License plate lamp			
–exc. 36R	78/	168	C7SZ 13466–B
–36R	78/	194	C2AZ 13466–C
Lift gate open	79	194	C2AZ 13466–C
Luggage compartment lamp	78/	89	B5AZ 13466–A
Low fuel warning lamp	78/	194	C2AZ 13466–C
Marker lamps			
–front side	78/	194	C2AZ 13466–C
–rear side	78/	194	C2AZ 13466–C
Oil pressure warning lamp	78/	194	C2AZ 13466–C
Odometer	79	194	C2AZ 13466–C
Parking lamp			
–park	78/	194A	C9DZ 13466–A
–park and turn	78/	1157NA	C9MY 13466–A
PRNDL	78	1445	D8TZ 13466–A
	79	1893	C1VY 13466–A
Radio pilot light			
AM	78/	1893	C1VY 13466–A
AM/FM/Mono	78/	1893	C1VY 13466–A
AM/FM/MPX	78/	1893	C1VY 13466–A
AM/Stereo/tape	78/	1893	C1VY 13466–A
AM/FM/MPX/Tape	78/	37	D4AZ 13466–A
Radio Stereo Light			
–AM/FM/MPX	79	1892	B9MY 13466–A
AM/FM/MPX/Stereo	78/	1892	B9MY 13466–A
AM/FM/MPX/Cassette	78/	37	D4AZ 13466–A
AM/FM/MPX/Search	78	37	D4AZ 13466–A
AM/FM/MPX/Stereo/Search	78	1892	B9MY 13466–A
Quad/tape	78	37	D4AZ 13466–A
Rear lamp	78/	1157	C8TZ 13466–A
Seat belt warning lamp	78/	194	C2AZ 13466–C
Tachometer	79	194	C2AZ 13466–C
Temperature warning lamp	78/	194	C2AZ 13466–C
Tilt wheel	78/	37	D4AZ 13466–A
Turn indicator	78/	194	C2AZ 13466–C
Vanity mirror–visor	78/	212–2	D4MY 13466–A
Windshield/Wiper–washer			
– – exc. 36R	78	168	C7SZ 13466–B
– – 36R	78	1815	D2TZ 13466–A

V (VERSAILLES)

FUNCTION	YEAR	INDUSTRY NO.	U.S. ● PART NUMBER
A/C controls	77/	161	C3AZ 13466–D
Alternator warning lamp	77/78	194	C2AZ 13466–C
Ash receptacle	77/	1816	B8AZ 13466–A
Back–up lamp	77/	1156	C3DZ 13466–A
Brake warning lamp	77/	194	C2AZ 13466–C
Clock	77/	194	C2AZ 13466–C
Coach lamp	77/	161	C3AZ 13466–D
Cornering lamp	77/	1156	C3DZ 13466–A
Console warning lamps	77/78	194	C2AZ 13466–C
Courtesy lamp			
–Instrument panel	77/	89	B5AZ 13466–A
Dome/map lamp comb.			
–dome	77/78	211–2	D1FZ 13466–B
	79	912	D7TZ 13466–A
–map	77/	105	D0AZ 13466–A
Door Ajar	79	194	C2AZ 13466–C
Engine compartment	77/	89	B5AZ 13466–A
Engine warning	79	194	C2AZ 13466–C
Floor shift	77/	1893	C1VY 13466–A
Fuel gage	79	194	C2AZ 13466–C
Glove compartment lamp	77/	1816	B8AZ 13466–A
Heater control	77/	161	C3AZ 13466–D
Headlamps–"ON" warning	79	194	C2AZ 13466–C
High beam indicator	77/	194	C2AZ 13466–C
Instrument cluster	77/78	194	C2AZ 13466–C
License plate lamp	77/	168	C7SZ 13466–B
Low fuel	79	194	C2AZ 13466–C
Luggage compartment	77/	89	B5AZ 13466–A
Marker lamps			
–front side	79	194	C2AZ 13466–C
Odometer	79	194	C2AZ 13466–C
Oil Pressure warning lamp	77/78	194	C2AZ 13466–C
Parking lamp	77/	1157NA	C9MY 13466–A
Radio Pilot Light			
–AM	77/	1893	C1VY 13466–A
–AM/FM/Mono	77/	1893	C1VY 13466–A
–AM/FM/MPX	77/	1893	C1VY 13466–A
–AM/FM/MPX/Tape	77/	37	D4AZ 13466–A
AM/Stereo/Tape	77/	1893	C1VY 13466–A
Radio Stereo Light			
AM/FM/MPX	77/	1892	B9MY 13466–A
AM/FM/MPX/Cassette	77/	37	D4AZ 13466–A
Rear lamp	77/	1157	C8TZ 13466–A
Seat belt warning lamp	77/	194	C2AZ 13466–C
Temperature warning lamp	77/78	194	C2AZ 13466–C
Trunk lid open	79	194	C2AZ 13466–C

MINIATURE BULB APPLICATION CHART

● For unique Canadian Motorcraft part numbers, refer to Identification Chart which precedes this Application Chart

13466 BULB (MINIATURE) — Cont'd

V (VERSAILLES)

FUNCTION	YEAR	INDUSTRY NO.	U.S. ● PART NUMBER	FUNCTION	YEAR	INDUSTRY NO.	U.S. ● PART NUMBER
Turn signal indicator	77/	194	C2AZ 13466-C	Visor-vanity mirror	77/	212-2	D4MY 13466-A

Y (METEOR)

FUNCTION	YEAR	INDUSTRY NO.	U.S. ● PART NUMBER	FUNCTION	YEAR	INDUSTRY NO.	U.S. ● PART NUMBER
A/C control panel	75/76	161	C3AZ 13466-D	License plate lamp			
Alternator warning lamp	73/76	194	C2AZ 13466-C	-exc. 71	73/74	90	C6SZ 13466-A
Ash receptacle	73/76	161	C3AZ 13466-D	-71	73/74	1178	C5TZ 13466-A
Backup lamp	73	1156	C3DZ 13466-A	-exc. 71	75/76	1178	C5TZ 13466-A
	74	1295	D3AZ 13466-A	-71	75/76	194	C2AZ 13466-C
	75/76	1156	C3DZ 13466-A	Luggage compartment	73/75	631	C3VY 13466-A
Brake system master cylinder warning lamp	73/76	194	C2AZ 13466-C		76	89	B5AZ 13466-A
				Marker lamp			
				-body side	73/74	194	C2AZ 13466-C
Cargo lamp	73/76	105	D0AZ 13466-A	-body side-exc. 71	75/76	168	C7SZ 13466-D
Clock	73/76	194	C2AZ 13466-C	-body side-71	75/76	194	C2AZ 13466-C
Cornering lamp	73/76	1295	D3AZ 13466-A	-front side	73/74	194	C2AZ 13466-C
Courtesy lamp				-front side	75/76	97NA	C8MY 13466-A
-pillar	73/76	105	D0AZ 13466-A	Oil pressure-warning lamp	73/76	194	C2AZ 13466-C
-instrument panel	73/75	631	C3VY 13466-A				
	76	89	B5AZ 13466-A	Parking lamp	73/76	1157NA	C9MY 13466-A
-door mounted	73/76	214-2	D2SZ 13466-A	Radio dial			
Dome lamp	73/76	561	D1AZ 13466-A	-AM,AM/FM	73/76	1893	C1VY 13466-A
Dome/map lamp	74/76	211-2	D1FZ 13466-B	-AM/FM tape	74/76	37	D4AZ 13466-A
		105	D0AZ 13466-A	Rear lamp	73/76	1157	C8TZ 13466-A
Engine compartment	73/75	631	C3VY 13466-A	Seat belt warning	73/76	194	C2AZ 13466-C
	76	89	B5AZ 13466-A	Speedometer dial	73/76	194	C2AZ 13466-C
Fuel economy	75	194	C2AZ 13466-C	Stereo lamp			
Glove compartment lamp	73/76	194	C2AZ 13466-C	-AM/FM	73/76	1892	B9MY 13466-A
Headlamp switch	73	161	C3AZ 13466-D	-AM/FM tape	74/76	37	D4AZ 13466-A
	74/76	1815	D2TZ 13466-A	Temperature warning lamp-hot/cold	73/76	194	C2AZ 13466-C
Heater control	73/76	161	C3AZ 13466-D				
High beam indicator	73/76	194	C2AZ 13466-C	Turn signal indicator	76/76	194	C2AZ 13466-C
Instrument panel illumination	73/75	194	C2AZ 13466-C	Visor-vanity mirror	74/76	212-2	D4MY 13466-A
				Windshield wiper-washer switch	73	161	C3AZ 13466-D
					74/76	1815	D2TZ 13466-A

YEAR	MODEL/RESTRICTIONS	PART NUMBER	DESCRIPTION	QTY.
13471	**BRACKET (REAR LAMP MOUNTING)**			
73	F	D1WY 13471-A		4
76/78	J	★ D5RY 13471-A	Not replaced	2
13478-9	**PAD (REAR LAMP DOOR)**			
77/79	V	(RH) ★ D94Y 13478-A	(LH) ★ D94Y 13479-A Not replaced	1
13480	**SWITCH ASSY. (STOP LIGHT)**			
73/76	Y - - w/o hydro boost brake	E3ZZ 13480-A	*SW-861-A-#D2AB 13480-AA,BA, E3ZB 13480-BA	1
73/74	D "Before 4/8/74"			1
73/78	A - - w/o hydro boost brake			1
78/	P			1
74	L			1
79	J			1
74	D "From 4/8/74"	D3VY 13480-A	*SW-1199	1

COPYRIGHT © 1986 — FORD MOTOR COMPANY — DEARBORN, MICHIGAN

1973/79 LINCOLN-MERCURY CARS

YEAR	MODEL/RESTRICTIONS	PART NUMBER	DESCRIPTION	QTY.
13480	SWITCH ASSY. (STOP LIGHT) — Cont'd			
75/78	A,Y - - w/hydro boost brakes	D5LY 13480-A	*SW-1253 -#D5LB 13480-AA	1
75/	D,K			1
75/77	G - - w/power disc brakes			1
77	V - - w/power disc brakes			1
73/76	C - - w/o power brakes	D1ZZ 13480-A	*SW-989-#D1ZB 13480-AA, E27B 13480-BA	1
73/76	F - - w/o power brakes			1
75/	G - - w/o power brakes			1
75/	L - - w/o power brakes			1
77/78	V - - w/o power brakes			1
78/	G,V - - w/power brakes	E3UZ 13480-A	*SW-1886-#D6UB 13480-AA, E3UB 13480-AA	1
73/76	C - - power brakes	D1ZZ 13480-B	*SW-990-#D1ZB 13480-BA	1
73/	F - - power brakes			1
73/74	K			1
75/	L - - w/power brakes			1
73/78	J	E0RZ 13480-A	*SWE-1047-B-#71BB 13480-AC,AD	1
73/74	P	C90Z 13480-A	*SW-881-#C90B 13480-A	1
75/77	P - - w/o power brakes			1
75/77	P - - w/power brakes	D5BZ 13480-A	*SW-1257-#D5BB 13480-AA	1
79	A	E6AZ 13480-A	*SW-1520-B-#D9AB 13480-AA,E3VB 13480-AA, E6AB 13480-AA	1
73/	C,F	380699-S2	(NN-128-F)-pin-attach switch to master cylinder	1
73/78	J	E-820015-S72	(AM-13)-nut-M12(Metric)	1

YEAR	MODEL/RESTRICTIONS	PART NUMBER (RH)	PART NUMBER (LH)		QTY.
13489	DOOR (REAR LAMP LENS)				
73	A(exc. 71),Y(exc. 71)	(RH) ★ D3MY 13489-A	(LH) ★ D3MY 13489-B	Not replaced	1
74	A(exc. 71),Y(exc. 71)	(RH) ★ D4MY 13489-A	(LH) ★ D4MY 13489-B	Not replaced	1
75/76	Y(exc. 71)	(RH) D5MY 13489-A	(LH) D5MY 13489-B		1
75/78	A(exc.71)				1
73/78	A(71)	(RH) ★ D3MY 13489-D	(LH) ★ D3MY 13489-C	Not replaced	1
73/76	Y(71)				1
74/76	C(exc. 71)	(RH) ★ D4GY 13489-C	(LH) ★ D4GY 13489-D	Not replaced	1
73/75	C(71) "Before 6/23/75"	(RH) ★ D20Z 13489-A	(LH) ★ D20Z 13489-B	Not replaced	1
75/76	C(71) "From 6/23/75"	(RH) D60Z 13489-A	(LH) D60Z 13489-B		1
73	D	(RH) ★ D2VY 13489-A	(LH) ★ D2VY 13489-A	Not replaced	1
74	D	(RH) ★ D4VY 13489-A	(LH) ★ D4VY 13489-B	Not replaced	1
73	F	(RH) ★ D3WY 13489-A	(LH) ★ D3WY 13489-B	Not replaced	1
74/76	F	(RH) ★ D4WY 13489-C	(LH) ★ D4WY 13489-D	Not replaced	1
77/	F(53,65D,K)	(RH) D7WY 13489-C	(LH) D7WY 13489-D		1
77/78	F(65L)	(RH) D8WY 13489-A	(LH) D8WY 13489-B		1
77	F(71)	(RH) D60Z 13489-A	(LH) D60Z 13489-B		1
75/77	G	(RH) D54Y 13489-A	(LH) D54Y 13489-B		1
77	G(66H) - - Sports coupe	(RH) D74Y 13489-C	(LH) D74Y 13489-D		1
78/	G				1
73	K	(RH) ★ D2LY 13489-A	(LH) ★ D2LY 13489-B	Not replaced	1
74/76	K	(RH) ★ D4LY 13489-A	(LH) ★ D4LY 13489-B	w/o 13A415 shield	1
74/76	K	(RH) ★ D4LY 13489-C	(LH) ★ D4LY 13489-D	w/13A415-shield	1
77	K "Before 10/1/76"	(RH) D7LY 13489-A	(LH) D7LY 13489-B	Black	1
77/	K "From 10/1/76"	(RH) D7LY 13489-C	(LH) D7LY 13489-D	Red	1
74	L(62,64) "Before 11/5/73"	(RH) D4FZ 13489-A	(LH) D4FZ 13489-B		1
74/78	L(62,64) "From 11/5/73 to 3/13/78"	(RH) ★ D4FZ 13489-C	(LH) ★ D4FZ 13489-D	Not replaced	1
78	L(62,64) "From 3/13/78"	(RH) ★ D7YY 13489-A	(LH) ★ D7YY 13489-B	Not replaced	1
74/75	L(73)	(RH) ★ D2FZ 13489-A	(LH) ★ D2FZ 13489-B	Not replaced	1
76/	L(73)	(RH) D6FZ 13489-A	(LH) D6FZ 13489-B		1
73/77	P	(RH) ★ D0GY 13489-H	(LH) ★ D0GY 13489-J	Not replaced	1
78/	P(36R)	(RH) D8BZ 13489-A	(LH) D8BZ 13489-B	ends	1
78/	P(36R)	D8BZ 13489-C	Center-upper and lower		2

1973/79
LINCOLN-MERCURY CARS

YEAR	MODEL/RESTRICTIONS	PART NUMBER	DESCRIPTION		QTY.
13489	DOOR (REAR LAMP LENS) — Cont'd				
77/	V	(RH) D74Y 13489-A	(LH) D74Y 13489-B		1
13A493	PAD (REAR REFLECTOR MOUNTING)				
75/	D	D5VY 13A493-A	Rubber		2
13A495	SEAL (REAR LAMP)				
73	A(exc. 71),Y(exc. 71)	(RH) D3MY 13A495-A	(LH) D3MY 13A495-A		1
74	A(exc. 71),Y(exc. 71)	(RH) ★ D4MY 13A495-A	(LH) ★ D4MY 13A495-A	Not replaced	1
75/78	A(exc. 71)	(RH) ★ D5MY 13A495-A	(LH) ★ D5MY 13A495-B	Outer-not replaced	1
75/76	Y(exc.71)				1
75/78	A(exc. 71)	(RH) ★ D5MY 13A495-C	(LH) ★ D5MY 13A495-C	Inner-not replaced	1
75/76	Y(exc.71)				1
73/78	A(71)	(RH) ★ D3MY 13A495-B	(LH) ★ D3MY 13A495-C	Not replaced	1
73/76	Y(71)				1
79	A(54,66)	(RH) D9MY 13A495-A	(LH) D9MY 13A495-C		1
79	A(74)	(RH) D9MY 13A495-B	(LH) D9MY 13A495-B		1
74/76	C(exc. 71),F	(RH) ★ D4GY 13A495-A	(LH) ★ D4GY 13A495-A	Not replaced	1
74	D	★ D4VY 13A495-A	Inner end-not replaced		2
		★ D4VY 13A495-B	Outer end-not replaced		2
		★ D4VY 13A495-C	Center-not replaced		4
75/	D	(RH) D5VY 13A495-A	(LH) D5VY 13A495-A		2
77/	F(53,65D,K)	(RH) D7OZ 13A495-A	(LH) D7OZ 13A495-B		1
77/78	F(65L)	(RH) D7WY 13A495-A	(LH) D7WY 13A495-A		1
79	F(65L)	(RH) D9WY 13A495-B	(LH) D9WY 13A495-C		1
79	F(65L)	(RH) D9WY 13A495-A	(LH) D9WY 13A495-A	Outer	1
75/	G	★ D5DZ 13A495-A	Outer-not replaced		2
		★ D5DZ 13A495-B	Center-not replaced		2
		★ D5DZ 13A495-C	Inner-not replaced		2
79	J	(RH) D9ZZ 13A495-A	(LH) D9ZZ 13A495-B		1
74/76	K	(RH) ★ D4LY 13A495-A	(LH) ★ D4LY 13A495-B	Not replaced	1
77/	K	(RH) D7LY 13A495-A	(LH) D7LY 13A495-A		1
74/78	L(62,64)	(RH) ★ D4FZ 13A495-A	(LH) ★ D4FZ 13A495-A	For rear reflector	1
79	L	(RH) ★ D9FZ 13A495-A	(LH) ★ D9FZ 13A495-A	Not replaced	1
74/	L(73)	(RH) ★ D2FZ 13A495-A	(LH) ★ D2FZ 13A495-B	Not replaced	1
73/77	P	(RH) ★ D0GY 13A495-D	(LH) ★ D0GY 13A495-D	Not replaced	1
78/	P(54,66)	(RH) E2BZ 13A495-A	(LH) E2BZ 13A495-B		1
78/	P(36R)	(RH) D8BZ 13A495-B	(LH) D8BZ 13A495-B		1
78/	P(74)	(RH) D8BZ 13A495-C	(LH) D8BZ 13A495-C		1
77/	V	★ D5DZ 13A495-A	Outer-not replaced		2
		★ D5DZ 13A495-B	Center-not replaced		2
		★ D5DZ 13A495-C	Inner-not replaced		2

COPYRIGHT © 1986 — FORD MOTOR COMPANY — DEARBORN, MICHIGAN

1973/79
LINCOLN-MERCURY CARS

YEAR	MODEL/RESTRICTIONS	PART NUMBER	DESCRIPTION	QTY.
13A506	RETAINER (REAR LAMP WIRING)			
73/	A,Y	D3AZ 13A506-B		AR
74/	D,K			AR
75/	G,L,V			AR
73/75	Y	D1AZ 13A506-A	Use w/vacuum headlamp hose	AR
73/78	A			AR
73/78	A,K,P,Y	C8TZ 13A506-A		AR
73/	D,F,G,L,V			AR
73/78	C,G,L,P,Y	C7AZ 13A506-B		AR
73/	A,D,F,K,V			AR
74/78	A,C,G,L,Y	D4AZ 13A506-A		AR
79	F,K			AR
75/78	A,D,G,Y	★ D00Z 13A506-A	Not replaced	AR
78	A	D2VY 13A506-A		AR
79	G			AR
78	L	D4ZZ 13A506-A		AR
79	F,G,L,V			AR
75/76	G	★ D5DZ 13A506-B	Not replaced	AR
75/76	K,L	★ D5FZ 13A506-A	Not replaced	AR
13508	SHIELD (REAR LICENSE PLATE LAMP)			
79	A(74)	D9MY 13508-A	Paint to match	1
73/78	J	D0RY 13508-A		1
		120321-ES	Clip	4
13520	SEAL (REAR LAMP)			
73/76	C(71)	(RH) D20Z 13520-A	(LH) D20Z 13520-B	1
13W520	SEAL (REAR LAMP LENS)			
75/	G	D6DZ 13W520-A	20 1/2" long-cut to size-used to faciliate Rear lamp lens installation	2
77/	K		Back-up lamp lens installation	2
77/	V		Rear lamp lens installation	AR
78/	P		Rear lamp lens installation	2
79	L(62,64)	D9FZ 13W520-A	Rear lamp lens-40 in. long-cut to size	AR
79	A(54,66),F,J	E1FZ 13W520-A	Rear lamp lens-65 in. long-cut to size	AR
13533	CAP (HEADLAMP DIMMER FOOT SWITCH)			
73/74	A,C,F,Y	C5ZZ 13533-A		1
75/	D,K			1
13539	RETAINER (REAR LAMP LENS)			
79	J	D9ZZ 13539-A		8
13547	LENS ASSY. (COURTESY LAMP)			
73/74	K	★ D2LY 13547-A	Luggage compartment lamp-not replaced	1
13A547	SPACER (REAR LAMP MOUNTING BOLT)			
77/	F (53D,65D)	D70Z 13A547-A		8
13550	LAMP ASSY. (REAR LICENSE)			
	A (Mercury)			
73	A(exc. 71)	★ D3AZ 13550-A	Not replaced	1
74/76	A(exc. 71)	★ D4MY 13550-A	Not replaced	1
77/78	A(exc.71)	D7AZ 13550-A		1
79	A(54,66)	D9MY 13550-A		1
73	A(71)	★ D3AZ 13550-B	R.H. and L.H.-Not replaced	2
74/78	A(71)	D4AZ 13550-B	R.H. and L.H.	2
79	A(74)	D9AZ 13550-A		2
	C (Montego)			
73	C(exc. 71)	★ D2GY 13550-A	Not replaced	1
73	C(71)	★ D20Z 13550-B	Not replaced	2
74/76	C	D40Z 13550-B		1

COPYRIGHT © 1986 — FORD MOTOR COMPANY — DEARBORN, MICHIGAN

1973/79
LINCOLN-MERCURY CARS

YEAR	MODEL/RESTRICTIONS	PART NUMBER	DESCRIPTION	QTY.
13550	LAMP ASSY. (REAR LICENSE) — Cont'd			
	D (Lincoln)			
73	D	★D3VY 13550-A	Not replaced	1
74	D		Part of rear lamp #13404-5	
75/76	D	D4AZ 13550-A		1
77/	D	D7AZ 13550-A		1
	F (Cougar)			
73	F	★D3WY 13550-A	Not replaced	1
74/76	F	D40Z 13550-B		1
77	F(71)			1
77/	F(53,65)	D7AZ 13550-A		1
	G (Monarch)			
75/77	G "Before 3/7/77"	D5DZ 13550-A		1
77/	G "From 3/7/77"	D7AZ 13550-A		1
	J (Capri)			
73/74	J - - 4 cyl. 122(2000 cc)	D3RY 13550-C	R.H. and L.H.	2
73	J - - 6 cyl. 159(2600 cc)- "From 10/1/72"	D3RY 13550-D	R.H. and L.H.	2
74	J - - 6 cyl. 171(2800 cc)			1
76/78	J	★D5RY 13550-A	Not replaced	1
79	J	D9ZZ 13550-A		2
	K (Mark IV, Mark V)			
73	K	★D3SZ 13550-A	Not replaced	1
74/76	K	★D4SZ 13550-A	Not replaced	1
77/	K	D7AZ 13550-A		1
	L (Bobcat)			
74/76	L	★D4FZ 13550-B	Not replaced	1
77/	L	D7AZ 13550-A		1
	P (Comet)			
73	P	★D3DZ 13550-B	Not replaced	1
74/76	P	★D4FZ 13550-B	Not replaced	1
77	P	D7AZ 13550-A		1
	P (Zephyr)			
78/	P(54,66,74)	D7AZ 13550-A		1
	V (Versailles)			
77/	V	D7AZ 13550-A		1
	Y (Meteor)			
73	Y(exc. 71)	★D3AZ 13550-A	Not replaced	1
74/76	Y(exc. 71)	D4MY 13550-A		1
73	Y(71)	D3AZ 13550-B	R.H. and L.H.	2
74/76	Y(71)	D4AZ 13550-B	R.H. and L.H.	2
73	A(exc. 71)	40917-S8	(U-257)-screw-No. 8-32 x 1/2"	2
73	A,C,Y	356642-S36	(MM-126-E)-nut-1 1/4"-18(attach lamp to bumper)	2
73	C	52012-S8	(U-202)-screw(attach lamp to rear bumper)- No. 8-15 x 1/2"	2
74	C,F,L,P	55928-S2	(U-380-A)-screw(attach lamp to bumper bar)- No. 8-18 x 3/4"	AR

YEAR	MODEL/RESTRICTIONS	PART NUMBER	DESCRIPTION	QTY.
13550	LAMP ASSY. (REAR LICENSE) — Cont'd			
74	C,F	40927-S8	(U-262)-screw(attach lamp to rear bumper)-1/4"-20 x 1/2"	2
73/78	J	120321-ES	Clip(attach lamp to rear panel)	4
13560	WIRING ASSY. (REAR LICENSE PLATE LAMP)			
73/74	J	★ D0RY 13560-A	Not replaced	1
13564	LENS (REAR LICENSE LAMP)			
73/76	A(exc. 71),Y(exc. 71)	C4AZ 13564-A		1
73/76	C,F,K,P			1
73	D			1
74/76	L			1
75/76	D,G			1
73	A(71),Y(71) "Before 10/2/72"	★ D0TZ 13564-A	Not replaced	2
73/78	A(71) "From 10/2/72"	D3AZ 13564-A		2
73/76	Y(71) "From 10/2/72"			2
73	J - - 4 cyl. 122(2000 cc)	★ D3RY 13564-A	Not replaced	2
74	J - - 4 cyl. 122(2000 cc)	★ D4RY 13564-A	Not replaced	2
73	J - - 6 cyl. 159(2600 cc)	★ D3RY 13564-B	Not replaced	2
74	J - - 6 cyl. 171(2800 cc)	D4RY 13564-B		2
76/78	J	D5RY 13564-A		1
13A565	REFLECTOR ASSY. (REAR PANEL)			
79	A(74)	(RH) D9MY 13A565-A	(LH) D9MY 13A566-A	1
74/76	F	★ D4WY 13A565-A	Located on gas filler door-not replaced	1
74/76	F	(RH) ★ D4WY 13A565-B	(LH) ★ D4WY 13A565-C On center panel Not replaced	1
77/	K	(RH) D7LY 13A565-A	(LH) D7LY 13A566-A Located on deck lid	1
74/78	L(62,64) "Before 3/13/78"	(RH) ★ D4FZ 13A565-A	(LH) ★ D4FZ 13A565-B Located in rear lamp	1
78	L(62,64) "From 3/13/78"	(RH) ★ D7YY 13A565-A	(LH) ★ D7YY 13A566-A Not replaced	1
13566	DOOR (REAR LICENSE LAMP)			
73	A(exc. 71),K,P,Y(exc. 71)	★ D1AZ 13566-A	Not replaced	1
73	C(exc. 71),D,F	C50Z 13566-B		1
73	C(71)	★ D20Z 13566-A	Not replaced	1
74/76	A(exc. 71), Y(exc. 71)			1
74/76	C,F,G,K,L,P			1
13568	GASKET (REAR LICENSE LAMP LENS)			
73/76	A(exc. 71),Y(exc. 71)	C7AZ 13568-A		1
73/76	C,F,K,P			1
73	D			1
75/76	D,G			1
74/76	L			1
73/78	A(71)	D3AZ 13568-A		2
73/76	Y(71)			2
13A568	REFLECTOR (REAR)			
75/	D	(RH) D5VY 13A568-A	(LH) D5VY 13A568-B	1
13A569	PLATE ASSY. (REAR LAMP REFLECTOR)			
75/	D	D5VY 13A569-A		1
74/78	L(62,64) "Before 3/13/78"	(RH) ★ D4FZ 13A569-A	(LH) ★ D4FZ 13A569-B Not replaced	1
78	L(62,64) "From 3/13/78"	(RH) ★ D7YY 13A569-A	(LH) ★ D7YY 13A569-B Not replaced	1
75/	D	384273-S100	(MM-288-DC)-nut-attach plate to reflector assy.-5/32" self threading	AR
13A570	BEZEL (REAR REFLECTOR)			
75/	D	D5VY 13A570-A		1
13A576	WIRING (TRAILER WIRING FEED)			
73/75	A,C,D,F,J,K,P,Y	★ C6AZ 13A576-A	Universal-not replaced	1
74	L			1

COPYRIGHT © 1986 — FORD MOTOR COMPANY — DEARBORN, MICHIGAN

1973/79 LINCOLN-MERCURY CARS

YEAR	MODEL/RESTRICTIONS	PART NUMBER	DESCRIPTION	QTY.
13A576	WIRING (TRAILER WIRING FEED) — Cont'd			
73/75	C	D2AZ 13A576-A	#D2AB 13A576-BA	1
73	A,Y			1
74/78	A,Y - - w/class II or III towing package			1
75/78	F			1
73/	K			1
74/78	A,Y - - w/class I towing package	★ D4AZ 13A576-A	#D4AB 13A576-AA,D5AB 15A416-BB-not replaced	1
75/76	G	★ D54Y 13A576-A	#D54B 13A576-AA-Not replaced	1
79	A - - w/class III towing package	D9AZ 13A576-A	#D9AB 13A576-AB	1
13586	JEWEL (HIGH BEAM INDICATOR LAMP)			
73/74	D	D0VY 13586-A		1
75/	D	★ D5VY 13586-A	Not replaced	1
73/	K	★ D2LY 13586-A	Not replaced	1
13623	GASKET (REAR LAMP REFLECTOR LENS)			
75/	D	D5VY 13623-A		1
74	L(62,64) "Before 11/5/73"	D4FZ 13623-A	R.H. and L.H.	2
74/78	L(62,64) "From 11/5/73"	★ D4FZ 13623-B	R.H. and L.H.-not replaced	2
13654	SPRING (HEADLAMP DIMMER CONTROL ADJUSTING SCREW)			
73/	D,K	D0VY 13654-A		1
13A692	ORNAMENT (REAR REFLECTOR)			
75/77	D	D5VY 13A692-A		1
78/	D	D8VY 13A692-A		1
13A705	WIRING ASSY. (INDICATOR LAMP)			
79	J - - 4 cyl. 140 TC	D9ZZ 13A705-A	#D9ZB 13A705-AB	1
13C708-9	HOUSING ASSY. (READING LAMP SWITCH)			
75/76	D(60)	(RH) ★ D5VY 13C708-A	(LH) ★ D5VY 13C708-B — Quarter-not replaced	1
77/	D(60)	(RH) D8VY 13C708-A	(LH) ★ D8VY 13C709-A — Incl. (1) 56924-S2 Screw	1
75/76	K	(RH) ★ D6LY 13C708-A	(LH) ★ D6LY 13C709-A — Lt. maple wood grain	1
75/76	K	(RH) D6SZ 13C708-A	(LH) D6SZ 13C709-A — Baby burl wood grain	1
78/	K(Diamond Jubilee)	(RH) D8LY 13C708-A	(LH) D8LY 13C708-A — Ebony woodgrain	1
13A709	WIRING ASSY. (COURTESY OR INTERIOR LAMP SWITCH)-Unless listed improvise from B6A 14296-C			
73	A,Y	★ D3AZ 13A709-B	#D3AB 13A724-AB-73" long-extension-Not replaced	1
73	A,Y	D3AZ 13A709-A	#D3AB 13A724-AA-instrument panel	1
73	A,Y	★ D1AZ 13A709-A	#D1AB 13A709-AA-14" long-Not replaced	2
73/74	D			1
74/77	A(53,57,71),Y(53,57,71)- "Before 4/15/77"	★ D4AZ 13A709-A Not replaced	#D4AB 13A709-AB-14 1/2" long-R.H. and L.H.-rear doors-connection for 13713 switch	2
74/77	D(53) - - w/o Illuminated entry system			2
74	A(53,57,71),Y(53,57,71) "Before 6/10/74"	D4AZ 13A709-B	#D4AB 13A724-AC -91" long-R.H. to L.H. door extension	1
74/77	A(53,57,71),Y(53,57,71)- "From 6/10/74 to 4/15/77"	★ D5AZ 13A709-A Not replaced	#D5AB 13A724-AA,D6AB 13A724-AA-98" long-R.H. and L.H. door extension	1
77/78	A(53,71)- "From 4/15/77"	★ D7AZ 13A709-C	#D7AB 13A724-AA R.H. & L.H. rear doors connection for 13713 switch-not replaced	1
77/78	A - - w/Illuminated entry system	★ D7AZ 13A709-A	#D7AB 13C722-AC-not replaced	1
79	A(54H,66H) - - w/dome lamp-w/o lighted vanity mirror	D9AZ 13A709-A	#D9AB 14334-AD,AE,AF	1
79	A(54H,66H) - - w/dome lamp-w/lighted vanity mirror	D9AZ 13A709-D	#D9AB 14334-DD,DE,DF	1
79	A(54) - - with dome/map lamp-w/lighted vanity mirror	D9AZ 13A709-C	#D9AB 14334-CD,CE,CF	1
79	A(66) - - with dome/map lamp-w/lighted vanity mirror	D9AZ 13A709-B	#D9AB 14334-BD,BE,BF	1
79	A(74) - - w/dome lamp-w/lighted vanity mirror	D9AZ 13A709-F	#D9AB 14334-FD,FE,FF	1
79	A(74) - - with dome/map lamp-w/lighted vanity mirror	D9AZ 13A709-H	#D9AB 14334-GC,GD,GE	1
79	A(66) - - w/Illuminated entry system	★ D9AZ 13A709-E	#D9AB 13C722-AD,AE,AF-not replaced	2

YEAR	MODEL/RESTRICTIONS	PART NUMBER	DESCRIPTION	QTY.
13A709	WIRING ASSY. (COURTESY OR INTERIOR LAMP SWITCH)-Unless listed improvise from B6A 14296-C — Cont'd			
79	A(54,74) - - w/Illuminated entry system	★ D9AZ 13A709-K	#D9AB 13C722-BB-not replaced	1
79	A - - w/lugg. compt. lamp	D9AZ 13A709-J	#D9AB 14335-AA-extension - 13412 wire to 14334 wire	1
73	C(53,71)	★ D30Z 13A709-A	#D30B 13A724-AD-R.H. door to L.H. door-not replaced	1
74	C(53,71) "Before 3/15/74"	★ D40Z 13A709-A	#D40B 13A724-AE-extension to R.H. and L.H. front and rear door switches-not replaced	1
74	C(53,71) "From 3/15/74"	★ D40Z 13A709-B	#D40B 13A724-BA-extension to R.H. and L.H. front and rear door switches-not replaced	1
75	C(53,71) - - exc. taxi	★ D50Z 13A709-B	#D50B 13A724-BB-not replaced	1
76	C(53,71) - - exc. taxi	★ D60Z 13A709-A	#D60B 13A724-AA-not replaced	1
75/76	C(53) - - taxi	★ D50Z 13A709-C	#D50B 13A724-AA-not replaced	1
73/74	D(exc. Town Car) - - w/reading lamp	★ D3VY 13A709-A	#D3VB 14334-AA-not replaced	1
73/74	D(Town Car) - - w/reading lamp	★ D3VY 13A709-B	#D3VB 14334-BA-not replaced	1
75/	D - - w/reading lamp	★ D5VY 13A709-A	#D5VB 14334-AB,AC-not replaced	2
75/76	D - - with dome/map lamp	★ D5VY 13A709-B	#D5VB 14334-BA-not replaced	1
77	D - - w/Illuminated entry system	★ D7VY 13A709-E	#D7VB 13C722-AA-not replaced	1
78/	D - - w/Illuminated entry system	D8VY 13A709-A	#D8VB 13C722AA	1
77	D - - with dome/map lamp- "Before 5/2/77"	★ D7LY 13A709-A	#D7LB 14334-AA-not replaced	1
77/78	D - - with dome/map lamp "From 5/2/77"	★ D7VY 13A709-G	#D7VB 14334-CA-not replaced	1
77/	D - - w/dome lamp	D7VY 13A709-D	#D7VB 14334-BC	1
77/	D(53)	D7VY 13A709-B	#D7VB 13A709-BA-rear doors	1
79	D - - with dome/map lamp w/lighted vanity mirror- w/o moon roof	D9VY 13A709-A	#D9VB 14334-AA,AB	1
79	D - - with dome/map lamp- w/o lighted vanity mirror- w/o moon roof	D9VY 13A709-B	#D9VB 14334-BA,BB	1
77/	F(53,71) - - w/o power windows	D70Z 13A709-A	#D70B 13A724-AB	1
77/	F - - w/dome lamp	D70Z 13A709-B	#D70B 14334-AA	1
77/78	F - - with dome/map lamp- w/o moonroof	★ D70Z 13A709-D	#D70B 14334-BA-not replaced	1
78	F - - with dome/map lamp- with moonroof	D80Z 13A709-B	#D80B 14334-AA	1
79	F - - with dome/map lamp	D90Z 13A709-A	#D90B 14334-AA,AB	1
77/	F - - w/Illuminated entry system	D70Z 13A709-C	#D70B 13C722-AA,AB	1
75/76	G - - w/dome lamp "Before 5/3/76"	★ D5DZ 13A709-A	#D5DB 14334-AC-feed-not replaced	1
76/77	G(54K) - - w/dome lamp "From 5/3/76"	★ D7DZ 13A709-B	#D7DB 14334-AC,AD-feed-not replaced	1
76/77	G(54H,66) - - w/dome lamp "From 5/3/76"	★ D6DZ 13A709-A	#D7DB 14334-CA,CC-feed-not replaced	1
78/	G			1
75/76	G - - w/dome/map lamp "Before 5/3/76"	★ D5DZ 13A709-B	#D5DB 14334-BD-feed-not replaced	1
76/77	G(54) - - with dome/map lamp "From 5/3/76"	★ D7DZ 13A709-C	#D7DB 14334-BD,BE-feed-not replaced	1
78/	G(54)	★ D8DZ 13A709-A	#D8DB 13A724-AA-R.H.-rear door-not replaced	1
76/78	G(66) - - with dome/map lamp "From 5/3/76"	★ D7DZ 13A709-F	#D7DB 14334-DA,DB,DC-not replaced	1
75/77	G	D5DZ 13A709-D	#D5DB 13A724-AC, D7DB 13A724-AC-R.H. rear door-78 1/2" long	1
75/77	G	★ D5DZ 13A709-C	#D5DB 13A724-CC-L.H. rear door-97" long-not replaced	1
77/	G - - w/Illuminated entry system	★ D7DZ 13A709-D	#D7DB 13C722-AB-not replaced	1
77/	G - - w/o electric lugg. compt.	★ D7DZ 13A709-E	#D7DB 13A724-BA,BB,BC-not replaced	1
79	G(54) - - with dome/map lamp	★ D9DZ 13A709-A	#D9DB 14334-AA,AB-not replaced	1
79	G(66) - - with dome/map lamp	★ D9DZ 13A709-B	#D9DB 44334-BA,BB-not replaced	1
73/78	J	★ D4RY 13A709-A	Not replaced	1

COPYRIGHT © 1986— FORD MOTOR COMPANY —DEARBORN, MICHIGAN

1973/79 LINCOLN-MERCURY CARS

YEAR	MODEL/RESTRICTIONS	PART NUMBER	DESCRIPTION	QTY.
13A709	WIRING ASSY. (COURTESY OR INTERIOR LAMP SWITCH)–Unless listed improvise from B6A 14296-C — Cont'd			
79	J – w/dome lamp–w/flip top moon roof	D9ZZ 13A709-A	#D9ZB 14334-AB	1
79	J – – w/dome lamp – w/o flip top moon roof	D9ZZ 13A709-D	#D9ZB 14334-BB,BC	1
79	J – – with dome/map lamp– w/o flip top moon roof	D9ZZ 13A709-B	#D9ZB 14335-BC,BD	1
79	J	D9ZZ 13A709-C	#D9ZB 14335-AB,AC–to rear door courtesy lamp switch	1
77/	K – – w/dome lamp	D7LY 13A709-B	#D7LB 14334-BA	1
77/78	K – – with dome/map lamp	★ D7LY 13A709-A	#D7LB 14334-AA,CA–not replaced	1
79	K – – with dome/map lamp– w/o moon roof	★ D9LY 13A709-A	#D9LB 14334-AA,AB–not replaced	1
79	D,K – – with dome/map lamp– w/moon roof	D9LY 13A709-B	#D9LB 14334-BA	1
74	L	★ D2FZ 13A709-A	#D22B 13A724-AB-34" long–not replaced	1
74/76	L(64)	D4FZ 13A709-A	#D42B 13A724-AA-165" long–extension	1
77/	L(64)	★ D7FZ 13A709-A	#D7EB 13A724-AA–not replaced	1
74	L(73)	★ D4FZ 13A709-B	#D42B 13A724-BA-31" long–Not replaced	1
75/78	L – – w/dome/map lamp	D5FZ 13A709-A	#D52B 14334-AA, D7EB 14334-AA,AB	1
75/78	L(73H) "Before 8/1/77"	★ D5FZ 13A709-B	#D52B 13A724-BA-57" long extension–courtesy lamp to door switch–not replaced	1
77/	L(73H) "From 8/1/77"	★ D6FZ 13A709-B	#D6EB 13A724-BA–extension–14401 to courtesy lamp door switch–not replaced	1
75/78	L(62,64,73B) "Before 8/1/77"	★ D5ZZ 13A709-C	#D52B 13A724-AA-14401 to 13713 R.H. side only	1
77/	L(62,64,73B) "From 8/1/77"	★ D6FZ 13A709-A	#D6EB 13A724-AA–extension– 14401 to R.H. front door courtesy lamp switch–not replaced	1
77/	L – – w/deluxe seat belts w/o convience light group	★ D6FZ 13A709-C	#D6EB 13A724-CA–extension–1 4401 to R.H. courtesy lamp switch–not replaced	1
73	P	★ D0DZ 13A709-B	#D1DB 13A724-A–extension–luggage compt. lamp– not replaced	1
78	P(54,66,74) – – w/dome lamp– "Before 2/1/78"	★ D8BZ 13A709-A	#D8BB 14334-AB,AC–From 14A005 (Harness) to dome lamp–not replaced	1
78	P(54,66,74) – – w/dome lamp– w/o moon roof "From 2/1/78"	★ D8BZ 13A709-D	#D8BB 14334-AD–From 14A005 (Harness) to dome lamp–not replaced	1
78	P(54,74) "Before 2/1/78"	★ D8BZ 13A709-B	#D8BB 14335-AB,AC,AD–rear doors–not replaced	1
78	P(54,74) – – w/o moon roof "From 2/1/78"	★ D8BZ 13A709-E	#D8BB 14335-AE–rear doors–not replaced	1
78 78	P(66) "Before 2/1/78" P(54 P/C) "Before 2/1/78"	★ D8BZ 13A709-C	#D8BB 14335-BC–From 14A005 to dome/map lamp switches–not replaced	1 1
78 78	P(66) – – w/o moon roof "From 2/1/78" P(54 P/C)	★ D8BZ 13A709-F	#D8BB 14335-BD–From 14A005 (Harness) to dome/map lamp switches–not replaced	1 1
78	P(36R) – – w/dome lamp– w/o moon roof	★ D8BZ 13A709-G	#D8BB 14334-BA–From 14A005 (Harness) to dome lamp–not replaced	1
78	P(36R) – – with dome/map lamp– w/o moon roof	★ D8BZ 13A709-H	#D8BB 14335-EA,EC–From 14A005 (Harness) to dome/map lamp switches–not replaced	1
78	P(54,66) – – w/dome lamp– w/moonroof	★ D8BZ 13A709-J	#D8BB 14335-FA–not replaced	1
78	P(54) – – with dome/map lamp– w/moonroof	★ D8BZ 13A709-K	#D8BB 14335-GA–not replaced	1
78	P(66) – – with dome/map lamp– w/moonroof	D8BZ 13A709-N	#D8BB 14335-HA	1
78	P(36) – – w/dome lamp– w/moonroof	★ D8BZ 13A709-L	#D8BB 14334-DA–not replaced	1
78	P(36) – – with dome/map lamp– w/moonroof	D8BZ 13A709-M	#D8BB 14334-EA	1
79 79	P(54 exc P/C or Taxi) – – w/dome lamp–w/o moonroof P(66,74) – – w/dome lamp– w/o moonroof	D9BZ 13A709-A	#D9BB 14334-AB,AD, E0BB 14334-AA,AB	1 1

YEAR	MODEL/RESTRICTIONS	PART NUMBER	DESCRIPTION	QTY.
13A709	WIRING ASSY. (COURTESY OR INTERIOR LAMP SWITCH)-Unless listed improvise from B6A 14296-C — Cont'd			
79	P(54 exc. P/C or Taxi) - - w/dome lamp-w/moonroof	★ D9BZ 13A709-D	#D9BB 14335-BC,BE,E0BB 14335-AA,AB-not replaced	1
79	P(66) - - w/dome lamp-w/moonroof			1
79	P(54 exc. P/C or Taxi) - - with dome/map lamp-w/o moonroof	★ D9BZ 13A709-C	#D9BB 14335-AC,AE,AF,AG,E0BB 14335-EA-not replaced	1
79	P(74) - - with dome/map lamp			1
79	P(54 exc. P/C or Taxi) - - with dome/map lamp-w/moonroof	D9BZ 13A709-K	#D9BB 14335-GA,GC, E0BB 14335-GA	1
79	P(54 Taxi) - - w/dome lamp	D9BZ 13A709-E	#D9BB 14335-EA,ED,E0BB 14335-CA,CB	1
79	P(54 Taxi) - - with dome/map lamp	D9BZ 13A709-F	#D9BB 14335-DA,DD,E0BB 14335-BA,BB	1
79	P(54 P/C) - - with windshield header dome/map lamp- "Before 4/15/79"	D9BZ 13A709-N	#EDD9BB 14335-KC, D9BB 14335-KD	1
79	P(54 P/C) - - with windshield header dome/map lamp- "From 4/15/79"	D9BZ 13A709-R	#D9BB 14335-KE	1
79	P(54 P/C) - - with headliner dome/map lamp	D9BZ 13A709-P	#EDD9BB 14335-LA, D9BB 14335-LB,LC	1
79	P(66) - - with dome/map lamp-w/o moonroof	★ D9BZ 13A709-M	#D9BB 14335-JA,JC,E0BB 14335-HA-not replaced	1
79	P(66) - - with dome/map lamp-w/moonroof	★ D9BZ 13A709-L	#D9BB 14335-HA,HC,HE,HF-not replaced	1
79	P(36) - - w/dome lamp-w/o moonroof	E1BZ 13A709-A	#D9BB 14334-BB,BD,BE, E0BB 14334-BA, E1BB 14334-AA	1
79	P(36) - - w/dome lamp-w/moonroof	E1BZ 13A709-B	#D9BB 14334-CA,CC,E0BB 14334-CA,CB, E1BB 14334-BA	1
79	P(36) - - with dome/map lamp-w/o moonroof	E1BZ 13A709-D	#D9BB 14335-CC,CE, E1BB 14334-DA	1
79	P(36) - - with dome/map lamp-w/moonroof	E1BZ 13A709-C	#D9BB 14335-FA,,FC,E0BB 14335-FA, E1BB 14334-CA	1
77/78	V - - w/Illuminated entry system	D7DZ 13A709-D	#D7DB 13C722-AB	1
77/78	V	★ D74Y 13A709-A Not replaced	#D74B 14334-AA,AD-14405 to door courtesy lamp switch to R.H. & L.H. coach lamps	1
79	V	★ D94Y 13A709-A Not replaced	#D94B 14334-AA,AB-14405 to door courtesy lamp switch to R.H. & L.H. coach lamps	1
73	C	382931-S	(GG-338)-clip(attach wiring to center body pillar)	2
13A710	WIRING ASSY. (REAR INTERIOR LAMP)			
79	A(74) - - w/cargo lamp	D9AZ 13A710-A	#D9AB 13A710-AC,AD	1
13711	SOCKET (INSTRUMENT PANEL LAMP)			
73/	A,C,D,F,G,K,L,P,Y	C80Z 13711-B	Twist in type	AR
78/	L(73)			1
73/77	A,Y	D0GY 13711-B	Twist in type-for A.T.C. controls	AR
75/	G			AR
73/74	F	D1AZ 13711-A	Incl. two terminals	AR
75/77	G,P			AR
75/78	L			AR
79	L		Instrument cluster	AR
73/78	J	D3RY 13711-A		AR
73/78	J	★ D3RY 13711-B	Windshield wiper-not replaced	1
73/74	J	D3RY 13711-C	Emergency warning lamp	1
74	J	D4RY 13711-A	Heated backlite switch	1
76/78	J	D5RY 13711-A	Clock	2
73	K	★ D2LY 13711-A	Red-Not replaced	1
73/77	P	★ D3DZ 13711-A	Windshield wiper-Not replaced	1
13B711	WIRE ASSY. (COURTESY LAMP)-If not listed below improvise from bulk wiring(14296)			
73/76	A(53K,57K) - - w/o power door locks	★ D3AZ 13B711-B	#D3AB 13B711- BA-door mounted courtesy lamp-not replaced	1
73/74	A(53,57,71),Y(53,57,71) - - with power door locks-	D3AZ 13B711-H	R.H. -#D3AB 13B711-DB-door mounted courtesy lamp	1

COPYRIGHT © 1986— FORD MOTOR COMPANY —DEARBORN, MICHIGAN

1973/79 LINCOLN-MERCURY CARS

YEAR	MODEL/RESTRICTIONS	PART NUMBER		DESCRIPTION	QTY.
13B711	WIRE ASSY. (COURTESY LAMP)-If not listed below improvise from bulk wiring (14296) — Cont'd.				
73/74	A(53,57,71),Y(53,57,71) - - with power door locks-	D3AZ	13B711-J	L.H. -#D3AB 13B763-BA,BB-door mounted courtesy lamp	1
74	A(65),Y(65) - - w/power door locks-w/o anti-theft alarm system	D4AZ	13B711-B	R.H. -#D4AB 13B711-BA-door mounted courtesy lamp	1
74	A(65),Y(65) - - w/power door locks-w/o anti-theft alarm system	D4AZ	13B711-C	L.H. -#D4AB 13B763-AA-door mounted courtesy lamp	1
74	A(65),Y(65) - - w/anti-theft alarm system	★ D4AZ	13B711-A	R.H. and L.H.-#D4AB 13B711-AA-27 1/4" long-not required "From 10/15/74"-Not replaced	2
75	A(65),Y(65) - - w/power door locks and/or anti-theft alarm system	★ D5AZ	13B711-C	R.H. -#D5AB 13B711-AB-Not replaced	1
75/76	A(65),Y(65) - - w/power door locks and/or anti-theft alarm system	★ D5AZ	13B711-A	L.H. -#D5AB 13B763-AA-Not replaced	1/2
73/74 75/76	A(53K,57K,65K,71H,K) A(53K,L,65K,L,71K)	★ D5AZ	13B711-E	Door mounted courtesy lamp-lead-Not replaced Door mounted courtesy lamp-lead	2 2
75	A(53,71),Y(53,71) - - w/power door locks and/or anti-theft alarm system	★ D5AZ	13B711-D	R.H. -#D5AB 13B711-BA-Not replaced	1
75/76	A(53,71),Y(53,71) - - w/power door locks and/or anti-theft alarm system	★ D5AZ	13B711-B	L.H. -#D5AB 13B763-BA-Not replaced	1/2
73/	D	C6VY	13B711-B	Front door courtesy lamps-incl. holder for double end bulbs	2
73	K	★ D2LY	13B711-A	Reading lamp-Not replaced	2
73/75	K "Before 8/4/74"	★ D3SZ	13B711-A	Door mounted courtesy lamp-Not replaced	2
75/	K "From 8/4/74"	★ D5SZ	13B711-A	#D5SB 13B711 -AA-door mounted courtesy lamp	2
74	L(62) - - w/anti-theft alarm system	D4FZ	13B711-A	#D42B 13B711-AB	1
74/	L(73) - - w/anti-theft alarm system	★ D4FZ	13B711-B	#D42B 13B711-BA,D7EB 13B7B11-AA	1
75/	L(62) - - w/anti-theft alarm system	★ D5FZ	13B711-A	#D52B 13B711-AB, D8EB 13B711-AA	1
13B712	WIRE ASSY. (COURTESY LAMP FEED)				
79	A - - w/arm rest lamp	E0MY	13B712-A	#D9MB 13B712-AC, E0MB 13B712-AA	2
75	G	★ D5DZ	13B712-A	#D5DB 13B712-AA,AC or AD-Not replaced	1
76	G - - w/o console	★ D6DZ	13B712-B	#D6DB 13B712-AA-Not replaced	1
76	G - - w/console "Before 1/5/76"	★ D6DZ	13B712-C	#D6DB 13B712-BB-Not replaced	1
76	G - - w/console "From 1/5/76"	★ D6DZ	13B712-D	#D6DB 13B712-BD-Not replaced	1
77/	G - - w/console	D7DZ	13B712-C	#D7DB 13B712-AB,AD	1
77/	G - - w/o console	★ E0DZ	13B712-B	#D7DB 13B712-BA,BC, E0DB 13B712-BA-not replaced	1
79	J	D9ZZ	13B712-A	#D9ZB 13B712-AA,BA-on models w/o console tie back ash tray lamp lead	1
74	L	D4FZ	13B712-A	#D42B 13B712-AA	1
75/78	L "Before 8/1/77"	★ D5FZ	13B712-A	#D52B 13B712-AB-not replaced	1
77/	L "From 8/1/77"	★ D6FZ	13B712-A	#D6EB 13B712-AA-not replaced	1
74/75	P	★ D4DZ	13B712-A	#D4DB 13B712-AB-Not replaced	1
76/77	P	★ D6DZ	13B712-A	#D6BB 13B712-AA,AB,D7BB 13B712-AA-instrument panel lamps-Not replaced	1
78	P	★ D8BZ	13B712-A	#D8BB 13B712-AB,AC-not replaced	1
79	P	D9BZ	13B712-A	#D9BB 13B712-AC	1
74	P		42367-S36	(U-269-B)-screw (attach wiring to instrument panel)-No. 10-16 x 1/2"	AR
13713	SWITCH ASSY. (ACCESSORY)				
73/78	J	D4RY	13713-A	*SW-1251	1

YEAR	MODEL/RESTRICTIONS	PART NUMBER	DESCRIPTION	QTY.
13713	SWITCH ASSY. (COURTESY LAMP)-Also refer to group 13713 Switch and Wiring and 14018			
73/76	A,C,F,P,Y - - w/o auto. seat back latch	C80Z 13713-A	*SW-659-R.H.-front door	2
73/76	C,Y		R.H. and L.H.-rear door	2
73/78	A		R.H. and L.H.-rear door	2
73/74	D - - w/auto seat back latch		R.H.- front door	1
73/74	D		L.H.-front door	1
75/76	D(53) "From 10/1/74"		R.H.-front door	1
75/76	D		R.H. and L.H.-rear doors	2
77/78	A - - w/o auto-seat back latch and/or Illuminated entry		R.H.-front door	1
77/78	D(53) - - w/o anti-theft alarm system		R.H. - front door	1
77/	F(53)		R.H. and L.H.-rear doors	2
79	D(53)		R.H. & L.H.-rear doors	2
73/76	A,C,F,Y	D1AZ 13713-E	*SW-1055-L.H.-front door	1
73/76	A,C,F,Y - - w/auto. seat back latch		R.H.-front door	1
73/76	K		R.H. and L.H.-front door	1
73/76	P		R.H. and L.H.-front door	2
75/76	D(53) "From 10/1/74"		L.H.-front door	1
75/76	D(60) "From 10/1/74"		R.H. and L.H.-front doors	2
73/74	D - - w/o auto. seat back latch		R.H.-front door	1
75	D "Before 10/1/74"		R.H. and L.H.-front doors	2
77/78	A - - w/auto-seat back latch and/or Illuminated entry		R.H.-front door	1
77/78	A		L.H.-front door	1
77/	D(53)		L.H.-front door	1
77/	D(60)		R.H. and L.H.-front door	2
77/78	D(53) - - w/anti-theft alarm system		R.H. and L.H.-rear door	2
77/	K		R.H. and L.H.-front door	2
73/74	D	C8AZ 13713-B	*SW-647-R.H. and L.H.-rear door	2
73/	D	D3VY 13713-A	Located at arm rest for reading lamp	2
74/	K		Reading lamp	2
74/76	D,G,K	E3SZ 13713-A	*SW-1782-luggage compt. door	1
75/	G,V		R.H. and L.H.-front and rear doors	4
75/77	P			4
73/78	J	D1RY 13713-A	*SWE-1048-ignition buzzer switch located on L.H. front pillar	2
73/74	J	D3RY 13713-A	L.H.-front door	1
76/78	J(64D,P)		L.H.-pillar lamp	1
76/78	J(64T)	D5RY 13713-A	L.H.-pillar lamp	1
73/78	J	D9RZ 13713-A	R.H.-front door	1
74/	L	D1FZ 13713-A	*SW-975-R.H. and L.H.	2
77/	F - - w/o auto. seat back latch	D70Z 13713-B	*SW-1384-R.H. front door	1
77/	F - - w/auto. seat back latch	D70Z 13713-A	*SW-1383-R.H. front door	1
77/	F		L.H. front door	1
79	A	D9AZ 13713-A	*SW-1513-R.H. and L.H. front and rear doors	4
79	J		R.H. and L.H. front doors	2
79	J		Rear door	1
78/79	P		R.H. and L.H. front and rear doors	4
78	P	97474-S	(QQ-4) "C" ring-as listed in TSB No. 146 dated 11/4/77, article 2020	AR
13713	SWITCH and WIRING ASSY. (COURTESY LAMP)			
73	A,Y - - w/o auto. seat back latch	D3AZ 13713-B	*SW-1151-#D3AB 13A764-BA-R.H. front door	1
73	A(65B,F,H,X),Y(65) - - w/auto. seat back latch	★ D3AZ 13713-A Not replaced	*SW-1150-#D3AB 13A764-AA-R.H. front door	1
73	A(exc. 53K,57K, 65K,71K), Y		L.H.-front door	1
73	A(65K) - - w/auto. seat back latch	★ D3AZ 13713-C	*SW-1152-#D3AB 13A764-CB-R.H. front door	1
73	A(53K,57K,65K,71H,K)	Not replaced	L.H.-front door	1

COPYRIGHT © 1986 — FORD MOTOR COMPANY — DEARBORN, MICHIGAN

1973/79 LINCOLN-MERCURY CARS

YEAR	MODEL/RESTRICTIONS	PART NUMBER	DESCRIPTION	QTY.
13713	SWITCH and WIRING ASSY. (COURTESY LAMP) — Cont'd.			
74/76	A,Y - - w/o auto. seat back latch	★ D4AZ 13713-B Not replaced	*SW-1216-#D4AB 13A764-BB-R.H. front door	1
74	A(65B,F,H,X),Y - - w/auto. seat back latch w/o anti-theft alarm system	D4AZ 13713-A	*SW-1217-#D4AB 13A764-AB-R.H. front door	1
74	A,Y		L.H.-front door	1
75/76	A(exc. 53L,65L,71K),Y		L.H.-front door	1
75/76	A(65H),Y(65) - - w/auto. seat back latch		R.H.-front door	1
77/78	A - - w/auto-seat back latch and/or Illuminated entry		R.H.-front door	1
77/78	A		L.H.-front door	1
74	A(65K) - - w/auto. seat back latch	★ D4AZ 13713-C Not replaced	*SW-1215-#D4AB 13A764-CB-R.H. front door	1
74	A(65B,F,H,X),Y - - w/auto. seat back latch w/anti-theft alarm system		R.H.-front door	1
75/76	A(53L,65L,71K)		L.H.-front door	1
75/76	A(65K,L) - - w/auto. seat back latch		R.H.-front door	1
77/78	A - - w/o automatic seat back latch and/or Illuminated entry	D7AZ 13713-A	*SW-1378- #D7AB 13A764-AA-R.H.-front door	1
73	D - - w/o auto. seat back latch	★ D0VY 13713-A	*SW-934-#D2VB 13A764-AA-R.H. front door	1
73	D - - w/auto. seat back latch	C9MY 13713-A	*SW -851-#D1VB 13A764-AB-R.H. front door	1
73	D		L.H.-front door	1
74	D(53)	★ D4VY 13713-A	*SW-1214-#D4VB 13A764-AB-R.H. front door	1
74	D(53)	★ D4VY 13713-B Not replaced	*SW-1213-#D4VB 13A764-BB-L.H. front door	1
74	D(65)		R.H. and L.H. front door	2
75/	D(53)	D5VY 13713-D	*SW-1294-#D5VB 13A764-BB-L.H.- front door	1
75/	D(60)		R.H. and L.H.-front door	2
75/	D	D5VY 13713-C	*SW-1293-#D5VB 13A764-AB-R.H.- front door	1
74	A	372172-S100	(GG-228)-clip(attach switch and wire to brake pedal support)	AR
74	A	383182-S100	(GG-359)-clip(attach switch and wire to cowl panel)	AR
13B713	Refer to group 13763			
13K713	KNOB ASSY. (INSTRUMENT PANEL LAMP SWITCH)			
73/74	J	★ D4RY 13K713-B	Not replaced	1
76/78	J	D6RY 13K713-A		1
13A718	WIRE ASSY. (REAR INTERIOR LAMP JUMPER)			
74/78	L(73)	★ D4FZ 13A718-A	#D42B 13B783-AA, D52B 13B783-AA-not replaced	1
76/78	A,C,D,F,G,K,L,P,Y - - w/dome lamp	D6AZ 13A718-A	#D6AB 14318-AA	1
79	A(74)	D9AZ 13A718-A	#D9AB 13178-AA	1
13B718	COVER (MAP LAMP)			
73/78	J	★ D3RY 13B718-A	Black-not replaced	1
73/74	J	D3RY 13B718-B	Tan	1
76/78	J	★ D5RY 13B718-A	Medium tan-not replaced	1
		★ D5RY 13B718-B	Saddle brown-not replaced	1
13C718	ACTUATOR ASSY. (ILLUMINATED ENTRY)			
77/	A,D,F,K	D7AZ 13C718-A	#D7AB 13C718 A1A,A2B	1
77/	G,V	★ D7DZ 13C718-A	#D7DB 13C718-A1A,A2A-not replaced	1
13A719	SOCKET and WIRING (INTERIOR LAMP)-If not listed below improvise from bulk wiring(14296)			
73/78	A,Y	★ D3MY 13A719-A	#D3MB 13B743-AD-head lamp switch	1
73/78	A(exc. 71),Y(exc. 71) - - w/dome lamp	★ D3AZ 13A719-D	#D3AB 14334-AB,AC-dome lamp feed-84" long	1
74/78	A(exc. 71),Y(exc. 71) - - w/dome/map lamp	★ D4AZ 13A719-A	#D4AB 14334-AC-feed-not replaced	1

YEAR	MODEL/RESTRICTIONS	PART NUMBER	DESCRIPTION	QTY.
13A719	SOCKET and WIRING (INTERIOR LAMP)-If not listed below improvise from bulk wiring(14296)			
73	A(71),Y(71) "Before 5/15/73"	D3AZ 13A719-C	#D3AB 14334-BB-dome lamp	1
73	A(71),Y(71) "From 5/15/73"	★ D3AZ 13A719-E	#D3AB 14334-BC-dome lamp-133" long	1
74/78	A(71),Y(71) - - w/dome lamp	Not replaced		1
74/78	A(71),Y(71) - - w/dome/map lamp	★ D4AZ 13A719-B	#D4AB 14334-BC-dome lamp feed-not replaced	1
73/74	A(53K,57K,65K) - - w/roof side trim panel	★ D3MY 13A719-B Not replaced	#D3MB 14334-AB-roof side lamp	1
75	A(53K,L,65K,L)			1
77/78	A(53,65) - - w/lighted visor			1
73/76	C - - exc. w/dome/map lamp	★ D30Z 13A719-A	#D30B 14334-AA,AB,BA,BB	1
73	C(71)	Not replaced	Cargo lamp	1
73/76	C - - w/dome/map lamp	★ D30Z 13A719-B	#D30B 14334- CB,CC,DA,DB,DC	1
74/76	C(71)	★ D40Z 13A719-A	#D40B 14335-AA-cargo lamp-not replaced	1
76	C	D70Z 13A719-A	#D70B 13B743 AA-10 inches long -to	AR
76/	F		service damage lamp sockets of 15A856 wire harness	AR
74	D - - w/ dome/map lamp	★ D4VY 13A719-A	#D4VB 14334-AA-dome lamp feed-Not replaced	1
75/	D	D5SZ 13A719-A	#D5SB 14K041-AA-reading lamp	1
78/	D - - w/o auto. headlamp dimmer	D8VY 13A719-A	#D8VB 13B743-AB-headlamp switch	1
78/	D - - w/auto. headlamp dimmer	D8VY 13A719-B	#D8VB 13B743-BB-headlamp switch	1
73	F(exc. 76)	★ D3ZZ 13A719-A	#D3ZB 14334-AA,AB-dome lamp-not replaced	1
75	G	★ D5DZ 13A719-A	#D5DB 13B743-AB,AC-instrument panel lamp	1
73/74	K "Before 2/1/74"	D3LY 13A719-D	#D3LB 13B743-BA-headlamp switch	1
74/76	K "From 2/1/74"	★ D4LY 13A719-B	#D4LB 13B743- BA-headlamp switch-not replaced	1
73/76	K	★ D3LY 13A719-A	#D2LB 13B743-AC, D3LB 13B743-AA- instrument panel	1
73/76	K - - w/ dome/map lamp-	★ D3LY 13A719-C	#D3LB 14334-AA,AB-dome lamp	1
73/76	K - - w/opera windows	D3LY 13A719-B	#D3LB 14K041-AA, D4LB 13B743-BA-reading lamp	2
74/76	K - - w/autolamp system and auto. headlamp dimmer	★ D4LY 13A719-A	#D4LB 13B743-AC-instrument panel-not replaced	1
75/76	K	D5SZ 13A719-A	#D5SB 14K041-AA-reading lamp	1
77	K	★ D7LY 13A719-A	#D7LB 14K041-AB-reading lamp-not replaced	2
78	K	★ D8LY 13A719-A	#D8LB 14K041-AA,AB-reading lamp-not replaced	1
77/	K - - w/o auto headlamp dimmer	D7LY 13A719-B	#D7LB 13B743-AB-headlamp switch	1
77/	K - - w/auto headlamp dimmer	D7LY 13A719-C	#D7LB 13B743-BB-headlamp switch	1
74/	L - - w/o sun roof	D3FZ 13A719-A	#D32B 13A719-AB,D7EB 13A719-AA,AB	1
73	P	★ D3DZ 13A719-B	#D3DB 14334-AA,AB- dome lamp	1
74/75	P - - exc. w/ dome/map lamp	Not replaced	Dome lamp	1
74/75	P - - w/ dome/map lamp	★ D4DZ 13A719-A	#D4DB 14334-AA-dome lamp feed-not replaced	1
76	P - - w/o dome/map lamp	★ D6DZ 13A719-A	#D6BB 14334-AA-not replaced	1
76/77	P - - w/dome/map lamp	★ D6DZ 13A719-B	#D6BB 14334-BA-not replaced	1
74	A(53,57)	383477-S	(GG-271-C)-clip-attach socket and wiring to package tray	5
13A721	WIRING ASSY. (GLOVE COMPARTMENT LAMP)			
73/74	C - - w/console	★ D20Z 13A721-A	#D20B 13A721-AB	1
75/76	F	Not replaced		1
77/	F - - w/console			1
73/74	J	D3RY 13A721-A		1
73/76	P	★ D44Y 13A721-A	#D44B 13A721-AA-feed-not replaced	1
13C721	BRACKET (ILLUMINATED ENTRY ACTUATOR)			
77/78	A	★ D7MY 13C721-A	Not replaced	1
79	A	★ D9AZ 13C721-A	Not replaced	1
77/	G,V	★ D7DZ 13C721-A	Not replaced	1
78/	D	D7AZ 13C721-A		1

COPYRIGHT © 1986— FORD MOTOR COMPANY —DEARBORN, MICHIGAN

1973/79 LINCOLN-MERCURY CARS

YEAR	MODEL/RESTRICTIONS	PART NUMBER	DESCRIPTION	QTY.
13A724	WIRING ASSY. (COURTESY LAMP SWITCH EXTENSION)			
79	P(exc. P/C)	★ D9BZ 13A724-A	#D9BB 13A724-AB-to R.H. door switch-not replaced	1
79	P(P/C)	D9BZ 13A724-B	#D9BB 13A724-BA	1
13C724	WIRING ASSY. (DOOR LOCK CYLINDER LIGHT)			
77/	A,D,F,G,K,V - - with Illuminated entry system	D7AZ 13C724-A	Repair wire	1
13A726	WIRING and SOCKET ASSY. (ASH RECEPTACLE LAMP)-also refer to group 15A856, 14A313			
73/78	A,Y	★ D8VY 13A726-A	#D3AB 13A726-AA, D8VB 13A726-AA-	1
78/	D		on instrument panel-not replaced	1
79	A	E0AZ 13A726-A	#D9AB 13A726-BC, E0AB 13A726-AA	1
73/75	C	D20Z 13A726-B	#D20B 13A726-AA or BB-on instrument panel	1
74/75	F			1
73/77	D	★ D2VY 13A726-B	#D2VB 13A726-AA-on instrument panel-Not replaced	1
73/74	D,K "Before 4/15/74"	★ D2VY 13A726-A	#D2VB 15080 -AA-instrument panel-cigar lighter	1
75	K "Before 2/3/75"		lamp-Not replaced	1
74/	D "From 4/15/74"	D4VY 13A726-C	#D4VB 15080- AA-instrument panel-cigar lighter	1
74	K "From 4/15/74"		lamp	1
75	K "From 2/3/75"			1
74/	D	D4VY 13A726-B	#D4VB 13A726-AA,AB- R.H. front door	1
73/74	K "Before 2/25/74"	D2SZ 13A726-C	#D3SB 13A726- AA-on front doors-ash receptacle	AR
73	D		On doors and quarter panels	AR
74	D "Before 2/25/74"		On rear doors or quarter panel	2
74/75	K "From 2/25/74"	★ D4SZ 13A726-A	#D4SB 13A726- AA-on front doors	2
74/	D "From 2/25/74"	Not replaced	On rear doors or quarter panel	AR
77/	K		R.H. and L.H. - quarter arm rests	AR
73	F	★ D1WY 13A726-A	Instrument panel or console-Not replaced	1
75/	G	D74Y 13A726-A	#D5DB 13K702-AA, D74B 13K702-AA -instrument panel	1
77/	V			1
73/	K	D2SZ 13A726-A	#D2SB 13A726-AC-on instrument panel- -ash receptacle	1
77/	K	D7LY 13A726-A	#D7LB 15080-AA instrument panel-Cigar lighter	1
74/	L	D4FZ 13A726-A	#D42B 13A726-A-instrument panel	1
76	C	D70Z 13A726-A	#D70B 13A726-AA-10 inches long-	1
76/	F		to service damage ashtray lamp socket of 14A313 or 15A856 wire harness	1
78/	P	D8BZ 13A726-A	#D8BB 13K702-AA	1
79	J			1
13C726	MASK ASSY. (CONSOLE PANEL LAMP)			
79	J	D9ZZ 13C726-A	#D9ZB 13C726-AA-ash tray illumination	1
79	J	★ D9ZZ 13C726-B Not replaced	#D9ZB 13C726-BA-incl. Blue filter- warning indicator illumination	2
13732	BRACKET (HEADLAMP DIMMER CONTROL)			
74/	L	★ D2FZ 13732-A	Not replaced	1
13C733	BEZEL ASSY. (READING LAMP)			
79	V - - Town Car	D94Y 13C733-A		2
13734	LENS (INTERIOR LAMP)-Also refer to group 13783			
73/76	A,Y	D2AZ 13734-A	R.H. and L.H.-door mounted courtesy lamp	2
73/	K		R.H. and L.H.-door mounted courtesy lamp	2
79	A "Before 5/21/79"	D9MY 13734-A	R.H. and L.H. door mounted courtesy lamp	2
79	A "From 5/21/79"	E0MY 13734-A	R.H. and L.H. door mounted courtesy lamp	2
73	D	C4VY 13734-C	Front door courtesy lamps	2
73/	D		Map lamp	1
74/	L(73)		Cargo lamp	1
73	F	D1WY 13734-A	Map lamp	1
13740	SWITCH ASSY. (INSTRUMENT PANEL LAMP)			
73/74	J	★ D3RY 13740-A	Not replaced	1
76/78	J	D5RY 13740-A	Rheostat	1

YEAR	MODEL/RESTRICTIONS	PART NUMBER	DESCRIPTION	QTY.
13752	SWITCH ASSY. (INTERIOR LAMP)-Also refer to group 13713			
73	K	★ D2LY 13752-B	R.H. and L.H.-reading lamp-Not replaced	2
77/79	A,D,F,G,J,K,V - - with illuminated entry system	D9AZ 13752-A	*SW-1530-#D9AB 13752-AA	2
79	V	★ D94Y 13752-A	Reading lamp-not replaced	2
13753	NUT (COURTESY LAMP SWITCH)			
73	F(65F,76F)	★ C7WY 13753-A	Attach toggle switch to panel-Not replaced	3
73/78	J	D3RY 13753-A	Attach instrument panel lamp switch	1
13A756	LAMP ASSY. (LUGGAGE COMPARTMENT)			
73/78	A(exc. 71),Y(exc. 71) - - w/o electric luggage compt. lock	D3AZ 13A756-C	Mercury actuated	1
73/74	A(exc. 71),Y(exc. 71) - - w/ electric luggage compt. lock- "Before 3/1/74"	★ D3AZ 13A756-D	Mercury actuated-Not replaced	1
74/78	A(exc. 71),Y(exc. 71) - - w/electric luggage compt. lock- "From 3/1/74"	★ D4AZ 13A756-A	Mercury actuated-not replaced	1
79	A(54,66)	D9MY 13A756-A	#D9MB 13A756-AA-Mercury actuated- To service damage socket of 13412 wiring	1
73 74/76	C(exc. 71) C(53,65),F - - w/o electric luggage compt. lock	★ D20Z 13A756-A	Mercury actuated-not replaced	1 1
77/	F(53,65)- - w/o electric luggage compt. lock	D70Z 13A756-A	Mercury actuated	1
76 77/	C,F - - w/electric luggage compt. lock F(53,65) - - w/electric luggage compt. lock	★ D60Z 13A756-A	#D60B 13A756-AB-not replaced	1 1
73/74	D "Before 3/1/74"	★ D1VY 13A756-C	Not replaced	1
74/	D "From 3/1/74"	★ D5VY 13A756-B	Not replaced	1
73	F	★ D1ZZ 13A756-B	Not replaced	1
75 76/	G - - w/o anti-theft alarm system G	D5DZ 13A756-A		1 1
75	G - - w/anti-theft alarm system	★ D5DZ 13A756-B	Not replaced	1
76/78	J	D6RY 13A756-A	#74GG 13A756-BA	1
73	K - - w/o electric luggage compt. lock "Before 4/2/73"	★ D2LY 13A756-A	Not replaced	1
73	K - - w/electric luggage compt. lock "Before 4/2/73"	★ D2LY 13A756-B	Not replaced	1
73/75	K - - w/ or w/o electric luggage compt. lock "From 4/2/73"	★ D4LY 13A756-B	Not replaced	1
76	K	★ D6SZ 13A756-A	#D6SB 13A756-AA-Not replaced	1
77/	K	★ D7LY 13A756-A	#D7LB 13A756-AB-not replaced	1
74/	L	★ D4FZ 13A756-A	Mercury actuated-not replaced	1
73/77	P	★ D0DZ 13A756-A	Not replaced	1
78/	P(54,66)	D8BZ 13A756-A	#D8BB 13A756-AD, D9BB 13A756-AA	1
78/	P(36R)	D8BZ 13A756-B	#D8BB 13A756-BB, D9BB 13A756-BA	1
77/	V	★ D74Y 13A756-A	#D74B 13A756-AA-not replaced	1
73	D	C2VY 13A759-A		2
13B756	BRACKET (COURTESY LAMP SWITCH)			
79	A(74)	D9AZ 13B756-A		1
79	J	★ D9ZZ 13B756-A	Not replaced	1

COPYRIGHT © 1986 — FORD MOTOR COMPANY — DEARBORN, MICHIGAN

1973/79 LINCOLN-MERCURY CARS

YEAR	MODEL/RESTRICTIONS	PART NUMBER	DESCRIPTION	QTY.
13763	BRACKET (INTERIOR COURTESY LAMP)			
73/74	A,Y	C7AZ 13763-A	Mounts in roof side trim panel	2
73/	D			1
79	K			2
73	F	(RH) D1WY 13763-A	(LH) D1WY 13763-B	1
75/	G	★ D5DZ 13763-A	Not replaced	1
75/	L	★ D5FZ 13763-A	Not replaced	1
78/	P(54,66,74)	D8BZ 13763-A		1
79	J			1
73	F	52012-S8	(U-202)-screw(attach bracket to rear quarter header)-No. 8-15 x 1/2"	AR
13764	SWITCH (MAP LAMP)			
73/77	D	★ D1VY 13764-A	Not replaced	1
13767	CLIP (MAP LAMP)			
73/78	J	D1RY 13767-A		1
13B767	WIRE ASSY. (COURTESY LAMP JUMPER)			
73	C(63,65B,D) - - w/console	D30Z 13B767-A	#D30B 13B767- AA	1
74	F - - w/console			1
75/	F - - w/console	★ D50Z 13B767-A	#D50B 13B767-AA-not replaced	1
75	G	★ D5DZ 13B767-A	#D5DB 13B767-AA-not replaced	1
78/	K(Diamond Jubilee)	D8LY 13B767-A	#D8LB 13B767-AA	1
79	K	D9LY 13B767-A	#D9LB 13B767-AA	1
13A769	WIRING (DOOR COURTESY LAMP SWITCH)			
75/76	A(71)	★ D4AZ 13A769-C	R.H. and L.H.-#D4AB 13B768-BA-Not replaced	2
73	F(65F,76F) - - w/stereo speakers	D3WY 13A769-B	L.H.-#D3WB 13A769-BA	1
73	F(65F,76F) - - w/o power window	D3WY 13A769-A	R.H.-#D3WB 13A769-AA	1
		D3WY 13A769-B	L.H.-#D3WB 13A769-BA	1
73/78	J	★ D3RY 13A769-A	Not replaced	1
13771	SHIELD (INSTRUMENT PANEL LIGHT)			
74/	L	★ D1FZ 13771-A	Not replaced	1
13776	LAMP (INTERIOR)-also refer to group 13788			
73/76	A,Y	(RH) ★ D3AZ 13776-B	(LH) ★ D3AZ 13776-B Instrument panel	1
77/	A	(RH) D7AZ 13776-A	(LH) D7AZ 13776-A Instrument panel	1
73	A "Before 8/8/72"	(RH) D2AZ 13776-B	(LH) D2AZ 13776-B Door mounted	1
73/76	A "From 8/8/72"	(RH) D3AZ 13776-A	(LH) D3AZ 13776-A Door mounted	1
79	A(74)	D9AZ 13776-A	Cargo lamp	1
79	A	E1AZ 13776-A	Dome/Map lamp	1
73/74	A(53K,57K,65K)	(RH) E0SZ 13776-B	(LH) E0SZ 13776-B Pillar lamp	1
75/76	A(53K,L,65K,L)			1
77/78	A(53,65)			1
73/76	C	(RH) D70Z 13776-A	(LH) D1AZ 13776-B Instrument panel	1
73/	D	(RH) D6VY 13776-A	(LH) D6VY 13776-A Arm rest mounted	1
73/	D	(RH) D0VY 13776-A	(LH) D0VY 13776-A Pillar lamp-round	1
79	D	E1AZ 13776-A	Dome/Map lamp	1
73/74	D	(RH) ★ D2VY 13776-A Not replaced	(LH) ★ D2VY 13776-B Not replaced Roof side lamp-rectangle	1
75/	D - - w/opera window	(RH) D5SZ 13776-A	(LH) D5SZ 13776-B Reading lamp-rectangle	1
79	D	(RH) D7AZ 13776-A	(LH) D7AZ 13776-A Instrument panel	1
73	F(65F)	(RH) E0SZ 13776-B	(LH) E0SZ 13776-B Roof side lamp	1
73	F	(RH) D1AZ 13776-B	(LH) D1AZ 13776-B Instrument panel	1
74/76	F	(RH) D70Z 13776-A	(LH) D1AZ 13776-B Instrument panel	1
77/	F	(RH) D70Z 13776-A	(LH) D70Z 13776-B Instrument panel	1
79	F	E1AZ 13776-A	Dome/Map lamp	1
75/	G	(RH) D70Z 13776-A	(LH) D70Z 13776-A Instrument panel	1
79	G	E1AZ 13776-A	Dome/Map lamp	1
73/78	J	D6RY 13776-A		1

YEAR	MODEL/RESTRICTIONS	PART NUMBER	DESCRIPTION	QTY.
13776	LAMP (INTERIOR)-also refer to group 13788 — Cont'd			
79	J	D8BZ 13776-K	Dome/Map lamp-arm only	1
79	J	D8BZ 13776-S	Base-dome/map lamp-located on windshield header Black	1
		D9ZZ 13776-C	Blue	1
		D8BZ 13776-P	Chamois	1
		D9BZ 13776-B	Red	1
		D9ZZ 13776-D	Vaquero	1
		D8BZ 13776-M	White	1
74/76	K	(RH) D1AZ 13776-B	(LH) D1AZ 13776-B Instrument panel	1
77/	K	(RH) D1AZ 13776-B	(LH) D70Z 13776-B Instrument panel	1
73/	K	(RH) D5SZ 13776-C	(LH) D5SZ 13776-C Front doors	1
73	K - - w/opera window	(RH) D2LY 13776-B	(LH) ★ D2LY 13776-C Reading lamp	1
74/	K - - w/opera window	(RH) D5SZ 13776-A	(LH) D5SZ 13776-B Reading lamp	1
79	K	(RH) D0VY 13776-A	(LH) D0VY 13776-A Pillar lamp-round	1
79	K	E1AZ 13776-A	Dome/Map lamp	1
74/	L	D2FZ 13776-B	Dome-paint to match	1
75/79	L - - w/o sun roof	D5FZ 13776-D	Black-dome/map lamp -located on w/shield header	1
74/76	P	(RH) ★ D4DZ 13776-A	(LH) ★ D4DZ 13776-A Instrument panel	1
77	P	(RH) ★ D7DZ 13776-A	(LH) ★ D7DZ 13776-A Instrument panel	1
78/	P(74)	D8BZ 13776-H	Cargo lamp	1
78/	P	D8BZ 13776-K	Dome/Map lamp-arm only	1
78	P(54,66,74)	D8BZ 13776-S	Base-dome/map lamp-located on windshield header Black	1
		★ D8BZ 13776-L	Blue-not replaced	1
		D8BZ 13776-P	Chamois/black	1
		★ D8BZ 13776-R	Cream/gold-not replaced	1
		★ D8BZ 13776-N	Russet-not replaced	1
		D8BZ 13776-M	White	1
79	P(54,66,74)	D8BZ 13776-S	Base-dome/map lamp-located on windsheild header Black	1
		★ D8BZ 13776-L	Blue-not replaced	1
		D8BZ 13776-P	Chamois/Black	1
		★ D8BZ 13776-R	Cream/gold-not replaced	1
		D9BZ 13776-B	Red	1
		D8BZ 13776-M	White	1
79	P	E1AZ 13776-A	Dome/Map lamp-headliner mounted	1
77/	V	(RH) D70Z 13776-A	(LH) D70Z 13776-A Instrument panel	1
79	V - - Town Car	(RH) D5SZ 13776-A	(LH) D5SZ 13776-B Reading lamp	1
79	V	E1AZ 13776-A	Dome/Map lamp	1
73/78	A,K,Y	33769-S2	(M-89-J)-nut(attach lamp-door courtesy to trim panel)-1/4"-20	AR
73/	D	★377099-S	Nut(attach pillar lamp to inside pillar)-stamped-1/8"	AR
73/	K	376642-S35	(MM-292-A)-nut(attach interior lamp assy. to side rail)-3/8"-24	AR
74	P	42367-S36	(U-269-B)-screw(attach lamp to instrument panel)-No. 10-16 x 1/2"	AR
13776	DOME/MAP LAMP KIT			
73	C,K	D2LY 13776-D	Incl. (1) D2LY 13783-D-lens, (1) D4LY 13786-D	1
74/76	C,Y - - with dome/map lamp		plate, (1) D4LY 13786-A body, (4) 52794-S screws	1
74/77	P - - with dome/map lamp		and (1) I.S. 4240	1
77/78	V - - with dome/map lamp			1
74/78	A,D,F,G,K - - with dome/map lamp			1
78	P(36R)			1

COPYRIGHT © 1986 — FORD MOTOR COMPANY — DEARBORN, MICHIGAN

1973/79 LINCOLN-MERCURY CARS

YEAR	MODEL/RESTRICTIONS	PART NUMBER	DESCRIPTION	QTY.
13783	LENS (PILLAR OR DOME LAMP)–also refer to group 13734			
73/76	A,C,F,G,Y	D1AZ 13783-B	Dome lamp	1
77/78	A,D			1
77/	F,G,K			1
73/77	P – – w/o dome/map lamp			1
78	P(54,66,74) – – w/o dome/map lamp– "From 2/1/78"			1
78	P(36R) – – w/o dome/map lamp			1
73/76	A(71),C(71),Y(71)	C5AZ 13783-E	Cargo lamp	1
77/78	A(71)			1
77	F(71)			1
79	A(74)	D9AZ 13783-B	Cargo lamp	1
73	C,K – – with dome/map lamp	D2LY 13783-D	Dome lamp	1
74/76	C,Y			1
74/77	P			1
74/	A,D,F,G,K – – with dome/map lamp			1
77/	V – – with dome/map lamp			1
78/	P(36R) – – with dome/map lamp			1
78	P – – with dome/map lamp with moon roof			1
73/74	D(53-Town Car)	(RH) ★ D2VY 13783-A	(LH) ★ D2VY 13783-B; Roof side lamp	1
73/	K – – w/opera window	(RH) E0LY 13783-A	(LH) D2LY 13783-C; Reading lamp–rectangle	1
75/	D – – w/opera window			1
74/	L – – w/o dome/map lamp	D5FZ 13783-D	Dome lamp	1
75/	L – – with dome/map lamp	D5FZ 13783-A	Dome lamp	1
75/	L – – with dome/map lamp	D5FZ 13783-B	Map lamp	1
78	P(54,66,74) – – w/o dome/map lamp "Before 2/1/78"	D8BZ 13783-A	Dome lamp	1
79	J – – w/flip top moon roof		Dome-lamp	1
78/	P(74)	D8BZ 13783-B	Cargo lamp	1
78/	P – – with dome/map lamp	D5FZ 13783-E	Dome lamp	1
78/	P – – with dome/map lamp	D5FZ 13783-B	Map lamp	1
79	A,P – – exc. dome/map lamp	D9AZ 13783-C	Dome lamp	1
79	J – – w/o flip top moon roof			1
13786	BODY and SOCKET ASSY. (INTERIOR LAMP)			
75/78	A,D,F,G,K – – with dome/map lamp	D4LY 13786-D	Plate assy.–incl. bulbs and switches	1
75/76	C,Y – – with dome/map lamp			1
75/77	P – – with dome/map lamp			1
77/78	V – – with dome/map lamp	★ D8TZ 13786-A Not replaced	Plate assy–incl bulbs and switches	1
78	P(36R) – – with dome/map lamp			1
78	P – – with dome/map lamp w/moon roof			1
73/74	C,K – – with dome/map lamp			1
74	A,D,F,P,Y – – with dome/map lamp			1
73	C,K – – with dome/map lamp	D4LY 13786-A	Body assy. –incl. map lamp lens	1
74/76	C,Y – – with dome/map lamp			1
74/78	A,D,F,G,K,V – – with dome/map lamp			1
74/77	P – – with dome/map lamp			1
78	P(36R) – – with dome/map lamp			1
78	P – – with dome/map lamp w/moon roof			1
73/78	A(71)	★ D3AZ 13786-A	Cargo lamp–not replaced	1
73/76	Y(71)			1
73/76	C(71)	★ D20Z 13786-A	Cargo lamp–not replaced	1
77	F(71)		Cargo lamp	1

YEAR	MODEL/RESTRICTIONS	PART NUMBER	DESCRIPTION	QTY.
13786	BODY AND SOCKET ASSY. (INTERIOR LAMP)+5FCont'd			
73/74	D - - w/heated backlite	★ D4VY 13786-B	Map lamp-not replaced	1
73/	D - - w/o heated backlite	D5VY 13786-D	Map lamp- "Fasten Belt-Antenna"	1
75/	D - - w/heated backlite	★ D5VY 13786-C	Map lamp- "Fasten Belt-Antenna-Electric De-ice"	1
73/76	C(71)	52012-S8	(U-202)-screw(attach lamp body to rear window header)-No. 8-15 x 1/2"	AR
73/	C,K	376389-S101	(UU-82-D)-screw(attach body-interior lamp to roof rail)-No. 8-18 x 3/4"	AR
74	A,D,F,Y			AR
13A786	ACTUATOR (COURTESY LAMP SWITCH)			
79	J	D9ZZ 13A786-A		1
13788	DOOR (INTERIOR LAMP)			
73/76	C,Y	D6UZ 13788-A	# D3AB 13778-AA-dome lamp	1
73/78	A,D - - exc. dome/map lamp			1
73/	F,G,K - - exc. dome/map lamp			1
73/77	P - - w/o dome/map lamp			1
78	P - - w/o dome/map lamp	★ D8BZ 13788-B	Body assy. dome lamp -not replaced	1
79	A,P - - exc. dome/map lamp	D9AZ 13788-A	Body assy. dome lamp	1
79	J - - w/o flip top moon roof			1
73/78	A,C,F,G,P,Y	376328-S	(UU-67-G)-screw(attach door interior lamp to roof rail)-No. 8-18 x 3/4"	2
13793	SOCKET ASSY. (INTERIOR LAMP)			
78	P(54,66,74)	D8BZ 13793-A	Dome lamp	1
79	J - - w/flip top moon roof			1
13800	AIR HORN KIT			
73/75	J	★ D3RY 13800-A	Not replaced	1
13800	HORN KIT			
73/75	A,C,D,F,K,L,P,Y	D3AZ 13800-A	Dual-air-painted body cover	1
77/78	A			1
78	F			1
79	A,D,G,K,P			1

Consists of

1-D3AJ 2A965-AA	Insulator	1-D6AJ 13932-AA	Pad	2-44724-S36	Washer
1-D0AZ 5A694-A	Bracket	1-D3AJ 14462-AA	Terminal	5-34790-S36	Washer
1-D3AJ 5A739-AA	Sleeve	1-D3AJ 14463-AA	Terminal	5-34825-S36	Washer
1-C5AZ 13801-B	Compressor	1-C9PJ 14487-A	Connector	5-55736-S2	Nut
1-D6AJ 13A803-AA	Horn			1-359922-S36M	Washer
1-D3AJ 13828-AA	Bracket	1-C9AJ 17491-A	Tee	1-373387-S	Washer
1-C9AZ 13A875-B	Switch	1-D3AJ 9A445-AA	Hose	1-383009-S	Connector
1-C7RA 13A887-A	Fitting	1-D2AJ 18N173-AA	Plate	2-375810-S	Grommet
1-D3AZ 13A888-A	Reservoir			4-382215-S	Insert
1-D3AJ 13927-AA	Wire	5-26531-S8	Screw	4-383800-S	Sleeve
1-D3AJ 13930-AA	Tube	5-33795-S36	Nut	1-383804-S	Nut
				1-I.S.-4172-G	Instruction Sheet

77/78	A	D7AZ 13800-A	Dual Air-deluxe-chrome body cover	1
78	F			1
79	A,D,G,K,P			1

Consists of

1-D3AJ 2A965-AA	Insulator	1-D3AJ 13927-AA	wire	5-34790-S36	Washer
1-D0AZ 5A694-A	Bracket	1-D3AJ 13930-AA	Tube	2-44724-S36	Washer
4-D3AJ 5A739-AA	Sleeve	1-D6AJ 13932-AA	Pad	5-55736-S2	Nut
1-D3AJ 9A445-AA	Hose	2-D3AJ 14462-AA	Terminal	1-359922-S36M	Washer
1-C5AZ 13801-B	Compressor	1-D3AJ 14463-AA	Terminal	1-373387-S	Washer
1-D7AJ 13A803-AA	Horn	1-C9PJ 14487-A	Connector	2-375810-S	Grommet
1-D3AJ 13828-AA	Bracket	1-C9AJ 17491-A	Tee	4-383800-S	Sleeve
1-C9AZ 13A875-B	Switch	1-D2AJ 18N173-AA	Plate	1-383804-S	Nut
1-C7RA 13A887-A	Fitting	5-26531-S8	Screw	1-I.S.4172-G	Instruction Sheet
1-D3AZ 13A888-A	Reservoir	5-33795-S36	Nut		

73/78	J	★ D3RY 13800-B	High pitch-not replaced	1
73/78	J	111503-ES8	(BB-630-H)-bolt and washer(attach horn to apron)-1/4"-20 x 5/8"	AR

COPYRIGHT © 1986— FORD MOTOR COMPANY —DEARBORN, MICHIGAN

1973/79 LINCOLN-MERCURY CARS

YEAR	MODEL/RESTRICTIONS	PART NUMBER	DESCRIPTION	QTY.
13801	**COMPRESSOR (AIR HORN VACUUM)**			
73/75	A,C,D,F,P,Y	C5AZ 13801-B		1
77/78	A			1
78	F			1
79	A,D,G,K,P			1
13A805	**COVER ASSY. (HORN BLOWING)-refer to group 13A915**			
13A823	**PLATE (HORN SWITCH BRUSH)**			
73/78	A	D0AZ 13A823-C	Outer-use w/2 or 3 spoke steering wheel	1
73/	D,F,G,K,L			1
73/76	C,Y			1
73/77	P			1
73/78	A	D0AZ 13A823-D	Inner-use w/2 or 3 spoke steering wheel	1
73/	D,F,G,K,L			1
73/76	C,Y			1
73/77	P			1
13826	**PLATE (HORN BRACKET REINFORCEMENT)**			
74/	D	★ D4VY 13826-A	Not replaced	1
13828	**BRACKET (HORN MOUNTING)**			
78/	V	★ D8AY 13828-A	Used with 3rd horn mounted on L.H. fender apron	1
13830	**SPACER (HORN MOUNTING)**			
73/78	J	★ D0RY 13830-A	Not replaced	1
13832-3	**HORN ASSY.**			
73/	A,C,D,F,G,K,V,Y	E3AZ 13832-A	Kit-high pitch	1
	Consists of			
	1-E3AF 13A803-BA	Horn and Support	1-34791-S36	Lockwasher
	1-E3AF 13828-AA	Bracket	1-55734-S2	Nut
	1-C7AF 13828-E	Bracket	1-372289-S36	Screw and washer
	1-55736-S36	Nut	1-379915-S36	Nut
73/	A,C,D,F,G,L,K,P,V,Y	E3AF 13833-A	Kit-low pitch	1
79	J "Before 11/1/78"			1
	Consists of			
	1-E3AF 13A803-AA	Horn and Support	1-34791-S36	Lockwasher
	1-E3AF 13828-AA	Bracket	1-55794-S2	Nut
	1-C7AF 13828-E	Bracket	1-372289-S36	Screw and washer
	1-55736-S36	Nut	1-379915-S36	Nut
74	A,C,D,F,G,K,P - - New York City only	★ D4AZ 13832-A	High pitch-not replaced	1
73/77	D,K	D6VY 13833-A	Low pitch - 3rd horn	1
78	V		Low pitch-3rd horn	1
73/78	J	E0RZ 13833-B	Low pitch	1
		★ D5RY 13832-B	High pitch-not replaced	1
79	J "From 11/1/78"	D9CY 13832-A	Hi-pitch-beep horn	1
73/74	J	130927-ES8	Bolt & lockwasher assy.-5/16"-24 x 1/2"(Metric)	AR
73/77	A,C,D,F,L,P,Y	379930-S	(MM-173-M)-nut(horn to radiator support)-lock-5/16"-18	1
73/77	A,C,F,L,P,Y	57140-S2	(B-340-H)-screw(horn to radiator support)-5/16"-18 x 1"	2
73/77	D	58619-S2	(B-55-C)-screw(horn to support)-5/16"-18 x 1 1/4"	3
13A840	**WIRING ASSY. (HORN JUMPER)**			
76/77	G "Before 2/15/77"	★ D6DZ 13A840-A	# D6DB 13A840-AA-not replaced	1
77/	G "From 2/15/77"	★ D7DZ 13A840-A	# D7DB 13A840-AB-not replaced	1
77/	V			1
73	J	★ D3RY 13A840-A	Not replaced	1
74/78	J	★ D4RY 13A840-B	Not replaced	1
76/78	J	★ D5RY 13A840-A	W/dual horns-not replaced	1
13A847	**WIRE (HORN GROUND)**			
73/74	J	★ D4RY 13A847-A	W/dual horns-not replaced	1

YEAR	MODEL/RESTRICTIONS	PART NUMBER	DESCRIPTION	QTY.
13N850	**WIRE ASSY. (GROUND)**			
73/74	A,Y - - A.T.C.	D3AZ 13N850-A	#D3AB 13N850-AA	1
79	A - - 8 cyl. 351W-exc. Canada	D9AZ 13N850-A	#D9AB 13N850-AA	1
13A875	**SWITCH ASSY. (HORN BLOWING)**			
73/75	A,C,D,F,K,L,P,Y - - w/air horn	C9AZ 13A875-B	Use with air horn kit	1
77/78	A			1
78	F			1
79	A,D,G,K,P			1
73/74	A,C,D,F,K,Y	D1AZ 13A875-A	Use with 3 spoke wheel rim blow type	1
73/74	A,C,L,P,Y	D2AZ 13A875-B	Use w/deluxe 2 spoke steering wheel-pad blow type	1
73	F			1
73/74	A,C,L,Y	D2AZ 13A875-A	Use w/standard 2 spoke steering wheel-pad blow type	1
73/74	A,C,D,F,K,Y - - speed control		Use with 2 spoke steering wheel-rim blow type-serviced in 3600	1
75/78	A,F,G,L - - w/standard or deluxe horn	D6AZ 13A875-A		1
75/79	F,G,L - - w/standard or deluxe horn			1
75/76	C,Y - - w/standard or deluxe horn			1
75/77	P - - w/standard or deluxe horn			1
75/78	A,Y - - w/luxury wheel		Serviced only in 13A805 cover assy.	
75/	D,F,K - - w/luxury wheel			
13A888	**RESERVOIR ASSY. (AIR HORN VACUUM SUPPLY)**			
73/75	A,C,D,F,K,L,P,Y	D3AZ 13A888-A		1
77/78	A			1
78	F			1
79	A,D,G,K,P			1
13A891	**INSULATOR (HORN BLOWING RING INNER CONTACT PLATE)**			
73/78	A	D0AZ 13A891-B	Use with 2 or 3 spoke steering wheel	1
73/	D,F,G,K,L,V			1
73/76	C,Y			1
73/77	P			1

MODEL	PART NUMBER LESS SUFFIX	COLORS and APPLICABLE PART NUMBER SUFFIXES														QTY
			BLUE	ORANGE	RED	GIN-GER	AVO-CADO	GREEN	BEIGE	TAN	GRAY GOLD	TOB-ACCO	BLACK	WHITE	SEE NOTE	
13A915	**COVER (HORN BLOW SWITCH)**															

1973

A (Mercury)

Wheel-2 spoke(w/o speed control)			Refer to group 3600													
Cover - - standard	D3AZ 13A915		C					★G	★D			★H	A			1
- - deluxe	D3AZ 13A915		N					★V	★Z		★AA	★Y	L			1
Pad assy.			Refer to group 3623													
Emblem			Refer to group 3649													
Wheel-2 spoke (w/speed control)-rim blow			Refer to group 3600													
Cover assy.			Refer to group 3D752													
Pad assy.			Refer to group 3623													
Wheel-3 spoke-rim blow			Refer to group 3600													
Cover assy.			Refer to group 3D752													
Pad assy.			Refer to group 3623													

COPYRIGHT © 1986 — FORD MOTOR COMPANY — DEARBORN, MICHIGAN

1973/79 LINCOLN-MERCURY CARS

MODEL	PART NUMBER LESS SUFFIX		COLORS and APPLICABLE PART NUMBER SUFFIXES													QTY
			BLUE	ORANGE	RED	GIN-GER	AVO-CADO	GREEN	BEIGE	TAN	GRAY GOLD	TOB-ACCO	BLACK	WHITE	SEE NOTE	
13A915	COVER (HORN BLOW SWITCH)															
C (Montego)																
Wheel-2 spoke			Refer to group 3600													
Cover - - standard	D3AZ 13A915												A			1
- - deluxe	D3AZ 13A915												L			1
Pad assy.			Refer to group 3623													
Emblem			Refer to group 3649													
Wheel-3 spoke-rim blow			Refer to group 3600													
Pad assy.			Refer to group 3623													
Cover assy.			Refer to group 3D752													
Emblem			Refer to group 3649													
1973																
D (Lincoln)																
Wheel-2 spoke (w/speed control)-rim blow			Refer to group 3600													
Cover assy.			Refer to group 3D752													
Pad assy.			Refer to group 3623													
Wheel-3 spoke-rim blow			Refer to group 3600													
Cover assy.			Refer to group 3D752													
Pad assy.			Refer to group 3623													
F (Cougar)																
Wheel-2 spoke			Refer to group 3600													
Cover - - standard	D3AZ 13A915		C			★F	★B	★G					A			1
- - deluxe	D3AZ 13A915		N			★S	★P	★V		★R			L			1
Pad assy.			Refer to group 3623													
Emblem			Refer to group 3649													
Wheel-3 spoke-rim blow			Refer to group 3600													
Cover assy.			Refer to group 3D752													
Pad assy.			Refer to group 3623													
J (Capri)																
Wheel-3 spoke			Refer to group 3600													
Cover assy.			Refer to group 3623													
Emblem			Refer to group 3649													
K (Mark IV)																
Wheel-2 spoke (w/speed control)-rim blow			Refer to group 3600													
Cover assy.			Refer to group 3D752													
Pad assy.			Refer to group 3623													
Wheel-3 spoke-rim blow			Refer to group 3600													
Cover assy.			Refer to group 3D752													
Pad assy.			Refer to group 3623													
P (Comet)																
Wheel-2 spoke			Refer to group 3600													
Cover - - deluxe	D3AZ 13A915		N			★S			★Z				L			1
Pad assy.			Refer to group 3623													
Emblem			Refer to group 3649													

MODEL	PART NUMBER LESS SUFFIX	COLORS and APPLICABLE PART NUMBER SUFFIXES														QTY
			BLUE	ORANGE	RED	GIN-GER	AVO-CADO	GREEN	BEIGE	TAN	GRAY GOLD	TOB-ACCO	BLACK	WHITE	SEE NOTE	
13A915	COVER (HORN BLOW SWITCH) — Cont'd															

1973

Y (Meteor)

Wheel–2 spoke(w/o speed control)			Refer to group 3600													
Cover – – standard	D3AZ 13A915		C					★G	★D			★H	A			1
– – deluxe	D3AZ 13A915		N					★V	★Z		★AA	★Y	L			1
Pad assy.			Refer to group 3623													
Emblem			Refer to group 3649													
Wheel–2 spoke (w/speed control)–rim blow			Refer to group 3600													
Cover assy.			Refer to group 3D752													
Pad assy.			Refer to group 3623													
Wheel–3 spoke–rim blow			Refer to group 3600													
Cover assy.			Refer to group 3D752													
Pad assy.			Refer to group 3623													

MODEL	PART NUMBER LESS SUFFIX	COLORS and APPLICABLE PART NUMBER SUFFIXES														QTY
			BLUE	ORANGE	RED	AVO-CADO	GREEN	BEIGE	TAN	GOLD	SADDLE	BLACK	WHITE	SEE NOTE	SEE NOTE	
13A915	COVER (HORN BLOW SWITCH) — Cont'd															

1974

Notes: ▲ Gray ‡ Yellow

A (Mercury)

Wheel–2 spoke(w/o speed control)			Refer to group 3600													
Cover – – standard	D3AZ 13A915		C					★G	★D			A				1
	D4AZ 13A915								★B		★C					1
– – deluxe	D3AZ 13A915		N				★V	★Z	★R	★AA		L				1
	D4AZ 13A915										★D					1
Pad assy.			Refer to group 3623													
Emblem			Refer to group 3649													
Wheel–2 spoke (w/speed control)–rim blow			Refer to group 3600													
Cover assy.			Refer to group 3D752													
Pad assy.			Refer to group 3623													
Wheel–3 spoke–rim blow			Refer to group 3600													
Pad assy.			Refer to group 3623													
Emblem			Refer to group 3649													

C (Montego)

Wheel–2 spoke(w/o speed control)			Refer to group 3600													
Cover – – standard	D3AZ 13A915		C					★G				A				1
	D4AZ 13A915										★C					1
– – deluxe	D3AZ 13A915		N				★V		★R	★AA		L				1
	D4AZ 13A915										★D					1
Pad assy.			Refer to group 3623													
Emblem			Refer to group 3649													

COPYRIGHT © 1986 — FORD MOTOR COMPANY — DEARBORN, MICHIGAN

1973/79 LINCOLN-MERCURY CARS

MODEL	PART NUMBER LESS SUFFIX	COLORS and APPLICABLE PART NUMBER SUFFIXES														QTY
			BLUE	ORANGE	RED	AVO-CADO	GREEN	BEIGE	TAN	GOLD	SADDLE	BLACK	WHITE	SEE NOTE	SEE NOTE	
13A915	COVER (HORN BLOW SWITCH) — Cont'd															

1974

Notes: ▲ Gray ‡ Yellow

C (Montego)

Wheel–2 spoke (w/speed control)–rim blow			Refer to group 3600										
Cover assy.			Refer to group 3D752										
Pad assy.			Refer to group 3623										
Emblem			Refer to group 3649										
Wheel–3 spoke–rim blow			Refer to group 3600										
Pad assy.			Refer to group 3623										
Emblem			Refer to group 3649										

D (Lincoln)

wheel–2 spoke (w/speed control)–rim blow			Refer to group 3600										
Cover assy.			Refer to group 3D752										
Pad assy.			Refer to group 3623										
Wheel–3 spoke–rim blow			Refer to group 3600										
Cover assy.			Refer to group 3D752										
Pad assy.			Refer to group 3623										

F (Cougar)

Wheel–2 spoke(w/o speed control)			Refer to group 3600											
Cover – – deluxe	D3AZ 13A915		N	★T	★V	★R	L	1
	D4AZ 13A915		★D	1
Pad assy.			Refer to group 3623											
Emblem			Refer to group 3649											
Wheel–2 spoke (w/speed control)–rim blow			Refer to group 3600											
Cover assy.			Refer to group 3D752											
Pad assy.			Refer to group 3623											
Wheel–3 spoke–rim blow			Refer to group 3600											
Pad assy.			Refer to group 3623											
Emblem			Refer to group 3649											

J (Capri)

Wheel–3 spoke			Refer to group 3600										
Cover assy.			Refer to group 3623										

K (Mark IV)

Wheel–2 spoke (w/speed control)–rim blow			Refer to group 3600										
Cover assy.			Refer to group 3D752										
Pad assy.			Refer to group 3623										
Wheel–3 spoke–rim blow			Refer to group 3600										
Cover assy.			Refer to group 3D752										
Pad assy.			Refer to group 3623										

MODEL	PART NUMBER LESS SUFFIX	COLORS and APPLICABLE PART NUMBER SUFFIXES														QTY
			BLUE	ORANGE	RED	AVO-CADO	GREEN	BEIGE	TAN	GOLD	SADDLE	BLACK	WHITE	SEE NOTE	SEE NOTE	
13A915	COVER (HORN BLOW SWITCH) — Cont'd															

1974

Notes: ▲ Gray ‡ Yellow

L (Bobcat)

Wheel–2 spoke																
Cover – – standard	D4AZ 13A915										★C					1
– – deluxe	D3AZ 13A915		N	M					★R			L		‡W		1
– – standard	D3AZ 13A915		C			★B						A				1
– – deluxe	D4AZ 13A915										★D					1

P (Comet)

Wheel–2 spoke																
Cover – – deluxe	D3AZ 13A915		N	★M		★P			★R				L			1
	D4AZ 13A915														▲J	1
Pad assy.			Refer to group 3623													
Emblem			Refer to group 3649													

Y (Meteor)

Wheel–2 spoke(w/o speed control)																
Cover – – standard	D3AZ 13A915		C				★G	★D				A				1
	D4AZ 13A915								★B		★C					1
– – deluxe	D3AZ 13A915		N				★V	★Z	★R	★AA		L				1
	D4AZ 13A915										★D					1
Pad assy.			Refer to group 3623													
Emblem			Refer to group 3649													
Wheel–2 spoke (w/speed control)–rim blow			Refer to group 3600													
Cover assy.			Refer to group 3D752													
Pad assy.			Refer to group 3623													
Wheel–3 spoke–rim blow			Refer to group 3600													
Pad assy.			Refer to group 3623													
Emblem			Refer to group 3649													

MODEL	PART NUMBER LESS SUFFIX	COLORS and APPLICABLE PART NUMBER SUFFIXES														QTY
			BLUE	ORANGE	RED	SILVER BLUE	GREEN	SILVER	TAN	GOLD	SADDLE	BLACK	WHITE	SEE NOTE	SEE NOTE	
13A915	COVER (HORN BLOW SWITCH)															

1975

Notes: ● – With baby burl Walnut trim palte ♦ – With light burl Walnut trim plate ■ – With black camera case trim plate
▲ Jade @ Taupe ⊕ Dark red ‡ Bright red † Aqua △ Tobacco

A (Mercury)

Wheel–2 spoke w/o speed control			Refer to group 3600													
Cover	D6AZ 13A915		H		L		★M				K	J				1
Emblem			Refer to group 3649													
Trim plate			Refer to group 13A932													
Switch assy.			Refer to group 13A875													

COPYRIGHT © 1986 — FORD MOTOR COMPANY — DEARBORN, MICHIGAN

1973/79 LINCOLN-MERCURY CARS

MODEL	PART NUMBER LESS SUFFIX		COLORS and APPLICABLE PART NUMBER SUFFIXES													QTY
			BLUE	ORANGE	RED	SILVER BLUE	GREEN	SILVER	TAN	GOLD	SADDLE	BLACK	WHITE	SEE NOTE	SEE NOTE	
13A915	COVER (HORN BLOW SWITCH) — Cont'd															

1975

Notes: ● - With baby burl Walnut trim palte ♦ - With light burl Walnut trim plate ■ - With black camera case trim plate
▲ Jade @ Taupe ⊕ Dark red ‡ Bright red † Aqua △ Tobacco

A (Mercury)

Wheel–2 spoke w/o speed control			Refer to group 3600													
Cover assy. – – luxury	D5AZ 13A805						★U									1
	D7AZ 13A805		AC		AF											1
	D9AZ 13A805											E				1
	D8AZ 13A805										AC					1
Emblem			Refer to group 3649													
Trim plate			Refer to group 13A932													
Wheel–2 spoke w/speed control			Refer to group 3600													
Cover assy.	D5AZ 13A805				★E		★CC									1
	D8AZ 13A805		AB								AC					1
	D9AZ 13A805											E				1
Emblem			Refer to group 3649													
Trim plate			Refer to group 13A932													

C (Montego)

Wheel–2 spoke w/o speed control			Refer to group 3600													
Cover assy.																
Cover	D6AZ 13A915		B				★D				★E	■C				1
	D6AZ 13A915		●H				★M				●K	●J				1
Emblem			Refer to group 3649													
Trim plate			Refer to group 13A932													
Switch assy.			Refer to group 13A875													
Wheel–2 spoke w/o speed control			Refer to group 3600													
Cover assy. – – luxury	D5AZ 13A805						★U									1
	D7AZ 13A805		AC													1
	D9AZ 13A805											E				1
	D8AZ 13A805										AC					1
Emblem			Refer to group 3649													
Trim plate			Refer to group 13A932													
Wheel–2 spoke w/speed control			Refer to group 3600													
Cover assy.	D5AZ 13A805						★CC									1
	D8AZ 13A805		AB								AC					1
	D9AZ 13A805											E				1
Emblem			Refer to group 3649													
Trim plate			Refer to group 13A932													

D (Lincoln)

Wheel–2 spoke w/o speed control			Refer to group 3600													
Cover assy. – – luxury	D5AZ 13A805						★U		★CV						★CZ	1
	D7AZ 13A805		AC		AF					★AJ						1
	D9AZ 13A805											E		▲B		1
Emblem			Refer to group 3649													
Trim plate			Refer to group 13A932													

MODEL	PART NUMBER LESS SUFFIX	COLORS and APPLICABLE PART NUMBER SUFFIXES														Q T Y
			BLUE	ORANGE	RED	SILVER BLUE	GREEN	SILVER	TAN	GOLD	SADDLE	BLACK	WHITE	SEE NOTE	SEE NOTE	
13A915	COVER (HORN BLOW SWITCH) — Cont'd															

1975

Notes: ● - With baby burl Walnut trim palte ♦ - With light burl Walnut trim plate ■ - With black camera case trim plate
▲ Jade @ Taupe ⊕ Dark red ‡ Bright red † Aqua △ Tobacco ★ Not replaced

D (Lincoln)

Wheel-2 spoke w/speed control			Refer to group 3600													
Cover assy.	D5AZ 13A805				★E		★CC		★CF	CN					★CM	1
	D9AZ 13A805		AB									E		▲B		1
Emblem			Refer to group 3649													
Trim plate			Refer to group 13A932													

F (Cougar)

Wheel-2 spoke w/o speed control			Refer to group 3600													
Cover	D6AZ 13A915		H		L		★M				★K	J				1
Emblem			Refer to group 3649													
Trim plate			Refer to group 13A932													
Switch assy.			Refer to group 13A875													
Wheel-2 spoke w/o speed control			Refer to group 3600													
Cover assy. - - luxury	D5AZ 13A805						★U									1
	D7AZ 13A805		AC		AF											1
	D9AZ 13A805											E				1
	D8AZ 13A805										AC					1
Emblem			Refer to group 3649													
Trim plate			Refer to group 13A932													
Wheel-2 spoke w/speed control			Refer to group 3600													
Cover assy.	D5AZ 13A805				★E		★CC									1
	D8AZ 13A805		AB								AC					1
	D9AZ 13A805											E				1
Emblem			Refer to group 3649													
Trim plate			Refer to group 13A932													

G (Monarch)

Wheel-2 spoke			Refer to group 3600													
Cover	D6AZ 13A915				L	★P	★M		★G			J				1
Emblem			Refer to group 3649													
Trim plate			Refer to group 13A932													
Switch assy.			Refer to group 13A875													
Wheel-2 spoke			Refer to group 3600													
Cover assy. - - luxury	D5AZ 13A805					★AF	★U		★CV					★AG		1
	D7AZ 13A805				AF											1
	D9AZ 13A805											E				1
Emblem			Refer to group 3649													
Trim plate			Refer to group 13A932													

K (Mark IV)

Wheel-2 spoke			Refer to group 3600													
Cover assy.	D5AZ 13A805				★⊕E		★CC		★CF					★CG	★K	1
	D8AZ 13A805		AB								AC					1
	D9AZ 13A805							A				E				1
Emblem			Refer to group 3649													
Trim plate			Refer to group 13A932													

COPYRIGHT © 1986— FORD MOTOR COMPANY —DEARBORN, MICHIGAN

1973/79 LINCOLN-MERCURY CARS

MODEL	PART NUMBER LESS SUFFIX		COLORS and APPLICABLE PART NUMBER SUFFIXES													QTY
			BLUE	ORANGE	RED	SILVER BLUE	GREEN	SILVER	TAN	GOLD	SADDLE	BLACK	WHITE	SEE NOTE	SEE NOTE	
13A915	COVER (HORN BLOW SWITCH) — Cont'd															

1975

Notes: ● - With baby burl Walnut trim palte ♦ - With light burl Walnut trim plate ■ - With black camera case trim plate
▲ Jade @ Taupe ⊕ Dark red ‡ Bright red † Aqua △ Tobacco ★ Not replaced

L (Bobcat)

Wheel-2 spoke Cover assy.			Refer to group 3600													
Cover	D6AZ 13A915		B				★D		★A			■C				1
	D6AZ 13A915		●H	★			★M		★G			●J				1
Emblem			Refer to group 3649													
Trim plate			Refer to group 13A932													
Switch assy.			Refer to group 13A875													

P (Comet)

Wheel-2 spoke			Refer to group 3600													
Cover	D6AZ 13A915		H				★M		★G			J				1
Emblem			Refer to group 3649													
Trim plate			Refer to group 13A932													
Switch assy.			Refer to group 13A875													

Y (Meteor)

Wheel-2 spoke w/o speed control			Refer to group 3600													
Cover	D6AZ 13A915		H		L		★M				★K	J				1
Emblem			Refer to group 3649													
Trim plate			Refer to group 13A932													
Switch assy.			Refer to group 13A875													
Wheel-2 spoke w/o speed control			Refer to group 3600													
Cover assy. - - luxury	D5AZ 13A805						★U									1
	D7AZ 13A805		AC		AF											1
	D9AZ 13A805											E				1
	D8AZ 13A805										AC					1
Emblem			Refer to group 3649													
Trim plate			Refer to group 13A932													
Wheel-2 spoke w/speed control			Refer to group 3600													
Cover assy.	D5AZ 13A805				★E		★CC									1
	D8AZ 13A805		AB								AC					1
	D9AZ 13A805											E				1
Emblem			Refer to group 3649													
Trim plate			Refer to group 13A932													

MODEL	PART NUMBER LESS SUFFIX		BLUE	RED	SILVER BLUE	GREEN	JADE	TAN	CREAM	GOLD	SADDLE	BLACK	WHITE	SEE NOTE	SEE NOTE	QTY
		COLORS and APPLICABLE PART NUMBER SUFFIXES														
13A915	COVER (HORN BLOW SWITCH)															

1976

Notes: ● With baby burl Walnut trim palte ■ With black camera case trim plate ▲ Gray @ Taupe
♦ With light burl Walnut trim plate † Aqua △ Tobacco ⊕ Dark red ‡ Bright red

A (Mercury)

Wheel-2 spoke - - deluxe w/o speed control.			Refer to group 3600													
Cover	D6AZ 13A915		H	L		★M				★R	★K	J				1
Emblem			Refer to group 3649													
Trim plate			Refer to group 13A932													
Switch assy.			Refer to group 13A875													
Wheel-2 spoke - - luxury w/o speed control			Refer to group 3600													
Cover assy.	D5AZ 13A805						★CU									1
	D7AZ 13A805		AC	AF						★AJ						1
	D8AZ 13A805										AC					1
	D9AZ 13A805											E				1
Emblem			Refer to group 3649													
Trim plate			Refer to group 13A932													
Wheel-2 spoke - - luxury w/speed control			Refer to group 3600													
Cover assy.	D5AZ 13A805						★CC									1
	D7AZ 13A805			BF						★BJ						1
	D8AZ 13A805		AB								AC					1
	D9AZ 13A805											E				1
Emblem			Refer to group 3649													
Trim plate			Refer to group 13A932													

C (Montego)

Wheel-2 spoke - - standard-w/o speed control			Refer to group 3600													
Cover	D6AZ 13A915		B	W		★D				★X	★E	C				1
Emblem			Refer to group 3649													
Trim plate			Refer to group 13A932													
Switch assy.			Refer to group 13A875													
Wheel-2 spoke - - deluxe w/o speed control			Refer to group 3600													
Cover	D6AZ 13A915		H	L		★M				★R	★K	J				1
Emblem			Refer to group 3649													
Trim plate			Refer to group 13A932													
Switch assy.			Refer to group 13A875													
Wheel-2 spoke - - luxury w/o speed control			Refer to group 3600													
Cover assy.	D5AZ 13A805					★CU										1
	D7AZ 13A805		AC	AF						★AJ						1
	D8AZ 13A805										AC					1
	D9AZ 13A805											E				1
Emblem			Refer to group 3649													
Trim plate			Refer to group 13A932													
Wheel-2 spoke - - luxury with speed control			Refer to group 3600													
Cover assy.	D5AZ 13A805					★CC										1
	D7AZ 13A805			BF						BJ						1
	D8AZ 13A805		AB								AC					1
	D9AZ 13A805											E				1
Emblem			Refer to group 3649													
Trim plate			Refer to group 13A932													

COPYRIGHT © 1986— FORD MOTOR COMPANY —DEARBORN, MICHIGAN

1973/79 LINCOLN-MERCURY CARS

MODEL	PART NUMBER LESS SUFFIX	COLORS and APPLICABLE PART NUMBER SUFFIXES														QTY
			BLUE	RED	SILVER BLUE	GREEN	JADE	TAN	CREAM	GOLD	SADDLE	BLACK	WHITE	SEE NOTE	SEE NOTE	
13A915	COVER (HORN BLOW SWITCH) — Cont'd															

1976

Notes: ● With baby burl Walnut trim palte ■ With black camera case trim plate ▲ Gray @ Taupe
♦ With light burl Walnut trim plate † Aqua △ Tobacco ⊕ Dark red ‡ Bright red

D (Lincoln)

Wheel-2 spoke - - luxury w/o speed control			Refer to group 3600													
Cover assy.	D5AZ 13A805							★CV						★CZ		1
	D7AZ 13A805		AC	AF						★AJ						1
	D9AZ 13A805				A		B					E				1
Emblem			Refer to group 3649													
Trim plate			Refer to group 13A932													
Wheel-2 spoke - - luxury w/speed control			Refer to group 3600													
Cover assy.	D5AZ 13A805							★CF						★CM		1
	D7AZ 13A805			BF						★BJ						1
	D8AZ 13A805		AB													1
	D9AZ 13A805				A		B				E					1
Emblem			Refer to group 3649													
Trim plate			Refer to group 13A932													

F (Cougar)

Wheel-2 spoke - - deluxe w/o speed control			Refer to group 3600													
Cover	D6AZ 13A915		H	L		★M				★R	★K	J		★Y		1
Emblem			Refer to group 3649													
Trim plate			Refer to group 13A932													
Switch assy.			Refer to group 13A875													
Wheel-2 spoke - - luxury w/o speed control			Refer to group 3600													
Cover assy.	D5AZ 13A805					★CU										1
	D6AZ 13A805		AC											★N		1
	D7AZ 13A805			AF						★AJ						1
	D8AZ 13A805										AC					1
	D9AZ 13A805						B					E				1
Emblem			Refer to group 3649													
Trim plate			Refer to group 13A932													
Wheel-2 spoke - - luxury w/speed control			Refer to group 3600													
Cover assy.	D5AZ 13A805					★CC								★CK		1
	D7AZ 13A805			BF						★BJ						1
	D8AZ 13A805		AB								AC					1
	D9AZ 13A805						B					E				1
Emblem			Refer to group 3649													
Trim plate			Refer to group 13A932													

G (Monarch)

Wheel-2 spoke - - standard w/o speed control			Refer to group 3600													
Cover	D6AZ 13A915			W	U			★A				C				1
Emblem			Refer to group 3649													
Trim plate			Refer to group 13A932													
Switch assy.			Refer to group 13A875													

MODEL	PART NUMBER LESS SUFFIX	COLORS and APPLICABLE PART NUMBER SUFFIXES														QTY
			BLUE	RED	SILVER BLUE	GREEN	JADE	TAN	CREAM	GOLD	SADDLE	BLACK	WHITE	SEE NOTE	SEE NOTE	
13A915	COVER (HORN BLOW SWITCH) — Cont'd															

1976

Notes: ● With baby burl Walnut trim palte ■ With black camera case trim plate ▲ Gray @ Taupe
♦ With light burl Walnut trim plate † Aqua △ Tobacco ⊕ Dark red ‡ Bright red ★ Not replaced

G (Monarch)

Wheel-2 spoke - - deluxe w/o speed control			Refer to group 3600													
Cover assy.	D5AZ 13A805			♦BU												1
Cover	D6AZ 13A915			L	★P		AA	★G				J		★T	★AB	1
Emblem			Refer to group 3649													
Trim plate			Refer to group 13A932													
Switch assy.			Refer to group 13A875													
Wheel-2 spoke - - luxury w/o speed control			Refer to group 3600													
Cover assy.	D5AZ 13A805							★CV						△AG		1
	D7AZ 13A805			AF												1
	D9AZ 13A805				A		B					E				1
Emblem			Refer to group 3649													
Trim plate			Refer to group 13A932													
Wheel-2 spoke - - luxury w/speed control			Refer to group 3600													
Cover assy.	D5AZ 13A805							★CF								1
	D6AZ 13A805				★E									★F		1
	D7AZ 13A805			BF												1
	D9AZ 13A805						B					E			▲A	1
Emblem			Refer to group 3649													
Trim plate			Refer to group 13A932													

K (Mark IV)

Wheel-2 spoke - - luxury w/o speed control			Refer to group 3600													
Cover assy.	D5AZ 13A805															1
Cover assy.	D6AZ 13A805														★N	1
	D7AZ 13A805		AC	⊕AF						★AJ						1
	D8AZ 13A805										AC					1
	D9AZ 13A805			A			B					E				1
Emblem			Refer to group 3649													
Trim plate			Refer to group 13A932													
Wheel - 2 spoke - - luxury w/speed control			Refer to group 3600													
Cover assy.	D5AZ 13A805														★CK	1
	D7AZ 13A805			⊕BF						★BJ						1
	D5AZ 13A805			★CG												1
	D8AZ 13A805		AB								AC					1
	D9AZ 13A805						B					E		▲A		1
Emblem			Refer to group 3649													
Trim plate			Refer to group 13A932													

L (Bobcat)

Wheel-2 spoke - - standard			Refer to group 3600													
Cover	D6AZ 13A915		B	★F		★D		★A				C				1
Emblem			Refer to group 3649													
Trim plate			Refer to group 13A932													
Switch assy.			Refer to group 13A875													
Wheel - 2 spoke - - deluxe			Refer to group 3600													
Cover	D6AZ 13A915		H	★S		★M		★G				J				1
Emblem			Refer to group 3649													
Trim plate			Refer to group 13A932													
Switch assy.			Refer to group 13A875													

COPYRIGHT © 1986— FORD MOTOR COMPANY —DEARBORN, MICHIGAN

1973/79 LINCOLN-MERCURY CARS

MODEL	PART NUMBER LESS SUFFIX	COLORS and APPLICABLE PART NUMBER SUFFIXES														QTY
			BLUE	RED	SILVER BLUE	GREEN	JADE	TAN	CREAM	GOLD	SADDLE	BLACK	WHITE	SEE NOTE	SEE NOTE	
13A915	COVER (HORN BLOW SWITCH) — Cont'd															

1976

Notes: ● With baby burl Walnut trim palte ■ With black camera case trim plate ▲ Gray @ Taupe
♦ With light burl Walnut trim plate † Aqua △ Tobacco ⊕ Dark red ‡ Bright red

P (Comet)

Wheel-2 spoke - - std.			Refer to group 3600													
Button assy.	D3DZ 13A805											A				1
	D6DZ 13A805		B			★C		A								1
Wheel-2 spoke - - deluxe			Refer to group 3600													
Cover	D6AZ 13A915		H			★M		★G				J				1
Emblem			Refer to group 3649													
Trim plate			Refer to group 13A932													
Switch assy.			Refer to group 13A875													

Y (Meteor)

Wheel-2 spoke - - std. w/o speed control			Refer to group 3600													
Cover	D6AZ 13A915		B			★D					★E	C				1
Emblem			Refer to group 3649													
Trim plate			Refer to group 13A932													
Switch assy.			Refer to group 13A875													
Wheel - 2 spoke - - deluxe w/o speed control			Refer to group 3600													
Cover	D6AZ 13A915		H	L		★M				★R	★K	J				1
Emblem			Refer to group 3649													
Trim plate			Refer to group 13A932													
Switch assy.			Refer to group 13A875													
Wheel-2 spoke - luxury w/o speed control.			Refer to group 3600													
Cover assy.	D5AZ 13A805					★CU										1
	D7AZ 13A805		AC	AF						★AJ						1
	D8AZ 13A805										AC					1
	D9AZ 13A805											E				1
Emblem			Refer to group 3649													
Trim plate			Refer to group 13A932													
Wheel-2 spoke - - luxury w/speed control			Refer to group 3600													
Cover assy.	D5AZ 13A805					★CC										1
	D7AZ 13A805			BF						★BJ						1
	D8AZ 13A805		AB								AC					1
	D9AZ 13A805											E				1
Emblem			Refer to group 3649													
Trim plate			Refer to group 13A932													

MODEL	PART NUMBER LESS SUFFIX	COLORS AND APPLICABLE PART NUMBER SUFFIXES														QTY
		BLUE	RED	GRAY	GREEN	JADE	AQUA	CHAM-OIS	TAN	GOLD	SADDLE	BLACK	EMER-ALD	SEE NOTE	SEE NOTE	
13A915	COVER (HORN BLOW SWITCH) — Cont'd															

1977

Notes: ♦ Cordovan ⊕ Bright red ‡ Dark red

A (Mercury)

Wheel-2 spoke-Standard- w/o speed control			Refer to group 3600													
Cover	D6AZ 13A915	B	W							★X	★E					1
	D7AZ 13A915			★B		A										1
Trim plate			Refer to group 13A932													
Switch assy			Refer to group 13A875													

MODEL	PART NUMBER LESS SUFFIX	COLORS AND APPLICABLE PART NUMBER SUFFIXES														Q T Y
		BLUE	RED	GRAY	GREEN	JADE	AQUA	CHAM-OIS	TAN	GOLD	SADDLE	BLACK	EMER-ALD	SEE NOTE	SEE NOTE	
13A915	COVER (HORN BLOW SWITCH) — Cont'd															

1977

Notes: ♦ Cordovan ⊕ Bright red ‡ Dark red

A (Mercury)

Wheel-2 spoke-deluxe-w/o speed Control			Refer to group 3600													
Cover	D6AZ 13A915	H	L	★AB		★AA				R	★K					1
Emblem			Refer to group 3649													
Trim plate			Refer to group 13A932													
Switch assy			Refer to group 13A875													
Wheel-2 spoke-luxury-w/o speed control			Refer to group 3600													
Cover assy	D7AZ 13A805									★AJ						1
	D8AZ 13A805	AB									AC					1
	D9AZ 13A805		F	A		B										1
Emblem			Refer to group 3649													
Trim plate			Refer to group 13A932													
Wheel-2 spoke-luxury-with speed Control			Refer to group 3600													
Cover assy	D7AZ 13A805									★BJ						1
	D8AZ 13A805	AB									AC					1
	D9AZ 13A805		F	A		B										1
Emblem			Refer to group 3649													
Trim plate			Refer to group 13A932													

D (Lincoln)

Wheel-2 spoke-luxury-w/o speed control			Refer to group 3600													
Cover assy	D7AZ 13A805									★AJ						1
	D8AZ 13A805	AB						AA			AC					1
	D9AZ 13A805		F	A		B						E		♦D		1
Emblem			Refer to group 3649													
Trim plate			Refer to group 13A932													
Wheel-2 spoke-luxury-with speed control			Refer to group 3600													
Cover assy	D7AZ 13A805									★BJ						1
	D8AZ 13A805	AB						AA				AM				1
	D9AZ 13A805		F	A		B								♦D		1
Emblem			Refer to group 3649													
Trim plate			Refer to group 13A932													

F (Cougar)

Wheel-2 spoke-standard-w/o speed control			Refer to group 3600													
Cover	D6AZ 13A915	B	‡W								★E					1
	D7AZ 13A915			★B		★A		E								1
Trim plate			Refer to group 13A932													
Switch assy			Refer to group 13A875													
Wheel-2 spoke-deluxe-w/o speed control			Refer to group 3600													
Cover	D6AZ 13A915	H	‡L	★AB		AA					★K					1
	D6AZ 13A915		★S													1
	D7AZ 13A915							★F								1
Emblem			Refer to group 3649													
Trim plate			Refer to group 13A932													
Switch assy			Refer to group 13A875													

COPYRIGHT © 1986— FORD MOTOR COMPANY —DEARBORN, MICHIGAN

1973/79 LINCOLN-MERCURY CARS

MODEL	PART NUMBER LESS SUFFIX	COLORS AND APPLICABLE PART NUMBER SUFFIXES														QTY
		BLUE	RED	GRAY	GREEN	JADE	AQUA	CHAM-OIS	TAN	GOLD	SADDLE	BLACK	EMER-ALD	SEE NOTE	SEE NOTE	
13A915	COVER (HORN BLOW SWITCH) — Cont'd															

1977

Notes: ♦ Cordovan ⊕ Bright red ‡ Dark red ★ Not replaced

F (Cougar)

Wheel-2 spoke-luxury-w/o speed control			Refer to group 3600													
Cover assy	D6AZ 13A805		★M													1
	D8AZ 13A805	AB						AA			AC					1
	D9AZ 13A805		F	A		B						E				1
Emblem			Refer to group 3649													
Trim plate			Refer to group 13A932													
Wheel-2 spoke-luxury-with speed control			Refer to group 3600													
Cover assy	D5AZ 13A805		★CG													1
	D8AZ 13A805	AB						AA			AC	AM				1
	D9AZ 13A805		F	A		B										1
Emblem			Refer to group 3649													
Trim plate			Refer to group 13A932													
Wheel-3 spoke			Refer to group 3600													
Button	D8FZ 13A805											B				1

G (Monarch)

Wheel-2 spoke-standard-w/o speed control			Refer to group 3600													
Cover	D6AZ 13A915	B	W						★A	★X						1
	D7AZ 13A915					★A										1
Trim plate			Refer to group 13A932													
Switch assy			Refer to group 13A875													
Wheel-2 spoke-deluxe-w/o speed control			Refer to group 3600													
Cover	D6AZ 13A915	H	L	★AB		AA			★G	R						1
Emblem			Refer to group 3649													
Trim plate			Refer to group 13A932													
Switch assy			Refer to group 13A875													
Wheel-2 spoke-luxury-w/o speed control			Refer to group 3600													
Cover assy	D5AZ 13A805								CV							1
	D9AZ 13A805		F	A		B										1
Emblem			Refer to group 3649													
Trim plate			Refer to group 13A932													
Wheel-2 spoke-luxury-with speed control			Refer to group 3600													
Cover assy	D5AZ 13A805								★CF							1
	D7AZ 13A805									★BJ						1
	D8AZ 13A805	AB										AM				1
	D9AZ 13A805		F	A		B										1
Emblem			Refer to group 3649													
Trim plate			Refer to group 13A932													
Wheel- 3 spoke			Refer to group 3600													
Button	D8FZ 13A805											B				1

MODEL	PART NUMBER LESS SUFFIX	COLORS AND APPLICABLE PART NUMBER SUFFIXES														QTY
		BLUE	RED	GRAY	GREEN	JADE	AQUA	CHAMOIS	TAN	GOLD	SADDLE	BLACK	EMERALD	SEE NOTE	SEE NOTE	
13A915	COVER (HORN BLOW SWITCH) — Cont'd															

1977

Notes: ♦ Cordovan ⊕ Bright red ‡ Dark red

K (Mark V)

Wheel-2 spoke-luxury-w/o speed control			Refer to group 3600													
Cover assy	D7AZ 13A805									★AJ						1
	D8AZ 13A805	AB						AA								1
	D9AZ 13A805		F	A		B						E		♦D		1
Emblem			Refer to group 3649													
Trim plate			Refer to group 13A932													
Wheel-2 spoke-luxury-with speed control			Refer to group 3600													
Cover assy	D7AZ 13A805									★BJ						1
	D8AZ 13A805	AB						AA				AM				1
	D9AZ 13A805		F	A		B								♦D		1
Emblem			Refer to group 3649													
Trim plate			Refer to group 13A932													

L (Bobcat) – "Before 6/27/77"

For units built "From 6/27/77" – refer to 1978

Wheel-2 spoke-deluxe-			Refer to group 3600													
Cover	D6AZ 13A915	H	★S		★M							J				1
	D7AZ 13A915							★F								1
Emblem			Refer to group 3649													
Trim plate			Refer to group 13A932													
Switch assy			Refer to group 13A875													
Wheel-2 spoke			Refer to group 3600													
Button assy-"Sunburst"	D3DZ 13A805											A				1
	D6DZ 13A805	B			★C											1
	D7DZ 13A805		⊕A					★C								1
Wheel-3 spoke			Refer to group 3600													
Button	D8FZ 13A805											B				1

P (Comet)

Wheel-2 spoke			Refer to group 3600													
Button assy-"Sunburst"	D3DZ 13A805											A				1
	D6DZ 13A805	B			★C				A							1
	D7DZ 13A805		⊕A													1
Wheel-3 spoke			Refer to group 3600													
Button assy.-"Stallion"	D7DZ 13A805											A				1
Wheel-2 spoke-deluxe			Refer to group 3600													
Cover	D6AZ 13A915	H	★S		★M				★G			J				1
Emblem			Refer to group 3649													
Trim plate			Refer to group 13A932													
Switch assy			Refer to group 13A875													

V (Versailles)

Wheel- 2 spoke-luxury-w/o speed control			Refer to group 3600													
Cover assy.	D8AZ 13A805	AB						AA								1
	D9AZ 13A805			A										♦D		1
Emblem			Refer to group 3649													
Trim plate			Refer to group 13A932													
Wheel-2 spoke-luxury-with speed control			Refer to group 3600													
Cover assy.	D9AZ 13A805			A										♦D		1
	D8AZ 13A805	AB				AA										1
Emblem			Refer to group 3649													
Trimplate			Refer to group 13A932													

COPYRIGHT © 1986— FORD MOTOR COMPANY —DEARBORN, MICHIGAN

1973/79 LINCOLN-MERCURY CARS

MODEL	PART NUMBER LESS SUFFIX	COLORS and APPLICABLE PART NUMBER SUFFIXES														QTY
		BLUE	RED	RUSSET	CORD-OVAN	JADE	GRAY	CHAM-OIS	CAMEL	SADDLE	CHAM-PAGNE	GOLD	BLACK	SEE NOTE	SEE NOTE	
13A915	COVER (HORN BLOW SWITCH) — Cont'd															
1978																
A (Mercury)																
Wheel – 2 spoke–standard–w/o speed control			Refer to group 3600													
Cover	D6AZ 13A915	B	W							★E						1
	D7AZ 13A915					★A	★B									1
	D8AZ 13A915								A							1
Trimplate			Refer to group 13A932													
Switch assy.			Refer to group 13A875													
Wheel–2 spoke–deluxe–w/o speed control			Refer to group 3600													
Cover	D6AZ 13A915	H	L			AA	★AB			★K						1
	D8AZ 13A915								E							1
Emblem			Refer to group 3649													
Trimplate			Refer to group 13A932													
Switch assy.			Refer to group 13A875													
Wheel–2 spoke–luxury with or without speed control			Refer to group 3600													
Cover assy.	D8AZ 13A805	AB							★AF	AC						1
	D9AZ 13A805		F			B	A									1
Emblem			Refer to group 3649													
Trimplate			Refer to group 13A932													
D (Lincoln)																
Wheel–2 spoke–luxury with or without speed control			Refer to group 3600													
Cover assy.	D8AZ 13A805	AB						AA				AJ				1
	D9AZ 13A805		F		D	B	A				C		E			1
Emblem			Refer to group 3649													
Trimplate			Refer to group 13A932													
F (Cougar)																
Wheel–2 spoke–standard–w/o speed control			Refer to group 3600													
Cover	D6AZ 13A915	B								★E						1
	D7AZ 13A915					★A	★B	E								1
	D8AZ 13A915			★B												1
Trimplate			Refer to group 13A932													
Switch assy.			Refer to group 13A875													
Wheel–2 spoke–deluxe–w/o speed control			Refer to group 3600													
Cover	D6AZ 13A915	H				AA	★AB			★K						1
	D7AZ 13A915							★F								1
	D8AZ 13A915			★F												
Emblem			Refer to group 3649													
Trimplate			Refer to group 13A932													
Switch assy.			Refer to group 13A875													
Wheel–2 spoke–luxury–with or without speed control			Refer to group 3600													
Cover assy.	D8AZ 13A805	AB	AP	★AG				AA		AC						1
	D9AZ 13A805					B	A									1
Emblem			Refer to group 3649													
Trimplate			Refer to group 13A932													
Wheel–3 spoke			Refer to group 3600													
Button	D8FZ 13A805												B			1

MODEL	PART NUMBER LESS SUFFIX	COLORS and APPLICABLE PART NUMBER SUFFIXES														QTY
		BLUE	RED	RUSSET	CORD-OVAN	JADE	GRAY	CHAM-OIS	CAMEL	SADDLE	CHAM-PAGNE	GOLD	BLACK	SEE NOTE	SEE NOTE	
13A915	COVER (HORN BLOW SWITCH) — Cont'd															
1978																
G (Monarch)																
Wheel-2 spoke-standard-w/o speed control			Refer to group 3600													
Cover	D6AZ 13A915	B	W													1
	D7AZ 13A915					★A	★B									1
	D8AZ 13A915				★D				A							1
Trimplate			Refer to group 13A932													
Switch assy.			Refer to group 13A875													
Wheel-2 spoke-deluxe-w/o speed control			Refer to group 3600													
Cover	D6AZ 13A915	H	L			AA	★AB									1
	D8AZ 13A915				★H				E							1
Emblem			Refer to group 3649													
Trimplate			Refer to group 13A932													
Switch assy.			Refer to group 13A875													
Wheel-2 spoke-luxury-with or without speed control			Refer to group 3600													
Cover assy.	D8AZ 13A805	AB							★AF							1
	D9AZ 13A805		F		D	B	A						E			1
Emblem			Refer to group 3649													
Trimplate			Refer to group 13A932													
Wheel-3 spoke			Refer to group 3600													
Button	D8FZ 13A805												B			1
K (Mark V)																
Wheel-2 spoke-luxury-with or without speed control			Refer to group 3600													
Cover assy.	D8AZ 13A805	AB						AA				AJ				1
	D9AZ 13A805		F		D	B	A				C		E			1
Emblem			Refer to group 3649													
Trimplate			Refer to group 13A932													
L (Bobcat)																
Wheel-2 spoke-standard			Refer to group 3600													
Cover	D6AZ 13A915	B	★F										C			1
	D7AZ 13A915							E								1
	D8AZ 13A915					★C										1
Trimplate			Refer to group 13A932													
Switch assy.			Refer to group 13A875													
Wheel-2 spoke-deluxe-			Refer to group 3600													
Cover	D6AZ 13A915	H	★S										J			1
	D7AZ 13A915							★F								1
	D8AZ 13A915					★G										1
Emblem			Refer to group 3649													
Trimplate			Refer to group 13A932													
Switch assy.			Refer to group 13A875													
Wheel-2 spoke			Refer to group 3600													
Button assy. "Sunburst"	D3DZ 13A805												A			1
	D6DZ 13A805	B														1
	D7DZ 13A805		A					★C								1
	D8FZ 13A805					★A										1
Wheel-3 spoke			Refer to group 3600													
Button assy. "Crest"	D8FZ 13A805												B			1

COPYRIGHT © 1986— FORD MOTOR COMPANY —DEARBORN, MICHIGAN

1973/79 LINCOLN-MERCURY CARS

MODEL	PART NUMBER LESS SUFFIX	COLORS and APPLICABLE PART NUMBER SUFFIXES														QTY
		BLUE	RED	RUSSET	CORD-OVAN	JADE	GRAY	CHAM-OIS	CAMEL	SADDLE	CHAM-PAGNE	GOLD	BLACK	SEE NOTE	SEE NOTE	
13A915	COVER (HORN BLOW SWITCH) — Cont'd															

1978

P (Zephyr)

Wheel-3 spoke Button assy.	D8BZ 13A805												C			1

V (Versailles)

Wheel-2 spoke-luxury-with speed control Cover assy.			Refer to group 3600													
	D8AZ 13A805	AB						AA								1
	D9AZ 13A805		F		D		A									1

MODEL	PART NUMBER LESS SUFFIX	COLORS and APPLICABLE PART NUMBER SUFFIXES														QTY
		BLUE	RED	BERYL	CORD-OVAN	JADE	GRAY	CHAM-OIS	CAMEL	AME-THYST	CHAM-PAGNE	GOLD	BLACK	SEE NOTE	SEE NOTE	
13A915	COVER (HORN BLOW SWITCH) — Cont'd															

1979

Notes: ● Wedge Blue-♦ Medium Blue

D (Lincoln)

Wheel-2 spoke-luxury-with or without speed control Cover assy.			Refer to group 3600													
	D8AZ 13A805	●AB										AJ				1
	D9AZ 13A805	♦G	F	J	D	B	A				C		E			1
Emblem			Refer to group 3649													
Trimplate			Refer to group 13A932													

F (Cougar)

Wheel-2 spoke-standard w/o speed control Cover			Refer to group 3600													
	D6AZ 13A915	B	W													1
	D7AZ 13A915					★A	★B	E								1
	D8AZ 13A915				★D											1
Trimplate			Refer to group 13A932													
Switch assy.			Refer to group 13A875													
Wheel-2 spoke-deluxe w/o speed control Cover			Refer to group 3600													
	D6AZ 13A915	H	L			AA	★AB									1
	D7AZ 13A915							★F								1
	D8AZ 13A915				★H											1
Emblem			Refer to group 3649													
Trimplate			Refer to group 13A932													
Switch assy.			Refer to group 13A875													
Wheel-2 spoke-luxury with or without speed control Cover assy.			Refer to group 3600													
	D8AZ 13A805	AB						AA								1
	D9AZ 13A805		F		D	B	A									1
Emblem			Refer to group 3649													
Trimplate			Refer to group 13A932													

MODEL	PART NUMBER LESS SUFFIX	COLORS and APPLICABLE PART NUMBER SUFFIXES														QTY
		BLUE	RED	BERYL	CORD-OVAN	JADE	GRAY	CHAM-OIS	CAMEL	AME-THYST	CHAM-PAGNE	GOLD	BLACK	SEE NOTE	SEE NOTE	
13A915	COVER (HORN BLOW SWITCH) — Cont'd															

1979

Notes: ● Wedge Blue ♦ Medium Blue

G (Monarch)

Wheel-2 spoke-standard w/o speed control			Refer to group 3600													
Cover	D6AZ 13A915	B	W													1
	D7AZ 13A915					★A	★B									1
	D8AZ 13A915				★D				A							1
Trimplate			Refer to group 13A932													
Switch assy.			Refer to group 13A875													
Wheel-2 spoke-deluxe w/o speed control			Refer to group 3600													
Cover	D6AZ 13A915	H	L			AA	★AB									1
	D8AZ 13A915				★H				E							1
Emblem			Refer to group 3649													
Trimplate			Refer to group 13A932													
Switch assy.			Refer to group 13A875													
Wheel-2 spoke-luxury with or without speed control			Refer to group 3600													
Cover assy.	D8AZ 13A805	AB							★AF							1
	D9AZ 13A805		F		D	B	A									1
Emblem			Refer to group 3649													
Trimplate			Refer to group 13A932													
Wheel - 3 spoke			Refer to group 3600													
Button assy.	D8FZ 13A805												B			1
Emblem			Refer to group 3649													

J (Capri)

Wheel - 3 spoke			Refer to group 3600													
Button assy.	D8BZ 13A805												C			1
Emblem			Refer to group 3649													

K (Mark V)

Wheel - 2 spoke-luxury with or without speed control			Refer to group 3600													
Cover assy.	D8AZ 13A805	●AB										AJ				1
	D9AZ 13A805	♦G	F	J	D		A			★H	C		E			1
Emblem			Refer to group 3649													
Trimplate			Refer to group 13A932													

L (Bobcat)

Wheel-2 spoke-standard																
Cover	D6AZ 13A915	B	★F										C			1
	D7AZ 13A915							E								1
Trimplate			Refer to group 13A932													
Switch assy.			Refer to group 13A875													
Wheel-2 spoke-deluxe																
Cover	D6AZ 13A915	H	★S										J			1
	D7AZ 13A915							★F								1
Emblem			Refer to group 3649													
Trimplate			Refer to group 13A932													
Switch assy.			Refer to group 13A875													
Wheel-3 spoke			Refer to group 3600													
Button assy.	D8FZ 13A805												B			1
Emblem			Refer to group 3649													

COPYRIGHT © 1986— FORD MOTOR COMPANY —DEARBORN, MICHIGAN

1973/79 LINCOLN-MERCURY CARS

MODEL	PART NUMBER LESS SUFFIX	COLORS and APPLICABLE PART NUMBER SUFFIXES														QTY
		BLUE	RED	BERYL	CORD-OVAN	JADE	GRAY	CHAM-OIS	CAMEL	AME-THYST	CHAM-PAGNE	GOLD	BLACK	SEE NOTE	SEE NOTE	
13A915	COVER (HORN BLOW SWITCH) — Cont'd															

1979

Notes: ● Wedge Blue ♦ Medium Blue

P (Zephyr)

Wheel–3 spoke			Refer to group 3600													
Button assy.	D8BZ 13A805												C			1
Emblem			Refer to group 3649													

V (Versailles)

Wheel–2 spoke–luxury with or without speed control			Refer to group 3600													
Cover assy.	D8AZ 13A805	AB										AJ				1
	D9AZ 13A805		F	J	D		A									1
Emblem			Refer to group 3649													
Trimplate			Refer to group 13A932													

YEAR	MODEL/RESTRICTIONS	PART NUMBER	DESCRIPTION	QTY.
13A927	ACTUATOR ASSY. (HORN WARNING)			
73	A,D,K,Y – – w/anti-theft alarm system	★ D3AZ 13A927-A	Located under instrument panel–Not replaced	1
74	A,C,D,F,K,L,P,Y – – w/anti-theft alarm system	★ D4AZ 13A927-A	Not replaced	1
75/76	A,D,G,K,P,Y – – w/anti-theft alarm system	★ D5AZ 13A927-B	Not replaced	1
75	C,F – – w/anti-theft alarm system			1
74	A,C,D,F,K,P,Y	42367-S36	(U-269-B)-screw (attach actuator to bracket)–No. 10-16 x 1/2"	AR
13A928	BRACKET (HORN WARNING ACTUATOR)			
73/76	A,Y – – w/anti-theft alarm system	★ D3MY 13A928-A	Not replaced	1
74/75	C,F – – w/anti-theft alarm system	★ D40Z 13A928-A	Not replaced	1
73/76	D – – w/anti-theft alarm system	★ D4VY 13A928-A	Not replaced	1
75	G – – w/anti-theft alarm system	★ D5DZ 13A928-A	Not replaced	1
73/76	K – – w/anti-theft alarm system	★ D4SZ 13A928-A	Not replaced	1
74/76	L – – w/anti-theft alarm system	D4FZ 13A928-A		1
74	A,C,D,F,K,P,Y	42367-S36	(U-269-B)-screw (attach actuator to bracket)–No. 10-16 x 1/2"	AR
13A929	WIRING ASSY. (HORN WARNING)			
73	A,Y – – w/anti-theft alarm system	★ D3AZ 13A929-A	Not replaced	1
75/76	A,Y – – w/anti-theft alarm system	★ D5AZ 13A929-A	Not replaced	1
74/75	C,F – – w/anti-theft alarm system	★ D40Z 13A929-A	Not replaced	1
75	G – – w/anti-theft alarm system	★ D5DZ 13A929-A	Not replaced	1
74/75	L – – w/anti-theft alarm system–w/o visibility light group–"Before 3/15/75"	★ D4FZ 13A929-A	Not replaced	1
75	L – – w/anti-theft alarm system–w/o visibility light group–"From 3/15/75"	★ D5FZ 13A929-C	Not replaced	1
74/75	L – – w/anti-theft alarm system–w/visibility light group–"Before 3/15/75"	★ D4FZ 13A929-B	Not replaced	1
75	L – – w/anti-theft alarm system–w/visibility light group–"From 3/15/75"	★ D5FZ 13A929-D	Not replaced	1

YEAR	MODEL/RESTRICTIONS	PART NUMBER	DESCRIPTION	QTY.
13A932	TRIM PLATE (HORN BLOW SWITCH COVER)			
73/74	A,C,F,L,P,Y - - deluxe wheel	D3AZ 13A932-A	Cherry wood applique	1
75/76	C,L - - standard wheel	D5AZ 13A932-C	Black camera case	1
76	G,Y - - standard wheel			1
77/78	A - - standard wheel			1
77/	F,G - - standard wheel			1
78/	L - - standard wheel			1
75/76	A,C,L,P,Y - - deluxe wheel	★ D5AZ 13A932-A	Baby burl walnut-not replaced	1
75/77	F - - deluxe wheel	D5AZ 13A932-B	Light burl walnut	1
77/78	A - - deluxe wheel			1
75/	G - - deluxe wheel			1
75/76	A,C,D,K,Y - - luxury wheel w/o speed control	★ D5AZ 13A932-G	Baby burl walnut-not replaced	1
75/77	F,G - - luxury wheel w/o speed control	D5AZ 13A932-H	Light burl walnut	1
77/78	A - - luxury wheel w/o speed control			1
75/76	A,C,D,K,Y - - luxury wheel w/ speed control	★ D5AZ 13A932-E	Baby burl walnut-not replaced	1
75/77	F - - luxury wheel w/speed control	D5AZ 13A932-D	Light burl walnut	1
76/	G - - luxury wheel w/speed control			
77/78	A - - luxury wheel w/speed control			1
76	K - - luxury wheel w/o speed control	★ D6AZ 13A932-A	Light maple-Not replaced	1
75/76	K - - luxury wheel w/speed control	★ D5AZ 13A932-F	Light maple-Not replaced	1
77/	F - - luxury wheel w/speed control	D7AZ 13A932-A	Rosewood	1
77	P - - deluxe wheel	D7AZ 13A932-B	Rosewood	1
77/	F,L - - deluxe wheel			1
77/	D,K,V - - luxury wheel w/speed control	D7LY 13A932-A	Majestic walnut - (high gloss)	1
78/	G - - luxury wheel w/ speed control			1
77/	D,K - - luxury Wheel w/o speed control	D7LY 13A932-B	Majestic walnut - (high gloss)	1
78/	G - - luxury wheel w/o speed control			1
77	V - - luxury Wheel w/o speed control			1
77	F - - luxury wheel w/speed control	D70Z 13A932-A	Black corithian grain	1
77	F - - luxury wheel w/o speed control	★ D70Z 13A932-B	Black corithian grain-not replaced	1
77/	F - - luxury wheel w/o speed control	★ D7WY 13A932-A	Rosewood-not replaced	1
78/	F - - deluxe Wheel	D8SZ 13A932-A	Dark burl walnut	1
78/	F - - luxury Wheel w/o speed control	★ D8SZ 13A932-B	Dark burl walnut-not replaced	1
78/	F - - luxury Wheel w/speed control	★ D8SZ 13A932-C	Dark burl walnut-not replaced	1
77	L - - standard wheel	D7FZ 13A932-A	Black camera case w/white trim	1
79	K - - luxury wheel w/speed control	D9LY 13A932-A	Ebony	1
13A936	SWITCH and BRACKET ASSY. (HORN CONTROL)			
74	A,C,D,F,K,L,P,Y - - New York City only	★ D4AZ 13A936-A	Not replaced	1

COPYRIGHT © 1986— FORD MOTOR COMPANY —DEARBORN, MICHIGAN

1973/79
LINCOLN-MERCURY CARS

YEAR	MODEL/RESTRICTIONS	PART NUMBER	DESCRIPTION	QTY.
14A003	**COVER (FUSE PANEL)-Also refer to Body Group 04459**			
73/74	D,K - - w/brake skid control	★ D0VY 14A003-A	Not replaced	1
75/77	D - - w/brake skid control	★ D5LY 14A003-A	Not replaced	1
75/76	K - - w/brake skid control			1
75	P	D7DZ 14A003-A	Grey-paint to match	1
75/	G			1
77/78	V			1
76/77	P	D6DZ 14A003-A	Black-paint to match	1
75/	G,P	56910-S2	(U-413)-screw(attach cover to fuse panel)-No. 8-18 x 1/2"	2
14A004	**BRACKET ASSY. (WIRING)**			
73/75	D - - w/power windows	★ D2AZ 14A004-B	Not replaced	AR
73/75	D - - w/power windows	57077-S2	(B-330-B)-screw-No. 8-32 x 3/4"	4
14A005	**WIRING (BODY MAIN)**			
74	K	★ D4LY 14A005-A	#D4LB 14A005-AD-not replaced	1
75	K	★ D5LY 14A005-A	#D5LB 14A005-AC-not replaced	1
76	K	★ D6LY 14A005-A	#D6LB 14A005-AB-not replaced	1
77/	K	★ D7LY 14A005-A	#D7LB 14A005-AF, D8LB 14A005-AA	1
78	P(exc. 74 P/C and Taxi) - - w/o auto. trans., light grp. deluxe seat belts, luggage compt. lamp or lux. decor grp.	★ D8BZ 14A005-A	#D8BB 14A005-AB,AD-not replaced	1
78	P - - w/auto. trans., light grp. or deluxe seat belts or lux. decor group	★ D8BZ 14A005-B	#D8BB 14A005-BE,BG-not replaced	1
78	P - - w/auto trans, or luggage compt. lamp w/out light grp.	★ D8BZ 14A005-C	#D8BB-14A005-CC,CE-not replaced	1
78	P(74) - - w/o light grp.	★ D8BZ 14A005-D	#D8BB 14A005-DB-not replaced	1
78	P - - with deluxe seat without vis. light grp.	★ D8BZ 14A005-F	#D8BB 14A005-FB-not replaced	1
78	P(54) - - P/C and Taxi	★ D8BZ 14A005-E	#D8BB 14A005-EA-not replaced	1
79	A - - with or without illum. entry system	★ D9AZ 14A005-B	#D9AB-14A005-AE,AF or ED D9AB 14A005-BF, D9AB 14A005-BG-not replaced	1
14A011	**SWITCH and BRACKET ASSY. (TAILGATE WINDOW LIMIT)**			
73/	A(71,74)	D2AZ 14A011-A	#D2AB 14743-AA	1
73/76	C(71)			1
73/77	F(71)			1
14014	**WIRING ASSY. (FRONT DOOR LOCK) - Refer to group 14A412**			
14K016	**LABEL (FUSE IDENTIFICATION) - Refer to Body Group 044F08**			
14N016	**KNOB (FUSE HOLDER COVER)**			
75	G	★ D5DZ 14N016-A	Black-not replaced	1
14017	**SWITCH ASSY. (DOOR LOCK) - Refer to group 14028**			
14018	**SWITCH ASSY. (DOOR OPEN WARNING LAMP)-Also refer to group 13713**			
73/76	A(exc. 71),Y(exc. 71) - - w/anti-theft alarm system	★ D3AZ 14018-A	*SW-1272-incl. bracket-located in luggage compartment-not replaced	1
73/76	A(71),C(71),Y(71) - - w/anti-theft alarm system	★ D4AZ 14018-A	*SW-1273-tailgate open-not replaced	1
77/78	A(71)			1
77	F(71)			1
74/75	C(exc. 71),F - - w/anti-theft alarm system	★ D4ZZ 14018-A	*SW-1279-luggage compartment door open-not replaced	1
73/74	D	★ C9WY 14018-A	*SW-818-R.H.-front and rear doors-not replaced	2
		★ C9WY 14018-B	*SW-819-L.H.-front and rear doors-not replaced	2
75	D	D60Z 14018-C	*SW-1314-A-front and rear doors	AR

COPYRIGHT © 1986 — FORD MOTOR COMPANY — DEARBORN, MICHIGAN

1973/79 LINCOLN-MERCURY CARS

YEAR	MODEL/RESTRICTIONS	PART NUMBER	DESCRIPTION	QTY.
14018	SWITCH ASSY. (DOOR OPEN WARNING LAMP)-Also refer to group 13713 — Cont'd			
76	D,F,G,K "Before 4/1/76"	D60Z 14018-A	*SW-1314-front and rear doors	AR
76/	D,F,G,K "From 4/1/76"	D60Z 14018-B	*SW-1352-front and rear doors	AR
78/	P(54) Taxi			AR
77/	V			AR
77/	F(53,71)	D70Z 14018-A	*SW 1366-R.H. and L.H. rear doors	2
73/76	D - - w/anti-theft alarm system	★ D4VY 14018-A	*SW-1278-#D4VB 10C948-AA-incl. bracket luggage compartment open-not replaced	1
73	F	D60Z 14018-C	*SW-1314-A-R.H. and L.H.	2
73/75	K		R.H. and L.H.	2
73	K	★ D2LY 14018-A	*SW-1085-#D2LB 10C948-AA-use w/remote control luggage compartment-not replaced	1
73/76	K - - w/anti-theft alarm system	★ D4SZ 14018-A	*SW-1277-#D4SB 10C948-AB-incl. bracket luggage compartment open-not replaced	1
75/	L(64)	D5ZZ 14018-A	*SW-1341-liftgate or luggage compartment open-located inside latch	1
75/	G			
74	L(62) - - w/anti-theft alarm system	D4FZ 14018-B	*SW-1275-incl. bracket-luggage compartment open	1
74/76	L(64) - - w/anti-theft alarm system	★ D4FZ 14018-C	*SW-1276-incl. bracket-luggage compartment open Not required w/all glass lift gate-not replaced	1
74	L(73) - - w/anti-theft alarm system	D4FZ 14018-A	*SW-1274-incl. bracket-liftgate open	1
75/	L(73)	D5FZ 14018-A	*SW-1259-lift gate open-incl. housing	1
75/	L(73)	★ D5FZ 14018-B	*SW-1260-lift gate open-switch only-not replaced	1
73	Y(Taxi)	D60Z 14018-C	*SW-1314-A	4
78/	P(74)	D8BZ 14018-A	*SW 1496	1
79	A(74) - - w/cargo area lamp "From 9/11/78"			1
73	D	355067-S	(BB-53)-screw (attach switch to lock assy.)-No. 8-32 x 5/16"	AR
74	D,K	52012-S8	(U-202)-screw No. 8-15 x 1/2"	AR
73/76	K	42127-S8	(W-248-C)-screw (attach switch and bracket to luggage compt. hinge)-No. 10-12 x 1/2"	AR
76	C,F,G	55927-S100	(U-506)-screw-No. 8-18 x 1/2" (attach switch to door lock)	2
14A020	PLATE ASSY. (WINDOW REGULATOR SWITCH COVER) - Also refer to groups 13C708 and 14527-8			
73/74	A - - w/o power windows or power door locks or remote control mirror	D3MY 14A020-A	L.H.-front door	1
73/76	A - - w/o power windows or power door lock, with remote control mirror "Before 6/1/76"	D3MY 14A020-B	L.H.-front door "Mirror"	1
76/78	A - - w/o power windows or power door locks with remote control mirror "From 6/1/76"	★ D6MY 14A020-A Not replaced	L.H.-front door "Mirror"	1
77/	F - - w/o power windows or power door locks with remote control mirror		L.H.-front door "Mirror"	1
77/	F(65L) - - w/o power windows or power door locks or remote control mirror	★ D7SZ 14A020-A	L.H. front door-not replaced	1
14024-5	WIRING ASSY. (FRONT DOOR LOCK) - Refer to group 14A412			
14026-7	WIRING ASSY. (REAR DOOR LOCK) - Refer to group 14A412			
14A027	WIRING ASSY. (WINDOW REGULATOR REAR SWITCH FEED)			
73/74	A(exc. 53K,57K,71H,K),Y - - w/power windows	★ D3AZ 14A027-A Not replaced	#D3AB 14A027-AB,D4AB 14A027-AA-R.H. to L.H. rear door	1
73	A(53K,57K,71H,K) - - w/power windows "Before 10/15/72"	★ D3MY 14A027-A Not replaced	#D3MB 14A027-AB-R.H. to L.H.-rear door	1
73	A(53K,57K,71H,K) - - w/power windows "From 10/15/72"	★ D3MY 14A027-B Not replaced	#D3MB 14A027-AC-R.H. to L.H. rear door	1
74	A(53K,57K,71K) - - w/power windows "Before 6/10/74"	★ D4MY 14A027-A Not replaced	#D4MB 14A027-AC	1

YEAR	MODEL/RESTRICTIONS	PART NUMBER	DESCRIPTION	QTY.
14A027	WIRING ASSY. (WINDOW REGULATOR REAR SWITCH FEED) — Cont'd			
74	A(53K,57K,71H) "From 6/10/74"	★ D5MY 14A027-A	#D5MB 14A027-AA	1
75	A(53K,71K)	Not replaced		1
73	A(71),Y(71) - - w/tailgate washer w/o heated backlite	★ D3AZ 14A027-C Not replaced	#D3AB 14A304-BB	1
74/75	A(71),Y(71) - - w/o tailgate washer or heated backlite	★ D4AZ 14A027-C Not replaced	#D4AB 14A304-AC	1
74	A(71),Y(71) - - w/tailgate washer w/o heated backlite	★ D4AZ 14A027-D Not replaced	#D4AB 14A304-BC	1
75	A(71),Y(71) - - w/heated tailgate window	★ D5AZ 14A027-B Not replaced	#D5AB 14A304-AB	1
75/76	A(exc. 53K,71K),Y(53) - - w/power windows	★ D5AZ 14A027-A Not replaced	#D5AB 14A027-AA	1
76/78	A(71) - - w/o heated backlite	★ D6AZ 14A027-A	#D6AB 14A304-AA,AB-not replaced	1
76	Y(71) - - w/o heated backlite			1
77/78	A(71) - - w/heated backlite	★ D7AZ 14A027-A	#D7AB 14A304-AA-not replaced	1
76	A(71),Y(71) - - w/heated backlite	★ D6AZ 14A027-B	#D6AB 14A304-BA,BB-not replaced	1
76	A(53K,71K),Y(53,71)	★ D6MY 14A027-A	#D6MB 14A027-AA-not replaced	1
77	A(53,71) - - w/power windows "Before 11/1/76"	★ D7MY 14A027-A	#D7MB 14A027-AB-not replaced	1
77/78	A(53,71) - - w/power windows "From 11/1/76"	★ D7MY 14A027-B	#D7MB 14A027-AC-not replaced	1
79	A(74)	D9AZ 14A027-A	#D9AB 14A304-AB	1
74/75	C(71)	★ D40Z 14A027-A	#D30B 14A304-AB-not replaced	1
76	C(71)	★ D60Z 14A027-A	#D60B 14A304-AA,AB-not replaced	1
77	F(71)			1
73	D	★ D3VY 14A027-A	#D3VB 14A027-AA-not replaced	1
14028	SWITCH ASSY. (DOOR LOCK)-also refer to group 14529			
73/76	C(53,71)	★ D20Z 14028-E	R.H.-#D20B 14017-AB-not replaced	1
		D20Z 14028-D	L.H.-#D20B 14963-AB	1
73/76	C(63,65)	D20Z 14028-C	R.H. and L.H.-#D20B 14017-BA	2
73	D "Before 10/2/72"	D3VY 14028-A	R.H.-#D3VB 14A460-AA	1
73	D "From 11/2/72"		Refer to group 14529	
77/	F(53)	★ D20Z 14028-E	R.H. #D20B 14017-AB-not replaced	1
77	F(71)	D20Z 14028-D	L.H. #D20B 14963-AB	1
73/	F(65)	D20Z 14028-C	R.H. and L.H. #D20B 14017-BA	2
76/	G(54),V	D6DZ 14028-A	R.H.-#D6DB 14017-AA	1
		D6DZ 14028-B	L.H.-#D6DB 14963-AA	1
76/	G(66)	★ D6DZ 14028-C	R.H.-#D6DB 14017-BA-not replaced	1
		★ D6DZ 14028-D	L.H.-#D6DB 14963-BA-not replaced	1
78/	P(54,74)	D8BZ 14028-A	R.H.-#D9BB 14017-AC	1
78/	P(54,74)	D8BZ 14028-B	L.H.-#D9BB 14963-AC	1
78/	P(36,66) "Before 3/19/79"	★ D8BZ 14028-C	L.H.-#D9BB 14963-CA-not replaced	1
78/	P(36,66) "Before 3/19/79"	★ D8BZ 14028-D	R.H.-#D9BB 14017-DB-not replaced	1
79	P(36,66) "From 3/19/79"	D9BZ 14028-A	R.H. & L.H.-#D9BB 14017-DC	2
14A033	BUS BAR ASSY. (ACCESSORY FEED)			
73	A,C,Y	★ D3AZ 14A033-D	With 1 fuse holder-not replaced	1
74/76	C,Y	★ D4ZZ 14A033-B	With 1 fuse holder-not replaced	1
74/78	A,F			1
73/78	A	★ D3AZ 14A033-A	With 2 fuse holders-not replaced	1
73/76	Y			1
73/78	A	★ D3AZ 14A033-B	With 3 fuse holders-not replaced	1
73/76	Y			1
73/78	A,Y	★ D3AZ 14A033-C	With 4 fuse holders-not replaced	1
74/78	A	★ D4AZ 14A033-A	With 1 fuse holder-not replaced	1
74/76	Y			1
79	F			1

COPYRIGHT © 1986— FORD MOTOR COMPANY —DEARBORN, MICHIGAN

1973/79 LINCOLN-MERCURY CARS

YEAR	MODEL/RESTRICTIONS	PART NUMBER	DESCRIPTION	QTY.
14A033	BUS BAR ASSY. (ACCESSORY FEED) — Cont'd			
73	K	★ D0VY 14A033-D	With 2 fuse holders-not replaced	1
73/76	D			1
74	D	D4VY 14A033-A	With 3 fuse holders	1
75/	D	D5VY 14A033-A	With 1 fuse holder	1
78/	D	D8VY 14A033-A	With 4 fuse holders	1
73	F - - w/power windows and sun roof	★ C80Z 14A033-C	With 1 fuse holder-not replaced	1
74	L			1
73/75	P - - w/rear window defroster			1
75/76	G,L,P	★ D5DZ 14A033-A	With 3 fuse holders-not replaced	1
75	G	D5DZ 14A033-B	With 2 fuse holders	1
75/76	P			1
75/	L			1
75	G	★ D5FZ 14A033-B	With 3 fuse holders-not replaced	1
75/	L			1
76	G,P	★ D6DZ 14A033-A	With 4 fuse holders-not replaced	1
74/	K	★ D4SZ 14A033-A	With 4 fuse holders-not replaced	1
75	K	★ D5SZ 14A033-A	With 3 fuse holders-not replaced	1
77/78	V	★ D74Y 14A033-A	With 4 fuse holders-not replaced	1
78/	P			1
79	V	D94Y 14A033-A	With 3 fuse holders	1
77/	V	D74Y 14A033-B	With 2 fuse holders	1
78/	L	★ D8FZ 14A033-A	With 2 fuse holders-not replaced	1
78/	P	D8BZ 14A033-A	With 2 fuse holders	1
14046	SWITCH & WIRING ASSY. (TAILGATE WINDOW REGULATOR) - Refer to group 14529			
14K064	WIRING ASSY. (ENGINE COMPARTMENT TEMPERATURE SWITCH)			
73/75	A,Y	★ D3AZ 14K064-A	5" long-not replaced	1
74	D			1
74/75	K			1
14A067-8	PANEL ASSEMBLY (FUSE JUNCTION)			
Note #1-	Less fuse holders and bus bars			
73	A,Y "Before 4/2/73"	★ D3AZ 14A068-A	Not replaced	1
73	A,Y "From 4/2/73"	★ D3AZ 14A068-B	Not replaced	1
74	A,Y	★ D4AZ 14A068-A	Not replaced	1
75	A,C,F,Y	★ D5AZ 14A068-A	Not replaced	1
76	A,Y "Before 3/1/76"	★ D6AZ 14A068-A	Not replaced	1
76	C,Y "From 3/1/76"	★ D6AZ 14A068-B	Not replaced	1
76/77	A,F			1
78	A,F	★ D8AZ 14A068-A	Not replaced	1
79	A	D9ZZ 14A068-A		1
73	C	★ D20Z 14A068-B	Not replaced	1
74	C,F	★ D40Z 14A068-A	Not replaced	1
76	C,F "Before 3/1/76"	★ D60Z 14A068-A	Not replaced	1
73	D	★ D3VY 14A068-A	Not replaced	1
74	D	★ D4VY 14A068-A	Not replaced	1
75	D	★ D5VY 14A068-A	Not replaced	1
76	D	★ D6VY 14A068-A	Not replaced	1
77	D	D7VY 14A068-A		1
78	D	★ D8VY 14A068-A	Not replaced	1
79	D	D9VY 14A068-A		1
73	F	★ D1ZZ 14A068-A	Not replaced	1
79	F	★ D90Z 14A068-A	Not replaced	1
75	G	★ D5DZ 14A068-A	Not replaced	1
76	G	★ D6DZ 14A068-A	Not replaced	1
77	G	★ D7DZ 14A068-A	Not replaced	1
78	G - - without A/C or A.T.C.	★ D8DZ 14A068-A	Not replaced	1
78	G - - with A/C or A.T.C.	★ D8DZ 14A068-B	Not replaced	1
79	G - - without A/C or A.T.C.	★ D9DZ 14A068-A	Not replaced	1
79	G - - with A/C or A.T.C.	★ D9DZ 14A068-B	Not replaced	1

YEAR	MODEL/RESTRICTIONS	PART NUMBER	DESCRIPTION	QTY.
14A067-8	PANEL ASSEMBLY (FUSE JUNCTION) — Cont'd			
Note #1-	Less fuse holders and bus bars			
73/74	J	D3RY 14A067-B		1
76	J "Before 12/1/75"	D5RY 14A067-A		1
76/77	J "From 12/1/75 to 1/1/77"	D6RY 14A067-A		1
77/78	J "From 1/1/77"	D6RY 14A067-B		1
79	J	D9ZZ 14A068-A		1
73	K	★ D3SZ 14A068-A	Not replaced	1
74	K	★ D4SZ 14A068-A	Not replaced	1
75	K	★ D5SZ 14A068-A	Not replaced	1
76	K	★ D6SZ 14A068-A	Not replaced	1
77	K	D7LY 14A068-A		1
78	K	★ D8LY 14A068-A	Not replaced	1
79	K	★ D9LY 14A068-A	Not replaced	1
74	L	★ C80Z 14A068-A	Note #1-not replaced	1
75/77	L "Before 6/27/77"	★ D5FZ 14A068-A	Not replaced	1
77/78	L - - with A/C "From 6/27/77"	★ D8FZ 14A068-B	Not replaced	1
77/78	L - - w/out A/C "From 6/27/77"	★ D8FZ 14A068-A	Not replaced	1
79	L - - without A/C	★ D9FZ 14A068-A	Not replaced	1
79	L - - with A/C	★ D9FZ 14A068-B	Not replaced	1
73	P	★ C80Z 14A068-A	Note #1-not replaced	1
74/75	P	★ D4DZ 14A068-A	Note #1-not replaced	1
76/77	P	★ D6DZ 14A068-B	Not replaced	1
78	P	★ D8BZ 14A068-A	Not replaced	1
79	P	★ D9BZ 14A068-A	Not replaced	1
77/78	V "Before 10/1/77"	D74Y 14A068-A		1
78	V "From 10/1/77"	★ D84Y 14A068-A	Not replaced	1
79	V	D94Y 14A068-A		1
73/78	J	E604052-S74	Screw-oval head-M5 x 25(Metric coarse)	2
		E620011-S70	Nut-hex.-M5(Metric coarse)	2
		★ E630023-S70	Washer-M5.3(Metric)	2
14A076	COVER (FUSE PANEL)			
73/74	J	D3RY 14A076-A	Black plastic	1
73/74	J	D3RY 14A076-B	Clear plastic	1
76	J "Before 12/1/75"	D5RY 14A076-B		1
76/78	J "From 12/1/75"	D6RY 14A076-A		1
14A079	PAD (FUSE BOX)			
73/77	J	★ D3RY 14A079-A	Not replaced	1
14A093	RELAY ASSY. (POWER DOOR LOCK) - Refer to group 14677			
14A099	SHIELD (WIRING) - Improvise unless listed below-Also refer to body group 20770			
73	A	★ D0AZ 14A099-A	15" long-located in L.H. front door-not replaced	1
73/78	A	★ D3AZ 14A099-B	6" long-located on R.H. side of instrument panel	1
73/76	Y	Not replaced		1
78/	D			1
73/78	A	★ D3AZ 14A099-C	6 1/2" long-located on cowl top-inner panel	1
73/76	Y	Not replaced		1
73/78	A	★ D3AZ 14A099-E	5 1/2" long-located on brake pedal support	1
73/76	Y	Not replaced		1
73/78	A - - w/heated backlite	★ D1AZ 14A099-D		1
73/76	Y - - w/heated backlite	Not replaced		1
73/78	A(71) - - w/heated backlite	★ D3AZ 14A099-D	8" long	2
73/76	Y(71) - - w/heated backlite	Not replaced		1
79	A,P	D9AZ 14A099-A	18.50" long-located above glove compt. box	1
79	A - - w/power seats	D9AZ 14A099-B	48.25" long-located at front floor pan sides	2
79	A(74)	D9AZ 14A099-C	15" long-located at belt rail-L.H. side	1

COPYRIGHT © 1986— FORD MOTOR COMPANY —DEARBORN, MICHIGAN

1973/79 LINCOLN-MERCURY CARS

YEAR	MODEL/RESTRICTIONS	PART NUMBER	DESCRIPTION	QTY.
14A099	SHIELD (WIRING) - Improvise unless listed below-Also refer to body group 20770 — Cont'd			
79	A	D9AZ 14A099-D	5" long-located above glove compt. box	1
79	A(74) - - w/heated backlite	D9AZ 14A099-E	Located on hinged side of tailgate door	1
79	A(74) - - w/C.B. and/or coach lamps	D9AZ 14A099-H	24" long-black-located at R.H. belt side rail	1
73/74	C "Before 9/1/73"	★ D30Z 14A099-D	Located on instrument panel lower flange	1
74	F "Before 9/1/73"	Not replaced		1
74/76	C "From 9/1/73"	★ D40Z 14A099-C	Located on instrument panel lower flange	1
73/	F "From 9/1/73"	Not replaced		1
73/76	C - - w/power windows	★ D20Z 14A099-A	R.H.-located in door-not replaced	1
		★ D20Z 14A099-F	L.H.-located in door-not replaced	1
73/76	C(53,71) - - w/power windows	★ D20Z 14A099-J	R.H.-located in rear door-not replaced	1
		★ D20Z 14A099-K	L.H.-located in rear door-not replaced	1
73/76	C(53,71) - - w/power windows or power door locks "Before 5/3/76	★ D20Z 14A099-C	R.H. & L.H.-located in rear doors-not replaced	2
73/76	C(53,71) - - w/power windows or power door locks "From 5/3/76"	★ D70Z 14A099-A Not replaced	R.H. & L.H. located in rear doors	2
77/	F(53)			
77	F(71)			2
73	C	★ D20Z 14A099-E	Contains 1/2" dia. hole clearance for w/s wiper switch located on instrument panel lower flange reinforcement-not replaced	1
73/76	C - - 3/M/T	★ D2AZ 14A099-D	Not replaced	1
73/76	C(71) - - w/heated backlite	★ D30Z 14A099-A	Located on inner tailgate panel-not replaced	1
77	F(71) - - w/heated backlite			1
74/76	C	★ D40Z 14A099-A	Located on instrument panel lower flange	2
74/76	C(71) - - w/anti-theft alarm system	★ D40Z 14A099-B	Incl. bracket and tube-not replaced	1
74	C	★ D4SZ 14A099-B	Located on front cross member	1
74/	K	Not replaced		1
74	C	★ D4SZ 14A099-C	Located on front cross member	1
74/	K	Not replaced		1
73/75	D	★ D0VY 14A099-A	Located on center floor pan-not replaced	1
73/	D	D0VY 14A099-B	Located under instrument panel-retains 14401 wiring	1
73/	D	★ D0VY 14A099-E	Located under instrument panel-retains 14631 wiring	1
77/	D	Not replaced	Located at brake pedal support to retain radio antenna cable	1
73/	D	★ D0VY 14A099-G	Located on brake pedal support	1
73/75	D	★ D0VY 14A099-H	Located on parking brake bracket-not replaced	1
73/	D	★ D0VY 14A099-J	Located under instrument panel-retains 14630 wiring	2
73/76	D	D0VY 14A099-M	Located at rear window to retain heated backlite wiring-8 1/2" long-cut to size	2
77/	D		Located at instrument panel for map lamp wiring	1
73/77	D	D3VY 14A099-A	Located on radiator support	1
74/77	D	★ D4VY 14A099-B	Located on brake pedal support-not replaced	1
74	D	★ D4VY 14A099-C Not replaced	Located at instrument panel-retains 14401 wire	1
75	D - - w/heated backlite	D1AZ 14A099-D	Located at rear window to retain heated backlite wiring	2
73	F	★ D1ZZ 14A099-F	Located on L.H. cowl side panel-not replaced	1
73	F	★ D1ZZ 14A099-B	Located in quarter window-not replaced	2
73	F	★ D1ZZ 14A099-D	Located under instrument panel R.H. and L.H. end	2
73	F	★ D2AZ 14A099-D	Use w/three speed manual transmission-not replaced	1
74/	F	★ D20Z 14A099-A	R.H.-located in door	1
		★ D20Z 14A099-F	L.H.-located in door-not replaced	1
74/	F	★ D40Z 14A099-A	Located on instrument panel lower flange	1
77/	F(53) - - w/power windows	★ D20Z 14A099-J	R.H. & L.H.- located in rear door	2
77	F(71)	Not replaced		1
77	F(53,71) - - w/power windows	★ D20Z 14A099-K	L.H. located in rear door-not replaced	1
75/76	G - - 3/M/T	★ D2AZ 14A099-D	Not replaced	1
75/	G - - w/anti-theft alarm system, AM/FM multiplex, or dual rear seat speakers	D5DZ 14A099-A	13" long-located at cowl top panel	1

YEAR	MODEL/RESTRICTIONS	PART NUMBER	DESCRIPTION	QTY.
14A099	SHIELD (WIRING) - Improvise unless listed below-Also refer to body group 20770 — Cont'd			
78/	G	★ D8DZ 14A099-A	16.50" long-black-located at instrument panel-retains 14401 wiring.-not replaced	1
79	J	D8BZ 14A099-B	26" long-located at center floor side member	2
79	J "Before 1/15/79"	D9ZZ 14A099-B	Located at body side rocker panel	1
79	J "From 1/15/79"	D9ZZ 14A099-C	Located at body side rocker panel	1
74	K	D0VY 14A099-M	Located at rear window to retain heated backlite wiring	2
73/75	K	★ D2LY 14A099-A	R.H.-not replaced	1
		★ D2LY 14A099-B	L.H.-not replaced	1
73	K	D2SZ 14A099-A	30 39/64" long-located at instrument panel	1
73/76	K	★ D2SZ 14A099-B	Located on instrument panel -not replaced	1
77	K	D7LY 14A099-A	located at instrument panel	1
73	K	D2SZ 14A099-F	To be mated with D2SZ 14A390-B-located at front floor cross member	1
73	K "Before 8/15/72"	★ D2SZ 14A099-K	Located on brake pedal support-not replaced	1
73/74	K "From 8/15/72"	★ D3SZ 14A099-A	Nylon-located on brake pedal support-not replaced	1
73	K	★ D2SZ 14A099-G	"S" shaped-located on front floor cross member-not replaced Not replaced	1
73/	K	★ D2SZ 14A099-D Not replaced	16 1/4" long-located on R.H. side of inst. panel-incl. hole for glove box lamp	1
74/76	K	★ D4SZ 14A099-A	Located on instrument panel-not replaced	1
74/76	K - - w/heated w/shield and heated backlite	★ D4SZ 14A099-D	Not replaced	1
74/76	K - - w/heated w/shield and heated backlite	★ D4SZ 14A099-E	Located on package tray-not replaced	1
74	L	★ D4ZZ 14A099-C	Located at rear floor pan-not replaced	1
74/	L(64) - - w/heated backlite	D4FZ 14A099-A	Located on luggage compartment at hinge	2
74/	L(64) - - w/heated backlite	D2FZ 14A099-A	Located at back window lift assy.	1
73	P	★ D0DZ 14A099-G	Located under instrument panel R.H. side-not replaced	1
73/76	P - - M/T	★ D2AZ 14A099-D	Not replced	1
73	P "Before 2/5/73"	★ D3DZ 14A099-A	Located on R.H. side of instrument panel-not replaced	1
73/77	P "From 2/5/73"	★ D4DZ 14A099-A	22 1/2" long-located on instrument panel lower flange-not replaced	1
78/79	P "Before 1/15/79"	D8BZ 14A099-B	26" long located at floor pan side-L.H. center	1
79	P "From 1/15/79"	D9BZ 14A099-A	26" long-located at floor pan side-L.H. center	1
78/79	P "Before 1/15/79"	D8BZ 14A099-C	13" long located at floor pan side-L.H. rear	1
79	P "From 1/15/79"	D9BZ 14A099-B	13" long-located at floor pan side-L.H. rear	1
77/	V	D5DZ 14A099-A		1
78/	V	D8DZ 14A099-A	16.50" long, black, located at instrument panel-retains 14401 wiring.	1
74/	A,C,D,F,G,K,L,P,Y	D4AZ 14A099-A	25 foot roll 3/4" I.D.-Nylon	AR
74/	A,C,D,F,G,K,L,P,Y	D4FZ 14A099-B	25 foot roll 3/16" I.D.-Nylon	AR
74/	A,C,D,F,G,K,L,P,Y	D4SZ 14A099-F	25 foot roll 27/64" I.D.-Nylon	AR
73/	C,F,L	376389-S101	(UU-82-D) - screw(attach shield to brake pedal support) - No. 8-18 x 3/4"	AR
73/76	C,F	381664-S2	(MM-192-AF) - nut and retainer(attach shield to door inner panel) - No. 8-32	AR
73/	K	42119-S8	(U-246) - screw(attach shield to brake pedal support) - No. 8-18 x 3/8"	1
74	A,Y		(Attach shield to cowl top panel and/or instrument panel)	AR
74/76	C,F	381801-S2	(UU-148) - screw(attach shield to cowl panel) - No. 8-18 x 1/2"	2
74/76	C,F	★55589-S	(U-1-P) - screw-No. 8-32 x 1/2"(attach shield to door inner panel)	AR
74	D	57077-S2	(B-330-B) - screw(attach shield to inner door) - No. 8-32 x 3/4"	AR
74	D	384742-S	(GG-166-D) - clip(attach shield to brake pedal support)	2

COPYRIGHT © 1986— FORD MOTOR COMPANY —DEARBORN, MICHIGAN

YEAR	MODEL/RESTRICTIONS	PART NUMBER	DESCRIPTION	QTY.
14A099	SHIELD (WIRING) - Improvise unless listed below-Also refer to body group 20770 — Cont'd			
75	D	55981-S2	(U-254-E) - screw(attach shield to brake pedal support) - 1/4"-14 x 1/2" hex. head	AR
75/	D	42367-S36	(U-269-B) - screw(attach shield to front floor pan) - No. 10-16 x 1/2"	AR
73/	K	376642-S35	(MM-292-A) - nut(attach shield to instrument panel) - 3/8"-24	2
75/	C,F,K	56910-S2	(U-413)-screw(attach shield to front cross-member)-No. 8-18 x 1/2"	AR
75	K		(attach shield to relay panel)	AR
75	K	382142-S100	(GG-213-K)-clip(attach shield to brake pedal support)	AR
74	P	381709-S	(UU-52-G)-screw(attach shield to transmission)-1/4-20 x 3/8"	AR
14A122	BEZEL (REAR WINDOW REGULATOR CONTROL SWITCH)			
75/78	A(71)	★ D5MY 14A122-A	"rear window-up-down"	1
75/76	Y(71)	Not replaced		1
14K124	WIRING AND CONTROL ASSY. (BACK WINDOW WIPER MOTOR FEED)-Refer to group 17K400			
14A125	RETAINER (REAR WINDOW REGULATOR CONTROL SWITCH)			
79	A(74) - - w/out power antenna	D9AZ 14A125-A		1
79	A(54,66) - - w/power antenna			1
79	A(74) - - w/power antenna	D9AZ 14A125-B		1
14A148	SUPPORT (FUSE JUNCTION PANEL)UPPER			
74	L	★ D1FZ 14A148-A	Steel(attaches to brake pedal support)	1
75	L "Before 6/2/75"	★ D5FZ 14A148-A	Steel	1
75/76	L "From 6/2/75 to 8/2/76"	★ D6FZ 14A148-A		1
76/	L "From 8/2/76"	★ D7FZ 14A148-A	Located under inst. panel for flasher	1
14A163	RETAINER (WIRING HARNESS)			
73/	A	★ D3AZ 14A163-D	Located on instrument panel	3
73/76	Y			1
73/	A	★ D3AZ 14A163-E	Located on brake pedal support	1
73/76	Y			1
73/	A	★ D3AZ 14A163-F	Located on steering column bracket	1
73/76	Y			1
73/	A	D3MY 14A163-A	Located on instrument panel	1
73/76	Y			1
73/	A,F - - 8 cyl. 351C,400	D2AZ 14A163-G	Located on engine	1
73/76	C,Y - - 8 cyl 351C,400			1
74	A,Y - - 8 cyl. 351,400,460	D4AZ 14A163-C	Attach 14289 wiring to engine	1
74/	A,C,D,G,K,Y	D4AZ 14A163-B		1
73/76	C (71),Y (71) - - w/power t/gate	D0AZ 14A163-J		1
73/	A (71)			1
77	F(71) - - w/power tailgate			1
77/	A,D,F,K,	D7AZ 14A163-A	Located inside door on door panel strainer	4
77	G			1
74	A,Y - - 8 cyl. 400	D4AZ 14A163-D	Attach 14289 wiring to engine	1
74/75	A,Y - - w/power seats	D4AZ 14A163-A	Steel	AR
75/	A,F - - 8 cyl.	D5AZ 14A163-A		1
75/76	C,Y - - 8 cyl			1
75/	A - - 8 cyl. 302,400	D2AZ 14A163-K	Located on L.H. valve cover	1
75/76	Y - - 8 cyl 400			1
79	A	D9AZ 14A163-C	Located at instrument panel	1
79	A	D9AZ 14A163-J	Located at R.H. cowl side panel	1
79	A	D9ZZ 14A163-B	Mates with 14A068 fuse jct panel	1
79	A(74) - - w/C.B. and/or coach lamps	D8BZ 14A163-A		1
73	C	C3SZ 14A163-B	Located on glove box	1
73	C(exc. 71) - - 8 cyl. 351	D2AZ 14A163-L	Located on L.H. valve cover	1
73/76	C	D20Z 14A163-E	Attach 14289 to valve cover	AR
73/76	C(71) - - w/heated backlite	D30Z 14A163-A		1
73/76	C(71) - - w/heated backlite	D30Z 14A163-B	Located inside tailgate	1
74/76	C - - w/anti-theft alarm system	D40Z 14A163-A		AR

YEAR	MODEL/RESTRICTIONS	PART NUMBER	DESCRIPTION	QTY.
14A163	RETAINER (WIRING HARNESS) — Cont'd			
74/76	C(53,71) - - w/anti-theft alarm system	D40Z 14A163-B	R.H. front door	1
		D40Z 14A163-C	L.H. front door	1
74	C	D4SZ 14A163-D	Located on seat frame	AR
75	C(53,71) - - w/anti-theft alarm system	D50Z 14A163-B	R.H.-located inside front door panel	1
		D50Z 14A163-C	L.H.-located inside front door panel	1
73/	D	D2VY 14A163-B	Nylon retains door ajar wiring lead to door panel	2
74	D	D20Z 14A163-D	20 1/2" long	1
73/	D,K	D0VY 14A163-F	10 1/2" long-adjustable	1
73/	D,K - - w/brake skid control	D2LY 14A163-B		1
74	D - - w/automatic headlamp dimmer	D4VY 14A163-B		1
74	D,K	D4SZ 14A163-A		1
74/	D,K - - w/trailer towing package	D4SZ 14A163-B		1
75/	D	D5VY 14A163-B	Nylon-used with illuminated vanity mirror	6
78/	D - - w/vis light grp.		Also used with map/dome lamp wiring	7
75/77	D - - w/skid control	★ D5VY 14A163-C	Steel-not replaced	1
74/78	D(53)	C3SZ 14A163-B		AR
77/	D - - 8 cyl. 400	D2AZ 14A163-G	Located on engine	AR
77/	D - - 8 cyl. 400	D2AZ 14A163-K	Located on L.H. valve cover	AR
77/	D - - 8 cyl. 400	D5AZ 14A163-A		AR
78/	D	D3AZ 14A163-D	Located at the instrument panel	3
78/	D	D3MY 14A163-A	Located at the instrument panel	1
73	F	D4ZZ 14A163-F	Located on instrument panel	AR
77	F(71) - - w/heated backlite	D30Z 14A163-A		1
77	F(71) - - w/heated backlite	D30Z 14A163-B	Located inside tailgate	1
77	F - - w/split bench seats	D4SZ 14A163-D	Located on seat frame	AR
77/	F - - w/power windows	D70Z 14A163-A	R.H. front door	1
77/	F(65D) - - w/power windows	D70Z 14A163-B	L.H. front door	1
73	F - - 8 cyl. 351C, 351CJ	D2AZ 14A163-K	Located on L.H. valve cover	1
79	G,J,P,V - - 8 cyl. 302			1
79	K - - 8 cyl. 351M,400			1
79	F - - 8 cyl. 302,351,400			1
73	F - - M/T	★ C9ZZ 14A163-A	Located on transmission-retains 15546 wiring	2
73/76	P - - M/T		to transmission housing	2
73	F	C8WY 14A163-B	Attach 14A200 wiring to cowl panel	AR
73	F		Attach 14405 wiring to quarter window regulator panel	2
73	A,Y		Attach 5A667 hose	AR
73	C		Attach 14A412 wiring to tail gate inner panel	2
73/	C,F		Attach 14289 to R.H. valve cover	AR
74	C,F		Attach 14A412 wire assy. to inner luggage compt. and tailgate panel	AR
74	K		Attach 14290 to parking lamp	AR
73	P		Attach 14431 cable to R.H. fender shield	1
74	P		Attach 14290 to fender shield and dash panel	AR
74	F - - 8 cyl. 351	D2AZ 14A163-L	Located on valve cover	1
74	F - - w/anti-theft alarm	D40Z 14A163-A		AR
74	F	D4SZ 14A163-D	Located on seat frame	1
76	F "From 4/19/76"	D6ZZ 14A163-B	Used to attach wiring to door inside panel	1
78	F - - 8 cyl. 351(W) exc. Calif.	D7DZ 14A163-A	Return EGR valve vacuum hose to engine	1
78/	F(65L) - - w/moon roof	D5VY 14A163-B		1
75/78	G	★ D5DZ 14A163-A	Nylon-used to attach 14290 wiring	1
75/	G(54) - - w/anti-theft alarm system	(RH) D5DZ 14A163-B	(LH) D5DZ 14A163-C	1
75/	G	D2AZ 14A163-L	Located on L.H. valve cover	1
75/	G	D20Z 14A163-E	Attach 14289 to valve cover	1
75/	G	D4ZZ 14A163-F	Nylon-attaches to instrument panel	1
75/76	G - - M/T w/floor shift	★ C9ZZ 14A163-A		1
75/	G - - w/steering column mounted w/shield wiper switch	★ D5ZZ 14A163-C	Located inside shift collar-not replaced	1
77	V			1

COPYRIGHT © 1986 — FORD MOTOR COMPANY — DEARBORN, MICHIGAN

1973/79 LINCOLN-MERCURY CARS

YEAR	MODEL/RESTRICTIONS	PART NUMBER		DESCRIPTION	QTY.
14A163	RETAINER (WIRING HARNESS) — Cont'd				
78/	G	D4FZ	14A163-A	Located at instrument panel	1
76/	G	★ D6DZ	14A163-B	Used to attach 14630 wiring-not replaced	AR
76/	G	★ D6DZ	14A163-C	Used to attach 9A289 to brake pedal support-not replaced	1
77/	V - - w/speed control				1
76	G	D6ZZ	14A163-A	Located on valve cover	1
76/	G	D2AZ	14A163-G	Located on engine	AR
76	G - - 8 cyl.	D5AZ	14A163-A		AR
77	G,P - - 8 cyl. 302	D7DZ	14A163-A	Attach E.G.R. vacuum valve hose to cylinder head	1
78/	G - - w/power door locks or illuminated entry	★ D8DZ	14A163-A	Not replaced	4
73/74	J	★ D0RY	14A163-A	Not replaced	8
79	J	C3SZ	14A163-B		1
79	J	D4ZZ	14A163-F	Located at instrument panel	1
79	J,K	D2AZ	14A163-G	Located on engine	2
79	J(61) - - w/rear window washer	D9ZZ	14A163-A		1
79	J(61) - - w/rear window washer	D9ZZ	14A163-G	Located at L.H. side of 3rd door-retains 17A413 wiring to door	1
79	J,P	D9ZZ	14A163-C	Located at instrument panel shake brace	1
73/	K	C3SZ	14A163-B	Attach hood latch cable to radiator support	1
73	K	D2LY	14A163-C	Use w/quarter window wiring	2
73/	K	D20Z	14A163-D	20 1/2" long chain link lock type	1
74/	K	D4SZ	14A163-D	Located on seat frame	2
74	L - - A/T	D4FZ	14A163-A	Nylon	1
74	L - - w/anti-theft alarm system	D40Z	14A163-A	Steel	AR
74/77	L(64) - - w/heated backlite "Before 11/15/76"	D2FZ	14A163-A	Located in luggage compartment on hinge support	2
77/	L(64) - - w/heated backlite "From 11/15/76"	★ D7FZ	14A163-A	Located in luggage compartment on hinge support-not replaced	AR
74/75	L	D3FZ	14A163-A	Located at steering column	1
74/75	L - - M/T	★ C9ZZ	14A163-A	Located at transmission to attach wiring	2
74/	P	D2AZ	14A163-L	Located on L.H. valve cover	1
73/	P	D3DZ	14A163-A	Located on steering column bracket	1
73/	P	D20Z	14A163-E	Attach 14289 to valve cover	AR
73/	P	D3DZ	14A163-B	Located on instrument panel lower	1
74/	P	D2AZ	14A163-G	Located on engine	1
75/	P	★ C9ZZ	14A163-A	Located at transmission to attach wiring	2
76	P	D6DZ	14A163-A	Used to attach 14A068 to 14401 wiring	1
76	P	D6ZZ	14A163-A	Located on valve cover	1
75/	P - - w/heated backlite	D4ZZ	14A163-F	Nylon located at instrument panel	AR
76	P - - 8 cyl.	D5AZ	14A163-A		AR
78	P - - w/stereo radio	C3SZ	14A163-B		1
78/	P	D4ZZ	14A163-F	Located at instrument panel	1
78	P	D8BZ	14A163-A		3
78	P	★ D8BZ	14A163-B	Located in engine compartment-not replaced	4
78	P	D8BZ	14A163-C	Located at instrument panel	3
79	P	★ D9BZ	14A163-B	Located at instrument panel-not replaced	3
79	J				1
78/	P	D8BZ	14A163-E		1
77/	V	★ D6DZ	14A163-B	Used to attach 14630 wiring-not replaced	1
77/	V	D7AZ	14A163-A	Located inside door on door panel strainer	2
77	V - - 8 cyl. 302 - - Calif.	D7DZ	14A163-A	Attach engine vacuum valve hose to cylinder head	1
78	V - - 8 cyl. 302				1
73/	K		34653-S36M	(M-106-X)-nut and washer(attach retainer to door inner panel)-No. 8-32	AR
75	A,Y		382802-S2	(MM-173-JB)-Nut(attach 14A163 to brake pedal support)-3/8"-16	1
75	L,P		383255-S	(MM-296-AC)-nut(attach 14A163 to alternator)-No. 10-24	1
75	P		383184-S2	(UU-52-AD)-screw(attach 14A163 to steering column)-1/4"-20 x 3/4"	1
75	L		55907-S2	(U-254-B)-screw(attach retainer to door inner panel)-No. 8-18 x 1/2"	AR

YEAR	MODEL/RESTRICTIONS	PART NUMBER	DESCRIPTION	QTY.
14A163	RETAINER (WIRING HARNESS) — Cont'd			
75	L	45174-S8	(M-138)-"U" nut (attach retainer to door inner panel)-No. 8-15	AR
14A169	CLIP (SEAT BELT WARNING SYSTEM WIRE)			
73/74	J	D3RY 14A169-A	Attach wiring to rocker panel	4
76/77	J		Attach backlite wiper wiring inside luggage compt.	AR
76/	J		Attach interior lamp wiring inside luggage compt.	AR
73/74	J	★ D4RY 14A169-A	Attach 14398 wiring in engine compartment	1
76/77	J	Not replaced	Attach backlite wiper wiring inside luggage compt.	AR
73/78	J	★ D2RY 14A169-C	Attach battery cable-not replaced	2
74/78	J	★ D4RY 14A169-B	Located on 14A501 switch in front seat-not replaced	AR
14A170	PLATE ASSY. (WINDOW REGULATOR CONTROL SWITCH MOUNTING)-Refer to group 14524			
14A187	BOLT (FUSE PANEL JUNCTION)			
73/74	A,C,K,Y	D20Z 14A187-A	1/4"-20 x 2 21/32" long	1
74	D,F			1
75/76	C,Y	D5AZ 14A187-A	1/4"-20 x 2 21/32" long	AR
75/78	A			1
75/	D,F,K,L			1
79	A	D9AZ 14A187-A		1
14197	CLIP (WIRING)			
73/78	J	★ D3RY 14197-B Not replaced	Attach wiring to fender at distributor coil	1
73/78	J	120293-ES32	Attach 14300 to battery, transmission, and dome lamp wire to body rail	AR
14A199	INSULATOR (HEATED BACKLITE)			
74/	D	D4VY 14A199-A	Located at R.H. and L.H. garnish moulding	AR
14A200	WIRING ASSY. (WINDOW REGULATOR SAFETY RELAY TO WINDOW REGULATOR SWITCH)			
73/76	A,Y - - w/o anti-theft alarm	★ D3AZ 14A200-A	#D3AB 14A200-AC,AD-not replaced	1
73/76	A,Y - - w/anti-theft alarm	★ D3AZ 14A200-B	#D3AB 14A200-BC,BD-not replaced	1
79	A(54,74) - - w/power windows and/or power door locks "Before 3/1/79"	★ D9AZ 14A200-A	#D9AB 14A200-AC-not replaced	1
79	A(54,74) - - w/power windows and/or power door locks "From 3/1/79"	★ D9AZ 14A200-H	#D9AB 14A200-AD-not replaced	1
79	A(54,74) - - w/power windows w/out power door locks	★ D9AZ 14A200-B	#D9AB 14A200-BD-not replaced	1
79	A(66) - - w/power windows and/or power door locks	D9AZ 14A200-C	#D9AB 14A200-CD	1
79	A(66) - - w/power windows w/out power door locks	★ D9AZ 14A200-D	#D9AB 14A200-DC-not replaced	1
79	A - - w/heated backlite w/out power windows, trailer tow or P/C pkg.	D9AZ 14A200-E	#D9AB 14A435-AE,AF	1
79	A - - w/power windows w/out trailer tow or P/C pkg.	E4AZ 14A200-A	#D9AB 14A435-BE,BF	1
79	A - - w/trailer tow or P/C pkg.	E4AZ 14A200-C	#D9AB 14A435-CF,CG	1
73	C(exc. P/C and Taxi) - - w/o power windows and/or trailer towing pkg.	★ D30Z 14A200-D Not replaced	#D30B 14A435- AA-used w/auto. seat back latch power door locks, power seats or heated backlite	1
73	C(exc. P/C and Taxi) - - w/power windows and w/o trailer towing pkg.	★ D30Z 14A200-A	#D30B 14A200-AA-not replaced	1
73	C(exc. P/C and Taxi) - - w/power windows and trailer towing pkg.	★ D30Z 14A200-B	#D30B 14A200-BA-not replaced	1
73	C(exc. P/C and Taxi) - - w/trailer towing pkg. w/power backlite w/o power windows	★ D30Z 14A200-E	#D30B 14A435-BA-not replaced	1
73	C(P/C and Taxi) - - w/o power windows	★ D30Z 14A200-F	#D30B 14A435-CA-not replaced	1
73	C(P/C and Taxi) - - w/power windows	★ D30Z 14A200-C	#D30B 14A200-CA-not replaced	1
74/76	C(exc. P/C, Taxi),F - - w/power windows w/o trailer towing pkg.	★ D40Z 14A200-A	#D40B 14A200-AB-not replaced	1

COPYRIGHT © 1986 — FORD MOTOR COMPANY — DEARBORN, MICHIGAN

1973/79 LINCOLN-MERCURY CARS

YEAR	MODEL/RESTRICTIONS	PART NUMBER	DESCRIPTION	QTY.
14A200	WIRING ASSY. (WINDOW REGULATOR SAFETY RELAY TO WINDOW REGULATOR SWITCH) — Cont'd			
74/76	C(exc. P/C, Taxi),F - - w/power windows and trailer towing pkg.	★ D40Z 14A200-B	#D40B 14A200-BB-not replaced	1
74/76	C(exc. P/C,Taxi) - - w/ or w/o trailer towing package w/o power windows	★ D40Z 14A200-E	#D40B 14A435-AA,BA-not replaced	1
74/78	F - - w/ power windows, heated backlite, power seats w/ trailer towing package			1
77/78	F(65L) - - w/moon roof			1
74	C(P/C, Taxi) - - w/power windows	★ D40Z 14A200-C	#D40B 14A200-CC-not replaced	1
74	C(P/C, Taxi) - - w/o power windows	★ D40Z 14A200-F	#D40B 14A435-CC-not replaced	1
75/76	C(P/C, Taxi) - - w/power windows	★ D50Z 14A200-C	#D50B 14A200-CA-not replaced	1
73	F(65) - - w/heated backlite w/o power windows and/or auto. seat back latch	★ D3ZZ 14A200-B	#D3ZB 14A435-AB-not replaced	1
73	F(65) - - w/heated backlite and auto. seat back latch w/o power windows	★ D3ZZ 14A200-C	#D3ZB 14A435-BB-not replaced	1
73	F(65) - - w/power windows and heated backlite	★ D3ZZ 14A200-A	#D3ZB 14A200-AB-not replaced	1
73	F - - w/power windows w/o heated backlite	★ D2ZZ 14A200-A	#D2ZB 14A200-AA-not replaced	1
77/78	F(P/C, Taxi) - - w/power windows	★ D60Z 14A200-A	#D60B 14A435-AA-not replaced	1
79	F(54) - - w/power windows	★ D90Z 14A200-A	#D90B 14A435-AA,AB-not replaced	1
79	F(P/C, Taxi)			1
79	F(65L) - - w/sun roof	★ D90Z 14A200-B	#D90B 14A435-BB,BC-not replaced	1
75	G - - w/power windows w/o heated backlite or trailer towing package	★ D5DZ 14A200-F	#D5DB 14A200-AB,AC-not replaced	1
75	G - - w/power windows w/heated backlite w/o trailer towing package	★ D5DZ 14A200-G	#D5DB 14A200-BC,BE-not replaced	1
75	G - - w/o power windows w/o trailer towing package	★ D5DZ 14A200-D	#D5DB 14A435-AC-not replaced	1
75	G - - w/power windows w/trailer towing package	★ D5DZ 14A200-H	#D5DB 14A200-HA ,ED-D5DB 14A200-CC-Not replaced	1
75	G - - w/o power windows w/trailer towing package	★ D5DZ 14A200-E	#D5DB 14A435-BA-Not replaced	1
76	G(54) - - w/power windows and power door locks	★ D6DZ 14A200-A	#D6DB 14A200-AC-not replaced	1
76	G(66) - - w/power windows and power door locks	★ D6DZ 14A200-B	#D6DB 14A200-BB-not replaced	1
76	G - - w/trailer towing heated backlite, low vacuum warning, w/o power windows or power door locks "Before 3/10/76"	★ D6DZ 14A200-C	#ED-D6DB 14A435-AE-not replaced	1
76	G - - w/trailer towing, heated backlite, low vacuum warning, w/o power windows or power door locks "From 3/10/76"	★ D6DZ 14A200-E	#D6DB 14A435-AE-not replaced	1
76	G - - w/trailer towing, heated backlite, low vacuum warning w/power windows and power door locks "Before 4/15/76"	★ D6DZ 14A200-D	#ED-D6DB 14A435-BE-not replaced	1
76	G - - w/trailer towing, heated backlite, low vacuum warning, w/power windows and power door locks "From 4/15/76"	★ D6DZ 14A200-F	#D6DB 14A435-BE-not replaced	1

YEAR	MODEL/RESTRICTIONS	PART NUMBER	DESCRIPTION	QTY.
14A200	WIRING ASSY. (WINDOW REGULATOR SAFETY RELAY TO WINDOW REGULATOR SWITCH) — Cont'd			
77	G(54) - - w/power windows and power door locks "Before 11/1/76"	★ D7DZ 14A200-A	# D7DB 14A200-AC-not replaced	1
77/	G (54) - - w/power windows and power door locks "From 11/1/76"	★ D7DZ 14A200-D	# D7DB 14A200-AD-not replaced	1
77/	G(66) - - w/power windows and power door locks	★ D7DZ 14A200-B	# D7DB 14A200-BB-not replaced	1
77/78	G - - w/power windows, auto/seat back latch heated backlite and power door locks	★ D7DZ 14A200-C	# D7DB 14A435-BB, D8DB 14A435-AA-not replaced	1
79	G - - w/power windows, heated backlite, auto seat back latch, power door locks, vis light grp., and/or engine compt. lamp	★ D9DZ 14A200-A	# D9DB 14A435-AB-not replaced	1
79	J - - w/power door locks	D9ZZ 14A200-A	# D9ZB 14A200-AA	1
78/	P - - w/heated backlite "Before 6/1/79"	★ D8BZ 14A200-A	# D8BB-14A435-AC or AB-not replaced	1
79	J - - w/heated backlite "Before 6/1/79"			1
79	J,P - - w/heated backlite w/o power door locks or power seats "From 6/1/79"	★ D9ZZ 14A200-B	# D9ZB 14A435-AA-not replaced	1
78	P - - w/power windows	★ D8BZ 14A200-B	# D8BB 14A200-BA-not replaced	1
78	P(54) - - P/C and Taxi-w/roof lamps	★ D8BZ 14A200-C	# D8BB 14A200-AB-not replaced	1
79	P - - w/power door locks	D9BZ 14A200-A	# D9BB 14A200-AA	1
79	P(Taxi) "Before 4/15/79"	★ D9BZ 14A200-C	# D9BB 14A200-CB-not replaced	1
79	P(Taxi) "From 4/15/79"	★ D9BZ 14A200-E	# D9BB 14A200-CC-not replaced	1
79	P - - w/power windows	★ D9BZ 14A200-D	# D9BB 14A200-DA,DB,DC-not replaced	1
77/	V - - w/power windows	★ D74Y 14A200-A	# D74B 14A200-AA-not replaced	1
77/78	V - - w/power windows,auto/seat back latch, heated backlite and power door locks	★ D7DZ 14A200-C	# D7DB 14A435-BB, D8DB 14A435-AA-not replaced	1
79	V - - w/power windows, heated backlite, auto seat back latch, power door locks, vis light grp. and/or engine compt. lamp	★ D9DZ 14A200-A	# D9DB 14A435-AB-not replaced	1
74/78	A,Y	376389-S101	(UU-82-D)-screw (attach wiring to cowl top panel)-No. 8-18 x 3/4"	1
76	G	55907-S2	(U-254-B)-screw (attach wiring to cowl panel) No. 8-18 x 1/2"	6
75/78	G	383182-S100	(GG-359)-clip (attach wiring to cowl panel)	1
14A217	BRACKET (WIRING SHIELD)			
74/	D	D4VY 14A217-A	Located on brake pedal support	1
14A227	WIRING ASSY. (LUGGAGE COMPARTMENT LAMP JUMPER)			
79	P - - w/deluxe seat belt w/out vis. light grp.	D9BZ 14A227-A	# D9BB 14A227-AB	1
14240	WIRE ASSY. (DOOR LOCK FEED)			
73/78	A(65) - - w/power door locks	★ D3AZ 14240-A	# D3AB 14240-AB-front door	1
73/76	Y(65) - - w/power door locks	Not replaced		1
74/75	A(53,57),Y(53,57) - - w/power door locks	D5AZ 14240-A	# D5AB 14240-AA	1
74	A(71),Y(71) - - w/power door locks and power tailgate lock- "Before 6/10/74"	D4AZ 14240-B	# D4AB 14240-BA	1
74/75	A(71),Y(71) - - w/power door locks and power tailgate lock- "From 6/10/74"	D5AZ 14240-B	# D5AB 14240-BA	1

COPYRIGHT © 1986— FORD MOTOR COMPANY —DEARBORN, MICHIGAN

1973/79 LINCOLN-MERCURY CARS

YEAR	MODEL/RESTRICTIONS	PART NUMBER	DESCRIPTION	QTY.
14240	WIRE ASSY. (DOOR LOCK FEED) — Cont'd			
74/78	A(71) - - w/power tailgate lock w/o power door locks	★ D4AZ 14240-C Not replaced	#D4AB 14240-CB	1
74/76	Y(71) - - w/power tailgate lock w/o power door locks			1
76/78	A(53) - - w/power door locks	★ D6AZ 14240-A Not replaced	#D6AB 14240-AA	1
76	Y(53) - - w/power door locks			1
76/78	A(71) - - w/power door locks	★ D6AZ 14240-B Not replaced	#D6AB 14240-BA	1
76	Y(71) - - w/power door locks			1
79	A(54,74) - - w/power door locks w/o power windows "Before 3/1/79"	D9AZ 14240-A	#ED-D9AB 14240-AC-R.H. & L.H. rear door	1
79	A(54,74) - - w/power door locks w/o power windows "From 3/1/79"	D9AZ 14240-C	#D9AB 14240-AD - R.H. & L.H. rear door	1
79	A(66) - - w/power door locks w/o power windows	D9AZ 14240-B	#ED-D9AB 14240-BC-R.H. & L.H. front door	1
76	G(54) - - w/power door locks- "Before 5/3/76"	D6DZ 14240-C	R.H.-rear door-#D6DB 14240-AC,AD,AE	1
76	G(54) - - w/power door locks "From 5/3/76"	D6DZ 14240-D	R.H.-rear door-# D6DB 14240-AF	1
76	G(54) - - w/power door locks "Before 5/3/76"	D6DZ 14240-B	L.H.-rear door-#D6DB 14A623-AC	1
76	G(54) - - w/power door locks "From 5/3/76"	D6DZ 14240-E	L.H.-rear door-#D6DB 14240-AE	1
77/	G(54) - - w/power door locks	★ D7DZ 14240-A Not replaced	#D7DB 14240-AC-R.H. and L.H. rear door	2
78/	P(54,74) - - w/power door locks	★ D8BZ 14240-A Not replaced	#D9BB 14240-AC,AE-R.H. & L.H. rear door	1
14A240	INSULATOR (WIRING)			
73/	A,C,D,F,G,J,K,L,P,Y	D30Z 14A240-A	Located on output terminal of alternator	1
73/	A,C,D,F,G,K,J,L,P,Y	C1AZ 14A240-A	15 foot roll 3/8" I.D.	AR
73/	A,C,D,F,G,K,J,L,P,Y	C1AZ 14A240-B	15 foot roll 3/16" I.D.	AR
14276	WIRING ASSY. (LUGGAGE COMPARTMENT REMOTE CONTROL LOCK EXTENSION)-If not listed below-improvise from (14296) bulk wire			
73/74	A(exc. 71),Y(exc. 71)	D3AZ 14276-A	#D3AB 14A549-AB	1
75	A(exc. 71),Y(exc. 71) - "Before 1/3/75"	★ D5AZ 14276-A	#D4AB 14A549-AB-not replaced	1
76/78	A(exc. 71)			1
76	Y(exc. 71)			1
75	A(exc. 71),Y(exc. 71)- "From 1/3/75"	D5AZ 14276-B	#D5AB 14A549-BA	1
76	C(exc. 71),F(65)	D60Z 14276-A	#D60B 14A549-AA	1
14277	COVER (BATTERY TERMINAL) INSULATOR			
76	J	D5RY 14277-A		1
14A282	RETAINER (WIRING HARNESS)			
73/	D	D0VY 14A282-A	Located on L.H. front fender apron-retains 14290 wiring	1
14A285	WIRING ASSY. (CIRCUIT BREAKER FEED)-Refer to group 15A669			

14289 WIRE ASSY. (DASH TO ENGINE GAUGE FEED)

WIRING LOOM MARKING or TAG NUMBER TO SERVICE WIRING PART NUMBER GUIDE

The purpose of this guide is to facilitate the identification of the Service Wiring Part Number. The chart that follows lists in numerical sequence the Wiring Loom Markings or Tag Numbers. For many vehicles the Service Wiring Part Number will be the same 2
Number. This type of replacement will cause little or no installation problems. However, when the Service Wiring differs from the Loom Marking or Tag Number it will be necessary to match lead wires and to tape up those lead wires which are not required. This is necessary when the Service Wiring has a more general application than the original wiring installed by the factory. Following this guide chart, Service Wiring Part Numbers are listed by model year and vehicle usage which will permit the identification of replacement wiring when the loom identification or tag number is not known.

IDENTIFICATION CHART

IDENTIFICATION	PART NUMBER	IDENTIFICATION	PART NUMBER
14289 WIRE ASSY. (DASH TO ENGINE GAUGE FEED)			
D40B 14A219-AA	D40Z 14289-L	D30B 14289-EH	★D30Z 14289-AA
D3AB 14289-BF	★D3AZ 14289-B	D30B 14289-JA	★D30Z 14289-D
ED-D3AB 14289-BF	★D3AZ 14289-B	ED-D30B 14289-KA	★D30Z 14289-K
ED-D3AB 14289-BG	★D3AZ 14289-B	D30B 14289-KB	★D30Z 14289-S
ED-D3AB 14289-BK	★D3AZ 14289-AA	D30B 14289-KD	★D30Z 14289-V
D3AB 14289-CG	★D3AZ 14289-L	D30B 14289-LA	★D30Z 14289-L
ED-D3AB 14289-CG	★D3AZ 14289-L	D30B 14289-LB	★D30Z 14289-L
ED-D3AB 14289-CH	★D3AZ 14289-C	D30B 14289-MA	D30Z 14289-Z
D3AB 14289-CK	★D3AZ 14289-AC	D3ZB 14289-CB	★D3ZZ 14289-C
D3AB 14289-EF	★D3AZ 14289-N	D3ZB 14289-CC	★D3ZZ 14289-C
ED-D3AB 14289-EF	★D3AZ 14289-N	D3ZB 14289-CD	★D3ZZ 14289-C
ED-D3AB 14289-EG	★D3AZ 14289-E	D3ZB 14289-CE	★D3ZZ 14289-C
ED-D3AB 14289-EH	★D3AZ 14289-N	D3ZB 14289-CF	★D3ZZ 14289-C
D3AB 14289-EJ	★D3AZ 14289-V	D3ZB 14289-DA	★D3ZZ 14289-D
D3AB 14289-EK	★D3AZ 14289-AB	D4AB 14289-EG	★D4AZ 14289-E
D3AB 14289-FG	★D3AZ 14289-P	ED-D4AB 14289-HG	★D4AZ 14289-H
ED-D3AB 14289-FG	★D3AZ 14289-P	ED-D4AB 14289-HH	★D4AZ 14289-H
ED-D3AB 14289-FH	★D3AZ 14289-F	ED-D4AB 14289-HJ	★D4AZ 14289-H
D3AB 14289-FK	★D3AZ 14289-AD	D4AB 14289-JG	★D4AZ 14289-J
D3AB 14289-LA	★D3AZ 14289-R	D4AB 14289-KH	★D4AZ 14289-K
D3AB 14289-MA	★D3AZ 14289-S	D4AB 14289-LD	★D4AZ 14289-L
D3DB 14289-AA	D4AZ 14289-R	D4AB 14289-LE	★D4AZ 14289-L
ED-D3DB 14289-BC	★D3DZ 14289-B	ED-D4AB 14289-ME	★D4AZ 14289-M
ED-D3DB 14289-BD	★D3DZ 14289-B	ED-D4AB 14289-MF	★D4AZ 14289-M
D3DB 14289-CC	D3DZ 14289-C	D4DB 14289-AC	★D4DZ 14289-A
D3DB 14289-CE	★D3DZ 14289-E	D4DB 14289-BC	D4DZ 14289-B
D3DB 14289-CF	D3DZ 14289-F	D4DB 14289-BD	★D4DZ 14289-H
ED-D3DB 14289-EA	★D3DZ 14289-G	D4DB 14289-CC	★D4DZ 14289-C
D30B 14289-AC	★D30Z 14289-A	D4DB 14289-DB	D4AZ 14289-R
ED-D30B 14289-AC	★D30Z 14289-A	D4DB 14289-ED	★D4DZ 14289-E
ED-D30B 14289-AD	★D30Z 14289-U	D4DB 14289-FC	D4DZ 14289-F
D30B 14289-BC	★D30Z 14289-M	D4GB 14289-AD	★D4GY 14289-A
ED-D30B 14289-BC	★D30Z 14289-B	D4GB 14289-AE	★D4GY 14289-A
D30B 14289-BD	★D30Z 14289-B	D4GB 14289-BD	★D4GY 14289-B
ED-D30B 14289-BD	★D30Z 14289-B	D4GB 14289-BE	★D4GY 14289-B
D30B 14289-CE	★D30Z 14289-N	D4GB 14289-CD	★D4GY 14289-C
ED-D30B 14289-CE	★D30Z 14289-C	D4GB 14289-DD	★D4GY 14289-D
D30B 14289-DA	★D30Z 14289-D	D4GB 14289-EA	★D4GY 14289-E
ED-D30B 14289-DF	★D30Z 14289-D	D4GB 14289-FA	★D4GY 14289-F
D30B 14289-EE	★D30Z 14289-T	D40B 14289-BD	★D40Z 14289-B
ED-D30B 14289-EE	★D30Z 14289-E	D40B 14289-DD	★D40Z 14289-D
D30B 14289-EF	★D30Z 14289-AA	D40B 14289-ED	★D40Z 14289-E
D30B 14289-EG	D30Z 14289-R	D40B 14289-JD	★D40Z 14289-J

COPYRIGHT © 1986 — FORD MOTOR COMPANY — DEARBORN, MICHIGAN

IDENTIFICATION CHART

IDENTIFICATION	PART NUMBER	IDENTIFICATION	PART NUMBER
14289 WIRE ASSY. (DASH TO ENGINE GAUGE FEED) — Cont'd			
D40B 14289-KD	★ D40Z 14289-K	D6AB 14289-MA	★ D6AZ 14289-H
D40B 14289-LC	★ D40Z 14289-L	D6DB 14289-GA	★ D6DZ 14289-G
D5AB 14289-AF	D5AZ 14289-G	ED-D6DB 14289-GD	★ D6DZ 14289-G
D5AB 14289-AG	★ D5AZ 14289-A	D6DB 14289-HB	★ D6DZ 14289-H
D5AB 14289-BF	★ D5AZ 14289-H	ED-D6DB 14289-HE	★ D6DZ 14289-H
D5AB 14289-BG	★ D5AZ 14289-B	ED-D6DB 14289-HF	★ D6DZ 14289-H
D5AB 14289-DC	★ D5AZ 14289-D	D6DB 14289-JB	★ D6DZ 14289-J
D5AB 14289-EC	★ D5AZ 14289-J	ED-D6DB 14289-JE	★ D6DZ 14289-J
D5AB 14289-EF	★ D5AZ 14289-J	D6DB 14289-LA	★ D6DZ 14289-L
D5AB 14289-FB	D5AZ 14289-F	D6DB 14289-LB	★ D6DZ 14289-L
D5AB 14289-GA	D5AZ 14289-G	D6DB 14289-LC	★ D6DZ 14289-L
D5AB 14289-HA	★ D5AZ 14289-H	D6DB 14289-MA	★ D6DZ 14289-M
D5AB 14289-KA	D5AZ 14289-G	D6EB 14289-AB	D6FZ 14289-A
D5AB 14289-LA	★ D5AZ 14289-H	D6EB 14289-BA	★ D6FZ 14289-C
D5BB 14289-AE	★ D5BZ 14289-A	D6EB 14289-CA	★ D6FZ 14289-C
D5BB 14289-AF	★ D5BZ 14289-A	D60B 14289-AB	D60Z 14289-A
D5BB 14289-BE	D5DZ 14289-H	D60B 14289-AC	D60Z 14289-J
D5BB 14289-BF	★ D5BZ 14289-B	D60B 14289-BB	D60Z 14289-B
D5BB 14289-CA	★ D5DZ 14289-E	D60B 14289-BC	D60Z 14289-K
D5BB 14289-DD	★ D5DZ 14289-D	D60B 14289-CA	D60Z 14289-C
D5BB 14289-DE	★ D5DZ 14289-D	D60B 14289-CB	D60Z 14289-L
D5BB 14289-DF	★ D5DZ 14289-D	D60B 14289-DA	D60Z 14289-D
D5BB 14289-EB	★ D5DZ 14289-H	D60B 14289-DB	D60Z 14289-M
D5DB 14289-AG	★ D5DZ 14289-A	D60B 14289-EA	D60Z 14289-E
D5DB 14289-AH	★ D5DZ 14289-A	D60B 14289-EB	D60Z 14289-N
D5DB 14289-BE	★ D5DZ 14289-B	D60B 14289-FA	D70Z 14289-L
D5DB 14289-CE	★ D5DZ 14289-C	D60B 14289-FB	★ D60Z 14289-P
D5DB 14289-DA	★ D5DZ 14289-G	D60B 14289-GA	D60Z 14289-G
ED-D5DB 14289-DA	D5DZ 14289-F	D60B 14289-GB	★ D60Z 14289-R
D5DB 14289-DB	★ D5DZ 14289-G	D60B 14289-HA	D60Z 14289-H
D50B 14289-AC	★ D50Z 14289-A	D60B 14289-HB	D60Z 14289-S
ED-D50B 14289-AC	★ D50Z 14289-A	D60B 14289-JA	★ D60Z 14289-P
D50B 14289-BC	★ D50Z 14289-B	D60B 14289-KA	★ D60Z 14289-R
ED-D50B 14289-BC	★ D50Z 14289-B	D7AB 14289-AD	D7AZ 14289-A
D50B 14289-CE	★ D50Z 14289-C	ED-D7AB 14289-AE	D7AZ 14289-A
D50B 14289-DE	★ D50Z 14289-D	D7AB 14289-BD	★ D7AZ 14289-B
D50B 14289-FG	★ D50Z 14289-F	ED-D7AB 14289-BE	★ D7AZ 14289-B
D50B 14289-JA	★ D50Z 14289-C	D7AB 14289-CC	★ D7AZ 14289-C
D50B 14289-KA	★ D50Z 14289-D	D7AB 14289-DC	★ D7AZ 14289-D
D50B 14289-MA	★ D50Z 14289-M	D7BB 14289-AA	★ D7DZ 14289-K
D50B 14289-NA	★ D50Z 14289-N	D7BB 14289-BB	D7DZ 14289-H
D5ZB 14289-AE	D5EZ 14289-A	ED-D7DB 14289-AA	★ D7DZ 14289-A
D5ZB 14289-BD	D5ZZ 14289-B	D7DB 14289-AB	★ D7DZ 14289-A
D52B 14289-AA	★ D5FZ 14289-A	ED-D7DB 14289-CA	★ D7DZ 14289-C
D52B 14289-AB	★ D5FZ 14289-A	D7DB 14289-CB	★ D7DZ 14289-C
D6AB 14289-AC	D6AZ 14289-A	D7DB 14289-DB	D7DZ 14289-D
D6AB 14289-BC	D6AZ 14289-B	D7DB 14289-EB	D7DZ 14289-E
D6AB 14289-CC	D6AZ 14289-C	D7DB 14289-FB	★ D7DZ 14289-F
D6AB 14289-EC	D6AZ 14289-E	D7DB 14289-HB	★ D7DZ 14289-A
D6AB 14289-FC	D6AZ 14289-F	D7DB 14289-JA	D7DZ 14289-J
D6AB 14289-GB	D6AZ 14289-G	D7DB 14289-KA	★ D7DZ 14289-M
D6AB 14289-GC	D6AZ 14289-G	D7DB 14289-LA	★ D7DZ 14289-L
D6AB 14289-HC	★ D6AZ 14289-H	D7EB 14289-AA	★ D7FZ 14289-A
D6AB 14289-JA	★ D6AZ 14289-J	D7EB 14289-AB	★ D7FZ 14289-A
D6AB 14289-KB	★ D6AZ 14289-K	D7EB 14289-BA	★ D7FZ 14289-B
D6AB 14289-LA	D6AZ 14289-G	D70B 14289-AC	D70Z 14289-A

IDENTIFICATION CHART

IDENTIFICATION	PART NUMBER	IDENTIFICATION	PART NUMBER
14289 WIRE ASSY. (DASH TO ENGINE GAUGE FEED) — Cont'd			
D70B 14289-AD	D70Z 14289-A	D8DB 14289-BD	★ D8DZ 14289-B
D70B 14289-CC	D70Z 14289-C	D8DB 14289-CC	D8DZ 14289-H
D70B 14289-CD	D70Z 14289-C	D80B 14289-AA	D80Z 14289-A
D70B 14289-CF	D80Z 14289-J	D80B 14289-BA	★ D80Z 14289-B
ED-D70B 14289-CF	D70Z 14289-C	D80B 14289-CB	D80Z 14289-C
D70B 14289-DC	D70Z 14289-D	D80B 14289-DB	D80Z 14289-D
D70B 14289-DD	D70Z 14289-D	D80B 14289-JA	D80Z 14289-C
D70B 14289-DF	★ D80Z 14289-K	D80B 14289-KA	D80Z 14289-D
ED-D70B 14289-DF	D70Z 14289-D	D8ZB 14289-AA	D8ZZ 14289-B
D70B 14289-FC	★ D70Z 14289-F	D84B 14289-AE	D84Y 14289-A
D70B 14289-FD	★ D70Z 14289-F	D9AB 14289-AF	★ D9AZ 14289-B
D70B 14289-FE	★ D70Z 14289-F	D9AB 14289-BF	★ D9AZ 14289-B
D70B 14289-GC	★ D70Z 14289-G	D9AB 14289-CG	★ D9AZ 14289-D
D70B 14289-GD	★ D70Z 14289-G	D9AB 14289-DG	★ D9AZ 14289-D
D70B 14289-GE	★ D70Z 14289-G	D9AB 14289-EG	★ D9AZ 14289-F
D70B 14289-HB	★ D70Z 14289-H	D9AB 14289-FB	★ D9AZ 14289-F
D70B 14289-HC	★ D70Z 14289-H	D9AB 14289-GB	★ D9AZ 14289-G
D70B 14289-KA	D70Z 14289-K	D9BB 14289-AB	★ D9BZ 14289-A
D7SB 14289-AA	D7SZ 14289-A	D9BB 14289-BA	★ D9BZ 14289-B
D7SB 14289-AC	D7SZ 14289-A	D9CB 14289-BC	D9CY 14289-B
D8AB 14289-AC	D8AZ 14289-A	D9CB 14289-CD	★ D9CY 14289-C
D8AB 14289-BC	★ D8AZ 14289-B	D9EB 14289-BB	D9FZ 14289-B
D8AB 14289-CC	★ D8AZ 14289-C	D90B 14289-AA	D90Z 14289-A
D8AB 14289-JA	★ D8AZ 14289-J	D90B 14289-BA	★ D90Z 14289-B
D8AB 14289-KA	★ D8AZ 14289-K	D90B 14289-DA	★ D90Z 14289-D
D8AB 14289-LA	★ D8AZ 14289-L	D9SB 14289-AA	D9SZ 14289-A
D8AB 14289-MA	D8AZ 14289-A	D9SB 14289-BA	★ D9SZ 14289-B
D8AB 14289-NA	★ D8AZ 14289-B	D9ZB 14289-AC	★ D9ZZ 14289-A
D8BB 14289-AB	★ D8BZ 14289-A	D9ZB 14289-BC	D9ZZ 14289-B
D8BB 14289-BC	D8BZ 14289-B	D9ZB 14289-CA	D9ZZ 14289-C
D8BB 14289-BD	D8BZ 14289-B	D9ZB 14289-DB	D9ZZ 14289-D
D8BB 14289-CB	★ D8BZ 14289-C	D9ZB 14289-EB	D9ZZ 14289-E
D8BB 14289-DA	★ D8BZ 14289-D	D9ZB 14289-FC	★ D9ZZ 14289-F
D8BB 14289-EC	★ D8BZ 14289-E	D9ZB 14289-GB	★ D9ZZ 14289-G
D8BB 14289-FA	★ D8BZ 14289-K	D9ZB 14289-HF	D9ZZ 14289-H
D8DB 14289-AB	★ D8DZ 14289-A		

YEAR	MODEL/RESTRICTIONS	ENGINE CYL.	ENGINE C.I.D. (C.C.D.)	PART NUMBER	DESCRIPTION	QTY.
14289 WIRE ASSY. (DASH TO ENGINE GAUGE FEED)						

APPLICATION CHART

A (Mercury)

NOTE 1- Refer to basic group 14305 for units built from 3/2/79

73	A - - without A.T.C. or diagnostic system "Before 5/1/73"	8	351,400	★ D3AZ 14289-B	Not replaced	1
73	A - - without A.T.C. or diagnostic system "From 5/1/73"	8	351,400	★ D3AZ 14289-AA	Not replaced	1
73	A - - w/diagnostic system	8	351,400	★ D3AZ 14289-R	Not replaced	1
73	A - - A.T.C. "Before 10/16/72"	8	351,400	★ D3AZ 14289-E	Not replaced	1
73	A - - A.T.C. "From 10/16/72 to 12/16/72"	8	351,400	★ D3AZ 14289-N	Not replaced	1
73	A - - A.T.C. "From 12/16/72 to 5/3/73"	8	351,400	★ D3AZ 14289-V	Not replaced	1
73	A - - A.T.C. "From 5/3/73"	8	351,400	★ D3AZ 14289-AB	Not replaced	1

COPYRIGHT © 1986— FORD MOTOR COMPANY —DEARBORN, MICHIGAN

YEAR	MODEL/RESTRICTIONS	ENGINE CYL.	ENGINE C.I.D. (C.C.D.)	PART NUMBER	DESCRIPTION	QTY.
14289	WIRE ASSY. (DASH TO ENGINE GAUGE FEED) — Cont'd					

APPLICATION CHART

A (Mercury)

NOTE 1- Refer to basic group 14305 for units built from 3/2/79

73	A - - without A.T.C. or diagnostic system "Before 10/16/72"	8	429,460	★ D3AZ 14289-C	Not replaced	1
73	A - - without A.T.C. or diagnostic system "From 10/16/72 to 5/1/73"	8	429,460	★ D3AZ 14289-L	Not replaced	1
73	A - - without A.T.C. or diagnostic system "From 5/1/73"	8	429,460	★ D3AZ 14289-AC	Not replaced	1
73	A - - w/diagnostic system	8	429,460	★ D3AZ 14289-S	Not replaced	1
73	A - - A.T.C. "Before 10/16/72"	8	429,460	★ D3AZ 14289-F	Not replaced	1
73	A - - A.T.C. "From 10/16/72 to 5/3/73"	8	429,460	★ D3AZ 14289-P	Not replaced	1
73	A - - A.T.C. "From 5/3/73"	8	429,460	★ D3AZ 14289-AD	Not replaced	1
74	A - - without A.T.C.	8	400	★ D4AZ 14289-M	Not replaced	1
74	A - - A.T.C.	8	400	★ D4AZ 14289-H	Not replaced	1
74	A(exc. P/C)	8	460 exc. P/C	★ D4AZ 14289-J	Not replaced	1
74	A(P/C)	8	460P/C	★ D4AZ 14289-K	Not replaced	1
75	A - - without A.T.C. exc. Calif. and Canada "Before 6/2/75"	8	351M	★ D5AZ 14289-A	With floor hear sensor-not replaced	1
75	A - - without A.T.C. Calif. and Canada	8	351M			1
75	A - - without A.T.C.	8 8	400 351M	D5AZ 14289-G		1 1
75	A - - A.T.C.	8	400	★ D5AZ 14289-H	Not replaced	1
75	A - - w/o A.T.C. exc. Calif.	8	460	★ D5AZ 14289-D	Not replaced	1
75	A - - with A.T.C. exc. Calif.	8	460	★ D5AZ 14289-J	With or w/out floor heat sensor-not replaced	1
75	A - - with heater-A/C or A.T.C.-Calif.	8	460	D5AZ 14289-F	With floor heat sensor	1
76	A - - without A.T.C.	8	400	D6AZ 14289-G		1
76	A - - A.T.C.	8	400	★ D6AZ 14289-H	Not replaced	1
76	A(exc. P/C)	8	460	D6AZ 14289-C		1
76	A(P/C) - - Calif.	8	460	★ D6AZ 14289-K	Not replaced	1
76	A(P/C) - - exc. Calif.	8	460	★ D6AZ 14289-J	Not replaced	1
77	A - - w/o A.T.C. exc. Calif.	8	351, 400-2V	D7AZ 14289-A		1
77	A - - A.T.C. exc. Calif.	8	351, 400-2V	★ D7AZ 14289-B	Not replaced	1
77/78	A - - Calif.	8	351, 400-2V	★ D7AZ 14289-D	Not replaced	1
77	A - - exc. Calif.	8	460	★ D7AZ 14289-C	Not replaced	1
77	A - - Canada	8	351, 400-2V	D7AZ 14289-F		1
78	A - - without A.T.C. exc. Calif.	8	351M, 400-2V	D8AZ 14289-A		1
78	A - - with A.T.C. exc. Calif.	8	351M 400-2V	★ D8AZ 14289-B	Not replaced	1
78	A exc. P/C and Calif.	8	460	★ D8AZ 14289-C	Not replaced	1
78	A - - Without A.T.C. Canada	8	351M	★ D8AZ 14289-J	Without catalytic converter-not replaced	1
78	A - - With A.T.C. Canada	8	351M	★ D8AZ 14289-K	Without catalytic converter-not replaced	1
78	A(P/C)	8	460	★ D8AZ 14289-L	Not replaced	1
79	A - - Calif. NOTE 1	8	351W	★ D9AZ 14289-B	Not replaced	1

YEAR	MODEL/RESTRICTIONS	ENGINE CYL.	ENGINE C.I.D. (C.C.D.)	PART NUMBER	DESCRIPTION	QTY.
14289	WIRE ASSY. (DASH TO ENGINE GAUGE FEED) — Cont'd					

APPLICATION CHART

A (Mercury)

NOTE 1 Refer to basic group 14305 for units built from 3/2/79

79	A - - exc. Calif. NOTE 1	8	351W	★ D9AZ 14289-D	Not replaced	1
79	A - - exc. Calif. NOTE 1	8	302	★ D9AZ 14289-F	Not replaced	1
79	A - - Calif. NOTE 1	8	302	★ D9AZ 14289-G	Not replaced	1

C (Montego)

73	C - - M/T "Before 11/24/72"	6	250	★ D30Z 14289-A	Not replaced	1
73	C - - M/T "From 11/24/72"	6	250	★ D30Z 14289-U	Not replaced	1
73	C - - A/T "Before 10/16/72"	6	250	★ D30Z 14289-K	Not replaced	1
73	C - - A/T "From 10/16/72 to 3/12/73"	6	250	★ D30Z 14289-S	Not replaced	1
73	C - - A/T "From 3/12/73"	6	250	★ D30Z 14289-V	Not replaced	1
73	C "Before 10/16/72"	8	302, 351W	★ D30Z 14289-B	Not replaced	1
73	C "From 10/16/72"	8	302, 351W	★ D30Z 14289-M	Not replaced	1
73	C - - A/T "Before 10/16/72"	8	351-4/B	★ D30Z 14289-C	Not replaced	1
73	C - - A/T "From 10/16/72"	8	351-4/B	★ D30Z 14289-N	Not replaced	1
73	C - - M/T	8	351-4/B	★ D30Z 14289-L	Not replaced	1
73	C "From 10/16/72 to 5/1/73"	8	351C-2/B,400	★ D30Z 14289-T	Not replaced	1
73	C "Before 10/16/72"	8	351C-2/B,400	★ D30Z 14289-AA	Not replaced	1
73	C	8	429, 460 P/C	★ D30Z 14289-D	Not replaced	1
74	C	6	250	★ D40Z 14289-B	Not replaced	1
74	C - - without A.T.C.-with breakerless ignition	8	302 351W	★ D4GY 14289-F	Not replaced	1
74	C - - without A.T.C.- and/or breakerless ignition	8	302 351W	★ D40Z 14289-E	Not replaced	1
74	C - - A.T.C.-without breakerless ignition	8	302 351W	★ D40Z 14289-J	Not replaced	1
74	C - - A.T.C. with breakerless ignition	8	302 351W	★ D4GY 14289-D	Not replaced	1
74	C - - without A.T.C. and/or breakerless ignition	8	351C-2/B	★ D40Z 14289-D	Not replaced	1
74	C - - without A.T.C., A/C and/or breakerless ignition	8	351-4/B			1
74	C - - A.T.C. without breakerless ignition	8	351C-2/B	★ D40Z 14289-K	Not replaced	1
74	C - - A.T.C. or A/C without breakerless ignition	8	351-4/B			1
74	C - - A.T.C. and breakerless ignition	8	351C	★ D4GY 14289-B	Not replaced	1
74	C - - A.T.C.	8	400			1
74	C - - without A.T.C. with breakerless ignition	8	351C	★ D4GY 14289-A	Not replaced	1
74	C - - without A.T.C.	8	400			1
74	C(exc. P/C)	8	460	★ D4GY 14289-C	Not replaced	1
74	C(P/C)	8	460	★ D4GY 14289-E	Not replaced	1
74	C - - w/speed control	8	All	★ D40Z 14289-L	Jumper-not replaced	1

COPYRIGHT © 1986— FORD MOTOR COMPANY —DEARBORN, MICHIGAN

1973/79 LINCOLN-MERCURY CARS

YEAR	MODEL/RESTRICTIONS	ENGINE CYL.	ENGINE C.I.D. (C.C.D.)	PART NUMBER	DESCRIPTION	QTY.
14289	WIRE ASSY. (DASH TO ENGINE GAUGE FEED) — Cont'd					

APPLICATION CHART

C (Montego)

75	C - - without A.T.C.	8	351W	★D50Z 14289-A	Not replaced	1
75	C - - A.T.C.	8	351W	★D50Z 14289-B	Not replaced	1
75	C - - without A.T.C. exc. Calif. and Canada- "Before 6/2/75"	8	351M, 400	★D50Z 14289-C	Not replaced	1
75	C - - without A.T.C. Calif. and Canada	8	351M, 400			1
75	C - - A.T.C. exc. Calif. and Canada "Before 6/2/75"	8	351M, 400	★D50Z 14289-D	Not replaced	1
75	C - - A.T.C. Calif. and Canada	8	351M, 400			1
75	C - - without A.T.C. exc. Calif. and Canada- "From 6/2/75"	8	351M, 400	★D50Z 14289-M	Not replaced	1
75	C - - A.T.C. exc. Calif. and Canada "From 6/2/75"	8	351M, 400	★D50Z 14289-N	Not replaced	1
75	C	8	460	★D50Z 14289-F	Not replaced	1
76	C - - without A.T.C.- "Before 11/3/75"	8	351W	D60Z 14289-A		1
76	C - - without A.T.C.- "From 11/3/75"	8	351W	★D70Z 14289-J	Not replaced	1
76	C - - A.T.C.- "Before 11/3/75"	8	351W	D60Z 14289-B		1
76	C - - A.T.C.- "From 11/3/75"	8	351W	D60Z 14289-K		1
76	C - - without A.T.C. Canada - "Before 11/3/75"	8	351M, 400	D60Z 14289-C		1
76	C - - without A.T.C. Canada- "From 11/3/75"	8	351M, 400	D60Z 14289-L		1
76	C - - A.T.C. Canada- "Before 11/3/75"	8	351M, 400	D70Z 14289-K		1
76	C - - A.T.C. Canada- "From 11/3/75"	8	351M, 400	D60Z 14289-M		1
76	C - - without A.T.C. exc. Canada- "Before 5/3/76"	8	351M, 400	★D70Z 14289-L	Not replaced	1
76	C - - without A.T.P exc. Canada- "From 5/3/76"	8	351M, 400	★D60Z 14289-P	Not replaced	1
76	C - - A.T.C. exc. Canada- "Before 5/3/76"	8	351M, 400	D60Z 14289-G		1
76	C - - A.T.C. exc. Canada- "From 5/3/76"	8	351M, 400	★D60Z 14289-R	Not replaced	1
76	C(exc. P/C)- "Before 11/3/75"	8	460	D60Z 14289-E		1
76	C(exc. P/C)- "From 11/3/75"	8	460	D60Z 14289-N		1
76	C(P/C)-exc. Calif.- "Before 11/3/75"	8	460	D60Z 14289-H		1
76	C - - Canada	8	460	D60Z 14289-S		1
76	C(P/C) - - exc. Calif.- "From 11/3/75"	8	460			1

YEAR	MODEL/RESTRICTIONS	ENGINE CYL.	ENGINE C.I.D. (C.C.D.)	PART NUMBER	DESCRIPTION	QTY.
14289	WIRE ASSY. (DASH TO ENGINE GAUGE FEED) — Cont'd					

APPLICATION CHART

F (Cougar)

73	F - - M/T	8	351	★ D3ZZ 14289-D	Not replaced	1
73	F - - A/T	8	351	★ D3ZZ 14289-C	Not replaced	1
74	F - - without A.T.C. and/or breakerless ignition	8	351W	★ D40Z 14289-E	Not replaced	1
74	F - - A.T.C. without breakerless ignition	8	351W	★ D40Z 14289-J	Not replaced	1
74	F - - without A.T.C. and/or breakerless ignition	8	351C	★ D40Z 14289-D	Not replaced	1
74	F - - without A.T.C. with breakerless ignition	8	351C-400	★ D4GY 14289-A	Not replaced	1
74	F - - without A.T.C. with breakerless ignition	8	351W	★ D4GY 14289-F	Not replaced	1
74	F - - A.T.C. without breakerless ignition	8	351C	★ D40Z 14289-K	Not replaced	1
74	F - - A.T.C. and breakerless ignition	8	351C 400	★ D4GY 14289-B	Not replaced	1
74	F - - A.T.C.-w/breakerless ign.	8	351W	★ D4GY 14289-D	Not replaced	1
74	F	8	460	★ D4GY 14289-C	Not replaced	1
75	F - - without A.T.C.	8	351W	★ D50Z 14289-A	Not replaced	1
75	F - - with A.T.C.	8	351W	★ D50Z 14289-B	Not replaced	1
75	F - - without A.T.C. exc. Calif. and Canada "Before 6/2/75"	8	351M, 400	★ D50Z 14289-C	Not replaced	1
75	F - - without A.T.C. Calif. and Canada	8	351M, 400			1
75	F - - A.T.C. exc. Calif. and Canada "Before 6/2/75"	8	351M, 400	★ D50Z 14289-D	Not replaced	1
75	F - - A.T.C. Calif. and Canada	8	351M, 400			1
75	F - - without A.T.C. exc. Calif. and Canada- "From 6/2/75"	8	351M, 400	★ D50Z 14289-M	Not replaced	1
75	F - - A.T.C. exc. Calif. and Canada "From 6/2/75"	8	351M, 400	★ D50Z 14289-N	Not replaced	1
75	F	8	460	★ D50Z 14289-F	Not replaced	1
76	F - - without A.T.C.	8	351W	D60Z 14289-A		1
76	F - - A.T.C.	8	351W	D60Z 14289-B		1
76	F - - without A.T.C. Canada- "Before 11/3/75"	8	351M,400	D60Z 14289-C		1
76	F - - without A.T.C. Canada- "From 11/3/75"	8	351M, 400	D60Z 14289-L		1
76	F - - A.T.C. Canada- "Before 11/3/75"	8	351M,400	D60Z 14289-D		1
76	F - - A.T.C. Canada- "From 11/3/75"	8	351M, 400	D60Z 14289-M		1
76	F - - without A.T.C. exc. Canada- "Before 11/3/75"	8	351M, 400	★ D70Z 14289-L	Not replaced	1
76	F - - without A.T.C. exc. Canada- "From 11/3/75"	8	351M, 400	★ D60Z 14289-P	Not replaced	1
76	F - - A.T.C. exc. Canada- "Before 11/3/75"	8	351M,400	D60Z 14289-G		1
76	F - - A.T.C. exc. Canada- "From 11/3/75"	8	351M, 400	★ D60Z 14289-R	Not replaced	1
76	F "Before 11/3/75"	8	460	D60Z 14289-E		1

COPYRIGHT © 1986 — FORD MOTOR COMPANY — DEARBORN, MICHIGAN

1973/79 LINCOLN-MERCURY CARS

YEAR	MODEL/RESTRICTIONS	ENGINE CYL.	ENGINE C.I.D. (C.C.D.)	PART NUMBER	DESCRIPTION	QTY.
14289	WIRE ASSY. (DASH TO ENGINE GAUGE FEED) — Cont'd					

APPLICATION CHART

F (Cougar)

76	F - - Canada- "From 11/3/75"	8	460	D60Z 14289-S		1
76	F - - exc. Canada- "From 11/3/75"	8	460	D60Z 14289-N		1
76	F - - without A.T.C.	8	351W	★ D70Z 14289-J	Not replaced	1
76	F - - A.T.C.	8	351W	D60Z 14289-K		1
77	F - - w/o A.T.C. exc. Calif.	8	302, 351W	D70Z 14289-A		1
77	F - - A.T.C. exc. Calif.	8	302, 351W	★ D70Z 14289-H	Not replaced	1
77	F - - w/o A.T.C. exc. Calif.	8	351M, 400-2V	D70Z 14289-C		1
77	F - - A.T.C. exc. Calif.	8	351M, 400-2V	D70Z 14289-D		1
77	F - - w/o A.T.C. Calif.	8	351M, 400-2V	★ D70Z 14289-F	Not replaced	1
77	F - - A.T.C. Calif.	8	351M, 400-2V	★ D70Z 14289-G	Not replaced	1
77	F - - Canada	8	351M 400-2V	D7SZ 14289-A		1
78	F - - without A.T.C. exc. Calif.	8	302	D80Z 14289-A		1
78	F - - with A.T.C. exc. Calif.	8	302	★ D80Z 14289-B	Not replaced	1
78	F - - without A.T.C.	8	351M, 400-2V	D80Z 14289-C	With catalytic converter	1
79	F - - without A.T.C. or high altitude carb.	8	351M			1
78	F - - with A.T.C.	8	351M, 400-2V	D80Z 14289-D	With catalytic converter	1
79	F - - with A.T.C. without high altitude carb.	8	351M			1
79	F - - with high altitude carb.	8	351M	★ D90Z 14289-D	Not replaced	1
78	F - - without A.T.C. exc. Calif.	8	351W	D80Z 14289-G		1
78	F - - with A.T.C. exc. Calif.	8	351W	★ D80Z 14289-H	Not replaced	1
78	F - - without A.T.C. Canada	8	351M	D80Z 14289-J	Without catalytic converter	1
78	F - - with A.T.C. Canada	8	351M	★ D80Z 14289-K	Without catalytic converter-not replaced	1
79	F - - without A.T.C. exc. Calif.	8	302	D90Z 14289-A		1
79	F - - with A.T.C. exc. Calif.	8	302	★ D90Z 14289-B	Not replaced	1
79	F - - without A.T.C. exc. Calif.	8	351W	D9SZ 14289-A		1
79	F - - with A.T.C. exc. Calif.	8	351W	★ D9SZ 14289-B	Not replaced	1

G (Monarch)

75	G "Before 11/1/74"	6	200	D5DZ 14289-F	With floor heat sensor	1
75	G(exc. 66)- "Before 11/1/74"	6	250		With floor heat sensor	1
75	G "From 11/1/74"	6	200	★ D5DZ 14289-G	With floor heat sensor-not replaced	1
75	G - - exc. Calif. and Canada M/T- "From 11/1/74 to 5/5/75"	6	250			1
75	G - - exc. Calif. and Canada A/T					1
75	G - - exc. Calif. and Canada A/T "From 5/5/75"	6	250	★ D5DZ 14289-A	Without floor heat sensor-not replaced	1
75	G(66H) - - Calif.	6	250			1
75	G	6	200		Without floor heat sensor	1

YEAR	MODEL/RESTRICTIONS	ENGINE CYL.	ENGINE C.I.D. (C.C.D.)	PART NUMBER	DESCRIPTION	QTY.
14289	WIRE ASSY. (DASH TO ENGINE GAUGE FEED) — Cont'd					

APPLICATION CHART

G (Monarch)

75	G	8	302	★ D5ZZ 14289-D	With floor heat sensor–not replaced	1
75	G - - Calif. and Canada	8	351W		With floor heat sensor	1
75	G - - A/T Calif.– "Before 6/2/75"	8	302			1
75	G - - Canada	6	250	★ D5DZ 14289-C	Without floor heat sensor–not replaced	1
75	G(66H) - - exc. Calif.	6	250			1
75	G	8	302	★ D5DZ 14289-B	Without floor heat sensor–not replaced	1
75	G - - Calif.	8	351W		Without floor heat sensor	1
75	G - - exc. Calif., Canada	8	351W	D5ZZ 14289-B	Without floor heat sensor	1
75	G - - A/T Calif.– "From 6/2/75"	8	302			1
76	G - - Calif.	6	250	★ D6DZ 14289-H	Not replaced	1
76	G - - exc. Calif.	6	200	★ D6DZ 14289-L	Not replaced	1
76	G - - Canada w/ catalic cov.	6	200			1
76	G - - exc. Calif. and Canada	6	250			1
76	G - - Canada	6	250	★ D6DZ 14289-J	Not replaced	1
76	G - - exc. Calif.– "Before 11/15/75"	8	302	★ D6DZ 14289-G	Not replaced	1
76	G - - A/T Calif.	8	302			1
76	G - - A/T Calif.– "Before 11/15/75"	8	351			1
76	G - - exc. Calif.– "From 11/15/75"	8	302	★ D6DZ 14289-M	Not replaced	1
76	G - - A/T– "From 11/15/75"	8	351			1
77/	G - - w/o A.T.C.	6	200	★ D7DZ 14289-A	Not replaced	1
77/	G - - exc Jatco A/T without A.T.C.	6	250			1
77/	G - - Jatco A/T without A.T.C.	6	250	★ D7DZ 14289-M	Not replaced	1
77/	G - - A.T.C.	6	200	★ D7DZ 14289-C	Not replaced	1
77/	G - - exc Jatco A/T with A.T.C.	6	250			1
77/	G - - Jatco A/T with A.T.C.	6	250	★ D7DZ 14289-L	Not replaced	1
77	G - - w/o A.T.C. exc. Calif.	8	302, 351	D7DZ 14289-D		1
77	G - - Calif.	8	302	D7DZ 14289-E		1
77	G - - A.T.C. exc. Calif. w/o high alt. Carb.	8	302, 351	★ D7DZ 14289-F	Not replaced	1
77	G - - A/T exc. Calif. w/high alt. Carb.	8	302	D7DZ 14289-J		1
78/	G - - A.T.C. exc. Calif.	8	302	★ D8DZ 14289-A	Not replaced	1
78/	G - - with heater and manual A/C	8	302	D8ZZ 14289-B		1
78/	G - - Calif.	8	302	D8DZ 14289-H		1

COPYRIGHT © 1986— FORD MOTOR COMPANY —DEARBORN, MICHIGAN

1973/79 LINCOLN-MERCURY CARS

YEAR	MODEL/RESTRICTIONS	ENGINE CYL.	ENGINE C.I.D. (C.C.D.)	PART NUMBER	DESCRIPTION	QTY.
14289	WIRE ASSY. (DASH TO ENGINE GAUGE FEED) — Cont'd					

APPLICATION CHART

J (Capri)

79	J – – M/T exc. Calif. or TC	4	140 (2300)	D9ZZ 14289-C		1
79 79	J – – M/T Calif. J – – A/T Calif.	4	140 (2300)	D9ZZ 14289-D		1 1
79	J – – exc. Calif.	8	302	D9ZZ 14289-E		1
79	J – – Calif.	8	302	★ D9ZZ 14289-G	Not replaced	1
79	J – – with T/C	4	140 (2300)	D9ZZ 14289-H		1
79	J – – Calif.	6	171 (2800)	D9CY 14289-B		1
79	J – – exc. Calif.	6	171 (2800)	★ D9CY 14289-C	Not replaced	1
79	J – – A/T exc. Calif. or T/C	4	140 (2300)	D9FZ 14289-B		1
79	J	6	200	★ D9BZ 14289-A	Not replaced	1

L (Bobcat)

75	L	6	171 (2800)	★ D5FZ 14289-A	Not replaced	1
76	L – – exc. Calif. and Canada	6	171 (2800)	D6FZ 14289-A		1
76	L – – Calif. and Canada	6	171 (2800)	★ D6FZ 14289-C	Not replaced	1
77/78	L – – exc. Calif.	6	171 (2800)	★ D7FZ 14289-A	Not replaced	1
77/78	L – – Calif.	6	171 (2800)	★ D7FZ 14289-B	Not replaced	1
79	L – – Calif.	6	171 (2800)	D9CY 14289-B		1
79	L – – exc. Calif.	6	171 (2800)	★ D9CY 14289-C	Not replaced	1
79	L – – A/T exc. Calif.	4	140 (2300)	D9FZ 14289-B		1
79	L – – M/T exc. Calif.	4	140 (2300)	★ D9ZZ 14289-C	Repl. by D9ZZ 14289-D (8/79)	1
79 79	L – – M/T w/w/o high alt. carb. L – – A/T Calif.	4	140 (2300)	D9ZZ 14289-D		1 1

P (Comet)

73	P – – A/T "Before 3/12/73"	6	250	★ D3DZ 14289-C	Not replaced	1
73	P – – A/T "From 3/12/73"	6	250	★ D3DZ 14289-E	Not replaced	1
73	P – – without passenger restraint system	8	302	★ D3DZ 14289-B	Not replaced	1
73	P – – with passenger restraint system	8	302	★ D3DZ 14289-G	Not replaced	1
73/74 73/74 74 74	P – – w/o breakerless ignition P – – M/T-w/o breakerless ign. P – – A/T-w/o breakerless ign.-w/3.00 axle ratio P – – A/T-w/o breakerless ign.-w/2.79 axle ratio "From 5/13/74"	6 6 6 6	200 250 250 250	D4AZ 14289-R		1 1 1 1
74	P – – w/breakerless ignition	6	200	★ D4DZ 14289-A	Not replaced	1

YEAR	MODEL/RESTRICTIONS	ENGINE CYL.	ENGINE C.I.D. (C.C.D.)	PART NUMBER	DESCRIPTION	QTY.
14289	WIRE ASSY. (DASH TO ENGINE GAUGE FEED) — Cont'd					

APPLICATION CHART

P (Comet)

74	P - - A/T-w/o breakerless ign.- w/2.79 axle ratio- "Before 5/13/74"	6	250	★D4DZ 14289-E	Not replaced	1
74	P - - w/breakerless ignition- "Before 12/15/73"	6	250	D4DZ 14289-B		1
74	P - - w/breakerless ignition- "From 12/15/73"	6	250	★D4DZ 14289-H	Not replaced	1
74	P - - w/o breakerless ignition	8	302	D4DZ 14289-F		1
74	P - - M/T-w/o breakerless ign.	6	250			1
74	P - - w/breakerless ignition	8	302	★D4DZ 14289-C	Not replaced	1
75	P - - exc. Calif.- "Before 12/2/74"	6	250	★D5BZ 14289-A	Not replaced	1
75	P - - exc. Calif. A/T- "From 12/2/74 to 5/5/75"	6	250			1
75	P - - Canada	6	250			1
75	P	6	200	★D5DZ 14289-D	Not replaced	1
75	P - - Calif.	6	250			1
75	P - - exc. Calif.- "From 5/5/75"	6	250			1
75	P - - exc. Calif. M/T- "From 12/2/74"	6	250	★D5DZ 14289-H	Not replaced	1
75	P - - A/T exc. Calif. and Canada	8	302	★D5BZ 14289-B	Not replaced	1
75	P - - A/T Calif.- "Before 6/2/75"	8	302			1
75	P - - M/T	8	302	★D5DZ 14289-E	Not replaced	1
75	P - - A/T Canada	8	302			1
75	P - - A/T Calif.- "From 6/2/75"	8	302			1
76	P - - Calif.	6	250	★D6DZ 14289-H	Not replaced	1
76	P - - exc. Calif.	6	200	★D6DZ 14289-L	Not replaced	1
76	P - - Canada w/ catalic conv.	6	200			1
76	P - - exc. Calif. and Canada	6	250			1
76	P - - Canada	6	250	★D6DZ 14289-J	Not replaced	1
76	P - - M/T- "Before 11/15/75"	8	302	★D6DZ 14289-G	Not replaced	1
76	P - - A/T Calif.	8	302			1
76	P - - A/T exc. Calif.- "Before 11/15/75"	8	302			1
76	P - - exc. Calif.- "From 11/15/75"	8	302	★D6DZ 14289-M	Not replaced	1
77	P - - A/T w/o A.T.C. exc. Canada	6	200, 250	★D7DZ 14289-A	Not replaced	1
77	P - - A/T w/o A.T.C. Canada	6	250	★D7DZ 14289-K	Not replaced	1
77	P - - A.T.C.	6	200, 250	★D7DZ 14289-C	Not replaced	1
77	P - - w/o A.T.C. exc. Calif. w/o high alt. Carb.	8	302	D7DZ 14289-D		1
77	P - - w/o A.T.C. exc. Calif. w/high alt. Carb.	8	302	D7DZ 14289-H		1
77	P - - Calif.	8	302	D7DZ 14289-E		1

COPYRIGHT © 1986— FORD MOTOR COMPANY —DEARBORN, MICHIGAN

1973/79 LINCOLN-MERCURY CARS

YEAR	MODEL/RESTRICTIONS	ENGINE CYL.	ENGINE C.I.D. (C.C.D.)	PART NUMBER	DESCRIPTION	QTY.
14289	WIRE ASSY. (DASH TO ENGINE GAUGE FEED) — Cont'd					

APPLICATION CHART

P (Zephyr)

78	P – – A/T	6	200	★ D8BZ 14289-A	with catalytic converter–not replaced	1
78	P – – exc. Calif.	8	302	D8BZ 14289-B		1
78	P	4	140 (2300)	★ D8BZ 14289-C	Not replaced	1
78	P – – Canada	6	200	★ D8BZ 14289-D	Without catalytic converter–not replaced	1
78	P – – Calif.	8	302	★ D8BZ 14289-E	Not replaced	1
78	P – – M/T exc. Calif.	6	200	★ D8BZ 14289-K	Not replaced	1
79	P	6	200	★ D9BZ 14289-A	Not replaced	1
79	P – – A/T exc. Calif.	4	140 (2300)	D9FZ 14289-B		1
79	P – – Calif. with gauges	8	302	★ D9ZZ 14289-A	Not replaced	1
79	P – – Calif. without gauges– "Before 12/15/78"	8	302	D9ZZ 14289-B		1
79	P – – Calif. without gauges "From 12/15/78"	8	302	★ D9BZ 14289-B	Not replaced	1
79	P – – M/T exc. Calif.	4	140 (2300)	D9ZZ 14289-C		1
79	P – – M/T Calif.	4	140 (2300)	D9ZZ 14289-D		1
79	P – – A/T Calif.					1
79	P – – exc. Calif.	8	302	★ D9ZZ 14289-F	Not replaced	1

V (Versailles)

77	V – – exc Calif. without A/C	8	302, 351W	D7DZ 14289-D		1
77	V – – exc Calif. A/C	8	302, 351W	★ D7DZ 14289-F	Not replaced	1
77	V – – Calif A/C	8	302	D7DZ 14289-E		1
78/	V – – w/electronic engine control	8	302	D84Y 14289-A	Used with 12060 wiring (coil jumper)	1
79	V – – Calif. w/o electronic engine control	8	302	D8DZ 14289-H		1

Y (Meteor)

73	Y – – without A.T.C. "Before 5/1/73"	8	351,400	★ D3AZ 14289-B	Not replaced	1
73	Y – – without A.T.C. "From 5/1/73"	8	351,400	★ D3AZ 14289-AA	Not replaced	1
73	Y – – A.T.C. "Before 10/16/72"	8	351,400	★ D3AZ 14289-E	Not replaced	1
73	Y – – A.T.C. "From 10/16/72 to 12/16/72"	8	351,400	★ D3AZ 14289-N	Not replaced	1
73	Y – – A.T.C. "From 12/16/72 to 5/3/73"	8	351,400	★ D3AZ 14289-V	Not replaced	1
73	Y – – A.T.C.– "From 5/3/73"	8	351,400	★ D3AZ 14289-AB	Not replaced	1
73	Y – – without A.T.C. "Before 10/16/72"	8	429,460	★ D3AZ 14289-C	Not replaced	1
73	Y – – without A.T.C. "From 10/16/72 to 5/1/73"	8	429,460	★ D3AZ 14289-L	Not replaced	1
73	Y – – without A.T.C. "From 5/1/73"	8	429,460	★ D3AZ 14289-AC	Not replaced	1
73	Y – – A.T.C. "Before 10/16/72"	8	429,460	★ D3AZ 14289-F	Not replaced	1
73	Y – – A.T.C. "From 10/16/72 to 5/3/73"	8	429,460	★ D3AZ 14289-P	Not replaced	1
73	Y – – A.T.C. "From 5/3/73"	8	429,460	★ D3AZ 14289-AD	Not replaced	1

YEAR	MODEL/RESTRICTIONS	ENGINE CYL.	ENGINE C.I.D. (C.C.D.)	PART NUMBER	DESCRIPTION	QTY.
14289	WIRE ASSY. (DASH TO ENGINE GAUGE FEED) — Cont'd					

APPLICATION CHART

Y (Meteor)

74	Y – – without A.T.C. and/or breakerless ignition	8	351	★D4AZ 14289-L	Not replaced	1
74	Y – – without A.T.C. w/breakerless ignition	8	351	★D4AZ 14289-M	Not replaced	1
74	Y – – without A.T.C.	8	400			1
74	Y – – A.T.C. w/o breakerless ignition	8	351	★D4AZ 14289-E	Not replaced	1
74	Y – – A.T.C. and breakerless ignition	8	351	★D4AZ 14289-H	Not replaced	1
74	Y – – A.T.C.	8	400			1
74	Y(exc. P/C)	8	460	★D4AZ 14289-J	Not replaced	1
74	Y(P/C)	8	460	★D4AZ 14289-K	Not replaced	1
75	Y – – without A.T.C.– "Before 6/2/75"	8	351M	★D5AZ 14289-A	Not replaced	1
75	Y – – A.T.C.– "Before 6/2/75"	8	351M	★D5AZ 14289-B	Not replaced	1
75	Y – – without A.T.C.–	8 8	400 351M	D5AZ 14289-G		1 1
75	Y – – A.T.C.– "Before 6/2/75"	8	400 351M	★D5AZ 14289-H	Not replaced	1
75	Y – – without A.T.C.	8	460	★D5AZ 14289-D	Not replaced	1
75	Y – – A.T.C.	8	460	D5AZ 14289-J		1
76	Y – – without A.T.C.– "Before 9/2/75"	8	351M	D6AZ 14289-A		1
76	Y – – A.T.C.– "Before 9/2/75"	8	351M	D6AZ 14289-B		1
76	Y – – without A.T.C.– "Before 9/2/75"	8	400	D6AZ 14289-E		1
76	Y – – without A.T.C.– "From 9/2/75"	8	351M, 400	D6AZ 14289-G		1
76	Y – – A.T.C.– "Before 9/2/75"	8	400	D6AZ 14289-F		1
76	Y – – A.T.C.– "From 9/2/75"	8	351M, 400	★D6AZ 14289-H	Not replaced	1
76	Y(exc. P/C)	8	460	D6AZ 14289-C		1
76	Y(P/C)	8	460	★D6AZ 14289-J	Not replaced	1
73/	A,C,F,Y	6&8	All	★353547-S	(GG-173)-clip(attach. wiring to engine assy.)	AR
73/	A,C,P,Y			20314-S8	(B-98)-bolt(attach ground wire of 14289 to engine block)-7/16"-14 x 1/2"	AR

COPYRIGHT © 1986 — FORD MOTOR COMPANY — DEARBORN, MICHIGAN

14290 WIRE ASSY. (DASH PANEL TO HEADLAMP JUNCTION)

WIRING LOOM MARKING or TAG NUMBER TO SERVICE WIRING PART NUMBER GUIDE

The purpose of this guide is to facilitate the identification of the Service Wiring Part Number. The chart that follows lists in numerical sequence the Wiring Loom Markings or Tag Numbers. For many vehicles the Service Wiring Part Number will be the same as the Loom Marking or Tag Part Number. This type of replacement will cause little or no installation problems. However, when the Service Wiring differs from the Loom Marking or Tag Number it will be necessary to match lead wires and to tape up those lead wires which are not required. This is necessary when the Service Wiring has a more general application than the original wiring installed by the factory. Following this guide chart, Service Wiring Part Numbers are listed by model year and vehicle usage which will permit the identification of replacement wiring when the loom identification or tag number is not known.

IDENTIFICATION CHART

IDENTIFICATION	PART NUMBER	IDENTIFICATION	PART NUMBER
14290 WIRE ASSY. (DASH PANEL TO HEADLAMP JUNCTION) — Cont'd			
D3DB 14290-AG	D3DZ 14290-E	D4MB 14290-AD	D4MY 14290-A
D3DB 14290-BD	★ D3DZ 14290-B	D4MB 14290-BC	D4MY 14290-B
D3DB 14290-BE	★ D3DZ 14290-B	D4MB 14290-BE	D4MY 14290-B
★ D3DB 14290-BF	★ D3DZ 14290-B	D4MB 14290-DC	★ D4MY 14290-D
D3GB 14290-AB	★ D3GY 14290-A	D4MB 14290-DE	★ D4MY 14290-D
ED-D3GB 14290-BB	★ D3GY 14290-B	D40B 14290-BB	★ D40Z 14290-B
D3LB 14290-AB	★ D3LY 14290-B	D40B 14290-BC	★ D40Z 14290-B
D3LB 14290-AC	★ D3LY 14290-A	D40B 14290-DB	D40Z 14290-D
D3LB 14290-AD	★ D3LY 14290-B	D40B 14290-DC	D40Z 14290-D
ED-D3LB 14290-AD	★ D3LY 14290-B	D4VB 14290-AC	D4VY 14290-A
D3LB 14290-BA	★ D3LY 14290-D	D4VB 14290-AE	D4VY 14290-A
D3LB 14290-BB	★ D3LY 14290-D	D4VB 14290-AF	D4VY 14290-A
D3MB 14290-AE	★ D3MY 14290-A	D4VB 14290-AG	D4VY 14290-A
D3MB 14290-AF	D3MY 14290-E	D42B 14290-AH	★ D4FZ 14290-E
D3MB 14290-AG	D3MY 14290-E	D42B 14290-AJ	★ D4FZ 14290-E
ED-D3MB 14290-AG	D3MY 14290-E	D42B 14290-CL	★ D4FZ 14290-F
D3MB 14290-BE	★ D3MY 14290-B	ED-D42B 14290-CM	★ D4FZ 14290-F
ED-D3MB 14290-BE	★ D3MY 14290-F	D42B 14290-DL	D4FZ 14290-G
D3MB 14290-BF	★ D3MY 14290-F	ED-D42B 14290-DM	D4FZ 14290-G
D3MB 14290-CF	★ D3MY 14290-C	D5BB 14290-AE	★ D5BZ 14290-A
D3MB 14290-CG	★ D3MY 14290-G	ED-D5BB 14290-AE	★ D5BZ 14290-A
D3MB 14290-CH	★ D3MY 14290-G	D5BB 14290-AF	★ D5BZ 14290-A
D3MB 14290-DF	★ D3MY 14290-D	D5BB 14290-AG	★ D5DZ 14290-E
D3MB 14290-DG	★ D3MY 14290-H	D5BB 14290-AL	★ D5DZ 14290-E
D3MB 14290-DH	★ D3MY 14290-H	ED-D5BB 14290-AL	★ D5BZ 14290-A
D3VB 14290-AE	D3VY 14290-A	D5DB 14290-EB	★ D5DZ 14290-F
D3VB 14290-AF	D3VY 14290-B	D5DB 14290-EG	★ D5DZ 14290-F
D3WB 14290-AC	D3WY 14290-A	ED-D5DB 14290-EH	★ D5DZ 14290-F
D3WB 14290-AD	D3WY 14290-A	D5GB 14290-AA	★ D5GY 14290-A
D3WB 14290-AE	D3WY 14290-A	D5GB 14290-AB	★ D5GY 14290-A
D3WB 14290-BC	D3WY 14290-B	D5GB 14290-AC	★ D5GY 14290-A
D3WB 14290-BD	D3WY 14290-B	D5LB 14290-AC	★ D5LY 14290-A
D3WB 14290-BE	D3WY 14290-B	D5MB 14290-AB	★ D5MY 14290-E
D4DB 14290-AD	★ D4DZ 14290-A	D5MB 14290-AC	★ D5MY 14290-E
D4DB 14290-BF	D4DZ 14290-C	D5MB 14290-AD	★ D5MY 14290-E
D4GB 14290-AB	★ D4GY 14290-A	D5MB 14290-BB	★ D5MY 14290-E
D4GB 14290-AC	★ D4GY 14290-A	D5MB 14290-BC	★ D5MY 14290-E
D4GB 14290-BA	★ D4GY 14290-B	D5MB 14290-BD	★ D5MY 14290-E
ED-D4LB 14290-AB	★ D4LY 14290-A	D5MB 14290-CD	★ D5MY 14290-F
ED-D4LB 14290-AD	★ D4LY 14290-A	D5MB 14290-CE	★ D5MY 14290-F
D4MB 14290-AC	D4MY 14290-A	D50B 14290-BA	★ D50Z 14290-B

IDENTIFICATION CHART

IDENTIFICATION	PART NUMBER	IDENTIFICATION	PART NUMBER
14290 WIRE ASSY. (DASH PANEL TO HEADLAMP JUNCTION) — Cont'd			
D50B 14290-BB	★D50Z 14290-B	D64B 14290-BG	★D64Y 14290-B
D50B 14290-BC	★D50Z 14290-B	ED-D64B 14290-BG	★D64Y 14290-B
D50B 14290-DA	★D50Z 14290-B	D64B 14290-CG	★D64Y 14290-C
D5VB 14290-AB	★D5VY 14290-A	ED-D64B 14290-CG	★D64Y 14290-C
D52B 14290-AF	D5FZ 14290-B	D7BB 14290-AC	★D7DZ 14290-E
D52B 14290-AM	D5FZ 14290-D	D7BB 14290-AD	★D7DZ 14290-E
D52B 14290-BF	★D5FZ 14290-B	D7BB 14290-BC	★D7DZ 14290-F
D52B 14290-BG	★D5FZ 14290-B	D7BB 14290-BD	★D7DZ 14290-F
D52B 14290-BH	★D5FZ 14290-B	D7DB 14290-AF	★D7DZ 14290-H
D52B 14290-BM	★D5FZ 14290-D	ED-D7DB 14290-AF	★D7DZ 14290-H
ED-D52B 14290-BM	★D5FZ 14290-D	D7DB 14290-BH	★D7DZ 14290-J
D52B 14290-CF	D5FZ 14290-C	ED-D7DB 14290-BH	★D7DZ 14290-J
ED-D52B 14290-CF	D5FZ 14290-C	D7DB 14290-CF	★D7DZ 14290-K
D52B 14290-CK	D5FZ 14290-C	ED-D7DB 14290-CF	★D7DZ 14290-K
D52B 14290-CP	D5FZ 14290-E	D7DB 14290-DB	D7DZ 14290-D
D54B 14290-AE	D54Y 14290-A	D7DB 14290-DG	D7DZ 14290-L
ED-D54B 14290-AE	D54Y 14290-A	ED-D7DB 14290-DG	D7DZ 14290-L
D54B 14290-AF	D54Y 14290-A	D7DB 14290-ED	D7DZ 14290-G
D54B 14290-AL	D54Y 14290-C	D7DB 14290-EH	★D7DZ 14290-M
ED-D54B 14290-AL	D54Y 14290-C	ED-D7DB 14290-EH	★D7DZ 14290-M
D54B 14290-BE	★D45Y 14290-B	D7EB 14290-AE	D7FZ 14290-A
ED-D54B 14290-BE	★D45Y 14290-B	D7EB 14290-AF	★D7FZ 14290-K
D54B 14290-BF	★D45Y 14290-B	D7EB 14290-AG	★D7FZ 14290-K
D54B 14290-BG	★D45Y 14290-B	D7EB 14290-BD	D7FZ 14290-B
D54B 14290-BH	★D45Y 14290-B	D7EB 14290-BE	★D7FZ 14290-L
ED-D54B 14290-BL	★D45Y 14290-C	D7EB 14290-BF	★D7FZ 14290-L
D54B 14290-BL	★D45Y 14290-C	D7EB 14290-CD	D7FZ 14290-C
D6BB 14290-AE	★D6DZ 14290-F	D7EB 14290-CF	★D7FZ 14290-M
ED-D6BB 14290-AJ	★D6DZ 14290-F	D7EB 14290-GB	D7FZ 14290-G
ED-D6DB 14290-AK	D6DZ 14290-G	D7LB 14290-AC	★D7LY 14290-A
D6DB 14290-DH	★D6DZ 14290-D	D7LB 14290-AD	★D7LY 14290-A
ED-D6DB 14290-DH	★D6DZ 14290-D	D7LB 14290-BC	D7LY 14290-B
ED-D6DB 14290-DJ	★D6DZ 14290-D	D7LB 14290-BD	D7LY 14290-B
D6DB 14290-EH	★D6DZ 14290-E	D7MB 14290-AA	D7MY 14290-B
ED-D6DB 14290-EH	★D6DZ 14290-E	D7MB 14290-AB	D7MY 14290-B
ED-D6DB 14290-EJ	★D6DZ 14290-E	D7MB 14290-BC	D7MY 14290-B
D6EB 14290-AE	★D6FZ 14290-A	ED-D7MB 14290-BC	D7MY 14290-B
ED-D6EB 14290-AH	★D6FZ 14290-A	D7VB 14290-AB	D7VY 14290-A
ED1-D6EB 14290-AJ	★D6FZ 14290-D	D7WB 14290-AB	D7WY 14290-A
D6EB 14290-BE	★D6FZ 14290-B	D7WB 14290-AC	D7WY 14290-A
ED-D6EB 14290-BH	★D6FZ 14290-B	D7WB 14290-AD	D7WY 14290-A
ED1-D6EB 14290-BJ	D6FZ 14290-E	D7WB 14290-BB	D7WY 14290-A
ED-D6EB 14290-CA	★D6FZ 14290-C	D7WB 14290-BC	D7WY 14290-A
D6EB 14290-CF	★D6FZ 14290-C	D7WB 14290-BD	D7WY 14290-B
ED-D6EB 14290-CH	★D6FZ 14290-C	D74B 14290-AB	★D74Y 14290-A
D6EB 14290-CJ	D6FZ 14290-F	D74B 14290-AF	★D74Y 14290-E
D6GB 14290-AB	★D6GY 14290-A	ED-D74B 14290-AF	★D74Y 14290-E
D6GB 14290-AD	★D6GY 14290-B	D74B 14290-BA	★D74Y 14290-B
D6LB 14290-BB	★D6LY 14290-B	ED-D74B 14290-BE	★D74Y 14290-B
D6SB 14290-BB	★D6SZ 14290-B	D74B 14290-BF	★D74Y 14290-B
D6SB 14290-BC	★D6SZ 14290-B	D74B 14290-BH	★D74Y 14290-B
D6WB 14290-BB	★D6WY 14290-B	D74B 14290-CF	★D74Y 14290-F
D64B 14290-AG	D64Y 14290-A	D74B 14290-CB	★D74Y 14290-C
ED-D64B 14290-AG	D64Y 14290-A	ED-D74B 14290-CF	★D74Y 14290-F
ED-D64B 14290-AK	D64Y 14290-D	D74B 14290-DH	★D74Y 14290-G
ED-D64B 14290-AL	D64Y 14290-G	ED-D74B 14290-DH	★D74Y 14290-G

COPYRIGHT © 1986 — FORD MOTOR COMPANY — DEARBORN, MICHIGAN

IDENTIFICATION CHART

IDENTIFICATION	PART NUMBER	IDENTIFICATION	PART NUMBER
14290 WIRE ASSY. (DASH PANEL TO HEADLAMP JUNCTION) — Cont'd			
D8DB 14290-AC	★D8DZ 14290-A	D9DB 14290-BE	★D9DZ 14290-B
D8DB 14290-AF	★D8DZ 14290-F	D9DB 14290-BF	★D9DZ 14290-B
D8DB 14290-BD	★D8DZ 14290-B	D9DB 14290-CD	★D9DZ 14290-C
D8DB 14290-BF	★D8DZ 14290-B	D9DB 14290-DD	D9DZ 14290-D
D8DB 14290-BG	★D8DZ 14290-G	D9DB 14290-ED	D9DZ 14290-E
ED-D8DB 14290-CG	★D8DZ 14290-C	D9DB 14290-EE	D9DZ 14290-E
D8DB 14290-CH	★D8DZ 14290-C	D9DB 14290-EF	D9DZ 14290-E
ED-D8DB 14290-CH	★D8DZ 14290-C	D9EB 14290-AD	D9FZ 14290-A
D8DB 14290-CJ	★D8DZ 14290-H	D9EB 14290-BJ	★D9FZ 14290-B
ED-D8DB 14290-DG	★D8DZ 14290-D	D9EB 14290-CK	D9FZ 14290-C
D8DB 14290-DH	★D8DZ 14290-D	D9EB 14290-CL	★D9FZ 14290-H
ED-D8DB 14290-DH	★D8DZ 14290-D	D9EB 14290-DE	D9FZ 14290-D
D8DB 14290-DJ	★D8DZ 14290-J	D9EB 14290-DF	D9FZ 14290-J
D8DB 14290-ED	★D8DZ 14290-E	D9EB 14290-ED	D9FZ 14290-E
D8DB 14290-EF	★D8DZ 14290-E	D9EB 14290-FD	★D9FZ 14290-F
D8DB 14290-EG	★D8DZ 14290-K	D9EB 14290-GE	★D9FZ 14290-G
D8EB 14290-AE	D8FZ 14290-A	D9EB 14290-GF	★D9FZ 14290-K
D8EB 14290-AF	★D8FZ 14290-F	D9KB 14290-AE	D9KY 14290-A
D8EB 14290-BF	★D8FZ 14290-G	D9KB 14290-BC	★D9KY 14290-B
D8EB 14290-BE	D8FZ 14290-B	D9KB 14290-CA	D9KY 14290-C
D8EB 14290-CA	★D8FZ 14290-C	D9KB 14290-CB	D9KY 14290-C
D8EB 14290-DA	★D8FZ 14290-D	D9KB 14290-DB	★D9KY 14290-F
D8EB 14290-EA	★D8FZ 14290-E	D9KB 14B90-EB	★D9KY 14290-F
D8KB 14290-AD	★D8KZ 14290-A	D9KB 14290-FA	★D9KY 14290-F
D8KB 14290-AE	★D8KZ 14290-A	D9KB 14290-FB	★D9KY 14290-F
D8KB 14290-BC	★D8KZ 14290-B	D9LB 14290-AB	★D9LY 14290-A
D8KB 14290-BD	★D8KZ 14290-B	D9LB 14290-BC	★D9LY 14290-B
D8LB 14290-AB	★D8LY 14290-A	D9MB 14290-AD	★D9MY 14290-B
D8LB 14290-AC	★D8LY 14290-A	D9MB 14290-AE	★D9MY 14290-B
D8LB 14290-AD	★D8LY 14290-A	D9MB 14290-BD	★D9MY 14290-B
D8LB 14290-BB	★D8LY 14290-B	D9MB 14290-BE	★D9MY 14290-B
D8LB 14290-BC	★D8LY 14290-B	D9VB 14290-AA	D9VY 14290-A
D8LB 14290-BD	★D8LY 14290-B	D9ZB 14290-BH	D9ZZ 14290-B
D8MB 14290-CB	★D8MY 14290-C	D9ZB 14290-BJ	D9ZZ 14290-B
D8MB 14290-DB	★D8MY 14290-D	D9ZB 14290-BK	D9ZZ 14290-B
D8VB 14290-AB	★D8VY 14290-A	D9ZB 14290-CH	★D9ZZ 14290-C
D8VB 14290-AC	★D8VY 14290-B	D9ZB 14290-CJ	★D9ZZ 14290-C
D84B 14290-AG	★D84Y 14290-A	D9ZB 14290-CK	★D9ZZ 14290-C
ED-D84B 14290-AL	★D84Y 14290-C	D9ZB 14290-DA	D9ZZ 14290-D
D84B 14290-AM	★D84Y 14290-F	D9ZB 14290-EB	D9ZZ 14290-G
D84B 14290-AN	★D84Y 14290-F	D9ZB 14290-FB	★D9ZZ 14290-F
ED-D84B 14290-BD	★D84Y 14290-B	D9ZB 14290-GB	D9ZZ 14290-G
D84B 14290-BE	★D84Y 14290-B	D9ZB 14290-HB	★D9ZZ 14290-F
D84B 14290-BF	★D84Y 14290-E	D94B 14290-AF	D94Y 14290-A
D9DB 14290-AD	★D9DZ 14290-A	D94B 14290-AG	★D94Y 14290-C
		D94B 14290-BA	★D94Y 14290-B

YEAR	MODEL/RESTRICTIONS	ENGINE CYL.	ENGINE C.I.D. (C.C.D.)	PART NUMBER	DESCRIPTION	QTY.
14290 WIRE ASSY. (DASH PANEL TO HEADLAMP JUNCTION) — Cont'd						

APPLICATION CHART

A (Mercury)

73	A(53B,F,57B,F,65B,F,71B) - - without A/C and/or anti-theft alarm system "Before 12/16/72"	8	All	★D3MY 14290-A	Not replaced	1
73	A(53B,F,57B,F,65B,F,71B) - - without A/C and/or anti-theft alarm system- "From 12/16/72"	8	All	D3MY 14290-E		1

YEAR	MODEL/RESTRICTIONS	ENGINE CYL.	ENGINE C.I.D. (C.C.D.)	PART NUMBER	DESCRIPTION	QTY.
14290	WIRE ASSY. (DASH PANEL TO HEADLAMP JUNCTION) — Cont'd					

APPLICATION CHART

A (Mercury)

73	A(53B,F,57B,F,65B,F,71B) - - A/C and/or anti-theft alarm system "Before 10/16/72"	8	All	★ D3MY 14290-C	Not replaced	1
73	A(53B,F,57B,F,65B,F,71B) - - A/C and/or anti-theft alarm system "From 10/16/72"	8	All	★ D3MY 14290-G	Not replaced	1
73	A(53H,K,X,57H,K,X,65H,K, X,71H,K) - - w/o cornering lamps or anti-theft alarm system "Before 10/16/72"	8	All	★ D3MY 14290-B	Not replaced	1
73	A(53H,K,X,57H,K,X,65H,K, X,71H,K) - - w/cornering lamps and/or anti-theft alarm system "Before 10/16/72"	8	All	★ D3MY 14290-D	Not replaced	1
73	A(53H,K,X,57H,K,X,65H,K, and/or anti-theft alarm system "From 10/16/72"	8	All	★ D3MY 14290-H	Not replaced	1
74	A(53B,F,65B,F,71B)	8	All	D4MY 14290-A		1
74	A(53H,K,X,57H,K,X,65H, K,X,71H,K) - - w/o cornering lamps	8	All	D4MY 14290-B		1
74	A(53H,K,X,57H,K,X,65H, K,X,71H,K) - - w/cornering lamps	8	All	★ D4MY 14290-D	Not replaced	1
75/76	A	8	All	★ D5MY 14290-E	Not replaced	1
77	A - - with or without cornering lamps	8	All	D7MY 14290-B		1
78	A - - without cornering lamps	8	All	★ D8MY 14290-C	Not replaced	1
78	A - - with cornering lamps	8	All	★ D8MY 14290-D	Not replaced	1
79	A - - with or without cornering lamps	8	All	★ D9MY 14290-B	Not replaced	1

C (Montego)

73	C - - without A/C	6&8	All	★ D3GY 14290-A	Not replaced	1
73	C - - A/C	6&8	All	★ D3GY 14290-B	Not replaced	1
74	C - - without A/C	8	All	★ D4GY 14290-B	Not replaced	1
74	C - - A/C	8	All	★ D4GY 14290-A	Not replaced	1
75	C	8	All	★ D5GY 14290-A	Not replaced	1
76	C "Before 11/3/75"	8	All	★ D6GY 14290-A	Not replaced	1
76	C "From 11/3/75"	8	All	★ D6GY 14290-B	Not replaced	1

D (Lincoln)

73	D "Before 10/16/72"	8	All	D3VY 14290-A		1
73	D "From 10/16/72"	8	All	D3VY 14290-B		1
74	D	8	All	D4VY 14290-A		1
75/76	D	8	All	★ D5VY 14290-A	Not replaced	1
77	D	8	All	D7VY 14290-A		1
78	D "Before 5/15/78"	8	All	★ D8VY 14290-A	Not replaced	1
78	D "From 5/15/78"	8	All	★ D8VY 14290-B	Not replaced	1
79	D	8	All	D9VY 14290-A		1

COPYRIGHT © 1986 — FORD MOTOR COMPANY — DEARBORN, MICHIGAN

YEAR	MODEL/RESTRICTIONS	ENGINE CYL.	ENGINE C.I.D. (C.C.D.)	PART NUMBER	DESCRIPTION	QTY.
14290	WIRE ASSY. (DASH PANEL TO HEADLAMP JUNCTION) — Cont'd					

APPLICATION CHART

F (Cougar)

73	F(65D,76D)	8	351	D3WY 14290-A		1
73	F(65F,76F)	8	351	D3WY 14290-B		1
74	F - - without A/C	8	All	D40Z 14290-D		1
74	F - - A/C	8	All	★D40Z 14290-B	Not replaced	1
75	F	8	All	★D50Z 14290-B	When used on units without A/C-fold and tape excess wiring leads-not replaced	1
76	F "Before 11/3/75"	8	All	★D6WY 14290-B	Not replaced	1
76	F "From 11/3/75"	8	All	★D6WY 14290-C	Not replaced	1
77/	F	8	All	D7WY 14290-A		1

G (Monarch)

75	G - - without A/C	6&8	All	D54Y 14290-A		1
75	G - - A/C "Before 12/16/74"	6&8	All	★D54Y 14290-B	Not replaced	1
75	G - - A/C without brake skid control "From 12/16/74"	6&8	All	★D54Y 14290-C	Not replaced	1
75	G - - w/brake skid control	6&8	All	★D5DZ 14290-F	Not replaced	1
76	G - - without A/C without skid control	6&8	All	★D64Y 14290-C	Not replaced	1
76	G - - A/C without skid control "Before 3/1/76"	6	200,250	D64Y 14290-A		1
76	G - - A/C without skid control "From 3/1/76 to 4/15/76"	6	200,250	D64Y 14290-D		1
76	G - - A/C without skid control "From 4/15/76"	6	200,250	D64Y 14290-G		1
76	G - - A/C without skid control	8	302,351W	★D64Y 14290-B	Not replaced	1
76	G - - w/skid control	6	200,250	★D6DZ 14290-E	Not replaced	1
76	G - - w/skid control	8	302,351W	★D6DZ 14290-D	Not replaced	1
77	G - - without A/C with cornering lamps "Before 2/15/77"	6	All	D7DZ 14290-D		1
77	G - - w/cornering lamps, with or without A/C "Before 2/15/77"	8	All			1
77	G - - without A/C with cornering lamps "From 2/15/77"	6	All	D7DZ 14290-L		1
77	G - - w/cornering lamps, with or without A/C "From 2/15/77"	8	All			1
77	G - - A/C with cornering lamps "Before 2/15/77"	6	All	D7DZ 14290-G		1
77	G - - A/C with cornering lamps "From 2/15/77"	6	All	★D7DZ 14290-M	Not replaced	1
77	G - - without A/C without cornering lamps "Before 2/15/77"	6&8	All	★D74Y 14290-A	Not replaced	1
77	G - - without A/C without cornering lamps "From 2/15/77"	6&8	All	★D74Y 14290-E	Not replaced	1
77	G - - A/C w/o cornering lamps "Before 2/15/77"	8	All	★D74Y 14290-C	Not replaced	1
77	G - - A/C without cornering lamps "From 2/15/77"	8	All	★D74Y 14290-F	Not replaced	1
77	G - - A/C without cornering lamps "Before 2/15/77"	6	All	★D74Y 14290-D	Not replaced	1
77	G - - A/C without cornering lamps "From 2/15/77"	6	All	★D74Y 14290-G	Not replaced	1

YEAR	MODEL/RESTRICTIONS	ENGINE CYL.	ENGINE C.I.D. (C.C.D.)	PART NUMBER	DESCRIPTION	QTY.
14290	WIRE ASSY. (DASH PANEL TO HEADLAMP JUNCTION) — Cont'd					

APPLICATION CHART

G (Monarch)

78	G – – without A/C or cornering lamps "Before 4/3/78"	6&8	All	★D8DZ 14290–A	Not used with 6 cyl. 250 engine with power steering–not replaced	1
78	G – – without A/C or cornering lamps "From 4/3/78"	6&8	250,302	★D8DZ 14290–F	Not used with power steering on 6 cyl. 250 engine–not replaced	1
78	G – – A/C or P/S without cornering lamps "Before 1/16/78"	6	250	★D8DZ 14290–B	Not replaced	1
78	G – – with A/C and/or P/S without cornering lamps "From 1/16/78"	6	250	★D8DZ 14290–G	Not replaced	1
78	G – – A/C without cornering lamps "Before 2/13/78"	8	302	★D8DZ 14290–C	Not replaced	1
78	G – – with A/C or A.T.C. without cornering lamps "From 2/13/78"	8	302	★D8DZ 14290–H	Not replaced	1
78	G – – A/C with cornering lamps "Before 2/13/78"	6&8	All	★D8DZ 14290–D	Not used with 6 cyl. 250 engine with power steering–not replaced	1
78	G – – without A/C with cornering lamps "From 2/13/78"	6&8	250,302	★D8DZ 14290–J	Not used with power steering on 6 cyl. 250 engine–not replaced	1
78	G – – A/C or P/S with cornering lamps "Before 1/16/78"	6	250	★D8DZ 14290–E		1
78	G – – with A/C or P/S with cornering lamps "From 1/16/78"	6	250	★D8DZ 14290–K	Not replaced	1
79	G – – without A/C or cornering lamps	6&8	All	★D9DZ 14290–A	Not replaced	1
79	G – – with A/C without cornering lamps	6	250	★D9DZ 14290–B	Not replaced	1
79	G – – with A/C without cornering lamps	8	302	★D9DZ 14290–C	Not replaced	1
79	G – – with cornering lamps	6&8	All	D9DZ 14290–D	not used with A/C or 6 cyl. 250 engine	1
79	G – – with A/C & cornering lamps	6	250	D9DZ 14290–E		1

J (Capri)

79	J – – with console w/o TC "Before 5/1/79"	4–6 &8	140,171 302	D9ZZ 14290–B		1
79	J – – with TC "Before 5/1/79"	4	140 (2300)	★D9ZZ 14290–C	Not replaced	1
79	J – – with TC with or without heated backlite "From 5/1/79"	4	140 (2300)	★D9ZZ 14290–F	Not replaced	1
79	J – – w/o console or TC "Before 5/1/79"	4–6 &8	140,171, 302	D9ZZ 14290–D		1
79	J – – with or without console or heated backlite w/o TC "From 5/1/79"	4–6 &8	140,171, 200,302	D9ZZ 14290–G		1

K (Mark IV, Mark V)

73	K – – w/o breakerless ignition "Before 12/16/72"	8	All	★D3LY 14290–A	Not replaced	1
73	K – – w/o breakerless ignition "From 12/16/72"	8	All	★D3LY 14290–B	Not replaced	1
73	K – – w/breakerless ignition	8	460	★D3LY 14290–D	Not replaced	1
74	K	8	All	★D4LY 14290–A	Not replaced	1
75	K	8	All	★D5LY 14290–A	Not replaced	1

COPYRIGHT © 1986 — FORD MOTOR COMPANY — DEARBORN, MICHIGAN

1973/79 LINCOLN-MERCURY CARS

YEAR	MODEL/RESTRICTIONS	ENGINE CYL.	ENGINE C.I.D. (C.C.D.)	PART NUMBER	DESCRIPTION	QTY.
14290	WIRE ASSY. (DASH PANEL TO HEADLAMP JUNCTION) — Cont'd					

APPLICATION CHART

K (Mark IV, Mark V)

76	K – – w/o skid control and/or auto headlamp dimmer	8	460	★D6SZ 14290–B	Not replaced	1
76	K – – skid control and/or auto headlamp dimmer	8	460	★D6LY 14290–B	Not replaced	1
77	K – – w/o skid control and/or head lamp dimmer	8	All	★D7LY 14290–A	Not replaced	1
77	K – – skid control and/or head lamp dimmer	8	All	D7LY 14290–B		1
78	K – – w/o skid control or auto head lamp dimmer	8	All	★D8LY 14290–A	Not replaced	1
78	K – – skid control and/or auto headlamp dimmer	8	All	★D8LY 14290–B	Not replaced	1
79	K – – w/o skid control and/ or auto headlamp dimmer	8	All	★D9LY 14290–A	Not replaced	1
79	K – – skid control and/or auto headlamp dimmer	8	All	★D9LY 14290–B	Not replaced	1

L (Bobcat)

▲ 2000 cc @ 2300 cc ⊕ 2800 cc

74	L	4	▲122	★D4FZ 14290–E	Not replaced	1
74	L – – withoutA/C	4	@140	D4FZ 14290–G		1
74	L – – A/C	4	@140	★D4FZ 14290–F	Not replaced	1
75	L "Before 2/3/75"	4	@140	★D5FZ 14290–B	Not replaced	1
75	L "From 2/3/75"	4	@140	★D5FZ 14290–D	Not replaced	1
75	L "Before 2/3/75"	6	⊕171	D5FZ 14290–C		1
75	L "From 2/3/75"	6	⊕171	D5FZ 14290–E		1
76	L – – without A/C "Before 4/23/76"	4	@140	★D6FZ 14290–A	Not replaced	1
76	L – – without A/C "From 4/23/76"	4	@140	★D6FZ 14290–D	Not replaced	1
76	L – – A/C "Before 4/23/76"	4	@140	★D6FZ 14290–B	Not replaced	1
76	L – – A/C "From 4/23/76"	4	@140	D6FZ 14290–E		1
76	L "Before 4/23/76"	6	⊕171	★D6FZ 14290–C	Not replaced	1
76	L "From 4/23/76"	6	⊕171	D6FZ 14290–F		1
77	L – – without A/C exc. Calif. "Before 3/1/77"	4	140 (2300)	D7FZ 14290–A		1
77/78	L – – without A/C exc. Calif. "From 3/1/77 to 8/1/77"	4	140 (2300)	★D7FZ 14290–K	Not replaced	1
77	L – – A/C exc. Calif. "Before 3/1/77"	4	140 (2300)	D7FZ 14290–B		1
77/78	L – – A/C exc. Calif. "From 3/1/77 to 8/1/77"	4	140 (2300)	★D7FZ 14290–L	Not replaced	1
77	L – – without gauges "Before 3/1/77"	6	171 (2800)	D7FZ 14290–C		1
77/	L – – without gauges "From 3/1/77"	6	171 (2800)	★D7FZ 14290–M	Not replaced	1
77/78	L – – with gauges "Before 3/1/77"	6	171 (2800)	D7FZ 14290–D		1
77/	L – – with gauges "From 3/1/77"	6	171 (2800)	D7FZ 14290–N		1
78	L – – without gauges Calif. "From 8/1/77 to 1/15/78"	4	140 (2300)	D8FZ 14290–A		1
77/	L – – w/gauges "Before 3/1/77"	4	140 (2300)	D7FZ 14290–E		1
77/78	L – – w/gauges "From 3/1/77 to 8/1/77"	4	140 (2300)	D7FZ 14290–P		1

YEAR	MODEL/RESTRICTIONS	ENGINE CYL.	ENGINE C.I.D. (C.C.D.)	PART NUMBER	DESCRIPTION	QTY.
14290	WIRE ASSY. (DASH PANEL TO HEADLAMP JUNCTION) — Cont'd					

APPLICATION CHART

L (Bobcat)

▲ 2000 cc @ 2300 cc ⊕ 2800 cc

78	L – – without gauges Calif. "From 1/15/78"	4	140 (2300)	★ D8FZ 14290-F	Not replaced	1
78	L – – with gauges Calif. "From 8/1/77 to 1/15/78"	4	140 (2300)	D8FZ 14290-B		1
78	L – – with gauges Calif. "From 1/15/78"	4	140 (2300)	★ D8FZ 14290-G	Not replaced	1
78	L – – without gauges or A/C exc. Calif. "From 8/1/77"	4	140 (2300)	★ D8FZ 14290-C	Not replaced	1
78	L – – A/C without gauges exc. Calif. "From 8/1/77"	4	140 (2300)	★ D8FZ 14290-D	Not replaced	1
78	L – – A/C with gauges exc. Calif. "From 8/1/77"	4	140 (2300)	★ D8FZ 14290-E	Not replaced	1
79	L – – without gauges exc. Calif.	4	140 (2300)	D9FZ 14290-A		1
79	L – – without gauges-Calif.	4	140 (2300)	★ D9FZ 14290-B	Not replaced	1
79	L – – with gauges-Calif. "Before 12/4/78"	4	140 (2300)	D9FZ 14290-C		1
79	L – – with gauges-Calif. "From 12/4/78"	4	140 (2300)	★ D9FZ 14290-H	Not replaced	1
79	L – – with gauges "Before 12/4/78"	6	171 (2800)	D9FZ 14290-D		1
79	L – – with gauges "From 12/4/78"	6	171 (2800)	D9FZ 14290-J		1
79	L – – without gauges	6	171 (2800)	D9FZ 14290-E		1
79	L – – with A/C-exc. Calif.	4	140 (2300)	★ D9FZ 14290-F	Not replaced	1
79	L – – with gauges exc. Calif. "Before 12/4/78"	4	140 (2300)	★ D9FZ 14290-G	Not replaced	1
79	L – – with gauges exc. Calif. "From 12/4/78"	4	140 (2300)	★ D9FZ 14290-K	Not replaced	1

P (Comet)

73	P "Before 4/2/73"	6	All	D2DZ 14290-D		1
73	P "Before 4/2/73"	8	302	★ D3DZ 14290-B	Not replaced	1
73	P – – A/C "From 4/2/73"	8	302			1
73	P – – without A/C "From 4/2/73"	8	302	D3DZ 14290-E		1
73	P "From 4/2/73"	6	250			1
74	P – – without breakerless ignition	6&8	All	★ D4DZ 14290-A	Not replaced	1
74	P – – w/breakerless ign.	6&8	All	D4DZ 14290-C		1
75	P "Before 2/15/75"	8	All	★ D5BZ 14290-A	Not replaced	1
75	P	8	All			1
75	P "From 2/15/75"	6	All	★ D5DZ 14290-E	Not replaced	1
76	P	6&8	All	★ D6DZ 14290-F	Not replaced	1
77	P – – exc. Calif.	6&8	All	★ D7DZ 14290-E	Not replaced	1
77	P – – Calif.	8	All	★ D7DZ 14290-F	Not replaced	1

P (Zephyr)

78	P – – Calif.	4,6 &8	All	★ D8KZ 14290-A	Not replaced	1
78	P – – exc. Calif.	4,6 &8	All	★ D8KZ 14290-B	Not replaced	1

COPYRIGHT © 1986 — FORD MOTOR COMPANY — DEARBORN, MICHIGAN

1973/79 LINCOLN-MERCURY CARS

YEAR	MODEL/RESTRICTIONS	ENGINE CYL.	ENGINE C.I.D. (C.C.D.)	PART NUMBER	DESCRIPTION	QTY.
14290	WIRE ASSY. (DASH PANEL TO HEADLAMP JUNCTION) — Cont'd					

APPLICATION CHART

P (Zephyr)

79	P - - Calif. w/gauges	8	302	D9KY 14290-A		1
79	P(36R) - - w/gauges "Before 6/1/79"	4-6 &8	140,200, 302			1
79	P - - w/gauges "From 6/1/79"	4-6 &8	140,200, 302	D9KY 14290-C		1
79	P - - w/o gauges	4-6	140,200	★ D9KY 14290-B	Not replaced	1
79	P - - exc. Calif. w/o gauges	8	302			1
79	P(36R) - - w/o gauges "Before 6/1/79"	8	302			1
79	P - - w/o gauges "From 6/1/79"	4-6 &8	140,200, 302	★ D9KY 14290-F	Not replaced	1

V (Versailles)

77	V	8	All	★ D74Y 14290-B	Not replaced	1
78	V - - w/electronic engine control "Before 11/1/77"	8	302	★ D84Y 14290-A	Not replaced	1
78 ★	V - - w/electronic engine control "From 11/1/77 to 2/13/78"	8	302	★ D84Y 14290-C	Not replaced	1
78	V - - w/electronic engine control "From 2/13/78"	8	302	D84Y 14290-F	Not replaced	1
78	V - - w/o electronic engine control "Before 1/3/78"	8	302	★ D84Y 14290-B	Not replaced	1
78	V - - w/o electronic engine control "From 1/3/78"	8	302	★ D84Y 14290-E	Not replaced	1
79	V - - w/electronic engine control "Before 12/4/78"	8	302	D94Y 14290-A		1
79	V - - w/electronic engine control "From 12/4/78"	8	302	★ D94Y 14290-C	Not replaced	1
79	V - - w/o electronic engine control (Calif.)	8	302	★ D94Y 14290-B	Not replaced	1

Y (Meteor)

73	Y - - without A/C and/or anti-theft alarm system "Before 12/16/72"	8	All	★ D3MY 14290-A	Not replaced	1
73	Y - - without A/C and/or anti-theft alarm system "From 12/16/72"	8	All	D3MY 14290-E		1
73	Y - - A/C and/or anti-theft alarm system "Before 10/16/72"	8	All	★ D3MY 14290-C	Not replaced	1
73	Y - - A/C and/or anti-theft alarm system "From 10/16/72"	8	All	★ D3MY 14290-G	Not replaced	1
74	Y	8	All	D4MY 14290-A		1
75/76	Y	8	All	★ D5MY 14290-F	Not replaced	1
74/	A,Y			376389-S101	(UU-82-D)-screw (attach wiring to anti-theft actuator)-No. 8-18 x 3/4"	1
73	F			33797-S7	(M-50)-nut (attach wiring to 11450 relay)-5/16"-18	AR
73	F			★42547-S	(U-248-A)-screw (attach wiring to radiator support)-No. 10-16 x 1/2"	AR
76	K			382930-S	(GG-338-A)-clip (attach wiring to side member lamp)	2
73	P			352542-S	(GG-324)-clip (attach wiring to radiator support)	2
73/	P			★353547-S	(GG-173)-clip (attach wiring to engine assy.)	AR
74/	L,P			383255-S	(MM-296-AC)-nut-attach retainer (part of wiring) to alternator-No. 10-24	AR

YEAR	MODEL/RESTRICTIONS	ENGINE CYL.	ENGINE C.I.D. (C.C.D.)	PART NUMBER	DESCRIPTION	QTY.
14290	WIRE ASSY. (DASH PANEL TO HEADLAMP JUNCTION) — Cont'd					
74/	P			383207-S101	(GG-271)-clip (attach wiring to dash panel)	2
74	P			382931-S	(GG-338)-clip (attach wiring to radiator support)	AR
75	L			383256-S	(MM-296-AE)-nut-attach wiring to alternator-1/4"-20	1
76	A,Y			42367-S36	(U-269-B)-screw (attach wiring to cowl panel)-No. 10-16 x 1/2"	AR

YEAR	MODEL/RESTRICTIONS	PART NUMBER	DESCRIPTION	QTY.
14294	TERMINAL (ELECTRIC WIRING SOLDERLESS CRIMP ON TYPE)			
73/	A,C,D,F,G,K,L,P,V,Y	B9A 14294-B	Eyelet No. 6 stud-for No. 14, gauge wire	AR
		B9A 14294-C	Eyelet No. 10 stud-for No. 14,16 gauge wire	AR
		B9A 14294-D	Eyelet 1/4" stud-for No. 14,16 gauge wire	AR
		B9A 14294-F	Eyelet No. 10 stud-for No. 10,12 gauge wire	AR
		B9A 14294-G	Eyelet 1/4" stud-for No. 10,12 gauge wire	AR
		B9A 14294-H	Eyelet 3/8" stud-for No. 10,12 gauge wire	AR
		B9A 14294-J	Faston tab-for No. 14,16,18 gauge wire	AR
		B9A 14294-M	Shur plug-insulated bullet-for No. 14,16 gauge wire	AR
		B9A 14294-A	Eyelet No. 10 stud-for No. 16,18,20,22 gauge wire	AR
		B9A 14294-K	Shur plug-uninsulated bullet-for No. 14,16,18 gauge wire	AR
		B9A 14294-L	Faston receptacle-for No.14,16,18 gauge wire	AR
73/	A,C,D,F,G,K,L,P,V,Y	C5AZ 14294-B	Bullet type-insulated-No. 14,16 gauge wire	AR
		C5AZ 14294-A	Eyelet No. 10 stud-insulated-No. 8 gauge wire	AR
		C5AZ 14294-C	Faston tab-male-No. 14,16 gauge wire	AR
		C5ZZ 14294-A	Eyelet-1/2"-No. 14,16,18 gauge wire	AR
		D3AZ 14294-A	Eyelet 9/32" for No. 8 or No. 10 gauge wire at alternator terminal	AR
		D3AZ 14294-B	Eyelet 9/32" for No. 6 gauge wire at alternator terminal	AR
		★ B9A 14294-N	Spade type for 14 or 16 gauge wire	AR
75/	L,P	D1FZ 14294-A	Eyelet No. 18 or 20 gauge wire	AR
76/77	J	D5RY 14294-A	Spade type	AR
14296	WIRE			
73/	A,C,D,F,K,L,P,V,Y	8A 14296-A	Hi-tension-100 ft. spool (copper)	AR
		8A 14296-B	Ignition-No. 7MM-100 ft. spool (stainless steel)	AR
		D2PZ 14296-A	Spark plug-100 ft. spool	AR
		B3A 14296-A	Primary-No. 8 gauge-50 ft. spool	AR
		B6A 14296-A	Primary-No. 12 gauge-100 ft. spool	AR
		B6A 14296-B	Primary-No. 14 gauge-100 ft. spool	AR
		B6A 14296-C	Primary-No. 16 gauge-100 ft. spool	AR
		B3A 14296-B	Primary-No. 8 gauge-50 ft. spool	AR
14300	CABLE KIT (BATTERY BOOSTER)			
73/	A,C,D,F,G,K,L,P,V,Y	C9PZ 14300-A	*WC-8038-8 ft. long	AR
		★ C9PZ 14300-B	*WC-8039-12 ft. long-not replaced	AR

COPYRIGHT © 1986 — FORD MOTOR COMPANY — DEARBORN, MICHIGAN

14300 CABLE ASSY. (BATTERY UNIVERSAL TYPE)

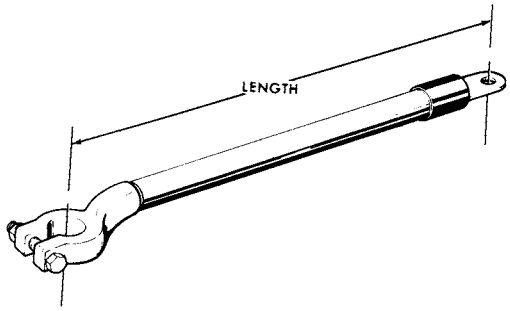

P-9098

IDENTIFICATION CHART

Battery cable terminals(battery end)are universal and may be used on either the positive or negative battery post. Battery cable length is determined by distance between hole centers.

LENGTH (INCHES)	WIRE GAUGE	IDENTIFICATION	SERVICE PART NUMBER	MOTORCRAFT NUMBER	LENGTH (INCHES)	WIRE GAUGE	IDENTIFICATION	SERVICE PART NUMBER	MOTORCRAFT NUMBER
10	4	D1PF 14300-AGA	D1PZ 14300-AG	*WC-8118			D3VF 14300-AA	D3VY 14300-A	
10	6	D1PF 14300-AA	D1PZ 14300-A	*7106			D4AF 14300-AA	D1PZ 14300-F	
12 1/2	1	D1PF 14300-MA	D1PZ 14300-M	*6121			D4AF 14300-CA	D1PZ 14300-F	
13	4	D1PF 14300-DA	D1PZ 14300-D	*7134			D4AF 14300-DA	D1PZ 14300-F	
16	4	D1PF 14300-EA	D1PZ 14300-E	*7164			D4DF 14300-AA	D1PZ 14300-A	
16 1/2	1	D1PF 14300-NA	D1PZ 14300-N	*6161			D40F 14300-AA	D1PZ 14300-E	
19	4	D1PF 14300-FA	D1PZ 14300-F	*7194			D40F 14300-BA	D1PZ 14300-E	
20	6	D1PF 14300-BA	D1PZ 14300-B	*7206			D4SF 14300-BB	★ D4SZ 14300-B	
21	1	D1PF 14300-PA	D1PZ 14300-P	*6211			D4VF 14300-BB	D4VY 14300-C	
23	4	D1PF 14300-GA	D1PZ 14300-G	*7234			D4VF 14300-BC	D4VY 14300-C	
24	6	D1PF 14300-CA	D1PZ 14300-C	*7246			D4VF 14300-BD	D4VY 14300-C	
27	1	D1PF 14300-RA	D1PZ 14300-R	*6271			D4ZF 14300-BA	D1PZ 14300-D	
30	4	D1PF 14300-HA	D1PZ 14300-H	*7304			D42F 14300-AA	D1PZ 14300-E	
34	1	D1PF 14300-SA	D1PZ 14300-S	*6341			D5VF 14300-AA	D1PZ 14300-A	
40	1	D1PF 14300-TA	D1PZ 14300-T	*6401			D5VF 14300-BA	D1PZ 14300-AG	
41	4	D1PF 14300-JA	D1PZ 14300-J	*7414			D52F 14300-BA	D1PZ 14300-A	
48	4	D1PF 14300-KA	D1PZ 14300-K	*7484			D7DF 14300-A	D1PZ 14300-A	
53	1	D1PF 14300-UA	D1PZ 14300-U	*6531			D7LF 14300-AA	D1PZ 14300-AG	
56	4	D1PF 14300-LA	D1PZ 14300-L	*7564			D7SF 14300-AA	D1PZ 14300-E	
65	1	D1PF 14300-VA	D1PZ 14300-V	*6651			D8EF 14300-AA	D1PZ 14300-AG	
75	1	D1PF 14300-XA	D1PZ 14300-X	*6751			D00F 14301-D	D00Z 14301-D	
104	6	D1PF 14300-AFA	D1PZ 14300-AF	*WC-8085			D1AF 14301-AA	D1PZ 14300-H	
		D20F 14300-AC	D1PZ 14300-E				D2AF 14301-AA	D1PZ 14300-H	
		D20F 14300-BA	D1PZ 14300-E				D2AF 14301-BA	D1PZ 14300-H	
		D20F 14300-CA	D1PZ 14300-E				D2AF 14301-CA	D1PZ 14300-H	
		D2SF 14300-AB	D4SZ 14300-B				D2BF 14301-AA	D2BZ 14301-A	
		D2SF 14300-AC	D1PZ 14300-E				D20F 14301-AA	D00Z 14301-D	
			and D1PZ 14431-E				D2SF 14301-AB	D3SZ 14301-A	
		D2SF 14300-BA	D2SZ 14300-B				D2VF 14301-BA	★ D2VY 14301-A	
		D2SF 14300-BC	D3SZ 14300-A				D2ZF 14301-AA	D00Z 14301-D	
		D2SF 14300-DA	D1PZ 14300-D				D2ZF 14301-BA	D00Z 14301-D	
			and D1PZ 14431-E				D22F 14301-AA	D1FZ 14301-B	
		D2VF 14300-AA	D1PZ 14300-D				D22F 14301-AB	★ D3FZ 14301-A	
			and D1PZ 14431-E				D3AF 14301-AA	D1PZ 14300-H	
		D2ZF 14300-AA	D1PZ 14300-A				D3AF 14301-BA	D1PZ 14300-H	
		D22F 14300-AA	D1PZ 14300-A				D3AF 14301-CA	★ D3AZ 14301-D	
		D3AF 14300-AA	D1PZ 14300-F				D3AF 14301-DA	★ D3AZ 14301-D	
		D3AF 14300-BA	D1PZ 14300-F				D3VF 14301-AA	D3VY 14301-A	
		D3AF 14300-CA	D3AZ 14300-D				D3ZF 14301-AA	D00Z 14301-D	
		D3AF 14300-DA	D3AZ 14300-D				D4AF 14301-AA	D1PZ 14300-H	

LENGTH (INCHES)	WIRE GAUGE	IDENTIFICATION	SERVICE PART NUMBER	MOTORCRAFT NUMBER	LENGTH (INCHES)	WIRE GAUGE	IDENTIFICATION	SERVICE PART NUMBER	MOTORCRAFT NUMBER
		D4AF 14301-BA	D1PZ 14300-H				D52F 14301-CA	★ D5FZ 14301-C	
		D4AF 14301-CA	D1PZ 14300-H				D60F 14301-AA	D1PZ 14300-H	
		D4AF 14301-EA	D1PZ 14300-H				D60F 14301-BA	D1PZ 14300-H	
		D4AF 14301-EB	D1PZ 14300-H				D6ZF 14301-AA	D6ZZ 14301-A	
		D4AF 14301-FB	D1PZ 14300-H				D8BF 14301-AA	D8BZ 14301-B	
		D4DF 14301-AA	D00Z 14301-D				D8BF 14301-BA	D8BZ 14301-B	
		D4SF 14301-BA	D1PZ 14300-H				D8EF 14301-AA	D8FZ 14301-A	
		D4SF 14301-BB	D1PZ 14300-H				D8EF 14301-BA	★ D8FZ 14301-B	
		D4VF 14301-BA	D1PZ 14300-H				D84F 14301-BA	D84Y 14301-B	
		D42F 14301-AB	D8FZ 14301-A				D9AF 14301-AB	D9AZ 14301-A	
		D5DF 14301-BA	D00Z 14301-D				D9AF 14301-BB	D9AZ 14301-B	
		D5ZF 14301-BB	★ D5ZZ 14301-B				D9BF 14301-AA	D9BZ 14301-A	
		D5ZF 14301-CB	D5ZZ 14301-C				D9ZF 14301-AA	D9ZZ 14301-A	
		D52F 14301-BA	★ D5FZ 14301-C				D9ZF 14301-BA	D9ZZ 14301-B	

YEAR	MODEL/RESTRICTIONS	ENGINE CYL.	ENGINE C.I.D. (C.C.D.)	PART NUMBER	DESCRIPTION	QTY.
14300-1	CABLE ASSY. (BATTERY) ▲ 2000 cc @ 2300 cc ♦ 2600 cc ⊕ 2800 cc					

APPLICATION CHART

BATTERY TO STARTER RELAY

73/77	A,Y - - w/o diagnostic system	8	All	D1PZ 14300-F	*7194-19" long- 4 gauge	1
78	A	8	351			1
73	A - - w/diagnostic system	8	All	D3AZ 14300-D	*WC-8202-18" long- 4 gauge	1
73/76	C	6&8	All	D1PZ 14300-E	*7164-universal-16" long-4 gauge	1
74/	F	8	All			1
73	D,K - - w/top terminal battery	8	All		Battery to junction block	1
78	A	8	400,460			1
78/	P	4	@140			1
78/	P	6&8	200,302			1
79	J	4,6 &8	All			1
73	D - - w/side terminal battery	8	All	D3VY 14300-A	*WC-8151-55" long	1
73	D - - w/top terminal battery	8	All	D1PZ 14300-D	*7134-13" long- 4 gauge	1
73	F	8	351	D1PZ 14300-AG	*WC-8118-universal-10" long-4 gauge	1
78/	L	4	@140			1
75/	D,K	8	400,460			1
74	D - - w/top terminal battery	8	All	D4VY 14300-C	*WC-8260-A-51 1/2" long-4 gauge	1
73	J "Before 2/20/73"	4	▲122	★ D2RY 14300-C	*WC-8092-C-not replaced	1
73/74	J "From 2/20/73"	4	▲122	★ D3RY 14300-B	*WC-8092-D-35" long-not replaced	1
74	J	6	⊕171			1
76/78	J	4	@140	★ D5RY 14300-C	*WC-8303-A-not replaced	1
76/78	J	6	⊕171	★ D5RY 14300-E	*WC-8310-A-not replaced	1
73	K - - w/side terminal battery "Before 12/11/72"	8	All	★ D2SZ 14300-B	*WC-8154-55" long-not replaced	1
73	K - - w/side terminal battery "From 12/11/72"	8	All	D3SZ 14300-A	*WC-8215-41" long-4 gauge	1
73/74	K - - w/top terminal battery	8	All	★ D4SZ 14300-B	*WC-8258-56" long-4 gauge-not replaced	1
73/77	P	6&8	All	D1PZ 14300-A	#7106-universal-10" long-6 gauge	1
74/77	L	4&6	All			1
78/	L	6	⊕171			1
79	A	8	All			1
75/	G	6&8	All			1
77/	V	8	All			1

COPYRIGHT © 1986— FORD MOTOR COMPANY —DEARBORN, MICHIGAN

1973/79 LINCOLN-MERCURY CARS

YEAR	MODEL/RESTRICTIONS	ENGINE CYL.	ENGINE C.I.D. (C.C.D.)	PART NUMBER	DESCRIPTION	QTY.
14300-1	CABLE ASSY. (BATTERY) — Cont'd ▲ 2000 cc @ 2300 cc ♦ 2600 cc ⊕ 2800 cc					

APPLICATION CHART

BATTERY TO GROUND

73/78	A - - w/o diagnostic system	8	All	D1PZ 14300-H	*7304-universal-30" long-4 gauge	1
73	C "Before 12/4/72"	8	351			1
73	C	6&8	exc. 351			1
74/76	C,Y	6&8	All			1
74/	F	8	All			1
74/	D - - w/top terminal battery	8	All			1
73/	K - - w/top terminal battery	8	All			1
79	A - - (U.S.)	8	351W	D9AZ 14301-A	*WC-8405-31" long-6 gauge-with 16 ga. ground lead wire	1
79	A	8	302	D9AZ 14301-B	*WC-8406-31.50" long-6 gauge	1
79	A(Canada)	8	351W			1
76	A,C,F,Y	6&8	All	D1PZ 14300-J	*7414-41" long-4 gauge	1
73	A - - w/diagnostic system	8	All	★ D3AZ 14301-D	*WC-8205-27" long-4 gauge-not replaced	1
73	C "From 12/4/72"	8	351	D1PZ 14300-C	*7246-universal-24" long-6 gauge	1
73	D - - w/side terminal battery	8	All	★ D3VY 14301-A	*WC-8153-28" long-not replaced	1
73	D - - w/top terminal battery	8	All	★ D2VY 14301-A	*WC-8119-A-not replaced	1
73	F	6&8	All	D00Z 14301-D	*WC-8041-A-42" long	1
73/	G	6&8	All			1
73/77	P	6&8	All			1
73/74	J	4	▲122	★ D4RY 14301-A	*WC-8148-C-not replaced	1
73	J "Before 2/20/73"	6	♦159	★ D3RY 14301-B	*WC-8145-A-not replaced	1
73	J "From 2/20/73"	6	♦159	★ D8RY 14301-A	*WC-8145-B-not replaced	1
74	J	6	⊕171			1
76/78	J	4	@140	★ D5RY 14301-D	*WC-8302-A-not replaced	1
76/78	J	6	⊕171	★ D5RY 14301-E	*WC-8301-A-not replaced	1
79	J "Before 3/15/79"	4	140 (2300)	D9ZZ 14301-A	*WC-8407-36.50" long-6 gauge-with ground strap	1
79	J "Before 3/15/79"	6&8	171,302	D9ZZ 14301-B	*WC-8408-39.50" long-4 gauge-with ground strap	1
79	J	4,6	140,171	D9ZZ 14301-C	*WC-8048-A-39.50" long-4 gauge-	1
		8	302		with ground strap	1
73	K - - w/side terminal battery	8	All	★ D3SZ 14301-A	*WC-8216-28" long-4 gauge-not replaced	1
74/	L	4	140	D8FZ 14301-A	*WC-8241-A 24.50" long-4 gauge	1
75/78	L "Before 6/1/78"	6	⊕171	★ D5FZ 14301-C Not replaced	*WC-8300-A-27 3/4" long-6 gauge	1
78/	L "From 6/1/78"	6	171 (2800)	★ D8FZ 14301-B	*WC-8465-23" long-6 gauge-with ground strap-not replaced	1
77/78	V - - w/or without electronic engine control "Before 4/3/78"	8	302, 351W	D00Z 14301-D	*WC-8041-A-42"long	1
78/	V - - w/electronic engine control "From 4/3/78"	8	302	D84Y 14301-B	*WC-8409-42" long-6 gauge-with ground strap	1
78/	P	6&8	All	D8BZ 14301-B	*WC-8294-D 38" long-4 gauge-	1
78/	P	4	@140		with ground strap	1
79	J	6	200			1
79	P (P/C & TAXI)	6&8	200,302	D9BZ 14301-A	*WC-8466-41.50" long-6 gauge-with ground strap	1
73/	A,C,F,G,K,P,Y	6&8	All	383849-S	(BB-842-G)-bolt-1/4"-20 x 1 3/8"	AR
				383848-S	(MM-130-FX)-nut-1/4"-20	AR
73/75	A,C,F,P,Y	6&8	All	33797-S7	(M-50)-nut(cable to 11450 relay)- 5/16"-18	AR
73/75	K	8	All		Cable to 14448 junction block	AR

YEAR	MODEL/RESTRICTIONS	ENGINE CYL.	ENGINE C.I.D. (C.C.D.)	PART NUMBER	DESCRIPTION	QTY.
14300-1	CABLE ASSY. (BATTERY) — Cont'd ▲ 2000 cc @ 2300 cc ♦ 2600 cc ⊕ 2800 cc					

APPLICATION CHART

BATTERY TO GROUND

76	G,K,L,P	All	All	381561-S36	(MM-295-AD)-nut(attach cable to 11450 relay)-5/16"-18	AR
73/	A,C,F,P,Y	6&8	All	★20312-S	(B-75)-bolt(cable to engine)-3/8"-16 x 1/2"	AR
75/	A,C,F,Y	8	All	33799-S2	(M-52)-nut (attach 14301 to thermactor mounting bolt-3/8"-16	1
75	A,C,F,P,Y	8	All	351487-S	(XX-291)-washer (attach cable to block)- 3/8"	1
73/	D	8	All	40936-S8	(U-265)-screw (cable to R.H. side rail)-5/16"-24 x 5/8"	AR
75	D	8	All	★379618-S	(MM-291-E)-nut (attach 14300 to starter motor)-No. 10-32	1
73/78	J	4&6	All	120293-ES32	Clip (attach cable to battery tray)	AR
73/78	J	4&6	All	118577-ES2	(AG-20)-clip (cable to engine)	AR
74	J	4&6	All	E804459-S72	(AB-145-E)-bolt-M6 x 16mm	2
74	J	4&6	All	E864422-S	(AG-26-A)-clip (attach cable to battery tray)	AR
74	J	4&6	All	E602327-S72	(AB-140-BG)-screw (attach ground cable to frame)-M6 x 8mm	1
75/	L	4&6	All	N602206-S51	(AB-23)-screw (attach cable to block)	1
79	J	4	140		M10 x 16mm(Metric coarse)	1

YEAR	MODEL/RESTRICTIONS	PART NUMBER	DESCRIPTION	QTY.
14A301	BRACKET (RELAY MOUNTING)			
77/78	A - - w/power windows	★ D7AZ 14A301-A	Not replaced	1
79	A	D9AZ 14A301-A	Located at lower flange of instrument panel reinforcement	1
73/76	C	D20Z 14A301-A	With glove compartment lamp	1
74/76	C	D40Z 14A301-A	With speed control and power door locks	1
77/	F			1
78/	F		Power windows and automatic seat back latch	1
73	D	D3VY 14A301-A	For heated backlite	1
73/75	D	D2VY 14A301-B	Under instrument panel	1
74/75	D	D4VY 14A301-A	On cowl panel	1
76/77	D	D6VY 14A301-A		1
78/	D	D8VY 14A301-A	Located at instrument panel	1
77/	F	D70Z 14A301-A	Located at instrument panel lower	1
76/	F - - w/speed control and/or power door locks and/or auto seat back latch	D40Z 14A301-A		1
74/78	J	★ D4RY 14A301-A	For override switch mounting-not replaced	1
79	J,P	D9ZZ 14A301-A	Located at instrument panel	1
73	K	D3SZ 14A301-A	Located on quarter panel wheelhouse	1
73/	K - - w/trailer towing package	D4SZ 14A301-B	Located on quarter panel wheelhouse	1
73/76	K	D6SZ 14A301-A		1
77	K	D7LY 14A301-A	Located at instrumental panel lower	1
78	K "Before 5/1/78"	D8LY 14A301-A		1
78/	K "From 5/1/78"	D8LY 14A301-B		1
78/	P	D8BZ 14A301-A	Located at instrument panel	1
73/	D	42119-S8	(U-246)-screw(relay bracket to instrument panel)-No. 8-18 x 3/8"	AR
73	F	382086-S	(UU-89-F)-screw(relay bracket to lower instrument panel)-No. 8-18 x 1/2"	AR
73	F	382655-S2	(MM-273-D)-spring nut(relay bracket to lower instrument panel)-No. 8	AR
74/	K	34655-S8	(M-107)-nut(attach bracket to A.T.C. duct)-No.10-24	AR
74/	D		(Attach bracket to instrument panel)	AR

COPYRIGHT © 1986 — FORD MOTOR COMPANY — DEARBORN, MICHIGAN

1973/79
LINCOLN-MERCURY CARS

YEAR	MODEL/RESTRICTIONS	PART NUMBER	DESCRIPTION	QTY.
14303	CABLE (DASH PANEL TO GROUND)-Also refer to group 14431			
75/78	A,Y - - 8 cyl. 400	★ D5AZ 14303-B	*WC-8304-not replaced	1
75/78	A - - 8 cyl. 460-Calif.			1
78/	P - - 4,6&8-All	D5FZ 14303-A	*WC-8305-16" long	1
79	J - - 4,6&8-All			1
75/	L - - 4 cyl. 140(2300 cc)			1

14305 WIRING ASSY. (ALTERNATOR TO VOLTAGE REGULATOR)

WIRING LOOM MARKING or TAG NUMBER TO SERVICE WIRING PART NUMBER GUIDE

The purpose of this guide is to facilitate the identification of the Service Wiring Part Number. The chart that follows lists in numerical sequence the Wiring Loom Markings or Tag Numbers. For many vehicles the Service Wiring Part Number will be the same as the Loom Marking or Tag Part Number. This type of replacement will cause little or no installation problems. However, when the Service Wiring differs from the Loom Marking or Tag Number it will be necessary to match lead wires and to tape up those lead wires which are not required. This is necessary when the Service Wiring has a more general application than the original wiring installed by the factory. Following this guide chart, Service Wiring Part Numbers are listed by model year and vehicle usage which will permit the identification of replacement wiring when the loom identification marking or tag number is not known.

IDENTIFICATION CHART

IDENTIFICATION	PART NUMBER	IDENTIFICATION	PART NUMBER
D3AB 14305-BE	★ D3AZ 14305-H	D3ZB 14305-CD	★ D3ZZ 14305-C
D3AB 14305-BH	★ D3AZ 14305-H	D3ZB 14305-HA	★ D3DZ 14305-B
D3AB 14305-CH	★ D3AZ 14305-F	D4AB 14305-AG	★ D4AZ 14305-A
D3AB 14305-DD	★ D3AZ 14305-F	D4AB 14305-BH	★ D4AZ 14305-B
D3AB 14305-EC	★ D3AZ 14305-E	D4AB 14305-DG	★ D4AZ 14305-D
D3AB 14305-ED	★ D3AZ 14305-E	D4DB 14305-BC	★ D4DZ 14305-B
D3AB 14305-HA	★ D3AZ 14305-L	D4DB 14305-EA	★ D4DZ 14305-B
D3AB 14305-JA	★ D3AZ 14305-J	D40B 14305-BE	★ D40Z 14305-B
D3AB 14305-KA	★ D3AZ 14305-K	D40B 14305-CD	★ D40Z 14305-C
D3DB 14305-AA	★ D3DZ 14305-B	D40B 14305-CE	★ D40Z 14305-C
D3DB 14305-AC	★ D3DZ 14305-B	D40B 14305-DE	★ D40Z 14305-D
D3DB 14305-BC	★ D3DZ 14305-B	D40B 14305-EE	★ D40Z 14305-E
D3DB 14305-BD	★ D3DZ 14305-B	D40B 14305-FE	★ D40Z 14305-F
D3DB 14305-CC	★ D3DZ 14305-D	D40B 14305-GE	★ D40Z 14305-G
D3DB 14305-DB	★ D3DZ 14305-D	D42B 14305-CE	★ D4FZ 14305-C
D3DB 14305-DC	★ D3DZ 14305-D	D42B 14305-DD	★ D4FZ 14305-D
ED-D30B 14305-AB	★ D30Z 14305-L	D5AB 14305-AA	★ D5AZ 14305-D
D30B 14305-AC	★ D30Z 14305-L	D5AB 14305-BA	★ D5AZ 14305-B
D30B 14305-AD	★ D30Z 14305-L	D5AB 14305-DA	★ D5AZ 14305-D
D30B 14305-AE	★ D30Z 14305-L	D5AB 14305-DB	★ D5AZ 14305-D
D30B 14305-AF	★ D30Z 14305-L	D5AB 14305-EA	★ D5AZ 14305-E
D30B 14305-BC	★ D30Z 14305-L	D5AB 14305-EB	★ D5AZ 14305-E
ED-D30B 14305-BC	★ D30Z 14305-L	D5DB 14305-BC	★ D5DZ 14305-B
D30B 14305-BD	★ D30Z 14305-L	D5DB 14305-CC	★ D5DZ 14305-C
D30B 14305-BF	★ D30Z 14305-L	D50B 14305-AA	★ D50Z 14305-E
D30B 14305-CC	D30Z 14305-C	D50B 14305-CA	★ D50Z 14305-C
D30B 14305-CD	D30Z 14305-C	D50B 14305-DA	★ D50Z 14305-D
D30B 14305-CE	★ D30Z 14305-M	D50B 14305-EA	★ D50Z 14305-E
ED-D30B 14305-DD	★ D30Z 14305-N	D5ZB 14305-AB	★ D5ZZ 14305-A
D30B 14305-DE	★ D30Z 14305-N	D5ZB 14305-AC	★ D5ZZ 14305-A
D30B 14305-DF	★ D30Z 14305-N	D5ZB 14305-CB	★ D5ZZ 14305-C
D30B 14305-ED	D30Z 14305-E	ED-D5ZB 14305-DB	★ D5ZZ 14305-D
D30B 14305-EE	D30Z 14305-E	D5ZB 14305-DC	★ D5ZZ 14305-D
D30B 14305-EF	★ D30Z 14305-P	ED-D52B 14305-BC	★ D5FZ 14305-B
ED-D30B 14305-HD	D30Z 14305-F	D52B 14305-BD	★ D5FZ 14305-B
D30B 14305-HE	D30Z 14305-F	D6AB 14305-AA	★ D5AZ 14305-D
D30B 14305-HF	★ D30Z 14305-R	D6AB 14305-AA	★ D60Z 14305-A
ED-D30B 14305-JD	★ D30Z 14305-S	D6AB 14305-BA	★ D5AZ 14305-B
D30B 14305-JE	★ D30Z 14305-S	D6AB 14305-BA	★ D60Z 14305-B
D30B 14305-JF	★ D30Z 14305-S	D6DB 14305-AA	★ D6DZ 14305-A
D3ZB 14305-AF	★ D3ZZ 14305-E	D6EB 14305-AA	★ D6FZ 14305-A
D3ZB 14305-BC	D3ZZ 14305-B	D6EB 14305-BA	D6FZ 14305-B
D3ZB 14305-BD	D3ZZ 14305-B	D6EB 14305-CA	★ D6FZ 14305-C
D3ZB 14305-CC	★ D3ZZ 14305-C	D6EB 14305-DA	★ D6FZ 14305-D

COPYRIGHT © 1986— FORD MOTOR COMPANY —DEARBORN, MICHIGAN

IDENTIFICATION CHART

IDENTIFICATION	PART NUMBER	IDENTIFICATION	PART NUMBER
D60B 14305-AA	★D60Z 14305-A	D9AB 14305-DB	D9AZ 14305-D
D60B 14305-BA	★D60Z 14305-B	D9AB 14305-EB	★D9AZ 14305-E
D60B 14305-CA	★D60B 14305-C	D9AB 14305-FC	D9AZ 14305-F
D60B 14305-DA	★D60Z 14305-D	D9AB 14305-GB	★D9AZ 14305-G
D7AB 14305-AB	D7AZ 14305-G	D9AB 14305-HB	D9AZ 14305-H
D7AB 14305-BB	D7AZ 14305-B	D9AB 14305-JA	D9AZ 14305-J
D7AB 14305-CB	D7AZ 14305-C	D9AB 14305-KA	D9AZ 14305-K
D7AB 14305-FA	D7AZ 14305-H	D9AB 14305-LA	★D9AZ 14305-L
D7AB 14305-GA	D7AZ 14305-G	D9AB 14305-MA	★D9AZ 14305-M
D7AB 14305-HA	D7AZ 14305-H	D9AB 14305-NA	D9AZ 14305-N
D7AB 14305-DB	★D7AZ 14305-D	D9AB 14305-PA	D9AZ 14305-P
D7AB 14305-EB	★D7AZ 14305-E	D9AB 14305-RA	D9AZ 14305-R
D7BB 14305-AA	D7DZ 14305-E	D9BB 14305-AA	D9BZ 14305-A
D7DB 14305-AA	D7DZ 14305-A	D9BB 14305-AB	D9BZ 14305-A
D7DB 14305-AC	D7DZ 14305-G	D9BB 14305-BA	★D9BZ 14305-B
D7DB 14305-BA	★D7DZ 14305-B	D9BB 14305-BB	D9BZ 14305-G
D7DB 14305-CB	D7DZ 14305-C	D9BB 14305-CA	D9BZ 14305-C
D7DB 14305-CC	★D7DZ 14305-H	D9BB 14305-DA	D9BZ 14305-D
D7DB 14305-DA	★D7DZ 14305-D	D9BB 14305-EA	D9BZ 14305-E
D7DB 14305-FB	★D7DZ 14305-J	D9DB 14305-AD	★D9DZ 14305-A
D7DB 14305-GA	D7DZ 14305-A	D9DB 14305-BD	★D9DZ 14305-B
D7DB 14305-GB	★D7DZ 14305-G	D9DB 14305-CC	★D9DZ 14305-C
D7EB 14305-AA	D7FZ 14305-A	D9DB 14305-DA	★D9DZ 14305-D
D7LB 14305-AA	D7LY 14305-A	D9EB 14305-AC	D9FZ 14305-A
D7LB 14305-AB	D7LY 14305-A	D9EB 14305-BB	D9FZ 14305-B
D7VB 14305-AA	D7VY 14305-A	D9EB 14305-CB	D9FZ 14305-C
D8BB 14305-AB	★D8BZ 14305-A	D90B 14305-AA	D90Z 14305-A
D8BB 14305-AC	★D8BZ 14305-A	D90B 14305-BA	D90Z 14305-B
D8BB 14305-BB	★D8BZ 14305-B	D90B 14305-CA	★D90Z 14305-C
D8BB 14305-CB	D8BZ 14305-C	D90B 14305-DA	★D90Z 14305-D
D8BB 14305-CC	★D8BZ 14305-H	D90B 14305-EA	D90Z 14305-A
D8BB 14305-DB	D8BZ 14305-D	D90B 14305-FA	D90Z 14305-B
ED-D8BB 14305-DB	D8BZ 14305-D	D90B 14305-GA	D90Z 14305-C
D8BB 14305-DC	D8BZ 14305-D	D90B 14305-HA	★D90Z 14305-D
D8BB 14305-GA	★D8BZ 14305-G	D9ZB 14305-AA	★D9ZZ 14305-A
D8DB 14305-CA	D7DZ 14305-D	D9ZB 14305-AB	★D9ZZ 14305-A
D8EB 14305-AB	D8FZ 14305-A	D9ZB 14305-BC	★D9ZZ 14305-B
D8LB 14305-AA	D7LY 14305-A	D9ZB 14035-CA	D9ZZ 14305-C
D8VB 14305-AA	D8VY 14305-A	D9ZB 14305-DA	★D9ZZ 14305-D
D9AB 14305-AF	★D9AZ 14305-A	D9ZB 14305-EA	D9ZZ 14305-E
D9AB 14305-BF	D9AZ 14305-B	D9ZB 14305-FA	D9ZZ 14305-F
		D9ZB 14305-GA	D9ZZ 14305-G

YEAR	MODEL/RESTRICTIONS	ENGINE CYL.	ENGINE C.I.D. (C.C.D.)	PART NUMBER	DESCRIPTION	QTY.
14305	WIRING ASSY. (ALTERNATOR TO VOLTAGE REGULATOR) — Cont'd					

APPLICATION CHART

A (Mercury)

73	A - - w/o diagnostic system	8	351,400	★D3AZ 14305-H	Use w/Ford 42, 55 or 61 amp. alternator	1
73	A - - w/diagnostic system	8	351,400	★D3AZ 14305-J	Use w/Ford 55 or 61 amp. alternator	1
73	A - - w/o diagnostic system	8	429,460	★D3AZ 14305-E	Use w/Ford 55 or 61 amp. alternator	1
73	A - - w/diagnostic system	8	429,460	★D3AZ 14305-K	Use w/Ford 55 or 61 amp. alternator	1
73	A - - w/o diagnostic system	8	351,400, 429,460	★D3AZ 14305-F Not replaced	Use w/Ford 70 or 90 amp. alternator	1
73	A - - w/diagnostic system	8	351,400, 429,460	★D3AZ 14305-L Not replaced	Use w/Ford 70 or 90 amp. alternator	1
74	A	8	400	★D4AZ 14305-A	Use w/Ford 42, 55 or 61 amp. alternator	1
74	A	8	460	★D4AZ 14305-D	Use w/Ford 42, 55 or 61 amp. alternator	1
74	A	8	400,460	★D4AZ 14305-B	Use w/Ford 70 or 90 amp. alternator	1
75/76	A - - w/heated backlite or P/C	8	400	★D5AZ 14305-B	Use w/Ford 70 or 90 amp. alternator	1

YEAR	MODEL/RESTRICTIONS	ENGINE CYL.	ENGINE C.I.D. (C.C.D.)	PART NUMBER	DESCRIPTION	QTY.
14305	WIRING ASSY. (ALTERNATOR TO VOLTAGE REGULATOR) — Cont'd					

APPLICATION CHART

A (Mercury)

75/76	A - - w/o heated backlite	8	400,460	★ D5AZ 14305-D	Use w/Ford 42,55,61 amp. alternator	1
75/76	A - - w/heated backlite or P/C	8	460	★ D5AZ 14305-E	Use w/Ford 70 or 90 amp. alternator	1
77	A "Before 1/3/77"	8	351,400	D7AZ 14305-B	Use w/Ford 40 or 60 amp alternator	1
77	A "Before 1/3/77"	8	351,400	D7AZ 14305-C	Use w/Ford 70 or 90 amp alternator	1
77/78	A	8	460	★ D7AZ 14305-D	Use w/Ford 40 or 60 amp alternator	1
77/78	A	8	460	★ D7AZ 14305-E	Use w/Ford 70 or 90 amp alternator	1
77/78	A "From 1/3/77"	8	351W	D7AZ 14305-G	Use w/Ford 40 or 60 amp. alternator	1
77/78	A "From 1/3/77"	8	351W	D7AZ 14305-H	Use w/Ford 70 or 90 amp. alternator	1
79	A(74) - - with heated backlite Calif. exc. P/C- "Before 3/2/79"	8	351W	★ D9AZ 14305-A	Use w/Ford 60 or 65 amp. alternator	1
79	A - - exc P/C without heated backlite "From 3/2/79"	8	351W	D9AZ 14305-G	Use w/Ford 60 or 65 amp alternator	1
79	A(54,66) - - with heated backlite "Before 3/2/79"	8	351W	D9AZ 14305-B	Use w/Ford 70 or 90 amp. alternator	1
79	A(P/C) - - Calif.- "Before 3/2/79"	8	351W			1
79	A(54,66) - - with heated backlite "From 3/2/79"	8	351W	D9AZ 14305-H	Use w/Ford 70 or 100 amp alternator	1
79	A(P/C)- "From 3/2/79"	8	351W	D9AZ 14305-H		1
79	A(P/C) - - exc. Calif.- "Before 3/2/79"	8	351W	D9AZ 14305-D	Use w/Ford 70 or 90 amp. alternator	1
79	A - - without A.T.C. (Canada) or P/C "From 3/2/79"	8	351W	D9AZ 14305-J	Use w/Ford 60 or 65 amp alternator	1
79	A - - exc. P/C- "Before 3/2/79"	8	302	D9AZ 14305-E	Use w/Ford 60 or 65 amp. alternator	1
79	A(P/C) - - exc Calif. "From 3/2/79"	8	351W	D9AZ 14305-K	Use w/Ford 70 or 100 amp alternator	1
79	A - - with A.T.C. (Canada) "From 3/2/79"	8	351W	D9AZ 14305-R	Use w/Ford 60 or 65 amp alternator	1
79	A(P/C) "Before 3/2/79"	8	302	D9AZ 14305-F	Use w/Ford 70 or 90 amp. alternator	1
79	A - - exc. Calif. "From 3/2/79"	8	302	★ D9AZ 14305-L Not replaced	Use w/Ford 60 or 65 amp alternator	1
79	A - - Calif. "From 3/2/79"	8	302	D9AZ 14305-N	Use w/Ford 60 or 65 amp alternator	1
79	A - - exc. Calif. "From 3/2/79"	8	302	D9AZ 14305-M	Use w/Ford 70 or 100 amp alternator	1
79	A - - Calif. "From 3/2/79"	8	302	D9AZ 14305-R	Use w/Ford 70 or 100 amp alternator	1

C (Montego)

73	C - - w/o Rallye instrument cluster	6&8	All	★ D30Z 14305-L Not replaced	Use w/Ford 42 amp. alternator	1
73	C - - w/o Rallye instrument cluster	6&8	All		Use w/Ford 55 or 61 amp. alternator	1
73	C - - w/o Rallye instrument cluster	6&8	250,302, 351,400	★ D30Z 14305-N	Use w/Ford 70 or 90 amp. alternator	1
73	C - - w/o Rallye instrument cluster "Before 3/1/73"	8	429, 460 P/C	D30Z 14305-F	Use w/Ford 70 or 90 amp. alternator	1
73	C - - w/o Rallye instrument cluster "From 3/1/73"	8	429, 460 P/C	★ D30Z 14305-R	Use w/Ford 70 or 90 amp. alternator	1
73	C - - w/Rallye instrument cluster "Before 3/1/73"	6&8	All	D30Z 14305-C	Use w/Ford 42, 55 or 61 amp. alternator	1
73	C - - w/Rallye instrument cluster "From 3/1/73"	6&8	All	★ D30Z 14305-M	Use w/Ford 42, 55 or 61 amp. alternator	1

COPYRIGHT © 1986— FORD MOTOR COMPANY —DEARBORN, MICHIGAN

14305 WIRING ASSY. (ALTERNATOR TO VOLTAGE REGULATOR) — Cont'd

APPLICATION CHART

C (Montego)

YEAR	MODEL/RESTRICTIONS	ENGINE CYL.	ENGINE C.I.D. (C.C.D.)	PART NUMBER	DESCRIPTION	QTY.
73	C – – w/Rallye instrument cluster "Before 3/1/73"	6&8	250,302, 351,400	D30Z 14305–E	Use w/Ford 70 or 90 amp. alternator	1
73	C – – w/Rallye instrument cluster "From 3/1/73"	6&8	250,302, 351,400	★ D30Z 14305–P Not replaced	Use w/Ford 70 or 90 amp. alternator	1
73	C – – w/Rallye instrument cluster	8	429, 460 P/C	★ D30Z 14305–S Not replaced	Use w/Ford 70 or 90 amp. alternator	1
74	C – – w/o Rallye instrument cluster	6&8	250,302, 351,400	★ D40Z 14305–B Not replaced	Use w/Ford 42,55 or 61 amp. alternator	1
74	C – – w/o Rallye instrument cluster	6&8	302,351, 400	★ D40Z 14305–D Not replaced	Use w/Ford 70 or 90 amp. alternator	1
74	C – – w/o Rallye instrument cluster	8	460	★ D40Z 14305–F Not replaced	Use w/Ford 70 or 90 amp. alternator	1
74	C – – w/Rallye instrument cluster	8	302,351, 400	★ D40Z 14305–C Not replaced	Use w/Ford 42,55 or 61 amp. alternator	1
74	C – – w/Rallye instrument cluster	8	302,351, 400	★ D40Z 14305–E Not replaced	Use w/Ford 70 or 90 amp. alternator	1
74	C – – w/Rallye instrument cluster	8	460	★ D40Z 14305–G Not replaced	Use w/Ford 70 or 90 amp. alternator	1
75	C – – w/o Rallye instrument cluster	8	351,400	★ D5AZ 14305–A Not replaced	Use w/Ford 40 or 60 amp. alternator	1
75	C – – w/o Rallye instrument cluster	8	351,400	★ D5AZ 14305–B Not replaced	Use w/Ford 70 or 90 amp. alternator	1
75	C – – w/o Rallye instrument cluster	8	460	★ D5AZ 14305–D Not replaced	Use w/Ford 40 or 60 amp. alternator	1
75	C – – w/o Rallye instrument cluster	8	460	★ D5AZ 14305–E	Use w/Ford 70 or 90 amp. alternator	1
75	C – – w/Rallye instrument cluster	8	351,400	★ D50Z 14305–D Not replaced	Use w/Ford 70 or 90 amp. alternator	1
75	C – – w/Rallye instrument cluster	8	All	★ D50Z 14305–E Not replaced	Use w/Ford 40 or 60 amp. alternator	1
75	C – – w/Rallye instrument cluster	8	460	★ D50Z 14305–C	Use w/Ford 70 or 90 amp. alternator	1
76	C	8	351,400	★ D60Z 14305–A	Use w/Ford 40 or 60 amp. alternator	1
76	C	8	351,400	★ D60Z 14305–B	Use w/Ford 70 or 90 amp. alternator	1
76	C	8	460	★ D60Z 14305–C	Use w/Ford 40 or 60 amp. alternator	1
76	C	8	460	★ D60Z 14305–D	Use w/Ford 70 or 90 amp. alternator	1

D (Lincoln)

73/76	D				Refer to group 14398	
77	D – – w/o heated backlite	8	400	D7VY 14305–A	Use w/Ford 40 or 60 amp alternator	1
78/	D	8	400	D8VY 14305–A	Use w/Ford 60 amp. alternator	1

F (Cougar)

73	F – – w/o gauges	8	All	★ D3DZ 14305–B	Use w/Ford 42, 55 or 61 amp. alternator	1
73	F – – w/gauges	8	All	★ D3ZZ 14305–E	Use w/Ford 42, 55 or 61 amp. alternator	1
73	F – – w/o gauges	8	All	★ D3ZZ 14305–C	Use w/Ford 70 amp. alternator	1
73	F – – w/gauges	8	All	D3ZZ 14305–B	Use w/Ford 70 amp. alternator	1
74	F	8	351,400, 460	★ D40Z 14305–C Not replaced	Use w/Ford 42, 55 or 61 amp. alternator	1
74	F	8	351,400	★ D40Z 14305–E	Use w/Ford 70 or 90 amp. alternator	1
74	F	8	460	★ D40Z 14305–G	Use w/Ford 70 or 90 amp. alternator	1
75	F	8	351,400	★ D50Z 14305–D	Use w/Ford 70 or 90 amp. alternator	1

14305 WIRING ASSY. (ALTERNATOR TO VOLTAGE REGULATOR) — Cont'd

APPLICATION CHART

F (Cougar)

YEAR	MODEL/RESTRICTIONS	ENGINE CYL.	ENGINE C.I.D. (C.C.D.)	PART NUMBER	DESCRIPTION	QTY.
75	F	8	All	★D5OZ 14305-E	Use w/Ford 42, 55, 61 amp. alternator	1
75	F	8	460	★D5OZ 14305-C	Use w/Ford 70 or 90 amp. alternator	1
76	F	8	351,400	★D6OZ 14305-A	Use w/Ford 40 or 60 amp. alternator	1
76	F	8	351,400	★D6OZ 14305-B	Use w/Ford 70 or 90 amp. alternator	1
76	F	8	460	★D6OZ 14305-C	Use w/Ford 40 or 60 amp. alternator	1
76	F	8	460	★D6OZ 14305-D	Use w/Ford 70 or 90 amp. alternator	1
77/78	F - - w/o heated backlite	8	302,400	D7AZ 14305-B	Use w/Ford 40 or 60 amp alternator	1
77/78	F - - w/o heated backlite	8	351M			1
77	F - - w/o heated backlite "Before 1/3/77"	8	351W			1
77/78	F - - w/o heated backlite "From 1/3/77"	8	351W	D7AZ 14305-G	Use w/Ford 40 or 60 amp alternator	1
77/78	F - - w/heated backlite	8	302,400	D7AZ 14305-C	Use w/Ford 70 or 90 amp alternator	1
77/78	F - - w/heated backlite	8	351M			1
77	F - - w/heated backlite "Before 1/3/77"	8	351W			1
77/78	F - - w/heated backlite "From 1/3/77"	8	351W	D7AZ 14305-H	Use w/Ford 70 or 90 amp alternator	1
79	F - - without gauges	8	302,351	D9OZ 14305-A	Use w/Ford 40 or 60 amp. alternator	1
79	F - - without gauges	8	302,351	D9OZ 14305-B	Use w/Ford 70 or 90 amp. alternator	1
79	F - - with gauges	8	302,351	★D9OZ 14305-C	Use w/Ford 40 or 60 amp. alternator	1
79	F - - with gauges	8	302,351	★D9OZ 14305-D	Use w/Ford 70 or 90 amp. alternator	1

G (Monarch)

YEAR	MODEL/RESTRICTIONS	CYL.	C.I.D. (C.C.D.)	PART NUMBER	DESCRIPTION	QTY.
75	G	6&8	All	★D5DZ 14305-B	Use w/Ford 40 or 60 amp. alternator	1
76	G - - without A/C	6	All			1
76	G - - without heated backlite	8	All			1
75/76	G	6&8	All	★D5DZ 14305-C	Use w/Ford 70 or 90 amp. alternator	1
76	G - - A/C "Before 3/1/76"	6	All	★D5ZZ 14305-A	Use w/Ford 40 or 60 amp. alternator	1
76	G - - A/C "From 3/1/76"	6	All	★D6DZ 14305-A	Use w/Ford 40 or 60 amp. alternator	1
77	G - - without A/C w/o heated backlite "Before 11/8/76"	6	All	D7DZ 14305-A	Use w/Ford 40 or 60 amp alternator	1
77	G - - without A/C without heated backlite "From 11/8/76"	6	All	★D7DZ 14305-G	Use w/Ford 40 or 60 amp alternator	1
77	G - - A/C without heated backlite	6	All	★D7DZ 14305-B	Use w/Ford 40 or 60 amp alternator	1
77	G - - A/C w/heated backlite "Before 11/8/76"	8	All	D7DZ 14305-C	Use w/Ford 70 amp alternator	1
77/78	G - - A/C w/heated backlite "From 11/8/76"	8	All	★D7DZ 14305-H Not replaced	Use w/Ford 70 amp alternator	1
77/78	G - - A/C or P/S w/heated backlite	6	250	★D7DZ 14305-D	Use w/Ford 70 amp alternator	1
77	G "Before 11/8/76"	8	All	D7DZ 14305-F	Use w/Ford 40 or 65 amp alternator	1
77	G "From 11/8/76"	8	All	★D7DZ 14305-J	Use w/Ford 40 or 65 amp alternator	1
78	G	8	302			1
78	G - - without A/C or P/S	6	250	★D8DZ 14305-A	Use w/Ford 40 or 60 amp alternator	1
78	G - - with A/C or P/S without heated backlite	6	250	★D8DZ 14305-B	Use w/Ford 40 or 60 amp alternator	1
79	G - - with A/C and/or P/S without heated backlite	6	250	★D9DZ 14305-A	Use w/Ford 40 or 60 amp. alternator	1
79	G - - with A/C and heated backlite	6	250	★D9DZ 14305-B	Use w/Ford 70 or 90 amp. alternator	1
79	G - - without A/C or P/S	6	250	★D9DZ 14305-C	Use w/Ford 40 or 60 amp. alternator	1
79	G	8	302	★D9DZ 14305-D	Use w/Ford 40 or 65 amp. alternator	1

COPYRIGHT © 1986— FORD MOTOR COMPANY —DEARBORN, MICHIGAN

1973/79 LINCOLN-MERCURY CARS

14305 WIRING ASSY. (ALTERNATOR TO VOLTAGE REGULATOR) — Cont'd

APPLICATION CHART

J (Capri)

▲ 2000 cc @2300 cc ♦ 2600 cc ⊕ 2800 cc

YEAR	MODEL/RESTRICTIONS	ENGINE CYL.	ENGINE C.I.D. (C.C.D.)	PART NUMBER	DESCRIPTION	QTY.
73/74	J	4	▲122	★ D4RY 14305-A		1
74	J - - exc. Calif.	6	⊕171	Not replaced		1
73	J	6	♦159	D4RY 14305-B		1
74	J - - Calif.	6	⊕171			1
76	J "Before 8/1/75"	4	@140			1
76	J "Before 8/1/75"	6	⊕171	D3RY 14305-C		1
73/74	J	4	@140	★	Serviced as a part of 14398	1
76/78	J "From 8/1/75"	4	@140	★	Serviced as a part of 14398	1
76/78	J "From 8/1/75"	6	⊕171	★	Serviced as a part of 14398	1
79	J "Before 10/25/78"	6&8	171,302	★ D9ZZ 14305-B	Use w/Ford 70 or 90 amp. alternator	1
79	J "From 10/25/78"	6&8	171,302	★ D9ZZ 14305-A	Use w/Ford 70 or 90 amp alternator	1
79	J "Before 10/25/78"	4	140	D9BZ 14305-C	Use w/Ford 40 or 60 amp. alternator	1
79	J "From 10/25/78"	4	140	D9ZZ 14305-C	Use w/Ford 40 or 60 amp alternator	1
79	J "Before 10/25/78"	6&8	171,302	D9BZ 14305-D	Use w/Ford 40 or 60 amp. alternator	1
79	J "From 10/25/78"	6&8	171,302	★ D9ZZ 14305-D	Use w/Ford 40 or 60 amp alternator	1
79	J	4	140	D9ZZ 14305-E	Use w/Ford 70 or 90 amp alternator	1
79	J	6	200	D9ZZ 14305-F	Use w/Ford 40 or 65 amp. alternator	1
79	J	6	200	D9ZZ 14305-G	Use w/Ford 70 or 100 amp. alternator	1

K (Mark V)

77/	K	8	400	D7LY 14305-A	Use w/Ford 40 or 60 amp alternator	1

L (Bobcat)

@ 2300 cc ⊕ 2800 cc

74	L	4	@140	★ D4FZ 14305-D	Use w/Ford 38, 61 amp. alternator	1
74	L	4	@140	★ D4FZ 14305-C	Use w/Ford 70 amp. alternator	1
75/76	L "Before 4/23/76"	4	@140	★ D5ZZ 14305-A	Use w/Ford 40 or 60 amp. alternator	1
76	L "From 4/23/76"	4	@140	★ D6FZ 14305-A	Use w/Ford 40 or 60 amp. alternator	1
75/76	L "Before 4/23/76"	4	@140	★ D5FZ 14305-B	Use w/Ford 70 or 90 amp. alternator	1
76	L "From 4/23/76"	4	@140	D6FZ 14305-B	Use w/Ford 70 or 90 amp. alternator	1
75/76	L "Before 4/23/76"	6	⊕171	★ D5ZZ 14305-C	Use w/Ford 40 or 60 amp. alternator	1
76/78	L "From 4/23/76"	6	⊕171	★ D6FZ 14305-C	Use w/Ford 40 or 60 amp. alternator	1
75/76	L "Before 4/23/76"	6	⊕171	★ D5ZZ 14305-D	Use w/Ford 70 or 90 amp. alternator	1
76/78	L "From 4/23/76 to 6/1/78"	6	⊕171	★ D6FZ 14305-D	Use w/Ford 70 or 90 amp. alternator	1
77	L "Before 6/27/77"	4	@140	D7FZ 14305-A	Use w/Ford 40 or 60 amp alternator	1
77/78	L "From 6/27/77"	4	@140	D8FZ 14305-A	Use w/Ford 40 or 60 amp alternator	1
79	L	4	140 (2300)	D9FZ 14305-A	Use w/Ford 40 or 60 amp. alternator	1
79	L	6	171 (2800)	D9FZ 14305-B	Use w/Ford 40 or 60 amp. alternator	1
79	L	6	171 (2800)	D9FZ 14305-C	Use w/Ford 70 or 90 amp. alternator	1

P (Comet)

73	P	6	200,250	★ D3DZ 14305-D		1
73	P "Before 10/2/72"	8	302	★ D3DZ 14305-B		1
73	P "From 10/2/72"	8	302	D3ZZ 14305-D		1
74/76	P	6&8	All	★ D4DZ 14305-B	Use w/Ford 38,42,55 or 61 amp. alternator	1
75	P	6&8	All	★ D5DZ 14305-C	Use w/Ford 70 or 90 amp. alternator	1
77	P - - exc. Calif.	6	200, 250	D7DZ 14305-A	Use w/Ford 40 or 60 amp alternator	1
77	P	8	302	★ D7DZ 14305-J	Use w/Ford 40 or 60 amp alternator	1

YEAR	MODEL/RESTRICTIONS	ENGINE CYL.	ENGINE C.I.D. (C.C.D.)	PART NUMBER	DESCRIPTION	QTY.
14305	WIRING ASSY. (ALTERNATOR TO VOLTAGE REGULATOR) — Cont'd					

APPLICATION CHART

P (Zephyr)

78	P - - exc. P/C ,Taxi	6	200	★D8BZ 14305-A	Use w/Ford 60 amp alternator	1
78	P - - exc. 36R "Before 10/15/77"	4	140 (2300)	D8BZ 14305-C	Use w/Ford 60 amp alternator	1
78	P - - exc. 36R "From 10/15/77"	4	140 (2300)	★D8BZ 14305-H Not replaced	Use w/Ford 60 amp. alternator	1
78	P(54,66,74) - - exc. P/C, Taxi	8	302	D8BZ 14305-D	Use w/Ford 60 amp alternator	1
78	P(P/C, Taxi)	6&8	All	★D8BZ 14305-B	Use w/Ford 70 amp alternator	1
78	P(36R)	4	140 (2300)	★D8BZ 14305-G	Use w/Ford 70 amp alternator	1
79	P(P/C, Taxi)	8	302	★D9ZZ 14305-B	Use w/Ford 70 or 90 amp. alternator	1
79	P	6	200	D9BZ 14305-A	Use w/Ford 40 or 60 amp. alternator	1
79	P "Before 10/23/78"	6	200	★D9BZ 14305-B	Use w/Ford 70 or 90 amp. alternator	1
79	P "From 10/23/78"	6	200	D9BZ 14305-G	Use w/Ford 70 or 90 amp. alternator	1
79	P	4	140	D9BZ 14305-C	Use w/Ford 40 or 60 amp. alternator	1
79	P - - exc. P/C & Taxi	8	302	D9BZ 14305-D	Use w/Ford 40 or 60 amp. alternator	1
79	P	4	140	D9BZ 14305-E	Use w/Ford 70 or 90 amp. alternator	1

V (Versailles)

77	V	8	302,351W	★D7DZ 14305-J		1
78	V	8	302	★D7DZ 14305-H	Not replaced	1
79	V	8	302	D9DZ 14305-D		1

Y (Meteor)

73	Y - - w/o diagnostic system	8	351,400	★D3AZ 14305-H	Use w/Ford 42,55 or 61 amp. alternator	1
73	Y - - w/diagnostic system	8	351,400	★D3AZ 14305-J	Use w/Ford 55 or 61 amp. alternator	1
73	Y - - w/o diagnostic system	8	429,460	★D3AZ 14305-E	Use w/Ford 55 or 61 amp. alternator	1
73	Y - - w/diagnostic system	8	429,460	★D3AZ 14305-K	Use w/Ford 55 or 61 amp. alternator	1
73	Y - - w/o diagnostic system	8	351,400, 429,460	★D3AZ 14305-F Not replaced	Use w/Ford 70 or 90 amp. alternator	1
73	Y - - w/diagnostic system	8	351,400, 429,460	★D3AZ 14305-L Not replaced	Use w/Ford 70 or 90 amp. alternator	1
74	Y	8	351,400	★D4AZ 14305-A	Use w/Ford 42,55 or 61 amp. alternator	1
74	Y	8	460	★D4AZ 14305-D	Use w/Ford 42,55 or 61 amp. alternator	1
74	Y	8	351,400, 460	★D4AZ 14305-B	Use w/Ford 70 or 90 amp. alternator	1
75/76	Y	8	351M, 400	★D5AZ 14305-B Not replaced	Use w/Ford 70 or 90 amp. alternator	1
75/76	Y	8	351M, 400, 460	★D5AZ 14305-D Not replaced	Use w/Ford 40 or 60 amp. alternator	1
75/76	Y	8	460	★D5AZ 14305-E	Use w/Ford 70 or 90 amp. alternator	1
73/	A,C,F,G,Y			383255-S	(MM-296-AC)-nut-No. 10-24(attach wiring and terminal to alternator)	1
73/	A,C,F,G,Y			383256-S	(MM-296-AE)-nut-1/4"-20(attach wiring and terminal to alternator)	1
73	F			33797-S7	(M-51)-nut-5/16"-18(attach wiring lead	1
75	AY,				to block 14448)	1
73	J	4&6	All	34983-GS40	Lockwasher-split ring-M5.3(Metric)	1
				27961-GS40	Screw-pan head-M5 x 8(Metric coarse)	1

COPYRIGHT © 1986— FORD MOTOR COMPANY —DEARBORN, MICHIGAN

1973/79 LINCOLN-MERCURY CARS

YEAR	MODEL/RESTRICTIONS	PART NUMBER	DESCRIPTION	QTY.
14A309	SHELL (WIRE CONNECTOR)			
73	A,C,D,K,Y	★ D2AZ 14A309-A	Nylon -use at w/wiper motor	AR
73/ 73 75/ 79	A,C,D,F,K,P,Y - - w/warning buzzer K - - w/sun roof A,Y - - w/heated backlite D	D3AZ 14A309-C	Nylon-3 circuit	1 1 AR 1
73/	A,C,D,F,G,K,Y	C6AZ 14A309-B	Mates with C6AZ 14A309-A-female-black	AR
73/ 77/	A,C,D,F,G,K,Y V	C6AZ 14A309-A	Mates with C6AZ 14A309-B-male-black-use w/power windows	AR AR
73/78 76/77	A,P,Y - - w/heated backlite D(53)	D3AZ 14A309-A	Used in 14405 wiring assy.	AR 2
74	A,C,Y - - w/power windows, trailer towing pkg., cornering lamp, anti-theft alarm system, heated backlite	★ D4AZ 14A309-A	Not replaced	AR
76/77	A,C,F,Y	★ D6AZ 14A309-A	Blue-single used w/tailgate window and auto/seat backlatch	AR
75/77	L "Before 6/27/77"	★ D5FZ 14A309-A	Nylon-single-use at carb. vacuum solenoid wiring	1
78 77/78	G,P L "From 6/27/77"	D7FZ 14A309-A	Mates with electric choke connector at carburetor or D8BZ 14489-K connector sleeve	1 1
73 76	P D,G	★ C7AZ 14A309-A	Female	1 2
74/76 76/78	P A,D,G,K,Y	★ C70Z 14A309-A	Used in 13B712 wiring assy. Used in 13B712, 14290 and 14401 wiring assy.	AR AR
75/78 75/76	A(71) - - w/power tailgate window Y(71)	★ D3AZ 14A309-B		1 1
75/78 75/76 75/78	A(71) - - w/power tailgate Y(71) C,F - - with A/C	★ D50Z 14A309-B		1 1 1
79	A	D9AZ 14A309-A	Gray-single circuit-mates with 14448 junction block	AR
79	A	D9AZ 14A309-B	Green-single circuit-mates with 14448 junction block	AR
79	A	D9AZ 14A309-C	Gray-single circuit-mates with 14448 junction block or wiring 14A200, 14683 and/or 14716	AR
79	A	D9AZ 14A309-D	Green-single circuit-mates with 14448 junction block or wiring 9A840, 14A005, 14A200 and/or 15237	AR
79	A	D9ZZ 14A309-A	Blue-single circuit-mates with 14A068 fuse junction panel	1
79	A	D9ZZ 14A309-B	Light green-single circuit-mates with 14A068 fuse junction panel	1
79	A	D9ZZ 14A309-C	Pink-single circuit-mates with 14A068 fuse junction panel	1
79	A	D9ZZ 14A309-G	White-single circuit-mates with 14A068 fuse junction panel	1
14A313	WIRING ASSY. (SEAT BELT WARNING INDICATOR)			
75/78 75/76	A Y	★ D4AZ 14A313-A Not replaced	#D5AB 14A313-AB-headlamp warning relay and buzzer to 14401	1 1
79	A - - w/seat belt "chime" warning system	★ D9AZ 14A313-A Not replaced	#D9AB 14A515-AA,AB	1
77/78	F	★ D70Z 14A313-A Not replaced	#D70B 14A313-AB,AC- use w/visibility light group	1
79	F	D8SZ 14A313-A	#D8SB 14A515-AA-"Chime" warning system	1
79	F	D90Z 14A313-A	#D90B-14A313-AB-use w/ visibility light group	1
75	G - - M/T	D5DZ 14A313-B	#D5DB 14A515-BA-w/seat belt and floor heat sensor	1
74/75	P - - M/T	D4DZ 14A313-A	#D4DB 14A515-AB-w/o floor heat sensor	1
75	P - - M/T	D5DZ 14A313-C	#D5BB 14A515-AA-w/seat belts and floor heat sensor	1
77	K - - w/o headlamp warning	D7LY 14A313-A	#D7LB-14A313-AA	1
78/ 79	K D	D8LY 14A313-A	#D8LB 14A515-AA- "Chime" warning system	1 1
14A318	WIRE ASSY. (ACCESSORY FEED)-if not listed below-improvise from bulk wiring (14296)			
73	A,Y - - w/o cornering lamps with speed control, w/sun roof, power door locks or heated backlite	D3AZ 14A318-A	#D3AB 14A318-AA,AB	1

YEAR	MODEL/RESTRICTIONS	PART NUMBER	DESCRIPTION	QTY.
14A318	WIRE ASSY. (ACCESSORY FEED)-if not listed below-improvise from bulk wiring (14296) — Cont'd			
74/78	A,Y - - w/anti-theft alarm system, power door locks, heated backlite, rear window defogger or brake skid control	★ D4AZ 14A318-A Not replaced	# D4AB 14A318-AA, D6AB 14A318-AA	1
73 73/75	F P	★ C9ZZ 14A318-A Not replaced	Power backlite, defogger, speed control, seat belts, power antenna, tilt strg. column, power windows, courtesy lights	1 1
75/ 76 77/	G - - w/anti-theft alarm system, heated backlite or brake skid control G - - w/rear window defogger, speed control or power windows G - - w/power luggage compt. door, illuminated entry system and or cornering lamps	★ D5DZ 14A318-A	# D5DB 14A318-AA	1 AR AR
74	L - - w/anti-theft alarm system	D4ZZ 14A318-A	# D4ZB 14A318-AC	1
76/	G	★ D6DZ 14A318-A	# D6DB 14A318-AA	1
78/	F - - with moon roof	D8SZ 14A318-A	# D8SB 14A318-AB	1
78 78	P - - with power windows and/or power door locks P(54,74) - - (P/C & Taxi) - - with marker lamp	★ D8BZ 14A318-C Not replaced	# D8BB 14A318-BA or CA	1 1
79	J - - with console	★ D9ZZ 14A318-A	# D9ZB 14A318-AC-not replaced	1
79	J - - 4 cyl. 140 w/TC	D9ZZ 14A318-B	# D9ZB 14A318-BA	1
14A320	WIRE ASSY. (AUTO/HEADLAMP DIMMER SWITCH)			
77/78	D	D7VY 14A320-A	# D7VB 14A320-AA jumper	1
79	D	D9VY 14A320-A	# D9VB 14A320-AA jumper	1
14324	WIRE ASSY. (ENGINE TO FRAME)			
73/74	J - - 4 cyl. 122(2000 cc)and radio	D3RY 14324-B		1
73	J - - 6 cyl. 159(2600 cc)and radio	D3RY 14324-A		1
74	J - - 6 cyl. 171(2800 cc)and radio	D4RY 14324-A	Ign. coil to engine	1
76/78	J - - 4 cyl. 140(2300 cc)	★ D5RY 14324-A	Heater to engine-11 7/8" long-not replaced	1
76/78	J - - 4 cyl. 140(2300 cc),6 cyl. 171(2800 cc)	★ D5RY 14324-B	Heater to transmission (radio ground)-not replaced	1
76/78	J - - 6 cyl. 171 (2800 cc)	★ D6RY 14324-B	Exhaust manifold to side rail (radio ground)-not replaced	2
76/78	J - - 6 cyl. 171 (2800 cc)	★ D6RY 14324-A	Air pump to side rail (radio ground)-not replaced	1
73/78	J - - 4 cyl. 122(2000 cc)	E602184-S72	(AB-16-G)-bolt-M8 x 12 MM (attach. wiring to engine)(Metric coarse)	1
73/78	J	E630318-S71	(M-8)-washer	2
74/76	J	E610265-S70	Screw	AR
76/78	J	E630317-S71	Lockwasher serrated	AR
14334-5	WIRING ASSY. (INTERIOR LAMP FEED)-Refer to groups 13A709 & 13A719			
14A335	HOUSING ASSY. (WINDOW REGULATOR SWITCH)-Refer to group 14527			
14A336	INSULATOR (WIRING TERMINAL)-Refer to group 7E464			
14A346	WIRING ASSY. (TRAILER BATTERY FEED)			
73/	K	★ D2SZ 14A346-B	# D2SB 14A346-AE-not replaced	1
14A347	CONNECTOR KIT (TRAILER WIRING)			
73/75	A,C,D,F,G,K,L,P,Y	★ C7AZ 14A347-B	Not replaced	1

Consists of

1-C6RA 14A496-A	Bracket	2-34657-S	Nut and washer
1-C8PJ 14487-A	Connector	2-36822-S	Bolt
2-20324-S	Bolt	2-44713-S	Flat washer
2-34656-S	Nut and washer	1-Installation sketch	

COPYRIGHT © 1986— FORD MOTOR COMPANY —DEARBORN, MICHIGAN

1973/79 LINCOLN-MERCURY CARS

YEAR	MODEL/RESTRICTIONS	PART NUMBER	DESCRIPTION	QTY.
14A348	WIRE ASSY. (TRAILER BRAKE CONTROL SWITCH)			
73/76	C,Y	★ D7TZ 14A348-A	#D2AB 14A348-BA,D7TB 14A348-AA	1
73/	A - - with/class II or III towing pkg.	Not replaced		1
77/	F			1
73/	K			1
77/78	A - - w/towing pkg.	★ D7AZ 14A348-A	#D7AB 14A348-A-not replaced	1
14A353	SEAL (TAILGATE WINDOW REGULATOR SWITCH)			
73/76	C(71),Y(71)	C5AZ 14A353-E		1
77	F(71)			1
73/	A(71,74)			1
14A365-6	MOTOR ASSY. (WINDOW REGULATOR)-Refer to Body group 23394-5			
14370	WIRE ASSY. (THERMAL SENSOR)			
75/76	C - - 8 cyl. Calif.	D50Z 14370-A	#D50B 14370-AA-R.H. side switch	1
75/77	F - - 8 cyl. Calif.			1
14A380	WIRE ASSY. (SEAT BELT RETRACT)			
73/78	J - - M/T	D2RY 14A380-A	Trans. switch to instrument panel	1
73/78	J - - A/T	D2RY 14A380-B	Trans. switch to instrument panel	1
73/74	J	D3RY 14A380-A	With 1974 seat belts	2
78/	G - - w/deluxe seat belts	D8DZ 14A380-A	#D8DB 14A380-AA	1
14A382	WIRE ASSY. (WARNING INDICATOR EXTENSION)			
75/76	D,K - - w/fuel economy light-	D5SZ 14A382-A		1
14A389	MOTOR ASSY. (WINDOW REGULATOR)-Refer to Body group 23394-5			
14A390	COVER (WIRING SHIELD)			
73/76	C	D20Z 14A390-A	Use w/power windows-located in front door	2
75/	F			2
73	K			2
73/78	J	D1RY 14A390-A	Black plastic-located at rear of alternator	1
73	K	D2SZ 14A390-B	Located at front floor cross member-mates with D2SZ 14A099-F	1
73	K	D2SZ 14A390-C	Located at front floor cross member-mates with D2SZ 14A099-G	1
73/74	K	D2LY 14A390-A	R.H.-with power windows, power seats, stereo or deluxe trim	1
73/74	K	D2LY 14A390-B	L.H.-w/power windows, power seats, stereo or deluxe trim	1

14398 WIRING ASSY. (DASH PANEL TO ENGINE)

WIRING LOOM MARKING or TAG NUMBER TO SERVICE WIRING PART NUMBER GUIDE

The purpose of this guide is to facilitate the identification of the Service Wiring Part Number. The chart that follows lists in numerical sequence the Wiring Loom Markings or Tag Numbers. For many vehicles the Service Wiring Part Number will be the same as the Loom Marking or Tag Part Number. This type of replacement will cause little or no installation problems. However, when the Service Wiring differs from the Loom Marking or Tag Number it will be necessary to match lead wires and to tape up those lead wires which are not required. This is necessary when the Service Wiring has a more general application than the original wiring installed by the factory. Following this guide chart, Service Wiring Part Numbers are listed by model year and vehicle usage which will permit the identification of replacement wiring when the loom identification or tag number is not known.

IDENTIFICATION CHART

IDENTIFICATION	PART NUMBER	IDENTIFICATION	PART NUMBER
14398 WIRING ASSY. (DASH PANEL TO ENGINE) — Cont'd			
D3LB 14398-AG	★D3LY 14398-B	D50B 14398-DA	★D50Z 14398-D
ED-D3LB 14398-AG	★D3LY 14398-A	D50B 14398-DC	★D50Z 14398-D
ED-D3LB 14398-AH	★D3LY 14398-A	D50B 14398-DF	★D50Z 14398-E
ED-D3LB 14398-AK	★D3LY 14398-D	ED-D5SB 14398-BD	D5SZ 14398-D
ED-D30B 14398-AB	★D30Z 14398-A	D5SB 14398-CC	★D5SZ 14398-C
ED-D30B 14398-BC	★D30Z 14398-B	ED-D5SB 14398-CC	★D5SZ 14398-C
ED-D30B 14398-BE	★D30Z 14398-B	ED-D5SB 14398-CL	D5SZ 14398-D
ED-D30B 14398-CB	★D30Z 14398-C	D5SB 14398-DA	★D5SZ 14398-F
ED-D30B 14398-DC	★D30Z 14398-D	D5SB 14398-EA	★D5SZ 14398-E
ED-D30B 14398-DE	★D30Z 14398-D	ED-D5VB 14398-BD	★D5VY 14398-B
D3SB 14398-CH	★D3SZ 14398-F	ED-D5VB 14398-BJ	★D5VY 14398-D
ED-D3SB 14398-CH	★D3SZ 14398-C	D5VB 14398-CA	D5VY 14398-C
D3SB 14398-CJ	★D3SZ 14398-C	ED-D5VB 14398-CF	D5VY 14398-E
ED-D3SB 14398-CL	D3SZ 14398-K	D5VB 14398-DA	★D5VY 14398-F
ED-D3VB 14398-AH	D3VY 14398-A	D5VB 14398-EA	★D5VY 14398-G
D3VB 14398-AJ	★D3VY 14398-B	D5YB 14398-BD	★D5VY 14398-B
ED-D3VB 14398-AJ	★D3VY 14398-C	D6LB 14398-AA	★D6LY 14398-A
D4LB 14398-AG	★D4LY 14398-B	ED-D6LB 14398-AC	★D6LY 14398-A
D4LB 14398-AH	★D4LY 14398-B	D6LB 14398-BA	★D6LY 14398-B
D4LB 14398-AL	★D4LY 14398-B	ED-D6LB 14398-BC	★D6LY 14398-B
ED-D4LB 14398-AM	★D4LY 14398-B	D60B 14398-AC	★D60Z 14398-A
D40B 14398-CE	★D40Z 14398-C	D60B 14398-BC	★D60Z 14398-B
D40B 14398-DE	D40Z 14398-D	D6SB 14398-AD	★D6SZ 14398-A
D40B 14398-DF	D40Z 14398-D	D6SB 14398-BD	★D6SZ 14398-B
D40B 14398-GC	★D40Z 14398-G	D6SB 14398-CB	D6SZ 14398-C
D40B 14398-GE	★D40Z 14398-G	D6SB 14398-DB	D6SZ 14398-D
D40B 14398-HC	★D40Z 14398-H	D6VB 14398-AE	D6VY 14398-A
D40B 14398-HE	★D40Z 14398-H	ED-D6VB 14398-AG	D6VY 14398-E
D40B 14398-HF	★D40Z 14398-H	D6VB 14398-BE	★D6VY 14398-B
D4SB 14398-CG	D4SZ 14398-C	ED-D6VB 14398-BG	★D6VY 14398-F
D4SB 14398-CH	D4SZ 14398-C	D6VB 14398-CC	★D6VY 14398-C
D4SB 14398-CM	D4SZ 14398-C	D6VB 14398-DC	★D6VY 14398-D
ED-D4SB 14398-CN	★D4SZ 14398-F	D6VB 14398-EB	D6VY 14398-J
D4VB 14398-BJ	D4VY 14398-B	D6VB 14398-FB	D6VY 14398-K
ED-D4VB 14398-BN	★D4VY 14398-F	D7LB 14398-AE	★D7LY 14398-A
ED1-D4VB 14398-BN	★D4VY 14398-F	D7LB 14398-BE	D7LY 14398-B
D4VB 14398-CK	D4VY 14398-C	ED-D7LB 14398-BE	★D7LY 14398-G
ED-D4VB 14398-CP	D4VY 14398-E	D7LB 14398-BG	★D7LY 14398-G
ED1-D4VB 14398-CP	D4VY 14398-G	D7LB 14398-CE	★D7LY 14398-C
D5LB 14398-AC	★D5LY 14398-A	D7LB 14398-CF	★D7LY 14398-C
ED-D5LB 14398-AC	★D5LY 14398-A	D7LB 14398-CH	D7LY 14398-J
D5LB 14398-AL	D5LY 14398-B	D7LB 14398-DE	★D7LY 14398-D
ED-D5LB 14398-AL	D5LY 14398-B	D7LB 14398-DJ	★D7LY 14398-D
D50B 14398-BA	★D50Z 14398-B	D7LB 14398-EE	★D7LY 14398-E
D50B 14398-BF	★D50Z 14398-C	D7LB 14398-EF	★D7LY 14398-E
D50B 14398-BC	★D50Z 14398-B	D7LB 14398-EH	D7LY 14398-K

COPYRIGHT © 1986— FORD MOTOR COMPANY —DEARBORN, MICHIGAN

IDENTIFICATION CHART

IDENTIFICATION	PART NUMBER	IDENTIFICATION	PART NUMBER
14398 WIRING ASSY. (DASH PANEL TO ENGINE) — Cont'd			
D7LB 14398-FE	★D7LY 14398-F	D8VB 14398-AD	★D8VY 14398-G
D7LB 14398-FH	★D7LY 14398-F	D8VB 14398-AE	★D8VY 14398-L
D70B 14398-AB	D70Z 14398-B	D8VB 14398-AF	★D8VY 14398-L
D70B 14398-CC	★D70Z 14398-C	D8VB 14398-DB	★D8VY 14398-D
D7VB 14398-AC	★D7VY 14398-A	D8VB 14398-DD	★D8VY 14398-H
D7VB 14398-AD	★D7VY 14398-A	D8VB 14398-DF	D8VY 14398-S
D7VB 14398-AE	★D7VY 14398-A	D8VB 14398-EB	★D8VY 14398-E
D7VB 14398-AF	★D7VY 14398-A	D8VB 14398-ED	★D8VY 14398-J
D7VB 14398-BC	★D7VY 14398-B	D8VB 14398-EF	D8VY 14398-T
D7VB 14398-BD	★D7VY 14398-B	D8VB 14398-FA	★D8VY 14398-F
D7VB 14398-BE	★D7VY 14398-B	D8VB 14398-FC	★D8VY 14398-K
D7VB 14398-BF	★D7VY 14398-B	D8VB 14398-FD	★D8VY 14398-P
D7VB 14398-CD	D7VY 14398-C	D8VB 14398-FE	★D8VY 14398-P
D7VB 14398-CH	D7VY 14398-E	D8VB 14398-GA	★D8VY 14398-S
D7VB 14398-DD	★D7VY 14398-D	D8VB 14398-HA	★D8VY 14398-T
D7VB 14398-DG	★D7VY 14398-D	D9KB 14398-AD	D9KZ 14398-A
D7VB 14398-EA	D7VY 14398-G	D9KB 14398-AE	D9KZ 14398-C
D7VB 14398-FA	D7VY 14398-F	D9KB 14398-BD	D9KZ 14398-B
ED-D8KB 14398-AF	D8KZ 14398-A	D9KB 14398-BE	D9KZ 14398-D
ED-D8KB 14398-AG	D8KZ 14398-A	D9LB 14398-AC	D9LY 14398-C
ED-D8KB 14398-AJ	D8KZ 14398-A	D9LB 14398-BC	D9LY 14398-D
ED-D8KB 14398-AK	D8KZ 14398-B	D9LB 14398-CA	D9LY 14398-A
ED-D8LB 14398-AC	D8LY 14398-A	D9LB 14398-DA	D9LY 14398-B
D8LB 14398-BB	D8LY 14398-B	D90B 14398-AB	D90Z 14398-A
D8LB 14398-BC	D8LY 14398-B	D90B 14398-BA	★D90Z 14398-B
D8LB 14398-BD	D8LY 14398-D	D9VB 14398-AA	★D9VY 14398-C
D8LB 14398-CB	D8LY 14398-C	D9VB 14398-BA	D9VY 14398-D
D8LB 14398-CC	D8LY 14398-E	D9VB 14398-CA	D9VY 14398-A
ED-D8LB 14398-FA	D8LY 14398-F	D9VB 14398-DA	D9VY 14398-B
D8LB 14398-GA	★D8LY 14398-G	D9ZB 14398-BE	★D9ZZ 14398-B
D8LB 14398-HA	★D8LY 14398-H	D9ZB 14398-BF	★D9ZZ 14398-E
D80B 14398-AB	D80Z 14398-A	D9ZB 14398-CE	★D9ZZ 14398-C
D8VB 14398-AB	★D8VY 14398-A	D9ZB 14398-CF	★D9ZZ 14398-F
		D9ZB 14398-DA	★D9ZZ 14398-D

YEAR	MODEL/RESTRICTIONS	PART NUMBER	DESCRIPTION	QTY.
14398 WIRING ASSY. (DASH PANEL TO ENGINE) — Cont'd				

APPLICATION CHART

C (Montego)

73	C(53B,65B) - - w/o tachometer and/or hidden wipers	★D30Z 14398-A		1
73	C(53B,65B) - - w/tachometer w/o hidden wipers	★D30Z 14398-B	Not replaced	1
73	C - - w/hidden wipers w/o tachometer	★D30Z 14398-C		1
73	C - - w/hidden wipers and tachometer	★D30Z 14398-D		1
74	C - - w/o tachometer and/or A.T.C.	★D40Z 14398-C		1
74	C - - w/tachometer-without A.T.C.	D40Z 14398-D		1
74	C - - A.T.C. without tachometer	★D40Z 14398-G		1
74	C - - A.T.C. and tachometer	★D40Z 14398-H		1
75	C - - without A.T.C. - "Before 2/17/75"	★D50Z 14398-B		1
75	C - - without A.T.C.- "From 2/17/75"	★D50Z 14398-C		1
75	C - - A.T.C. "Before 2/17/75"	★D50Z 14398-D		1
75	C - - A.T.C. "From 2/17/75"	★D50Z 14398-E		1
76	C - - without A.T.C.	★D60Z 14398-A		1
76	C - - A.T.C.	★D60Z 14398-B		1

YEAR	MODEL/RESTRICTIONS	PART NUMBER	DESCRIPTION	QTY.
14398	WIRING ASSY. (DASH PANEL TO ENGINE) — Cont'd			
	D (Lincoln)			
73	D "Before 12/16/72"	D3VY 14398-A		1
73	D "From 12/16/72 to 5/1/73"	★D3VY 14398-B		1
73	D "From 5/1/73"	★D3VY 14398-C		1
74	D – – w/o heated backlite "Before 11/8/73"	D4VY 14398-C		1
74	D – – w/o heated backlite "From 11/8/73 to 12/31/73"	D4VY 14398-E		1
74	D – – w/o heated backlite "From 12/31/73"	D4VY 14398-G		1
74	D – – w/heated backlite "Before 11/8/73"	D4VY 14398-B		1
74	D – – w/heated backlite "From 11/8/73"	★D4VY 14398-F	Not replaced	1
75	D – – w/heated backlite "Before 2/3/75"	★D5VY 14398-B		1
75	D – – w/heated backlite "From 2/3/75 to 4/1/75"	★D5VY 14398-D		1
75	D – – w/heated backlite "From 4/1/75"	★D5VY 14398-G		1
75	D – – w/o heated backlite "Before 2/3/75"	D5VY 14398-C		1
75	D – – w/o heated backlite "From 2/3/75 to 4/1/75"	D5VY 14398-E		1
75	D – – w/o heated backlite "From 4/1/75"	★D5VY 14398-F		1
76	D – – w/o heated backlite exc. Canada "Before 8/18/75"	D6VY 14398-A		1
76	D – – w/o heated backlite exc. Canada "From 8/18/75 to 3/11/76"	D6VY 14398-E		1
76	D – – w/o heated backlite Canada– "From 9/2/75 to 3/11/76"			1
76	D – – w/o heated backlite "From 3/11/76"	D6VY 14398-J		1
76	D – – w/heated backlite exc. Canada "Before 8/18/75"	★D6VY 14398-B		1
76	D – – w/heated backlite exc. Canada– "From 8/18/75 to 3/11/76"	★D6VY 14398-F	Not replaced	1
76	D – – w/heated backlite Canada– "From 9/2/75 to 3/11/76"			1
76	D – – w/heated backlite "From 3/11/76"	D6VY 14398-K		1
76	D – – w/o heated backlite Canada– "Before 9/2/75"	★D6VY 14398-C	Not replaced	1
76	D – – w/heated backlite Canada– "Before 9/2/75"	★D6VY 14398-D	Not replaced	1
77	D – – 8 cyl. 460 exc. Calif. w/o heated backlite "Before 10/29/76"	★D7VY 14398-A	Not replaced	1
77	D – – 8 cyl. 460 exc. Calif. w/ heated backlite	★D7VY 14398-B		1
77	D – – 8 cyl. 460 exc. Calif. w/o heated backlite "From 10/29/76"			1
77	D – – 8 cyl. 400 Calif. w/o heated backlite "Before 3/15/77"	D7VY 14398-C		1
77	D – –8 cyl. 400 Calif. w/o heated backlite "From 3/15/77"	D7VY 14398-E	Used w/14305 wiring	1

COPYRIGHT © 1986 — FORD MOTOR COMPANY — DEARBORN, MICHIGAN

1973/79 LINCOLN-MERCURY CARS

YEAR	MODEL/RESTRICTIONS	PART NUMBER	DESCRIPTION	QTY.
14398	WIRING ASSY. (DASH PANEL TO ENGINE) — Cont'd			
	D (Lincoln)			
77	D – – 8 cyl. 400 Calif. w/heated backlite	★D7VY 14398-D		1
77	D – – 8 cyl. 400 exc. Calif. w/heated backlite	D7VY 14398-F	Used w/Ford 70 or 90 amp alternator	1
77	D – – 8 cyl. 400 exc. Calif. w/o heated backlite	D7VY 14398-G	Used w/Ford 40 or 60 amp alternator	1
78	D – – 8 cyl. 460 w/ heated backlite exc. Calif "Before 1/3/78"	★D8VY 14398-A	Used w/Ford 70 or 90 amp alternator-not replaced	1
78	D – – 8 cyl. 460 w/heated backlite exc. Calif. "From 1/3/78 to 5/15/78"	★D8VY 14398-G	Used w/Ford 70 or 90 amp alternator-not replaced	1
78	D – – 8 cyl. 460 w/heated backlite exc. Calif. "From 5/15/78"	★D8VY 14398-L	Used w/Ford 70 or 90 amp alternator-not replaced	1
78	D – – 8 cyl. 400 "Before 1/3/78"	★D8VY 14398-D	Used w/Ford 60 amp alternator-not replaced	1
78	D – – 8 cyl. 400 "From 1/3/78 to 5/15/78"	★D8VY 14398-H	Used w/Ford 60 amp alternator-not replaced	1
78	D – – 8 cyl. 400 exc. Calif. "From 4/17/78"	★D8VY 14398-S	Used w/Ford 60 amp alternator-not replaced	1
78	D – – 8 cyl. 400 w/o high alt. carb. Calif. "From 4/17/78"			1
78	D – – 8 cyl. 400 w/heated backlite "Before 1/3/78"	★D8VY 14398-E	Used w/Ford 70 or 90 amp alternator-not replaced	1
78	D – – 8 cyl. 400 w/heated backlite "From 1/3/78 to 4/17/78"	★D8VY 14398-J	Used w/Ford 70 or 90 amp alternator-not replaced	1
78	D – – 8 cyl. 400 w/heated backlite exc. Calif. "From 4/17/78"	★D8VY 14398-T	Used w/Ford 70 or 90 amp alternator-not replaced	1
78	D – – 8 cyl. 400 w/heated backlite w/ or w/o high alt. carb. Calif. "From 4/17/78"			1
78	D – – 8 cyl. 460 w/o heated backlite exc. Calif. "Before 1/3/78"	★D8VY 14398-F	Used w/Ford 60 amp alternator-not replaced	1
78	D – – 8 cyl. 460 w/o heated backlite exc. Calif. "From 1/3/78 to 5/15/78"	★D8VY 14398-K	Used w/Ford 60 amp alternator-not replaced	1
78	D – – 8 cyl. 460 w/o heated backlite exc. Calif. "From 5/15/78"	★D8VY 14398-P	Used w/Ford 60 amp alternator-not replaced	1
79	D – – without heated backlite or high altitude carb.	D9VY 14398-A		1
79	D – – with high altitude carb. w/o heated backlite	★D9VY 14398-C	Not replaced	1
79	D – – with heated backlite w/o high altitude carb.	D9VY 14398-B		1
79	D – – with high altitude carb. w/heated backlite	D9VY 14398-D		1
	F (Cougar)			
74	F – – without A.T.C.	D40Z 14398-D		1
74	F – – A.T.C. w/o tachometer	★D40Z 14398-G		1
74	F – – A.T.C. w/tachometer	★D40Z 14398-H		1
75	F – – without A.T.C. "Before 2/17/75"	★D50Z 14398-B		1
75	F – – without A.T.C. "From 2/17/75"	★D50Z 14398-C		1
75	F – – A.T.C. "Before 2/17/75"	★D50Z 14398-D		1

YEAR	MODEL/RESTRICTIONS	PART NUMBER	DESCRIPTION	QTY.
14398	WIRING ASSY. (DASH PANEL TO ENGINE) — Cont'd			
	F (Cougar)			
75	F – – A.T.C. "From 2/17/75"	★D50Z 14398-E		1
76	F – – without A.T.C.	★D60Z 14398-A		1
76	F – – A.T.C.	★D60Z 14398-B		1
77	F – – exc. Calif.	D70Z 14398-B		1
78	F – – without C.B. radio			1
77	F – – Calif.	★D70Z 14398-C		1
78	F – – with C.B. radio	D80Z 14398-A		1
79	F – – without C.B. radio	D90Z 14398-A		1
79	F – – with C.B. radio	★D90Z 14398-B	Not replaced	1
	J (Capri)			
	Note 1 Refer to group 14290 for units built from 6/1/79			
73	J(exc. GT) – – 4 cyl. 122(2000 cc) and M/T without diagnostic system	D3RY 14398-A		1
73	J(exc. GT) – – 4 cyl. 122(2000 cc) and M/T with diagnostic system	★D3RY 14398-G		1
73	J(exc. GT) – – 4 cyl. 122(2000 cc) and A/T without diagnostic system	★D3RY 14398-D	Not replaced	1
73	J(exc. GT) – – 4 cyl.122(2000 cc) and A/T with diagnostic system	D3RY 14398-H		1
73	J(GT) – – 4 cyl.122(2000 cc)and M/T	★D3RY 14398-B		1
73	J(GT) – – 4 cyl.122(2000 cc)and A/T	D3RY 14398-C		1
73	J(GT) – – 6 cyl.159(2600 cc)and M/T without diagnostic system	★D3RY 14398-F	Not replaced	1
73	J(GT) – – 6 cyl.159(2600 cc)and M/T with diagnostic system	★D3RY 14398-J		1
73	J(GT) – – 6 cyl.159(2600 cc)and A/T without diagnostic system	★D3RY 14398-E	Not replaced	1
73	J(GT) – – 6 cyl.159(2600 cc)and A/T with diagnostic system	★D3RY 14398-K		1
74	J – – 4 cyl. 122(2000 cc)and M/T "Before 8/1/73"	D4RY 14398-A		1
74	J – – 4 cyl. 122(2000 cc)and M/T "From 8/1/73 to 3/1/74"	D4RY 14398-B		1
74	J – – 4 cyl. 122(2000 cc)and M/T "From 3/1/74"	★D4RY 14398-L		1
74	J – – 4 cyl. 122(2000 cc)and A/T "Before 3/1/74"	D4RY 14398-C		1
74	J – – 4 cyl. 122(2000 cc)and A/T "From 3/1/74"	D4RY 14398-M		1
74	J – – 6 cyl. 171(2800 cc)and M/T "Before 3/1/74"	D4RY 14398-D		1
74	J – – 6 cyl. 171(2800 cc)and M/T "From 3/1/74"	★D4RY 14398-K	Not replaced	1
74	J – – 6 cyl. 171(2800 cc)and A/T "Before 3/1/74"	D4RY 14398-E		1
74	J – – 6 cyl. 171(2800 cc)and A/T "From 3/1/74"	★D4RY 14398-N	Not replaced	1
76	J – – 4 cyl. 140(2300cc) and M/T exc. Calif. "Before 12/1/74"	D5RY 14398-AF		1
76	J – – 4 cyl. 140(2300 cc)and M/T- exc. Calif. "From 12/1/74 to 8/1/75"	★D5RY 14398-AM		1
76	J – – 4 cyl. 140(2300 cc)and M/T "From 8/1/75 to 12/1/75"	D6RY 14398-G		1
76	J – – 4 cyl. 140(2300cc) and M/T "From 12/1/75 to 8/30/76"	D6RY 14398-M		1

COPYRIGHT © 1986 — FORD MOTOR COMPANY — DEARBORN, MICHIGAN

YEAR	MODEL/RESTRICTIONS	PART NUMBER	DESCRIPTION	QTY.
14398	WIRING ASSY. (DASH PANEL TO ENGINE) — Cont'd			

J (Capri)

Note 1 Refer to group 14290 for units built from 6/1/79

76/77	J - - 4 cyl. 140 (2300cc) and M/T "From 8/30/76to 1/1/77"	★D6RY 14398-S	Not replaced	1
77/78	J - - 4 cyl. 140(2300cc) and M/T exc. Calif. "From 1/1/77"	D7RY 14398-J		1
77/78	J - - 4 cyl. 140(2300cc) and M/T Calif. "From 1/1/77"	D7RY 14398-K		1
76	J - - 4 cyl. 140(2300cc)and M/T- Calif. "From 12/1/74 to 8/1/75"	★D5RY 14398-AK		1
76	J - - 4 cyl. 140(2300cc) and M/T Calif. "Before 12/1/74"	D5RY 14398-AE		1
76	J - - 4 cyl. 140(2300cc)and A/T- exc. calif. "From 12/1/74 to 8/1/75"	★D5RY 14398-AN		1
76	J - - 4 cyl. 140(2300cc) and A/T exc. Calif. "Before 12/1/74"	D5RY 14398-AG		1
76	J - - 4 cyl. 140(2300cc)and A/T Calif. "From 12/1/74 to 8/1/75"	★D5RY 14398-AL		1
76	J - - 4 cyl. 140(2300cc) and A/T Calif. "Before 12/1/74"	D5RY 14398-AC		1
76	J - - 4 cyl. 140(2300cc)and A/T "From 8/1/75 to 12/1/75"	★D6RY 14398-D		1
76	J - - 4 cyl. 140(2300cc) and A/T "From 12/1/75 to 8/30/76"	D6RY 14398-L		1
76/77	J - - 4 cyl. 140 (2300cc) and A/T "From 8/30/76to 1/1/77"	★D6RY 14398-R	Not replaced	1
77/78	J - - 4 cyl. 140(2300cc) and A/T "From 1/7/77"	D7RY 14398-D		1
76	J - - 6 cyl. 171(2800cc)and M/T "Before 12/1/74"	★D5RY 14398-AB		1
76	J - - 6 cyl. 171(2800cc)and M/T "From 12/1/74 to 8/1/75"	★D5RY 14398-AH		1
76	J - - 6 cyl. 171(2800cc) and A/T "Before 12/1/74"	D5RY 14398-AD		1
76	J - - 6 cyl. 171(2800cc)and A/T "From 12/1/74 to 8/1/75"	★D5RY 14398-AJ		1
76	J - - 6 cyl. 171(2800cc)and A/T- "From 8/1/75 to 12/1/75"	★D6RY 14398-B		1
76	J - - 6 cyl. 171(2800cc) and A/T "From 12/1/75 to 8/30/76"	D6RY 14398-K		1
76/77	J - - 6 cyl. 171 (2800cc) and A/T "From 8/30/76to 1/1/77"	★D6RY 14398-P	Not replaced	1
77/78	J - - 6 cyl. (2800cc) and A/T exc. Calif. "From 1/1/77"	D7RY 14398-F		1
77/78	J - - 6 cyl. (2800cc) and A/T Calif. "From 1/1/77"	D7RY 14398-H		1
76	J - - 6 cyl. 171(2800cc)and M/T- "From 8/1/75 to 12/1/75"	★D6RY 14398-A		1
76	J - - 6 cyl. 171(2800cc) and M/T "From 12/1/75 to 8/30/76"	D6RY 14398-J		1
76/77	J - - 6 cyl. 171 (2800cc) and M/T "From 8/30/76to 1/1/77"	★D6RY 14398-N	Not replaced	1
77/78	J - - 6 cyl. 171(2800cc) and M/T exc. Calif. "From 1/1/77"	D7RY 14398-E		1
77/78	J - - 6 cyl. 171(2800cc) and M/T Calif. "From 1/1/77"	D7RY 14398-G		1

YEAR	MODEL/RESTRICTIONS	PART NUMBER	DESCRIPTION	QTY.
14398	WIRING ASSY. (DASH PANEL TO ENGINE) — Cont'd			
	J (Capri)			
Note 1	Refer to group 14290 for units built from 6/1/79			
79	J – – w/o T/C "Before 10/25/78"	★D9ZZ 14398-B	Not replaced	1
79	J – – w/o T/C or heated backlite "From 10/25/78 to 6/1/79"	★D9ZZ 14398-E	Note 1–not replaced	1
79	J – – w/T/C "Before 10/25/78"	★D9ZZ 14398-C	Not replaced	1
79	J – – w/T/C Calif. "From 10/25/78 to 6/1/79"	★D9ZZ 14398-F	Note 1–not replaced	1
79	J – – w/heated backlite w/o T/C "Before 6/1/79"	★D9ZZ 14398-D	Note 1	1
	K (Mark IV, Mark V)			
73	K – – w/o heated backlite "Before 1/15/73"	★D3LY 14398-A		1
73	K – – w/o heated backlite "From 1/15/73 to 5/1/73"	★D3LY 14398-B		1
73	K – – w/o heated backlite "From 5/1/73"	★D3LY 14398-D	Not replaced	1
73	K – – w/heated backlite "Before 1/15/73"	D3SZ 14398-C		1
73	K – – w/heated backlite "From 1/15/73 to 5/1/73"	★D3SZ 14398-F		1
73	K – – w/heated backlite "From 5/1/73"	D3SZ 14398-K		1
74	K – – w/o heated backlite	★D4LY 14398-B		1
74	K – – w/heated backlite	★D4SZ 14398-F		1
75	K – – w/o heated backlite "Before 2/3/75"	★D5LY 14398-A		1
75	K – – w/o heated backlite "From 2/3/75 to 4/1/75"	D5LY 14398-B		1
75	K – – w/o heated backlite "From 4/1/75"	★D5SZ 14398-F		1
75	K – – w/heated backlite "Before 2/3/75"	★D5SZ 14398-C		1
75	K – – w/heated backlite "From 2/3/75 to 4/1/75"	D5SZ 14398-D		1
75	K – – w/heated backlite "From 4/1/75"	★D5SZ 14398-E		1
76	K – – w/o heated backlite exc. Calif.	★D6SZ 14398-A	Not replaced	1
76	K – – w/o heated backlite Calif.	★D6LY 14398-A		1
76	K – – w/heated backlite exc. Calif.	★D6SZ 14398-B		1
76	K – – w/heated backlite Calif.	★D6LY 14398-B		1
76	K – – w/o heated backlite Canada	D6SZ 14398-C		1
76	K – – w/heated backlite Canada	D6SZ 14398-D		1
77	K – – 8 cyl. 460 w/o heated backlite "Before 10/29/76"	★D7LY 14398-A		1
77	K – – 8 cyl. 460 w/o heated backlite "From 10/29/76"	D7LY 14398-B		1
77	K – – 8 cyl. 460 w/heated backlite "Before 3/15/77"			1
77	K – – 8 cyl. 460 w/heated backlite "From 3/15/77"	★D7LY 14398-G	Not replaced	1
77	K – – 8 cyl. 400 w/o heated backlite exc. Calif. "Before 3/15/77"	★D7LY 14398-C		1
77	K – – 8 cyl. 400 w/o heated backlite exc. Calif. "From 3/15/77"	D7LY 14398-J	used with 14305 wiring	1

COPYRIGHT © 1986— FORD MOTOR COMPANY —DEARBORN, MICHIGAN

1973/79 LINCOLN-MERCURY CARS

YEAR	MODEL/RESTRICTIONS	PART NUMBER	DESCRIPTION	QTY.
14398	WIRING ASSY. (DASH PANEL TO ENGINE) — Cont'd			

K (Mark IV, Mark V)

77	K - - 8 cyl. 400 w/heated backlite exc. Calif.	★D7LY 14398-D		1
77	K - - 8 cyl. 400 w/o heated backlite "Before 3/15/77"	★D7LY 14398-E	Not replaced	1
77	K - - 8 cyl. 400 w/o heated backlite "From 3/15/77"	D7LY 14398-K	used with 14305 wiring	1
77	K - - 8 cyl. 400 w/heated backlite Calif.	★D7LY 14398-F	Not replaced	1
78	K - - 8 cyl. 400 w/o heated backlite "Before 4/17/78"	D8LY 14398-B		1
78	K - - 8 cyl. 400 w/o heated backlite "From 4/17/78"	★D8LY 14398-G	Not replaced	1
78	K - - 8 cyl. 400 w/heated backlite "Before 4/17/78"	D8LY 14398-C		1
78	K - - 8 cyl. 400 w/heated backlite "From 4/17/78"	★D8LY 14398-H	Not replaced	1
78	K - - 8 cyl. 460 w/heated backlite exc. Calif.	★D8LY 14398-A	Not replaced	1
78	K - - 8 cyl. 460 w/o heated backlite	D8LY 14398-F		1
79	K - - without heated backlite or high altitude carb.	D9LY 14398-A		1
79	K - - with high altitude carb. w/o heated backlite	D9LY 14398-C		1
79	K - - with heated backlite or high altitude carb.	D9LY 14398-B		1
79	K - - with high altitude carb. w/heated backlite	D9LY 14398-D		1

P (Zephyr)

Note 1 Refer to group 14290 for units built from 6/1/79

78	P "Before 6/15/78"	D8KZ 14398-A		1
78	P "From 6/15/78"	★D8KZ 14398-B	Not replaced	1
79	P - - with gauges- "Before 6/1/79"	D9KZ 14398-A	Note 1	1
79	P - - without gauges- "Before 6/1/79"	D9KZ 14398-B	Note 1	1
73/	C,D,F	33797-S7	(M-51)-nut-5/16"-18(attach. wiring to block 14448)	1
73/	D	384007-S	(GG-369)-clip(attach. wiring to front dash panel)	2
73	D	382932-S	(GG-338-C)-clip(attach.wiring to inner panel)	AR
73/	D,K	383255-S	(MM-296-AC)-nut-No. 10-24(attach.wiring to alternator)	1
73/	D,K	383256-S	(MM-296-AE)-nut-1/4"-20(attach.wiring to alternator)	1
73/	D,K	352605-S	(GG-149)-clip(attach.wiring to engine)	1
74	D	★374532-S	(GG-335)-clip(attach wiring to A.T.C. blower housing)	AR
74	D	55981-S2	(U-254-E)-screw(attach wiring and shield to R.H. valve cover)-1/4"-14 x 1/2"	AR
75/	D	42367-S36	(U-269-B)-screw(attach wiring and shield to cowl panel)-No. 10-16 x 1/2"	AR
75	K	33769-S2	(N-89-J)-nut(attach wire to dash panel)-1/4"-20	AR
75	K	56910-S2	(U-413)-screw(attach wiring to valve cover)-No. 8-18 x 1/2"	AR

14401 WIRING ASSY. (INSTRUMENT PANEL TO DASH PANEL)

WIRING LOOM, MARKING or TAG NUMBER TO SERVICE WIRING PART NUMBER GUIDE

The purpose of this guide is to facilitate the identification of the Service Wiring Part Number. The chart that follows lists in numerical sequence the Wiring Loom Markings or Tag Numbers. For many vehicles the Service Wiring Part Number will be the same as the Loom Marking or Tag Part Number. This type of replacement will cause little or no installation problems. However, when Service Wiring differs from the Loom Marking or Tag Number it will be necessary to match lead wires and to tape up those lead wires which are not required. This is necessary when the Service Wiring has a more general application than the original wiring installed –0.005 2
chart, Service Wiring Part Numbers are listed by model year and vehicle usage which will permit the identification of replacement wiring when the loom identification marking or tag number is not known.

IDENTIFICATION CHART

IDENTIFICATION	PART NUMBER	IDENTIFICATION	PART NUMBER
14401 WIRING ASSY. (INSTRUMENT PANEL TO DASH PANEL) — Cont'd			
ED–D3AB 14401–AG	D3AZ 14401–A	ED1–D30B 14401–CG	D30Z 14401–C
D3AB 14401–AJ	D3AZ 14401–D	ED–D30B 14401–CK	D30Z 14401–G
ED–D3AB 14401–AJ	D3AZ 14401–D	ED–D30B 14401–CL	D30Z 14401–G
ED–D3AB 14401–AL	D3AZ 14401–D	D30B 14401–DK	D30Z 14401–H
ED–D3AB 14401–AN	D3AZ 14401–D	ED–D30B 14401–DK	D30Z 14401–D
D3AB 14401–AR	D3AZ 14401–G	ED1–D30B 14401–DK	D30Z 14401–D
ED–D3AB 14401–AU	D3AZ 14401–G	D30B 14401–DL	D30Z 14401–H
ED–D3AB 14401–BK	D3AZ 14401–B	ED–D30B 14401–DP	D30Z 14401–H
D3AB 14401–BL	D3AZ 14401–E	ED–D30B 14401–DR	D30Z 14401–H
ED–D3AB 14401–BL	D3AZ 14401–E	D30B 14401–DS	D30Z 14401–M
ED–D3AB 14401–BN	D3AZ 14401–E	D3VB 14401–AG	D3VY 14401–A
ED–D3AB 14401–BS	D3AZ 14401–E	D3VB 14401–AH	D3VY 14401–B
D3AB 14401–BU	D3AZ 14401–H	D3VB 14401–AJ	D3VY 14401–B
ED–D3AB 14401–BY	D3AZ 14401–H	ED–D3VB 14401–AL	D3VY 14401–C
ED–D3AB 14401–CK	D3AZ 14401–C	ED–D3VB 14401–AR	D3VY 14401–D
D3AB 14401–CL	D3AZ 14401–F	D3VB 14401–AT	D3VY 14401–D
ED–D3AB 14401–CL	D3AZ 14401–F	D3WB 14401–AB	D3WY 14401–C
ED–D3AB 14401–CN	D3AZ 14401–F	D3WB 14401–AD	D3WY 14401–C
ED–D3AB 14401–CT	D3AZ 14401–F	D3WB 14401–BD	D3WY 14401–B
ED–D3AB 14401–CX	D3AZ 14401–J	ED–D3WB 14401–BD	D3WY 14401–D
D3AB 14401–DA	★ D3AZ 14401–K	D4AB 14401–AK	D4AZ 14401–A
ED–D3AB 14401–EA	D3AZ 14401–J	D4AB 14401–AL	D4AZ 14401–A
D3DB 14401–AG	D3DZ 14401–A	D4AB 14401–BK	D4AZ 14401–B
ED–D3DB 14401–AH	D3DZ 14401–A	D4AB 14401–BL	D4AZ 14401–B
ED–D3DB 14401–AM	D3DZ 14401–C	D4AB 14401–CK	D4AZ 14401–C
ED–D3DB 14401–AN	D3DZ 14401–G	D4AB 14401–CL	D4AZ 14401–C
ED–D3DB 14401–BF	D3DZ 14401–B	D4DB 14401–AC	D4DZ 14401–B
ED–D3DB 14401–BG	D3DZ 14401–B	D4DB 14401–AE	D4DZ 14401–B
ED–D3DB 14401–BL	D3DZ 14401–D	ED–D4DB 14401–AE	D4DZ 14401–B
ED–D3DB 14401–BM	D3DZ 14401–H	D4LB 14401–AE	D4LY 14401–A
D3LB 14401–AJ	D3LY 14401–B	ED–D4LB 14401–AF	D4LY 14401–A
ED–D3LB 14401–AJ	D3LY 14401–B	D4LB 14401–AG	D4LY 14401–A
ED–D3LB 14401–AL	D3LY 14401–A	D40B 14401–CF	D40Z 14401–C
ED–D3LB 14401–AN	D3LY 14401–C	D40B 14401–CJ	D40Z 14401–C
ED–D3LB 14401–AP	D3LY 14401–B	D40B 14401–DF	D40Z 14401–D
D3LB 14401–AV	D3LY 14401–D	D40B 14401–DJ	D40Z 14401–D
ED1–D30B 14401–AG	D30Z 14401–A	D40B 14401–FF	D40Z 14401–F
ED–D30B 14401–AK	D30Z 14401–E	D40B 14401–FG	D40Z 14401–F
ED–D30B 14401–AL	D30Z 14401–E	ED–D40B 14401–FL	D40Z 14401–F
ED1–D30B 14401–BK	D30Z 14401–B	D4VB 14401–AF	D4VY 14401–A
ED–D30B 14401–BP	D30Z 14401–F	D4VB 14401–AG	D4VY 14401–A
ED–D30B 14401–BR	D30Z 14401–F	D42B 14401–AC	D4FZ 14401–A
D30B 14401–CG	D30Z 14401–G	ED–D42B 14401–AE	D4FZ 14401–A

COPYRIGHT © 1986 — FORD MOTOR COMPANY — DEARBORN, MICHIGAN

IDENTIFICATION CHART

IDENTIFICATION	PART NUMBER	IDENTIFICATION	PART NUMBER
14401 WIRING ASSY. (INSTRUMENT PANEL TO DASH PANEL) — Cont'd			
ED-D42B 14401-AH	D4FZ 14401-C	D52B 14401-BH	D5FZ 14401-D
D42B 14401-BC	D4FZ 14401-D	ED-D52B 14401-CE	D5FZ 14401-E
ED-D42B 14401-BF	D4FZ 14401-D	ED-D52B 14401-CG	D5FZ 14401-E
D5AB 14401-AD	D5AZ 14401-A	D52B 14401-CH	D5FZ 14401-E
ED-D5AB 14401-AM	D5AZ 14401-G	D6AB 14401-AE	D6AZ 14401-A
D5AB 14401-AN	D5AZ 14401-G	ED-D6AB 14401-AG	D6AZ 14401-A
D5AB 14401-BD	D5AZ 14401-B	D6AB 14401-AH	D6AZ 14401-D
ED-D5AB 14401-BM	D5AZ 14401-H	D6AB 14401-BE	D6AZ 14401-B
D5AB 14401-BN	D5AZ 14401-H	D6AB 14401-BG	D6AZ 14401-E
D5AB 14401-CD	D5AZ 14401-C	D6AB 14401-CE	D6AZ 14401-C
ED-D5AB 14401-CG	D5AZ 14401-C	D6AB 14401-CG	D6AZ 14401-F
ED-D5AB 14401-CN	D5AZ 14401-J	D6BB 14401-AE	D6DZ 14401-D
D5AB 14401-CP	D5AZ 14401-J	ED-D6BB 14401-AJ	D6DZ 14401-D
D5BB 14401-AD	D5DZ 14401-A	D6BB 14401-BE	D6DZ 14401-E
ED-D5BB 14401-AF	D5DZ 14401-K	ED-D6BB 14401-BK	D6DZ 14401-E
D5BB 14401-AG	D5DZ 14401-K	D6DB 14401-AF	D6DZ 14401-A
ED-D5DB 14401-BJ	D5DZ 14401-F	D6DB 14401-AJ	D6DZ 14401-A
D5DB 14401-BL	D5DZ 14401-D	D6DB 14401-BF	D6DZ 14401-B
ED-D5DB 14401-CK	D5DZ 14401-G	D6DB 14401-BJ	D6DZ 14401-B
D5DB 14401-CM	D5DZ 14401-E	D6EB 14401-AD	D6FZ 14401-A
D5DB 14401-DB	D5DZ 14401-D	ED-D6EB 14401-AF	D6FZ 14401-A
ED-D5DB 14401-DE	D5DZ 14401-D	D6EB 14401-AF	D6FZ 14401-A
ED-D5DB 14401-DG	D5DZ 14401-D	D6EB 14401-BC	D6FZ 14401-D
D5DB 14401-EB	D5DZ 14401-E	ED-D6EB 14401-BF	D6FZ 14401-D
ED-D5DB 14401-EE	D5DZ 14401-E	D6EB 14401-BF	D6FZ 14401-D
ED-D5DB 14401-EG	D5DZ 14401-E	D6EB 14401-CC	D6FZ 14401-E
D5LB 14401-AC	D5LY 14401-A	ED-D6EB 14401-CF	D6FZ 14401-E
D5LB 14401-AF	D5LY 14401-B	D6EB 14401-CF	D6FZ 14401-E
ED-D5LB 14401-AJ	D5LY 14401-A	D6LB 14401-AE	D6LY 14401-A
ED-D5LB 14401-AP	D5LY 14401-B	D6LB 14401-AG	D6LY 14401-B
ED-D5LB 14401-AX	D5LY 14401-B	D6LB 14401-AH	D6LY 14401-C
D5LB 14401-AY	D5LY 14401-B	D6LB 14401-AJ	D6LY 14401-C
D50B 14401-AC	D50Z 14401-A	D60B 14401-AD	D60Z 14401-A
ED-D50B 14401-AF	D50Z 14401-D	ED-D60B 14401-AH	D60Z 14401-D
D50B 14401-AG	D50Z 14401-D	D60B 14401-BD	D60Z 14401-B
ED-D50B 14401-AH	D50Z 14401-D	ED-D60B 14401-BH	D60Z 14401-E
D50B 14401-AK	D50Z 14401-D	D60B 14401-CD	D60Z 14401-C
D50B 14401-BC	D50Z 14401-B	ED-D60B 14401-CH	D60Z 14401-F
ED-D50B 14401-BF	D50Z 14401-E	D6VB 14401-AD	D6VY 14401-A
D50B 14401-BG	D50Z 14401-E	D6VB 14401-AE	D6VY 14401-B
ED-D50B 14401-BH	D50Z 14401-E	D6VB 14401-AF	D6VY 14401-B
D50B 14401-BK	D50Z 14401-E	D7AB 14401-AC	D7AZ 14401-A
D50B 14401-CC	D50Z 14401-C	D7AB 14401-AD	D7AZ 14401-A
ED-D50B 14401-CD	D50Z 14401-C	D7AB 14401-BD	D7AZ 14401-B
ED-D50B 14401-CH	D50Z 14401-F	D7AB 14401-BE	D7AZ 14401-B
D50B 14401-CJ	D50Z 14401-F	D7AB 14401-CD	D7AZ 14401-C
ED-D50B 14401-CK	D50Z 14401-F	D7AB 14401-CE	D7AZ 14401-C
D50B 14401-CM	D50Z 14401-F	D7BB 14401-AA	D7DZ 14401-C
D5VB 14401-AC	D5VY 14401-A	D7BB 14401-BB	D7DZ 14401-D
ED-D5VB 14401-AE	D5VY 14401-A	D7DB 14401-AC	D7DZ 14401-A
ED1-D5VB 14401-AE	D5VY 14401-B	D7DB 14401-AD	D7DZ 14401-E
ED-D5VB 14401-AG	D5VY 14401-B	D7DB 14401-AF	D7DZ 14401-E
D5VB 14401-AH	D5VY 14401-B	ED-D7DB 14401-AF	D7DZ 14401-E
D52B 14401-AC	D5FZ 14401-A	D7DB 14401-BD	D7DZ 14401-B
ED-D52B 14401-AF	D5FZ 14401-F	D7DB 14401-BG	D7DZ 14401-F
D52B 14401-AG	D5FZ 14401-F	ED-D7DB 14401-BG	D7DZ 14401-F
ED-D52B 14401-BE	D5FZ 14401-D	D7EB 14401-AA	D7FZ 14401-C
ED-D52B 14401-BG	D5FZ 14401-D	D7EB 14401-AB	D7FZ 14401-C

IDENTIFICATION CHART

IDENTIFICATION	PART NUMBER	IDENTIFICATION	PART NUMBER
14401 WIRING ASSY. (INSTRUMENT PANEL TO DASH PANEL) — Cont'd			
D7EB 14401-BB	D7FZ 14401-B	D84B 14401-AK	D84Y 14401-B
D7EB 14401-CB	D7FZ 14401-C	D9AB 14401-AR	D9AZ 14401-A
D7EB 14401-DC	D7FZ 14401-D	D9AB 14401-AT	D9AZ 14401-B
D7EB 14401-ED	D7FZ 14401-E	D9AB 14401-AV	D9AZ 14401-B
D7LB 14401-AF	D7LY 14401-A	D9AB 14401-AX	D9AZ 14401-B
D7LB 14401-AH	D7LY 14401-A	D9AB 14401-BA	D9AZ 14401-B
D70B 14401-AA	D70Z 14401-A	D9BB 14401-AP	D9BZ 14401-A
D70B 14401-BC	D70Z 14401-B	D9BB 14401-AV	D9BZ 14401-A
D70B 14401-BD	D70Z 14401-B	D9BB 14401-CA	D9BZ 14401-C
D7VB 14401-AE	D7VY 14401-A	D9DB 14401-AC	D9DZ 14401-A
D74B 14401-AG	D74Y 14401-A	D9DB 14401-AD	D9DZ 14401-A
D74B 14401-AK	D74Y 14401-A	D9DB 14401-BC	D9DZ 14401-B
D8AB 14401-AC	D8AZ 14401-A	D9DB 14401-BD	D9DZ 14401-B
D8AB 14401-BD	D8AZ 14401-B	D9DB 14401-B1D	D9DZ 14401-B
D8BB 14401-AK	D8BZ 14401-A	D9DB 14401-B2D	D9DZ 14401-B
D8BB 14401-AL	D8BZ 14401-A	D9EB 14401-AA	D9FZ 14401-A
D8BB 14401-AN	D8BZ 14401-B	D9EB 14401-BA	D9FZ 14401-B
ED D8BB 14401-AT	D8BZ 14401-C	D9EB 14401-CA	D9FZ 14401-C
D8DB 14401-AA	D8DZ 14401-A	D9EB 14401-DA	D9FZ 14401-D
D8DB 14401-AB	D8DZ 14401-C	D9EB 14401-EA	D9FZ 14401-E
D8DB 14401-BB	D8DZ 14401-B	D9LB 14401-AA	D9LY 14401-A
D8DB 14401-BC	D8DZ 14401-D	D90B 14401-AC	D90Z 14401-A
D8EB 14401-AA	D8FZ 14401-A	D90B 14401-AD	D90Z 14401-A
D8EB 14401-BE	D8FZ 14401-B	D90B 14401-BD	D90Z 14401-B
D8EB 14401-BG	D8FZ 14401-F	D90B 14401-BE	D90Z 14401-B
D8EB 14401-CA	D8FZ 14401-C	D9VB 14401-AA	D9VY 14401-A
D8EB 14401-DA	D8FZ 14401-D	D9VB 14401-AB	D9VY 14401-A
D8EB 14401-EE	D8FZ 14401-E	D9ZB 14401-AJ	D9ZZ 14401-A
D8EB 14401-EG	D8FZ 14401-G	D9ZB 14401-AK	D9ZZ 14401-A
D8LB 14401-AE	D8LY 14401-A	D9ZB 14401-AV	D9ZZ 14401-A
D80B 14401-AC	D80Z 14401-A	D9ZB 14401-BL	D9ZZ 14401-B
D80B 14401-BE	D80Z 14401-B	D9ZB 14401-BT	D9ZZ 14401-B
D8VB 14401-AE	D8VY 14401-A	D9ZB 14401-CA	D9ZZ 14401-C
D8VB 14401-AF	D8VY 14401-B	D94B 14401-AE	D94Y 14401-A
D8VB 14401-AH	D8VY 14401-C	D94B 14401-AH	D94Y 14401-A
D84Y 14401-AH	D84Y 14401-B	D94B 14401-AK	D94Y 14401-A

YEAR	MODEL/RESTRICTIONS	PART NUMBER	DESCRIPTION	QTY.
14401 WIRING ASSY. (INSTRUMENT PANEL TO DASH PANEL) — Cont'd				

APPLICATION CHART

A (Mercury)

73	A - - without A/C or A.T.C. "Before 2/15/73"	D3AZ 14401-A		1
73	A - - without A/C or A.T.C. "From 2/15/73 to 4/2/73"	★ D3AZ 14401-D	Not replaced (12/83)	1
73	A - - without A/C or A.T.C. "From 4/2/73"	★ D3AZ 14401-G	Not replaced (12/83)	1
73	A - - A/C "Before 2/15/73"	D3AZ 14401-B		1
73	A - - A/C "From 2/15/73 to 4/2/73"	D3AZ 14401-E		1
73	A - - A/C "From 4/2/73"	D3AZ 14401-H		1
73	A - - A.T.C. "Before 2/15/73"	D3AZ 14401-C		1
73	A - - A.T.C. "From 2/15/73 to 4/2/73"	D3AZ 14401-F		1
73	A - - A.T.C. "From 4/2/73"	D3AZ 14401-J		1
74	A - - without A/C or A.T.C.	D4AZ 14401-A		1
74	A - - manual A/C	D4AZ 14401-B		1

COPYRIGHT © 1986 — FORD MOTOR COMPANY — DEARBORN, MICHIGAN

1973/79 LINCOLN-MERCURY CARS

YEAR	MODEL/RESTRICTIONS	PART NUMBER	DESCRIPTION	QTY.
14401	WIRING ASSY. (INSTRUMENT PANEL TO DASH PANEL) — Cont'd			

APPLICATION CHART

A (Mercury)

74	A – – A.T.C.	D4AZ 14401-C		1
75	A – – without A/C or A.T.C. "Before 2/3/75"	D5AZ 14401-A		1
75	A – – without A/C or A.T.C. "From 2/3/75"	D5AZ 14401-G		1
75	A – – manual A/C "Before 2/3/75"	D5AZ 14401-B		1
75	A – – manual A/C "From 2/3/75"	D5AZ 14401-H		1
75	A – – A.T.C. "Before 2/3/75"	D5AZ 14401-C		1
75	A – – A.T.C. "From 2/3/75"	D5AZ 14401-J		1
76	A – – without A/C or A.T.C. "Before 3/1/76"	D6AZ 14401-A		1
76	A – – without A/C or A.T.C. "From 3/1/76"	D6AZ 14401-D		1
76	A – – A/C "Before 3/1/76"	D6AZ 14401-B		1
76	A – – with A/C "From 3/1/76"	D6AZ 14401-E		1
76	A – – A.T.C. "Before 3/1/76"	D6AZ 14401-C		1
76	A – – with A.T.C. "From 3/1/76"	D6AZ 14401-F		1
77	A – – w/o A/C or A.T.C.	D7AZ 14401-A		1
77	A – – A/C	D7AZ 14401-B		1
77	A – – A.T.C.	D7AZ 14401-C		1
78	A – – without A/C or A.T.C.	★ D8AZ 14401-A	Not replaced (3/82)	1
78	A – – with A/C or A.T.C.	D8AZ 14401-B		1
79	A – – without premium sound system	D9AZ 14401-A	Fusible link wire leads to 11450 relay routed thru grommet at L.H. side of dash panel	1
79	A – – with or without premium sound system	D9AZ 14401-B	Fusible link wire leads to 11450 relay routed thru grommet at R.H. side of dash panel	1

C (Montego)

73	C – – without A/C without hidden wipers "Before 12/16/72"	D30Z 14401-A		1
73	C – – without A/C without hidden wipers "From 12/16/72"	D30Z 14401-E		1
73	C – – A/C without hidden wipers "Before 12/16/72"	D30Z 14401-B		1
73	C – – A/C without hidden wipers "From 12/16/72"	D30Z 14401-F		1
73	C – – without A/C with hidden wipers "Before 10/16/72"	★ D30Z 14401-C	Not replaced (12/83)	1
73	C – – without A/C with hidden wipers "From 10/16/72"	D30Z 14401-G		1
73	C – – A/C with hidden wipers "Before 10/16/72"	D30Z 14401-D		1
73	C – – A/C with hidden wipers "From 10/16/72 to 5/21/73"	D30Z 14401-H		1
73	C – – A/C with hidden wipers "From 5/21/73"	D30Z 14401-M		1
74	C – – without A/C or A.T.C.	D40Z 14401-C		1
74	C – – manual A/C	D40Z 14401-D		1
74	C – – A.T.C.	D40Z 14401-F		1
75	C – – without A/C or A.T.C. "Before 2/3/75"	D50Z 14401-A		1
75	C – – without A/C or A.T.C. "From 2/3/75"	D50Z 14401-D		1
75	C – – manual A/C "Before 2/3/75"	D50Z 14401-B		1
75	C – – manual A/C "From 2/3/75"	D50Z 14401-E		1
75	C – – A.T.C. "Before 2/3/75"	D50Z 14401-C		1
75	C – – A.T.C. "From 2/3/75"	D50Z 14401-F		1
76	C – – without A/C or A.T.C. "Before 3/1/76"	D60Z 14401-A		1

YEAR	MODEL/RESTRICTIONS	PART NUMBER	DESCRIPTION	QTY.
14401	WIRING ASSY. (INSTRUMENT PANEL TO DASH PANEL) — Cont'd			

APPLICATION CHART

C (Montego)

76	C – – without A/C or A.T.C. "From 3/1/76"	D60Z 14401-D		1
76	C – – A/C "Before 3/1/76"	D60Z 14401-B		1
76	C – – A/C "From 3/1/76"	D60Z 14401-E		1
76	C – – A.T.C. "Before 3/1/76"	★D60Z 14401-C	Not replaced (12/83)	1
76	C – – A.T.C. "From 3/1/76"	D60Z 14401-F		1

D (Lincoln)

73	D "Before 12/16/72"	D3VY 14401-A		1
73	D "From 12/16/72 to 6/15/73"	★D3VY 14401-B	Not replaced (12/83)	1
73	D – – w/o passenger restraint system "From 6/15/73"	D3VY 14401-C		1
73	D – – w/passenger restraint system	★D3VY 14401-D	Not replaced (12/83)	1
74	D	D4VY 14401-A		1
75	D "Before 1/2/75"	D5VY 14401-A		1
75	D "From 1/2/75"	D5VY 14401-B		1
76	D "Before 2/2/76"	D6VY 14401-A		1
76	D "From 2/2/76"	D6VY 14401-B		1
77	D	D7VY 14401-A		1
78	D "Before 3/1/78"	D8VY 14401-A		1
78	D "From 3/1/78 to 5/18/78"	D8VY 14401-B	When used on vehicles with C.B. radio– (1) D80Z 18A832-A wiring is required	1
78	D "From 5/18/78 to 6/12/78"	★D8VY 14401-C	When used on vehicles with C.B. radio– (1) D80Z 18A832-A wiring is required– not replaced	1
78/	D "From 6/12/78"	D9VY 14401-A		1

F (Cougar)

73	F(65F,76F)	★D3WY 14401-D	Not replaced (3/79)	1
73	F(65D,76D)	D3WY 14401-C		1
74	F – – without A/C or A.T.C.	D40Z 14401-C		1
74	F – – manual A/C	D40Z 14401-D		1
74	F – – A.T.C.	D40Z 14401-F		1
75	F – – without A/C or A.T.C. "Before 2/10/75"	D50Z 14401-A		1
75	F – – without A/C or A.T.C. "From 2/10/75"	D50Z 14401-D		1
75	F – – manual A/C "Before 2/10/75"	D50Z 14401-B		1
75	F – – manual A/C "From 2/10/75"	D50Z 14401-E		1
75	F – – A.T.C. "Before 2/10/75"	D50Z 14401-C		1
75	F – – A.T.C. "From 2/10/75"	D50Z 14401-F		1
76	F – – without A/C or A.T.C. "Before 3/1/76"	D60Z 14401-A		1
76	F – – without A/C or A.T.C. "From 3/1/76"	D60Z 14401-D		1
76	F – – A/C "Before 3/1/76"	D60Z 14401-B		1
76	F – – A/C "From 3/1/76"	★D60Z 14401-E	Not replaced (12/83)	1
76	F – – A.T.C. "Before 3/1/76"	D60Z 14401-C		1
76	F – – A.T.C. "From 3/1/76"	D60Z 14401-F		1
77	F – – without A/C	D70Z 14401-A		1
77	F – – A/C	★D70Z 14401-B	Not replaced (7/82)	1
78	F – – without A/C or A.T.C.	★D80Z 14401-A	Not replaced (3/82)	1
78	F – – with A/C or A.T.C.	D80Z 14401-B		1
79	F – – without A/C or A.T.C.	D90Z 14401-A		1
79	F – – with A/C or A.T.C.	D90Z 14401-B		1

COPYRIGHT © 1986 — FORD MOTOR COMPANY — DEARBORN, MICHIGAN

YEAR	MODEL/RESTRICTIONS	PART NUMBER	DESCRIPTION	QTY.
14401	WIRING ASSY. (INSTRUMENT PANEL TO DASH PANEL) — Cont'd			

APPLICATION CHART

G (Monarch)

75	G - - without A/C "Before 2/17/75"	D5DZ 14401-F		1
75	G - - without A/C "From 2/17/75"	D5DZ 14401-D	Used w/steering column mounted wiper switch	1
75	G - - A/C "Before 2/17/75"	D5DZ 14401-G		1
75	G - - A/C "From 2/17/75"	D5DZ 14401-E	Used w/steering column mounted wiper switch	1
76	G - - without A/C	D6DZ 14401-A		1
76	G - - A/C	D6DZ 14401-B		1
77	G - - without A/C "Before 3/1/77"	D7DZ 14401-A		1
77	G - - without A/C "From 3/1/77 to 8/8/77"	D7DZ 14401-E		1
77	G - - A/C 'Before 3/1/77"	D7DZ 14401-B		1
77	G - - A/C "From 3/1/77 to 8/8/77"	D7DZ 14401-F		1
77/78	G - - without A/C or A.T.C. "From 8/8/77 to 1/19/78"	★D8DZ 14401-A	Not replaced (3/82)	1
78	G - - without A/C or A.T.C. "From 1/19/78	★D8DZ 14401-C	Not replaced (3/82)	1
77/78	G - - with A/C or A.T.C. "From 8/8/77 to 1/19/78"	★D8DZ 14401-B	Not replaced (3/82)	1
78	G - - with A/C or A.T.C. "From 1/19/78"	★D8DZ 14401-D	Not replaced (3/82)	1
79	G - - without A/C or A.T.C.	D9DZ 14401-A		1
79	G - - with A/C or A.T.C.	★D9DZ 14401-B	Not replaced (5/83)	1

J (Capri)

73	J(exc. GT) - - 4 cyl. 122(2000 cc)and M/T	D3RY 14401-D		1
73	J(exc. GT) - - 4 cyl. 122(2000 cc) and A/T	★D3RY 14401-E	Not replaced (12/83)	1
73	J(GT) - - 4 cyl. 122(2000 cc)and M/T	★D3RY 14401-C	Not replaced (12/83)	1
73	J(exc. GT) - - 6 cyl. 159(2600 cc) and M/T	D3RY 14401-A		1
73 73	J(GT) - - 4 cyl. 122(2000 cc)and A/T J(GT) - - 6 cyl. 159(2600 cc)and A/T	D3RY 14401-B		1 1
74 74	J - - 4 cyl. 122(2000 cc)-with A/C J - - 6 cyl. 171(2800 cc)-with A/C	D4RY 14401-B		1 1
74 74	J - - 4 cyl. 122(2000 cc)-without A/C "Before 4/1/74" J - - 6 cyl. 171(2800 cc)-without A/C "Before 4/1/74"	D4RY 14401-G		1 1
74 74	J - - 4 cyl. 122(2000 cc)-without A/C "From 4/1/74" J - - 6 cyl. 171(2800 cc)-without A/C "From 4/1/74"	D4RY 14401-H		1 1
76 76	J - - 4 cyl. 140(2300 cc)-with A/C J - - 6 cyl. 171(2800 cc)-with A/C "Before 12/1/74"	D5RY 14401-R		1 1
76 76	J - - 4 cyl. 140(2300 cc)-with A/C "From 12/1/74 to 8/1/75" J - - 6 cyl. 171(2800 cc)-with A/C "From 12/1/74 to 8/1/75"	D5RY 14401-U		1 1

YEAR	MODEL/RESTRICTIONS	PART NUMBER	DESCRIPTION	QTY.
14401	WIRING ASSY. (INSTRUMENT PANEL TO DASH PANEL) — Cont'd			

APPLICATION CHART

J (Capri)

76	J - - 4 cyl. 140(2300 cc)-with A/C "From 8/1/75 to 12/1/75"	★D6RY 14401-D	Not replaced (12/83)	1
76	J - - 6 cyl. 171(2800 cc)-with A/C "From 8/1/75 to 12/1/75"			1
76	J - - 4 cyl. 140(2300 cc) with A/C "From 12/1/75 to 8/30/76"	D6RY 14401-F		1
76	J - - 6 cyl. 171(2800 cc) with A/C "From 12/1/75 to 8/30/76"			1
76/77	J - - 4 cyl. 140(2300cc) with A/C "From 8/30/76 to 1/1/77"	★D6RY 14401-H	Not replaced (3/82)	1
76/77	J - - 6 cyl. 171(2800cc) with A/C "From 8/30/76 to 1/1/77"			1
77/78	J - - 4 cyl. (2300 cc) & 6 cyl. (2800 cc) with A/C "From 1/1/77"	D7RY 14401-D		1
76	J - - 4 cyl. 140(2300 cc)-without A/C "Before 12/1/74"	D5RY 14401-S		1
76	J - - 6 cyl. 171(2800 cc)-without A/C "Before 12/1/74"			1
76	J - - 4 cyl. 140(2300 cc)-without A/C "From 12/1/74 to 8/1/75"	D5RY 14401-T		1
76	J - - 6 cyl. 171(2800 cc)-without A/C "From 12/1/74 to 8/1/75"			1
76	J - - 4 cyl. 140(2300 cc)-without A/C "From 8/1/75 to 12/1/75"	★D6RY 14401-B	Not replaced (12/83)	1
76	J - - 6 cyl. 171(2800 cc)-without A/C "From 8/1/75 to 12/1/75"			1
76	J - - 4 cyl. 140(2300 cc) without A/C "From 12/1/75 to 8/30/76"	D6RY 14401-E		1
76	J - - 6 cyl. 171(2800 cc) without A/C "From 12/1/75 to 8/30/76"			1
76/77	J - - 4 cyl. 140(2300cc) w/o A/C "From 8/30/76 to 1/1/77"	★D6RY 14401-G	Not replaced (3/82)	1
76/77	J - - 6 cyl. 171(2800cc) w/o A/C "From 8/30/76 to 1/1/77"			1
77/78	J - - 4 cyl. (2300 cc) & 6 cyl. (2800 cc) without A/C "From 1/1/77"	★D7RY 14401-B	Not replaced (7/82)	1
79	J - - without console "Before 5/1/79"	★D9ZZ 14401-A	Not replaced (9/83)	1
79	J - - without console "From 5/1/79"	★D9ZZ 14401-C	Not replaced (5/83)	1
79	J - - with console "Before 5/1/79"	D9ZZ 14401-B		1
79	J - - with console "From 5/1/79"	★D9ZZ 14401-D	Not replaced (9/83)	1

K (Mark IV, Mark V)

73	K "Before 1/15/73"	★D3LY 14401-A	Not replaced (12/83)	1
73	K "From 1/15/73 to 4/2/73"	D3LY 14401-B		1
73	K - - w/o breakerless ignition system "From 4/2/73"	★D3LY 14401-C	Not replaced (12/83)	1
73	K - - w/breakerless ignition system	★D3LY 14401-D	Not replaced (12/83)	1
74	K	D4LY 14401-A		1
75	K "Before 2/3/75"	D5LY 14401-A		1
75	K "From 2/3/75"	D5LY 14401-B		1

COPYRIGHT © 1986 — FORD MOTOR COMPANY — DEARBORN, MICHIGAN

YEAR	MODEL/RESTRICTIONS	PART NUMBER	DESCRIPTION	QTY.
14401	WIRING ASSY. (INSTRUMENT PANEL TO DASH PANEL) — Cont'd			

APPLICATION CHART

K (Mark IV, Mark V)

76	K "Before 9/22/75"	D6LY 14401-A		1
76	K "From 9/22/75 to 1/5/76"	D6LY 14401-B		1
76	K "From 1/5/76"	D6LY 14401-C		1
77	K	D7LY 14401-A		1
78	K	★D8LY 14401-A	Not replaced (3/82)	1
79	K	★D9LY 14401-A	Not replaced (9/83)	1

L (Bobcat)

74	L - - without A/C "Before 3/1/74"	D4FZ 14401-A		1
74	L - - without A/C "From 3/1/74"	D4FZ 14401-C		1
74	L - - A/C	D4FZ 14401-D		1
75	L(62,64) - - without A/C and/or anti-theft alarm system or interior light group "Before 2/3/75"	D5FZ 14401-A		1
75	L(62,64) - - without A/C and/or anti-theft alarm system or interior light group "From 2/3/75"	D5FZ 14401-F		1
75 75	L(73) - - without A/C L(62,64) - - w/anti-theft alarm system and/or interior light group	D5FZ 14401-E		1 1
75	L - - A/C	D5FZ 14401-D		1
76	L(62,64) - - without A/C, interior light group or sport accent group	D6FZ 14401-A		1
76 76	L(62,64) - - without A/C-w/interior light group with sport accent group L(73) - - without A/C	D6FZ 14401-E		1 1
76	L - - A/C	★D6FZ 14401-D	Not replaced (12/83)	1
77	L - - without A/C without sports package "Before 6/27/77"	D7FZ 14401-C		1
77	L - - A/C w/o sports package "Before 6/27/77"	D7FZ 14401-B		1
77	L - - without A/C w/sports package "Before 6/27/77"	D7FZ 14401-D		1
77	L - - A/C w/sports package "Before 6/27/77"	D7FZ 14401-E		1
77/78	L(62,64) - - without A/C interior light group, luxury decor group, sports pkg, luggage compt. lamp or AM digital clock radio "From 6/27/77"	★D8FZ 14401-A	Not replaced (7/82)	1
77/78	L(62,64,73) - - with A/C, AM digital clock radio, without sports pkg. "From 6/27/77 to 11/1/77"	★D8FZ 14401-B	Not replaced (3/82)	1
78	L(62,64,73) with A/C, AM digital clock radio, without sports pkg. "From 11/1/77"	★D8FZ 14401-F	Not replaced (3/82)	1

YEAR	MODEL/RESTRICTIONS	PART NUMBER	DESCRIPTION	QTY.
14401	WIRING ASSY. (INSTRUMENT PANEL TO DASH PANEL) — Cont'd			

APPLICATION CHART

L (Bobcat)

77/78	L(73) - - with AM digital clock radio without A/C or sports pkg. "From 6/27/77"	★D8FZ 14401-C	Not replaced (3/82)	1
	L(62,64) - - with AM digital clock radio, interior light group without A/C "From 6/27/77"			1
77/78	L(62) - - with AM digital clock radio, luggage compt. lamp without A/C "From 6/27/77"			1
77/78	L(62,64) - - with AM digital clock radio, deluxe interior decor group without A/C or sports pkg. "From 6/27/77"			1
77/78	L - - with AM digital clock radio & Sports pkg. without A/C "From 6/27/77"	★D8FZ 14401-D	Not replaced (3/82)	1
77/78	L - - with AM digital clock radio, A/C & sports pkg. "From 6/27/77 to 11/1/77"	★D8FZ 14401-E	Not replaced (3/82)	1
78	L - - with AM digital clock radio, A/C & sports pkg. "From 11/1/77"	★D8FZ 14401-G	Not replaced (3/82)	1
79	L(62B,64B) - - without A/C, conv. grp., light grp., digital clock radio int. decor or accent sports grp., cigar lighter or cargo light	★D9FZ 14401-A	Not replaced (9/83)	1
79	L - - with A/C without sports pkg.	★D9FZ 14401-B	Not replaced (9/83)	1
79	L(62B-64B) - - with light grp., conv. grp. digital clock radio without A/C decor or accent grp., sports pkg. cigar lighters, squire pkg., cargo light or Bobcat sports accent pkg.	★D9FZ 14401-C	Not replaced (9/83)	1
79	L(64H-73) - - without A/C or sports pkg.			1
79	L - - with sports pkg. without A/C	★D9FZ 14401-D	Not replaced (4/83)	1
79	L - - with A/C and sports pkg.	D9FZ 14401-E		1

P (Comet)

73	P - - w/o clock or courtesy lamps- "Before 2/5/73"	D3DZ 14401-B		1
73	P - - w/o clock or courtesy lamps- "From 2/5/73 to 5/7/73"	D3DZ 14401-D		1
73	P - - w/o clock or courtesy lamp w/o passenger restraint system- "From 5/7/73"	★D3DZ 14401-H	Not replaced (12/83)	1
73	P - - w/clock and/or courtesy lamps "Before 2/5/73"	★D3DZ 14401-A	Not replaced (12/83)	1
73	P - - w/clock and/or courtesy lamp- "From 2/5/73 to 5/7/73"	D3DZ 14401-C		1

COPYRIGHT © 1986 — FORD MOTOR COMPANY — DEARBORN, MICHIGAN

YEAR	MODEL/RESTRICTIONS	PART NUMBER	DESCRIPTION	QTY.
14401	WIRING ASSY. (INSTRUMENT PANEL TO DASH PANEL) — Cont'd			

APPLICATION CHART

P (Comet)

73	P - - w/clock and/or courtesy lamp w/o passenger restraint system- "From 5/7/73"	★D3DZ 14401-G	Not replaced (12/83)	1
73/74	P - - w/passenger restraint system	D4DZ 14401-B		1
75	P "Before 2/3/75"	D5DZ 14401-A		1
75	P "From 2/3/75"	D5DZ 14401-K		1
76	P - - without A/C	D6DZ 14401-D		1
76	P - - A/C	★D6DZ 14401-E	Not replaced (12/83)	1
77	P - - without A/C	D7DZ 14401-C		1
77	P - - A/C	D7DZ 14401-D		1

P (Zephyr)

78	P "Before 2/1/78"	D8BZ 14401-A		1
78	P "From 2/1/78 to 3/20/78"	★D8BZ 14401-B	Not replaced (3/82)	1
78	P "From 3/20/78"	D8BZ 14401-C		1
79	P "Before 5/1/79"	D9BZ 14401-A		1
79	P "From 5/1/79"	★D9BZ 14401-C	Not replaced (9/83)	1

V (Versailles)

77	V	D74Y 14401-A		1
78	V "Before 1/19/78"	★D84Y 14401-A	Not replaced (3/82)	1
78	V "From 1/19/78"	★D84Y 14401-B	Not replaced (3/82)	1
79	V	★D94Y 14401-A	Not replaced (9/83)	1

Y (Meteor)

73	Y - - without A/C or A.T.C. "Before 2/15/73"	D3AZ 14401-A		1
73	Y - - without A/C or A.T.C. "From 2/15/73 to 4/2/73"	★D3AZ 14401-D	Not replaced (12/83)	1
73	Y - - without A/C or A.T.C. "From 4/2/73"	★D3AZ 14401-G	Not replaced (12/83)	1
73	Y - - A/C "Before 2/15/73"	D3AZ 14401-B		1
73	Y - - A/C "From 2/15/73 to 4/2/73"	D3AZ 14401-E		1
73	Y - - A/C "From 4/2/73"	D3AZ 14401-H		1
73	Y - - A.T.C. "Before 2/15/73"	D3AZ 14401-C		1
73	Y - - A.T.C. "From 2/15/73 to 4/2/73"	D3AZ 14401-F		1
73	Y - - A.T.C. "From 4/2/73"	D3AZ 14401-J		1
74	Y - - without A/C or A.T.C.	D4AZ 14401-A		1
74	Y - - A/C	D4AZ 14401-B		1
74	Y - - A.T.C.	D4AZ 14401-C		1
75	Y - - without A/C or A.T.C. "Before 2/3/75"	D5AZ 14401-A		1
75	Y - - without A/C or A.T.C. "From 2/3/75"	D5AZ 14401-G		1
75	Y - - manual A/C "Before 2/3/75"	D5AZ 14401-B		1
75	Y - - manual A/C "From 2/3/75"	D5AZ 14401-H		1
75	Y - - A.T.C. "Before 2/3/75"	D5AZ 14401-C		1
75	Y - - A.T.C. "From 2/3/75"	D5AZ 14401-J		1
76	Y - - without A/C or A.T.C. "Before 3/1/76"	D6AZ 14401-A		1
76	Y - - without A/C or A.T.C. "From 3/1/76"	D6AZ 14401-D		1

YEAR	MODEL/RESTRICTIONS	PART NUMBER	DESCRIPTION	QTY.
14401	WIRING ASSY. (INSTRUMENT PANEL TO DASH PANEL) — Cont'd			

APPLICATION CHART

Y (Meteor)

76	Y – – A/C "Before 3/1/76"	D6AZ 14401–B		1
76	Y – – A/C "From 3/1/76"	D6AZ 14401–E		1
76	Y – – A.T.C. "Before 3/1/76"	D6AZ 14401–C		1
76	Y – – A.T.C. "From 3/1/76"	D6AZ 14401–F		1
73/	A,Y	384007–S	(GG–369)–clip(attach wiring to instrument panel)	AR
74/	A,Y	382932–S	(GG–338–C)–clip(attach wiring to steering column)	AR
74	A,Y	52012–S8	(U–202)–screw(attach retainer on wiring to instrument panel)–No. 8–18 x 1/2"	AR
73	C,D,F,K	42134–S8	(U–249)–screw–No. 10–12 x 5/8"(attach wiring to radio bracket, and/or instrument panel)	AR
73/	C,F,K	383938–S	(UU–52–V)–screw–No. 8–12 x 1/2"(attach wiring to instrument panel)	2
73/	D	382142–S100	(GG–213–K)–clip(attach wiring to instrument panel)	AR
73/	D	381941–S100	(GG–275)–clip(attach wiring to instrument panel)	AR
73/	D	384742–S	(GG–166–D)–clip–(attach wiring to brake pedal support)	2
73/	D	55914–S2	(U–254–F)–screw–1/4"–14 x 3/4"(attach wiring to brake pedal support)	2
74/ 76	D,K A,C,F,Y	42367–S36	(U–269–B)–screw(attach wiring to cowl panel)–No. 10–16 x 1/2"	AR AR
73	K	★377988–S	(GG–289–A)–clip(attach wiring to instrument panel)	AR
73	P	55981–S2	(U–254–E)–screw–1/4"–14 x 1/2"(attach wiring to brake pedal support)	AR
73/	P	372172–S100	(GG–228)–clip(attach wiring to retainer on parking brake support)	AR
75	P	45234–S7	(M–179)–nut(attach wiring retainer to air duct)–1/4"–20	AR
76	P	★42160–S	(U–274–A)–screw(attach wiring to instrument panel extension)–No. 8–15 x 1 1/2"	AR
75	K	352879–S	(BB–528)–screw(attach wiring and retainer to instrument panel)–No. 10–24 x 5/8"	AR
75	L	382033–S100	(GG–203)–clip(attach wiring to instrument panel)	AR

14405 WIRING ASSY. (REAR LAMP)

WIRING MARKING or TAG NUMBER TO SERVICE WIRING PART NUMBER GUIDE

The purpose of this guide is to facilitate the identification of the Service Wiring Part Number. The chart that follows lists in numerical sequence the Wiring Markings or Tag Numbers. For many vehicles the Service Wiring Part Number will be the same as the Wiring Marking or Tag Part Number. This type of replacement will cause little or no installation problems. However, when Service Wiring differs from the Wiring Marking or Tag Number it will be necessary to match lead wires and to tape up those lead wires which are not required. This is necessary when the Service Wiring has a more general application than the original wiring installed by the factory. Following this guide chart, Service Wiring Part Numbers are listed by model year and vehicle usage which will permit the identification of replacement wiring when the loom identification marking or tag number is not known.

IDENTIFICATION CHART

IDENTIFICATION	PART NUMBER	IDENTIFICATION	PART NUMBER
14405 WIRING ASSY. (REAR LAMP) — Cont'd			
D3AB 14405–BD	★D3AZ 14405–B	D3AB 14405–DA	★D3AZ 14405–D
D3AB 14405–BF	★D3AZ 14405–B	D3AB 14405–DC	★D3AZ 14405–D
D3AB 14405–BH	★D3AZ 14405–K	D3AB 14405–DE	★D3AZ 14405–M

COPYRIGHT © 1986 — FORD MOTOR COMPANY — DEARBORN, MICHIGAN

IDENTIFICATION CHART

IDENTIFICATION	PART NUMBER	IDENTIFICATION	PART NUMBER
14405 WIRING ASSY. (REAR LAMP) — Cont'd			
D3LB 14405–AA	★ D3LY 14405–A	D5LB 14405–AB	★ D5LY 14405–A
D3LB 14405–AC	★ D3LY 14405–C	D5LB 14405–AC	★ D5LY 14405–B
ED–D3LB 14405–BA	★ D3LY 14405–B	D50B 14405–AA	★ D50Z 14405–A
D3LB 14405–BD	★ D3LY 14405–D	D5VB 14405–AB	D5VY 14405–A
D3MB 14405–AB	★ D3MY 14405–A	D5VB 14405–BB	★ D5VY 14405–B
ED–D3MB 14405–AD	★ D3MY 14405–A	D52B 14405–AA	★ D5FZ 14405–A
ED–D3MB 14405–AF	★ D3MY 14405–E	D52B 14405–BA	★ D5FZ 14405–B
D3MB 14405–BB	★ D3MY 14405–B	D54B 14405–AC	★ D54Y 14405–C
ED–D3MB 14405–BD	★ D3MY 14405–B	D54B 14405–AD	★ D54Y 14405–C
ED–D3MB 14405–BF	★ D3MY 14405–F	D54B 14405–AF	★ D54Y 14405–C
ED–D30B 14405–AA	★ D30Z 14405–A	D54B 14405–AG	★ D54Y 14405–C
D30B 14405–AB	★ D30Z 14405–A	D54B 14405–AH	★ D54Y 14405–C
D30B 14405–AC	★ D30Z 14405–A	D54B 14405–BD	★ D5AY 14405–B
D30B 14405–BB	★ D30Z 14405–B	D54B 14405–BE	★ D54Y 14405–B
D30B 14405–DC	★ D30Z 14405–D	D54B 14405–BF	★ D54Y 14405–B
ED–D30B 14405–FA	★ D30Z 14405–F	D6AB 14405–AA	D6AZ 14405–A
D30B 14405–FC	★ D30Z 14405–F	D6BB 14405–AA	D6DZ 14405–A
ED–D3VB 14405–AF	★ D3VY 14405–A	D6DB 14405–CA	D6DZ 14405–C
D3VB 14405–AG	★ D3VY 14405–A	D6DB 14405–DA	D6DZ 14405–D
D3VB 14405–AH	★ D3VY 14405–C	D6EB 14405–AA	D6FZ 14405–A
ED–D3VB 14405–AH	★ D3VY 14405–C	D6EB 14405–AA	D6FZ 14405–A
ED–D3VB 14405–AK	★ D3VY 14405–C	ED–D6EB 14405–AA	D6FZ 14405–A
D3VB 14405–AM	★ D3VY 14405–F	D6EB 14405–AB	D6FZ 14405–A
ED–D3VB 14405–AM	★ D3VY 14405–C	D6EB 14405–AD	D6FZ 14405–C
D3VB 14405–AN	★ D3VY 14405–F	D6EB 14405–AE	D6FZ 14405–C
D3VB 14405–BE	★ D3VY 14405–B	D6EB 14405–AF	D6FZ 14405–C
D3VB 14405–BG	★ D3VY 14405–D	D6EB 14405–BA	D6FZ 14405–B
ED–D3VB 14405–BG	★ D3VY 14405–D	D6EB 14405–BB	D6FZ 14405–B
D3VB 14405–BH	★ D3VY 14405–E	D6EB 14405–BC	D6FZ 14405–D
D3VB 14405–BJ	★ D3VY 14405–E	D6EB 14405–BD	D6FZ 14405–D
D3WB 14405–AB	★ D3WY 14405–A	D6EB 14405–BE	D6FZ 14405–D
ED–D3WB 14405–AB	★ D3WY 14405–A	D6KB 14405–AA	D64Y 14405–A
D3WB 14405–BB	★ D3WY 14405–B	D60B 14405–AA	D60Z 14405–A
ED–D3WB 14405–BB	★ D3WY 14405–B	D60B 14405–BA	D60Z 14405–B
D34B 14405–AA	★ D34Y 14405–A	D6VB 14405–CB	D6VY 14405–C
D34B 14405–AB	★ D34Y 14405–A	D6VB 14405–DA	D6VY 14405–D
ED–D34B 14405–AB	★ D34Y 14405–A	D64B 14405–CA	D64Y 14405–C
D4AB 14405–BC	★ D4AZ 14405–B	D64B 14405–DA	D64Y 14405–D
D4AB 14405–DC	★ D4AZ 14405–D	ED–D64B 14405–EA	D64Y 14405–F
D4GB 14405–AB	★ D4GY 14405–A	D6SB 14405–AC	D6SZ 14405–A
D4GB 14405–BC	★ D4GY 14405–B	D6SB 14405–AD	D6SZ 14405–B
D4LB 14405–AB	★ D4LY 14405–A	D7AB 14405–BA	D7AZ 14405–B
D4LB 14405–AC	★ D4LY 14405–A	ED–D7AB 14405–BB	D7AZ 14405–B
ED–D4LB 14405–AE	★ D4LY 14405–A	D7AB 14405–BB	D7AZ 14405–C
ED–D4LB 14405–AF	★ D4LY 14405–A	D7EB 14405–BB	D7FZ 14405–B
D4MB 14405–AB	★ D4MY 14405–A	D7KB 14405–AA	D74Y 14405–B
D4MB 14405–BB	★ D4MY 14405–B	D7LB 14405–AB	D7LY 14405–A
D40B 14405–BA	★ D40Z 14405–B	D7LB 14405–AD	D7LY 14405–B
D40B 14405–DA	★ D40Z 14405–D	D7LB 14405–AE	D7LY 14405–B
D4VB 14405–AE	★ D4VY 14405–A	D7MB 14405–AA	D7MY 14405–A
D4VB 14405–BE	★ D4VY 14405–B	D7MB 14405–BA	D7MY 14405–B
D42B 14405–AD	★ D5FZ 14405–A	D70B 14405–CC	D70Z 14405–A
D42B 14405–BC	★ D4FZ 14405–B	D70B 14405–CD	D70Z 14405–A
ED–D42B 14405–BF	★ D4FZ 14405–B	D70B 14405–C1C	D70Z 14405–C
D44B 14405–AB	★ D44Y 14405–A	D70B 14405–C2C	D70Z 14405–C
D5AB 14405–AA	★ D5AZ 14405–A	D70B 14405–DB	D70Z 14405–D

IDENTIFICATION CHART

IDENTIFICATION	PART NUMBER	IDENTIFICATION	PART NUMBER
14405 WIRING ASSY. (REAR LAMP) — Cont'd			
D70B 14405-DC	D70Z 14405-D	D8VB 14405-BA	D8VY 14405-B
D7VB 14405-AC	D7VY 14405-A	D84B 14405-AB	D84Y 14405-A
D7VB 14405-BD	D7VY 14405-B	D9BB 14405-EA	D9BZ 14405-E
D7WB 14405-AD	D7WY 14405-A	D9BB 14405-EB	D9BZ 14405-E
ED-D7WB 14405-AD	D7WY 14405-A	D9BB 14405-FA	D8ZZ 14405-A
D7WB 14405-AE	D7WY 14405-A	D9BB 14405-GA	D9BZ 14405-G
D7YB 14405-AC	D7YY 14405-A	D9BB 14405-GB	D9BZ 14405-J
ED-D74B 14405-AD	D64Y 14405-E	D9MB 14405-AB	D9MY 14405-A
D74B 14405-AE	D64Y 14405-E	D9MB 14405-AC	D9MY 14405-A
D74B 14405-AF	D64Y 14405-E	D9MB 14405-AD	D9MY 14405-A
ED-D74Y 14405-AF	D64Y 14405-E	D9MB 14405-BB	D9MY 14405-B
D74B 14405-CB	D74Y 14405-C	D9MB 14405-BC	D9MY 14405-B
D74B 14405-CC	D74Y 14405-C	D9MB 14405-BD	D9MY 14405-B
D8BB 14405-A1B	D8BZ 14405-A	D9MB 14405-BF	D9MY 14405-B
D8BB 14405-A2A	D8BZ 14405-A	D9MB 14405-CC	D9MY 14405-C
D8BB 14405-A2C	D8BZ 14405-A	D9MB 14405-CD	D9MY 14405-C
D8BB 14405-A2D	D8BZ 14405-A	D9MB 14405-CE	D9MY 14405-C
D8BB 14405-BE	D8BZ 14405-B	D9MB 14405-CF	D9MY 14405-C
D8BB 14405-BF	D8BZ 14405-B	D9MB 14405-DC	D9MY 14405-D
D8BB 14405-CC	D8BZ 14405-C	D9MB 14405-DD	D9MY 14405-D
D8BB 14405-CF	D8BZ 14405-C	D9MB 14405-DE	D9MY 14405-D
D8BB 14405-DB	D8BZ 14405-D	D9MB 14405-DF	D9MY 14405-D
D8LB 14405-AA	D8LY 14405-A	D9MB 14405-DG	D9MY 14405-D
D8LB 14405-BB	D8LY 14405-C	D9ZB 14405-CC	D9ZZ 14405-C
D8LB 14405-BC	D8BZ 14405-C	D9ZB 14405-DC	D9ZZ 14405-D
D8VB 14405-AA	D8VY 14405-A	D94B 14405-AA	D94Y 14405-A
		D94X 14405-AA	D94Y 14405-B

YEAR	MODEL/RESTRICTIONS	PART NUMBER	DESCRIPTION	QTY.
14405 WIRING ASSY. (REAR LAMP) — Cont'd				

APPLICATION CHART

A (Mercury)

73	A(exc. 71) - - 8 cyl. 351,400,429 "Before 1/16/73"	★D3MY 14405-A	Not replaced (3/79)	1
73	A(exc. 71) - - 8 cyl. 460 P/C "Before 1/16/73"	★D3MY 14405-B	Not replaced (3/79)	1
73	A(exc. 71) - - 8 cyl. 460 P/C "From 1/16/73"	★D3MY 14405-F	Not replaced (3/79)	1
74	A(53,57,65) - - 8 cyl. 400,460 exc. P/C	★D4MY 14405-A	Not replaced (3/79)	1
74	A(53,57,65) - - 8 cyl. 460 P/C	★D4MY 14405-B	Not replaced (3/79)	1
74	A(71) - - 8 cyl. 400,460 exc. P/C	★D4AZ 14405-B	Not replaced (3/79)	1
74	A(71) - - 8 cyl. 460 P/C	★D4AZ 14405-D	Not replaced (3/79)	1
75	A	★D5AZ 14405-A	Not replaced (3/79)	1
76	A	D6AZ 14405-A		1
77/78	A(53,65) exc. P/C	★D7MY 14405-A	Not replaced (3/82)	1
77	A(71) "Before 6/1/77"	D7AZ 14405-B		1
77/78	A(71) "From 6/1/77"	★D7AZ 14405-C	Not replaced (3/82)	1
77/78	A(53H) 8 cyl. 460 P/C	★D7MY 14405-B	With in-tank elect. fuel pump-not replaced (3/82)	1
79	A(54,66) - - without trailer tow pkg.	D9MY 14405-A		1
79	A(54,66) - - with trailer tow pkg.	D9MY 14405-B		1
79	A(74) - - without trailer tow pkg.	★D9MY 14405-C	R/b E0AZ 14405-D (7/82)	1
79	A(74) - - with trailer tow pkg.	D9MY 14405-D		1

COPYRIGHT © 1986 — FORD MOTOR COMPANY — DEARBORN, MICHIGAN

1973/79 LINCOLN-MERCURY CARS

YEAR	MODEL/RESTRICTIONS	PART NUMBER	DESCRIPTION	QTY.
14405	WIRING ASSY. (REAR LAMP) — Cont'd			
	C (Montego)			
74	C(exc. 71) - - w/o trailer towing pkg.	★ D4GY 14405-A	Not replaced (3/79)	1
74	C(exc. 71) - - w/trailer towing pkg.	★ D4GY 14405-B	Not replaced (3/79)	1
74	C(71) - - w/o trailer towing pkg.	★ D40Z 14405-B	Not replaced (6/78)	1
74	C(71) - - w/trailer towing pkg.	★ D40Z 14405-D	Not replaced (6/78)	1
75	C	★ D50Z 14405-A	Not replaced (3/79)	1
76	C(exc. 71) - - 8 cyl. 351,400	D60Z 14405-A		1
76	C(71) - - 8 cyl. 351,400,460			1
76	C(exc. 71) - - 8 cyl. 460	D60Z 14405-B		1
	D (Lincoln)			
73	D(53) "Before 9/5/72"	★ D3VY 14405-B	Not replaced (3/79)	1
73	D(53) "From 9/5/72"	★ D3VY 14405-E	Not replaced (3/79)	1
73	D(65) "Before 10/16/72"	★ D3VY 14405-A	Not replaced (3/79)	1
73	D(65) - - w/o passenger restraint system "From 10/16/72"	★ D3VY 14405-C	Not replaced (3/79)	1
73	D(65) - - w/passenger restraint	★ D3VY 14405-F	Not replaced (3/79)	1
74	D(53)	★ D4VY 14405-B	Not replaced (3/79)	1
74	D(65)	★ D4VY 14405-A	Not replaced (3/79)	1
75	D(53)	★ D5VY 14405-B	Not replaced (3/79)	1
75	D(60)	D5VY 14405-A		1
76	D(53)	D6VY 14405-D		1
76	D(60)	D6VY 14405-C		1
77	D(53)	★ D7VY 14405-A	Not replaced (3/82)	1
77	D(60)	★ D7VY 14405-B	Not replaced (3/82)	1
78/	D(60)	★ D8VY 14405-A	Not replaced (5/83)	1
78/	D(53)	D8VY 14405-B		1
	F (Cougar)			
73	F(65D,76D)	★ D3WY 14405-A	Not replaced (1/79)	1
73	F(65F,76F)	★ D3WY 14405-B	Not replaced (1/79)	1
74	F - - w/o trailer towing package	★ D4GY 14405-A	Not replaced (1/79)	1
74	F - - w/trailer towing package	★ D4GY 14405-B	Not replaced (1/79)	1
75	F - - 8 cyl.	★ D50Z 14405-A	Not replaced (3/79)	1
76	F - - 8 cyl. 351,400	D60Z 14405-A		1
76	F - - 8 cyl. 460	D60Z 14405-B		1
77/	F(exc. 65L,71)	★ D70Z 14405-A	Not replaced (9/83)	1
77/	F(65L)	★ D7WY 14405-A	Not replaced (9/83)	1
77	F(71)	D70Z 14405-D		1
	G (Monarch)			
75	G - - w/o trailer towing package-	★ D54Y 14405-C	Not replaced (3/79)	1
75	G - - w/trailer towing package	★ D54Y 14405-B	Not replaced (3/79)	1
76	G - - w/o trailer towing package "Before 5/3/76"	D64Y 14405-C		1
76/77	G - - w/o trailer towing package- "From 5/3/76"	★ D64Y 14405-E	Not replaced (3/82)	1
78	G			1
76	G - - w/trailer towing package "Before 5/3/76"	D64Y 14405-D		1
76/77	G - - w/trailer towing package - "From 5/3/76"	D64Y 14405-F		1
79	G(54,66)	D94Y 14405-A		1
	J (Capri)			
73/77	J	★	Serviced only in 14401 assy.	

YEAR	MODEL/RESTRICTIONS	PART NUMBER	DESCRIPTION	QTY.
14405	WIRING ASSY. (REAR LAMP) — Cont'd			
	J (Capri)			
79	J – – without console	★D9ZZ 14405-C	Not replaced (5/83)	1
79	J – – with console	★D9ZZ 14405-D	Not replaced (5/83)	1
	K (Mark IV, Mark V)			
73	K – – w/o trailer towing pkg. "Before 4/2/73"	★D3LY 14405-A	Not replaced (3/79)	1
73	K – – w/o trailer towing pkg. "From 4/2/73"	★D3LY 14405-C	Not replaced (3/79)	1
73	K – – w/trailer towing pkg. "Before 4/2/73"	★D3LY 14405-B	Not replaced (3/79)	1
73	K – – w/trailer towing pkg. "From 4/2/73"	★D3LY 14405-D	Not replaced (3/79)	1
74	K	★D4LY 14405-A	Not replaced (3/79)	1
75	K	★D5LY 14405-A	Not replaced (3/79)	1
76	K "Before 3/1/76"	D6SZ 14405-A		1
76	K – – "From 3/1/76"	D6SZ 14405-B		1
77	K "Before 1/4/77"	D7LY 14405-A		1
77	K "From 1/4/77"	D7LY 14405-B		1
78/	K – – without console	D8LY 14405-A		1
78/	K – – with console	D8LY 14405-C		1
	L (Bobcat)			
74	L(73)	★D4FZ 14405-B	Not replaced (1/79)	1
74/75	L(62,64)	★D5FZ 14405-A	Not replaced (3/79)	1
75	L(73)	★D5FZ 14405-B	Not replaced (3/79)	1
76	L(62,64) "Before 2/2/76"	D6FZ 14405-A		1
76	L(62,64) "From 2/2/76"	D6FZ 14405-C		1
76	L(73) "Before 2/2/76"	D6FZ 14405-B		1
76	L(73) "From 2/2/76"	D6FZ 14405-D		1
77/78	L(62,64)	D7YY 14405-A		1
79	L(62,64)	D7FZ 14405-A		1
77/	L(73)	D7FZ 14405-B		1
	P (Comet)			
73	P	★D34Y 14405-A	Not replaced (1/79)	1
74/75	P	★D44Y 14405-A	Not replaced (3/79)	1
76	P	D64Y 14405-A		1
77	P	D74Y 14405-B		1
	P (Zephyr)			
78/	P(54,66)	D8BZ 14405-A		1
78/	P(74) – – without tailgate window washer	D8BZ 14405-B		1
78	P(74) – – with tailgate window washer	★D8BZ 14405-C	Not replaced (3/82)	1
78	P(36R)	★D8BZ 14405-D	Not replaced (3/82)	1
79	P(36)	★D9BZ 14405-D	Not replaced (5/83)	1
79	P(74) – – with tailgate window washer w/o tachometer	D9BZ 14405-E		1
79	P(74) – – with tailgate window washer and tachometer "Before 5/1/79"	D9BZ 14405-G		1
79	P(74) – – with tailgate window washer and tachometer "From 5/1/79"	D9BZ 14405-J		1
	V (Versailles)			
77	V	D74Y 14405-C		1
78	V	D84Y 14405-A		1
79	V	D94Y 14405-B		1

COPYRIGHT © 1986 — FORD MOTOR COMPANY — DEARBORN, MICHIGAN

YEAR	MODEL/RESTRICTIONS	PART NUMBER	DESCRIPTION	QTY.
14405	WIRING ASSY. (REAR LAMP) — Cont'd			
	Y (Meteor)			
73	Y(exc. 71) – – 8 cyl. 351,400,429 "Before 1/16/73"	★D3MY 14405–A	Not replaced (3/79)	1
73	Y(exc. 71) – – 8 cyl. 351,400,429 "From 1/16/73"	★D3MY 14405–E	Not replaced (3/79)	1
73	Y(exc. 71) – – 8 cyl. 460 P/C "Before 1/16/73"	★D3MY 14405–B	Not replaced (3/79)	1
73	Y(exc. 71) – – 8 cyl. 460 P/C "From 1/16/73"	★D3MY 14405–F	Not replaced (3/79)	1
74	Y(exc. 71) – – 8 cyl. 351,400,460 exc. P/C	★D4MY 14405–A	Not replaced (3/79)	1
74	Y(exc. 71) – – 8 cyl. 460 P/C	★D4MY 14405–B	Not replaced (3/79)	1
74	Y(71) – – 8 cyl. 400, 460 exc. P/C	★D4AZ 14405–B	Not replaced (3/79)	1
74	Y(71) – – 8 cyl. 460 P/C	★D4AZ 14405–D	Not replaced (3/79)	1
75	Y	★D5AZ 14405–A	Not replaced (3/79)	1
76	Y	D6AZ 14405–A		1
73/	A	353182–S	(GG–359)–clip (attach wiring to cowl panel)	AR
73/	A,C,D,F,K	383207–S	(GG–271)–clip(attach wiring to rear seat strainer)	AR
73	A,F,Y	42134–S8	(U–249)–screw(attach wiring to rear quarter pillar and luggage compt. striker plate)–No. 10–12 x 5/8"	AR
74/	A,Y	42367–S36	(U–269–B)–screw(attach wiring to rear lamp body, luggage compt. striker plate or rear quarter pillar)–No. 10–16 x 1/2"	AR
76	G		(attach wiring to rear side rail)	AR
73/76	C	382931–S	(GG–338)–clip(attach wiring to roof side rail L.H. side)	AR
74	P			AR
73/	D	55981–S2	(U–254–E)–screw(attach wiring to center floor pan)–1/4"–14 x 1/2"	3
73/	D	381671–S45X	(UU–89–C)–screw(attach wiring and strap to front floor member)–No. 8–18 x 3/8"	6
73/	D	378674–S	(GG–150–H)–clip(attach wiring to floor pan)	4
75	A		(attach wiring to rear floor pan)	AR
74	D	★382988–S	(GG–338–B)–clip(attach wiring to pkg. tray support)	AR
75	D	384386–S	(GG–271–A)–clip(attach wiring to pkg. tray support)	AR
73/	K	382239–S	(GG–285)–clip(attach wiring to quarter panel wheel house)	2
73/	K	381801–S2	(UU–48)–screw–No. 18–18 x 1/2"(attach wiring to rear quarter panel)	AR
73	P	381645–S100	(GG–261)–clip(attach wiring to lower back panel)	2
73	P	★353547–S	(GG–173)–clip(attach wiring backup lamp socket to rear lamp)	2
74/	L	★383270–S	(MM–263–H)–nut(attach wiring to lower back panel)–1/4"–20	AR
75	L	★42120–S	(U–248)–screw(attach wiring rear lamps to lower back panel)–No. 10–16 x 3/8"	AR
75	D		(attach wiring to strainer at pkg. tray)	AR
76	D	95874–S	(Y–6)–strap (attach wiring to floor pan)	AR
76	D	378834–S	(GG–301)–clip (attach wiring to rear quarter panel extension)	AR
76	P	372047–S100	(GG–217)–clip (attach wiring lead to fuel sender)	AR
14406	WIRING ASSY. (FUEL TANK SENDER)			
73/	A,C,D,F,G,K,L,P	D30Z 14406–A	# D30B 14406–AA "Repair part"–moulded rubber connector (2 terminal), with 4" long pigtail with butt connector	1
79	J			1

COPYRIGHT © 1986 — FORD MOTOR COMPANY — DEARBORN, MICHIGAN

YEAR	MODEL/RESTRICTIONS	PART NUMBER	DESCRIPTION	QTY.
14408	WIRE ASSY. (REAR LAMP EXTENSION)			
75	A(exc. 71)	D5MY 14408-A	#ED-D5MB 14408-AA	1
75	Y(exc. 71)			1
76	A(exc. 71)	D6MY 14408-A	#D5MB 14408-AC	1
76	Y(exc. 71)			1
75/76	A(71),Y(71) "Before 3/1/76"	D6AZ 14408-A	#D5AB 14408-BB	1
76/77	A(71) "From 3/1/76"	D6AZ 14408-C	#D6AB 14408-AA,AB	1
76	Y(71)			1
75/76	C(53,65),F(65)	D5GY 14408-A	#D5GB 14408-AA	1
75/76	C(71)	D50Z 14408-B	#D50B 14408-BA	1
75/76	D	D5VY 14408-A	#D5VB 14408-AB	1
77/	D	★D7VY 14408-A	#D7VB 14408-AB, D8VB 14408-AA-not replaced (9/83)	1
75/76	K	D5LY 14408-A	#D5LB 14408-AA	1
77	K	D7LY 14408-A	#D7LB 14408-AB	1
78/	K	D8LY 14408-A	#D8LB 14408-AA	1
74/	L(73)	D4FZ 14408-B	#D42B 14408-BA	1
78/	P(74D) - - w/o heated backlite	D8BZ 14408-A	#D8BB 14408-AB,AC,AD	1
78/	P(74D) - - with heated backlite	D8BZ 14408-B	#D8BB 14408-BC,BD,BE	1
75	A	42367-S36	(U-269-B)-screw (attach wire assy. to luggage compt. striker plate)-No. 10-16 x 1/2"	AR
75	A(71),Y(71)	383207-S	(GG-271)-clip (attach wire assy. rear quarter panel rail)	AR
75	C,F		(attach wire assy. to package tray)	AR
75	D	384386-S	(GG-271-A)-clip (attach wire assy. to rear support at package tray)	AR
75	K	381801-S2	(U-48)-screw (attach wire assy. to quarter panel wheelhouse)-No. 8-18 x 1/2"	AR
75	K	382239-S	(GG-285)-clip (attach wire assy. to rear quarter panel wheelhouse)	AR
76	L	376389-S101	(UU82-D) screw (attach wiring to floor pan) No. 8-18 x 3/4"	2
76	L	★353547-S	(GG-173)clip (attach wiring to emergency hand brake handle)	2
14A411	WIRE ASSY. (MAIN) JUMPER			
73	D	★D3VY 14A411-A	#D3VB 14A584-AA-not replaced (3/79)	1
75/77	All - - with A/C	D7AZ 14A411-A	#D7AB 18A336-AA	1
78	P - - with stereo system	D8BZ 14A411-B	#D8BB 14A411-BA	1
79	A - - w/stereo system	D9AZ 14A411-B	#D9AB-14A411-AB	1
14412	LAMP and WIRING ASSY. (GLOVE COMPARTMENT)			
73/74	A,Y	D3AZ 14412-A	#D3AB 14412-AB	1
73/74	D,K	D1SZ 14412-A	#D1SB 14412-A1A	1
73/76	C		Console glove compt.	1
74/	F		Console glove compt.	1
75/77	D	D4SZ 14412-A	#D4SB 14412-AA	1
75/	K		Instr. panel or console glove compt.	1or2
73/78	J	★D3RY 14412-A	Not replaced	1

IDENTIFICATION CHART

IDENTIFICATION	PART NUMBER	IDENTIFICATION	PART NUMBER
14A412 WIRE ASSY. (DOOR LOCK LEAD)			
D7DB 14014-AD	D7DZ 14A412-A	D3AB 14024-AC	★D3AZ 14A412-A
D7DB 14014-AE	D7DZ 14A412-A	D5DB 14024-AB	★D5DZ 14A412-A
D7DB 14014-AG	D7DZ 14A412-A	D5DB 14024-BB	★D5DZ 14A412-C
D7DB 14014-BA	D7DZ 14A412-E	D52B 14024-AA	D5FZ 14A412-A
D8DB 14014-AA	D8DZ 14A412-H	D6DB 14024-AE	D6DZ 14A412-A
D8DB 14014-BA	D8DZ 14A412-G	D6DB 14024-AF	D6DZ 14A412-A
D20B 14024-AB	D20Z 14A412-M	D7AB 14024-AC	D7AZ 14A412-A
D20B 14024-BB	D20Z 14A412-B	D7AB 14024-BB	D7AZ 14A412-C

COPYRIGHT © 1986 — FORD MOTOR COMPANY — DEARBORN, MICHIGAN

IDENTIFICATION CHART

IDENTIFICATION	PART NUMBER	IDENTIFICATION	PART NUMBER
14A412 WIRE ASSY. (DOOR LOCK LEAD) — Cont'd			
D7AB 14024-CB	D7AZ 14A412-D	D9ZB 14025-AC	D9ZZ 14A412-B
D7DB 14024-AD	D7DZ 14A412-C	D20B 14026-AA	D20Z 14A412-C
D70B 14024-AB	D70Z 14A412-A	D3AB 14026-AA	D3AZ 14A412-C
D70B 14024-AC	D70Z 14A412-A	D3AB 14026-AB	D3AZ 14A412-C
D7SB 14024-AB	D7SZ 14A412-A	D3VB 14026-AA	★D3VY 14A412-A
D7VB 14024-AD	D7VY 14A412-A	D3VB 14026-AC	★D3VY 14A412-G
D7VB 14024-AE	D7VY 14A412-A	D5VB 14026-AB	D5VY 14A412-A
D7VB 14024-BD	D7VY 14A412-B	D70B 14026-AA	D70Z 14A412-C
D7VB 14024-BE	D7VY 14A412-B	D70B 14026-AB	D70Z 14A412-C
D8BB 14024-AA	D9BZ 14A412-A	D80B 14026-AA	D70Z 14A412-C
D8BB 14024-BA	D9BZ 14A412-C	D8VB 14026-AB	D8VY 14A412-A
D8DB 14024-AA	D8DZ 14A412-A	D9AB 14026-AH	D9AZ 14A412-D
D8SB 14024-AA	D7SZ 14A412-A	D9AB 14026-AJ	D9AZ 14A412-D
D8VB 14024-AA	D7VY 14A412-A	D20B 14027-AA	D20Z 14A412-D
D8VB 14024-BA	D7VY 14A412-B	D3AB 14027-AA	D3AZ 14A412-D
D9AB 14024-AG	D9AZ 14A412-A	D3AB 14027-AB	D3AZ 14A412-D
D9AB 14024-AH	D9AZ 14A412-A	D3VB 14027-AA	★D3VY 14A412-B
D9AB 14024-AJ	D9AZ 14A412-A	D3VB 14027-AC	★D3VY 14A412-H
D9AB 14024-BB	D9AZ 14A412-E	D20B 14A491-AA	★D20Z 14A412-E
D9AB 14024-BC	D9AZ 14A412-E	D20B 14A491-BA	D20Z 14A412-G
D9BB 14024-AE	D9BZ 14A412-D	D20B 14A491-CA	★D20Z 14A412-J
D9BB 14024-AF	D9BZ 14A412-D	D2SB 14A491-AB	★D2SZ 14A412-B
D9BB 14024-BE	D9BZ 14A412-F	D3AB 14A491-AB	★D3AZ 14A412-E
D9BB 14024-BF	D9BZ 14A412-G	D3AB 14A491-AC	D3AZ 14A412-G
D90B 14024-AA	D90Z 14A412-A	D30B 14A491-AA	D30Z 14A412-A
D9SB 14024-AA	D9SZ 14A412-A	D30B 14A491-BA	D30Z 14A412-C
D9ZB 14024-AB	D9ZZ 14A412-A	D30B 14A491-CA	D30Z 14A412-E
D9ZB 14024-AC	D9ZZ 14A412-A	D3SB 14A491-AA	★D3SZ 14A412-A
D3AB 14025-AA	D3AZ 14A412-B	D3VB 14A491-AA	★D3VY 14A412-E
D5DB 14025-AB	★D5DZ 14A412-B	D3VB 14A491-AB	★D3VY 14A412-J
D5DB 14025-BB	★D5DZ 14A412-D	D3VB 14A491-BA	★D3VY 14A412-C
D52B 14025-AA	D5FZ 14A412-B	D3VB 14A491-BB	★D3VY 14A412-L
D6DB 14025-AE	D6DZ 14A412-B	D4VB 14A491-AA	★D4VY 14A412-A
D6DB 14025-AF	D6DZ 14A412-B	D4VB 14A491-BA	★D4VY 14A412-C
D6DB 14025-AG	D6DZ 14A412-B	D5AB 14A491-AA	D5AZ 14A412-A
D7AB 14025-AC	D7AZ 14A412-B	D50B 14A491-AB	D50Z 14A412-A
D7DB 14025-AD	D7DZ 14A412-D	D50B 14A491-BB	D50Z 14A412-C
D70B 14025-AB	D70Z 14A412-B	D50B 14A491-CB	D50Z 14A412-E
D70B 14025-AC	D70Z 14A412-B	D5SB 14A491-AA	D5SZ 14A412-A
D70B 14025-AE	D70Z 14A412-F	D5VB 14A491-AA	D5VY 14A412-B
D7SB 14025-AB	D7SZ 14A412-B	D5VB 14A491-BA	D5VY 14A412-C
D7SB 14025-AC	D7SZ 14A412-D	D6DB 14A491-AB	D6DZ 14A412-E
D8AB 14025-AA	D8AZ 14A412-A	D6DB 14A491-AC	D6DZ 14A412-E
D8BB 14025-AA	D9BZ 14A412-B	D70B 14A491-AB	D70Z 14A412-D
D8DB 14025-AA	D8DZ 14A412-B	D70B 14A491-AC	D70Z 14A412-D
D80B 14025-AA	D80Z 14A412-A	ED-D70B 14A491-AC	D70Z 14A412-D
D8SB 14025-AA	D8SZ 14A412-A	D70B 14A491-BB	D70Z 14A412-E
D9AB 14025-AG	D9AZ 14A412-B	D7SB 14A491-AD	D7SZ 14A412-C
D9AB 14025-AH	D9AZ 14A412-B	D8AB 14A491-AA	D8AZ 14A412-B
D9AB 14025-AJ	D9AZ 14A412-B	D8AB 14A491-AB	D8AZ 14A412-B
D9AB 14025-BG	D9AZ 14A412-C	D8LB 14A491-AA	D8LY 14A412-A
D9AB 14025-BH	D9AZ 14A412-C	D80B 14A491-AA	D80Z 14A412-B
D9AB 14025-CB	D9AZ 14A412-F	D80B 14A491-BA	D80Z 14A412-C
D9AB 14025-CC	D9AZ 14A412-F	D8SB 14A491-AA	D8SZ 14A412-B
D9BB 14025-AE	D9BZ 14A412-E	D9BB 14A491-AC	D8BZ 14A412-D
D9BB 14025-AF	D9BZ 14A412-E	D9BB 14A491-AD	D8BZ 14A412-D
D90B 14025-AA	D90Z 14A412-B	D90B 14A491-AA	D90Z 14A412-C
D9SB 14025-AA	D9SZ 14A412-B	D90B 14A491-BA	D90Z 14A412-D
D9ZB 14025-AB	D9ZZ 14A412-B		

IDENTIFICATION CHART

IDENTIFICATION	PART NUMBER	IDENTIFICATION	PART NUMBER
14A412 WIRE ASSY. (DOOR LOCK LEAD) — Cont'd			
D9SB 14A491-AA	D9SZ 14A412-C	D50B 14A492-AB	D50Z 14A412-B
D20B 14A492-AA	★D20Z 14A412-F	D50B 14A492-BB	D50Z 14A412-D
D20B 14A492-BA	★D20Z 14A412-H	D50B 14A492-CB	D50Z 14A412-F
D20B 14A492-CA	★D20Z 14A412-K	D5SB 14A492-AA	D8LY 14A412-A
D2SB 14A492-AB	★D2SZ 14A412-C	D6DB 14A492-AB	D6DZ 14A412-F
D3AB 14A492-AC	★D3AZ 14A412-F	D6DB 14A492-AC	D6DZ 14A412-F
D3AB 14A492-AD	D3AZ 14A412-H	D8AB 14A492-AA	D8AZ 14A412-C
D30B 14A492-AA	D30Z 14A412-B	D8AB 14A492-AB	D8AZ 14A412-C
D30B 14A492-BA	D30Z 14A412-D	D8DB 14A492-AA	D8DZ 14A412-F
D30B 14A492-CA	D30Z 14A412-F	D7DB 14A507-AD	D7DZ 14A412-B
D3SB 14A492-AA	★D3SZ 14A412-B	D7DB 14A507-AE	D7DZ 14A412-B
D3VB 14A492-AA	★D3VY 14A412-F	D7DB 14A507-AG	D7DZ 14A412-B
D3VB 14A492-AB	★D3VY 14A412-K	D7DB 14A507-BA	D7DZ 14A412-F
D3VB 14A492-BA	★D3VY 14A412-D	D8DB 14A507-AA	D8DZ 14A412-C
D3VB 14A492-BB	★D3VY 14A412-M	D8DB 14A507-BA	D8DZ 14A412-D
D4VB 14A492-AA	★D4VY 14A412-B	D20B 14A523-AA	★D20Z 14A412-L
D4VB 14A492-BA	★D4VY 14A412-D	D30B 14A523-AA	D30Z 14A412-G
D5AB 14A492-AA	D5AZ 14A412-B	D50B 14A523-AB	D50Z 14A412-G

YEAR	MODEL/RESTRICTIONS	PART NUMBER	DESCRIPTION	QTY.
14A412 WIRE ASSY.(DOOR LOCK LEAD) — Cont'd				

APPLICATION CHART

A (Mercury)

73/75	A - - w/o power windows with anti-theft alarm	★D3AZ 14A412-A	R.H.-front door-not replaced (3/79)		1
76	A - - w/o power windows with anti-theft alarm	D6AZ 14A412-A	R.H.-front door		1
73/76	A - - w/o power windows with anti-theft alarm	D3AZ 14A412-B	L.H.-front door		1
73/76	A(71) - - w/power tailgate lock				1
73/76	A(53,57,71) - - w/o power windows	★D3AZ 14A412-C	R.H.-rear door-not replaced (3/82)		1
77/78	A(53H,71)				1
		★D3AZ 14A412-D	L.H.-rear door		1
73/74	A(53,57,71)	D3AZ 14A412-G	R.H.-lead-rear door		1
		D3AZ 14A412-H	L.H.-lead-rear door		1
75/77	A(53,71)	★D5AZ 14A412-A	R.H.-lead-rear door-not replaced		1
		★D5AZ 14A412-B	L.H.-lead-rear door-not replaced		1
77/78	A(53H,65H,71) - - w/o power windows	★D7AZ 14A412-A	R.H. front door-not replaced		1
77	A(53H,65H,71) - - w/o power windows	D7AZ 14A412-B	L.H. front door		1
77	A(71) - - w/power tailgate lock				1
77/78	A(53,71)	★D7AZ 14A412-C	R.H. and L.H. front door-not replaced		2
77/78	A(65)	★D7AZ 14A412-D	R.H. and L.H. front door-not replaced		2
78	A - - w/o power windows	★D8AZ 14A412-A	L.H. front door-not replaced		1
78	A(71) - - w/power tailgate lock				1
78	A(53,71)	★D8AZ 14A412-B	R.H. rear door-not replaced		1
78	A(53,71)	★D8AZ 14A412-C	L.H. rear door-not replaced		1
79	A(66) - - without power windows	(RH) D9AZ 14A412-A	(LH) D9AZ 14A412-B	Front door	1
79	A(74) - - with conv. grp. without power windows or power door locks	(RH)	(LH) D9AZ 14A412-C	Front door (tailgate)	1
79	A(54,74) - - without power windows	(RH) D9AZ 14A412-D	(LH) D9AZ 14A412-D	Rear door	1
79	A(54,74) - - without power windows	(RH) D9AZ 14A412-E	(LH) D9AZ 14A412-F	Front door	1

COPYRIGHT © 1986 — FORD MOTOR COMPANY — DEARBORN, MICHIGAN

YEAR	MODEL/RESTRICTIONS	PART NUMBER	DESCRIPTION	QTY.
14A412	WIRE ASSY.(DOOR LOCK LEAD) — Cont'd			

APPLICATION CHART

C (Montego)

YEAR	MODEL/RESTRICTIONS	PART NUMBER	DESCRIPTION	QTY.
73/76	C(53,71)	D20Z 14A412-M	R.H. and L.H.-front doors	2
73	C(53,71) "Before 3/1/73"	★D20Z 14A412-G	R.H.-lead-front door-26" long-not replaced	1
		★D20Z 14A412-H	L.H.-lead-front door-26" long-not repl.(2/78)	1
73/74	C(53,71) "From 3/1/73"	D30Z 14A412-C	R.H.-lead-front door-26" long	1
		D30Z 14A412-D	L.H.-lead-front door-26" long	1
73/76	C(53,71)	D20Z 14A412-C	R.H.-rear door	1
		D20Z 14A412-D	L.H.-rear door	1
73/74	C(53,71) "From 3/1/73"	D30Z 14A412-E	R.H.-lead-rear door-27" long	1
		D30Z 14A412-F	L.H.-lead-rear door-27" long	1
73/76	C(63,65)	D20Z 14A412-B	R.H. and L.H.-front doors	2
73/74	C(63,65) "From 3/1/73"	D30Z 14A412-A	R.H.-lead-front door-14" long	1
		D30Z 14A412-B	L.H.-lead-front door-24" long	1
73/74	C(71) "From 3/1/73"	D30Z 14A412-G	Tailgate lead-23" long	1
75/76	C(53,71)	D50Z 14A412-C	R.H.-lead-front door	1
		D50Z 14A412-D	L.H.-lead-front door	1
75/76	C(53,71)	D50Z 14A412-E	R.H.-lead-rear door	1
		D50Z 14A412-F	L.H.-lead-rear door	1
75/76	C(65)	D50Z 14A412-A	R.H.-lead-front door	1
		D50Z 14A412-B	L.H.-lead-front door	1
75/76	C(71)	D50Z 14A412-G	Tailgate lead-27" long	1

D (Lincoln)

YEAR	MODEL/RESTRICTIONS	PART NUMBER	DESCRIPTION	QTY.
73	D(53) "Before 3/1/73"	★D3VY 14A412-C	R.H.-front door-not replaced (3/79)	1
		★D3VY 14A412-D	L.H.-front door-not replaced (3/79)	1
73	D(53) "From 3/1/73 to 6/15/73"	★D3VY 14A412-L	R.H.-front door-not replaced (3/79)	1
		★D3VY 14A412-M	L.H.-front door-not replaced (3/79)	1
73/74	D(53) "From 6/15/73"	★D4VY 14A412-C	R.H.-front door-not replaced (3/79)	1
		★D4VY 14A412-D	L.H.-front door-not replaced (3/79)	1
73	D(53) "Before 3/1/73"	★D3VY 14A412-A	R.H.-rear door-not replaced (3/79)	1
		★D3VY 14A412-B	L.H.-rear door-not replaced (3/79)	1
73/74	D(53) "From 3/1/73"	★D3VY 14A412-G	R.H.-rear door-not replaced (3/79)	1
		★D3VY 14A412-H	L.H.-rear door-not replaced (3/79)	1
73	D(65) "Before 3/1/73"	★D3VY 14A412-E	R.H.-front door-not replaced (3/79)	1
		★D3VY 14A412-F	L.H.-front door-not replaced (3/79)	1
73	D(65) "From 3/1/73 to 6/15/73"	★D3VY 14A412-J	R.H.-front door-not replaced (3/79)	1
		★D3VY 14A412-K	L.H.-front door-not replaced (3/79)	1
73/74	D(65) "From 6/15/73"	★D4VY 14A412-A	R.H.-front door-not replaced (3/79)	1
		★D4VY 14A412-B	L.H.-front door-not replaced (3/79)	1
75/77	D(53)	D5VY 14A412-A	R.H. and L.H.-rear door	2
75/76	D(53)	D5VY 14A412-C	R.H. and L.H.-lead-front door-48" long	2
77/	D(53)	D7VY 14A412-B	R.H. and L.H. front doors	2
75/76	D(60)	D5VY 14A412-B	R.H. and L.H.-lead-front door-63" long	2
77/	D(60)	D7VY 14A412-A	R.H. and L.H. front doors	2
78/	D(53)	D8VY 14A412-A	R.H. and L.H. rear doors	2

F (Cougar)

YEAR	MODEL/RESTRICTIONS	PART NUMBER	DESCRIPTION	QTY.
75/76	F	D50Z 14A412-A	R.H. lead-front door	1
		D50Z 14A412-B	L.H. lead-front door	1
77/	F(exc. 65L)	D70Z 14A412-A	R.H. front door	1
77	F(exc. 65L) "Before 3/1/77"	D70Z 14A412-B	L.H. front door	1
77	F(exc. 65L) "From 3/1/77"	D70Z 14A412-F	L.H. front door	1
77	F(exc. 65L)	★D70Z 14A412-D	R.H. and L.H. front door lead-not replaced	2
77/78	F(65L)	★D7SZ 14A412-A	R.H. front door-not replaced	1
77	F(65L) "Before 3/1/77"	D7SZ 14A412-B	L.H. front door	1

YEAR	MODEL/RESTRICTIONS	PART NUMBER	DESCRIPTION	QTY.
14A412	WIRE ASSY.(DOOR LOCK LEAD) — Cont'd			

APPLICATION CHART

F (Cougar)

77	F(65L) "From 3/1/77"	D7SZ 14A412-D	L.H.front door	1
77	F(65L)	★D7SZ 14A412-C	R.H. and L.H. front door lead-not replaced	2
77/78	F(53,71)	D70Z 14A412-C	R.H. and L.H. front door	2
77	F(53,71)	★D70Z 14A412-E	R.H. and L.H. front door lead-not replaced	2
77	F(71)	D50Z 14A412-G	Tailgate lead-27" long	1
78/	F(exc. 65L)	D80Z 14A412-A	L.H. front door	1
78	F(exc. 65L)	★D80Z 14A412-B	R.H. and L.H. front door lead-not replaced	2
78	F(53,71)	★D80Z 14A412-C	R.H. and L.H. front door lead-not replaced	2
78	F(65L)	★D8SZ 14A412-A	L.H. front door-not replaced	1
78	F(65L)	★D8SZ 14A412-B	R.H. and L.H. front door lead-not replaced	2
79	F(53D,65D) - - without power windows	(RH) D90Z 14A412-A	(LH) D90Z 14A412-B Front door	1
79	F(65D)	(RH) D90Z 14A412-C	(LH) D90Z 14A412-C Front door-lead	1
79	F(53)	(RH) D90Z 14A412-D	(LH) D90Z 14A412-D Front door-lead	1
79	F(65L) - - without power windows	(RH) D9SZ 14A412-A	(LH) D9SZ 14A412-B Front door	1
79	F(65L)	(RH) D9SZ 14A412-C	(LH) D9SZ 14A412-C Front door-lead	1

G (Monarch)

75	G(54) - - w/anti-theft alarm system	★D5DZ 14A412-C	R.H.-front door-not replaced (3/79)	1
		★D5DZ 14A412-D	L.H.-front door-not replaced (3/79)	1
75	G(66) - - w/anti-theft alarm system	★D5DZ 14A412-A	R.H.-front door-not replaced (3/79)	1
		★D5DZ 14A412-B	L.H.-front door-not replaced (3/79)	1
76	G - - w/power door locks	D6DZ 14A412-A	R.H.-front door	1
		D6DZ 14A412-B	L.H.-front door	1
76/77	G(54) - - w/power door locks	★D6DZ 14A412-E	R.H.-rear door-not replaced	1
		D6DZ 14A412-F	L.H.-rear door	1
77	G(66)	D7DZ 14A412-A	R.H.-front door lead	1
77	G(54) "Before 3/7/77"			1
77	G(66)	★D7DZ 14A412-B	L.H.-front door lead-not replaced	1
77	G(54) "Before 3/7/77"			1
77	G(54) "From 3/7/77"	D7DZ 14A412-E	R.H. -front door lead	1
77	G(54) "From 3/7/77"	D7DZ 14A412-F	L.H. -front door lead	1
77	G	D7DZ 14A412-C	R.H.-front door	1
77	G	D7DZ 14A412-D	L.H.-front door	1
78/	G(54) - - with illum. entry console and/or stereo	D8DZ 14A412-G	R.H. -front door	1
78/	G All - - with illum. entry, console and/or stereo	D8DZ 14A412-A	R.H. -front door	1
78/	G - - with illum. entry, console and/or stereo	D8DZ 14A412-B	L.H. -front door	1
78/	G(66H)	D8DZ 14A412-H	R.H.-front door lead	1
78/	G(66H)	D8DZ 14A412-C	L.H. -front door lead	1
78/	G(54H)	D8DZ 14A412-D	L.H. -front door lead	1
78/	G(54)	D6DZ 14A412-E	R.H. -rear door	1
78/	G(54)	D8DZ 14A412-F	L.H. -rear door	1

J (Capri)

79	J	(RH) D9ZZ 14A412-A	(LH) D9ZZ 14A412-B Front door	1

K (Mark IV, Mark V)

73	K "Before 3/1/73"	★D2SZ 14A412-B	R.H.-not replaced (3/79)	1
		★D2SZ 14A412-C	L.H.-not replaced (3/79)	1
73/74	K "From 3/1/73"	★D3SZ 14A412-A	R.H.-not replaced (3/79)	1
		★D3SZ 14A412-B	L.H.-not replaced (3/79)	1

COPYRIGHT © 1986 — FORD MOTOR COMPANY — DEARBORN, MICHIGAN

YEAR	MODEL/RESTRICTIONS	PART NUMBER	DESCRIPTION	QTY.
14A412	WIRE ASSY.(DOOR LOCK LEAD) — Cont'd			

APPLICATION CHART

K (Mark IV, Mark V)

75/77	K "Before 5/2/77"	★D5SZ 14A412-A	R.H.-front door lead-not replaced	1
	"Before 5/2/77"	D5SZ 14A412-B	L.H.-front door lead	1
77/	K "From 5/2/77"	D8LY 14A412-A	R.H. and L.H.-front door lead	2

L (Bobcat)

74	L - - w/power door locks	D4FZ 14A412-C	R.H.-front door	1
		D4FZ 14A412-D	L.H.-front door	1

P (Zephyr)

78/	P(54,74)	D8BZ 14A412-D	R.H. & L.H.-front door lead	2
78	P(54,74)	D9BZ 14A412-A	R.H.-front door	1
78	P(54,74)	D9BZ 14A412-B	L.H.-front door	1
78	P(36,66)	D9BZ 14A412-C	R.H. & L.H.-front door	2
79	P(54,74) - - without power windows	(RH) D9BZ 14A412-D	(LH) D9BZ 14A412-E Front door	1
79	P(36,66) - - without power windows "Before 3/19/79"	(RH) D9BZ 14A412-F	(LH) D9BZ 14A412-F Front door	1
79	P(36,66) - - without power windows "From 3/19/79"	(RH) D9BZ 14A412-G	(LH) D9BZ 14A412-G Front door	1

V (Versailles)

77	V	D7DZ 14A412-E	R.H.-front door	1
77	V	D7DZ 14A412-F	L.H.-front door	1
77/78	V	★D6DZ 14A412-E	R.H.-rear door-not replaced	1
77	V	D6DZ 14A412-F	L.H.-rear door	1
78/	V	D8DZ 14A412-G	R.H. front door	1
78/	V	D8DZ 14A412-D	L.H. front door	1
78/	V	D8DZ 14A412-F	L.H. rear door	1
79	V	D8DZ 14A412-E	R.H.-rear door	1

Y (Meteor)

73/76	Y - - w/o power windows with anti-theft alarm	★D3AZ 14A412-A	R.H.-front door	1
73/76	Y - - w/o power windows with anti-theft alarm	D3AZ 14A412-B	L.H.-front door	1
73/76	Y(71) - - w/power tailgate lock			1
73/76	Y(53,57,71) - - w/o power windows	★D3AZ 14A412-C	R.H.-rear door-not replaced	1
		★D3AZ 14A412-D	L.H.-rear door-not replaced	1
73/74	Y(53,57,71) "From 3/1/73"	D3AZ 14A412-G	R.H.-lead-rear door	1
		D3AZ 14A412-H	L.H.-lead-rear door	1
75/76	Y(53,71)	★D5AZ 14A412-A	R.H.-lead-rear door-not replaced	1
		★D5AZ 14A412-B	L.H.-lead-rear door-not replaced	1
73/	D	52012-S8	(U-202)-screw-No. 8-15 x 1/2" (attach wiring to door inner panel)	2
73/	C,F	384647-S	(KK-93)-grommet (located inside door panel)	1
75/	D	55907-S2	(U-254-B)-screw (attach wire assy. to door inside panel)-No. 8-18 x 1/2"	AR

14413	SWITCH and WIRE ASSY. (GLOVE COMPARTMENT LAMP)			
73/74	A,Y	D1WY 14413-A	Instrument panel	1
73/76	C		Console glove compartment	1
73	F		Instrument panel	1
74/	F		Console glove compt.	1
73/	K			1
75/77	A	D5AZ 14413-A	#D5AB 13B748-A1A or A2A-incl. bulb	1
75/76	Y			1
78/	D			1

YEAR	MODEL/RESTRICTIONS	PART NUMBER	DESCRIPTION	QTY.
14413	**SWITCH and WIRE ASSY. (GLOVE COMPARTMENT LAMP) — Cont'd**			
73/76	C	D1AZ 14413–A	Instrument panel glove compartment	1
73/	P			1
74/	F,G			1
79	J			1
77/	V			1
77/	V	380614–S	(DD–3)–cap – 3/16" I.D.–located on switch plunger	1
73/77	D	C6VY 14413–A		1
73/74	J	D4RY 14413–A	Not replaced (3/79)	1
76/78	J – – without A/C	D5RY 14413–A		1
74/76	L "Before 11/3/75"	D10Z 14413–A		1
76/	L "From 11/3/75"	D6FZ 14413–A		1
79	A	D9AZ 14413–A	# D9AB 15A563–AB,AC–includes striker assembly	1
14417	**HOLDER (FUSE)**			
73	A,Y – – A.T.C.	D20Z 14417–A	Single fuse–not replaced (3/79)	4
73/	A,C,F,G,K,L,P,Y – – w/hang–on A/C–dealer installed	D0AZ 14417–A	Fuse clip and terminal	1
76/78	A	D6AZ 14417–A	Single fuse holder	1
76	Y			1
79	F			1
73/	A,C,D,F,G,K,L,P,Y – – A/C	D7AZ 14417–A		AR
73/	D	D2VY 14417–A	Use w/10 or 12 gauge wire–1 wire type	AR
75/	G	D5DZ 14417–A	Single fuse	1
75	C,F,Y	D5AZ 14417–A	Single fuse	1
75/76	A			1
73/	K	D2SZ 14417–A	Use w/14 or 16 gauge wire–1 wire type	AR
		D2SZ 14417–B	Use w/18 or 20 gauge wire–1 wire type	AR
		D2SZ 14417–C	Use w/14 or 18 gauge wire–2 wire type	AR
		D2SZ 14417–D	Use w/16,18 or 20 gauge wire–2 wire type	AR
78/	A,D,F,G,K,L,P,V	D8AZ 14417–A		AR
78/	V	D84Y 14417–A	Use with instrument panel lighting circuit	1
79	A,J	D9ZZ 14417–E	Double terminal (bus bar)–use to repair single or double terminal with (1) 14 or 16 ga. wire at fuse junction panel	AR
79	A,J	D9ZZ 14417–F	Double terminal (bus bar)–use to repair single or double terminal with (1) 18 or 20 ga. wire at fuse junction panel	AR
79	A,J	D9ZZ 14417–J	Quadruple terminal (bus bar)–use to repair single, double or triple terminal with (1) 10 or 12 ga. wire at fuse junction panel	AR
14421	**TERMINAL (WIRE)**			
77/	L – – w/heated backlite	D7FZ 14421–A	snap–on male located at R.H. and L.H. side of backlite	AR
79	A	D9AZ 14421–A	Snap on–male 5 blade ground terminal–located at cowl top inner panel brace	1

YEAR	MODEL/RESTRICTIONS	ENGINE CYL.	ENGINE C.I.D. (C.C.D.)	PART NUMBER	DESCRIPTION	QTY.
14431	**CABLE ASSY. (RELAY TO STARTER)–Also refer to group 14303 @ 2300 cc ⊕ 2800 cc**					
73/77	P	6	200	D1PZ 14431–C	*7284–28 1/2" long	1
78/	P – – exc. Calif.	6	200			1
74/	L	4	@140			1

COPYRIGHT © 1986 — FORD MOTOR COMPANY — DEARBORN, MICHIGAN

1973/79 LINCOLN–MERCURY CARS

YEAR	MODEL/RESTRICTIONS	ENGINE CYL.	ENGINE C.I.D. (C.C.D.)	PART NUMBER	DESCRIPTION	QTY.
14431	CABLE ASSY. (RELAY TO STARTER)–Also refer to group 14303 — Cont'd @ 2300 cc ⊕ 2800 cc					
73/75	C	6	250	D1PZ 14431–D	*7364–36" long	1
75/	G	6	200,250			1
75/	L	6	⊕171			1
78/	P	4	140 (2300)			1
78/	P	8	302			1
79	J	4	140 (2300)			1
75	A,Y – – exc. Calif. and Canada	8	400		(Dash to engine ground)	1
73/	P	6	250			1
73/76	C,Y	6&8	All	D1PZ 14431–B	*7244–(dash to engine ground)–23 1/2" long	1
73/78	A	8	351,400, 429,460		(Dash to engine ground)	1
74/	G,P	6&8	All		(Dash to engine ground)	1
75/	F	8	All		(Dash to engine ground)	1
77/	D,K	8	400		(Dash to engine ground)	1
75/	L	4&6	All		(Dash to engine ground)	1
73/78	D,K	8	460	D1PZ 14431–A	*7136–(dash to engine ground)–15" long	1
74	F	8	All		Dash to engine ground	1
75/	G,P	6&8	All		Dash to engine ground	1
73/74	C	8	351,400, 429,460 exc. P/C	D1PZ 14431–J	*WC–8096–43" long	1
73/76	C,Y	8	All			1
73/	F,G	8	All			1
73/	D	8	All		Junction block relay to starter	1
73/78	K – – w/top terminal battery	8	460		Junction block to starter	1
77/	K	8	400			1
73/77	P	8	302			1
77/	V	8	302,351W		Relay to starter	1
79	J	8	302			1
73/78	A	8	302			1
73	D – – w/top terminal battery	8	460	D1PZ 14431–E	*7514–(junction block to starter)	1
79	A	8	302,351W			1
79	J	6	171 (2800)			1
73	A – – w/diagnostic system	8	All	D3AZ 14431–H	*WC–8209–39" long–4 gauge	1
73	A,C,Y	8	460 P/C	D2AZ 14431–E	*WC–8123–41" long	1
78/	P – – (Calif.) "Before 10/2/78"	6	200	D8BZ 14431–A	49" long–6 gauge	1
79	P – – Calif. "From 10/2/78"	6	200	D9BZ 14431–A	*WC–8468–49" long–6 gauge	1
79	J	6	200			1
73/	A,F	8	All	33797–S7	(M–50)–nut(attach cable to starter relay)–5/16"–18	1
73	C,K	6&8	All	381877–S2	(UU–52–AF)–screw (attach clip–on cable to front member)–5/16"–18 x 3/4"	1
75	D	8	All	★359605–S	(BB–590)–screw (attach cable to R.H. fender apron)–5/16"–24 x 5/8"	AR
76	D,K	8	All		(attach bracket on cable to R.H. side rail)	1
73	F	8	All	380896–S	(GG–252)–clip (attach cable to engine mount)	1
76	G,P	6&8	All	20314–S8	(B–98)–bolt (attach cable to engine cylinder head)–7/16"–14 x 1/2"	1
76	G,P	6&8	All	42367–S36	(U–269–B)–screw (attach cable to cowl panel)–No. 10–16 x 1/2"	1
73	L	4	All	382931–S	(GG–338)–clip (attach cable to fender apron)	1
75	L	4	All	383256–S	(MM–296–AE)–nut (attach cable to cowl panel)–1/4"–20	AR
75/	L	4&6	All		(attach cable to 11450 solenoid)	1

YEAR	MODEL/RESTRICTIONS	ENGINE CYL.	ENGINE C.I.D. (C.C.D.)	PART NUMBER	DESCRIPTION	QTY.
14431	CABLE ASSY. (RELAY TO STARTER)-Also refer to group 14303 — Cont'd					
	@ 2300 cc ⊕ 2800 cc					
75	L	4	All	55914-S2	(U-254-F)-screw (attach cable to R.H. fender apron)-1/4"-14 x 3/4"	AR
76	L	4&6	All	34670-S	(M-54)-nut (attach bracket on cable to thermactor)-7/16"-14	1
76	L	4&6	All	372047-S100	(GG-217)-clip (attach cable to radiator support)	2
75/	D,K	8	All	381561-S45	(MM-295-AD)-nut (attach cable to 11450 relay)-5/16"-18	AR
74	D			33797-S7	(M-50)-nut (attach cable to block)-5/16"-18	1
76	G	6&8	All	★20312-S	(B-75)-bolt (attach clip on cable to engine)-3/8-16 x 1/2"	1
77	A,D,F,G,K,L,P	All	All	385022-S	Screw (attach cable to starter motor)1/4"-20 x 7/8"	1

YEAR	MODEL/RESTRICTIONS	PART NUMBER	DESCRIPTION	QTY.
14A434	SPACER (BULLET TYPE TERMINAL)			
73/	D	D1AZ 14A434-A		1
14448	BLOCK ASSY. (JUNCTION)			
73/74	A,D,K,Y	D0SZ 14448-A	*DY-91-located at front fender apron	1
73/76	C - - w/tachometer			AR
73/	F - - w/tachometer			AR
74	L	★ D4ZZ 14448-A	Not replaced	1
79	A	D9AZ 14448-A	#D9AB 14448-AA	1
73	F	55914-S2	(U-254-F)-screw (attach block to fender apron)-	2
74	A,D,K,Y		1/4"-14 x 3/4"	2
74	D,K	33795-S7	(M-49)-nut (attach block to fender apron)-1/4"-20	2
14457	WIRE ASSY. (HORN RELAY EXTENSION)			
77/	D,K - - w/speed control	D7LY 14457-A		1

YEAR	MODEL/RESTRICTIONS	PART NUMBER	TYPE	DESCRIPTION	QTY.
14461	TERMINAL (WIRE)				
73/	A,C,D,F,G,K,L,P,V,Y,	C8AZ 14461-A		Bullet (pin) type- for No. 10 or 12 gauge wire	AR
		C80Z 14461-B		Bullet (pin) type- for No. 18 or 20 gauge wire	AR
		C8AZ 14461-B		Bullet (pin) type- for No. 18 or 20 gauge wire	AR
		C8AZ 14461-C		Bullet (pin) type- for No. 14 or 16 gauge wire	AR
		D1AZ 14461-B		Bullet (pin) type-for No. 14, 16, 18, 20 gauge wire	AR
		D1AZ 14461-D		Bullet (pin) type-for No. 16-20 gauge wire	AR
		D1AZ 14461-E		Bullet (pin) type-for No. 6-20 gauge wire	AR
		D1AZ 14461-F		Bullet (pin) type with 6" long 14 gauge wire and butt connector (mates w/D1AZ 14488-H)	AR
		D1AZ 14461-G		Bullet (pin) type with 6" long 10 gauge wire and butt connector (mates w/D1AZ 14487-D)	AR
		C9AZ 14461-A		Bullet (pin) type with 4" long 14 gauge wire with stripped end (mates w/C9AZ 14488-A)	AR
14466	TERMINAL (HIGH TENSION WIRE)				
73/	All	D4AZ 14466-A		Use w/radio resistor type wiring- "J" shape-at distributor end	AR

COPYRIGHT © 1986— FORD MOTOR COMPANY —DEARBORN, MICHIGAN

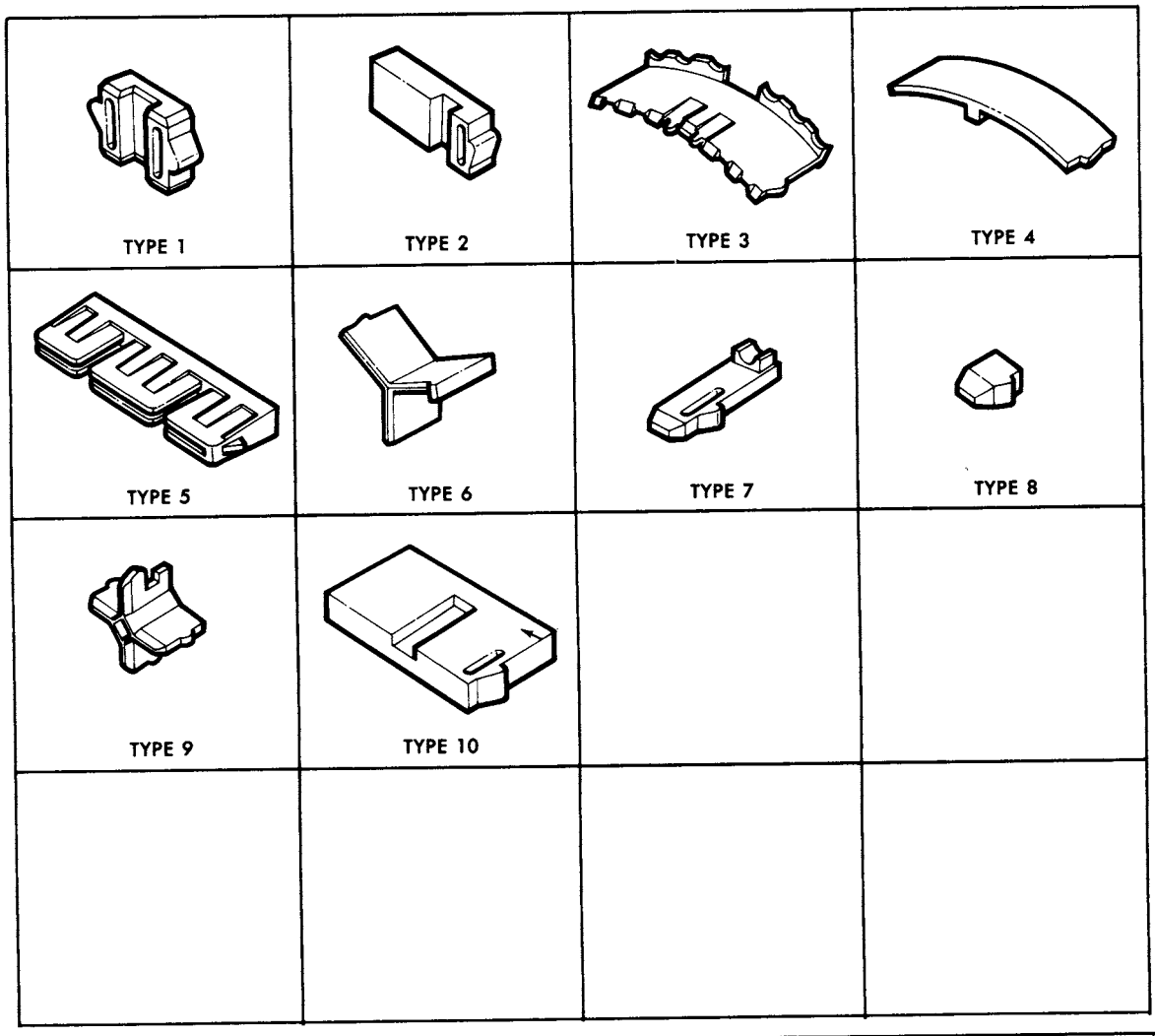

YEAR	MODEL/RESTRICTIONS	PART NUMBER	TYPE	DESCRIPTION	QTY.
14A468	SPACER (WIRE CONNECTOR)				
73	A	D3AZ 14A468-A	5	Red (mates w/D3AZ 14489-C) 1 3/4" x 1/2"	AR
73/	A,C,Y	D20Z 14A468-B	4	Gray-3/8" long (mates w/D20Z 14489-A)	1
73/	A,C,D,F,K,L,P,V,Y	D20Z 14A468-A	3	Gray-11/16" long (mates w/D20Z 14489-B)	1
73/	A,C,D,P,Y	D2SZ 14A468-A	2	Red-23/32" long (mates w/D2SZ 14489-E)	AR
73/	A,C,D,Y	D2SZ 14A468-B	2	Red-47/64" long (mates w/D2SZ 14489-D)	AR
73/	A,C,D,F,K,L,P,Y	D3AZ 14A468-B	2	Red-3/4" x 7/64" (mates with D3AZ 14489-E)	AR
74/	A,Y - - w/power seats	D4AZ 14A468-E	7	Red-2 way (mates w/D4AZ 14489-H)	AR
74/	A,L,Y - - w/anti-theft alarm system	D4AZ 14A468-B	6	Red-3 way (mates w/D4AZ 14489-D)	AR
74/	A,C,F,Y	D4AZ 14A468-D	1	Red-4 way (mates w/D4AZ 14489-E)	AR
74/	A,Y	D4AZ 14A468-F	8	Red-2 way (mates w/D4AZ 14489-L or S)	AR
74/	A,C,D,F,K,P,Y	D4AZ 14A468-A	6	Red-3 way (mates w/D4AZ 14489-J)	AR
74/	A,C,D,F,K,Y	D4AZ 14A468-C	1	Red-4 way (mates w/D4AZ 14489-K)	AR
73/	D,F	D1AZ 14A468-B	2	Red-1" x 11/16" (mates w/D1AZ 14489-L or D2SZ 14489-G)	AR
73/	D,F,L,P	D1AZ 14A468-A	2	Red-1" x 3/8" (mates w/D1AZ 14489-C or D2SZ 14489-H)	AR
75/	G	D5DZ 14A468-A	10	Red(mates with D5DZ 14489-C)	1
77/	K - - w/auto/headlamp dimmer	D7AZ 14A468-A	9	Red-female mates with D7LY 14489-B	1
77/	K - - w/auto/headlamp dimmer	D5HZ 14A468-B	9	Red-male mates with D7LY 14489-A	1
78	V - - w/electronic engine control	D8FZ 14A468-A		Purple-35/64" x 47/64"	1
79	A	D9AZ 14A468-C		#D9AB 14A468-CA-red (mates w/D9AZ 14489-E)	2
79	A,J	D9ZZ 14A468-A		#D9ZB 14A468-AA-white (mates w/D9ZZ 14A068-A)	2
79	A(exc. Canada)	D9AZ 14A468-G		Blue-7/8" x 5/8" x 1/4" (mates with D9AZ 14489-B)	2

COPYRIGHT © 1986 — FORD MOTOR COMPANY — DEARBORN, MICHIGAN

YEAR	MODEL/RESTRICTIONS	PART NUMBER	TYPE	DESCRIPTION	QTY.
14474	TERMINAL (WIRE)				
73/	A,C,D,F,K,L,P,V,Y	C8AZ 14474–A	83	Snap–on–female	AR
		D2AZ 14474–A	82	Snap–on (male) "L" shaped–use with 18 or 20 gauge wire	AR
		D2AZ 14474–B	87	Snap–on (female)–use with 16,18 or 20 gauge wire	AR
		D20Z 14474–D	81	Snap–on (male) 14 or gauge wire	AR
		D20Z 14474–C	88	Snap–on (female) 14 or 16 gauge wire	AR
		D20Z 14474–F		Snap–on (female) (1) wire	AR
		D20Z 14474–B	81	Snap–on (male) (1) or (2) wire	AR
		D20Z 14474–A	88	Snap–on (female) (1) or (2) –10 gauge wire	AR
		D3AZ 14474–F	81	Snap–on–(male)	AR
		D3AZ 14474–H		Snap–on (female) for 14 or 16 gauge wire	AR
		D3AZ 14474–J		Snap–on (female) for 16 or 18 gauge wire	AR
		D3AZ 14474–G		Snap–on (female) for 18 or 20 gauge wire	AR
		D4AZ 14474–C		Snap–on (female) for 16,18,20 or 24 gauge wire	AR
		C1AF 14474–A	85	Snap on (female)–flag type	AR
		B8E 14474–A	86	Snap on (female)	AR
		D3AZ 14474–N		Snap–on (female) for 10 or 12 gauge wire	AR
		D4AZ 14474–A		Snap–on (female) for 18 or 20 gauge wire	AR
		D4AZ 14474–M		Snap–on(female)use with 10 or 12 gauge wire	AR
		D4AZ 14474–E		Snap–on(female)use with 24 gauge wire	AR
		D4AZ 14474–G	88	Snap–on(female)use with 24 gauge wire	AR
75/	A,C,D,F,K,L,P,V,Y	D5AZ 14474–A		Snap–on(female)repair 18 gauge wire lead at coil	AR
		D5AZ 14474–B		Snap–on(female)use with 14 gauge wire	AR
		D5AZ 14474–C		Snap–on(female)repair 16 gauge wire lead at coil	AR
74/	L – – A/C	D1FZ 14474–A		Female–snap–on	AR
76	J,L	D6AZ 14474–F	88	Snap on female–use on thermal timer and for stacked 16, 18 or 20 gauge wire	1
74/	L – – w/heated backlite	D3FZ 14474–B		Female–connects onto terminal at heated backlite	AR
77/	A,F,G,K,L,P	D7AZ 14474–B		Snap–on female–used to repair 16 ga wire at headlamp connector	AR
77/	G,L	D7AZ 14474–A		Snap–on female–used to repair 18 ga wire at headlamp connector	AR
77/	A,F,G,K,P	D7AZ 14474–D		Snap–on female–used to repair (2) 16 ga wires at headlamp connector	AR
77/	G,L,P	D7AZ 14474–C		Snap–on female–used to repair (2) 18 ga wires at headlamp connector	AR
74/	A,Y	D6AZ 14474–G	88	Snap–on–female–use with 10 or 12 gauge wire	AR
78/	A,C,D,F,G,K,L,P,V,Y	D8BZ 14474–A	88	Use to repair 12–14 or 16 ga. wire stacked with (1) 14–16–18–20 or 24 ga. wire	AR
		D8BZ 14474–B	88	Used to repair 18–19 or 20 ga. single wire	AR
		D9AZ 14474–F	88	Used to repair 18–19 or 20 ga. single wire	AR
		D8BZ 14474–C	88	Used to repair 14–16–17–18 ro 20 ga. single wire	AR
		D8BZ 14474–D	88	Used to repair 16–18 or 20 ga. wire stacked with (1) 18–20 or 24 ga. wire	AR
		D8BZ 14474–L	88	Used to repair 18 or 20 ga. wire stacked with (1) 24 ga. wire	AR
		D8TZ 14474–A	88	Used to repair 10 or 12 ga. single wire or (1) 10 & (1) 24 ga. or (1) 12 & (1) 24 ga. stacked wires	AR
		D8LY 14474–A	107	Male–flag type	2
78/ 79	P(74) – – w/heated backlite J – – w/heated backlite	D8BZ 14474–E	108	Connects into heated backlite glass	1 1
		D9AZ 14474–A		Snap–on (female) for 18 or 20 gauge wire	AR
		D9AZ 14474–C		Snap–on (female) for 10 or 12 gauge wire	AR
		D9AZ 14474–D		Snap–on (female) for 14 or 16 gauge wire	AR
		D9AZ 14474–E		Snap–on (female) for 18 or 20 gauge wire stacked	AR
		D9ZZ 14474–B		Snap–on (female) for 14 or 16 gauge wire stacked	AR
		D9ZZ 14474–C		Snap–on (female) for 18 or 20 gauge wire stacked	AR
77/	F,P	D70Z 14474–A		Female–Used to repair flat flex rear lamp wiring	AR

COPYRIGHT © 1986 — FORD MOTOR COMPANY — DEARBORN, MICHIGAN

1973/79 LINCOLN-MERCURY CARS

YEAR	MODEL/RESTRICTIONS	PART NUMBER	DESCRIPTION	QTY.
14A481	PANEL (RELAY)			
73	K "Before 4/15/73"	D2LY 14A481-A	Plastic-not replaced (3/79)	1
73/75	K "From 4/15/73"	D3LY 14A481-A	Plastic-not replaced (3/79)	1

YEAR	MODEL/RESTRICTIONS	PART NUMBER	TYPE	DESCRIPTION	QTY.
14487	CONNECTOR ASSY. (WIRING)				
73/	All	B6A 14487-A	80	4-way plug in-for bullet terminal	AR
		B7A 14487-A		2-Way plug in-for 14,16,18 gauge wire	2
79	J,P - - built in A/C (dealer installed)	D9BZ 14487-A		1	
14487	TERMINAL (WIRING)				
73/	A,C,D,F,G,K,L,P,V,Y	B9A 14487-A	105	2-Way crimp-on-for 16,18,20,22 gauge wire	AR
		E0AZ 14487-B	105	2-Way crimp-on-for 14,16 gauge wire	AR
		C3TZ 14487-A		1-Way crimp-on for No. 16 and 18 gauge wire	AR
		C7AZ 14487-B	89	2-way crimp-on for 14 or 18 gauge wire	AR
		D1AZ 14487-B		1-Way crimp-on for 10 gauge wire	AR
		D1AZ 14487-C		1-Way crimp-on for 12 gauge wire	AR
		D20Z 14487-A		Brass-90° type located at fuel gauge sender	2
		D5AZ 14487-A		4-way crimp-on for 10 or 12 gauge wire	AR
		D0AZ 14487-A	79	1-way crimp-at alternator terminal	AR
		C9AZ 14487-D	104	Ignition switch (copper) vinyl coated	2
		D1AZ 14487-D		1-way-with 6" long 10 gauge wire with butt connector (mate w/D1AZ 14461-G)	AR
14A488	WIRE ASSY. (Window Regulator-Jumper)-Refer to group 14A630				

14488-9 CONNECTORS and SLEEVES (WIRE)-For headlamp switch-refer to 11A648

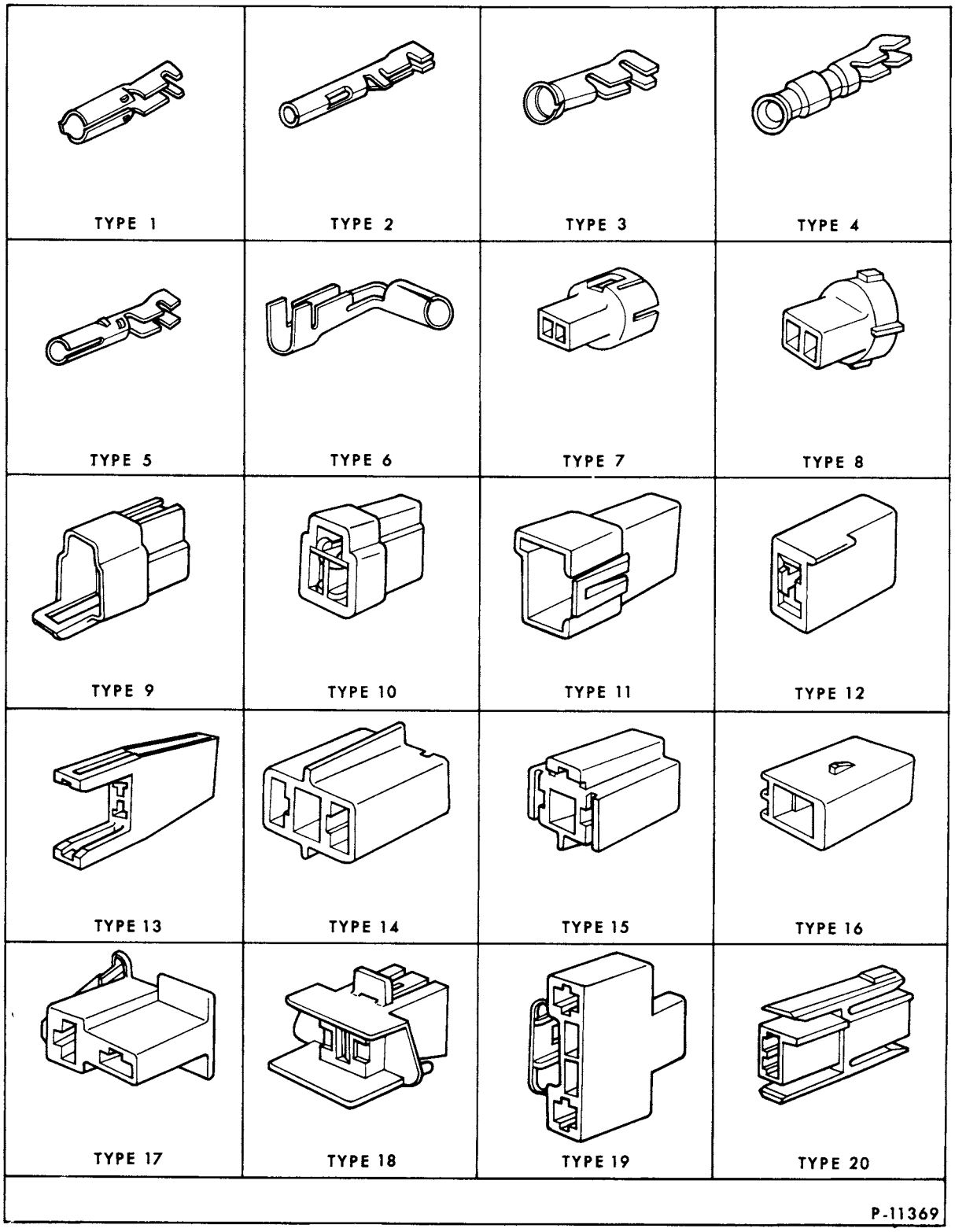

COPYRIGHT © 1986 — FORD MOTOR COMPANY — DEARBORN, MICHIGAN

14488-9 CONNECTORS and SLEEVES (WIRE) — Cont'd

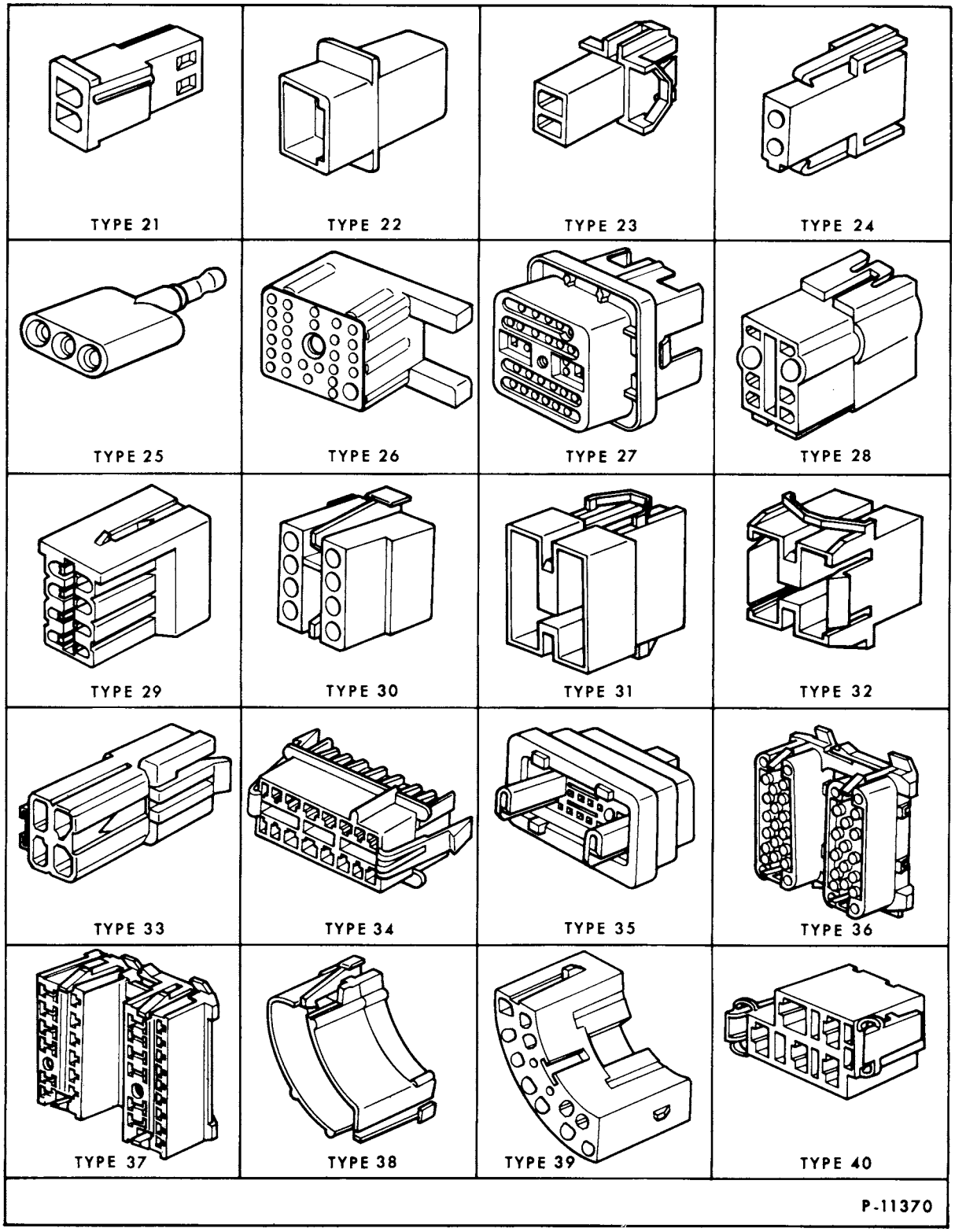

14488-9 CONNECTORS and SLEEVES (WIRE) — Cont'd

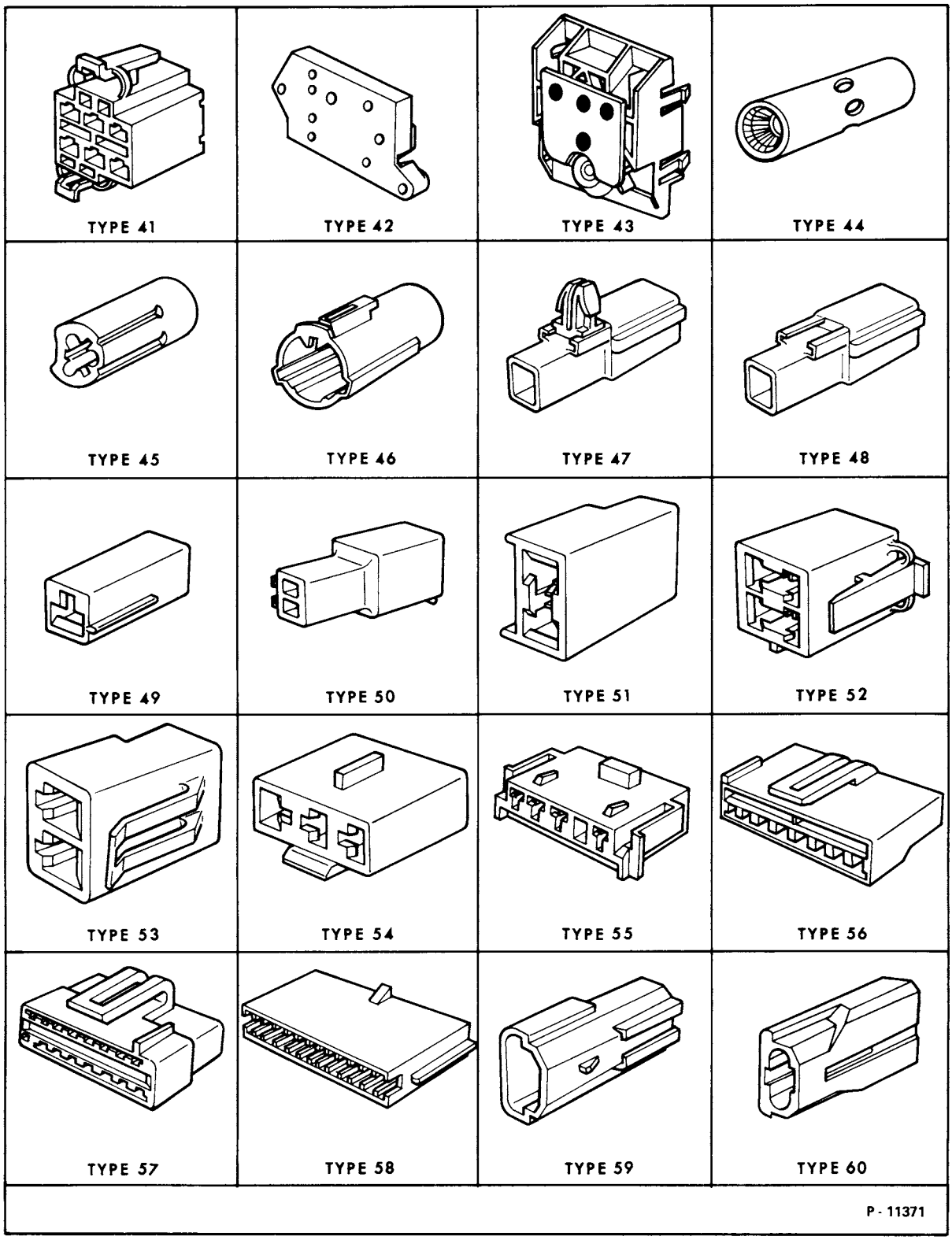

COPYRIGHT © 1986 — FORD MOTOR COMPANY — DEARBORN, MICHIGAN

14488–9 CONNECTORS and SLEEVES (WIRE) — Cont'd

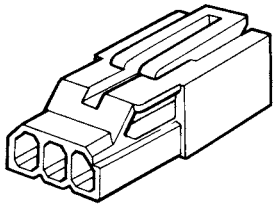
TYPE 61

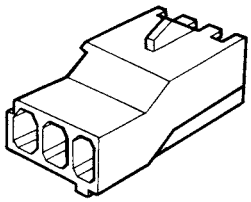
TYPE 62

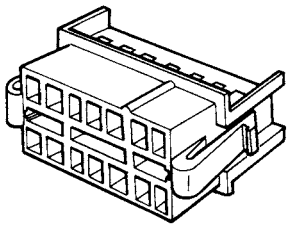
TYPE 63

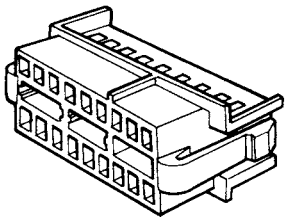
TYPE 64

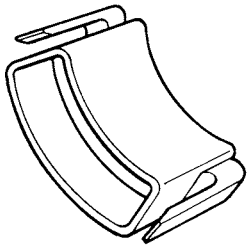
TYPE 65

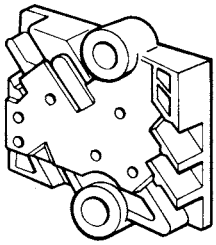
TYPE 66

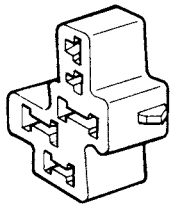
TYPE 67

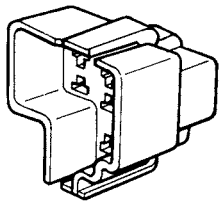
TYPE 68

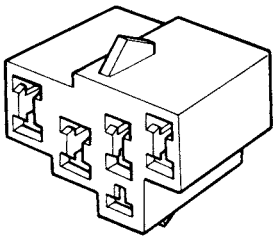
TYPE 69

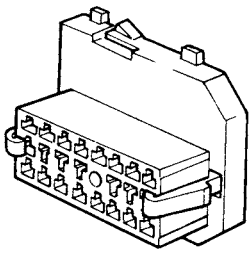
TYPE 70

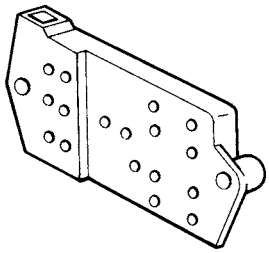
TYPE 71

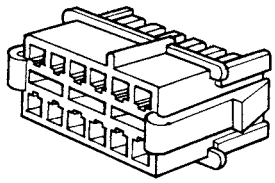
TYPE 72

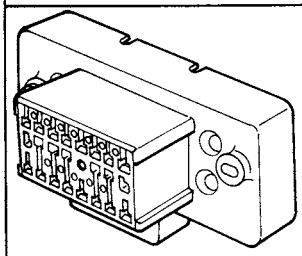
TYPE 73

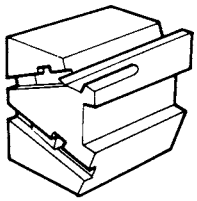
TYPE 74

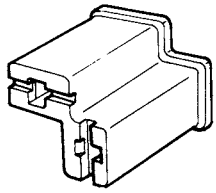
TYPE 75

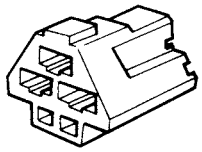
TYPE 76

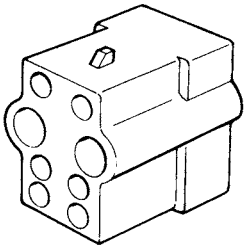
TYPE 77

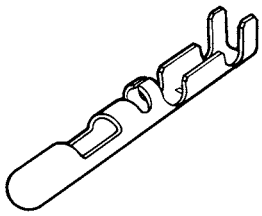
TYPE 78

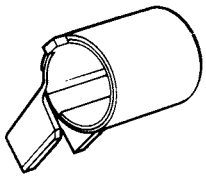
TYPE 79

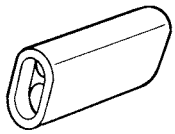
TYPE 80

P-11372

14488-9 CONNECTORS and SLEEVES (WIRE) — Cont'd

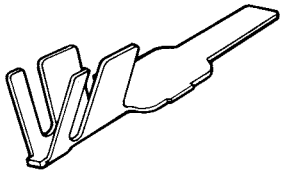
TYPE 81

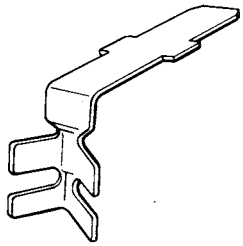
TYPE 82

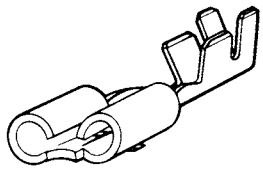
TYPE 83

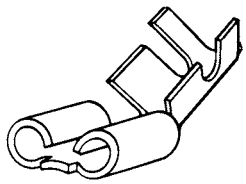
TYPE 84

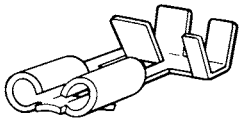
TYPE 85

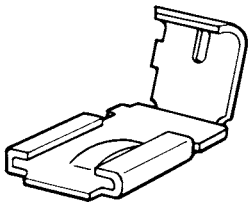
TYPE 86

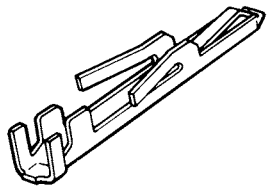
TYPE 87

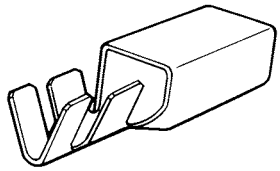
TYPE 88

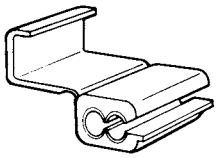
TYPE 89

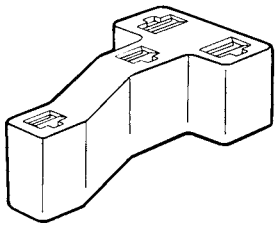
TYPE 90

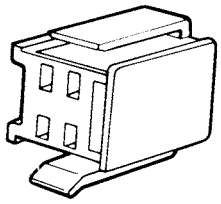
TYPE 91

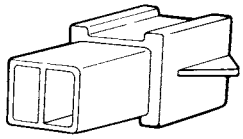
TYPE 92

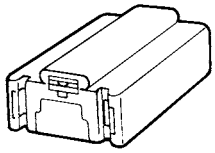
TYPE 93

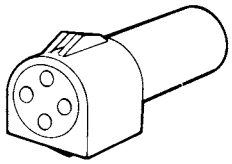
TYPE 94

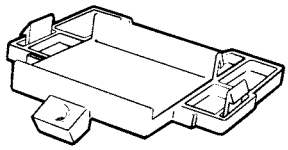
TYPE 95

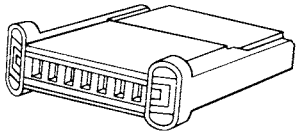
TYPE 96

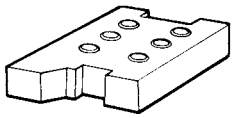
TYPE 97

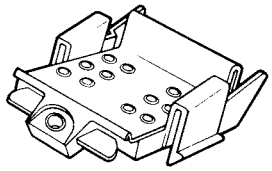
TYPE 98

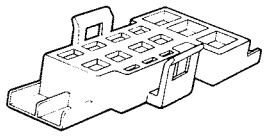
TYPE 99

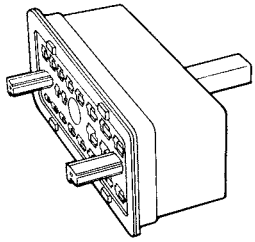
TYPE 100

P-13579

COPYRIGHT © 1986 — FORD MOTOR COMPANY — DEARBORN, MICHIGAN

14488-9 CONNECTORS and SLEEVES (WIRE) — Cont'd

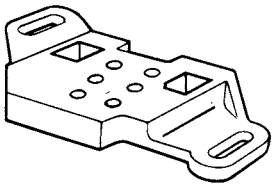
TYPE 101

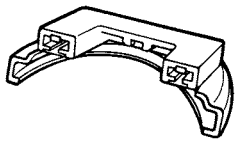
TYPE 102

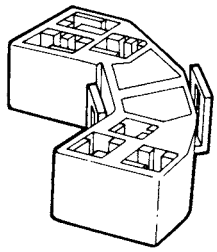
TYPE 103

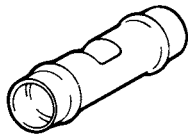
TYPE 104

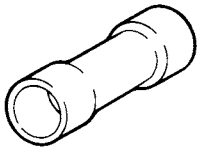
TYPE 105

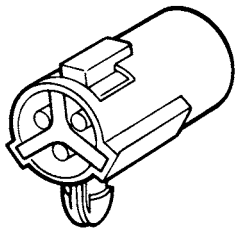
TYPE 106

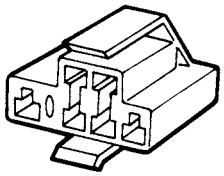
TYPE 107

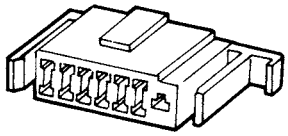
TYPE 108

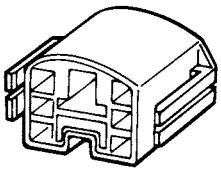
TYPE 109

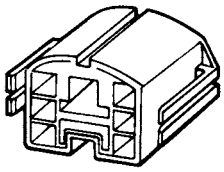
TYPE 110

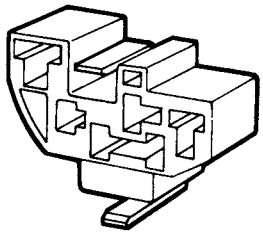
TYPE 111

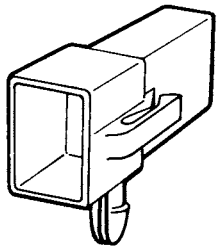
TYPE 112

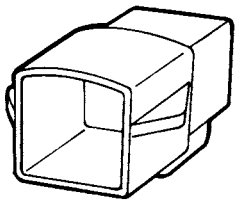
TYPE 113

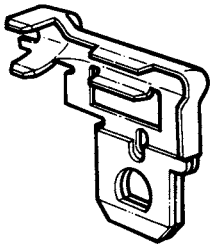
TYPE 114

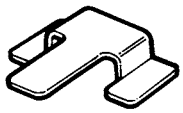
TYPE 115

P-13580

YEAR	MODEL/RESTRICTIONS	PART NUMBER	TYPE	DESCRIPTION	QTY.
14488-9	CONNECTORS and SLEEVES (WIRE) — Cont'd				

CONNECTORS

73/	All	D1MY 14488-C	2	Bullet type-female-for 16 or 18 gauge wire-mates with D1MY 14461-A	AR
		D1MY 14488-D	2	Bullet type-female-for 12,14 or 18 gauge wire-mates with D1MY 14461-B	AR
		D1MY 14488-E	2	Bullet type-female-for 20 gauge wire-mates with D1MY 14461-C	AR
		B7A 14488-C	1	Bullet type-single female	AR
		C8AZ 14488-B	3	Female-16,18,20 and 24 gauge wire	AR
		C7AZ 14488-A	5	Male-use with 18 or 22 gauge wire	AR
		C7AZ 14488-B	5	Male-use with 14 or 16 gauge wire	AR
		C7AZ 14488-C	5	Double wire-use with(2)18 gauge wires or (1)18 gauge or(1)16 gauge wire	AR
		C80Z 14488-A	25	Three circuit type-female with 1 male end	AR
		C8AZ 14488-A	1	Female-10-12 gauge wire	AR
		D1AZ 14488-B	4	1-Way crimp-on female for 18 or 20 gauge wire	AR
		D1AZ 14488-E		1-Way crimp-on female for (1)16 and 18 or (1)16 and 20 or(1)18 and 20 or(2)18 or (2)20 gauge wires	AR
		B6A 14488-A	6	"L" shape-crimp-on-12,14,16 and 18 gauge wire	AR
		D3AZ 14488-Y	44	Female-10 or 12 gauge wire-used w/14526 fuseable link repair	AR
		D3AZ 14488-Z	44	Female-14 or 16 gauge wire-used w/14526 fuseable link repair	AR
		D1AZ 14488-H		Female-1 way crimp on with 6" long 10 gauge wire and butt connector (mates w/D1AZ 14461-F)	AR
		C8AZ 14488-G		Female-1 way crimp on with 4" long 18 gauge wire-use with 3/16" O.D. bullet terminal	AR
79	All - - with EEC or 3 way catalytic system	D9AZ 14488-E		Female-for 14 or 18 gauge wire repair-1.17" long x 7/64" dia.	AR
		D9AZ 14488-K		Female-for 18 gauge wire repair-1.17" long x 7/64" dia.	AR
		D9AZ 14488-L		Female-for 14 gauge wire repair-1.17" long x 7/64" dia.	AR

SLEEVES

77	All	D70Z 14489-A		*YH-316 attaches to 19D671 Gray-4 circuit-male	1
73/	A,Y	D3AZ 14489-GA	101	R.H. front door-attach 14529 to 14630 R.H. rear door-attach 14529 to 14632	1 1
		D3AZ 14489-EA		L.H. front door-attach 14529 to 14631	1
		D3AZ 14489-FA		L.H. rear door-attach 14529 to 14633	1
73/75	A,Y	D3AZ 14489-HA	43	R.H. and L.H. rear quarter-attach 14529 to 14644	2
73/	A,Y	D3AZ 14489-FA		R.H. front door for door lock switch	1
		D3AZ 14489-GA		L.H. front door for door lock switch	1
73	C	D2AZ 14489-M		R.H. front door-attach 14529 to 14630	1
		D2AZ 14489-L	95	L.H. front door-attach 14529 to 14631	1
		D2AZ 14489-K	43	R.H. and L.H. rear doors-attach 14529 to 14632, 14633	2
73/75 74/75	C F	D20Z 14489-M	43	R.H. and L.H. rear quarter R.H. and L.H. rear quarter	2 2
74/76	C(54,71)	D3AZ 14489-HA	43	R.H. front door-attach 14529 to 14630	1
		D2AZ 14489-L	62	L.H. front door-attach 14529 to 14631	1
		D3AZ 14489-HA	43	R.H. and L.H. rear door-attach 14529 to 14632-3	2
74/76	C(65),F(65)	D3AZ 14489-HA	43	R.H. front door-attach 14529 to 14630	1
		D4WY 14489-A	98	L.H. front door-attach 14529 to 14631	1

COPYRIGHT © 1986 — FORD MOTOR COMPANY — DEARBORN, MICHIGAN

YEAR	MODEL/RESTRICTIONS	PART NUMBER	TYPE	DESCRIPTION	QTY.
14488-9	CONNECTORS and SLEEVES (WIRE) — Cont'd				
		SLEEVES			
73/	D	D3AZ 14489-GA		R.H. front door-attach 14529 to 14630	1
		D3LY 14489-A	71	L.H. front door-attach 14529 to 14631	1
73/	D	D3VY 14489-B	66	R.H. rear door-attach 13713 and 14529 switch to 14632	1
		D3VY 14489-C	66	L.H. rear door-attach 13713 and 14529 switch to 14633	1
73	F	D20Z 14489-M	43	R.H. front door-attach 14529 to 14630	1
		D2AZ 14489-L	62	L.H. front door-attach 14529 to 14631	1
73	F	D20Z 14489-M	43	R.H. and L.H. rear quarter-attach 14529 to 14644	2
75	G(54)	D3AZ 14489-HA	43	R.H. front door-attach 14529 to 14630	1
		D2AZ 14489-L	62	L.H. front door-attach 14529 to 14631	1
		D3AZ 14489-HA	43	R.H. and L.H. rear door-attach 14529 to 14632-3	2
75	G(66)	D3AZ 14489-HA	43	R.H. front door-attach 14529 to 14630	1
		D4WY 14489-A	98	L.H. front door-attach 14529 to 14631	1
76/	G(54K) - - w/power windows-w/decor group	D64Y 14489-A	71	R.H. front door-attach 14630 to 14529	1
		D3LY 14489-A	71	L.H. front door-attach 14631 to 14529	1
76	G(54K) - - w/power windows-w/decor group	D3AZ 14489-EA	71	R.H. rear door-attach 14632 to 14529	1
		D3AZ 14489-FA	71	L.H. rear door-attach 14633 to 14529	1
76	G - - w/power windows-w/o decor group	D3AZ 14489-HA	43	R.H. front door-attach 14630 to 14529	1
76	G(54) - - w/power windows-w/o decor group	D2AZ 14489-L	95	L.H. front door-attach 14631 to 14529	1
76	G(66) - - w/power windows-w/o decor group	D4WY 14489-A		L.H. front door-attach 14631 to 14529	1
76	G(54) - - w/power windows-w/o decor group	D3AZ 14489-HA	43	R.H. and L.H. rear door-attach 14632 to 14529	1
78/	P - - w/power windows	D8BZ 14489-P	43	R.H. front door-R.H. and L.H. rear doors-connects 14529 to 14630, 14632, 14633	1
78/	P(54,74)	D2AZ 14489-L	71	L.H. front door-attach 14631 to 14529	1
78/	P(36,66)	D4WY 14489-A	98	L.H. front door-attach 14631 to 14529	1
73/75	K	D3AZ 14489-GA		R.H. front door-attach 14529 to 14630	1
		D3LY 14489-A	71	L.H. front door-attach 14529 to 14631	1
75	K	D5SZ 14489-A	71	R.H.-quarter window for power window and reading lamp switches	1
		D5SZ 14489-B	71	L.H.-quarter window for power window and reading lamp switches	1
76	K	D3AZ 14489-EA		R.H. front door-attach 14630 to 14529	1
		D3LY 14489-A	71	L.H. front door-attach 14631 to 14529	1
		D3AZ 14489-FA		R.H. front door for door lock switch	1
73/	All	C5AZ 14489-C	74	2 wire(nylon)-to stop lamp switch	1
		C7AZ 14489-J	75	Turn signal and emergency flasher (polypropylene)	1
73/	All	C8AZ 14489-Y	15	3 plug in(nylon)-connects to headlamp bulb	2
		C8AZ 14489-V	14	2 plug in(nylon)-connects to headlamp bulb	2

YEAR	MODEL	WIRING CIRCUIT	COLOR	TYPE	MATING PART	TYPE	PART NUMBER	QTY
					SLEEVES – Listed by Circuit Number (Number of Wire Connections)			
73/	All	1	Black				D3AZ 14489-N	1
		1	Brown	48	D3AZ 14489-BA	49	D3AZ 14489-P	1
		1	Brown	49	D3AZ 14489-P	48	D3AZ 14489-BA	1
		1	Gray	49	D9AZ 14489-F	48	D9AZ 14489-H	1
		1	Gray	48	D3AZ 14489-CA	49	D3AZ 14489-F	1
		1	Gray	18	D2AZ 14489-E	16	D2AZ 14489-B	1
		1	Gray	16	D2AZ 14489-B	18	D2AZ 14489-E	1
78	P	1	Black		D7FZ 14A309-A at carb. choke wire of 14289 wiring	112	D8BZ 14489-K	1
		1	White	49	D9AZ 14489-H	48	D9AZ 14489-G	1
71/73 71	D K	2	Natural		Connects to reostat of headlamp switch	114	D8HZ 14489-W	1 1
73/	All	2	Black				D3AZ 14489-K	1
		2			Attaches to fuse panel	19	D4AZ 14489-T	1
		2	Red		Connect to reading lamp	20	D2VY 14489-B	1
		2	Natural		Connects to parking brake lamp	19	D20Z 14489-J	1
		2	Natural		Connects to alternator	17	D20Z 14489-K	1
		2	Natural or Black		Connects to ignition coil	102	D5AZ 14489-H	1
		2	Black		Connects to stop lamp. switch	74	C5AZ 14489-C	AR
		2	Blue	24	C7AZ 14489-A	23	C7AZ 14489-B	AR
		2	Blue	23	C7AZ 14489-B	24	C7AZ 14489-A	AR
		2	Brown	11	D2AZ 14489-D	12	D2AZ 14489-C	AR
		2	Brown	12	D2AZ 14489-C	11	D2AZ 14489-D	AR
		2	Green	51	D3AZ 14489-U	53	D3AZ 14489-DA	1
		2	Green	53	D3AZ 14489-DA	51	D3AZ 14489-U	1
		2	Gray	60	D4AZ 14489-H	59	D4AZ 14489-L	1
		2	Gray	59	D4AZ 14489-L	60	D4AZ 14489-H	1
		2	Blue	12	D50Z 14489-B	11	D50Z 14489-A	AR
		2	Blue	11	D50Z 14489-A	12	D50Z 14489-B	AR
		2	Gray		Connects to 14C691 wiring		D6UZ 14489-A	AR
		2	Gray		Connects to 13007 bulb		D7AZ 14489-D	AR
		2	Natural Black or Blue		Connects to 12029 coil	102	D7AZ 14489-F	AR
		2	White		Connects to Frigedaire A/C clutch		D8VY 14489-E	1
		2	Black		Connects to 15000 clock	115	D9BZ 14489-A	1
		2	Orange		Connects to 9E724 wiring	94	D9FZ 14489-A	1
78	V	2	Black		Connects to distributor EGR modulator valve		D84Y 14489-A	1
78	V	2	Gray		Connects to distributor EGR modulator valve		D84Y 14489-B	1
79	A	2	Brown		connects to EEC water temperature sensor		D9AZ 14489-B	1
		2	Gray		Connects to 19B888 valve		D9AZ 14489-D	1
79	J,P – – w/M/T & speed control	2	Natural		connects to 9A837 switch		D9ZZ 14489-B	1
73/	All	3	Black				D3AZ 14489-J	1
		3	Black		Sun roof	76	D2AZ 14489-J	1
		3	Brown		Connects to 17508 wiper motor	54	D4AZ 14489-G	1
		3	Gray	61	D3AZ 14489-JA	62	D3AZ 14489-E	1
		3	Gray	62	D3AZ 14489-E	61	D3AZ 14489-JA	1
		3	Gray	46	D4AZ 14489-J	45	D4AZ 14489-D	1
		3	Gray	45	D4AZ 14489-D	46	D4AZ 14489-J	1
		3	Green	23	C7AZ 14489-F	24	C7AZ 14489-E	AR
		3	Green	24	C7AZ 14489-E	23	C7AZ 14489-F	AR
		3		9	D2LY 14489-C	10	D2LY 14489-B	1
		3		10	D2LY 14489-B	9	D2LY 14489-C	1

COPYRIGHT © 1986 — FORD MOTOR COMPANY — DEARBORN, MICHIGAN

1973/79 LINCOLN–MERCURY CARS

YEAR	MODEL	WIRING CIRCUIT	COLOR	TYPE	MATING PART	TYPE	PART NUMBER	QTY
73/	All	3	Gray		Connects to 19B888 valve		D5AZ 14489–F	1
		3	Gray		Connects to anti–skid module		D5LY 14489–A	1
		3	Gray		Connects to 10B924 belt switch		D5AZ 14489–R	AR
		3	Black		Connects to 13A024 switch	93	D7AZ 14489–A	AR
		3	Gray		Connects to 13007 bulb		D7AZ 14489–C	AR
		3	Gray		Connects to 13713 switch	43	D7LY 14489–C	AR
78	P(74)	3	Gray		Connects to rear door wiper motor	106	D8BZ 14489–N	1
78	V	3	Black		Connects to power relay in engine compartment	91	D84Y 14489–K	1
73/	All	4	Gray		D4ZZ 14489–C	52	D5DZ 14489–A	1
		4	Green		Connects to anti–skid module		D5LY 14489–B	1
		4	Black				D3AZ 14489–M	1
		4	Black			90	C6VY 14489–D	1
		4	Brown		Attach to 10316 regulator	55	D4AZ 14489–B	1
		4	Gray		Connects to 19B888 valve	91	D5AZ 14489–G	1
		4	Gray	33	D4AZ 14489–K	29	D4AZ 14489–E	AR
		4	Gray	29	D4AZ 14489–E	33	D4AZ 14489–K	AR
		4	Red		D60Z 14489–A		D60Z 14489–B	1
		4	Red		D60Z 14489–B		D60Z 14489–A	1
		4	Black		Connects to 13150 buzzer (temperature warning)		D6LY 14489–A	1
		4	Black		Connects to 19D592 relay		D7AZ 14489–B	AR
		4	Gray	92	D5AZ 14489–G		D7DZ 14489–A	AR
		4	Gray		Connects to 19D671 relay		D70Z 14489–A	AR
		4	Brown		Connects to 17360 tachometer		D7ZZ 14489–A	AR
		4	Natural	94	D7LY 14489–A		D7LY 14489–B	AR
		4	Natural		D7LY 14489–B	94	D7LY 14489–A	AR
78	P	4	Black		Connects to 10316 regulator	55	D8BZ 14489–J	1
78/	V	4	Orange		Connects to carburetor throttle positioner sensor D84Y 14489–M		D84Y 14489–L	1
73/	All	5	Black		Connects to 11572 switch	40	D4AZ 14489–R	1
		5	Gray		Connects to 18549 control		D5AZ 14489–C	1
		5	Brown		Connects to anti–skid module		D5LY 14489–C	1
78	P – – w/o intermittent wiper	5	Gray		Connects to 17A553 switch	109	D8BZ 14489–B	1
78	P	5	Gray		D8BZ 14489–B	113	D8BZ 14489–M	1
77/	L "From 6/27/77"	5	Black		Connects to 17A553 switch	113	D8FZ 14489–A	1
		5	Black		Connects to 14529 switch–RH front and RR door window		D9AZ 14489–N	3
		5	Natural		Connects to 14529 switch–door locks		D9AZ 14489–P	3
		5	Gray		Connects to 14529 switch–LH front door		D9AZ 14489–T	1
		5	Natural		Connects to 14529 switch at Instr. panel		D9AZ 14489–C	1
		5	Black		Connects to 18863 antenna switch		D9AZ 14489–A	1
		5	Gray		Connects to 14529 door lock or sun roof switch	97	D9ZZ 14489–D	AR

1973/79 LINCOLN-MERCURY CARS

YEAR	MODEL	WIRING CIRCUIT	COLOR	TYPE	MATING PART	TYPE	PART NUMBER	QTY
73/	All	6	Natural		Connects to 11572 switch	41	D4AZ 14489-M	1
		6	Gray		Connects to printed circuit	56	D4AZ 14489-P	1
		6	Brown	33	D2SZ 14489-E	29	D2SZ 14489-D	AR
		6	Brown	29	D2SZ 14489-D	33	D2SZ 14489-E	AR
		6	Natural	96	Connects to printed circuit		D1VY 14489-A	1
		6	Natural			32	C7AZ 14489-N	AR
78/	P	6	Gray		Connects to R.H. turn signal switch	111	D8BZ 14489-D	1
78/	P	6	Gray		Connects to L.H. turn signal switch	103	D8BZ 14489-E	1
		6	Gray		Connects to 14529 tailgate switch		D9AZ 14489-J	1
		6	Black		Connects to 9C908 stepper motor	91	D9AZ 14489-L	1
		6	Gray		Connects to 14529 switch-LH front door		D9AZ 14489-S	1
79	A - - w/seat belt "chime" warning system	6	Gray				D9AZ 14489-F	1
78/	V	7	Black		Connects to engine electronic control module		D84Y 14489-J	1
73/	All	7	Gray	77	D0AZ 14489-C	28	D0AZ 14489-B	AR
		7	Gray	28	D0AZ 14489-B	77	D0AZ 14489-C	AR
		7	Gray		Connects to 19A706 resistor		D5AZ 14489-J	1
		8	Black	29	D1AZ 14489-L	33	★ D1AZ 14489-C	AR
		8	Black	33	D1AZ 14489-C	29	D1AZ 14489-L	AR
78/	P - - w/intermittent wipers	8	Gray		Connects to 17A553 switch	110	D8BZ 14489-C	1
73/	All	8	Black		Connects to 14A701 switch	42	D2LY 14489-A	2
		8	Gray		Connects to 17A553 switch	67	D3AZ 14489-B	1
		8	Green		Connects to printed circuit	56	D3AZ 14489-T	1
		8	Black	31	C4AZ 14489-F	30	C4AZ 14489-E	AR
		8	Black	30	C4AZ 14489-E	31	C4AZ 14489-F	AR
		8	Black	32	★ C7AZ 14489-M		★ C7AZ 14489-AD	AR
		8	Black		★ C7AZ 14489-AD	32	★ C7AZ 14489-M	AR
		8	Gray	33	D2SZ 14489-H	29	D2SZ 14489-G	AR
		8	Gray	29	D2SZ 14489-G	33	D2SZ 14489-H	AR
		8	Green		D5DZ 14489-C		D5DZ 14489-B	1
		8	Green		D5DZ 14489-B		D5DZ 14489-C	1
		9	Gray	69	D3AZ 14489-A	68	D3AZ 14489-AA	1
		9	Gray	68	D3AZ 14489-AA	69	D3AZ 14489-A	1
78/	V	9	Red		Connects to engine electronic control module		D84Y 14489-H	1
78/	V	10	Blue		Connects to engine electronic control module		D84Y 14489-G	1
73/	All	10	Black	31	C5SZ 14489-B	30	C5SZ 14489-A	AR
		10	Black	30	C5SZ 14489-A	31	C5SZ 14489-B	AR
		10	Brown	32	★ C7AZ 14489-L		C7AZ 14489-AC	AR
		10	Brown		C7AZ 14489-AC	32	★ C7AZ 14489-L	AR
		10	Natural		★ C7AZ 14489-AG		★ C7AZ 14489-AF	AR
		10	Natural		★ C7AZ 14489-AF		★ C7AZ 14489-AG	AR
		10	Black	38	★ C8AZ 14489-AA	39	D0AZ 14489-L	1
		10	Brown			18	C7AZ 14489-AC	AR
		11	Gray	39	D20Z 14489-B	38	D20Z 14489-A	1
		11	Gray	38	D20Z 14489-A	39	D20Z 14489-B	1
		11	Black		Connects to 11572 switch	99	D7AZ 14489-E	AR
78/	P	11	Black		Connects to 11572 switch	108	D8BZ 14489-A	1

COPYRIGHT © 1986 — FORD MOTOR COMPANY — DEARBORN, MICHIGAN

1973/79 LINCOLN–MERCURY CARS

YEAR	MODEL	WIRING CIRCUIT	COLOR	TYPE	MATING PART	TYPE	PART NUMBER	QTY
73/	All	12	Black		Connects to auto. headlamp dimmer	58	D4SZ 14489–C	1
		14	Gray		Connects to instrument cluster	63	D3AZ 14489–C	1
		14	Gray		Connects 14A554 module	57	D4AZ 14489–C	1
		14	Green		Connects to auto. headlamp dimmer	56	D5SZ 14489–C	1
		18	Black		Connects to printed circuit–upper	34	D0DZ 14489–A	1
		18	Gray		Connects to 10K843 printed circuit	64	D4ZZ 14489–B	1
		21	Black		With diagnostic system	55	D4AZ 14489–A	1
		21	Green	70	D3AZ 14489–D	35	D3AZ 14489–Z	1
		21	Green	35	D3AZ 14489–Z	70	D3AZ 14489–D	1
		21	Gray	37	D20Z 14489–C	35	D20Z 14489–D	1
		21	Gray	37	D20Z 14489–C	35	D20Z 14489–E	1
		21	Blue	70	D3AZ 14489–D	100	D5FZ 14489–A	1
		27	Green or Orange		Connects to 14401 wiring	26	★C80Z 14489–A	AR
		27	Natural		Connects to 14290 wiring	27	★C80Z 14489–B	AR
		27	Green or Orange		Connects to 14290 wiring	26	D1ZZ 14489–A	AR
		32	Natural		Connects to 12650		D9AZ 14489–E	1
		38	Natural			36	D3VY 14489–A	1
		42	Gray	35 35	D20Z 14489–D & D20Z 14489–E	37	D20Z 14489–C	1

YEAR	MODEL/RESTRICTIONS	PART NUMBER	DESCRIPTION	QTY.
14490	BOOT (WIRING CONNECTOR SLEEVE)			
73/75	C	D3AZ 14490–A		1
74/75	D,F			1

YEAR	MODEL/RESTRICTIONS	PART NUMBER	DESCRIPTION	QTY.
14A500	WIRING ASSY. (SEAT BELT RETRACTOR JUMPER)-Improvise			
14A504	WIRE ASSY. (SEAT BELT RETRACTOR SWITCH)-Improvise from (14296) bulk wiring			
14505	SWITCH & HOUSING ASSY. (WINDOW REGULATOR)-Refer to group 14529			
14A507	WIRING ASSY. (FRONT DOOR LOCK FEED-LH)-Refer to group 14A412			
14A509	SWITCH & WIRING ASSY. (FRONT DOOR WINDOW REGULATOR CONTROL-L.H.)- Refer to groups 14529 & 14631			
14512	RELAY ASSY. (WINDOW and SEAT REGULATOR CONTROL)-Also refer to group 14677			
73	A,C,D,Y - - w/power windows or power door locks	★ D3AZ 14512-A	#D3AB 14512-AC-R/B D2SZ 14677-A or D30Z 14677-B- "Refer to T.S.B. #46-dated 6/1/73"	1
73/	C,D,G,K,Y - - w/auto. seat back latch	D2LY 14512-A	#D2LB 14C690-AA, D5AB 14C690-AA,BA,CA	1
77/	V			1
73/77	A - - w/auto seat back latch			1
76/77	A - - w/power windows			1
76/	D - - w/power windows			
77	A - - w/A.T.C.			1
74	K - - w/auto. lamp system			1
75/	C,D,F - - w/A.T.C.			1
77/	D,F,G,K - - w/Sun roof			1
74/78	F - - w/auto. seat back latch "Before 3/1/78"			1
75/	G - - w/power windows "From 12/2/74"			1
77/	F(53,71) - - w/power windows			1
77/	K,V - - w/power windows			1
78	P - - w/power windows			1
78/	P(Taxi)			1
78	P(P/C)			1
79	A(P/C)			1
79	A(54,74) - - w/power windows			1
78	A - - with auto. seat back latch or power windows	D7AZ 14512-A	#D8SB 15B683-AA	1
78/	F - - auto seat back latch or power windows or power door locks "From 3/1/78"			1
78	D - - with sun roof			1
78/	F - - with sun roof			1
73	F - - w/auto. seat back latch	D1ZZ 14512-A	#D1ZB 14C690-AA	1
79	P	D9BZ 14512-A	#D9BB 14512-AA,BA	1
73	D	42134-S8	(U-249)-screw (attach relay to front floor reinforcement)-No. 10-12 x 5/8"	2
73	F	55981-S2	(U-245-E)-screw (attach relay to relay bracket)- 1/4"-14 x 1/2"	1
76	D,C,F,G	42367-S36	(U-269-B)-screw (attach relay to cowl panel)- No. 10-16 x 1/2"	AR
14A515	WIRING ASSY. (SEAT BELT WARNING INDICATOR) -Refer to group 14A313			
14517	WIRING ASSY. (FUSE HOLDER JUMPER)			
79	All	E5FZ 14517-A	#E5EB 14517-AA-for 3 amp thru 30 amp blace type in-line fuses	
14522	SOCKET and WIRE ASSY. (WARNING LAMP)			
73/	D	D0VY 14522-A	#D1VB 14522-AA	1
73/75	K - - w/heated backlite	D2LY 14522-A	#D2LB 14522-AB	1

COPYRIGHT © 1986 — FORD MOTOR COMPANY — DEARBORN, MICHIGAN

1973/79 LINCOLN-MERCURY CARS

YEAR	MODEL/RESTRICTIONS	PART NUMBER	DESCRIPTION	QTY.
14524	PLATE (WINDOW REGULATOR SWITCH)			
73/75	K	D2LY 14524-A	Multiple-on R.H. and L.H. rear quarter	2
79	A,P - - w/power window	D9AZ 14524-A	# D9AB 14A170-AA	1

14526 BREAKER ASSY. (ELECTRICAL CIRCUIT)-GLASS TUBE FUSE

GLASS TUBE FUSE IDENTIFICATION CHART

AMPERAGE	LENGTH	INDUSTRY NUMBER	COLOR STRIPE	PART NUMBER	AMPERAGE	LENGTH	INDUSTRY NUMBER	COLOR STRIPE	PART NUMBER
1	.62"	AGA-1 or 1AG-1	Dk. Green	B6AZ 14526-D	15	1.25"	AGC-15 or 3AG-15	Lt. Blue	A2AZ 14526-A
1.5	1.25"	3AG-1.5		D7AZ 14526-A					
2	1.00"	8AG-2	Gray	D4AZ 14526-B	15	.88"	AGW-15 or 7AG-15	Lt. Blue	C4SZ 14526-B
2	.62	1AG-2	Gray	D4AZ 14526-C					
2.5	.62"	1AG-2 1/2	Purple	C4GY 14526-A	20	.62"	AGA-20	Yellow	8HC 14526
3	.62"	AGA-3 or 1AG-3	Violet	A6AZ 14526-A	20	1.00"	AGX-20 or 8AG-20	Yellow	C5AZ 14526-B
3	1.00"	8AG-3 or AGX-3	Violet	D4AZ 14526-E					
4	.62"	SFE-4	Pink	C9SZ 14526-C	20	1.25"	SFE-20	Yellow	A0AZ 14526-B
4	.84"	AGW-4 or 7AG-4	Pink	C0LY 14526-B	20	.87	7AG-20 or AGW-20	Yellow	D4AZ 14526-V
5	.62"	AGA-5 or IAG-5	Tan	B6AZ 14526-B					
6	.75"	SFE-6	Gold	C1VY 14526-A	25	1.25"	3AG-25 or AGC-25	White	C6TZ 14526-AB
7.5	.88"	SFE-7 1/2	Brown	B6AZ 14526-A					
7.5	1.25	3AG-7.5 or AGC-7.5	Brown	D0VY 14526-D	30	1.25"	AGC-30 or 3AG-30	Lt. Green	A9AZ 14526-A
7.5	.62"	1AG-7.5 or AGA-7.5	Brown	D4AZ 14526-L	30	1.00"	AGX-30 or 8AG-30	Lt. Green	C80Z 14526-A
9	.88"	SFE-9	Orange	A6AZ 14526-B					
10	1.25"	AGC-10 or 3AG-10	Red	B8TZ 14526-A	30	.87"	7AG-30 or AGW-30	Lt. Green	C6TZ 14526-AA
14	1.06"	SFE-14	Black	A0AZ 14526-A	35	1.25"	3AG-35	Silver	D74Y 14526-A
15	.62"	1AG-15	Lt. Blue	D6TZ 14526-A					

GLASS TUBE FUSE APPLICATION CHART

FUNCTION	BOBCAT	ZEPHYR	COUGAR	LINCOLN	MARK VI	MERCURY		MONARCH		VERSAILLES	INDUSTRY NUMBER	PART NUMBER
14526 BREAKER ASSY. (ELECTRICAL CIRCUIT)-GLASS TUBE FUSE — Cont'd												
Air conditioner blower	74	73/75	73/76						75		AGX-30	C80Z 14526-A
	75/77	76						75/77			7AG-30	C6TZ 14526-AA
			77	75/77	75/77	75/77	75/76		73-76		AGC-30	A9AZ 14526-A
		77									8AG-30	C80Z 14526-A
	78	78	78	78	78	78	78			77/	3AG-35	D74Y 14526-A
Air conditioner clutch		78						77/		77/	AGW-15	C4SZ 14526-B
			77/	77/	77	77/					SFE-20	A0AZ 14526-B
					78						SFE-7.5	B6AZ 14526-A
	78	77									3AG-15	A2AZ 14526-A
	77							78			7AG-30	C6TZ 14526-A
Antenna (power)				73/	73/	75/	75/76			77/	AGC-15	A2AZ 14526-A
Anti-theft alarm	74/75					73	73				SFE-20	A0AZ 14526-B
Anti-theft module						76	76				3AG-15	A2AZ 14526-A
				75/	74						SFE-7 1/2	B6AZ 14526-A
			76						76		3AG-10	B8TZ 14526-A
								76			7AG-15	C4SZ 14536-B
					76						3AG-7.5	D0VY 14526-D
Ash recepticle lamp		74/	73			73/	73/76	75/	73	77/	SFE-4	C9SZ 14526-C
				78	73/						SFE-6	C1VY 14526-A
											SFE-20	A0AZ 14526-B
	75/										7AG-4	C0LY 14526-B

GLASS TUBE FUSE APPLICATION CHART

FUNCTION	BOBCAT	ZEPHYR	COUGAR	LINCOLN	MARK VI	MERCURY		MONARCH		VERSAILLES	INDUSTRY NUMBER	PART NUMBER
14526 BREAKER ASSY. (ELECTRICAL CIRCUIT)-GLASS TUBE FUSE — Cont'd												
Auto.-headlamp dimmer				73/	73/						SFE-4	C9SZ 14526-C
Auto.- deck lid opener			78			76/	76				SFE-20	A0AZ 14526-B
			77					77			3AG-15	A2AZ 14526-A
Auto.- seat back latch			73								SFE-14	A0AZ 14526-A
			74/76			74	74		74/75		AGC-10	B8TZ 14526-A
			77	73/	73/	73-75/	73-75/		76/	77/	AGC-15	A2AZ 14526-A
Back-up lamp	74 & 78	73/	73/74	73/74	73/74	73/74	73/74		73/74		AGC-15	A2AZ 14526-A
			75/	75/	75/	75/	75/76		75/76		SFE-20	A0AZ 14526-B
	75/77							75/			AGW-15	C4SZ 14526-B
										77/	7AG-20	D4AZ 14526-V
Breakerless ignition		74									SFE-14	A0AZ 14526-A
Cargo lamp	75/77		77/	73/	73/	73/	73/76	75/		77/	AGC-15	A2AZ 14526-A
	78	78									7AG-15	C4SZ 14526-B
		74/76									SFE-14	A0AZ 14526-A
Cigar lighter	74	73/76	73/74		73/						SFE-20	A0AZ 14526-B
			75/76			73/76	73/76		73/76	77	AGC-15	A2AZ 14526-A
				73/							3AG-25	C6TZ 14526-AB
	75/							75/			AGX-20 or 8AG-20	C5AZ 14526-B
			77/			77/				78	3AG-30	A9AZ 14526-A
		77									7AG-15	C4SZ 14526-B
		78								77	7AG-20	D4AZ 14526-V
Clock	74		75/	75/	75/	75/	75/76	75/	75/76	77/	AGC-15	A2AZ 14526-A
		78									7AG-15	C4SZ 14526-B
Clock illumination		73	73/			73/	73/76	77/	74/76	77/	SFE-4	C9SZ 14526-C
				73/	73/						SFE-6	C1VY 14526-A
								76/			3AG-15	A2AZ 14526-A
Cornering lamps			78			73/	73/76				SFE-20	A0AZ 14526-B
				73	73						AGC-15	A2AZ 14526-A
				74/	74						SFE-7 1/2	B6AZ 14526-A
					75/						3AG-7.5	D0VY 14526-D
								77			7AG-15	C4SZ 14526-B
								78		77/	7AG-20	D4AZ 14526-V
Courtesy lights-dome	74/75	73/76	73						73		SFE-14	A0AZ 14526-A
-dome	76/77		77/		73/	73/	73/76	76/		78	AGC-15	A2AZ 14526-A
-dome			74/76						74/76		AGC-10	B8TZ 14526-A
-door				73/		73	73				AGC-15	A2AZ 14526-A
-pillar		73									SFE-14	A0AZ 14526-A
-pillar	76			73/				76			AGC-15	A2AZ 14526-A
-dome	78	77/								77	7AG-15	C4SZ 14526-B
Defogger	74/75	73/76	75/76			75/76	75/76		73/76	77/	SFE-20	A0AZ 14526-B
	76	77/						75/77			AGW-15	C4SZ 14526-B
								78			7AG-20	D4AZ 14526-V
Dome/Map lamp	75/77		77/	75/	75/	75/	75/76	75/		78	AGC-15	A2AZ 14526-A
			75/76						75/76		AGC-10	B8TZ 14526-A
		75/76									SFE-14	A0AZ 14526-A
	78	77/								77	7AG-15	C4SZ 14526-B
Door locks (electric)				73		73					AGC-15	A2AZ 14526-A
					73/						SFE-20	A0AZ 14526-B
Door ajar warning lamp	77/	74	73					77		77/	SFE-14	A0AZ 14526-A
				73/	73		73/76				SFE-7 1/2	B6AZ 14526-A
									74		AGC-15	A2AZ 14526-A
			75/						75/76		SFE-20	A0AZ 14526-B
					74/						3AG-7.5	D0VY 14526-D
								78			7AG-20	D4AZ 14526-V

COPYRIGHT © 1986 — FORD MOTOR COMPANY — DEARBORN, MICHIGAN

GLASS TUBE FUSE APPLICATION CHART

FUNCTION	BOBCAT	ZEPHYR	COUGAR	LINCOLN	MARK VI	MERCURY		MONARCH		VERSAILLES	INDUSTRY NUMBER	PART NUMBER
14526 BREAKER ASSY. (ELECTRICAL CIRCUIT)–GLASS TUBE FUSE — Cont'd												
Electric fuel pump						73	73		74/76		SFE-4	C9SZ 14526-C
						74/	74/76				3AG-7.5	D0VY 14526-D
Emergency warning flasher	74	74/76		77/							SFE-20	A0AZ 14526-B
	75/77		75/			73/	73/76	75/76	73/76		AGC-15	A2AZ 14526-A
	78	77/									7AG-15	C4SZ 14526-B
					77/						3AG-25	C6TZ 14526-AB
								77/		77/	7AG-20	D4AZ 14526-V
Garage door opener				77/	77/					77/	7AG-15	C4SZ 14526-B
Glove compartment lamp	74	73									SFE-14	A0AZ 14526-A
	75/77		77/	73/	73/	73/	73/76	75/	76	78	AGC-15	A2AZ 14526-A
			74/76						74/75		AGC-10	B8TZ 14526-A
	78									77	7AG-15	C4SZ 14526-B
Headlamps-on warning buzzer	76/		77/	73/	74/	75/		75/		77/	AGC-15	A2AZ 14526-A
			73								SFE-14	A0AZ 14526-A
	78										7AG-15	C4SZ 14526-B
Headlamp switch illumination			73/74			73/	73/76				SFE-4	C9SZ 14526-C
				73/	74/						SFE-6	C1VY 14526-A
Heated backlite switch & relay	74		73/			73/	73/76		75/76		SFE-20	A0AZ 14526-B
					73/76	73	73		73		AGC-30	A9AZ 14526-A
				74/76	73/75						SFE-7 1/2	B6AZ 14526-A
				78							SFE-7 1/2	B6AZ 14526-A
					78						3AG-15	A2AZ 14526-A
										78/	1AG-15	D6TZ 14526-A
Heated backlite (in feed line)									73		3AG-25	C6TZ 14526-AB
	78								74		AGC-15	A2AZ 14526-A
				75/76	75/76						3AG-7.5	D0VY 14526-D
	75/77							75/76		78/	AGW-15	C4SZ 14526-B
										77/	7AG-20	D4AZ 14526-V
Heated mirror										78/	1AG-15	D6TZ 14526-A
Heater		73/75	73								SFE-14	A0AZ 14526-A
	78					73/74	73/74				AGC-15	A2AZ 14526-A
			74/75						73/76		3AG-25	C6TZ 14526-AB
			76/			75/	75/76				SFE-20	A0AZ 14526-B
				75/77	75/77						AGC-30	A9AZ 14526-A
	75/77	76/						75/		77/	AGW-15	C4SZ 14526-B
				78	78						3AG-35	D74Y 14526-A
			77								3AG-25	C6TZ 14526-AB
Horn			73								SFE-20	A0AZ 14526-B
	75/77							75/			AGX-20 or 8AG-20	C5AZ 14526-B
	78	78								77	7AG-20	D4AZ 14526-V
										78	3AG-30	A9AZ 14526-A
Ignition key warning	77	77/									7AG-15	C4SZ 14526-B
	78		77/			77/		77/			3AG-15	A2AZ 14526-A
Illuminated entry system			77/			77/				77	7AG-20	D4AZ 14526-V
				78	78						SFE-7.5	B6AZ 14526-A
										78	AGC-15	A2AZ 14526-A
Instrument cluster lights	74	73/	73/			74/	74/76	75/	73/76	77/	SFE-4	C9SZ 14526-C
						73	73				AGA-7 1/2	C7VY 14526-A
				73/	73/						SFE-6	C1VY 14526-A
	75/										AGW-4 or 7AG-4	C0LY 14526-B
Low fuel warning			73					77/		77/	SFE-14	A0AZ 14526-A
				73/	73		73/76				SFE-7 1/2	B6AZ 14526-A
					74/						3AG-7.5	D0VY 14526-D

GLASS TUBE FUSE APPLICATION CHART

FUNCTION	BOBCAT	ZEPHYR	COUGAR	LINCOLN	MARK VI	MERCURY		MONARCH		VERSAILLES	INDUSTRY NUMBER	PART NUMBER
14526 BREAKER ASSY. (ELECTRICAL CIRCUIT)-GLASS TUBE FUSE — Cont'd												
Luggage compartment lamp		73/76	73								SFE-14	A0AZ 14526-A
	75/77		77/	73/	73/	73/	73/76	75/	73-76	78	AGC-15	A2AZ 14526-A
			74/76						74/75		AGC-10	B8TZ 14526-A
	78	77/								77	7AG-15	C4SZ 14526-B
Parking brake warning lamp			73-75/						73		SFE-20	A0AZ 14526-B
									75/76			A0AZ 14526-B
		77/						75/		77/	SFE-14	A0AZ 14526-A
			74						74		AGC-15	A2AZ 14526-A
				76/							SFE-7 1/2	B6AZ 14526-A
						73	73				AGA-7 1/2	C7VY 14526-A
						76/	76				1AG-7.5	D4AZ 14526-L
					77/						3AG-7.5	D0VY 14526-D
Power window			73-75/			73/	73/76		73		SFE-20	A0AZ 14526-B
									75/76			A0AZ 14526-B
					73		73/76				SFE-7 1/2	B6AZ 14526-A
			74						74		AGC-15	A2AZ 14526-A
					74/76						3AG-7.5	D0VY 14526-D
		78						75/77			AGW-15	C4SZ 14526-B
								78		77/	7AG-20	D4AZ 14526-V
Radio	74	73/76	73/	73/	73/	75/	75/76		74/76	77/	AGC-15	A2AZ 14526-A
						73/74	73/74		73		3AG-7 1/2	D0VY 14526-D
	75/	77/	76					75/			SFE-7 1/2	B6AZ 14526-A
Radio-CB				77	77						SFE-20	A0AZ 14526-B
				78	78						3AG-15	A2AZ 14526-A
Radio illumination		74/	78			73/			77/		SFE-4	C9SZ 14526-C
				77/	77/						SFE-6	C1VY 14526-A
Seat belt warning	74/	73/	73					75/	73	77/	SFE-14	A0AZ 14526-A
						73	73				AGA-7 1/2	C7VY 14526-A
			74/	73/	73/75				74/76		SFE-7 1/2	B6AZ 14526-A
						75/	75/76				1AG-7.5	D4AZ 14526-L
					76/						3AG-7.5	D0VY 14526-D
Speed control			75/			73/	73/76		75/76		SFE-20	A0AZ 14526-B
				73/	73/76						SFE-7 1/2	B6AZ 14526-A
					78						SFE-7 1/2	B6AZ 14526-A
			74						74		AGC-15	A2AZ 14526-A
					77						3AG-7.5	D0VY 14526-D
								77			7AG-15	C4SZ 14526-B
								78		77/	7AG-20	D4AZ 14526-V
Speed Control (dealer installed)	75/78	73/78	73/78	73/78	73/78	73/78	73/76	75/78	73/76	77/78	3AG-15	D7AZ 14526-A
Stereo tape system			74			74	74		74		3AG-7.5	D0VY 14526-D
			75/		75/	75/	75/76		75/76	77/	AGC-15	A2AZ 14526-A
								75/76			AGW-15 or 7AG-15	C4SZ 14526-B
	77/	77/						77/			SFE-7.5	B6AZ 14526-A
Stop lamps	75/77		75/			73/	73/76	75/	74/76	78	AGC-15	A2AZ 14526-A
				77/							SFE-20	A0AZ 14526-B
					77/						3AG-25	C6TZ 14526-AB
	78									77	7AG-15	C4SZ 14526-B
Sure track				73/74	74	73	73				AGA-3	A6AZ 14526-A
					73						8AG-3	D4AZ 14526-E
						74	74				1AG-7.5	D4AZ 14526-L
				75/	75/	75/76	75/76	75/76			SFE-4	C9SZ 14526-C
Sunroof			75/			75/	75/76	78			3AG-25	C6TZ 14526-A
Tailgate window (instr. pnl. sw.)						77/					3AG-25	C6TZ 14526-AB

COPYRIGHT © 1986 — FORD MOTOR COMPANY — DEARBORN, MICHIGAN

GLASS TUBE FUSE APPLICATION CHART

FUNCTION	BOBCAT	ZEPHYR	COUGAR	LINCOLN	MARK VI	MERCURY		MONARCH		VERSAILLES	INDUSTRY NUMBER	PART NUMBER
14526 BREAKER ASSY. (ELECTRICAL CIRCUIT)-GLASS TUBE FUSE — Cont'd												
Tailgate window (tailgate sw.)						77/					3AG-30	A9AZ 14526-A
Throttle positioner solenoid	75/	76/	73					75/		77/	SFE-14	A0AZ 14526-A
						73	73				AGC-15	A2AZ 14526-A
		74/		73/		74/76			73		SFE-7 1/2	B6AZ 14526-A
						74/	74/76				1AG-7.5	D4AZ 14526-L
					74/						3AG-7.5	D0VY 14526-D
Trailer towing stop lamp relay								76			7AG-15	C4SZ 14526-B
			76/			76/	76		76		3AG-15	A2AZ 14526-A
				76	76						SFE-20	A0AZ 14526-B
					77/						3AG-25	C6TZ 14526-AB
Turn signal	78	77	73	73/74	73/74						AGC-15	A2AZ 14526-A
			75/	75/	75/	75/	75/76		75/76		SFE-20	A0AZ 14526-B
	75/77	78						75/77	78		AGW-15 or 7AG-15	C4SZ 14526-B
										77/	7AG-20	D4AZ 14526-V
Vanity mirror illumination (Hi)			77/	74/	74/	74/	74/76	75/		77/	8AG-2	D4AZ 14526-B
Vanity mirror illumination (Lo)			77/	75/	74/	75/	75/76	75/		77/	AGC-15	A2AZ 14526-A
Warning lamps						74/	74/76				1AG-7.5	D4AZ 14526-L
	75/	74/						75/		77/	SFE-14	A0AZ 14526-A
			74/	74	77/				74/76		SFE-7 1/2	B6AZ 14526-A
				77/							3AG-7.5	D0VY 14526-D
Windshield washer	78	73/	73/74						73/74		AGC-15	A2AZ 14526-A
			75/77			73/	73/76		75/76		SFE-20	A0AZ 14526-B
				73/77	73/74						SFE-7 1/2	B6AZ 14526-A
					75/77						3AG-7.5	D0VY 14526-D
	75/77							75/77			AGW-15 or 7AG-15	C4SZ 14526-B
										77/	7AG-20	D4AZ 14526-V
Windshield wiper switch			73/			73/	73/76		74		SFE-4	C9SZ 14526-C
				73/	73/						SFE-6	C1VY 14526-A

YEAR	MODEL/RESTRICTIONS	PART NUMBER	DESCRIPTION	QTY.
73/78	J	D0RY 14526-A	8 amp. fuse-GBC-8	AR
		D0RY 14526-C	16 amp. fuse-relay for high beam-GBC-16	AR
		B6AZ 14526-B	5 amp. fuse-for radio	AR
		D4RY 14526-A	2 amp. fuse-radio	AR
		D6RY 14526-A	25 amp fuse-A/C-GBC-25	AR

BLADE TYPE FUSE IDENTIFICATION CHART

AMPERAGE	INDUSTRY NUMBER	COLOR	PART NUMBER	AMPERAGE	INDUSTRY NUMBER	COLOR	PART NUMBER
4	ATO-4	Pink	D9ZZ 14526-A	20	ATO-20	Yellow	D9ZZ 14526-E
5	ATO-5	Tan	D8ZZ 14526-B	25	ATO-25	Natural	D9ZZ 14526-F
10	ATO-10	Red	D9ZZ 14526-C	30	ATO-30	Lt. green	D9ZZ 14526-G
15	ATO-15	Lt. blue	D9ZZ 14526-D				

BLADE TYPE FUSE APPLICATION CHART

FUNCTION	MERCURY	CAPRI	BOBCAT	ZEPHYR	MONARCH	COUGAR	MARK V	LINCOLN	INDUSTRY NUMBER	PART NUMBER
Air conditioner blower	79								ATO-30	D9ZZ 14526-G
		79							ATO-15	D9ZZ 14526-D
Air conditioner clutch	79								ATO-20	D9ZZ 14526-E
		79							ATO-25	D9ZZ 14526-F
Antenna (radio)	79								ATO-15	D9ZZ 14526-D
Back up lamp	79	79							ATO-20	D9ZZ 14526-E

BLADE TYPE FUSE APPLICATION CHART

FUNCTION	MERCURY	CAPRI	BOBCAT	ZEPHYR	MONARCH	COUGAR	MARK V	LINCOLN	INDUSTRY NUMBER	PART NUMBER
Cigar lighter	79								AT0-25	D9ZZ 14526-F
		79							AT0-20	D9ZZ 14526-E
Clock	79								AT0-15	D9ZZ 14526-D
Courtesy lamps		79							AT0-15	D9ZZ 14526-D
Dome lamp	79								AT0-15	D9ZZ 14526-D
Emergency warning lamps	79	79							AT0-20	D9ZZ 14526-E
Heater blower	79	79							AT0-30	D9ZZ 14526-G
Horn		79							AT0-20	D9ZZ 14526-E
Instrument panel lamps	79								AT0-4	D9ZZ 14526-A
		79							AT0-5	D8ZZ 14526-B
Radio (C.B.)	79	79								D9ZZ 14526-D
Radio (AM or AM/FM)	79	79							AT0-15	D9ZZ 14526-D
Seat belt tension Eliminator		78	78	78	78				AT0-5	D8ZZ 14526-B
Stop lamps	79	79							AT0-20	D9ZZ 14526-E
Tailgate window (74)	79								AT0-25	D9ZZ 14526-F
Turn signal lamps	79	79							AT0-20	D9ZZ 14526-E
Warning lamps	79	79							AT0-10	D9ZZ 14526-C

COPYRIGHT © 1986 — FORD MOTOR COMPANY — DEARBORN, MICHIGAN

14526 BREAKER ASSY. (FUSE ELECTRICAL CIRCUIT)-Listed by Ampere

RELAY CIRCUIT BREAKER TYPE APPLICATION CHART

YEAR	MODEL	FUNCTION	AMP.	LENGTH	WIDTH	IDENTIFICATION MARKING COLOR	QTY.	PART NUMBER
78/	P(74)	Rear window wiper	4.5	1.25"	.78"	D8BB 14526-BA	1	D8BZ 14526-B
79	J(61H)						1	
78	G,L,P	Seat belt tension eliminator	5	.75"	.21"	Tan	2	D8ZZ 14526-B
78/	P	Windshield wiper	6	1.27"	.50"	D8BB 14526-AA	1	D8BZ 14526-A
73/	A(exc. 71),	Power deck lid release	6	1.27"	.79"	Blue dot	1	D3AZ 14526-A
73/76	Y(exc. 71)						1	
73/76	A,D,K	Power luggage compartment door	6	1.06"	.40"	Blue dot	1	★D1VY 14526-A
73/76	Y						1	Not replaced
75/	G	Located at fuse panel for wiper motor	6	1.27"	.63"		1	D4ZZ 14526-A
77/	V	Located at fuse panel for wiper motor					1	
79	F	Windshield wiper-washer	6	1.25"	.75"	D9ZB 14526-AA	1	D9ZZ 14526-H
73/76	A	Intermittent wipers	8.25	1.25"	.79"		1	C9AZ 14526-F
73/76	Y						1	
73/78	A	Windshield wiper-washer	8.25	1.27"	.40"		1	D3AZ 14526-B
73/	F						1	
74/	D,K						1	
77	G,L,P						1	
73/76	Y						1	
79	A	Windshield wiper-washer	8.25	1.25"	.75"	D9AB 14526-CA	1	D9AZ 14526-C
75/	D	Heated back window	10	1.32"	.86"		1	D5VY 14526-A
73/76	A,F	Trailer towing, marker lamps, parking lamps, tail lamps	15	1.27"	.29"		1	D1MY 14526-A
74	C,F,L,P	Stop lamp, marker lamp, parking and tail lamps					1	
73/76	Y						1	
77	D,K	C.B. radio	15			Plugs into fuse panel	1	D0VY 14526-A
73/	A	Located on 11450 relay-Power windows	20	1.07"	.40"		1	D1AZ 14526-A
73	F	Automatic seat back latch					1	
74/78	A,F	Power door locks					1	
74/78	A	Power seats					1	
78/	P(54) - - P/C & taxi	Marker lamps					1	
77/	V	Power door locks and power seats					1	
78/	P	Power door locks and power windows					1	
73/76	C,Y	Used w/auto/seat back latch, power door locks and power seats					1	
73/78	A	Power door locks seats, or automatic seat back latch	20	1.07"	.40"		1	C4DZ 14526-C
73/76	Y						1	
73/78	A(71)	Power tailgate					1	
74	C,D,K	Power windows					1	
74	C	Power seats					1	
73/76	C(71),Y(71)	Power tailgate					1	
73/78	A(71)	Power backlite-plugs into fuse panel	20	1.26"	.40"	Red dot	1	D0VY 14526-B
74/	D,K	Power windows					1	
74	F	Sun roof					1	
74/77	D,K	Stop lamps					1	
76/	F,G	Power windows, power seats					1	
76/78	A	Power windows					1	
76	C,Y	Power windows					1	
73/76	Y(71)	Power tailgate					1	
73	F	Sun roof	20				1	★C9WY 14526-A Not replaced
73/	D,G,K	Sun roof	20	1.25"	.79"		1	C8ZZ 14526-A
79	A(66)	Power windows	20	1.00"	.38"	D9AB 14526-BA	1	D9AZ 14526-B

14526 BREAKER ASSY. (FUSE ELECTRICAL CIRCUIT)-Listed by Ampere — Cont'd

RELAY CIRCUIT BREAKER TYPE APPLICATION CHART

YEAR	MODEL	FUNCTION	AMP.	LENGTH	WIDTH	IDENTIFICATION MARKING COLOR	QTY.	PART NUMBER
79	A	Power door locks or power seats	30	1.00"	.38"	D9AB 14526-AA	1	D9AZ 14526-A
73	A,Y	A/C	35	1.27"	.70"		1	D2SZ 14526-B
73	D,K	A/C-plugs into fuse panel	30				1	D0VY 14526-C
74	A,Y	A.T.C.					1	
74/76	D,K	Horns					1	
74/	D,K	Power seats					1	
74	D	Power door locks					1	
76	K	Power deck lid release					1	
73	D,K	A.T.C.	35	1.27"	.70"		1	D2SZ 14526-B
73/78	A	Power door locks		2.00"	.50"	Located on	2	D2SZ 14526-A
73	C,K					actuator	2	
73/76	Y	Power door locks					2	

YEAR	MODEL/RESTRICTIONS	PART NUMBER	DESCRIPTION	QTY.
14526	BREAKER ASSY. (FUSIBLE LINK WIRE TYPE FUSE)			

FUSIBLE LINK WIRE APPLICATION CHART

73/	A,C,D,F,K,L,P,V,Y	D3AZ 14526-D	9" long-14 gauge-wire color Green-1 end stripped-1 end with eyelet	AR
73/	A,C,D,F,K,L,P,V,Y	D3AZ 14526-E	9" long-16 gauge wire color Orange-1 end stripped-1 end w/eyelet	AR
73/	A,C,D,F,K,L,P,V,Y	D3AZ 14526-F	9" long-18 gauge wire color Red-1 end stripped-1 end w/eyelet	AR
73/	A,C,D,F,K,L,P,V,Y	D3AZ 14526-G	9" long-20 gauge wire color Blue-1 end stripped-1 end w/eyelet	AR
73/	A,C,D,F,K,L,P,V,Y	D3AZ 14526-H	9" long-14 gauge wire color Green-both ends stripped	AR
73/78	J	D2RY 14526-A	Fuse link 5" long	1
73/	A,C,D,F,K,L,P,V,Y	D3AZ 14526-J	9" long-16 gauge wire color Orange-both ends stripped	AR
73/	A,C,D,F,K,L,P,V,Y	D3AZ 14526-N	9" long-17 gauge wire color Yellow-both ends stripped	AR
73/	A,C,D,F,K,L,P,V,Y	D3AZ 14526-L	9" long-18 gauge wire color Red-both ends stripped	AR
73/	A,C,D,F,K,L,P,V,Y	D3AZ 14526-M	9" long-20 gauge wire color Blue-both ends stripped	AR
73/	D	55981-S2	(U-254-E)-screw (attach circuit breaker to relay panel)-1/4"-14 x 1/2"	AR

14527-8 HOUSING (WINDOW REGULATOR SWITCH)-Also refer to groups 13C708, 14A020, 238A06 and 24142-3

A (Mercury)

73/78	A - - w/power door locks and w/o power windows with remote control mirror	★ D6AZ 14527-A Not replaced	Multiple-type L.H.-front door-"Door Lock" "Mirror"	1
73/74	A - - w/power windows and w/o power door locks	★ D6MY 14527-A Not replaced	Multiple type-L.H.-front door- "L-Front" "R-Front" "L-Rear" "R-Rear" "Window Lock" "Mirror"	1
75/76	A(53,71) - - w/power windows and w/o power door locks "Before 6/76"			1

COPYRIGHT © 1986 — FORD MOTOR COMPANY — DEARBORN, MICHIGAN

1973/79 LINCOLN-MERCURY CARS

YEAR	MODEL/RESTRICTIONS	PART NUMBER	DESCRIPTION	QTY.
14527-8	HOUSING (WINDOW REGULATOR SWITCH)-Also refer to groups 13C708, 14A020, 238A06 and 24142-3 — Cont'd			

A (Mercury)

76/78	A(53,71) - - w/power windows and w/o power door locks with remote control mirror	★ D6MY 14527-A Not replaced	Multiple type L.H. front door "Mirror"-L-Front"-R-Front"-L-Rear"-R-Rear"-Window Lock"	1
76/78	A(53,71) - - w/power windows and power door locks and remote control mirror	D6AZ 14527-B	Multiple type L.H. front door "Mirror"-L-Front" R-Front" - L-Rear" - R -Rear" Window Lock" Door lock"	1
76/78	A(65) - - w/power windows and w/o power door locks with remote control mirror	D6AZ 14527-C	Multiple type-L.H. front door "L-Front"-R-Front"	1
75/78	A(65) - - w/power windows and power door locks and remote control mirror "From 6/76"	D6AZ 14527-D	Multiple type-L.H. -front door "L-Front-R-Front" "Door Lock" unlock"	1
73/78	A - - w/power door locks and power windows	D6AZ 14528-B	Single type-R.H. front door "Window" Door Lock "unlock" includes ash receptacle cover	1
76/78	A - - w/power door locks and w/o power windows	★ D6AZ 14528-A Not replaced	Single type-R.H. front door "Door Lock" unlock" includes ash receptacle cover	1
76/78	A - - w/power windows and w/o power door locks	★ D6MY 14528-A Not replaced	Single type R.H.-front door incl. ash receptacle cover	1
73/75	A	D3MY 14528-D	Single type R.H. and L.H.-rear quarter windows	2
76/78	A(53,71) - - w/power windows	(RH) ★ D6MY 14528-A Not replaced	(LH) ★ D6AZ 14528-C Not replaced — Single type-rear door "Window" includes ash receptacle cover w/out cigar lighter opening	1
79	A(66) - - w/o power door locks or remote control mirror	D9AZ 14527-A	Multiple type-L.H. front door-trim panel mtd.	1
79	A(54,74) - - w/o power door locks or remote control mirror	D9AZ 14529-B	Switch & housing assy.-5 switches - L.H. front door - trim panel mtd.	1
79	A(54,74) - - w/remote control mirror w/o power door locks	E0AZ 14527-A	Multiple type-L.H. front door-arm rest mtd.	1
79	A(54,74) - - w/remote control mirror and power door locks	E0AZ 14527-B	Multiple type-L.H. front door-arm rest mtd.	1
79	A(66) - - w/remote control mirror w/o power door locks	E0AZ 14527-C	Multiple type-L.H. front door-arm rest mtd.	1
79	A(66) - - w/remote control mirror and power door locks	★ D9AZ 14527-E Not replaced	Multiple type-L.H. front door arm rest mtd.	1
79	A(54,66,74)	E0AZ 14528-D	Single type-RH front door or R.H. & L.H. rear door-trim panel mounted	3
79	A - - w/o power door locks	E0AZ 14528-A	Single type-front door R.H.-arm rest mtd.-incl. ash receptacle cover	1
79	A - - w/power door locks	E0AZ 14528-B	Multiple type front door R.H.-arm rest mtd.-incl. ash receptacle cover	1
79	A(54,74)	D9AZ 14528-D	Single type-R.H. rear door-arm rest mtd. -includes ash receptacle cover and cigar lighter opening	1
79	A(54,74)	D9AZ 14528-E	Single type-L.H. rear door-arm rest mtd. -includes ash receptacle cover and cigar lighter opening	1

C (Montego)

74/76	C(53,71)	D4GY 14527-A	Multiple type-L.H. front door-5 switch	1
74/76	C(65)	D4WY 14527-A	Multiple type-L.H. front door-2 switch	1
74/76	C	D3MY 14528-D	Single type-R.H. front door or R.H. and L.H. rear doors	3

YEAR	MODEL/RESTRICTIONS	PART NUMBER	DESCRIPTION	QTY.
14527-8	HOUSING (WINDOW REGULATOR SWITCH)-Also refer to groups 13C708, 14A020, 238A06 and 24142-3 — Cont'd			

D (Lincoln)

NOTE 1 - Metal casting, NOTE 2 - Plastic casting

77/	D - - w/power door locks w/o power seats	D8VY 14527-L	Multiple type -R.H. front door "Window" "Door lock"	1
77/	D - - w/power door locks w/power seats NOTE 2	D8VY 14527-K	Multiple type -R.H. front door "Rear Tilt" "Front Tilt" "Seat" "Window" "Door lock"	1
78/	D(53) - - w/o power door locks w/power seats NOTE 2	★D8VY 14527-A Not replaced	Multiple type -L.H. front door "Mirror" "Rear Tilt" "Front Tilt" "Seat" "L front" "R front" "L rear" "R rear" "Window lock"	1
78/	D(53) - - w/power door locks w/power seats NOTE 2	D8VY 14527-B	Multiple type -L.H. Front door "Mirror" "Rear Tilt" "Front Tilt" "Seat" "L Front" "R front" "L rear" "R rear" "Window lock" "Door lock"	1
77/	D(60) - - w/o power door locks w/power seats NOTE 2	★D8VY 14527-C Not replaced	Multiple type -L.H. front door "Mirror" "Rear Tilt" "Front Tilt" "Seat" "L front" "R front"	1
78/	D(60) - - w/power door locks w/power seats NOTE 2	D8VY 14527-D	Multiple type -L.H. front door "Mirror" "Rear Tilt" "Front Tilt" "Seat" "L front" "R front" "Door lock"	1
78/	D(60) - - w/o power door locks w/o power seats NOTE 2	★D8VY 14527-E Not replaced	Multiple type -L.H. front door "Mirror" "L front" "R front"	1
78/	D(60) - - w/power door locks w/o power seats NOTE2	★D8VY 14527-F Not replaced	Multiple type -L.H. front door "Mirror" "L front" "R front" "Door lock"	1
78/	D(53) - - w/o power door locks w/o power seats NOTE 2	★D8VY 14527-G Not replaced	Multiple type L.H. front door "Mirror" "L front" "R front" "L rear" "R rear" "Window lock"	1
77/	D(53) - - w/power door locks w/o power seats NOTE 2	★D8VY 14527-H Not replaced	Multiple type -L.H. front door "Mirror" "L front" "R front" "L rear" "R rear" "Door lock" "Window lock"	1
77/	D - - w/o power door locks w/o power seats NOTE 2	★D8VY 14528-A Not replaced	Single type -R.H. front door "Window"	1
78/	D(53) NOTE 2	D8VY 14528-B	Multiple type-R.H. rear door "Window" "Light"	1
77/	D(53) NOTE 2	D8VY 14528-C	Multiple type-L.H. rear door "Window" "Light"	1

F (Cougar)

74/76	F	D4WY 14527-A	Multiple type-2 switch L.H. front door	1
74/76	F	D3MY 14528-D	Single type R.H. front door	1
77/	F(65L) - - w/power door locks w/o power windows with remote control mirror	★D6AZ 14527-A Not replaced	Single type-L.H. front door "Door Lock" "Mirror"	1
77/	F(65L) - - w/power door locks w/o power windows	★D6AZ 14528-A Not replaced	Single type-R.H. front door "Door Lock" "Unlock"	1
77/	F(65L) - - w/power door locks and power windows	D6AZ 14528-B	Single type-R.H. front door "Window" "Door Lock" "unlock" includes ash receptacle cover	1
77/	F(65L) - - w/o power door locks w/power windows	★D6MY 14528-A Not replaced	Single type-R.H. front door "window" includes ash receptacle cover	1
77/	F(65L) - - w/o power door locks w/power windows with remote control mirror	D6AZ 14527-C	Multiple type-L.H. front door "L-Front" "R-Front"	1

COPYRIGHT © 1986 — FORD MOTOR COMPANY — DEARBORN, MICHIGAN

1973/79 LINCOLN-MERCURY CARS

YEAR	MODEL/RESTRICTIONS	PART NUMBER	DESCRIPTION	QTY.
14527-8	HOUSING (WINDOW REGULATOR SWITCH)-Also refer to groups 13C708, 14A020, 238A06 and 24142-3 — Cont'd			

F (Cougar)

77/	F(65L) - - w/power door locks and power windows with remote control mirror	D6AZ 14527-D	Multiple type-L.H. front door "L-Front" "R-Front" "Door lock" "Unlock"	1
77/	F(53,71)	D4GY 14527-A	Multiple type 5 switch L.H. front door	1
77/	F(65D,K)	D4WY 14527-A	Multiple type 2 switch L.H. front door	1
77/ 77/	F(exc. 65L) F(53,71)	D3MY 14528-D	Single type-R.H. front door R.H. and L.H. rear doors	1 2

G (Monarch)

75 75/	G(54K) G(54H) - - w/o power door locks	D4GY 14527-A	Multiple type-5 switch L.H. front door-trim panel mtd.	1 1
75/	G(66)	D4WY 14527-A	Multiple type-2 switch L.H. front door	1
75 75/ 75/ 75 75/	G(54K) G(54H) "From 11/74" G(66) "From 11/74" G(54K) G(54H)	D3MY 14528-D	Single type-R.H. front door R.H.-front door R.H.-front door R.H. and L.H. rear door R.H. and L.H. rear door	1 1 1 2 2
76/77	G(54K) - - w/o power door locks	★ D64Y 14527-A Not replaced	Multiple type-5 switch L.H. front door arm rest mtd. "L-front" "R-front" "L-rear" "R-rear" "window lock" includes ash receptacle	1 1
77	G(54) - - w/power door locks	D7DZ 14527-B	Multiple type-6 switches-L.H. front door arm rest mtd. "L-front" "R front" "L rear" "R-rear" "Window lock" "Door lock" includes ash receptacle	1
76/77	G(54K)	D64Y 14528-A	Single type-R.H. front door includes ash receptacle	1
76/77	G(54K)	D64Y 14528-B	Single type-R.H. rear door includes ash receptacle	1
76/77	G(54K)	D64Y 14528-C	Single type-L.H. rear door includes ash receptacle	1

J (Capri)

79	J - - w/power door locks	(RH) D9ZZ 14528-C	(LH) D9ZZ 14528-D	Front door	1

K (Mark IV,Mark V)

NOTE 1 - Metal casting, NOTE 2 - Plastic moulded

75/76	K	★ D6LY 14527-A Not replaced	Multiple type-L.H. front door "Mirror" "Rear Tilt" "Front Tilt" "Seat" "L-Front" "R-Front" "Window Lock" "Door Lock"-Baby burl wood grain finish	1
75/76	K	D6LY 14527-B	Multiple type-L.H. front door "Mirror" "Rear Tilt" "Front Tilt" "Seat" "L-Front" "R-Front" "Window Lock" "Door Lock"-Light maple wood grain finish	1
75/76	K	★ D5LY 14528-C Not replaced	Multiple type-R.H. front door "Rear Tilt" "Front Tilt" "Seat" "Window" "Door Lock"-Light maple wood grain finish	1
75/76	K	D5SZ 14528-A	Multiple type-R.H. front door "Rear Tilt" "Front Tilt" "Seat" "Window" "Door Lock"-Baby burl wood grain finish	1
77/	K - - w/power seats w/o power door locks NOTE 2	★ D8LY 14527-A Not replaced	Multiple type-L.H. front door-"Mirror" "Rear Tilt" "Front Tilt" "L front" "R front"	1
77/	K - - w/power seats w/power door locks w/o console NOTE 2	D8LY 14527-B	Multiple type-L.H. front door-"Mirror" "Rear Tilt" "Front Tilt" "L Front" "R Front" "Door Lock"- majestic walnut wood grain finish	1
78/	K - - w/power seats w/power door locks w/console	★ D8LY 14527-C Not replaced	Multiple type-L.H. front door-"Mirror" "Seat" "Rear Tilt" "Front Tilt" "L front" "R front" "Door Lock"-ebony wood grain finish	1
77/	K - - w/o power door locks w/o power seats- NOTE 2	★ D8LY 14528-A Not replaced	Single type -R.H. front door "Window"	1

YEAR	MODEL/RESTRICTIONS	PART NUMBER	DESCRIPTION	QTY.
14527-8	HOUSING (WINDOW REGULATOR SWITCH)-Also refer to groups 13C708, 14A020, 238A06 and 24142-3 — Cont'd			
	K (Mark IV,Mark V)			
	NOTE 1 - Metal casting, NOTE 2 - Plastic moulded			
77/	K - - w/power door locks w/o power seats NOTE 2	D8LY 14528-B	Multiple type -R.H. front door "Window" "Door lock"	1
77/	K - - w/power seats w/o power door locks NOTE 2	★D8LY 14528-C Not replaced	Single type-R.H. front door "Rear Tilt" "Front Tilt" "Seat" "Window"	1
77/	K - - w/power door locks w/power seats NOTE 2	D8LY 14528-D	Multiple type -R.H. front door "Rear Tilt" "Front Tilt" "Seat" "Window" majestic walnut wood grain finish	1
78/	K - - w/power door locks w/power seats	D8LY 14528-E	Multiple type -R.H. front door "Rear Tilt" "Front Tilt" "Seat" "Window" "Door Lock"-ebony wood grain finish	1
	P (Zephyr)			
78	P - - w/o power door locks	D4GY 14527-A	Multiple type -5 switch L.H. front door trim panel mtd.	1
78	P	D4WY 14527-A	Multiple type-2 switch L.H. front door	1
78	P	D3MY 14528-D	Single type-R.H. front door and/or both R.R. doors	1
79	P(66) - - w/o power door locks or remote control mirror	D9AZ 14527-A	Multiple type-L.H. front door-trim panel mounted	1
79	P(54,66,74)	D9AZ 14528-F	Single type - R.H. front door or R.H. and L.H. rear door-trim panel mounted	3
	V (Versailles)			
77/	V - - w/power door locks	D7DZ 14527-A	Multiple type-2 switches-R.H. front door "window" "Door locks"	1
77/	V - - w/power door locks	D74Y 14527-B	Multiple type-6 switches L.H. front door "L front" "R front" "R rear" "window lock" "door lock"	1
77/	V - - w/o power door locks	★D74Y 14527-A Not replaced	Multiple type-5 switches L.H. front door "L front" "R front" "L rear" "R rear" "window lock"	1
77/	V - - w/o power door locks	★D64Y 14527-A Not replaced	Single type-R.H. front door includes ash receptacle	1
77/	V	D64Y 14528-B	Single type - R.H. rear door includes ash receptacle	1
77/	V	D64Y 14528-C	Single type - L.H. rear door includes ash receptacle	1
	Y (Meteor)			
73/76	Y - - w/power door locks and w/o power windows with remote control mirror	★D6AZ 14527-A Not replaced	Multiple type-L.H. front door "Door Lock-" unlock"	1
76	Y(53,71) - - w/power windows w/o power door locks with remote control mirror	★D6MY 14527-A Not replaced	Multiple type -L.H. front door "Mirror " L- Front" "R Front" L Rear" R Rear" Window Lock"	1
73/76	Y (53,71) - - w/power windows with power door locks and remote control mirror	D6AZ 14527-B	Multiple type L.H. Front door "Mirror" L Front" R Front" L Rear" R Rear" Window Lock" Door Lock"	1
76	Y(65) - - w/power windows and power door locks with remote control mirror	D6AZ 14527-C	Multiple type - L.H. Front door "L Front" R Front"	1
75/76	Y(65) - - w/power windows and power door locks with remote control mirror	D6AZ 14527-D	Multiple type-L.H. front door "L Front" R Front "Door Lock" unlock"	1
76	Y - - w/power door locks and power windows	D6AZ 14528-B	Single type - R.H. front door" Window " Door Lock" unlock" includes ash receptacle cover	1

COPYRIGHT © 1986 — FORD MOTOR COMPANY — DEARBORN, MICHIGAN

YEAR	MODEL/RESTRICTIONS	PART NUMBER	DESCRIPTION	QTY.
14527-8	HOUSING (WINDOW REGULATOR SWITCH)-Also refer to groups 13C708, 14A020, 238A06 and 24142-3 — Cont'd			
	Y (Meteor)			
73/76	Y - - w/power door locks and w/o power windows	★ D6AZ 14528-A Not replaced	Single type-R.H. front door" Door Lock" unlock" includes ash receptacle cover	1
73/75	Y	D3MY 14528-D	Single type-R.H. and L.H.-rear quarter windows	2
76	Y(53,71) - - w/power windows	(RH) ★ D6MY 14528-A Not replaced	(LH) ★ D6AZ 14528-C Not replaced; Single type-rear door "Window" includes ash receptacle cover	1
73/	A,Y	34653-S36M	(M-106-XA)-nut (attach housing to panel)-No. 8-32	AR
73/	A,C,F,Y	52445-S13	(U-317)-screw (attach housing to panel)-No. 8-18 x 1"	AR
73/	C,F,G	52388-S13	(U-298)-screw (attach housing to panel)-No. 8-15 x 1 1/2"	AR
73/	C,F,G	★ 382387-S	(UU-59-B)-screw (attach housing to panel)-No. 8-32 x 7/8"	AR
76	G	352000-S	(CC-29)-bumper (located on R.H. front and R.H. and L.H. rear housing ash tray lid)	AR
73/ 76	A,Y C,F	55935-S2	(U-317-B)-screw (attach housing to arm rest)-No. 8-18 x 1"	AR AR
73/ 74	A,C,F,K,Y D "Before 6/76"	383356-S	(MM-216-A)-nut (attach housing to arm rest)-No. 8 or 10	AR AR
73/	K	370713-S100	(M-292)-nut (attach housing to trim panel)-1/8" self threading	4
14529	SWITCH ASSY. (WINDOW REGULATOR CONTROL) - Also refer to group 15B691 and 18863			
73/78	A(71), Y(71) - - w/o power door locks	D3AZ 14529-D	#D3AB 14046-AC-key operated-on tailgate	1
73/74	A(71), Y(71) - - w/power door locks	★ D4AZ 14529-A	#D4AB 14046-AA-key operated-on tailgate-not repl.	1
75/76	A(71), Y(71) - - w/power door locks	D5AZ 14529-B	#D5AB 14046-AA-key operated on tailgate	1
73/78	A(71) - - w/o tailgate window washer	D3MY 14529-A	#D3MB 14529-AA-toggle type-on instrument panel	1
73/78	A - - w/power antenna			1
78/	D - - w/power antenna			1
73/76	Y(71) - - w/o tailgate window washer			1
73/76	Y - - w/power antenna			1
77/78	A(71) - - w/power door locks	D7AZ 14529-A	#D7AB 14046-AA- Key operated on tailgate	1
73/76	C	D3AZ 14529-F	#D3AB 14529-CA,CB-single type-	AR
73/	A,F		R.H. front door or R.H. and L.H. rear doors or quarters-also used for power door lock control	AR
77/	G(54),V		Used for power door locks control	2
73/	K		R.H. front door or power door lock control	AR
73/	D		R.H. front door or R.H. and L.H. rear door or quarter windows	AR
73/	D "From 10/72"		R.H. and L.H. front door-used for power door lock control	1
74/76	F		L.H.-front door	2
75/	K		Used for lumbar adjustable seat	1
75/	G(66)		R.H. and L.H. front doors	3
75/	G(54)		R.H. front door or R.H. and L.H. rear doors	AR
78/	P(36)		L.H. front door	2
78/	P		R.H. front door or R.H. and L.H. rear doors	3
77/	D,K		Sun roof	1
78/	F "From 9/77"		Sun roof	1
75/78	A(65)	E0VY 14529-B	#D5AB 14540-A1A-multiple type-(2) switches-arm rest mtd.	1
75/76	Y(65)		L.H. front door	1
77/	F(65),D(60),K		L.H. front door	1
79	A(66)		L.H. front door	1

YEAR	MODEL/RESTRICTIONS	PART NUMBER	DESCRIPTION	QTY.
14529	SWITCH ASSY. (WINDOW REGULATOR CONTROL) - Also refer to group 15B691 — Cont'd			
73/76	C,K,Y	E0VY 14529-C	#D2MB 14540-AA,D5AB 14540-BA-multiple type-	1
73/	A(54,71,74)		(5) switches-L.H. front door-arm rest mtd.	1
73	F		L.H.-front door	1
77/	F(53,71)		L.H.-front door	1
73/74	D "From 10/72"		L.H.-front door	1
75/	D(53)		L.H.-front door	1
75/	G(54)		L.H.-front door	1
78	P		L.H. front door	1
77/	V		L.H.-front door	1
79	A,J - - w/power door locks	D9AZ 14529-A	#D9AB 14017-AB	2
79	A(54,74)	D9AZ 14529-B	#D9AB 14505-AA-multiple type-incl. housing	1
79	P(54,74)		and 5 switches-L.H. front door-trim panel mtd.	1
79	A(74) - - w/power tailgate window	★ D9AZ 14529-C	#D9AB 14A551-A1A (T' GATE)-repl. by E2AZ 14529-A (9/83)	1
79	A(74) - - w/power tailgate window	D9AZ 14529-D	#D9AB 14A551-BB-located on tailgate door latch (key operated)	1
73/76	C(71)	D30Z 14529-A	#D30B 14046-AA-key operated-on tailgate	1
77	F(71)			1
73/76	C(71)	D20Z 14529-A	#D20B 14529-AA-toggle type-on instrument panel	1
77	F(71)			1
73	D "Before 10/72"	D1VY 14529-A	#D1VB 14A265-AA-multiple type (4) switches and wiring-L.H. front door	1
73/	D	C9SZ 14529-A	Single type switch and wiring used as a replacement switch in D1VY 14529-A multiple switch assy.	AR
75/76	D(60), K	D5VY 14529-A	#D5VB 14540-A1A,A2A-multiple type-3 switch L.H. front door	1
77/	D,K	E0VY 14529-B	#D5AB 14540-A1A Multiple type (2) switch L.H. front door	1
73/74	K	★ D2LY 14529-B Not replaced	#D2LB 14529-AB-single type switch-R.H. and L.H. rear quarter windows	2
74/	A(71), Y(71)	383938-S	(UU-52-V)-screw (attach switch to instru. panel)- No. 8-12 x 1/2"	AR
14530	BUTTON ASSY. (WINDOW REGULATOR CONTROL SWITCH)			
73/	A,C,D,F,K,Y	★ D1MY 14530-A	Use on single type switches-not replaced	AR
14536	BRACKET (INSTRUMENT PANEL WIRING)			
73/75	C,K	★ D20Z 14536-C	Located at parking brake control mounting housing	1
75	F,L	Not replaced		1
76/77	F,K "Before 5/77"	★ D60Z 14536-A	Located at parking brake control	1
76	C	Not replaced		1
77/	F,K "From 5/77"	★ D70Z 14536-A	Located at parking brake control mounting housing-N.R.	1
74/77	D - - w/automatic headlamp dimmer	★ D4VY 14536-A	Located on headlamp switch-not replaced	1
75/77	D - - w/heated back lite	★ D5VY 14536-A	Not replaced	1
75/77	G	D5DZ 14536-A	Located at cowl top panel	1
77	V			1
77/	K			1
73	K - - w/brake skid control	D3LY 14536-B		1
75/	L	D5ZZ 14536-A		1
73	C	52012-S8	(U-202)-screw (attach bracket to parking brake)-	AR
74/	K		8-15 x 1/2"	AR
74/	D,K	376785-S2	(MM-292-H)-nut (attach bracket to brake booster)- 3/8"-16	AR
14A546	WIRE ASSY. (SEAT BELT SWITCH)-Improvise			
14547	MOTOR ASSY. (SEAT REGULATOR)			
73/74	A,C,D,Y	★ D20Z 14547-A	*MM-304-6-way bench seat	1
74	F	Not replaced		1
75/	A,C,D,F,Y	D7AZ 14547-B	*MM-343-A - - w/6 way bench seat	1
73/78	A,D,F,K "Before 3/1/78"	D5SZ 14547-A	*MM-344-6-way split bench seat	
73/76	C,Y			AR

COPYRIGHT © 1986 — FORD MOTOR COMPANY — DEARBORN, MICHIGAN

1973/79 LINCOLN-MERCURY CARS

YEAR	MODEL/RESTRICTIONS	PART NUMBER	DESCRIPTION	QTY.
14547	MOTOR ASSY. (SEAT REGULATOR) — Cont'd			
75/	D,F,K "From 3/78"	D7AZ 14547-A	*MM-344-A - - w/6 way split bench seat	1
75/76	C,Y			
75/78	A - - w/6 way split bench seat "From 3/78"			2
79	A - - w/6 way split bench seat	D9AZ 14547-A	*MM-384	2
73	D	★ D0VY 14547-A	*MM-285-2-way bench seat-not replaced	1
74	D(65) Town Car	★ C7SZ 14547-B	*MM-222-6-way bench seat-not replaced	1
75/	D(60) Town Car	★ D5VY 14547-A	*MM-345-6-way bench seat-not replaced	1
75/	G	D5DZ 14547-A	*MM-349-4-way bucket seats	1
75/	G	D5DZ 14547-B	*MM-350-4-way bench seats	1
78/	P			1
77/	V			1
75/	K	★ D5LY 14547-A	*MM-336-lumbar adjustable seat-not replaced	1
14A547	WIRE ASSY. (SEAT BELT SWITCH JUMPER)-Refer to group 14A546			
14A549	WIRING ASSY. (LUGGAGE COMPARTMENT REMOTE CONTROL EXTENSION)-Refer to group 14276			
14A551	SWITCH ASSY. (TAILGATE WINDOW REGULATOR)-Refer to group 14529			
14553	MOTOR ASSY. (WINDOW REGULATOR)-Refer to Body group 23394-5			
14A554	ACTUATOR (SEAT BELT and IGNITION WARNING SYSTEM)-Also refer to Group 10B926			
74	A,C,F,G,L,Y	★ D4AZ 14A554-B	#C4AB 14A554-A1C,A1D,A2D,A3D,A4C-not replaced	1
73/74	P - - w/passenger restraint system			1
75	A,C,D,F,G,K,L,P,Y "Before 1/75"		Seat belt and ignition warning system	1
74	K	55907-S2	(U-254-B)-screw (attach actuator to bracket)-	AR
75	P		No. 8-18 x 1/2"	AR
74/75	D,P	381863-S2	(MM-275-J)-nut (attach actuator to glove compart-ment)-No. 8-18	AR
75	L	56910-S2	(U-413)-screw (attach actuator to bracket)- No. 8-18 x 1/2"	AR
14A558	WIRING ASSY. (LUGGAGE COMPARTMENT)			
73	A(53,57,65),Y(53,57,65) - - w/anti-theft alarm system	★ D3AZ 14A558-A Not replaced	#D3AB 14A558-AB	1
74/75	A(exc. 71),Y(exc. 71) - - w/anti-theft alarm system-	★ D4AZ 14A558-A Not replaced	#D4AB 14A558-AA	1
76	A,Y - - w/anti-theft alarm system	★ D6AZ 14A558-A	#D6AB 14A558-AA-not replaced	1
74	C(exc. 71), F - - w/anti-theft alarm system	★ D40Z 14A558-A Not replaced	#D40B 14A558-AA	1
75/76	C,F - - w/anti-theft alarm system	★ D50Z 14A558-A	#D50B 14A558-AA-not replaced	1
75/76	G - - w/anti-theft alarm system	★ D5DZ 14A558-A	#D5DB 14A558-AA-not replaced	1
14559	CLIP (WINDOW or SEAT REGULATOR SWITCH RETAINING)			
73/78	A(71)	★ C5AZ 14559-B Not replaced	For electric tailgate	1
73/76	C(71),Y(71)			1
77	F(71)			1
73	D	C5AZ 14559-C	Power window, door locks, or power seats	AR
73/	D	C5AZ 14559-A	Use with power windows and power seats	AR
14A563-4	HOUSING ASSY. (WINDOW REGULATOR SWITCH)-Refer to groups 14527 and 14528			
14A567-8	HOUSING ASSY. (WINDOW REGULATOR SWITCH)-Refer to group 14528			
14570	CLIP (WINDOW REGULATOR HOUSING RETAINER)			
73	F	D1AZ 14570-A	Use in R.H. and L.H. quarter windows	2
14574	WIRE ASSY. (RADIO REAR SEAT SPEAKER EXTENSION)			
73	A(exc. 71), Y(exc. 71) - - w/AM radio and dual rear seat speakers	★ D3AZ 14574-A Not replaced	#D3AB 14574-AB	1
73	A(71),Y(71) - - w/AM radio and dual rear seat speakers	★ D3AZ 14574-B Not replaced	#D3AB 14574-BB	1

YEAR	MODEL/RESTRICTIONS	PART NUMBER	DESCRIPTION	QTY.
14574	WIRE ASSY. (RADIO REAR SEAT SPEAKER EXTENSION) — Cont'd			
74/78	A(exc. 71) - - w/dual rear seat speakers-AM or AM/FM radio	★ D5AZ 14574-A Not replaced	#D4AB 14574-AA, D5AB 14574-AA	1
74/76	Y(exc. 71) - - w/dual rear seat speakers-AM or AM/FM radio			1
74/78	A(71) - - w/dual rear seat speakers-AM or AM/FM radio	★ D5AZ 14574-B Not replaced	#D4AB 14574-BA, D5AB 14574-BA	1
74/76	Y(71) - - w/dual rear seat speakers-AM or AM/FM radio			1
79	A - - w/AM or AM/FM radio and dual rear seat speakers	D9AZ 14574-A	#D9AB 14574-AB	1
73/74	C - - w/AM radio and dual rear seat speakers	★ D30Z 14574-A Not replaced	#D30B 14574-AA, D40B 14574-CA	1
74	F			1
75/76	C - - w/dual rear seat speakers	★ D50Z 14574-A Not replaced	#D50B 14574-AA	1
75/	F(65) - - w/dual rear seat speakers			1
77/	F(53,71) - - w/dual rear seat speakers and monaural radio			1
77/	F - - w/stereo radio or tape system	★ D70Z 14574-C Not replaced	#D70B 14574-AB	1
73/75	C(exc. 71), F - - AM radio w/dual rear speakers	★ D20Z 14574-A Not replaced	#D20B 14574-AC	1
73/76	C,F - - with AM/FM radio and rear seat speakers	★ D20Z 14574-B Not replaced	#D30B 14574-BA	1
73	A	383182-S100	(GG-359)-clip-(attach wiring to cowl top panel)	3
73	A	383472-S	(GG-271-C)-clip-(attach wiring to package tray)	4
73/	A	379042-S	(GG-143-A)-clip-(attach wiring to center floor pan)	AR
73/	A	376389-S101	(UU-82-D)-screw (attach clip to center floor pan)-No. 8-18 x 3/4"	AR
76	A,Y	377774-S	(GG-270)-clip (attach wire assy. to R.H. side of center floor pan)	AR
14A576	WIRE ASSY. (SEAT SENSOR SWITCH)			
74	A,Y - - w/full bench seat	★ D4AZ 14A576-D	#D4AB 14A576-AD-not replaced	1
74	A,Y - - w/split bench seat	★ D4AZ 14A576-B	#D4AB 14A576-BD-not replaced	1
74	A(P/C),Y(P/C) - - w/heavy duty bench seat	★ D4AZ 14A576-E	#D4AB 14A576-CC-not replaced	1
75	A - - w/split bench seat	★ D5AZ 14A576-A	#D5AB 14A576-AB-not replaced	1
75	Y - - w/split bench seat			1
75	A - - w/bench seat	★ D5AZ 14A576-B	#D5AB 14A576-BA-not replaced	1
75	Y - - w/bench seat			1
74	C - - exc. flight bench seat	★ D40Z 14A576-C	#D40B 14A576-AC,AD-not replaced	1
74	F			1
74	C - - w/flight bench seat	★ D40Z 14A576-D	#D40B 14A576-BC-not replaced	1
75	C - - w/bench seat	★ D50Z 14A576-A	#D50B 14A576-AA-not replaced	1
73/74	D - - w/full bench seat	★ D4VY 14A576-A	#D4VB 14A576-AB-not replaced	1
73/74	D - - w/split bench seat	★ D4VY 14A576-B	#D4VB 14A576-BB-not replaced	1
14A579	WIRE ASSY. (SEAT BELT RETRACTOR SWITCH)-Refer to group 14A504			
14A584	WIRING ASSY. (DOOR LOCK JUMPER)			
78/	G,V - - w/illuminated entry system w/o power door locks	D8DZ 14A584-A	#D8DB-14A584-AA	2
14A587	WIRE ASSY. (DOOR WARNING SWITCH)			
77/	A(65),F(65) - - w/illuminated entry system	★ D7AZ 14A587-A	#D7AB 14A587-AB,AC-not replaced	2
77/	K - - w/illuminated entry system	★ D7LY 14A587-A	#D7LB 14A587-AA-not replaced	1
75/76	D	55907-S2	(U-254-B)-screw (attach wire to front door inside panel)-No. 8-18 x 1/2"	AR
14A595	WIRING ASSY. (THROTTLE)			
79	A - - w/351W Calif. only	D9AZ 14A595-A	#E4AB 14A595-AA-for conv. from EECII to EECIII system	1

COPYRIGHT © 1986 — FORD MOTOR COMPANY — DEARBORN, MICHIGAN

1973/79 LINCOLN-MERCURY CARS

YEAR	MODEL/RESTRICTIONS	PART NUMBER	DESCRIPTION	QTY.
14A601	RESISTOR ASSY. (OUTSIDE MIRROR WITH THERMOMETER)			
78/	D,K,V	D8LY 14A601-A	330 ohms-repair part for illuminated thermometer	1
14605	GROMMET			
77/	A,D,K - - w/hidden headlamps	D6AZ 14605-A	3 hole-1 1/4" x 1"	1
14613	RETAINER (WIRING GROMMET)			
73/76	A,Y	★ D2MY 14613-A	Use with brake skid control	1
76/	D,K	Not replaced	Use with brake skid control	1
73/	A,C,D,F,G,K,L,P,V,Y - - w/breakerless ignition system	D3LY 14A614-A	8" long, 3 terminal connector-wiring loom to modulator assy. and/or distributor connection	AR
73/	A,C,D,F,G,K,L,P,V,Y - - w/breakerless ignition system	D3LY 14A614-B	8" long, 4 terminal connector-wiring loom to modulator assy. connection	AR

14630-1 WIRING (FRONT WINDOW REGULATOR)

WIRING LOOM MARKING or TAG NUMBER TO SERVICE WIRING PART NUMBER GUIDE

The purpose of this guide is to facilitate the identification of the Service Wiring Part Number. The chart that follows lists in numerical sequence the Wiring Loom Markings or Tag Numbers. For many vehicles the Service Wiring Part Number will be the same as the Loom Marking or Tag Part Number. This type of replacement will cause little or no installation problems. However, when the Service Wiring differs from the Loom Marking or Tag Number it will be necessary to match lead wires and to tape up those lead wires which are not required. This is necessary when the Service Wiring has a more general application than the original wiring installed by the factory. Following this guide chart, Service Wiring Part Numbers are listed by model year and vehicle usage which will permit the identification of replacement wiring when the loom identification marking or tag number is not known.

IDENTIFICATION CHART

IDENTIFICATION	PART NUMBER	IDENTIFICATION	PART NUMBER
D3AB 14630-AD	★ D3AZ 14630-A	D7AB 14630-BA	D7AZ 14630-B
D3LB 14630-AB	D3LY 14630-A	D7DB 14630-AD	★ D7DZ 14630-A
ED-D3LB 14630-AB	D3LY 14630-A	D7DB 14630-BD	D7DZ 14630-B
D30B 14630-AA	★ D30Z 14630-A	D7LB 14630-AD	D7LY 14630-A
D3VB 14630-AB	D3VY 14630-A	D7LB 14630-AE	D7LY 14630-C
D3VB 14630-AC	D3VY 14630-C	D7LB 14630-BD	D7LY 14630-B
D3VB 14630-AD	D3VY 14630-C	D7LB 14630-BE	D7LY 14630-D
D3VB 14630-BB	D3VY 14630-B	D70B 14630-AB	D70Z 14630-A
D3VB 14630-BC	D3VY 14630-D	D7SB 14630-AB	D7SZ 14630-A
D3VB 14630-BD	D3VY 14630-D	D7SB 14630-AD	D7SZ 14630-A
D3ZB 14630-AB	★ D3WY 14630-A	D7VB 14630-AC	D7VY 14630-A
D4AB 14630-AA	D4AZ 14630-A	D7VB 14630-BC	D7VY 14630-B
D4AB 14630-BA	D5AZ 14630-A	D74B 14630-AA	D74Y 14630-A
D4LB 14630-BA	D4LY 14630-A	D8BB 14630-AA	D8BZ 14630-B
D4LB 14630-BB	D4LY 14630-A	D8BB 14630-BA	D8BZ 14630-C
D4LB 14630-BD	D4LY 14630-A	D8DB 14630-AA	D8DZ 14630-A
D40B 14630-AA	D40Z 14630-B	D8SB 14630-AA	D7SZ 14630-A
D40B 14630-AB	D40Z 14630-B	D8VB 14630-AB	D8VY 14630-A
D40B 14630-AC	D40Z 14630-B	D8VB 14630-BB	D8VY 14630-B
D40B 14630-AD	D40Z 14630-B	D84B 14630-AA	D84Y 14630-A
D4VB 14630-AA	D4VY 14630-A	D9AB 14630-AF	D9AZ 14630-A
D4VB 14630-AB	D4VY 14630-A	D9AB 14630-AG	D9AZ 14630-A
ED-D4VB 14630-AC	D4VY 14630-C	D9AB 14630-BD	D9AZ 14630-B
D4VB 14630-CA	D4VY 14630-B	D9AB 14630-BE	D9AZ 14630-B
D4VB 14630-CB	D4VY 14630-B	D9AB 14630-BF	D9AZ 14630-B
ED-D4VB 14630-CC	D4VY 14630-D	D9AB 14630-BG	D9AZ 14630-B
D5AB 14630-AA	D6AZ 14630-A	D9AB 14630-CB	D9AZ 14630-F
D5DB 14630-AB	D5DZ 14630-A	D9AB 14630-CC	D9AZ 14630-F
D5DB 14630-BB	D5DZ 14630-B	D9AB 14630-DB	D9AZ 14630-G
D5DB 14630-CB	D5DZ 14630-C	D9AB 14630-DC	D9AZ 14630-G
D50B 14630-AA	D50Z 14630-A	D9AB 14630-EC	D9AZ 14630-H
D5VB 14630-AB	D5VY 14630-A	D9AB 14630-ED	D9AZ 14630-H
D5VB 14630-AC	D5VY 14630-C	D9AB 14630-EE	D9AZ 14630-H
D5VB 14630-BB	D5VY 14630-B	D9BB 14630-AB	D8BZ 14630-A
D5VB 14630-BC	D5VY 14630-D	D9BB 14630-DA	D9BZ 14630-A
D5VB 14630-BD	D5VY 14630-B	D9BB 14630-EC	D9BZ 14630-B
D6AB 14630-AA	D6AZ 14630-B	D9BB 14630-ED	D9BZ 14630-B
D6DB 14630-AE	D6DZ 14630-A	D9BB 14630-FC	D9BZ 14630-C
D6DB 14630-AF	D6DZ 14630-A	D9DB 14630-AA	D9DZ 14630-A
D6DB 14630-BD	D6DZ 14630-B	D9MB 14630-AB	D9MY 14630-A
D6DB 14630-BE	D6DZ 14630-B	D9MB 14630-AC	D9MY 14630-A
D6LB 14630-BA	D6LY 14630-B	D9MB 14630-BB	D9MY 14630-B
D60B 14630-AA	D60Z 14630-A	D9MB 14630-BC	D9MY 14630-B
D64B 14630-AG	D64Y 14630-A	D9MB 14630-BD	D9MY 14630-B
D64B 14630-AH	D64Y 14630-A	D90B 14630-AB	D90Z 14630-A
D7AB 14630-AC	D7AZ 14630-A	D9SB 14630-AA	D9SZ 14630-A

COPYRIGHT © 1986 — FORD MOTOR COMPANY — DEARBORN, MICHIGAN

IDENTIFICATION CHART

IDENTIFICATION	PART NUMBER	IDENTIFICATION	PART NUMBER
D3AB 14631-AB	D3AZ 14631-A	D7DB 14631-AF	D7DZ 14631-D
D3LB 14631-AB	D3LY 14631-C	D7DB 14631-BE	D7DZ 14631-B
ED-D3LB 14631-AD	D3LY 14631-C	D7DB 14631-BF	D7DZ 14631-E
D3LB 14631-AD	D3LY 14631-C	D7DB 14631-CD	D7DZ 14631-C
D30B 14631-AA	★ D30Z 14631-A	D7LB 14631-AD	D7LY 14631-A
D30B 14631-AB	★ D30Z 14631-A	D7LB 14631-AE	D7LY 14631-B
D3VB 14631-AB	D3VY 14631-A	D70B 14631-AB	D70Z 14631-A
D3VB 14631-AC	D3VY 14631-B	D70B 14631-AC	D70Z 14631-C
D3VB 14631-AD	D3VY 14631-B	D70B 14631-BB	D70Z 14631-B
D3ZB 14631-AB	★ D3WY 14631-A	D70B 14631-BC	D70Z 14631-D
D4AB 14631-AA	D4AZ 14631-A	D7SB 14631-AG	D7SZ 14631-A
D4LB 14631-AC	D4LY 14631-A	D7SB 14631-AH	D7SZ 14631-A
D4LB 14631-AD	D4LY 14631-A	D7SB 14631-AJ	D7SZ 14631-B
D40B 14631-AA	D40Z 14631-B	D7VB 14631-AD	D7VY 14631-A
D40B 14631-AB	D40Z 14631-B	D7VB 14631-BC	D7VY 14631-B
D40B 14631-AC	D40Z 14631-B	D74B 14631-AA	D74Y 14631-A
D40B 14631-AD	D40Z 14631-B	D8AB 14631-AB	D8AZ 14631-A
D4VB 14631-AB	D4VY 14631-B	D8AB 14631-BA	D8AZ 14631-B
ED-D4VB 14631-AD	D4VY 14631-B	D8AB 14631-CA	D8AZ 14631-C
D4WB 14631-AD	D4WY 14631-A	D8BB 14631-AA	D8BZ 14631-A
D4WB 14631-AE	D4WY 14631-A	D8BB 14631-BA	D8BZ 14631-D
D4WB 14631-AF	D4WY 14631-A	D8DB 14631-AA	D8DZ 14631-A
D4WB 14631-AG	D4WY 14631-B	D8DB 14631-BA	D8DZ 14631-B
D5AB 14631-AA	D5AZ 14631-A	D8LB 14631-AA	D8LY 14631-A
D5AB 14631-BA	D5AZ 14631-B	D80B 14631-AA	D80Z 14631-A
D5DB 14631-AA	D5DZ 14631-A	D80B 14631-BA	D80Z 14631-B
D5DB 14631-BB	D5DZ 14631-B	D8SB 14631-AA	D8SZ 14631-A
ED-D5DB 14631-BB	D5DZ 14631-B	D8VB 14631-AD	D8VY 14631-A
D5DB 14631-CA	D5DZ 14631-C	D8VB 14631-BD	D8VY 14631-B
D5DB 14631-DB	D5DZ 14631-D	D84B 14631-AA	D84Y 14631-A
ED-D5DB 14631-DB	D5DZ 14631-D	D9AB 14631-AF	D9AZ 14631-A
D5DB 14631-DC	D5DZ 14631-D	D9AB 14631-AG	D9AZ 14631-A
D50B 14631-BA	D50Z 14631-B	D9AB 14631-AH	D9AZ 14631-A
D5VB 14631-AC	D5VY 14631-A	D9AB 14631-BD	D9AZ 14631-B
D5VB 14631-AD	D5VY 14631-C	D9AB 14631-BE	D9AZ 14631-B
D5VB 14631-BC	D5VY 14631-B	D9AB 14631-BF	D9AZ 14631-B
D5VB 14631-BD	D5VY 14631-B	D9AB 14631-CC	D9AZ 14631-G
D5VB 14631-BE	D5VY 14631-B	D9AB 14631-CD	D9AZ 14631-G
D5VB 14631-BF	D5VY 14631-B	D9AB 14631-CE	D9AZ 14631-G
D5WB 14631-AA	D5WY 14631-A	D9AB 14631-CF	D9AZ 14631-G
D6AB 14631-AA	D6AZ 14631-A	D9AB 14631-DB	D9AZ 14631-H
D6AB 14631-AB	D6AZ 14631-A	D9AB 14631-DC	D9AZ 14631-H
D6AB 14631-BB	D6AZ 14631-B	D9AB 14631-EB	D9AZ 14631-J
D6AB 14631-BC	D6AZ 14631-B	D9AB 14631-EC	D9AZ 14631-J
D6AB 14631-DA	D6AZ 14631-D	D9AB 14631-FB	D9AZ 14631-K
D6DB 14631-AE	D6DZ 14631-A	D9AB 14631-FC	D9AZ 14631-K
D6DB 14631-BC	D6DZ 14631-B	D9AB 14631-GB	D9AZ 14631-L
D6DB 14631-CD	D6DZ 14631-C	D9AB 14631-GC	D9AZ 14631-L
D6DB 14631-DE	D6DZ 14631-D	D9AB 14631-HC	D9AZ 14631-M
D60B 14631-AA	D60Z 14631-A	D9AB 14631-HD	D9AZ 14631-M
D60B 14631-BA	D60Z 14631-B	D9AB 14631-HE	D9AZ 14631-M
D6SB 14631-AB	D6SZ 14631-A	D9BB 14631-BC	D8BZ 14631-B
D64B 14631-AG	D64Y 14631-A	D9BB 14631-CB	D8BZ 14631-C
D7AB 14631-AC	D7AZ 14631-A	D9BB 14631-EC	D9BZ 14631-A
D7AB 14631-AD	D7AZ 14631-E	D9BB 14631-FE	D9BZ 14631-B
D7AB 14631-BC	D7AZ 14631-B	D9BB 14631-FF	D9BZ 14631-B
D7AB 14631-CA	D7AZ 14631-C	D9BB 14631-GA	D9BZ 14631-C
D7AB 14631-DA	D7AZ 14631-D	D9BB 14631-HC	D9BZ 14631-D
D7AB 14631-DB	D7AZ 14631-F	D9MB 14631-AB	D9MY 14631-A
D7DB 14631-AE	D7DZ 14631-A	D9MB 14631-AC	D9MY 14631-A

IDENTIFICATION CHART

IDENTIFICATION	PART NUMBER	IDENTIFICATION	PART NUMBER
D9MB 14631-AD	D9MY 14631-A	D90B 14631-AA	D90Z 14631-A
D9MB 14631-BB	D9MY 14631-B	D90B 14631-BA	D90Z 14631-B
D9MB 14631-BC	D9MY 14631-B	D9SB 14631-AA	D9SZ 14631-A
D9MB 14631-BD	D9MY 14631-B	D9SB 14631-AB	D9SZ 14631-A

YEAR	MODEL/RESTRICTIONS	PART NUMBER		DESCRIPTION	QTY.
14630-1	WIRING (FRONT WINDOW REGULATOR) — Cont'd				
	A (Mercury)				
79	A(54K) - - w/power door locks	(RH) E0AZ 14630-A	(LH) E0AZ 14631-A		1
79	A(74H) - - w/power door locks and colony park pkg.	(RH) E0AZ 14630-A	(LH) E0AZ 14631-A		1
79	A(66K) - - w/power door locks	(RH) E0AZ 14630-B	(LH) E0AZ 14631-C		1
79	A(54H,66H) - - w/o power door locks	(RH) ★ D9AZ 14630-F	(LH) ★ D9AZ 14631-H	Not replaced	1
79	A(74H) - - w/o power door locks or colony park pkg.	(RH) ★ D9AZ 14630-F Not replaced	(LH) ★ D9AZ 14631-H Not replaced		1
79	A(54H) - - w/power door locks and lux. trim	(RH) ★ D9AZ 14630-G Not replaced	(LH) ★ D9AZ 14631-J Not replaced		1
79	A(74H) - - w/power door locks or colony park pkg.	(RH) ★ D9AZ 14630-G Not replaced	(LH) ★ D9AZ 14631-J Not replaced		1
79	A(66H) - - w/power door locks	(RH) ★ D9AZ 14630-H(N.R.)	(LH) D9AZ 14631-M		1
79	A(66K) - - w/lux. trim w/o power door locks	(RH) ★ D9MY 14630-B Not replaced	(LH) ★ D9MY 14631-B Not replaced		1
79	A(54K) - - w/lux. trim w/o power door locks	(RH) ★ D9MY 14630-A Not replaced	(LH) ★ D9MY 14631-A Not replaced		1
79	A(74H) - - w/colony park pkg. w/o power door locks	(RH) ★ D9MY 14630-A Not replaced	(LH) ★ D9MY 14631-B Not replaced		1
79	A(74H) - - w/conv. grp. w/o power door locks or colony park	(RH) ★ D9MY 14630-A Not replaced	(LH) ★ D9AZ 14631-K Not replaced		1
79	A(66H) - - w/o power door locks	(RH) ★ D9MY 14630-A	(LH) ★ D9AZ 14631-L	Not replaced	1
	D (Lincoln)				
78/	D(53) - - w/bench seat	(RH) ★ D8VY 14630-A	(LH) ★ D8VY 14631-B	Not replaced	1
78/	D(53) - - w/split bench seat	(RH) ★ D8VY 14630-B	(LH) ★ D8VY 14631-B	Not replaced	1
78/	D(60) - - w/bench seat	(RH) ★ D8VY 14630-A(N.R.)	(LH) D8VY 14631-A	Not replaced	1
78/	D(60) - - w/split bench seat	(RH) D8VY 14630-B	(LH) D8VY 14631-A		1
	F (Cougar)				
79	F(53,65D)	(RH) ★ D90Z 14630-A	(LH) ★ D90Z 14631-A	Not replaced	1
79	F(65L)	(RH) ★ D9SZ 14630-A	(LH) ★ D9SZ 14631-A	Not replaced	1
	G (Monarch)				
78	G(66H)	(RH) E0AZ 14630-A	(LH) ★ D8DZ 14631-B(N.R.)		1
78	G(54H) - - w/decor group	(RH) ★ D84Y 14630-A	(LH) ★ D84Y 14631-A	Not replaced	1
79	G(66H)	(RH) ★ D9DZ 14630-A	(LH) ★ D8DZ 14631-B	Not replaced	1
	K (Mark IV, Mark V)				
77	K - - w/o power seats "From 5/77"	(RH) ★ D7LY 14630-D Not replaced	(LH) ★ D7LY 14631-B Not replaced		1
77	K - - w/power seats "From 5/77"	(RH) ★ D7LY 14630-C Not replaced	(LH) ★ D7LY 14631-B Not replaced		1
78/	K - - w/power seats	(RH) ★ D7LY 14630-C	(LH) ★ D8LY 14631-A	Not replaced	1
78/	K - - w/o power seats	(RH) ★ D7LY 14630-D	(LH) ★ D8LY 14631-A	Not replaced	1

COPYRIGHT © 1986 — FORD MOTOR COMPANY — DEARBORN, MICHIGAN

YEAR	MODEL/RESTRICTIONS	PART NUMBER	DESCRIPTION		QTY.
14630-1	WIRING (FRONT WINDOW REGULATOR)— Cont'd				
	P (Zephyr)				
78	P(54,74) - - w/o power door locks	(RH) ★ D8BZ 14630-A	(LH) ★ D8BZ 14631-A	Not replaced	1
78	P(54,74) w/power door locks	(RH) ★ D8BZ 14630-B	(LH) ★ D8BZ 14631-B	Not replaced	1
78	P(36,66) - - w/o power door locks	(RH) ★ D8BZ 14630-A	(LH) ★ D8BZ 14631-C	Not replaced	1
78	P(36,66) w/power door locks	(RH) ★ D8BZ 14630-C	(LH) ★ D8BZ 14631-D	Not replaced	1
79	P(36,66) - - w/o power door locks	(RH) E1DZ 14630-A	(LH) E1DZ 14631-C		1
79	P(54,74) - - w/o power door locks	(RH) E1DZ 14630-A	(LH) E1DZ 14631-A		1
79	P(54,74) - - w/power door locks	(RH) E1DZ 14630-B	(LH) E1DZ 14631-B		1
79	P(36,66) - - w/power door locks	(RH) E1DZ 14630-C	(LH) E1DZ 14631-D		1
	V (Versailles)				
78/	V	(RH) ★ D84Y 14630-A	(LH) ★ D84Y 14631-A	Not replaced	1
73/	A,Y	383182-S100	(GG-359)-clip (attach wiring to door inner panel)		1
73/	D		(Attach wiring to cowl to panel)		2
73	D	55981-S2	(U-254-E)-screw (attach wiring to brake pedal pedal support)-1/4"-14 x 1/2"		1
73	K	42134-S8	(U-249)-screw No. 10-12 x 5/8"-(attach wiring to brake pedal support)		AR
73	F		(Attach wiring to door inner panel and cowl side panel)		AR
73/	K	382142-S	(GG-213-K)-clip (attach wiring to door inner panel)		2
73/	K	382932-S	(GG-338-C)-clip-(attach wiring to door panel)		AR
75	K	56910-S2	(U-413)-screw (attach wiring to cowl top panel)-No. 8-18 x 1/2"		AR
76	C,F	55907-S2	(U-254-B)-screw (attach wiring to front door inside panel)-No. 8-18 x 1/2"		AR
76	K	34653-S36M	(M-106-XA)-nut (attach wiring to front door window regulator switch)-No. 8-32		2
14A630	WIRE ASSY. (WINDOW REGULATOR JUMPER)				
79	F(65L) - - w/power windows and/or power door locks	★ D9SZ 14A630-A Not replaced	# D9SB 14A488-AC		1
79	F(53) - - w/power windows and/or power door locks	★ D90Z 14A630-A Not replaced	# D90B 14A488-AC		1
79	F(65D) - - w/power windows and/or power door locks	★ D90Z 14A630-B Not replaced	# D90B 14A488-BC		1
78/	P(54,74) - - w/o power door locks	D8BZ 14A630-A	# D9BB 14A488-AC,AE		1
78/	P(54,74) - - w/power door locks	D8BZ 14A630-B	# D9BB 14A488-BC,BE		1
73	C	382931-S	(GG-338)-clip-(attach wiring to center body pillar)		AR
14A631	WIRE ASSY. (DOOR LOCK SWITCH JUMPER)				
77/	G - - w/power door locks	D7DZ 14A631-A	# D7DB 14A631-AB		2

14632-3 WIRING (REAR DOOR WINDOW REGULATOR)

WIRING LOOM MARKING or TAG NUMBER TO SERVICE WIRING PART NUMBER GUIDE

The purpose of this guide is to facilitate the identification of the Service Wiring Part Number. The chart that follows lists in numerical sequence the Wiring Loom Markings or Tag Numbers. For many vehicles the Service Wiring Part Number will be the same as the Loom Marking or Tag Part Number. This type of replacement will cause little or no installation problems. However, when the Service Wiring differs from the Loom Marking or Tag Number it will be necessary to match lead wires and to tape up those lead wires which are not required. This is necessary when the Service Wiring has a more general application than the original wiring installed by the factory. Following this guide chart, Service Wiring Part Numbers are listed by model year and vehicle usage which will permit the identification of replacement wiring when the loom identification marking or tag number is not known.

IDENTIFICATION CHART

IDENTIFICATION	PART NUMBER	IDENTIFICATION	PART NUMBER
D20B 14632-AD	★ D20Z 14632-C	D9BB 14632-CA	D9BZ 14632-A
D3AB 14632-AA	D3AZ 14632-A	D9BB 14632-DB	D9BZ 14632-B
D30B 14632-AA	D40Z 14632-A	D9DB 14632-AA	D9DZ 14632-A
D3VB 14632-AB	D3VY 14632-A	D9MB 14632-AD	D9MY 14632-A
D3VB 14632-AC	D3VY 14632-C	D9MY 14632-AE	D9MY 14632-A
D3VB 14632-AE	D3VY 14632-C	D90B 14632-AA	D90Z 14632-A
D3VB 14632-AF	D3VY 14632-C	D20B 14633-AD	★ D20Z 14633-C
D5DB 14632-AB	D5DZ 14632-A	D3AB 14633-AA	D3AZ 14633-A
D5DB 14632-AC	D5DZ 14632-A	D30B 14633-AA	D40Z 14633-A
D5DB 14632-AD	D5DZ 14632-A	D3VB 14633-AB	D3VY 14633-A
ED- D5DB 14632-AA	D5DZ 14632-A	D3VB 14633-AC	D3VY 14633-C
D5VB 14632-AB	D5VY 14632-A	D3VB 14633-AE	D3VY 14633-C
D6DB 14632-AD	D6DZ 14632-A	D3VB 14633-AF	D3VY 14633-C
D6DB 14632-AE	D6DZ 14632-C	D5DB 14633-AB	D5DZ 14633-A
D6DB 14632-AF	D6DZ 14632-C	D5DB 14633-AC	D5DZ 14633-A
D6DB 14632-AG	D6DZ 14632-C	D5DB 14633-AD	D5DZ 14633-A
D64B 14632-AE	D64Y 14632-A	ED- D5DB 14633-AA	D5DZ 14633-A
D64B 14632-AF	D64Y 14632-A	D5VB 14633-AB	D5VY 14633-A
D64B 14632-AG	D64Y 14632-B	D6DB 14633-AD	D6DZ 14633-A
D7AB 14632-AA	D3AZ 14632-A	D6DB 14633-AE	D6DZ 14633-B
D7DB 14632-AC	D7DZ 14632-A	D6DB 14633-AF	D6DZ 14633-B
D70B 14632-AB	D70Z 14632-A	D6DB 14633-AG	D6DZ 14633-C
D70B 14632-AC	D70Z 14632-A	D64B 14633-AE	D64Y 14633-A
D74B 14632-AC	D74Y 14632-A	D64B 14633-AF	D64Y 14633-A
D80B 14632-AA	D70Z 14632-A	D64B 14633-AG	D64Y 14633-B
D8VB 14632-AB	D8VY 14632-A	D7AB 14633-AA	D3AZ 14633-A
D9AB 14632-AG	D9AZ 14632-A	D7DB 14633-AC	D7DZ 14633-A
D9AB 14632-AH	D9AZ 14632-A	D74Y 14633-AC	D74Y 14633-A
D9AB 14632-BC	D9AZ 14632-B	D8VB 14633-AB	D8VY 14633-A
D9AB 14632-BD	D9AZ 14632-B	D9BB 14633-AB	D8BZ 14633-A
D9AB 14632-CK	★ D9AZ 14632-C	D9BB 14633-BC	D8BZ 14633-B
D9AB 14632-CL	D9AZ 14632-C	D9BB 14633-CA	D9BZ 14633-A
D9AB 14632-DB	D9AZ 14632-D	D9BB 14633-DB	D9BZ 14633-B
D9BB 14632-AB	D8BZ 14632-A	D9DB 14633-AA	D9DZ 14633-A
D9BB 14632-BC	D8BZ 14632-B		

YEAR	MODEL/RESTRICTIONS	PART NUMBER	DESCRIPTION	QTY.
14632-3	WIRING (REAR DOOR WINDOW REGULATOR) — Cont'd			

APPLICATION CHART

79	A(54H,74H) - - w/power door locks w/o colony park pkg.	(RH) D9AZ 14632-A	(LH) D9AZ 14632-A		1
79	A(54H,74H) - - w/o power door locks or colony park pkg.	(RH) E0AZ 14632-B	(LH) E0AZ 14632-B		1
79	A(54H,74H) - - w/power door locks and colony park pkg.	(RH) E0AZ 14632-A	(LH) E0AZ 14632-A		1
79 79	54K - - w/o power door locks 74H - - w/o power door lock or colony park pkg.	(RH) ★ D9MY 14632-A Not replaced	(LH) ★ D9MY 14632-A Not replaced		1
78/	D(53)	(RH) ★ D8VY 14632-A	(LH) ★ D8VY 14633-A	Not replaced	1
79	F(53)	(RH) ★ D90Z 14632-A	(LH) ★ D90Z 14632-A	Not replaced	1
79	G(54H)	(RH) D9DZ 14632-A	(LH) D9DZ 14633-A		1
78	P(54,74) - - w/o power door locks	(RH) ★ D8BZ 14632-A	(LH) ★ D8BZ 14633-A	Not replaced	1
78	P(54,74) - - w/power door locks	(RH) ★ D8BZ 14632-B	(LH) ★ D8BZ 14633-B	Not replaced	1
79	P(54,74) - - w/o power door locks	(RH) D9BZ 14632-A	(LH) D9BZ 14633-A		1
79	P(54,74) - - w/power door locks	(RH) E0AZ 14632-B	(LH) D9BZ 14633-B		1

COPYRIGHT © 1986 — FORD MOTOR COMPANY — DEARBORN, MICHIGAN

YEAR	MODEL/RESTRICTIONS	PART NUMBER	DESCRIPTION	QTY.
14632-3	WIRING (REAR DOOR WINDOW REGULATOR) — Cont'd			

APPLICATION CHART

77/	V	(RH) ★ D74Y 14632-A	(LH) ★ D74Y 14633-A Not replaced	1
73/74	D	★ 382034-S100	(GG-334)-clip (attach wiring to inside rear door)-No. 8-32	2
73/74	D	383477-S	(GG-271-C)-clip (attach wiring to arm rest brkt.)	2
75	D	381954-S100	(GG-299)-clip (attach wiring to inside rear door support)	AR
75	G	382930-S	(GG-338-A)-clip (attach wiring to rear door hinge)-1/2" I.D.	2
14A660	HOUSING ASSY. (DOOR LOCK SWITCH)-Refer to group 14528			
14A665	HOUSING ASSY. (DOOR LOCK SWITCH)-Refer to group 14528			
14A676	WIRING ASSY. (DASH PANEL TO ENGINE & ALTERNATOR RECTIFIER WIRING-JUMPER)			
79	J	★ D9ZZ 14A676-A	#D9ZB 14A676-AA-not replaced	
14677	RELAY ASSY.- Also refer to group 14512			
73/75	A,D,Y - - w/power door locks	D2SZ 14677-A	#D3AB 14A093-AA	2
73	K - - w/power door locks			2
76/	G - - w/power door locks			1
73/78	A - - w/power door locks power luggage compt. opener or sun roof	D2SZ 14677-B	#D2SB 14677-AA,D3AB 14677-AA	AR
79	A - - w/trailer tow pkg. class I,II			1
77/	F(P/C, TAXI)			1
73/76	C - - w/power door locks power backlite-w/o power door locks			1
73/76	C(P/C, taxi)			1
73/	D - - w/power windows			2
76	D - - w/power door locks			2
74/77	F - - w/power windows			1
77/78	F - - w/power seats and/ or trailer towing			1
73/78	K - - w/power windows and power door locks			AR
75	G - - sunroof			AR
75	G - - w/power windows "Before 12/74"			1
77	G - - w/power door locks			1
76	K - - w/4 horn system			1
77	L - - A/C			1
77/78	V - - w/power door locks			1
73/76	Y - - w/power door locks power luggage compt. opener or sun roof			1
73/76	C - - w/power door locks	D30Z 14677-B	#D30B 14A093-AA,AB	2
74/	F - - w/power door locks			2
73/74	C - - w/power windows	D2AZ 14677-A	#D2AB 14677-AA	1
73	F - - w/power windows	C5AZ 14677-A	#C8AB 14677-A	1
78/	P - - w/power door locks	D8BZ 14677-A	#D9BB 14A093-AA	2
73	C,K	42134-S8	(U-249)-screw (attach relay cowl panel)-No. 10-12 x 5/8"	4
73	C	376389-S101	(UU-82-D)-screw (attach relay to fender apron)-No. 8-18 x 3/4"	2
73 75/ 76	K C,F A,C,D,F,G	42367-S36	(U-269-B)-screw (attach relay to cowl top panel)-No. 10 x 1/2" (attach relay to floor pan)	2 2 2
14683	WIRING ASSY. (BACK WINDOW REGULATOR FEED)			
73	C(71) - - w/o heated tailgate window	★ D30Z 14683-A	#D30B 14683-AA,AC-not replaced	1

YEAR	MODEL/RESTRICTIONS	PART NUMBER	DESCRIPTION	QTY.
14683	WIRING ASSY. (BACK WINDOW REGULATOR FEED) — Cont'd			
73/74	C(71) - - w/heated tailgate window	★ D30Z 14683-B	#D30B 14683-BB,BD-not replaced	1
74/76	C(71) - - w/o heated tailgate window- "Before 3/76"	★ D40Z 14683-A Not replaced	#D30B 14683-AB	1
76	C(71) - - w/o heated tailgate window	★ D60Z 14683-C	#D60B 14683-AC,AD-not replaced	1
75/76	C(71) - - w/heated tailgate window-	★ D50Z 14683-B	#D50B 14683-BA-not replaced	1
76	C(71) - - w/heated tailgate window "From 3/76"	★ D60Z 14683-D Not replaced	#D60B 14683-BC,BD	1
77	F(71) - - w/o heated tailgate window	★ D60Z 14683-C Not replaced	#D60B 14683-AD	1
77	F(71) w/heated tailgate window	D60Z 14683-D	#D60B 14683-BD	1
14687	WIRING ASSY. (BACK WINDOW REGULATOR)			
79	A(74)	D9AZ 14687-B	#D9AB 14687-BE,BF	1
73/77	C,F	40953-S8	(U-263)-screw (attach wire to rear pillar)- 1/4"-20 x 3/4"	AR
73	C	42367-S36	(U-269-B)-screw (attach wire to rear side rail)- No. 10-16 x 1/2"	AR
14B690	BEZEL (SEAT REGULATOR CONTROL SWITCH)			
75/	K	★ D5LY 14B690-A	#D5LB 13C704-AB-with lumbar adjustable seat-N.R.	1
14C690	RELAY ASSY. (SEAT BACK LATCH) - Refer to group 14512			
14B691	BRACKET (SEAT REGULATOR CONTROL MOUNTING)			
74/76	C,F	★ D40Z 14B691-A		1
77/	F	Not replaced		1
75/76	C	55914-S2	(U-254-F)-screw (attach bracket to front seat frame)-1/4"-14 x 3/4"	AR
78/	P	D8BZ 14B691-A		1
79	G			1
14C691	WIRE ASSY. (SEAT BACK LATCH EXTENSION)			
	A (Mercury)			
73/74	A(65B,F)	★ D5AZ 14C691-A Not replaced	R.H.-#D3AB 14C691-BA	1
73/74	A(65H,K,X)	★ D3AZ 14C691-E	R.H.-#D3AB 14C691-CA	1
75/78	A(65K,L)	Not replaced	R.H.	1
73/74	A(65H,K,X)	★ D3AZ 14C691-F	L.H.-#D3AB 14C693-CA	1
75/78	A(65K,L)	Not replaced	L.H.	1
75/78	A(65H)	★ D5AZ 14C691-A Not replaced	R.H.-#D5AB 14C691-AA	1
73/78	A(65B,F,H)	★ D5AZ 14C691-B Not replaced	L.H.-#D5AB 14C693-AA	1
73/78	A(65) - - w/recliner seat	★ D3AZ 14C691-G Not replaced	#D3AB 14C691-DA	1
	C (Montego)			
73/76	C - - w/bucket seats	★ D20Z 14C691-A	#D20B 14C691-AC-not replaced	2
73/76	C(63,65) - - w/bench seat	★ D2LY 14C691-A	R.H.-#D2LB 14C691-AB-not replaced	1
73/76	C(63,65) - - w/bench seat	★ D2LY 14C691-B	L.H.-#D2LB 14C693-AB-not replaced	1
76	C(65K) - - w/split bench seat	★ D2LY 14C691-D	R.H.-#D2LB 14C691-BB-not replaced	1
	D (Lincoln)			
73/74	D(65)	D3VY 14C691-A	#D3VB 14C691-AB	2
75/	D(60)			2
	F (Cougar)			
73	F	★ D3ZZ 14C691-B	R.H.-#D3ZB 14C691-BA-not replaced	1
		★ D3ZZ 14C691-A	L.H.-#D3ZB 14C691-AA-not replaced	1
75/76	F(65) - - w/split bench seat	D20Z 14C691-A	#D20B 14C691-AC	2
75/76	F	D2LY 14C691-A	R.H.-#D2LB 14C691-AB	1
75/76	F	★ D2LY 14C691-B	L.H.-#D2LB 14C693-AB-not replaced	1

COPYRIGHT © 1986 — FORD MOTOR COMPANY — DEARBORN, MICHIGAN

1973/79 LINCOLN-MERCURY CARS

YEAR	MODEL/RESTRICTIONS	PART NUMBER	DESCRIPTION	QTY.
14C691	WIRE ASSY. (SEAT BACK LATCH EXTENSION) — Cont'd			
	F (Cougar)			
76	F - - w/split bench seat	D2LY 14C691-D	R.H.-#D2LB 14C691-BB	1
77/	F - - w/o recliner seat	D5SZ 14C691-A	R.H. #D5SB 14C691-AA	1
77/	F - - w/recliner seat	D5SZ 14C691-C	R.H. #D5SB 14C691-BA	1
		D5SZ 14C691-B	L.H. #D5SB 14C693-AA	1
77/	F(65)	★D70Z 14C691-A	R.H. and L.H. #D70B 14C691-AA-not replaced	1
	G (Monarch)			
76/77	G(66) - - w/bucket seat "Before 5/76"	D6DZ 14C691-D	R.H.-#D6DB 14C691-DB	1
76/77	G(66) - - w/bucket seat "Before 5/76"	D6DZ 14C691-E	L.H.-#D6DB 14C693-AB	1
77/	G(66) "From 5/76"	★14C691	#D7DB 14C691-BA-improvise from bulk wiring (14296)	2
	K (Mark IV, Mark V)			
73/74	K - - w/o recliner seat	★D2LY 14C691-A	R.H.-#D2LB 14C691-AB-not replaced	1
73/74	K - - w/o recliner seat	D2LY 14C691-B	L.H.-#D2LB 14C693-AB	1
73/74	K - - w/recliner seat	★D2LY 14C691-D	R.H.-#D2LB 14C691-BB-not replaced	1
75/	K - - w/o recliner seat	D5SZ 14C691-A	R.H.-#D5SB 14C691-AA	1
75/	K - - w/recliner seat w/o console	D5SZ 14C691-C	R.H.-#D5SB 14C691-BA	1
75/	K	D5SZ 14C691-B	L.H.-#D5SB 14C693-AA	1
78/	K - - w/console	★D8LY 14C691-A	R.H.-#D8LB 14C691-AB-not replaced	1
78/	K - - w/console	★D70Z 14C691-A	L.H.-#D70B 14C691-AA-not replaced	1
	Y (Meteor)			
73/74	Y(65)	★D3AZ 14C691-C	R.H.-#D3AB 14C691-BA-not replaced	1
75/76	Y(65)	★D5AZ 14C691-A	R.H.-#D5AB 14C691-AA-not replaced	1
73/76	Y(65)	★D5AZ 14C691-B	L.H.-#D5AB 14C693-AA-not replaced	1
73/	A,D	382239-S	(GG-285)-clip (attach wire to seat cushion frame)	2
75/	C,F	56910-S2	(U-413)-screw (attach wire assy. to front seat side shield)-No. 8-18 x 1/2"	AR
75/	D	42367-S36	(U-269-B)-screw (attach wire assy. to seat back latch solenoid)-No. 10-16 x 1/2"	AR
76	G		(attach wire assy. to front floor siderail)	AR
76	D	42119-S8	(U-246)-screw (attach wiring to front seat spring)-No. 8-18 x 1/2"	AR
14B692	SWITCH & HOUSING ASSY. (SEAT REGULATOR CONTROL)-Refer to groups 14A701 & 14716			
14C692	WIRE ASSY. (SEAT BACK LATCH)			
73/	K - - w/recliner seat	★D2SZ 14C692-A		1
76	C(65K),F - - w/split bench seat	Not replaced		1
76	D			1
77/	F(65)			1
77/	G - - w/bucket seat	★14C692	#D6DB 14C692-AA, D7DB 14C692AA-improvise from bulk wiring (14296)	2
14693	WIRING ASSY. (STARTER SWITCH TO TRANSMISSION LOCK SWITCH)			
77/	G "From 3/77"	★	#D7DB 14693-AA-Improvise	1
14A698	WIRING ASSY. (SEAT REGULATOR RELAY FEED)-If not listed below improvise from bulk wiring(14296)			
79	F	★D90Z 14A698-A	#D90B 14A698-AB-not replaced	1
78/	P	D8BZ 14A698-A	#D9BB 14A691-AA	1
14A699	WIRE (SEAT CONTROL FEED JUMPER)			
78/	D - - w/split bench seat	★D8VY 14A699-A	#D8VB 14A699-AA-not replaced	1
14A701	SWITCH (SEAT REGULATOR CONTROL)			
73/76	A - - w/split bench seat	C7MY 14A701-E	R.H.-incl. 3 switches and housing	1
73/76	C - - w/bench or split bench seat		L.H.	1
74/	F		L.H.	1

YEAR	MODEL/RESTRICTIONS	PART NUMBER	DESCRIPTION	QTY.
14A701	SWITCH (SEAT REGULATOR CONTROL) — Cont'd			
73/ 73/ 73/76	A - - w/bench A - - w/split bench seat Y - - w/bench or split bench seat	C7MY 14A701-F	L.H.-incl. 3 switches and housing L.H.	1 1 1
73	D - - with 2 way bench seat- "Before 10/72"	★ D2VY 14A701-A Not replaced	#D2VB 14B723-AA	1
73	D - - with 6 way split bench seat- "Before 10/72"	D2VY 14A701-B	#D2VB 14B723-BA	2
73/	D,K - - with 6 way split bench seat- "From 10/72"	E0VY 14A701-A	#D2LB 14A701-AB	2
73	F	★ D2WY 14A701-A	#D2WB 14B723-AC-drivers seat-not replaced	1
75/ 77/	G - - with 4 way bench or bucket seat V - - with 4 way bench or bucket seat	D5DZ 14A701-B	#D5DB 14B723-BA less bezel	1 1
78/	P	D8BZ 14A701-A	#D9BB 14B723-AA	1
73/	A,Y	382150-S	(MM-248)-nut (attach switch to seat side shield)-No. 8-15	2
76	C,F	55935-S2	(U-317-B)-screw (attach switch to front seat side shield)-No. 8-10 x 1"	AR
14A706	BEZEL (SEAT REGULATOR CONTROL SWITCH)			
75/	G - - with 4 way bench or bucket seat	D5DZ 14A706-A	Light Burl wood grain finish	1
78/	P - - w/4-way bench seat	D8BZ 14A706-A		1
77/	V - - with 4 way bench or bucket seat	D74Y 14A706-A	Majestic walnut wood grain finish	1
14B711	SWITCH & HOUSING ASSY. (SEAT REGULATOR CONTROL)-Refer to groups 14A701 & 14716			
14716	WIRING ASSY. (SEAT REGULATOR FEED)			
75/78 75/76	A - - w/bench or split bench seat Y - - w/bench or split bench seat	★ D5AZ 14716-B Not replaced	L.H.-#D5AB 14716-BA	1 1
79	A - - w/split bench seat	D9AZ 14716-A	#ED D9AB 14716-AD,AE-drivers side	1
79	A - - w/bench seat	★ D9AZ 14716-B Not replaced	#ED D9AB 14716-BD-driver & passenger side	1
79	A	D9AZ 14716-C	#D9AB 14716-CA-L.H.-component part of D9AB 14B711-AA switch & housing assy.	1
79	A	D9AZ 14716-D	#D9AB 14716-DA-R.H.-component part of D9AB 14B692-AA switch & housing assy.	1
75/76	C,F	D50Z 14716-A	#D50B 14716-AA	1
77/	F	D7SZ 14716-A	#D7SB 14716-AA	1
75/ 77/	G - - with 4 way bench or bucket seat V - - with 4 way bench or bucket seat	D5DZ 14716-A	#D5DB 14716-AA	1 1
14B719	WIRING ASSY. (SEAT BACK CONTROL)			
75/	K - - w/o console	★ D5LY 14B719-A Not replaced	#D5LB 14B719-AA,AC,ED-D5LB 14B719-AC-w/lumbar adjustable seat	1
78/	K - - w/console	★ D8LY 14B719-A	#D8LB 14B719-AA,AB-not replaced	1
75/	K	56910-S2	(U-413)-screw (attach wiring and shield to seat cushion)-No. 8-18 x 1/2"	AR
76	K	371583-S7	(MM-284-W)-nut (attach retainer on wiring to switch)-1/8" self-thread	2
14B723	SWITCH & WIRING ASSY. (SEAT REGULATOR CONTROL)-Refer to group 14A701			
14B724	WIRING ASSY. (AUTOMATIC SEAT BACK LATCH)			
79	F(65)	★ D90Z 14B724-A	#D90B 14B724-AA-not replaced	1
78/	G(66) "From 1/78"	D8DZ 14B724-B	#D8DB 14B724-AB	1
73/	A,F	42367-S36	(U-269-B)-screw (attach wiring to front cross-member)-No. 10-16 x 1/2"	2

COPYRIGHT © 1986 — FORD MOTOR COMPANY — DEARBORN, MICHIGAN

1973/79
LINCOLN-MERCURY CARS

YEAR	MODEL/RESTRICTIONS	PART NUMBER	DESCRIPTION	QTY.
14790	WIRING ASSY. (DOOR OPEN WARNING LAMP)			
76/	G(54)	D6DZ 14790-A	#D6DB 10D844-AA	2
77/	V			2
76/	G(66)	D6DZ 14790-B	#D6DB 10D844-BA	2
78	P(54) P/C	★ D8BZ 14790-A	#D8BB 10C865-AA	1
78/	P(TAXI)	Not replaced		1
73/75	D	384647-S	(KK-93)-grommet	2
14792	WIRING ASSY. (DOOR OPEN WARNING LAMP)			
77/	G	D7DZ 14792-B	#D7DB 14792-AB,AD, D8DB 14792-AA-feed	1
77/	V	D74Y 14792-A	#D74B 14792-AB	1
14963	SWITCH ASSY. (DOOR LOCK)-Refer to group 14028			

1973/79
LINCOLN-MERCURY CARS

YEAR	MODEL/RESTRICTIONS	PART NUMBER	DESCRIPTION	QTY.
15000	CLOCK ASSY. (ELECTRIC)-Also refer to group 15A000			
73	C - - w/o Rallye instrument group	★ D2GY 15000-A	#D2GF 15000-AA-Incl. reset knob-not replaced	1
74/76	C - - w/Rallye instrument group	★ D4GY 15000-B	#D4GF 15000-BA	1
74/76	F	Not replaced		1
73/74	D	D4VY 15000-A	#D4VF 15000-AB-Dial-"Cartier"	1
75/77	D	D7VY 15000-A	#D6VF 15000-A-Digital "Cartier"	1
78/	D	D8VY 15000-A	#D8VF 15000-AA-Digital "Cartier"	1
73	F - - w/console	★ D1ZZ 15000-C	#D1ZF 15000-CB-Rectangular-console mounted-N.R.	1
77/	F - - w/o Rallye package	D7SZ 15000-A	#D7SF 15000-A1C or A2C Dial	1
77/	F - - w/o Rallye package	D7SZ 15000-C	#D7SF 15000-CC or CD Quartz-day-date	1
77/	F - - w/Rallye package	D7SZ 15000-B	#D7SF 15000-BA or D8SF 15000-AA Dial	1
75/	G	D4ZZ 15000-B	#D4ZF 15000-BB Digital	1
73/74	J	★ D3RY 15000-A	Not replaced	1
76/78	J	★ D5RY 15000-A	Not replaced	1
79	J - - w/console	D9ZZ 15000-A	#D9ZF 15000-AA-digital-day/date	1
73/76	K	D2LY 15000-B		1
77	K "Before 3/1/77"	★ D7LY 15000-A Not replaced	#D7LF 15000-AC Quartz-day-date "Cartier" chrome minute and hour hands	1
77/	K "From 3/1/77"	★ D7LY 15000-B Not replaced	#D7LF 15000-AD Quartz-day date "Cartier" black minute and hour hands	1
73	P	★ D0DZ 15000-A	Not replaced	1
78/	P	E2BZ 15000-A	#D8BF 15000-AB Dial-not replaced	1
77/	V	D74Y 15000-A	#D74F 15000-AA-Digital "Cartier"	1
73/76	C	381863-S2	(MM-275-J)-nut(attach clock to instrument cluster)	2
75/76	F		-No. 8-18	
73	F	42124-S7	(U-245)-screw(attach clock to instrument panel)- No. 6-18 x 1/2"	AR
73/78	J	E610227-S74	(AU-8-EH)-screw(attach clock to 15A003-4)- 3.5M x 16mm pan head(Metric)	AR
75	A,G,Y	383938-S	(UU-52-V)-screw(attach clock to instrument panel)-No. 8-12 x 1/2"	AR
76	A,C,F,G,Y	384157-S	(UU-89-FB)-screw(attach clock to instrument panel)-No. 8-18 x 3/4"	3
76	A,C,F,G,Y	384816-S	(MM-319)-nut(attach clock to instrument panel)- No. 8-18	3
15A000	CLOCK KIT (ELECTRIC)			
73/78	A	★ D3MY 15A000-A	Dial	1
73/76	Y	N.R. (4/83)		1

Consists of

1-C2AZ 13466-A	Bulb	1-384157-S	Screw- No. 8-18 x 3/4"	1-384641-S	Nut-No. 8-18
1-D4MF 15000-BA	Clock				
1-D3MY 15026-A	Wire				

74/78	A	D4MY 15A000-A	Digital	1
74/76	Y			1

Consists of

1-C2AZ 13466-C	Bulb	3-384157-S	Screw	3-384641-S	Nut
1-D4MF 15000-AB	Clock	1-IS 4632-A	Installation sketch		

79	A	D9AZ 15A000-A	Digital	1

Consists of

1-D9AF 15000-BA	Clock	3-N611039-S2	Screw
3-384816-S100	Nut	1-IS 4726	Installation sketch

COPYRIGHT © 1986 — FORD MOTOR COMPANY — DEARBORN, MICHIGAN

1973/79 LINCOLN-MERCURY CARS

YEAR	MODEL/RESTRICTIONS	PART NUMBER	DESCRIPTION	QTY.
15A000	CLOCK KIT (ELECTRIC) — Cont'd			
79	A	D9AZ 15A000-B	Dial	1
	Consists of			
	1-D9AF 15000-AA Clock		3-N611039-S2 Screw	
	3-384816-S100 Nut		1-IS 4727 Installation sketch	
	1-C2AZ 13466-C Bulb			
73	C - - w/o Rallye instrument pkg.	★ D20Z 15A000-B	Not replaced	1
	Consists of			
	1-C3AZ 13466-B Bulb	1-D20Z 15A006-B	Wiring 1-384816-S Nut-No. 8-18	
	1-D2GY 15000-A Clock	1-42380-S	Screw- 1-Sketch	
74/76	C - - w/o Rallye instrument pkg.	D40Z 15A000-A		1
	Consists of			
	1-C2AZ 13466-C Bulb	1-D20Z 15A006-B	Wiring 2-384816-S Nut	
	1-D4GF 15000-AA Clock	2-42380-S2	Screw 1-IS 3661-D Installation sketch	
77/	F	★ D7SZ 15A000-A	Quartz-day-date-Repl. by details	1
	Consists of			
	2-C2AZ 13466-C Bulb	1-D70Z 15A006-A	Wiring	
	1-D7SZ 15000-C Clock	1-IS-4572	Installation sketch	
77/	F - - w/o Rallye package	★ D70Z 15A000-A	Dial-Repl. by details	1
	Consists of			
	2-C2AZ 13466-C Bulb		1-D70Z 15A006-A Wire	
	1-D7SZ 15000-A Clock		1-IS 4573 Installation sketch	
75	G	★ D5DZ 15A000-A	Digital - Repl. by details	1
	Consists of			
	1-C2AZ 13466-C Bulb	1-D5DZ 15A006-A	Wiring 3-383938-S Screw	
	1-D4ZZ 15000-B Clock			
76	G	★ D6DZ 15A000-A	Digital - Repl. by D7DZ 15A000-A (3/77)	1
	Consists of			
	1-C2AZ 13466-C Bulb	1-D6DZ 15A006-A	Wire 1-IS Installation sketch	
	1-D4ZZ 15000-B Clock	3-383938-S2	Screw	
77	G "Before 4/1/77"	★ D7DZ 15A000-A	Digital - Repl. by D7DZ 15A000-B (2-77)	1
	Consists of			
	1-C2AZ 13466-C Bulb		1-D7DZ 15A006-A Wire assy.	
	1-D4ZZ 15000-B Clock		3-383938-S2 Screw	
	1-D4ZZ 15A006-A Wire assy.		1-IS Installation sketch	
77/79	G	D9DZ 15A000-A	Digital	1
	Consists of			
	1-D4ZZ 15000-B Clock		3-383938-S2 Screw	
	1-C2AZ 13466-C Bulb		1-IS 4720 Installation sketch	
	1-D7DZ 15A006-A Wiring			
73/74	J	★ D3RY 15A000-A	Not replaced	1
73	P	★ D1DZ 15A000-A	R/B details (8/76)	1
	Consists of			
	2-C3AZ 13466-B Bulb	1-D0DZ 15A006-B	Wire assy. 2-55907-S Screw-No. 8-18 x 1/2"	
	1-D0DZ 15000-A Clock	1-D0DZ 62044D38-A	Cover 4-55927-S Screw-No. 8-18 x 1/2"	
	1-D0DZ 15A006-A Wire assy.	1-D1DJ 62045A06-A	Console 4-55948-S Screw- No. 8-18 x 1 1/4"	
		1-C9AZ 6206081-A	Lock set 2-381817-S Screw-No. 8-18 x 1/2"	
15002	THERMOMETER ASSY. (OUTSIDE MIRROR)			
78/	D,K,V	D8LY 15002-A		1
15A003	HOUSING (CLOCK)			
73/74	J	★ D3RY 15A003-A	Black not replaced	1
		★ D4RY 15A003-A	Saddle brown not replaced	1
		★ D4RY 15A003-B	Medium tan not replaced	1

YEAR	MODEL/RESTRICTIONS	PART NUMBER	DESCRIPTION	QTY.
15A003	HOUSING (CLOCK) — Cont'd			
73/74	J	E610227-S74	(AU-8)-screw (attach housing and base to instru. panel)-3.5 mm x 16 mm	AR
15A004	BASE (CLOCK)			
76/78	J	★ D5RY 15A004-A	Not replaced	1
73/74	J	E610227-S74	(AU-8)-screw (attach housing and base to instru. panel)-3.5 mm x 16 mm	AR
76	J	E610628-S71	(AB-24-G)-screw (attach base to trinket tray) M3.5 x 19 mm	2
15A005	Refer to Body Section 04428			
15A006	WIRE ASSY. (CLOCK FEED)-If not listed below improvise from bulk wiring (14296)			
77/	F - - w/o Rallye package	D70Z 15A006-A	#D70B 15A006-AA	1
77/	G - - w/digital clock "From 2/77"	D7DZ 15A006-A	#D7DB 15A006-AA	1
78/	L - - w/digital clock radio	★ D8FZ 15A006-A	#D8EB 15A006-AA-not replaced	1
79	J - - w/o console	★ D9ZZ 15A006-A	#D9ZB 15A006-AB use with AM digital clock radio-not replaced	1
15010	BEZEL (CLOCK)			
77/	K	★ D7LY 15010-A	Not replaced	1
15A012	NUT(CLOCK RESET KNOB)			
77/	K	D7LY 15A012-A		1
15017	BRACKET (CLOCK MOUNTING)			
73/74	J	★ D3RY 15017-A	Not replaced	1
15026	SOCKET and WIRING (CLOCK)			
73/	A	★ D3MY 15026-A	Not replaced	1
73/76	Y			1
73/74	J - - w/glove compt. lamp	★ D3RY 15026-B	Not replaced	1
15032	KNOB (CLOCK FRONT RESET)			
73/	C,K	D2SZ 15032-A	Incl. 15A012 nut	1
74/76	F			1
77/	F - - w/Rallye instrument cluster			1
75/	G - - w/digital clock			1
75/77	D	D1AZ 15032-A		1
77/	K	D7LY 15032-A		1
73	F - - w/console clock	★ C9AZ 15032-A	Not replaced	1
78/	P	D8BZ 15032-A	Incl. 15A012 nut	1

COPYRIGHT © 1986 — FORD MOTOR COMPANY — DEARBORN, MICHIGAN

1973/79 LINCOLN-MERCURY CARS

YEAR	MODEL/RESTRICTIONS	PART NUMBER	DESCRIPTION	QTY.
15A044	**CIGAR LIGHTER KIT**			
73/74	L,P	D1FZ 15A044-A		1
	Consists of 1-C4RA 15A046-A Wire 1-C7ZZ 15052-A Knob and element	1-C4AZ 15055-B Socket	1-Instruction sheet	
75/	L,P	★ D6FZ 15A044-A	Not replaced	1
	Consists of (1) D30Z 15052-A Knob and element (1) D3DZ 15055-A Socket	(1) D6EJ 15A046-AA Wire (1) Instruction sheet		
15052	**KNOB and ELEMENT ASSY. (CIGAR LIGHTER)**			
73/78	A	D3AZ 15052-B	Instrument panel	1
73/76	Y			1
73/76	C	D30Z 15052-A		1
74/	A		Rear doors or rear quarters	AR
74/	D		Instrument panel, doors or rear quarters	AR
74/	F,G,L			1
74/	K		Doors or rear quarters	AR
73/	P			1
74/76	Y		Rear doors or rear quarters	AR
77/	V			AR
79	A,J		Instrument panel	1
73	F	D3ZZ 15052-A		1
73/77	J "Before 1/77"	D3RY 15052-A	2 3/8 inch length	1
77/78	J "From 1/77"	★ D7RY 15052-A	1 3/8 inch length-not replaced	1
73/76	K	D3LY 15052-A	Instrument panel	1
77/	K - - w/o console	D7LY 15052-A	Instrument panel	1
78/	D		Instrument panel	1
78/	K - - w/console	★ D8LY 15052-A	Not replaced	1
73	K	D3SZ 15052-B	Front doors	AR
73	A,Y		Rear doors or quarter panels	AR
73	D			AR
15054	**ELEMENT ASSY. (CIGAR LIGHTER)**			
73/	A,C,D,F,G,J,K,L,P,Y	D3AZ 15054-B		AR
15055	**SOCKET and RETAINER ASSY. (CIGAR LIGHTER)**			
73/76	A	D3AZ 15055-A	Instrument panel	
73/74	C			1
74	F			1
73/76	Y			1
77/78	A		On instrument panel	1
79	J - - w/console			1
79	A	★ D9AZ 15055-B	On instrument panel-repl. by E0VY 15055-A	1
73/	A	D3SZ 15055-B	Rear doors or quarters	2
73/	D		On doors or quarters	3
73/77	D		Instrument panel	1
73/76	Y			1
78/	D	D8VY 15055-A	Instrument panel	1
77/	C,F,G,V	D70Z 15055-A	On instrument panel	1
73/77	J	D3RY 15055-A	Less retainer-used with D3RY 15052-A knob & element	1
77/78	J	★ D7RY 15055-A Not replaced	Used with D7RY 15052-A knob & element	1
73/	K	D3SZ 15055-B	On doors	3
73/76	K	D3LY 15055-A	Instrument panel	1
77/	K	D7LY 15055-A	Instrument panel	1
74/	L	D3DZ 15055-A		1
73/	P			1
79	J - - w/o console			1

YEAR	MODEL/RESTRICTIONS	PART NUMBER	DESCRIPTION	QTY.
15072	LAMP ASSY. (CIGAR LIGHTER)			
73/78	J	★ D3RY 15072-A	Includes retainer-not replaced	1
15A200	SOCKET & WIRING ASSY. (CORNERING LAMPS)-Refer to group 15A434			
15A201	LAMP ASSY. (MARKER or CORNERING)			
	A (Mercury)			
73/74	A(53H,K,X,57H,K,X,65H,K, X,71H,K) - - w/cornering lamp	(RH) D6MY 15A201-A	(LH) D6MY 15A201-B	Front fender-clear 1
75/78	A			1
73/74	A(53H,K,X,57H,K,X,65H,K, X,71H,K)	(RH) ★ D3MY 15A201-E N.R. (5/82)	(LH) ★ D3MY 15A201-F N.R. (5/82)	Front fender-amber 1
73/74	A(exc. 71)	(RH) ★ D3MY 15A201-C	(LH) ★ D3MY 15A201-D	Body side-red-N.R. 1
73/78	A(71)	(RH) D3MY 15A201-G	(LH) D3MY 15A201-H	Body side-red 1
79	A - - w/cornering lamps	(RH) D9AZ 15A201-A	(LH) D9AZ 15A201-B	Front fender-clear 1
	C (Montego)			
73/76	C	(RH) D9FZ 15A201-A	(LH) D9FZ 15A201-B	Front fender-amber 1
73/74	C(exc. 71)	(RH) D2GY 15A201-C	(LH) D2GY 15A201-D	Body side-red 1
73/76	C(71)	(RH) D20Z 15A201-J	(LH) D20Z 15A201-K	Body side-red 1
	D (Lincoln)			
73	D	(RH) D0VY 15A201-D	(LH) D0VY 15A201-D	Rear bumper end-red 1
74/77	D	(RH) ★ D5VY 15A201-C r/b (1) D8VY 15A201-A (1) D4VY 15A440-A	(LH) ★ D5VY 15A201-D r/b (1) D8VY 15A201-B (1) D4VY 15A440-B	Front fender-clear and amber-incl. bezel 1
78/	D	(RH) D8VY 15A201-A	(LH) D8VY 15A201-B	Front fender- clear and amber-less bezel 1
	F (Cougar)			
74/76	F - - w/o cornering lamp	(RH) D9FZ 15A201-A	(LH) D9FZ 15A201-B	Front fender-amber 1
77/	F - - w/cornering lamp	(RH) D70Z 15A201-A	(LH) D70Z 15A201-B	Front fender 1
77	F(71)	(RH) D20Z 15A201-J	(LH) D20Z 15A201-K	Bodyside-red 1
	G (Monarch)			
77/	G - - w/cornering lamp	(RH) D7DZ 15A201-A	(LH) D7DZ 15A201-B	Front fender 1
78/	G	(RH) D8DZ 15A201-A	(LH) D8DZ 15A201-B	Front fender-amber 1
	J (Capri)			
73/74	J	(RH) D0RY 15A201-A	(LH) D0RY 15A201-A	Front fender 1
73/74	J	(RH) D0RY 15A201-B	(LH) D0RY 15A201-B	Body side-rear 1
76/78	J(exc. 64S)	(RH) D5RY 15A201-A	(LH) D5RY 15A201-B	Front fender-chrome finish bezel 1
76/78	J(exc. 64S)	(RH) D5RY 15A201-C	(LH) D5RY 15A201-D	Body side rear-chrome finish bezel 1
76/78	J(64S)	(RH) D6RY 15A201-A	(LH) D6RY 15A201-B	Front fender-black finish bezel 1
76/78	J(64S)	(RH) D6RY 15A201-C	(LH) D6RY 15A201-D	Body side rear-black finish bezel 1
79	J	(RH) D9CY 15A201-A	(LH) D9CY 15A201-B	Front fender-amber 1
	K (Mark IV, Mark V)			
73	K	(RH) D2LY 15A201-C	(LH) D2LY 15A201-D	Body side-red 1
73/76	K	(RH) D2LY 15A201-A	(LH) D2LY 15A201-B	Front fender-amber 1
73/74	K - - w/cornering lamp	(RH) D3LY 15A201-A	(LH) D3LY 15A201-B	Front fender-clear 1
75/76	K - - w/cornering lamp	(RH) D5LY 15A201-A	(LH) D5LY 15A201-B	Front fender-clear 1

COPYRIGHT © 1986 — FORD MOTOR COMPANY — DEARBORN, MICHIGAN

1973/79 LINCOLN-MERCURY CARS

YEAR	MODEL/RESTRICTIONS	PART NUMBER	DESCRIPTION	QTY.
15A201	LAMP ASSY. (MARKER or CORNERING) — Cont'd			
	K (Mark IV, Mark V)			
77/	K - - w/cornering lamp	(RH) D7LY 15A201-E	(LH) D7LY 15A201-D	1
77/	K	(RH) D7LY 15A201-F	(LH) D7LY 15A201- F Body side rear	1
	L (Bobcat)			
74/78	L	(RH) D4FZ 15A201-A	(LH) D4FZ 15A201-B Front fender-amber	1
74/	L	(RH) D1FZ 15A201-C	(LH) D1FZ 15A201-D Body side-red	1
79	L	(RH) D9FZ 15A201-A	(LH) D9FZ 15A201-B Front fender-amber	1
	P (Comet)			
73/75	P "Before 6/75"	(RH) D0DZ 15A201-N	(LH) D0DZ 15A201-P Front fender-amber	1
75/77	P "From 6/75"	(RH) D6DZ 15A201-A	(LH) D6DZ 15A201-B Front fender	1
73/75	P "Before 6/75"	(RH) D0DZ 15A201-R	(LH) D0DZ 15A201-S Body side-red	1
75/77	P "From 6/75"	(RH) D6DZ 15A201-C	(LH) D6DZ 15A201-D Body side-red	1
	P (Zephyr)			
78/	P	(RH) D9BZ 15A201-A	(LH) D9BZ 15A201-B Front fender-amber	1
78/	P(exc. 74)	(RH) D9BZ 15A201-C	(LH) D9BZ 15A201-D Body side-red	1
	V (Versailles)			
77/	V - - w/cornering lamps	(RH) D7DZ 15A201-A	(LH) D7DZ 15A201-B Front fender	1
	Y (Meteor)			
73/74	Y(exc. 71)	(RH) ★ D3MY 15A201-C	(LH) ★ D3MY 15A201-D Body side-red-N.R.	1
73/76	Y(71)	(RH) D3MY 15A201-G	(LH) D3MY 15A201-H Body side-red	1
75/76	Y	(RH) D6MY 15A201-A	(LH) D6MY 15A201-B Front fender	1
73/	A,K	374566-S100	(MM-284-Z)-nut(attach lamp to body side panel)-5/32" self thread	AR
73/74	J	E630316-S7	Lockwasher(Metric)	4
		34079-S7	(M-163)-nut-hex.-No. 10-32	4
		34803-S7	(X-60)-washer	4
76/78	J	E826130-S71	(AM-65-G)-nut-(attach lamp to front fender)M8	8
73/	P	★382423-S	(MM-290-P)-nut(attach lamp to fender)-No. 8-32"	AR
73/	K	382729-S2	(BB-643-CC)-clip(attach lamp to front fender)-1/4"-20 stud	AR
73/ 75	K L	384652-S100	(MM-118-K)-nut(attach lamp to front fender)-5/32" self thread	AR AR
75/	A(71),Y(71)	55928-S2	(U-380-A)-screw(attach lamp body side rear to rear quarter panel)-No. 8-18 x 3/4"	AR
15A209	GASKET (SIDE LAMP LENS)			
73	D	(RH) ★ D0VY 15A209-A	(LH) ★ D0VY 15A209-A Fender-not repl.	1
73	D	(RH) ★ D0VY 15A209-B	(LH) ★ D0VY 15A209-B Body side-not repld.	1
73/76	K - - w/cornering lamp	(RH) ★ D2LY 15A209-A	(LH) ★ D2LY 15A209-A Front fender-not repld.	1

YEAR	MODEL/RESTRICTIONS	PART NUMBER	DESCRIPTION	QTY.
15A209	GASKET (BODY SIDE LAMP)			
73/74	J	★ D0RY 15A209-A	Not replaced	4
76/78	J(exc. 64S)	D5RY 15A209-A	Used for front and rear lamps	4
76/78	J(64S)	D6RY 15A209-A	Used on front and rear lamps	4
15A210	RETAINER (SIDE MARKER LAMP)			
76/78	J	D5RY 15A210-A	R.H. and L.H. front-at rear of lamp	8
73/77	P	(RH) D0DZ 15A210-A	(LH) D0DZ 15A210-B Front fender	1
73/77	P	(RH) D1DZ 15A210-A	(LH) D1DZ 15A210-B Body side	1
15A210	RETAINER ASSY. (CORNERING LAMP)			
73/76	K	(RH) D2LY 15A210-A	(LH) D2LY 15A210-B	1
73/76	K	52012-S8	(U-202)-screw(attach retainer to cornering lamp)-No. 8-15 x 1/2"	AR
15A210	BASE (BODY SIDE LAMP)			
73/74	J	★ D0RY 15A210-A	Not replaced	4
15A210	CLAMP (BODY SIDE LAMP)			
73/74	J	D0RY 15A210-B		8
15A215	LENS (SIDE LAMP)			
73/74	A(53H,K,X,57H,K,X,65H,K,X,71H,K) w/cornering lamp	(RH) ★ D6MY 15A215-A Not replaced	(LH) ★ D6MY 15A215-B Not replaced Front fender-clear	1
75/78	A,Y			1
73	D	(RH) ★ D0VY 15A215-A	(LH) ★ D0VY 15A215-B Front bumper-N.R.	1
73	D	(RH) ★ D0VY 15A215-C	(LH) ★ D0VY 15A215-C Rear bumper end-N.R.	1
73/76	K - - w/cornering lamp	(RH) ★ D2LY 15A215-A Not replaced	(LH) ★ D2LY 15A215-B Not replaced Front fender-clear	1
15A217	RELAY ASSY. (TURNING LAMP)			
73/	A - - w/cornering lamp	E35Y 15A217-A	#D1AB 15A217-AA,AB,D74B 15A217-AA	2
77/	F,G,V - - w/cornering lamp			2
73/76	Y - - w/cornering lamp			2
15A224-5	BEZEL (CORNERING LAMP)-Refer to group 15A440			
15A240	SHIELD (CORNERING LAMP SPLASH)			
77/	K	(RH) D7LY 15A240-A	(LH) D7LY 15A240-B	1
15C404	PLATE (ORNAMENT LAMP MOUNTING)			
79	V	★ D94Y 15C404-A	R.H. & L.H.-not replaced	2
15B411	WIRE ASSY. (BODY SIDE LAMP)			
79	A - - w/cornering lamps	D9AZ 15B411-A	#ED D9AB 15237-AF or D9AB 15237-AG	1
77/	F - - w/cornering lamps	D70Z 15B411-A	#D70B 15237-AA-feed	1
77/	G - - w/cornering lamps	D7DZ 15B411-A	#D7DB 15237-AD-feed	1
15A416	WIRING & PLUG KIT (TRAILER LIGHTING)-Refer to groups 13A576 & 14A348			
15A416	WIRING KIT (TRAILER LAMP PLUG)			
73/75	All	★ C7AZ 15A416-A	Not replaced (5/82)	1

Consists of

3-C6AZ 13A435-A	Relay	3-55980-S	Screw-1/4"-14 x 3/8"
1-C6AZ 13A576-A	Wiring	1-354451-S	Grommet
3-C7AZ 14487-A	Sleeve	1-358292-S	Grommet
1-55906-S	Screw-No. 8-18 x 3/8"	1-	Instruction sheet

15B424	CLIP (WIRING)			
73/74	A(53H,K,X,57H,K,X,65H,K, X,71H,K)	★ D3MY 15B424-A	Retain cornering lamp wiring-not replaced	2
73/78	J	D1RY 15B424-A	Retain side marker lamp wiring to front fender	2

COPYRIGHT © 1986 — FORD MOTOR COMPANY — DEARBORN, MICHIGAN

1973/79 LINCOLN-MERCURY CARS

YEAR	MODEL/RESTRICTIONS	PART NUMBER	DESCRIPTION	QTY.
15A434	SOCKET and WIRE (FRONT FENDER SIDE LAMP)			
73/74	A(53H,K,X,57H,K,X,65H,K, X,71H,K) - - w/cornering lamp	D3AZ 15A434-A	#D3MB 15A219-AB (E-88 socket)-34" long R.H. and L.H.-front fender	2
74	D - - w/cornering lamp		R.H. and L.H.-cut to fit	2
75/78	A - - w/cornering lamp		R.H. and L.H.	2
75/76	Y - - w/cornering lamp			2
78	V	D84Y 15A434-A	#D84B 15A434-AA (E-145 socket) R.H. and L.H.)	2
79	A - - w/cornering lamps	D9AZ 15A434-A	#D9AB 15A200-AA (E-147 socket)	2
79	J	D9ZZ 15A434-A	#D9ZB 15A434-AA (E-46 socket)	2
73/	A,C,D,F,L,P,Y	D0DZ 15A434-B	Repair 8" long (E-46 socket) used for front and rear marker lamps	AR
79	V		Coach lamp	2
76	C - - with cornering lamps	D80Z 15A434-A	#D70B 15A200-AA (E-136 socket)- R.H. and L.H.	2
77/	F		front fender	2
15436	WIRE and PLUG ASSY. (TRAILER LAMP)			
74	A,Y - - w/class II or III towing package	★ D4AZ 15436-A	#D4AB 15A417-AA-not repld.	1
74	A,Y - - w/class I towing package	★ D4AZ 15436-B	#D4AB 15A417-BA-not repld.	1
75	A(exc. 71),Y(exc. 71) - - w/class II or III towing package	★ D5AZ 15436-A	#D5AB 15A417-AB-not repld.	1
75	A(exc. 71),Y(exc. 71) - - w/class I towing package	★ D5AZ 15436-B	#D5AB 15A417-BB-not repld.	1
75	A(71),Y(71) - - w/class II or III towing package	★ D5AZ 15436-C	#D5AB 15A417-CA-not repld.	1
75	A(71),Y(71) - - w/class I towing package	★ D5AZ 15436-D	#D5AB 15A417-DA-not repld.	1
76	A(exc. 71),Y(exc. 71) - - w/class I towing package	★ D6AZ 15436-B	#D6AB 15A417-BA-not repld.	1
76	A(exc. 71),Y(exc. 71) - - w/class II or III towing package	★ D6AZ 15436-A	#D6AB 15A417-AA-not repld.	1
76	A(71),Y(71) - - w/class I towing package	★ D6AZ 15436-D	#D6AB 15A417-DA-not repld.	1
76	A(71),Y(71) - - w/class II or III towing package	★ D6AZ 15436-C	#D6AB 15A417-CA-not repld.	1
74	C(exc. 71) - - w/class II or III towing package	★ D40Z 15436-D	#D40B 15A417-DA-not repld.	1
74	C(71)- - w/class II or III towing package	★ D40Z 15436-E	#D40B 15A417-EA-not repld.	1
75	C(exc. 71),F - - w/class II or III towing package	★ D50Z 15436-A	#D50B 15A417-AA-not repld.	1
76	C(exc. 71),F - - w/class II or III towing package	★ D60Z 15436-A	#D60B 15A417-AA-not repld.	1
76	C(71)- - w/class II or III towing package	★ D60Z 15436-B	#D60B 15A417-BA-not repld.	1
75	G - - w/trailer towing package	★ D5DZ 15436-B	#D5DB 15A417-AA,AB-not repld.	1
76	G - - w/trailer towing package	★ D6DZ 15436-A	#D6DB 15A417-AA-not repld.	1
74/76	K	★ D4SZ 15436-A	#D4SB 15A417-AA-not repld.	1
77/	K	★ D8LY 15436-A	#D7LB 15A417-AA or D8LB 15A417-AA-not repld.	1
15B437	LAMP ASSY. (EXTERIOR PILLAR OR COACH)			
79	A(54K,L,66K,L,74K,L)	D9MY 15B437-A	R.H.	1
79	A(54K,L,66K,L,74K,L)	D9MY 15B437-B	L.H.	1
75/	D	D5VY 15B437-A		2

YEAR	MODEL/RESTRICTIONS	PART NUMBER	DESCRIPTION	QTY.
15B437	LAMP ASSY. (EXTERIOR PILLAR OR COACH) — Cont'd			
78/79	K	D9LY 15B437-A	R.H.	1
78/79	K	D9LY 15B437-B	L.H.	1
77/78	V	D74Y 15B437-A		2
15B438	BEZEL ASSY. (EXTERIOR PILLAR LAMP OR COACH)			
79	A(54K,66K,74)	D9MY 15B438-A	R.H.	1
79	A(54K,66K,74)	D9MY 15B438-B	L.H.	1
75/	D - - w/o half vinyl roof	D5VY 15B438-A		2
75/	D - - w/half vinyl roof	D5VY 15B438-B		2
77/78	V			2
79	K	D9LY 15B438-A	R.H.-Red	1
79	K	D9LY 15B438-B	L.H.-Red	1
79	K	★ D9LY 15B438-C	R.H.-White-not repld.	1
79	K	★ D9LY 15B438-D	L.H.-White-not repld.	1
79	K	D9LY 15B438-E	R.H.-Med. blue	1
79	K	★ D9LY 15B438-F	L.H.-Med blue-not repld.	1
75/	D	55974-S45X	(U-316-D)-screw (attach bezel to pillar upper)-No. 8-18 x 3/4"	2
75/	D	377340-S102	(UU-58-X)-screw (attach bezel to pillar lower)-No. 8-18 x 13/32"	2
15B439	LENS ASSY. (ORNAMENT LP)			
79	V - - Town Car	D94Y 15B439-A	R.H.	1
79	V - - Town Car	D94Y 15B439-B	L.H.	1
15A440	BEZEL (FRONT or REAR SIDE LAMP)			
73/74	A(53H,K,X,57H,K,X,65H,K, X,71H,K) - - w/cornering lamp	(RH) ★ D3MY 15A440-A Not replaced	(LH) ★ D3MY 15A440-B Not replaced	Front fender	1
73/74	A(53H,K,X,57H,K,X,65H,K, X,71H,K) - - w/o cornering lamps	(RH) D3MY 15A440-C	(LH) ★ D3MY 15A440-D Not replaced	Front fender	1
73/74	A(exc. 71),Y(exc. 71)	(RH) ★ D3MY 15A440-E	(LH) ★ D3MY 15A440-F	Body side-not repld.	1
75/78	A - - w/cornering lamps	(RH) D5MY 15A440-A	(LH) D5MY 15A440-B	Front fender	1
79	A	(RH) D9AZ 15A440-A	(LH) D9AZ 15A440-B	Front fender	1
77/	F - - w/cornering lamps	(RH) D70Z 15A440-A	(LH) D70Z 15A440-B	Front fender	1
74/	D - - w/front fender wheel opening moulding	(RH) D4VY 15A440-A	(LH) D4VY 15A440-B	Front fender	1
74/	D - - w/o front fender wheel opening moulding	(RH) D8VY 15A440-A	(LH) D8VY 15A440-B	Front fender	1
73	F	(RH) ★ D1AZ 15A440-F	(LH) ★ D1AZ 15A440-E	Body side-prime-N.R.	1
77/	G - - w/cornering lamp	(RH) D7DZ 15A440-A	(LH) D7DZ 15A440-B	Front fender	1
73/74	J	(RH) D0RY 15A440-E	(LH) ★ D0RY 15A440-F	Front fender	1
73/74	J	(RH) ★ D0RY 15A440-C	(LH) ★ D0RY 15A440-D	Body side	1
79	J	(RH) ★ E1CY 15A440-A Not replaced	(LH) ★ E1CY 15A440-B Not replaced	Front fender-black	1
73/76	K	(RH) D2LY 15A440-A	(LH) D2LY 15A440-B	Front fender-marker lamp bezel	1
73	K - - w/cornering lamps	(RH) D3LY 15A440-A	(LH) D3LY 15A440-B	Front fender-cornering lamp bezel	1
73	K	(RH) D2LY 15A440-C	(LH) D2LY 15A440-D	Body side	1
74/76	K - - w/cornering lamps	(RH) D4LY 15A440-A	(LH) D4LY 15A440-B	Front fender-cornering lamp	1
77/	K - - w/cornering lamps	(RH) D7LY 15A440-A	(LH) D7LY 15A440-B		1
74/	L	(RH) D1FZ 15A440-A	(LH) D1FZ 15A440-B	Front fender	1
74/	L	(RH) D1FZ 15A440-B	(LH) D1FZ 15A440-A	Body side-rear	1
73/75	P "Before 6/75"	(RH) ★ D0DZ 15A440-J Not replaced	(LH) ★ D0DZ 15A440-K Not replaced	Front fender-bright chrome finish	1
75/77	P "From 6/75"	(RH) D6DZ 15A440-A	(LH) D6DZ 15A440-B	Front fender-argent paint finish	1
73/75	P "Before 6/75"	(RH) D0DZ 15A440-L	(LH) D0DZ 15A440-M	Body side-bright chrome finish	1

COPYRIGHT © 1986 — FORD MOTOR COMPANY — DEARBORN, MICHIGAN

1973/79 LINCOLN-MERCURY CARS

YEAR	MODEL/RESTRICTIONS	PART NUMBER	DESCRIPTION	QTY.
15A440	BEZEL (FRONT or REAR SIDE LAMP) — Cont'd.			
75/77	P "From 6/9/75"	(RH) D6DZ 15A440-C	(LH) D6DZ 15A440-D Body side-argent paint finish	1
77/	V	(RH) D7DZ 15A440-A	(LH) D7DZ 15A440-B Front fender	1
74	Y(exc. 71)	(RH) ★ D3MY 15A440-C Not replaced	(LH) ★ D3MY 15A440-D Front fender	1
73/	A	384652-S100	(MM-118-K)-nut (attach bezel to front fender)-5/32" self thread	AR
73/	A,F	374566-S100	(MM-284-Z)-nut (attach bezel to lamp assy.)-5/32" self thread	AR
73/	K	52012-S8	(U-202)-screw (attach bezel to front fender)-No. 8-15 x 1/2"	AR
74/	L	382110-S100	(MM-284-X)-nut-5/16" self threading	AR
15A442	SOCKET and WIRE (BODY SIDE OR COACH LAMP)			
79	A(54K,66K,74)	D9MY 15A442-A	#D9MB 15B456-AB-R.H. & L.H.	2
75/	D	D5VY 15A442-A	R.H. and L.H.	2
73/78	J	★ D0RY 15A442-B	Rear-not replaced	2
78/	K - - w/console	★ D8VY 15A442-A	#D8LB 15B456-AA-not replaced	1
15443	SWITCH ASSY. (MARKER LAMP)			
78/	P(Taxi)	D8BZ 15443-A	#D8BB 15443-AA	1
78	P(P/C)			1
15B444	RETAINER (EXTERIOR PILLAR LAMP BEZEL)			
75/	D	D5VY 15B444-B		4
75/	D	377340-S102	(UU-58-X)-screw (attach retainer to pillar)-No. 8-18 x 13/32"	2
15B445	PLATE (EXTERIOR PILLAR LAMP OPENING COVER)			
75/	D - - w/o half vinyl roof	D5VY 15B445-A		2
75/	D - - w/half vinyl roof	★ D5VY 15B445-B	Not replaced	2
75/	D	55974-S45X	(U-316-D)-screw (attach plate body pillar)-No. 8-18 x 3/4"	AR
15B446	SEAL (EXTERIOR PILLAR LAMP)			
75/	D	★ D5VY 15B446-A		2
77/	V	Not replaced		2
15A447	SEAL (BODY SIDE LAMP)			
73/76	C	D30Z 15A447-A	R.H. and L.H.	2
77	F(71)			2
73	K	★ D2LY 15A447-A	R.H. and L.H.-not replaced	2
77/	K	★ D7LY 15A447-A	R.H. and L.H.-not replaced	2
78/	K	★ D8LY 15A447-A	R.H. and L.H.-not replaced	2
78/	P(exc. 74)	D30Z 15A447-A	R.H. and L.H.	2
15B447	RETAINER ASSY. (EXTERIOR PILLAR LAMP)			
75/	D	D5VY 15B447-B		2
75/	D	52720-S8	(U-380)-screw (attach retainer assy. to body pillar)-No. 8-18 x 3/8"	AR
15B456	SOCKET & WIRING ASSY. (COACH LAMP)-Refer to group 15B465			
15457	COVER (REAR SIDE MARKER)			
73/78	J	D0RY 15457-A		2
15B462	COVER (COACH LAMP RETAINER)			
79	A(54K,66K,74)	D9MY 15B462-A	#D9MB 15B462-AA-R.H.	2
79	A(54K,66K,74)	D9MY 15B462-B	#D9MB 15B463-AA-L.H.	2
15B465	WIRING ASSY. (COACH LAMP FEED)			
79	A(54K,66K,74) - - w/lux. decor. grp.	★ D9MY 15B465-A	#D9MB 15B465-AC-not replaced	1
79	A(74) - - w/o lux. decor. grp.	E0MY 15B465-A	#D9MB 15B465-BE	1

YEAR	MODEL/RESTRICTIONS	PART NUMBER	DESCRIPTION	QTY.
15B475	KNOB ASSY. (MARKER LAMP SWITCH)			
78/	P(Taxi)	D8BZ 15B475-A		1
78	P(P/C)			1
79	A,J,P - - w/premium sound system			1
15B485	TRANSFER (FRONT SIDE LAMP COLOR STRIPE)			
79	J	★ D9CY 15B485-A	Gold-R.H. and L.H.-not replaced	2
		D9CY 15B485-B	Red-R.H. and L.H.	2
		D9CY 15B485-C	Blue-R.H. and L.H.	2
		D9CY 15B485-D	Argent-R.H. and L.H.	2
		★ D9CY 15B485-E	Orange-R.H. and L.H.-not replaced	2
		★ D9CY 15B485-F	Lt. orange-R.H. and L.H.-not replaced	2
		D9CY 15B485-G	Green-R.H. and L.H.	2
15500-1	LAMP ASSY. (BACKUP)			
75/78	A(exc. 71)	(RH) D5MY 15500-A	(LH) D5MY 15500-B	1
75/76	Y(exc. 71)			1
79	A(54,66)	(RH) D9MY 15500-A	(LH) D9MY 15500-A	1
75/	D	(RH) D5VY 15500-A	(LH) D5VY 15501-A	1
77/	F(exc. 71)	(RH) D70Z 15500-A	(LH) D70Z 15500-B	1
77/	K	(RH) D7LY 15500-A	(LH) D7LY 15500-B	1
78/	P(74)	(RH) D8BZ 15500-A	(LH) D8BZ 15500-A	1
73	K	383356-S	(MM-216-PA)-nut(attach lamp to back-up lamp bracket)-No. 8	AR
15510	GASKET (BACKUP LAMP LENS)			
79	A(54,66)	D9MY 15510-A	R.H. & L.H.	2
75/	D	★ D5VY 15510-A	R.H. and L.H.-not replaced	2
73	K	★ D2LY 15510-A	Not replaced	2
15513	DOOR (BACKUP LAMP)			
77/	F(exc. 71)	(RH) D70Z 15513-A	(LH) D70Z 15513-B	1
15514	LENS (BACKUP LAMP)			
73	K	(RH) D2LY 15514-A	(LH) D2LY 15514-B	1
77/	K	(RH) D7LY 15514-A	(LH) D7LY 15514-B	1
78/	P(54,66)	(RH) D8KY 15514-A	(LH) D8KY 15514-A Package includes (1) IS 4652	1
78/	P(36)	(RH) D8KY 15514-B	(LH) D8KY 15514-C Package includes (1) IS 4697	1
15520	SWITCH (BACKUP LAMP)-Also refer to Groups 2B623 & 7A247			
73	A,D,Y	D2VY 15520-B	*SW-1107-A-#D2VA 15520-AC,D3AA 15520-BA	1
74/75	A,Y	D4AZ 15520-B	*SW-1206-#D4AW 15520-BA	1
76/78	A - - w/o vacuum brake release	D6AZ 15520-A	*SW-1321-#D6AW 15520-AA, A1A,D7AC 15520-AA	1
76	Y - - w/o vacuum brake release			1
76/78	A,Y - - w/vacuum brake release	D6AZ 15520-B	*SW-1322-#D6AW 15520-BA,B1A,D7AC 15520-BA	1
73/74	C - - 3/M/T	★ D20Z 15520-B	*SW-1092-#D20A 15520-BA-not repld.	1
73	C - - A/T (column shift)	D20Z 15520-D	*SW-1106-A-#D20A 15520-AG	1
73	C - - 4/M/T	D0ZZ 15520-A	*SW-943-#D0ZB 15520-A	1
73	F - - 4/M/T			1
74/75	C,F - - A/T	D40Z 15520-A	*SW-1209-#D40W 15520-A1B	1
76	C - - A/T w/o vacuum brake release	D60Z 15520-A	*SW-1326-#D60W 15520-AA-A1A-A2A,	1
76/	F - - A/T w/o vacuum brake release		D70C 15520-AA	1
76	C - - A/T (column shift) w/vacuum brake release	D6SZ 15520-A	*SW-1327-#D6SW 15520-AA	1
76/	F - - A/T (column shift) w/vacuum brake release			1
74/75	D	D4VY 15520-B	*SW-1211-A-#D4VW 15520-BA	1
76/	D	D6VY 15520-A	*SW-1328-#D6VW 15520-AA,D7VC 15520-AA	1
73	F - - 3/M/T	D2ZZ 15520-A	*SW-1160-#D2ZB 15546-AA	1
73/74	P - - M/T (floor shift)			1
75/76	G - - A/T (column shift) w/out vacuum release	D5DZ 15520-A	*SW-1248-#D5DW 15520-CA	1
77	G - - A/T (column shift) w/out vacuum release	D7DZ 15520-B	*SW-1544-#D7DC 15520-AA	1

1973/79 LINCOLN-MERCURY CARS

YEAR	MODEL/RESTRICTIONS	PART NUMBER	DESCRIPTION	QTY.
15520	SWITCH (BACKUP LAMP)-Also refer to Groups 2B623 & 7A247 — Cont'd			
75	G - - M/T (column shift)	★ D5DZ 15520-B	*SW-1247-#D5DW 15520-DA-not replaced	1
75/76	G - - M/T (floor shift)	D2ZZ 15520-A	*SW-1160-#D2ZB 15546-AA	1
77/78	G - - M/T (floor shift)	D7DZ 15520-A	*SW-1385 #D7DB 15546-AA	1
76/78	G - - A/T (column shift) w/vacuum brake release	D6DZ 15520-A	*SW-1320-#D6DW 15520-AA,D7DC 15520-BA	1
76	G - - M/T	★ D6DZ 15520-B	*SW-1323-#D6DW 15520-BA,BB-not replaced	1
78/	G - - A/T (column shift) w/o vacuum brake release	D8DZ 15520-A	*SW-1544-A-#D8DC 15520-AA	1
78/	G - - A/T (column shift) with vacuum brake release	D8DZ 15520-B	*SW-1320-A #D8DC 15520-BA	1
79	G - - 4/M/T-O/D	D8BZ 15520-A	*SW-1486 #D8BR 15520-A	1
73/74	J - - M/T	★ D2RY 15520-B	*SWE-1148-not replaced	1
74/78	J - - M/T	D4RY 15520-A	*SWE-1148-A	1
79	J - - 4/M/T-O/D	D8BZ 15520-A	*SW-1486 #D8BR 15520-A	1
79	J - - 4/M/T-w/Borg Warner trans.	★ D4FZ 15520-A	*SW-1212-#D42R 15520-AA-not replaced	1
79	J - - 4/M/T	D3FZ 15520-A	*SW-1052-A #D32B 15520-AA	1
73	K	D2SZ 15520-C	*SW-1108-A-#D2SA 15520-AJ-electric and vacuum	1
74/75	K	D4SZ 15520-A	*SW-1210-#D4SW 15520-AB	1
76	K	D6SZ 15520-A	*SW-1327-#D6SW 15520-AA	1
77/	K	D7LY 15520-A	*SW-1388-#D7LC 15520-AA	1
74/	L - - 4/M/T	D3FZ 15520-A	*SW-1052-A-#D32B 15520-AA	1
73	P - - A/T	D2DZ 15520-C	*SW-1104-A-#D2AA 15520-BD, D2DA 15520-BD	1
73	P - - M/T (column shift)	★ D2DZ 15520-B	*SW-1105-#D2DA 15520-AB-not replaced	1
74/75	P - - A/T	D4DZ 15520-B	*SW-1208-#D4DW 15520-BA	1
74/75	P - - M/T (column shift)	D4DZ 15520-A	*SW-1207-#D4DW 15520-CA	1
76/77	P - - A/T	D6DZ 15520-D	*SW-1325-#D6BW 15520-BA,B1A,D7BC 15520-AA	1
76/	P - - M/T (column shift)	D6DZ 15520-C	*SW-1324-#D6BW 15520-AA	1
78/	P - - 4 M/T	D3FZ 15520-A	*SW-1052-A-#D32B 15520-AA	1
77/78	V - - A/T with vacuum brake release "Before 2/78"	D6DZ 15520-A	*SW-1320 #D6DW 15520-AA, D7DC 15520-BA	1
78/	V - - A/T with vacuum brake release "From 2/78"	D84Y 15520-A	*SW-1509	1
77/	V - - A/T without vacuum brake release	D5DZ 15520-A	*SW-1248 #D5DW 15520-CA, D7DC 15520-AA	1
73/77	P - - 3/M/T (floor shift)	D2ZZ 15520-A	*SW-1160-#D2ZB 15546-AA	1
78 79	P - - 3/M/T P - - 4/M/T-O/D	D8BZ 15520-A	*SW-1486-#D8BR 15520-AA	1 1
73/	A,D	★40905-S7	(U-258)-screw (attach switch to steering column)-No. 10-24 x 3/8"	AR
75/	C,F,K	★55583-S	(U-1-M)-screw (attach switch to steering column)-No. 8-32 x 3/8"	AR
15525	WIRING ASSY. (BACKUP LAMP SWITCH TO REAR LAMP FEED)-Also refer to Group 7D307 If not listed below improvise from bulk wiring(14296)			
76 76/	C F	★ D60Z 15525-A Not replaced	#D60B 15A519-AA	1 1
79	G - - 4/M/T-O/D (floor shift)	D9DZ 15525-A	#D9DB 15525-AB	1
79	J(4 cyl.) - - 4/M/T w/turbo charger	D9ZZ 15525-A	#D9ZB 15525-AA	1
79	J(4 cyl.) - - 4/M/T w/o turbo charger	D9BZ 15525-B	#D8BB 15525-AC	1
79	J(6&8 cyl.) - - 4/M/T-O/D	D9BZ 15525-A	#D9BB 15525-AA	1

YEAR	MODEL/RESTRICTIONS	PART NUMBER	DESCRIPTION	QTY.
15525	WIRING ASSY. (BACKUP LAMP SWITCH TO REAR LAMP FEED)-Also refer to Group 7D307 — Cont'd If not listed below improvise from bulk wiring(14296)			
76/	K	★ D6SZ 15525-A	#D6SB 15A519-AA-not replaced	1
76/	L - - M/T	★ D6FZ 15525-A	#D6EB 15525-AA-not replaced	1
78	P - - 3/M/T	★ D8BZ 15525-B	#D8BB 15525-BD,ED-D8BB 15525-BC,BE-not repld.	1
79	P - - 4/M/T-O/D	D9BZ 15525-A	#D9BB 15525-AA	1
79	P - - 4/M/T	D9BZ 15525-B	#D8BB 15525-AC	1
73	F	20310-S8	(B-48)-bolt (attach clip and wiring to trans.)-5/16"-18 x 1/2"	1
		★ 353547-S	(GG-173)-clip (attach wiring to transmission)	1
73	C	42367-S36	(U-269-B)-screw (attach ground terminal of wiring to crossmember)-No. 10-16 x 1/2"	1
75	L	379560-S	(UU-89-CA)-screw (attach wire assy. to shift column at dash panel)-No. 8-18 x 3/8"	AR
15527	WIRING ASSY. (BACK UP LAMP)-Refer to group 15536			
15533	SEAL (BACKUP LAMP)			
75/	D	(RH) ★ D5VY 15533-A	(LH) ★ D5VY 15533-B Not replaced	1
78/	P	(RH) D8BZ 15533-A	(LH) D8BZ 15533-A	2
15536	WIRE ASSY. (BACKUP LAMP SOCKET)-Also refer to group 13410			
74/	D	D40Z 15536-B	#D4VB 15A536-AA-R.H. & L.H. (Repair part) 8"	
79	A		long-socket (E-125) & wire assy.	2
75/	G	D4ZZ 15536-A	#D4ZB 15A536-AA R.H. & L.H. (Repair part) 8"	2
77/	F(exc. 65L-71),V		long-socket (E-126) & wire assy.	2
79	J			2
77	F(71)	D00Z 15536-A	#D00B 15A536-A	2
73	K	D3LY 15536-A	#D3LB 15A536-AA	2
74/76	K	★ D4LY 15536-A	#D4LB 15A536-AB-not replaced	2
77/	K	D7LY 15536-A	#D7LB 15A536-AA	2
73/77	P	D24Y 15536-A	#D24B 15A536-AA	2
78/	P	D4SZ 15536-B	#D4SB 15A536-BA-R.H. & L.H. (Repair part) 8"	2
77/	F(65L)		long socket (E-124) & wire assy.	2
15540	ACTUATOR (BACKUP LAMP SWITCH)			
73/78	A - - A/T	D0AZ 15540-A		1
77/	V - - A/T			1
73/76	Y - - A/T			1
73/	D			1
73/78	P - - A/T			1
75/	G - - A/T			1
15A541	RETAINER (BACKUP LAMP SWITCH)			
73/74	C - - 4/M/T	★ D0ZZ 15A541-A		1
73	F - - 4/M/T	Not replaced		1
73/78	J - - A/T	D0RY 15A541-A		1
15A563	LAMP ASSY. (GLOVE COMPARTMENT)-Refer to group 14413			
15A599	WIRING (EMERGENCY WARNING JUMPER)			
73/78	J	D1RY 15A599-A		1
15650	LAMP ASSY. (MAP)			
73/78	J	D3RY 15650-A	Located on front "A" pillar	1

COPYRIGHT © 1986 — FORD MOTOR COMPANY — DEARBORN, MICHIGAN

1973/79 LINCOLN-MERCURY CARS

YEAR	MODEL/RESTRICTIONS	PART NUMBER	DESCRIPTION	QTY.
15650	LAMP ASSY. (MAP) — Cont'd			
75/	L(73)	D0MY 15650-A	Used as cargo area lamp	1
73	F	384154-S9	(UU-66-G)-screw (attach lamp to instrument panel)-No. 8-18 x 3/4"	2
75/	L(73)	45271-S36	(M-180)-nut (attach lamp assy. to liftgate hinge) No. 8-32	2
75/	L(73)	381518-S45	(BB-601-F)-screw (attach lamp assy. to liftgate hinge) No. 8-32 x 3/4"	2
15B663	NUT (TOP CONTROL SWITCH MOUNTING)			
73	F(65D,76D)	★ D1WY 15B663-B	Use w/heated back window-not replaced	1
15668	SWITCH ASSY. (TOP CONTROL)			
73	F(76D)	★ D1WY 15668-A	Top control-not replaced	1
73	F(76F)	★ D1WY 15668-B	Top control incl. courtesy light and map light switches-not replaced	1
15A669	WIRE ASSY. (TOP CONTROL CIRCUIT BREAKER TO TOP CONTROL SWITCH)			
77/	G - - w/power windows and power door locks, auto/seat back latch w/o heated backlite	D7DZ 15A669-A	#D7DB 14A285-AA, D8DB 14A285 - AA	1
77/	V			1
79	J "Before 5/1/79"	★ D8BZ 15A669-A Not replaced	#D8BB 14A285-AC-use with heated backlite and/or power door locks	1
79	J,P "From 5/1/79"	★ D9ZZ 15A669-A Not replaced	#D9ZB 14A285-AA,BA-use w/heated backlite and/or power seats and/or power door locks	1
79	P(P/C, Taxi)			1
78/	P "Before 5/1/79"	★ D8BZ 15A669-A Not replaced	Use w/power windows with or without heated backlite use w/marker lamp	1
15A670	NUT (TOP CONTROL SWITCH)			
73	A,F,Y	★ C9AZ 15A670-A	To attach brake cable to bezel-N.R. (5/82)	1
15C670	WIRE ASSY. (ROOF SLIDING PANEL EXTENSION)			
77/	K	D7LY 15C670-A	#D7LB 15C670-AA-feed	1
15B672	WIRE ASSY. (ROOF SLIDING PANEL)			
77/	D	★ D9VY 15B672-A	#D9VB 15B672-AA-not replaced	1
78/79	F "Before 1/15/79"	★ D8SZ 15B672-A	#D8SB 15B672-AB-not replaced	1
79	F "From 1/15/79"	★ D9SZ 15B672-A	#D9SB 15B672-AA-not replaced	1
77/	K	★ D9LY 15B672-A	#D9LB 15B672-AA-not replaced	1
15B673	WIRE ASSY. (ROOF SLIDING PANEL FEED)			
78/	F	★ D8SZ 15B673-A	#D8SB 15B673-AB-not replaced	1
77/	K	★ D7LY 15B673-A	#D7LB 15B673-AC feed-not replaced	1
15674	KNOB (INSTRUMENT PANEL CONTROL)-Also refer to group 18519			
73/74	A(71),Y(71) - - w/tailgate window washer	★ D3MY 15674-B Not replaced	For tailgate window- "push"-washer	1
73	F(65)	★ D1WY 15674-A	For heated backlite switch or top control-not repld.	2
15676	BRACKET (TOP CONTROL SWITCH MOUNTING)			
73	F(76)	★ D1WY 15676-A	For top control switch-not replaced	1
15B683	RELAY ASSY. (SEAT BACK LATCH)-Refer to group 14512			

YEAR	MODEL/RESTRICTIONS	PART NUMBER	DESCRIPTION	QTY.
15A690	WIRE (TOP CONTROL FEED JUMPER)			
73	F(76)	D1WY 15A690-A	#D1WB 15A690-AA	1
78/	G,V - - w/sun or moon roof	D8DZ 15A690-A	#D5DX 15A690-AA	1
15B691	SWITCH ASSY. (ROOF SLIDING PANEL)-Also refer to groups 14529 and 15873			
73/75	A,D,F,G,K,Y	D1SZ 15B691-AA	#A5AA-321-0031	1
75/78	A	D6LY 15B691-A	Includes bezel	1
75/77	F "Before 9/1/77"			1
75/	G			1
75/76	C,D,K,Y			1
77/	V			1
15B692	BRACKET (ROOF SLIDING PANEL SWITCH)			
75	A,D,F,G,K,Y	★ D5WY 15B692-A	Not replaced	1
77/	D,K	★ D7LY 15B692-A		1
78/	F	Not replaced		1
15702	LAMP ASSY. (ENGINE COMPARTMENT)-Also refer to group 15A702			
73/78	A	D4ZZ 15702-B	#D5ZB 15702-AA	1
73/	L			1
73/76	Y			1
79	A	D9AZ 15702-A	#D9AB 15A702-AA	1
73/76	C,D	D3TZ 15702-A	#D4TB 15702-AA	1
73/	F,K			1
73	F	D4ZZ 15702-B	#D2ZB 15702-AA	1
75/	G,V	D84Y 15702-A	#D84B 15K702-AA	1
74	L	★ D4FZ 15702-A	#D42B 15702-AC-not replaced	1
74/77	P	★ D5DZ 15702-B	#D5BB 15702-AB	1
78/	P	D8BZ 15702-A	#D8BB 15K702-AA	1
79	J			1
73	F	382963-S100	(GG-213-J)-clip(attach lamp and wiring to hood panel)	AR
73	K	42367-S36	(U-269-B)-screw(attach lamp to hood panel)-	AR
75	P		No. 10-16 x 1/2"	AR
75	L	★ 42120-S	(U-248)-screw(attach lamp assy. to hood support)-No. 10-16 x 1/2"	AR
15A702	WIRE ASSY. (ENGINE COMPARTMENT LAMP FEED)-Also refer to group 15702			
75/	G	D20Z 15A702-A	#D00B 15A702-B,D20B 15A702-AA,	1
77/	V		D5DB 15A702-AB	1
15790	MOTOR ASSY. (ROOF SLIDING PANEL)			
73	K - - w/sliding roof(glass)	★ D3LY 15790-A	*MM-331 Inline drive Bosch #0130820017-(FPA-12)	1
74	K - - w/sliding roof-glass or steel	Not replaced		1
74/75	A,D,F,Y			1
75/78	A,	D74Y 15790-A	*MM-355-B-R.H. angle drive #H-21X1-0026-A or B	1
75/	G			1
77/	V			1
75/76	C,D,K,Y			1
75/78	F "Before 9/1/77"			1
77/	D,K	D8VY 15790-A	*MM-367 #13256-26-M016 WM	1
78/	F "From 9/1/77"			1

COPYRIGHT © 1986 — FORD MOTOR COMPANY — DEARBORN, MICHIGAN

1973/79 LINCOLN-MERCURY CARS

YEAR	MODEL/RESTRICTIONS	PART NUMBER	DESCRIPTION	QTY.
15A801	LAMP ASSY. (TRANSMISSION CONTROL SELECTOR)-Also refer to group 15A808			
73	A,Y	★ D1AZ 15A801-A	Incl. bulb-not replaced	1
73	C	★ D3DZ 15A801-A	#D3DA 7B036-AB-less bulb	1
74/	C,F - - A/T fixed steering column	Not replaced		1
74/	P - - A/T			1
74/76	C - - A/T tilt steering column	D40Z 15A801-A	#ED-D40W 7B036-AB or D70C 7B036-AA-	1
			incl. bulb wiring & socket	1
74/	F - - A/T			1
15A807	CLIP (TRANSMISSION CONTROL SELECTOR INDICATOR LAMP)			
73	C - - C4 or C6 and console shift	★ C80Z 15A807-A	Not replaced	1
15A808	WIRING ASSY. (TRANSMISSION CONTROL SELECTOR INDICATOR LAMP)-Also refer to group 15A801			
73	F - - A/T	★ D1ZZ 15A808-A	#D2ZB 15A808-AA	1
73/77	P - - M/T	Not replaced		1
75/78	G,P - - A/T	D5FZ 15A808-A	#D52B 15A808-AB	1
75/	L			1
77	V			1
78/	P - - with A/T (floor shift)	D8BZ 15A808-A	#D8BB 15A808-AB	1
73/76	J - - A/T "Before 8/1/75"	★ D3RY 15A808-A	Not replaced	1
76/78	J - - A/T "From 8/1/75"	★ D6RY 15A808-A	Not replaced	1
73	P - - A/T	★ D0SZ 15A808-C	#D0SB 7B036-A,C or E or D1SA 7B036-AA-	1
			27 1/2" long-not replaced	
15811	FILTER (TRANSMISSION CONTROL SELECTOR INDICATOR LAMP)			
79	J,P - - A/T (floor shift)	D9BZ 15811-A	Blue	1
15A811	SHROUD ASSY. (TRANSMISSION CONTROL SELECTOR INDICATOR LAMP)			
74/78	J - - A/T	D4RY 15A811-A		1
15837	SEAL (TRANSMISSION CONTROL SELECTOR INDICATOR)			
74/78	J	D4RY 15837-A		1
15A851	SWITCH and BRACKET (PARKING BRAKE SIGNAL)			
76/77	A,K "Before 3/1/77"	E1FZ 15A851-A		1
76/	D			1
76/77	F "Before 3/14/77"			1
76	C,Y			1
73/75	C,F	E1FZ 15A851-A		1
76/	G,L,P			1
77/	V			1
77/	A,K "From 3/1/77"			1
77/	F "From 3/14/77"			1
79	J			1
73/78	J	D9RY 15A851-A		1
15A856	WIRE ASSY. (PARKING BRAKE WARNING INDICATOR)-Also refer to group 14A313			
73/74	J	★ D3RY 15A856-A	Not replaced	1
15873	HOUSING ASSY. (ROOF SLIDING PANEL SWITCH)-Also refer to group 15B691			
77/	D,K	D7LY 15873-A		1
78/	F "From 9/1/77"			1
15883	SOCKET and WIRE ASSY. (PARKING BRAKE SIGNAL LAMP)			
73	A,Y	★ D2AZ 15883-A	#D2AB 15883-AA-not replaced	1
73	C(P/C and Taxi)	★ D20Z 15883-A	#D20B 10A932-AA-not replaced	1
74/75	C	★ D50Z 15883-A	#D50B 10A932-AA-not replaced	1

YEAR	MODEL/RESTRICTIONS	PART NUMBER	DESCRIPTION		QTY.
16003-4	Refer to Exterior Moulding Section at the end of this catalog				
16005-6	FENDER (FRONT)				
	Certain reinforcements are also required-see footnotes and refer to the group numbers shown for the complete part numbers.				
	NOTE 1-Reinforcements (16D186-7) also required, NOTE 2-Reinforcements (16D186-7 and 16094-95) also required				
	NOTE 3-Use D8BZ 18919-A plug for radio antenna hole when required				
73/74	A(53B,F,65B,F,71B),Y	(RH) ★ D3MY 16005-A	(LH) ★ D3MY 16006-A	NOTE 1-N.R. (5/82)	1
73/74	A(53H,K,X,57H,K,X,65H,K,X,71H,K)	(RH) D7MY 16005-A	(LH) D7MY 16006-A	NOTE 1	1
75/78	A	(RH) D7MY 16005-A	(LH) D7MY 16006-A	NOTE 1	1
79	A - - w/o cornering lights	(RH) E1MY 16005-A	(LH) E1MY 16006-A		1
79	A - - w/cornering lights	(RH) E1MY 16005-B	(LH) E1MY 16006-B		1
73/76	C	(RH) D4GY 16005-A	(LH) D4GY 16006-A	NOTE 2	1
73	D	(RH) ★ D3VY 16005-A	(LH) ★ D3VY 16006-A	NOTE 1-not repl.	1
74	D	(RH) ★ D4VY 16005-A	(LH) ★ D4VY 16006-A	NOTE 1-N.R. (5/82)	1
75/	D	(RH) D8VY 16005-A	(LH) D7VY 16006-A	NOTE 1	1
73	F	(RH) ★ D3WY 16005-A	(LH) ★ D3WY 16006-A	Not replaced	1
74/76	F	(RH) D4GY 16005-A	(LH) D4GY 16006-A	NOTE 2	1
77/	F	(RH) D70Z 16005-A	(LH) D70Z 16006-A	NOTE 2	1
75/	G	(RH) D8DZ 16005-A	(LH) D8DZ 16006-A	NOTE 3	1
73/74	J	(RH) D3RY 16005-A	(LH) D3RY 16006-A		1
76/78	J	(RH) D6RY 16005-B	(LH) D6RY 16006-B		1
79	J	(RH) E1CY 16005-A	(LH) E1CY 16006-A		1
73	K	(RH) D3LY 16005-A	(LH) D3LY 16006-A	NOTE 1	1
74/76	K	(RH) D6LY 16005-A	(LH) D6LY 16006-A	NOTE 1	1
77	K	(RH) D7LY 16005-A	(LH) D7LY 16006-A	NOTE 1	1
78/	K	(RH) D8LY 16005-A	(LH) D8LY 16006-A	NOTE 1	1
74	L	(RH) D3FZ 16005-A	(LH) D3FZ 16006-A		1
75/78	L	(RH) D8FZ 16005-A	(LH) D8FZ 16006-A	NOTE 3	1
79	L	(RH) D9FZ 16005-A	(LH) D9FZ 16006-A		1
73/74	P	(RH) D34Z 16005-A	(LH) D34Z 16006-A		1
75/77	P	(RH) D7DZ 16005-B	(LH) D7DZ 16006-B		1
78/	P - - w/o louver opening	(RH) D8BZ 16005-A	(LH) D8BZ 16006-A	NOTE 3 "Patent pending"	1
78/	P - - w/louver opening	(RH) E2KY 16005-A	(LH) E2KY 16006-A	NOTE 3	1
77/	V	(RH) D8DZ 16005-A	(LH) D8DZ 16006-A	"Patent pending"	1
73/78	J	42742-S7-8	(U-2-A)-screw & washer assy.-fillister head-1/4"-20 x 1/2"		4
16A005-6	BRACKET (FRONT FENDER TO PILLAR)				
79	A	(RH) D9AZ 16A005-A	(LH) D9AZ 16A006-A		1
75/	G	(RH) D5DZ 16A005-A	(LH) D5DZ 16A006-A		1
77/	V				1
74/78	L	(RH) D4FZ 16A005-A	(LH) D4FZ 16A006-A		1
16018-9	EXTENSION ASSY. (FRONT FENDER FRONT)				
73	C	(RH) ★ D3GY 16018-A Not replaced	(LH) ★ D3GY 16019-A Not replaced	Drill necessary holes	1
74/76	F	(RH) D4WY 16018-A	(LH) D4WY 16019-A		1
75/78	L	(RH) D5YY 16018-A	(LH) D5YY 16019-A		1
16A023-4	BRACE (FRONT FENDER TO APRON and RADIATOR SUPPORT)				
73/78	A	(RH) ★ D7AZ 16A023-A	(LH) ★ D7AZ 16A024-A	Not replaced	1
79	A	D9AZ 16A023-A	L.H. side only		1
73/76	C	★ D3GY 16A023-A	R.H. and L.H. - - front fender to rad. suppt. lower		1
74/76	F	Not replaced			1

COPYRIGHT © 1986— FORD MOTOR COMPANY —DEARBORN, MICHIGAN

1973/79 LINCOLN-MERCURY CARS

YEAR	MODEL/RESTRICTIONS	PART NUMBER	DESCRIPTION		QTY.
16A023-4	BRACE (FRONT FENDER TO APRON and RADIATOR SUPPORT) — Cont'd				
77/	F	D70Z 16A023-A	R.H. and L.H.		2
74/	D	D4VY 16A023-A	R.H. and L.H.-front fender to radiator support		2
73	F	★ D3WY 16A023-A	R.H. and L.H.-not replaced		2
75/	G	D7DZ 16A023-A	R.H. and L.H.		2
79	J	D9ZZ 16A023-A	R.H. & L.H. side		2
73/76	K	(RH) ★ D3LY 16A023-A Not replaced	(LH) ★ D3LY 16A024-A Not replaced	Fender to rad. suppt.	1
77	K	★ D7LY 16A023-A	R.H. and L.H. Fender to rad. suppt.-not repl.		2
78/	K	★ D8LY 16A023-A	R.H. and L.H.-r/b 383615-S		2
73/76	K	(RH) ★ D3LY 16A023-B Not replaced	(LH) ★ D3LY 16A024-B Not replaced	Brace to fender wheel opening	1
77 75/78	L,P L	D7FZ 16A023-A	R.H. and L.H.		2 2
79	L	(RH) D9FZ 16A023-A	(LH) D9FZ 16A024-A		1
74/76 77/	P V	D7DZ 16A023-A	R.H. and L.H.		2 2
78/	P	(RH) D8BZ 16A023-A	(LH) D8BZ 16A024-A		1
16A027-9	Refer to Exterior Moulding Section at the end of this catalog				
16036-7	Refer to Exterior Moulding Section at the end of this catalog				
16038-9	Refer to Exterior Moulding Section at the end of this catalog				
16A038-9	Refer to Exterior Moulding Section at the end of this catalog				
16B048	REINFORCEMENT (FRONT FENDER APRON and RADIATOR SUPPORT UPPER)				
73/74	J	★ D3RY 16B048-A	Not replaced		1
76/78	J	D5RY 16B048-A			1
16C048-9	BRACKET (FRONT FENDER EXTENSION TO RADIATOR SUPPORT)				
73/77 74	P L	★ D0DZ 16C048-A Not replaced	R.H. and L.H. R.H. and L.H.		2 2
75/	L	(RH) D5YY 16C048-A	(LH) ★ D5YY 16C049-A	Not replaced	1
16A052-3	BRACE (FRONT FENDER APRON TO DASH)				
75	G	(RH) D5DZ 16A052-A	(LH) ★ D5DZ 16A053-A		1
76/	G	(RH) D5DZ 16A052-A	(LH) D6DZ 16A053-A		1
73/75 76	K K	D2SZ 16A052-A	R.H. and L.H. L.H.		2 1
73/74	P	(RH) ★ D0DZ 16A052-A	(LH) ★ D0DZ 16A053-A	Not replaced	1
75/77	P - - w/power disc brakes	(RH) D0DZ 16A052-A	(LH) ★ D5DZ 16A053-B		1
75/77	P - - w/o power disc brakes	(RH) D0DZ 16A052-A	(LH) D0DZ 16A053-A		1
77/	V	(RH) D5DZ 16A052-A	(LH) D6DZ 16A053-A		1
73/77	P	382802-S2	(MM-173-JB)-nut-hex. washer head-3/8"-16		AR
16054-5	APRON (FRONT FENDER) NOTE 1-And E1SZ 5486-A and E1SZ 5B482-A				
73/76 77/78	A,Y A	(RH) D3AZ 16054-A	(LH) D4AZ 16055-A		1 1
79	A	(RH) ★ D9AZ 16054-A r/bE0VY 16054-A(3/80)	(LH) ★ D9AZ 16055-A r/bE0VY 16054-A(3/80)		1
73/76	C	(RH) D70Z 16054-A	(LH) D70Z 16055-A		1
73/	D	(RH) D4VY 16054-A	(LH) D4VY 16055-A		1
73	F	(RH) ★ D1ZZ 16054-A	(LH) ★ D1ZZ 16055-A	Incl. front side member Not replaced	1
73	F	(RH) D1ZZ 16054-B	(LH) D1ZZ 16055-B	Less side member	1

YEAR	MODEL/RESTRICTIONS	PART NUMBER	DESCRIPTION		QTY.
16054-5	APRON (FRONT FENDER) — Cont'd NOTE 1-And E1SZ 5486-A and E1SZ 5B482-A				
74/	F	(RH) D70Z 16054-A	(LH) D70Z 16055-A		1
75/	G	(RH) D5DZ 16054-A	(LH) D5DZ 16055-A	Front section	1
75/	G	(RH) D6DZ 16054-A	(LH) D6DZ 16055-A	Incl. front side member	1
73	J	(RH) ★ D3RY 16054-A	(LH) ★ D3RY 16055-A	Not replaced	1
74	J	(RH) ★ D4RY 16054-A	(LH) ★ D4RY 16055-A	Not replaced	1
76/78	J	(RH) ★ D5RY 16054-A	(LH) ★ D5RY 16055-A	Not replaced	1
79	J	(RH) ★ D9ZZ 16054-A r/bE3ZZ 16054-A(3/83) and NOTE 1	(LH) ★ D9ZZ 16055-A r/bE3ZZ 16055-A(3/83) and NOTE 1	Incl. front side member	1
79	J	(RH) E3DZ 16054-B	(LH) E3DZ 16055-B	Front section	1
73/76	K	(RH) D4SZ 16054-A	(LH) D4SZ 16055-A		1
77/	K	(RH) D7LY 16054-A	(LH) D7LY 16055-A		1
75/	L	(RH) D9FZ 16054-A	(LH) D9FZ 16055-A		1
73/75	P	(RH) ★ D3DZ 16054-C	(LH) ★ D3DZ 16055-B	Incl. front side member	1
73/77	P	(RH) D3DZ 16054-B	(LH) D0DZ 16055-A	Front section	1
76/77	P	(RH) ★ D6DZ 16054-B	(LH) ★ D6DZ 16055-B	Incl. front side member	1
78/	P	(RH) D9BZ 16054-A	(LH) D9BZ 16055-A	Incl. front side member	1
78/	P	(RH) E0SZ 16054-B	(LH) E0SZ 16055-B	Front section	1
77/	V	(RH) D5DZ 16054-A	(LH) D5DZ 16055-A	Front section	1
77/	V	(RH) D6DZ 16054-A	(LH) D6DZ 16055-A	Incl. front side member	1
16A056-7	STABILIZER (FRONT END)				
73/76	K	(RH) ★ D3LY 16A056-A Not replaced	(LH) ★ D3LY 16A057-A Not replaced		1
77	K	(RH) D7LY 16A056-A	(LH) D7LY 16A057-A		1
78/	K	(RH) D8LY 16A056-A	(LH) D8LY 16A057-A		1
16060	REINFORCEMENT (FRONT FENDER APRON LOWER)				
73/76	A,Y	★ D0AZ 16060-A			8
77	A	Not replaced			8
73/76	C				6
74/	F				6
79	J	(RH) D9ZZ 16060-A	(LH) D9ZZ 16060-B		1
73/76	K	★ D2SZ 16060-A	Round-not replaced		6
73/76	K	★ D2SZ 16060-B	Oblong-not replaced		6
78/	P	(RH) D8BZ 16060-A	(LH) D8BZ 16060-B		1
16071-2	ABSORBER (FRONT FENDER TO COWL SIDE SOUND)				
79	A	D9AZ 16071-A	Seal-hood to fender-R.H. side only		1
		(RH) D9AZ 16071-B	(LH) D9AZ 16072-B	Insulator-fender to cowl	1
73/76	C(53D,K,65D,K,71D,K),F	(RH) D6GY 16071-A	(LH) D6GY 16072-A		1
77/	F				1
78	G "Before 7/78"	(RH)	(LH)	Refer to group 16102 rear	
78/	G "From 7/78"	(RH) D8DZ 16071-A	(LH) D8DZ 16072-A		1
79	J	(RH) D9ZZ 16071-A	(LH) D9ZZ 16072-A		1
78/	P	(RH) D8BZ 16071-A	(LH) D8BZ 16072-A		1
79	V	(RH) D8DZ 16071-A	(LH) D8DZ 16072-A		1

COPYRIGHT © 1986 — FORD MOTOR COMPANY — DEARBORN, MICHIGAN

1973/79 LINCOLN-MERCURY CARS

YEAR	MODEL/RESTRICTIONS	PART NUMBER	DESCRIPTION		QTY.
16074	MOULDING (HEADLAMP UPPER) – Also Refer to Exterior Moulding Section at the end of this catalog				
73/74	A	(RH) ★ D3MY 16074-B	(LH) ★ D3MY 16075-B	Not replaced	1
16A076	Refer to Exterior Moulding Section at the end of this catalog				
16C078	BRACKET (FRONT FENDER MOUNTING REAR)				
73/	D	★ D0VY 16C078-A	Lower-not replaced		2
75/	G	D5DZ 16C078-A	R.H. and L.H.		2
77/	V				2
78/	J,P	D8BZ 16C078-A	R.H. and L.H.		2
16094-5	BRACKET (FRONT FENDER TO COWL TOP)				
79	A	(RH) D9AZ 16094-A	(LH) D9AZ 16095-A		1
73/76	C	(RH) D30Z 16094-A	(LH) D30Z 16095-A		1
74/	F				1
73/76	D	★ D0VY 16094-A	Not replaced		1
73/76	D	23378-S8	(B-3)-bolt-5/16"-18 x 3/4"		1
73/76	D	378838-S2	(MM-296-AF)-nut & washer assy.-5/16"-18		1
16098	Refer to Exterior Moulding Section at the end of this catalog				
16102-3	SHIELD (FRONT FENDER SPLASH)				
73/74	A(53H,K,X,57H,K,X,65H,K,X, 71H,K) – – w/cornering lights	(RH) ★ D3MY 16102-A	(LH) ★ D3MY 16103-A		1
75/77	A – – w/cornering lights "Before 3/77"	Not replaced	Not replaced		1
73	D	★ D0VY 16102-A	R.H. and L.H.-not replaced		2
74/	D	(RH) D4VY 16102-B	(LH) D4VY 16103-B		1
73	F	(RH) ★ D1WY 16102-A	(LH) ★ D1WY 16103-A	Front-not replaced	1
73	F	(RH) ★ D1WY 16102-B	(LH) ★ D1WY 16103-B	Rear-not replaced	1
75/77	G	(RH) D5DZ 16102-A	(LH) D5DZ 16103-A	Front	1
75/77	G	(RH) D5DZ 16102-B	(LH) D5DZ 16103-B	Rear	1
78/	G	(RH) ★ D7DZ 16102-A r/b E0DZ 16102-A&B	(LH) D7DZ 16103-A r/b E0DZ 16103-A&B	Splash shield-(1) piece design	1
78	G "Before 7/78"	(RH) D5DZ 16102-B	(LH) D5DZ 16103-B	Used as a sound insulator, located between fender and cowl panel behind, (1) piece splash shield	1
78	G "From 7/78"	★	Sound insulator shield-refer to group 16071		
79	J	(RH) D9ZZ 16102-A	(LH) D9ZZ 16103-A		1
74/77	L "Before 7/77"	(RH) D5FZ 16102-B	(LH) D5FZ 16103-B	Front	1
74	L	(RH) ★ D4FZ 16102-A	(LH) ★ D4FZ 16103-A	Rear-not replaced	1
75/77	L "Before 7/77"	(RH) D5FZ 16102-A	(LH) D5FZ 16103-C	Rear	1
77/	L "From 7/77"	(RH) D7FZ 16102-A	(LH) D7FZ 16103-A	Full-front and rear	1
73/77	P	(RH) D0DZ 16102-A	(LH) D0DZ 16103-A	Front	1
73/77	P	(RH) D0DZ 16102-B	(LH) D0DZ 16103-B	Rear	1
78/	P	(RH) D8BZ 16102-A	(LH) D8BZ 16103-A	Full-front and rear	1
78/	V	(RH) ★ D7DZ 16102-A r/b E0DZ 16102-A&B	(LH) ★ D7DZ 16103-A r/b E0DZ 16103-A&B	Splash shield-(1) piece design	1
77/78"	V "Before 7/78"	(RH) D5DZ 16102-B	(LH) D5DZ 16103-B	Used as a sound insulator, located between fender and cowl panel behind (1) piece splash shield	1
79	V "From 7/78"	★	Sound insulator shield-refer to group 16071		
16D116-7	TRANSFER (FRONT FENDER STRIPE)				
74	A,Y		Refer to Group 13C019		
75 73/75	D,G K		Refer to Exterior Moulding Section at the end of this catalog		

YEAR	MODEL/RESTRICTIONS	PART NUMBER	DESCRIPTION		QTY.
16B124-5	MOULDING ASSY. (FRONT FENDER FRONT EXTENSION)-Also refer to Exterior Moulding Section at the end of this catalog				
75/	L	(RH) D5YY 16B124-A	(LH) D5YY 16B125-A		1
16K127	BRACKET (COWL SIDE TO FRONT FENDER BRACE)				
74	J	★ D4RY 16K127-A	R.H. and L.H.-not replaced		2
16D128-9	Refer to Exterior Moulding Section at the end of this catalog				
16D130	SEAL (FRONT FENDER EXTENSION)				
73/76	C	D0MZ 16D130-A	R.H. and L.H.		2
74/76	A,Y		R.H. and L.H.-front fender		2
77/78	A		R.H. and L.H.-quarter panel		2
73	K		R.H. and L.H.-radiator grille		2
16B132-3	BRACE (FRONT FENDER TO RADIATOR SUPPORT)				
79	A(74)	(RH) D9AZ 16B132-A	(LH) D9AZ 16B133-A		1
77/	K	(RH) ★ D7LY 16B132-A Not replaced	(LH) D7LY 16B133-A		2
77/	V	(RH) D74Y 16B132-A	(LH) D74Y 16B133-A		1
16C132-3	MOULDING (FRONT FENDER UPPER REAR)-Incl. attaching parts				
79	A	(RH) D9AZ 16C132-A	(LH) D9AZ 16C133-A		1
73/74	D	(RH) ★ D0VY 16C132-A	(LH) ★ D0VY 16C133-A	Not replaced	1
75/	D	(RH) D5VY 16C132-A	(LH) D5VY 16C133-A		1
77/	F	(RH) D7SZ 16C132-A	(LH) D7SZ 16C133-A		1
73/76	K - - w/full vinyl roof	(RH) D2SZ 16C132-A	(LH) D2SZ 16C133-A		1
75/76	K - - w/half vinyl roof		Refer to Exterior Moulding Section at the end of this catalog		
77/	K	(RH) D7LY 16C132-A	(LH) D7LY 16C133-A		1
73/	D	381969-S2	(UU-89-A)-screw-round washer hd.-No. 8-18 x 1/2"		AR
16B134-5	BRACE (FRONT FENDER TO FRAME)				
73/74	D	(RH) ★ D0VY 16B134-A	(LH) ★ D0VY 16B135-A	Not replaced	1
78/	P	D8BZ 16B134-A	R.H. and L.H.		2
16138	SUPPORT (RADIATOR)				
73/76	A(53B,F,65B,F,71B),Y	D3MY 16138-A			1
73/74	A(53H,K,X,57H,K,X,65H,K, X,71H,K)	D3MY 16138-B			1
75/76	A(53H,K,L,65H,K,L,71H,K)				1
77/78	A				1
79	A	E2AZ 16138-A			1
73/76	C	D70Z 16138-A			1
73	D	★ D3VY 16138-A	Not replaced		1
74/77	D	D4VY 16138-A			1
78/	D	D8LY 16138-A			1
73	F(65)	D3ZZ 16138-A			1
74/	F	D70Z 16138-A			1
75/76	G	★ D5DZ 16138-A	Repl. by D7DZ 16138-A, (1) D8DZ 8B455-C and (1) D8DZ 8B455-D		1
77/	G	D7DZ 16138-A			1
79	J,P	E2ZZ 16138-A			1
74/77	K	D6SZ 16138-A			1
78/	K	D8LY 16138-A			1
74	L	★ D4FZ 16138-A	Not replaced (4/84)		1
75/79	L	D9FZ 16138-A			1
73/77	P	D5DZ 16138-B			1
78/	P	E2BZ 16138-A			1
77/	V	D74Y 16138-A			1

COPYRIGHT © 1986 — FORD MOTOR COMPANY — DEARBORN, MICHIGAN

1973/79 LINCOLN-MERCURY CARS

YEAR	MODEL/RESTRICTIONS	PART NUMBER	DESCRIPTION		QTY.
16142	REINFORCEMENT (FRONT FENDER APRON TO RADIATOR SUPPORT)				
73	J	★ D3RY 16142-A	N.R. (5/82)		1
74/78	J	D4RY 16142-A			1
16154-5	REINFORCEMENT (FRONT FENDER APRON UPPER)				
78/	P	(RH) D8BZ 16154-A	(LH) D8BZ 16155-A		1
79	J				1
16160-1	Refer to Exterior Moulding Section at the end of this catalog				
16A162-3	EXTENSION (FRONT FENDER FRONT LOWER)				
74/77	P	(RH) D4DZ 16A162-A	(LH) D4DZ 16A163-A		1
16164-5	MOULDING (FRONT FENDER FRONT)				
73	D		Refer to Exterior Moulding at the end of this catalog		
74	D	(RH) ★ D4VY 16164-A	(LH) ★ D4VY 16165-A	N.R. (5/82)	1
75/	D	(RH) D5VY 16164-A	(LH) D5VY 16165-A		1
16B168	REINFORCEMENT (FRONT FENDER BATTERY MOUNTING)				
79	A	D9AZ 16B168-A			2
16A174-5	SUPPORT (FRONT FENDER APRON and RADIATOR SIDE)				
74/	D	(RH) D4VY 16A174-A	(LH) D4VY 16A175-A		1
73	J	(RH) ★ D3RY 16A174-A	(LH) ★ D3RY 16A175-A	Lower-not replaced	1
74	J	(RH) ★ D4RY 16A174-A	(LH) ★ D4RY 16A175-A	Not replaced	1
76/78	J	(RH) ★ D5RY 16A174-A	(LH) ★ D5RY 16A175-A	Not replaced	1
16B174	RETAINER (FRONT FENDER APRON TO BUMPER SHIELD)				
73	D	★ D0VY 16B174-A	Not replaced		2
16A178-9	MEMBER (FRONT FENDER APRON TO COWL SIDE UPPER)				
75/	G	(RH) D5DZ 16A178-A	(LH) D5DZ 16A179-A		1
77/	V				1
16D186-7	REINFORCEMENT (FRONT FENDER TOP FRONT)				
73/78	A,Y	(RH) D7AZ 16D186-A	(LH) D7AZ 16D187-A		1
73/76	C	(RH) D30Z 16D186-A	(LH) D30Z 16D187-A		1
74/76	F				1
77/	F	(RH) D70Z 16D186-A	(LH) D70Z 16D187-A		1
73/	D	(RH) D7VY 16D186-A	(LH) D0VY 16D187-A		1
73/	K	(RH) D7LY 16D186-A	(LH) D7LY 16D187-A		1
16B198-9	GUSSET ASSY. (FRONT FENDER APRON TO RADIATOR SUPPORT)				
75/	L	(RH) D5FZ 16B198-A	(LH) D5FZ 16B199-A		1
16A200-1	BRACKET (FRONT FENDER APRON TO FRAME)				
79	A	D9AZ 16A200-A			1
73	D	★ D0VY 16A200-A	R.H. and L.H.-not replaced		2
74/	D	(RH) ★ D4VY 16A200-A	(LH) ★ D4VY 16A201-A	Not replaced	1
73/76	K	(RH) ★ D2SZ 16A200-A	(LH) ★ D2SZ 16A201-A	Not replaced	1
16D200	PLATE (FRONT FENDER APRON ACCESS HOLE COVER)				
79	A	D9AZ 16D200-A	R.H. and L.H.		2
		387843-S	(SS-43-D) rivet (cover to apron) 1/4" x 5/8" blind head		AR
74	L	★ D4FZ 16D200-A	Not replaced		1
75/	L	D5FZ 16D200-A			1
16A214-5	SUPPORT ASSY. (FRONT FENDER)				
73/76	K	(RH) D3LY 16A214-A	(LH) D3LY 16A215-A		1
16C220	SPACER (FRONT FENDER MOUNTING)				
73/76	K	★ D3SZ 16C220-A	Not replaced		2
16228	ORNAMENT (FRONT FENDER)-Incl. attaching parts- Also refer to Exterior Moulding Section at the end of this catalog				
73/78	J	D2RY 16228-B	L.H.-Ford		1
79	J	D9ZZ 16228-B	"FORD" logo-at floor side member		2
78/	P	D8BZ 16228-A	"FORD" logo-at floor side member		2

YEAR	MODEL/RESTRICTIONS	PART NUMBER	DESCRIPTION		QTY.
16232	Refer to Exterior Moulding Section at the end of this catalog				
16234	Refer to Exterior Moulding Section at the end of this catalog				
16A238	SEAL (RADIATOR SUPPORT TO HOOD) ▲ 2000 cc ♦ 2600 cc ⊕ 2800 cc				
73	J - - 6 cyl. ♦159	D5RY 6443720-A			1
74	J - - 6 cyl. ⊕171				1
		E647521-S	Rivet .4 mm long		1
73/	L - - 4 cyl. ▲122 with A/C	C4DZ 16A238-A	Cut to fit		1
75/	L - - 6 cyl. ⊕171 with A/C	★ D5FZ 16A238-A	Not replaced		1
16240	SEAL (FRONT FENDER APRON TO FRAME)				
73/76	A,Y	D4AZ 16240-A	R.H. and L.H.-front		2
77/78	A				2
73/76	A,Y	(RH) D3AZ 16240-D	(LH) D3AZ 16240-E	Apron to frame	1
77/78	A				1
79	A	(RH) E0AZ 16240-A	(LH) E0AZ 16240-B		1
73/76	C	D30Z 16240-A	R.H. and L.H. rubber		2
74/	F				2
73/76	C	(RH) D20Z 16240-B	(LH) D20Z 16240-C	Plastic	1
74/	F				1
73/	D	D0VY 16240-A	R.H. and L.H.		2
73/76	K	D3SZ 16240-A	R.H. and L.H.		2
16A246-7	REINFORCEMENT (FRONT FENDER APRON UPPER OUTER)				
75/	G	(RH) ★ D5DZ 16A246-A	(LH) ★ D5DZ 16A247-A		1
77/	V	Not replaced	Not replaced		1
16A248-9	EXTENSION (FRONT FENDER APRON TO DASH)				
73/76	K	(RH) ★ D2SZ 16A248-A	(LH) ★ D2SZ 16A249-A	Not replaced	1
16249	Refer to Exterior Moulding Section at the end of this catalog				
16250-1	Refer to Exterior Moulding Section at the end of this catalog				
16C252	LOUVER (FRONT FENDER SIDE)				
79	A	D9MY 16C252-A			4
77/	K	D7LY 16C252-A	R.H. and L.H.		6
78/	K - - (Diamond Jubilee)	D8LY 16C252-A	R.H. and L.H.		6
78/	P - - w/o wood grain	D84Y 16C252-A	R.H. and L.H.		4
78/	P(74) - - w/wood grain	D84Y 16C252-B	R.H. and L.H.		4
16A268-9	PAD (FRONT FENDER REAR MOULDING)				
73/76	D	(RH) ★ D0VY 16A268-A	(LH) ★ D0VY 16A269-A	Not replaced	1
16A272	PAD (FRONT FENDER UPPER REAR MOULDING)				
73/	D	★ D0VY 16A272-A	R.H. and L.H.-not replaced		2
16A276	SPACER (FRONT FENDER UPPER REAR MOULDING)				
73/	D	★ D0VY 16A276-A	R.H. and L.H.-not replaced		AR
16286-7	BRACKET (FRONT FENDER TO COWL SIDE)				
73/76	C	(RH) ★ D30Z 16286-A	(LH) ★ D30Z 16287-A		1
74/	F	Not replaced	Not replaced		1
16296-7	BRACKET (FRONT FENDER APRON TO DASH)				
73/76	A,Y	(RH) ★ D3AZ 16296-A	(LH) ★ D3AZ 16297-A		1
77/	A	Not replaced	Not replaced		1

COPYRIGHT © 1986 — FORD MOTOR COMPANY — DEARBORN, MICHIGAN

1973/79
LINCOLN-MERCURY CARS

YEAR	MODEL/RESTRICTIONS	PART NUMBER	DESCRIPTION	QTY.
16A324-5	SHIELD ASSY. (FRONT WHEEL SPLASH INNER)			
73/74	A(53B,F,65B,F,71B),Y	(RH) ★ D3AZ 16A324-A	(LH) ★ D3AZ 16A325-A Not replaced	1
16466	STIFFENER (FRONT FENDER REINFORCEMENT REAR)			
73/	D	★ D0VY 16466-A	Not replaced	2
16550-1	Refer to Exterior Moulding Section at the end of this catalog			
16A550	SHIELD (SPLASH GUARD) ¿ CANADA ONLY			
73/	All	★ D5AZ 16A550-A	Front or rear-stainless steel and rubber-kit (N.R.)	AR
74/	All	D5AZ 16A550-B	Front or rear-plastic-kit	AR
79	A	¿ D9AZ 16A550-A	Front or rear-stainless steel & rubber-kit	AR
79	F	D9ZZ 16A550-A	Front R.H. and L.H.-plastic	2
		D9ZZ 16A550-B	Rear	2
79	G	D9DZ 16A550-A	Front R.H. and L.H.-plastic	2
		D9DZ 16A550-B	Rear	2
79	J	D9ZZ 16A550-A	Front R.H. and L.H.-plastic	2
		D9ZZ 16A550-B	Rear	2
79	L	D9FZ 16A550-A	Front R.H. and L.H.-plastic	2
		D9FZ 16A550-B	Rear	2
16570-1	FILLER (FRONT FENDER)			
73/	K	(RH) D2SZ 16570-A	(LH) D2SZ 16571-A	1
16A603	REINFORCEMENT (HOOD LATCH ON HOOD)			
73	P	★ D0DZ 16A603-A	Not replaced	1
74/77	P	★ D4DZ 16A603-A	Not replaced	1
16604	PLATE (FRONT NAME)-Incl. attaching parts			
73/78	A	D3MY 16604-A	"MERCURY"	1
74/76	C	★ D4GY 16604-A	"MERCURY"-not replaced	1
73	D	★ D2VY 16604-A	"LINCOLN CONTINENTAL"-N.R. (9/81)	1
73	D	★ D3VY 16604-A	"LINCOLN"-N.R. (9/81)	1
73	F	★ D1WY 16604-A	"MERCURY"-N.R. (5/82)	1
74/76	F	D4WY 16604-A	"MERCURY"	1
77/	F	D7WY 16604-A	"MERCURY"	1
74/76	L	D3MY 16604-A	"MERCURY"	1
77/	V	D74Y 16604-A	"LINCOLN"	1
73/76	Y	D3MY 16604-A	"MERCURY"	1
16606	LETTER (HOOD FRONT)-Incl. attaching parts			
73	D	★ D3VY 16606-K	"C"-repl. by D7LY 6540282-A	1
		★ D3VY 16606-B	"O"-repl. by D7LY 6540282-B(3/79)	1
		★ D3VY 16606-C	"N"-repl. by D7LY 6540282-C (6/77)	1
		★ D3VY 16606-D	"T"-repl. by D7LY 56540282-D	1
		★ D3VY 16606-E	"I"-repl. by D7LY 6540282-E(3/79)	1
		★ D3VY 16606-A	"N"-not replaced	1
		★ D3VY 16606-G	"E"-repl. by D7LY 6540282-G (6/77)	1
		★ D3VY 16606-C	"N"-repl. by D7LY 6540282-C (6/77)	1
		★ D3VY 16606-D	"T"-repl. by D7LY 6540282-D	1
		★ D3VY 16606-H	"A"-repl. by D7LY 6540282-H(3/79)	1
		★ D3VY 16606-J	"L"-repl. by D7LY 6540282-J (6/77)	1
74	D	★ D3VY 16606-J	"L"-repl. by D7LY 6540282-J (6/77)	1
		★ D3VY 16606-E	"I"-repl. by D7LY 6540282-E	1
		★ D3VY 16606-C	"N"-repl. by D7LY 6540282-C (6/77)	1
		★ D4VY 16606-A	"C"-N.R.(9/81)	1
		★ D3VY 16606-B	"O"-repl. by D7LY 6540282-B	1
		★ D3VY 16606-J	"L"-repl. by D7LY 6540282-J (6/77)	1
		★ D3VY 16606-C	"N"-repl. by D7LY 6540282-C (6/77)	1

YEAR	MODEL/RESTRICTIONS	PART NUMBER	DESCRIPTION	QTY.
16606	LETTER (HOOD FRONT)-Incl. attaching parts — Cont'd			
74	A(53H,K,57H,K,65H,K,71H,K)	D54Y 16606-A	"M"	1
75/	G,L	D54Y 16606-B	"E"	1
		D54Y 16606-C	"R"	1
		D54Y 16606-D	"C"	1
		D54Y 16606-E	"U"	1
		D54Y 16606-C	"R"	1
		D54Y 16606-F	"Y"	1
73/74	J	D0RY 16606-E	"C"	1
		D0RY 16606-F	"A"	1
		D0RY 16606-G	"P"	1
		★ D0RY 16606-H	"R"-not replaced	1
		D0RY 16606-J	"I"	1
79	J	D9CZ 16606-A	"C"	1
		D9CZ 16606-B	"A"	1
		D9CZ 16606-C	"P"	1
		D9CZ 16606-D	"R"	1
		D9CZ 16606-E	"I"	1
16612	HOOD (LESS HINGES)-Incl. attaching parts			
73/78	A,Y	D3MY 16612-A		1
79	A	E2MY 16612-A		1
73/76	C - - w/o hood scoops	★ D6GY 16612-A		1
74/76	F	Not replaced		1
73/76	C - - w/hood scoops	★ D3GY 16612-B	Not replaced	1
74/76	D	★ D4VY 16612-A	Not replaced	1
77/	D	D7VY 16612-A		1
75/76	G	D6DZ 16612-A	For modification refer to T.S.B. No. 112, dated May 21, 1976, article No. 1486	1
77/	G			1
73	F	★ D3WY 16612-A	Not replaced	1
77/	F	D7SZ 16612-A		1
73/74	J	★ D3RY 16612-B	Not replaced	1
76/78	J	D5RY 16612-A		1
79	J - - exc. TC	★ D9CY 16612-A	Repl. by E3CY 16612-A (4/83)	1
79	J - - with TC	★ D9CY 16612-B	Repl. by E3CY 16612-B (4/83)	1
73/76	K	D5LY 16612-A		1
77/	K	D7LY 16612-A		1
74	L	D6FZ 16612-A		1
75/78	L	D5YY 16612-A		1
79	L	D9FZ 16612-B		1
73/77	P	D14Y 16612-A	Incl. instructions for hood scoop installation	1
78/	P	D8BZ 16612-A		1
77/	V	D74Y 16612-A		1
16B621	EMBLEM (HOOD TRANSFER ON HOOD)			
79	J	D9ZZ 16B621-A	"TURBO"	2
16N622	REINFORCEMENT (HOOD ROD)			
78	P "From 4/78"	D8BZ 16N622-A	W/front mounted prop rod	1
16A624-5	GRILLE (HOOD AIR SCOOP)-Incl. attaching parts			
73/76	C	(RH) ★ D2GY 16A624-A	(LH) ★ D2GY 16A625-A — Not replaced	1
79	J	(RH) D9CY 16A624-A	(LH) D9CY 16A625-A — On hood	1
		D9ZZ 16A624-A	On hood air scoop	1
16C630	SCOOP (HOOD AIR)-Incl. attaching parts			
73/76	C	(RH) ★ D2GY 16C630-A	(LH) ★ D2GY 16C630-B — Not replaced	1
73/75	P(62B-G.T.)	★ D14Y 16C630-A	Fiberglas-N.R. (5/82)	1
79	J	D9ZZ 16C630-A	Non-functional	1
16637	ORNAMENT (HOOD FRONT)			
73	F(65F,76F)	D3WY 16637-B	"XR7"	1

COPYRIGHT © 1986 — FORD MOTOR COMPANY — DEARBORN, MICHIGAN

1973/79 LINCOLN-MERCURY CARS

YEAR	MODEL/RESTRICTIONS	PART NUMBER	DESCRIPTION	QTY.
16K637	SPRING (HOOD DOWEL RETAINING)			
73/78	J	D1RY 16K637-A		1
16C644	SPRING (HOOD ASSIST)			
73/78	A,Y	D3AZ 16C644-A		1
73/	G			1
73/76	K			1
74	L			1
73/77	P			1
79	A	E0TZ 16C644-A		1
73/76	C			1
74/	F			1
77/	K			1
75/78	L			1
78/	P			1
73/	D	D3VY 16C644-A		1
79	L	D9FZ 16C644-A		1
79	J	D9ZZ 16C644-A		1
16B656	SHIELD (HOOD FRONT OPENING)			
75/76	A	★ D5MY 16B656-A	Not replaced	1
75/76	G	D5DZ 16B656-A	Not required from 10/9/75	1
77/	V	D74Y 16B656-A		1
16700	LATCH (HOOD)			
73/	A,D,K	E1TZ 16700-A		1
73/76	C			1
74/	F,L			1
75/	G			1
79	J			1
78/	P			1
77/	V			1
73/76	Y			1
73	F	★ D1WY 16700-A	Not replaced	1
73/77	P	D14Y 16700-A		1
16707	SUPPORT (HOOD LATCH)			
75/78	A	D5MY 16707-A		1
79	A	D9AZ 16707-A		1
73/76	C	★ D40Z 16707-A	Not replaced	1
74	D	★ D4VY 16707-A	Not replaced	1
75/76	D	D5VY 16707-A		1
77/	D	D7VY 16707-A		1
73	F	★ D1WY 16707-A	Not replaced	1
74/76	F	D40Z 16707-A		1
77/	F	D7SZ 16707-A		1
75/77	G	D5DZ 16707-A		1
78/	G	D74Y 16707-A		1
79	J	D9ZZ 16707-A		1
75/76	K	D5LY 16707-A		1
77	K	D7LY 16707-A		1
78/	K	D8LY 16707-A		1
74	L	★ D4FZ 16707-A	Not replaced	1
75/78	L	D5YY 16707-A		1
79	L	D9FZ 16707-A		1
73/77	P	D0DZ 16707-A		1
78/	P	D8BZ 16707-A		1
77/	V	D74Y 16707-A		1
16B708	LEVER ASSY. (HOOD LATCH RELEASE)			
73	F	★ D1WY 16B708-A	Not replaced	1
16B708	LINK (HOOD LATCH RELEASE)			
73/74	J	★ D0RY 16B708-A	Not replaced	1
		45625-GS40	Clip	1
		73924-GS40	Pin	1

YEAR	MODEL/RESTRICTIONS	PART NUMBER	DESCRIPTION	QTY.
16738	INSULATOR (HOOD)			
73/78	A,Y	D3MY 16738-A		1
79	A	D9MY 16738-A		1
73/76	C	D70Z 16738-A		1
73/76	D	D3VY 16738-A		1
77/	D	D7VY 16738-A		1
73	F	D1WY 16738-A		1
74/	F	D70Z 16738-A		1
75/	G	D5DZ 16738-A		1
76/78	J	★ D5RY 16738-C	Not replaced	1
79	J - - exc. TC	D9ZZ 16738-A	Hood insulator	1
79	J - - w/TC	D9ZZ 16738-B	Hood air scoop insulator	1
		D9ZZ 16738-C	Hood insulator	1
73/76	K	D2LY 16738-A		1
77/	K	D7LY 16738-A		1
75/78	L	D5YY 16738-A		1
79	L	D9FZ 16738-A		1
74/77	P	D4DZ 16738-A		1
78/	P	D8BZ 16738-A		1
77/	V	D74Y 16738-A		1
73/	A,C,D,F,G,K,L,V	385330-S	(GG-387)-Clip-rectangular head-push in claw type-11/16" deep	AR
		385595-S	(GG-391)-Clip-round head-1 1/4" dia.-push in claw type-1" long	AR
		386553-S	(NN-180)-Pin-1 1/8" round head push in claw type-3/4" deep	AR
		N803387-S	(AN-3-U)-Clip-1 3/4" dia. round head	AR
16740	PAD (HOOD)			
73/78	A,Y	D1AZ 16740-B		1
79	A	★	Cut from D8BZ 5443720-A bulk stock	AR
73/76	C	D40Z 16740-A		1
75/	D	D1AZ 16740-B		1
74/	F	D40Z 16740-A		1
75/	G	D5DZ 16740-A		1
79	J	D9ZZ 16740-A		1
73/75	K - - w/o heated windshield	★ D4SZ 16740-B	Not replaced	1
75	K - - w/heated windshield	★ D4SZ 16740-A		1
76/	K	Not replaced		1
74/75	L	★ D2FZ 16740-A	Not replaced	1
76/	L	D4ZZ 16740-A		1
73/77	P	D3DZ 16740-A		1
78/	P	E1DZ 16740-A		1
77/	V	D5DZ 16740-A		1
16747	BRACE (HOOD LATCH SUPPORT)			
75/78	A	D5MY 16747-A		1
79	A	D9AZ 16747-A		1
73/76	C	D40Z 16747-A		1
74/76	F	D40Z 16747-A		1
77/	F	D70Z 16747-A		1
75/77	G	D5DZ 16747-A		1
78/	G	D74Y 16747-A		1
73/74	J	★ D3RY 16747-A	Not replaced	1
76/78	J	D5RY 16747-A		1
79	L	D9FZ 16747-A		1

COPYRIGHT © 1986— FORD MOTOR COMPANY —DEARBORN, MICHIGAN

1973/79 LINCOLN-MERCURY CARS

YEAR	MODEL/RESTRICTIONS	PART NUMBER	DESCRIPTION	QTY.
16747	BRACE (HOOD LATCH SUPPORT) — Cont'd			
74	L	★ D4FZ 16747-B	Not replaced	1
75/	L	D5YY 16747-A		1
74/77	P	D4DZ 16747-A		1
77/	V	D74Y 16747-A		1
75/76	Y	★ D5MY 16747-B	Not replaced	1
16C748	RETAINER (HOOD ASSIST)			
73/	D	D3VY 16C748-A		1
16758	BUMPER (HOOD)			
73/78	A,Y	D20Z 16758-B	Hood to fender	2
73/76	C			2
74/	F,K			2
73/	A,Y	D3AZ 16758-A	Hood to fender	4
79	A	D9AZ 16758-A	Kit-consists of (1) bumper & (1) nut & retainer assy.	2
73/	C,K	D20Z 16758-A	On fender-wedge shape	4
74/	F			4
73/	D	D0VY 16758-A	On fender	4
73/	D	D1AZ 16758-A	Hood to fender-use w/16B844 retainer	2
73	F	D1ZZ 16758-A	On fender-wedge shape	4
75/	G	D3AZ 16758-A		4
73/74	J	D0RY 16758-A	Side of hood	4
73/74	J	★ D0RY 16758-B	Front of hood-not replaced	2
76/78	J	D5RY 16758-B	Front of hood	2
76/78	J	D5RY 16758-A	On fender	4
79	J	D20Z 16758-A	Hood to fender	1
		C5ZZ 16763-B	Hood height adjustment	1
73/	K	D2LY 16758-A	Located on radiator grille opening	2
77/	K	D7LY 16758-A	Wedge shape	4
74/	L	E0SZ 16758-A	On fender-wedge shape	4
73/	P	E0SZ 16758-A	On fender-wedge shape	4
73/	P	D0DZ 16758-A	Front fender to cowl	2
77/	V	D7LY 16758-A	Wedge type	4
79	V	C5ZZ 16763-B	Luggage comp. door height adj.	AR
73/74	J	20426-S8	(B-55)-bolt-hex. head-5/16"-18 x 1 1/4"	2
73/74	J	33797-S7	(M-50)-nut-hex.-5/16"-18	2
73/74	J	34806-S7	(X-64)-Lockwasher-split ring-5/16"	2
73/74	J	44722-S8	(X-19)-washer-flat-5/16"	2
16763	BUMPER (HOOD)			
73/	F,P	C5ZZ 16763-B	5/16"-18 x 1 1/4"-incl. rubber tip	2
73/76	C			1
74/	A,K			2
75/	D,G,V			1
74/76	Y			1
73/74	D	D0VZ 16763-A	On radiator support-incl. rubber tip	2
75	F			2
74/	L	C5ZZ 16763-B	On radiator support-with rubber tip	2
73/	C,F,P	33922-S	(M-27)-nut-5/16"-18	2
73/	A,Y	384669-S	(MM-207-AN)-nut-5/16"-18	2
16C764	HOUSING (HOOD HINGE)			
74/	L	D1FZ 16C764-A		2
79	J	D9ZZ 16C764-A		2
75/	G	D5DZ 16C764-A		2
78/	P	E1DZ 17C764-A		2
16C766	RETAINER (HOOD HINGE HOUSING)			
74/	L	D1FZ 16C766-A		2
75/	G	D5DZ 16C766-A		2
77/	V			2
16772	SPRING (HOOD LATCH RELEASE EXTENSION)			
73/74	J	★ D0RY 16772-A	Not replaced	1

YEAR	MODEL/RESTRICTIONS	PART NUMBER	DESCRIPTION	QTY.
16K774	RETAINER (HOOD WEATHERSTRIP FRONT)			
76/78	J	★ D5RY 16K774-A	Not replaced	1
16776	RETAINER (HOOD INSULATOR)-Also refer to group 16738			
74/	L	★ D4FZ 16776-A	Front-not replaced	1
16N782	PLATE (HOOD LATCH COVER)			
73/78	A	D4SZ 16N782-A		1
73/76	Y			1
78/	G			1
74/	K			1
75/	P			1
78/	V			1
77/	D	D7VY 16N782-A		1
77/	F	D70Z 16N782-A		1
16C786	SUPPORT (HOOD LATCH CABLE MOUNTING)			
75/	G	D5DZ 16C786-A		1
77/	V			1
16789	SPRING (HOOD HINGE)			
73/76	A,Y	D3AZ 16789-A	Coil type 7 1/8" overall length	2
77/78	A			1
73/	K	D3SZ 16789-A		2
73/76	C	D20Z 16789-A	Coil type-9 3/16" overall length	2
73/	D	D0VY 16789-A	Coil type-8 5/64" overall length	2
73	F	★ D1ZZ 16789-A	Coil type-6 1/4" overall length-not replaced	2
74/	F	D20Z 16789-A	Coil type-9 5/16" overall length	2
16795	PLATE (HOOD HINGE)			
73/74	J	★ D0RY 16795-A	Not replaced	2
76/78	J	★ D5RY 16795-A	Not replaced	2
16796-7	HINGE (HOOD LESS SPRING)			
73/78	A,Y	(RH) D7AZ 16796-A	(LH) D7AZ 16797-A	1
79	A	(RH) D9AZ 16796-A	(LH) D9AZ 16797-A	1
		N606677-S43B	(AB-181-G) Screw & washer N6 x 1.0 x 25 hex hd. (hinge to fender)	4
73/	D	(RH) D7VY 16796-A	(LH) D7VY 16797-A	1
73	F	(RH) D1ZZ 16796-A	(LH) D1ZZ 16797-A	1
73/76	C	(RH) D70Z 16796-A	(LH) D70Z 16797-A	1
74/	F			1
75/	G	D5DZ 16796-A	R.H. and L.H.	2
73/74	J	(RH) ★ D3RY 16796-A	(LH) ★ D3RY 16797-A Not replaced	1
76/78	J	(RH) D6RY 16796-A	(LH) D6RY 16797-A	1
79	J	D9ZZ 16796-A	R.H. and L.H.	2
73/	K	(RH) D3SZ 16796-A	(LH) D3SZ 16797-A	1
74/	L	D5FZ 16796-A	R.H. and L.H.	2
73/77	P	(RH) D0DZ 16796-C	(LH) D0DZ 16797-C	1
78/	P	E0SZ 16796-A	R.H. and L.H.	2
77/	V	D5DZ 16796-A	R.H. and L.H.	2
73/74	J	33797-S7	(M-50)-nut-hex.-5/16"-18	4
73/74	J	34806-S7	(X-64)-lockwasher-split ring-5/16"	4
73/74	J	44722-S8	(X-19)-washer-flat-5/16"	4
16826	ROD (HOOD SUPPORT)			
73/78	J	D0RY 16826-A		1
79	J	D9ZZ 16826-A		1
75/76	L "Before 5/76"	★ D5FZ 16826-A	Not replaced	1
76/	L "From 5/76"	D5ZZ 16826-B		1
73/76	P "Before 5/76"	★ D1DZ 16826-A	Not replaced	1
76/78	P "From 5/76 to 4/78"	D5ZZ 16826-B	w/side mounted prop rod	1
78/	P "From 4/78"	D8BZ 16826-A	W/front mounted prop rod	1
75/76	G	(RH) ★ D5DZ 16826-A	(LH) ★ D5DZ 16826-B Hinge type-N.R.	1

COPYRIGHT © 1986 — FORD MOTOR COMPANY — DEARBORN, MICHIGAN

1973/79 LINCOLN-MERCURY CARS

YEAR	MODEL/RESTRICTIONS	PART NUMBER	DESCRIPTION	QTY.
16826	ROD (HOOD SUPPORT) — Cont'd			
75/	G	D5ZZ 16826-B	Rod type	1
77/	V	(RH) D74Y 16826-A	(LH) D74Y 16826-B Hinge type	1
16827	GROMMET (HOOD SUPPORT TO HOOD)			
73/78	J	D2RY 16827-A		1
16828	CLIP (HOOD SUPPORT ROD RETAINING)			
75/	G	D5ZZ 16828-B	Used with rod type	1
73/78	J	D0RY 16828-A		1
79	J	D9ZZ 16828-A	Mounting bracket	1
76/	L	D5ZZ 16828-B		1
73/76	P "Before 5/76"	★ D0DZ 16828-A	Not replaced	1
76/78	P "From 5/76 to 4/78"	D5ZZ 16828-B	W/side mounted prop rod	1
78/	P "From 4/78"	★ D8BZ 16828-A	Support-w/front mounted prop rod-not replaced	1
		D8BZ 16828-B	Retainer-rod-w/front mounted prop rod	1
16832	SPRING (HOOD SUPPORT ROD)			
73/76	P	8A 16832		1
74/76	L			1
16B844	RETAINER (HOOD BUMPER)			
73/	A,C,D,K,Y	D0SZ 16B844-A	Retainer-at cowl top ends-w/studs at both ends-	2
74/	F		use w/16758 rubber tip	2
16850	ORNAMENT (HOOD TOP)-Incl. attaching parts			
73/74	A	D3MY 16850-A		1
75/78	A	D5MY 16850-A		1
79	A	E0MY 16850-A		1
73/76	D	D2VY 16850-A		1
77/	D	D7VY 16850-A		1
74/76	F	D4WY 16850-A		1
77/	F	D7WY 16850-A		1
75/77	G	D54Y 16850-A		1
78/	G	D84Y 16850-A		1
73/76	K	D2LY 16850-A		1
77/	K	D7LY 16850-A	Chrome	1
78/	K	D8LY 16850-A	Gold	1
		★	Blue-use gold	
73/77	P	D14Y 16850-A		1
78/	P	D8KY 16850-A		1
77/	V	D74Y 16850-A		1
75/76	Y	★ D5MY 16850-B	Not replaced	1
16856-7	MOULDING (HOOD)-Incl. attaching parts			
73	F	(RH) ★ D1WY 16856-A	(LH) ★ D1WY 16857-A Not replaced	1
74	L	D4FZ 16856-A		1
75/78	L	D5YY 16856-A		1
73/77	P	D14Y 16856-A		1
16877	CLIP (HOOD LATCH CONTROL CABLE)			
73/74	J	★ D0RY 16877-A	Not replaced	2
16892	HOOK (HOOD AUXILIARY CATCH)			
73/76	A,Y	D3AZ 16892-A		1
77/78	A			1
79	A	D9AZ 16892-A		1
73/76	C	D30Z 16892-A		1
73/	D	D9AZ 16892-A		1
74/	F	D30Z 16892-A		1
75/	G	D3AZ 16892-A		1
73/78	J	D5RY 16892-A		1
79	J	D9CY 16892-A		1

YEAR	MODEL/RESTRICTIONS	PART NUMBER	DESCRIPTION	QTY.
16892	HOOK (HOOD AUXILIARY CATCH) — Cont'd			
77/	K	D3SZ 16892-A		1
74	L	D4FZ 16892-A		1
79	L	D9ZZ 16892-A		1
75/77	P	D3AZ 16892-A		1
78/	P	D8BZ 16892-A		1
77/	V	D74Y 16892-A		1
16900	HOOK (HOOD LATCH)			
73	D	★ D3VY 16900-A	Not replaced	1
16B906	TRANSFER KIT (HOOD)-Also refer to Group 20,000 in Exterior Moulding Section at the end of this Catalog			
76	P	★ D64Y 16B906-A	Black-hood and fender-not replaced	1
		★ D64Y 16B906-B	Blue-hood and fender-not replaced	1
		★ D64Y 16B906-C	Brown-hood and fender-not replaced	1
		★ D64Y 16B906-D	Gold-hood and fender-not replaced	1
		★ D64Y 16B906-E	Green-hood and fender-not replaced	1
		★ D64Y 16B906-F	White-hood and fender-not replaced	1
79	J		Letters on hood scoop "RS"	
		D9CY 16B906-AB	Blue	1
		D9CY 16B906-AR	Green	1
		D9CY 16B906-AV	Orange	1
		D9CY 16B906-AD	Red	1
16907	CLIP (CABLE HOOD LATCH CONTROL)			
73	J "Before 12/72"	★ D1RY 16907-A	Not replaced	1
73/78	J "From 12/72"	★ D3RY 16907-A	Not replaced	1
73/	A,C,D,K,Y	D3AZ 16907-A		1
74/	F,L			1
75/	G			1
16914-6	HANDLE and CABLE ASSY. (HOOD LATCH CONTROL)			
73/76	A,Y	★ D3AZ 16914-A	Locking-less lock cylinder-not replaced	1
73/76	A,Y	D3AZ 16916-A	Non-locking	1
77/78	A			1
79	A	D9AZ 16916-A		1
73/76	C	D30Z 16916-A	Non-locking	1
74/76	C	★ D40Z 16914-A	Locking-less lock cylinder-not replaced	1
73/76	D	★ D3VY 16914-A	Locking-less lock cylinder-not replaced	1
73/	D	D3VY 16916-A	Non-locking	1
75/76	F	★ D40Z 16914-A	Locking-less lock cylinder-not replaced	1
74/	F	D30Z 16916-A	Non-locking	1
75/76	G	D5DZ 16914-A	Locking-less lock cylinder	1
75/	G	D5DZ 16916-A	Non-locking	1
73/74	J	D4RY 16916-A	Less handle	1
76/78	J	D5RY 16916-A	Less handle	1
73/78	J	D3RY 16914-A	Handle only	1
79	J	D9ZZ 16916-A		1
73/76	K	D4SZ 16914-A	Locking-less lock cylinder	1
73/	K	D3SZ 16916-A	Non-locking	1
74/76	L	★ D5FZ 16914-A	Locking-less lock cylinder-not replaced	1
74/	L	D5FZ 16916-A	Non-locking	1
78/	P	D5DZ 16916-A	Non-locking	1
77/	V	D5DZ 16916-A	Non-locking	1
73/	All	382930-S	(GG-338-A) clip-1/2" dia. plastic push in type (cable to fender)	AR

COPYRIGHT © 1986 — FORD MOTOR COMPANY — DEARBORN, MICHIGAN

1973/79 LINCOLN-MERCURY CARS

YEAR	MODEL/RESTRICTIONS	PART NUMBER	DESCRIPTION	QTY.
16918	PLATE (HOOD AUXILIARY CATCH)			
73	K	★ D3SZ 16918-A	Not replaced	1
16B918	MOULDING (HOOD REAR)			
75/76	A,Y	D5AZ 16B918-A		1
77/78	A			1
79	A	D9MY 16B918-A		1
73/75	D	★ D0VY 16B918-A	Snap on-N.R. (5/82)	1
75/	D	D7VY 16B918-A		1
77/	F	D7SZ 16B918-A		1
73/76	K - - w/full vinyl roof	D2SZ 16B918-A		1
75/	K - - w/half vinyl roof		Refer to Exterior Moulding Section at the end of this catalog	1
77/	K	D7LY 16B918-A		1
16925	SPRING (HOOD LATCH)			
73/74	J	★ D1RY 16925-A	Not replaced	1
16926	CLIP (HOOD LATCH SPRING)			
73/78	J	D1RY 16926-A		1
16927	GUIDE (HOOD LATCH SPRING)			
73/78	J	D1RY 16927-A		1
16929	LATCH (HOOD)			
73	F	★ C9AZ 16929-A	Hook type-not replaced	1
73/78	J	D1RY 16929-A	Dowel type	1
73/77	P	★ C7SZ 16929-A	Hook type-not replaced	1
16930	RETAINER (HOOD RELEASE CABLE)			
73/76	A,Y	D3AZ 16930-A		1
75/	G	D6DZ 16930-A		1
73/78	J	★ D3RY 16930-A	Not replaced	1
79	J	D8DZ 16930-A		1
78/	P	D8DZ 16930-A		1
77/	V	D6DZ 16930-A		1
16958	Refer to group 16856			
16B968	PLATE (HOOD LATCH CABLE RETAINER)			
73	A,D,Y "Before 2/73"	★ D3AZ 16B968-A	Not replaced	1
73/78	A,Y "From 2/73"	D3VY 16B968-A		1
73/	D "From 2/73"			
79	A	D9AZ 16B968-A		1
73/76	C	D30Z 16B968-B		1
74/	F			1
75/	G	D3VY 16B968-A		1
79	J	D4ZZ 16B968-A		1
73	K	★ D3AZ 16B968-A	Not replaced	1
74/76	K	D3VY 16B968-A		1
77/	K	D4ZZ 16B968-A		1
75/76	L	★ D5FZ 16B968-A	Not replaced	1
77/	L	D7FZ 16B968-A		1
78/	P	D4ZZ 16B968-A		1
77/	V	D3VY 16B968-A		1
16978	LOCK SET (HOOD LATCH RELEASE HANDLE)			
73/76	A,Y	★ D3AZ 16978-B		1
74/76	C,F,L	Not replaced		1
75/76	G			1
73	K "Before 4/73"			1
73/76	D,K "From 4/73"	★ D3VY 16978-A	Not replaced	1

1973/79
LINCOLN-MERCURY CARS

YEAR	MODEL/RESTRICTIONS	PART NUMBER	DESCRIPTION	QTY.
17003	TOOL KIT			
79	D - - Collector series	★ D9VY 17003-AB	Midnight blue-not replaced	1
79	K - - Collector series	★ D9LY 17003-AB	Midnight blue-not replaced	1
17A003	HOOK (JACK)			
73	A(53,57,65),Y(53,65)	★ D1MY 17A003-A	Not replaced	1
73	A(71),Y(71)	★ D1AZ 17A003-A	Not replaced	1
73	D	★ D0VY 17A003-A	Not replaced	1
17018	TOOL (ELECTRICAL TERMINAL CRIMPING)			
73/	All	B9A 17018-A		1
73/	All	C4AZ 17018-B	Terminal extraction tool	1
77/	All	D7AZ 17018-A	For flat flex wire	1
17032	WRENCH (JACK HANDLE and WHEEL NUT)			
73/	A,C,D,K,Y	C2SZ 17032-C		1
74/	F			1
73	F,P	D4ZZ 17032-A		1
73/78	J	D0RY 17032-A		1
74/	L,G,V	D4ZZ 17032-A		1
79	J			1
17A038	RETAINER (JACK HANDLE and WHEEL NUT WRENCH)			
73/76	A(71),Y(71)	C7AZ 17A038-A	Front	2
77/78	A (71)			2
17A040	BRACKET (JACK STOWAGE)-Unless listed improvise			
73	D	★ C8LY 17A040-A	Rear-not replaced	1
75/	D	★ D5VY 17A040-A	Rear-not replaced	1
73	D	42127-S8	(U-248-C)-screw (bracket to 106A18)-self-tapping-No. 10-12 x 1/2"	1
17A056-9	BRACKET (JACK HOLD DOWN)-Improvise			
17080	JACK (ASSY.)			
73/78	A,C,K,Y	D9AZ 17080-A		1
74/78	D,F			1
73/78	A,C,D,K,Y	C5AZ 17080-C	Heavy duty-universal chain lift	1
79	A,D,F,K	D9AZ 17080-A		1
73	D	★ D2VY 17080-A	Not replaced	1
73/78	J	D0RY 17080-A		1
77/78	J	★ D7RY 17080-A	Not replaced	1
73	F	D4ZZ 17080-A	Scissors type	1
73/	G,L,V,P			1
79	J			1
73/79	All	E6PZ 17080-A	Electro-hydraulic	1

COPYRIGHT © 1986— FORD MOTOR COMPANY —DEARBORN, MICHIGAN

17088 BASE (JACK)

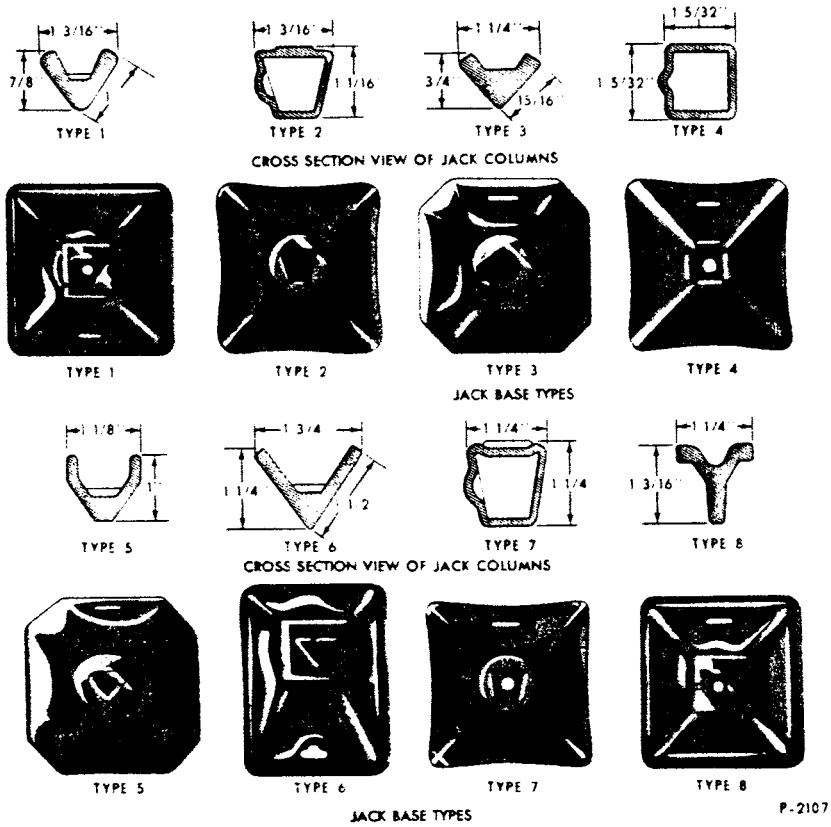

YEAR	MODEL/RESTRICTIONS	PART NUMBER	DESCRIPTION	QTY.
73/	A,C,K,Y	D20Z 17088-D	Type 7	1
74/	D,F			1
73/	A,C,K,Y	D20Z 17088-A	Type 4	1
74/	D,F			1
73/	A,C,K,Y	D3AZ 17088-A	Type 2	1
74/	D,F			1
73	D	★ D2VY 17088-A	Not replaced	1
17091	CLAMP (JACK HOLD DOWN)			
73/78	J	D0RY 17091-A		
76	C(53,65) - - w/collapsible spare tires	★ D50Z 17091-A	Not replaced	1
77/	F			1
79	A(54,66)	D9AZ 17091-C		1
17A116	RETAINER ASSY. (JACK FRONT)			
75/	G - - w/collapsible spare tire	D5DZ 17A116-A	Outer	1
77/	V			1
75/	G - - w/collapsible spare tire	D5DZ 17A116-B	Inner	1
77/	V			1
17A117	BRACKET (TIRE INFLATOR)			
75/	G,P - - w/collapsible spare tire	★ D5DZ 17A117-A	Not replaced	1
17119	SPRING (JACK HOLD DOWN)			
73/	D	★ C7SZ 17119-B	Not replaced	1
75/	G,P - - w/collapsible spare tire	★ C8ZZ 17119-A	Not replaced	1
17226	FILLER (REAR LICENSE PLATE)			
73	F	★ D3WY 17226-A	Not replaced	1

YEAR	MODEL/RESTRICTIONS	PART NUMBER	DESCRIPTION		QTY.
17236-7	BRACKET (REAR BUMPER JACKING)				
79	A(74)	D9AZ 17236-A			1
74	D	(RH) ★ D4VY 17236-A	(LH) ★ D4VY 17237-A	Not replaced	1
75/	D	★ D5VY 17236-A	Not replaced		2
73/74	K	(RH) ★ D3LY 17236-A Not replaced	(LH) ★ D3LY 17236-B Not replaced	Attaches to reinforcement quarter panel rear	1
73	K	★ D3LY 17236-C	Attaches to rear bumper-not replaced		2
74/76	K	★ D4LY 17236-B	Attach to rear bumper-not replaced		2
17A254	TIP REPLACEMENT KIT (SPEEDOMETER CABLE)				
73/	All	B9AF 17A254-A	Used w/universal speedometer cable core with .130" diameter-consists of (1) swaging tool (1) cable tip		1
17255	SPEEDOMETER ASSY. (LESS MOUNTING PLATE)				
NOTE:	¿ CANADA ONLY				
	●Dual bands-description will show the last number(s) on the dial and will list top band number first				
77/78	A(exc. P/C)	D7AZ 17255-D	●85 mph/130 km/h -"Unleaded Gasoline Only"		1
79	A(exc. P/C) - - w/o tripodometer	D9MY 17255-A	●85 mph/130 km/h		1
79	A(exc. P/C) - - w/tripodometer	E1MY 17255-B	●85 mph/120 km/h		1
79	A(P/C)	E1MY 17255-C	●140 mph/220 km/h-"CERTIFIED CALIBRATION"		1
77	A(exc. P/C) "Before 12/1/76"	D4AZ 17255-A	120 mph - - Canada only		1
79	A(exc. P/C) - - w/tripodometer "Before 3/23/79"	¿ D9MY 17255-E	●180 km/h/110 mph		1
73/76	C(exc. P/C) - - w/tripodometer	★ D40Z 17255-A	120 mph-not replaced		1
74/76	C(P/C) - - w/o tripodometer	★ D40Z 17255-C	120 mph-not replaced		1
77	D - - U.S. only	★ D7VY 17255-C	85 mph-not replaced		1
78/	D	D8VY 17255-A	●85 mph/130 km/h		1
73	F - - w/o tripodometer	★ D1WY 17255-A	Not replaced		1
73	F - - w/tripodometer	★ D1WY 17255-B	Not replaced		1
74/76	F	★ D40Z 17255-A	120 mph		1
77/	F(exc. P/C) - - w/tripodometer-w/o tachometer	D7SZ 17255-D	●85 mph/130 km/h		1
77/	F(exc. P/C) - - w/tripodometer and tachometer	D7SZ 17255-E	●85 mph/130 km/h		1
77/	F(exc. P/C) - - w/o tripodometer and tachometer	D7SZ 17255-F	●85 mph/130 km/h		1
77/	F (P/C)	★ D70Z 17255-A	●140 mph/220 km/h-not replaced		1
75/77	G "Before 12/1/76"	D5PZ 17255-B	120 mph		1
77/	G "From 12/1/76"	D7DZ 17255-E	●85 mph/130 km/h		1
73/74	J(exc. GT) - - 4 cyl. 122 (2000 cc)	★ D3RY 17255-A	Not replaced		1
76/78	J	D5RY 17255-A			1
79	J	¿ D9ZZ 17255-B	●180 km/h/110 mph		1
77/	K	D7LY 17255-D	W/black pointer		1
77	K	★¿D7LY 17255-A	W/chrome pointer-not replaced		1
75/76	L	★ D5FZ 17255-A	100 mph-not replaced		1
79	L - - w/o tachometer	D9FZ 17255-A	●80 mph/120 km/h-rectangular head		1
77/	L - - w/tachometer	E0FZ 17255-B	●80 mph/130 km/h		1
73/74	P	★ D4DZ 17255-E	120 mph-not replaced		1
75/77	P	★ D5DZ 17255-C	100 mph-not replaced		1
78/	P(exc. P/C) - - w/o tachometer	D8BZ 17255-A	●85 mph/130 km/h		1
78/	P(P/C)	★ D8BZ 17255-C	●120 mph/180 km/h-not replaced		1
78/	P(exc. P/C) - - w/o tachometer	¿ D8BZ 17255-B	●180 km/h/110 mph		1
79	P(exc. P/C) - - w/tachometer	¿ D9ZZ 17255-B	●180 km/h/110 mph		1
78/	P(P/C)	¿ D8BZ 17255-D	●180 km/h/110 mph		1
77/	V	D74Y 17255-A	85 mph		1
77	V	¿ D74Y 17255-B	180 km/h		1

COPYRIGHT © 1986 — FORD MOTOR COMPANY — DEARBORN, MICHIGAN

17260 CABLE ASSY. (SPEEDOMETER)

There are two ways of selecting Speedometer Cables
(1) By identification
(2) By Model Application

BY IDENTIFICATION

When the Identification Number of the speedometer cable is known

1. Refer to Identification Chart below
2. Find the Identification Number and the corresponding Service Number

BY MODEL APPLICATION

1. Refer to Model Application Chart beginning on page 6
2. Refer to appropriate Model, Year and, Transmission to find Service Part Number

IDENTIFICATION CHART

IDENTIFICATION	PART NUMBER	IDENTIFICATION	PART NUMBER
C9ZF 17260-A	C9ZZ 17260-A	D50F 17260-AA	D50Z 17260-B
C9ZF 17260-E	D00Z 17260-A	D50F 17260-AB	D50Z 17260-B
D00F 17260-A	D00Z 17260-A	D50F 17260-BA	D50Z 17260-B
D00F 17260-H	D00Z 17260-A	D50F 17260-BB	D50Z 17260-C
D1AF 17260-AA	D00Z 17260-A	D5VF 17260-AA	D5VY 17260-A
D1AF 17260-AB	D00Z 17260-A	D5VF 17260-AB	D5VY 17260-B
D1AF 17260-BA	D0AZ 17260-D	D52F 17260-AB	D5FZ 17260-B
D1AF 17260-BB	D0AZ 17260-D	D52F 17260-BB	D5FZ 17260-B
D1DF 17260-AC	D1ZZ 17260-G	D7EF 17260-AA	D7FZ 17260-A
D1ZF 17260-AC	D1ZZ 17260-G	D7EF 17260-BA	D7FZ 17260-A
D1ZF 17260-BA	D00Z 17260-A	D9AF 17260-AA	D9AZ 17260-A
D1ZF 17260-BB	D00Z 17260-A	D9BF 17260-AA	D9BZ 17260-A
D2AF 17260-BA	D1AZ 17260-C	D9BF 17260-BA	D9BZ 17260-A
D2AF 17260-CA	D00Z 17260-A	D9BF 17260-CA	D9BZ 17260-A
D2AF 17260-DA	D0AZ 17260-D	D9BF 17260-DA	D9BZ 17260-A
D2DF 17260-AA	D1ZZ 17260-G	D9DF 17260-AA	D9DZ 17260-A
D2DF 17260-BA	D0AZ 17260-D	D9EF 17260-AA	D9FZ 17260-A
D20F 17260-AA	D20Z 17260-B	D9EF 17260-BA	D9FZ 17260-A
D20F 17260-BA	D20Z 17260-B	1	
D20F 17260-CA	D20Z 17260-D	D9EF 17260-CA	D9FZ 17260-A
D20F 17260-DA	D20Z 17260-D	D9ZF 17260-AB	D9ZZ 17260-A
D2SF 17260-AB	D2VY 17260-A	69EB 17260-C2A	D1RY 17260-C
D2VF 17260-AB	D2VY 17260-A	71EB 17260-A1A	D1RY 17260-C
D2ZF 17260-BA	D00Z 17260-A	71EB 17260-A2A	D1RY 17260-C
D5AF 17260-AA	D5AY 17260-A	72EB 17260-D2A	D2RY 17260-F
D5AF 17260-BA	D5AY 17260-A	72EB 17260-F2A	D2RY 17260-C
D5AF 17260-CA	D5AY 17260-C	72EB 17260-H1A	D2RY 17260-E
D5BF 17260-AA	D5DZ 17260-A	72EB 17260-J2A	D2RY 17260-J
D5BF 17260-BA	D5AY 17260-A	72EB 17260-K2A	D2RY 17260-E
		74EB 17260-BB	D5RY 17260-C

17260 CABLE ASSY. (SPEEDOMETER) — Cont'd

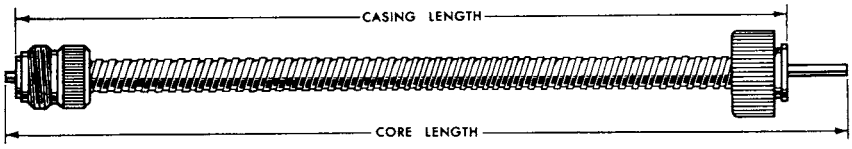

P-868

APPLICATION CHART

YEAR	MODEL	TRANS.	SPEED CONTROL OR MODULATOR YES	SPEED CONTROL OR MODULATOR NO	PART NUMBER	(APPROX) CORE LENGTH (INCHES)	REMARKS
17260	CABLE ASSY. (SPEEDOMETER) — Cont'd						
	For Core Replacement use D4AZ 17262-A (81") or C5AZ 17262-B (135") and cut to fit						
73/	A	All	x				Refer to group 9A820
73/74	A(53,57,65) - - 8 cyl. 351-2/B - "Before 6/3/74"	C/M		x	D0AZ 9A820-L	50 13/16	W/3.25 rear axle
73/78	A(exc. P/C)	C4,C6		x	D6DZ 17260-A	54	
73/78	A(P/C)	C6		x	D5AY 17260-C	54	
79	A	All		x	★ D9AZ 17260-B	68	Repl. by E0AZ 17260-B (9/81)
73/74	C - - 6 cyl. 8 cyl. 302, 351-2/b	C4,CM 3/M/T		x	D20Z 17260-B	66	
73/74	C	4/M/T,C6		x	D20Z 17260-D	73	
73/76	C	All	x				Refer to group 9A820
75/76	C	All		x	D50Z 17260-C	76	
73/	D	All	x				Refer to group 9A820
73/74	D	C6		x	★ D2VY 17260-A	64	Not replaced
75/77	D	All		x	D5VY 17260-B	72	
78	D	All		x	★ D8BZ 17260-A	70 1/2	Repl. by E2BZ 17260-A (9/81)
73	F	A/T		x	D4FZ 17260-A	61 1/2	W/o 3.91 or 4.11 rear axle-
73/	F	All	x				Refer to group 9A820
74	F	C4,CM		x	D20Z 17260-B	66	
74	F	C6		x	D20Z 17260-D	73	
75/	F	All		x	D50Z 17260-C	76	
75/	G	A/T		x	D5DZ 17260-A	60 3/4	
75/78	G	M/T		x	★ D5DZ 17260-B	53 3/4	Repl. by D6DZ 17260-A (6/79)
79	G	M/T		x	D9DZ 17260-A	55 1/2	
73/74	J - - w/o automatic ign. adv.	C4			D4RY 17260-B		
73/74	J - - w/automatic ign. adv.	C4			D2RY 17260-E		Lower
73/78	J - - w/o automatic ign. adv.	4/M/T			D4RY 17260-A	96	
73/78	J - - w/automatic ign. adv.	4/M/T			D2RY 17260-C		Lower
73/78	J - - w/automatic ign. adv.	All			D2RY 17260-F		Upper
76/78	J	A/T			D5RY 17260-C	63	
79	J - - w/4 cyl. 140 T/C (2300cc)	All		x	E0ZZ 17260-A	79	
79	J - - w/o 4 cyl. 140 T/C (2300cc)	All		x	★ D9BZ 17260-A	74 1/2	Repl. by E2BZ 17260-A (9/81)
73	K	C6		x	D0SZ 17260-B	67 13/16	
73/74	K	C6		x	★ D2VY 17260-A	64	Not replaced
75/	K	All		x	D5VY 17260-B	72	
73/	K	C6	x				Refer to group 9A820
74	L	C4		x	D4FZ 17260-A	61 1/2	
74	L	M/T		x	D4FZ 17260-A	66 11/16	
75/	L	All		x	D9FZ 17260-A	70 3/4	
73/75	P	C4		x	D4FZ 17260-A	61 1/2	
73/75	P "Before 2/75"	M/T		x	D0AZ 9820-L	50	
75	P "From 2/75"	M/T		x	E0AZ 17260-A	54	
75	P	C4		x	D5DZ 17260-A	60 3/4	
76/77	P	All		x	D6DZ 17260-A	54 1/2	
78/	P	All		x	★ D8BZ 17260-A	70 1/2	Repl. by E2BZ 17260-A (9/81)
77/	V	All		x	D5DZ 17260-A	60 3/4	
77/	V	All	x				Refer to group 9A820
73/74	Y(53,57,65) - - 8 cyl. 351 2/B - "Before 6/74"	C/M		x	D0AZ 9A820-A	50 13/16	W/3.25 rear axle
73/76	Y(exc. P/C) - "Before 6/74"	C6		x	D6DZ 17260-A	53 13/16	
75/76	Y(P/C)	C6		x	D5AY 17260-C	54	
73/76	Y	All	x				Refer to group 9A820

COPYRIGHT © 1986 — FORD MOTOR COMPANY — DEARBORN, MICHIGAN

1973/79
LINCOLN-MERCURY CARS

YEAR	MODEL/RESTRICTIONS	PART NUMBER	DESCRIPTION	QTY.
17262	CORE (SPEEDOMETER DRIVE)			
73/	A,C,D,F,K,L,P,Y-	C5AZ 17262-B	L.H. lay-135" long x 1/8" dia.-cut to fit	1
73/	A,C,D,F,G,K,L,P,V,Y-	D4AZ 17262-A	81" long x 1/8" dia.-cut to fit	1
17263	BRACKET (SPEEDOMETER CABLE SUPPORT)-If not listed below improvise			
79	F - - 4 cyl. 140 TC (2300cc)	D9ZZ 17263-A		1
17264	CLIP (SPEEDOMETER CABLE)			
73/	A,C,D,F,G,K,L,P,V,Y	B9TZ 17264-A	To clip speedo. cable to transmission housing	1
		31497-S8	(U-254)-screw (clamp to dash panel)-hex. washer head-14-14 x 1/2"	1
17269	BUSHING (SPEEDOMETER CABLE TO DRIVEN GEAR)			
73/78	J - - 4/M/T	★ D1RY 17269-A	Not replaced	1
73/78	J - - 4/M/T	97615-S	Used to attach 17269 to 7003	1
17271	Refer to section 172.73			
17292	RETAINER (SPEEDOMETER DRIVEN GEAR)			
73/	All	C1DD 17292-A	"C" type-.330" /.345" I.D. x .665" /.685" O.D.	1
17298	SEAL (SPEEDOMETER DRIVE GEAR)			
73/78	J	D0RY 17298-A		1

17271 SPEEDOMETER GEARS (DRIVE and/or DRIVEN)

HOW TO FIND SPEEDOMETER DRIVE and DRIVEN GEAR PART NUMBERS

There are two ways of determining the part number of a speedometer drive or driven gear.

BY IDENTIFICATION or BY APPLICATION

BY IDENTIFICATION

YOU MUST KNOW–
- Physical shape
- Material
- Color
- Number of teeth
- Size (17285 only)
- Identification number–if applicable (17271 only)

EXAMPLE

DRIVEN GEAR (17271)

Physical shape conforms to–
- TYPE–3A
- MATERIAL–Nylon
- COLOR–Red
- NUMBER OR TEETH–21
- PART NUMBER listed is–C4OZ 17271–A

DRIVE GEAR (17285)

Physical shape conforms to–
- TYPE–4A
- MATERIAL–Nylon
- COLOR–Brown
- NUMBER OF TEETH–8
- SIZE–1 3/8" I.D. x 2 1/64" O.D. x 11/16" thick or long
- PART NUMBER listed is–C8OZ 17285–B

BY APPLICATION

YOU MUST KNOW–
- Year
- Rear axle Ratio
- Engine
- Transmission
- Tire Size

EXAMPLE

YEAR–	1973
REAR AXLE RATIO–	3.25 to 1
ENGINE–	8 cyl. 302 C.I.D.
TRANSMISSION–	3 speed manual (3/M/T)
TIRE SIZE	7.35 x 14

DRIVE GEAR part number listed is C8OZ 17285–B

DRIVEN GEAR part number listed is C4OZ 17271–A (for both regular vehicles and Police, Taxi and Rental vehicles).

COPYRIGHT © 1986 — FORD MOTOR COMPANY — DEARBORN, MICHIGAN

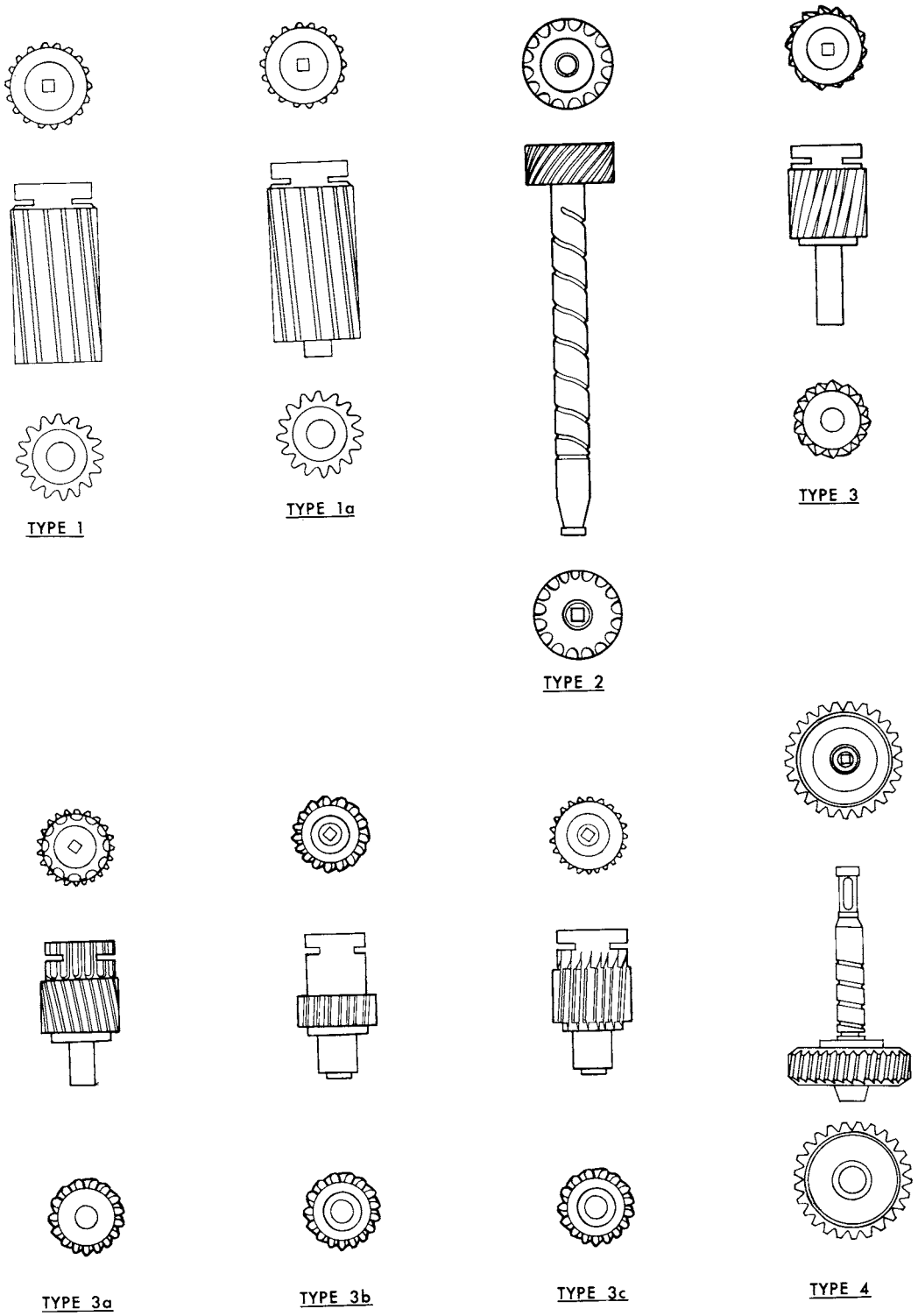

SPEEDOMETER DRIVEN GEARS (TYPICAL)

TYPE ●	MATERIAL	COLOR	TEETH	DESCRIPTION	PART NUMBER
17271	SPEEDOMETER DRIVEN GEAR IDENTIFICATION CHART				
	● Refer to Illustration on page 9.				
1a	Nylon	Blue	16		D0AZ 17271-B
2	Nylon and steel	Blue	20		D4RY 17271-A
3	Nylon	Green	17		C7SZ 17271-A
3	Nylon	Gray	18		C7SZ 17271-B
3	Nylon	Tan	19		C7VY 17271-A
3	Nylon	Orange	20		C8SZ 17271-B
3	Nylon	Purple	21		D0OZ 17271-B
3a	Nylon	Orange	16		C2DZ 17271-J
3a	Nylon	Wine	16		C0DD 17271-A
3a	Nylon	Green or White	17		C3DZ 17271-B
3a	Nylon	Purple	17		C2DZ 17271-G
3a	Nylon	White or Green	18		C2DZ 17271-F
3a	Nylon	Gold or Yellow	18		C0DD 17271-B
3a	Nylon	Pink	19		C4DZ 17271-A
3a	Nylon	Pink-end only	19		C0DE 17271-B
3a	Nylon	Black	20		C1DD 17271-A
3a	Nylon	Blue	20		C2DZ 17271-H
3a	Nylon	Red	21		C40Z 17271-A
4	Nylon and steel	Green	19		D5RY 17271-B
4	Nylon and steel	Yellow	21		D5RY 17271-A

COPYRIGHT © 1986 — FORD MOTOR COMPANY — DEARBORN, MICHIGAN

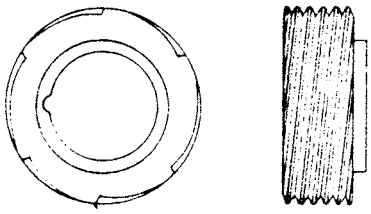

TYPE 1

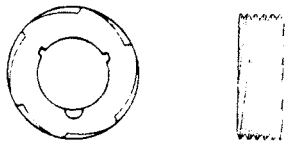

TYPE 2

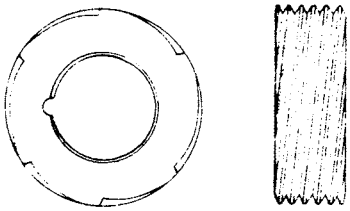

TYPE 2a

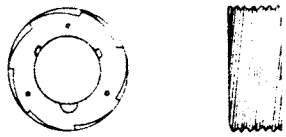

TYPE 2b

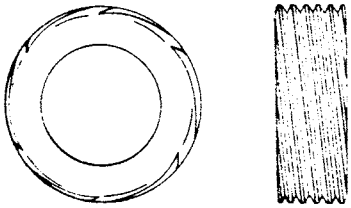

TYPE 3

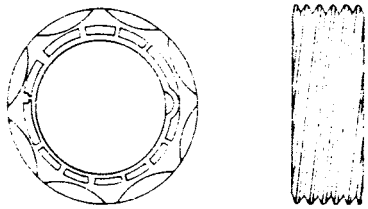

TYPE 4

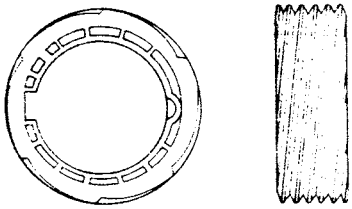

TYPE 4a

TYPE 4b

P-8344

SPEEDOMETER DRIVE GEARS (TYPICAL)

17285 GEAR (SPEEDOMETER DRIVE)–Refer to section 172 for model application

TYPE ●	MATERIAL	COLOR	TEETH	DIMENSIONS(INCHES) I.D.	O.D.	THICKNESS OR LENGTH	PART NUMBER
17285	SPEEDOMETER DRIVE GEAR IDENTIFICATION CHART ● Refer to Illustration on page 11						
2a	Steel	None	7	1 3/8	2 1/4	11/16	C3OZ 17285–C
2a	Steel	None	7	1 1/32	1 25/32	7/16	D1RY 17285–C
3	Steel	None	6	1.00	1 29/32	35/64	D1FZ 17285–A
3	Steel	None	8	1.00	1 29/32	35/64	D7FZ 17285–A
3	Steel	None	7	1.00	1 29/32	35/64	D8FZ 17285–A
3	Nylon	Orange	9	1 19/32	2 1/64	1 9/64	D8TZ 17285–B
4a	Nylon	Green	6	1 3/4	2.00	11/16	D0TZ 17285–A
4a	Nylon	Black	7	1 3/8	1 13/16	11/16	C4DZ 17285–A
4a	Nylon	Brown	8	1 3/8	2 1/64	11/16	C80Z 17285–B
5	Nylon	Black	7	1–17/32	1–25/32	25/32	D3TZ 17285–A

YEAR	MODEL/RESTRICTIONS	PART NUMBER	DESCRIPTION	QTY.
17288	SPACER (SPEEDOMETER DRIVING GEAR)			
73/78	J – – 4 cyl. 122 (2000 cc) w/C4 trans.	D1RY 17288–A		1
17289	PLATE (SPEEDOMETER MOUNTING)			
73	Y	★ C9AZ 17289–A	Not replaced	1
17292	RETAINER (SPEEDOMETER DRIVEN GEAR)			
73/	All	C1DZ 17292–A		1
73/78	J	D0RY 17292–A		1
17298	SEAL (SPEEDOMETER DRIVE GEAR)			
73/78	J	D0RY 17298–A		1
74	L			1
		E661128–S	Clip	1
76/78	J	D5RY 17298–A		1

COPYRIGHT © 1986 — FORD MOTOR COMPANY — DEARBORN, MICHIGAN

1973/79 LINCOLN-MERCURY CARS

ENGINE CYL.	ENGINE C.I.D. (C.C.D.)	TRANS.	TIRE SIZE	REMARKS	DRIVE GEAR	DRIVEN GEAR REGULAR	DRIVEN GEAR P/C,TAXI or RENTAL
	17271		SPEEDOMETER DRIVE and DRIVEN GEAR APPLICATION CHART $ Part of transmission output shaft				
			1973				
	2.75		**REAR AXLE RATIO**				
6&6 8	All	C4,C6, C/M	E78 x 14,7.35 x 14,		$-8 teeth	C7SZ 17271-A	C7SZ 17271-B
6& 8	All	C4,C6, C/M	E70 x 14		$-8 teeth	C7SZ 17271-B	C7SZ 17271-B
6& 8	All	C4,C6, C/M	F60 x 15,F70 x 14,F78 x 14, G60 x 15,G70 x 14,7.75 x 14, 8.25 x 14		$-8 teeth	C7SZ 17271-A	C7SZ 17271-A
6& 8	All	C4,C6, C/M	F78 x 15,G78 x 14,G78 x 15 H70 x 14,HR78 x 14, 8.25 x 15		$-8 teeth	D0AZ 17271-B	D0AZ 17271-B
6& 8	All	C4,C6, C/M	H70 x 15,H78 x 14,H78 x 15, HR78 x 15,J78 x 15, JR78 x 15,L78 x 15, 8.55 x 15		$-8 teeth	D0AZ 17271-B	D0AZ 17271-B
8	460 P/C	C6	H70 x 15,H78 x 15 HR78 x 15,J78 x 15, JR78 x 15,L78 x 15, 8.55 x 15,215 x 15,215R x 15		$-9 teeth		C7SZ 17271-B
8	460 P/C	C6	F78 x 15,G78 x 15,8.25 x 15, 225R x 15		$-9 teeth		C7VY 17271-A
8	460	C6	9.15 x 15,225 x 15,230 x 15		$-9 teeth	C7SZ 17271-A	C7SZ 17271-B
8	460	C6	H78 x 15,LR78 x 15, 8.55 x 15,215 x 15		$-9 teeth	C7SZ 17271-B	C7SZ 17271-B
	2.79		**REAR AXLE RATIO**				
6 8	250 302,351	C4	E78 x 14		$-8 teeth	C7SZ 17271-A	C7SZ 17271-B
6 8 8	250 302,351 302,351	C4	C78 x 14,D70 x 14,D78 x 14, DR78 x 14,E70 x 14, 6.95 x 14,7.35 x 14		$-8 teeth	C7SZ 17271-B	
6 8	250 302,351	C4	F60 x 15,F70 x 14,F78 x 14, F78 x 15,G60 x 15,G70 x 14, G78 x 14,H70 x 14, HR78 x 14,7.75 x 14, 8.25 x 14,8.25 x 15		$-8 teeth	C7SZ 17271-A	C7SZ 17271-A
6 8	250 302,351	C4	G78 x 15,H78 x 14		$-8 teeth	D0AZ 17271-B	C7SZ 17271-B
6 8	200,250 302	C4	6.45 x 14,6.50 x 13		$-8 teeth	C7SZ 17271-B	C7VY 17271-A
6 8	200,250 302	C4	6.00 x 13		$-8 teeth	C7VY 17271-A	C8SZ 17271-B
6 8	200,250 302	C4	B78 x 14		$-8 teeth	C7VY 17271-A	C7VY 17271-A
6 8	200,250 302	C4	A70 x 13,A78 x 13		$-8 teeth	C8SZ 17271-B	C8SZ 17271-B
6 8	200 302	3/M/T	6.45 x 14,6.50 x 13		C80Z 17285-B	C0DD 17271-B	C0DD 17271-C
6 8	200 302	3/M/T	6.00 x 13		C80Z 17285-B	C0DZ 17271-B	C1DD 17271-A

COPYRIGHT © 1986 — FORD MOTOR COMPANY — DEARBORN, MICHIGAN

1973/79 LINCOLN-MERCURY CARS

ENGINE CYL.	ENGINE C.I.D. (C.C.D.)	TRANS.	TIRE SIZE	REMARKS	DRIVE GEAR	DRIVEN GEAR REGULAR	DRIVEN GEAR P/C,TAXI or RENTAL
	17271		SPEEDOMETER DRIVE and DRIVEN GEAR APPLICATION CHART — Cont'd $ Part of transmission output shaft				
			1973				
			2.79 REAR AXLE RATIO				
6 8	200 302	3/M/T	B78 x 14		C80Z 17285-B	C0DZ 17271-B	C0DZ 17271-B
6 8	200 302	3/M/T	C78 x 14,D70 x 14,D78 x 14, DR78 x 14,6.95 x 14		C80Z 17285-B	C0DD 17271-B	C0DD 17271-B
6 8	200 302	3/M/T	A70 x 13,A78 x 13		C80Z 17285-B	C1DD 17271-A	C1DD 17271-A
			3.00 REAR AXLE RATIO				
6 8	200,250 302	C4	B78 x 14,D70 x 14 DR78 14,6.45 x 14, 6.50 x 13		$-8 teeth	C8SZ 17271-B	C8SZ 17271-B
6 8	200,250 302	C4	A70 x 13,6.00 x 13		$-8 teeth	D00Z 17271-B	D00Z 17271-B
8	460	C6	LR78 x 15,9.15 x 15, 225 x 15,230 x 15		$-9 teeth	C7VY 17271-A	C7VY 17271-A
8	460	C6	8.55 x 15		$-9 teeth	C8SZ 17271-B	C8SZ 17271-B
8	460	C6	H78 x 15,215 x 15		$-9 teeth	C7VY 17271-A	C8SZ 17271-B
6 8	200 302	3/M/T	B78 x 14,D70 x 14, DR78 x 14,6.45 x 14, 6.50 x 13		C80Z 17285-B	C1DD 17271-A	C1DD 17271-A
6 8	200 302	3/M/T	A70 x 13,A78 x 13,6.00 x 13		C80Z 17285-B	C40Z 17271-A	C40Z 17271-A
6 8	200 302	3/M/T	C78 x 14,D78 x 14,E70 x 14, 6.95 x 14		C80Z 17285-B	C0DZ 17271-B	C0DZ 17271-B
6 8	250 302	3/M/T	E78 x 14,F70 x 14,7.35 x 14		C80Z 17285-B	C0DZ 17271-B	C0DZ 17271-B
6& 8	All	C4,C6, C/M	E78 x 14,F70 x 14,7.35 x 14		$-8 teeth	C7VY 17271-A	C7VY 17271-A
6& 8	All	C4,C6, C/M	C78 x 14,D78 x 14,E70 x 14, 6.95 x 14		$-8 teeth	C7VY 17271-A	C8SZ 17271-B
6& 8	All	C4,C6, C/M	F60 x 15		$-8 teeth	C7SZ 17271-A	C7SZ 17271-B
6& 8	All	C4,C6, C/M	F78 x 14,G70 x 14,7.75 x 14, 8.25 x 14		$-8 teeth	C7SZ 17271-B	C7VY 17271-A
6& 8	All	C4,C6, C/M	F78 x 15,G60 x 15,G78 x 14, G78 x 15,H70 x 14,H78 x 14, H78 x 15,HR78 x 14, 8.25 x 15		$-8 teeth	C7SZ 17271-B	C7SZ 17271-B
6 8	250 302	3/M/T	F60 x 15,F78 x 14,G70 x 14, 7.75 x 14,8.25 x 14		C80Z 17285-B	C0DD 17271-B	C0DZ 17271-B
6 8	250 302	3/M/T	F78 x 15,G60 x 15,G78 x 14, G78 x 15,H70 x 14,H78 x 14, H78 x 15,HR78 x 14, 8.25 x 15		C80Z 17285-B	C0DD 17271-B	C0DD 17271-B
			3.22 REAR AXLE RATIO				
6	♦159	4/M/T	185 x 13		D2RY 17285-B	D4RY 17271-A	D4RY 17271-A
6	♦159	C4	185 x 13		$	C7SZ 17271-A	C7SZ 17271-A

ENGINE CYL.	ENGINE C.I.D. (C.C.D.)	TRANS.	TIRE SIZE	REMARKS	DRIVE GEAR	DRIVEN GEAR REGULAR	DRIVEN GEAR P/C,TAXI or RENTAL
	17271		SPEEDOMETER DRIVE and DRIVEN GEAR APPLICATION CHART — Cont'd $ Part of transmission output shaft				
			1973				
	3.25		**REAR AXLE RATIO**				
6&8	All	C4,C6, C/M	E78 x 14		$-8 teeth	C8SZ 17271-B	D00Z 17271-B
6&8	All	C4,C6, C/M	E70 x 14,7.35 x 14		$-8 teeth	D00Z 17271-B	D00Z 17271-B
6&8	All	C4,C6, C/M	F60 x 15,F70 x 14,F78 x 14, F78 x 15,G60 x 15,G70 x 14, G78 x 15,HR78 x 14, 7.75 x 14,8.25 x 14		$-8 teeth	C8SZ 17271-B	C8SZ 17271-B
6&8	All	C4,C6, C/M	G78 x 14,H70 x 14,8.25 x 15		$-8 teeth	C7VY 17271-A	C8SZ 17271-B
6&8	All	C4,C6, C/M	G78 x 15,H70 x 15,H78 x 14, H78 x 15,HR78 x 15, JR78 x 15,8.55 x 15		$-8 teeth	C7VY 17271-A	C7VY 17271-A
8	351,400, 429	C4,C6, C/M	L78 x 15		$-8 teeth	C7SZ 17271-B	C7SZ 17271-B
8	351,400, 429	C4,C6, C/M	J78 x 15		$-8 teeth	C7SZ 17271-B	C7VY 17271-A
8	460 P/C	C6	H78 x 15,J78 x 15,JR78 x 15, L78 x 15,8.55 x 15,215 x 15		$-9 teeth		D00Z 17271-B
8	460	C6	H78 x 15,LR78 x 15, 8.55 x 15,9.15 x 15, 215 x 15,225 x 15, 230 x 15		$-9 teeth	D00Z 17271-B	D00Z 17271-B
6 8	250 302	3/M/T	E78 x 14		C80Z 17285-B	C1DD 17271-A	C40Z 17271-A
6 8	250 302	3/M/T	E70 x 14,7.35 x 14		C80Z 17285-B	C40Z 17271-A	C40Z 17271-A
6 8	250 302	3/M/T	F60 x 15,F70 x 14,F78 x 14, F78 x 15,G60 x 15,G70 x 14, G78 x 15,HR78 x 14, 7.75 x 14,8.25 x 14		C80Z 17285-B	C1DD 17271-A	C1DD 17271-A
6 8	250 302	3/M/T	G78 x 14,H70 x 14,8.25 x 15		C80Z 17285-B	C0DZ 17271-B	C1DD 17271-A
6 8	250 302	3/M/T	G78 x 15, H78 x 14, H78 x 15 8.55 x 15		C80Z 17285-B	C0DZ 17271-B	C0DZ 17271-B
8	351	4/M/T	E78 x 14, F70 x 14, 7.35 x 14		C4DZ 17285-A	C2DZ 17271-F	C2DZ 17271-F
8	351	4/M/T	E70 x 14		C4DZ 17285-A	C2DZ 17271-F	C4DZ 17271-A
8	351	4/M/T	F60 x 15, F78 x 14, G60 x 15, G70 x 14,7.75 x 14, 8.25 x 14		C4DZ 17285-A	C2DZ 17271-G	C2DZ 17271-F
8	351	4/M/T	F78 x 15, G78 x 14, G78 x 15, H70 x 14, H78 x 14, H78 X 15, HR78 x 14,8.25 x 15		C4DZ 17285-A	C2DZ 17271-G	C2DZ 17271-G
	3.44		**REAR AXLE RATIO**				
4	▲122	4/M/T	165 x 13,185 x 13		D1RY 17285-C	★D1RY 17271-A r/bD5RY 17271-A(12/75)	★D1RY 17271-A r/bD5RY 17271-A(12/75)
4	▲122	C4	165 x 13,185 x 13		$	C7SZ 17271-B	C7SZ 17271-B

COPYRIGHT © 1986 — FORD MOTOR COMPANY — DEARBORN, MICHIGAN

1973/79 LINCOLN-MERCURY CARS

17271 SPEEDOMETER DRIVE and DRIVEN GEAR APPLICATION CHART — Cont'd

$ Part of transmission output shaft

1973

3.50 REAR AXLE RATIO

ENGINE CYL.	ENGINE C.I.D. (C.C.D.)	TRANS.	TIRE SIZE	REMARKS	DRIVE GEAR	DRIVEN GEAR REGULAR	DRIVEN GEAR P/C,TAXI or RENTAL
8	351,400 429,460	C6	F60 x 15,F70 x 14,F78, x 14, F78 x 15,G60 x 15,G70 x 14, G78 x 14,G78 x 15,H70 x 14, H78 x 14,HR78 x 14, 8.25 x 15		$-8 teeth	D00Z 17271-B	D00Z 17271-B
8	351	4/M/T	E78 x 14,F60 x 15,F70 x 14, F78 x 14,G60 x 15,G70 x 14, 7.35 x 14,7.75 x 14 8.25 x 14		C4DZ 17285-A	C4DZ 17271-A	C4DZ 17271-A
8	351	4/M/T	E70 x 14		C4DZ 17285-A	C2DZ 17271-H	C2DZ 17271-H
8	351	4/M/T	F78 x 15,G78 x 14,HR78 x 14		C4DZ 17285-A	C2DZ 17271-F	C4DZ 17271-A
8	351	4/M/T	G78 x 15,H70 x 14,H78 x 14, 8.25 x 15		C4DZ 17285-A	C2DZ 17271-F	C2DZ 17271-F

3.91 REAR AXLE RATIO

8	351	C6	E78 x 14,F60 x 15,F70 x 14, F78 x 14,7.35 x 14,7.75 x 14	‡	$-8 teeth	C7SZ 17271-A	C7SZ 17271-A
8	351	C6	E70 x 14	‡	$-8 teeth	C7SZ 17271-A	C7SZ 17271-B
8	351	C6	G80 x 15	‡	$-8 teeth	D0AZ 17271-B	C7SZ 17271-B
8	351	4/M/T	E78 x 14,F60 x 15,F70 x 14, F78 x 14,G60 x 15,7.35 x 14, 7.75 x 14	%	C4DZ 17285-A	C2DZ 17271-J	C2DZ 17271-J
8	351	4/M/T	E70 x 14	%	C4DZ 17285-A	C2DZ 17271-J	C2DZ 17271-G

ENGINE CYL.	ENGINE C.I.D. (C.C.D.)	TRANS.	TIRE SIZE	REMARKS	DRIVE GEAR	DRIVEN GEAR REGULAR	DRIVEN GEAR P/C,TAXI or RENTAL
	17271		SPEEDOMETER DRIVE and DRIVEN GEAR APPLICATION CHART — Cont'd $ Part of transmission output shaft				
			1974				
	2.75		**REAR AXLE RATIO**				
6&8	All	C4,C6	E70 x 14,E78 x 14		$-8 teeth	C7SZ 17271-B	C7SZ 17271-B
6&8	All	A/T	F70 x 14,F78 x 14,G70 x 14, G78 x 14,H70 x 14, HR78 x 14,F60 x 15, F78 x 15,G60 x 15,G78 x 15		$-8 teeth	C7SZ 17271-A	C7SZ 17271-A
8	460	C6	225 x 15,230 x 15,235R x 15, LR78 x 15,H78 x 15		$-9 teeth	C7SZ 17271-B	C7SZ 17271-B
6&8	All	A/T	H78 x 14,HR70 x 15, H78 x 15,HR78 x 15, J78 x 15,JR78 x 15, L78 x 15,LR78 x 15, 225 x 15		$-8 teeth	D0AZ 17271-B	D0AZ 17271-B
8	302	3/M/T	E78 x 14		C80Z 17285-B	C0DD 17271-B	C0DD 17271-B
8	302	3/M/T	H78 x 14		C80Z 17285-B	C0DD 17271-A	C0DD 17271-A
8	302	3/M/T	E70 x 14		C80Z 17285-B	C7SZ 17271-B	C7SZ 17271-B
8	302	3/M/T	F70 x 14,F78G x 14,G70 x 14, G78 x 14,H70 x 14 HR78 x 14,F60 x 15,		C80Z 17285-B	C3DZ 17271-B	
	2.79		**REAR AXLE RATIO**				
6&8	All	C4	B78 x 14,6.45 x 14		$-8 teeth	C7VY 17271-A	C7VY 17271-A
6&8	All	C4	6.00 x 13		$-8 teeth	C8SZ 17271-B	C8SZ 17271-B
6&8	All	C4	C78 x 14,D70 x 14,D78 x 14, DR78 x 14,ER70 x 14, 185 x 14		$-8 teeth	C7SZ 17271-B	C7SZ 17271-B
6&8	All	3/M/T	6.45 x 14,B78 x 14		C80Z 17285-B	C0DZ 17271-B	C0DZ 17271-B
6&8	All	3/M/T	6.45 x 14,B78 x 14		C80Z 17285-B	C1DD 17271-A	C2DD 17271-A
6&8	all	3/M/T	C78 x 14,D70 x 14,D78 x 14, DR78 x 14,ER70 x 14, 185 x 14		C80Z 17285-B	C0DD 17271-B	C0DD 17271-B
	3.00		**REAR AXLE RATIO**				
6&8	All	C4,C6, CM	E70 x 14,ER70 x 14, E78 x 14,F70 x 14,F78 x 14, G70 x 14,185 x 14		$-8 teeth	C7VY 17271-A	C7VY 17271-A
6&8	All	A/T	G78 x 14,H70 x 14,H78 x 14, HR78 x 14,F60 x 15, F78 x 15,G60 x 15,G78 x 15, HR70 x 15,H78 x 15, HR78 x 15		$-8 teeth	C7SZ 17271-B	C7SZ 17271-B
8	All	A/T	J78 x 15,JR78 x 15, L78 x 15,LR78 x 15, 225 x 15		$-8 teeth	C7SZ 17271-A	C7SZ 17271-A

COPYRIGHT © 1986 — FORD MOTOR COMPANY — DEARBORN, MICHIGAN

1973/79 LINCOLN-MERCURY CARS

ENGINE CYL.	ENGINE C.I.D. (C.C.D.)	TRANS.	TIRE SIZE	REMARKS	DRIVE GEAR	DRIVEN GEAR REGULAR	DRIVEN GEAR P/C,TAXI or RENTAL
17271			SPEEDOMETER DRIVE and DRIVEN GEAR APPLICATION CHART — Cont'd $ Part of transmission output shaft				
			1974				
			3.00 REAR AXLE RATIO — Cont'd				
6&8	All	C4	B78 x 14,C78 x 14,D70 x 14, D78 x 14,DR78 x 14, 6.45 x 14		$-8 teeth	C8SZ 17271-B	C8SZ 17271-B
6&8	All	C4	6.00 x 13		$-8 teeth	D00Z 17271-B	D00Z 17271-B
8	460P/C	C6	F78 x 15		$-9 teeth	D00Z 17271-B	D00Z 17271-B
8	460P/C	C6	G78 x 15,H78 x 15, HR70 x 15		$-9 teeth	C8SZ 17271-B	C8SZ 17271-B
8	460	C6	J78 x 15, JR78 x 15, L78 x 15,LR78 x 15, 235R x		$-9 teeth	C7VY 17271-A	C7VY 17271-A
8	302	3/M/T	G78 x 14,H70 x 14,H78 x 14, HR78 x 14,F78 x 15, G60 x 15,G78 x 15		C80Z 17285-B	C0DD 17271-B	C0DD 17271-B
6&8	200,250, 302	3/M/T	E70 x 14,ER70 x 14, E78 x 14,F70 x 14,F78 x 14, G70 x 14,185 x 14,F60 x 15		C80Z 17285-B	C0DZ 17271-B	C0DZ 17271-B
6&8	All	3/M/T	6.00 x 13		C80Z 17285-B	C40Z 17271-A	C40Z 17271-A
6&8	All	3/M/T	B78 x 14,C78 x 14,D70 x 14, D78 x 14,DR78 x 14, 6.45 x 14		C80Z 17285-B	C1DD 17271-A	C1DD 17271-A
8	460	C6	225 x 15,230 x 15		$-9 teeth	C8SZ 17271-B	C8SZ 17271-B
			3.07 REAR AXLE RATIO				
8	351,400 460	C4,C6, C/M	F78 x 15		$-8 teeth	C7VY 17271-A	C7VY 17271-A
8	351,400 460	C4,C6	G78 x 15,H78 x 15, HR70 x 15,HR78 x 15, J78 x 15,JR78 x 15, L78 x 15,LR78 x 15, 225 x 15		$-8 teeth	C7SZ 17271-B	C7SZ 17271-B
			3.22 REAR AXLE RATIO				
6	⊕171	4/M/T	185 x 13		D2RY 17285-B	D4RY 17271-A	D4RY 17271-A
6	⊕171	C4	185 x 13		$	C7SZ 17271-A	C7SZ 17271-A
			3.25 REAR AXLE RATIO				
6&8	All	C4,C6, C/M	E70 x 14,E78 x 14		$-8 teeth	D00Z 17271-B	D00Z 17271-B
6&8	All	A/T	F70 x 14,F78 x 14,G70 x 14, G78 x 14,H70 x 14, HR78 x 14,F60 x 15, F78 x 15,G60 x 15		$-8 teeth	C8SZ 17271-B	C8SZ 17271-B
6&8	All	A/T	H78 x 14,G78 x 15, HR70 x 15,H78 x 15, HR78 x 15,J78 x 15, JR78 x 15,LR78 x 15, 225 x 15,8.55 x 15		$-8 teeth	C7VY 17271-A	C7VY 17271-A
8	All	A/T	L78 x 15		$-8 teeth	C7SZ 17271-B	C7SZ 17271-B

ENGINE CYL.	ENGINE C.I.D. (C.C.D.)	TRANS.	TIRE SIZE	REMARKS	DRIVE GEAR	DRIVEN GEAR REGULAR	DRIVEN GEAR P/C,TAXI or RENTAL
17271			SPEEDOMETER DRIVE and DRIVEN GEAR APPLICATION CHART — Cont'd $ Part of transmission output shaft				
			1974				
	3.25		**REAR AXLE RATIO — Cont'd**				
8	460	C6	H78 x 15,LR78 x 15, 225 x 15,230 x 15,235R x 15		$-9 teeth	D00Z 17271-B	D00Z 17271-B
8	302	3/M/T	E70 x 14,E78 x 14		C80Z 17285-B	C40Z 17271-A	C40Z 17271-A
8	302	3/M/T	F70 x 14,F78 x 14,G70 x 14 G78 x 14,H70 x 14, HR78 x 14,F60 x 15, F78 x 15,G70 x 15		C80Z 17285-B	C1DD 17271-A	C1DD 17271-A
8	302	3/M/T	H78 x 14,G78 x 15,8.55 x 15		C80Z 17285-B	C0DZ 17271-B	C0DZ 17271-B
	3.40		**REAR AXLE RATIO**				
4& 6	All	A/T	A70 x 13,A78 x 13,BR70 x 13 BR78 x 13,CR70 x 13, 6.00 x 13,175 x 13,175R x 13		$-6 teeth	C7SZ 17271-B	C7SZ 17271-B
4& 6	All	A/T	B78 x 13,185 x 13		$-6 teeth	C7SZ 17271-A	C7SZ 17271-A
4& 6	All	4/M/T	A70 x 13,A78 x 13,BR70 x 13, BR78 x 13,CR70 x 13, 6.00 x 13,175 x 13175R x 13		D1FZ 17285-A	C0DD 17271-B	C0DD 17271-B
4& 6	All	4/M/T	B78 x 13,185 x 13		D1FZ 17285-A	C3DZ 17271-B	C3DZ 17271-B
	3.44		**REAR AXLE RATIO**				
4	▲122	C4	165 x 13,185 x 13		$	C7SZ 17271-B	C7SZ 17271-B
4	▲122	4/M/T	165 x 13,185 x 13		★ D1RY 17285-C	★ D1RY 17271-A r/b D5RY 17271-A(12/75)	★ D1RY 17271-A r/b D5RY 17271-A(12/75)
	3.50		**REAR AXLE RATIO**				
6& 8	All	C4,C6, C/M	E70 x 14,E78 x 14,F70 x 14 F78 x 14,G70 x 14,G78 x 14, H70 x 14,H78 x 14, HR78 x 14,F78 x 15, G60 x 15,G78 x 15		$-8 teeth	D00Z 17271-B	D00Z 17271-B
	3.55		**REAR AXLE RATIO**				
4& 6	All	A/T	A70 x 13,A78 x 13,BR70 x 13, BR78 x 13,CR78 x 13, 6.00 x 13,175 x 13,175R x 13		$-6 teeth	C7VY 17271-A	C7VY 17271-A
4& 6	All	A/T	B78 x 13,185 x 13		$-6 teeth	C7SZ 17271-B	C7SZ 17271-B
4& 6	All	4/M/T	A70 x 13,A78 x 13,BR70 x 13, BR78 x 13,BR70 x 13, 6.00 x 13,175 x 13,175R x 13		B7C 17285-A	C0DZ 17271-B	C0DZ 17271-B
4& 6	All	4/M/T	B78 x 13, 185 x 13		B7C 17285-A	C0DD 17271-B	C0DD 17271-B

COPYRIGHT © 1986 — FORD MOTOR COMPANY — DEARBORN, MICHIGAN

1973/79 LINCOLN-MERCURY CARS

ENGINE CYL.	ENGINE C.I.D. (C.C.D.)	TRANS.	TIRE SIZE	REMARKS	DRIVE GEAR	DRIVEN GEAR REGULAR	DRIVEN GEAR P/C,TAXI or RENTAL
	17271		SPEEDOMETER DRIVE and DRIVEN GEAR APPLICATION CHART $ Part of transmission output shaft				
1975							
2.75 REAR AXLE RATIO							
8	All	A/T	230 x 15,HR70 x 15, H78 x 15,HR78 x 15, J78 x 15,JR78 x 15, LR78 x 15		$-8 teeth	D0AZ 17271-B	D0AZ 17271-B
6& 8	All	A/T	G70 x 14,F78 x 14,H70 x 14, H78 x 14,HR78 x 14, JR78 x 14		$-8 teeth	C7SZ 17271-A	C7SZ 17271-A
8	460	C6	230 x 15,235 x 14, LR78 x 15		$-9 teeth	C7SZ 17271-B	C7SZ 17271-B
3.00 REAR AXLE RATIO							
8	All	A/T	G78 x 14,H70 x 14, HR70 x 15,H78 x 14, H78 x 15,HR78 x 14, HR78 x 15,JR78 x 14, JR78 x 15		$-8 teeth	C7SZ 17271-B	C7SZ 17271-B
8	All	A/T	230 x 15,H78 x 15, J78 x 15,LR78 x 15		$-8 teeth	C7SZ 17271-A	C7SZ 17271-A
8	460	C6	235 x 15,LR78 x 15		$-9 teeth	C7VY 17271-A	C7VY 17271-A
8	460	C6	230 x 15,JR70 x 15, J78 x 15,JR78 x 15		$-9 teeth	C8SZ 17271-B	C8SZ 17271-B
6& 8	All	A/T	E78 x 14,FR78 x 14, G70 x 14		$-8 teeth	C7VY 17271-A	C7VY 17271-A
6& 8	All	A/T	BR78 x 14,C78 x 14, CR78 x 14,DR70 x 14, DR78 x 14,ER78 x 14		$-8 teeth	C8SZ 17271-B	C8SZ 17271-B
6& 8	200,250 302	3/M/T	BR78 x 14,C78 x 14, CR78 x 14,DR70 x 14, DR78 x 14,ER78 x 14		C80Z 17285-B	C1DD 17271-A	C1DD 17271-A
6& 8	200,250 302	3/M/T	E78 x 14FR78 x 14		C80Z 17285-B	C0DZ 17271-B	C0DZ 17271-B
3.07 REAR AXLE RATIO							
8	All	A/T	230 x 15,H78 x 15 HR70 x 15,HR78 x 15, J78 x 15,JR78 x 15, LR78 x 15		$-8 teeth	C7SZ 17271-B	C7SZ 17271-B
6& 8	All	A/T	DR78 x 14,E78 x 14, ER78 x 14,FR78 x 14		$-8 teeth	C8SZ 17271-B	C8SZ 17271-B
6& 8	200,250 302	3/M/T	DR78 x 14,E78 x 14 ER78 x 14,FR78 x 14		C80Z 17285-B	C1DD 17271-A	C1DD 17271-A
3.22 REAR AXLE RATIO							
6	⊕171	C4	185 x 13		$	C7SZ 17271-A	C7SZ 17271-A
6	⊕171	4/M/T	185 x 13		D2RY 17285-B	D4RY 17271-A	D4RY 17271-A
3.25 REAR AXLE RATIO							
8	All	A/T	230 x 15,HR70 x 15, H78 x 15,HR78 x 15, JR70 x 15,J78 x 15, JR78 x 15,LR78 x 15		$-8 teeth	C7VY 17271-A	C7VY 17271-A

COPYRIGHT © 1986 — FORD MOTOR COMPANY — DEARBORN, MICHIGAN

1973/79 LINCOLN-MERCURY CARS

17271 SPEEDOMETER DRIVE and DRIVEN GEAR APPLICATION CHART — Cont'd

$ Part of transmission output shaft

1975

3.25 REAR AXLE RATIO — Cont'd

ENGINE CYL.	ENGINE C.I.D. (C.C.D.)	TRANS.	TIRE SIZE	REMARKS	DRIVE GEAR	DRIVEN GEAR REGULAR	DRIVEN GEAR P/C,TAXI or RENTAL
8	All	A/T	G70 x 14,G78 x 14, H70 x 14,H78 x 14, HR78 x 14,JR78 x 14		$-8 teeth	C8SZ 17271-B	C8SZ 17271-B
8	460P/C	C6	H78 x 15		$-8 teeth	C8SZ 17271-B	C8SZ 17271-B

3.40 REAR AXLE RATIO

ENGINE CYL.	ENGINE C.I.D. (C.C.D.)	TRANS.	TIRE SIZE	REMARKS	DRIVE GEAR	DRIVEN GEAR REGULAR	DRIVEN GEAR P/C,TAXI or RENTAL
4& 6	140 171	C3,C4	175 x 13,BR70 x 13, B78 x 13,BR78 x 13		$-6 teeth	C7SZ 17271-B	C7SZ 17271-B
4	140	4/M/T	175 x 13,BR70 x 13, B78 x 13,BR78 x 13		D1FZ 17285-A	C0DD 17271-B	C0DD 17271-B

3.55 REAR AXLE RATIO

ENGINE CYL.	ENGINE C.I.D. (C.C.D.)	TRANS.	TIRE SIZE	REMARKS	DRIVE GEAR	DRIVEN GEAR REGULAR	DRIVEN GEAR P/C,TAXI or RENTAL
4& 6	140 171	C3,C4	BR70 x 13, BR78 x 13		$-6 teeth	C7VY 17271-A	C7VY 17271-A
4& 6	140 171	C3,C4	175 x 13,B78 x 13, CR70 x 13		$-6 teeth	C7SZ 17271-B	C7SZ 17271-B
4	140	4/M/T	BR70 x 13,BR78 x 13		D1FZ 17285-A	C0DZ 17271-B	C0DZ 17271-B
4	140	4/M/T	175 x 13,B78 x 13, CR70 x 13		D1FZ 17285-A	C0DD 17271-B	C0DD 17271-B

ENGINE CYL.	ENGINE C.I.D. (C.C.D.)	TRANS.	TIRE SIZE	REMARKS	DRIVE GEAR	DRIVEN GEAR REGULAR	DRIVEN GEAR P/C,TAXI or RENTAL
	17271		SPEEDOMETER DRIVE and DRIVEN GEAR APPLICATION CHART $ Part of transmission output shaft @ 2300 cc ⊕ 2800 cc ☆ (RAD) 4/M/T				
			1976				
	2.75		**REAR AXLE RATIO**				
8	All	A/T	230 x 15,HR70 x 15,H78 x 15, HR78 x 15,J78 x 15, JR78 x 15,LR78 x 15		$8-teeth	D0AZ 17271-B	D0AZ 17271-B
8	All	A/T	G70 x 14,G78 x 14,H70 x 14, H78 x 14,H78 x 15, HR78 x 14,JR78 x 14		$8-teeth	C7SZ 17271-A	C7SZ 17271-A
8	460	C6	225 x 15,230 x 15,235R x 15, JR78 x 15,LR78 x 15		$9-teeth	C7SZ 17271-B	C7SZ 17271-B
6& 8	All	C4	DR78 x 14,E78 x 14, ER78 x 14,FR78 x 14		$8-teeth	C7SZ 17271-B	C7SZ 17271-B
6& 8	200,250 302	3/M/T	DR78 x 14,E78 x 14, ER78 x 14,FR78 x 14		C80Z 17285-B	C0DD 17271-B	C0DD 17271-B
	2.79		**REAR AXLE RATIO**				
4& 6& 8	All	C3,C4	175 x 13,195/70R x 13, BR70 x 13,B78 x 13, BR78 x 13,BR78 x 14, CR70 x 13,CR78 x 14		$8-teeth	C7VY 17271-A	C7VY 17271-A
6& 8	All	C4	185 x 14,C78 x 14, DR70 x 14,DR78 x 14, E78 x 14,ER78 x 14, FR78 x 14		$8-teeth	C7SZ 17271-B	C7SZ 17271-B
6& 8	200,250 302	3/M/T	BR78 x 14,CR78 x 14		C80Z 17285-B	C0DZ 17271-B	C0DZ 17271-B
6& 8	200,250 302	3/M/T	185 x 14,C78 x 14, DR70 x 14,DR78 x 14, E78 x 14,ER78 x 14, FR78 x 14		C80Z 17285-B	C0DD 17271-B	C0DD 17271-B
4	@140	☆4/M/T	175 x 13,195/70R x 13, BR70 x 13,BR78 x 13, CR70 x 13		C80Z 17285-B	C0DZ 17271-C	C0DZ 17271-C
	3.00		**REAR AXLE RATIO**				
6& 8	All	A/T	195/70R x 13,BR78 x 14, C78 x 14,CR78 x 14, DR70 x 14,DR78 x 14, ER78 x 14,JR70 x 15, J78 x 15,JR78 x 15		$8-teeth	C8SZ 17271-B	C8SZ 17271-B
4& 6	@140 ⊕171	A/T	175 x 13,BR70 x 13,B78 x 13, BR78 x 13,CR70 x 13		$8-teeth	D00Z 17271-B	D00Z 17271-B
6& 8	All	A/T	235 x 15,E78 x 14,FR78 x 14, G70 x 14,LR78 x 15		$8-teeth	C7VY 17271-A	C7VY 17271-A
8	All	A/T	215 x 15,G78 x 14,H70 x 14, HR70 x 15,H78 x 14,H78 x 15, HR78 x 14,HR78 x 15, J78 x 15,JR70 x 15, JR78 x 14,JR78 x 15		$8-teeth	C7SZ 17271-B	C7SZ 17271-B
8	All	A/T	230 x 15,235 x 15,H78 x 15, J78 x 15,LR78 x 15		$8-teeth	C7SZ 17271-A	C7SZ 17271-A
8	460	C6	235R x 15,LR78 x 15		$9-teeth	C7VY 17271-A	C7VY 17271-A
8	460	C6	225 x 15,230 x 15,JR78 x 15		$9-teeth	C8SZ 17271-B	C8SZ 17271-B

COPYRIGHT © 1986 — FORD MOTOR COMPANY — DEARBORN, MICHIGAN

1973/79 LINCOLN-MERCURY CARS

ENGINE CYL.	ENGINE C.I.D. (C.C.D.)	TRANS.	TIRE SIZE	REMARKS	DRIVE GEAR	DRIVEN GEAR REGULAR	DRIVEN GEAR P/C,TAXI or RENTAL
	17271		SPEEDOMETER DRIVE and DRIVEN GEAR APPLICATION CHART — Cont'd $ Part of transmission output shaft @ 2300 cc ⊕ 2800 cc ☆ (RAD) 4/M/T				
			1976				
	3.00		**REAR AXLE RATIO — Cont'd**				
6&8	200,250 302	3/M/T	BR78 x 14,C78 x 14, CR78 x 14,DR70 x 14, DR78 x 14,ER78 x 14		C80Z 17285-B	C1DD 17271-A	C1DD 17271-A
6&8	200,250 302	3/M/T	E78 x 14,FR78 x 14		C80Z 17285-B	C0DZ 17271-B	C0DZ 17271-B
4	@140	☆4/M/T	195/70R x 13		C80Z 17285-B	C1DD 17271-A	C1DD 17271-A
4	@140	☆4/M/T	175 x 13,BR70 x 13,B78 x 13, BR78 x 13,CR70 x 13		C80Z 17285-B	C40Z 17271-A	C40Z 17271-A
	3.07		**REAR AXLE RATIO**				
6&8	200,250 302	3/M/T	DR78 x 14,E78 x 14, ER78 x 14,FR78 x 14		C80Z 17285-B	C1DD 17271-A	C1DD 17271-A
6&8	All	C4	DR78 x 14,E78 x 14, ER78 x 14,FR78 x 14		$8-teeth	C8SZ 17271-B	C8SZ 17271-B
8	351M, 400,460	A/T	215 x 15,230 x 15, 235 x 15,H78 x 15, HR78 x 15,J78 x 15, JR78 x 15,LR70 x 15		$8-teeth	C7SZ 17271-B	C7SZ 17271-B
	3.09		**REAR AXLE RATIO**				
4&6	All	4/M/T	165 x 13,185 x 13		D2RY 17285-B	D5RY 17271-B	D5RY 17271-B
4&6	All	C3	165 x 13,185 x 13			C8SZ 17271-A	C8SZ 17271-A
	3.18		**REAR AXLE RATIO**				
4&6	All	A/T	195/70R x 13,B78 x 13, CR70 x 13		$6-teeth	D0AZ 17271-B	D0AZ 17271-B
4&6	All	A/T	175 x 13,BR70 x 13, BR78 x 13		$6-teeth	C7SZ 17271-A	C7SZ 17271-A
4	@140	☆4/M/T	195/70R x 13,B78 x 13, CR70 x 13		D0TZ 17285-A	C0DD 17271-A	C0DD 17271-A
4	@140	☆4/M/T	175 x 13,BR70 x 13,BR78 x 13		D0TZ 17285-A	C3DZ 17271-B	C3DZ 17271-B
4	@140	☆4/M/T	175 x 13,195/70R x 13, BR70 x 13,B78 x 13, BR78 x 13,CR70 x 13		D1FZ 17285-A	C0DD 17271-A	C0DD 17271-A
	3.22		**REAR AXLE RATIO**				
6	⊕171	4/M/T	165 x 13, 185 x 13		D2RY 17285-B	D4RY 17271-A	D4RY 17271-A
	3.25		**REAR AXLE RATIO**				
8	All	A/T	215 x 15,230 x 15,235 x 15, HR70 x 15,H78 x 15, HR78 x 15,JR70 x 15, J78 x 15,JR78 x 15,LR78 x 15		$8-teeth	C7VY 17271-A	C7VY 17271-A
8	All	A/T	G70 x 14,G78 x 14,H70 x 14, H78 x 14,H78 x 15,HR78 x 14		$8-teeth	C8SZ 17271-B	C8SZ 17271-B
	3.40		**REAR AXLE RATIO**				
4&6	All	A/T	175 x 13,BR70 x 13, B78 x 13,BR78 x 13		$6-teeth	C7SZ 17271-B	C7SZ 17271-B

ENGINE CYL.	ENGINE C.I.D. (C.C.D.)	TRANS.	TIRE SIZE	REMARKS	DRIVE GEAR	DRIVEN GEAR REGULAR	DRIVEN GEAR P/C,TAXI or RENTAL
	17271		SPEEDOMETER DRIVE and DRIVEN GEAR APPLICATION CHART — Cont'd $ Part of transmission output shaft @ 2300 cc ⊕ 2800 cc ☆ (RAD) 4/M/T ● German 4/M/T				
			1976				
	3.40		**REAR AXLE RATIO — Cont'd**				
4	@140	☆4/M/T	-75 x 13,BR70 x 13, B78 x 13,BR78 x 13		D0TZ 17285-A	C0DD 17271-B	C0DD 17271-B
4	@140	●4/M/T	175 x 13,BR70 x 13, B78 x 13,BR78 x 13		D1FZ 17285-A	C0DD 17271-B	C0DD 17271-B
	3.44		**REAR AXLE RATIO**				
4	@140	4/M/T	165 x 13,185 x 13		D2RY 17285-B	D5RY 17271-A	D5RY 17271-A
	3.55		**REAR AXLE RATIO**				
4&	All	A/T	BR70 x 13,BR78 x 13		$6-teeth	C7VY 17271-A	C7VY 17271-A
4& 6	All	A/T	175 x 13,B78 x 13, CR70 x 13		$6-teeth	C7SZ 17271-B	C7SZ 17271-B
4	@140	☆4/M/T	BR70 x 13,BR78 x 13		D0TZ 17285-A	C0DZ 17271-B	C0DZ 17271-B
4	@140	☆4/M/T	175 x 13,B78 x 13,CR70 x 13		D0TZ 17285-A	C0DD 17271-B	C0DD 17271-B
4	@140	●4/M/T	BR70 x 13,BR78 x 13		D1FZ 17285-A	C0DZ 17271-B	C0DZ 17271-B
4	@140	●4/M/T	175 x 13,B78 x 13,CR70 x 13		D1FZ 17285-A	C0DD 17271-B	C0DD 17271-B

COPYRIGHT © 1986 — FORD MOTOR COMPANY — DEARBORN, MICHIGAN

ENGINE CYL.	ENGINE C.I.D. (C.C.D.)	TRANS.	TIRE SIZE	REMARKS	DRIVE GEAR	DRIVEN GEAR REGULAR	DRIVEN GEAR P/C,TAXI or RENTAL
	17271		SPEEDOMETER DRIVE and DRIVEN GEAR APPLICATION CHART				
	Notes:		$ Part of transmission output shaft ★ (RAD) 4/M/T ● German 4/M/T ◊ Overdrive				
			1977				
	2.47		**REAR AXLE RATIO**				
8	All	A/T	HR78x15		$9-teeth	C7SZ 17271-A	C7SZ 17271-A
8	All	A/T	H78x15, J78x15, JR78x15, LR78x15		$9-teeth	D0AZ 17271-B	D0AZ 17271-B
6 8	All	C4,Jatco	DR78x14, ER78x14, FR78x14		$8-teeth	D0AZ 17271-B	D0AZ 17271-B
6 8	All 302 2/b	3/M/T	DR78x14, ER78x14, FR78x14		C80Z 17285-B	C0DD 17271-A	C0DD 17271-A
	2.50		**REAR AXLE RATIO**				
6	All	3/M/T	DR78x14,ER78x14, FR78x14		C80Z 17285-B	C0DD 17271-A	C0DD 17271-A
6&8	All	C4	DR78x14,ER78x14, FR78x14		$8-teeth	D0AZ 17271-B	D0AZ 17271-B
8	All	A/T	G70x14,G78x14, H70x14,H78x14, HR78x14,215x15, HR70x15,H78x15, HR78x15,JR78x15		$9-teeth	C7SZ 17271-A	C7SZ 17271-A
8	All	C6	225x15,230x15, KR78x15,LR78x15		$9-teeth	D0AZ 17271-B	D0AZ 17271-B
	2.73		**REAR AXLE RATIO**				
4&6	All	★4/M/T	195/70Rx13,A70x13, A78x13,B78x13, BR70x13,BR78x13, CR70x13		C80Z 17285-B	C0DZ 17271-B	C0DZ 17271-B
4&6	All	●4/M/T	195/70Rx13,A70x13, A78x13,B70x13, BR70x13,BR78x13 CR70x13		D7FZ 17285-A	C0DZ 17271-B	C0DZ 17271-B
	2.75		**REAR AXLE RATIO**				
8	All	A/T	215x15,225x15, 230x15,H78x15, HR70x15,HR78x15, J78x15,JR78x15, KR78x15,LR78x15		$-9teeth	C7SZ 17271-B	C7SZ 17271-B
	2.79		**REAR AXLE RATIO**				
6	All	3/M/T	C78x14,DR70x14, DR78x14		C80Z 17285-B	C0DD 17271-B	C0DD 17271-B
6	All	3/M/T	CR78x14		C80Z 17285-B	C0DZ 17271-B	C0DZ 17271-B
6&8	All	A/T	C78x14,DR70x14, DR78x14		$-8 teeth	C7SZ 17271-B	C7SZ 17271-B
6&8	All	A/T	CR78x14		$-8 teeth	C7VY 17271-A	C7VY 17271-A
	3.00		**REAR AXLE RATIO**				
6 8	All	★4/M/T	195/70x13		C80Z 17285-B	C1DD 17271-A	C1DD 17271-A
6 8	All	★4/M/T	A70x13,A78x13, B70x13,BR70x13, BR78x13,CR70x13		C80Z 17285-B	C40Z 17271-A	C40Z 17271-A

COPYRIGHT © 1986 — FORD MOTOR COMPANY — DEARBORN, MICHIGAN

ENGINE CYL.	ENGINE C.I.D. (C.C.D.)	TRANS.	TIRE SIZE	REMARKS	DRIVE GEAR	DRIVEN GEAR REGULAR	DRIVEN GEAR P/C,TAXI or RENTAL
	17271		SPEEDOMETER DRIVE and DRIVEN GEAR APPLICATION CHART — Cont'd				
	NOTES:		$ Part of transmission output shaft ★ (RAD) 4/M/T ● German 4/M/T ◊ Overdrive				
			1977				
	3.00		**REAR AXLE RATIO — Cont'd**				
6 8	All	◊4/M/T	DR78x14,ER78x14, FR78x14		C4DZ 17285-A	C2DZ 17271-G	C2DZ 17271-G
4&6 8	All	A/T	A70x13,A78x13 B70x13,BR70x13, BR78x13,CR70x13		$-8teeth	D00Z 17271-B	D00Z 17271-B
4&6 8	All	A/T	195/70x13,C78x14, CR78x14,DR70x14, DR78x14,ER78x14		$-8teeth	C8SZ 17271-B	C8SZ 17271-B
6 8	All	A/T	FR78x14		$-8teeth	C7VY 17271-A	C7VY 17271-A
8	All	A/T	235x15,LR78x15		$-9teeth	C7VY 17271-A	C7VY 17271-A
8	All	A/T	H78x14,215x15, 225x15,230x15, H78x15,HR70x15, HR78x15,J78x15, JR70x15,JR78x15, KR78x15		$-9teeth	C8SZ 17271-B	C8SZ 17271-B
8	All	A/T	G70x14,G78x14, H70x14,HR70x14		$-9teeth	D00Z 17271-B	D00Z 17271-B
4&6 8	All	A/T	A70x13,A78x13, B70x13,BR70x13 BR78x13,CR70x13		$-8teeth	D00Z 17271-B	D00Z 17271-B
	3.07		**REAR AXLE RATIO**				
6 8	All	A/T	DR78x14,ER78x14, FR78x14		$-8teeth	C8SZ 17271-B	C8SZ 17271-B
8	All	A/T	215x15,235x15, HR70x15,HR78x15, JR70x15,JR78x15, LR78x15		$-9teeth	C8SZ 17271-B	C8SZ 17271-B
8	All	A/T	H78x15,J78x15		$-9teeth	D00Z 17271-B	D00Z 17271-B
	3.18		**REAR AXLE RATIO**				
4&6 8	All	A/T	A70x13,A78x13, BR70x13,BR78x13, CR70x13		$-6teeth	C7SZ 17271-A	C7SZ 17271-A
4&6 8	All	A/T	195/70x13,B78x13		$-6teeth	D0AZ 17271-B	D0AZ 17271-B
4&6 8	All	★4/M/T	A70x13,A78x13,BR70x13, BR78x13,CR70x13		D0TZ 17285-A	C3DZ 17271-B	C3DZ 17271-B
4&6 8	All	★4M/T	195/70x13,B78x13		D0TZ 17285-A	C0DD 17271-A	C0DD 17271-A
4&6 8	All	●4/M/T	A70x13,A78x13,BR70x13, BR78x13,CR70x13		D1FZ 17285-A	C3DZ 17271-B	C3DZ 17271-B
4&6 8	All	●4/M/T	195/70x13,B78x13		D1FZ 17285-A	C0DD 17271-A	C0DD 17271-A
	3.40		**REAR AXLE RATIO**				
6 8	All	◊4/M/T	DR78x14,ER78x14, FR78x14		C4DZ 17285-A	C4DZ 17271-A	C4DZ 17271-A

ENGINE CYL.	ENGINE C.I.D. (C.C.D.)	TRANS.	TIRE SIZE	REMARKS	DRIVE GEAR	DRIVEN GEAR REGULAR	DRIVEN GEAR P/C,TAXI or RENTAL
	17271		SPEEDOMETER DRIVE and DRIVEN GEAR APPLICATION CHART-				
	NOTES:		$ Part of transmission output shaft ★ (RAD) 4/M/T ● German 4/M/T ◊ Overdrive				
			1978				
	2.47		**REAR AXLE RATIO**				
	All	A/T	E78 x 14, CR78 x 14, DR78 x 14, ER78 x 14, FR78 x 14,		$8-teeth	D0AZ 17271-B	D0AZ 17271-B
	All	A/T	HR70 x 15, JR70 x 15, H78 x 15, J78 x 15, JR78 x 15, LR78 x 15, 235 x 15		$9-teeth	D0AZ 17271-B	D0AZ 17271-B
	All	A/T	HR78 x 15, B78 x 14, BR78 x 14		$9-teeth	C7SZ 17271-A	C7SZ 17271-A
	All	3/M/T	C78 x 14, DR78 x 14		D8TZ 17285-A	C2DZ 17271-J	C2DZ 17271-J
			CR78 x 15		D8TZ 17285-A	C2DZ 17271-G	C2DZ 17271-G
	2.50		**REAR AXLE RATIO**				
	All	A/T	DR78 x 14		$8-teeth	C7SZ 17271-A	C7SZ 17271-A
			ER78 x 14, FR78 x 14		$8-teeth	D0AZ 17271-B	D0AZ 17271-B
			G70 x 14, G78 x 14, H70 x 14, 215 x 15, H78 x 14, HR78 x 14, JR78 x 14, HR70 x 15, H78 x 15, HR78 x 15, JR78 x 15, GR78 x 15		$9-teeth	C7SZ 17271-A	C7SZ 17271-A
	All	A/T	225 x 15, 230 x 15, J78 x 15, LR78 x 15		$9-teeth	D0AZ 17271-B	D0AZ 17271-B
	2.73		**REAR AXLE RATIO**				
	All	A/T	B78 x 14, C78 x 14, CR78 x 14, DR78 x 14, BR78 x 14		$8-teeth	C7SZ 17271-B	C7SZ 17271-B
					$8-teeth	C7VY 17271-A	C7VY 17271-A
	All	3/M/T	B78 x 14, C78 x 14, CR78 x 14, DR78 x 14, BR78 x 14		D8TZ 17285-A	C2DZ 17271-F	C2DZ 17271-F
					D8TZ 17285-A	D4DZ 17271-A	D4DZ 17271-A
	All	●4/M/T	195/70R x 13		D8FZ 17285-A	C0DD 17271-A	C0DD 17271-A
			A70 x 13, BR70 x 13, A78 x 13, B78 x 13, BR78 x 13		D8FZ 17285-A	C3DZ 17271-A	C3DZ 17271-A
	2.75		**REAR AXLE RATIO**				
	All	A/T	DR78 x 14, ER78 x 14, FR78 x14		$8-teeth	C7SZ 17271-B	C7SZ 17271-B
			215 x 15, 275 x 15, 230 x 15, 235 x 15, HR70 x 15, JR70 x 15, H78 x 15, HR78 x 15, J78 x 15, JR78 x 15, LR78 x 15		$9-teeth	C7SZ 17271-B	C7SZ 17271-B
	All	A/T	G70 x 14, H70 x 14, G78 x 14, H78 x 14, HR78 x 14, JR78 x 14, GR78 x 15		$9-teeth	C7VY 17271-A	C7VY 17271-A
	2.79		**REAR AXLE RATIO**				
	All	A/T	DR78 x 14, ER78 x 14, FR78 x 14		$8-teeth	C7SZ 17271-B	C7SZ 17271-B
	2.92		**REAR AXLE RATIO**				
	All	A/T	195/70R x 13, A70 x 13, BR70 x 13, A78 x 13, B78 x 15, BR78 x 15		$8-teeth	C8SZ 17271-B	C8SZ 17271-B

COPYRIGHT © 1986 — FORD MOTOR COMPANY — DEARBORN, MICHIGAN

17271 SPEEDOMETER DRIVE and DRIVEN GEAR APPLICATION CHART- — Cont'd

NOTES: $ Part of transmission output shaft ★ (RAD) 4/M/T ● German 4/M/T ◊ Overdrive

1978

3.00 REAR AXLE RATIO

ENGINE CYL.	ENGINE C.I.D. (C.C.D.)	TRANS.	TIRE SIZE	REMARKS	DRIVE GEAR	DRIVEN GEAR REGULAR	DRIVEN GEAR P/C,TAXI or RENTAL
All		A/T	FR78 x 14 235 x 15, LR78 x 15 H78 x 15, HR78 x 15, J78 x 15, JR78 x 15 215 x 15, HR70 x 15, HR78 x 15		$8-teeth $9-teeth $9-teeth $9-teeth	C7VY 17271-A C7VY 17271-A C8SZ 17271-A C8SZ 17271-B	C7VY 17271-A C7VY 17271-A C8SZ 17271-B C8SZ 17271-B
All		A/T	DR78 x 14, ER78 x 14 225 x 15, 230 x 15 JR70 x 15, J78 x 15, JR78 x 15 H78 x 14, JR78 x 14 G70 x 14, H70 x 14, G78 x 14, HR78 x 14		$8-teeth $9-teeth	C8SZ 17271-B C8SZ 17271-B	C8SZ 17271-B C8SZ 17271-B
All		3/M/T	DR78 x 14, ER78 x 14 FR78 x 14		C80Z 17285-B C80Z 17285-B	C1DD 17271-A C0DZ 17271-B	C1DD 17271-A C0DZ 17271-B
All		4/M/T	195/70R x 13 A70 x 13, BR70 x 13, A78 x 13, B78 x 13, BR78 x 13		C80Z 17285-B C80Z 17285-B	C1DD 17271-A C40Z 17271-A	C1DD 17271-A C40Z 17271-A

3.08 REAR AXLE RATIO

All		A/T	C78 x 14, DR78 x 14 CR78 x 14, B78 x 14, BR78 x 14		$8-teeth $8-teeth	C8SZ 17271-B D00Z 17271-B	C8SZ 17271-B D00Z 17271-B
All		3/M/T	C78 x 14, DR78 x 14 CR78 x 14		D8TZ 17285-A D8TZ 17285-A	C2DZ 17271-H C40Z 17271-A	C2DZ 17271-H C40Z 17271-A
All		●4/M/T	C78 x 14, DR78 x 14 CR78 x 14 B78 x 14, BR78 x 14 195/70R x 13, A70 x 13, A78 x 13, B78 x 13, BR70 x 13, BR78 x 13		D7FZ 17285-A D7FZ 17285-A D7FZ 17285-A D8FZ 17285-A	C1DD 17271-A C40Z 17271-A C40Z 17271-A C0DZ 17271-B	C1DD 17271-A C40Z 17271-A C40Z 17271-A C0DZ 17271-B

3.18 REAR AXLE RATIO

All		C3	195/70R x 13		$6-teeth	D0AZ 17271-B	D0AZ 17271-B
All			A70 x 13, BR70 x 13, A78 x 13, B78 x 13, BR78 x 13		$6-teeth	C7SZ 17271-A	C7SZ 17271-A
All		C4	195/70R x 13, A70 x 13, BR70 x 13, A78 x 13, B78 x 13, BR78 x 13		$7-teeth	C7VY 17271-A	C7VY 17271-A
All		●4/M/T	195/70R x 13, A70 x 13, BR70 x 13, A78 x 13, B78 x 13, BR78 x 13		D8FZ 17285-A	C0DZ 17271-B	C0DZ 17271-B
All		★4/M/T	195/70R x 13, A70 x 13, BR70 x 13, A78 x 13, B78 x 13, BR78 x 13		C30Z 17285-C	C0DZ 17271-B	C0DZ 17271-B

3.40 REAR AXLE RATIO

All		C3	195/70R x 13, A70 x 13, BR70 x 13, A78 x 13, B78 x 13, BR78 x 13		$6-teeth	C7SZ 17271-B	C7SZ 17271-B
All		C4	195/70R x 13, A70 x 13, BR70 x 13, A78 x 13, B78 x 13, BR78 x 13		$7-teeth	D00Z 17271-B	D00Z 17271-B

17271 SPEEDOMETER DRIVE and DRIVEN GEAR APPLICATION CHART

NOTES: $ Part of transmission output shaft, ▲ (RAD or RUG) 4/M/T, ● German 4/M/T, ♦ Overdrive, ⊕ 390mm wheel diameter

1979

ENGINE CYL.	ENGINE C.I.D. (C.C.D.)	TRANS.	TIRE SIZE	REMARKS	DRIVE GEAR	DRIVEN GEAR REGULAR	DRIVEN GEAR P/C,TAXI or RENTAL
2.26 REAR AXLE RATIO							
All	All	A/T	R70 x 14P,B78 x 14, BR78 x 14, C78 x 14, CR78 x 14, DR78 x 14, 195/70 x HR14		$9-teeth	C7SZ 17271-A	C7SZ 17271-A
			FR78 x 14, G78 x 14, GR78 x 14, HR78 x 14,GR70 x 15P, ⊕ 215/65R x 15		$9-teeth	D0AZ 17271-B	D0AZ 17271-B
2.47 REAR AXLE RATIO							
All	All	A/T	B78 x 13, C78 x 13, P185/80R x 13, B78 x 14, BR78 x 14, C78 x 14, CR78 x 14, ⊕190/65R x 15		$8-teeth	C7SZ 17271-A	C7SZ 17271-A
			G70 x 14, G78 x 14, H70 x 14, H78 x 14, HR78 x 14, GR78 x 14, H78 x 15P, HR70 x 15, HR78 x 15		$9-teeth	C7SZ 17271-A	C7SZ 17271-A
			DR78 x 14, ER78 x 14, FR78 x 14		$8-teeth	D0AZ 17271-B	D0AZ 17271-B
			HR70 x 15P, LR78 x 15, 215 x 15P, 225 x 15, 230 x 15		$9-teeth	D0AZ 17271-B	D0AZ 17271-B
2.50 REAR AXLE RATIO							
All	All	A/T	DR78 x 14, G70 x 14, G78 x 14, H70 x 14, H78 x 14, HR78 x 14, GR78 x 15, H78 x 15, HR70 x 15, HR78 x 15, JR78 x 15, 215 x 15		$9-teeth	C7SZ 17271-A	C7SZ 17271-A
			ER78 x 14, FR78 x 14, LR78 x 15, 225 x 15, 230 x 15		$8-teeth	D0AZ 17271-B	D0AZ
2.73 REAR AXLE RATIO							
All	All	C3	B78 x 14, BR78 x 14, C78 x 14, CR78 x 14, DR78 x 14		$7-teeth	D0AZ 17271-B	D0AZ 17271-B
All	All	C4	B78 x 14, C78 x 14, CR78 x 14, DR78 x 14		$8-teeth	C7SZ 17271-B	C7SZ 17271-B
			BR78 x 14		$8-teeth	C7VY 17271-A	C7VY 17271-A
			DR70 x 14P, DR78 x 14P		$8-teeth	C8SZ 17271-B	C8SZ 17271-B
			195/70 x HR14		$8-teeth	D00Z 17271-B	D00Z 17271-B
All	All	C6,FMX	GR70 x 15P, FR78 x 14, G78 x 14, GR78 x 14, 478 x 14, HR278 x 14, ⊕ 215/65R x 15		$8-teeth	C7SZ 17271-A	C7SZ 17271-B
All	All	● 4/M/T	A70 x 13, A78 x 13, B78 x 13, BR70 x 13, BR78 x 13		D8FZ 17285-A	C3DZ 17271-B	C3DZ 17271-B
			195/70R x 13		D8FZ 17285-A	C0DD 17271-A	C0DD 17271-A
All	All	♦ 4/M/T	B78 x 14, BR78 x 14, C78 x 14, CR78 x 14, DR78 x 14		C4DZ 17285-A	C2DZ 17271-J	C2DZ 17271-J

COPYRIGHT © 1986 — FORD MOTOR COMPANY — DEARBORN, MICHIGAN

1973/79 LINCOLN-MERCURY CARS

ENGINE CYL.	ENGINE C.I.D. (C.C.D.)	TRANS.	TIRE SIZE	REMARKS	DRIVE GEAR	DRIVEN GEAR REGULAR	DRIVEN GEAR P/C,TAXI or RENTAL
	17271		SPEEDOMETER DRIVE and DRIVEN GEAR APPLICATION CHART — Cont'd				
	NOTES:		$ Part of transmission output shaft, ▲ (RAD or RUG) 4/M/T, ● German 4/M/T, ♦ Overdrive, ⊕ 390mm wheel diameter				
2.75			**REAR AXLE RATIO**				
All	All	A/T	BR70 x 15, HR70 x 15, HR78 x 15, JR78 x 15, LR78 x 15, 215 x 15, 225 x 15, 230 x 15		$9-teeth	C7SZ 17271-B	C7SZ 17271-B
			G70 x 14, G78 x 14, H70 x 14, H78 x 14, HR78 x 14, GR78 x 15, H78 x 15		$9-teeth	C7VY 17271-A	C7VY 17271-A
2.79			**REAR AXLE RATIO**				
All	All	A/T	DR78 x 14, ER78 x 14, FR78 x 14		$8-teeth	C7SZ 17271-B	C7SZ 17271-B
3.00			**REAR AXLE RATIO**				
All	All	A/T	G70 x 14, FR78 x 14		$8-teeth	C7VY 17271-A	C7VY 17271-A
			H70 x 14, G78 x 14, H78 x 14, HR78 x 14, HR70 x 15, GR78 x 14, HR78 x 15		$8-teeth	C7SZ 17271-B	C7SZ 17271-A
			DR78 x 14, ER78 x 14		$8-teeth	C8SZ 17271-B	C8SZ 17271-B
			LR78 x 15		$9-teeth	C7VY 17271-A	C7VY 17271-A
			225 x 15, 230 x 15		$9-teeth	C8SZ 17271-B	C8SZ 17271-B
All	All	♦ 4/M/T	DR78 x 14, ER78 x 14, FR78 x 14		C4DZ 17285-A	C2DZ 17271-G	C2DZ 17271-G
3.08			**REAR AXLE RATIO**				
All	All	C3	C78 x 13, B78 x 14, BR78 x 14, C78 x 14, CR78 x 14, DR78 x 14, ⊕ 190/65R x 15, P185/80R x 13, ⊕ 205/60R x 15		$7-teeth	C7SZ 17271-B	C7SZ 17271-B
			A70 x 13, A78 x 13, BR70 x 13, B78 x 13, BR78 x 13, 195/70R x 13		$7-teeth	C7VY 17271-A	C7VY 17271-A
All	All	C4	B78 x 13, C78 x 13, P185/80R x 13, B78 x 14, BR78 X 14, CR78 x 14, 190/70 x HR14, ⊕ 190/65R x 15		$8-teeth	D0OZ 17271-B	D0OZ 17271-B
			DR70 x 14P, C78 x 14, DR78 x 14, HR78 x 15P		$8-teeth	C8SZ 17271-B	C8SZ 17271-B
All	All	C6	G78 x 14, GR78 x 14, HR78 x 14, GR70 x 15P, ⊕ 215/65R x 15		$8-teeth	C7VY 17271-A	C7VY 17271-A
			FR78 x 14		$8-teeth	C8SZ 17271-B	C8SZ 17271-B
			HR78 x 15		$9-teeth	C7SZ 17271-B	C7SZ 17271-B
All	All	▲ 4/M/T	A70 x 13, A78 x 13, B78 x 13, BR70 x 13, BR78 x 13, 195/70R x 13		C30Z 17285-C	C0DZ 17271-B	C0DZ 17271-B
All	All	● 4/M/T	B78 x 13, C78 x 13, B78 x 14, BR78 x 14, CR78 x 14, ⊕ 190/65R x 15, ⊕ 205/60R x 15		D7FZ 17285-A	C40Z 17271-A	C40Z 17271-A
			C78 x 14, DR78 x 14		D7FZ 17285-A	C1DD 17271-A	C1DD 17271-A

ENGINE CYL.	ENGINE C.I.D. (C.C.D.)	TRANS.	TIRE SIZE	REMARKS	DRIVE GEAR	DRIVEN GEAR REGULAR	DRIVEN GEAR P/C,TAXI or RENTAL
17271			SPEEDOMETER DRIVE and DRIVEN GEAR APPLICATION CHART — Cont'd.				
NOTES:			$ Part of transmission output shaft, ▲ (RAD or RUG) 4/M/T, ● German 4/M/T, ♦ Overdrive, ⊕ 390mm wheel diameter				
3.08			**REAR AXLE RATIO – Cont'd**				
All	All	●4 M/T	A70 x 13, B70 x 13, A78 x 13, B78 x 13, BR78 x 13		D8FZ 17285-A	C0DZ 17271-B	C0DZ 17271-B
All	All	♦ 4/M/T	C78 x 13, B78 x 14, BR78 x 14, C78 x 14, CR78 x 14, DR78 x 14, ⊕ 190/65R x 15, ⊕ 205/60R x 15		C4DZ 17285-A	C2DZ 17271-F	C2DZ 17271-F
			ER78 x 14, FR78 x 14		C4DZ 17285-A	C2DZ 17271-G	C2DZ 17271-G
			B78 x 13		C4DZ 17285-A	C4DZ 17271-A	C4DZ 17271-A
3.40			**REAR AXLE RATIO**				
All	All	A/T	A70 x 13, BR70 x 13, A78 x 13, B78 x 13, BR78 x 13		$7-teeth	D00Z 17271-B	D00Z 17271-B
3.45			**REAR AXLE RATIO**				
All	All	A/T	C78 x 13, B78 x 14, C78 x 14, CR78 x 14, ⊕ 190/65R x 15, ⊕ 205/60R x 15,		$7-teeth	C8SZ 17271-B	C8SZ 17271-B
			B78 x 13, BR78 x 14, P185/80R x 13		$7-teeth	D00Z 17271-B	D00Z 17271-B
All	All	▲ 4/M/T	B78 x 13, BR78 x 14,		D0TZ 17285-A	C0DD 17271-B	C0DD 17271-B
			P185/80R x 13, C78 x 13, B78 x 14, C78 x 14, CR78 x 14, ⊕ 190/65R x 15		D0TZ 17285-A	C3DZ 17271-B	C3DZ 17271-B
All	All	♦ 4/M/T	B78 x 13, BR78 x 14		C5ZZ 17285-A	C2DZ 17271-F	C2DZ 17271-F
			C78 x 13, B78 x 14, C78 x 14, CR78 x 14, ⊕ 190/65R x 15		C5ZZ 17285-A	C2DZ 17271-G	C2DZ 17271-G

COPYRIGHT © 1986 — FORD MOTOR COMPANY — DEARBORN, MICHIGAN

1973/79
LINCOLN-MERCURY CARS

YEAR	MODEL/RESTRICTIONS	PART NUMBER	DESCRIPTION	QTY.
17303	GASKET (SPEEDOMETER CASE)			
73/	A,K	C9MY 17303-A		1
74/	C,F,L,P			1
76/	G			1
73	C,F	C7MY 17303-A		1
73/	D	C6VY 17303-A		1
73/78	J	★ D3RY 17303-A	Not replaced	1
17304	GROMMET (SPEEDOMETER CASE)			
73/	D	★ C6VY 17304-A	Not replaced	3
73/78	J	★ D3RY 17304-A	Not replaced	1
17305	RETAINER (SPEEDOMETER CASE GROMMET)			
73/	D	FDR 17305-A		3
73/78	J	★ D3RY 17305-A	Not replaced	2
17K311	KNOB ASSY. (TRIPODOMETER RESET CONTROL)			
79	A	★ D9MY 17K311-A	Not replaced	1
17B336	CLIP (SPEEDOMETER DRIVE GEAR RETAINING)-Also refer to group 7064			
73/	All	C9AZ 17B336-A	Used to attach speedo. drive gear to output shaft	1
17360	TACHOMETER ASSY.			
Note:	¿ Canada only			
73	F(65D,76D)	D1WY 17360-B	6000 RPM-#D1WF 17360-BA,BB	1
73	F(65F,76F)	D1WY 17360-A	6000 RPM-#D1WF 17360-AA,AB	1
77/	F	D7SZ 17360-A	6000 RPM	1
73/74	J(G.T.) - - 4 cyl. 122(2000 cc)	D3RY 17360-A		1
73	J(G.T.) - - 6 cyl. 159(2600 cc)	D3RY 17360-B		1
74	J - - 6 cyl. 171(2800 cc)			1
79	J,P	D9ZZ 17360-A	6000 R.P.M.-"Unleaded Fuel Only"	1
		★ D9ZZ 17360-C	8000 R.P.M.-"Unleaded Fuel Only"-not replaced	1
		¿ D9ZZ 17360-B	6000 R.P.M.-no fuel call out on dial face	1
77/	L	★ D7FZ 17360-C Not replaced	6000 RPM- "Unleaded Fuel Only" on dial face-with yellow pointer	1
17B365	SHIELD ASSY. (SPEEDOMETER CABLE)			
74/75	P - - 8 cyl. 302-T/E	★ D4DZ 17B365-A	Attach to side rail lower L.H. engine compartment-not replaced	1
74/75	G,P - - 8 cyl.	★ D5DZ 17B365-A	Attach to c/member at rear of engine housing-not replaced	1
17368	BRACKET (TACHOMETER MOUNTING)			
73	A,C,L,P,Y	★ C6AZ 17368-A	Not replaced	1
17A381	SHAFT ASSY. (ODOMETER RESET)-Also refer to group 10887			
73/74	D	★ D0VY 17A381-B	Incl. knob, shaft and coupling-not replaced	1
75/	D	★ D5VY 17A381-A	Incl. knob-not replaced	1
73/78	J	★ D3RY 17A381-A	Incl. knob-not replaced	1

COPYRIGHT © 1986 — FORD MOTOR COMPANY — DEARBORN, MICHIGAN

1973/79 LINCOLN-MERCURY CARS

YEAR	MODEL/RESTRICTIONS	PART NUMBER	DESCRIPTION	QTY.
17A385	**BRACKET (LICENSE PLATE MOUNTING)**			
73/78	A,Y	D6AZ 17A385-A		1
79	A	D9AZ 17A385-A		1
		D9AZ 17A385-B	Kit-license plate attaching-consists of (4) nuts & (4) screws	1
73/76	C	D3GY 17A385-A		1
74/76	F			1
74/76	D "Before 4/76"	D5VY 17A385-A		1
76/	D "From 4/76"	D6VY 17A385-A		1
77/	F	D70Z 17A385-A		1
75/	G	D5DZ 17A385-A		1
73	J	(RH) ★ D3RY 17A385-A	(LH) ★ D3RY 17A385-B Front-not replaced	1
73	J		Rear-Refer to group 13406	
74/78	J	D4RY 17A385-A	R.H. and L.H.	2
79	J	D9ZZ 17A385-A		1
		D9AZ 17A385-B	Kit-license plate attaching-consists of (4) nuts & (4) screws	1
73/74	K "Before 8/73"	★ D3SZ 17A385-A	Not replaced	1
74/76	K "From 8/73"	D4SZ 17A385-A		1
77/	K	D7LY 17A385-A		1
74/78	L	D4FZ 17A385-B		1
79	L	D9FZ 17A385-A		1
		D9AZ 17A385-B	Kit-license plate attaching-consists of (4) nuts & (4) screws	1
74/77	P	D4DZ 17A385-A		1
78/	P	D9BZ 17A385-A		1
		D9AZ 17A385-B	Kit-license plate attaching-consists of (4) nuts & (4) screws	1
77/	V	D5DZ 17A385-A		1
73	J	113233-ES	Washer-special	AR
73	J	111430-ES	Rivet-plastic	4
73	J	116053-ES	Washer	2
79	A,F,L,P	N800465-S2	(AM-51-E) nut & retainer (bracket to bumper)	1
		N606677-S43B	(AB-181-G) screw & washer (bracket to bumper)	3
		N623342-S101	(AM-58-F) nut	2
17A387	**FRAME KIT (LICENSE PLATE)**			
73/	A,C,D,F,J,L,P,V,Y	D2AZ 17A387-A	Kit-w/aluminum frame-front & rear	AR
73/76	K		Front & rear	AR
77/	K		Rear only	1
		D2AZ 17A387-B	Clip-use to repair D2AZ 17A387-A license plate frame kit	1
		D7AZ 17A387-A	Kit-w/plastic frame	AR
77/	K	D8LY 17A387-A	Front-plastic-remove mounting tab from bracket when used in place of aluminum frame	1
17B390	**HOUSING & BRACKET (REAR LICENSE PLATE)**			
78/	P(74)	E2DZ 17B390-A		1
17A396	**BUMPER (LICENSE PLATE)**			
73	C(71)	★ D20Z 17A396-A	Not replaced	2

YEAR	MODEL/RESTRICTIONS	PART NUMBER	DESCRIPTION	QTY.
17K400	WIRE ASSY. REAR WINDOW (WIPER and WASHER)			
79	J	D9ZZ 17K400-A	From rear wiper motor to luggage compt. door	1
		D9ZZ 17K400-B	From luggage compt. door to roof headlining	1
		D9ZZ 17K400-C	From roof headlining to rear wiper motor switch feed	1
		E0BZ 17K400-A	From main loom (14401) to wiper switch & feed wire	1
78/	P(74)	★ D8BZ 17K400-A	To wiper switch-not replaced	1
78/	P(74)	D8BZ 17K400-B	To wiper motor	1
17408	HOSE ASSY. (WINDOW WASHER)			
79	A	D9AZ 17408-A		1
79	J - - rear window wiper	D9ZZ 17408-A	From reservoir to lugg. comp. door	1
		D9ZZ 17408-B	From lugg. comp. door to wiper arm	1
79	A,J	386132-S	Clip (GG-420) washer hose to sheet metal	AR
17A409	WIRING (REAR WINDOW WASHER FEED)			
74	A(71),Y(71) - - w/wash and wipe	★ D4AZ 17A409-A	Not replaced	1
17A412	SWITCH ASSY. (REAR WINDOW WASHER TIME DELAY)			
73/74	A(71),Y(71) - - w/wash and wipe	★ D3AZ 17A412-A	Not replaced	1
17C430	GASKET (WINDSHIELD WIPER MOTOR SEAL)			
73/78	A,C,Y	★ C9AZ 17C430-D	Not replaced	2
73/	D,F,K			1
78/	P	D8BZ 17C430-A		1
17A431	HOUSING (WINDSHIELD WIPER MOTOR)			
73	C,P - - w/o concealed wipers	★ C60Z 17A431-A	Not replaced	1
73/78	J	★ D8RY 17A431-A	Not replaced	2
73/78	J	E630321-S71	(AX-38)-washer-16.5(Metric)	2
17C431	GROMMET (WINDSHIELD WIPER MOTOR MOUNTING)			
73/78	A	D2AZ 17C431-A	Less ground	2
73/76	C - - w/concealed wipers			2
73/	D,K			2
74/	F			2
		D2AZ 17C431-B	Incl. ground	1
79	A	D9AZ 17C431-A	Incl. (3) grommets	1
73	C - - w/o concealed wipers	★ D1ZZ 17C431-B	Less groung-not replaced	2
73	F			2
		★ D1ZZ 17C431-A	Incl. ground-not replaced	1
79	J - - w/windshield wiper	D2AZ 17C431-A	Less ground	2
78/	P			2
		D8BZ 17C431-A	Incl. ground	1
79	J	D9ZZ 17C431-A	Kit-rear window wiper motor bracket-consist of (3) grommets & (3) eyelets	1
17C432	GROMMET (WINDSHIELD WIPER MOUNTING BRACKET)			
76/78	J	★ D5RY 17C432-C	Steel-back window	1
17A434	GEAR and SHAFT ASSY. (WINDSHIELD WIPER MOTOR OUTPUT)			
73/78	J	D0RY 17A434-A		1
74/	L	D1FZ 17A434-A		1
73/	P	C60Z 17A434-A		1
17A436	ARM (WINDSHIELD WIPER MOTOR OUTPUT)			
73/	K	D1AZ 17A436-A	Arm assy. under stud marked with number #2	1

Consists of

1-C9AF 17A436-A	Arm assy.-output	1-C9AF 17C526-A	Cover-output arm
1-D1AF 17C518-AA	Latch assy.-wind	1-359294-S2	Screw-1/4"-20
1-C9AF 17C522-A	Spring-wind latch	1-Instruction sheet	

COPYRIGHT © 1986 — FORD MOTOR COMPANY — DEARBORN, MICHIGAN

1973/79 LINCOLN-MERCURY CARS

YEAR	MODEL/RESTRICTIONS	PART NUMBER	DESCRIPTION	QTY.
17A436	**ARM (WINDSHIELD WIPER MOTOR OUTPUT) — Cont'd**			
73/76	A,D,Y	D1VY 17A436-A	Arm assy. under stud marked with letter #L	1
77/78	A,D			1
	Consists of			
	1-D0VF 17A436-D Arm assy.-output		1-C9AF 17C526-A Cover-output arm	
	1-D1AF 17C518-AA Latch assy.-wind		1-359294-S2 Screw-hex. washer head-1/4"-20	
	1-C9AF 17C522-A Spring-wind latch		1-Instruction sheet	
73/76	C - - w/concealed wipers	D20Z 17A436-A	Arm assy. under stud marked with number #3	1
74/	F			1
79	A,D			1
	Consists of			
	1-D20F 17A436-AB Arm assy.-output		1-C9AZ 17C526-A Cover-output arm	
	1-D1AF 17C518-AA Latch assy.-wind		1-359294-S Screw-hex. washer head-1/4"-20	
	1-C9AF 17C522-A Spring-wind latch		1-Instruction sheet	
73	C - - w/o concealed wipers	★ D20Z 17A436-B	Not replaced	1
73	F	★ D1ZZ 17A436-A	Not replaced	1
75/	G	★ D5DZ 17A436-A	Not replaced	1
73/78	J	D0RY 17A436-A		1
79	J	★ D8RZ 17A436-A	Not replaced	1
79	J - - w/back window wiper	★	Serviced in 17566 arm pivot shaft assy.	1
74/	L	D5FZ 17A436-A		1
73/77	P	★ D0DZ 17A436-A	Not replaced	1
78/	P	D8BZ 17A436-A		1
78/	P(74) - - w/back window wiper	D8BZ 17A436-B		1
77/	V	★ D5DZ 17A436-A	Not replaced	1
17C436	**RETAINER (WINDSHIELD WIPER MOTOR BUSHING)**			
73	A,D,Y	C9AZ 17B583-B		1
17D440	**LENS ASSY. (WINDSHIELD WIPER CONTROL)**			
78/	D "From 9/77"	★ D8VY 17D440-C	"WIPE-WASH"-clear adhesive backed tape-not replaced	1
		★ D8VY 17D440-D	"INT-WIPE-WASH"-clear adhesive backed tape-not replaced	1
17C443	**BRACKET (WINDSHIELD WIPER CONTROL MOUNTING)**			
73/76	K	★ D2LY 17C443-A	Not replaced	1
77/	K	★ D7LY 17C443-A	Not replaced	1
74/78	L	D3FZ 17C443-A		1
17471	**GASKET (WINDSHIELD WIPER MOTOR COVER)**			
75/	G	★ D5DZ 17471-A	Not replaced	1
74/78	L,P	★ C6AZ 17471-A	Not replaced	1
77	V	★ D5DZ 17471-A	Not replaced	1
17A475	**SEAL (WINDSHIELD WIPER PIVOT SHAFT to COWL TOP)**			
75/	G	D1FZ 17A475-A	Leather	2
75	G	D5DZ 17A475-A	L.H.-rubber	1
75/	G	D5DZ 17A475-B	R.H. and L.H.-plastic	2
73/77	P	C5ZZ 17A475-B		2
78/	P	D8BZ 17A475-A		2
73	J "Before 11/72"	D0RY 17A475-A		2
73/74	J "From 11/72"	★ D3RY 17A475-A	Not replaced	2
76/78	J	D5RY 17A475-A	Cap type	2
76/78	J	D0RY 17A475-A	Washer type	2
79	J	D9ZZ 17A475-A	Seal-L.H. side pivot shaft to cowl	1
		D9ZZ 17A475-B	Mounting kit-L.H. side pivot shaft to cowl-incl. (1)spacer, (1)washer & (1)nut	1
79	J - - w/back window wiper	D9ZZ 17A475-C	Mounting kit-incl. (1)seal, (1)spacer & (1)nut	1
74/	L	D1FZ 17A475-A	Leather	2
77/	V	D1FZ 17A475-A	Leather	2

YEAR	MODEL/RESTRICTIONS	PART NUMBER	DESCRIPTION	QTY.
17A475	SEAL (WINDSHIELD WIPER PIVOT SHAFT to COWL TOP) — Cont'd			
77/	V	D5DZ 17A475-B	Plastic	2
17A476	WIRING and BRUSH (WINDSHIELD WIPER MOTOR)			
73/78	J	★ D0RY 17A476-A	Not replaced	1
17C476	GOVERNOR (WINDSHIELD WIPERS)			
73/78	A,Y - - w/intermittent wipers	D5AZ 17C476-A		1
79	A - - w/intermittent wipers	D9AZ 17C476-A		1
73/76	C - - w/intermittent wipers	D50Z 17C476-A		1
74/76	F - - w/intermittent wipers			1
77	F - - w/intermittent wipers	D70Z 17C476-A		1
78/	F - - w/intermittent wipers	D80Z 17C476-A		1
76/77	G - - w/intermittent wipers	D6ZZ 17C476-A		1
78/	G - - w/intermittent wipers	D8ZZ 17C476-A		1
73/77	D - - w/intermittent wipers	D5VY 17C476-A		1
78/	D - - w/intermittent wipers	D8VY 17C476-A		1
73	F,P - - w/intermittent wipers	D3TZ 17C476-A		1
79	J - - w/intermittent wipers	D8BZ 17C476-A		1
73/77	K - - w/intermittent wipers	D5SZ 17C476-A		1
78/	K - - w/intermittent wipers	D8LY 17C476-A		1
76/	L - - w/intermittent wipers	D6FZ 17C476-A		1
78/	P - - w/intermittent wipers	D8BZ 17C476-A		1
77	V - - w/intermittent wipers	D6ZZ 17C476-A		1
78/	V - - w/intermittent wipers	D8ZZ 17C476-A		1
17A479	GEAR and PINION (WINDSHIELD WIPER MOTOR)			
73/76	A,D,K,Y	C9AZ 17A479-A		1
77/	A,D,K			1
73/76	C - - w/concealed wipers			1
74/	F			1
	Consists of			
	1-C9AF 17B580-A Gear assy.		1-380444-S Ring-retaining-3/8"	
73	C - - w/o concealed wipers	D0PZ 17A479-B		1
73	F			1
73/	G,L,P,V			1
79	J			1
	Consists of			
	1-C5AZ 17B549-A Lever-switch	1-D60F 17B580-AA	Gear and pinion 1-373907-S2	Nut-1/4" spring
	1-C90F 17A482-A Shaft			
73/78	J	D0RY 17A479-A		1
17C479	STOP ASSY. (WINDSHIELD WIPER MOTOR)			
73	F	C60Z 17C479-A	Spring type	1
73/	P			1
73	C - - w/o concealed wipers			1
73/78	J	D0RY 17C479-B		1
74/78	L	C5AZ 17C479-A		1
17481	NUT (WINDSHIELD WIPER PIVOT SHAFT TO COWL)			
73/74	J	D3RY 17481-A	To pivot shaft	2
73/78	J	D3RY 17481-B	To wiper arm	2
76/78	J	D5RY 17481-A	To pivot shaft	AR
17A485	ARMATURE (WINDSHIELD WIPER MOTOR)			
73	F	C60Z 17A485-B		1
73	C - - w/o concealed wipers			1
74/78	L			1
73/78	P			1
75/77	G "Before 10/76"			1
77/78	G "From 10/76"	★ D7DZ 17A485-A	Not replaced	1
73/78	J	D0RY 17A485-A		1

COPYRIGHT © 1986 — FORD MOTOR COMPANY — DEARBORN, MICHIGAN

1973/79 LINCOLN-MERCURY CARS

YEAR	MODEL/RESTRICTIONS	PART NUMBER	DESCRIPTION	QTY.
17C491	RETAINER (WINDSHIELD WIPER SWITCH)			
78/	D	★ D8VY 17C491-A	Not replaced	1
73	F	★ D3WY 17C491-A	Not replaced	1
79	J,P(74) - - w/back window wiper	D9ZZ 17C491-A		1
76/	G - - w/tilt steering column	D6DZ 17C491-C	Used with threaded rod type	1
76/	G - - w/tilt steering column	D6DZ 17C491-B	Used with clip type	1
73/76	K	★ D2LY 17C491-A	Not replaced	1
77/	K	★ D7LY 17C491-A	Not replaced	1
78	P(74) - - w/back window wiper	D9ZZ 17C491-A		1
77/	V	D6DZ 17C491-B	Used with clip type	1
77/	V	D6DZ 17C491-C	Used with threaded rod type	1
17K495	LOCKWASHER			
73/78	J	D3RY 17K495-A	To wiper arm	2
17496	BRACKET (WINDSHIELD WIPER MOTOR MOUNTING)			
73	C - - w/o concealed wipers	★ D20Z 17496-A	Not replaced	1
75/	G	D5DZ 17496-A		1
73	J "Before 11/72"	★ D0RY 17496-A	Not replaced	1
79	J - - w/windshield wiper	D8BZ 17496-A		1
79	J - - w/rear window wiper	D9ZZ 17496-A		1
73/77	P	★ D0DZ 17496-B	Not replaced	1
78/	P	D8BZ 17496-A		1
78/	P(74) - - w/back window wiper	D8BZ 17496-B		1
77/	V	D5DZ 17496-A		1
17A497	STRAP (WINDSHIELD WIPER MOTOR GROUND)			
73	L	★	Improvise from 2" brass strap x .010" thick	1
17C499	RELAY ASSY. (REAR WINDOW WIPER)			
76/78	J	★ D5RY 17C499-A	#5WB-002690-12-not replaced	1
76/78	J - - w/intermittent windshield wipers	D6RY 17C499-A		1
17504	Refer to group 17508			
17A504	RETAINER (WINDSHIELD WIPER ARM)			
73	C,F	D1AZ 17A504-B		1
73	D	★ D0SZ 17A504-A	Not replaced	1
74/	L	★ D1FZ 17A504-A	Not replaced	4

17508 MOTOR ASSY. (WINDSHIELD WIPER)

The following chart will provide quick identification when the production wiper motor number is known, wiper motors may also be selected by model, year and description in the application chart which follows.

IDENTIFICATION CHART

IDENTIFICATION	SERVICE PART NUMBER	IDENTIFICATION	SERVICE PART NUMBER
D1ZF 17C434-A	D1ZZ 17508-A	D4ZF 17504-AB	D4ZZ 17508-A
D00F 17504-B	C60Z 17508-D	D42F 17504-AA	D4ZZ 17508-A
D1DF 17504-AA	C60Z 17508-D	D5DF 17504-AA	C60Z 17508-D
D1ZF 17504-AA	D1ZZ 17508-A	D9AF 17504-AA	D9AZ 17508-A
D2DF 17504-AA	C60Z 17508-D	D1ZF 17C504-A	D1ZZ 17508-A
D20F 17504-AB	C60Z 17508-D	D2PF 17C504-AA	D2AZ 17508-A
D2ZF 17504-AA	D1ZZ 17508-A	D2PF 17C504-BA	D2SZ 17508-B
D4AF 17504-AA	D4AZ 17508-A	D4PF 17C504-AA	D4AZ 17508-A
D40F 17504-AA	D4AZ 17508-A	D4PF 17C504-BA	D4SZ 17508-A
D4SF 17504-AA	D4SZ 17508-A	C70F 17508-A	C60Z 17508-D
		72EB 17B571-EB	D2RY 17508-B

YEAR	MODEL/RESTRICTIONS	PART NUMBER	DESCRIPTION	QTY.
17508	MOTOR ASSY. (WINDSHIELD WIPER) — Cont'd			

APPLICATION CHART

73	A,Y	D3AZ 17508-A	*WM-368	1
74/78	A	D7AZ 17508-A	*WM-372	1
79	A	D9AZ 17508-A	*WM-379	1
		★ D30Z 17508-A	*WM-369-not replaced	1
73	C - - w/o concealed wipers	C60Z 17508-D	*WM-189	1
74/76	C	D7AZ 17508-A	*WM-353	1
		D3AZ 17508-A	*WM-368	1
74/	D	D7AZ 17508-A	*WM-372	1
73	F	D1ZZ 17508-A	*WM-254	1
74/	F	D70Z 17508-A	*WM-373	1
75/	G "From 10/76"	D7DZ 17508-A	*WM-359-A	1
73/74	J "Before 7/74"	★ D2RY 17508-B	*WME-258-3" housing dia.-not replaced	1
74	J "From 7/74"	D4RY 17508-A	*WME-360-2 1/2" housing dia.	1
76/78	J - - w/back window wiper	★ D5RY 17508-C	*WME-357-A-not replaced	1
76/78	J	D5RY 17508-B	*WME-358	1
79	J - - w/windshield wiper	D8BZ 17508-B	*WM-378	1
79	J - - w/rear window wiper	D8BZ 17508-A	*WM-377	1
73/	K	D7LY 17508-A	*WM-375	1
74/	L	D4ZZ 17508-A	*WM-355	1
73/77	P	C60Z 17508-D	*WM-189	1
78/	P	D8BZ 17508-B	*WM-378	1
78/	P(74) - - w/back window wiper	D8BZ 17508-A	*WM-377	1
77/	V	D7DZ 17508-A	*WM-359-A	1
17A511	COVER (WINDSHIELD WIPER MOTOR)			
73	A,D,K,Y	D2AZ 17A511-A	Kit	1
73	C - - w/concealed wipers			1
	Consists of			
	1-C9AF 17B580-A Gear assy.	1-380444-S	Ring-retaining-3/8" 1-Instruction sheet	
73	F	C3AZ 17A511-C		1
74/	G,J,L,P			1
73	P	★ C60Z 17A511-B	Not replaced	1
73	C - - w/o concealed wipers			1
74/76	A,C,D,F,K,Y	D4AZ 17A511-A	Kit	1
77/	A,D,F,K			1
17512	NUT (WINDSHIELD WIPER CONTROL)			
73/	D	D4VY 17512-A	Wiper control	1
			Automatic head lamp dimmer control	1
73	F	D1ZZ 17512-A	Wiper control	1
74/	L			1
73/	P	★ D3DZ 17512-A	Wiper control-not replaced	1
17A512	COVER (WINDSHIELD WIPER SWITCH)			
75/	G,V - - w/o tilt steering column	D5ZZ 17A512-A	Prime-paint to match	1
76/	G,V - - w/tilt steering column	D6DZ 17A512-A	Prime paint to match	1

COPYRIGHT © 1986 — FORD MOTOR COMPANY — DEARBORN, MICHIGAN

1973/79 LINCOLN-MERCURY CARS

YEAR	MODEL/RESTRICTIONS	PART NUMBER	DESCRIPTION	QTY.
17513	KNOB ASSY.-Also refer to group 18519			
73	A	(RH) ★ C9AZ 17513-B	(LH) ★ C9AZ 17513-C Air control-not repl.	1
73/	A,C,D,F,P,Y	C8UZ 17513-A	Rear window defogger-dealer installed	1
75/	G		Rear window defogger-dealer installed	1
73/	A,D,Y	C9AZ 17513-A	Rear seat speaker fader control	1
73/76	C			1
74/	F			1
75/	G			1
73/74	K			1
75/	G	D5DZ 17513-A	Air control	1
73/76	C	D30Z 17513-B	Wiper control	1
74/76	F			1
74	K			1
74/	L			1
73/76	D "Before 1/76"	D3VY 17513-A	Wiper control	1
76/77	D "From 1/76"	D1AZ 17513-C	Wiper control	1
78/	D	D8VY 17513-A	Wiper control	1
73/76	K,P	D1AZ 17513-C	Wiper control	1
77	P			1
78/	P(74)	D8BZ 17513-A	Back window wiper control	1
79	J - - w/back window wiper			1
76	K	★ D1ZZ 17513-A	Headlamp switch-not replaced	1
77	F	D70Z 17513-A	Wiper control	1
77/	K - - exc. Diamond Jubilee	D7LY 17513-A	Wiper control	1
78/	K - - Diamond Jubilee	D8LY 17513-A	Wiper control	1
77	V	D5DZ 17513-A	Air control	1
17514	SPACER (WINDSHIELD WIPER PIVOT SHAFT MOUNTING)			
73/74	J "From 11/72"	D3RY 17514-A	R.H. and L.H.	2
17526-7	ARM (WINDSHIELD WIPER)			
73/78	A,Y	(RH) D3AZ 17526-B	(LH) D3VY 17527-A	1
79	A	(RH) D9AZ 17526-A	(LH) D9AZ 17527-A	1
73/74	C - - w/concealed wipers	(RH) D20Z 17526-C	(LH) D30Z 17527-B	1
75/76	C	(RH) D50Z 17526-A	(LH) D50Z 17527-A	1
73/74	D	(RH) D3AZ 17526-B	(LH) D3VY 17527-A	1
75/	D	(RH) D3AZ 17526-B	(LH) D5VY 17527-A	1
73	F	(RH) ★ D1ZZ 17526-A	(LH) D1ZZ 17527-B	1
74	F	(RH) D20Z 17526-C	(LH) D30Z 17527-B	1
75/	F	(RH) D50Z 17526-A	(LH) D50Z 17527-A	1
75/79	G "Before 4/79"	(RH) D5DZ 17526-C	(LH) D5DZ 17527-A Bright finish	1
77/79	G "Before 4/79"	(RH) D74Y 17526-B	(LH) D74Y 17527-B Black finish	1
79	G "From 4/79"	(RH) D9DZ 17526-A	(LH) D9DZ 17527-A Black finish	1
73	J "Before 11/72"	D8RY 17526-B	Kit-repair	1
73/74	J	D3RY 17526-A	R.H. and L.H.	2
76/78	J	D5RY 17526-D	R.H. and L.H.	2
76/78	J - - w/back window wiper	★ D5RY 17526-E	Not replaced	1
79	J - - windshield wiper	E3ZZ 17526-A	R.H. and L.H.	2
79	J - - w/back window wiper	D9ZZ 17526-B		1
73	K	(RH) ★ D2SZ 17526-B	(LH) ★ D2SZ 17527-A Not replaced	1
74/	K	(RH) D4SZ 17526-A	(LH) D4SZ 17527-A	1

YEAR	MODEL/RESTRICTIONS	PART NUMBER	DESCRIPTION	QTY.
17526-7	ARM (WINDSHIELD WIPER) — Cont'd			
74/76	L "Before 9/77"	D1FZ 17526-A	R.H. and L.H.-bright finish	2
76/78	L "Before 9/77"	D6FZ 17526-A	R.H. and L.H.-black finish	1
78/	L "From 9/77"	D8FZ 17526-A	R.H. and L.H.-black finish	2
73/77	P	D0DZ 17526-A	R.H. and L.H.-bright finish	1
78/	P	D9BZ 17526-A	R.H. and L.H.	2
78/	P(74) - - w/back window wiper	D8BZ 17526-B		1
77/79	V "Before 4/79"	(RH) D74Y 17526-B	(LH) D74Y 17527-B	1
79	V "From 4/79"	(RH) D9DZ 17526-A	(LH) D9DZ 17527-A	1
17C526	COVER (WINDSHIELD WIPER OUTPUT ARM)			
73/	A,D,K,Y	C9AZ 17C526-A		1
73/76	C - - w/concealed wipers			1
74/	F			1
73	J	D3RY 17C526-A		2
78/	P - - w/back window wiper	D8BZ 17C526-A		1

YEAR	MODEL/RESTRICTIONS	PART NUMBER: BLADE (REFILL)	PART NUMBER: BLADE ASSY.	DESCRIPTION	QTY.
17528	BLADE ASSY. (WINDSHIELD WIPER)				
73	A,F,Y "Before 7/73"	E3AZ 17593-A	D3AZ 17528-A	18" long	2
73	A,F,Y "From 7/73"	D4AZ 17593-H	E3FZ 17528-A	18" long	2
73/78	A,Y	E3AZ 17593-D	E3FZ 17528-A	18" long	2
79	A	D9AZ 17593-A	D9AZ 17528-A	18" long	2
73/74	A(71),Y(71) - - w/wash and wipe		★ D3AZ 17528-B	43" long-not replaced	1
73/76	C	E3AZ 17593-C	★ D00Z 17528-A	16" long	2
74/78	F		r/b E3DZ 17528-B (9/83)		2
73/78	D,K	E3AZ 17593-D	E3FZ 17528-A	18" long	2
79	D,K	D9AZ 17593-A	D9AZ 17528-A	18" long	2
79	F	D90Z 17593-A	E3DZ 17528-B	16" long	2
75/79	G "Before 4/79"	E3AZ 17593-C	D5DZ 17528-B	Bright finish-16" long	2
77/79	G "Before 4/79"	E3AZ 17593-C	E3DZ 17528-B	Black finish-16" long	2
79	G "From 4/79"	D90Z 17593-B	D90Z 17528-B	Black plastic frame	2
73/74	J	E3AZ 17593-C	D1RY 17528-B		2
76/78	J - - w/windshield wiper	D6RY 17593-B	D5RY 17528-D		2
76/78	J - - w/back window wiper	D6RY 17593-C	D5RY 17528-C		1
79	J - - windshield wiper	D9ZZ 17593-A	D9ZZ 17528-B	16 1/2" long	2
79	J - - w/rear window wiper				1
75/78	L "Before 9/77"	E3AZ 17593-C	D5FZ 17528-A	Bright finish-16" long	1
76/78	L(64) "Before 9/77"	D5FZ 17593-A	D6FZ 17528-A	Black finish -16" long	1
78	L "From 9/77"	D90Z 17593-A	D8BZ 17528-A	Black plastic-16" long	2
79	L	D9ZZ 17593-A	D9ZZ 17528-B	16 1/2" long	2
73/74	P	E3AZ 17593-C	D5FZ 17528-A	16" long	2
75/77	P	D5FZ 17593-C	D5FZ 17528-A	Bright finish-16" long	1
78	P	D90Z 17593-A	D8BZ 17528-A	Black plastic-16" long	2
78	P(74) - - w/back window wiper				1
79	P - - windshield wiper	D90Z 17593-A	E3DZ 17528-B	Tridon- 16" long-black plastic w/plastic backed wiper blade refill	2
79	P - - w/rear window wiper				1
79	P - - windshield wiper	D90Z 17593-B	D90Z 17528-B	Trico- 16" long-black plastic w/steel backed wiper blade refill	2
79	P - - w/rear window wiper				1
77/79	V "Before 4/79"	E3AZ 17593-C	★ E3DZ 17528-B	16" long	2
79	V "From 4/79"	D90Z 17593-B	D90Z 17528-B	Black plastic frame	2

YEAR	MODEL/RESTRICTIONS	PART NUMBER	DESCRIPTION	QTY.
17530	BEZEL (REAR VIEW OUTSIDE MIRROR CONTROL)			
73/78	A,Y - - w/R.H. remote control mirror	D3AZ 17530-A		1
74/76	C,F - - w/R.H. remote control mirror			1
79	A - - w/R.H. remote control mirror	D9AZ 17530-A	Located on dash-incl. (1) D9AB 17B715-AB bracket	1

COPYRIGHT © 1986 — FORD MOTOR COMPANY — DEARBORN, MICHIGAN

1973/79 LINCOLN-MERCURY CARS

YEAR	MODEL/RESTRICTIONS	PART NUMBER	DESCRIPTION	QTY.
17530	**BEZEL (REAR VIEW OUTSIDE MIRROR CONTROL) — Cont'd**			
79	A - - w/L.H. remote control mirror	D9AZ 17530-C	Incl. (2) N623401-S36 nuts	1
77/	F - - w/R.H. remote control mirror	D70Z 17530-A		1
77/	F - - w/L.H. remote control mirror	D70Z 17530-B		1
75/	G - - w/R.H. remote control mirror	D5DZ 17530-A		1
73/	D - - w/R.H. remote control mirror	D3SZ 17530-A		1
73	K - - w/R.H. remote control mirror "Before 4/73"			1
73/	K "From 4/73"	D3SZ 17530-B		1
74/	L - - w/R.H. remote control mirror	★ D4FZ 17530-A	Not replaced	1
77/	V - - w/R.H. remote control mirror	D5DZ 17530-A		1
17531	**CLIP (WINDSHIELD WIPER ADAPTER and CONNECTOR ARM)**			
73/	A,C,D,F,G,K,P,V,Y	C5ZZ 17531-A		AR
73/78	J	★ D3RY 17531-A	R.H. and L.H.-not replaced	2
17540	**ARM (WINDSHIELD WIPER MOUNTING)**			
73/78	J - - w/windshield wipers	(RH) D2RY 17540-E	(LH) D2RY 17540-F	1
17C541	**COVER ASSY. (WINDSHIELD WIPER MOTOR)**			
73/78	A,Y	D2AZ 17C541-A		1
74/76	C			1
74/	F			1
	Consists of			
	1-C9AZ 17C430-D Gasket	1-C9AZ 17C526-A	Cover(output arm) 1-Instruction sheet	
	2-D2AF 17C430-AA Gasket	1-D2AF 17C541-AA	Cover	
73	C - - w/concealed wipers	D20Z 17C541-B		1
	Consists of			
	1-C9AZ 17C430-D Gasket	1-C9AZ 17C526-A	Cover(output arm) 1-Instruction sheet	
	1-D2AF 17C430-AA Gasket	1-D20F 17C541-AB	Cover(drive)	
73/	K	★ D2SZ 17C541-A	Not replaced	1
	Consists of			
	1-C9AZ 17C430-D Gasket	1-C9AF 17C526-A	Cover(output arm) 1-Instruction sheet	
	1-D2AF 17C430-AA Gasket	1-D2SF 17C541-AA	Cover(drive)	
17543	**HOSE BULK (WINDSHIELD WIPER, WASHER, HEATER and AIR CONDITIONER VACUUM CONTROL)**			
73/	All	D3PZ 17543-A	*KW-5-B-bulk-7/32" I.D. x 50 ft. roll	AR
		D3PZ 17543-B	*KW-6-B-bulk-7/64" I.D. x 50 ft. roll	AR
		D3PZ 17543-C	*KW-7-B-bulk-5/32" I.D. x 50 ft. roll	AR
		D3PZ 17543-D	*KW-8-B-bulk-9/32" I.D. x 50 ft. roll	AR
		D9PZ 17543-A	*KW-9-bulk-1/4" I.D. x 50 ft. roll	AR
73/	A,C,D,Y	D3AZ 17543-C	3/32" I.D. x 11" long	1
74/	F,K		5/32" O.D.	1
73/78	J	★ D0RY 17543-A	Washer tee to jet-not replaced	2
17A543	**BUSHING (WINDSHIELD WIPER ARM or LINK RETAIN)**			
73	J "Before 11/1/72"	D0RY 17A543-A	Arm retaining	1
73/78	J "From 11/1/72"	D3RY 17A543-A	Arm retaining	4
73/78	J	D0RY 17A543-B	Link retaining	3
17B549	**LEVER (WINDSHIELD WIPER MOTOR PARK SWITCH)**			
73	F	C5AZ 17B549-A		1
74/78	L			1
73	C,P - - w/o concealed wipers			1
17C549	**STOP (WINDSHIELD WIPER ARM)**			
73/	K	(RH) ★ D2SZ 17C549-A	(LH) ★ D2SZ 17C549-B Not replaced	1
79	A	D9AZ 17C549-B		1
17A553	**SWITCH ASSY. (WINDSHIELD WIPER and WASHER)**			
73/78	A - - w/o intermittent wipers	D3AZ 17A553-C	*SW-1156-A	1
73/76	Y - - w/o intermittent wipers			
73/78	A - - w/intermittent wipers	D3AZ 17A553-D	*SW-1155-A	1
73/76	Y - - w/intermittent wipers			
79	A - - w/o intermittent wipers	E1AZ 17A553-B	*SW-1656	

YEAR	MODEL/RESTRICTIONS	PART NUMBER	DESCRIPTION	QTY.
17A553	SWITCH ASSY. (WINDSHIELD WIPER and WASHER) — Cont'd			
79	A - - w/intermittent wipers	E1AZ 17A553-C	*SW-1657	1
73	C - - w/o intermittent wipers	D8LY 17A553-A	*SW-1478	1
73/76	C - - w/o intermittent wipers	D80Z 17A553-A	*SW-1480-10 terminals	1
73/76	C - - w/intermittent wipers	D8LY 17A553-B	*SW-1479	1
73/	D,K - - w/o intermittent wipers	D8LY 17A553-A	*SW-1478	1
73/	D,K - - w/intermittent wipers	D8LY 17A553-B	*SW-1479	1
73	F - - w/o intermittent wipers	D1ZZ 17A553-A	*SW-994	1
74/77	F - - w/o intermittent wipers	D80Z 17A553-A	*SW-1480	1
78/	F - - w/o intermittent wipers	D80Z 17A553-A	*SW-1480	1
73	F - - w/intermittent wipers	D1ZZ 17A553-B	*SW-993	1
74/77	F - - w/intermittent wipers	D8LY 17A553-B	*SW-1479	1
78/	F - - w/intermittent wipers	D80Z 17A553-B	*SW-1481	1
75	G	D5DZ 17A553-A	*SW-1264-instrument panel mounted	1
75	G - - w/o intermittent wipers, w/fixed steering column	D5ZZ 17A553-B	*SW-1295-steering column mounted	1
76/	G - - w/o intermittent wipers, w/fixed steering column	D8ZZ 17A553-A	*SW-1484	1
76/	G - - w/o intermittent wipers, w/tilt steering column	D8DZ 17A553-A	*SW-1482	1
76/	G - - w/intermittent wipers, w/fixed steering column	D8ZZ 17A553-B	*SW-1485	1
76/	G - - w/intermittent wipers, w/tilt steering column	D8DZ 17A553-B	*SW-1483	1
73/76	J - - w/windshield wiper	D4RY 17A553-A	*SWE-1236-dash panel mounted	1
73/76	J - - w/windshield washer	D5RY 17A553-A	*SWE-1283-foot operated	1
76/78	J - - w/windshield wiper & washer	★	Refer to group 11654-column mounted	
76	J - - w/back window wiper	★ D5RY 17A553-B	*SWE-1285-round type-not replaced	1
76/78	J - - w/back window wiper & w/o A/C	★ D6RY 17A553-A	*SWE-1353-rectangular type-not replaced	1
76/78	J - - w/back window wiper & w/A/C	★ D6RY 17A553-C	*SWE-1386-not replaced	1
76/78	J - - w/back window washer & w/o-A/C	★ D6RY 17A553-B	*SWE-1354, rectangular type-not replaced	1
76/78	J - - w/back window washer & w/A/C	★ D7RY 17A553-A	*SWE-1432, round type-not replaced	1
79	J - - w/o intermittent wipers	E1DZ 17A553-A	*SW-1661	1
79	J - - w/intermittent wipers	E1DZ 17A553-B	*SW-1662	1
79	J - - w/back window wiper	D8BZ 17A553-C	*SW-1477	1
74/ 73/77	L - - w/o intermittent wipers P - - w/o intermittent wipers	D1ZZ 17A553-A	*SW-994	1

COPYRIGHT © 1986 — FORD MOTOR COMPANY — DEARBORN, MICHIGAN

1973/79 LINCOLN-MERCURY CARS

YEAR	MODEL/RESTRICTIONS	PART NUMBER	DESCRIPTION	QTY.
17A553	**SWITCH ASSY. (WINDSHIELD WIPER and WASHER) — Cont'd**			
76/	L - - w/intermittent wipers	D6FZ 17A553-A	*SW-1315	1
76/77	P - - w/intermittent wipers			1
78/	P - - w/o intermittent wipers	★ D8BZ 17A553-A	*SW-1475-repl. by E1DZ 17A553-A (9/81)	1
78/	P - - w/intermittent wipers	★ D8BZ 17A553-B	*SW-1476-repl. by E1DZ 17A553-B (6/84)	1
78/	P(74) - - w/back window wiper	D8BZ 17A553-C	*SW-1477	1
77	V - - w/intermittent wipers and tilt steering column	D8DZ 17A553-B	*SW-1483	1
77	V - - w/o intermittent wipers w/fixed steering column	★ D6ZZ 17A553-B r/b D8ZZ 17A553-A(9/81)	*SW-1343	1
77/	V - - w/intermittent wipers and w/fixed steering column	D8ZZ 17A553-B	*SW-1485	1
78/	V - - w/intermittent wipers and w/tilt steering column	D8DZ 17A553-B	*SW-1483	1
78/	V - - w/o intermittent wipers and w/fixed steering column	D8ZZ 17A553-A	*SW-1484	1
77/	V - - w/o intermittent wipers and w/tilt steering column	D8DZ 17A553-A	*SW-1482	1
17A558	**SPACER (WINDSHIELD WIPER MOTOR OUTPUT SHAFT)**			
73	F,P	C5AZ 17A558-A		1
73	C - - w/o concealed wipers			1
74/	L,P			1
17B563	**PIN (WINDSHIELD WIPER MOTOR)**			
73	F,P	C70Z 17B563-A		1
73	C - - w/o concealed wipers			1
74/	L,P			1
17566-7	**ARM and PIVOT SHAFT ASSY. (WINDSHIELD WIPER MOUNTING)**			
73/78	A(53,57,71),Y(53,71)	(RH) D3AZ 17566-A	(LH) D3AZ 17567-D	1
73/78	A(65),Y(65)	(RH) D3AZ 17566-A	(LH) D3AZ 17567-C	1
79	A	D9AZ 17566-B	One piece design	1
73/	D "From 9/1/72"	(RH) D3AZ 17566-A	(LH) D3AZ 17567-D	1
73/76	C	D40Z 17566-A	One piece design	1
74/	F			1
73	F	(RH) ★ D1ZZ 17566-A	(LH) D1ZZ 17567-A	1
75/	G	(RH) D5DZ 17566-C	(LH) D5DZ 17567-B Bright mntg. plate	1
78/	G	(RH) D74Y 17566-A	(LH) D74Y 17567-A Black mntg. plate	1
73/78	J - - w/windshield wipers	(RH) D3RY 17566-A	(LH) D3RY 17567-A Windshield	1
79	J	D9ZZ 17566-A	One piece design	1
79	J - - w/back window wiper	D9ZZ 17566-C	Includes wiper arm linkage and wiper motor arm	1
		374792-S8B	(MM-54-A) Nut 3/4"-20 (linkage arm to w/wiper motor)	1
73/	K	D2SZ 17566-A	One piece design	1
73/	L	★ D7FZ 17566-A	One piece design-repl. by E0FZ 17566-A	1
73/77	P	(RH) D0DZ 17566-A	(LH) D0DZ 17567-A	1
78/	P	D9BZ 17566-A	One piece design	1

YEAR	MODEL/RESTRICTIONS	PART NUMBER	DESCRIPTION	QTY.
17566-7	ARM and PIVOT SHAFT ASSY. (WINDSHIELD WIPER MOUNTING) — Cont'd			
78/	P - - w/back window wiper	D8BZ 17566-C		1
77/	V	(RH) D74Y 17566-A	(LH) D74Y 17567-A	1
17B566	BRUSH and TERMINAL ASSY. (WINDSHIELD WIPER MOTOR)			
73	F	C60Z 17B566-A		1
73	C - - w/o concealed wipers			1
73/74	P			1
74	L			1
17C569	COVER (WINDSHIELD WIPER MOTOR AND LINKAGE)			
79	A	E0VY 17C569-A		1
17573	BEARING (WINDSHIELD WIPER ARM)			
73/76	C	★ D1FZ 17573-A	Not replaced	1
74/78	F			1
17C582	GROMMET (WINDSHIELD WIPER PIVOT SHAFT)			
73/77	P	★ D0DZ 17C582-A	29/32" I.D. x 1" long-not replaced	1
17B583	PLATE and SWITCH ASSY. (WINDSHIELD WIPER MOTOR)			
73/78	A	C9AZ 17B583-B	Kit	1
73/	D,K,Y			1
73/76	C - - w/concealed wipers			1
74/	F			1
	Consists of			
	1-C9AZ 17C535-A Retainer (cup)	1-C9AF 17B443-A	Plate assy.	1-Instruction sheet
	1-C9AZ 17C536-A Retainer(bearing spring)	1-D7AF 17C485-AA	Holder (Brush)	
79	A	D9AZ 17B583-A	Kit	1
73	F	C8UZ 17B583-B		1
73/	P			1
73	C - - w/o concealed wipers			1
75/	L			1
75/	G,V	★ D7DZ 17B583-A	Not replaced	1
17C583	STOP ASSY. (WINDSHIELD WIPER ARM)			
73/78	A,D,Y	(RH) ★ D3AZ 17C583-A	(LH) ★ D1AZ 17C583-C Not replaced	1
17B584	CUP and MAGNET ASSY. (WINDSHIELD WIPER MOTOR)			
73/78	P	C70Z 17B584-A		1
73	C - - w/o concealed wipers			1
74/78	L			1
17B586-7	WIRING ASSY. (WINDSHIELD WIPER MOTOR)			
73	J - - w/o windshield washers	★ D1RY 17B586-A	Not replaced	1
17B588	SPACER (WINDSHIELD WIPER PIVOT SHAFT INNER)			
73	D	★ D3VY 17B588-A	L.H.-not replaced	1
17593	Refer to group 17528			
17598	CONNECTOR (WINDSHIELD WASHER HOSE)			
73/78	J	D0RY 17598-A		1
17B599	SPRING (WINDSHIELD WIPER MOTOR BRUSH)			
73	F,P	C5AZ 17B599-A		3
73	C - - w/o concealed wipers			3
75/78	L,P			3
73/78	J	★ D0RY 17B599-A	Not replaced	3

COPYRIGHT © 1986 — FORD MOTOR COMPANY — DEARBORN, MICHIGAN

1973/79
LINCOLN-MERCURY CARS

YEAR	MODEL/RESTRICTIONS	PART NUMBER	DESCRIPTION	QTY.
17A601	TEE (WINDSHIELD WASHER HOSE)			
73/78	A,Y	D3AZ 17A601-B	"S" shaped	1
73/	D			1
		D3AZ 17A601-C	"U" shaped	1
73/74	C	D20Z 17A601-A		1
74	F			1
73	F	★ D1ZZ 17A601-A	Not replaced	1
73/	P	C7SZ 17A601-A		1
75	G "Before 12/16/74"			1
75/	G "From 12/16/74"	D5UZ 17A601-A		1
73/	J	D0RY 17A601-A		1
74/	K	★ D4SZ 17A601-A	Not replaced	1
77/	V	D5UZ 17A601-A		1
17A602	JET (WINDSHIELD WASHER NOZZLE)			
73/	A,D,Y	D3AZ 17A602-B		2
74/	K			2
75/	C,F	(RH) D50Z 17A602-A	(LH) D3AZ 17A602-B	1
17603	JET and BRACKET ASSY. (WINDSHIELD WASHER NOZZLE)			
73/74	C	D20Z 17603-A	R.H. and L.H.	2
74	F			2
73	F	(RH) D1ZZ 17603-B	(LH) D1ZZ 17603-A	1
75/	G	D5DZ 17603-A	R.H. and L.H.	2
73/78	J	D5RY 17603-B	R.H. and L.H.	2
76/78	J - - w/back window wiper	★ D5RY 17603-A	Not replaced	1
79	J	E0ZZ 17603-A		1
79	J - - w/rear window washer	★	Use D8BZ 17603-C, discard push-in clip, cut hose to required length & use 383001-9 (II-191-A) hose connector	
73	K	★ D2SZ 17603-A	R.H. and L.H.-not replaced	2
74/	L	D1FZ 17603-A	R.H. and L.H.	2
73/74	P	★ D0DZ 17603-C	R.H. and L.H.-not replaced	2
75/77	P	D0DZ 17603-B	R.H. and L.H.	2
78/	P	(RH) D8BZ 17603-B	(LH) D8BZ 17603-C	1
78/	P(74) - - w/back window wiper	D8BZ 17603-D		1
77/	V	D5DZ 17603-A	R.H. and L.H.	2
17A605	HOSE (WINDSHIELD WASHER)-Improvise from bulk hose(17543)			
17K605	HOSE ASSY. (WINDSHIELD WASHER)-Improvise from bulk hose(17543)			
17K608	FILTER ASSY. (WINDSHIELD WASHER FLUID)			
73/74	A(71),Y(71) - - w/wash and wipe	★ C8UZ 17K608-A	Not replaced	1
77/	L - - 6 cyl. 171 (2800cc) ""From 3/1/77"	D7FZ 17K608-B	Incl. (1) filter, (1) seal & (1) washer	1
17B609	RETAINER (WINDSHIELD WASHER PUMP)			
75/78	G - - w/anti-skid control	★ D5DZ 17B609-A	Not replaced	2
17B610	SEAL (WINDSHIELD WASHER PUMP)			
73/74	A(71),Y(71) - - w/wash and wipe	C8UZ 17B610-A		1
17612	PLATE (FRONT BUMPER ANCHOR)			
73	D	(RH) ★ D3VY 17612-A	(LH) ★ D3VY 17612-B Not replaced	1
17A612	ADAPTER (WINDSHIELD WASHER HOSE)			
74/	K	D4SZ 17A612-A		1
75/	C,F			1
17A613	CLIP (WINDSHIELD WASHER HOSE)			
76/78	J	★ D5RY 17A613-A	Not replaced	1
17A614	VALVE (WINDSHIELD WASHER CONTROL)			
73/74	J	D3RY 17A614-A		1
76/78	J	★ D5RY 17A614-A	Not replaced	1
17616	Refer to group 17632			

COPYRIGHT © 1986 — FORD MOTOR COMPANY — DEARBORN, MICHIGAN

1973/79 LINCOLN-MERCURY CARS

YEAR	MODEL/RESTRICTIONS	PART NUMBER	DESCRIPTION	QTY.
17618	RESERVOIR (WINDSHIELD WASHER)			
73/78	A,C,Y	D4AZ 17618-A	Reservoir and cover-canister type-less pump	1
74/79	D - - w/o low fluid sensor			1
74/79	F			1
73/74	A(71),Y(71) - - w/wash and wipe	★ D1AZ 17618-A	Reservoir only-tailgate-not replaced	1
79	A - - w/o low fluid sensor	D9AZ 17618-A		1
79	A - - w/low fluid sensor	E1AZ 17618-A		1
73	D	C9AZ 17618-B	Less pump	1
78/	D - - w/low fluid sensor	D74Y 17618-A	Reservoir & cover-canister type	1
73	F	D1TZ 17618-B	Less pump-incl. cover	1
75/76	G - - w/o anti-skid control	D4AZ 17618-A	Reservoir and cover-canister type-less pump	1
75/76	G - - w/anti-skid control	★ D5DZ 17618-A	Reservoir and cover-bag type-less pump-not replaced	1
77/	G	D4AZ 17618-A		1
73/74	J	D0RY 17618-A	Less pump	1
76/78	J "Before 2/1/77"	★ D5RY 17618-C	Less pump-not replaced	1
76/78	J "From 2/1/77"	D8RZ 17618-B	Less pump	1
76/78	J - - w/back window wiper	D5RY 17618-A		1
79	J - - w/o low fluid sensor	E3ZZ 17618-C	Incl. cover	1
79	J - - w/low fluid sensor	E3ZZ 17618-D	Incl. cover-for sensor refer to group 17B649	1
79	J - - w/back window washer	D9ZZ 17618-B		1
73/76	K	D2LY 17618-B	Less pump	1
77	K "Before 9/15/76"	D7LY 17618-A	Reservoir and cover-canister type-less pump	1
77	K "From 9/15/76"	D2LY 17618-B	Less pump	1
78/	K - - w/o low fluid sensor	D4AZ 17618-A	Reservoir and cover-canister type-less pump	1
	K - - w/low fluid sensor	D8LY 17618-A	Reservoir & cover-canister type	1
74	L	D1SZ 17618-B	Reservoir only	1
75/76	L	D20Z 17618-B	Reservoir only-canister type	1
77/	L - - 4 cyl. 140 (2300cc)			1
77	L - - 6 cyl. 171 (2800cc) "Before 3/1/77"	D7FZ 17618-A	Reservior and cover-bag type-incl. pump	1
77/78	L - - 6 cyl. 171 (2800cc) "From 3/1/77"	D9FZ 17618-A	Reservoir only-canister type	1
79	L - - 6 cyl. 171 (2800cc)	D9FZ 17618-A	Reservoir only	1
73/77	P	C90Z 17618-B	Less pump	1
78/	P	D8BZ 17618-A	Reservoir and cover-canister type-less pump	1
78/	P(74) - - w/back window wiper	D8BZ 17618-B	Reservoir only	1
77	V	D4AZ 17618-A	Reservoir and cover-canister type-less pump	1
77/	V - - w/low fluid sensor	D74Y 17618-A	Reservoir and cover-canister type	1
78/	V - - w/o low fluid sensor	D4AZ 17618-A	Reservoir and cover-canister type-less pump	1
17A622	WIRING AND CONNECTOR (WINDSHIELD WASHER PUMP)			
73/	All	D7AZ 17A622-A		1
17626	PANEL (FRONT VALANCE)-Also refer to group 17747			
73	J	D3RY 17626-B		1
74	J	D4RY 17626-A		1
76/78	J	D5RY 17626-A		1
79	L	D9FZ 17626-A		1
73	P	D34Y 17626-A		1
78/	P	E1BZ 17626-A		1
17632	COVER (WINDSHIELD WASHER RESERVOIR)			
73/74	A,C,Y	★ D3AZ 17632-A	Serviced only in reservoir and cover	1
74	D,F,G		assy. D4AZ 17618-A(3/76)	1
73/74	A(71),Y(71) - - w/wash and wipe	★ D1AZ 17632-A	Back window-not replaced	1
73	F	★ D1TZ 17632-A	Serviced only in reservoir and cover assy. D1TZ 17618-B(6/77)	1
73/74	J	★ D4RY 17632-A	Not replaced	1
76/78	J - - w/foot operated pump	D5RY 17632-A		1
73/78	J - - w/electric pump	D6RY 17632-A		1
79	J - - w/back window washer	D8BZ 17632-A		1
		B7AZ 8287-C	Clamp (filler tube to reservoir)	1

YEAR	MODEL/RESTRICTIONS	PART NUMBER	DESCRIPTION	QTY.
17632	COVER (WINDSHIELD WASHER RESERVOIR) — Cont'd			
73/76	K	★ D2LY 17632-A	Not replaced	1
74	L	D1SZ 17632-A		1
77/	L - - 6 cyl. 171 (2800cc) "From 3/1/77"	D7FZ 17632-A		1
73/77	P	★ C9OZ 17632-A	Not replaced	1
78/	P(74) - - w/back window wiper	D8BZ 17632-A	Cover & filler tube assy.	1
17B649	SENSOR (WINDSHIELD WASHER RESERVIOR FLUID LEVEL)			
78/	A,D,K	D8LY 17B649-A		1
79	J	D9ZZ 17B649-A		1
77/	V	★ D74Y 17B649-A	Not replaced	1
17651	BRACKET (WINDSHIELD WASHER RESERVOIR MOUNTING)			
73/74	A,Y - - w/wash and wipe	★ D3AZ 17651-A	Not replaced	1
73	D	★ D1VY 17651-B	Not replaced	1
74/	D	★ D4VY 17651-A	Not replaced	1
74	J	D4RY 17651-A		1
76/78	J	★ D5RY 17651-C	Not replaced	1
78/	K	★ D8LY 17651-A	Not replaced	1
78/	P(74) - - w/back window wiper	D8BZ 17651-A		1
17652	HOSE (REAR WINDOW WASHER)			
73/74	A(71),Y(71) - - w/wash and wipe	D3AZ 17652-A		1
17664	PUMP (WINDSHIELD WASHER)			
73/ 77/ 79	A,C,D,F,K,L,P,V,Y G J	E0AZ 17664-A	*WG-30	1 1 1
73/74	A(71),Y(71) - - w/wash and wipe	C8SZ 17664-A	*WG-2	1
75/76	G - - w/anti-skid control	★ D5DZ 17664-A	*WG-4-used with reservoir D5DZ 17618-A-N/R	1
73/78	J	D0RY 17664-A	Foot operated	1
76/78	J - - w/back window wiper	★ D5RY 17664-B	Electric-not replaced	1
76/78	J	E1FZ 17664-A	Electric-*WG-31	1
77/	L - - 6 cyl. 171 (2800cc) "From 3/1/77"	D7FZ 17664-A	*WG-20	1
78/ 79	P(74) - - w/back window wiper J - - w/back window washer	E1FZ 17664-A	*WG-31	1 1
73/	J	E610267-S74	(AU-8-G)-screw 4.8 x 16(Metric)	2
17673	GROMMET (WINDSHIELD WASHER HOSE)			
76/78	J	D6RY 17673-A		AR
17676	COVER (INTERIOR MIRROR BRACKET)			
73/78	J	D1RY 17676-E	Black-plastic	1
		D1RY 17676-C	Blue	1
		D1RY 17676-B	Parchment	1
		D1RY 17676-D	Tan	1
17D678	GUIDE (REAR VIEW OUTSIDE MIRROR CABLE)			
79	A - - R.H. remote control	D9AZ 17D678-A		1
75/	G,V - - w/R.H. remote control mirror	★ D5DZ 17D678-A	Not replaced	1
74/	L	★ D4FZ 17D678-A	Not replaced	1
17A679	MIRROR (VANITY)			
73/	A,D,K,V,Y	D5AZ 17A679-B	On windshield visor-heat adhesive backed-2 15/16" x 9 3/16"	AR
73/	C,F,G,L,P	D50Z 17A679-B	On windshield visor heat adhesive backed-2 1/2" x 6 3/16"	AR
74/76	A,C,D,F,K,Y	D4MZ 17A679-A	On windshield visor- with push thru type studs-2 15/16" x 9 3/16"	AR
73	All	C6AZ 17A679-A	On windshield visor-consist of 6 self adhesive backed mirrors-3 1/4" x 7"	AR
73/76	D	★ C8VY 17A679-B	In glove compartment-not replaced	1
75/	D,F,K,V-w/lighted vanity	E0AZ 17A679-A	Also supplied in 04100 visor assy.-refer to group in Soft Trim Section	

COPYRIGHT © 1986— FORD MOTOR COMPANY —DEARBORN, MICHIGAN

1973/79 LINCOLN-MERCURY CARS

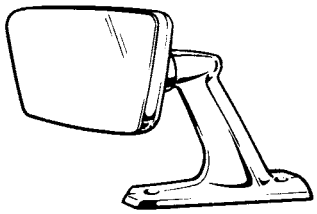

TYPE 1

TYPE 2

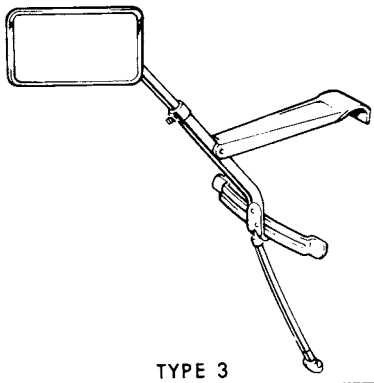

TYPE 3

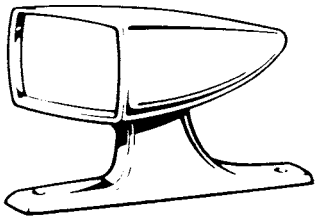

TYPE 4

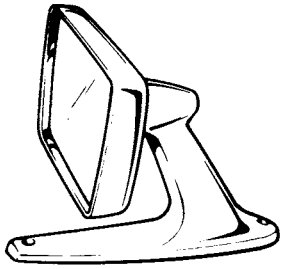

TYPE 5

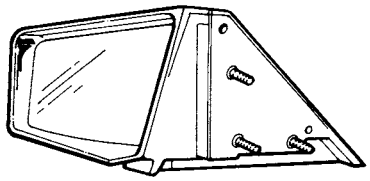

TYPE 6

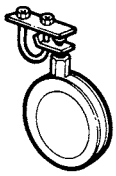

TYPE 7

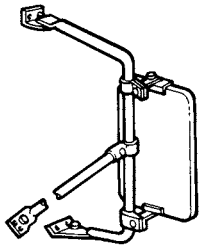

TYPE 8

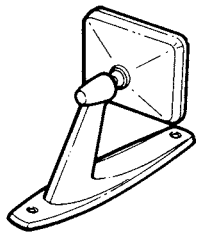

TYPE 9

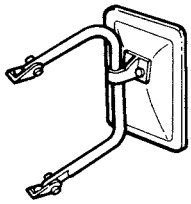

TYPE 10

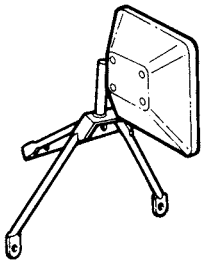

TYPE 11

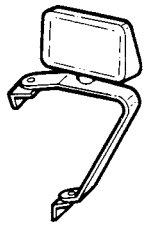

TYPE 12

P-4914

YEAR	MODEL/RESTRICTIONS	PART NUMBER	DESCRIPTION	QTY.
17682	MIRROR (REAR VIEW OUTSIDE)-Incl. Pad			
Notes:	† incl. attaching parts (to door)			
	● Refer to Section 176A for listing of kit components			

A (Mercury) and Y (Meteor)

TYPE 1-	Rectangular Head (non-hooded)			
73/78	A,Y	(RH) Not available		
		(LH) † D3AZ 17682-C	Mirror assy.	1
79	A	(R.H.) Not available		
		(L.H.) † D9AZ 17682-A	Mirror assy.	1
TYPE 2-	Convex-adhesive backed (attaches to R.H. mirror)			
73/78	A,Y	★ D7AZ 17696-A	3 1/4" x 5 1/4"-not replaced	1
TYPE 3-	Trailer towing (fender mounted)-Not available			
TYPE 5-	Rectangular head (hooded)			
73/78	A,Y	(RH) † D3AZ 17682-D	Mirror assy. -remote control	1
			For initial installation R.H. remote control, the following additional parts are required	
73/78	A	D3AZ 17530-A	Bezel	1
		382239-C	(GG-285)-clip	1
		044D70	Panel (instrument cluster finish)-refer to group in Body Section	1
		382162-S36	(MM-119-X)-Nut-8-32 x 5/8" round rivet type (mirror to door)	1
73/78	A,Y	(RH) ● D3AZ 17696-C	Mirror kit (complete)-manual control	1
		(LH) ● D3AZ 17696-A	Mirror kit (complete)-remote control	1
79	A - - remote control	(RH) D9AZ 17682-E	(LH) D9AZ 17682-F Mirror assy.	1
			For initial installation of R.H. or L.H. door mounted mirror the following additional parts are req'd.	
		D9AZ 17724-A	Gasket-R.H. & L.H.	AR
		20224	Reinforcement-R.H. and L.H.-refer to group in Body Section	AR
		(LH) D9AZ 17530-C	Bezel kit-w/door trim panel mount	1
		(LH) C7SZ 17B732-B	Nut-w/arm rest mount	1
		(LH) ★95832-S	Strap (cable to door)	2
		(RH) D9AZ 17530-A	Bezel kit-instrument panel mount	1
		044D70	Panel (instrument cluster finish)-refer to group in Body Section-req'd. for R.H. installation	1
		(RH) D9AZ 17D678-A	Guide-mirror cable (on dash)	3
		(RH) D9AZ 17D678-B	Guide-mirror cable (on door)	1
TYPE 6-	Window mounted (sail)			
79	A	(L.H.) D9AZ 17682-C	Remote control-door trim panel mounted	1
		(L.H.) D9AZ 17682-D	Remote control-door arm rest mounted	1
		(R.H.) D9AZ 17682-B	Remote control-instrument panel mounted	1

C (Montego)

TYPE 1-	Rectangular head (non-hooded)			
73/76	C	● D4AZ 17696-A	R.H. or L.H.-Mirror kit (complete) - manual	2
TYPE 2-	Convex-adhesive backed (attaches to R.H. mirror)			
73/76	C	D70Z 17696-A	2 7/8" x 4 1/2"	1
		★ D70Z 17696-B	3" x 5 1/4"-not replaced	1
TYPE 3-	Trailer towing (fender mounted)-Not available			
TYPE 4-	Racing (Paint to match)			
73/76	C	(RH) † D2GY 17682-C	Mirror assy.-manual control	1
		(LH) Not available		1
		★● D2GY 17696-A	Mirror kit (complete)-incl. R.H. manual and L.H. remote control mirror.-not replaced	1
		(RH) † D5GY 17682-A	Mirror assy.-remote control	1
		(LH) † D2GY 17682-B	Mirror assy.-remote control	1

COPYRIGHT © 1986 — FORD MOTOR COMPANY — DEARBORN, MICHIGAN

1973/79 LINCOLN-MERCURY CARS

YEAR	MODEL/RESTRICTIONS	PART NUMBER	DESCRIPTION	QTY.
17682	MIRROR (REAR VIEW OUTSIDE)-Incl. Pad — Cont'd			
Notes:	† incl. attaching parts (to door)			
	● Refer to Section 176A for listing of kit components			

C (Montego)

TYPE 4-	Racing (Paint to match)			
73/76	C	(RH) C7SZ 17B732-B	Nut-R.H. and L.H.	2
74/76	C	(RH) D4GY 17B733-A	Plate	1
73/76	C	(LH) C7SZ 17B733-C	Plate	1
TYPE 5-	Rectangular head (hooded)			
73/76	C	(RH) Not available		
		(LH) ● D90Z 17696-B	Mirror kit-remote control	1
73/75	C	(RH) ★ C9AZ 17696-A	Mirror kit-manual control-r/b D1AZ 17696-B	1
		(LH) Not available		
76	C	(RH) ● D1AZ 17696-B	Mirror kit-manual control	1
		(LH) Not available		

D (Lincoln)

TYPE 2-	Convex-adhesive backed (attaches to R.H. mirror)			
73/	D	D7LY 17696-A	3 1/4" x 5 1/8"	1
TYPE 3-	Trailer towing (fender mounted)-Not available			
TYPE 5-	Rectangular head (hooded)			
73/78	D "Before 10/1/77"	(RH) † D5VY 17682-C	Mirror assy.-remote control	1
	"Before 10/1/77"	(LH) † D8VY 17682-B	Mirror assy.-remote control	1
78/	D "From 10/1/77"	(RH) D8VY 17682-A	Mirror assy.-remote control	1
78/	"From 10/1/77"	(LH) D8VY 17682-B	Mirror assy.-remote control	1
78/	D	(LH) D8VY 17682-C	Mirror assy.-remote control (heated)	1
78/		(LH) D8VY 17682-D	Mirror assy.-remote control (w/thermometer)	1
78/		(LH) D8VY 17682-E	Mirror assy.-remote control (heated w/thermometer)	1
78/	D	(RH) D3SZ 17530-A	Bezel-1-1/8"-20	1
78/	D	(RH) D3SZ 17530-B	Bezel	1
			Panel (instrument cluster finish)	
			-refer to group 044D70 in body section	
78	D	(RH) D8VY 17B715-A	Bracket	1
74/	D	(RH) D3AZ 17B732-A	Nut	1
73/	D	(LH) C7SZ 17B732-B	Nut	1
		17B733	Plate-none used	

F (Cougar)

TYPE 1-	Rectangular head (non-hooded)			
73/	F	● D4AZ 17696-A	R.H. or L.H.-Mirror kit (complete) - manual	2
TYPE 2-	Convex-adhesive backed (attaches to R.H. mirror)			
73/	F	★ D7AZ 17696-A	3 1/4" x 5 1/4"-not replaced	1
		D70Z 17696-A	2 7/8" x 4 1/2"	1
		★ D70Z 17696-B	3" x 5 1/4"-not replaced	1
TYPE 3-	Trailer towing (fender mounted)-Not available			
TYPE 4-	Racing (Paint to match)			
73	F	(RH) † D10Z 17682-B	Mirror assy.-manual control	1
		(LH) Not available		
74/	F	(RH) † D2GY 17682-C	Mirror assy.-manual control	1
		(LH) Not available		
73	F	(RH) Not available		
		(LH) † D1WY 17682-A	Mirror assy.-remote control	1
74/76	F	(RH) † D5GY 17682-A	Mirror assy.-remote control	1
		(LH) † D2GY 17682-B	Mirror assy.-remote control	1

YEAR	MODEL/RESTRICTIONS	PART NUMBER	DESCRIPTION	QTY.
17682	MIRROR (REAR VIEW OUTSIDE)-Incl. Pad — Cont'd			
Notes:	† incl. attaching parts (to door)			
	● Refer to Section 176A for listing of kit components			

F (Cougar)

TYPE 4-	Racing (Paint to match)			
77/	F	(RH) † D5GY 17682-A	Mirror assy.-remote control	1
		(LH) † D70Z 17682-C	Mirror assy.-remote control	1
74/78	F	★● D2GY 17696-A	Mirror kit (complete)-incl. R.H. manual and L.H. remote control mirrors-not replaced	1
79	F	★● D90Z 17696-A	Mirror kit (complete)-incl. R.H. manual and L.H. remote control mirrors-not replaced	1
73	F	★ ● D1WY 17696-B	Mirror kit (complete)-incl. R.H. manual and L.H. remote control repl. by details (12/76)	1
77	F	(RH) D70Z 17530-A	Bezel-3/4"-20-also serves as nut	1
77	F	(LH) D70Z 17530-B	Bezel Panel (instrument cluster finish)-refer to group 044D70 in body section	1
73/76	F	C7SZ 17B732-B	Nut-R.H. and L.H.	2
77/	F	(LH) C7SZ 17B732-B	Nut	1
74/77	F	(RH) D4GY 17B733-A	Plate	1
74/76	F	(LH) C8SZ 17B733-C	Plate	1
77/	F	(LH) 17B733	Plate-none used	
TYPE 5-	Rectangular head (hooded)			
73	F	(RH) Not available		
		(LH) ★● D2WY 17696-A	Mirror kit (complete)-remote control-r/b details	1
74/76	F	(RH) Not available		
		(LH) D90Z 17696-B	Mirror kit (complete)-remote control	1
73/	F	(RH) ● D1AZ 17696-B	Mirror kit (complete)-manual control	1
		(LH) Not available		
77/	F	(RH) † D70Z 17682-A	Mirror assy.-remote control	1
		(LH) † D70Z 17682-B	Mirror assy.-remote control	1
77/	F	(R.H.) Not available	Mirror kit (complete)-remote control	
		(L.H.) ● D90Z 17696-B	Mirror kit (complete)-remote control	1
77/	F	(RH) D70Z 17530-A	Bezel	1
77/	F	(LH) D70Z 17530-B	Bezel-3/4"-20	1
73/76	F	C7SZ 17B732-B	Nut-R.H. and L.H.	2
73/	F	(RH) D4GY 17B733-A	Plate	1
		(LH) C8SZ 17B733-C	Plate	1

G (Monarch)

TYPE 1-	Rectangular head (non-hooded)			
75/	G	(RH) ● D7DZ 17696-C	Mirror kit (complete)	1
		(LH) † D5DZ 17682-B	Mirror assy.-manual control	1
TYPE 2-	Convex-adhesive backed (attaches to R.H. mirror)			
75/	G	★ D7AZ 17696-A	3 1/4" x 5 1/4"-not replaced	1
		D70Z 17696-A	2 7/8" x 4 1/2"	1
TYPE 3-	Trailer towing (fender mounted)-Not available			
TYPE 4-	Racing (Paint to match)			
76/	G	(RH) † D6DZ 17682-A	Mirror assy.-remote control	1
		(LH) † D2GY 17682-B	Mirror assy.-remote control	1
		★● D7DZ 17696-A	Mirror kit (complete)-incl. R.H. manual and L.H. remote control mirrors.-not replaced	1

COPYRIGHT © 1986 — FORD MOTOR COMPANY — DEARBORN, MICHIGAN

YEAR	MODEL/RESTRICTIONS	PART NUMBER	DESCRIPTION	QTY.
17682	MIRROR (REAR VIEW OUTSIDE)-Incl. Pad — Cont'd			
Notes:	† incl. attaching parts (to door)			
	● Refer to Section 176A for listing of kit components			

G (Monarch)

TYPE 4-	Racing (Paint to match)			
75/	G	(RH) D5DZ 17530-A	Bezel-name plate-"R.H. Mirror" Panel (instrument panel finish) refer to body section	1
		(RH) D5DZ 17D678-A	Guide	1
		C7SZ 17B732-B	Nut-R.H. and L.H.	2
		(RH) D5DZ 17B733-A	Plate	1
		(LH) D4ZZ 17B733-B	Plate	1
TYPE 5-	Rectangular head (hooded)			
75/	G	(RH) † D5DZ 17682-C	Mirror assy.-remote control	1
		(LH) ● D5DZ 17696-A	Mirror kit (complete)-remote control	1
75/	G	(RH) ● D7DZ 17696-B	Mirror kit (complete)-manual control	1
		(LH) Not available		
		(RH) D5DZ 17530-A	Bezel-name plate-"R.H. MIRROR" panel (instrument panel finsih)-refer to body section	1
		(RH) D5DZ 17D678-A	Guide	1
		(RH) C7SZ 17B732-B	Nut	1
		(RH) D5DZ 17B733-A	Plate	1

J (Capri)

TYPE 1-	Rectangular head (non-hooded)			
73/74	J	D3RY 17682-A	R.H. or L.H.-Mirror assy.	2
76	J	(LH) D5RY 17682-A	Mirror assy.	1
TYPE 3-	Trailer towing (fender mounted)			
73/77	J	● D3AZ 17696-D	R.H. and L.H. - mirror kit (complete)	2
TYPE 4-	Racing			
74	J	(RH) Not available		
		(LH) ★ D4RY 17682-A	Mirror assy.-remote control-not replaced (chrome)	1
76	J	(RH) D5RY 17682-E	Mirror assy.-manual control (paint to match)	1
		(LH) Not available		
		(RH) Not available		
		(LH) ★ D5RY 17682-D	Mirror assy.-remote control-not replaced (paint to match)	1
74	J	(LH) ★ D4RY 17B732-A	Nut-not replaced	1
76	J(exc. 64S)			
76	J(64S)	★(LH) ★ D6RY 17B732-A	Nut-not replaced	1
74	J	(LH) ★ D4RY 17B733-A	Plate-not replaced	1
76	J	(LH) D5RY 17B733-A	Plate-not replaced	1
TYPE 5-	Rectangular head (hooded)			
73/74	J	(RH) ● D1AZ 17696-B	Mirror kit (complete)-manual control	1
		(LH) Not available		
		(RH) Not available		
		(LH) ★ D00Z 17696-A	Mirror kit (complete)-remote control-not replaced	1
TYPE 6-	Window mounted (sail)			
79	J - - w/manual mirror-	(RH) Not available	(LH) E0ZZ 17682-A Mirror assy.-black	1
79	J - - w/remote control-	(RH) ● E0ZZ 17696-C	(LH) ● E0ZZ 17696-B Mirror kit-complete-paint to match	1

YEAR	MODEL/RESTRICTIONS	PART NUMBER	DESCRIPTION	QTY.
17682	MIRROR (REAR VIEW OUTSIDE)-Incl. Pad — Cont'd			
Notes:	† incl. attaching parts (to door)			
	● Refer to Section 176A for listing of kit components			

K (Mark IV, Mark V)

TYPE 2-	Convex-adhesive backed (attaches to R.H. mirror)			
73/	K	★ D7LY 17696-A	3 1/4" x 5 1/8"-not replaced	1
TYPE 3-	Trailer towing (fender mounted)-Not available			
TYPE 5-	Rectangular head (hooded)			
73	K	(RH) ★ D3LY 17682-A	Mirror assy.-remote control-not replaced	1
		(LH) † D3SZ 17682-B	Mirror assy.-remote control	1
74/76	K	(RH) † D4SZ 17682-A	Mirror assy.-remote control	1
		(LH) † D3SZ 17682-B	Mirror assy.-remote control	1
77/	K	(RH) D8LY 17682-A	Mirror assy.-remote control	1
		(LH) D8LY 17682-B	Mirror assy.-remote control	1
78/	K	(LH) D8LY 17682-C	Mirror assy.-remote control (heated)	1
78/	K	(LH) ★ D8LY 17682-D	Mirror assy.-remote control (w/thermometer)-N/R	1
78/	K	(LH) D8LY 17682-E	Mirror assy.-remote control (heated w/thermometer)	1
78/	K	(RH) D3SZ 17530-B	Bezel	1
73/	K	(RH) D3AZ 17B732-A	Nut	1
		(LH) C7SZ 17B732-B	Nut	1

L (Bobcat)

TYPE 1-	Rectangular head (non-hooded)			
74/	L	(RH) Not available		
		(LH) † D2FZ 17682-B	Mirror assy.-manual control	1
TYPE 2-	Convex-adhesive backed (attaches to R.H. mirror)			
74/	L	D70Z 17696-A	2 7/8" x 4 1/2"	1
TYPE 3-	Trailer towing (fender mounted)-Not available			
TYPE 4-	Racing (Paint to match)			
74/	L	(RH) † D4FZ 17682-A	Mirror assy.-remote control	1
		(LH) † D2FZ 17682-C	Mirror assy.-remote control	1
		(RH) † D2FZ 17682-A	Mirror assy.-manual control	1
		(LH) Not available		
		● D3FZ 17696-A	Mirror kit (complete)-incl. R.H. manual and L.H. remote control mirrors	1
		(RH) D4FZ 17530-A	Bezel-name plate-"R.H. MIRROR"	1
		(RH) D4FZ 17D678-A	Guide	1
		C7SZ 17B732-B	Nut-R.H. and L.H.	2
		(LH) C8SZ 17B733-C	Plate	1

P (Comet)

TYPE 1-	Rectangular head (non-hooded)			
73/77	P	(RH) Not available		
		(LH) † D0DZ 17682-A	Mirror assy.-manual control	1

COPYRIGHT © 1986 — FORD MOTOR COMPANY — DEARBORN, MICHIGAN

1973/79 LINCOLN-MERCURY CARS

YEAR	MODEL/RESTRICTIONS	PART NUMBER	DESCRIPTION	QTY.
17682	MIRROR (REAR VIEW OUTSIDE)-Incl. Pad — Cont'd			
Notes:	† incl. attaching parts (to door)			
	● Refer to Section 176A for listing of kit components			

P (Comet)

TYPE 2–	Convex-adhesive backed (attaches to R.H. mirror)			
73/77	P	D70Z 17696-A	2 7/8" x 4 1/2"	1
TYPE 3–	Trailer towing (fender mounted)-Not available			
TYPE 4–	Racing (Paint to match)			
73/77	P	(RH) † D0DZ 17682-D	Mirror assy.-manual control	1
		(LH) Not available		
		(RH) Not available		
		(LH) † D1DZ 17682-A	Mirror assy.-remote control	1
		★● D1DZ 17696-B	Mirror kit (complete)-incl. R.H.manual and L.H. remote control mirrors-r/b details	1
		(LH) C9TZ 17B732-A	Nut	1
		(LH) C8SZ 17B733-C	Plate	1
TYPE 5–	Rectangular head (hooded)			
73/77	P	(RH) Not available		
		(LH) ● D2DZ 17696-A	Mirror kit (complete)-remote control	1

P (Zephyr)

TYPE 6–	Window mounted (sail)				
78/	P(54,66,74) - - w/manual control	(RH) D8BZ 17682-E	(LH) D8BZ 17682-A	Bright finish	1
		(RH) D8BZ 17682-F	(LH) Not available	Black finish	1
78/	P(54,66,74) - - w/remote control	(RH) D9BZ 17682-A "From 3/5/79"	(LH) E3DZ 17682-B	Bright finish	1
		(RH) D9BZ 17682-C "From 3/5/79"	(LH) D8BZ 17682-D	Black finish	1
		(RH) Not available	(LH) ● D8BZ 17696-A	Mirror kit-bright finish	1
			(LH) ● D8BZ 17696-B	Mirror kit-black finish	1
78/	P(36) - - w/manual control	(RH) D8BZ 17682-G	(LH) D8BZ 17682-H	Bright finish	1
78/	P(36) - - w/remote control	(RH) D9BZ 17682-B "From 3/5/79"	(LH) D8BZ 17682-J	Bright finish	1

V (Versailles)

TYPE 5–	Rectangular head (hooded)			
78/	V	(RH) † D84Y 17682-A	Mirror assy.-remote control	1
77/		(LH) † D84Y 17682-B	Mirror assy.-remote control	1
78/		(LH) † D84Y 17682-C	Mirror assy.-remote control (heated)	1
78/		(LH) ★ D84Y 17682-D	Mirror assy.-remote control (w/thermometer)	1
78/		(LH) ★ D84Y 17682-E	Mirror assy.-remote control (heated w/thermometer)	1
77/		(RH) D5DZ 17530-A	Bezel	1
77/		C7SZ 17B732-B	Nut R.H. and L.H.	2
77/		(RH) D5DZ 17B733-A	Plate	1

Y (Meteor)-Refer to A (Mercury)

17D682	PIN (VANITY MIRROR COVER)			
74/	A,C,D,F,G,K,V,Y - - w/illuminated vanity mirror	D4MY 17D682-A		2
17D683	SPRING (VANITY MIRROR COVER)			
74/	A,C,D,F,G,K,V,Y - - w/illuminated vanity mirror	D4MY 17D683-A		2

YEAR	MODEL/RESTRICTIONS	PART NUMBER	DESCRIPTION	QTY.
17B685	ESCUTCHEON (REAR VIEW OUTSIDE REMOTE CONTROL MIRROR)			
74	J	★ D4RY 17B685-A	Not replaced	1
76/78	J (e-not replacedxc. 64S)	★ D5RY 17B685-A	Chrome-not replaced	1
		★ D7RY 17B685-A	Black-not replaced	1
		★ D5RY 17B685-D	Tan (light)-not replaced	1
		★ D5RY 17B685-C	Tan (dark)-not replaced	1
76/78	J(64S)	★ D7RY 17B685-B	Black-not replaced	1
17D685	JUMPER WIRE KIT (VANITY MIRROR LAMP)			
75/76	A,C,D,F,K,Y	★ D4LZ 17D685-A	Not replaced	1
17D687	BOARD ASSY. (VANITY MIRROR LAMP CIRCUIT)			
75/	G	D6DZ 17D687-A		1
75/	A,C,D,F,K	D6MY 17D687-A		1
77/	V	D6DZ 17D687-A		1
17A692	BRACKET (VANITY MIRROR MOUNTING)			
73/76	D(Town Car,Town Coupe)	★ C8LY 17A692-A	Used in glove compartment-not replaced	1
17B693	PLATE (REAR VIEW OUTSIDE MIRROR)			
79	A	(RH) D9AZ 17B693-C	(LH) D9AZ 17B693-D	1
78/	P(54,66,74)	(RH) D8BZ 17B693-A	(LH) D8BZ 17B693-B	1
78/	P(36)	(RH) D8BZ 17B693-C	(LH) D8BZ 17B693-D	1
17696	MIRROR KIT (REAR VIEW OUTSIDE) - Refer to group number 17682			
17698	BRACKET (REAR VIEW INSIDE MIRROR)			
73/	All	C9AZ 17698-A	Flat bracket on windshield-grooved. To attach to glass, refer to group 19554 (Loctite bond adhesive #312) in Paint Section	1
73/76	A,C,D,F	C9AZ 17698-B	Detachable bracket & ball stud for mirror mounting arm	1
17700	MIRROR ASSY. (REAR VIEW INSIDE)			
73/	All - - electronically self adjusting	E4AZ 17700-A	Kit-day/nite mirror-9 5/8" x 2 1/2" used for conversion from manual to automatic electrically self adjusting inside rear view mirror-on some models, check for sun visor clearance	1
73/76	A,C,D,F,K,Y	D0AZ 17700-A	Day/nite mirror-2 1/2" wide x 12" long w/	1
77/	A,D,F,K		Undetachable mounting arm-black vinyl covered	1
73/	F,G,L,P,V	D0DZ 17700-A	Day/nite mirror-2 7/16" x 10" long	1
79	J		w/detachable mounting arm-black vinyl covered	1
73/78	J	D5RY 17700-A	Black	1
76/78	J	D5RY 17700-B	Gray	1
76/78	J	★ D5RY 17700-C	Tan-not replaced	1
17C700	RETAINER (REAR VIEW OUTSIDE MIRROR)			
76/78	J	★ D5RY 17C700-A	Not replaced	AR
73/76	C,F	C9AZ 17C700-B		1
74	J			1
73/	F,P			1
75/	L			1
17C706	LENS (VANITY MIRROR LAMP)			
74/	A,D,F,K	D7AZ 17C706-A		1
74/76	C,Y			1
77/	A,D,F,K	D7AZ 17C706-A		2
75/76	G	★ D5DZ 17C706-A	Not replaced	2
77/	G,V	D7FZ 17C706-A		2
17K707	GLASS REPLACEMENT (REAR VIEW OUTSIDE MIRROR) For additional application refer to T.S.B No. 150, dated January 4, 1978, article No. 3009 on page 8			
73/78	A,F	D70Z 17K707-A	w/manual control, rectangular mirror-L.H.	1
73/76	C			1
75/	G			1
		D7AZ 17K707-A	w/remote control, hooded, rectangular mirror, R.H. and L.H.	2
73/	C,F,G,L	D7FZ 17K707-A	R.H.-w/remote control, racing, oblong mirror	1
		D7FZ 17K707-B	L.H.-w/remote control, racing, oblong mirror	1
73/	L	D7FZ 17K707-C	w/manual control, rectangular mirror-L.H.	1

COPYRIGHT © 1986— FORD MOTOR COMPANY —DEARBORN, MICHIGAN

1973/79 LINCOLN-MERCURY CARS

YEAR	MODEL/RESTRICTIONS	PART NUMBER	DESCRIPTION	QTY.
17K707	**GLASS REPLACEMENT (REAR VIEW OUTSIDE MIRROR) — Cont'd**			
73/77	P	D70Z 17K707-A	w/manual control, rectangular mirror-L.H.	1
		★ D7DZ 17K707-A	w/remote control, hooded, rectangular mirror, R.H. and L.H.-not replaced	2
		D7FZ 17K707-A	R.H.-w/remote control, racing, oblong mirror	1
		D7FZ 17K707-B	L.H.-w/remote control, racing, oblong mirror	1
78/	P	D8BZ 17K707-A	R.H.-w/manual control	1
		D8BZ 17K707-C	L.H.-w/remote control	1
73/	D,K,V	D74Y 17K707-A	w/remote control, hooded, R.H. & L.H.	2
		D7AZ 17K707-A	3 3/8" x 5 3/8", rectangular	1
		D7DZ 17K707-A	3" x 5 1/8", rectangular	1
		D7FZ 17K707-A	2 7/8" x 4 1/2", oblong	1
		D7FZ 17K707-B	2 3/4" x 4 5/8" oblong	1
		D7FZ 17K707-C	3" x 5" rectangular	1
		D70Z 17K707-A	3 1/8" x 5 3/8" rectangular	1
		D74Y 17K707-A	3 1/2" x 5 1/4" rectangular	1
17K709	**COVER (REAR VIEW OUTSIDE MIRROR MOUNTING HOLE INSIDE)**			
79	A	(RH) D9AZ 17K709-A	(LH) D9AZ 17K709-B	1
79	J - - w/remote control	(RH) D9ZZ 17K709-A	(LH) D9ZZ 17K709-B	1
79	J - - w/manual control	(RH) D9ZZ 17K709-C	(LH) D9ZZ 17K709-D	1
79	J - - w/o outside rear view mirror	(R.H.) ★	Cover plate-refer to group 214A62 in Body Section	
78/	P(54,66,74) - - w/o door trim panel	(RH) D8BZ 17K709-A	(LH) D8BZ 17K709-B Manual mirrors	1
		(RH) D9BZ 17K709-C	(LH) D8BZ 17K709-E Remote control mirror	1
78/	P(54,66,74) - - w/door trim panel	(RH) D8BZ 17K709-C	(LH) Not available Manual mirror	1
		(RH) E3DZ 17K709-A	(LH) D8BZ 17K709-D Remote control mirror	1
78	P(36) - - w/o door trim panel	(RH) ★ D8BZ 17K709-F	(LH) ★ D8BZ 17K709-G Manual mirror	1
		(RH) Not available	(LH) ★ D8BZ 17K709-J Remote control mirror	1
78/	P(36) - - w/door trim panel	(RH) D8BZ 17K709-H	(LH) D8BZ 17K709-L Manual mirror	1
		(RH) D9BZ 17K709-B	(LH) D8BZ 17K709-K Remote control mirror	1
17C710	**WIRE ASSY. (VANITY MIRROR LAMP FEED)**			
74/76	A,Y - - w/dual dome lamp	★ D4MY 17C710-C	Not replaced	1
77/78	A - - w/dual dome lamp			1
74/76	A(53,57,65),Y(53,65)	★ D4MY 17C710-A	Not replaced	1
77/78	A(53,65)			1
74/76	A(71),Y(71)	★ D4MY 17C710-B	Not replaced	1
77/78	A(71)			1
74	C(53,65),F "Before 4/1/74"	★ D4GY 17C710-A	Not replaced	1
74/76	C(53,65),F "From 4/1/74"	★ D4GY 17C710-C	# D4GB 17C710-AC-not replaced	1
77/	F			1
74/76	C(71)	★ D4GY 17C710-B	# D4GB 17C710-BC-not replaced	1
75/76	C,F	★ D5GZ 17C710-A	# D4GB 17C712-AA-not replaced	1
77/	F			1
74	D	★ D4VY 17C710-A	Not replaced	1
75/	D	D7VY 17C710-A		1
75/	G(66)	D5DZ 17C710-B		1
75/78	G(54)	D8DZ 17C710-A		1
74/	K	D4LY 17C710-A		2
77/78	V "Before 3/1/78"	★ D74Y 17C710-A	# D74B 17C710-AB-not replaced	1
78/	V "From 3/1/78"	D84Y 17C710-A	# D84B 17C710-AC	1
17B715	**BRACKET (REAR VIEW OUTSIDE MIRROR)**			
78/	D - - w/R.H. remote control mirror	D8VY 17B715-A		1
73/	K - - w/R.H. remote control mirror	D3LY 17B715-A		1

1973/79
LINCOLN-MERCURY CARS

YEAR	MODEL/RESTRICTIONS	PART NUMBER	DESCRIPTION	QTY.
17B718	KNOB KIT (REAR VIEW OUTSIDE REMOTE CONTROL MIRROR)			
73/	All	D6AZ 17B718-A	Repair kit for R.H. or L.H. remote control cable knob-incl. (1) cable knob, (1) drill guide & (1) instruction sheet	AR
17A720	PAD (REAR VIEW INSIDE MIRROR TO WINDSHIELD)			
73/	A,C,D,F,K,L,P,V,Y	★	Refer to group 19554 (loctite minute bond adhesive No. 312)-in paint section	
17B721	RETAINER (REAR VIEW OUTSIDE MIRROR ADJUSTING CABLE)			
73	K	★ D3SZ 17B721-A	R/b 377599-S100 (3/75)	1
17723	HEAD (REAR VIEW OUTSIDE MIRROR)			
73	A,C,F,P,Y	★ C8AZ 17723-A	Use as replacement glass for manual mirror-N/R	1
73	A,C,Y	D1AZ 17723-A	Use as replacement glass for L.H. racing type mirror	1
73/74	J	D0RY 17723-A	Glass replacement repair kit	1
73/74	J	D3RY 17723-A	R.H. and L.H.-manual rectangular head mirror	1
76/78	J		L.H.-manual rectangular head mirror	1
17724	GASKET (REAR VIEW OUTSIDE MIRROR)-Also serviced in assy.-group 17682-3			
79	A	D9AZ 17724-A	L.H. manual door mounted mirror	1
73/76	C	D2GZ 17724-A	Use w/manual mirror	1
74/	F			1
74/76	C(65),F	D4GY 17724-A	R.H.-remote control racing mirror	1
73	C	★ D2GY 17724-B	R.H. and L.H. racing type mirrors -Not replaced	1
73	F	(RH) ★ D10Z 17724-B	(LH) ★ D1WY 17724-A / Racing mirror-N/R	1
73	F	(RH) Not available	(LH) D1AZ 17724-A / Manual mirror	1
73/74	J	★ D3RY 17724-A	R.H. and L.H.-not replaced	1
74	J	★ D4RY 17724-A	Remote control mirror-not replaced	1
76/78	J	D5RY 17724-B	R.H. and L.H. racing type mirror	2
76/78	J	★ D5RY 17724-A	L.H.-manual mirror-not replaced	1
77/	K	★ D7LY 17724-A	L.H.-not replaced	1
74/	L	D4FZ 17724-A		1
73/77	P - - w/racing mirrors	(RH) ★ D0DZ 17724-C	(LH) ★ D0DZ 17724-B / Not replaced	1
74/77	P - - w/o racing mirrors	D0DZ 17724-A	L.H.	1
17B732	NUT (REAR VIEW OUTSIDE MIRROR REMOTE CONTROL)			
73/	A,D,K,Y	C7SZ 17B732-B	L.H.	1
73/	D,K	D3AZ 17B732-A	R.H.	1
73/	C,F,G,V	C7SZ 17B732-B	R.H. and L.H.	2
73	J			1
74/78	J(exc. 64S)	D4RY 17B732-A		1
76	J(64S)	D6RY 17B732-A		1
74	L	C7SZ 17B732-B	L.H.	1
75/	L		R.H.-remote control mirror	1
74/	L	★ C9TZ 17B732-A	L.H.-not replaced	1
73/77	P			1
17B733	PLATE (REAR VIEW OUTSIDE MIRROR REMOTE CONTROL)			
73	A,Y - - w/o power windows	(RH) Not available	(LH) D3AZ 17B733-B	1
74/78	A,Y - - w/o power windows	D4AZ 17B733-A	L.H.	1
74/	C,F - - w/racing mirrors	D4GY 17B733-A	R.H.	1
73/	C,F,P - - w/rectangular head mirror	C8SZ 17B733-C		1
74/	L			1
75/	G - - w/racing mirrors	D4ZZ 17B733-B	L.H.	1
75/	G,V - - w/remote control mirror	D5DZ 17B733-A	R.H.	1
74	J	★ D4RY 17B733-A	Not replaced	1
76/78	J	★ D5RY 17B733-A	Not replaced	1
79	J	D9ZZ 17B733-A	Cover-knob-R.H. & L.H.	2
79	P "From 3/5/79"			2
17A746	RETAINER (REAR VIEW OUTSIDE MIRROR PLATE)			
75/78	G,L - - w/remote control racing	D4ZZ 17A746-A		1
17747	SUPPORT (FRONT BUMPER STONE DEFLECTOR)-Also refer to group 17626			
73	A,Y	★ D3MY 17747-A	R.H. and L.H.-13" long-not replaced	2
73	A,Y	★ D3MY 17747-B	R.H. and L.H.-3 1/2" long-not replaced	2
75/78	A	(RH) ★ D5MY 17747-A	(LH) ★ D5MY 17747-B / Not replaced	1
73	C	(RH) ★ D3GY 17747-A	(LH) ★ D3GY 17747-B / Not replaced	1

COPYRIGHT © 1986 — FORD MOTOR COMPANY — DEARBORN, MICHIGAN

1973/79 LINCOLN-MERCURY CARS

YEAR	MODEL/RESTRICTIONS	PART NUMBER	DESCRIPTION		QTY.
17747	SUPPORT (FRONT BUMPER STONE DEFLECTOR)-Also refer to group 17626 — Cont'd				
73	D	★ D3VY 17747-A	R.H. and L.H.-not replaced		2
73/74	D	D3VY 17747-B	Center-not replaced		1
77/	G "From 3/7/77"	D7DZ 17747-A			1
73	K	D3LY 17747-A	R.H. and L.H.-not replaced		2
74	L	(RH) ★ D4FZ 17747-A	(LH) ★ D4FZ 17747-B	Not replaced	1
73	P	D3DZ 17747-A	R.H. and L.H.-not replaced		2
17A750-1	BRACKET (REAR BUMPER INNER ARM MOUNTING)				
73	C(53,63,65)	(RH) ★ D3GY 17A750-A	(LH) ★ D3GY 17A751-A	Not replaced	1
73	F	★ D3WY 17A750-A	R.H. and L.H.-not replaced		2
17754-5	ARM (FRONT BUMPER ISOLATOR)				
73	A,Y "Before 12/1/72"	(RH) ★ D3AZ 17C882-A	(LH) ★ D3AZ 17C883-A	15" from mounting bracket to center of rear mounting hole	1
73/74	A,Y "From 12/1/72"	(RH) D6AZ 17754-B	(LH) D6AZ 17755-B	15 9/16" from mounting bracket to center of rear mounting hole	1
75/78	A	(RH) D6MY 17754-B	(LH) D6MY 17755-B		2
79	A	E0AZ 17754-A	Use w/steel reinforcement-front or rear		4
		E0AZ 17754-B	Use w/aluminum reinforcement-front or rear		4
		N606084-S2	(AB-119-CU) bolt M12 x 1.75 x 70 (isolator to frame)		AR
		N800325-S2	(AM-63-E) nut & retainer J-lock M12 x 1.75 (isolator to frame)		AR
		N800321-S53B	(AB-37-EE) Screw & washer M12 x 1.75 x 40 hex hd. (isolator to reinforcement)		AR
73	C	(RH) ★ D3GY 17C882-A	(LH) ★ D3GY 17C883-A	Not replaced	1
74	C,F "Before 12/17/73"	(RH) D6MY 17754-B	(LH) D6MY 17755-B		1
74/76	C,F "From 12/17/73"	(RH) D6GY 17754-B	(LH) D6GY 17755-B	W/wedge welded on top of housing	1
73	D	(RH) ★ D3AZ 17C882-A	(LH) ★ D3AZ 17C883-A	Not replaced	1
74/	D	(RH) D6SZ 17754-B	(LH) D6SZ 17755-B		1
73	F	(RH) ★ D3WY 17C882-A	(LH) ★ D3WY 17C883-A	Not replaced	1
77/78	F	(RH) D70Z 17754-A	(LH) D70Z 17755-A		1
79	F	D90Z 17754-A	R.H. and L.H.		2
75/77	G "Before 3/7/77"	(RH) D6DZ 17754-A	(LH) D6DZ 17755-A		1
77/	G "From 3/7/77"	(RH) E0DZ 17754-A	(LH) E0DZ 17755-A		1
73/78	J	(RH) ★ D3RY 17C882-A	(LH) ★ D3RY 17C883-A	Not replaced	1
79	J	E0ZZ 17754-A	R.H. and L.H. front R.H. and L.H. rear		2 2
73	K	(RH) ★ D3GY 17C882-A	(LH) ★ D3GY 17C883-A	Not replaced	1
74/75	K	(RH) ★ D4LY 17754-A r/b D6MY 17754-B	(LH) D6MY 17755-B		1
76	K	(RH) D6MY 17754-B	(LH) D6MY 17755-B		1
77/79	K	D9LY 17754-A	R.H. & L.H.		2
74/76	L	(RH) D4FZ 17754-A	(LH) D4FZ 17755-A		1
77/78	L	(RH) D7FZ 17754-A	(LH) D7FZ 17755-A		1
79	L	(RH) E0FZ 17754-A	(LH) E0FZ 17755-A		1
73	P	(RH) ★ D3DZ 17C882-A	(LH) ★ D3DZ 17C883-A	Not replaced	1
74	P	(RH) D4DZ 17754-A	(LH) D4DZ 17755-A		1
75/77	P	(RH) D6DZ 17754-A	(LH) D6DZ 17755-A		1
78/	P	D8BZ 17754-A	R.H. & L.H.		2
73	Y	(RH) ★ D3AZ 17C882-A	(LH) ★ D3AZ 17C883-B	Not replaced	1
77/	V	(RH) D9DZ 17754-A	(LH) D9DZ 17755-A		1
73	K	385485-S36	(MM-284-EH)-nut and retainer (isolator to 17A792)-7/16"-14 x 3 3/32"		6
73/	A,Y	385700-S2	(MM-192-AH)-nut and retainer-9/16"-12		AR

YEAR	MODEL/RESTRICTIONS	PART NUMBER	DESCRIPTION	QTY.
17K754	BRACKET (FRONT BUMPER STOP)			
77/	F	(RH) D70Z 17K754-A	(LH) D70Z 17K754-B	1
17757	BUMPER (FRONT)			
	When steel bumpers with bumper guard attaching holes are installed on vehicles without guards, use 385361-S100(PP-8-H)plug button to plug the unused holes. This plug button is not to be used with aluminum bumpers.			
73	A - - w/o bumper guards and horizontal pads	★ D3MY 17757-A	Steel-not replaced	1
73/78	A - - w/bumper guards and horizontal pads	D4MY 17757-B	Steel	1
73/78	A - - w/bumper guards w/o horizontal pads	D4MY 17757-C	Steel	1
79	A - - w/o guards & horizontal pads	D9MY 17757-A	Steel	1
79	A - - w/guards & w/o horizontal pads	D9MY 17757-B	Steel	1
79	A - - w/guards & horizontal pads	D9MY 17757-C	Steel	1
73/74	C - - w/bumper guards and	★ D4GY 17757-A	Steel-not replaced	1
73/74	C - - w/bumper guards w/o horizontal pads	★ D4GY 17757-B	Steel-repl. by D5GY 17757-B, D5GY 17D808-A and D5GY 17D808-B (3/77)	1
75/76	C - - w/bumper guards and horizontal pads	★ D5GY 17757-A	Steel-not replaced	1
75/76	C - - w/bumper guards w/o horizontal pads	D5GY 17757-B	Steel	1
73	D	★ D3VY 17757-A	Steel-not replaced	1
74/76	D - - w/bumper guards and horizontal pads	★ D6VY 17757-B	Steel-not replaced	1
77/	D	D9VY 17757-A	Steel	1
73	F - - w/bumper guards w/o horizontal pads	★ D3WY 17757-A	Steel-not replaced	1
73	F - - w/bumper guards and horizontal pads	★ D3WY 17757-B	Steel-not replaced	1
74	F - - w/bumper guards and horizontal pads	★ D4GY 17757-A	Steel-repl. by D5GY 17757-A, D5GY 17D808-A, and D5GY 17D808-B (12/77)	1
74	F - - w/bumper guards w/o horizontal pads	★ D4GY 17757-B	Steel-repl. by D5GY 17757-B, D5GY 17D808-A, and D5GY 17D808-B (3/77)	1
75/76	F - - w/bumper guards and horizontal pads	★ D5GY 17757-A	Steel-not replaced	1
75/76	F - - w/bumper guards w/o horizontal pads	D5GY 17757-B	Steel	1
77/	F - - w/o bumper guards and horizontal pads	D70Z 17757-A	Steel	1
77/	F - - w/bumper guards and horizontal pads	D70Z 17757-B	Steel	1
77/	F - - w/three bumper guards w/o horizontal pads	D7SZ 17757-A	Steel	1
77/	F - - w/bumper guards and w/o horizontal pads	D70Z 17757-C	Steel	1
75/77	G - - w/ or w/o bumper guards, w/o horizontal pads & w/cooling slots "Before 3/17/77"	D54Y 17757-B	Steel	1
77/	G - - w/ or w/o bumper quards, w/o horizontal pads & w/o cooling slots "From 3/17/77"	★ D7DZ 17757-A	Steel-repl. by (1) E0DZ 17757-B (2) 387169-S100 beauty bolts, and (2) 376785-S2 nut & washer	1
75/77	G - - w/bumper guards, horizontal pads & cooling slots "Before 3/17/77"	D5DZ 17757-D	Steel	1

COPYRIGHT © 1986— FORD MOTOR COMPANY —DEARBORN, MICHIGAN

1973/79 LINCOLN-MERCURY CARS

YEAR	MODEL/RESTRICTIONS	PART NUMBER	DESCRIPTION	QTY.
17757	BUMPER (FRONT) — Cont'd When steel bumpers with bumper guard attaching holes are installed on vehicles without guards, use 385361-S100(PP-8-H)plug button to plug the unused holes. This plug button is not to be used with aluminum bumpers.			
77/	G - - w/bumper guards, horizontal pads & w/o cooling slots "From 3/17/77"	★ D74Y 17757-A	Steel-repl. by (1) E0DZ 17757-A (2) 387169-S100 beauty bolts and (2) 376785-S2 nut & washer	1
73	J	★ D3RY 17757-A	Steel-not replaced	1
74	J	★ D4RY 17757-A	Urethane - paint to match with Elastomeric paint-N/R	1
76	J	★ D5RY 17757-A	Urethane - paint to match with Elastomeric paint-N/R	1
77/78	J	★ D6RY 17757-A	Urethane - paint to match with Elastomeric paint-N/R	1
79	J	★ E0ZZ 17757-A	Aluminum-Repl. by E0ZZ 17757-B	1
		E0ZZ 17757-B	Steel	1
73	K	★ D3LY 17757-A	Steel-not replaced	1
74	K - - w/bumper guards and horizontal pads "Before 8/27/73"	★ D4LY 17757-B	Steel-not replaced	1
74/76	K - - w/bumper guards and horizontal pads "From 8/27/73"	D6LY 17757-A	Steel	1
77/	K - - w/bumper guards and horizontal pads	★ D7LY 17757-A	Steel-not replaced	1
74/76	L - - w/bumper guards and horizontal pads "From 2/3/75"	D5FZ 17757-B	Steel	1
74/76	L - - w/o horizontal pads	D5FZ 17757-A	Steel	1
77/78	L - - w/o bumper guards and horizontal pads	D7FZ 17757-A	Aluminum	1
77/78	L - - w/bumper guards w/o horizontal pads	★ D7FZ 17757-B	Aluminum-r/b D7FZ 17757-A(4/79)	1
77/78	L - - w/bumper guards and horizontal pads	D7FZ 17757-C	Aluminum	1
79	L - - w/guards, w/o horizontal pads	E0FZ 17757-A	Aluminum	1
79	L - - w/guard, w/horizontal pads	★ D9FZ 17757-E	Aluminum- repl. by (1) E0FZ 17757-B bumper assy., (1) E0FZ 17C829-A, (1) E0FZ 17K833-A, (1) E0FZ 17K834-A pads	1
73	P - - w/o bumper guards and horizontal pads	★ D3DZ 17757-A	Steel-r/b D3DZ 17757-C(4/79)	1
73	P - - w/bumper guards and horizontal pads	★ D3DZ 17757-B	Steel-not replaced	1
73	P - - w/bumper guards w/o horizontal pads	★ D3DZ 17757-C	Steel-not replaced	1
74/77	P - - w/o bumper guards and horizontal pads	D6DZ 17757-A	Steel	1
74/77	P - - w/bumper guards w/o horizontal pads	D6DZ 17757-B	Steel	1
74/77	P - - w/bumper guards and horizontal pads	D6DZ 17757-C	Steel	1
78/	P - - w/o bumper guards and horizontal pads	★ D8BZ 17757-A	Aluminum-r/b (1) E0BZ 17757-A, (2) 387169-S100 bolt (BB-689-G), (2) 376668-S wshr (XX-166-A) & (2) 382802-S2 nut (MM-173-JB)- also use D6AZ 19560-A caulking cord on bolt heads.	1
78/	P - - w/bumper guards w/o horizontal pads	E0BZ 17757-A	Aluminum	1
78/	P - - w/bumper guards and horizontal pads	★ D8BZ 17757-C	Aluminum-repls. by (1) E0BZ 17757-B bumper (1) E0BZ 17C829-A, (1) E0BZ 17K833-A, (1) E0BZ 17K834-A rub strips	1
77/79	V - - w/bumper guards and horizontal pads- "Before 12/14/78"	★ D74Y 17757-A	Steel-repl. by E0DZ 17757-A	1
79	V - - w/bumper guards and horizontal pads	★ D94Y 17757-A	Steel -repl. by (1) E0DZ 17757-C bumper assy. (2) 387169-S100 beauty bolts, (2) 376785-S2 nut & washer assy.	1
73	Y - - w/o bumper guards and horizontal pads	★ D3MY 17757-A	Steel-not replaced	1

YEAR	MODEL/RESTRICTIONS	PART NUMBER	DESCRIPTION	QTY.
17757	BUMPER (FRONT) — Cont'd			
	When steel bumpers with bumper guard attaching holes are installed on vehicles without guards, use 385361-S100(PP-8-H)plug button to plug the unused holes. This plug button is not to be used with aluminum bumpers.			
73	Y - - w/bumper guards and horizontal pads "Before 3/1/73"	★ D3MY 17757-B	Steel-not replaced	1
73	Y - - w/bumper guards and horizontal pads "From 3/1/73"	★ D3MY 17757-D	Steel-not replaced	1
73/76	Y - - w/bumper guards w/o horizontal pads	D4MY 17757-C	Steel	1
74/76	Y - - w/bumper guards and horizontal pads	D4MY 17757-B	Steel	1
73/76	A,C,D,F,K,P,Y	385575-S100	(BB-648-DM)-bolt (bumper to 17A820 brace)-7/16-14 x 1 1/2"	AR
17C760-1	INSULATOR (FRONT BUMPER STONE DEFLECTOR)			
73	A,Y	(RH) ★ D3MY 17C760-A	(LH) ★ D3MY 17C761-A — 20" long-not repl.	1
75/78	A,G	D40Z 17C760-B	8" long	2
73	C	★ D3GY 17C760-A	Not replaced	2
73	C	(RH) ★ D3GY 17C760-B	(LH) ★ D3GY 17C761-A — 9" long-not repl.	1
73	F	★ D3WY 17C760-A	Not replaced	6
74/76	C,F	★ D4GY 17C760-A	1 1/2" long-not replaced	2
74/76	C,F	★ D4GY 17C760-B	2 1/4" long-not replaced	2
77/	F	★ D7SZ 17C760-A	Not replaced	2
77/	V	D74Y 17C760-A		2
17765	SPACER (FRONT BUMPER ARM)			
73	A,D,K,Y	★ D3AZ 17765-B	R.H. and L.H.-not replaced	AR
74/76 77/78	A,C,F,K,Y A	D4AZ 17765-A	R.H. and L.H.	AR 1
74/76 77/78	A,C,F,K,Y A	D4AZ 17765-B	R.H. and L.H.	AR 1
79	A	D9AZ 17765-B	Spacer	1
		D9AZ 17B947-A	Insulator	1
73	C	★ D30Z 17765-A	R.H. and L.H.-1/8" thick-not replaced	AR
73	C	★ D30Z 17765-B	R.H. and L.H.-1/16" thick-not replaced	AR
74/79	D	D9VY 17765-A	Front bumper, incl. (2) wax coated spacers & (1) mylar insulator	AR
73	F	★ D3WY 17765-A	R.H. and L.H.-5/32" thick-not replaced	AR
73	F	★ D3WY 17765-B	R.H. and L.H.-1/8" thick-not replaced	AR
77/	F	D70Z 17765-A	R.H. and L.H.	AR
75/77	G "Before 3/7/77"	D6FZ 17765-A	R.H. and L.H.-1/4" thick	AR
77/79	G "From 3/7/77"	D9FZ 17765-C	Front	AR
79	J - - front bumper-	D9ZZ 17765-B	Spacer-incl. (2) spacers	1
		D9ZZ 17765-C	Insulator-	1
73	K	★ C9AZ 17765-A	R.H. and L.H.-not replaced	AR
77/79	K	D9LY 17765-A	Front bumper, incl. (2) wax coated spacers & (1) mylar insulator	AR
74/76	L,P	D6FZ 17765-A	R.H. and L.H.-1/4" thick	AR
77/78	L	D7FZ 17765-A	R.H. and L.H.	AR
79	L - - front bumper	D9FZ 17765-B	Spacer-incl. (2) spacers	AR
		D9FZ 17765-D	Insulator-incl. (2) mylar packed foils	AR
79	L - - rear bumper	D9FZ 17765-C	Spacer-incl. (2) spacers	1
73	P	★ D3ZZ 17765-A	R.H. and L.H.-not replaced	AR

COPYRIGHT © 1986 — FORD MOTOR COMPANY — DEARBORN, MICHIGAN

1973/79 LINCOLN-MERCURY CARS

YEAR	MODEL/RESTRICTIONS	PART NUMBER	DESCRIPTION		QTY.
17765	SPACER (FRONT BUMPER ARM) — Cont'd				
77	P	D6FZ 17765-A	R.H. and L.H.		AR
78/	P	D8BZ 17765-A	R.H. and L.H.-1/8" thick		AR
77/	V	D9FZ 17765-C	Front		AR
17766-7	ARM (FRONT BUMPER INNER)				
74	J	(RH) ★ D4RY 17766-A	(LH) ★ D4RY 17767-A	Not replaced	1
76/78	J	(RH) D5RY 17766-A	(LH) D5RY 17767-A		1
17B769	DEFLECTOR (FRONT BUMPER STONE LOWER)				
73/76	K	D3LY 17B769-A			1
17D771	Refer to group 17A896				
17B772-3	PLATE (REAR BUMPER ARM ANCHOR)				
73	A(53,57,65),Y(53,65)	(RH) ★ D3AZ 17B772-A	(LH) ★ D3AZ 17B773-A	Not replaced	1
73/75	A(71),Y(71)	(RH) ★ D3AZ 17B772-B	(LH) ★ D3AZ 17B773-B	Not replaced	1
17C772	MOULDING (REAR BUMPER UPPER)				
73	D	★ D1VY 17C772-A	Not replaced		1
17B774-5	RETAINER (REAR BUMPER ANCHOR PLATE)				
73	A(53,57,65),Y(53,65)	(RH) ★ D3AZ 17B774-A	(LH) ★ D3AZ 17B775-A	Not replaced	1
73	A(71),Y(71)	(RH) ★ D3AZ 17B774-B	(LH) ★ D3AZ 17B775-B	Not replaced	1
77/78	K	D9LY 17B774-A	Kit-reinforcement repair		1
	Consists of				
	2-D9LB 17B880-AA Retainer	6-385764-S53	Bolt	8-388442-S100 Rivet	
	2-D9LB 17B857-AA Insulator	2-388811-S100	Bolt	2-33772-S100 Nut	
		D9LY 17B774-B	Kit-reinforcement maintenance		1
	Consists of				
	2-D9VY 17C977-B Insulator	6-385764-S53	Bolt		
17C776	BRACKET (REAR BUMPER ADJUSTMENT)				
74/76	A(exc. 71),Y(exc. 71)	(RH) D4AZ 17C776-E	(LH) D4AZ 17C776-F		1
74/76	A(71),Y(71)	(RH) ★ D4AZ 17C776-C	(LH) ★ D4AZ 17C776-D	Not replaced	1
77/78	A(71) "Before 9/1/76"				1
79	F(65L)	(RH) ★ D9WY 17C776-A	(LH) ★ D9WY 17C776-B	Not replaced	1
17C777	MOULDING (REAR BUMPER LOWER CENTER)				
73	D	★ D1VY 17C777-A	Not replaced		1
17779	DEFLECTOR (FRONT BUMPER STONE)				
	● Paint to match w/Elastomeric paint				
73	A	(RH) ★ D3MY 17779-A	(LH) ★ D3MY 17779-B	Not replaced	1
		★● D3MY 17779-C	Center-not replaced		1
74	A	(RH) ★ D4MY 17779-A	(LH) D4MY 17779-B		1
		★ D4MY 17779-C	Center-not replaced		1
75/78	A	(RH) D5MY 17779-A	(LH) D5MY 17779-B		1
		D5MY 17779-C	Center		1
79	A - - upper	(RH) ● D9MY 17779-C	(LH) ● D9MY 17779-D		1
		● D9MY 17779-E	Center		1
79	A - - lower	(RH) ● D9MY 1779-A	(LH) ● D9MY 17779-B		1
73	C	(RH) ● D3GY 17779-A	(LH) ● D3GY 17779-B		1
		★● D3GY 17779-D	Center-not replaced		1
74/76	C	(RH) D4GY 17779-A	(LH) D4GY 17779-B		1
		D4GY 17779-C	Center		1
73	D	(RH) ★ D3VY 17779-B	(LH) ★ D3VY 17779-C	Not replaced	1
		★● D3VY 17779-A	Center-not replaced		1
74/76	D	(RH) D4VY 17779-A	(LH) D4VY 17779-B		1
		D4VY 17779-C	Center		1
77/	D	(RH) ● D7VY 17779-A	(LH) ● D7VY 17779-B		1
		● D7VY 17779-C	Center		1
73	F	(RH) ● D3WY 17779-A	(LH) ● D3WY 17779-B		1
		● D3WY 17779-D	Center		1

YEAR	MODEL/RESTRICTIONS	PART NUMBER	DESCRIPTION		QTY.
17779	DEFLECTOR (FRONT BUMPER STONE) — Cont'd				
	● Paint to match w/Elastomeric paint				
74/76	F	(RH) D4GY 17779-A	(LH) D4GY 17779-B		1
		D4GY 17779-C	Center		1
77/	F	(RH) ● D7WY 17779-A	(LH) ● D7WY 17779-B		1
		● D9SZ 17779-A	Center		1
75/77	G	● D64Y 17779-A	R.H.-#D64B 17776-AWA, D74B 17776-CWA		1
		● D64Y 17779-B	L.H.-#D64B 17777-AWA,		1
		● D6DZ 17779-C	Center		1
78/	G	(RH) ● D8DZ 17779-A	(LH) ● D8DZ 17779-B		1
		D8DZ 17779-C	Center		1
73	J	D3RY 17779-A			1
73	K	(RH) ● D3LY 17779-A	(LH) ● D3LY 17779-B		1
		★ D3LY 17779-C	Center-not replaced		1
74/76	K	(RH) D4LY 17779-B	(LH) D4LY 17779-C		1
		D4LY 17779-D	Center		1
77/	K	(RH) ● D7LY 17779-D	(LH) ● D7LY 17779-E	Ends	1
		(RH) ● D7LY 17779-A	(LH) ● D7LY 17779-B	Centers	1
		● D7LY 17779-C	Center-incl. 17B814 moulding		1
74	L "Before 1/3/74"	D4FZ 17779-A	Center		1
74	L "From 1/3/74"	D4FZ 17779-B	Center		1
75/78	L "Before 11/1/76"	★	3 piece design-R.H., L.H. & center is replaced by (1) piece design D7FZ 17779-D		
78	L "From 11/1/76"	● D7FZ 17779-D	Center		1
79	L	● D9FZ 17779-A	Center		1
73	P	★ D34Y 17779-A	Center-not replaced		1
74/77	P	D44Y 17779-A	Center		1
78/	P	(RH) ● D8BZ 17779-A	(LH) ● D8BZ 17779-B		1
77/78	V	(RH) ● D74Y 17779-A	(LH) ● D74Y 17779-B		1
		● D74Y 17779-C	Center		1
79	V	(RH) ● D94Y 17779-A	(LH) ● D94Y 17779-B		1
		● D74Y 17779-C	Center		1
73	Y	(RH) ★ D3MY 17779-A	(LH) ★ D3MY 17779-B	Not replaced	1
		★ D3MY 17779-C	Center-not replaced		1
74/76	Y	(RH) ● D4MY 17779-A	(LH) ● D4MY 17779-B		1
		● D4MY 17779-C	Center		1
17787-8	ISOLATOR AND BRACKET ASSY. (REAR BUMPER)				
73	A(53,57,65),Y(53,65)	(RH) D3AZ 17C884-A	(LH) ★ D3AZ 17C885-A		1
73	A(71),Y(71)	(RH) ★ D3AZ 17C884-B	(LH) ★ D3AZ 17C885-B	Not replaced	1
74	A(53,57,65),Y(53,65)	(RH) ★ D4AZ 17787-A	(LH) ★ D4AZ 17788-A	Isolator-not repl.	1
75/76 77/78	A(53,65),Y(53,65) "From 2/2/76" A(53,65)	(RH) D6AZ 17787-C	(LH) D6AZ 17788-C	Isolator w/wedge welded on top of housing	1 1
74/76	A(71),Y(71) "Before 2/2/76"	(R.H.) ★ D4AZ 17787-B	Isolator-r/b- (1) D6AZ 17787-D (1) D6AZ 5A007-A & (3) 382483-S2 (BB-546-GA)		1
		(L.H.) D4AZ 17788-B	Isolator-repl. by (1) D6AZ 17788-D		1
76 77/78	A(71),Y(71) "From 2/2/76" A(71)	(RH) D6AZ 17787-D	(LH) D6AZ 17788-D	Isolator w/wedge welded on top of housing	1 1
79	A		Use front bumper isolator-refer to group 17754-5		
73	C(71)	(RH) ★ D30Z 17787-A	(LH) ★ D30Z 17788-A	Not replaced	1
74/76	C(53,65) "Before 1/5/76"	(R.H.) ★ D40Z 17787-C	Isolator-r/b- (1) D60Z 17787-D which incl. instruction sheet for rework & (3) 382483-S2 (BB-546-GA) bolt		1
		(L.H.) ★ D40Z 17788-B	Isolator-Repl. by (1) D60Z 17788-D which incl. instruction sheet for rework & (3) 382483-S2 (BB-546-GA) bolt		1
76	C(53,65) "From 1/5/79"	(RH) D60Z 17787-D	(LH) D60Z 17788-D	Isolator	1
74/75	C(53,65) "Before 7/7/75"	★ D40Z 17787-A	R.H. and L.H.-bracket-not replaced		2
75/76	C(53,65) "From 7/7/75"	(RH) D60Z 17787-C	(LH) D60Z 17788-C	Bracket	1

COPYRIGHT © 1986 — FORD MOTOR COMPANY — DEARBORN, MICHIGAN

YEAR	MODEL/RESTRICTIONS	PART NUMBER	DESCRIPTION	QTY.
17787-8	ISOLATOR AND BRACKET ASSY. (REAR BUMPER) — Cont'd			
74/76	C(71)	(RH) D40Z 17787-B	(LH) D40Z 17788-A Bracket	1
74/76	C(71) "Before 1/5/76"	(R.H.) ★ D40Z 17787-D	Isolator-r/b (1) D60Z 17787-E which incl. instruction sheet for rework & (3) 382483-S2 (BB-546-GA) bolt	1
		(L.H.) ★ D40Z 17788-C	Insolator-Repl. by (1) D60Z 17788-E which incl. instruction sheet for rework & (3) 382483-S2 (BB-546-GA)	1
76	C(71) "From 1/5/76"	(RH) D60Z 17787-E	(LH) D60Z 17788-E Isolator	1
73	D	(RH) ★ D3VY 17787-A	(LH) ★ D3VY 17788-A Outer-N/R	1
		(RH) ★ D3VY 17787-B	(LH) D3VY 17788-B Inner	1
74/	D	(RH) D6VY 17787-B	(LH) D6VY 17788-B Isolator	1
73	F	(RH) ★ D3WY 17787-A	(LH) ★ D3WY 17788-A Not replaced	1
74/76	F	(RH) D60Z 17787-D	(LH) D60Z 17788-D Isolator	1
74/75	F "Before 7/7/75"	D40Z 17787-A	R.H. and L.H. bracket	2
75/76	F "From 7/7/75"	(RH) D60Z 17787-C	(LH) D60Z 17788-C bracket	1
77/78	F(53,65)	(RH) D60Z 17787-D	(LH) D60Z 17788-D Isolator	1
		(RH) D70Z 17787-A	(LH) D70Z 17788-A Bracket	1
77	F(71)	(RH) D60Z 17787-E	(LH) D60Z 17788-E Isolator	1
		(RH) D40Z 17787-B	(LH) D40Z 17788-A Bracket	1
79	F	(RH) D90Z 17787-B	(LH) D90Z 17788-B Isolator	1
		(RH) D90Z 17787-A	(LH) D90Z 17788-A Bracket	1
75/77	G "Before 3/7/77"	D4DZ 17787-A	R.H. and L.H.-bracket	2
77/	G "From 3/7/77"	(RH) D74Y 17787-B	(LH) D74Y 17788-A Bracket	1
75	G	D5DZ 17787-A	R.H. and L.H.-isolator	2
76	G	D6DZ 17787-C	R.H. and L.H.-isolator	2
77/	G	D7DZ 17787-C	R.H. and L.H.-Isolator	2
74	J	(RH) ★ D4RY 17787-A	(LH) D4RY 17788-A Isolator	1
76/78	J	D5RY 17787-A	R.H. and L.H.-Isolator	2
79	J		Use front bumper isolator-refer to group 17754-5	
73	K	★ D3LY 17788-A	R.H. and L.H.-not replaced	2
73	K	(RH) ★ D3LY 17787-B	(LH) ★ D3LY 17788-B Not replaced	1
74	K "Before 8/27/73"	(RH) ★ D4LY 17787-A	(LH) ★ D4LY 17788-A Isolator-not repl.	1
74/76	K "From 8/27/73"	(RH) D6LY 17787-B	(LH) D6LY 17788-B Isolator	1
77/	K	(RH) D7LY 17787-A	(LH) D7LY 17788-A Isolator	1
74/76	L(62,64)	D5FZ 17787-A	R.H. and L.H.-isolator	2
77/	L(62,64)	(RH) D7FZ 17787-A	(LH) D7FZ 17788-A Isolator	1
74/76	L(73)	★ D5FZ 17787-B	R.H. and L.H.-isolator-not replaced	2
77/78	L(73)	(RH) D7FZ 17787-B	(LH) D7FZ 17788-B Isolator	1
79	L(62,64)	(RH) E0FZ 17787-A	(LH) E0FZ 17788-A Isolator	1
79	L(73)	(RH) E0FZ 17787-B	(LH) E0FZ 17788-B Isolator	1
79	L		Bracket-refer to Group 17789	
73	P	D3DZ 17787-A	R.H. and L.H.	2
74	P	D4DZ 17787-A	R.H. and L.H.-bracket	2
74/75	P	D4DZ 17787-B	R.H. and L.H.-isolator	2
76	P	D6DZ 17787-B	R.H. and L.H.-isolator	2
77	P	D7DZ 17787-B	R.H. and L.H.-isolator	2
78/	P	D8BZ 17754-A	R.H. and L.H.-isolator	2
77/	V	D74Y 17787-A	R.H. and L.H.-isolator	2
77/	V	(RH) D74Y 17787-B	(LH) D74Y 17788-A Bracket	1
73/76	A,Y	385700-S2	(MM-192-AH)-nut and retainer-9/16"-12	AR
74	C,F	34670-S7-8	(M-54)-nut and washer-7/16"-14	AR
17C787	BRACKET (FRONT VALANCE PANEL)			
78/	P	D8BZ 17C787-A	R.H. and L.H.-end	2
78/	P	D8BZ 17C787-B	Center	1
17789	BRACE (REAR BUMPER END)			
73	C(53,63,65)	(RH) ★ D2GY 17789-A	(LH) ★ D2GY 17789-B Not replaced	1
75/76	D	(RH) ★ D5VY 17789-A	(LH) ★ D5VY 17789-B Not replaced	1
78/	D "From 6/19/78"	(RH) D8VY 17789-A	(LH) D8VY 17789-B	1
74	L	(RH) ★ D4FZ 17789-A	(LH) ★ D4FZ 17789-B Not replaced	1
76	L			1
79	L	(RH) E0FZ 17789-A	(LH) E0FZ 17789-B Bracket	1

YEAR	MODEL/RESTRICTIONS	PART NUMBER	DESCRIPTION	QTY.
17A792	REINFORCEMENT (FRONT BUMPER CENTER)			
73	A,Y	★ D3MY 17A792-B	Repl. by D5MY 17A792-A, D4MY 17A820-A and D4MY 17A821-A(9/75)	1
74/76	A,Y	D5MY 17A792-A		1
77/78	A	D5MY 17A792-A		1
79	A	D9AZ 17A792-C	Aluminum	1
		D9AZ 17A792-B	Steel	1
73/76	C	D5GY 17A792-C		1
73	D	★ D3VY 17A792-A	Not replaced	1
74/76	D	★ D5VY 17A792-B	Not replaced	1
77/78	D	D7VY 17A792-A		1
79	D	D9VY 17A792-A		1
73	F	★ D3WY 17A792-A	Not replaced	1
74/76	F	D5GY 17A792-C		1
77/79	F	D90Z 17A792-A		1
75/77	G "Before 3/7/77"	D5DZ 17A792-B	Steel-w/cooling slots	1
77/78	G "From 3/7/77"	D9DZ 17A792-B	Steel-w/o cooling slots	1
79	G,V	E0DZ 17A792-B	Steel	1
73	J	★ D3RY 17A792-A	Not replaced	1
73/74	K "Before 8/27/73"	★ D3LY 17A792-A	Not replaced	1
74/76	K "From 8/27/73"	D5LY 17A792-B		1
77/	K	D7LY 17A792-A		1
74/76	L	D4FZ 17A792-A		1
73	P	D3DZ 17A792-A	Outer	1
		★ D3DZ 17A792-B	Inner-not replaced	1
74/77	P	D5DZ 17A792-C		1
78	P		Refer to group 17859	
77/78	V	D9DZ 17A792-B		1
17C794-5	MOULDING (REAR BUMPER END)			
73	D	(RH) ★ D1VY 17C794-A	(LH) ★ D1VY 17C795-A Not replaced	1
73	D	D1VY 17C796-A	Lower	1
17795-6	ARM (REAR BUMPER OUTER)			
73	C(71)	(RH) ★ D30Z 17795-A	(LH) ★ D30Z 17796-A Not replaced	1
73	J	(RH) ★ D3RY 17795-A	(LH) ★ D3RY 17796-A Upper-not repl.	1
73	J	★ D3RY 17795-B	R.H. and L.H.-not replaced	2
17C796	Refer to group 17C794-5			
17A799	SHIM (FRONT BUMPER)-Improvise			
17A807	PAD (REAR BUMPER GUARD) - Also refer to group 17A812			
73	A(71)	★ D3AZ 17A807-A	R.H. and L.H.-not replaced	2
74/76	A(71),Y(71)	D4AZ 17A807-B	R.H. and L.H.	2
73	C(71)	D30Z 17A807-A	R.H. and L.H.	2
74/76	C(71)	D40Z 17A807-B	R.H. and L.H.	2
74/75	D	D4VY 17A807-A	R.H. and L.H.-black	2
75/76	D	D5VY 17A807-A	R.H. and L.H.-black w/white stripe	2
76/	D	D6VY 17A807-A	R.H. and L.H.-black	2
77	F(71)	D40Z 17A807-B	Rear-R.H. and L.H.-black	2
77	F(71)	D70Z 17A812-A	Front-R.H. and L.H.-black	2
77/	F(53,65)	D70Z 17A807-A	Front and Rear-black	4
74/75	K	D4LY 17A807-A	R.H. and L.H.-black	2
75/76	K	D5LY 17A807-A	R.H. and L.H.-black w/white stripe	2
76	K	D6LY 17A807-A	R.H. and L.H.-black	2
77/	K	D7LY 17A807-B	Front-R.H. and L.H.-black	2
77/	K	D7LY 17A807-A	Rear-R.H. and L.H.-black	2
78/	K	D8LY 17A807-A	Front-R.H. and L.H.-blue	2
		D8LY 17A807-B	Front-R.H. and L.H.-gold	2
78/	K	D8LY 17A807-C	Rear-R.H. and L.H.-blue	2
		D8LY 17A807-D	Rear-R.H. and L.H.-gold	2

COPYRIGHT © 1986 — FORD MOTOR COMPANY — DEARBORN, MICHIGAN

1973/79 LINCOLN-MERCURY CARS

YEAR	MODEL/RESTRICTIONS	PART NUMBER	DESCRIPTION	QTY.
17A807	PAD (REAR BUMPER GUARD)-Also refer to group 17A812 — Cont'd			
73	P	D3ZZ 17A807-A	Front and rear	4
77/	V	D74Y 17A807-A	Rear-R.H. and L.H.	2
17B807	STEP (REAR BUMPER)			
73/74	A(71),Y(71) - - w/dual facing seats	★ C9AZ 17B807-B	Not replaced	1
79	A(74)	D9AZ 17B807-A		1
17808	DEFLECTOR (REAR BUMPER STONE)-Also refer to group 17C837 ● Paint to match with Elastomeric paint			
73	A(53,57,65),Y(53,65)	★ D3MY 17808-A	Black-not replaced	1
73	A(53,57,65),Y(53,65)	★ D3MY 17808-B	Argent-not replaced	1
74	A(53,57,65),Y(53,65)	★ D4MY 17808-B	Not replaced	1
75/76	A(53,65),Y(53,65)	D5MY 17808-A		1
77/78	A(53,65)			1
73	A(71),Y(71)	★ D3AZ 17808-A	Not replaced	1
74/76	A(71),Y(71)	D4AZ 17808-C		1
77/78	A(71)			1
79	A(54,66)	E0MY 17808-A		1
79	A(74)	D9AZ 17808-C	Upper	1
		E0AZ 17808-B	Lower	1
73	C(53,63,65)	★ D30Z 17808-A	Not replaced	1
74/76	C(53,65)	D40Z 17808-B		1
73	C(71)	★ D30Z 17808-B	Not replaced	1
74/76	C(71)	D40Z 17808-A		1
73	D	★ D3VY 17808-A	Not replaced	1
74	D	★ D4VY 17808-A	Not replaced	1
75/	D	(RH) ● D9VY 17808-A	(LH) ● D9VY 17808-B	1
73	F	★ D3WY 17808-A	Not replaced	1
74/76	F	D40Z 17808-B		1
77/	F(53,65D,K)	D70Z 17808-A		1
77/78	F(65L)	D7WY 17808-A		1
79	F(65L)	● D9WY 17808-A		1
77	F(71)	D40Z 17808-A		1
75/78	G "Before 10/3/77"	★ D5DZ 17808-A	Repl. by D8DZ 17808-A & B	1
78/	G "From 10/3/77"	(RH) D8DZ 17808-A	(LH) D8DZ 17808-B	1
74/76	K	D4LY 17808-A		1
77/	K	(RH) D7LY 17808-A	(LH) D7LY 17808-B	1
74/78	L(62,64)	D5FZ 17808-A		1
74/78	L(73)	D5FZ 17808-B		1
79	L(62,64)	● D9FZ 17808-A		1
79	L(73)	● D9FZ 17808-B		1
74/77	P	D4DZ 17808-A		1
78/	P(74)	D8BZ 17808-A		1
78/	P(36)	D8BZ 17808-B		1
77/78	V "Before 3/20/78"	★ D74Y 17808-A	Repl. by (1) D94Y 17808-A R.H. & (1) D94Y 17808-A L.H. assy.	AR
		★ D74Y 17808-B	Repl. by (1) D94Y 17808-A R.H. & (1) D94Y 17808-A L.H. assy.	AR
78/	V "From 3/20/78"	(RH) ● D94Y 17808-A	(LH) ● D94Y 17808-B	1
17D808	SHIELD (FRONT BUMPER OPENING)			
79	A	D9MY 17D808-A		1
75/76	C,F	(RH) ★ D5GY 17D808-A	(LH) ★ D5GY 17D808-B Not replaced	1
74	D	★ D4VY 17D808-A	Not replaced	1
75/	G	(RH) D54Y 17D808-A	(LH) D54Y 17D808-B	1
77/	K	D7LY 17D808-A		1
74/76	L	★ D4FZ 17D808-A	Not replaced	1
74/77	P	(RH) ★ D4DZ 17D808-A	(LH) ★ D4DZ 17D808-B Not replaced	1
17810-1	CAP (REAR BUMPER END)			
79	L	(RH) D9FZ 17810-A	(LH) D9FZ 17811-A	1

1973/79 LINCOLN-MERCURY CARS

YEAR	MODEL/RESTRICTIONS	PART NUMBER	DESCRIPTION	QTY.
17A812	PAD ASSY. (BUMPER GUARD) - Also refer to group 17A807			
73	A "Before 9/5/72"	D3AZ 17A812-A	3/4" wide	4
73	A,Y "From 9/5/72 to 6/1/73"	D3AZ 17A812-B	1 1/4" wide	4
73	A,Y "From 6/1/73"	★ D3MY 17A812-A	Front and rear-push on type-not replaced	4
74/76	A(53,57,65),Y(53,65)	D4AZ 17A812-A	Front and rear	4
74/76	A(71),Y(71)		Front	2
77/78	A(53,65)		Front and rear	4
77/78	A(71)		Front	2
73	C "Before 12/4/72"	D3AZ 17A812-A	3/4" wide	4
73	C "From 12/4/72"	D3AZ 17A812-B	1 1/4" wide	4
74/76	C(53,65)	D4AZ 17A812-A	Front and rear	4
73	D	D3VY 17A812-A	Front	2
74/75	D	D4VY 17A812-A	Front-black	2
75/76	D	D5VY 17A812-A	Front-black w/white stripe	2
76/	D	D6VY 17A812-A	Front-black	2
74/76	F	D4AZ 17A812-A	Front and rear	2
73	F,K "Before 9/5/72"	D3AZ 17A812-A	3/4" wide	4
73	F,K "From 9/5/72"	D3AZ 17A812-B	1 1/4" wide	4
75/	G	D4AZ 17A812-A	Front and rear	4
73	J	D3RY 17A812-A	Front and rear	4
74	K "Before 8/27/73"	D4LY 17A812-A	Front	2
74/75	K "From 8/27/73"	D4LY 17A812-B	Front-black	2
75/76	K	D5LY 17A812-A	Front-black w/white stripe	2
76	K	D6LY 17A812-A	Front-black	2
74/78	L	D4FZ 17A812-A	Front and rear	2
74/77	P	D4AZ 17A812-A	Front and rear	4
77/	V	D4AZ 17A812-A	Front	2
17B814	MOULDING (FRONT BUMPER STONE DEFLECTOR CENTER)			
77/	K	D7LY 17B814-A		1
17C816	SPACER (REAR BUMPER LOWER)			
73	F	★ D3WY 17C816-A	Not replaced	2
17D816	RETAINER (FRONT BUMPER STONE END DEFLECTOR)			
73	A,C,Y	★ D3AZ 17D816-A	Not replaced	AR
17C817	STOP (FRONT BUMPER REINFORCEMENT)			
73	A	★ D3AZ 17C817-A	Not replaced	1
74	A	(RH) ★ D4MY 17C817-A	(LH) ★ D4MY 17C817-B Not replaced	1
75/78	A	(RH) ★ D5MY 17C817-A	(LH) ★ D5MY 17C817-B Not replaced	1
74/78	D	(RH) ★ D4VY 17C817-A	(LH) ★ D4VY 17C817-B Not replaced	1
79	D	(RH) ★ D9VY 17C817-A	(LH) ★ D9VY 17C817-B Not replaced	1
79	L	(RH) D9FZ 17C817-A	(LH) D9FZ 17C817-B Not replaced	1
73	F	★ D1WY 17C817-A	R.H. and L.H.-not replaced	2
77/	F	(RH) D70Z 17C817-A	(LH) D70Z 17C817-B	1
73/76	K	(RH) ★ D4LY 17C817-C	(LH) ★ D4LY 17C817-D Not replaced	1
73	Y	★ D3AZ 17C817-A	Not replaced	1
74/76	Y	(RH) ★ D4MY 17C817-A	(LH) ★ D4MY 17C817-B Not replaced	1
17D817	CLIP (FRONT BUMPER STONE DEFLECTOR)			
73/78	A,Y	D3AZ 17D817-A		AR
74/77	P			AR
75/	C(53,65),F,G			1
77/	K	D7LY 17D817-B		3
17A820-1	BRACKET (FRONT BUMPER END)			
73	A,Y	(RH) ★ D3MY 17A820-A	(LH) ★ D3MY 17A821-A Not replaced	1
74/76	A,Y	(RH) D4MY 17A820-A	(LH) D4MY 17A821-A	1
77/78	A			1
73/76	C	★ D30Z 17A820-A	R.H. and L.H.-not replaced	2
74/76	F			2
77/78	F	(RH) D70Z 17A820-A	(LH) D70Z 17A821-A	1
79	F	(RH) D90Z 17A820-A	(LH) D90Z 17A821-A	1
73	D	★ D0VY 17A820-A	R.H. and L.H.-not replaced	2
73	F	★ D3WY 17A820-A	R.H. and L.H.-not replaced	2
75/77	G "Before 3/7/77"	(RH) D5DZ 17A820-B	(LH) D5DZ 17A821-A	1
77/79	G "From 3/7/77"	(RH) D9DZ 17A820-A	(LH) D9DZ 17A821-A	1

COPYRIGHT © 1986 — FORD MOTOR COMPANY — DEARBORN, MICHIGAN

1973/79 LINCOLN-MERCURY CARS

YEAR	MODEL/RESTRICTIONS	PART NUMBER	DESCRIPTION		QTY.
17A820-1	BRACKET (FRONT BUMPER END) — Cont'd				
79	J	(RH) E2ZZ 17A820-B	(LH) E2ZZ 17A821-B		1
76	L	(RH) ★ D5FZ 17A820-A	(LH) ★ D5FZ 17A821-A	Not replaced	1
75	L	(RH) ★ D4FZ 17A820-A	(LH) ★ D4FZ 17A821-A	Not replaced	1
79	L	(RH) E0FZ 17A820-A	(LH) E0FZ 17A821-A		1
73	P	(RH) ★ D3DZ 17A820-A	(LH) ★ D3DZ 17A821-A	Not replaced	1
74	P	★ D4DZ 17A820-A	R.H. and L.H.-not replaced		2
78/	P	(RH) D8BZ 17A820-A	(LH) D8BZ 17A821-A		1
77/79	V	(RH) D9DZ 17A820-A	(LH) D9DZ 17A821-A		1
17C824	COVER (REAR BUMPER MOUNTING BRACKET)				
73	J	★ D3RY 17C824-A	Not replaced		2
17D828-9	BRACKET (FRONT BUMPER ISOLATOR)				
79	A	(RH) D9AZ 17D828-A	(LH) D9AZ 17D829-A		1
17C829	PAD ASSY. (FRONT BUMPER HORIZONTAL)-Incl. attaching parts				
	● When a black pad longer than 26" is required use D4LY 17K833-4-A and paint stripe with elastomeric paint.				
73	A,Y "Before 6/1/73"	(RH) ★ D3MY 17K833-A	(LH) ★ D3MY 17K834-A	Not replaced	1
73	A,Y "From 6/1/73"	(RH) D4MY 17K833-A	(LH) D4MY 17K834-A		1
73	A,Y "Before 6/1/73"	★ D3MY 17C829-A	Center-not replaced		1
73	A,Y "From 6/1/73"	★ D3MY 17C829-B	Center-not replaced		1
74/76	A,Y	(RH) D4MY 17K833-A	(LH) D4MY 17K834-A		1
77/78	A				1
		D4MY 17C829-A	Center		1
79	A	(RH) D9MY 17K832-A	(LH) D9MY 17K833-A		1
		D9MY 17C829-A	Center		1
73	C	(RH) ★ D3GY 17K833-A	(LH) ★ D3GY 17K834-A	Not replaced	1
74/76	C,F	(RH) D4GY 17K833-A	(LH) D4GY 17K834-A		1
74	D "Before 8/3/73"	(RH) ★ D4VY 17K833-A	(LH) ★ D4VY 17K834-A	Black w/white stripe	1
		★ D4VY 17C829-A	Center-black w/white stripe-not replaced		1
74	D "From 8/3/73"	(RH) D4VY 17K833-B	(LH) D4VY 17K834-B	Black	1
		★ D4VY 17C829-B	Center-black		1
75/76	D	(RH) D5VY 17K833-B	(LH) D5VY 17K834-B	Black w/white stripe	1
		D5VY 17C829-B	Center-black w/white stripe		1
75/	D	(RH) D5VY 17K833-A	(LH) D5VY 17K834-A	All black	1
		D5VY 17C829-A	Center-black		1
73	F	(RH) ★ D3WY 17K833-A	(LH) ★ D3WY 17K834-A	Not replaced	1
77/	F	(RH) D70Z 17K833-A	(LH) D70Z 17K834-A	Black	1
		D70Z 17C829-A	Center-black		1
75/78	G	(RH) D7DZ 17K833-C	(LH) D7DZ 17K834-C	Black-1 5/16" wide	1
		D7DZ 17C829-C	Center-black-1 5/16" wide		1
76/77	G - - w/cooling slots in bumper "Before 3/17/77"	(RH) D74Y 17K833-A	(LH) D74Y 17K834-A	Black w/white stripes	1
		D64Y 17C829-A	Center-black w/white stripes		1
		(RH) D7DZ 17K833-B	(LH) D7DZ 17K834-B	Black-2 3/4" wide	1
		D7DZ 17C829-A	Center-black-2 3/4" wide		1
77/	G - - w/o cooling slots in bumper "From 3/17/77"	(RH) D7DZ 17K833-B	(LH) D7DZ 17K834-B	Black-2 3/4" wide	1
		D7DZ 17C829-B	Center-2 3/4" wide		1
74	K "Before 8/3/73"	(RH) D4LY 17K833-A	(LH) D4LY 17K834-A	Black w/white stripe	1
		★ D4LY 17C829-A	Center-black w/white stripe-not replaced		1
74	K "From 8/3/73"	(RH) ● D4LY 17K833-D	(LH) ● D4LY 17K834-D	Black	1
		D4LY 17C829-D	Center-black		1
75/76		(RH) D5LY 17K833-A	(LH) D5LY 17K834-A	Black	1
		D5LY 17C829-A	Center-black		1
		(RH) D5LY 17K833-B	(LH) D5LY 17K834-B	Black w/white stripes	1
		D5LY 17C829-B	Center-black w/white stripes		1
77/	K	D7LY 17K833-A	R.H. and L.H.-black		1
		D7LY 17C829-A	Center-black		1
78/	K	D8LY 17K833-A	R.H. and L.H.-blue		1
		D8LY 17C829-A	Center-blue		1
		D8LY 17K833-B	R.H. and L.H.-gold		1
		D8LY 17C829-B	Center-gold		1
74/76	L	(RH) D4FZ 17K833-A	(LH) D4FZ 17K834-A		1
77/78	L	(RH) D7FZ 17K833-A	(LH) D7FZ 17K834-A	Black	1

1973/79 LINCOLN-MERCURY CARS

YEAR	MODEL/RESTRICTIONS	PART NUMBER	DESCRIPTION		QTY.
17C829	PAD ASSY. (FRONT BUMPER HORIZONTAL)-Incl. attaching parts ● When a black pad longer than 26" is required use D4LY 17K833-4-A and paint stripe with elastomeric paint				
74/76	L	D4FZ 17C829-A	Center		1
77/78	L	D7FZ 17C829-A	Center-black		1
79	L	(RH) D9FZ 17K833-A	(LH) D9FZ 17K834-A		1
		D9FZ 17C829-A	Center		1
73	P	(RH) D3DZ 17K833-A	(LH) D3DZ 17K834-A		1
		D3DZ 17C829-A	Center		1
74/77	P	(RH) D4DZ 17K833-A	(LH) D4DZ 17K834-A		1
		D4DZ 17C829-A	Center		1
78/	P	(RH) D8BZ 17K833-A	(LH) D8BZ 17K834-A		1
		D8BZ 17C829-A	Center		1
77/	V	(RH) D74Y 17K833-A	(LH) D74Y 17K834-A	Black w/white stripe	1
		D74Y 17C829-A	Center-black w/white stripe		1
17C830	PAD (REAR BUMPER HORIZONTAL)				
73	A(53,57,65),Y(53,65) "Before 9/20/72"	(RH) ★ D3MY 17K831-A	(LH) ★ D3MY 17K832-A	Not replaced	1
		★ D3MY 17C830-A	Center-use with D3MY 17906-B bumper only-N/R		1
73	A(53,57,65),Y(53,65) "From 9/20/72 to 6/1/73"	(RH) ★ D3MY 17K831-B	(LH) ★ D3MY 17K832-B	Not replaced	1
		★ D3MY 17C830-B	Center-use with D3MY 17906-C or D6MY 17906-B bumpers-not replaced		1
73	A(53,57,65),Y(53,65) "From 6/1/73"	(RH) D4MY 17K831-A	(LH) D4MY 17K832-A		1
		★ D3MY 17C830-C	Center-push on type-not replaced		1
74/76	A(53,57,65),Y(53,65)	(RH) D4MY 17K831-A	(LH) D4MY 17K832-A		1
77/78	A(53,65)				1
		D4MY 17C830-A	Center		1
75/76	A(71),Y(71)	(RH) D5AZ 17C830-A	(LH) D5AZ 17C830-B	Center	1
77/78	A(71)				1
		(RH) D5AZ 17K831-A	(LH) D5AZ 17K832-A		1
79	A(54,66)	(RH) D9AZ 17K831-A	(LH) D9AZ 17K832-A		1
		D9AZ 17C830-A	Center		1
79	A(74)	(RH) D9AZ 17K831-B	(LH) D9AZ 17K832-B		1
		D9AZ 17C830-B	Center		1
74/76	C(53,65)	(RH) D40Z 17K831-A	(LH) D40Z 17K832-A		1
		D50Z 17C830-A	Center		1
74/76	C(71)	(RH) D40Z 17K831-B	(LH) D40Z 17K832-B		1
		D40Z 17C830-B	Center		1
74	D "Before 8/3/73"	(RH) ★ D4VY 17K831-A	(LH) ★ D4VY 17K832-A	Black w/white stripe	1
		★ D4VY 17C830-A	Center-black w/white stripe-not replaced		1
74	D "From 8/3/73"	(RH) D4VY 17K831-B	(LH) D4VY 17K832-B	Black	1
		★ D4VY 17C830-B	Center-black-not replaced		1
75/	D	(RH) D5VY 17K831-A	(LH) D5VY 17K832-A	Black	1
		(RH) D5VY 17C830-A	(LH) D5VY 17C830-B	Center-black	1
75/76	D	(RH) D5VY 17K831-B	(LH) D5VY 17K832-B	Black w/white stripe	1
		(RH) D5VY 17C830-C	(LH) D5VY 17C830-D	Center-black with white stripe	1
74/76	F	(RH) D40Z 17K831-A	(LH) D40Z 17K832-A		1
74/76	F "From 10/21/74"	D50Z 17C830-A	Center		1
77/	F(53,65)	(RH) D70Z 17K831-A	(LH) D70Z 17K832-A	Black	1
		D70Z 17C830-A	Center		1
77	F(71)	(RH) D40Z 17K831-B	(LH) D40Z 17K831-B	Black	1
		D40Z 17C830-B	Center		1
75/	G	(RH) D7DZ 17K831-C	(LH) D7DZ 17K832-C	Black-1 5/16" wide	1
		D7DZ 17C830-C	Center-black-1 5/16" wide		1
76/77	G "Before 3/7/77"	(RH) D74Y 17K831-A	(LH) D74Y 17K832-A	Black w/white stripes	1
		D74Y 17C830-A	Center-black w/white stripes		1
		(RH) D7DZ 17K831-B	(LH) D7DZ 17K832-B	Black-2 3/4" wide	1
		D7DZ 17C830-B	Center-black-2 3/4" wide		1
77/	G "From 3/7/77"	(RH) D7DZ 17K831-B	(LH) D7DZ 17K832-B	Black-2 3/4"wide	1
		D7DZ 17C830-B	Center-black-2 3/4" wide		1

COPYRIGHT © 1986 — FORD MOTOR COMPANY — DEARBORN, MICHIGAN

1973/79 LINCOLN-MERCURY CARS

YEAR	MODEL/RESTRICTIONS	PART NUMBER	DESCRIPTION		QTY.
17C830	PAD (REAR BUMPER HORIZONTAL) — Cont'd				
73	K	D3LY 17C830-A			1
74	K "Before 8/3/73"	(RH) ★ D4LY 17K831-A	(LH) ★ D4LY 17K832-A	Black w/white stripe	1
		★ D4LY 17C830-A	Center-black w/white stripe-not replaced		1
74	K "From 8/3/73"	(RH) D4LY 17K831-B	(LH) D4LY 17K832-B	Black	1
		D4LY 17C830-B	Center-black		1
75/76	K	(RH) D5LY 17K831-A	(LH) D5LY 17K832-A	Black	1
		D5LY 17C830-A	Center-black		1
		(RH) D5LY 17K831-B	(LH) D5LY 17K832-B	Black w/white stripe	1
		D5LY 17C830-B	Center-Black w/white stripes		1
77/	K	D7LY 17K831-A	Black-R.H. and L.H.		2
		D7LY 17C830-A	Black-center		2
78	K	D8LY 17K831-A	Blue-R.H. and L.H. side		2
		★ D8LY 17C830-A	Blue-center-R.H. and L.H.-not replaced		2
		D8LY 17K831-B	Gold-R.H. and L.H. side		2
		★ D8LY 17C830-B	Gold-center-R.H. and L.H.-not replaced		2
74/76	L	(RH) D4FZ 17K831-A	(LH) D4FZ 17K832-A		1
		D4FZ 17C830-A	Center		1
77/78	L	(RH) D7FZ 17K831-A	(LH) D7FZ 17K832-A	Black	1
		D7FZ 17C830-A	Center-black		1
79	L	(RH) D9FZ 17K831-A	(LH) D9FZ 17K832-A		1
		D9FZ 17C830-A	Center		1
73	P	(RH) D3DZ 17K831-A	(LH) D3DZ 17K832-A		1
		D3DZ 17C830-A	Center		1
74/77	P	(RH) D4DZ 17K831-A	(LH) D4DZ 17K832-A		1
		D4DZ 17C830-A	Center		1
78/	P	(RH) D8BZ 17K831-A	(LH) D8BZ 17K832-A		1
		D8BZ 17C830-A	Center		1
77/	V	(RH) D74Y 17K831-A	(LH) D74Y 17K832-A	Black w/white stripe	1
		D74Y 17C830-A	Center-black w/white stripe		1
17K831-2	Refer to group 17C830				
17K833-4	Refer to group 17C829				
17D834-5	SHIELD (REAR BUMPER ISOLATOR HEAT)				
74/75	A(53,57,65) - - Calif. only	★ D4AZ 17D834-A	R.H.-not replaced		1
74/75	D - - Calif.	★ D4VY 17D834-A	R.H.-not replaced		1
74/75	K	★ D4SZ 17D835-A	Not replaced		1
17K835	COVER ASSY. (REAR BUMPER)				
79	J	E1ZZ 17K835-A	Paint to match w/elastomeric paint		1
17D836-7	SUPPORT (REAR BUMPER STONE DEFLECTOR END)				
74/76	A(71),Y(71)	(RH) ★ D4AZ 17D836-A	(LH) ★ D4AZ 17D837-A	Not replaced	1
77/78	A(71)				1
74/76	K	★ D4LY 17D836-A	R.H. and L.H.-not replaced		2
17C837-8	DEFLECTOR ASSY. (REAR BUMPER STONE END) ● Paint to match w/elastomeric paint				
73	A(53,57,65),Y(53,65)	(RH) ★ D3MY 17C837-A	(LH) ★ D3MY 17C838-A	black-not repl.	1
73	A(53,57,65),Y(53,65)	(RH) ★ D3MY 17C837-B	(LH) ★ D3MY 17C838-B	Argent-not repl.	1
73	A(71),Y(71)	(RH) ★ D3AZ 17C837-C	(LH) ★ D3AZ 17C838-C	Not replaced	1
74	A(53,57,65),Y(53,65)	(RH) ★ D4MY 17C837-A	(LH) ★ D4MY 17C838-A	Not replaced	1
75/76	A(53,65),Y(53,65)	(RH) D5MY 17C837-A	(LH) D5MY 17C838-A		1
77/78	A(53,65)				1
74/76	A(71),Y(71)	(RH) D4AZ 17C837-B	(LH) D4AZ 17C838-B		1
77/78	A(71)				1
79	A(54,66)	(RH) ● D9MY 17C837-A	(LH) ● D9MY 17C838-A		1
79	A(74)	(RH) ● D9AZ 17C837-B	(LH) ● D9AZ 17C838-B		1
73	C(53,63,65)	(RH) ★ D3GY 17C837-A	(LH) ★ D3GY 17C838-A	Not replaced	1
73	C(71)	(RH) ★ D3OZ 17C837-B	(LH) ★ D3OZ 17C838-B	Not replaced	1
74/76	C(53,65)	(RH) D4GY 17C837-A	(LH) D4GY 17C838-A		1
74/76	C(71)	(RH) D5OZ 17C837-A	(LH) D5OZ 17C838-A		1
74	D	(RH) ★ D4VY 17C837-A	(LH) ★ D4VY 17C838-A	Not replaced	1
73	F	(RH) ★ D3WY 17C837-A	(LH) ★ D3WY 17C838-A	Not replaced	1
74/76	F	(RH) D4GY 17C837-A	(LH) D4GY 17C838-A		1

YEAR	MODEL/RESTRICTIONS	PART NUMBER	DESCRIPTION	QTY.
17C837-8	DEFLECTOR ASSY. (REAR BUMPER STONE END) — Cont'd			
	● Paint to match w/elastomeric paint			
77	F(71)	(RH) ● D50Z 17C837-A	(LH) ● D50Z 17C838-A	1
77/78	F(65L)	(RH) ● D7WY 17C837-A	(LH) ● D7WY 17C838-A	1
79	F(65L)	(RH) ● D9WY 17C837-A	(LH) ● D9WY 17C838-A	1
77/	F(53,65D,K)	(RH) ● D70Z 17C837-A	(LH) ● D70Z 17C838-A	1
75/78	G "Before 10/3/77"	(RH) D5DZ 17C837-A	(LH) D5DZ 17C838-A	1
78/	G "From 10/3/77"		Refer to Group 17808	
74/76	K	(RH) D6LY 17C837-A	(LH) D6LY 17C838-A	1
77/	K	(RH) D7LY 17C837-A	(LH) D7LY 17C838-A	1
73	P	(RH) ● D3DZ 17C837-B	(LH) ● D3DZ 17C838-B	1
74/77	P	(RH) D4DZ 17C837-B	(LH) D4DZ 17C838-B	1
78/	P(54,66)	(RH) D8BZ 17C837-A	(LH) D8BZ 17C838-A	1
78/	P(74)	(RH) D8BZ 17C837-B	(LH) D8BZ 17C838-B	1
78/	P(36)	(RH) D8BZ 17C837-C	(LH) D8BZ 17C838-C	1
17B839	BRACKET ASSY. (FRONT BUMPER JACKING)			
73	K	★ D2LY 17B839-B	Not replaced	2
17841	SLEEVE (BUMPER ARM BOLT)			
73	J	★ D0RY 17841-A	Not replaced	2
17C853	BRACKET (REAR BUMPER CENTER REINFORCEMENT)			
73	K	★ D2LY 17C853-A	Not replaced	2
17D854-5	BRACE (FRONT BUMPER STOP)			
77/	F	(RH) ★ D70Z 17D854-A	(LH) ★ D70Z 17D855-A Not replaced	1
17B857	INSULATOR (REAR BUMPER REINFORCEMENT CENTER)			
73	F	★ D1WY 17B857-A	Not replaced	1
17C857	SHIELD (REAR BUMPER OPENING)			
73	A(53,57,65),Y(53,65)	★ D3AZ 17C857-A	Not replaced	1
74/76	A(53,57,65),Y(53,65)	★ D4AZ 17C857-A	Not replaced	1
	A(53,65)			1
74/76	A(71),Y(71)	★ D4AZ 17C857-B	Not replaced	1
	A(71)			1
74/76	C,F	D40Z 17C856-B		1
75/	D	D5VY 17C857-A		1
75/77	G "Before 3/7/77"	★ D4DZ 17C857-B	Not replaced	1
77/	G "From 3/7/77"	D74Y 17C857-A		1
77/	F	D40Z 17C857-B		1
73	K	★ D2LY 17C857-B	Not replaced	1
74/76	K	D4LY 17C857-A		1
74/76	L	★ D4FZ 17C857-A	Not replaced	1
74	P "Before 5/1/74"	★ D4DZ 17C857-A	Not replaced	1
74/77	P "From 5/1/74"	D4DZ 17C857-B		1
77/	V	D74Y 17C857-A		1
17859	PLATE (FRONT BUMPER)			
77/	L	D7FZ 17859-A		2
78/	P	D8BZ 17859-A		1
79	J	D9ZZ 17859-A	Reinforcement	1
17C859	EXTENSION (REAR BUMPER MOUNTING BRACKET)			
73	F	★ D1WY 17C859-A	Not replaced	2
17C861	REINFORCEMENT (FRONT VALANCE PANEL)			
78/	P	(RH) D8BZ 17C861-A	(LH) D8BZ 17C861-B	1
17D861	BUTTON (FRONT BUMPER GUARD IMPACT)-Incl. attaching parts			
74/	C,F	★ D4GY 17D861-AA	Not replaced	2
17B862	REINFORCEMENT (REAR BUMPER MOUNTING BRACKET)			
73	F	★ D3WY 17B862-A	Not replaced	2
73	P	★ D1ZZ 17B862-A	Not replaced	2
74/78	J	★ D4RY 17B862-A	Not replaced	2
17C874	PAD (REAR BUMPER JACK BRACKET)			
79	A(74)	D9AZ 17C874-A		2
74/76	K	★ D4LY 17C874-A	Not replaced	2
77	K "Before 12/1/76"	★ D7LY 17C874-A	Not replaced	2

COPYRIGHT © 1986 — FORD MOTOR COMPANY — DEARBORN, MICHIGAN

1973/79 LINCOLN-MERCURY CARS

YEAR	MODEL/RESTRICTIONS	PART NUMBER	DESCRIPTION	QTY.
17B876	REINFORCEMENT (REAR BUMPER GUARD)			
74	J	★ D4RY 17B876-A	Not replaced	1
76/78	J	★ D5RY 17B876-A	Not replaced	1
17879	RETAINER (REAR BUMPER STONE DEFLECTOR)			
73	A(53B,65B),Y(53,65)	★ D3MY 17879-A	Not replaced	1
73	A(53F,H,K,57F,H,K,65F,H,K)	★ D3MY 17879-B	Not replaced	1
74	A(53B,F,65B,F),Y(53,65)	★ D4MY 17879-A	Not replaced	1
74	A(53H,K,X,57H,K,X,65H,K,X)	★ D4MY 17879-B	Not replaced	1
75/76	A(53,65),Y(53,65)	D5MY 17879-A		1
77/78	A(53,65)			1
73	D	★ D3VY 17879-A	Not replaced	1
77/	K	D7LY 17879-A		1
17C881	PAD (FRONT BUMPER)			
73	K	(RH) ★ D3LY 17C881-A	(LH) ★ D3LY 17C881-B Not replaced	1
17C882-3	Refer to group 17754-5			
17C884-5	Refer to group 17787-8			
17C886-7	BRACKET (FRONT BUMPER ISOLATOR)			
79	F	(RH) D9OZ 17C886-A	(LH) D9OZ 17C887-A	1
77/	K	(RH) D7LY 17C886-A	(LH) D7LY 17C887-A	1
78/	P	(RH) D8BZ 17C886-A	(LH) D8BZ 17C887-A	1
17A896	SUPPORT (REAR BUMPER STONE DEFLECTOR)			
74/76	C(53,65),F	★ D4OZ 17A896-A	Not replaced	2
74	C(71) "Before 9/1/73"	★ D4OZ 17A896-B	Not replaced	2
74	C(71) "From 9/1/73"	(RH) ★ D4OZ 17A896-C	(LH) ★ D4OZ 17A897-C 4" long-not repl.	1
74	D	★ D4VY 17A896-A	Not replaced	2
75/	D	D5VY 17A896-A	Outer-2 1/2" long	1
75/	D	★ D5VY 17A896-B	Inner-11" long-not replaced	1
74	D	★ D4VY 17D771-A	Center-17 1/4" long-not replaced	2
75/	D	★ D5VY 17D771-A	Center-16 1/2" long-not replaced	2
77/	F	★ D4OZ 17A896-A	Not replaced	2
74	K "Before 10/8/73"	★ D4SZ 17A896-A	Not replaced	1
74/76	K "From 10/8/73"	★ D4SZ 17A896-B	Not replaced	1
17D896	SPRING (FRONT BUMPER STONE DEFLECTOR)			
78/	G,V	D8DZ 17D896-A		2
17C897	BRACKET (REAR BUMPER ISOLATOR)			
79	A(74)	(RH) E0AZ 17C897-A	(LH) E0AZ 17C897-B	1
78/79	P(54,66,74)	(RH) D9BZ 17C897-A	(LH) D9BZ 17C897-B	1
78/79	P(36)	(RH) D9BZ 17C897-C	(LH) D9BZ 17C897-D	1
17D898	SHIELD (FRONT BUMPER GRILLE OPENING)			
77/	D	★	Improvise-cut 4" x 2 7/8" from 1/16" thick black plastic material	1
17A900-1	EXTENSION (FRONT BUMPER)			
73	D	(RH) ★ D3VY 17A900-A	(LH) ★ D3VY 17A901-A Not replaced	1
79	L	(RH) D9FZ 17A900-A	(LH) D9FZ 17A901-A	1
17C900	GUIDE (REAR BUMPER ISOLATOR)			
78/	G	D7DZ 17C900-A	Reinforcement-R.H. & L.H., located on rear floor cross member (outer)	2
77	P			2
79	J	★ D9BZ 17C900-C	Reinforcement-R.H. & L.H., located on rear floor cross member (outer) repl. by E2BZ 17D828-A	2
78/	P			2
78/	P(36,54,66)	E1DZ 17C900-A	Guide-R.H. & L.H., located on floor side members (inner)	2
	P(74)	E1ZZ 17C900-A	Guide-R.H. & L.H., located on floor side members (inner)	2
17C901	REINFORCEMENT (REAR BUMPER ISOLATOR MOUNTING)			
78/	P(36,54,66)	D9BZ 17C901-A	R.H. and L.H.	2
78/	P(74)	D9BZ 17C901-B	R.H. and L.H.	2
17C903	BRACKET (FRONT BUMPER TOWING)			
73/74	K	★ D3SZ 17C903-A	Not replaced	1

YEAR	MODEL/RESTRICTIONS	PART NUMBER	DESCRIPTION	QTY.
17906	BUMPER (REAR)			
	When Steel bumpers with bumper guard attaching holes are installed on vehicles without guards, use 385361-S100 (PP-8-H) plug button to plug the unused holes. This plug button is not to be used with aluminum bumpers.			
73	A(53,57,65) - - w/o bumper guards and horizontal pads	★ D3MY 17906-A	Steel-not replaced	1
73	A(53,57,65) - - w/bumper guards and horizontal pads "Before 9/20/72"	★ D3MY 17906-B	Steel-not replaced	1
73	A(53,57,65) - - w/bumper guards and horizontal pads "From 9/20/72"	★ D6MY 17906-B	Steel	1
73	A(53,57,65) - - w/bumper guards w/o horizontal pads "Before 9/20/72"	★ D3MY 17906-D	Steel-not replaced	1
73/78	A(53,65) - - w/o bumper guards and horizontal pads "From 9/20/72"	★ D6MY 17906-A	Steel-not replaced	1
74/78	A(53,65) - - w/bumper guards and horizontal pads	★ D6MY 17906-B	Steel-not replaced	1
73/78	A(71) - - w/bumper guards w/o horizontal pads	★ D4AZ 17906-E	Steel-not replaced	1
73/78	A(71) - - w/o bumper guards and horizontal pads	★ D4AZ 17906-K	Steel-not replaced	1
75/78	A(71) - - w/bumper guards and horizontal pads	★ D5AZ 17906-A	Steel-not replaced	1
79	A(54,66) - - w/o bumper guards and horizontal pads	E0AZ 17906-A	Steel	1
79	A(54,66) - - w/bumper guards and w/o horizontal pads	D9AZ 17906-B	Steel	1
79	A(54,66) - - w/bumper guards and horizontal pads	D9AZ 17906-C	Steel	1
79	A(74) - - w/o bumper guards horizontal pads; w/step pad	★ D9MY 17906-A	Aluminum-not replaced	1
79	A(74) - - w/bumper guards, w/o horizontal pads, w/step pad	★ D9MY 17906-C	Aluminum-not replaced	1
79	A(74) - - w bumper guards and horizontal pads	★ D9MY 17906-B	Aluminum-Repl. by D9AZ 17906-G	1
73	C(53,63,65) - - w/o bumper guards and horizontal pads	★ D2GY 17906-A	Steel-not replaced	1
74/75	C(53,65) - - w/o bumper guards and horizontal pads- "Before 7/7/75"	★ D40Z 17906-A	Repl. by D70Z 17906-A, D60Z 17787-C and D60Z 17788-C (3/76)	1
75/76	C(53,65) - - w/o bumper guards and horizontal pads- "From 7/7/75"	D70Z 17906-A	Steel	1
74/75	C(53,65) - - w/bumper guards and horizontal pads- "Before 7/7/75"	★ D40Z 17906-E	Repl. by D60Z 17906-C, D60Z 17787-C and D60Z 17788-C (12/76)	1
75/76	C(53,65) - - w/bumper guards and horizontal pads- "From 7/7/75"	D60Z 17906-C	Steel	1
73	C(71) - - w/bumper guards	★ D30Z 17906-B	Steel-not replaced	1
73	C(71) - - w/o bumper guards	D20Z 17906-B	Steel	1
74/76	C(71) - - w/bumper guards and horizontal pads	★ D40Z 17906-H	Steel-not replaced	1

COPYRIGHT © 1986— FORD MOTOR COMPANY —DEARBORN, MICHIGAN

1973/79 LINCOLN-MERCURY CARS

YEAR	MODEL/RESTRICTIONS	PART NUMBER	DESCRIPTION	QTY.
17906	BUMPER (REAR) — Cont'd When Steel bumpers with bumper guard attaching holes are installed on vehicles without guards, use 385361-S100 (PP-8-H) plug button to plug the unused holes. This plug button is not to be used with aluminum bumpers.			
74/76	C(71) - - w/bumper guards w/o horizontal pads	★ D40Z 17906-G	Steel-not replaced	1
76	C(71) w/o bumper guards and horizontal pads	★ D60Z 17906-D	Steel-not replaced	1
73	D - - w/mouldings	★ D1VY 17906-A	Steel-not replaced	1
74	D - - w/bumper guards and horizontal pads	★ D4VY 17906-B	Steel-not replaced	1
75/	D - - w/bumper guards and horizontal pads	★ D5VY 17906-A	Steel-not replaced	1
73	F	★ D1WY 17906-A	Steel-not replaced	1
74/75	F - - w/bumper guards and horizontal pads "Before 7/7/75"	★ D40Z 17906-E	Steel-repl. by (1) D60Z 17906-C, (1) D60Z 17787-C and (1) D60Z 17788-C	1
75/76	F - - w/bumper guards and horizontal pads "From 7/7/75"	★ D60Z 17906-C	Steel-not replaced	1
74/75	F - - w/o bumper guards and horizontal pads "Before 7/7/75"	★ D40Z 17906-A	Repl. by D70Z 17906-A, D60Z 17787-C and D60Z 17788-C (3/76)	1
75/76	F - - w/o bumper guards and horizontal pads "From 7/7/75"	D70Z 17906-A	Steel	1
77/	F(53,65) - - w/o bumper guards and horizontal pads	D70Z 17906-A	Steel	1
77/	F(53,65) - - w/bumper guards w/o horizontal pads	D70Z 17906-C	Steel	1
77/	F(53,65) - - w/bumper guards and horizontal pads	D70Z 17906-B	Steel	1
77	F(71) - - w/o bumper guards and horizontal pads	★ D60Z 17906-D	Steel-not replaced	1
77	F(71) - - w/bumper guards w/o horizontal pads	★ D40Z 17906-G	Steel-not replaced	1
77	F(71) - - w/bumper guards and horizontal pads	D40Z 17906-H	Steel	1
75/77	G - - w/o horizontal pads "Before 3/7/77"	D5DZ 17906-A	Steel	1
75/77	G - - w/bumper guards and horizontal pads "Before 3/7/77"	D5DZ 17906-B	Steel	1
77/	G - - w/bumper guards and horizontal pads "From 3/7/77"	D74Y 17906-A	Steel	1
77/	G - - w/o bumper guards and horizontal pads "From 3/7/77"	D7DZ 17906-A	Steel	1
73	J	D3RY 17906-A	Steel	1
74	J	★ D4RY 17906-A	Urethane-paint to match with Elastomeric paint	1
76	J	★ D5RY 17906-A	Urethane-paint to match with Elastomeric paint-N/R	1
77/78	J	★ D6RY 17906-A	Urethane-paint to match with Elastomeric paint-N/R	1
79	J	D9ZZ 17906-A	Aluminum	1
		D9ZZ 17906-B	Steel	1
73	K - - w/o bumper guards	★ D2LY 17906-A	Steel-not replaced	1
73	K - - w/bumper guards	★ D3LY 17906-A	Steel-not replaced	1
74/76	K - - w/bumper guards and horizontal pads	★ D5LY 17906-A	Steel-not replaced	1
77/	K - - w/bumper guards and horizontal pads	D7LY 17906-A	Steel	1
74/76	L - - w/o horizontal pads	★ D5FZ 17906-A	Steel-not replaced	1
74/76	L - - w/bumper guards and horizontal pads	★ D5FZ 17906-B	Steel-not replaced	1
77/78	L - - w/or w/o bumper guards & w/o horizontal pads	D7FZ 17906-A	Aluminum	1

YEAR	MODEL/RESTRICTIONS	PART NUMBER	DESCRIPTION	QTY.
17906	BUMPER (REAR) — Cont'd When Steel bumpers with bumper guard attaching holes are installed on vehicles without guards, use 385361-S100 (PP-8-H) plug button to plug the unused holes. This plug button is not to be used with aluminum bumpers.			
77/78	L - - w/bumper guards and horizontal pads	★ D7FZ 17906-C	Aluminum-not replaced	1
79	L - - w/ or w/o bumper guards & w/o horizontal pads	★ D9FZ 17906-A	Aluminum-not replaced	1
79	L - - w/bumper guards and horizontal pads	★ D9FZ 17906-B	Aluminum-not replaced	1
73	P - - w/o bumper guards and horizontal pads	★ D3DZ 17906-B	Steel-not replaced	1
73	P - - w/bumper guards and horizontal pads	★ D3DZ 17906-A	Steel-not replaced	1
73	P - - w/bumper guards w/o horizontal pads	★ D3DZ 17906-C	Steel-not replaced	1
74/77	P - - w/bumper guards and horizontal pads	★ D6DZ 17906-B	Steel-not replaced	1
74/77	P - - w/o horizontal pads	★ D6DZ 17906-A	Steel-not replaced	1
78/	P - - w/o bumper guards and horizontal pads	E0BZ 17906-A	Aluminum	1
78/	P - - w/bumper guards w/o horizontal pads	E0BZ 17906-B	Aluminum	1
78/	P - - w/bumper guards and horizontal pads	E0BZ 17906-C	Aluminum	1
77/79	V - - w/bumper guards and horizontal pads- "Before 12/14/78"	★ D74Y 17906-A	Steel-not replaced	1
79	V - - w/bumper guards & horizontal pads- "From 12/14/78"	★ D94Y 17906-A	Steel-not replaced	1
73	Y(53,65) - - w/o bumper guards and horizontal pads	★ D3MY 17906-A	Steel-not replaced	1
73	Y(53,65) - - w/bumper guards and horizontal pads "Before 9/20/72"	★ D3MY 17906-B	Steel-not replaced	1
73	Y(53,65) - - w/bumper guards and horizontal pads "From 9/20/72 to 3/1/73"	★ D3MY 17906-C	Steel-not replaced	1
73	Y(53,65) - - w/bumper guards w/o horizontal pads "Before 9/20/72"	★ D3MY 17906-D	Steel-not replaced	1
73	Y(53,65) - - w/bumper guards w/o horizontal pads "From 9/20/72 to 4/2/73"	★ D3MY 17906-E	Steel-not replaced	1
73	Y(53,65) - - w/bumper guards w/o horizontal pads "From 4/2/73"	★ D4MY 17906-B	Steel-not replaced	1
74/75	Y(53,65) - - w/o bumper guards and horizontal pads	★ D3MY 17906-A	Steel-not replaced	1
76	Y(53,65) - - w/o bumper guards and horizontal pads	★ D6MY 17906-A	Steel-not replaced	1

COPYRIGHT © 1986— FORD MOTOR COMPANY —DEARBORN, MICHIGAN

1973/79 LINCOLN-MERCURY CARS

YEAR	MODEL/RESTRICTIONS	PART NUMBER	DESCRIPTION	QTY.
17906	BUMPER (REAR) — Cont'd When Steel bumpers with bumper guard attaching holes are installed on vehicles without guards, use 385361-S100 (PP-8-H) plug button to plug the unused holes. This plug button is not to be used with aluminum bumpers.			
74/76	Y(53,65) - - w/bumper guards and horizontal pads	★ D6MY 17906-B	Steel-not replaced	1
73/76	Y(71) - - w/bumper guards w/o horizontal pads	★ D4AZ 17906-E	Steel-not replaced	1
73/76	Y(71) - - w/o bumper guards and horizontal pads	★ D4AZ 17906-K	Steel-not replaced	1
75/76	Y(71) - - w/bumper guards and horizontal pads	★ D5AZ 17906-A	Steel-not replaced	1
74	C,P	34670-S7-8	(M-54)-nut and washer(bumper to 17A914 reinforcement and 17787 arm)-7/16"-14	AR
74	C,F	370677-S	(CC-22)-bumper-rubber(license plate anti-rattler)	2
74	A(71),P,Y(71)	380369-S	(CC-44)-bumper-rubber(license plate anti-rattler)	2
17A914	REINFORCEMENT (REAR BUMPER CENTER)			
73	A(53,57,65),Y(53,65) "Before 2/15/73"	★ D3MY 17A914-B	Not replaced	1
73	A(53,57,65),Y(53,65) "From 2/15/73"	★ D3MY 17A914-C	Not replaced	1
73	A(71),Y(71)	★ D3AZ 17A914-B	Not replaced	1
74/76	A(71),Y(71)	D5AZ 17A914-A		1
77/78	A(71)			1
74/76	A(53,57,65),Y(53,65)	★ D4MY 17A914-B	Repl. by (1) D7MY 17A914-A reinf., (1) D7AZ 13550-A lens assy., (1) D7MY 13412-A wire & socket assy., & (1) C7SZ 13466-B (No. 168) bulb	1
77/78	A(53,65)	D7MY 17A914-A		1
79	A(54,66)	D9AZ 17A914-A		1
79	A(74)		Refer to Group 17C897	
73	C(53,63,65)	★ D3GY 17A914-A	Not replaced	1
73	C(71)	★ D20Z 17A914-B	Not replaced	1
74/76	C(53,65)	D60Z 17A914-A		1
74/76	C(71)	D40Z 17A914-B		1
74	D	★ D4VY 17A914-A	Not replaced	1
75/76	D	★ D5VY 17A914-A	Repl. by (1) D7AZ 13350-lamp assy. (1) D7VY 13423-A bracket (1) D7VY 13412-A wiring & socket (1) C7SZ 13466-B bulb #168 (1) D7VY 17A914-A reinf. assy. (2) 40953-S8 screws	1
77/	D	D7VY 17A914-A	Steel-replaces aluminum reinf.	1
73	F	★ D1WY 17A914-A	Not replaced	1
74/76	F	D60Z 17A914-A		1
77/78	F(53,65)	★ D70Z 17A914-A	Repl. by (1) D90Z 17A914-A, (1) D90Z 17787-A R.H. brace & (1) D90Z 17788-A L.H. brace	1
77	F(71)	D40Z 17A914-B		1
79	F	D90Z 17A914-A		1
75/77	G "Before 3/7/77"	D5DZ 17A914-B		1
77/79	G "From 3/7/77"	E0DZ 17A914-A		1
73	K	★ D2LY 17A914-A	Not replaced	1
74	K "Before 8/27/73"	★ D4LY 17A914-A	Not replaced	1
74/76	K "From 8/27/73"	D4LY 17A914-B		1
77/	K	D7LY 17A914-C	Steel	1
74/76	L	D4FZ 17A914-B		1
79	L	D9FZ 17A914-A		1
74/77	P	D7DZ 17A914-A		1
78/	P(74)	★ D8BZ 17A914-A	Repl. by E0BZ 17A914-A	1
77/79	V	E0DZ 17A914-A		1

YEAR	MODEL/RESTRICTIONS	PART NUMBER	DESCRIPTION	QTY.
17A924	SPACER (BUMPER ARM)			
73	A,C,F,Y	★ D3AZ 17A924-A	Front bumper-not replaced	AR
73/74	P			AR
73	A,Y		Rear bumper	AR
17A928	REINFORCEMENT (FRONT BUMPER GUARD)			
74	J	★ D4RY 17A928-A	Not replaced	1
76/78	J	★ D5RY 17A928-A	Not replaced	1
17B947	INSULATOR (FRONT BUMPER ARM)-If not listed below improvise			
79	A	D9AZ 17B947-A		1
17C954	SUPPORT (FRONT BUMPER STONE DEFLECTOR CENTER)			
73/74	A,Y	★ D3MY 17C954-A	Not replaced	2
17A956	REINFORCEMENT (FRONT BUMPER STONE DEFLECTOR)			
75/78	A	D5MY 17A956-A		1
73	D	(RH) ★ D3VY 17A956-A	(LH) ★ D3VY 17A956-B Not replaced	1
17B956	BRACKET (FRONT BUMPER STONE DEFLECTOR MOUNTING INNER)			
73	F	★ D3WY 17B956-A	Not replaced	1
17B960-1	SPACER (REAR BUMPER IMPACT BAR)			
73	J	(RH) ★ D3RY 17B960-A	(LH) ★ D3RY 17B961-A Not replaced	1
17B965	BRACKET (REAR BUMPER STOP)			
73	C(53,63,65)	(RH) ★ D3GY 17B965-A	(LH) ★ D3GY 17B965-B Not replaced	1
74	D	(RH) ★ D4VY 17B965-A	(LH) ★ D4VY 17B965-B Not replaced	1
75/76	D	(RH) ★ D5VY 17B965-A	(LH) ★ D5VY 17B965-B Not replaced	1
78/	D "From 6/19/78"	★ D8VY 17B965-A	Not replaced	2
74/76	K	★ D4LY 17B965-A	Not replaced	2
74/76	K	★ D4LY 17B965-B	"L" shaped-not replaced	2
17B968	GRILLE (FRONT BUMPER)			
79	A	(RH) D9MY 17B968-A	(LH) D9MY 17B968-B	1
75/76	D	D5VY 17B968-A		1
77/	D	D7VY 17B968-A	Argent	1
79	D	D9VY 17B968-A	Gold	1
77/	F(65L)	D7WY 17B968-A		1
17B970	MOULDING (BUMPER)			
74/78	J(exc. 64S)	D4RY 17B970-A	Front and rear-bright finish-stainless steel	1or2
76/78	J(64S)	D6RY 17B970-A	Front and rear-gold finish-stainless steel	1or2
77/78	J(64S)	★ D7RY 17B970-A	Front and rear-gold finish-tape	1
17C972-3	GUIDE (FRONT BUMPER)			
77	K "Before 12/1/76"	(RH) ★ D7LY 17C972-A	(LH) ★ D7LY 17C973-A Not replaced	1
17C977	SHIM (REAR BUMPER ARM)			
73	A,Y	★ D3AZ 17C977-A	Not replaced	AR
74/78	A(71),Y(71)	D4AZ 17C977-A		AR
74/78	C,F	D40Z 17C977-A		AR
79	D	D9VY 17C977-B	Incl. (2) insulators	AR
74/76	K	★ D4SZ 17C977-A	Steel spacer-not replaced	AR
77/79	K	D7LY 19C977-A	Fibre spacer	2
78/79	K "From 1/3/78 to 6/4/79"	★ D9VY 17C977-B	Aluminum foil insulator-not replaced	2
78	D "From 1/3/78"			1
74/	G,L,P	★ D6FZ 17C977-A	Not replaced	1
17984-5	GUARD (REAR BUMPER)-Incl. pad and attaching parts			
73	A(53,57,65),Y(53,65) "Before 9/20/72"	(RH) ★ D3MY 17984-B	(LH) ★ D3MY 17985-B Not replaced Not replaced	1
73	A(53,57,65),Y(53,65) "From 9/20/72"	(RH) ★ D3MY 17984-D	(LH) ★ D3MY 17985-D Not replaced	1
73	A(53,57,65)	★ D3MY 17984-A	Kit-not replaced	1
74/75	A(53,57,65)	★ D4MY 17984-B	Kit-r/b details (12/77)	1

Consists of

2-D4AZ 17A812-A	Pad assy	4-57048-S2	Screw and washer assy.
1-D4MY 17984-A	Guard assy.-R.H.	1-Installation sketch	
1-D4MY 17985-A	Guard assy.-L.H.		

COPYRIGHT © 1986 — FORD MOTOR COMPANY — DEARBORN, MICHIGAN

1973/79 LINCOLN-MERCURY CARS

YEAR	MODEL/RESTRICTIONS	PART NUMBER	DESCRIPTION		QTY.
17984-5	GUARD (REAR BUMPER)-Incl. pad and attaching parts — Cont'd				
73/76	A(71),Y(71)	D4AZ 17984-C	R.H. and L.H.		2
77	A(71) "Before 9/1/76"				2
77/78	A(71) "From 9/1/76"	D7AZ 17984-C	R.H. and L.H.-incl. pad		2
74/76	A(53,57,65),Y(53,65)	(RH) D4MY 17984-A	(LH) D4MY 17985-A		1
77/78	A(53,65)				1
79	A(54,66)	D9AZ 17984-A	R.H. and L.H.		2
79	A(74)	D9AZ 17984-B	R.H. and L.H.		2
73	C(71)	D30Z 17984-B	R.H. and L.H.		2
74/76	C(53,65)	D40Z 17984-A	R.H. and L.H.		2
74/76	C(71)	D40Z 17984-D	R.H. and L.H.		2
74	D	(RH) ★ D4VY 17984-A	(LH) ★ D4VY 17985-A		1
75/	D	(RH) D6VY 17984-A	(LH) D6VY 17985-A	Less pad	1
73	F	★ D3WY 17984-A	R.H. and L.H.-not replaced		2
74/76	F	D40Z 17984-A	R.H. and L.H.		2
77/	F(53,65)	(RH) D80Z 17984-A	(LH) D80Z 17985-A	Rear-incl. pad	1
77	F(71)	D40Z 17984-D	R.H. and L.H.-incl. pad		2
75/	G	D7DZ 17984-A	R.H. and L.H.-incl. pad		2
77/	G(66H)	D7DZ 17984-B	R.H. and L.H.-moulded black rubber		2
73	J	D3RY 17984-A	R.H. and L.H.		2
73	K	★ D3LY 17984-A	Horizontal-not replaced		1
74	K "Before 8/27/73"	(RH) ★ D4LY 17984-A	(LH) ★ D4LY 17985-A	Not replaced	1
74/76	K "From 8/27/73"	(RH) D6LY 17984-B	(LH) D6LY 17985-B	Less pad	1
77/	K	(RH) D7LY 17984-A	(LH) D7LY 17985-A	Incl. black pad-for color coded pad refer to Group 17A807	1
74/78	L	D4FZ 17984-A	R.H. and L.H.-incl. pad		2
77/78	L	D7FZ 17984-A	R.H. and L.H.-moulded black rubber		2
79	L	D9FZ 17984-A	R.H. and L.H.		2
73	P	D3DZ 17984-B	R.H. and L.H.		2
74/77	P	D4DZ 17984-A	R.H. and L.H.		2
78/	P	D8BZ 17984-A	R.H. and L.H.-moulded black rubber		2
77/	V	D74Y 17984-A	R.H. and L.H.-incl. pad		2
73	J	E826009-S72	(AM-30)-nut-retainer(to attach 17984 to 17757)		4
17A986	BRACKET (FRONT BUMPER STONE DEFLECTOR MOUNTING)				
79	A	D9MY 17A986-A			2
73	C	★ D30Z 17A986-A			4
74/76	C,F	D4GY 17A986-A			4
73	D	★ D3VY 17A986-A	Not replaced		1
73	F	★ D3WY 17A986-A	Outer-not replaced		2
77/	F	D7SZ 17A986-A			1
74/76	K	★ D4LY 17A986-B	Not replaced		1
79	L	E0FZ 17A986-A			4
17B988	RETAINER (FRONT BUMPER ANCHOR PLATE)				
73	D	(RH) ★ D3VY 17B988-A	(LH) ★ D3VY 17B988-B	Not replaced	1
17B990	STOP (REAR BUMPER)				
74/76	A(71),Y(71)	★ D4AZ 17B990-A	Not replaced		2
77/78	A(71)				2
73	C(53,63,65)	★ D3GY 17B990-A	Not replaced		2
73	C(71)	★ D30Z 17B990-B	Not replaced		2
73	D	★ D3VY 17B990-A	1 1/8 x 1 5/32"-not replaced		2
73	D	★ D3VY 17B990-B	2 1/8" x 2 1/8"-not replaced		2
74	D	(RH) ★ D4VY 17B990-A	(LH) ★ D4VY 17B990-B	Not replaced	1

YEAR	MODEL/RESTRICTIONS	PART NUMBER	DESCRIPTION		QTY.
17B990	STOP (REAR BUMPER) — Cont'd				
75/76	D	(RH) ★ D5VY 17B990-A	(LH) ★ D5VY 17B990-B	Not replaced	1
78/	D "From 6/19/78"	★ D8VY 17B990-A	Not replaced		2
73	K	★ D2LY 17B990-A	Not replaced		2
74	K "Before 8/27/73"	★ D4LY 17B990-A	Not replaced		2
74/76	K "From 8/27/73"	★ D4LY 17B990-B	Not replaced		2
78/	P(74)	D8BZ 17B990-A	Center		1
17996-7	GUARD (FRONT BUMPER)-Incl. pad and attaching parts				
73	A,Y	(RH) ★ D3MY 17996-C	(LH) ★ D3MY 17997-C	Not replaced	1
74/76	A,Y	(RH) D4MY 17996-A	(LH) D4MY 17997-A		1
77/78	A				1
79	A	(RH) D9MY 17996-A	(LH) D9MY 17997-A		1
		D9AZ 17998-A	Center		1
73	C	(RH) ★ D3GY 17996-B	(LH) ★ D3GY 17997-A	Not replaced	1
74/76	C	(RH) D4GY 17996-B	(LH) D4GY 17997-B		1
73	D	(RH) ★ D3VY 17996-A	(LH) ★ D3VY 17997-A	Not replaced	1
74/	D	(RH) D6VY 17996-A	(LH) D6VY 17997-A	Less pad	1
73	F	(RH) ★ D3WY 17996-B	(LH) ★ D3WY 17997-A	Not replaced	1
74/76	F	(RH) D4GY 17996-B	(LH) D4GY 17997-B		1
77/	F	(RH) D70Z 17996-A	(LH) D70Z 17997-A	Incl. pad-9" high	1
77/	F	(RH) D70Z 17996-B	(LH) D70Z 17997-B	Moulded argent rubber	1
77/	F	D7SZ 17998-A	Center-moulded argent rubber		1
75/	G	(RH) D74Y 17996-A	(LH) D74Y 17997-A	Incl. pad	1
77/	G	(RH) D7DZ 17996-A	(LH) D7DZ 17997-A	Moulded black rubber	1
73	J	(RH) D3RY 17996-A	(LH) D3RY 17997-A		1
73	K	(RH) D3LY 17996-A	(LH) D3LY 17997-A		1
74	K "Before 8/27/73"	(RH) ★ D4LY 17996-A	(LH) ★ D4LY 17997-A	Not replaced	1
74/76	K "From 8/27/73"	(RH) D6LY 17996-A	(LH) D6LY 17997-A	Less pad	1
77/	K	(RH) D7LY 17996-A	(LH) D7LY 17997-A	Incl. black pad-for color coded pad refer to Group 17A807	1
74/76	L	(RH) D4FZ 17996-A	(LH) D4FZ 17997-A		1
77/78	L	(RH) D7FZ 17996-A	(LH) D7FZ 17997-A	Incl. pad	1
77/78	L	(RH) D7FZ 17996-B	(LH) D7FZ 17997-B	Moulded black rubber	1
79	L	(RH) D9FZ 17996-B	(LH) D9FZ 17997-B	Black	1
		D9FZ 17998-A	Center-argent		1
73	P	(RH) D3DZ 17996-B	(LH) D3DZ 17997-A		1
74/77	P	(RH) D4DZ 17996-C	(LH) D4DZ 17997-C		1
78/	P	(RH) D8BZ 17996-A	(LH) D8BZ 17997-A	Moulded black rubber	1
77/	V	(RH) D74Y 17996-A	(LH) D74Y 17997-A	Incl. pad	1

COPYRIGHT © 1986— FORD MOTOR COMPANY —DEARBORN, MICHIGAN

MIRROR KIT COMPONENTS

QTY.	PART NUMBER	DESCRIPTION
	C9AZ 17696–A	
Consists of		
1	C9AJ 17682–A	Mirror assy.
1	C9AJ 17C700–A	Retainer
2	C9AZ 17724–A	Gasket
1	376370–S100	Screw
1		Installation sheet
	D1AZ 17696–B	
Consists of		
1	D1AJ 17682–AA	Mirror assy.
2	C9AZ 17C700–B	Retainer
1	C9AB 17C701–A	Gasket
2	382879–S45	Screw–No. 10–24 x 1"
1		Installation sheet
	D1DZ 17696–B	
Consists of		
1	D0DZ 17682–D	Mirror assy.–R.H.–manual
1	D1DZ 17682–A	Mirror assy.–L.H.–remote
3	C9AZ 17C700–B	Retainer
1	D0DZ 17724–C	Gasket–R.H.
1	D0DZ 17724–B	Gasket–L.H.
1	C9TZ 17B732–A	Nut
1	C9TZ 17B733–C	Plate
1	382879–S45	Screw–No. 10–24 x 1"
1		Installation sheet
	D1WY 17696–B	
Consists of		
1	D10Z 17682–B	Mirror assy.–R.H.–manual
1	D1WY 17682–A	Mirror assy.–L.H.–remote
1	D10Z 17724–B	Gasket–R.H.
1	D1WY 17724–A	Gasket–L.H.
3	C9AZ 17C700–B	Retainer
1	C7SZ 17B732–B	Nut
1	C8SZ 17B733–C	Plate
4	382879–S45	Screw–No. 10–24 x 1"
1	382930–S	Clip
1		Installation sheet
	D2DZ 17682–A	
Consists of		
1	D2DB 17683–BA	Mirror assy.–L.H.–remote
1	D0DZ 17724–A	Gasket
1	C9TZ 17B732–A	Nut
1	C8SZ 17B733–B	Plate
2	382879–S45	Screw–No. 10–24 x 1"
1		Installation sheet
	D2GY 17696–A	
Consists of		
1	D2GY 17682–B	Mirror assy.–L.H.–remote
1	D2GY 17682–C	Mirror assy.–R.H.–manual
3	C9AZ 17C700–B	Retainer
2	D2GY 17724–B	Gasket
1	C7SZ 17B732–B	Nut
1	C8SZ 17B733–C	Plate
2	382390–S	Clip
4	382879–S45	Screw–No. 10–24 x 1"
1		Installation sheet
	D2WY 17696–A	
Consists of		
1	D1WB 17683–AA	Mirror assy.
1	C7AZ 17724–A	Gasket
1	C7SZ 17B732–B	Nut
1	C8SZ 17B733–B	Plate
2	382879–S45	Screw–No. 10–24 x 1"
1	382930–S	Clip
1		Installation sheet
	D3AZ 17696–A	
Consists of		
1	D3AB 17683–BC	Mirror assy.
1	D3AB 17B707–AA	Bracket
1	D3AB 17724–AA	Gasket
1	C7SZ 17B732–B	Nut
1	D3AZ 17B733–A	Plate
1	57077–S2	Screw and washer
1	381518–S45	Screw
1	382930–S	Clip
1		Installation sheet
	D3AZ 17696–C	
Consists of		
1	D3AJ 17696–BA	Mirror assy.
1	D3AJ 17B715–AA	Bracket
2	54598–S2	Screw and lockwasher
2	385195–S45	Screw
2	385469–S8	Nut
1		Installation sheet
	D3FZ 17696–A	
Consists of		
1	D32J 17682–AA	Mirror assy.–R.H.–manual
1	D22J 17683–AA	Mirror assy.–L.H.–remote
1	C9AZ 17C700–B	Retainer
2	D1FZ 17724–A	Gasket
1	C9TZ 17B732–A	Nut
1	C8SZ 17B733–C	Plate
1	95831–S	Strap
4	382879–S45	Screw–No. 10–24 x 1"
1		Installation sheet
	D4AZ 17696–A	
Consists of		
1	D4AJ 17682–AA	Mirror assy.–R.H.–L.H.
2	C9AZ 17C700–B	Retainer
1	C7AZ 17724–A	Gasket
1	C70Z 17724–A	Gasket
1	C80Z 17724–A	Gasket
1	C80Z 17724–B	Gasket
1	C9AZ 17724–A	Gasket
2	382879–S45	Screw–No. 10–24 x 1"
1		Installation sheet

COPYRIGHT © 1986 — FORD MOTOR COMPANY — DEARBORN, MICHIGAN

MIRROR KIT COMPONENTS — Cont'd

QTY.	PART NUMBER	DESCRIPTION
	D5DZ 17696–A	
Consists of		
1	D5DB 17683–BA	Mirror assy.–L.H.–remote
1	D5DB 17C701–AA	Gasket
1	C7SZ 17B732–B	Nut
1	D4ZZ 17B733–B	Plate
2	D4ZZ 17A746–A	Retainer
2	382879–S45	Screw–No. 10–24 x 1"
1	382930–S	Clip
1		Installation sheet
	D7DZ 17696–A	
Consists of		
1	D2GY 17682–B	Mirror assy.–L.H.–remote
1	D2GY 17682–C	Mirror assy.–R.H.–manual
3	C9AZ 17C700–B	Retainer
2	D6DB 17C701–AA	Gasket
1	C7SZ 17B732–B	Nut
1	D4ZZ 17B733–B	Plate
2	D4ZZ 17B746–A	Retainer
4	382879–S45	Screw–No. 10–24 x 1"
2	382930–S	Clip
1		Installation sheet
	D7DZ 17696–B	
Consists of		
1	D7DJ 17682–AA	Mirror assy.–L.H.–manual
2	C9AZ 17C700–B	Retainer
1	D5DB 17724–AA	Gasket
2	382879–S45	Screw–No. 10–24 x 1"
1		Installation sheet
	D7DZ 17682–C	
Consists of		
1	D7DJ 17682–BA	Mirror assy.–L.H.–manual
2	C9AZ 17C700–B	Retainer
1	D5DB 17724–AA	Gasket
2	382879–S45	Screw–No. 10–24 x 1"
1		Installation sheet
	D8BZ 17696–A	
Consists of		
1	D8BZ 17682–C	Mirror assy.–R.H.–remote (bright)
1	D8BZ 17K709–D	Cover
1	D8BZ 17K709–E	Cover
3	383255–S36	Nut and washer
1	385993–S	Screw
1		Installation sheet
	D8BZ 17969–B	
Consists of		
1	D8BZ 17682–D	Mirror assy.–R.H.–remote (black)
1	D8BZ 17K709–D	Cover
1	D8BZ 17K709–E	Cover
3	383255–S36	Nut and washer
1	385993–S	Screw
1		Installation sheet

1973/79
LINCOLN-MERCURY CARS

YEAR	MODEL/RESTRICTIONS	PART NUMBER	DESCRIPTION	QTY.
18A000	MEMBER ASSY. (REAR SHOCK ABSORBER MOUNTING)			
75/	G,V	D9DZ 18A000-A		1
75/	L(73)	★ D5FZ 18A000-A	Not replaced	1
73/77	P	D3DZ 18A000-A		1
18A017	BRACKET ASSY. (FRONT SHOCK)			
73	F	★ D1ZZ 18A017-A	R.H. and L.H.-not replaced	2
75	G	D5DZ 18A017-A	R.H. and L.H.	2
76/	G	D6DZ 18A017-B	R.H. and L.H.	2
73/77	P	D0DZ 18A017-A	R.H. and L.H.	2
77/	V	D8DZ 18A017-A		2
18K032	COVER (REAR SUSPENSION SHOCK ABSORBER-STUD)			
79	J,P	D9BZ 18K032-A		1
18A040	SPACER (REAR SHOCK ABSORBER)			
73/78	J	D0RY 18A040-A	R.H. and L.H.	2
18045	Refer to group 18124			
18A047	DUST TUBE (SHOCK ABSORBER KIT)			
78/	P - - Front shock	D8BZ 18A047-A	*AD-193	1
18080	Refer to group 18125			
18A086	RETAINER (FRONT SHOCK ABSORBER BUMPER)			
74/	L	D1FZ 18A086-B	R.H. and L.H.	2

18124-5 SHOCK ABSORBER IDENTIFICATION CHART

The production number is stamped on the barrel of each shock absorber as an identification marking. The following chart will provide quick identification of the service kit number when the identification marking is known. Also shock absorber kits may be selected by model, year and description under group number 18124-5 which follows the chart. Shock absorber kits include insulators, bolts, nuts and washers.

In those instances where both Ford and Motorcraft numbers are listed, Canadian dealers are to order Motorcraft numbers only.

SHOCK ABSORBER IDENTIFICATION CHART

IDENTIFICATION	PART NUMBER	MOTORCRAFT SALES NUMBER	IDENTIFICATION	PART NUMBER	MOTORCRAFT SALES NUMBER
73EB 3K098-B2D	D3RY 18124-A		D6EF 18045-AD	D6FZ 18124-A	
D2AF 18045-AA	D4AZ 18124-C		D6EF 18045-AE	D6FZ 18124-A	
D3AF 18045-BA	D3AZ 18124-B		D6EF 18045-BA	D6FZ 18124-B	
D3AF 18045-CA	D3AZ 18124-C		D6EF 18045-BB	D6FZ 18124-B	
D3DF 18045-BA	D4DZ 18124-B		D6EF 18045-CA	D6FZ 18124-A	
D3LF 18045-AA	D3LY 18124-A		D6EF 18045-DA	D6FZ 18124-B	
D3LF 18045-AB	D3SZ 18124-AB		D6SF 18045-AA	D6SZ 18124-A	
D3LF 18045-BB	D3LY 18124-B		D7AC 18045-AA	D7AZ 18124-A	
D3OF 18045-AA	D50Z 18124-A		D7AC 18045-BA	D7AZ 18124-B	
D3VF 18045-AA	D5VY 18124-A		D7AC 18045-CB	D7AZ 18124-C	
D3ZF 18045-AB	D3ZZ 18124-A		D7BC 18045-AA	D70Z 18124-D	
D4AF 18045-AA	D4AZ 18124-A		D7DC 18045-BA	D7DZ 18124-E	
D4AF 18045-BA	D4AZ 18124-B		D7DC 18045-AA	D7DZ 18124-A	
D4AF 18045-CA	D4AZ 18124-C		D7DC 18045-BD	D74Y 18124-A	
D40F 18045-AA	D50Z 18124-A		D7DC 18045-CA	D7DZ 18124-B	
D40F 18045-BA	D40Z 18124-B		D7EF 18045-AA	D7FZ 18124-A	
D40F 18045-DB	D70Z 18124-C		D7LF 18045-AA	D7LY 18124-A	
D42F 18045-AA	D1FZ 18124-A		D7LF 18045-BA	D7LY 18124-B	
D42F 18045-BB	D4PZ 18124-C		D70C 18045-AB	D70Z 18124-A	
D5AF 18045-AA	D5AZ 18124-A		D70C 18045-DC	D70Z 18124-C	
D5AF 18045-CA	D7AZ 18124-C		D70F 18045-AA	D70Z 18124-A	
D5DF 18045-AC	D5DZ 18124-C		D70F 18045-BA	D70Z 18124-B	
D5DF 18045-BB	D5DZ 18124-D		D7VC 18045-AA	D7VY 18124-A	
D50F 18045-AA	D50Z 18124-A		D7VC 18045-BA	D7VY 18124-B	
D50F 18045-CA	D50Z 18124-C		D8BC 18045-AC	D8BZ 18124-A	
D52F 18045-AA	D5FZ 18124-C		D8BC 18045-AD	D8BZ 18124-A	
D52F 18045-BD	D5FZ 18124-D		D8BC 18045-AE	D8BZ 18124-A	
D6DF 18045-CA	D6DZ 18124-C				

COPYRIGHT © 1986— FORD MOTOR COMPANY —DEARBORN, MICHIGAN

SHOCK ABSORBER IDENTIFICATION CHART

IDENTIFICATION	PART NUMBER	MOTORCRAFT SALES NUMBER	IDENTIFICATION	PART NUMBER	MOTORCRAFT SALES NUMBER
D8BC 18045-AF	D8BZ 18124-A		D9BC 18045-EB	D9BZ 18124-C	
D8BC 18045-AG	D8BZ 18124-A		D9BC 18045-EC	D9BZ 18124-C	
D8BC 18045-AH	D8BZ 18124-A		D9ZC 18045-AA	D9ZZ 18125-A	
D8BC 18045-AJ	D8BZ 18124-A		D9ZC 18045-AB	D9ZZ 18125-A	
D8BC 18045-BA	D8BZ 18124-B		D9ZC 18045-AC	D9ZZ 18125-A	
D8BC 18045-BB	D8BZ 18124-B		D9ZC 18045-AD	D9ZZ 18125-A	
D8BC 18045-BC	D8BZ 18124-B		D9ZC 18045-AE	D9ZZ 18125-A	
D8BC 18045-BD	D8BZ 18124-B		D9ZC 18045-CA	D9ZZ 18125-B	
D8BC 18045-BE	D8BZ 18124-B		D9ZC 18045-CB	D9ZZ 18125-B	
D8BC 18045-BF	D8BZ 18124-B		D9ZC 18045-CC	D9ZZ 18125-B	
D8BC 18045-BG	D8BZ 18124-B		D9ZC 18045-CD	D9ZZ 18125-B	
D8BC 18045-EA	D8BZ 18124-C		D9ZC 18045-DA	D9ZZ 18125-C	
D8BC 18045-EB	D8BZ 18124-C		D9ZC 18045-DB	D9ZZ 18125-C	
D8BC 18045-EC	D8BZ 18124-C		D9ZC 18045-DC	D9ZZ 18125-C	
D8BC 18045-ED	D8BZ 18124-C		D9ZC 18045-DD	D9ZZ 18125-C	
D8BC 18045-EE	D8BZ 18124-C		D9ZC 18045-DE	D9ZZ 18125-C	
D8BC 18045-FA	D8BZ 18124-D		D3AF 18080-AA	D3AZ 18125-A	
D8BC 18045-FB	D8BZ 18124-D		D3AF 18080-BA	D3AZ 18125-B	
D8BC 18045-FC	D8BZ 18124-D		D3AF 18080-CA	D3AZ 18125-C	
D8BC 18045-FD	D8BZ 18124-D		D3AF 18080-DA	D3AZ 18125-D	
D8BC 18045-FE	D8BC 18124-D		D3AF 18080-EA	D3AZ 18125-E	
D8BC 18045-GA	D8BZ 18124-E		D3AF 18080-FA	D3AZ 18125-F	
D8BC 18045-GB	D8BZ 18124-E		D3DF 18080-AA	D4DZ 18125-A	
D8BC 18045-HB	D8BZ 18124-H		D3LF 18080-AA	D3LY 18125-A	
D8BC 18045-HC	D8BZ 18124-H		D3LF 18080-BA	D3LY 18125-B	
D8DC 18045-AB	D94Y 18124-A		D3OF 18080-AA	D3OZ 18125-A	
D8VC 18045-AA	D8VY 18124-A		D3OF 18080-BA	D3OZ 18125-B	
D9BC 18045-HA	D9BZ 18124-D		D3OF 18080-CA	D3OZ 18125-C	
D9BC 18045-HB	D9BZ 18124-D		D3VF 18080-AA	D3VY 18125-A	
D9BC 18045-HC	D9BZ 18124-D		D3WF 18080-AA	D3WY 18125-A	
D9BC 18045-HD	D9BZ 18124-D		D3WF 18080-BA	D3WY 18125-B	
D9EC 18045-AA	D9FZ 18124-A		D4AF 18080-AA	D5AZ 18125-A	
D9ZC 18045-AA	D9ZZ 18124-A		D4AF 18080-BA	D4AZ 18125-B	
D9ZC 18045-AB	D9ZZ 18124-A		D4AF 18080-CA	D4AZ 18125-C	
D9ZC 18045-AC	D9ZZ 18124-A		D4AF 18080-DA	D5AZ 18125-C	
D9ZC 18045-AD	D9ZZ 18124-A		D4AF 18080-EA	D4AZ 18125-E	
D9ZC 18045-BA	D9ZZ 18124-A		D4AF 18080-FA	D4AZ 18125-F	
D9ZC 18045-BB	D9ZZ 18124-A		D4DF 18080-AB	D4DZ 18125-A	
D9ZC 18045-CA	D9ZZ 18124-B		D4DF 18080-CB	D4DZ 18125-C	
D9ZC 18045-CB	D9ZZ 18124-B		D4LF 18080-AA	D4LY 18125-A	
D9ZC 18045-CC	D9ZZ 18124-B		D4MF 18080-AA	D4AZ 18125-B	
D9ZC 18045-DA	D9ZZ 18124-C		D4OF 18080-AA	D4OZ 18125-A	
D9ZC 18045-DB	D9ZZ 18124-C		D4OF 18080-BA	D4OZ 18125-B	
D9ZC 18045-DC	D9ZZ 18124-C		D4OF 18080-CA	D4OZ 18125-C	
D9ZC 18045-DD	D9ZZ 18124-C		D4SF 18080-BA	D4SZ 18125-B	
D8LC 18045-AA	D8LY 18124-A		D42F 18080-AB	D4FZ 18125-A	
D8VC 18045-AA	D8VY 18124-A		D42F 18080-BB	D4FZ 18125-B	
D9AC 18045-AA	D9AZ 18124-A		D42F 18080-CA	D4FZ 18125-C	
D9AC 18045-BA	D9AZ 18124-B		D5AF 18080-AA	D5AZ 18125-A	
D9AC 18045-BC	D9AZ 18124-B		D5AF 18080-BA	D5AZ 18125-B	
D9AC 18045-CA	D9AZ 18124-C		D5AF 18080-CA	D5AZ 18125-C	
D9AC 18045-DA	D9AZ 18124-D		D5AF 18080-DA	D5AZ 18125-D	
D9AC 18124-EA	D9AZ 18124-E		D5AF 18080-EA	D7AZ 18125-D	
D9BC 18045-AA	D9BZ 18124-A		D5DF 18080-AB	D6DZ 18125-B	
D9BC 18045-AB	D9BZ 18124-A		D5DF 18080-BA	D5DZ 18125-D	
D9BC 18045-AC	D9BZ 18124-A		D5OF 18080-AA	D5OZ 18125-A	
D9BC 18045-BA	D9BZ 18124-B		D5OF 18080-BA	D5OZ 18125-B	
D9BC 18045-BB	D9BZ 18124-B		D5SF 18080-BA	D5SZ 18125-B	
D9BC 18045-BC	D9BZ 18124-B		D5VF 18080-AA	D5VY 18125-A	
D9BC 18045-EA	D9BZ 18124-C				

SHOCK ABSORBER IDENTIFICATION CHART

IDENTIFICATION	PART NUMBER	MOTORCRAFT SALES NUMBER	IDENTIFICATION	PART NUMBER	MOTORCRAFT SALES NUMBER
D52F 18080-AA	D5FZ 18125-F		D9AC 18080-DA	D9AZ 18125-D	
D52F 18080-BA	D5FZ 18125-G		D9AC 18080-DB	D9AZ 18125-M	
D52F 18080-CC	D5FZ 18125-M		D9AC 18080-EA	D9AZ 18125-E	
D52F 18080-FA	D5FZ 18125-J		D9AC 18080-EB	D9AZ 18125-N	
D52F 18080-FB	D5FZ 18125-N		D9AC 18080-FB	D9AZ 18125-P	
D6AF 18080-BA	D6AZ 18125-B		D9AC 18080-GA	D9AZ 18125-G	
D6AF 18080-CA	D6AZ 18125-A		D9AC 18080-GB	D9AZ 18125-R	
D6DF 18080-BA	D6DZ 18125-B		D9BC 18080-AA	D9BZ 18125-A	
D6DF 18080-BB	D6DZ 18125-B		D9BC 18080-BA	D9BZ 18125-B	
D6DF 18080-CA	D6DZ 18125-A		D9BC 18080-CA	D9BZ 18125-C	
D6DF 18080-CB	D6DZ 18125-A		D9BC 18080-DA	D9BZ 18125-D	
D6EF 18080-AC	D6FZ 18125-A		D9EC 18080-AA	D9FZ 18125-A	
D6EF 18080-BC	D6FZ 18125-B		D9EC 18080-BA	D9FZ 18125-A	
D6EF 18080-CB	D6FZ 18125-C		D9VC 18080-AA	D9VY 18125-A	
D6LF 18080-AA	D6LY 18125-A		D9ZC 18080-AA	D9ZZ 18125-A	
D7AC 18080-AA	D7AZ 18125-A		D9ZC 18080-BA	D9ZZ 18125-B	
D7AC 18080-BA	D7AZ 18125-B		D9ZC 18080-CA	D9ZZ 18125-C	
D7AC 18080-CA	D7AZ 18125-C		D8BC 18A084-AE	D8BZ 18124-A	
D7AC 18080-EB	D7AZ 18125-D		D8BC 18A084-AF	D8BZ 18124-A	
D7BC 18080-AA	D7DZ 18125-A		D8BC 18A084-AG	D8BZ 18124-A	
D7DC 18080-BC	D74Y 18125-A		D8BC 18A084-AH	D8BZ 18124-A	
D7DF 18080-AA	D7DZ 18125-A		D8BC 18A084-AJ	D8BZ 18124-A	
D7EF 18080-AA	D7FZ 18125-A		D8BC 18A084-BB	D8BZ 18124-B	
D7EF 18080-BA	D7FZ 18125-B		D8BC 18A084-BC	D8BZ 18124-B	
D7LC 18080-AA	D7LY 18125-A		D8BC 18A084-BD	D8BZ 18124-B	
D7LC 18080-BA	D7LY 18125-B		D8BC 18A084-BE	D8BZ 18124-B	
D7LC 18080-CA	D7LY 18125-C		D8BC 18A084-BF	D8BZ 18124-B	
D7OC 18080-AB	D7OZ 18125-A		D8BC 18A084-BG	D8BZ 18124-B	
D7OC 18080-CB	D7OZ 18125-C		D8BC 18A084-EA	D8BZ 18124-C	
D7OF 18080-AA	D7OZ 18125-A		D8BC 18A084-EB	D8BZ 18124-C	
D7OF 18080-BA	D7OZ 18125-B		D8BC 18A084-EE	D8BZ 18124-C	
D7OF 18080-CA	D7OZ 18125-C		D8BC 18A084-ED	D8BZ 18124-C	
D7SF 18080-BA	D7SZ 18125-BA		D8BC 18A084-EC	D8BZ 18124-C	
70EB 18080-A3B	D2RY 18125-C		D8BC 18A084-FA	D8BZ 18124-D	
73EB 18080-AB	D3RY 18125-B		D8BC 18A084-FB	D8BZ 18124-D	
D8BC 18080-AB	D8BZ 18125-A		D8BC 18A084-FC	D8BZ 18124-D	
D8BC 18080-AC	D8BZ 18125-A		D8BC 18A084-FD	D8BZ 18124-D	
D8BC 18080-AD	D8BZ 18125-A		D8BC 18A084-FE	D8BZ 18124-D	
D8BC 18080-AE	D8BZ 18125-A		D8BC 18A084-GA	D8BZ 18124-E	
D8BC 18080-AF	D8BZ 18125-A		D8BC 18A084-GB	D8BZ 18124-E	
D8BC 18080-BA	D8BZ 18125-B		D8BC 18A084-HB	D8BZ 18124-H	
D8BC 18080-BB	D8BZ 18125-B		D8BC 18A084-HC	D8BZ 18124-H	
D8BC 18080-BC	D8BZ 18125-B		D9BC 18A084-AA	D9BZ 18124-A	
D8BC 18080-BD	D8BZ 18125-B		D9BC 18A084-AB	D9BZ 18124-A	
D8BC 18080-BE	D8BZ 18125-B		D9BC 18A084-AC	D9BZ 18124-A	
D8BC 18080-EA	D8BZ 18125-C		D9BC 18A084-BA	D9BZ 18124-B	
D8BC 18080-EB	D8BZ 18125-C		D9BC 18A084-BB	D9BZ 18124-B	
D8BC 18080-EC	D8BZ 18125-C		D9BC 18A084-BC	D9BZ 18124-B	
D8BC 18080-ED	D8BZ 18125-C		D9BC 18A084-EA	D9BZ 18124-C	
D8BC 18080-FA	D8BZ 18125-D		D9BC 18A084-EB	D9BZ 18124-C	
D8BC 18080-GA	D8BZ 18125-E		D9BC 18A084-EC	D9BZ 18124-C	
D8DC 18080-AB	D94Y 18125-A		D9BC 18A084-HA	D9BZ 18124-D	
D8VC 18080-AA	D8VY 18125-A		D9BC 18A084-HB	D9BZ 18124-D	
D9AC 18080-AA	D9AZ 18125-A		D9BC 18A084-HC	D9BZ 18124-D	
D9AC 18080-AB	D9AZ 18125-J		D9BC 18A084-HD	D9BZ 18124-D	
D9AC 18080-BA	D9AZ 18125-B		D1AF 18A125-AB	D4AZ 18125-H	
D9AC 18080-BB	D9AZ 18125-K		D2AF 18A125-AA	D4AZ 18125-H	
D9AC 18080-CA	D9AZ 18125-C		D4AF 18A125-AA	D4AZ 18125-H	
D9AC 18080-CB	D9AZ 18125-C		D7AC 18A125-AB	D7AZ 18125-E	
D9AC 18080-CC	D9AZ 18125-L		D9AC 18A125-AB	D9AZ 18125-S	

COPYRIGHT © 1986 — FORD MOTOR COMPANY — DEARBORN, MICHIGAN

1973/79 LINCOLN-MERCURY CARS

SHOCK ABSORBER APPLICATION CHART

18124 SHOCK ABSORBER (FRONT)

YEAR	MODEL/ RESTRICTION	STANDARD	HEAVY-DUTY	EXTRA HEAVY-DUTY	SPRING-ASSIST	COMPETITION (ADJUSTABLE)
	A (Mercury)					
73/78	A,Y - - w/o H/D susp. & P/C	Not available	C5AZ 18124-H *AW-69	C5AZ 18124-K *AX-110-A	C5AZ 18124-L *AA-205	
	A,Y - - w/H/D susp. & P/C			C5AZ 18124-J *AX-252-A		
79	A - - w/o P/C		D9AZ 18124-F *AW-313			
	A - - w/P/C			D9AZ 18124-G *AX-316		
	C (Montego)					
73/76	C - - w/o H/D susp. & P/C	★D50Z 18124-A r/bC5AZ 18124-H	C5AZ 18124-H *AW-69	C5AZ 18124-K *AX-110-A	C5AZ 18124-L *AA-205	
75/76	C - - w/H/D susp. & P/C			D50Z 18124-E *AX-248-A		
	D (Lincoln)					
73/	D		C5AZ 18124-H *AW-69	C5AZ 18124-K *AX-110-A	C5AZ 18124-L *AA-205	
	F (Cougar)					
73	F	D1ZZ 18124-G *AW-169				
74/	F - - w/o H/D susp. or P/C		C5AZ 18124-H *AW-69	C5AZ 18124-K *AX-110-A	C5AZ 18124-L *AA-205	
	F - - w/H/D susp. & P/C			D50Z 18124-E *AX-248-A		
	G (Monarch)					
75/	G		D6DZ 18124-F *AW-184			
	J (Capri)					
73/78	J	D1RY 18124-A *AM-2	D6RY 18124-A (Refer to T.S.B. 127)			
79	J - - w/o TRX		E3ZZ 18124-A *AM-22A			
	J - - w/TRX		E3ZZ 18124-B *AM-21A			

SHOCK ABSORBER APPLICATION CHART

18124 SHOCK ABSORBER (FRONT)

YEAR	MODEL/ RESTRICTION	STANDARD	HEAVY-DUTY	EXTRA HEAVY-DUTY	SPRING-ASSIST	COMPETITION (ADJUSTABLE)
K (Mark IV,Mark V)						
73/76	K	D7LY 18124-B	C5AZ 18124-H *AW-69	C5AZ 18124-K *AX-110-A	C5AZ 18124-L *AA-205	
77/	K		D7LY 18124-B	C5AZ 18124-K *AX-110-A	C5AZ 18124-L *AA-205	
L (Bobcat)						
74/	L		D4FZ 18124-C *AW-183			
P (Comet)						
73/	P	Not available	C5ZZ 18124-F *AW-144	C1DZ 18124-F *AX-129-A	D0DZ 18124-F *AA-203	
P (Zephyr)						
78/79	P - - w/o P/C & Taxi		E3BZ 18124-A *AM-17A			
78/79	P - - w/Taxi & P/C		D8BZ 18124-G *AM-18			
V (Versailles)						
77/	V		D84Y 18124-A *AW-194			
Y (Meteor)-Refer to Mercury						

18125 SHOCK ABSORBER (REAR)
Quantity is 2 per vehicle unless otherwise noted.

YEAR	MODEL/ RESTRICTION	STANDARD	HEAVY-DUTY	EXTRA HEAVY-DUTY	SPRING-ASSIST	COMPETITION (ADJUSTABLE)
A (Mercury)						
73/78	A,Y		C5AZ 18125-AF *AW-190	C5AZ 18125-AE *AX-251-A	C5AZ 18125-L *AA-134	D7AZ 18125-F *AJ-69
79	A - - exc. P/C		D9AZ 18125-T *AW-314	D9AZ 18125-V *AX-316	D20Z 18125-E **AA-157	D9AZ 18125-S
79	A - - P/C			D9AZ 18125-V *AX-317		
C (Montego)						
73/76	C - - w/o P/C	D50Z 18125-A	D20Z 18125-K *AW-189	D20Z 18125-J *AX-204-A	D20Z 18125-E *AA-157	D4PZ 18125-C *AJ-25
	C - - w/P/C			D50Z 18125-C *AX-247-A		
D (Lincoln)						
73/	D		C5AZ 18125-AF *AW-190	C5AZ 18125-AD *AX-108-A	C5AZ 18125-L *AA-134	D4PZ 18125-K *AJ-31
F (Cougar)						
73	F	Not available	C60Z 18125-P *AW-15		D0DZ 18125-M *AA-101-A	D4PZ 18125-M *AJ-34
74/	F - - w/o P/C		D20Z 18125-K *AW-189	D20Z 18125-J *AX-204-A	D20Z 18125-E *AA-157	D4PZ 18125-C *AJ-25
	F - - w/P/C	Not available		D50Z 18125-C *AX-247-A		

COPYRIGHT © 1986— FORD MOTOR COMPANY —DEARBORN, MICHIGAN

1973/79 LINCOLN-MERCURY CARS

SHOCK ABSORBER APPLICATION CHART

18125 SHOCK ABSORBER (REAR)

YEAR	MODEL/ RESTRICTION	STANDARD	HEAVY-DUTY	EXTRA HEAVY-DUTY	SPRING-ASSIST	AIR-ADJUSTING
G (Monarch)						
75/79	G		D5DZ 18125-G *AW-182	D0DZ 18125-K *AX-157-A	D0DZ 18125-N *AA-156-A	
J (Capri)						
73/78	J		D0RY 18125-C *AW-127			
79	J		D8FZ 18125-F *AW-193			
K (Mark IV,Mark V)						
73/76	K	Not available	D3SZ 18125-E *AW-102	D3SZ 18125-F *AX-241-A	D3SZ 18125-G *AA-262	D4PZ 18125-A *AJ-24
77/	K		D7LY 18125-C	D3SZ 18125-F *AX-241-A	D3SZ 18125-G *AA-262	D4PZ 18125-A *AJ-24
L (Bobcat)						
74/79	L(62,64)		D4FZ 18125-D *AW-44			
	L(73)		D5FZ 18125-R *AW-107			
P (Comet)						
73/77	P	D4DZ 18125-A	D0DZ 18125-J *AW-85	D0DZ 18125-K *AX-157-A	D0DZ 18125-N *AA-156-A	
P (Zephyr)						
78/79	P - - w/o Taxi & P/C		D8BZ 18125-F *AW-193			
78/79	P - - w/Taxi & P/C	Not available	E0BZ 18125-A			
V (Versailles)						
77/	V		D5DZ 18125-G *AW-182			

Y (Meteor)-Refer to Mercury

YEAR	MODEL/RESTRICTIONS	PART NUMBER	DESCRIPTION	QTY.
18A161	BRACKET ASSY. (SHOCK ABS. FRONT R & LH UPPER MOUNTING)			
78/	P - - exc. P/C & Taxi	D8BZ 18A161-B	*AD-192	2
79	J			2
78/	P - - P/C & Taxi	E1BZ 18A161-A	*AD-196	2
18A168	CUP (FRONT SHOCK ABSORBER)			
79	P - - P/C and Tape	★ D9BZ 18A168-A	Repl. by E1BZ 18A161-A	2
18192	BRACKET (REAR SHOCK ABSORBER UPPER)			
75/	G,V	D5DZ 18192-A	R.H. and L.H.	2
74/76	L(62,64)	(RH) D4FZ 18192-C	(LH) ★ D4FZ 18192-D	1
77/	L(62,64)	(RH) D4FZ 18192-C	(LH) D7FZ 18192-A	1
74	L(73)	★ D4FZ 18192-A	R.H. and L.H.-not replaced	2
73	P	★ D0DZ 18192-A	Not replaced	2
74/77	P	D4DZ 18192-A		2
79	J	D8BZ 18192-A	R.H. & L.H., shock lower stud mounting kit	2
78/	P			2

Consists of

1-N800170-S100	Stud	1-N800937-S100	Nut	1-N800615-S2	Washer
1-D9BZ 18K032-A	Cover-stud	1-N800169-S101	Nut		

YEAR	MODEL/RESTRICTIONS	PART NUMBER	DESCRIPTION	QTY.
18198	BUSHING REPAIR KIT (SHOCK ABSORBER)			
73/	A,C,D,K,Y	D7AZ 18198-A	*AD-97-Front	AR
74/	F			AR
73/76	A,C,D,K,P,Y	C8AZ 18198-B	*AD-20-Rear	AR
74/76	F			AR
77/78	A,D,K,F	D7AZ 18198-C	*AD-99-Rear	AR
79	D,K,F			AR
79	A	D9AZ 18198-A	*AD-195-Rear	2
73	F	C80Z 18198-A	*AD-16-Front	AR
73	F	D7TZ 18198-E	*AD-180-Rear	AR
75/76	G	★ D5DZ 18198-C	*AD-87-Front-used on lower end of shock-N/R	1
75/76	G	D5ZZ 18198-B	*AD-89-Front-used on upper end of shock	AR
75/76	G		Rear	AR
77/	G	D7DZ 18198-A	*AD-95-Front	AR
76/	G	D6DZ 18198-B	*AD-92-Rear	AR
77/	V			1
73/78	J	★ D0RY 18198-C	*AD-45-Rear shock-upper-not replaced	4
		★ D3RY 18198-A	Rear shock-lower-not replaced	2
79	J	D8BZ 18198-A	*AD-188 Front	AR
79	J	D8BZ 18198-B	*AD-189 Rear	AR
74	L	★ D4FZ 18198-A	*AD-82-Front-not replaced	AR
75/76	L	D5ZZ 18198-A	*AD-88-Front	AR
74	L	★ D4FZ 18198-B	*AD-83-Rear-not replaced	1
75/76	L - - with 6 3/4" R/G	★ D5FZ 18198-A	*AD-90-Rear-not replaced	AR
75/76	L - - with 8" R/G	D5ZZ 18198-B	*AD-89-Rear	AR
77/	L	D7FZ 18198-A	*AD-100-Front	AR
77/	L	D7FZ 18198-B	*AD-101-Rear	AR
73/74	P	★ C8ZZ 18198-A	*AD-18-Front-not replaced	AR
75/76	P	★ D5DZ 18198-B	*AD-86-Front-not replaced	AR
77	P	D7DZ 18198-C	*AD-102-Front	AR
77	P	D7DZ 18198-D	*AD-103-Rear	AR
78	P	D8BZ 18198-A	*AD-188-Rear	AR
79	J,P	D9BZ 18198-A	*AD-194-Rear	AR
78/	P	D8BZ 18198-B	*AD-189-Front	AR
79	J			AR
77/	V	D74Y 18198-A	*AD-96 Front	1
18K253	LEVER (HEATER AIR OUTLET CONTROL)			
73/76	J "Before 9/1/75"	★ D0RY 18K253-A	Not replaced	1
76/78	J "From 9/1/75"	★ D6RY 18K253-A	Not replaced	1
18B254	DOOR (AIR CONDITIONER BLOWER)			
73/74	P	D0DZ 18B254-A		1
74	L			1
76	P	★ D6DZ 18B254-A		1
18C254	LEVER (WINDSHIELD DEFROSTER CONTROL)			
77/78	J - - integral A/C	★ D7RY 18C254-A		1
18K254	CLAMP (HEATER DOOR LEVER)			
73/74	P	D0DZ 18K254-A		1
18B258	BRACKET (AIR CONDITIONER CONTROL VACUUM MOTOR MOUNTING)			
73/74	C,K	D20Z 18B258-A		1
74	F			1
74/78	J	★ D4RY 18B258-A	Not replaced	1
73/75	P	★ D0DZ 18B258-A	Not replaced	1
74	L			1
76	P	D6DZ 18B258-A		1
77/	F,K	★ D70Z 18B258-A	Recirc.-f/air-vacuum motor-not replaced	1
77/	F,K	★ D70Z 18B258-B	A/C Heat - - vacuum motor-not replaced	1
77/	F,K - - A.T.C.	★ D70Z 18B258-C	Not replaced	1
78	A,D	★ D8AZ 18B258-A	Not replaced	1
79	D			1
78/	P	D8BZ 18B258-A		1
79	J			1
79	A	D9AZ 18B258-A		1

COPYRIGHT © 1986 — FORD MOTOR COMPANY — DEARBORN, MICHIGAN

1973/79 LINCOLN-MERCURY CARS

YEAR	MODEL/RESTRICTIONS	PART NUMBER	DESCRIPTION	QTY.
18B259	DUCT (HEATER AIR INLET)			
73/76	A,Y	★ D3MY 18B259-A	Not replaced	1
77	A			1
78	P - - built-in A/C-dealer installed	D8BZ 18B259-A		1
79	J - - built-in A/C-dealer installed			1
18N260	SEAL (HEATER BLOWER MOTOR MOUNTING)			
79	A	D9AZ 18N260-A		1
79	F,G,P - - integral A/C	D9LY 18N260-A		1
18C262-3	OUTLET ASSY. (HEATER DUCT)			
76/78	J - - integral A/C	(RH) ★ D5RY 18C263-A	(LH) ★ D5RY 18C262-A Not replaced	1
18K264	BRACKET (HEATER CORE SUPPORT)			
75/76	A,Y - - integral A/C	★ D5AZ 18K264-A	Not replaced	1
77/78	A			1
78	D			1
77/	F,K	★ D70Z 18K264-A	Not replaced	1
18C267	COVER (HEATER WATER TUBES)			
76/78	J	★ D6RY 18C267-A	Not replaced	1
18N267	SEAL (HEATER CORE AND COVER)			
78/	P	D8BZ 18N267-A		1
79	J			1
18A272	BRACKET (HEATER AIR DAMPER DOOR CONTROL)			
73/76	C,P	★ D20Z 18A272-A	Not replaced	1
77	P			1
74/77	F,L "Before 6/1/77"			1
75/78	G			2
77/78	L "From 6/1/77"	★ D7FZ 18A272-A	Not replaced	1
79	F,G,L	★ D9DZ 18A272-A★	Defroster cable-not replaced	1
79	F,G,L	★ D9DZ 18A272-B	Temperature cable-not replaced	1
18D273	WIRE ASSY. (HEATED WINDSHIELD)			
74/76	K - - w/heated W/S and back window	D4SZ 18D273-A		1
18D274	WIRE ASSY. (WINDSHIELD HEAT FEED)			
74/76	K - - w/heated W/S and back window	★ D4SZ 18D274-A	Not replaced	1
18B283	SPRING (HEATER AIR VENT DOOR)			
79	A	D9AZ 18B283-A		1
18D285	BRACKET ASSY. (HEATER CORE MOUNTING UPPER)			
75	A,Y	★ D8VY 18D285-A	Not replaced	1
78/	D			1
18A287	RETAINER KIT (HEATER MOTOR BLOWER)-Also refer- to group 18504			
73/	All	E0AZ 18A287-A	Kit-incl. (1) claw type washer retainer & (1) clamp	1
18K293	GROMMET (HEATER HOSE)			
74/78	L	★ D4FZ 18K293-A	Not replaced	1
79	L	D9FZ 18K293-A		1
18C296	COVER (HEATER DEFLECTOR)			
78/	P	D8BZ 18C296-A		1
79	J			1
18B300	COVER (HEATER CORE CASE)			
79	A	D9AZ 18B300-A		1
78	P - - heater	D8BZ 18B300-A		1
79	J			1
78	P - - integral A/C	E0SZ 18B300-A		1
79	J			1
18C301	COVER ASSY. (HEATER OUTLET DUCT)			
73/78	J - - built-in A/C-dealer installed	★ D3RY 18C301-A	Not replaced	1
73/77	P,L - - built-in A/C-dealer installed	★ D4ZZ 18C301-A	Not replaced	1

YEAR	MODEL/RESTRICTIONS	PART NUMBER	DESCRIPTION	QTY.
18C306	REGISTER ASSY. (HEATER AIR DISTRIBUTION)			
73/76	C - - integral A/C	★ D20Z 18C306-A	Not replaced	1
74/76	F - - integral A/C			1
73/76	K			1
73/76	C,F - - w/heater	★ D20Z 18C306-B	Not replaced	1
77/	F - - w/heater			1
73	C - - w/console	★ C60Z 18C306-B	Not replaced	1
74/76	F - - w/console	★ C60Z 18C306-B	Not replaced	1
75/	G - - integral A/C	D5DZ 18C306-A		1
77/	V			1
73/77	P - - integral A/C	★ D6DZ 18C306-A	Not replaced	1
18K306	ADAPTER (HEATER TEMPERATURE CONTROL VALVE)			
74	L	★ D1FZ 18K306-A	Not replaced	1
18K307	NUT (ADAPTER HEATER TEMPERATURE CONTROL VALVE)			
73/78	J	D1FZ 18K307-A	Use to adapt 9K495 and 9K793 to intake manifold	1
74	L			1
18K309	QUADRANT ASSY. (HEATER CONTROL)			
73/74	J	★ D3RY 18K309-A	Not replaced	1
76/78	J	D6RY 18K309-A		1
18C311	SWITCH ASSY. (HEATER SERVO CONTROL)			
73	F	C60Z 18C311-A		1
74/76	J,L			1
73/74	P			1
18A316	DOOR (AIR CONDITIONER AIR DAMPER)			
73/74	A,Y - - manual integral A/C	★ C9AZ 18A316-A	Not replaced	1

YEAR	MODEL/RESTRICTIONS	PART NUMBER	DESCRIPTION	● CODE	QTY.
18A318	MOTOR ASSY. (AIR CONDITIONER VACUUM CONTROL)				
	● To identify vacuum motors the function code is also shown on illustrations in Illustration Sections 184 and 195.1				
	A (Mercury)				
73/78	A	D1AZ 18A318-B	*YH-168-outside air door	1	1
73/78	A	C9AZ 18A318-C	*YH-164-recirculating air door	2	1
73/74	A - - manual	C9AZ 18A318-B	*YH-229-restrictor air door	3	1
73/74	A - - manual	D0VY 18A318-A	*YH-165-heat/defrost door	6	1
73/74	A	★ D3AZ 18A318-C	*YH-220-heat/defrost door-not repld.	7	1
73/78	A - - heater	D3AZ 18A318-A	*YH-221-heat/defrost/vent door	7	1
73/74	A - - A.T.C.	★ D3AZ 18A318-B	*YH-150-A/C heat door-not repld.	7	1
74	A - - manual	★ D0VY 18A318-B	*YH-167-A/C heat door-not repld.	6	1
75/78	A	D5AZ 18A318-A	*YH-243-A/C heat door	6	1
75/78	A	D5AZ 18A318-B	*YH-244-heat/defrost door	7	1
79	A	D9AZ 18A318-A	*YH-348-outside recir. air	1&2	1
79	A	D9AZ 18A318-B	*YH-349-heat-defrost	7	1
79	A	D9AZ 18A318-C	*YH-350-heat-defrost	6	2
	C (Montego)				
73/76	C	D50Z 18A318-A	*YH-268-outside air door and recirculating air door	1&2	1
73/74	C	D20Z 18A318-C	*YH-222-restrictor air door	3	1
75/76	C	D20Z 18A318-C	*YH-222-htr core bypass		1
73/76	C	D20Z 18A318-A	*YH-224-A/C heat door	6	1
73/76	C	D1FZ 18A318-A	*YH-166 heat/defrost door	7	1
	D (Lincoln)				
73/74	D	D1AZ 18A318-B	*YH-168-outside air	1	1
		C9AZ 18A318-C	*YH-164-recirculating door	2	1
		D0VY 18A318-C	Temp. blend door	5	1
		★ D0VY 18A318-B	*YH-167-defrost door-not replaced	6	1
		D0VY 18A318-A	*YH-165-floor heat door	7	1
75/	D	D0VY 18A318-C	Temp. blend door-tan vac. line to nipple	5	1
		C9AZ 18A318-C	*YH-164, fresh air intake		1
		D5AZ 18A318-A	*YH-243-Temp. blend door blue vac. line	6	1
		D0VY 18A318-A	*YH-165-floor heat door yellow & red vac. lines to nipple	7	1

COPYRIGHT © 1986 — FORD MOTOR COMPANY — DEARBORN, MICHIGAN

1973/79 LINCOLN-MERCURY CARS

YEAR	MODEL/RESTRICTIONS	PART NUMBER	DESCRIPTION	● CODE	QTY.
18A318	MOTOR ASSY. (AIR CONDITIONER VACUUM CONTROL) — Cont'd				
	● To identify vacuum motors the function code is also shown on illustrations in Illustration Sections 184 and 195.1				
	F (Cougar)				
73	F	★C9ZZ 18A318-C	Outside air door and recirculating air door	1&2	1
73	F	★C9ZZ 18A318-A	Restrictor air door-not replaced	3	1
73	F	★C9ZZ 18A318-B	Restrictor air door-not replaced	3	1
75/76	F	D50Z 18A318-A	*YH-268-outside air door and recirculating air door	1&2	1
74	F	D20Z 18A318-C	*YH-222-restrictor air door	3	1
75/76	F	D20Z 18A318-C	*YH-222-htr core bypass		1
73	F	★D1ZZ 18A318-A	A/C heat door-not replaced	6	1
74/76	F	D20Z 18A318-A	*YH-224-A/C heat door	6	1
73	F	★D1ZZ 18A318-B	Heat/defrost door-not replaced	7	1
74/76	F	D1FZ 18A318-A	*YH-166-heat/defrost door	7	1
77/	F	D5DZ 18A318-B	*YH-256-heat door	7	1
77/	F	D70Z 18A318-A	*YH-302-Recirc. F/A door	1 & 2	1
77/	F	D70Z 18A318-B	*YH-303-A/C heat	6	2
	G (Monarch)				
75/	G	D5DZ 18A318-C	*YH-257-outside air door and recirculating air door	1&2	1
75/	G	D5DZ 18A318-B	*YH-256-heat/defrost door	6	1
75/	G	D5DZ 18A318-A	*YH-255-defrost/A/C door	7	1
	J (Capri)				
74/78	J	★D4RY 18A318-A	*YH-203-heat/defrost door-not replaced		1
74/78	J	★D4RY 18A318-B	*YH-204-A/C heat door-not replaced		1
74/78	J	★D4RY 18A318-C	*YH-205-recirculating air door-N/R		1
79	J	D8BZ 18A318-A	*YH-331-head/def door	7	1
79	J	D8BZ 18A318-B	*YH-332-restrictor door		1
79	J	D8BZ 18A318-C	*YH-333-def/AC door	7	1
79	J	D5DZ 18A318-A	*YH-255-Recirc./FA	1&2	1
	K (Mark IV, Mark V)				
73/76	K	D50Z 18A318-A	*YH-268-outside air door and recirculating air door	1&2	1
73/74	K	D20Z 18A318-C	*YH-222-restrictor air door	3	1
75/76	K	D20Z 18A318-C	*YH-222-htr core bypass		1
73/74	K	★D2SZ 18A318-A	*YH-170-temperature blend door	5	1
73/76	K	D20Z 18A318-A	*YH-224-A/C heat door	6	1
73/76	K	D1FZ 18A318-A	*YH-166-heat/defrost door	7	1
77/	K	D5DZ 18A318-B	*YH-256-heat defrost door	7	1
77/	K	D70Z 18A318-A	*YH-302-Recirc. F/A door	1 & 2	1
77/	K	D70Z 18A318-B	*YH-303-A/C heat door	6	2
	L (Bobcat)				
74	L	D5FZ 18A318-A	*YH-193-outside air door and recirculating air door	1&2	1
74	L	D1FZ 18A318-A	*YH-166-heat/defrost door	7	1
74/	L	D4FZ 18A318-B	*YH-192-heat/defrost door	7	1
75/	L	D5FZ 18A318-A	*YH-258-defrost/A/C door	7	1
75/	L	D5FZ 18A318-B	*YH-277-outside air door and recirculating air door	1&2	1
75	L	D0VY 18A318-A	*YH-165-heat/defrost door	1	1

YEAR	MODEL/RESTRICTIONS	PART NUMBER	DESCRIPTION	● CODE	QTY.
18A318	MOTOR ASSY. (AIR CONDITIONER VACUUM CONTROL) — Cont'd				
	● To identify vacuum motors the function code is also shown on illustrations in Illustration Sections 184 and 195.1				
	P (Comet)				
73	P	★ D0DZ 18A318-C	Outside air door and recirculating air door	1&2	1
73/77	P	D0DZ 18A318-A	Heat/defrost door	7	1
73/74	P	★ D0DZ 18A318-B	*YH-228-A/C heat door-not repl.	6	1
74/76	P - "Before 2/15/76"	★ C9ZZ 18A318-C	Outside air door and recirculating air door	1&2	1
76/77	P - "From 2/15/76"	D6DZ 18A318-A	*YH-292	1&2	1
75/77	P	D5DZ 18A318-D	*YH-270-A/C heat door	6	1
	P (Zephyr)				
78/	P	D8BZ 18A318-A	*YH-331-heat/def. door	7	1
78/	P	D8BZ 18A318-B	*YH-332-restrictor door		1
78/	P	D8BZ 18A318-C	*YH-333 Def. A/C Door	7	1
78/	P	D5DZ 18A318-A	*YH-255 Recirc./FA	1 & 2	1
	V (Versailles)				
77/	V	D5DZ 18A318-C	*YH-257-outside air door and recirulating air door	1&2	1
77/	V	D5DZ 18A318-B	*YH-256-heat/defrost door	7	1
77/	V	D5DZ 18A318-A	*YH-255-defrost/A/C door	7	1
	Y (Meteor)				
73/76	Y	D1AZ 18A318-B	*YH-168-outside air door	1	1
73/74	Y	C9AZ 18A318-C	*YH-164-recirculating air door	2	1
73/74	Y - - manual	C9AZ 18A318-B	*YH-229-restrictor air door	3	1
73/74	Y	D0VY 18A318-A	*YH-165-heat/defrost door	6	1
73/74	Y - - A.T.C.	★ D3AZ 18A318-B	*YH-150-A/C heat door-not repl.	7	1
73/74	Y	★ D3AZ 18A318-C	*YH-220-heat/defrost door-not repl.	7	1
74	Y - - manual	★ D0VY 18A318-B	*YH-167-A/C heat door-not repl.	6	1
75/76	Y	D5AZ 18A318-A	*YH-243-A/C heat door	6	1
75/76	Y	D5AZ 18A318-B	*YH-244-heat/defrost door	7	1

YEAR	MODEL/RESTRICTIONS	PART NUMBER	DESCRIPTION	QTY.
18D320	SEAL (HEATER CORE TO CASE L.H.)			
77/	B,S - - integral A/C	★ D9LY 18D320-A	Repl. by E3LY 18658-A kit	1
18K331	TRUNNION (HEATER CONTROL)			
76/78	J	D6RY 18K331-A		1
18C336	BRACKET (AIR CONDITIONER BLOWER HOUSING)			
73/74	C,K	★ D20Z 18C336-A	Not replaced	1
74	F			1
18A339	CLIP (BOWDEN CABLE SUPPORT)			
73/78	J	★ D1RY 18A339-A	Not replaced	1
18A343	BRACKET (HEATER DEFROSTER DOOR CONTROL)			
78/	P	D8BZ 18A343-A		1
79	J			1
18C343	BAFFLE (HEATER PLENUM CHAMBER AIR)			
73/77	C,F - - heater	★ C60Z 18C343-A	Not replaced	1
75/	G - - heater			1
18A348	BRACKET (WINDSHIELD DEFROSTER NOZZLE MOUNTING)			
73/76	C	★ D40Z 18A348-A	R.H.-not replaced	1
74/77	F			1
73/76	C	★ D20Z 18A348-B	Center-not replaced	1
74/	F - - heater			1
73/76	C - - built-in A/C-dealer installed	(RH) ★ D30Z 18A348-A	(LH) ★ D30Z 18A348-B — Not replaced	1
74/77	F - - built-in A/C-dealer installed			1
78/	P - - built-in A/C-dealer installed	D8BZ 18A348-A		1
79	J			1
18C351	SCREEN (HEATER PLENUM CHAMBER AIR)			
73/74	C,F	★ C60Z 18C351-A	Not replaced	1
75/	F,G			1

COPYRIGHT © 1986 — FORD MOTOR COMPANY — DEARBORN, MICHIGAN

1973/79 LINCOLN-MERCURY CARS

YEAR	MODEL/RESTRICTIONS	PART NUMBER	DESCRIPTION	QTY.
18A357	ARM (HEATER AND DEFROSTER DOOR CONTROL)			
77/78	J - - integral A/C "From 10/1/76"	★ D7RY 18A357-A	Not replaced	1
18D358	RESTRICTOR (HEATER HOSE)			
79	A,G,V - - 8 cyl. 302,351	D9AZ 18D358-A		1
78	P - - 8 cyl. 302	D8BZ 18D358-A		1
18A361	DOOR (HEATER AIR DAMPER)			
73/76	A,Y	★ C9AZ 18A361-A	Not replaced	1
77/78	A			1
77/78	J - - integral A/C "From 10/1/76"	★ D7RY 18A361-A	Not replaced	1
73/76	C,F	★ C60Z 18A361-A	Not replaced	1
77/	F			1
76/	G			1
79	F,G	★ D9DZ 18A361-A	Not replaced	1
79	L	★ D9FZ 18A361-A	Not replaced	1
18C366	REGISTER (HEATER AIR)			
73	F	★ D1ZZ 18C366-A	Not replaced	1
73/74	J	★ D3RY 18C366-A	R.H. and L.H.-not replaced	2
76/78	J	D5RY 18C366-C	R.H. and L.H.	2
74/	L	D1FZ 18C366-B	Slide bar type	1
75/	L	D2FZ 18C366-A	Roll type	2
18A367	LEVER (AIR CONDITIONER TEMPERATURE REGULATOR CONTROL)			
73/74	A,Y - - manual integral A/C	★ D3AZ 18A367-A	Incl.(1) 372927-S2 spring nut-not replaced	1
18C367	SEAL (HEATER DEFROSTER NOZZLE)			
73/76	C	★ D20Z 18C367-A	Not replaced	1
74/	F			1
77/78	J - - integral A/C "From 10/1/76"	★ D7RY 18A367-A	Not replaced	1
18K367	LEVER ASSY. (HEATER AIR TEMPERATURE CONTROL VALVE)			
76/78	J	★ D6RY 18K367-A	Not replaced	1
18C371-2	EXTENSION (WINDSHIELD DEFROSTER NOZZLE)			
73/77	D	(RH) ★ D0VY 18C371-A	(LH) ★ D0VY 18C372-A Not replaced	1
18C387	ADAPTER ASSEMBLY (OUTLET DUCT)			
73	F	★ D1ZZ 18C387-A	Not replaced	1
78	P	D8BZ 18C387-A		1
79	J			1
18K391	STRIP (HEATER CONTROL INDICATOR)			
73/76	J - - w/o forced vent "Before 9/1/75"	★ D5RY 18K391-A	Not replaced	1
76	J - - w/o forced vent- "From 9/1/75"	★ D6RY 18K391-A	Not replaced	1
73/76	J - - w/forced vent	D5RY 18K391-B		1
18C394	WIRING ASSY. (REAR WINDOW DEFOGGER)-If not listed improvise			
73/74	A(53,57,65),Y(53,57,65) - - w/heated back window	★ D3AZ 18C394-A	Not replaced	1
73/76	A(71),Y(71) - - w/heated back window	★ D3AZ 18C394-B	Not replaced	1
77/78	A(71) - - w/heated back window			1
75/76	A(53,65),Y(53,65) - - w/heated back window	★ D5AZ 18C394-A	Not replaced	1
77/78	A(53,65) - - w/heated back window			1
73/76	C(53,65) - - w/heated back window	★ D30Z 18C394-A	Not replaced	1
74/76	F - - w/heated back window			1
74	C(53,65),F - - w/rear window defogger	★ D40Z 18C394-A	Not replaced	1
75/	G	D5DZ 18C394-A		1
74/76	L(62) - - w/back window defogger	★ D4FZ 18C394-A	Not replaced	1
76/77	P - - w/rear window defogger	★ D6DZ 18C394-A	Not replaced	1
78/	P	★ D8BZ 18C394-A	Not replaced	1
18397	REAR WINDOW DEFOGGER KIT			
74/76	A,Y	D8BZ 18397-A		1
77/78	A			1
74/	F,L,P			1
75/	G			1

18B402 TUBE (HEATER HOT WATER)

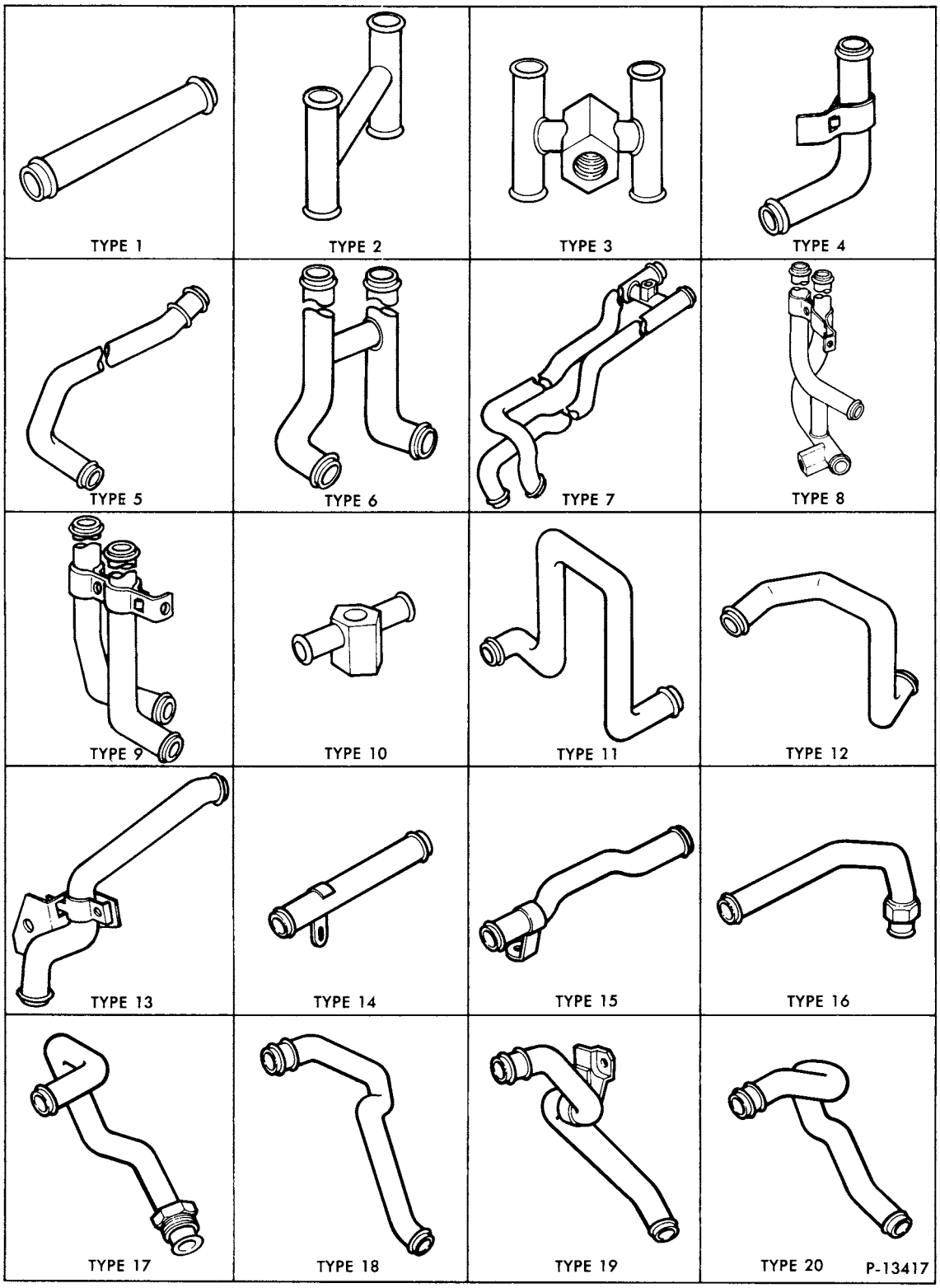

COPYRIGHT © 1986 — FORD MOTOR COMPANY — DEARBORN, MICHIGAN

1973/79 LINCOLN-MERCURY CARS

YEAR	MODEL/RESTRICTIONS	PART NUMBER	TYPE	DESCRIPTION	QTY.
18B402	TUBE (HEATER HOT WATER)				
73	A - - 8 cyl. 351	★ D3AZ 18B402-A	7	Not replaced	1
73	A - - 8 cyl. 400	★ D3AZ 18B402-B	8	Not replaced	1
73	A - - 8 cyl. 429,460	★ D3AZ 18B402-C	6	Not replaced	1
74	A - - 8 cyl. 460 Exc. P/C	★ D4AZ 18B402-A	9	Not replaced	1
74	A - - 8 cyl. 460 P/C	★ D4AZ 18B402-B	9	Not replaced	1
75/76	A - - 8 cyl. 460	★ D5AZ 18B402-A	6	Not replaced	1
74/76	A - - 8 cyl. 351,400	D5AZ 18B402-B	9	Integral A/C	1
77	A - - 8 cyl. 460	D7AZ 18B402-A	6		1
77/78	A - - 8 cyl. 351,400	D7AZ 18B402-B	9		1
78	A - - 8 cyl. 460	★ D8AZ 18B402A	6	Not replaced	1
79	A	D9AZ 18B402-A		Reducer-aluminum	1
73	A - - 8 cyl. 429	★ C9AZ 18663-A	16	Not replaced	1
73	A - - 8 cyl. 351	★ D0AZ 18663-A	14	Not replaced	1
73	C - - 8 cyl. 429,460	★ D3AZ 18B402-C	6	Not replaced	1
74	C - - 8 cyl. 460 Exc. P/C	D4AZ 18B402-A	9		1
74	C - - 8 cyl. 460 P/C	D4AZ 18B402-B	9		1
75/76	C - - 8 cyl. 460	★ D5AZ 18B402-A	6	Not replaced	1
73	C - - 8 cyl. 429	★ C9AZ 18663-A	16	Not replaced	1
73	C - - 8 cyl. 302,351W	★ D0DZ 18663-A	14	Not replaced	1
73	C - - 8 cyl. 351C	★ D0ZZ 18696-A	15	Not replaced	1
73	C - - 8 cyl. 351,400	D30Z 18B402-A	10	Heater	1
73	C - - 8 cyl. 351,400	D30Z 18B402-B	3	Integral A/C	1
73	D	★ D3AZ 18B402-C	6	Not replaced	1
74	D	D4AZ 18B402-A	9		1
75/76	D	★ D5AZ 18B402-A	6	Not replaced	1
77/	D	D7AZ 18B402-B	9		1
79	D	D9LY 18B402-A	7		1
73	F - - 8 cyl. 351,400	★ D3AZ 18B402-A	7	Heater-not replaced	1
73	F - - 8 cyl. 351,400	D30Z 18B402-B	10	Integral A/C	1
74	F - - 8 cyl. 460	★ D4AZ 18B402-A	9	Not replaced	1
75/76	F - - 8 cyl. 460	★ D5AZ 18B402-A	6	Not replaced	1
76/78	F - - 4 cyl.	D8ZZ 18B402-A	5	Outlet	1
73	F - - 8 cyl. 302,351W	★ D0DZ 18663-A	14	Not replaced	1
73	F - - 8 cyl. 429	★ C9AZ 18663-B	17	Not replaced	1
73	F - - 8 cyl. 351C	★ D0ZZ 18696-A	15	Integral A/C-not replaced	1
77	F - - 8 cyl. 351,400	D7AZ 18B402-B	9		1
79	F - - 8 cyl. 351M	D9LY 18B402-A	7		1
75/77	G - - 8 cyl. 302,351	C7AZ 18B402-A	2	Integral A/C	1
75/76	G - - 6 cyl.	★ D5DZ 18B402-A	1	Integral A/C-not replaced	1
78	G - - 6 cyl.	D7FZ 18B402-A	2		1
79	G - - 8 cyl. 351M	★ D9LY 18B402-A	7	Improvise	1
76/78	J - - 4 cyl. 140	D5FZ 18B402-A	11	Integral A/C	1
76	J - - 6 cyl. 171	★ D5RY 18663-B	13	Integral A/C-not replaced	1
79	J - - 8 cyl. 302	D9ZZ 18B402-A		Reducer-plastic	1
79	J - - 8 cyl. 302	D9ZZ 18B402-B		Reducer-aluminum	1
79	J - - 4 cyl.	D8BZ 18B402-D	11	Outlet	1
79	J - - 4 cyl.	D9BZ 18B402-A	18	Inlet	1
79	J - - 4 cyl. 140 Exc. Turbo	D9FZ 18B402-A	14	1/4 hose both ends - located in rear L.H. side of rocker cover	1
79	J - - 4 cyl. 140 with Turbo	D9ZZ 18B402-C	14	1/4 hose both ends - located on Manifold	1
73	K	★ D3AZ 18B402-C	6	Not replaced	1
74	K	★ D4AZ 18B402-A	9	Not replaced	1
75/76	K	★ D5AZ 18B402-A	6	Not replaced	1
77	K	D7AZ 18B402-A	6		1
77/78	K	D7AZ 18B402-B	9		1
78	K	★ D8AZ 18B402-A	6	Not replaced	1
79	K	D9LY 18B402-A	7		1
74	L - - 4 cyl. 140	★ D5ZZ 18B402-B	11	Inlet-not replaced	1
74	L - - 4 cyl. 140	★ D4FZ 18B402-A	5	Outlet-not replaced	1
75/76	L - - 4 cyl. 140	D5FZ 18B402-A	11	Inlet	1
75/76	L - - 4 cyl. 140 "Before 7/1/76"	D5FZ 18B402-B	5	Outlet	1

YEAR	MODEL/RESTRICTIONS	PART NUMBER	TYPE	DESCRIPTION	QTY.
18B402	TUBE (HEATER HOT WATER) — Cont'd				
76/77	L - - 4 cyl. 140 "From 7/1/76"	D8ZZ 18B402-A	5	Outlet	1
75/78	L - - 4 cyl. 140	C7AZ 18B402-A	2	Integral A/C	1
77/78	L - - 4 cyl. 140 "Before 2/18/78"	D7FZ 18B402-A	11	Inlet	1
78	L - - 4 cyl. 140 "From 2/18/77"	★ D8BZ 18B402-C	18	Inlet-not replaced	1
75	L - - 6 cyl. 171	★ D5ZZ 18663-B	19	Integral A/C-not replaced	1
76	L - - 6 cyl. 171	★ D6FZ 18663-A	19	Integral A/C-not replaced	1
77	L - - 6 cyl. 171	D7FZ 18663-A	18	Outlet-heater or integral A/C	1
78	L - - 6 cyl. 171			Integral A/C	1
74	L - - 4 cyl. 122	D1FZ 18696-B	4		1
78	L - - 4 cyl. "Before 2/13/78"	★ D8FZ 18B402-A	5	Outlet-not replaced	1
78/	L - - 4 cyl. "From 2/13/78"	D8BZ 18B402-D	11	Outlet	1
79	L - - 4 cyl.	D9BZ 18B402-A	18	Inlet	1
79	L - - 4 cyl. 140	D9FZ 18B402-A	14	1/4 hose both ends - located in rear L.H. side of rocker cover	1
77	P - - 6 cyl.	★ D5DZ 18B402-A	1	Integral A/C-not replaced	1
73	P - - 8 cyl. 302	★ D0DZ 18663-A	14	Not replaced	1
78	P - - 4 cyl. 140 "Before 2/18/78"	D7FZ 18B402-A	18		1
78/	P - - 4 cyl. 140 "From 2/18/77"	★ D8BZ 18B402-C	18	Inlet-not replaced	1
78	P - - 4 cyl. 140 "Before 2/13/78"	D5FZ 18B402-A	11	Outlet	1
78	P - - 4 cyl. 140 "From 2/13/78"	D8BZ 18B402-D	11	Outlet	1
79	P - - 4 cyl.		11	Heater outlet	1
79	P - - 4 cyl. 140	D9BZ 18B402-A	18	Outlet	1
79	P - - 4 cyl. 140	D9FZ 18B402-A	1	Located L.H. side of valve cover-rear	1
77	V - - 8 cyl. 302,351	C7AZ 18B402-A	2		1
73	Y - - 8 cyl. 429	★ C9AZ 18663-A	16	Not replaced	1
73	Y - - 8 cyl. 351	★ D0DZ 18663-A	14	Not replaced	1
73	Y - - 8 cyl. 351C	★ D3AZ 18B402-A	7	Not replaced	1
73	Y - - 8 cyl. 400	★ D3AZ 18B402-B	8	Not replaced	1
74	Y - - 8 cyl. 460 Exc. P/C	★ D4AZ 18B402-A	9	Not replaced	1
74	Y - - 8 cyl. 460 P/C	★ D4AZ 18B402-B	9	Not replaced	1
75/76	Y - - 8 cyl. 460	★ D5AZ 18B402-A	6	Not replaced	1
74/76	Y - - 8 cyl. 351,400	D5AZ 18B402-B	9	Integral A/C	1
YEAR	MODEL/RESTRICTIONS	PART NUMBER		DESCRIPTION	QTY.
18B409	CLIP (VENT AIR VALVE DAMPER DOOR STOP)				
73	F	★ D1FZ 18B409-A		Not replaced	2
73	P				1
18K417	LEVER (HEATER AIR DAMPER)				
77/78	J - - integral A/C	★ D7RY 18K417-A		Not replaced	1
18C433	DUCT ASSY. (HEATER OUTLET TO FLOOR)				
75/76	A,Y - - integral A/C	★ D5AZ 18C433-A		Not replaced	1
77/78	A - - integral A/C				1
79	A	E0VY 18C433-A			1
78/	D	★ D8VY 18C433-A		Not replaced	1
73	F	★ D1ZZ 18C433-A		Not replaced	1
77/	F - - integral A/C	D80Z 18C433-A			1
77/	K - - w/o console				1
78/	K - - w/console	★ D8LY 18C433-A		Not replaced	1
75/	G	D5DZ 18C433-A			1
74/	L - - integral A/C	★ D4FZ 18C433-A		Not replaced	1
74/	L - - heater	D4FZ 18C433-B			1
73/77	P	★ D3DZ 18C433-A		Not replaced	1
78/	P - - integral A/C	D8BZ 18C433-B			1
79	J				1
78/	P - - heater	D8BZ 18C433-C			1
79	J				1

COPYRIGHT © 1986 — FORD MOTOR COMPANY — DEARBORN, MICHIGAN

1973/79 LINCOLN-MERCURY CARS

YEAR	MODEL/RESTRICTIONS	PART NUMBER	DESCRIPTION	QTY.
18A435	CONNECTOR (WINDSHIELD DEFROSTER NOZZLE)			
73/74	A,Y - - integral A/C	(RH) ★ D3AZ 18A435-A	(LH) ★ D3AZ 18A435-C Not replaced	1
75/76	A,Y - - integral A/C	(RH) ★ D5AZ 18A435-B	(LH) ★ D5AZ 18A435-A Not replaced	1
77/78	A - - integral A/C			1
78/	D			1
73/76	A,Y - - w/o integral A/C	(RH) ★ D3AZ 18A435-D	(LH) ★ D3AZ 18A435-B Not replaced	1
77/78	A - - w/o integral A/C			1
73/77	D	(RH) ★ C9AZ 18A435-C	(LH) ★ D0VY 18A435-A Not replaced	1
74	J - - integral A/C "Before 11/1/73"	(RH) ★ D4RY 18A435-D	(LH) ★ D4RY 18A435-A Not replaced	1
74/78	J - - integral A/C "From 11/1/73"	(RH) ★ D4RY 18A435-D	(LH) ★ D4RY 18A435-C Not replaced	1
18K438	OUTLET (HEATER DUCT L.H.)			
77/78	J - - integral A/C	★ D7RY 18K438-A	Not replaced	1
18A441	FRAME (AIR CONDITIONER HEATER CORE)			
73/76	C - - integral A/C	★ D20Z 18A441-A	Not replaced	1
74/76	F - - integral A/C			1
78/	P - - heater	D8BZ 18A441-A		1
79	J			1
18A449	CONNECTION (DEFROSTER AIR HOSE)			
73/78	J	(RH) D0RY 18A449-B	(LH) D0RY 18A449-B	1
18A454	WARMER (CAR INTERIOR)			
74/	All - - Canada	CD6AZ 18A454-A		1
18A456	BRACKET (AIR CONDITIONER EVAPORATOR CASE MOUNTING)			
74/	L - - integral A/C	★ D1FZ 18A456-B	Rear bottom-not replaced	1
73/77	P - - integral A/C	★ D0DZ 18A456-A	"U" shaped-1" wide-not replaced	1
73/77	P - - integral A/C	★ D0DZ 18A456-B	"L" shaped-1 1/4" wide-not replaced	1
18457	DUCT ASSY. (HEATER AIR INLET)			
78/	P	D8BZ 18457-A		1
79	J			1
18A457	BRACKET (HEATER MOUNTING)			
78/	P	D8BZ 18A457-A		1
79	J			1
78/	P - - built-in A/C-dealer installed	D8BZ 18A457-B		1
79	J			1
18C466	SHAFT (HEATER AIR DAMPER DOOR)			
73/78	A,Y - - w/o manual integral A/C	★ D1AZ 18C466-A		1
73/74	A,Y - - manual integral A/C	★ D3AZ 18C466-A	Not replaced	1
73/76	C - - manual integral A/C	★ D20Z 18C466-A	Not replaced	1
74/76	F - - manual integral A/C			1
73/74	K	★ D2SZ 18C466-A	Not replaced	1
74	C,F - - A.T.C.			1
18469	PLATE (HEATER HOSE INLET and OUTLET COVER)			
73/78	J - - exc. integral A/C	D0RY 18469-A		1
73/78	J	52727-S8	(U-382)-screw-pan head tapping-No. 10-12 x 1/2"	2
18471	CHAMBER ASSY. (HEATER AIR PLENUM)			
73	A,Y - - A.T.C.	★ D3AZ 18471-C	Not replaced	1
75	A,Y - - built-in A/C-dealer installed-Canada only	★ D3AZ 18471-D	Not replaced	1
75/76	A,Y - - A.T.C.	★ D5AZ 18471-B	Front-not replaced	1
		★ D5AZ 18471-E	Rear-not replaced	1
77	A - - A.T.C			1
78	A,D - - A.T.C.	★ D8VY 18471-B	Front-not replaced	1
		★ D8AZ 18471-B	Rear-not replaced	1
79★	D - - A.T.C.	★ D8VY 18471-B	Front-not replaced	1
		★ D8AZ 18471-B	Rear-not replaced	1
73/74	A,Y - - manual integral A/C	★ D3AZ 18471-B	Not replaced	1

YEAR	MODEL/RESTRICTIONS	PART NUMBER	DESCRIPTION	QTY.
18471	CHAMBER ASSY. (HEATER AIR PLENUM) — Cont'd			
78	A - - manual A/C	★ D8AZ 18471-C	Front-not replaced	1
		★ D8AZ 18471-D	Rear-not replaced	1
75/76	A,Y - - heater	★ D5AZ 18471-C	Not replaced	1
77/78	A - - heater			1
79	A - - with heater or man. A/C	E0AZ 18471-C	Upper and lower assy.	1
79	A - - A.T.C.	D9AZ 18471-B	Lower	1
79	A - - A.T.C.	E0AZ 18471-D	Upper	1
73/76	C - - built-in A/C-dealer installed	★ D30Z 18471-C	Not replaced	1
74/76	F - - built-in A/C-dealer installed			1
77/	F - - built-in A/C-dealer installed	★ D70Z 18471-F	Not replaced	1
73/76	C - - manual integral A/C	★ D30Z 18471-A	Front-not replaced	1
		★ D30Z 18471-B	Rear-not replaced	1
74/76	F - - manual integral A/C			1
74/76	C,F - - A.T.C.	★ D40Z 18471-A	Front-not replaced	1
		★ D50Z 18471-A	Rear-not replaced	1
73/74	K	★ D3SZ 18471-A	Rear-not replaced	1
		★ D3SZ 18471-B	Front-not replaced	1
75/76	K	D3SZ 18471-B	Front	1
		★ D50Z 18471-A	Rear-not replaced	1
73	F	★ D1ZZ 18471-A	Not replaced	1
77/79	F,K - - manual A/C	D90Z 18471-B	Front	1
		D80Z 18471-A	Rear	1
77/79	F,K - - A.T.C.	D9LY 18471-A	Front	1
		★ D80Z 18471-A	Rear-not replaced	1
73/77	D	★ D2VY 18471-B	Rear upper-not replaced	1
73/77	D	★ D6VY 18471-B	Front upper-not replaced	1
73/76	D "Before 12/1/75"	★ D0VY 18471-C	Lower-not replaced	1
76/77	D "From 12/1/75"	★ D6VY 18471-A	Lower-not replaced	1
75	G - - integral A/C	★ D5DZ 18471-A	Not replaced	1
76	G - - integral A/C	★ D6DZ 18471-B	Not replaced	1
77/	G,V - - integral A/C	★ D7DZ 18471-B	Repl. by E0DZ 18471-A	1
75/	G - - built-in A/C-dealer installed	★ D5DZ 18471-B	Not replaced	1
73/78	J - - built-in A/C-dealer installed	★ D3RY 18471-A	Not replaced	1
74/78	J - - integral A/C	★ D4RY 18471-A	Not replaced	1
79	J - - integral A/C	E2BZ 18471-A		1
74	L - - integral A/C	★ D4FZ 18471-A	Not replaced	1
75/	L - - integral A/C	★ D5FZ 18471-A	Not replaced	1
74/	L - - built-in A/C-dealer installed	D4FZ 18471-B		1
73/75	P - - integral A/C	★ D3DZ 18471-A	Not replaced	1
76/77	P - - integral A/C	★ D6DZ 18471-A	Not replaced	1
78/	P - - integral A/C	E2BZ 18471-A		1
73/77	P - - built-in A/C-dealer installed	★ D4DZ 18471-A	Not replaced	1

COPYRIGHT © 1986 — FORD MOTOR COMPANY — DEARBORN, MICHIGAN

18472 HOSE (HEATER WATER)

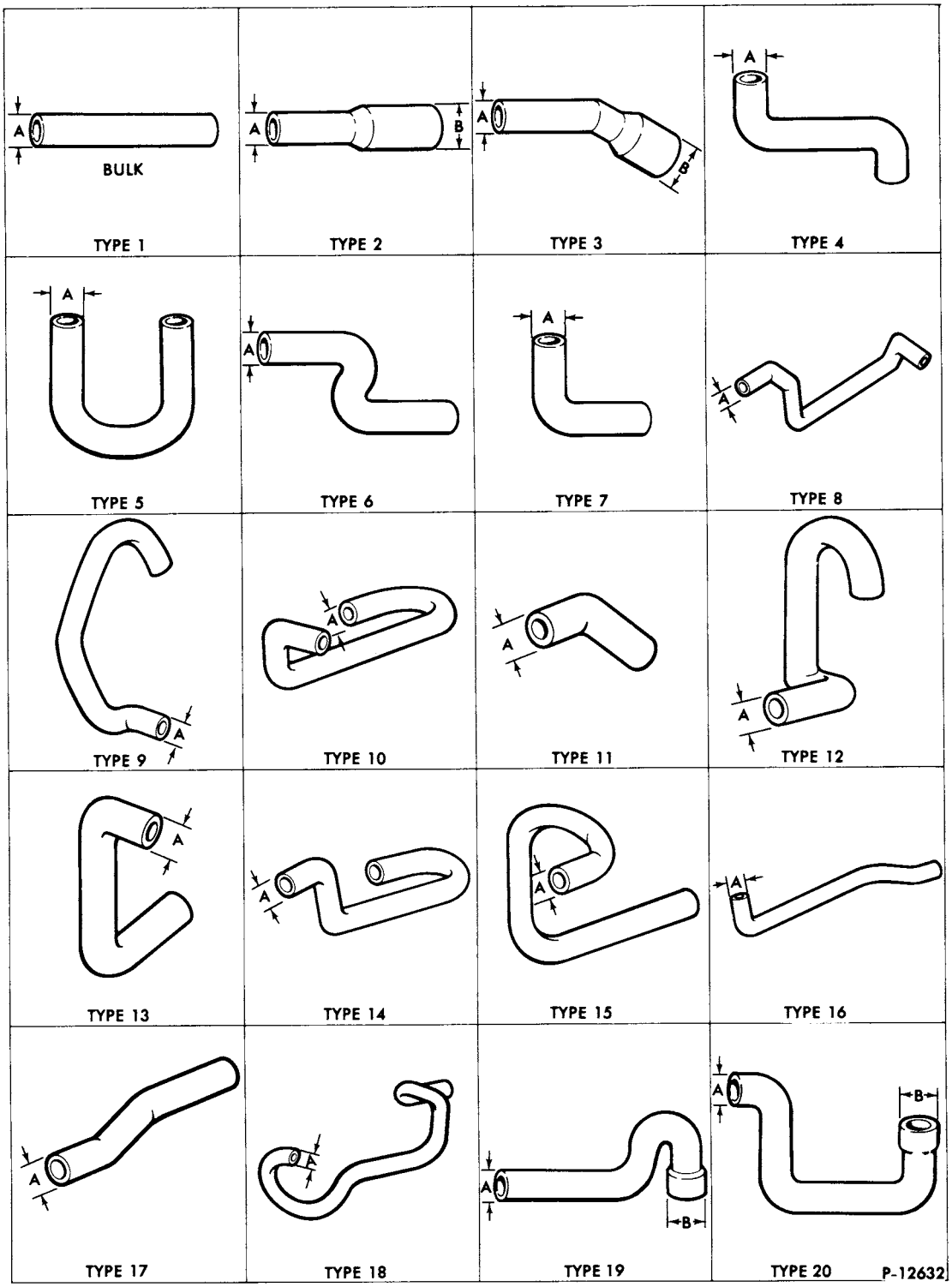

18472 HOSE (HEATER WATER) — Cont'd

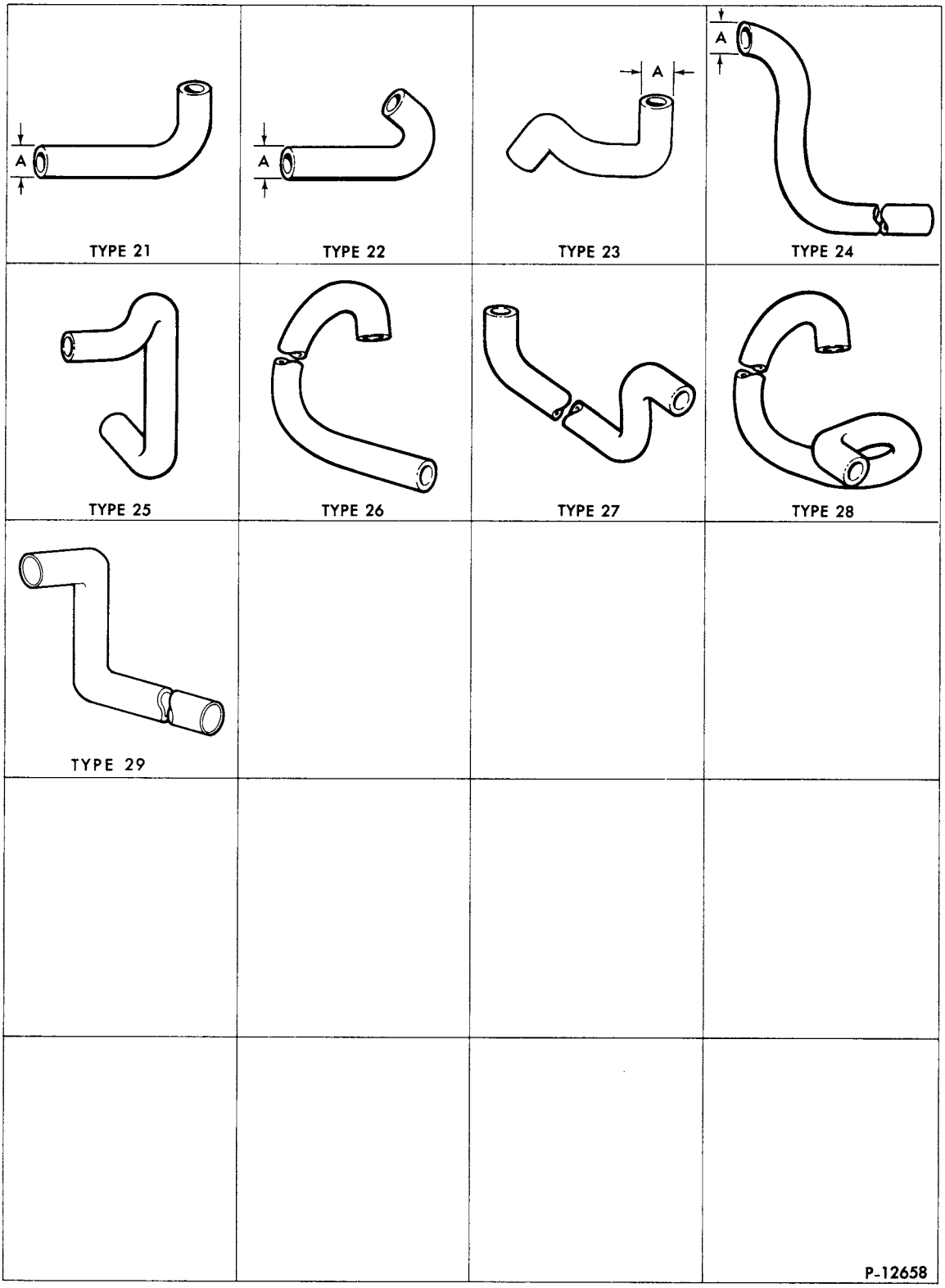

COPYRIGHT © 1986 — FORD MOTOR COMPANY — DEARBORN, MICHIGAN

1973/79 LINCOLN-MERCURY CARS

YEAR	MODEL/RESTRICTIONS	PART NUMBER	TYPE	I.D. INCHES A	I.D. INCHES B	DESCRIPTION	QTY.
18472	HOSE (HEATER WATER)-If not listed below improvise from bulk hose						
Note	☆-To form 90° bend in 5/8" I.D. hose-use D1AZ 18573-A Big Bend						
73/	All	C9PZ 18472-D	1	1/2		*KH-5-50 ft.	AR
73/	All	☆ C9PZ 18472-E	1	5/8		*KH-6-50 ft.	AR
73/	All	C9PZ 18472-F	1	3/4		*KH-7-50 ft.	AR
73/	All	D1PZ 18472-A	1	1		*KH-14-50 ft.	AR
	A (Mercury)						
73/76	A - - 8 cyl. 351,400	D1AZ 18472-J	6	3/4		Core to pump *KHM-80	1
73	A - - 8 cyl. 429,460	D1AZ 18472-J	6	3/4		Heater-core to pump	1
74	A - - 8 cyl. 351C,460	★ D4AZ 18472-D	6	3/4		Heater-not replaced	1
74/76	A - - 8 cyl. 400	D4AZ 18472-E	6	3/4		Heater	1
74/76	A - - 8 cyl. 400,460P/C	D4AZ 18472-C	4	3/4		Integral A/C	1
77	A - - 8 cyl. 351W	D7DZ 18472-B	7	5/8		Heater-engine to	1
77/78	A - - 8 cyl. 302,351W					water valve	1
75/78	A - - 8 cyl. 460	D5AZ 18472-A	7	5/8		Heater	1
74/	A	D4AZ 18472-F	7	5/8		Integral A/C-2 3/4" x 2 3/4"	1
77/78	A - - 8 cyl-460	D7AZ 18472-A	7	5/8		integral A/C	1
77/78	A - - 8 cyl-460	D7AZ 18472-B	6	5/8		heater	1
77/78	A - - 8 cyl. 302,351	D7AZ 18472-E	7	5/8		Integral A/C-inlet	1
77/78	A - - 8 cyl. 302,351W	D7AZ 18472-G	7	5/8		Integral A/C-outlet	1
77/78	A - - 8 cyl-302,351W,400	D7VY 18472-A	7	5/8		heater	1
79	A	D9AZ 18472-A	29	1		Inlet	1
	C (Montego)						
74/76	C - - 8 cyl. 460	★ D40Z 18472-A	2	5/8		Heater-not replaced	1
	D (Lincoln)						
73	D	★ D3VY 18472-A	4	3/4		Core to pump-Philco core-N/R	1
73	D	★ D3VY 18472-B	21	3/4		Core to pump-Harrison core-N/R	1
73	D	★ D3VY 18472-C	22	5/8		Not replaced	1
74/76	D	D4VY 18472-A	4	3/4			1
74/	D	D4AZ 18472-F	7	5/8		2 3/4" x 2 3/4"	1
75/	D	D5AZ 18472-A	7	5/8			1
77/78	D	D7AZ 18472-A	7	5/8			1
77/	D	D7VY 18472-A	22	5/8			1
79	D	D9VY 18472-A	7	3/4		Inlet (attaches to water valve)	1
	F (Cougar)						
73	F - - integral A/C	C9ZZ 18472-A	4	5/8			1
74/76	F - - 8 cyl. 460	★ D40Z 18472-A	2	5/8	3/4	Not replaced	1
75/77	F - - 8 cyl. 460	D5AZ 18472-A	7	5/8			1
77/	F - - 8 cyl. 351M,400	★ D70Z 18472-B	7	5/8		Heater-outlet-improvise from	1
79	F - - 8 cyl. 351M					5/8" bulk stock	1
						(1) D4AZ 18472-F hose &	
						(1) D5ZZ 18599-A connector	
77	F - - 8 cyl. 302	D7DZ 18472-B	7	5/8		Heater-engine to water valve	1
77/78	F - - 8 cyl. 302,351	D7DZ 18472-C	7	5/8		Heater inlet from engine to core	1
79	F - - 8 cyl. 302,351W	D9DZ 18472-A	5	3/4		Heater-inlet	1
79	F - - 8 cyl. 302,351W	D9DZ 18472-A	5	3/4		Integral A/C-inlet	1
79	F - - 8 cyl. 351M	E1FZ 18472-C	7	3/4		Heater-inlet	1
	G (Monarch)						
75	G - - 8 cyl.	★ D5DZ 18472-A	7	5/8		23" long-not replaced	1
76/78	G	D7DZ 18472-A	4	5/8		Integral A/C	1

YEAR	MODEL/RESTRICTIONS	PART NUMBER	TYPE	I.D. INCHES A	I.D. INCHES B	DESCRIPTION	QTY.
18472	HOSE (HEATER WATER)-If not listed below improvise from bulk hose — Cont'd						
Note	☆-To form 90° bend in 5/8" I.D. hose-use D1AZ 18573-A Big Bend						
	G (Monarch)						
77/77	G - - 8 cyl. 302,351	D7DZ 18472-B	7	5/8		Integral A/C-inlet engine to water valve	1
78	G - - 8 cyl. 302					heater	1
77/78	G - - 8 cyl. 302,351	D7DZ 18472-C	7	5/8		Heater-inlet from engine to core	1
79	G - - 8 cyl. 302	D9DZ 18472-A	5	3/4		Inlet	1
79	G - - 6 cyl. 250, 8 cyl. 302	D9DZ 18472-B	4	3/4		Integral A/C-inlet-attaches to water valve	1
79	G - - 6 cyl. 200 Calif. only	D9BZ 18472-D	7	5/8		Attaches to water pump	1
	J (Capri)						
73	J - - 4 cyl. 122 (2000cc)	D1RY 18472-D	10	5/8		*KHM-86	1
73	J - - w/defroster modification	D2RY 18472-F	9	5/8		Heater-water valve to inlet	1
73	J - - 6 cyl.-w/defroster modification	★ D2RY 18472-D	13	5/8		Outlet-not replaced	1
73/78	J - - 6 cyl.-w/o defroster modification	★ D2RY 18472-A	19	5/8	3/4	*KHM-87-heater-not repl.	1
73/78	J - - 6 cyl.-w/o defroster modification	D3RY 18472-B	8	5/8		Inlet	1
73	J - - 6 cyl.-w/o defroster modification	D3RY 18472-C	20	5/8	3/4	Outlet	1
73/78	J - - 4 cyl. w/defroster modification	★ D2RY 18472-E	17	5/8		Hot water valve to "T" conn.	1
74	J - - 6 cyl.	D3RY 18472-E	18	5/8		Outlet	1
74/78	J - - 4 cyl.-w/o integral A/C	D4RY 18472-A	16	5/8			1
74	J - - integral A/C	★ D4RY 18472-B	11	5/8		Not replaced	1
74	J - - 4 cyl.	★ D4RY 18472-C	14	5/8		Not replaced	1
73/74	J - - 4 cyl.-w/o integral A/C	D4RY 18472-D	12	5/8			1
74/78	J - - 4 cyl.	D3RY 18472-C	20	5/8			1
76/78	J - - 4 cyl.	D1RY 18472-D	10	5/8			1
76/78	J - - 4 cyl.	★ D5RY 18472-E	23	5/8		Heater-inlet-not replaced	1
76	J - - 4 cyl. "Before 8/1/75"	★ D5RY 18472-L	24	5/8		Heater-inlet-not replaced	1
76/78	J - - 4 cyl. "From 8/1/75"	★ D6RY 18472-A	13	5/8		Heater-inlet-not replaced	1
76	J - - 4 cyl. "Before 8/1/75"	★ D5RY 18472-F	25	5/8		Heater-outlet-not replaced	1
76/78	J - - 4 cyl. "From 8/1/75"	★ D6RY 18472-C	27	5/8		Heater-outlet-not replaced	1
76	J - - 6 cyl. "Before 8/1/75"	★ D5RY 18472-H	4	5/8		Heater-inlet-not replaced	1
76/78	J - - 6 cyl. "From 8/1/75"	D6RY 18472-B	27	5/8		Heater-inlet	1
76	J - - 6 cyl. "Before 8/1/75"	★ D5RY 18472-G	26	5/8		Heater-outlet-not replaced	1
76/78	J - - 6 cyl. "From 8/1/75"	D6RY 18472-D	28	5/8		Heater-outlet	1
76/78	J - - 6 cyl.	★ D5RY 18472-J	21	5/8		Integral A/C-inlet-not repl.	1
76/78	J - - 6 cyl.	D5RY 18472-K	5	5/8		Integral A/C-outlet	1
73/78	J	D4AZ 18472-F	7	5/8		2 3/4" x 2 3/4"	1
79	J - - 4 cyl. 140 (2300cc)	D8BZ 18472-D	6	5/8		Integral A/C-outlet	1
79	J - - 4 cyl. 140 (2300cc)	D9BZ 18472-A	4	3/4		heater-inlet	1
79	J - - 4 cyl. 140 (2300cc)	E2BZ 18472-A	6	3/4		Integral A/C-inlet	1
79	J - - 8 cyl. 302	D9DZ 18472-A	5	3/4		Inlet	1
79	J - - 4 cyl. 171 (2800cc)	D9ZZ 18472-A	13	3/4		Inlet	1
79	J - - 8 cyl. 302	D9ZZ 18472-C	7	3/4		Outlet	1
79	J - - 4 cyl. 140 (2300cc)	D9ZZ 18472-D	4	5/8		Heater-outlet	1
79	J - - 8 cyl. 302	D9ZZ 18472-E	7	1.00		From water pump to 18B402	1
	K (Mark IV, Mark V)						
75/78	K	D5AZ 18472-A	7	5/8			1
79	K	D9VY 18472-A	7	3/4		Inlet-attaches to w/valve	1

COPYRIGHT © 1986 — FORD MOTOR COMPANY — DEARBORN, MICHIGAN

1973/79 LINCOLN-MERCURY CARS

YEAR	MODEL/RESTRICTIONS	PART NUMBER	TYPE	I.D. INCHES A	I.D. INCHES B	DESCRIPTION	QTY.
18472	HOSE (HEATER WATER)-If not listed below improvise from bulk hose — Cont'd						
Note	☆-To form 90° bend in 5/8" I.D. hose-use D1AZ 18573-A Big Bend						
	L (Bobcat)						
73/74	L - - 4 cyl. 122 (2000 cc)	D4FZ 18472-C	2	5/8	3/4	Heater-35" long	1
74	L - - 4 cyl. 140 (2300 cc)	D4FZ 18472-A	3	5/8	3/4	Heater-20 1/2" long	1
74	L - - 4 cyl. 140 (2300 cc)	D4FZ 18472-B	6	5/8		Integral A/C	1
74/78	L - - 4 cyl. 140 (2300cc)	D4FZ 18472-E	4	5/8		Integral A/C	1
75/76	L	D4ZZ 18472-C	5	5/8			1
75	L - - 6 cyl. 171 (2800 cc)	D5ZZ 18472-B	6	5/8			1
76/78	L - - 4 cyl. 140 (2300cc) "Before 2/18/78"	D6FZ 18472-A	3	5/8	3/4	Heater-outlet from 18B402 to core	1
78/	L - - 4 cyl. (2300cc) "From 2/18/78"	D8FZ 18472-E	3	5/8	3/4	Heater-outlet	1
78	L - - 4 cyl. 140 (2300) "Before 11/1/77"	D6FZ 18472-B	3	5/8	3/4	Heater-outlet from 18B402 to core	1
78	L - - 6 cyl. 171 (2800cc) "From 11/1/77"	D8FZ 18472-B	6	5/8		Integral A/C from water valve to core	1
78	L - - 6 cyl. 171 (2800cc) "From 11/1/77"	D8FZ 18472-B	6	5/8		Integral A/C from water valve to core	1
76/77	L - - 6 cyl. 171 (2800 cc)	D6FZ 18472-C	6	5/8		Integral A/C-outlet	1
77/	L - - 6 cyl. 171 (2800 cc)	D7FZ 18472-A	29	5/8		Heater- inlet from engine to core	1
77/78	L - - 6 cyl. 171 (2800cc)	D8FZ 18472-A	29	5/8		Integral A/C from 18B402 to water valve	1
78	L - - 4 cyl. 140 (2300cc) "Before 2/13/78"	D8FZ 18472-C	6	5/8		Heater-inlet from 18B402 to core	1
78	L - - 4 cyl. 140 (2300cc) "From 2/13/78"	D8FZ 18472-D	6	5/8		Heater-inlet from 18B402 to core	1
73/	L	D4AZ 18472-F	7	5/8		2 3/4" x 2 3/4"	1
78/	L - - 4 cyl. 140 (2300cc)	D8FZ 18472-F	6	5/8		heater-inlet	1
79	L - - 4 cyl. 171 (2800cc)	D9FZ 18472-A	13	3/4		heater-inlet	1
79	L - - 4 cyl. 171 (2800cc)	★ D9FZ 18472-B	13	3/4		Integral A/C-inlet attaches to water valve-N/R	1
79	L - - 4 cyl. 140 (2300cc)	D9FZ 18472-C	6	3/4		Heater-inlet	1
79	L - - 4 cyl. 171 (2800cc)	D9FZ 18472-D	6	3/4		Integral A/C-inlet attaches to water valve	1
79	L - - 4 cyl. 140 (2300cc)	E0FZ 18472-A	7	3/4		Integral A/C-inlet attaches to water valve	1
	P (Comet)						
73	P - - 8 cyl.	D0DZ 18472-B	4	5/8			1
74	P - - 8 cyl.-exc. Calif.						1
74	P - - 8 cyl.-Calif.	★ D4DZ 18472-A	6	5/8		Improvise from 5/8" bulk stock & D1AZ 18573-A hose bender	1
77	P - - 8 cyl. 302	D7DZ 18472-C	7	5/8		Inlet from engine to water valve	1
	P (Zephyr)						
78/	P	D4AZ 18472-F	7	5/8		2 3/4" x 2 3/4"	1
78	P - - 8 cyl. 302	D8BZ 18472-A	7	5/8		Inlet-engine to water valve	1
78	P - - 4 cyl. 140 (2300cc) "From 11/28/77 to 2/13/78"	D8BZ 18472-B	5	5/8		Heater-inlet from 18B402 to core	1
78	P - - 4 cyl. 140 (2300cc) "From 11/28/77 to 2/13/78"	★ D8BZ 18472-C	6	5/8		Integral A/C-outlet from 18B402 to core-N/R	1 1
78	P - - 4 cyl. 140 (2300cc) "From 2/13/78"	D8BZ 18472-D	6	5/8		Heater-inlet and Integral A/C-outlet	1
79	P - - 4 cyl. 140 (2300cc)					Integral A/C-outlet	1

YEAR	MODEL/RESTRICTIONS	PART NUMBER	TYPE	I.D. INCHES A	I.D. INCHES B	DESCRIPTION	QTY.
18472	HOSE (HEATER WATER)-If not listed below improvise from bulk hose — Cont'd						
Note	☆-To form 90° bend in 5/8" I.D. hose-use D1AZ 18573-A Big Bend						
	P (Zephyr)						
78	P - - 4 cyl. 140 (2300cc) "From 2/13/78"	D8BZ 18472-E	6	5/8		Integral A/C-inlet from 18B402 to core	1
79	P - - 4 cyl. 140 (2300cc)	E2BZ 18472-A	4	3/4		Inlet	1
79	P - - 8 cyl. 302	D9DZ 18472-A	5	3/4		Inlet	1
79	P - - 6 cyl. 250 Exc. Calif.	D9BZ 18472-D	7	5/8		Attaches to water pump	1
	V (Versailles)						
77/78	V	D7DZ 18472-B	7	5/8		Inlet-engine to water valve	1
77/78	V	D7DZ 18472-C	7	5/8		Inlet-engine to core	1
79	V	★	1	3/4		Inlet-from engine to tee-cut from bulk	AR
		D94Y 18599-A				Tee-3/4" x 3/4" x 3/8" nipple	1
		D9DZ 18472-B	4	3/4		Inlet-from 18495 valve to heater core nipple	1
		★	1	5/8		Outlet-from heater core nipple to tee-cut from bulk	AR
		D8DZ 18599-A				Tee 5/8" x 3/4" x 3/8" nipple	1
		D9FZ 18472-D	6	3/4		Outlet-from tee to engine-cut to fit	1
		★	1	3/8		From 3/8" nipple of the tee to E.G.R. cooler-cut from bulk	1
	Y (Meteor)						
73	Y - - 8 cyl. 429,460	D1AZ 18472-J	6	3/4		Heater-core to pump	1
74	Y - - 8 cyl. 351C,460	★ D4AZ 18472-D	6	3/4		Heater-not replaced	1
74/76	Y - - 8 cyl. 400	D4AZ 18472-E	6	3/4		Heater	1
74/76	Y - - 8 cyl. 400,460P/C	D4AZ 18472-C	4	3/4		Integral A/C	1
74/76	Y - - 8 cyl. 460	D5AZ 18472-A	7	5/8		Heater	1
74/76	Y	D4AZ 18472-F	7	5/8		Integral A/C-2 3/4" x 2 3/4"	1

YEAR	MODEL/RESTRICTIONS	PART NUMBER	DESCRIPTION	QTY.
18A475	COVER (HEATER MOTOR DASH PANEL OPENING)			
73/76	A,Y	D3AZ 18A475-A		1
77	A			1
73/76	C - - w/o integral A/C	D20Z 18A475-A		1
74/	F - - w/o integral A/C			1
75/	G			1
73	F	★ D1ZZ 18A475-A	Not replaced	1
73/78	J	★ D3RY 18A475-A	Not replaced	1
78/	P - - built-in A/C-dealer installed	D8BZ 18A475-B		1
79	J - - built-in A/C-dealer installed			1

YEAR	MODEL/RESTRICTIONS	PART NUMBER: HEATER CORE	PART NUMBER: HEATER CORE SEAL KIT		QTY.
18476	CORE ASSY. (HEATER)				
73/76	AY - - w/heater	C9AZ 18476-B	Incl. w/18476		1
77/78	A - - w/heater	E3AZ 18476-B	E3AZ 18658-B		1
73/76	A,Y - - w/integral A/C	E3AZ 18476-A	E3AZ 18658-A		1
77/78	A - - w/integral A/C	E3AZ 18476-B	E3AZ 18658-B		1
79	A	E3AZ 18476-E	D9AZ 18658-A		1
73/76	C - - w/heater	E30Z 18476-A	E0DZ 18658-B		1
	C - - w/integral A/C	D30Z 18476-A	Not required		1
73/76	D	E3AZ 18476-A	E3AZ 18658-A		1
77/78	D	E3AZ 18476-B	E3AZ 18658-B		1
79	D	E3AZ 18476-A	E3AZ 18658-A		1
73/78	F - - w/heater	E30Z 18476-A	E0DZ 18658-B		1
79	F - - w/heater	E0DZ 18476-B	E0DZ 18658-B		1

COPYRIGHT © 1986 — FORD MOTOR COMPANY — DEARBORN, MICHIGAN

1973/79 LINCOLN-MERCURY CARS

YEAR	MODEL/RESTRICTIONS	PART NUMBER HEATER CORE	PART NUMBER HEATER CORE SEAL KIT		QTY.
18476	CORE ASSY. (HEATER) — Cont'd				
73	F - - w/integral A/C	E3ZZ 18476-B	E3ZZ 18658-B		1
74/76	F - - w/integral A/C	D30Z 18476-A	Not required		1
77/78	F - - w/integral A/C	E30Z 18476-D	E3LY 18658-A		1
79	F - - w/integral A/C	D9LY 18476-B		Includes seals	1
75/78	G - - w/heater	E30Z 18476-A	E0FZ 18658-B		1
79	G - - w/heater	E0DZ 18476-B	E0FZ 18658-B		1
75/78	G - - w/integral A/C	E3FZ 18476-A	E3FZ 18658-A		1
79	G - - w/integral A/C	E0DZ 18476-A	E0FZ 18658-A		1
73/76	J - - w/heater "Before 9/75"	D3RY 18476-A	Not required		1
76/78	J - - w/heater "From 9/75"	★ D6RY 18476-A	Not required		1
74/78	J - - w/integral A/C	Not replaced			
79	J - - w/heater	E2FZ 18476-A	E1FZ 18658-B		1
79	J - - w/integral A/C	D9BZ 18476-A	Not required		1
73/76	K	D3SZ 18476-A	Not required		1
77/78	K	E30Z 18476-D	E3LY 18658-A		1
79	K	D9LY 18476-B		Includes seals	1
74/78	L - - w/heater	E3FZ 18476-B	E3FZ 18658-B		1
79	L - - w/heater	E0FZ 18476-A	E0FZ 18658-A		1
74/78	L - - w/integral A/C	E3FZ 18476-A	E0FZ 18658-B		1
79	L - - w/integral A/C	E0DZ 18476-A	E0FZ 18658-B		1
73/77	P - - w/heater	C9ZZ 18476-A		Includes seals	1
		E3ZZ 18476-A	E3ZZ 18658-A		1
78	P - - w/heater	E3BZ 18476-A	E1FZ 18658-B		1
79	P - - w/heater	E2FZ 18476-A	E1FZ 18658-B		1
73/77	P - - w/integral A/C	E3ZZ 18476-B	E3ZZ 18658-B		1
78	P - - w/integral A/C	D8BZ 18476-B	Not required		1
79	P - - w/integral A/C	D9BZ 18476-A	Not required		1
77/78	V	E3FZ 18476-A	E3FZ 18658-A		1
79	V	E0DZ 18476-A	E0FZ 18658-B		1

YEAR	MODEL/RESTRICTIONS	PART NUMBER	DESCRIPTION	QTY.
18A478	DOOR ASSY. (AIR CONDITIONER WINDSHIELD DEFROSTER)			
79	A	D9AZ 18A478-C	Incl. (1) door assy. & (1) shaft	1
18481	BRACKET (HEATER HOSE SUPPORT)			
73/78	J	D2RY 18481-A		5
73/78	J - - w/o integral A/C	D0RY 18481-B	Clip	1
73/77	P - - 6 cyl. w/o integral A/C	D3DZ 18481-A		1
75/	G - - 6 cyl.			1
79	D	D9DZ 18481-A		1
75/77	P - - 6 cyl.-integral A/C	★ D5DZ 18481-A	Not replaced	1
78/	P	D8BZ 18481-A		1
79	J			1
18A482	RETAINER (DEFROSTER DAMPER DOOR)			
75/76	A,Y - - integral A/C	★ D5AZ 18A482-A	Not replaced	1
77	A - - integral A/C			1
18A484	CASE ASSY. (HEATER PLENUM CHAMBER)			
73/76	A,Y	★ D1AZ 18A484-A	Not replaced	1
77	A			1
73/74	C,F	★ D20Z 18A484-A	Not replaced	1
75/76	C,F,G	★ D5DZ 18A484-A	Not replaced	1
77/78	F,G			1
79	F,G	★ D9DZ 18A484-A	Not replaced	1
18A485	PLATE (HEATER HOUSING BLOWER and PLENUM)-Also refer to group 19A586			
73/76	A,Y - - w/o integral A/C	★ D3AZ 18A485-A	Not replaced	1
77/78	A - - w/o integral A/C			1
73/74	A,Y - - integral A/C	★ D3AZ 18A485-B	Not replaced	1
75/76	A,Y - - integral A/C	★ D5AZ 18A485-A	Not replaced	1
77	A - - integral A/C			1

YEAR	MODEL/RESTRICTIONS	PART NUMBER	DESCRIPTION	QTY.
18A485	PLATE (HEATER HOUSING BLOWER and PLENUM)-Also refer to group 19A586 — Cont'd			
73/74	C,F - - w/heater	★ D20Z 18A485-A	Not replaced	1
75/76	C,F,G - - heater	D5DZ 18A485-A		1
77/	F,G - - heater			1
18A488	PLATE (HEATER HOUSING CORE)			
73/76	A,Y	★ C9AZ 18A488-A	Not replaced	1
77/78	A			1
79	A	D9AZ 18A488-A	Incl. seal	1
73/76	C,F,G	★ C60Z 18A488-A	Not replaced	1
77/	F,G			1
73/74	J	★ D3RY 18A488-A	Not replaced	1
76/78	J	D0RY 18A488-A		1
18B488	GASKET (AIR CONDITIONER BLOWER HOUSING)			
73/76	C - - integral A/C	★ D20Z 18B488-A	Not replaced	1
73/76	K			1
74/76	F - - integral A/C			1
77/78	J - - integral A/C "From 10/1/76"	★ D7RY 18B488-A	Not replaced	1
18490-1	NOZZLE (WINDSHIELD DEFROSTER HOSE)			
73/76	A,Y	(RH) ★ D3AZ 18490-A	(LH) ★ D3AZ 18491-A Not replaced	1
77/78	A			1
79	A	D9AZ 18490-A		1
73/76	C - - integral A/C	(RH) ★ D20Z 18490-A	(LH) ★ D20Z 18491-A Not replaced	1
73/76	C - - heater	★ D20Z 18490-B	Not replaced	1
73	D	(RH) ★ C9AZ 18490-B	(LH) C9AZ 18491-A	1
74/77	D	(RH) ★ C9AZ 18490-B	(LH) ★ D4VY 18491-A Not replaced	1
78/	D	(RH) ★ D3AZ 18490-A	(LH) ★ D3AZ 18491-A Not replaced	1
73	F - - w/heater	★ D1ZZ 18490-A	Not replaced	1
	F - - w/A/C	★ D1ZZ 18490-B	Not replaced	1
74/76	F - - integral A/C	(RH) ★ D20Z 18490-A	(LH) D20Z 18491-A	1
74/76	F - - heater	★ D20Z 18490-B		1
77/	F - - heater	★ D70Z 18490-A	Not replaced	1
77/	F - - integral A/C	★ D70Z 18490-B	Not replaced	1
75/	G - - heater	D5DZ 18490-A		1
75/	G - - integral A/C	D5DZ 18490-B		1
73/74	J	(RH) D3RY 18490-A	(LH) ★ D3RY 18491-A Not replaced	1
76/78	J	(RH) ★ D5RY 18490-A	(LH) ★ D5RY 18491-A	1
79	J - - heater	E0ZZ 18490-A		1
79	J - - integral A/C	E0ZZ 18490-B		1
73/76	K	(RH) ★ D2SZ 18490-A	(LH) ★ D2SZ 18491-A Not replaced	1
77/	K	★ D7LY 18490-A	Not replaced	1
74/	L - - integral A/C	★ D1FZ 18490-A	Not replaced	1
74/	L - - heater	D1FZ 18490-B		1
73/77	P - - integral A/C	★ D6DZ 18490-A	Not replaced	1
73/77	P - - w/o integral A/C	★ D0DZ 18491-A	Not replaced	1
78/	P - - heater	E0ZZ 18490-A		1
78	P - - integral A/C "Before 4/3/78"	★ D8BZ 18490-B	Not replaced	1
78/	P - - integral A/C "From 4/3/78"	E0ZZ 18490-B		1
77/	V	D5DZ 18490-B		1
73/78	J	E812102-S74	Screw	4
73/78	J	E824102-S71	Nut	4
18C490	GRILLE ASSY. (REAR WINDOW DEFOGGER)			
73/76	A,C,F	C8AZ 18C490-B	Dealer installed	1
77	A,F			1
74/	L,P			1
75/76	C,F	D2AZ 18C490-A	Production installed	1
77	F			1
75/	G(66)	C8AZ 18C490-B		1
75/	G(54)	★ D5DZ 18C490-A	Not replaced	1
18A492	SEAL (AIR CONDITIONER DAMPER DOOR)			
74/77	L	★ D4FZ 18A492-A	Not replaced	1
78/	L	★ D9FZ 18A492-A	Not replaced	1

COPYRIGHT © 1986 — FORD MOTOR COMPANY — DEARBORN, MICHIGAN

1973/79 LINCOLN-MERCURY CARS

YEAR	MODEL/RESTRICTIONS	PART NUMBER	DESCRIPTION	QTY.
18495	**VALVE (HEATER WATER CONTROL)**			
73/76	A,C,F,K,L,Y	D4AZ 18495-A	*YG-136-incl. vacuum motor	1
77/78	A,L			1
73/78	D			1
79	D	D9VY 18495-A	*YG-212	1
75	G - - integral A/C	D5DZ 18495-A	*YG-173	1
76/78	G,V	D7DZ 18495-A	*YG-197	1
77/78	F,K			1
79	F,G,K,V - - integral A/C	D9LY 18495-A	*YG-211	1
79	L - - integral A/C with 2.3 ltr	D9VY 18495-A	*YG-212	1
79	L - - integral A/C with 2.8 ltr	D9FZ 18495-A	*YG-213	1
73	J - - w/defroster modification	★ D2RY 18495-B	Not replaced	1
73/74	J	D3RY 18495-A	*YG-172	1
74/77	J - - integral A/C "Before 10/1/76"	D4RY 18495-A	*YG-121	1
77/78	J - - integral A/C "From 10/1/76"	D7RY 18495-A	*YG-204	1
76/78	J - - w/o integral A/C	D5RY 18495-A	*YG-161	1
73/74	P(6 cyl.) - - integral A/C-	D4DZ 18495-A	*YG-137-incl. vacuum motor	1
75/76	P "Before 5/3/76"			1
76/77	P "From 5/3/76"	D4AZ 18495-A	*YG-136-incl. vacuum motor	1
73/74	P(8 cyl.)-integral A/C	D4DZ 18495-B	*YG-138-incl. vacuum motor	1
18C496	**WIRING ASSY. (REAR WINDOW DEFOGGER SWITCH FEED)-If not listed below improvise**			
73	A(53,57,65),Y(53,65) "Before 4/2/73"	★ D3AZ 18C496-A	Not replaced	1
73/74	A(53,57,65),Y(53,65) "From 4/2/73"	★ D3AZ 18C496-C	Not replaced	1
74/76	A(53,57,65),C(53,65),F	★ D3AZ 18C496-B	Dealer installed-not replaced	1
77/78	A(53,65),F			1
73/77	L(62),P		Dealer installed	1
74/76	C,F	★ D4OZ 18C496-A	Production installed-not replaced	1
75	G	★ D5DZ 18C496-A	# D5DB 18C496-AA-not replaced	1
75/76	G	★ D3AZ 18C496-B	# D3AJ 18C496-B-not replaced	1
76	G	★ D6DZ 18C496-B	Production installed-not replaced	1
77/	G	D7DZ 18C496-A	# D7DB-18C496-AA	1
74/75	L(62)	★ D4FZ 18C496-A	Production installed-not replaced	1
76/77	P	★ D6DZ 18C496-A	Production installed-not replaced	1
78	P	★ D8BZ 18C496-A	Not replaced	1
79	P	D9BZ 18C496-A		1
18C497	**BRACKET (REAR WINDOW DEFOGGER SWITCH MOUNTING)**			
73/77	A,C,F	★ C8AZ 18C497-A	Dealer installed-not replaced	1
77/78	A,F			1
75/	G			1
74/	P			1
18A499	**GRILLE (HEATER VENT AIR OUTLET)**			
78	P	D8BZ 18A499-A		1
79	J			1
18502	**VALVE (TEMPERATURE REGULATOR)**			
73/76	A,C,Y - - manual integral A/C	D3AZ 18502-A	*YG-113	1
77/	A - - manual integral A/C			1
74/	F - - manual integral A/C			1
75/	G - - manual integral A/C			1
77/	L "From 11/1/77"	D3AZ 18502-A		1
18504	**WHEEL (HEATER BLOWER)-Also refer to group 19834**			
73/76	A,C,F,Y	D0AZ 18504-A		1
77/78	A,F			1
79	F			1
75/	G			1
73/77	P	D1FZ 18504-A		1
74/	L			1
78/	P - - heater	E1FZ 18504-A		1
79	J - - heater			1
73/	All	E0AZ 18A287-A	Retainer kit for blower wheel, incl. (1) claw type washer retainer & (1) clamp	1

YEAR	MODEL/RESTRICTIONS	PART NUMBER	DESCRIPTION	QTY.
18508	CASE ASSY. (HEATER CORE)			
73/78	J	★ D3RY 18508-A	Not replaced	1
18A508	NUT (HEATER REGULATOR CONTROL)			
73/76	A,C,F,L,P	★ C5MY 18A508-A	Rear window defogger-dealer installed-N/R	1
75	G			1
77/	A,F,L,P,S			1
18518	CABLE ASSY. (HEATER TEMPERATURE)-Also refer to group 19988			
73/76	A,Y - - A.T.C.	★ D3MY 18518-A	Temperature control-24 1/2" long	1
77	A		Repl. by D7DZ 19988-A	1
73/74	A,Y - - manual integral A/C	★ D3AZ 18518-B	Temperature control-19 3/16" long-not repl.	1
75/76	A,Y - - manual integral A/C	D5AZ 18518-A	Cable-A/C temperature control-22 1/2" long	1
77	A			1
73/76	A,Y	D3AZ 18518-C	Temperature control-30" long	1
77/78	A			1
73/76	A,Y	D3AZ 18552-A	Air control-22" long	1
77	A			1
73/76	C	D20Z 18518-A	Air control	1
73/76	C	D20Z 18548-A	Defroster control	1
73	F	D1ZZ 18518-A	-temperature and defroster control	1
74/78	F	D20Z 18518-A	Air control	1
74/78	F	D20Z 18548-A	Defroster control	1
79	F	D90Z 18518-A	Temperature control	1
79	F	D90Z 18552-A	Air control	1
75/77	G	D5DZ 18518-B	Temperature control-28" long	1
75/78	G	D5DZ 18518-A	Cable-heater defroster control-39" long	1
79	G	D9DZ 18518-A	Temperature control	1
79	G	D9DZ 18552-A	Air control	1
73/76	J - - w/o defroster modification	D3RY 18518-A	Air control-15 3/4" long	1
73/76	J - - w/o defroster modification- "Before 9/1/75"	D3RY 18552-A	Air control-21 21/32" long	1
73/75	J - - w/defroster modification	★ D3RY 18518-C	Temperature-26 15/64" long-not repl.	1
76	J "Before 8/1/75"	D5RY 18518-A	Temperature-28 9/64" long	1
76/78	J "From 9/1/75"	D6RY 18552-A	Air control-19 3/32" long	1
76/78	J "From 8/1/75"	D6RY 18518-A	Temperature-15 5/32" long	1
79	J	D8BZ 18518-A	Temperature	1
79	J	D8BZ 18552-A	Air control	1
74/76	L	D4FZ 18518-A	temperature and defroster control	1
77	L - - instr pnl mtg "Before 6/1/77"			1
77/78	L - - instr. pnl. mtg "From 6/1/77"	★ D7FZ 18518-B	Temp. and Def. control-not replaced	1
77	L - - console mtg "Before 6/1/77"	★ D7FZ 18518-A	temperature and defroster control-not replaced	1
77/78	L - - console mtg "From 6/1/77"	★ D7FZ 18518-C	Temp. and Def. control-not replaced	1
79	L - - instr. pnl mtg	D9FZ 18518-A		1
79	L - - console mtg	D9FZ 18518-A		1
73/77	P	D2DZ 18518-A	Temperature	1
73/77	P	D6DZ 18552-A	Air	1
78/	P	D8BZ 18518-A	Temperature	1
78/	P	D8BZ 18552-A		1
18B518	WIRING (HEATER MOTOR)			
73	J "Before 9/1/72"	★ D0RY 18B518-A	Not replaced	1
73/78	J "From 9/1/72"	★ D3RY 18B518-A	Not replaced	1

COPYRIGHT © 1986 — FORD MOTOR COMPANY — DEARBORN, MICHIGAN

1973/79 LINCOLN-MERCURY CARS

YEAR	MODEL/RESTRICTIONS	PART NUMBER	DESCRIPTION	QTY.
18519	KNOB ASSY.			
73/78	A,C,Y	D8AZ 18519-A	Heater, integral A/C and heated backlite	AR
73/76	K			AR
75/78	G			AR
78/	P			AR
79	J			AR
78/	D		w/power antenna	1
77/78	D,F,K,V	D70Z 18519-A	Heater, integral A/C and heated backlite	AR
79	A,D,F,G,K,V	D8AZ 18519-A	Heater, integral A/C and heated backlite	AR
74/77	D	★ D0VY 18519-A	Heater or integral A/C-not replaced	3
73	F	C9ZZ 18519-A	Temperature air blower	3
73/77	P		Heater,integral A/C and heated B/Lite control	AR
73/78	J	D3RY 18519-A	Heater control	2
73/78	J	D0RY 18519-A	Heater	2
74/78	J	D1FZ 18519-A	Integral A/C	AR
74/77	L	D1FZ 18519-A	Heater or integral A/C control	AR
77/	L		Heater	AR
77/	L	D8FZ 18519-A	Integral A/C	AR
74/	L	D1FZ 18519-B	Rear window defogger	1
18K526	GEAR (HEATER CONTROL)			
76/78	J	★ D6RY 18K526-A	Not replaced	1
18527	MOTOR ASSY. (HEATER)-Also refer to group 19805			
73/	All - - w/rear window defogger	D3AZ 18527-A	*MM-309-incl. wheel	1
73/	A,C,F,G,P - - w/heater	E3PZ 18527-A	*MM-427	1
73/	L - - w/heater	E2FZ 18527-A	*MM-414-incl. E1FZ 18C629-B wiring connector	1
73/76	J "Before 9/1/75"	D3RY 18527-A	MME-295-A	1
76/78	J "From 9/1/75"	D6RY 18527-A	*MM-358	1
79	J	E3PZ 18527-A	*MM-427	1
18A527	ADAPTER (HEATER WINDSHIELD DEFROSTER OUTLET)			
73/74	A,Y - - integral A/C	D2AZ 18A527-A		1
75/76	A,Y	D5AZ 18A527-A		1
77/78	A			1
78/	D			1
73/77	D	(RH) ★ C9AZ 18A527-A	(LH) ★ D0VY 18A527-A Not replaced	1
18529	SEAL			
73/78	J	★ D0RY 18529-A	Heater to dash panel-not replaced	1
73/78	J	D0RY 18529-B	Heater to plenum panel	1
18A529	COVER (HEATER CONTROL OPENING)			
77/	L - - integral A/C "From 6/27/77"	★ D8FZ 18A529-A	Not replaced	1
18531	BRACKET (HEATER CONTROL MOUNTING)			
73/77	D	★ D0VY 18531-A	Not replaced	1
73	F	★ D1ZZ 18531-A	Not replaced	1
74/76	J "Before 10/1/75"	★ D4RY 18531-A	Not replaced	1
76/78	J "From 10/1/75"	★ D6RY 18531-A	Not replaced	1
73/77	P - - w/o rear window defogger	D5DZ 18531-A		1
73/77	P - - w/rear window defogger	D5DZ 18531-B		1

YEAR	MODEL/RESTRICTIONS	PART NUMBER	DESCRIPTION	QTY.
18K532	BEARING (HEATER AIR CONTROL)			
76	J	★ D6RY 18K532-A	Not replaced	1
18B536	SEAL (HEATER CORE TO CASE-BOTTOM)			
77/	F,K - - integral A/C	★ D9LY 18B536-A	Repl. by E3LY 18658-A kit	1
75/	G,V - - integral A/C	★ D9DZ 18B536-A	Repl. by E0DZ 18658-A kit	1
74/	L - - integral A/C	E0FZ 18B536-B		1
18541	SOCKET and WIRE ASSY. (HEATER and AIR CONDITIONER CONTROL LAMP)			
73/76	A,K,Y	D3AZ 18541-A		1
77/	A,V			1
78/	D			1
75/	G			1
74/78	J			1
74/	L - - integral A/C			1
74/	L - - heater	★ D4FZ 18541-A	Not replaced	1
73/76	C	★ D30Z 18541-A	Not replaced	1
74/	F			1
77/	K			1
73/77	P	★ D3DZ 18541-A	Not replaced	1
78/	P	D8BZ 18541-A		1
79	J			1
18A542-3	CASE ASSY. (HEATER CORE)			
73/78	J		Refer to group 18A488	
74/77	L "Before 6/1/77"	★ D4FZ 18A542-A	Front-not replaced	1
		D2FZ 18A543-A	Rear	1
77/78	L "From 6/1/77"	★ D7FZ 18A542-A	Front-not replaced	1
		D2FZ 18A543-A	Rear	1
79	L	D9FZ 18A542-A	Front	1
		D2FZ 18A543-A	Rear	1
73	P "Before 2/5/73"	★ D1DZ 18A542-A	Front-not replaced	1
		★ D0DZ 18A543-A	Rear-not replaced	1
73/75	P "From 2/5/73 to 1/2/75"	★ D1DZ 18A542-A	Front-not replaced	1
		★ D3DZ 18A543-A	Rear-not replaced	1
75/77	P "From 1/2/75"	★ D5DZ 18A542-A	Front-not replaced	1
		★ D5DZ 18A543-A	Rear-not replaced	1
78	P	D8BZ 18A542-A	Front	1
		E3FZ 18A542-A	One piece assy.-incl. front & rear	1
79	J			1
18K543	OUTLET (HEATER DUCT CENTER)			
77/78	J - - integral A/C	★ D7RY 18K543-A	Not replaced	1
18544	LEVER (HEATER TEMPERATURE REGULATOR CONTROL)			
73/78	J	D0RY 18544-A		1
18A544	HOUSING (AIR CONDITIONER and HEATER BLOWER)			
73	D	D1VY 18A544-C	Use with Harrison evaporator core	1
18A545	PLATE ASSY. (HEATER AIR MIXING)			
73/78	J	D0RY 18A545-A		1
18B545	DOOR ASSY. (HEATER AIR TEMPERATURE CONTROL)			
73/76	C,F	★ C60Z 18B545-A	Not replaced	1
77/78	F			1
75/78	G - - heater			1
79	F,G	D9DZ 18B545-A		1
75	G - - integral A/C	D5DZ 18B545-A		1
76/	G - - integral A/C-manual "Before 12/1/76"	D6DZ 18B545-A		1
77	G - - integral A/C-manual "From 12/1/76"	★ D7DZ 18B545-C	Not replaced	1
77	G - - A.T.C. "Before 12/1/76"	★ D7DZ 18B545-A	Not replaced	1
77	G - - A.T.C. "From 12/1/76"	★ D7DZ 18B545-B	Not replaced	1
77	V			1
76/78	J	★ D6RY 18B545-A	Not replaced	1
79	J	D8BZ 18B545-A		1
78	P			1

COPYRIGHT © 1986 — FORD MOTOR COMPANY — DEARBORN, MICHIGAN

1973/79 LINCOLN-MERCURY CARS

YEAR	MODEL/RESTRICTIONS	PART NUMBER	DESCRIPTION	QTY.
18B545	DOOR ASSY. (HEATER AIR TEMPERATURE CONTROL) — Cont'd			
74/76	L	★ D1FZ 18B545-A	Not replaced	1
75/77	P			1
77/79	L - - integral A/C "Before 11/1/78"	★ D9FZ 18B545-A	Not replaced	1
79	L - - integral A/C "From 11/1/78"	★ D9FZ 18B545-B	Not replaced	1
78/	P	D8BZ 18B545-A		1
79	J			1
18548	Refer to group 18518			
18549	CONTROL ASSY. (HEATER)			
73/76	A,Y - - w/o rear window defogger or heated back window	★ D5AZ 18549-A	Not replaced	1
77	A			1
73/76	A,Y - - w/rear window defogger or heated back window	★ D5AZ 18549-B	Not replaced	1
77	A			1
78	A - - w/o rear window defogger or heated back window	★ D8AZ 18549-A	Not replaced	1
78	A - - w/rear window defogger or heated back window	★ D8AZ 18549-B	Not replaced	1
79	A - - w/o rear window defogger or heated back window	D9AZ 18549-A		1
79	A - - w/rear window defogger or heated back window	D9AZ 18549-B		1
73/76	C,F	★ D50Z 18549-A	Repl. by D70Z 18549-A	1
77/	F	D70Z 18549-A		1
74/76	G - - w/o heated back window	D5ZZ 18549-C		1
75	G - - w/heated back window- "Before 11/1/74"	★ D4ZZ 18549-B	Not replaced	1
75/76	G - - w/heated back window- "From 11/1/74"	D5ZZ 18549-B		1
77/	G - - w/o heated back window	D7DZ 18549-A		1
77/	G - - w/heated back window	D7DZ 18549-B		1
79	J - - w/o rear window defogger or heated back window	D8BZ 18549-A		1
79	J - - w/rear window defogger or heated back window	D8BZ 18549-B		1
74/	L	D5FZ 18549-A		1
78/	P - - w/o rear window defogger or heated back window	D8BZ 18549-A		1
78/	P - - w/rear window defogger or heated back window	D8BZ 18549-B		1
18B551	SEAL (HEATER CORE TO HOUSING FRONT)			
73	D	★ D3VY 18B551-A	Use with Harrison evaporator core-N/R	1
78/	D	★ D8VY 18B551-A	Not replaced	1
18552	Refer to group 18518			
18B555	CLIP (HEATER CONTROL CABLE)			
74/78	J	E0RZ 18B555-A		1
18556	HOSE (WINDSHIELD DEFROSTER)			
73/78	J - - w/o integral A/C	D0RY 18556-A		2
18556	HOSE (VENTILATION NOZZLE AIR)			
73/78	J	D0RY 18556-B		2
18B561	CLIP (HEATER OR AIR CONDITIONER CONTROL CABLE)			
77/	A,F,G,L,P	D7FZ 18B561-A		1
79	J			1

YEAR	MODEL/RESTRICTIONS	PART NUMBER	DESCRIPTION	QTY.
18A569	GASKET (HEATER INLET)			
73	C	C6ZZ 18A569-A		1
74/	L			1
73/77	P			1
18570	GASKET (HEATER TO DASH)			
73/77	P	★ D1FZ 18570-A	Seal heater core to case-not replaced	1
74/76	L			1
77/	L	★ D7FZ 18570-A	Not replaced	1
79	A	D9AZ 18570-A		1
18572	CLAMP (HOT WATER HEATER HOSE)			
73	A,C,D,F,K,P,Y	BPA 18572-A		AR
73/78	J - - 6 cyl.	★ D3RY 18572-C	Inlet and outlet-not replaced	2
74/78	J - - 6 cyl.-w/o integral A/C	★ D4RY 18572-D	Used to att. 18472 to alternator-not repl.	1
74/78	J - - 4 cyl.	★ D4RY 18572-A	Not replaced	2
74	J - - 4 cyl.	★ D4RY 18572-B	Not replaced	2
74	J - - 6 cyl.-w/integral A/C	★ D4RY 18572-E	Inlet and outlet-not replaced	1
76/78	J - - 6 cyl.	D2RY 18572-C		1
76/78	J - - 4 cyl.-heater	★ D5RY 18572-A	Not replaced	1
18573	BENDER (HEATER HOSE 90°)			

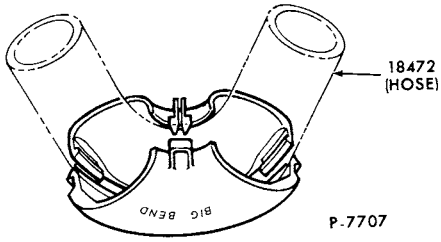

73/	All	D1AZ 18573-A	*KX-1A 5/8" I.D.	AR
18A573	RETAINER (HEATER CORE)			
73	D	★ D3VY 18A573-A	Use with Harrison evaporator core-N/R	1
73/77	P	★ C5DZ 18A573-A	Used with 2" thick heater core-not replaced	1
18574	LEVER ASSY. (HEATER and AIR CONDITIONER AIR)			
73/77	D - - A.T.C.	★ D0VY 18574-B	Lower-not replaced	1
73/77	D - - A.T.C.	★ D0VY 18574-D	Upper-not replaced	1
18A574	DOOR and SEAL ASSY. (AIR CONDITIONER AIR DAMPER)			
73/74	C - - integral A/C	★ D20Z 18A574-A	Not replaced	1
74	F - - integral A/C			1
75/76	C,F - - integral A/C	★ D50Z 18A574-A	Not replaced	1
77/	K,F - - integral A/C	★ D70Z 18A574-A	Not replaced	1
74/76	J - - integral A/C	★ D4RY 18A574-A	Not replaced	1
77/78	J - - integral A/C "From 10/1/76"	★ D7RY 18A574-A	Not replaced	1
79	J	★ D8BZ 18A574-A	Not replaced	1
78/	P			1
18B574	WIRING ASSY. (BLOWER MOTOR FEED)			
78/	P	★ D8BZ 18B574-A	Not replaced	1
79	J			1
18578	SWITCH ASSY.-Also refer to group 19986			

A (Mercury)

73/76	A,Y	D3AZ 18578-A	Heated back window	1
77/	A			1
73/76	A,Y	D3AZ 18578-B	Heater-external	1
77/78	A			1
73/76	A,Y	D3AZ 18578-D	Heater-internal vacuum	1
77/78	A			1
73/74	A,Y	D3AZ 18578-C	Rear window defogger-production installed	1
73/76	A,Y	D0AZ 18578-B	Rear window defogger-dealer installed	1
77/78	A			1

COPYRIGHT © 1986 — FORD MOTOR COMPANY — DEARBORN, MICHIGAN

1973/79 LINCOLN-MERCURY CARS

YEAR	MODEL/RESTRICTIONS	PART NUMBER	DESCRIPTION	QTY.
18578	SWITCH ASSY.-Also refer to group 19986 — Cont'd			
	C (Montego)			
73/76	C	D20Z 18578-A	Heater-3 speed	1
73/76	C	D20Z 18578-B	Heater-on-off	1
73/76	C(53,63,65)	D50Z 18578-A	Heated back window	1
73/76	C(71)	D1VY 18578-A	Heated back window	1
74/76	C	D40Z 18578-A	Rear window defogger-production installed	1
73/76	C	D0AZ 18578-B	Rear window defogger-dealer installed	1
	D (Lincoln)			
73/77	D	D4VY 18578-A	Heater and/or A/C	1
73/77	D	D1VY 18578-A	Heated back window	1
78/	D	D3AZ 18578-A	Heated back window	1
	F (Cougar)			
73	F(65D)	★D1WY 18578-A	Heated back window-not replaced	1
73	F(65F)	★D1WY 18578-B	Heated back window-incl. courtesy and map lite switches-not replaced	1
73	F	D1ZZ 18578-A	Heater	1
74/	F	D20Z 18578-A	Heater-3 speed	1
74/	F	D20Z 18578-B	Heater-on-off	1
74/76	F	D50Z 18578-A	Heated back window	1
77/	F(exc. 71)	D50Z 18578-A	Heated back window	1
77	F(71)	D1VY 18578-A	Heated back window	1
74/77	F	D40Z 18578-A	Rear window defogger	1
73/	F	D0AZ 18578-B	Rear window defogger-dealer installed	1
	G (Monarch)			
75/	G	D3AZ 18578-B	Heater-3 speed	1
75/	G	D20Z 18578-B	Heater-on-off	1
75/	G	D3AZ 18578-A	Heated back window	1
75/	G	D3AZ 18578-C	Rear window defogger-production installed	1
75/	G	D0AZ 18578-B	Rear window defogger-dealer installed	1
	J (Capri)			
73/78	J	D3RY 18578-A	Heater	1
73/78	J - - heater	D7RY 18578-A	Heated back window	1
74/78	J - - integral A/C	D4RY 18578-A	Heated back window	1
79	J	D8BZ 18578-A	ON-OFF	1
79	J	D8BZ 18578-B	3-Speed	1
79	J	D8BZ 18578-C	Heated back window	1
79	J	D8BZ 18578-E	Rear window defogger	1
	K (Mark IV,Mark V)			
73/	K	D50Z 18578-A	Heated back window	1
	L (Bobcat)			
74/	L	D1FZ 18578-D	Heater	1
74/	L	D2FZ 18578-A	Heated back window	1
75/	L	D0AZ 18578-B	Rear window defogger-dealer installed	1
75/76	L	D1FZ 18578-C	Rear window defogger-production installed	1
	P (Comet)			
73/75	P	D0DZ 18578-A	Heater	1
76/77	P	D6DZ 18578-A	Heater	1
73/77	P	★D0DZ 18578-B	Rear window defogger-production installed-N/R	1
73/77	P	D0AZ 18578-B	Rear window defogger-dealer installed	1

YEAR	MODEL/RESTRICTIONS	PART NUMBER	DESCRIPTION	QTY.
18578	SWITCH ASSY.-Also refer to group 19986 — Cont'd			
	P (Zephyr)			
78/	P	D8BZ 18578-A	ON-OFF	1
78/	P	E1FZ 18578-A	3-speed	1
78/	P	D8BZ 18578-C	Heated back window	1
78/	P	D0AZ 18578-B	Rear window defogger-dealer installed	1
78/	P	D8BZ 18578-E	Rear window defogger-production installed	1
	V (Versailles)			
77/	V	D3AZ 18578-A	Heated back window	1
	Y (Meteor)			
			Refer to Mercury	
18581	PLATE (HEATER MOTOR MOUNTING)			
73/78	A,Y	★ C9AZ 18581-A	Not replaced	1
73/	C,F	★ D10Z 18581-A	Not replaced	1
75/	G			1
73/	L	D4DZ 18581-A		1
73/77	P			1
78/	P	D8BZ 18581-A	Plate and coner	1
79	J			1
18A581	RING (AIR CONDITIONER BLOWER MOTOR)			
78/	P - - built-in A/C-dealer installed	D8BZ 18A581-A		1
79	J			1
18583	GASKET (HEATER BLOWER MOTOR MOUNTING)			
78/	P - - w/heater	E0BZ 18583-A	Incl. htr. mtr. mounting gasket & htr.	1
79	J - - w/heater		mtr. insulator	1
18C583	RETAINER (HEATER CORE)			
73/74	A,Y - - integral A/C	(RH) ★ C9AZ 18C583-A	(LH) ★ D3AZ 18C583-A — Not replaced	1
73/77	D			1
18C587	BRACKET ASSY. (HEATER VENT CONTROL MOUNTING)			
73	F	D1WY 18C587-A		1
18591	RESISTOR (SWITCH TO BLOWER MOTOR)-Also refer to group 19A706			
73/76	A,Y - - w/o manual integral A/C	E3TZ 18591-A		1
77/78	A			1
73/76	A,C,Y - - manual integral A/C	D0SZ 18591-A		1
77/78	A - - manual integral A/C "Before 10/1/77"			1
74/76	F - - manual integral A/C			1
77/78	F - - integral A/C "Before 4/10/78"			1
77/78	K "Before 4/10/78"			1
75/77	G - - integral A/C "Before 6/1/77"			1
77	V "Before 6/1/77"			1
78	D "Before 10/1/77"			1
77/	G - - integral A/C "From 6/1/77"	D7DZ 18591-A		1
77/	V "From 6/1/77"			1
78	A,D "From 10/1/77"			1
79	D			1
78/	F - - integral A/C "From 4/10/78"			1
78/	K "From 4/10/78"			1
73/76	C,F,P - - heater	C80Z 18591-A		1
77/	F,P			1
74/	L - - heater			1
75/	G - - heater			1
79	J			1
73/78	J - - heater	D2RY 18591-B		1
18592-3	HOUSING (AIR CONDITIONER BLOWER MOTOR)			
73	F - - w/integral A/C	(RH) ★ D1ZZ 18593-A	(LH) ★ D1ZZ 18592-A — Not replaced	1
74/78	J	★ D4RY 18592-A	Lower-not replaced	1
		★ D4RY 18593-A	Upper-not replaced	1
76/77	P	(RH) ★ D6DZ 18593-A	(LH) ★ D6DZ 18592-A — Not replaced	1

COPYRIGHT © 1986 — FORD MOTOR COMPANY — DEARBORN, MICHIGAN

1973/79 LINCOLN-MERCURY CARS

YEAR	MODEL/RESTRICTIONS	PART NUMBER	DESCRIPTION	QTY.
18592-3	HOUSING (AIR CONDITIONER BLOWER MOTOR) — Cont'd			
73/75	P - - integral A/C	(RH) ★ D5DZ 18593-A	(LH) D3FZ 18592-A	1
74/75	L - - integral A/C			1
18592-3	HOUSING (HEATER)			
73/76	J "Before 9/1/75"	D3RY 18592-A	Lower	1
73/76	J "Before 9/1/75"	★ D0RY 18593-A	Upper-not replaced	1
76/78	J - - w/heater "From 9/1/75"	★ D6RY 18593-B	R.H. and L.H.-not replaced	2
77/78	J - - integral A/C "From 10/1/76"	★ D7RY 18592-A	Lower-not replaced	1
18C592	Refer to group 18518			
18A593	CONTROL KIT (HEATER)			
73/78	J	D3RY 18A593-A		1
	Consists of			
	1-73EG 18532-AA Bracket	2-112784-ES Cap	2-E647522-S Rivet	
18596	GASKET (HEATER CORE TUBE)-If not listed below-improvise			
73/76	C	★ D20Z 18596-A	Not replaced	1
74/	F			1
76/	G - - heater			1
73	D	★ D3VY 18596-A	Use with Harrison evaporator core-N/R	2
75	G - - integral A/C	★ D5DZ 18596-A	Not replaced	1
76/	G - - integral A/C	★ D9DZ 18596-A	Not replaced	1
77/	V			1
76/78	J	★ D6RY 18596-A	Not replaced	1
74/78	J - - integral A/C	★ D4RY 18596-A	Not replaced	1
79	J	D9BZ 18596-A		1
74	L - - integral A/C	★ D4FZ 18596-A	Not replaced	1
75/	L - - integral A/C	★ D5FZ 18596-A	Not replaced	1
78/	P - - integral A/C	D9BZ 18596-A		1
18A597	SEAL (HEATER CORE TUBE TO EVAPORATOR CASE)			
77/78	J - - integral A/C	★ D7RY 18A597-A	Not replaced	1
18598	BEZEL (HEATED BACK WINDOW)			
73/76	C(71)	★ D30Z 18598-A	Not replaced	1
73	F(65D)	★ D1WY 18598-A	Not replaced	1
77	F(71)	★ D30Z 18598-A	Not replaced	1

18599 ELBOW (HOT WATER HEATER and AIR CONDITIONER CONNECTION)

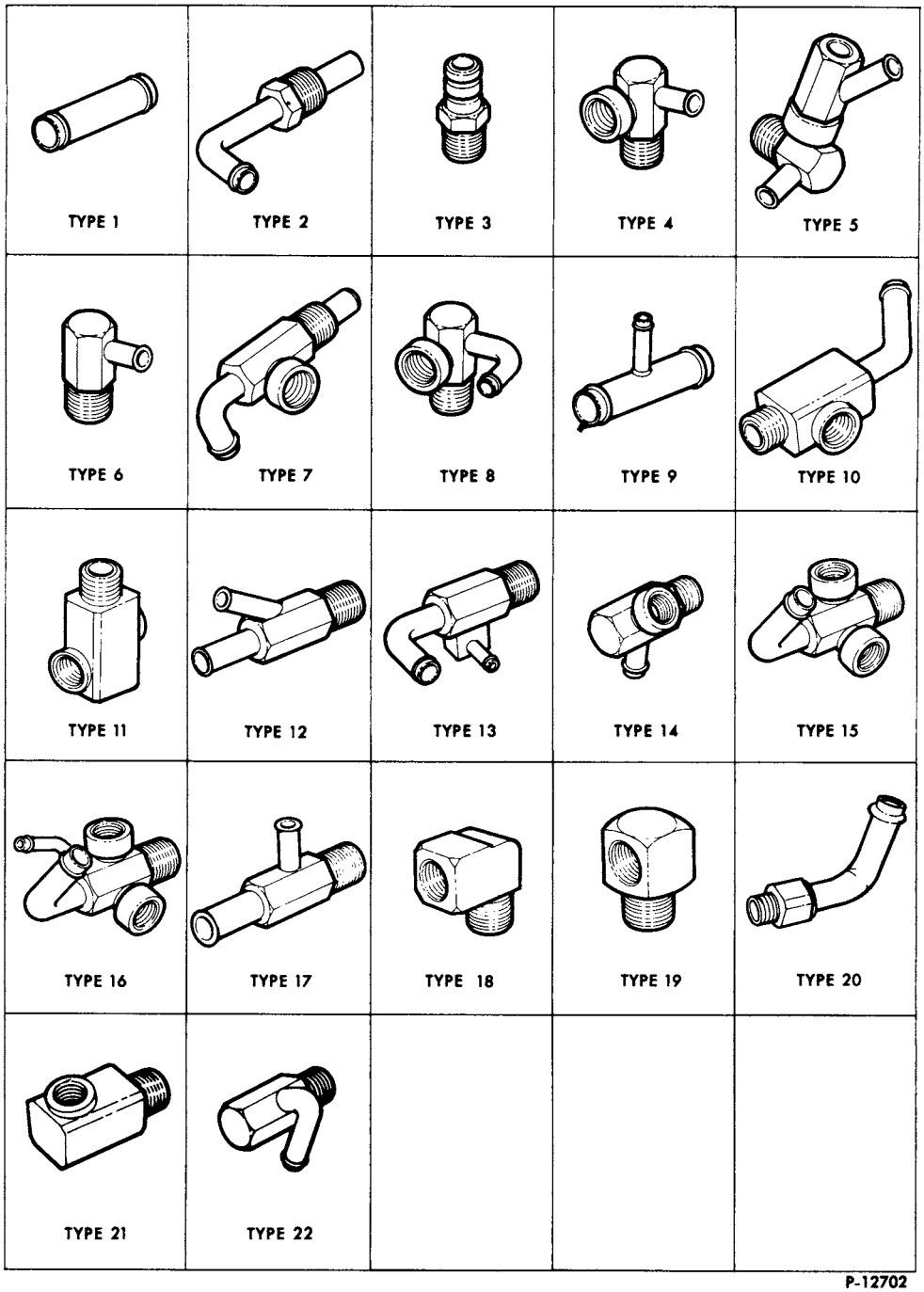

P-12702

COPYRIGHT © 1986 — FORD MOTOR COMPANY — DEARBORN, MICHIGAN

1973/79 LINCOLN-MERCURY CARS

YEAR	MODEL/RESTRICTIONS	PART NUMBER	TYPE	DESCRIPTION	QTY.
18599	ELBOW (HOT WATER HEATER and AIR CONDITIONER CONNECTION)				
	A (Mercury)				
73/	A,C,D,F,K,L,P,Y	8M 18599	3	Nipple–heater hose to water pump or hot water return–straight 3/8"	1
73	A – – 8 cyl. 429,460	D3VZ 18599–A	4		1
74	A – – 8 cyl. 460 exc. Calif.	D1AZ 18599–A	6		1
73/78	A	D0AZ 18599–A	2		1
73/78	A – – 8 cy. 460 P/C	★ D3AZ 18599–A	5	–oil cooler inlet–not replaced	1
73/78	A – – 8 cyl. 460	★ D3AZ 18599–B	12	–oil cooler outlet–not replaced	1
75	A – – 8 cyl. 460	D3VZ 18599–A	4		1
79	A – – (8 cyl. 302)	D9AZ 18599–B	2	Elbow 3/4 hose x 1/2 Pipe 90°	1
79	A – – (8 cyl. 351W) – – Non EEC	D9AZ 18599–C	10	Elbow 3/4 Hose x 1/2 INT x 3/8 EXT pipe – 45°	1
79	A – – (8 cyl. 351W) – – EEC	D9AZ 18599–D	10	Elbow 3/4 hose x 1/2 INT x 3/8 EXT pipe – 45°	1
	C (Montego)				
73	C – – 8 cyl. 429,460	D3VZ 18599–A	4		1
74	C – – 8 cyl. 460 exc. Calif.	D1AZ 18599–A	6		1
73/74	C – – 6 cyl. 250	D3DZ 18599–C	11		1
73/74	C – – 8 cyl. 302–2/B with T/E	D30Z 18599–A	7		1
73/74	C – – 8 cyl. 351 2/B Calif.	D30Z 18599–B	7		1
73/76	C – – 6 cyl. 250 w/hang–on A/C	★ D2DZ 18599–A	19	Not replaced	1
73/76	C – – 8 cyl. 460 P/C	★ D3AZ 18599–A	5	–oil cooler inlet–not replaced	1
73/76	C – – 8 cyl. 460 P/C	★ D3AZ 18599–B	12	–oil cooler outlet–not replaced	1
75	C – – 8 cyl. 460	D3VZ 18599–A	4		1
75	C – – 8 cyl. 351W exc. Calif.	D50Z 18599–A	8		1
75	C – – 8 cyl. 351W	D4TZ 18599–C	9		1
	D (Lincoln)				
73	D – – 8 cyl. 429,460	D3VZ 18599–A	4		1
74/	D – – 8 cyl. 460 exc. Calif.	D1AZ 18599–A	6		1
75	D – – 8 cyl. 460	D3VZ 18599–A	4		1
	F (Cougar)				
74/	F – – 8 cyl. 460 exc. Calif.	D1AZ 18599–A	6		1
77	F – – 8 cyl 351	D70Z 18599–A	22		1
75/	F – – 8 cyl 351	D0AZ 18599–A	2		1
77	F – – 8 cyl 302	D4TZ 18599–A	15		1
79	F – – (8 cyl. 302)	D9ZZ 18599–A	6	Elbow 3/4 hose x 1/2 EXT Pipe 90°	1
79	F – – (8 cyl. 351W)	★ D9SZ 18599–A		Elbow 3/4 hose x EXT x 3/8 INT Pipe 90°	1
	G (Monarch)				
75/76	G – – 6 cyl. 200–heater "Before 2/18/76"	D3DZ 18599–B	10		1
76/	G – – 6 cyl 200 heater "After 2/18/76"	D6DZ 18599–A	20		1
75/76	G – – 6 cyl. 200–integral A/C	D3DZ 18599–C	1	Also use 87838–S101 plug	1
75/76	G – – 6 cyl. 250				1
75/77	G – – 8 cyl. 302–heater	D4TZ 18599–A	15		1
78	G – – 8 cyl. 302	D8DZ 18599–A	9	3/4 x 5/8 x 3/8	1
75	G – – 8 cyl. 302–integral A/C	D4TZ 18599–B	16		1
75	G – – 8 cyl. 351W exc. Calif.	D50Z 18599–A	8		1
75	G – – 8 cyl. 351W	D4TZ 18599–C	9		1
77	G – – 8 cyl. 351	E0UZ 18599–A	22		1
79	G – – (6 cyl. 250)	D9BZ 18599–A	1	Nipple – straight – 3/4 hose x 3/8 pipe	1
79	G (8 cyl. 302)	D9ZZ 18599–A	6	Elbow – 3/4 hose x 1/2 EXT pipe 90°	1

YEAR	MODEL/RESTRICTIONS	PART NUMBER	TYPE	DESCRIPTION	QTY.
18599	ELBOW (HOT WATER HEATER and AIR CONDITIONER CONNECTION) — Cont'd				
	J (Capri)				
74	J - - 6 cyl.	★D4RY 18599-A	14	Not replaced	1
76/78	J - - 4 cyl.	★D6RY 18599-A	18	Not replaced	1
76/78	J - - 6 cyl.	D8RZ 18599-A	20		1
79	J	D9FZ 18599-A	9	Tee 5/8 x 1/4 x 5/8 inches	1
79	J - - (4 cyl. 190) with Turbo-Calif. only	D9FZ 18599-C		Tee 1/2 EXT x 3/8 INT pipe x 1/4 hose located on manifold	1
79	J - - (8 cyl. 302)	D9ZZ 18599-A	6	Elbow 3/4 hose x 1/2 EXT pipe 90°	1
79	J - - (4 cyl. 140) with TC	★D9ZZ 18599-B		Tee 3/8 INT x 3/8 EXT pipe x 1/4 hose	1
79	J - - (4 cyl. 140) w/o TC	D9ZZ 18599-C	1	Nipple 3/8 pipe x 1/4 hose - attach hose 18472 To manifold	1
	K (Mark IV,Mark V)				
73	K - - 8 cyl. 429,460	D3VZ 18599-A	4		1
75	K - - 8 cyl. 460				1
74/	K - - 8 cyl. 460 exc. Calif.	D1AZ 18599-A	6		1
	L (Bobcat)				
79	L - - 4 cyl. 140 (2300)	D9FZ 18599-A	9	Tee-5/8" O.D. both ends w/1/4" nipple	1
		D9ZZ 18599-C	1	Tube-1/4" O.D.-to intake manifold	1
	P (Comet)				
73/77 76	P - - 6 cyl. 200 without A/C w/o A/C "Before 2/18/76"	D3DZ 18599-B	10		1
76/77	P - - 6 cyl. 200 w/o A/C "After 2/18/76"	D6DZ 18599-A	20		1
73/77 73/77	P - - 6 cyl. 200 with A/C P - - 6 cyl. 250	D3DZ 18599-C	11	Also use 87838-S101 plug	1 1
75	P - - 8 cyl. 302-heater	D4TZ 18599-A	15		1
75	P - - 8 cyl. 302-integral A/C	D4TZ 18599-B	16		1
73/77	P - - 8 cyl. 302-2/B with T/E	D3OZ 18599-A	7		1
73/77	P - - 6 cyl. 200,250 w/hang-on A/C	★D2DZ 18599-A	19	Not replaced	1
	P (Zephyr)				
78	P - - 8 cyl. 302	D8DZ 18599-A	9	Tee 3/4 x 5/8 x 3/8	1
79	P - - (6 cyl. 200 & 250)	D9BZ 18599-A	1	Nipple - straight - 3/4 hose x 3/8 pipe	1
79	P - - (200) - - Auto Trans. heater	D9BZ 18599-B	4	Elbow - 3/4 hose x 3/8 EXT x 3/8 INT pipe 90°	1
79	P - - (6 cyl. 200)-Man. Trans. heater	D9BZ 18599-C	4	Elbow - 3/4 hose x 3/8 EXT x 3/8 INT pipe 45°	1
79	P - - (8 cyl. 302)	D9ZZ 18599-A	6	Elbow 3/4 hose x 1/2 EXT pipe 90°	1
79	P - - (4 cyl. 140)	D9ZZ 18599-C	1	Nipple 3/8 x 1/4 hose	1
	V (Versailles)				
77/	V	E0UZ 18599-A	22		1
78	V	D8DZ 18599-A	9	Tee 3/4 x 5/8 x 3/8	1
79	V	D94Y 18599-A	9	Tee 3/4 x 3/4 x 5/8	1
	Y (Meteor)				
73	Y - - 8 cyl. 429,460	D3VZ 18599-A	4		1
74	Y - - 8 cyl. 460 exc. Calif.	D1AZ 18599-A	6		1
73/76	Y	D0AZ 18599-A	2		1
73/76	Y - - 8 cyl. 460 P/C	★D3AZ 18599-A	5	Not replaced	1
73	Y - - 8 cyl. 460	★D3AZ 18599-B	12	Oil cooler outlet-not replaced	1
75	Y - - 8 cyl. 460	D3VZ 18599-A	4		1
YEAR	MODEL/RESTRICTIONS	PART NUMBER		DESCRIPTION	QTY.
18C605	INSERT (CONTROL LEVER DETENT)				
73/77	D	★D0VY 18C605-A	Not replaced		1

COPYRIGHT © 1986 — FORD MOTOR COMPANY — DEARBORN, MICHIGAN

YEAR	MODEL/RESTRICTIONS	PART NUMBER	DESCRIPTION	QTY.
18C607	BRACKET (AIR CONDITIONER AIR DAMPER DOOR MOTOR MOUNTING)			
73/76	A,Y - - manual integral A/C	★ D3AZ 18C607-A	Not replaced	1
78/	P	★ D8BZ 18C607-A	Not replaced	1
79	J			1
18608	SWITCH ASSY. (RADIO FOOT CONTROL)			
76/77	D - - AM/FM signal search	★ D6VY 18608-A	Not replaced	1
79	A,D,K,V	D94Y 18608-A		1
18A608	COVER (RADIO FOOT CONTROL SWITCH)			
79	A	★ D9AZ 18A608-A	Not replaced	1
18B608	WIRING ASSY. (RADIO FOOT CONTROL SWITCH)			
79	A	D9AZ 18B608-A		1
79	D,K	D9LY 18B608-A		1
18C617	WIRING ASSY. (BACK WINDOW HEAT CONTROL)-If not listed below improvise			
79	J	D9ZZ 18C617-A		1
77/	L	D7FZ 18C617-A		1
79	P	D9BZ 18C617-A		1
18C618-9	WIRING ASSY. (BACK WINDOW HEAT FEED)-If not listed below improvise			
79	A(54,66)	D9AZ 18C618-A		1
79	A(74)	D9AZ 18C618-B		1
79	A(74)	D9AZ 18C619-B		1
79	J(61)	D9ZZ 18C618-A		1
79	J	D9ZZ 18C619-A		1
78/	P(54,66)	E0BZ 18C618-A		1
78/	P(74)	D8BZ 18C618-B		1
78/	P	E2DZ 18C619-A		1
18C620	WIRE ASSY. (BACK WINDOW HEATER GROUND)-If not listed below improvise			
74/	L(62)	D2FZ 18C620-E		1
74/	L(64)	D3FZ 18C620-A		1
74/	L(73)	D2FZ 18C620-D		1
18621	PIN (TEMPERATURE REGULATOR CONTROL LEVER PIVOT)			
74/76	D	★ D0VY 18621-A	Not replaced	1
18C622	LAMP ASSY. (BACK WINDOW HEAT CONTROL WARNING)			
73/77	A,	D3AZ 18C622-A		1
73/76	Y			1
79	A	D9AZ 18C622-A		1
73/76	C	D20Z 18C622-A		1
74/76	F			1
77	F(71)			1
79	A,J,P - - premium sound system			1
73	F(65F)	★ D1AZ 18C622-A	Not replaced	1
74/78	J	D3AZ 18C622-A		1
75/76	G			1
78	A	D7DZ 18C622-A		1
78/	D			1
77/	G			1
77/	V			1
75/76	K	★ D5LY 18C622-A	Not replaced	1
77	F(53,65)			1
77/	F,K	D7LY 18C622-A		1
73/78	L	D2FZ 18C622-B		1
79	L	D9FZ 18C622-A		1
18B623	GASKET (HEATER PLENUM CHAMBER TO DASH)			
77/	F,K - - integral A/C	D9LY 18B623-A		1
75/78	A - - integral A/C	★ D8VY 18B623-A	Not replaced	1
78/	D			1
18C629	WIRING & CONNECTOR ASSY. (HEATER MOTOR)			
73/	L	E1FZ 18C629-B		1
18633	DUCT (HEATER AIR OUTLET)			
74	D "Before 7/1/74"	★ D0VY 18633-A	Front-not replaced	1
74/76	D "From 7/1/74"	★ D5VY 18633-A	Front-not replaced	1
73/76	D	★ D0VY 18633-B	Center-not replaced	1

YEAR	MODEL/RESTRICTIONS	PART NUMBER	DESCRIPTION	QTY.
18633	DUCT (HEATER AIR OUTLET) — Cont'd			
73/76	D	★ D0VY 18633-C	Rear-not replaced	1
74/	L	D1FZ 18633-A	Defroster nozzle extension	1
73/77	P	★ D1DZ 18633-A	Not replaced	1
18A635	BRACKET (HEATER WATER CONTROL VALVE MOUNTING)			
73/78	J - - 6 cyl.	D2RY 18A635-A		1
18C636	PLUG (HEATER CORE)			
79	A	D9AZ 18C636-A	1 1/2 inches long	1
79	A	D9AZ 18C636-B	1 inch long	1
79	A	D9AZ 18C636-C	3/4 inches long	1
18A638	(GASKET WINDSHIELD DEFROSTER NOZZLE)			
79	A	D9AZ 18A638-A		1
18C638	SHAFT ASSY. (HEATER AIR VENT DOOR)			
73	P	★ D0DZ 18C638-A	Incl. knob-not replaced	1
18C641	RELAY ASSY. (BACK WINDOW HEAT CONTROL)			
73	A,D,F,Y	★ D2FZ 18C641-B	Not replaced	1
73	C "From 11/15/72"			1
73	C "Before 11/15/72"	★ D20Z 18C641-A	Not replaced	1
74/76	A,C,D,F,G,L,Y	D4FZ 18C641-A		1
75/76	K			1
73/78	J		Refer to group 13A253	
73/74	K	D2SZ 18C641-B		1
74	K	★ D4SZ 18C641-A	Not replaced	1
74	K - - to convert Sierracin heated back window to conventional heated window	D9SZ 18C641-A	Ref. TSB #198 Article #3895 dated 12/14/79	1
75/76	K	★ D5SZ 18C641-A	Not replaced	1
77/78	A,D,F,G,K,L,P,V "Before 1/23/78"	D7TZ 18C641-A		1
79	G,L			1
78	A,D,F,G,K,L,V "From 1/23/78"	D8AZ 18C641-A		1
79	D,F,K,V			1
75/76	K - - to convert Sierracin heated back window to conventional heated window	★	Ref. TSB #198 Article #3895 dated 12/14/79	1
78/	P "From 1/23/78"	D8BZ 18C641-A		1
79	A,J			1
18B644	SEAL (DEFROSTER OUTLET)			
75/	G - - integral A/C	★ D5DZ 18B644-A	Not replaced	1
77/	V			1
18C648	BAR (HEATER CONTROL LEVER GUIDE)			
74/77	D	★ D0VY 18C648-A	Not replaced	1
18651	DUCT ASSY. (VENTILATION AND HEATER AIR INTAKE)			
78/	P	E1BZ 18651-A		1
79	J			1
18A651	PANEL ASSY. (HEATER CONTROL)			
73/77	P - - w or w/o rear window defogger	D2DZ 18A651-Y	Use black for all colors	1
18B652	BRACKET (CONTROL MOTOR)			
74/78	J - - integral A/C	★ D4RY 18B652-A	Defroster door-not replaced	1
74/77	J - - integral A/C "Before 10/1/76"	★ D4RY 18B652-B	A/C heater door-not replaced	1
77/78	J - - integral A/C "From 10/1/76"	★ D7RY 18B652-A	A/C heater door-not replaced	1
18658	SEAL (HEATER CORE TO CASE)			
78/	D	D8VY 18658-A	Bottom	1
79	A	D9AZ 18658-A		1
77/	F,K - - integral A/C	E3LY 18658-A	Seal kit	1
75/	G,V - - integral A/C	E0DZ 18658-A	Seal kit	1
76/	L - - integral A/C	E0FZ 18658-B	Upper	1
18C661	DOOR & SEAL ASSY. (HEATER AIR TEMPERATURE CONTROL)			
77/	F,K - - integral A/C	★ D9LY 18C661-A	Not replaced	1

COPYRIGHT © 1986— FORD MOTOR COMPANY —DEARBORN, MICHIGAN

1973/79 LINCOLN-MERCURY CARS

YEAR	MODEL/RESTRICTIONS	PART NUMBER	DESCRIPTION	QTY.
18663	TUBE (HEATER WATER OUTLET)-Refer to 18B402			
18666	Improvise from bulk hose group 17543			
18B669	DOOR ASSY. (HEATER AIR DISTRIBUTION)			
73/76	J "Before 9/1/75"	★ D0RY 18B669-B	Not replaced	1
76/78	J "From 9/1/75"	★ D6RY 18B669-A	Not replaced	1
77/78	J - - integral A/C "From 10/1/76"	★ D7RY 18B669-A	Not replaced	1
18C672	LENS (BACK WINDOW HEAT CONTROL WARNING LAMP) - Also Refer to Group 18C622			
73/74	K	★ D2LY 18C672-A	Not replaced	1
18C673	WIRING ASSY. (HEATED BACK WINDOW CONTROL JUMPER)			
78/	D	D8VY 18C673-A		1
18674	TUBE (HEATER WATER OUTLET)			
73	J - - 6 cyl. 159 (2600 cc)	D2RY 18674-A		1
74/78	J - - 6 cyl. 171 (2800 cc)			1
18C676	SEAL (HEATER CORE TOP)			
77/	F,K - - integral A/C	★ D9LY 18C676-A	Repl. by E3LY 18658-A kit	
18A677	BRACKET (HEATER TEMPERATURE CONTROL CABLE)			
78/	P	D8BZ 18A677-A		1
79	J			1
18679	PLATE (HEATER MOUNTING)			
74	A - - 8 cyl. 460 with A.T.C.	D4MY 18679-A	Use with Frigidaire-swash plate type compressor	1
75	D			1
75/76	A,Y - - integral A/C	★ D5AZ 18679-A	Not replaced	1
77	A - - integral A/C			1
78	A,D	★ D8VY 18679-A	Not replaced	1
79	D			1
77/79	F,K - - integral A/C	★ D9LY 18679-A	Not replaced	1
18B689	RETAINER (HEATER CORE)			
74/77	L - - integral A/C	★ D4FZ 18B689-A	Not replaced	1
18695	GASKET (HEATER MOUNTING PLATE)			
75/76	A,Y - - integral A/C	★ D8VY 18695-A	Not replaced	1
77/78	A - - integral A/C			1
78	D			1
79★	D	★ D9VY 18695-A	Not replaced	1
18696	TUBE ASSY. (HEATER WATER INLET)-Refer to 18B402			
18A699	BRACKET (AIR CONDITIONER CONTROL MOTOR MOUNTING)			
73	F - - integral A/C	★ C9ZZ 18A699-A	Not replaced	1
18731	DOOR ASSY. (AIR INLET)			
79	A	D9AZ 18731-A		1
18755	HOUSING (AIR CONDITIONER BLOWER OUTER)			
73/76	C,K - - integral A/C	★ D4GY 18755-A	Not replaced	1
74/76	F - - integral A/C			1
78	P - - built-in A/C-dealer installed	D8BZ 18755-A	Upper	1
79	J - - built-in A/C-dealer installed			1
78	P - - built-in A/C-dealer installed	D8BZ 18755-B	Lower	1
79	J - - built-in A/C-dealer installed			1

YEAR	MODEL/RESTRICTIONS	PART NUMBER	DESCRIPTION	QTY.
18B804	MICROPHONE ASSY. (C.B. RADIO)			
78/	D,F,G,K,V	D84Y 18B804-A		1
79	A			1

MODEL/RESTRICTIONS	PART NUMBER	DESCRIPTION	QTY.
18805 RADIO, ANTENNA and SPEAKER KITS For a complete installation select (1) each of the following: Antenna, Chassis and Speaker Parts			

RADIO KIT

1973

A (Mercury)

A(53,57,65)	C7AZ 18813-C	Antenna (electric)	1
A,Y	★D4AZ 18813-A	Antenna (manual)-r/b D7AZ 18813-A(12/79)	1
A,Y - - AM	D4AZ 18806-A	Chassis-attaching parts incl. with group 18819	1
A - - AM or AM/FM (monaural)	★D3AZ 18819-A	Speaker and hardware (instrument panel)-not replaced (4/83)	1
A(53,57,65) - - AM	★D3AZ 18875-A	Speaker (dual)-package tray-not replaced (4/83)	1
A(71)	★D3AZ 18875-B	Speaker (dual)-quarter trim panel-not replaced (12/79)	1
A,Y - - AM/FM	★D4AZ 18806-B	Chassis-repl. by D7AZ 18806-A & D3MY 18888-A (3/78)	1
A(53,57,65),Y	★D3AZ 18819-B	Speaker and hardware (front door and package tray)-not replaced (4/83)	1
A(71)	★D3AZ 18819-C	Speaker and hardware (front doors and quarter trim panel)-not replaced (12/79)	1
A(53X,57X,65X),Y - - AM/stereo tape	D3ZZ 18806-C	Chassis	1
A,Y - - AM/stereo tape-Canada only	D3AZ 18819-D		1
A,Y - - AM/FM stereo tape	E1AZ 18806-D	Chassis-attaching parts incl. with group 18819-alternate with D4AZ 18806-C	1
A(53,57,65),Y	★D3AZ 18819-B	Speaker and hardware (front door and package tray)-not replaced (4/83)	1
A(71),Y(71)	★D3AZ 18819-C	Speaker (front doors and quarter trim panel)-not replaced (12/79)	1

C (Montego)

C(53,63,65)	C7AZ 18813-C	Antenna (electric)	1
C	★D4AZ 18813-A	Antenna (manual)-r/b D7AZ 18813-A(12/79)	1
C - - AM	D4AZ 18806-A	Chassis-att. parts incl. w/group 18819	1
C - - AM	D8DZ 18875-A	Speaker (single)-for package tray	1
C(53,63,65)	★D20Z 18875-B	Speaker (dual)-for package tray-not replaced (12/79)	1
C(71)	★D20Z 18875-C	Speaker (dual)-for quarter trim panel-not replaced (12/79)	1
C - - AM/FM	★D4AZ 18806-B	Chassis - repl. by D7AZ 18806-A & D4OZ 18888-A (3/78)	1
C(53,63,65) - - AM/FM	D50Z 18819-A	Speaker and hardware (front doors and package tray)	1
C(71) - - AM/FM	★D50Z 18819-B	Speaker and hardware (front doors and quarter trim panel)-not replaced (12/79)	1

D (Lincoln)

D	★	Antenna (electric)-service details-	1
D - - AM	★D2VY 18806-A	Chassis-not replaced (12/79)	1
D - - AM/FM	★D2VY 18805-A	Radio kit-not replaced (12/79)	1

F (Cougar)

F	C7AZ 18813-C	Antenna (electric)	1
F	D3ZZ 18813-A	Antenna (manual)	1
F - - AM	★D3ZZ 18806-A	Chassis-not replaced (11/81)	1

COPYRIGHT © 1986 — FORD MOTOR COMPANY — DEARBORN, MICHIGAN

1973/79 LINCOLN-MERCURY CARS

MODEL/RESTRICTIONS	PART NUMBER	DESCRIPTION	QTY.
18805	RADIO, ANTENNA and SPEAKER KITS — Cont'd		
	For a complete installation select (1) each of the following: Antenna, Chassis and Speaker Parts		

RADIO KIT

1973

F (Cougar)

F - - AM/FM (multiplex)	D3ZZ 18805-A	Radio kit-less antenna	1
F - - AM/stereo tape	D3ZZ 18805-B	Radio kit	1
F - - AM/stereo tape	D3ZZ 18806-C	Chassis	1
F - - AM/FM and AM/stereo tape	D2ZZ 18808-A	Speaker (dual)-for front doors	1

J (Capri)

J	C8ZZ 18813-A	Antenna (non-disappearing)-	1
J	★ D3RY 18813-A	Antenna (disappearing)-not replaced (11/81)	1
J - - AM	D3RY 18806-B	Chassis-att. parts incl. w/group 18819	1
J - - AM/FM monaural	D3RY 18806-A	Chassis-att. parts incl. w/group 18819	1
J	★ D5RY 18819-A	Speaker and hardware (instrument panel)-not replaced (11/81)	1
J - - AM/FM multiplex	★ D4RY 18819-A	Speaker and hardware (doors)-not replaced (12/79)	1

K (Mark IV)

K	★	Antenna (electric)-service details-refer to group numbers 18850, 18865 and 18919	1
K - - AM	D4AZ 18806-A	Chassis	1
K - - AM/FM (multiplex)	★ D4AZ 18806-B	Chassis-repl. by D7AZ 18806-A and D7LY 18888-B (3/78)	1
K - - AM/FM stereo tape	D3AZ 18806-A	Chassis-alternate with D4AZ 18806-C	1

P (Comet)

P	C7AZ 18813-C	Antenna (electric)	1
P	★ D4AZ 18813-A	Antenna (manual)-r/b D7AZ 18813-A (9/75)	1
P - - AM-w/o glove compt.	D3DZ 18805-AA	Radio kit	1
P - - AM-w/o glove compt.	★ D3DZ 18806-A	Chassis-not replaced (12/79)	1
P - - AM-w/glove compt.	D4AZ 18806-A	Chassis	1
P		Speaker (instrument panel)	1
P	D8DZ 18875-A	Speaker (single)-for package tray	1
P - - AM/FM (monaural)	D2DZ 18805-A	Radio kit-less antenna	1
P - - AM/FM (multiplex)-w/o glove compt.	★ D3DZ 18806-B	Chassis-not replaced (12/79)	1
P - - AM/FM (multiplex) w/glove compt.	★ D4AZ 18806-B	Chassis-repl. by D7AZ 18806-A and D3DZ 18888-A (3/78)	1
P - - AM/FM (multiplex)-w/glove compt.	★ D7DZ 18819-D	Speaker and hardware (cowl trim panel and package tray)-not replaced (4/83)	1

Y (Meteor)

		Refer to Mercury	

1974

A (Mercury)

A(53,57,65)	C7AZ 18813-C	Antenna (electric)	1
A	★ D4AZ 18813-A	Antenna (manual)-r/b D7AZ 18813-A(12/79)	1
A,Y - - AM	D4AZ 18806-A	Chassis-att. parts incl. w/group 18819	1
A - - AM	★ D3AZ 18819-A	Speaker and hardware (instrument panel)-not replaced (4/83)	1
A(53,57,65) - - AM	★ D3AZ 18875-A	Speaker (dual)-package tray-not replaced (4/83)	1
A(71) - - AM	★ D3AZ 18875-B	Speaker (dual)-quarter trim panel-not replaced (12/79)	1

MODEL/RESTRICTIONS	PART NUMBER	DESCRIPTION	QTY.
18805	RADIO, ANTENNA and SPEAKER KITS — Cont'd		
	For a complete installation select (1) each of the following: Antenna, Chassis and Speaker Parts		

RADIO KIT

1974

A (Mercury)

A,Y - - AM/FM (multiplex)	★D4AZ 18806-B	Chassis-repl. by D7AZ 18806-A and D3MY 18888-A (3/78)	1
A(53,57,65) - - AM/FM multiplex	★D3AZ 18819-B	Speaker and hardware (front doors and package tray)-not replaced (4/83)	1
A(71) - - AM/FM multiplex	★D3AZ 18819-C	Speaker and hardware (front doors and quarter trim panels)-not replaced (12/79)	1
A,Y - - AM/FM stereo tape	E1AZ 18806-D	Philco chassis alternate with D3AZ 18806-A	1
A,Y - - AM/FM stereo tape	D3AZ 18806-A	Motorola chassis	1
A - - AM/FM stereo tape	★D4AZ 18806-D	Motorola chassis production repl. only-not replaced (3/84)	1
A(53,57,65) - - AM/FM stereo tape	★D3AZ 18819-B	Speaker and hardware (front doors and package tray)-not replaced (4/83)	1
A(71) - - AM/FM stereo tape	★D3AZ 18819-C	Speaker and hardware (front doors and quarter trim panels)-not replaced (12/79)	1
A,Y - - AM/stereo tape-Canada only	D3ZZ 18806-C	Chassis	1
A,Y - - AM/stereo tape-Canada only	D3AZ 18819-D	Speaker adapter and hardware (front doors and package tray)	1

C (Montego)

C	C7AZ 18813-C	Antenna (electric)	1
C	★D4AZ 18813-A	Antenna (manual)-r/b D7AZ 18813-A(12/79)	1
C - - AM	D4AZ 18806-A	Chassis	1
C(53,65) - - AM	★D20Z 18875-B	Speaker (dual)-package tray-not replaced (12/79)	1
C(71) - - AM	★D20Z 18875-C	Speaker (dual)-quarter trim panels-not replaced (12/79)	1
C(53,65) - - AM	D8DZ 18875-A	Speaker (single)-package tray	1
C - - AM/FM multiplex	★D4AZ 18806-B	Philco chassis-repl. by D7AZ 18806-A and D40Z 18888-A (3/78)	1
C - - AM/FM multiplex	★D40Z 18806-A	Motorola chassis production replacement only-not replaced (11/81)	1
C(53,65) - - AM/FM multiplex	D50Z 18819-A	Speaker and hardware (front doors and package tray)	1
C(71) - - AM/FM multiplex	D40Z 18819-B	Speaker and hardware (front doors and quarter trim panels)	1
C - - AM/FM stereo tape	E1AZ 18806-D	Philco chassis-alternate with D3AZ 18806-A	1
C - - AM/FM stereo tape	D3AZ 18806-A	Motorola chassis	1
C(53,65) - - AM/FM stereo tape	D50Z 18819-A	Speaker and hardware (front doors and package tray)	1
C(71) - - AM/FM stereo tape	D40Z 18819-B	Speaker and hardware (front doors and quarter trim panels)	1
C - - AM/stereo tape-Canada only	D3ZZ 18806-C	Chassis	1
C - - AM/stereo tape-Canada only	D3AZ 18819-D	Speaker adapter and hardware (front doors and package tray)	1

D (Lincoln)

D	★	Antenna (electric)-service details-refer to group numbers 18850, 18865 and 18919	
D - - AM	D4VY 18806-A	Chassis	1
D - - AM/FM multiplex	D7VY 18806-B	Chassis	1
D - - AM/FM stereo tape	D4VY 18806-C	Chassis	1

COPYRIGHT © 1986— FORD MOTOR COMPANY —DEARBORN, MICHIGAN

MODEL/RESTRICTIONS	PART NUMBER	DESCRIPTION	QTY.
18805	RADIO, ANTENNA and SPEAKER KITS — Cont'd		
	For a complete installation select (1) each of the following: Antenna, Chassis and Speaker Parts		

RADIO KIT

1974

F (Cougar)

F	C7AZ 18813-C	Antenna (electric)	1
F	★D4AZ 18813-A	Antenna (manual)-r/b D7AZ 18813-A(12/79)	
F - - AM	D4AZ 18806-A	Chassis	1
F - - AM	★D20Z 18875-B	Speaker (dual) package tray-not replaced (12/79)	1
F - - AM	D8DZ 18875-A	Speaker (single) package tray	1
F - - AM/FM multiplex	★D4AZ 18806-B (3/78)	Philco chasis-repl. by D7AZ 18806-A and D40Z 18888-A	1
F - - AM/FM multiplex	★D40Z 18806-A	Motorola chassis production replacement only-not replaced (11/81)	1
F - - AM/FM multiplex	D50Z 18819-A	Speaker and hardware (front doors and package tray)	1
F - - AM/FM stereo tape	E1AZ 18806-D	Philco chassis-alternate with D3AZ 18806-A	1
F - - AM/FM stereo tape	D3AZ 18806-A	Motorola chassis	1
F - - AM/FM stereo tape	D50Z 18819-A	Speaker and hardware (front doors and package tray)	1
F - - AM/stereo tape-Canada only	D3ZZ 18806-C	Chassis	1
F - - AM/stereo tape-Canada only	D3AZ 18819-D	Speaker adapter and hardware (front doors and package tray)	1

J (Capri)

J	C8ZZ 18813-A	Antenna (non-disappearing)	1
J	★D3RY 18813-A	Antenna (disappearing)-not replaced (11/81)	1
J - - AM-w/o integral A/C and/or production installed radio	★D3RY 18806-B	Chassis-not replaced (11/81)	1
J - - AM-w/o integral A/C and/or production installed radio	★D5RY 18819-A	Speaker and hardware (instrument panel)-not replaced (11/81)	1
J - - AM-w/integral A/C and/or production installed radio	D4RY 18806-A	Chassis	1
J - - AM-w/integral A/C	★D5RY 18819-A	Speaker and hardware (instrument panel)-not replaced (11/81)	1
J - - AM	D4RY 18819-B	Speaker adapter and hardware-use with D4RY 18819-A when vehicle has integral A/C	1
J - - AM/FM multiplex	★D4RY 18819-A	Speaker and hardware (doors)-also use D4RY 18819-B when vehicle has integral A/C-not replaced (12/79)	1
J - - AM/FM multiplex	D4RY 18819-B	Speaker adapter and hardware-use with D4RY 18819-A when vehicle has integral A/C	1
J - - AM/FM (monaural)-w/o integral A/C and/or production installed radio	D3RY 18806-A	Chassis	1
J - - AM/FM (monaural)-w/o integral A/C and/or production installed radio	★D5RY 18819-A	Speaker and hardware (instrument panel)-not replaced (11/81)	1
J - - AM/FM (monaural)-w/integral A/C and/or production installed radio	★D4RY 18806-B	Chassis-not replaced (11/81)	1
J - - AM/FM monaural-w/integral A/C	★D5RY 18819-A	Speaker and hardware (instrument panel)-not replaced (11/81)	1
J - - AM/FM monaural	★D4RY 18819-B	Speaker adapter and hardware-use with D4RY 18819-A when vehicle has integral A/C-not replaced (11/81)	1

MODEL/RESTRICTIONS	PART NUMBER	DESCRIPTION	QTY.
18805	RADIO, ANTENNA and SPEAKER KITS — Cont'd		
	For a complete installation select (1) each of the following: Antenna, Chassis and Speaker Parts		

RADIO KIT

1974

K (Mark IV)

K	★	Antenna (electric)-service details-refer to group numbers 18850, 18865 and 18919	1
K - - AM	D4AZ 18806-A	Chassis	1
K - - AM/FM multiplex	★ D4AZ 18806-B	Chassis-repl. by D7AZ 18806-A and D7LY 18888-B (3/78)	1
K - - AM/FM stereo tape	E1AZ 18806-D	Chassis-alternate with D3AZ 18806-A	1

P (Comet)

P	C7AZ 18813-C	Antenna (electric)	1
P	★ D4AZ 18813-A	Antenna (manual)-r/b D7AZ 18813-A(12/79)	1
P - - AM	D4AZ 18806-A	Philco chassis	1
P - - AM	D44Y 18806-A	Motorola chassis	1
P - - AM/FM monaural	D6DZ 18806-B	Motorola (chassis)	1
P - - AM/FM multiplex	★ D4AZ 18806-B	Chassis-repl. by D7AZ 18806-A and D3DZ 18888-A (3/78)	1
P - - AM/FM multiplex	★ D7DZ 18819-D	Speaker & hardware (cowl trim panel & pkg. tray)-not replaced (4/83)	1
P - - AM or AM/FM monaural	D8DZ 18875-A	Speaker (single) rear	1
P - - AM/stereo tape-Canada only	D3ZZ 18806-C	(Chassis)	1
P - - AM/stereo tape-Canada only	D4DZ 18819-A	Adapter kit	1

Y (Meteor)

		Refer to Mercury	

1975

A (Mercury)

A	C7AZ 18813-C	Antenna (electric)	1
A,Y	★ D4AZ 18813-A	Antenna (manual)-r/b D7AZ 18813-A(12/79)	1
A,Y - - AM	D4AZ 18806-A	Chassis	1
A,Y - - AM	★ D3AZ 18819-A	Speaker and hardware (instrument panel)-not replaced (4/83)	1
A(53,65) - - AM	★ D3AZ 18875-A	Speaker (dual)-package tray-not replaced (4/83)	1
A(71)	★ D3AZ 18875-B	Speaker (dual)-package tray-not replaced (12/79)	1
A,Y - - AM/FM multiplex	★ D4AZ 18806-B	Chassis-repl. by D7AZ 18806-A and D3MY 18888-A (3/78)	1
A(53,65),Y(53,65) - - AM/FM multiplex	★ D3AZ 18819-B	Speaker and hardware (front doors and package tray)-not replaced (4/83)	1
A(71),Y(71) - - AM/FM multiplex	★ D3AZ 18819-C	Speaker and hardware (front doors and quarter trim panels)-not replaced (12/79)	1
A - - AM/FM stereo tape	E1AZ 18806-D	Chassis	1
A(53,65) - - AM/FM stereo tape	★ D3AZ 18819-B	Speaker and hardware (front doors and package tray)-not replaced (4/83)	1
A(71) - - AM/FM stereo tape	★ D3AZ 18819-C	Speaker and hardware (front doors and quarter trim panels)-not replaced (12/79)	1
A,Y - - AM/stereo tape-Canada only	D3ZZ 18806-C	Chassis	1
A,Y - - AM/stereo tape-Canada only	D3AZ 18819-D	Speaker adapter and hardware (front doors and package tray)	1

COPYRIGHT © 1986 — FORD MOTOR COMPANY — DEARBORN, MICHIGAN

MODEL/RESTRICTIONS	PART NUMBER	DESCRIPTION	QTY.
18805	RADIO, ANTENNA and SPEAKER KITS — Cont'd		
	For a complete installation select (1) each of the following: Antenna, Chassis and Speaker Parts		

RADIO KIT

1975

C (Montego)

C	C7AZ 18813-C	Antenna (electric)	1
C	★ D4AZ 18813-A	Antenna (manual)-r/b D7AZ 18813-A(12/79)	1
C - - AM	D4AZ 18806-A	Chassis	1
C(53,65) - - AM	D8DZ 18875-A	Speaker (single)-package tray	1
C(53,65) - - AM	★ D20Z 18875-B	Speaker (dual)-package tray-not replaced (12/79)	1
C(71) - - AM	★ D20Z 18875-C	Speaker (dual)-quarter trim panel-not replaced (12/79)	1
C - - AM/FM multiplex	★ D4AZ 18806-B	Chassis-repl. by D7AZ 18806-A and D4OZ 18888-D (3/78)	1
C(53,65) - - AM/FM multiplex	D50Z 18819-A	Speaker and hardware (front door and package tray)	1
C(71) - - AM/FM multiplex	★ D50Z 18819-B	Speaker and hardware (front doors and quarter trim panels)-not replaced (12/79)	1
C - - AM/FM stereo tape	D3AZ 18806-A	Motorola chassis	1
C - - AM/FM stereo tape	E1AZ 18806-D	Philco chassis	1
C(71) - - AM/FM stereo tape	★ D50Z 18819-B	Speaker and hardware (front doors and package tray)-not replaced (12/79)	1
C - - AM/stereo tape-Canada only	D3ZZ 18806-C	Chassis	1
C - - AM/stereo tape-Canada only	D3AZ 18819-D	Speaker adapter and hardware (front doors and package tray)	1

D (Lincoln)

D	★	Antenna (electric)-service details-refer to group number 18850, 18865 and 18919	
D - - AM	D4VY 18806-A	Chassis	1
D - - AM/FM multiplex	D7VY 18806-B	Chassis	1
D - - AM/FM stereo tape	D4VY 18806-C	Chassis	1

F (Cougar)

F	C7AZ 18813-C	Antenna (electric)	1
F	★ D4AZ 18813-A	Antenna (manual)-r/b D7AZ 18813-A(12/79)	1
F - - AM	D4AZ 18806-A	Chassis	1
F - - AM	★ D20Z 18875-B	Speaker (dual) package tray-not replaced (12/79)	1
F - - AM	D8DZ 18875-A	Speaker (single) package tray	1
F - - AM/FM multiplex	★ D4AZ 18806-B	Chassis-repl. by D7AZ 18806-A and D4OZ 18888-A (3/78)	1
F - - AM/FM stereo tape	D3AZ 18806-A	Motorola chassis	1
F - - AM/FM stereo tape	E1AZ 18806-D	Philco chassis	1
F - - AM/stereo tape-Canada only	D3ZZ 18806-C	Chassis	1
F - - AM/stereo tape-Canada only	D3AZ 18819-D	Speaker adapter and hardware (front doors and package tray)	1

G (Monarch)

G	C7AZ 18813-C	Antenna (electric)	1
G	★ D5DZ 18813-B	Antenna (manual)-r/b D7AZ 18813-A(12/79)	1
G-AM	D4AZ 18806-A	Chassis	1
G - - AM/FM (monaural)	★ D5DZ 18806-A	Chassis - - replaced by D6DZ 18806-B and D5DZ 18888-A (3/79)	1
G-AM	D20Z 18875-E	Speaker (single) package tray	1

MODEL/RESTRICTIONS	PART NUMBER	DESCRIPTION	QTY.
18805	RADIO, ANTENNA and SPEAKER KITS — Cont'd		
	For a complete installation select (1) each of the following: Antenna, Chassis and Speaker Parts		

RADIO KIT

1975

G (Monarch)

G – – AM/FM monaural	D5DZ 18819-C	Speaker and hardware (instrument panel)	1
G – – AM/FM monaural	D8DZ 18875-A	Speaker (single) package tray	1
G – – AM/FM multiplex	★ D4AZ 18806-B	Chassis-repl by D7AZ 18806-A and D5DZ 18888-D (3/78)	1
G – – AM/FM stereo tape	D3AZ 18806-A	Motorola chassis	1
G – – AM/FM stereo tape	E1AZ 18806-D	Philco chassis	1
G – – AM/FM stereo tape	D5DZ 18819-B	Speaker and hardware (front doors and package tray	1

K (Mark IV)

K	★	Antenna (electric)-service details-refer to group numbers 18850, 18865 and 18919	1
K – – AM/FM multiplex	★ D4AZ 18806-B	Chassis-repl. by D4AZ 18806-A and D7LY 18888-B (3/78)	1
K – – AM/FM stereo tape	E1AZ 18806-D	Chassis	1
K – – AM/FM signal search	D5LY 18806-A	Chassis	1

L (Bobcat)

L	★ D4AZ 18813-A	Antenna (manual)-r/b D7AZ 18813-A(12/79)	1
L – – AM	D4FZ 18806-A	Chassis	1
L – – AM	D6FZ 18819-A	Speaker and hardware (instrument panel)	1
L – – AM	D8DZ 18875-A	Speaker (single)-package tray	1
L – – AM/FM (monaural)	D4FZ 18806-C	Chassis	1
L – – AM/FM (monaural)	D6FZ 18819-A	Speaker and hardware (instrument panel)	1
L – – AM/FM (monaural)	D20Z 18875-E	Speaker (single)-package tray	1
L – – AM/FM multiplex	★ D4FZ 18806-D	Chassis R/BY 1 PC. each of D7FZ 18806-A, D6FZ 18842-A & D6FZ 18888-A (3/78)	1
L – – AM/FM multiplex	D4FZ 18819-D	Speaker and hardware (doors)	1

P (Comet)

P	C7AZ 18813-C	Antenna (electric)	1
P	★ D4AZ 18813-A	Antenna (manual)-r/b D7AZ 18813-A(12/79)	1
P – – AM	D4AZ 18806-A	Chassis	1
P – – AM/FM monaural	D6DZ 18806-B	Chassis	1
P – – AM/FM multiplex	★ D4AZ 18806-B	Chassis-repl. by D7AZ 18806-A and D3DZ 18888-A (3/78)	1
P – – AM/FM multiplex	★ D7DZ 18819-D	Speaker and hardware (cowl trim panel and package tray)-not replaced (4/83)	1
P – – AM/stereo tape-Canada only	D3ZZ 18806-C	Chassis	1
P – – AM/stereo tape-Canada only	D4DZ 18819-A	Adapter kit	1
P – – AM	D8DZ 18875-A	Speaker (single) package tray	1
P – – AM/FM monaural	D20Z 18875-E	Speaker (single) package tray	1

Y (Meteor)

		Refer to Mercury	

COPYRIGHT © 1986 — FORD MOTOR COMPANY — DEARBORN, MICHIGAN

MODEL/RESTRICTIONS	PART NUMBER	DESCRIPTION	QTY.
18805 RADIO, ANTENNA and SPEAKER KITS — Cont'd			
For a complete installation select (1) each of the following: Antenna, Chassis and Speaker Parts			
1976			
A (Mercury)			
A	C7AZ 18813-C	Antenna (electric)	1
A,Y	★D4AZ 18813-A	Antenna (manual)-r/b D7AZ 18813-A(12/79)	1
A,Y - - AM	D4AZ 18806-A	Chassis	1
A,Y - - AM	★D3AZ 18819-A	Speaker and hardware (instrument panel)-not replaced (4/83)	1
A(53,65) - - AM	★D3AZ 18875-A	Speaker (dual)-package tray-not replaced (4/83)	1
A(71) - - AM	★D3AZ 18875-B	Speaker (dual)-quarter trim panels-not replaced (12/79)	1
A,Y - - AM/FM monaural	D6DZ 18806-B	Chassis	1
A,Y - - AM/FM monaural	★D3AZ 18819-A	Speaker and hardware (instrument panel)-not replaced (4/83)	1
A(53,65) - - AM/FM monaural	★D3AZ 18875-A	Speaker (dual)-package tray-not replaced (4/83)	1
A(71) - - AM/FM monaural	★D3AZ 18875-B	Speaker (dual)-quarter trim panel-not replaced (12/79)	1
A,Y - - AM/FM multiplex	★D4AZ 18806-B	Chassis-repl. by D7AZ 18806-A and D3MY 18888-A (3/78)	1
A,Y - - AM/FM stereo tape	D4AZ 18806-C	Chassis	1
A - - AM/FM signal search	D5LY 18806-A	Chassis-used w/manual antenna	1
A-AM/FM signal search	D6VY 18806-A	Chassis-used w/electric antenna	1
A - - AM/stereo tape	D6ZZ 18806-A	Chassis	1
A(53,65),Y53,65) - - all stereo	★D3AZ 18819-B	Speaker and hardware (front doors and package tray)-not replaced (4/83)	1
A(71),(Y71) - - all stereo	★D3AZ 18819-C	Speaker and hardware (front doors and quarter trim panels)-not replaced (12/79)	1
C (Montego)			
C	C7AZ 18813-C	Antenna (electric)	1
C	★D4AZ 18813-A	Antenna (manual)-r/b D7AZ 18813-A(12/79)	1
C - - AM	D4AZ 18806-A	Chassis	1
C(53,65) - - Monaural	★D20Z 18875-B	Speaker (dual)-package tray-not replaced (12/79)	1
C(71) - - Monaural	★D20Z 18875-C	Speaker (dual)-quarter trim panel-not replaced (12/79)	1
C(53,65) - - Monaural	D8DZ 18875-A	Speaker (single)-package tray	1
C - - AM/FM monaural	D6DZ 18806-B	Chassis	1
C - - AM/FM monaural-"Before 9/1/75"	D30Z 18819-A	Speaker and hardware (instrument panel)	1
C - - AM/FM monaural "From 9/1/75"	D6DZ 18806-B	Chassis	1
C - - AM/stereo tape	D6ZZ 18806-A	Chassis	1
C - - AM/FM multiplex	★D4AZ 18806-B	Chassis-repl. by D7AZ 18806-A and D40Z 18888-A (3/78)	1
C - - AM/FM stereo tape	E1AZ 18806-D	Chassis	1
C(53,65) - - stereo	D50Z 18819-A	Speaker and hardware (front doors and package tray)	1
C(71) - - stereo	★D50Z 18819-B	Speaker and hardware (front doors and quarter trim panels)-not replaced (12/79)	1

MODEL/RESTRICTIONS	PART NUMBER	DESCRIPTION	QTY.
18805 RADIO, ANTENNA and SPEAKER KITS — Cont'd			
For a complete installation select (1) each of the following: Antenna, Chassis and Speaker Parts			
1976			
D (Lincoln)			
D	★	Antenna (electric)–service details–refer to group numbers 18850, 18865 and 18919	1
D – – AM	D4VY 18806-A	Chassis	1
D – – AM/FM multiplex	D7VY 18806-B	Chassis	1
D – – AM/FM signal search	D6VY 18806-A	Chassis	1
D – – AM/FM stereo tape	D4VY 18806-C	Chassis	1
D – – AM/FM quadrasonic tape	D6VY 18806-B	Chassis	1
F (Cougar)			
F	C7AZ 18813-C	Antenna (electric)	1
F	★D4AZ 18813-A	Antenna (manual)–r/b D7AZ 18813-A(12/79)	1
F – – AM	D4AZ 18806-A	Chassis	1
F – – AM	★D20Z 18875-B	Speaker (dual)–package tray–not replaced (12/79)	1
F – – Monaural	D8DZ 18875-A	Speaker (single)–package tray	1
F – – AM/FM monaural– "Before 9/1/75"	D5DZ 18806-A	Chassis	1
F – – AM/FM monaural– "From 9/1/75"	D6DZ 18806-B	Chassis	1
F – – AM/FM monaural	D30Z 18819-A	Speaker and hardware (instrument panel)	1
F – – AM/FM monaural	★D20Z 18875-B	Speaker (dual)–package tray–not replaced (12/79)	1
F – – AM/stereo tape	D6ZZ 18806-A	Chassis	1
F – – AM/stereo tape	D50Z 18819-A	Speaker and hardware (front doors and package tray)	1
F – – AM/FM multiplex	★D4AZ 18806-B	Chassis–repl. by D7AZ 18806-A and D40Z 18888-A (3/78)	1
F – – AM/FM multiplex	D50Z 18819-A	Speaker and hardware (front doors and package tray)	1
F – – AM/FM signal search	D5LY 18806-A	Chassis –used w/manual antenna	1
F – – AM/FM signal search	D50Z 18819-A	Speaker and hardware (front door and package tray)	1
F – – AM/FM stereo tape	E1AZ 18806-D	Chassis	1
F – – AM/FM stereo tape	D50Z 18819-A	Speaker and hardware (front doors and package tray)	1
G (Monarch)			
G	C7AZ 18813-C	Antenna (electric)	1
G	★D5DZ 18813-B	Antenna (manual)–r/b D7AZ 18813-A(12/79)	1
G – – AM "Before 3/1/76"	D4AZ 18806-A	Chassis–att. parts incl. w/group 18819	1
G – – AM "From 3/1/76"	D6DZ 18806-C	Chassis–att. parts incl. w/group 18819	1
G – – Monaural	D8DZ 18875-A	Speaker (single)–package tray	1
G – – AM	D5DZ 18875-A	Speaker (dual)–package tray	1
G – – AM/FM monaural–	D6DZ 18806-B	Chassis–att. parts incl. w/group 18819	1
G – – AM/FM monaural	D8DZ 18875-B	Speaker (dual)–package tray	1
G – – AM/stereo tape	D6ZZ 18806-A	Chassis–att. parts incl. w/group 18819	1
G – – AM/FM multiplex	★D4AZ 18806-B	Chassis–repl. by D7AZ 18806-A and D5DZ 18888-D (3/78)	1

COPYRIGHT © 1986 — FORD MOTOR COMPANY — DEARBORN, MICHIGAN

1973/79 LINCOLN-MERCURY CARS

MODEL/RESTRICTIONS	PART NUMBER	DESCRIPTION	QTY.
18805	RADIO, ANTENNA and SPEAKER KITS — Cont'd For a complete installation select (1) each of the following: Antenna, Chassis and Speaker Parts		

1976

G (Monarch)

G - - AM/FM stereo tape	E1AZ 18806-D	Chassis-att. parts incl. w/group 18819	1
G - - stereo	D7DZ 18819-B	Speaker and hardware (front doors and package tray)	1

J (Capri)

J	C8ZZ 18813-A	Antenna (non-disappearing)-bright finish	1
J	★ D3RY 18813-A	Antenna (disappearing)-bright finish-not replaced (11/81)	1
J	D6RY 18813-A	Antenna-Black finish	1
J - - AM-exc. Canada-dealer instl'd	★ D3RY 18806-B	Chassis-not replaced (11/81)	1
J - - AM-with integral A/C	D5RY 18806-C	Chassis	1
J - - AM-w/o integral A/C	D6RY 18806-A	Chassis- production installed replacement	1
J - - AM	D5RY 18819-A	Speaker and hardware (instrument panel)	1
J - - AM/FM (monaural)	★ D4RY 18806-B	Chassis-production repl. only-not repld. (11/81)	1
J - - AM/FM (monaural)	D3RY 18806-A	Chassis	1
J - - AM/FM (monaural)	★ D5RY 18819-A	Speaker and hardware (instrument panel)-not replaced (11/81)	1
J - - AM/FM multiplex	★ D5RY 18806-B	RADIO chassis - production installed replacement-not replaced (12/79)	1
J - - integral A/C adapter kit	★ D4RY 18819-B	Speaker and hardware adapter-use with applicable 18819 when vehicle has integral A/C-not replaced (11/81)	1

K (Mark IV)

K	★	Antenna (electric)-service details-refer to group numbers 18850, 18865 and 18919	1
K - - AM	D4AZ 18806-A	Chassis	1
K - - AM/FM multiplex	★ D4AZ 18806-B	Chassis-repl. by D7AZ 18806-A and D7LY 18888-B (3/78)	1
K - - AM/FM signal search	D5LY 18806-A	Chassis	1
K - - AM/FM stereo tape	E1AZ 18806-D	Chassis	1
K - - AM/FM quadrasonic tape	D6SZ 18806-A	Chassis	1

L (Bobcat)

L	★ D4AZ 18813-A	Antenna manual-r/b D7AZ 18813-A(12/79)	1
L - - AM	D4FZ 18806-A	Chassis	1
L - - AM	D6FZ 18819-A	Speaker and hardware (instrument panel)	1
L - - Monaural	D8DZ 18875-A	Speaker (single)-package tray	1
L - - AM/FM monaural-"Before 9/1/75"	D4FZ 18806-C	Chassis	1
L - - AM/FM monaural-"From 9/1/75"	D6FZ 18806-B	Chassis	1
L - - AM/FM monaural	D6FZ 18819-A	Speaker and hardware (instrument panel)	1
L - - AM/stereo tape	D6FZ 18806-A	Chassis	1
L - - AM/stereo tape	D4FZ 18819-D	Speaker and hardware (doors)	1
L - - AM/FM multiplex	★ D4FZ 18806-D	Chassis- repl. by 1 pc. each of D6FZ 18842-A 18842-A,D6FZ 18888-A & D7FZ 18806-A (3/78)	1
L - - AM/FM multiplex	D4FZ 18819-D	Speaker and hardware (doors)	1

MODEL/RESTRICTIONS	PART NUMBER	DESCRIPTION	QTY.
18805 RADIO, ANTENNA and SPEAKER KITS — Cont'd			
For a complete installation select (1) each of the following: Antenna, Chassis and Speaker Parts			
1976			
P (Comet)			
P	C7AZ 18813-C	Antenna (electric)	1
P	★D4AZ 18813-A	Antenna (manual)-r/b D7AZ 18813-A(12/79)	1
P - - AM monaural- "Before 3/1/76"	D4AZ 18806-A	Chassis	1
P - - AM monaural "From 3/1/76"	D6DZ 18806-C	Chassis	1
P - - monaural	D8DZ 18875-A	Speaker (single) package tray	1
P - - AM/FM monaural- "Before 9/1/75"	D5DZ 18806-A	Chassis	1
P - - AM/FM monaural- "From 9/1/75"	D6DZ 18806-B	Chassis	1
P - - monaural	D3DZ 18819-A	Speaker and hardware (instrument panel)	1
P - - AM/stereo tape	★D6DZ 18806-A	Chassis-not replaced (4/83)	1
P - - AM/FM multiplex - stereo	★D4AZ 18806-B	Chassis-repl. by D7AZ 18806-A and D3DZ 18888-A (3/78)	1
P - - AM/FM stereo tape	E1AZ 18806-D	Chassis	1
P - - stereo	★D7DZ 18819-D	Speaker and hardware (cowl trim panel and package tray)-not replaced (4/83)	1 1
Y (Meteor)			
		Refer to Mercury	
1977			
A (Mercury)			
A(exc 71)	C7AZ 18813-C	Antenna (electric)	1
A	★D4AZ 18813-A	Antenna (manual)-r/b D7AZ 18813-A(12/79)	
A	D6DZ 18806-C	Chassis-AM-monaural	1
A	D6DZ 18806-B	Chassis-AM/FM-monaural	1
A "Before 5/2/77"	★D4AZ 18806-B	Chassis-AM/FM/MPLX - stereo repl. by D7AZ 18806-A and D40Z 18888-A (3/78)	1
A "From 5/2/77"	D7AZ 18806-A	Chassis-AM/FM/MPLX- stereo	1
A	D5LY 18806-A	Chassis AM/FM/MPLX-signal search-stereo	1
A	D6ZZ 18806-A	Chassis-AM tape-stereo	1
A	E1AZ 18806-D	Chassis AM/FM/MPLX-tape-stereo	1
A	D6SZ 18806-A	Chassis AM/FM/MPLX-quadrasonic tape-stereo	1
A	★D3AZ 18819-A	Speaker and hardware kit (instr pnl) monaural-not replaced (4/83)	1
A(exc. 71)	★D3AZ 18819-B	Speaker and hardware kit (front doors and package tray)-stereo-not replaced (4/83)	1
A(71)	★D3AZ 18819-C	Speaker and hardware kit (front doors and quarter trim panel)-stereo-not replaced (12/79)	1
A(exc 71)	D8DZ 18875-A	Speaker kit (single)-package tray-monaural	1
A(exc 71)	★D3AZ 18875-A	Speaker kit (dual)-package tray-monaural-not replaced (4/83)	1
A(71)	★D3AZ 18875-B	Speaker kit (dual)-quarter trim panel-monaural-not replaced (12/79)	1
D (Lincoln)			
D	★	Antenna (electric)-service details	1
D	D7VY 18806-A	Chassis-AM/FM-monaural	1
D "Before 5/2/77"	D4VY 18806-B	Chassis-AM/FM/MPLX-stereo	1
D "From 5/2/77"	D7VY 18806-B	Chassis-AM/FM/MPLX- stereo	1
D	D6VY 18806-A	Chassis-AM/FM/MPLX-signal search-stereo	1
D	D6ZZ 18806-A	Chassis-AM/tape-stereo	1

COPYRIGHT © 1986 — FORD MOTOR COMPANY — DEARBORN, MICHIGAN

MODEL/RESTRICTIONS	PART NUMBER	DESCRIPTION	QTY.
18805	RADIO, ANTENNA and SPEAKER KITS — Cont'd		
	For a complete installation select (1) each of the following: Antenna, Chassis and Speaker Parts		

1977

D (Lincoln)

D	D4VY 18806-C	Chassis-AM/FM/MPLX-tape-stereo	1
D	D6VY 18806-B	Chassis-AM/FM/MPLX-quadrasonic tape-stereo	1

F (Cougar)

F(exc 71)	C7AZ 18813-C	Antenna (electric)	1
F	★D4AZ 18813-A	Antenna (manual)-r/b D7AZ 18813-A(12/79)	1
F	D6DZ 18806-C	Chassis-AM-monaural	1
F	D6DZ 18806-B	Chassis-AM/FM-monaural	1
F "Before 5/2/77"	★D4AZ 18806-B	Chasss-AM/FM/MPLX - stereo repl. by D7AZ 18806-A and D40Z 18888-A (3/78)	1
F "From 5/2/77"	D7AZ 18806-A	Chassis-AM/FM/MPLX- stereo	1
F	D5LY 18806-A	Chassis-AM/FM/MPLX-signal search-stereo	1
F	D6ZZ 18806-A	Chassis-AM/tape-stereo	1
F	E1AZ 18806-D	Chassis-AM/FM/MPLX-tape-stereo	1
F	D6SZ 18806-A	Chassis-AM/FM/MPLX-quadrasonic tape-stereo	1
F	★D70Z 18819-A	Speaker and hardware kit (instr pnl) monaural-not replaced (4/83)	1
F(exc 71)	D80Z 18819-C	Speaker and hardware kit (front doors and package tray)-stereo	1
F(71)	★D70Z 18819-B	Speaker and hardware kit (front doors and quarter trim panels)-stereo-not repld. (4/83)	1
F(exc 71)	D80Z 18875-A	Speaker kit (single) package tray-monaural	1
F(exc 71)	D80Z 18875-B	Speaker kit (dual) package tray-monaural	1
F(71)	★D70Z 18875-B	Speaker kit (dual) quarter trim panel-monaural-not replaced (12/79)	1

G (Monarch)

G	C7AZ 18813-C	Antenna (electric)	1
G	★D5DZ 18813-B	Antenna (manual)-r/b D7AZ 18813-A(12/79)	1
G	D6DZ 18806-C	Chassis-AM-monaural	1
G	D6DZ 18806-B	Chassis-AM/FM-monaural	1
G "Before 5/2/77"	★D4AZ 18806-B	Chassis AM/FM/MPLX - stereo repl. by D7AZ 18806-A and D5DZ 18888-D (3/78)	1
G "From 5/2/77"	D7AZ 18806-A	Chassis-AM/FM /MPLX-stereo	1
G	D5LY 18806-A	Chassis-AM/FM/MPLX-signal search-stereo	1
G	D6ZZ 18806-A	Chassis-AM/tape-stereo	1
G	E1AZ 18806-D	Chassis-AAM/FM/MPLX-tape-stereo	1
G	D6SZ 18806-A	Chassis-AM/FM/MPLX-quadrasonic tape-stereo	1
G	★D7DZ 18819-A	Speaker and hardware kit (instr pnl)-monaural-not replaced (11/81)	1
G	D7DZ 18819-B	Speaker and hardware kit (front doors and package tray) stereo	1
G	D8DZ 18875-A	Speaker kit (single) package tray-monaural	1
G	D8DZ 18875-B	Speaker kit (dual)-package tray-monaural	1

J (Capri)

J	C8ZZ 18813-A	Antenna (non-disappearing)-bright finish	1
J	★D3RY 18813-A	Antenna (disappearing)-bright finish-not replaced (11/81)	1
J	D6RY 18813-A	Antenna-Black finish	1
J - - AM-exc. Canada-dealer instl'd	★D3RY 18806-B	Chassis-not replaced (11/81)	1
J - - AM-with integral A/C	D5RY 18806-C	Chassis - production installed replacement	1
J - - AM-w/o integral A/C	D6RY 18806-A	Chassis - production installed replacement	1
J - - AM	★D5RY 18819-A	Speaker and hardware (instrument panel)-not replaced (11/81)	1
J - - AM/FM (monaural)	★D4RY 18806-B	Chassis - production repl. only-not repld. (11/81)	1
J - - AM/FM (monaural)	D3RY 18806-A	Chassis	1
J - - AM/FM (monaural)	★D5RY 18819-A	Speaker and hardware (instrument panel)-not replaced (11/81)	1

MODEL/RESTRICTIONS	PART NUMBER	DESCRIPTION	QTY.
18805 RADIO, ANTENNA and SPEAKER KITS — Cont'd			
For a complete installation select (1) each of the following: Antenna, Chassis and Speaker Parts			
1977			
J (Capri)			
J - - AM/FM multiplex	★D5RY 18806-B	Chassis - production installed replacement-not replaced (12/79)	1
J - - AM/FM multiplex	★D5RY 18819-B	Speaker & hardware (door)-repl. by details-Refer to ILL. Section 188, page 1	1
J - - integral A/C adapter kit	★D4RY 18819-B	Speaker and hardware adapter-use with applicable 18819 when vehicle has integral A/C-not replaced (11/81)	1
K (Mark V)			
K	*	Antenna (electric) service details-	1
K	D6DZ 18806-B	Chassis-AM/FM-monaural	1
K "Before 2/17/77"	★D4AZ 18806-B	Chassis-AM/FM/MPLX - stereo repl. by D7AZ 18806-A and D7LY 18888-B (3/78)	1
K "From 2/17/77"	D7AZ 18806-A	Chassis-AM/FM/MPLX-stereo	1
K	D5LY 18806-A	Chassis-AM/FM/MPLX-signal search-stereo	1
K	D6ZZ 18806-A	Chassis-AM/tape-stereo	1
K	D4AZ 18806-C	Chassis-AM/FM/MPLX-tape-stereo	1
K	D6SZ 18806-A	Chassis-AM/FM/MPLX-quadrasonic-tape-stereo	1
L (Bobcat)			
"Before 6/27/77" For units built "From 6/27/77" refer to 1978			
L	★D4AZ 18813-A	Antenna (manual)-r/b D7AZ 18813-A(12/79)	1
L	D4FZ 18806-A	Chassis-AM-monaural	1
L	D6FZ 18806-B	Chassis-AM/FM-monaural	1
L "Before 1/3/77"	★D4FZ 18806-D	Chassis-AM/FM/APLX-Stereo R/B 1 pc. each of D7FZ 18806-A, D6FZ 18842-A, D6FZ 18888-A (3/78)	1
L "From 1/3/77"	D7FZ 18806-A	Chassis-AM/FM/MPLX-stereo	1
L	D6FZ 18806-A	Chassis-AM/tape-stereo	1
L	D6FZ 18819-A	Speaker and hardware kit (instr pnl)-monaural	1
L	D4FZ 18819-D	Speaker and hardware kit (doors)-stereo	1
L	D8DZ 18875-A	Speaker kit (single) package tray- monaural	1
P (Comet)			
P	C7AZ 18813-C	Antenna (electric)	1
P	★D4AZ 18813-A	Antenna (manual)-r/b D7AZ 18813-A(12/79)	1
P	D6DZ 18806-C	Chassis-AM-Monaural	1
P	D6DZ 18806-B	Chassis-AM/FM-monaural	1
P "Before 5/2/77"	★D4AZ 18806-B	Chassis-AM/FM/MPLX - stereo repl. by D7AZ 18806-A and D3DZ 18888-A (3/78)	1
P "From 5/2/77"	D7AZ 18806-A	Chassis-AM/FM/MPLX-stereo	1
P	D5LY 18806-A	Chassis-AM/FM/MPLX-signal search-stereo	1
P	D6DZ 18806-A	Chassis-AM/tape-stereo	1
P	E1AZ 18806-D	Chassis-AM/FM/MPLX-tape-stereo	1
P	D6SZ 18806-A	Chassis-AM/FM/MPLX-quadrasonic tape-stereo	1
P	D5FZ 18808-A	Speaker and hardware kit (instr pnl) monaural	1
P	★D7DZ 18819-D	Speaker and hardware kit (front doors and package tray)-stereo-not replaced (4/83)	1
V (Versailles)			
V		Antenna (Electric)-Service Details	1
V	D74Y 18806-D	Chassis-AM/FM/MPLX Signal Search -Stereo	1
V	D74Y 18806-C	Chassis-AM/FM/MPLX-quadrasonic-tape- stereo	1

COPYRIGHT © 1986 — FORD MOTOR COMPANY — DEARBORN, MICHIGAN

1973/79 LINCOLN-MERCURY CARS

MODEL/RESTRICTIONS	PART NUMBER	DESCRIPTION	QTY.
18805	RADIO, ANTENNA and SPEAKER KITS — Cont'd		
	For a complete installation select (1) each of the following: Antenna, Chassis and Speaker Parts		

1978

A (MERCURY)

A (exc.71)	C7AZ 18813-C	Antenna (electric)	1
A	D7AZ 18813-A	Antenna (manual)	1
A	D6DZ 18806-C	Chassis-AM-Monaural	1
A	D6DZ 18806-B	Chassis-AM/FM-Monaural	1
A - - w/manual antenna	D7AZ 18806-A	Chassis-AM/FM/MPLX-Stereo	1
A - - w/electric antenna	D7VY 18806-B	Chassis-AM/FM/MPLX -stereo	1
A - - w/manual antenna	D5LY 18806-A	Chassis-AM/FM/MPLX-Signal search stereo	1
A - - w/electric antenna	D8MY 18806-A	Chassis- AM/FM/MPLX-signal search	1
A	D6ZZ 18806-A	Chassis-AM/tape-stereo	1
A - - w/manual antenna	E1AZ 18806-D	Chassis-AM/FM/MPLY-tape-stereo	1
A - - w/electric antenna	D4VY 18806-C	Chassis-AM/FM/MPLX tape-stereo	1
A	D6SZ 18806-A	Chassis-AM/FM/MPLY- quadrasonic-tape stereo	1
A	E1AZ 18806-E	Chassis AM/FM/MPLY-cassette- tape-stereo	1
A	D3AZ 18819-A	Speaker & hardware kit (Instr. PNL) monaural	1
A(exc. 71)	★ D3AZ 18819-B	Speaker & hardware kit (front doors and package tray) stereo-not replaced (4/83)	1
A(71)	★ D3AZ 18819-C	Speaker & hardware kit (front doors and package tray) stereo-not replaced (12/79)	1
A(exc. 71)	★ D3AZ 18875-A	Speaker kit (dual) package tray-monaural-not replaced (4/83)	1
A(71)	★ D3AZ 18875-B	Speaker kit (dual) quarter trim PNL-monaural-not replaced (12/79)	1

D (LINCOLN)

D	★	Antenna (electric)-service details	
D	D7VY 18806-A	Chassis-AM/FM-monaural	1
D	D7VY 18806-B	Chassis-AM/FM/MPLX-stereo	1
D	D8MY 18806-A	Chassis-AM/FM/MPLX-signal search-stereo	1
D	D6ZZ 18806-A	Chassis-AM/tape-stereo	1
D	D6VY 18806-B	Chassis-AM/FM/MPLX- quadrasonic tape stereo	1
D	D4VY 18806-C	Chassis-AM/FM/MPLX-tape-stereo	1

F (COUGAR)

F	C7AZ 18813-C	Antenna (electric)	1
F	D7AZ 18813-A	Antenna (manual)	1
F - - w/electric antenna	D8HZ 18806-A	Chassis - AM monaural	1
F - - w/manual antenna	D6DZ 18806-C	Chassis-AM-monaural	1
F - - w/electric antenna	D7VY 18806-A	Chassis - AM/FM-monaural	1
F - - w/manual antenna	D6DZ 18806-B	Chassis-AM/FM-monaural	1
F - - w/electric antenna	D7VY 18806-B	Chassis - AM/FM/MPLX-stereo	1
F - - w/manual antenna	D7AZ 18806-A	Chassis-AM/FM/MPLY-stereo	1
F - - w/electric antenna	D8MY 18806-A	Chassis - AM/FM/MPLX - signal search-stereo	1
F - - w/manual antenna	D5LY 18806-A	Chassis-AM/FM/MPLY- signal search-stereo	1
F	D6ZZ 18806-A	Chassis-AM/tape-stereo	1
F - - w/manual antenna	D4AZ 18806-C	Chassis-AM/FM/MPLX-tape-stereo	1
F - - w/electric antenna	D4VY 18806-C	Chassis - AM/FM/MPLX tape-stereo	1
F - - w/manual antenna	D6SZ 18806-A	Chassis-AM/FM/MPLX- quadrasonic-tape-s tereo	1
F - - w/electric antenna	D6VY 18806-B	Chassis AM/FM/MPLX quadrasonic tape-stereo	1
F	E1AZ 18806-E	Chassis-AM/FM/MPLX- cassette tape-stereo	1
F	★ D70Z 18819-A	Speaker & hardware kit (instr. panel) monaural -not replaced (4/83)	1
F	★ D80Z 18819-A	Speaker & hardware kit (front doors and package tray)-not replaced (4/83)	1
F	D80Z 18875-A	Speaker kit (single) package tray-monaural	1
F	D80Z 18875-B	Speaker kit (dual) package tray-monaural	1

MODEL/RESTRICTIONS	PART NUMBER	DESCRIPTION	QTY.
18805	RADIO, ANTENNA and SPEAKER KITS — Cont'd		
	For a complete installation select (1) each of the following: Antenna, Chassis and Speaker Parts		

1978

G (MONARCH)

G	C7AZ 18813-C	Antenna (electric)	1
G	D7AZ 18813-A	Antenna (manual)	1
G	D6DZ 18806-C	Chassis-AM-monaural	1
G	D6DZ 18806-B	Chassis-AM/FM Monaural	1
G	D7AZ 18806-A	Chassis-AM/FM/MPLX-stereo	1
G	D5LY 18806-A	Chassis-AM/FM/MPLX-signal search-stereo	1
G	D6ZZ 18806-A	Chassis-AM/tape-stereo	1
G	E1AZ 18806-D	Chassis-AM/FM/MPLX-tape-stereo	1
G	D6SZ 18806-A	Chassis-AM/FM/MPLX- quadrasonic tape stereo	1
G	E1AZ 18806-E	Chassis-AM/FM/MPLX-cassette tape-stereo	1
G	D7DZ 18819-A	Speaker & hardware kit (instr. panel) monaural	1
G	D7DZ 18819-B	Speaker & hardware kit (frt. doors and package tray)-stereo	1
G	D8DZ 18875-A	Speaker kit (single) package tray-monaural	1
G	D8DZ 18875-B	Speaker kit (dual) package tray-monaural	1

K (MARK V)

K	★	Antenna (electric)-service details	
K	D6DZ 18806-B	Chassis-AM/FM-monaural	1
K	D7AZ 18806-A	Chassis-AM/FM/MPLX-stereo	1
K	D5LY 18806-A	Chassis-AM/FM/MPLX-signal search-stereo	1
K	D6ZZ 18806-A	Chassis-AM/tape-stereo	1
K	E1AZ 18806-D	Chassis-AM/FM/MPLX-tape-stereo	1
K	D6SZ 18806-A	Chassis-AM/FM/MPLX quadrasonic tape-stereo	1
K	E1AZ 18806-E	Chassis-AM/FM/MPLX-cassette tape-stereo	1

L (BOBCAT)

L	D7AZ 18813-A	Antenna (manual)	1
L	D4FZ 18806-A	Chassis-AM-monaural	1
L	D6FZ 18806-B	Chassis-AM/FM-monaural	1
L	D8FZ 18806-B	Chassis-AM with digital clock	1
L	D7FZ 18806-A	Chassis-AM/FM/MPLX-stereo	1
L	D6FZ 18806-A	Chassis AM/tape-stereo	1
L	D6FZ 18819-A	Seraker & hardware kit (instr. panel) monaural	1
L	D4FZ 18819-D	Seaker & hardward kit (doors)-stereo	1
L	D8DZ 18875-A	Speaker kit (single) package tray-monaural	1
L	D8DZ 18875-B	Speaker kit (dual) package tray-monaural	1

P (ZEPHYR)

P	D7AZ 18813-A	Antenna (manual)	1
P	D6DZ 18806-C	Chassis-AM-monaural	1
P	D6DZ 18806-B	Chassis-AM/FM-monaural	1
P	D7AZ 18806-A	Chassis-AM/FM/MPLX-stereo	1
P	D5LY 18806-A	Chassis-AM/FM/MPLX-signal search-stereo	1
P	D6ZZ 18806-A	Chassis-AM/tape-stereo	1
P	E1AZ 18806-D	Chassis-AM/FM/MPLX-tape-stereo	1
P	D6SZ 18806-A	Chassis AM/FM/MPLX-quadrasonic tape stereo	1
P	E1AZ 18806-E	Chassis-AM/FM/MPLX-cassette tape-stereo	1
P	D8BZ 18819-A	Speaker & hardware kit (instr. pnl) monaural	1
P(74)	D8BZ 18819-B	Speaker & hardware kit (instr. pnl, and rear quarter trim pnl)-stereo	1
P(exc. 74)	D8BZ 18819-D	Speaker & hardware kit (instr. pnl. and package tray)-stereo	1

COPYRIGHT © 1986 — FORD MOTOR COMPANY — DEARBORN, MICHIGAN

MODEL/RESTRICTIONS	PART NUMBER	DESCRIPTION	QTY.
18805	RADIO, ANTENNA and SPEAKER KITS — Cont'd For a complete installation select (1) each of the following: Antenna, Chassis and Speaker Parts		

1978

P (ZEPHYR)

P(exc. 74)	D80Z 18875-A	Speaker kit (single) package tray monaural	1
P(exc. 74)	D80Z 18875-B	Speaker kit (dual) package tray -monaural	1

V (VERSAILLES)

V	★	Antenna (electric)-service details	
V	D74Y 18806-D	Chassis-AM/FM/MPLX-signal search-stereo	1
V	D74Y 18806-C	Chassis-AM/FM/MPLX-quadrasonic tape -stereo	1

1979

A (Mercury)

Note 1- For initial (dealer) installation the additional following parts are req'd.- 1 pc. D9AZ 10A860-A plate assy. radio mtg., 1 pc. 044D70 trim panel (Refer to Body Section for complete part number) and 4 pcs. of 57014-S36 screw 8-32 x 1/2 hex washer head

A	D9AZ 18813-A	Antenna (manual)	1
A	D9AZ 18806-A	Chassis-AM-monaural	1
A	D9AZ 18806-B	Chassis-AM/FM-monaural	1
A	D9AZ 18806-C	Chassis-AM/FM/multiplex-stereo	1
A	D5LY 18806-A	Chassis-AM/FM/multiplex/signal search-stereo	1
A	D6ZZ 18806-A	Chassis-AM/8 track tape-stereo	1
A	D9AZ 18806-D	Chassis-AM/FM/multiplex/8 track tape-stereo	1
A	D6SZ 18806-A	Chassis-AM/FM/multiplex/ quadrasonic tape-stereo	1
A	D9AZ 18806-E	Chassis-AM/FM/multiplex cassette tape-stereo	1
A	D9LY 18806-A	Chassis-electronic AM/FM/ multiplex/quadrasonic/ signal search-stereo-for production replacement only-Note 1	1
A	★ D9AZ 18819-C	Speaker and hardware kit-monaural-incl. (1) speaker for instrument panel- r/b E0AZ 18819-A (11/81)	1
A(54,66)	E0AZ 18819-B	Speaker and hardware kit- stereo-incl. (4) speakers for front doors and package tray	1
A(74)	D9AZ 18819-B	Speaker and hardware kit- stereo-incl. (4) speakers for front doors and quarter trim panels	1
A(54,66)	D9AZ 18875-A	Speaker kit (dual)-rear	1
A(74)	D9AZ 18875-B	Speaker kit (dual)-rear	1

D (LINCOLN)

Note 1- For initial (dealer) installation the additional following parts are req'd- 1 pc. D9VY 10A860-A plate assy. radio mtg., 1 pc. D9VY 18888-A support radio receiver rear, 1 pc. 044D70 Trim panel (refer to Body Section for complete part number) and 4 pcs. of 57014-S36 screw 8-32 x 1/2 hex head washer

D	★	Antenna (electric)-service details	
D	D7VY 18806-A	Chassis-AM/FM-monaural	1
D	D7VY 18806-B	Chassis-AM/FM/multiplex-stereo	1

MODEL/RESTRICTIONS	PART NUMBER	DESCRIPTION	QTY.
18805	RADIO, ANTENNA and SPEAKER KITS — Cont'd		
	For a complete installation select (1) each of the following: Antenna, Chassis and Speaker Parts		
1979			
D (LINCOLN)			
D	D8MY 18806-A	Chassis-AM/FM/multiplex/signal search-stereo	1
D	D4VY 18806-C	Chassis-AM/FM/multiplex/8 track tape-stereo	1
D	D6VY 18806-B	Chassis-AM/FM/multiplex/ quadrasonic tape-stereo	1
D	D9VY 18806-B	Chassis-AM/FM/multiplex/ cassette tape-stereo	1
D	D9LY 18806-A	Chassis-electronic AM/FM/ multiplex/quadrasonic/signal search-stereo-for production replacement only-Note 1	1
F (COUGAR)			
F	D7AZ 18813-A	Antenna (manual)	1
F	C7AZ 18813-C	Antenna (electric)	1
F - - w/manual antenna	D6DZ 18806-C	Chassis-AM-monaural	1
F - - w/manual antenna	D6DZ 18806-B	Chassis-AM/FM-monaural	1
F - - w/manual antenna	D7AZ 18806-A	Chassis-AM/FM/multiplex-stereo	1
F - - w/manual antenna	D5LY 18806-A	Chassis-AM/FM/multiplex/ signal search-stereo	1
F	D6ZZ 18806-A	Chassis-AM/8 track tape-stereo	1
F - - w/manual antenna	E1AZ 18806-D	Chassis-AM/FM/multiplex/8 track tape-stereo	1
F - - w/manual antenna	D6SZ 18806-A	Chassis-AM/FM/multiplex/ quadrasonic tape-stereo	1
F - - w/manual antenna	E1AZ 18806-E	Chassis-AM/FM/multiplex/ cassette tape-stereo	1
F - - w/electric antenna	D8HZ 18806-A	Chassis-AM-monaural	1
F - - w/electric antenna	D7VY 18806-A	Chassis-AM/FM-monuaral	1
F - - w/electric antenna	D7VY 18806-B	Chassis-AM/FM/multiplex-stereo	1
F - - w/electric antenna	D8MY 18806-A	Chassis-AM/FM/multiplex/signal search-stereo	1
F - - w/electric antenna	D4VY 18806-C	Chassis-AM/FM/multiplex/8 track tape-stereo	1
F - - w/electric antenna	D6VY 18806-B	Chassis-AM/FM/multiplex/ quadrasonic tape-stereo	1
F - - w/electric antenna	D9VY 18806-B	Chassis-AM/FM/multiplex/ cassette tape-stereo	1
F	★D70Z 18819-A	Speaker and hardware kit- monaural-incl. (1) speaker for instrument panel-not replaced (4/83)	1
F	★D80Z 18819-A	Speaker and hardware kit- stereo-incl. (4) speakers for front doors and package tray-not replaced (4/83)	1
F	D80Z 18875-A	Speaker kit (single)-rear	1
F	D80Z 18875-B	Speaker kit (dual)-rear	1
G (MONARCH)			
G	D7AZ 18813-A	Antenna (manual)	1
G	C7AZ 18813-C	Antenna (electric)	1
G	D6DZ 18806-C	Chassis-AM-monaural	1
G	E1AZ 18806-E	Chassis-AM/FM/multiplex/cassette tape-stereo	1

COPYRIGHT © 1986 — FORD MOTOR COMPANY — DEARBORN, MICHIGAN

1973/79 LINCOLN-MERCURY CARS

MODEL/RESTRICTIONS	PART NUMBER	DESCRIPTION	QTY.
18805	RADIO, ANTENNA and SPEAKER KITS — Cont'd		
	For a complete installation select (1) each of the following: Antenna, Chassis and Speaker Parts		

1979

G (MONARCH)

G	D6DZ 18806-B	Chassis-AM/FM-monaural	1
G	D7AZ 18806-A	Chassis-AM/FM/multiplex-stereo	1
G	D5LY 18806-A	Chassis-AM/FM/multiplex/signal search-stereo	1
G	D6ZZ 18806-A	Chassis-AM/8 track tape-stereo	1
G	D4AZ 18806-C	Chassis-AM/FM/multiplex/8 track tape-stereo	1
G	D6SZ 18806-A	Chassis-AM/FM/multiplex/ quadraphonic tape-stereo	1
G	★ D7DZ 18819-A	Speaker and hardware kit-monaural-incl. (1) speaker for instrument panel-not replaced (11/81)	1
G	D7DZ 18819-B	Speaker and hardware kit-stereo-incl. speakers for instrument panel and package tray	1
G	D8DZ 18875-A	Speaker kit (single)-rear	1
G	D8DZ 18875-B	Speaker kit (dual)-rear	1

J (CAPRI)

J	D7AZ 18813-A	Antenna (manual)	1
J	D6DZ 18806-C	Chassis-AM-monaural	1
J	D6ZZ 18806-A	Chassis-AM/8 track tape-stereo	1
J	D9ZZ 18806-A	Chassis-AM/digital clock-monaural	1
J	D6DZ 18806-B	Chassis-AM/FM-monaural	1
J	D7AZ 18806-A	Chassis-AM/FM/multiplex-stereo	1
J	D5LY 18806-A	Chassis-AM/FM/multiplex/ signal search-stereo	1
J	E1AZ 18806-D	Chassis-AM/FM/multiplex/8 track tape-stereo	1
J	D6SZ 18806-A	Chassis-AM/FM/multiplex/ quadrasonic tape-stereo	1
J	E1AZ 18806-E	Chassis-AM/FM/multiplex/ cassette tape-stereo	1
J	D9ZZ 18819-C	Speaker and hardware kit-monaural-incl. (1) speaker	1
J	D9ZZ 18819-A	Speaker and hardware kit-stereo-incl. (4) speakers for front doors and quarter trim panels	1

K (MARK V)

Note 1- For initial (dealer) installation the following parts are req'd-1 pc. D9LY 10A860-B plate assy. radio mtg. 1 pc. 044D70 Trim panel (refer to body Section for complete part number) and 4 pcs. of 570014-S36 screw 8-32 x 1/2 hex head washer

K	★	Antenna (electric)-service details	
K	D6DZ 18806-B	Chassis-AM/FM-monaural	1
K	D7AZ 18806-A	Chassis-AM/FM/multiplex-stereo	1
K	D5LY 18806-A	Chassis-AM/FM/multiplex/signal search-stereo	1
K	D6ZZ 18806-A	Chassis-AM/8 track tape-stereo	1
K	E1AZ 18806-D	Chassis-AM/FM/multiplex/8 track tape-stereo	1
K	D6SZ 18806-A	Chassis-AM/FM/multiplex/ quadransonic tape-stereo	1

MODEL/RESTRICTIONS	PART NUMBER	DESCRIPTION	QTY.
18805	RADIO, ANTENNA and SPEAKER KITS — Cont'd		
	For a complete installation select (1) each of the following: Antenna, Chassis and Speaker Parts		
	1979		
	K (MARK V)		
K	E1AZ 18806-E	Chassis-AM/FM/multiplex/ cassette tape-stereo	1
K	D9LY 18806-A	Chassis-electronic AM/FM/ multiplex/quadrasonic tape-signal search-stereo-for production replacement only-Note 1	1
	L (BOBCAT)		
L	D7AZ 18813-A	Antenna (manual)	1
L	D4FZ 18806-A	Chassis-AM monaural	1
L	D8FZ 18806-B	Chassis-AM/digital clock monaural	1
L	D6FZ 18806-B	Chassis-AM/FM monaural	1
L	D7FZ 18806-A	Chassis-AM/FM/multiplex stereo	1
L	D6FZ 18806-A	Chassis-AM/8 track tape-stereo	1
L	D9FZ 18806-A	Chassis-AM/FM/multiplex/ cassette tape-stereo	1
L	D6FZ 18819-A	Speaker and hardware kit- monaural w/o digital clock-incl. (1) speaker for instrument panel	1
L	★D9FZ 18819-A	Speaker and hardware kit-monaural w/digital clock-incl.(1) speaker for instrument panel- not replaced (11/81)	1
L	D4FZ 18819-D	Speaker and hardware kit-stereo	1
L	D8DZ 18875-A	Speaker kit (single)-rear	1
L	D8DZ 18875-B	Speaker kit (dual)-rear	1
	P (ZEPHYR)		
P	D7AZ 18813-A	Antenna (manual)	1
P	D6DZ 18806-C	Chassis-AM-monaural	1
P	D6ZZ 18806-A	Chassis-AM/8 track tape-stereo	1
P	D6DZ 18806-B	Chassis-AM/FM-monaural	1
P	D7AZ 18806-A	Chassis-AM/FM/multiplex-stereo	1
P	D5LY 18806-A	Chassis-AM/FM/multiplex/ signal search-stereo	1
P	D4AZ 18806-C	Chassis-AM/FM/multiplex/8 track tape-stereo	1
P	D6SZ 18806-A	Chassis-AM/FM/multiplex/ quadrasonic tape-stereo	1
P	E1AZ 18806-E	Chassis-AM/FM/multiplex/ cassette tape-stereo	1
P	D8BZ 18819-A	Speaker and hardware kit-monaural	1
P(36,54,66)	D8BZ 18819-D	Speaker and hardware kit-stereo- incl. speakers for instrument panel and package tray	1
P(74)	D8BZ 18819-B	Speaker and hardware kit-stereo- incl. speakers for instrument panel and quarter trim panels	1
P	D80Z 18875-A	Speaker kit (single-rear)-monaural	1
P	D80Z 18875-B	Speaker kit (duel-rear)-monaural	1

COPYRIGHT © 1986 — FORD MOTOR COMPANY — DEARBORN, MICHIGAN

1973/79 LINCOLN-MERCURY CARS

MODEL/RESTRICTIONS	PART NUMBER	DESCRIPTION	QTY.
18805 RADIO, ANTENNA and SPEAKER KITS — Cont'd			
For a complete installation select (1) each of the following: Antenna, Chassis and Speaker Parts			

1979

V (VERSAILLES)

V	★	Antenna (electric)–service details	
V	D74Y 18806–D	Chassis–AM/FM/multiplex/signal search–stereo	1
V	D94Y 18806–A	Chassis–AM/FM/multiplex/8 track tape–stereo	1
V	D94Y 18806–B	Chassis–AM/FM/multiplex/cassette tape–stereo	1
V	D9LY 18806–A	Chassis–electronic AM/FM/multiplex/ quadrasonic/signal search–stereo– for production replacement only	1

YEAR	MODEL/RESTRICTIONS	PART NUMBER	DESCRIPTION	QTY.
18B806	C.B. RADIO, ANTENNA AND HARDWARE PARTS			
	(For complete installation, select (1) Each of the following Antenna, Chassis And Hardware parts			
77	D,K – – 40 Channel	D7LY 18B806–B	Chassis and transmitter–includes microphone	1
78/	D,K	D8VY 18B806–A	Chassis and transmitter–includes microphone	1
78/	F,G,V	D84Y 18B806–B	Chassis and transmitter	1
79	A			1
77	D,K	D7LY 18B850–B	Antenna–electric	1
78/	D	D8VY 18B850–B	Antenna–electric	1
78/	F	D8SZ 18B850–A	Antenna–electric	1
78/	K	D8LY 18B850–B	Antenna–electric	
78/	V	E04Y 18B850–B	Antenna–electric	1
79	A	D9AZ 18B850–A	Antenna–electric	1
78/	D	★ D8VY 18819–A	Hardware kit–chassis & antenna adapter–not replaced (4/83)	1
78/	K	★ D8LY 18819–A	Hardware kit–chassis & antenna adapter–not replaced (4/83)	1

MODEL/RESTRICTIONS	PART NUMBER	DESCRIPTION	IDENTIFICATION	SIZE (INCHES)
18808 SPEAKER ASSY. (RADIO RECEIVER)				

1973

A(53,57,65),C(53,57,65),Y(53,65)	D2AZ 18808–D	Rear–AM or stereo	D2AA 18971–AA D20A 18808–BA	6 x 9
A,Y	D5AZ 18808–A	Front–stereo–doors	D3AJ 18808–AA	5 dia.
A,Y	D2AZ 18808–D	Front–AM	D20A 18808–BA D20A 18808–BB D2AA 18971–AA	6 x 9
A(71),Y(71)	D3AZ 18808–C	Rear–AM or stereo	D3AA 18971–A	5 1/2 x 7 1/2
C	D2AZ 18808–D	Front–AM	D20A 18808–BB	6 x 9
C,P	D5AZ 18808–A	Front–stereo	D3AJ 18808–AA	5 dia.
C(71)	D2AZ 18808–E	Rear–AM or stereo	D2VA 18971–AA D2AJ 18971–AA	4 x 8
D	D4VY 18808–A	Front–AM or stereo	D2AA 18808–AB	5 dia.
D	D2AZ 18808–D	Rear–AM or stereo	D20A 18808–BB	6 x 9
F	D3ZZ 18808–B	Front–stereo–doors	D2ZA 18808–BA D2ZJ 18808–AA D3ZJ 18808–AA	4 x 8
F,P	D5FZ 18808–A	Front–AM		5 x 7
J	D3ZZ 18808–B	Front–stereo–doors	D4RJ 18808–AA	4 x 8
K	D5AZ 18808–A	Front–AM or stereo	D3AJ 18808–AA	5 dia.
K	D2AZ 18808–D	Rear–AM or stereo	D2AA 18971–AA D20A 18808–BA	6 x 9
P	D2AZ 18808–D	Rear–AM or AM/FM	D20A 18808–BA	6 x 9

1973/79 LINCOLN-MERCURY CARS

MODEL/RESTRICTIONS	PART NUMBER	DESCRIPTION	IDENTIFICATION	SIZE (INCHES)
18808 SPEAKER ASSY. (RADIO RECEIVER) — Cont'd				
1974				
A(53,57,65),Y(53,65)	D2AZ 18808-D	Rear-AM or stereo	D2AA 18971-AA D20A 18808-BB	6 x 9
A,Y	D2AZ 18808-D	Front-AM	D20A 18808-BB	6 x 9
A,Y	D5AZ 18808-A	Front-stereo-doors	D20A 18808-AA D3AJ 18808-AA	5 dia.
A(71),Y(71)	D3AZ 18808-C	Rear-AM or stereo	D3AA 18971-AA	5 1/2 x 7 1/2
C,F	D5AZ 18808-A	Front-stereo-doors	D20A 18808-AA D3AJ 18808-AA	5 dia.
D,F C(53,65),F	D2AZ 18808-D	Front-AM Rear-AM or stereo	D20J 18808-BB D20A 18808-BB	6 x 9
C(71)	D2AZ 18808-E	Rear-AM or stereo		4 x 8
D	★ D4VY 18808-A Not replaced (4/83)	Front-AM or stereo	D4VA 18808-AA	5 dia.
D	D2AZ 18808-D	Rear-AM or stereo	D20A 18808-BB	6 x 9
J	D3ZZ 18808-B	Front-stereo-doors	D4RJ 18808-AA D3ZJ 18808-AA	4 x 8
K	D5AZ 18808-A	Front-AM or stereo	D4SA 18808-BA D3AJ 18808-AA	5 dia.
K	D2AZ 18808-D	Rear-AM or stereo	D2AA 18971-AA D20A 18808-BB	6 x 9
L,P	D5FZ 18808-A	Front-AM		5 x 7
L,P	D2AZ 18808-D	Rear-AM or AM/FM	D20A 18808-BB	6 x 9
L	D3FZ 18808-B	Front-stereo-doors	D3ZA 18808-BA	5RD
P	D5AZ 18808-A	Cowl trim panel	D3AJ 18808-AA	5 dia.
1975				
A,Y	D2AZ 18808-D	Front-AM	D20A 18808-BB	6 x 9
A(53,65),Y(53865)	D2AZ 18808-D	Rear-AM or stereo	D20Z 18808-BB	6 x 9
A,Y	D5AZ 18808-A	Front stereo	D4SA 18808-AA	5 1/4RD
A(71),Y(71)	D3AZ 18808-C	Rear-AM or stereo	D5AA 18971-AA	5 1/2 x 7 1/2
C,F	D5AZ 18808-A	Front stereo	D4SA 18808-AA	5 1/4RD
C,F C(53,65)	D2AZ 18808-D	Front-AM Rear-AM or stereo	D20J 18808-BB D20A 18808-BB	6 x 9
C(71)	D2AZ 18808-E	Rear-AM or stereo	D2AJ 18971-AA	4 x 8
D	D5VY 18808-A	Front-AM or stereo	D5VA 18808-AB D5VA 18808-BA	5 1/4RD 5 1/4RD
D	D3AZ 18808-C	Rear-AM or stereo	D5AA 18971-AA	5 1/2 x 7 1/2
G	D5DZ 18808-A	Front-AM	D5DA 18808-CA	5 1/2 x 7 1/2
G	D5DZ 18808-B	Front stereo	D5DA 18808-AB D5DA 18808-BA	5 1/4RD
G	D2AZ 18808-D	Rear-AM or stereo	D2AA 18971-AA	6 x 9
K	D5AZ 18808-A	Front-AM or stereo	D4SA 18808-AA	5 1/4RD
K	D2AZ 18808-D	Rear-AM or stereo	D20A 18808-BA	6 x 9
L	D5FZ 18808-A	Front-AM	D22A 18808-AA D32A 18808-AA	5 x 7
L	D3FZ 18808-B	Front stereo doors	D32A 18808-BA	5RD
L	D2AZ 18808-D	Rear-AM	D20A 18808-BB	6 x 9
P	D5AZ 18808-A	Cowl trim panel	D4SA 18808-AA	5 1/4RD
P	D5FZ 18808-A	Front-AM	D3DA 18808-AA	5 x 7
P	D2AZ 18808-D	Rear-AM or stereo	D20A 18808-BB	6 x 9

COPYRIGHT © 1986 — FORD MOTOR COMPANY — DEARBORN, MICHIGAN

1973/79 LINCOLN-MERCURY CARS

MODEL/RESTRICTIONS	PART NUMBER	DESCRIPTION	IDENTIFICATION	SIZE (INCHES)
18808 SPEAKER ASSY. (RADIO RECEIVER) — Cont'd				
1976				
A,Y	D2AZ 18808-D	Front-AM	D20A 18808-BB	6 x 9
A(53,65)Y(53,65)	D2AZ 18808-D	Rear-AM or stereo	D20A 18808-BB	6 x 9
A,Y	D5AZ 18808-A	Front stereo	D4SA 18808-AA	5 1/4RD
A(71),Y(71)	D3AZ 18808-C	Rear-AM or stereo	D5AA 18971-AA	5 1/2 x 7 1/2
C,F	D5AZ 18808-A	Front stereo	D4SA 18808-AA	5 1/4RD
C,F C(53,65)	D2AZ 18808-D	Front-AM Rear-AM or stereo	D2AA 18971-AA	6 x 9
C(71)	D2AZ 18808-E	Rear-AM or stereo	D40A 18971-AA	4 x 8
D	D5VY 18808-A	Front-AM or stereo	D5VA 18808-AB	5 1/4RD
D	D3AZ 18808-C	Rear-AM or stereo	D5AA 18971-AA	5 1/2 x 7 1/2
G	D5DZ 18808-A	Front-AM	D5DA 18808-CA	5 1/2 x 7 1/2
G	D5DZ 18808-B	Front stereo	D5DA 18808-AB D5DA 18808-BA	5 1/4RD
G	D2AZ 18808-D	Rear-AM or stereo	D2AA 18971-AA	6 x 9
J	D3RY 18808-B	Front-AM or AM/FM monaural	D2AJ 18971-AA	4 x 8
J	D3ZZ 18808-B	Front stereo-dir. installed	D4RJ 18808-AA	4 x 8
J	★ D6RY 18808-A Not replaced (4/83)	Front-stereo doors	75EB 18808-AC	6 x 33/4
J	D6RY 18808-B	Rear-stereo-rear quarter trim panel	76GB 18808-AC	5 x 5 RD
K	D5AZ 18808-A	Front-AM or stereo	D4SA 18808-AB	5 1/4RD
K	D2AZ 18808-D	Rear-AM or stereo	D2AA 18971-AA	6 x 9
L	D5FZ 18808-A	Front-AM	D6EA 18808-AA D6EA 18808-BA	5 x 7
L	D3FZ 18808-B	Front stereo doors	D52A 18808-AA D52A 18808-BA	5 1/4RD
L	D2AZ 18808-D	Rear-AM or stereo	D20A 18808-BB	6 x 9
P	D5FZ 18808-A	Front-AM	D6EA 18808-AA	5 x 7
P	D2AZ 18808-D	Rear-AM or stereo	D20A 18808-BB	6 x 9
P	D5DZ 18808-B	Front stereo	D5DA 18808-AB	5 1/4RD
1977				
A A(53,65)	D2AZ 18808-D	Front monaural Rear-monaural and stereo	D20A 18808-BB D2AA 18971-AA	6 x 9 6 x 9
A	D5AZ 18808-A	Front-stereo	D4SA 18808-AA	5 1/4 RD
A(71)	D3AZ 18808-C	Rear-monaural and stereo	D5AA 18971-AA	5 1/2 x 7 1/2
F	D2AZ 18808-D	Front monaural	D20A 18808-BB	6 x 9
F	D5DZ 18808-B	Front-stereo	D5DA 1808-AB	5/4 RD
F(53,65)	D3AZ 18808-C	Rear-monaural and stereo	D5AA 18971-AA	5 1/2 x 7 1/2
F(71)	D2AZ 18808-E	Rear-monaural and stereo	D4DA 18971-AA	4X8
D	D5VY 18808-A	Front-monaural and stereo	D5VA 18808-AB	51/4 RD
D	D3AZ 18808-C	Rear-monaural and stereo	D5AA 18971-AA	5 1/2 x 7 1/2
G	D5DZ 18808-A	Front-monaural	D5DA 18808-CA	5 1/2 x 71/2
G	D5DZ 18808-B	Front-stereo	D5DA 18808-AB	5 1/4 RD
G	D2AZ 18808-D	Rear-monaural and stereo	D2AA 18971-AA	6 x 9
J	D3RY 18808-B	Front-AM or AM/FM monaural	D2AJ 18971-AA	4 x 8
J	D3ZZ 18808-B	Front-stereo-(dealer installed)	D4RJ 18808-AA	4 x 8
J	D6RY 18808-A	Front-stereo-doors	75EB 18808-AC	6 x 3 3/4
J	D6RY 18808-B	Rear-stereo-rear quarter trim panel	76GB 18808-AC	5 x 5 RD
K	D5AZ 18808-A	Front-monaural and stereo	D4SA 18808-AA	5 1/4 RD
K - - "Before 1/4/77"	D2AZ 18808-E	Rear-monaural and stereo	D5AA 18971-AA	5 1/2 x 7 1/2
K - - "From 1/4/77"	D7LY 18808-A	Rear-monaural and stereo	D7LF 18971-AA	5 1/2 x 7 1/2
L "Before 6/27/77"	D5FZ 18808-A	Front-monaural	D6EA 18808-AA	5 x 7
L "Before 6/27/77"	D3FZ 18808-B	Front-stereo	D52A 18808-AA	5 1/4 RD

MODEL/RESTRICTIONS	PART NUMBER	DESCRIPTION	IDENTIFICATION	SIZE (INCHES)
18808 SPEAKER ASSY. (RADIO RECEIVER) — Cont'd				
1977				
L "Before 6/27/77"	D2AZ 18808-D	Rear-monaural	D20A 18808-BB	6 x 9
P	D5FZ 18808-A	Front-monaural	D3DA 18808-AA-BA	5 x 7
P	D5DZ 18808-B	Front-stereo	D5DA 18808-AB-BA	5 1/4 RD
P	D2AZ 18808-D	Rear-stereo	D2AA 18971-AA	6 x 9
P		Rear-monaural	D20A 18808-BB	6 x 9
V	D5DZ 18808-B	Front-stereo	D5DA 18808-AB-BA	5 1/4 RD
V	D2AZ 18808-D	Rear-stereo	D20A 18808-BB	6 x 9
1978				
A	D2AZ 18808-D	Front-monaural	D20A 18808-A	6 x 9
A(53,65)		Rear-monaural and stereo	D2AA 18971-AA	6 x 9
A	D5AZ 18808-A	Front-stereo	D4SA 18808-AA	5 1/4 RD
A(71)	D3AZ 18808-C	Rear-stereo	D5AA 18971-AA	5 1/2 x 7 1/2
D	D5VY 18808-A	Front-stereo	D5VA 18808-AB	5 1/4 RD
D	D3AZ 18808-C	Rear-stereo	D5AA 18971-AA	5 1/2 x 7 1/2
F	D2AZ 18808-D	Front-monaural	D20A 18808-BB	6 x 9
F	D5DZ 18808-B	Front-stereo	D5DA 18808-AB	5 1/4 RD
F	D3AZ 18808-C	Rear-stereo	D5AA 18971-AA	51/2 x 7 1/2
G	D5DZ 18808-A	Front-monaural	D5DA 18808-CA	5 1/2 x 7 1/2
G	D5DZ 18808-B	Front-stereo	D5DA 18808-AB	5 1/4 RD
G	D2AZ 18808-D	Rear-stereo	D2AA 18971-AA	6 x 9
K	D5VY 18808-A	Front-stereo	D5VA 18808-AB,BB	5 1/2 RD
K	D7LY 18808-A	Rear-stereo	D7LF 18971-AA	5 1/2 x 7 1/2
L "From 6/27/77"	D5FZ 18808-A	Front-monaural	D6EA 18808-AA	5 x 7
L "From 6/27/77"	D3FZ 18808-B	Front-stereo	D52A 18808-AA	5 1/4 RD
L "From 6/27/77"	D2AZ 18808-D	Rear-monaural	D20A 18808-BB	6 x 9
P	D8BZ 18808-A	Front-monaural	D8BF 18808-AA	5 1/2 x 7 1/2
P	D8BZ 18808-B	Front-stereo	D8BF 18808-BA	3 1/4 RD
P(54,66)	D8BZ 18808-C	Rear-stereo	D8BF 18971-AA	5 1/2 x 7 1/2
P(74)	D8BZ 18808-D	Rear-stereo	D8BF 18971-BA	5 x 7
V	D5DZ 18808-B	Front-stereo	D5DA 18808-AA/BA	5 1/4 RD
V	D2AZ 18808-D	Rear-stereo	D20A 18808-BB	6 x 9
1979				
A	D9AZ 18808-A	Front-monaural	D9AF 18808-AA	5 1/2 x 7 1/2
A	D9AZ 18808-B	Front-stereo	D9AF 18808-BB	5 round
A(54,66)	D9AZ 18808-C	Rear-monaural and stereo	D9AF 18971-AA	6 x 9
A(74)	D8BZ 18808-C	Rear-monaural and stereo	D8BF 18971-AA	5 1/2 x 7 1/2
A(54,66)	E0AZ 18808-A	Rear-Premium sound	E0AF 18971-BA	6 x 9
A(74)	E0AZ 18808-B	Rear-Premium sound	D9AF 18971-CA	5 1/2 x 7 1/2
D	D5VY 18808-A	Front-monaural and stereo	D5VA 18808-AB-BB	5 1/4 round
D	D3AZ 18808-C	Rear-monaural and stereo	D5AA 18971-AA	5 1/2 x 7 1/2
F	D2AZ 18808-D	Front-monaural	D20A 18808-BB	6 x 9
F	D5DZ 18808-B	Front-stereo	D5DA 18808-AB-BA	5 1/4 round
F	D3AZ 18808-C	Rear-monaural and stereo	D5AA 18971-AA	5 1/2 x 7 1/2
G	D5DZ 18808-A	Front-monaural	D5DA 18808-CA	5 1/2 x 7 1/2
G	D5DZ 18808-B	Front-stereo	D5DA 18808-AB-BA	5 1/4 round
G	D2AZ 18808-D	Rear-monaural and stereo	D2AA 18971-AA	6 x 9
J	D8BZ 18808-A	Front-monaural	D8BF 18808-AA	5 1/2 x 7 1/2
J	D8BZ 18808-B	Front-stereo	D8BF 18808-CA	3 1/2 round
J	D8BZ 18808-C	Rear-monaural and stereo	D8BF 18971-AA	5 1/2 x 7 1/2
J	D9ZZ 18808-A	Rear-Premium sound	D9ZF 18971-AA	5 1/2 x 7 1/2
K	D5VY 18808-A	Front-monaural and stereo	D5VA 18808-AB-BB	5 1/4 round
K	D7LY 18808-A	Rear-monaural and stereo	D7LF 18971-AA	5 x 7
L	D5FZ 18808-A	Front-monaural	D9EF 18808-AA	5 x 7
L	D3FZ 18808-B	Front-stereo	D52A 18808-AA	5 1/4 round
L	D2AZ 18808-D	Rear-monaural	D20A 18808-BB	6 x 9
P	D8BZ 18808-A	Front-monaural	D8BF 18808-AA	5 1/2 x 7 1/2

COPYRIGHT © 1986 — FORD MOTOR COMPANY — DEARBORN, MICHIGAN

1973/79 LINCOLN-MERCURY CARS

MODEL/RESTRICTIONS	PART NUMBER	DESCRIPTION	IDENTIFICATION	SIZE (INCHES)
18808 SPEAKER ASSY. (RADIO RECEIVER) — Cont'd				
1979				
P	D8BZ 18808-B	Front-stereo	D8BF 18808-CA	3 1/2 round
P(36,54,66)	D8BZ 18808-C	Rear-monaural and stereo	D8BF 18971-AA	5 1/2 x 7 1/2
P(74)	D8BZ 18808-D	Rear-stereo	D8BF 18971-BA	5 x 7
P(36,54,66)	E0BZ 18808-A	Rear	D9BF 18971-BA	5 1/2 x 7 1/2
P(74)	E0BZ 18808-B	Rear	D9BF 18971-AA	5 1/2 x 7 1/2
V	D5DZ 18808-B	Front-stereo	D5DA 18808-AB-BA	5 1/4 round
V	D2AZ 18808-D	Rear-stereo	D2AA 18971-AA	6 x 9

YEAR	MODEL/RESTRICTIONS	PART NUMBER	DESCRIPTION	QTY.
18812	CABLE (RADIO ANTENNA LEAD-IN)			
73/78	A,Y - - w/manual antenna	★ D3AZ 18812-A	Not replaced (4/83)	1
75/76	A,Y	D5MY 18812-A	Electric	1
77/78	A			1
73/	D			1
79	A	D9AZ 18812-A	From radio to antenna	1
79	A(54,66) - - with C.B.	D9AZ 18812-E	From network to C.B. chassis	1
79	A(74) - - with C.B.	D9AZ 18812-C	From network to C.B. chassis	1
78/	F - - w/manual antenna-with C.B.	D80Z 18812-E	From antenna to network	1
78/	F - - w/manual antenna-with C.B.	D80Z 18812-C	From network to chassis	1
78/	F - - w/electric antenna	D8SZ 18812-A	60 inches long from radio	1
78/	F - - w/electric antenna-w/o C.B.	D8SZ 18812-B	128 inches long-from elec. antenna	1
78/	F - - w/electric antenna-with C.B.	D8SZ 18812-C	139 inches long-from network	1
75/78	G - - exc. C.B.	D5DZ 18812-B		1
79	G - - w/o C.B.	D9DZ 18812-A		1
78/	G - - C.B.	D8DZ 18812-A	From chassis to network	1
73/	K - - exc. C.B	D2SZ 18812-A		1
78/	K - - C.B.	D8LY 18812-A	From antenna to network	1
78/	K - - C.B.	D8LY 18812-B	From network to chassis	1
77/	L "From 6/27/77"	D8FZ 18812-A		1
78/	D - - C.B.	D8VY 18812-A		1
77/	V - - exc. C.B.	D74Y 18812-A		1
78/	V - - C.B.	D84Y 18812-A		1
78/	P - - C.B.	D8BZ 18812-A		1
18B812	NETWORK ASSY. (C.B. RADIO ANTENNA)			
79	A - - with elec. antenna	D9AZ 18B812-A		1
79	A - - with manual antenna	D9AZ 18B812-B	Aluminum	1
79	A - - with manual antenna	D9AZ 18B812-C	Zinc die cast	1
78/	D	D8VY 18B812-A		1
78/	F - - with electric antenna	D8SZ 18B812-A		1
78	G	D8DZ 18B812-A		1
79	G	D9DZ 18B812-B	Zinc die cast	1
78/	K	D8LY 18B812-A		1
78/	V	D84Y 18B812-A		1
18813	ANTENNA KIT (RADIO)-Also refer to group 18805			
78	G - - C.B.	D8DZ 18813-A	Tri-band - production replacement	1
18B813	BRACKET (C.B. RADIO MICROPHONE RETAINING)			
79	A	D9AZ 18B813-A		1
78/	D	D8VY 18B813-A		1
78/	F	D80Z 18B813-A		1
78/	G,V	D8DZ 18B813-A		1
78/	K - - w/o console	D8LY 18B813-A		1
78/	K - - w/console	D8LY 18B813-B		1
18816	CARTRIDGE KIT (STEREO TAPE)			
73/77	All - - Stereo tape	D7AZ 18816-A		1
76/77	All - - Quadrasonic tape	D7AZ 18816-B		1
78	All - - Quadrasonic tape	D9AZ 18816-A		1
78	All - - Cassette	D8AZ 18816-C		1

YEAR	MODEL/RESTRICTIONS	PART NUMBER	DESCRIPTION	QTY.
18816	CARTRIDGE KIT (STEREO TAPE) — Cont'd			
78/	All - - 8 track	D9ZZ 18816-A		1
79	All - - cassette tape	D9ZZ 18816-B		1
79	All - - quadrasonic tape w/o electronic chassis	D9AZ 18816-A		1
79	All - - quadrasonic tape w/electronic chassis	D9AZ 18816-B		1
18B816	PLATE (C.B. RADIO CONNECTOR)			
78	K - - w/console	D8LY 18B816-A		1
18817	KNOB ASSY. (RADIO)-Also refer to group 17513			
73	A,C,F,Y	D1ZZ 18817-A	-Bright finish w/camera case center	2
73/74	P - - w/glove compartment			2
73/78	A	D3AZ 18817-A		2
74/76	C,F,Y			2
74	P - - with AM/FM monaural			2
75/	P			2
79	J			2
77/	F,V	D70Z 18817-A		2
78/	D			2
77/	K - - w/o console			2
79	A			2
79	A,D,K,V - - Electronic quadrasonic chassis	D9AZ 18817-A	"SLIDER-VOLUME/TONE"	2
78/	K - - w/console	D8LY 18817-A		2
76/77	D	D1ZZ 18817-A		1
75/	G	D3AZ 18817-A		2
74/78	J	D4RY 18817-A	Use with "D" shaped radio control shaft-bright finish	2
76/78	J - - AM chassis	D6RY 18817-A	Black finish-outer	2
73/76	K	D1ZZ 18817-A		2
74/	L	D4FZ 18817-A		2
73	P	C9SZ 18817-A		2
18B817	BRACKET (C.B. ANTENNA NETWORK)			
78/	F	D80Z 18B817-A		1
79	A - - w/Aluminum network	D9AZ 18B817-A		1
79	A - - w/Zinc die cast network	D9AZ 18B817-B		1
18818	NUT (RADIO CONTROL SHAFT)			
73/76	C	D20Z 18818-A		2
74/	F			2
73/76	K	D2SZ 18818-A		2
75/	G,P			2
77/	V			1
18819	Refer to group 18805			
18B819	BRACKET (C.B. MICROPHONE CABLE MOUNTING)			
79	A	D9AZ 18B819-A		1
78/	D	D8VY 18B819-A		1
78/	F "From 2/6/78"	D80Z 18B819-B		1
78/	G,V	D84Y 18B819-A		1
78/	K	D8LY 18B819-A		1
18B821	RELAY ASSY (C.B. RADIO SPEAKER)			
79	A - - stereo	D9AZ 18B821-A		1
79	A - - monaural	D9AZ 18B821-B		1
78/	D	D8VY 18B821-A		1
78/	K "From 5/1/78"			1
78/	F	D80Z 18B821-B	Mono	1
78/	G	D8DZ 18B821-A	Mono	1
78/	G,V	D84Y 18B821-A	Stereo	1

COPYRIGHT © 1986— FORD MOTOR COMPANY —DEARBORN, MICHIGAN

1973/79 LINCOLN-MERCURY CARS

YEAR	MODEL/RESTRICTIONS	PART NUMBER	DESCRIPTION	QTY.
18B824	BRACKET (C.B. RADIO SPEAKER RELAY MOUNTING)			
78/	D	D8VY 18B824-A		1
78/	F	D80Z 18B824-A		1
78/79	G,V - - w/Aluminum network	D84Y 18B824-A		1
79	G,V - - w/Zinc die cast network	D9DZ 18B824-A		1
78/	K	D8LY 18B824-A		1
18B825	PLATE (C.B. MICROPHONE BRACKET MOUNTING)			
78/	G,V	D8DZ 18B825-A		1
78/	K "From 6/12/78"	D8LY 18B825-B		1
18827	CONDENSER (RADIO SUPPRESSION)-Also refer to group 103.1,103.2 etc.			
73/74	A,F,P,Y	D1AZ 18827-A	*GY-1018	1
18830	DISC (RADIO TONE CONTROL)			
73	A(53X,57X,65X),Y - - AM/stereo tape	D1ZZ 18830-A		2
73/76	C,F			2
73	A,D,K	D2SZ 18830-A		2
73	P - - w/glove compartment			2
74/78	A,P	D2SZ 18830-A	Tone control-use with Philco chassis	2
79	P			1
79	J			1
74/76	K			2
75/	G			
77/	F,K,V	D70Z 18830-A		2
79	A			1
76/77	D	D2SZ 18830-A		2
78/	D	D8VY 18830-A		1
76	J - - stereo "Before 4/1/76"	★ D5RY 18830-B	Not replaced (11/81)	1
76/78	J - - stereo "From 4/1/76"	D6RY 18830-C		2
74/	L	D1AZ 18830-A	Tone control	2
73	P - - AM or AM/FM multiplex radio w/o glove compartment	C80Z 18830-A		2
74/76	Y - - exc. with AM/stereo tape	D2SZ 18830-A		2
18832	CAPACITOR (RADIO VOLTAGE REGULATOR)			
73/74	A,K	D0LY 18832-A	For radio ignition interference	1
74	A,C,D,F,K,P - - w/breakerless ign.	D4AZ 18832-A	For radio ignition interference	1
75/76	A,Y	D5AZ 18832-B		1
77/	A,F			1
73/76	A,C,D,F,G,J,K,L,P,Y	D5AZ 18832-A	Located at voltage regulator	1
77/	A,D,F,G,J,K,L,P,V			1
73/	D - - exc. C.B.	D0VY 18832-A		1
78/	K - - C.B.	D8LY 18832-A		2
78/	D - - C.B.		1 required R.H. side-cowl	1
77	D,K - - C.B.			2
73/76	J "Before 4/25/78"	★ D3RY 18832-B	Alternator-not replaced (4/83)	1
77/78	J "From 4/25/78"	D7RY 18832-A		1
75/78	L	D5FZ 18832-A	Located on ignition coil	1
18A832	WIRING ASSY. (RADIO INTERFERENCE SUPPRESSION CAPACITOR)			
78/	J,P	D9ZZ 18A832-A		1
18B834	HOLDER ASSY. (C.B. RADIO MICROPHONE)			
78/	F	D80Z 18B834-B		1

1973/79 LINCOLN-MERCURY CARS

YEAR	MODEL/RESTRICTIONS	PART NUMBER	DESCRIPTION	QTY.
18842	BEZEL (RADIO CONTROL)			
73	F - - with AM or AM/FM	D1WY 18842-A		1
76/	G	D6DZ 18842-B		1
77/	V			1
76	J - - w/o integral A/C- "Before 3/1/75"	D5RY 18842-F		1
76/78	J - - w/o integral A/C- "From 3/1/75"	D5RY 18842-A	Used w/push button radio-4 13/64" panel opening	1
76/78	J	D5RY 18842-E	Used w/push button radio-3 23/32" long	1
79	J	D9CY 18842-A	French burl	1
79	J	D9ZZ 18842-B	Engine Turn	1
73/76	K - - with AM/FM stereo tape player	D2LY 18842-B	Walnut	1
75/76	K - - with AM/FM stereo tape player	D5LY 18842-A	Black-camera case	1
77/	K	D7LY 18842-A		1
74/	L - - AM	D6FZ 18842-A	Use with Philco chassis only	1
76/	L - - AM/FM monaural "From 9/1/75"			1
74/77	L - - AM/FM/MPLX stereo "Before 1/3/77"			1
77	L - - AM/FM/MPLX "From 1/3/77"	D6FZ 18842-B		1
76/	L - - AM/stereo tape			1
78/	L - - AM/FM/MPLX, AM digital clock or AM/FM/MPLX cassette tape			1
73/77	P - - monaural	D3DZ 18842-B		1
76/77	P - - stereo	D6DZ 18842-A		1
78	P(54,66,74)	D8BZ 18842-A	Dark pecan woodgrain	1
78	P(54,66,74)	D8BZ 18842-B	Bright finish	1
78	P(36R)	D8BZ 18842-C	Dark pecan	1
79	P(54,66,74)	D9BZ 18842-A	Majestic walnut-dull finish	1
79	P(36)	D9BZ 18842-B	Kashmer walnut	1
79	P(54,66,74)	D9BZ 18842-C	Majestic walnut-bright finish	1
79	P(54,66,74)	D9BZ 18842-D	Engine turn	1
79	P	D9BZ 18842-E	Black	1
18A842	BEZEL (RADIO SPEAKER FADER CONTROL)			
73/	K	D2AZ 18A842-A	Monaural	1
75/76	A,Y			1
77	A,F			1
75/	G			1
79	A - - with premium sound	D9AZ 18A842-A	"AMPLIFIER PULL"	1
79	J,P - - with premium sound	D9ZZ 18A842-A	"AMP. PULL"	1
18846	ESCUTCHEON (RADIO)			
73/78	J - - with AM/FM	C9RZ 18846-A		1
18B849	AMPLIFIER ASSY. (RADIO POWER BOOSTER AND EQUALIZER)			
79	A	D9AZ 18B849-A		1
79	J,P	D9ZZ 18B849-A		1
18850	MOTOR and TUBE ASSY. (ELECTRIC RADIO ANTENNA)			
75/78	A(53,65) - - w/o auxiliary fuel tank	D5MY 18850-A		1
79	A	D9AZ 18850-A		1
73/74	D	D0VY 18850-A		1
75/76	D	★ D5VY 18850-A	R/b D7VY 18850-A (3/84)	1
77	D	D7VY 18850-A		1
78	D	D8VY 18850-A	# D8VF 18850-AA	1
79	D	D9VY 18850-A		1
78/79	K	D9SZ 18850-A		1
77/	V	D74Y 18850-A		1
78/	F			1

COPYRIGHT © 1986— FORD MOTOR COMPANY —DEARBORN, MICHIGAN

1973/79 LINCOLN-MERCURY CARS

YEAR	MODEL/RESTRICTIONS	PART NUMBER	DESCRIPTION	QTY.
18B850	MOTOR AND TUBE ASSY (ELEC. RADIO ANTENNA C.B.) – Refer to group 18B806			
18B853	CONTROL ASSY. (RADIO POWER BOOST & EQUALIZER-AMPLIFIER)			
79	A	D9AZ 18B853-A		1
79	J,P	D9ZZ 18B853-A		1
18B857	BRACKET (RADIO FOOT CONTROL SWITCH)			
79	K	D9LY 18B857-A		1
79	V	D94Y 18B857-A		1
18W862	WIRING ASSY. (RADIO EXTENSION)			
78/	K	D8LY 18W862-A		1
79	J,P	D9ZZ 18W862-A		1
18863	SWITCH (ELECTRIC RADIO ANTENNA) – Also refer to 14529			
73/76	A,C,F,P	C7AZ 18863-A	Mounted on lower lip of instrument panel–dealer installed	1
77/78	A,P			1
78	A			1
75/	G			1
79	A	D9AZ 18863-A		1
78/	F	D8SZ 18863-A		1
73/77	D	D5VY 18863-A		1
73/78	K "Before 9/6/77"	D5SZ 18863-A	Bright finish	1
78/	K "From 9/6/77"	D8LY 18863-A	Black finish	1
78/	V "From 9/6/77"	D84Y 18863-A	Black finish	1
18B864	WIRING ASSY. (RADIO POWER BOOST & EQUALIZER AMPLIFIER)			
79	A	D9AZ 18B864-A		1
18865	NUT (RADIO ANTENNA)			
75/76	A(53,65),Y(53,65) – – w/o auxiliary fuel tank	D5MY 18865-A		1
77/78	A(53,65)			1
79	A	D9AZ 18865-A		1
73/74	D	C3VY 18865-A		1
75/77	D – – exc. C.B.	D5VY 18865-A		1
73/76	K	D2SZ 18865-A		1
77	D,K – – C.B.	D7LY 18865-A		1
78/	D			1
77/	K – – exc. C.B.	D7LY 18865-B		1
78	K	★ D8LY 18865-A	R/b D8LY 18865-B (4/85)	1
79	K	D8LY 18865-B		1
77/	V	D74Y 18865-A		1
78/	F			1
18870	STRAP (RADIO RECEIVER HOOD BONDING)–If not listed below improvise			
79	A	D9AZ 18870-A		1
73/76	C	D20Z 18870-A		1
74/	F			1
75/	G	D4ZZ 18870-A		1
77/	V			1
78/	P			1
79	J			1
73/78	J	D2RY 18870-A		1
74/	L	D4ZZ 18870-A		1
18875	Refer to group 18805			
18A886	MAST (RADIO ANTENNA REPLACEMENT)			
73	C,J,P	C0AZ 18A886-B		1
73/76	A,Y	D3AZ 18A886-A		1
77/	A – – w/o C.B.			1
78/	P,L – – w/o C.B.			1
78/	F – – w/o C.B.			1
79	G,J – – w/o C.B.	D3AZ 18A886-A		1
78	F with C.B.	D80Z 18A886-A		1
79	A,F,G – – w/C.B.	D9DZ 18A886-A		1

YEAR	MODEL/RESTRICTIONS	PART NUMBER	DESCRIPTION	QTY.
18A886	MAST (RADIO ANTENNA REPLACEMENT) — Cont'd			
75/ 78/ 77/	A,D – – w/elect. ant. exc. C.B. F – – w/elect. ant. exc. C.B. K,V – – w/elect. ant. exc. C.B.	E2MY 18A886-A	Replacement mast for Harada ant. only	1 1 1
75/ 77/	D – – with C.B. elect. ant. K – – with C.B. elect. ant.	D9VY 18A886-A	Replacement mast for Harada ant. only	1 1
18888	SUPPORT (RADIO or C.B. CHASSIS)-If not listed improvise			
	A (Mercury)			
73/76 77/78 77	A,Y – – w/AM or AM/FM A – – AM or AM/FM monaural A – – AM/FM/MPLX-stereo "Before 5/2/77"	D3MY 18888-A		1 1 1
73	A,Y – – w/AM/FM stereo tape player	D3MY 18888-B		1
74/76 77/78 77/78 77/78 77/78	A,Y – – w/AM/FM stereo tape player A – – AM/FM/MPLX-tape-stereo A-AM/FM/MPLX-signal search-stereo A-AM/FM/MPLX-quadrasonic-stereo A – – AM/FM/MPLX-stereo "After 5/2/77"	D3MY 18888-B	Use with Philco chassis	1 1 1 1 1
79	A – – monaural	D9AZ 18888-A		1
79	A – – stereo	D9AZ 18888-B		1
79	A(74) – – C.B.	D9AZ 18888-D		1
79	A(54,66) – – with C.B. "Before 2/12/79"	D9AZ 18888-E		1
79	A(54,66) – – with C.B. "From 2/12/79"	D9AZ 18888-F		1
	C (Montego)			
74/76	C – – w/AM or AM/FM radio	D20Z 18888-A	Use with Philco chassis only	1
74	C – – w/AM/FM radio	D40Z 18888-B	Use with Motorola chassis only	1
73	C – – w/AM or AM/FM radio	D20Z 18888-A		1
74/76	C – – w/AM/FM stereo tape player	D40Z 18888-A		1
	D (Lincoln)			
76/77 73/77 75/77 77	D – – AM/FM/MPLX tape-stereo D – – AM/FM/MPLX Siganal Search-stereo D – – AM/FM/MPLX quadrasonic-stereo D – – AM/FM/MPLX-stereo "From 5/1/77"	D3VY 18888-A		1 1 1 1
78/	D – – monaural	D3MY 18888-A		1
78/ 79	D – – stereo D – – w/o signal search quadrasonic	D3MY 18888-B		1 1
79	D – – w/signal search quadrasonic	D9VY 18888-A		1
	F (Cougar)			
73	F – – w/AM/FM multiplex radio	D2ZZ 18888-A		1
73	F – – w/AM or AM/stereo tape player	D2ZZ 18888-B		1
74/76 77/ 77	F – – w/AM or AM/FM radio F – – AM or AM/FM monarual F – – AM/FM/MPLX – stereo "Before 5/1/77"	D20Z 18888-A	Use with Philco radio chassis	1 1 1
74	F – – w/AM/FM radio	D40Z 18888-B	Use with Motorola chassis only	1
74/76 77/ 77/ 77/ 77/	F – – w/AM/FM stereo tape player or AM/FM signal search F – – AM/FM/MPLX tape stereo F – – AM/FM/MPLX-signal searcH F – – AM/FM/MPLX-quadrasonic F – – AM/FM/MPLX-stereo "From 5/1/77	D40Z 18888-A		1 1 1 1 1
78/	F – – C.B.	D80Z 18888-A		1

COPYRIGHT © 1986 — FORD MOTOR COMPANY — DEARBORN, MICHIGAN

1973/79 LINCOLN-MERCURY CARS

YEAR	MODEL/RESTRICTIONS	PART NUMBER	DESCRIPTION	QTY.
18888	SUPPORT (RADIO or C.B. CHASSIS)-If not listed improvise — Cont'd			
	G (Monarch)			
75/76	G - - AM/FM monaural- "Before 9/1/75"	D5DZ 18888-C	Rear	1
75/	G - - AM	D5DZ 18888-A	Rear	1
75/	G - - AM/FM monaural "From 9/1/75"			1
77	G - - AM/FM/MPLX stereo "Before 5/2/77"			1
75/	G - - AM/stereo tape	D5DZ 18888-D	Rear	1
77/	G - - AM/FM/MPLX-stereo tape			1
77/	G - - AM/FM/MPLX-stereo "From 5/1/77"			1
78/	G - - AM/FM/MPLX-Cassette Tape Stereo			1
78/	G - - C.B. "Before 5/15/78"	D8DZ 18888-A		1
78/	G - - C.B. "From 5/15/78"	D8DZ 18888-B		1
	J (Capri)			
76	J - - w/o integral A/C "Before 3/1/76"	D5RY 18888-A	Rear	1
				1
79	J - - stereo	D8BZ 18888-B		1
79	J - - monaural	D8BZ 18888-C		1
79	J - - digital clock	D9ZZ 18888-A		1
	K (Mark IV, Mark V)			
73/76	K - - w/AM or AM/FM radio	D2SZ 18888-A		1
77	K - - AM/FM/MPLX-tape-stereo	D7LY 18888-A	Rear	1
77	K - - AM/FM/MPLX-signal search-stereo			1
77	K-AM/FM/MPLX-quadrasonic-stereo			1
77	K - - AM/FM/MPLX-stereo "From 2/17/77"			1
77/	K - - stereo	★D8LY 18888-A	Not replaced (4/84)	1
78/	K - - monaural	D8LY 18888-B		1
	L (Bobcat)			
74/76	L - - AM/FM monaural radio "Before 9/1/75"	D2FZ 18888-B	Rear	1
74/	L - - AM	D4FZ 18888-A	Rear	1
74/	L - - AM/FM monaural "From 9/1/75"			1
74/77	L - - AM/FM/MPLX stereo "Before 1/3/77"			1
76/	L - - AM/stereo tape	D6FZ 18888-A		1
77/	L - - AM/FM/MPLX stereo "From 1/3/77"			1

YEAR	MODEL/RESTRICTIONS	PART NUMBER	DESCRIPTION	QTY.
18888	SUPPORT (RADIO or C.B. CHASSIS)-If not listed improvise — Cont'd			
	P (Comet)			
73	P - - w/glove box	D3DZ 18888-A	Rear	1
74/77	P - - AM			1
74/77	P - - AM/FM-monaural			1
74/77	P - - AM/FM/MPLX-stereo "From 5/1/77"			1
74	P - - AM or AM/FM monaural	D4DZ 18888-A	Use with Motorola chassis only	1
73	P - - AM or AM/FM multiplex radio w/o glove compartment	D2DZ 18888-C	Front	1
	P (Zephyr)			
78/	P - - stereo	D8BZ 18888-B		1
78/	P - - monaural	D8BZ 18888-C		1
	V (Versailles)			
77/	V	D5DZ 18888-D	Rear	1
78	V - - C.B. "Before 5/15/78"	D84Y 18888-A	Right side	1
78/	V - - C.B. "From 5/15/78"	D84Y 18888-C	Right side	1
78/	V - - C.B. "From 5/15/78"	D84Y 18888-D	Left side	1
	Y (Meteor)			
			Refer to Mercury	
18898	GASKET (ELECTRIC ANTENNA)			
75/76	A(53,65),Y(53,65)-w/o auxiliary fuel tank	D5MY 18898-A		1
77/78	A(53,65)			1
75/77	D	D5VY 18898-A		1
78	F	C3VY 18898-A		1
18A900	WIRING (RADIO RECEIVER TO REAR SEAT SPEAKER)			
79	A	D9AZ 18A900-A	L.H.	1
79	A	D9AZ 18A900-B	R.H.	1
78/	D	D8VY 18A900-A		1
18A901	WIRING ASSY. (RADIO REAR SEAT SPEAKER CONNECTOR)			
73/74	C(53,63,65) - - w/AM radio	D30Z 18A901-A		1
74	F - - w/AM radio			1
75/76	C(53,65),F,G,L,P - - w/AM radio	D50Z 18A901-A		1
77	G,P			1
78/	G			1
73/76	C(53,63,65) - - w/stereo	D50Z 18A901-D		1
74/	F - - w/stereo			1
73/74	C(71) - - w/AM radio	D30Z 18A901-B		1
73/74	C(71) - - w/stereo	D30Z 18A901-C		1
76	D - - AM radio	D2SZ 18A901-A		1
75/76	G - - w/stereo "Before 2/3/75"	D5DZ 18A901-A		1
76/	G - - w/stereo "From 5/15/76"	D6DZ 18A901-B	#D6DB 19A017-AA	1
77/	V			1
79	J(61)	D9ZZ 18A901-B		1
79	J(66) - - stereo	D9ZZ 18A901-C		1
76	K - - AM "Before 1/19/76"	D2SZ 18A901-A	With (2) speakers	1
76	K - - AM "From 1/19/76"	D6LY 18A901-B	With (4) speakers	1
77/	D,K- - AM/FM-monaural	D6LY 18A901-B		1
78/	L	D8FZ 18A901-A		1
79	P(36,54,66) - - stereo	D9BZ 18A901-A		1
79	P(74) - - stereo	D9BZ 18A901-B		1

COPYRIGHT © 1986 — FORD MOTOR COMPANY — DEARBORN, MICHIGAN

1973/79
LINCOLN-MERCURY CARS

YEAR	MODEL/RESTRICTIONS	PART NUMBER	DESCRIPTION	QTY.
18919	STANCHION (RADIO ANTENNA)			
73/76	A,Y - - w/o radio	D3AZ 18919-A	Dummy cap	1
77/78	A			1
75/76	A(53),Y(53) - - w/o auxiliary fuel tank	D5MY 18919-A	Electric antenna	1
77/78	A(53,65)			1
79	A - - w/o antenna	E0AZ 18919-A	Dummy cap	1
79	A - - electric antenna	D9AZ 18919-A		1
75/77	D(53)	D5VY 18919-A		1
75/77	D(60)	D5VY 18919-B		1
78/	D(60)	D8VY 18919-A		1
78/	D(53)	D8VY 18919-B		1
77	K - - C.B.	D7LY 18919-A		1
77	K	D7LY 18919-B		1
78/	K	D8LY 18919-A		1
73/76	K	D2LY 18919-A		1
77	D(53) - - C.B.	D7VY 18919-B		1
77/	V	D74Y 18919-A		1
78/	F,L,P - - w/o radio	E0BZ 18919-A	Dummy cap	1
79	J			1
78/	F - - electric antenna	D8WY 18919-A		1
18A919	WIRE ASSY. (RADIO FEED)			
79	A(54,66) - - with C.B.	D9AZ 18A919-C		1
76/78	J	D6RY 18A919-A	Incl. fuse holder	1
78/	G,V - - C.B.	D8DZ 18A919-A		1
18A927	CAP (RADIO ANTENNA BASE)			
78	A,F	D80Z 18A927-A		1
79	A	D9AZ 18A927-A		1
18934	INSERT (RADIO ANTENNA BASE)			
78/	A,F,J,L,P	D8BZ 18934-A		1
18936	BASE ASSY. (RADIO ANTENNA MANUAL)			
73/76	A,Y	D3AZ 18936-A		1
77/78	A			1
78/	F	D80Z 18936-B		1
18939	BRACKET (ELECTRIC ANTENNA MOUNTING)			
79	A	D9AZ 18939-A		1
78/	F	D8WY 18939-A		1
75/	D	D5VY 18939-A		1
78/	K - - C.B.	D8LY 18939-A	Upper	1
77/	K - - exc. C.B.	D7LY 18939-C	Upper	1
77/	V	D74Y 18939-A		1
18946	GASKET (RADIO ANTENNA)			
77/78	K,D - - C.B.	D7LY 18946-A		1
78/	V	D84Y 18946-A		1
18A952	RESISTOR (RADIO RECEIVER SUPRESSION CHOKE)			
74/	A,C,D,F,K,P,Y	C9AZ 18A952-A		1
73/78	J	D3RY 18A952-A		1
74/78	J - - AM/FM monaural	D4RY 18A952-A		1
18A954	REINFORCEMENT (RADIO ANTENNA GROUNDING)			
75/76	A,Y	D5MY 18A954-A		1
77/78	A			1
79	A - - elec. antenna	D9AZ 18A954-A		1
73/74	D(53)	D0VY 18A954-B		1
75/77	D(53)	D5VY 18A954-A		1
78/	D	D8VY 18A954-B		1
78/	F	D8WY 18A954-A		1
77/	V	D74Y 18A954-A		1

YEAR	MODEL/RESTRICTIONS	PART NUMBER	DESCRIPTION	QTY.
18963	PLATE (RADIO SPEAKER MOUNTING FRONT)			
73/76	C - - w/AM	D20Z 18963-A		1
74/	F - - w/AM			1
75/	G - - w/AM or AM/FM monaural	D5DZ 18963-A		1
74/	L	D1FZ 18963-A		1
18972	CONTROL (RADIO REAR SEAT SPEAKER VOLUME)			
73/75	A,Y - - w/AM/stereo tape-Canada only	D3AZ 18972-A		1
74	C,F,P - - w/AM/stereo tape-Canada only			1
73/	A - - monaural	D2SZ 18972-B	Dual speakers	1
73/74	K			1
76/	K			1
77/	D			1
75/	A,C,G,L,P - - monaural chassis	D50Z 18972-A	Single speaker	1
76	D - - w/AM	D6VY 18972-A	With 4 speakers	1
18978	GRILLE (RADIO SPEAKER)			
73/76	A(53,57,65),C(53,63,65), Y(53,65) "From 4/1/74"	D4AZ 18978-A	Package tray-used on 6" x 9" opening	AR
77	A(53,65)			1
74/	F			1
73/77	P			1
75/	G,L			AR
73/76	A,C,D,K,P,Y - - stereo	D20Z 18978-A	Front doors	2
75/	G - - stereo			2
77/	A,D,F,K,V - - stereo			1
77	P			1
78/	P(71) - - stereo	D8BZ 18978-A		2
73/76	C(71)	D20Z 18978-B	Rear speakers	2
77	F(71)			1
73/	A(71)	D70Z 18978-A	Rear-used with 6" x 9" opening	AR
77/	F(53,65)			AR
79	J			AR
73/76	Y(71)			AR
73	F - - w/stereo	D2ZZ 18978-A	Front doors	2
74/76	F - - w/stereo	D4WY 18978-A	Front doors	2
76/78	J - - w/stereo	D6RY 18978-A	Front doors	2
74/	L - - w/dual door speakers	D3FZ 18978-C	Black	2
74/	L - - w/dual door speakers	385395-S2	(BB-541-EH)-screw (grille radio speaker to door inner panel)-No. 8-32 x 1 1/8"	8
18981	WIRING and SOCKET ASSY. (ASH RECEPTACLE LAMP)			
76	P	FEK 18981-A		1
18A984	BASE AND CABLE ASSY. (RADIO ANTENNA)			
79	A - - C.B.	D9AZ 18A984-B		1
79	G	D9DZ 18A984-A		1
79	J	D9ZZ 18A984-A		1
78/	L	D8FZ 18A984-A		1
79	P "From 4/16/79"	E0BZ 18A984-A		1
18998	WIRING ASSY. (RADIO ANTENNA FEED)			
79	A - - C.B.	D9AZ 18998-A	Switch feed	1
79	A	D9AZ 18998-B	Motor feed	1
78/	F - - w/elec. antenna	D8SZ 18998-A	Switch feed	1
78/	F - - w/elec. antenna	D8SZ 18998-B	Motor feed	1

COPYRIGHT © 1986 — FORD MOTOR COMPANY — DEARBORN, MICHIGAN

1973/79
LINCOLN-MERCURY CARS

YEAR	MODEL/RESTRICTIONS	PART NUMBER	DESCRIPTION		QTY.
19000	Refer to Paint Section				
19A041	WIRING ASSY. (RADIO SPEAKER)-If not listed below improvise				
75/76	A,Y - - stereo radio and courtesy lights	(RH) ★ D5AZ 19A041-A not replaced (4/83)	(LH) ★ D5AZ 19A041-B not replaced (11/81)		1
77/78	A - - stereo	(RH) ★ D5AZ 19A041-A	(LH) ★ D7AZ 19A041-A	Not repld. (4/83)	1
73/74	C - - stereo radio and w/o power door latch and w/o power windows	D20Z 19A041-A			1
74	C - - stereo radio and anti-theft alarm system or power door latch	(RH) D40Z 19A041-C	(LH) D40Z 19A041-D		1
76	C,F - - stereo radio w/power door locks	(RH) D60Z 19A041-A	(LH) D60Z 19A041-B		1
76	C,F - - stereo radio w/o power door locks	(RH) D60Z 19A041-C	(LH) D60Z 19A041-D		1
77/78	F - - stereo w/o visibility light group "From 3/1/77"	(RH) ★ D70Z 19A041-A Not replaced(4/84)	(LH) D70Z 19A041-E		1
79	F - - stereo w/o visibility light group	(RH) D90Z 19A041-A	(LH) D90Z 19A041-C		1
77	F - - stereo w/visibility light group "Before 3/1/77"	(RH) D70Z 19A041-C	(LH) ★ D70Z 19A041-D not replaced (4/83)		1
77/78	F - - stereo w/visibility light group "From 3/1/77"	(RH) D70Z 19A041-C	(LH) D70Z 19A041-F		1
79	F - - stereo w/visibility light group	(RH) D90Z 19A041-B	(LH) D90Z 19A041-D		1
73/	L	D3FZ 19A041-A			1
19A095	BOND (RADIO FREQUENCY INTERFERENCE SUPPRESSION)				
73/76	A,Y	D3MY 19A095-A	5 1/4" long		1
77/78	A				1
78/	D				1
79	A	D9AZ 19A095-A	Lower instrument panel		1
78/	D - - with C.B.	D2SZ 19A095-C	8 1/4" long		1
78/	D - - with C.B. radio	D8VY 19A095-A	11 1/2" long		1
78/	D - - with C.B. radio	D8VY 19A095-B	10 1/2" long		1
73/76	C	D20Z 19A095-A	2 1/2" long		1
75/	F				1
78/	F - - with C.B. radio	D80Z 19A095-A	9 1/2" long		1
78/	F - - with C.B. radio	D80Z 19A095-B	15" long		1
78/	F - - with C.B. radio	D80Z 19A095-C	5 3/4" long		1
78/	F - - with C.B. radio	D80Z 19A095-D	6" long		1
75/	G	D5DZ 19A095-A	1" long		1
78/	G - - with C.B. radio	D37Z 19A095-B			1
73/78	J	D2SZ 19A095-B	7 1/4" long		1
73/76	K	D2SZ 19A095-A	8 3/4" long		1
73/	K	D2SZ 19A095-B	7 1/4" long		1
73/	K	D2SZ 19A095-C	8 1/4" long		1
73/76	K	D2SZ 19A095-D	Bright finish		1

COPYRIGHT © 1986 — FORD MOTOR COMPANY — DEARBORN, MICHIGAN

1973/79
LINCOLN-MERCURY CARS

YEAR	MODEL/RESTRICTIONS	PART NUMBER	DESCRIPTION	QTY.
19A095	BOND (RADIO FREQUENCY INTERFERENCE SUPPRESSION) — Cont'd			
77/	K	D7LY 19A095-A	10 1/2" long	1
77/78	K "Before 6/12/78"	★ D7LY 19A095-B	Attached to radio chassis-not replaced (4/83)	1
78/	K "From 6/12/78"	D8LY 19A095-A		1
78/	K - - with C.B. radio	D8VY 19A095-A	11 1/2" long	1
78/	K - - with C.B. radio	D8VY 19A095-B	10 1/2" long	1
75/	L - - 6 cyl. 171(2800 cc)	D5FZ 19A095-A		1
78	P	D8BZ 19A095-A		1
78/	V - - with C.B. radio	D37Z 19A095-B		1
78/	V - - with C.B. radio	D84Y 19A095-A	14" long-incl. clip	1
78/	V - - with C.B. radio	D84Y 19A095-A	14" long	1
19A123	WIRING ASSY. (RADIO SPEAKER EXTENSION)			
77/	G - - stereo radio	(RH) D7DZ 19A123-A	(LH) D7DZ 19A123-B	1
74/	L - - stereo radio	D3FZ 19A123-A	#D32B 19A123-AB or D42B 19A123-AA	2
19A132	COVER (RADIO REAR SEAT SPEAKER)			
79	A - - w/dual rear seat speakers	D9MY 19A132-A		1
75/	D	D5VY 19A132-A		2
75/76	K	D5SZ 19A132-A		1
77/	K,V	D5VY 19A132-A		1
19A145	SHIELD (RADIO FREQUENCY SUPPRESSION)			
73/	K	D2SZ 19A145-A		1
19A169	PAD (RADIO CONTROL BEZEL MOUNTING)			
73/76	K	D2SZ 19A169-A		1
19A170	WIRING ASSY. (RADIO SPEAKER JUMPER)			
79	A - - w/dual front speakers	D9AZ 19A170-A	#D9AB 19A170-AB	1
74	C,F - - AM/FM(multiplex)	D40Z 19A170-A		1
75/76	G - - stereo radio	D5DZ 19A170-A	#D5DB 19A170-AA	1
77/	G,V - - stereo radio	D7DZ 19A170-A	#D7DB 19A170-AA	1
75/	G - - AM/FM(monaural)	D5DZ 19A170-B	#D5DB 19A170-BA	1
77/	V			1
79	J - - AM radio w/rear speakers	D9ZZ 19A170-A	#D9ZB 19A170-AB	1
79	J - - stereo w/premium sound	D9ZZ 19A170-B	#D9ZB 19A170-BA	1
79	J - - stereo w/o premium sound	D9ZZ 19A170-C	#D9ZB 19A170-CA	1
73	P - - AM/FM	D3DZ 19A170-A		1
74/75	P - - AM/FM(multiplex)	D5DZ 19A170-A		1
76/77	P - - stereo radio	D6DZ 19A170-A	#D6BB 19A170-AA	1
79	P - - stereo w/premium sound	D9ZZ 19A170-B	#D9ZB 19A170-BA	1
79	P - - stereo w/o premiun sound	D9ZZ 19A170-C	#D9ZB 19A170-CA	1

1973/79
LINCOLN-MERCURY CARS

YEAR	MODEL/RESTRICTIONS	PART NUMBER	DESCRIPTION	QTY.
19209	RETAINER (AIR CONDITIONER BLOWER MOTOR)			
73/76	C,K - - integral A/C	D2SZ 19209-A		1
74/76	F - - integral A/C			1
73/78	J - - hang-on A/C	D0RY 19209-A		1
73/77	P - - integral A/C	D0DZ 19209-A		1
74/	L - - integral A/C			1
19A245	RELAY ASSY. (POWER ANTENNA)			
75/	D	D9VY 19A245-A		1
77/	K			1
19A332	ACTUATOR ASSY. (GARAGE DOOR)			
77/	D,K,V	D7LY 19A332-A		1
19A333	KEY ASSY. (GARAGE DOOR)			
77/	D,K,V	D7LY 19A333-A		1
19A334	SWITCH ASSY. (GARAGE DOOR)			
77/	D,K,V	D7LY 19A334-A		1
19A335	GARAGE DOOR ACTUATOR KIT			
77/	D,K,V	D7LY 19A335-A		1
19A336	WIRE ASSY. (GARAGE DOOR ACTUATOR)			
77/	D,K,V	★ D7LY 19A336-A	R/b E3VY 19A336-A (4/83)	1
19A337	ANTENNA (GARAGE DOOR ACTUATOR)			
77/	D,K,V	D7LY 19A337-A		1
19A338	BUTTON (GARAGE DOOR ACTUATOR SWITCH)			
77/	D,K,V	D7LY 19A338-A	Gray	1
19469	DOOR (AIR CONDITIONER EVAPORATOR CASE DAMPER)			
73	F,P - - integral A/C	C7ZZ 19469-A	Upper	1
		★ C7ZZ 19469-B	Lower-not replaced (12/79)	1
19E500	REFLECTOR KIT			
73	ALL	C5AZ 19E500-D		AR
19A501	Refer to Paint Section			
19F501	Refer to Paint Section			
19F503	BALL (TRAILER HITCH)			
73/76	All	C6AZ 19F503-A	1 7/8" dia.-use with 19D520 trailer hitch kits	1
		C6AZ 19F503-B	2" dia.-use with 19D520 trailer hitch kits	1
19D504	LITTER CONTAINER			
73	C - - w/console	D2SZ 19D504-A		1
74/	F - - w/console			1
19B507	COVER (ROOF LUGGAGE CARRIER)			
73/76	A(71),C(71),Y(71)	D8AZ 19B507-A	Use w/roof mounted luggage	1
77	A(71),F(71)			
78	A(71)			1
78/	P(74)			1
79	A(74)	D9AZ 19B507-A	Used w/roof mounted luggage carrier	1
76/	L	D6DZ 19B507-A	Used w/roof mounted luggage carrier	1
76/77	P(62)			1
78/	F,G,P	D80Z 19B507-A	Used w/luggage compartment carrier	1
19C507-19515	Refer to Paint Section			

COPYRIGHT © 1986 — FORD MOTOR COMPANY — DEARBORN, MICHIGAN

1973/79
LINCOLN-MERCURY CARS

YEAR	MODEL/RESTRICTIONS	PART NUMBER	DESCRIPTION	QTY.
19B516	WIRING ASSY. (LUGGAGE COMPARTMENT LAMP)			
73/74	C(53,63,65)	D50Z 19B516-A		1
75/76	C(53,65)			1
74/76	F			1
73/74	C(71)	D30Z 19B516-B		1
19517-19520	Refer to Paint Section			
19D520	HITCH KIT (TRAILER) Ball also required to complete installation-Refer to group 19F503			
73	A(53,57,65)	D3MY 19D520-A	Class 1-removable tongue type	1
73	A(71) - - w/trailer towing package	D3AZ 19D520-F	Class 3-equalizer type	1
74/75	A(53,57,65) - - w/trailer towing package	D4AZ 19D520-A	Class 3	1
74/75	A(71) - - w/trailer towing package	D4AZ 19D520-D	Class 3	1
73	C(53,63,65)	D3GY 19D520-A	Class 1	1
73	C(71)	D30Z 19D520-B	Class 1	1
73	C(71) - - w/trailer towing package	D30Z 19D520-D	Class 3-equalizer type	1
74/75	C(53,65 exc. 8 cyl. 400) - - w/trailer package	D40Z 19D520-B	Class 3-trailer not to exceed 6000 lbs. G.T.W. or 700 lbs. tongue load	1
73	D - - use w/3.00 axle	D3VY 19D520-B	Class 3-equalizer type	1
73	F	D3WY 19D520-A	Class 1	1
74/75	F - - exc. 8 cyl. 400-w/trailer towing package	D40Z 19D520-B	Class 3	1
73	J	D2RY 19D520-A	Class 1-when used with 4 cyl. 122(2000 cc) engine with A/T use transmission Oil Cooler Kit	1
73	K	D3LY 19D520-A	Class 1	1
74/75	K	D4LY 19D520-A	Class 1	1
19521-19534	Refer to Paint Section			
19D522	BAR (TRAILER HITCH)			
74	A(53,57,65)	D4AZ 19D522-A	Removable tongue type	1
75/76	A(53,65),Y(53,65)	D5AZ 19D522-C		1
74/76	A(71),Y(71)	D5AZ 19D522-B		1

YEAR	MODEL/RESTRICTIONS	PART NUMBER	DESCRIPTION	QTY.
19D524	PLATE (TRAILER HITCH BAR SUPPORT MOUNTING)			
75/76	A(53,65),Y(53,65) - - w/class 1 trailer hitch	D5AZ 19D524-B		1
19F524	REFLECTOR ASSY. (FLARE)			
74/	All	D4AZ 19F524-A		AR
19E525	SPOILER (AIR CONDITIONER)			
79	L	D9FZ 19E525-A		1
19F532	PAD ASSY. (CHILD SEAT IMPACT SHIELD)			
74/	All	E1AZ 19F532-A		1
19E535	SEAT (CHILD'S SAFETY)			
73/	All - - U.S.	D4AZ 19E535-A	Tot guard	AR
75	All - - U.S.	★ D5AZ 19E535-A	Infant carrier -r/b D7AZ 19E535-A (6/77)	AR
76	A,C,D,F,K,P - - U.S.			AR
76	G,L - - U.S.	★ D7AZ 19E535-A	Infant carrier-r/b D8AZ 19E535-A(3/79)	AR
77	All - - U.S.-exc. Calif.			AR
75	All - - Canada	D5AZ 19E535-B	Infant carrier	AR
76	A,C,D,F,K,P,Y - - Canada			AR
76	G,L - - Canada	D7AZ 19E535-B	Infant carrier	AR
77/78	All - - Canada			AR
79	All - - Canada	D8AZ 19E535-B	Infant carrier	1
78/	All - - U.S.	E1AZ 19E535-A	Infant carrier	1
19F535-19A540	Refer to Paint Section			
19F538	COVER (TISSUE DISPENSER)			
73	C - - w/console	D2SZ 19F538-A		1
74	F - - w/console			1
19B540	FIRE EXTINGUISHER and BRACKET KIT			
73/		D6AZ 19B540-A	10BC 2 3/4 lb. dry chemical	1
19A541-19B542	Refer to Paint Section			
19C542	SWITCH and WIRING ASSY. (LUGGAGE COMPARTMENT REMOTE CONTROL LATCH)			
73/74	A,D	C9AZ 19C542-A	Dealer installed	1
73	F			1
74	K,L(62,64),P			1
73/76	D "From 4/2/73"	D3AY 19C542-A	Production installed	1
74/76	A,K,Y			1
76	C,F			1
77/	A,D,F,G,K,V			1
79	J			1
78/	P			1
19D542	WIRING ASSY. (LUGGAGE COMPARTMENT REMOTE CONTROL LOCK)			
74	A(53,57,65),Y(53,65)	D4AZ 19D542-A		1
79	A(54,66)	D9AZ 19D542-A		1
76	C(53,65P/C)	D60Z 19D542-A		1
79	J	D9ZZ 19D542-A		1
79	P	D9BZ 19D542-A		1
77/	G,V	D7DZ 19D542-A		1

COPYRIGHT © 1986 — FORD MOTOR COMPANY — DEARBORN, MICHIGAN

1973/79 LINCOLN-MERCURY CARS

YEAR	MODEL/RESTRICTIONS	PART NUMBER	DESCRIPTION	QTY.
19C543	CYLINDER ASSY. (SPARE TIRE INFLATOR)			
75/76	C,F - - w/collapsible spare tire	D50Z 19C543-A		1
77/	D,F,K - - w/collapsible spare tire	D50Z 19C543-A		1
75/	G - - w/collapsible spare tire	D5DZ 19C543-A		1
75/77	P - - w/collapsible spare tire			1
77/	V - - w/collapsible spare tire			1
19C544-19B546	Refer to Paint Section			
19A547-19C547	Refer to Paint Section			
19C548-19550	Refer to Paint Section			
19A551	MEDALLION (AIR CONDITIONER REGISTER)			
73/	A,F,J,P - - hang-on A/C	D1FZ 19A551-A		1
73/76	C - - w/o built-in A/C (dealer installed)			1
75/	G - - hang-on A/C			1
74	L - - hang-on A/C			1
19552	Refer to Paint Section			
19B552	SEAL (AIR CONDITIONER EVAPORATOR CORE TUBE TO CASE)			
73	F - - integral A/C	C9ZZ 19B552-A		1
19553-19560	Refer to Paint Section			
19A553	Refer to group 19A559			
19A555	DOOR ASSY. (HEATER AIR OUTLET DAMPER)			
78/	P - - integral A/C	D9BZ 19A555-A		1
79	J - - integral A/C			1
19A559	HOUSING ASSY. (AIR CONDITIONER EVAPORATOR CORE)			
73/74	A,Y - - integral A/C	(RH) ★ D3AZ 19A559-B not replaced (4/83)	(LH) D3AZ 19A559-A	1
75/76	A,Y - - integral A/C	(RH) D5AZ 19A559-A	(LH) D5AZ 19A559-B	1
77/78	A - - integral A/C			1
79	A - - integral A/C	(RH) D9AZ 19A559-B	(LH) D9AZ 19A553-A	1
79	A - - heater	(RH) D9AZ 19A559-A	(LH) D9AZ 19A553-A	1
77/78	F,K - - integral A/C "Before 4/10/78"	(RH) D70Z 19A559-A	(LH) D70Z 19A553-A	1
78/	F,K - - integral A/C "From 4/10/78"	(RH) D8LY 19A559-A	(LH) D8LY 19A553-A	1
73	C - - integral A/C	(RH) D20Z 19A559-B	(LH) D30Z 19A553-A	1
73/77	D - - integral A/C	(RH) ★ D3VY 19A559-A not repld. (11/81)	(LH) D3AZ 19A559-B	1
78/	D	(RH) D5AZ 19A559-A	(LH) D5AZ 19A559-B	1
19A563	VALVE (VACUUM CHECK)			
73	A,Y - - heater only	C60Z 19A563-A	*YG-34-1/4" O.D. nipples at both ends	1
73	F - - integral A/C			1
79	A - - integral A/C	D9AZ 19A563-A		1
73/78	A - - integral A/C	D70Z 19A563-A	*YG-193	1
73/	D - - integral A/C			1
74/	L - - integral A/C			1
75/	G - - integral A/C			1
77/	F,K - - integral A/C			1
79	J - - integral A/C			1
78/	P - - integral A/C			1

YEAR	MODEL/RESTRICTIONS	PART NUMBER	DESCRIPTION	QTY.
19D565	BAFFLE (PLENUM CHAMBER)			
73/77	D	★ D0VY 19D565-A	Not replaced (4/83)	1
19A566	TANK and BRACKET (AIR CONDITIONER VACUUM RESERVOIR)			
73	A,Y - - A.T.C.	D2AZ 19A566-A		1
74/76	A,Y - - A.T.C.	D8VY 19A566-A		1
77/78	A - - A.T.C. "Before 9/1/77"			1
73	A,Y - - manual integral A/C	D3AZ 19A566-A		1
74/76	A,Y - - manual integral A/C	D4AZ 19A566-B		1
77/78	A - - manual integral A/C "Before 9/1/77"			1
78	A "From 9/1/77"	D8VY 19A566-A		1
79	A - - manual integral A/C and/or heater	D9AZ 19A566-A		1
79	A - - A.T.C.	D8VY 19A566-A		1
73	C - - integral A/C	★ D20Z 19A566-A	Not replaced (3/84)	1
74/76	C - - manual integral A/C	D40Z 19A566-A		1
74/76	C - - A.T.C.	D40Z 19A566-B		1
73	D	D2SZ 19A566-A		1
74/	D	D8VY 19A566-A		1
73	F - - integral A/C	D3AZ 19A566-A		1
74/76	F - - manual integral A/C	D40Z 19A566-A		1
77/79	F - - manual integral A/C "Before 2/1/79"	D70Z 19A566-A		1
79	F - - manual integral A/C "From 2/1/79"	D90Z 19A566-A		1
74/76	F - - A.T.C.	D40Z 19A566-B		1
77/79	F - - A.T.C. "Before 2/1/79"	D70Z 19A566-B		1
79	F - - A.T.C. "From 2/1/79"	D40Z 19A566-B		1
75/78	G - - manual integral A/C "Before 9/1/77"	D40Z 19A566-A		1
77/78	G,V - - A.T.C. "Before 9/1/77"	D8DZ 19A566-B		1
78/	G - - manual integral A/C "From 9/1/77"	D8DZ 19A566-A		1
78/	G,V - - A.T.C. "From 9/1/77"	D8DZ 19A566-B		1
74/78	J - - integral A/C	D40Z 19A566-A		1
79	J - - integral A/C	D8BZ 19A566-A		1
73	K	D2SZ 19A566-A		1
74/76	K	D40Z 19A566-B		1
77/79	K "Before 2/1/79"	D70Z 19A566-B		1
79	K "From 2/1/79"	D40Z 19A566-B		1
74	L - - integral A/C	D40Z 19A566-A		1
75/78	L - - integral A/C "Before 9/1/77"	D40Z 19A566-A		1
78/	L - - integral A/C "From 9/1/77"	D8DZ 19A566-A		1
73	P - - integral A/C	D6TZ 19A566-A		1
74/77	P - - integral A/C	D40Z 19A566-A		1
78/	P - - integral A/C	D8BZ 19A566-A		1
19C566	INSULATOR (AIR CONDITIONER CONDENSER LOWER)			
79	A,F - - integral A/C	D9ZZ 19C566-A		1
19D567	LIQUID LINE (AIR CONDITIONER DRYER TO EVAPORATOR)			
	Refer to Section 197 for Serviced Refrigerant Line Assemblies and/or replacement details.			
19A568	Refer to group 19B725			

COPYRIGHT © 1986 — FORD MOTOR COMPANY — DEARBORN, MICHIGAN

1973/79 LINCOLN-MERCURY CARS

YEAR	MODEL/RESTRICTIONS	PART NUMBER	DESCRIPTION	QTY.
19C574	BRACKET (AIR CONDITIONER EVAPORATOR TUBE SUPPORT)			
75/76	A,Y - - 8 cyl. 351,400 - - integral A/C	D5AZ 19C574-B	R.H.	1
75/76	A - - integral A/C	D5MY 19C574-A	L.H.	1
75/76	A,Y - - integral A/C "Before 1/12/76"	D5AZ 19C574-A	Upper	1
76	A,Y - - integral A/C "From 1/12/76"	D6AZ 19C574-A	Upper	1
77/78	A - - integral A/C			1
79	A - - integral A/C	D9AZ 19C574-A	2 3/4" long	1
79	A - - integral A/C	D9AZ 19C574-B	2 1/4" long	1
73	C - - integral A/C	D50Z 19C574-B	Clamp type	1
73	C - - integral A/C	D2SZ 19C574-C		1
74	D			1
75/77	D	D3AZ 19C574-A	Upper	1
75/77	D	D3AZ 19C574-B	Upper-clamp type	1
78/	D	D6AZ 19C574-A	Upper	1
79	D - - 8 cyl. 400	D5MY 19C574-A	L.H.	1
73/76	C,K - - integral A/C	D20Z 19C574-A	Clamp type	1
74/	F - - integral A/C			1
77/	K			1
75/76	C,F - - integral A/C	D50Z 19C574-B	Clamp to hose	1
73/74	K			1
77/	F,K - - integral A/C "From 6/1/77"	D70Z 19C574-B		1
19577-19581	Refer to Paint Section			

19D580	VALVE ASSY. (AIR CONDITIONER EVAPORATOR SUCTION THROTTLE)			
Note 1	With Certification Label Code AR8 or AR9			
Note 2	With Certification Label Code A			
73/76	A - - integral A/C "Before 1/2/76"	D0VY 19D580-A	*YG-116-r/b D6VY 19D580-A(11/81)	1
76	A - - integral A/C	D6VY 19D580-A	*YG-182	1
76/	A - - integral A/C "From 6/1/76"	D6VY 19D580-B	*YG-195	1
79	A - - integral A/C "Before 10/2/78"	D90Z 19D580-A	*YG-208	1
79	A - - integral A/C "From 10/2/78"	D9AZ 19D580-A	*YG-218	1
73/74	C - - integral A/C	D0VY 19D580-A	*YG-116	1
75/76	C - - integral A/C	D6VY 19D580-A	*YG-182	1
73/75	D	D0VY 19D580-A	*YG-116	1
76	D "Before 6/1/76"	D6VY 19D580-A	*YG-182	1
76/	D "From 6/1/76"	D6VY 19D580-B	*YG-195	1
79	D	D9LY 19D580-A	*YG-208	1
74	F - - integral A/C	D0VY 19D580-A	*YG-116	1
75/76	F - - integral A/C-w/accumulator	D6VY 19D580-A	*YG-182	1
76	F - - integral A/C-w/o accumulator	D6VY 19D580-B	*YG-195	1
77/78	F - - integral A/C-w/accumulator	D70Z 19D580-A	*YG-187 -Note 2	1
79	F - - integral A/C "Before 2/1/79"	D90Z 19D580-A	*YG-210	1
79	F - - integral A/C "From 2/1/79"	D9LY 19D580-A	*YG-208	1
78	F - - integral A/C-w/o accumulator	D6VY 19D580-B	*YG-195-Note 1	1
75	G - - integral A/C	D5DZ 19D580-A	*YG-159	1
76/	G - - integral A/C	D6DZ 19D580-A	*YG-176	1
77/	V - - integral A/C			1
79	J - - integral A/C	D6DZ 19D580-A	*YG-176	1
73	K "Before 4/15/73"	D0VY 19D580-A	*YG-116	1
73/76	K "From 4/15/73 to 6/1/76"	D6SZ 19D580-A	*YG-181	1
76/78	K "From 6/1/76"	D6VY 19D580-B	*YG-195	1
79	K	D9LY 19D580-A	*YG-208	1
74/76	L - - integral A/C "Before 1/2/76"	D0VY 19D580-A	*YG-116	1
76	L - - integral A/C "From 1/2/76"	D6VY 19D580-A	*YG-182	1
77/	L - - integral A/C	D6DZ 19D580-A	*YG-176	1
78/	P - - integral A/C	D6DZ 19D580-A	*YG-176	1
73/76	Y - - integral A/C "Before 1/2/76"	D0VY 19D580-A	*YG-116	1
76	Y - - integral A/C "From 1/2/76"	D6VY 19D580-A	*YG-182	1

YEAR	MODEL/RESTRICTIONS	PART NUMBER	DESCRIPTION	QTY.
19582-19585	Refer to Paint Section			
19A586	PLATE (AIR CONDITIONER EVAPORATOR HOUSING COVER)			
78	A - - integral A/C	D8VY 19A586-B		1
78/	D	D8VY 19A586-B		1
19587	Refer to Paint Section			
19B588	SEAL (AIR CONDITIONER TUBES TO DASH PANEL)			
76	G - - integral A/C	D6DZ 19B588-A		1
79	J - - integral A/C	D8BZ 19B588-A		1
74	L - - integral A/C	D4FZ 19B588-A		1
75/76	L - - integral A/C	D5FZ 19B588-A		1
77/	L - - integral A/C	D7FZ 19B588-A		1
78/	P - - integral A/C	D8BZ 19B588-A		1
19B589	BRACKET (AIR CONDITIONER EVAPORATOR TUBE SUPPORT)			
79	A - - integral A/C	D9AZ 19B589-A		1
77/	K - - integral A/C	D7LY 19B589-A	L shaped 5 1/4" long	1
77/	F,K - - integral A/C "From 6/1/77"	D70Z 19B589-B		1
78/	P - - integral A/C	D8BZ 19B589-A		1
19C590	DUCT ASSY. (AIR CONDITIONER RECIRCULATING AIR)			
79	A	E0VY 19C590-A		1
73/76	C,K - - integral A/C	D2SZ 19C590-A		1
74/76	F - - integral A/C			1
77/78	F,K - - integral A/C	D70Z 19C590-A		1
79	F,K - - integral A/C	D9LY 19C590-A		1
76/	G - - integral A/C	D9DZ 19C590-A		1
77/	V - - integral A/C			1
79	J - - integral A/C	D9BZ 19C590-A		1
74/	L - - integral A/C	D4FZ 19C590-A		1
78	P - - integral A/C	D8BZ 19C590-A		1
79	P - - integral A/C	D9BZ 19C590-A		1
19D592	RELAY ASSY. (AUTOMATIC TEMPERATURE CONTROL)			
73/76	A,D,K,Y	D2LY 19D592-A	*YH-191	1
74/76	C,F			1
74/77	P - - integral A/C and 6 cyl. 250			1
77/78	A,F			1
77/	D,G,V			1
19C593	SEAL (AIR CONDITIONER EVAPORATOR CASE TO DASH PANEL)			
74	L - - integral A/C	D4FZ 19C593-A		1
75/	L - - integral A/C	D5FZ 19C593-A		1
73/77	P - - integral A/C "From 12/15/72"	D2DZ 19C593-B	R.H. and L.H.	2
19B594	BRACKET (AIR CONDITIONER CONDENSER MOUNTING)			
79	A - - integral A/C	D9AZ 19B594-A		1
79	J - - integral A/C	D9ZZ 19B594-A	R.H. and L.H.	1
73/	C,F,J,L,P - - hang-on A/C	D1RY 19B594-A		1
73/	A,Y - - hang-on-Canada only			1
75/	G - - hang-on A/C			1
19B595-6	Refer to Section 197 for Service Refrigerant Line Assemblies and/or replacement details			
19C603	WIRING ASSY. (AIR CONDITIONER)			
73/78	A,Y - - built-in A/C (dealer installed)-Canada only	D2AZ 19C603-A		1
73/76	C			1
73/75	J,P - - deluxe hang-on A/C			1
74/	L - - built-in A/C (dealer installed)			1
78/	P - - built-in A/C (dealer installed)	D8BZ 19C603-A		1
79	J - - built-in A/C (dealer installed)			1
19D606	BRACKET ASSY. (AUTOMATIC TEMPERATURE CONTROL MUFFLER and HOSE)			
73/74	A,Y - - 8 cyl. 429,460	D1SZ 19D606-A		1
19D607	BRACKET (AIR CONDITIONER ACCUMULATOR)			

COPYRIGHT © 1986 — FORD MOTOR COMPANY — DEARBORN, MICHIGAN

1973/79 LINCOLN-MERCURY CARS

YEAR	MODEL/RESTRICTIONS	PART NUMBER	DESCRIPTION	QTY.
19D611	SOLENOID AND MANIFOLD ASSY. (AUTOMATIC TEMPERATURE CONTROL BOX)			
73/77	D	D2SZ 19D611-A		1
73/74	K			1
19D612	AMPLIFIER ASSY. (AUTOMATIC TEMPERATURE CONTROL BOX)			
73/77	D	D1AZ 19D612-A		1
73/74	K			1
19D613	TRANSDUCER ASSY. (AUTOMATIC TEMPERATURE CONTROL BOX)			
73/77	D	D1AZ 19D613-A		1
73/74	K			1
19D617	SWITCH ASSY. (SERVO AUTOMATIC TEMPERATURE CONTROL BOX)			
73/77	D	D1AZ 19D617-A		1
19618	THERMOSTAT (AIR CONDITIONER EVAPORATOR TEMPERATURE CONTROL)			
73	A - - integral A/C "Before 1/1/73"	★ D0VY 19618-A	*YH-121-not replaced (3/84)	1
73/	A - - integral A/C "From 6/15/73"	D6AZ 19618-A	*YH-304	1
73/78	A - - hang-on A/C	E1FZ 19618-A	*YH-239	1
79	A - - built-in A/C (dealer installed)	D8TZ 19618-A	*YH-352	1
73	C - - integral A/C "Before 1/1/73"	★ D0VY 19618-A	*YH-121-not replaced (3/84)	1
73/76	C - - integral A/C "From 1/1/73"	D6AZ 19618-A	*YH-304	1
73/76	C - - economy hang-on A/C	D2AZ 19618-A	*YH-139	1
73/76	C - - built-in A/C (dealer installed)	D1RY 19618-A	*YH-137	1
73	D "Before 1/1/73"	★ D0VY 19618-A	*YH-121-not replaced (3/84)	1
73/74	D "From 1/1/73"	D4ZZ 19618-A	*YH-209	1
75/76	D "Before 6/15/76"	D6AZ 19618-A	*YH-304	1
76/	D "From 6/15/76"	D6AZ 19618-A	*YH-304	1
74/	F - - integral A/C	D6AZ 19618-A	*YH-304	1
73/76	F - - economy hang-on A/C	D2AZ 19618-A	*YH-139	1
74/76	F - - built-in A/C (dealer installed)	D4ZZ 19618-A	*YH-209	1
77/	F - - built in A/C (dealer installed)	D2AZ 19618-A	*YH-139	1
75/	G - - integral A/C "From 6/15/76"	D6AZ 19618-A	*YH-304	1
75/	G - - built-in A/C (dealer installed)	E1FZ 19618-A	*YH-239	1
79	J - - integral A/C	D8BZ 19618-A	*YH-320	1
73/78	J - - built-in A/C (dealer installed)	D4ZZ 19618-B	*YH-239	1
73	K "Before 1/1/73"	★ D0VY 19618-A	*YH-121-not replaced (3/84)	1
73/74	K "From 1/1/73"	D4ZZ 19618-A	*YH-209	1
75/	K	D6AZ 19618-A	*YH-304	1
74/	L - - integral A/C	D4ZZ 19618-A	*YH-209	1
74/	L - - built-in A/C (dealer installed)	E1FZ 19618-A	*YH-239	1
75	L - - economy hang-on A/C	D2AZ 19618-A	*YH-139	1
73	P - - integral A/C "Before 12/15/72"	C60Z 19618-B	*YH-112	1

YEAR	MODEL/RESTRICTIONS	PART NUMBER	DESCRIPTION	QTY.
19618	THERMOSTAT (AIR CONDITIONER EVAPORATOR TEMPERATURE CONTROL) - Cont'd.			
73/77	P - - integral A/C "From 12/15/72"	D3DZ 19618-A	*YH-217	1
78/	P - - integral A/C	D8BZ 19618-A	*YH-320	1
73/75	P - - economy hang-on A/C	D2AZ 19618-A	*YH-139	1
73/	P - - built-in A/C (dealer installed)	E1FZ 19618-A	*YH-239	1
77/	V	D6AZ 19618-A	*YH-304	1
73	Y - - integral A/C "Before 1/1/73"	★ D0VY 19618-A	*YH-121-not replaced (3/84)	1
73/76	Y - - integral A/C "From 1/1/73"	D6AZ 19618-A	*YH-304	1
19A618	DUCT ASSY. (AIR CONDITIONER AIR INLET)			
75/76	A,Y	D5MY 19A618-A		1
77/78	A "Before 6/1/78"			1
78	A "From 6/1/78"	D8VY 19A618-A		1
79	A	D9AZ 19A618-A		1
73/76	C - - integral A/C	D20Z 19A618-A		1
74/76	F - - integral A/C			1
77/	F - - integral A/C	D70Z 19A618-A		1
78/79	D "Before 11/1/78"	D5MY 19A618-A		1
79	D "From 11/1/78"	D8VY 19A618-A		1
75/	G	D7DZ 19A618-A		1
77/	V			1
79	J - - integral A/C	D8BZ 19A618-B		1
77/	K	D7LY 19A618-A		1
78/	P	D8BZ 19A618-B		1
19623	HOUSING (AIR CONDITIONER INSTRUMENT PANEL REGISTER)			
75	D	D5VY 19623-C	R.H. and L.H. - gold	2
		D5VY 19623-G	R.H. and L.H. - green	2
		D5VY 19623-E	R.H. and L.H. - tan	2
		D5VY 19623-F	R.H. and L.H. - taupe	2
76	D	D5VY 19623-C	R.H. and L.H. - gold	2
		D5VY 19623-G	R.H. and L.H. - green	2
		D5VY 19623-E	R.H. and L.H. - tan	2
		D5VY 19623-F	R.H. and L.H. - taupe	2
77	D	D5VY 19623-C	R.H. and L.H. - gold	2
19A623	BRACKET (AIR CONDITIONER BLOWER HOUSING SUPPORT)			
73/76	C,K - - integral A/C	D20Z 19A623-A		1
74/76	F - - integral A/C			1
77/	F,K - - integral A/C	D70Z 19A623-A		1

COPYRIGHT © 1986 — FORD MOTOR COMPANY — DEARBORN, MICHIGAN

1973/79 LINCOLN-MERCURY CARS

YEAR	MODEL/RESTRICTIONS	PART NUMBER	DESCRIPTION	QTY.
19A623	BRACKET (AIR CONDITIONER BLOWER HOUSING SUPPORT) — Cont'd			
78/	P - - integral A/C	D8BZ 19A623-A		1
79	J - - integral A/C			1
78/	P - - built-in A/C-dealer installed	D8BZ 19A623-B		1
79	J - - built-in A/C (dealer installed)			1
19A626	CASE ASSY. (AIR CONDITIONER EVAPORATOR)			
75/76	A,Y - - integral A/C	D6AZ 19A626-A		1
77	A - - integral A/C			1
78	A - - integral A/C "Before 10/1/77"	★ D8VY 19A626-A	R/b D8VY 19A626-B and D7DZ 18591-A(11/81)	1
78	A - - integral A/C "From 10/1/77"	D8VY 19A626-B		1
75/77	D	D5VY 19A626-A		1
78	D "Before 10/1/77"	D8VY 19A626-A		1
78/	D "From 10/1/77"	D8VY 19A626-B		1
73	F - - integral A/C	D1ZZ 19897-B	Upper	1
		★ D1ZZ 19897-A	Lower-not replaced (12/79)	1
75/77	G - - manual integral A/C "Before 12/1/76"	D6DZ 19897-A		1
77	G - - manual integral A/C "From 12/1/76 to 6/1/77"	★ D7DZ 19897-C	Lower-not replaced (4/83)	1
77/78	G - - manual integral A/C "From 6/1/77 to 10/1/77"	D9DZ 19897-A	Lower	1
78	G - - manual integral A/C "From 10/1/77"	D8DZ 19897-A	Lower	1
77	G,V - - A.T.C. "Before 6/1/77"	★ D7DZ 19897-B	Lower-not replaced (11/81)	1
77/	G,V - - A.T.C. "From 6/1/77"	D9DZ 19897-B	Lower	1
79	J - - integral A/C	D9BZ 19897-A	Lower	1
75	L "Before 2/13/74"	★ D5FZ 19897-A	Lower-not replaced (12/79)	1
75/76	L - - integral A/C "From 2/13/74"	D5FZ 19897-B		1
77/78	L - - integral A/C "Before 11/1/77"	★ D7FZ 19897-A	Not replaced (4/83)	1
78/	L - - integral A/C "From 11/1/77"	D8FZ 19897-B		1
73	P - - integral A/C "Before 12/15/72"	★ D0DZ 19897-B	Upper-not replaced (9/78)	1
		★ D0DZ 19897-A	Lower-not replaced (11/81)	1
73	P - - integral A/C "From 12/15/72 to 3/1/73"	D3DZ 19897-D	Upper	1
		D3DZ 19897-A	Lower	1
73/76	P - - integral A/C- "From 3/1/73 to 2/15/76"	D6DZ 19897-D	Upper	1
		D3DZ 19897-C	Lower	1

YEAR	MODEL/RESTRICTIONS	PART NUMBER	DESCRIPTION	QTY.
19A626	CASE ASSY.(AIR CONDITIONER EVAPORATOR) — Cont'd.			
76/77	P - - integral A/C	★ D6DZ 19897-B	Upper-not replaced (11/81)	1
	"From 2/15/76"	★ D6DZ 19897-C	Lower-not replaced (3/84)	1
78	P - - integral A/C	D8BZ 19897-A	Lower	1
79	P - - integral A/C	D9BZ 19897-A		1
19627	SCREEN (AIR CONDITIONER WATER IMPINGEMENT FOAM)-Also refer to Paint section			
73/	A,C,F,J,P,Y - - hang-on A/C	D3TZ 19627-A		1
75/	G,L - - hang-on A/C			1
73/	A,Y - - hang-on A/C-Canada only	D3TZ 19627-A		1
73/76	C - - built-in A/C-dealer installed	D40Z 19627-A		1
74/	F - - built-in A/C-dealer installed			1
75/	G - - built-in A/C-dealer installed	D5DZ 19627-A		1
78/	P - - built-in A/C-dealer installed	D8BZ 19627-A		1
79	J - - built-in A/C (dealer installed)			1
19C627	CONNECTOR ASSY. (AIR CONDITIONER REGISTER)			
78/	P - - built-in A/C-dealer installed	D8BZ 19C627-A		1
79	J - - built-in A/C (dealer installed)			1
19A630	SEAL (AIR CONDITIONER COMPRESSOR HIGH PRESSURE VALVE)			
73/76	A,C,F,L,P,Y - - integral A/C	D0AZ 19A630-A		1
77/	F,L,P - - integral A/C			1
19D631	SLEEVE (AIR CONDITIONER REFRIGERANT TUBE PROTECTIVE)-Improvise			
19A634	CLAMP (AIR CONDITIONER EVAPORATOR EXPANSION VALVE BULB)			
73	A,Y - - integral A/C	C9AZ 19A634-A	Steel-use on aluminum A/C evaporator core 19860	1
78	A - - integral A/C			1
73/76	C,K - - integral A/C			1
74/	F,L - - integral A/C			1
77/	D,K			1
75	G			1
73/76	A,D,K,Y	D1VY 19A634-B	Aluminum	1
73/76	C			1
77	D,K			1
73/76	A,Y - - integral A/C	C9AZ 19A634-B	Use on copper A/C evaporator core 19860	1
77	A - - integral A/C			1
73/76	C,K - - integral A/C	D0VY 19A634-A		1
77	K - - integral A/C			1
79	A,J - - built-in A/C (dealer installed)	D8RZ 19A634-A		1
78/	P - - built-in A/C (dealer installed)			1
19D637	SEAL ASSY. (AIR CONDITIONER EVAPORATOR CASE)			
73/76	C	D20Z 19D637-A		1
74/76	F			1
77/	F,K	D9LY 19D637-A		1
19A639	BRACKET (AIR CONDITIONER EVAPORATOR CASE SUPPORT REAR)			
78/	P - - integral A/C	E0SZ 19A639-A		1
79	J - - integral A/C			1

COPYRIGHT © 1986 — FORD MOTOR COMPANY — DEARBORN, MICHIGAN

1973/79 LINCOLN-MERCURY CARS

YEAR	MODEL/RESTRICTIONS	PART NUMBER	DESCRIPTION	QTY.
19D644	**VALVE (AIR CONDITIONER COMPRESSOR PRESSURE RELIEF)**			
73/76	A,C,D,F,K,P,Y	D2AZ 19D644-A	*YF-878	1
77/78	D			1
75/	G			1
77/	A,F,K,P			1
74/	J,L			1
19D645	**TUBE (AIR CONDITIONER COMPRESSOR OIL INLET)**			
73/	D,K	D1VY 19D645-A	Use with Frigidaire-swash plate compressor	1
74	A - - 8 cyl. 460 with A.T.C.			1
75/76	A,Y			1
77/	A,V			1
76/	G			1
19D646-7	**HEAD (AIR CONDITIONER COMPRESSOR)**			
73/78	D "Before 5/1/78"	D1VY 19D646-A	Front-use with Frigidaire-swash plate compressor	1
73/	K			1
74	A - - 8 cyl. 460 with A.T.C.	D1VY 19D647-A	Rear-use with Frigidaire-swash plate compressor	1
75/76	A,Y			1
77/	A,V			1
76/	G			1
78/	D "From 5/1/78"	D1VY 19D646-A	Front-use with Frigidaire-swash plate compressor	1
		D9VY 19D647-A	Rear-use with Frigidaire-swash plate compressor	1
19D648	**SPACER (AIR CONDITIONER COMPRESSOR CLUTCH HUB)**			
73/	D,K	D1VY 19D648-A	Use with Frigidaire-swash plate compressor	1
74	A - - 8 cyl. 460 with A.T.C.			1
75/76	A,Y			1
77/	A,V			1
76/	G			1
19B650	**CONNECTOR (AIR CONDITIONER VACUUM HOSE)**			
79	F,G,K,P,V - - w/mini tube vac harness	D9SZ 19B650-A		1
19D651	**KEY (AIR CONDITIONER COMPRESSOR CLUTCH HUB)**			
73/	D,K	D1VY 19D651-A	Use with Frigidaire-swash plate compressor	1
74	A - - 8 cyl. 460 with A.T.C.			1
75/76	A,Y			1
77/	A,V			1
76/	G			1
73/74	A	D9BZ 19D651-A		1
73/76	C			1
73/79	F,L,P			1
75	G			1
19D652	**SCREEN (AIR CONDITIONER COMPRESSOR OIL SUCTION)**			
73/	D,K	D1VY 19D652-A	Use with Frigidaire-swash plate compressor	1
74	A - - 8 cyl. 460 with A.T.C.			1
75/76	A,Y			1
77/	A,V			1
76/	G			1
19D653	**PULLEY and BEARING ASSY. (AIR CONDITIONER COMPRESSOR)**			
73/	D,K	D1VY 19D653-A	*YB-197- use with Frigidaire-swash plate compressor	1
74	A - - 8 cyl. 460 with A.T.C.			1
75/76	A,Y			1
77/	A,V			1
76/	G			1
19D654	**CYLINDER and SHAFT ASSY. (AIR CONDITIONER COMPRESSOR)**			
73/	D,K	D1VY 19D654-A	Use with Frigidaire-swash plate compressor	1
74	A - - 8 cyl. 460 with A.T.C.			1
75/76	A,Y			1
77/	A,V			1
76/	G			1

YEAR	MODEL/RESTRICTIONS	PART NUMBER	DESCRIPTION	QTY.
19655	SEAL KIT (AIR CONDITIONER COMPRESSOR CRANKSHAFT)			
73/	All - - integral A/C	C9AZ 19655-A	*YE-10-use with Tecumseh compressor	1
73/	All - - integral A/C	C9AZ 19655-B	*YE-11-use with five hole c/shaft seal plate or York compressor-(exc. Model R210-L)	1
73/	All - - hang-on A/C	D0AZ 19655-C	*YE-5-use with six hole c/shaft seal plate or York compressor-(exc. Model R210-L)	1
73/	All - - hang-on A/C	D0AZ 19655-C	*YE-5-use with six hole c/shaft seal plate or York compressor-(Model R210-L)	1
74/	L - - integral A/C			1
19D655	COVER (AIR CONDITIONER COMPRESSOR SUCTION)			
73/	D,K	D1VY 19D655-A	Use with Frigidaire-swash plate compressor	1
74	A - - 8 cyl. 460 with A.T.C.			1
75/76	A,Y			1
77/	A,V			1
76/	G			1
19656	PLATE (AIR CONDITIONER COMPRESSOR VALVE)			
73/	All	C3GY 19656-A	*YE-6-Tecumseh compressor	1
73/	All	D5AZ 19656-A	*YE-17-York compressor	1
19D656-7	PLATE ASSY. (AIR CONDITIONER COMPRESSOR VALVE)			
73/	D,K	D1VY 19D656-A	Front-use with Frigidaire-swash plate compressor	1
74	A - - 8 cyl. 460 with A.T.C.			1
75/76	A,Y			1
77/	A,V			1
76/	G			1
73/	D,K	D1VY 19D657-A	Rear-use with Frigidaire-swash plate compressor	1
74	A - - 8 cyl. 460 with A.T.C.			1
75/76	A,Y			1
77/	A,V			1
76/	G			1
19C658	STUD (AIR CONDITIONER CONDENSER MOUNTING)			
73/76	A,C,D,K,Y	D2SZ 19C658-A		4
77/	A,D,K,P			4
74/	F			4
76/	G			4
77/	V			4
19D658	SCREW (AIR CONDITIONER COMPRESSOR CHARGING OIL DRAIN PLUG)			
73/	D,K	D1VY 19D658-A	Use with Frigidaire-swash plate compressor	1
74	A - - 8 cyl. 460 with A.T.C.			1
75/76	A,Y			1
77/	A,V			1
76/	G			1
19D659	REED (AIR CONDITIONER COMPRESSOR VALVE INLET)			
73/	D,K	D1VY 19D659-A	Use with Frigidaire-swash plate compressor	1
74	A - - 8 cyl. 460 with A.T.C.			1
75/76	A,Y			1
77/	A,V			1
76/	G			1
19D660	"O" RING KIT (AIR CONDITIONER COMPRESSOR)			
73/	D,K	D1VY 19D660-A	*YF-676-use with Frigidaire-swash plate compressor	1
74	A - - 8 cyl 460 with A.T.C.			1
75/76	A,Y			1
77/	A,V			1
76/	G			1

COPYRIGHT © 1986 — FORD MOTOR COMPANY — DEARBORN, MICHIGAN

1973/79 LINCOLN-MERCURY CARS

YEAR	MODEL/RESTRICTIONS	PART NUMBER	DESCRIPTION	QTY.
19D661	GASKET (AIR CONDITIONER COMPRESSOR CHARGING SCREW)			
73/	D,K	D1VY 19D661-A	Use with Frigidaire-swash plate compressor	1
74	A - - 8 cyl. 460 with A.T.C.			1
75/76	A,Y			1
77/	A,V			1
76/	G			1
19D662	PIN (AIR CONDITIONER COMPRESSOR HEAD LOCATOR)			
73/	D,K	D1VY 19D662-A	Use with Frigidaire-swash plate compressor	4
74	A - - 8 cyl. 460 with A.T.C.			4
75/76	A,Y			4
77/	A,V			4
76/	G			4
74/78	F	D9FZ 19B663-A		1
74/	L			1
19D663	OIL PUMP ROTOR KIT (AIR CONDITIONER COMPRESSOR)			
73/	D,K	D1VY 19D663-A	Use with Frigidaire-swash plate compressor	1
74	A - - 8 cyl. 460 with A.T.C.			1
75/76	A,Y			1
77/	A,V			1
76/	G			1
19D664	RETAINER RING KIT (AIR CONDITIONER COMPRESSOR)			
73/	D,K	D1VY 19D664-A	Use with Frigidaire-swash plate compressor	1
74	A - - 8 cyl. 460 with A.T.C.			1
75/76	A,Y			1
77/	A,V			1
76/	G			1
19D665	SEAL KIT (AIR CONDITIONER COMPRESSOR SHAFT)			
73/	D,K	D1VY 19D665-B	Use with Frigidaire-swash plate compressor	1
74	A - - 8 cyl. 460 with A.T.C.			1
75/	A,Y			1
77/	A,V			1
76/	G			1
19B666	INSULATOR (AIR CONDITIONER EVAPORATOR CASE COVER)			
79	A - - integral A/C	D9AZ 19B666-A		1
79	F - - integral A/C-P/C	D90Z 19B666-A		1
19D667	NUT KIT (AIR CONDITIONER COMPRESSOR SHAFT)			
73/78	D,K	D1VY 19D667-A	Use with Frigidaire-swash plate compressor	1
74	A - - 8 cyl. 460 with A.T.C.			1
75/76	A,Y			1
77/78	A,V			1
76/78	G			1
79	A,D,G,K,V	D9VY 19D667-A	Use with Frigidaire-swash plate compressor	1
19D668	BRACKET (AUTOMATIC TEMPERATURE CONTROL SENSOR)			
73/78	A	D3MY 19D668-A		1
78/	D			1
79	A	D9AZ 19D668-A		1
19D669	SERVO ASSY. (AUTOMATIC TEMPERATURE CONTROL)			
73	A,Y "Before 11/15/72"	D3AZ 19D669-A		1
75/76	A,Y	D5AZ 19D669-A	*YH-252	1
77	A			1
78	A	D8AZ 19D669-A	*YH-319	1
79	A	D9AZ 19D669-A	*YH-346	1
75/76	C,F,K	★ D50Z 19D669-A	*YH-262-not replaced (3/84)	1
78/	D	D8AZ 19D669-A	*YH-319	1
77/	F,K	D70Z 19D669-A	*YH-296	1
77/	G,V	D7DZ 19D669-A	*YH-297	1

1973/79
LINCOLN-MERCURY CARS

YEAR	MODEL/RESTRICTIONS	PART NUMBER	DESCRIPTION	QTY.
19D670	VALVE ASSY. (AUTOMATIC TEMPERATURE CONTROL SOLENOID PLENUM)			
73/76	A,Y	D3AZ 19D670-A	*YH-249	1
77	A			1
19D671	RELAY ASSY. (AUTOMATIC TEMPERATURE CONTROL SOLENOID PLENUM)			
73/76	A,Y	D7DZ 19D671-A	*YH-301-Also use 1 pc. of connector	1
74/76	C,F		D70Z 14489-A	1
75/76	K			1
77/	A,F,G,K,V	D7DZ 19D671-A	*YH-301	1
78/	D			1
19A672	SEAL (AIR CONDITIONER EVAPORATOR CORE)			
75/76	A,Y - - integral A/C	D8VY 19A672-A	Lower-foam	1
77/78	A	D8VY 19A672-B	Rubber	1
78/	D			1
79	A - - integral A/C	D9AZ 19A672-A	5/8" x 9 1/8"	1
79	A - - integral A/C	D9AZ 19A672-B	3/16" x 9 3/4"	1
79	A - - built-in A/C (dealer installed)	D9AZ 19A672-C	Used on top & bottom	1
79	A - - built-in A/C (dealer installed)	D9AZ 19A672-D	Used on sides	1
73	F - - integral A/C	(RH) D1ZZ 19A672-A	(LH) D1ZZ 19A672-B	1
73	P			1
77/	F,K	D9LY 19A672-B	1/4" thick	1
77/	F,K	D9LY 19A672-A	1/2" thick	1
79	J - - integral A/C	D8BZ 19A672-A		1
76/	G - - integral A/C	D9DZ 19A672-A		1
77/	V			1
74/	L - - integral A/C "Before 11/1/78"	D9FZ 19A672-A		1
78/	P - - integral A/C	D8BZ 19A672-A		1
19D672	SERVO ASSY. (AUTOMATIC TEMPERATURE CONTROL ELECTRONIC PROGRAMER)			
73/74	A,Y	D4AZ 19D672-A	*YH-269	1
75/76	A,Y	D5AZ 19D672-A	*YH-278	1
77/78	A			1
78/	D			1
73/76	C,F	D40Z 19D672-A	*YH-263	1
75/76	K			1
19C675	DEFLECTOR (AIR CONDITIONER EVAPORATOR TUBE)			
78/	P - - integral A/C	D8BZ 19C675-A		1
79	J - - integral A/C			1
19B679	CLAMP (AIR CONDITIONER HOSE)			
73/76	A,Y - - integral A/C	D3AZ 19B679-A	*YF-260	1
77/	A			1
73/	D			1
73/	A,C,F,G,J,L,P - - hang-on A/C	D0TZ 19B679-A	*YF-256	2
74/	J - - integral A/C	D4RY 19B679-A	*YF-593-lower	1
74/	J - - integral A/C	D4RY 19B679-B	*YF-594-upper	1
19B680	DUCT ASSY. (AIR CONDITIONER EVAPORATOR TO REGISTER)			
75/76	A,Y	(RH) D5MY 19B680-A	(LH) D5MY 19B680-B	1
77/78	A			1
79	A	(RH) E2AZ 19B680-A	(LH) D9AZ 19B680-B	1
73	C - - integral A/C	(RH) D20Z 19B680-A	(LH) ★ D20Z 19B680-B r/b D40Z 19B680-A(3/75)	1
74/76	C,F - - integral A/C	(RH) D20Z 19B680-A	(LH) D40Z 19B680-A	1

COPYRIGHT © 1986 — FORD MOTOR COMPANY — DEARBORN, MICHIGAN

1973/79 LINCOLN-MERCURY CARS

YEAR	MODEL/RESTRICTIONS	PART NUMBER	DESCRIPTION	QTY.
19B680	DUCT ASSY. (AIR CONDITIONER EVAPORATOR TO REGISTER)- Cont'd.			
78/	D	(RH) D5MY 19B680-A	(LH) D5MY 19B680-B	1
77/	F	(RH) D70Z 19B680-A	(LH) D70Z 19B680-B	1
75/	G	(RH) D5DZ 19B680-A	(LH) D5DZ 19B680-B	1
79	J - - integral A/C	(RH) D8BZ 19B680-A	(LH) D9ZZ 19B680-A	1
77/	K	(RH) D7LY 19B680-A	(LH) D7LY 19B680-B	1
74/76	L - - integral A/C "Before 7/1/76"	(RH) D1FZ 19B680-B	(LH) D3FZ 19B680-B	1
76/	L - - integral A/C "From 7/1/76"	(RH) D1FZ 19B680-B	(LH) D7FZ 19B680-A	1
74/	L - - integral A/C-w/o tachometer	D3FZ 19B680-A	Center-7 3/8" long	1
77/	L - - integral A/C-w/tachometer	D7FZ 19B680-B	Center-5 1/4" long	1
73	P - - integral A/C "Before 2/5/73"	(RH) ★ D0DZ 19B680-B not replaced (6/77)	(LH) D0DZ 19B680-A	1
73/74	P - - integral A/C "From 2/5/73"	(RH) D3DZ 19B680-A	(LH) D0DZ 19B680-A	1
75	P - - integral A/C	(RH) D3DZ 19B680-A	(LH) D0DZ 19C932-A	1
78/	P - - integral A/C	(RH) D8BZ 19B680-A	(LH) D9ZZ 19B680-A	1
77/	V	(RH) D5DZ 19B680-A	(LH) D5DZ 19B680-B	1
19B684	GASKET KIT (AIR CONDITIONER COMPRESSOR)			
73/	All	C3GY 19B684-A	*YE-8-use on Tecumseh compressor	1
	Consists of			
	2-C3AA 2944-A Gasket-oil filler		2-C2SZ 19B994-A Gasket (for roto-lock type valve)	
	1-C3VA 2945-A Gasket-cyl. head		2-B8A 19664-A Gasket (for bolt down type valve)	
	1-C3VA 2992-A Gasket-valve plate			
73/	All - - integral A/C	C8AZ 19B684-A	*YE-14-use with York or Eaton compressor	1
	Consists of			
	2- "O" ring (oil fill)		1- "O" ring (bearing housing)	
	1- Gasket (base plate)		1- Gasket (service valve)	
	1- Gasket (cylinder)		1- Gasket (head)	
	1- Gasket (head)		1- Gasket (base plate)	
73/	C,F,G,J,L,P - - hang-on A/C	D2AZ 19B684-A	*YE-13-use with York compressor	1
	Consists of			
	2 "O" ring (oil fill)		1- "O" ring (bearing housing)	
	1- Gasket (base plate)		1- Gasket (head)	
	1- Gasket (cylinder)		2- "O" ring (valve past seal)	
19A689	WIRING ASSY. (AIR CONDITIONER BLOWER SWITCH FEED JUMPER)			
75/76	C,F,G - - integral A/C	D8DZ 19A689-A		1
19C692	CONNECTOR (AIR CONDITIONER REGISTER)			
Note 1	With Certification Label Code AR8 or AR9-Refer to TSB #162 dated 7/25/78			
Note 2	With Certification Label Code A			
74	A,Y - - built-in A/C (dealer installed)-Canada only	(RH) D3AZ 19C692-A	(LH) D3AZ 19C692-B	1
75/78	A,Y - - built-in A/C (dealer installed)-Canada only	(RH) D4DZ 19C692-A	(LH) D3AZ 19C692-B	1
73/76	C - - built-in A/C-dealer installed	(RH) D30Z 19C692-A	(LH) D30Z 19C692-B	1
74/	F - - built-in A/C-dealer installed			1
73	F - - integral A/C	(RH) ★ D1ZZ 19C692-A not replaced (6/77)	(LH) D1WY 19C692-A	1
75/	G - - built-in A/C-dealer installed	(RH) D5DZ 19C692-A	(LH) D4DZ 19C692-B	1

YEAR	MODEL/RESTRICTIONS	PART NUMBER	DESCRIPTION	QTY.
19C692	CONNECTOR (AIR CONDITIONER REGISTER) — Cont'd			
NOTE 1	With Certification Label Code AR8 or AR9-Refer to TSB #162 dated 7/25/78			
NOTE 2	With Certification Label Code A			
79	J - - built-in A/C-dealer installed	(RH) D8BZ 19C692-A	(LH) D8BZ 19C692-B	1
74/	L - - built-in A/C-dealer installed	D4FZ 19C692-C	Center	1
74/	L - - built-in A/C-dealer installed	(RH) D4FZ 19C692-A	(LH) D4FZ 19C692-B	1
73/77	P - - built-in A/C-dealer installed	(RH) ★ D4DZ 19C692-A not replaced (4/83)	(LH) D4DZ 19C692-B	1
78/	P - - built-in A/C-dealer installed	(RH) D8BZ 19C692-A	(LH) D8BZ 19C692-B	1
19D695	FITTINGS (AIR CONDITIONER REFRIGERANT LINE)			
	Refer to Section 197 for Serviced Refrigerant Line Assemblies and/or replacement details			
19A700	GASKET (AIR CONDITIONER EVAPORATOR DRAIN TUBE)			
74	L - - integral A/C	D4FZ 19A700-A		1
75/	L - - integral A/C	D9FZ 19A700-A		1
19C700	DISCHARGE LINE (AIR CONDITIONER COMPRESSOR TO CONDENSER)			
	Refer to Section 197 for Serviced Refrigerant Line Assemblies and/or replacement details			
19W700	SEAL KIT (AIR CONDITIONER BIOCIDE)			
76/78	A	D9VY 19W700-A		1
79	A	D9AZ 19W700-A		1
78/	D	D9VY 19W700-A		1
77/	F,K	D9LY 19W700-A		1
77/	G,V	D9DZ 19W700-A		1
79	J	D9BZ 19W700-A		1
75/	L	D9FZ 19W700-A		1
78/	P	D9BZ 19W700-A		1
19D701	CORE ASSY. (AIR CONDITIONER CHARGING VALVE)			
73/	A,C,D,F,K,P,Y - - integral A/C	D20Z 19D701-A	*YF-879	1
74/	L - - integral A/C			1
75/	G - - integral A/C			1
77/	V			1
19702	BRACKET (AIR CONDITIONER CONDENSER MOUNTING)			
Note 1	With Certification Label Code AR8 or AR9-Refer to TSB #162 dated 7/25/78			
Note 2	With Certification Label Code A			
73/76	A,Y - - integral A/C	D3AZ 19702-A		2
77/78	A - - integral A/C			2
79	A - - integral A/C	D9AZ 19702-A	R.H. and L.H.	1
73/76	C - - integral A/C	(RH) D20Z 19702-A	(LH) D20Z 19702-B NOTE 2	1
74/	F - - integral A/C			1
74/	D	D3AZ 19702-A		1
75/	G	D5DZ 19702-A	NOTE 2	2
77/	V			2
78/	K	D3AZ 19702-A	R.H. and L.H.	2
78/	P - - integral A/C	D8BZ 19702-A	R.H. and L.H.	2
19D702	CAP ASSY. (AIR CONDITIONER CHARGING VALVE)			
73/76	A,C,D,F,K,P,Y	D20Z 19D702-A	*YF-880	1
77/	A,D,F,K,P			1
75/77	G "Before 4/15/77"			1
75/	L			1
77/	G "From 4/15/77"	D7DZ 19D702-A	*YF-881	1

COPYRIGHT © 1986 — FORD MOTOR COMPANY — DEARBORN, MICHIGAN

1973/79 LINCOLN-MERCURY CARS

YEAR	MODEL/RESTRICTIONS	PART NUMBER	DESCRIPTION	QTY.
19703	COMPRESSOR ASSY. (AIR CONDITIONER)			
73	A,C,Y - - integral A/C "Before 9/29/72"	D3AZ 19703-A		1
73/74	A,Y - - integral A/C "From 9/29/72"	D3AZ 19703-B	*YC-14-Tecumseh-iron	1
73/76	C			1
74/78	J - - integral A/C			1
75/	F,P - - integral A/C	★ D3AZ 19703-B		1
75	G - - integral A/C	r/b D4FZ 19703-B(9/78)		1
73/74	A,C,Y - - integral A/C	D4FZ 19703-B	*YC-19-York-aluminum	1
73/	F,P - - intergral A/C			1
75	G - - integral A/C			1
74/	J - - integral A/C			1
74/	L			1
73/	C,F,P - - hang-on A/C	D2AZ 19703-C	*YC-11	1
74/	J,L - - hang-on A/C			1
75/	G - - hang-on A/C			1
73/	D "Before 5/1/78"	D1VY 19703-A	*YC-10-Frigidaire-swash plate type compressor	1
73/	K			1
74	A - - 8 cyl. 460 with A.T.C.			1
75/76	A,Y			1
77/	A,V			1
76/	G			1
78/	D "From 5/1/78"	D9VY 19703-A	*YC-23-Frigidaire-swash plate type compressor	1
73	J - - hang-on A/C	D0RY 19703-B	*YC-7-Eaton #A2-10416	1
19A704	Refer to Section 197 for Serviced Refrigerant Line Assemblies and/or replacement details			
19A705	Refer to Section 197 for Serviced Refrigerant Line Assemblies and/or replacement details			
19C705-8	Refer to Section 197 for Serviced Refrigerant Line Assemblies and/or replacement details			
19A706	RESISTOR (AIR CONDITIONER BLOWER MOTOR)-Also refer to 18591 group			
73/74	A,Y - - A.T.C.	★ D3AZ 19A706-A	Not replaced (3/84)	1
74	C,F - - A.T.C.			1
75/76	A,C,F,Y - - A.T.C.	D5AZ 19A706-A		1
77/78	A - - A.T.C. "Before 10/1/77"			1
78	V "Before 10/1/77"			1
78	A,V "From 10/1/77"		Refer to group 18591	1
79	A	D9AZ 19A706-A		1
73/74	D,K	D1AZ 19A706-A	Incl. diode	1
75/77	D	D5VY 19A706-A		1
75/76	K			1
73	F - - integral A/C	C8ZZ 19A706-A		1
74/78	J - - integral A/C	D7RY 19A706-A		1
79	J - - integral A/C	D8BZ 19A706-A		1
79	J - - built-in A/C (dealer installed)	D8RZ 19A706-B		1
74	L - - integral A/C	D3FZ 19A706-A		1
75/	L - - integral A/C	D5FZ 19A706-A		1
73/75	P - - integral A/C	D3DZ 19A706-A		1
76/77	P - - integral A/C	★ D6DZ 19A706-A	Not replaced (3/84)	1
78/	P - - integral A/C	D8BZ 19A706-A		1
79	P - - built-in A/C (dealer installed)	D8RZ 19A706-B		1
19708	Refer to Group 19B968			
19712	CORE ASSY. (AIR CONDITIONER CONDENSER)			
Note 1	With Certification Label Code AR8 or AR9-Refer to TSB #162 dated 7/25/78			
Note 2	With Certification Label Code A			
73/77	A - - hang-on A/C-Canada only	★ C7AZ 19712-A	*YJ-49-used w/condenser mounted dehydrator-r/b details see mat 7069 (11/81)	1

YEAR	MODEL/RESTRICTIONS	PART NUMBER	DESCRIPTION	QTY.
19712	CORE ASSY. (AIR CONDITIONER CONDENSER) — Cont'd			
NOTE 1	With Certification Label Code AR8 or AR9-Refer to TSB #162 dated 7/25/78			
NOTE 2	With Certification Label Code A			
76/	A - - hang-on A/C-Canada only	D8AZ 19712-A	*YJ-132	1
73/78	A - - integral A/C	D3AZ 19712-A	*YJ-7	1
78	A - - integral A/C	D8AZ 19712-B	*YJ-142-condenser & dehydrator	1
79	A - - integral A/C	D9AZ 19712-A	*YJ-140	1
73/76	C - - hang-on A/C	★ C7AZ 19712-A	*YJ-49-used w/condenser mounted dehydrator-r/b details see mat 7069 (11/81)	1
73/74	C - - integral A/C	D20Z 19712-A	*YJ-6	1
75/76	C - - integral A/C	D80Z 19712-B	*YJ-138	1
73	D	D2VY 19712-B	*YJ-26	1
74/	D	D8AZ 19712-B	*YJ-142	1
73/77	F - - hang-on A/C	★ C7AZ 19712-A	*YJ-49-used w/condenser mounted dehydrator-r/b details see mat 7069 (11/81)	1
76/	F - - hang-on A/C	D8AZ 19712-A	*YJ-132	1
73	F - - integral A/C	D10Z 19712-A	*YJ-5	1
74	F - - integral A/C	D20Z 19712-A	*YJ-6	1
75/78	F - - integral A/C	★ D50Z 19712-A	*YJ-87-Note 2 -r/b D80Z 19712-B(12/79)	1
78	F - - integral A/C	D80Z 19712-B	*YJ-138-Condenser & dehydrator-Note 1	1
79	F - - integral A/C	D80Z 19712-B	*YJ-138-condenser & dehydrator	1
75/77	G - - hang-on A/C	★ C7AZ 19712-A	*YJ-49-used w/condenser mounted dehydrator-r/b details see mat 7069 (11/81)	1
76/	G - - hang-on A/C	D8AZ 19712-A	*YJ-132	1
75/77	G - - integral A/C "Before 2/15/77"	D5DZ 19712-A	*YJ-82	1
77/78	G - - integral A/C "From 2/15/77"	D74Y 19712-A	*YJ-130-Note 2	1
78	G - - integral A/C	D74Y 19712-B	*YJ-139-Condenser & dehydrator-Note 1	1
79	G - - integral A/C	D74Y 19712-B	*YJ-139-condenser & dehydrator	1
74	J - - hang-on A/C	D4RY 19712-B	*YJ-120	1
74	J - - integral A/C	D5RY 19712-B	*YJ-119	1
76/78	J - - 6 cyl.-integral A/C	★ D5RY 19712-B	*YJ-119-not replaced (3/84)	1
79	J - - integral A/C	D9ZZ 19712-A	*YJ-141-condenser & dehydrator	1
79	J - - hang-on A/C	D8AZ 19712-A	*YJ-132	1
73/74	K	D2SZ 19712-A	*YJ-24	1
75/77	K	D5SZ 19712-A	*YJ-88	1
78/	K	D8AZ 19712-B	*YJ-142	1
74/77	L - - hang-on A/C	★ C7AZ 19712-A	*YJ-49-used w/condenser mounted dehydrator-r/b details see mat 7069 (11/81)	1
76/	L - - hang-on A/C	D8AZ 19712-A	*YJ-132	1
76/79	L - - integral A/C "Before 2/16/79"	D9FZ 19712-A	*YJ-144-condenser & dehydrator	1
79	L - - integral A/C "From 2/16/79"	D9FZ 19712-B	*YJ-178	1
73/77	P - - hang-on A/C	★ C7AZ 19712-A	*YJ-49-used w/condenser mounted dehydrator-r/b details see mat 7069 (11/81)	1
76/	P - - hang-on A/C	D8AZ 19712-A	*YJ-132	1
73	P - - integral A/C	D1DZ 19712-A	*YJ-21	1
74/76	P - - integral A/C "Before 2/23/76"	D4DZ 19712-A	*YJ-81	1
76/77	P - - integral A/C "From 2/23/76"	D1DZ 19712-A	*YJ-21	1
78/	P - - integral A/C	D8BZ 19712-B	*YJ-143-condenser & dehydrator	1
77/78	V	★ D74Y 19712-A	*YJ-130-Note 2-r/b D74Y 19712-B(12/79)	1

COPYRIGHT © 1986 — FORD MOTOR COMPANY — DEARBORN, MICHIGAN

1973/79 LINCOLN-MERCURY CARS

YEAR	MODEL/RESTRICTIONS	PART NUMBER	DESCRIPTION	QTY.
19712	CORE ASSY. (AIR CONDITIONER CONDENSER) — Cont'd			
NOTE 1	With Certification Label Code AR8 or AR9-Refer to TSB #162 dated 7/25/78			
NOTE 2	With Certification Label Code A			
78	V	D74Y 19712-B	*YJ-139-Condenser & dehydrator-Note 1	1
79	V	D74Y 19712-B	*YJ-139-condenser & dehydrator	1
73/76	Y - - hang-on A/C	★C7AZ 19712-A	*YJ-49-used w/condenser mounted dehydrator-r/b details see mat 7069 (11/81)	1
73/76	Y - - integral A/C	D8AZ 19712-B	*YJ-7-r/b D8AZ 19712-B(12/79)	1
19D721	BRACKET (AIR CONDITIONER OUTLET TUBE)			
75/76	C,F,K - - integral A/C	D50Z 19D721-A		1
77/	F - - integral A/C			1
77	K			1
19D722-3	CLAMP (AIR CONDITIONER CONDENSER INLET MANIFOLD)			
79	A - - integral A/C	D9AZ 19D722-A	1" long	1
79	A - - integral A/C	D9AZ 19D723-A	1 1/2" long	1
78/	P - - integral A/C	D8BZ 19D722-A		1
19D727	SHIELD (AIR CONDITIONER TUBE)			
75/	L - - integral A/C	D5FZ 19D727-A		1
19D729	SCREEN (AIR CONDITIONER COMPRESSOR SUCTION)			
73/76	C,F,G,L,P	D3AZ 19D729-A		1
77/	F,L,P			1
73/74	A,Y			1
19B730	GASKET (AIR CONDITIONER BLOWER MOTOR MOUNTING)			
74/76	F,K - - integral A/C	D40Z 19B730-A		1
76/	G - - integral A/C	D6DZ 19B730-A		1
77/	V			1
19C730	BOX ASSY. (AUTOMATIC TEMPERATURE CONTROL)			
73/77	D	D1AZ 19C730-A		1
73/74	K	D2SZ 19C730-A		1
19732	Refer to group 19702			
19D732	BRACKET (AUTOMATIC TEMPERATURE CONTROL VACUUM SOLENOID VALVE)			
73/74	A,Y	D3AZ 19D732-A		1
77/	F,K	D70Z 19D732-A		1
77/	G,V	D7DZ 19D732-A		1
19C733	SWITCH ASSY. (AUTOMATIC TEMPERATURE CONTROL)			
73/77	D	D0VY 19C733-A	*YH-37	1
73/74	K	D2SZ 19C733-A	*YH-39	1
19C734	SENSOR ASSY. (AIR CONDITIONER TEMPERATURE CONTROL)			
74/76	C,F - - A.T.C.	D40Z 19C734-A	*YH-198	1
73/76	A,Y - - A.T.C.			1
77	A			1
78	A	D9AZ 19C734-A	*YH-198	1
79	A,D,F,G,V	D9AZ 19C734-A	*YH-351	1
73/77	D	D2SZ 19C734-A	*YH-41 - located at R.H. instrument panel in heater case near R.H. fender apron (ambient)	1
73/77	D	D3VY 19C734-A	Mounted on instrument panel	1
78	D	D9AZ 19C734-A	*YH-198	1
73/74	D,K	D3SZ 19C734-A	*YH-47-A-at instrument panel	1
77/78	F,G,V	D9AZ 19C734-A	*YH-198	1
73/74	K	D2SZ 19C734-A	*YH-46-at plenum	1
75/76	K	D5SZ 19C734-A	*YH-259	1
77/	K	D7LY 19C734-A	*YH-299	1

YEAR	MODEL/RESTRICTIONS	PART NUMBER	DESCRIPTION		QTY.
19D734	MANIFOLD and TUBE ASSY. (AIR CONDITIONER)				
76/	G - - integral A/C	D6DZ 19D734-A			1
79	J	D8BZ 19D734-A			1
74/76	L - - integral A/C	D5FZ 19D734-A			1
77/	L - - integral A/C	D7FZ 19D734-A			1
78/	P - - integral A/C	D8BZ 19D734-A			1
77/	V	D6DZ 19D734-A			1
19735-6	BRACKET (AIR CONDITIONER CONDENSER MOUNTING)				
Note 1	With Certification Label Code AR8 or AR9-Refer to TSB #162 dated 7/25/78				
Note 2	With Certification Label Code A				
73/76	A,Y - - integral A/C	(RH) D3AZ 19735-A	(LH) D3AZ 19735-B	Lower	1
77/78	A				1
74/	D				1
78/	K				1
73/76	C,K - - integral A/C	(RH) D2SZ 19735-A	(LH) D2SZ 19735-B	Lower-Note 2	1
74/	F - - integral A/C				1
77	K				1
79	J	(RH) D9ZZ 19735-A	(LH) D9ZZ 19735-B		1
78/	P - - integral A/C	D8BZ 19735-A	R.H. and L.H.		2
19B735	COVER (EVAPORATOR and HEATER CASE AIR CONDITIONER)				
73/74	A,Y - - integral A/C	C9AZ 19B735-A			1
19D736	PLATE (AIR CONDITIONER EVAPORATOR CORE)				
76/	G - - integral A/C	D6DZ 19D736-A			1
75/76	L	D5FZ 19D736-A			1
77/	L - - integral A/C	D7FZ 19D736-A			1
77/	V	D6DZ 19D736-A			1
19B738	SEAL (AIR CONDITIONER EVAPORATOR CASE COVER)				
78	A - - integral A/C	D8VY 19B738-A			1
78/	D				1
19D738	BRACKET ASSY. (AIR CONDITIONER CLAMP)				
74/76	L - - integral A/C	D4FZ 19D738-A			1
77/	L - - integral A/C	D7FZ 19D738-A			1
19B739	SEAL (AIR CONDITIONER EVAPORATOR DRAIN TUBE)				
79	A - - integral A/C	D9AZ 19B739-A			1
75	G	D5DZ 19B739-A			1
78/	P - - integral A/C	E0SZ 19B739-A			1
79	J - - integral A/C				1
19C739	HOSE (AUTOMATIC TEMPERATURE CONTROL)				
73/76	A,Y	D6AZ 19C739-A			1
77/	A				1
74/76	C,F	D5SZ 19C739-A			1
75/76	K				1
19D740	ADAPTOR ASSY. (AIR CONDITIONER EVAPORATOR TO PLENUM CHAMBER)				
74	L - - integral A/C	D4FZ 19D740-A			1
75/	L - - integral A/C	D5FZ 19D740-A			1
19D742	Refer to Section 197 for Serviced Refrigerant Line Assemblies and/or replacement details				
19D743	GROMMET (AIR CONDITIONER TUBE FENDER APRON)				
74/76	L - - integral A/C	D4FZ 19D743-A			1
19D745	GUARD (AIR CONDITIONER ACCUMULATOR HOSE)				
74	L - - 4 cyl. 140 (2300cc) and integral A/C	D4FZ 19D745-B			1
19C747	VENTURI (AUTOMATIC TEMPERATURE CONTROL)				
73/74	A,D,K,Y	D1AZ 19C747-A			1
19B749	DOOR ASSY (AIR CONDITIONER EVAPORATOR CASE OUTLET)				
78/	P - - integral A/C	D9BZ 19B749-A			1
79	J				
79	G,V - - integral A/C	D9DZ 19B749-A			1

COPYRIGHT © 1986 — FORD MOTOR COMPANY — DEARBORN, MICHIGAN

1973/79 LINCOLN-MERCURY CARS

YEAR	MODEL/RESTRICTIONS	PART NUMBER	DESCRIPTION	QTY.
19752	VALVE ASSY. (AIR CONDITIONER COMPRESSOR)-Also refer to group 19A990			
73/76	A,C,F,P,Y - - integral A/C	D0AZ 19752-A	*YF-305-low pressure	1
74/76	L - - integral A/C			1
77/	F,L,P - - integral A/C			1
19D753	GUARD (AIR CONDITIONER HOSE)			
78/	P - - integral A/C	D8BZ 19D753-A		1
79	J - - 6 cyl. (2800cc) and integral A/C	D9ZZ 19D753-A		1
19C754	HOSE (AIR CONDITIONER DEFLECTOR)			
73/	D	★	Cut from D0VY 19C753-A-21" long	1
19760	SPRING (AIR CONDITIONER TEMPERATURE CONTROL LEVER)			
75/76	A,Y	D6AZ 19760-A		1
77	A			1
78	G - - manual integral A/C	D8DZ 19760-A		1
78	G,V - - A.T.C.	D8DZ 19760-B		1
79	J - - integral A/C	D8BZ 19760-A		1
78/	P - - integral A/C			1
19B762	SEAL (AIR CONDITIONER INLET DOOR INNER)			
75/	G	D9DZ 19B762-A		1
79	J			1
78/	P			1
77/	V			1
19A771	DEFLECTOR (AIR CONDITIONER FLOOR AIR)			
75/76	G - - integral A/C	D5DZ 19A771-A		1
19C774	SHAFT ASSY. (AIR CONDITIONER DAMPER DOOR)			
73/76	C,K - - integral A/C	D20Z 19C774-B	Damper door inlet	1
74/76	F - - integral A/C			1
77	F,K	D70Z 19C774-A	Damper door inlet	1
73	F - - integral A/C	C9ZZ 19C774-C	Evaporator core	1
73	F - - integral A/C	D0DZ 19C774-A	Damper door inlet	1
73/77	P - - integral A/C	D0DZ 19C774-C	Evaporator core	1
19A779	CLIP (HEATER CORE CASE)			
73/76	C,F,G,P	C0DF 19A779-A		AR
77/	F,G,P,V			1
74/	L			1
74/	J			AR
19C784	BEZEL (AIR CONDITIONER REGISTER)			
73	A,C,F,J,P - - economy hang-on A/C	D2AZ 19C784-B		1
73/76	A,Y - - built-in A/C-dealer -installed Canada only	D3MY 19C784-A		1
77	A - - built in A/C-dealer installed - Canada only	D7MY 19C784-A		1
75/	G - - built-in A/C-dealer installed	D5DZ 19C784-A		1

YEAR	MODEL/RESTRICTIONS	PART NUMBER	DESCRIPTION	QTY.
19C784	BEZEL (AIR CONDITIONER REGISTER) — Cont'd			
76/78	J - - built-in A/C-dealer installed	D5RY 19C784-A	Center	1
19A786	TUBE (AIR CONDITIONER BLOWER HOUSING TO BLOWER MOTOR)			
73/77	D,Y - - integral A/C	D3AZ 19A786-A	Use with Philco evaporator core	1
73	A - - integral A/C- "Before 4/15/73"			1
73/77	A - - integral A/C- "From 4/15/73"	D3MY 19A786-A		1
75/76	Y			1
78	A - - integral A/C	D8AZ 19A786-A		1
79	A	D9AZ 19A786-A		1
73/76	A,Y - - heater	C7AZ 19A786-A		1
77	A - - heater			1
78/	D	D8AZ 19A786-A		1
19C800	ADAPTER (AUTOMATIC TEMPERATURE CONTROL EVAPORATOR AIR OUTLET)			
78	A	D8AZ 19C800-A		1
79	A	D9AZ 19C800-A		1
78/	D	D8AZ 19C800-A		1
74/76	C,F	D40Z 19C800-A		1
75/76	K			1
77/	G,V - - A.T.C.	D7DZ 19C800-A		1
19801-3	PANEL (AIR CONDITIONER EVAPORATOR CASE)			
73/76	C - - hang-on A/C	D2AZ 19801-A	Upper	1
73/	F - - hang-on A/C			1
73/78	J - - hang-on A/C			
73/77	P - - hang-on A/C			
		D2AZ 19803-A	Lower	1
74/	L			1
75/	G - - hang-on A/C			1
73/	A,Y - - hang-on A/C-Canada only			1
79	J - - built-in A/C (dealer installed)	D8BZ 19801-A	Upper	1
		D8BZ 19803-A	Lower	1
78/	P - - built-in A/C-dealer installed	D8BZ 19801-A	Upper	1
		D8BZ 19803-A	Lower	1
19A802	PLATE (AIR CONDITIONER BLOWER MOTOR COVER)			
78/	P - - built-in A/C-dealer installed	D8BZ 19A802-A		1
79	J - - built-in A/C (dealer installed)			1
19C802	DOOR ASSY. (AIR CONDITIONER DAMPER INLET)			
79	F,K - - integral A/C	D9LY 19C802-A		1
73/76	P - - integral A/C "From 12/15/72 to 2/15/76"	D1FZ 19C802-A		1
76/77	P - - integral A/C "From 2/15/76"	★ D6DZ 19C802-A	Not replaced (11/81)	1
76/	L	D9FZ 19C802-A		1
19804	PLATE (AIR CONDITIONER EVAPORATOR CASE MOUNTING)			
73/76	C,K - - integral A/C	D20Z 19804-A		1
74/76	F - - integral A/C			1

COPYRIGHT © 1986 — FORD MOTOR COMPANY — DEARBORN, MICHIGAN

1973/79
LINCOLN-MERCURY CARS

YEAR	MODEL/RESTRICTIONS	PART NUMBER	DESCRIPTION	QTY.
19A804-5	BRACKET ASSY. (AIR CONDITIONER EVAPORATOR CASE SUPPORT)			
74/	L	(RH) D4FZ 19A804-A	(LH) D4FZ 19A805-A	1
19805	MOTOR ASSY. (AIR CONDITIONER BLOWER)-Also refer to group 18527			
73/74	A,Y - - integral A/C	D2AZ 19805-B	*MM-297-A-initial replacement for Mercury and Meteor requires use of 18A475 cover	1
75/76	A,Y - - integral A/C	D5DZ 19805-A	*MM-341-steel housing	1
77/78	A			1
79	A	E0VY 19805-A	MM-392	1
73/74	C - - integral A/C	D20Z 19805-A	*MM-303-incl. wheels	1
75/76	C - - integral A/C "Before 8/1/76"	D50Z 19805-B	*MM-353-steel housing-r/b D60Z 19805-B (12/77)	1
76	C - - integral A/C "From 8/1/76"	D60Z 19805-B	*MM-363-steel housing	1
73/74	D	D2AZ 19805-B	*MM-297	1
75/	D	D5DZ 19805-A	*MM-341-steel housing	1
73/	A,Y - - hang-on A/C-Canada only	D2AZ 19805-A	*MM-306	1
73/	C,F,J,P - - hang-on A/C			1
74/	L - - hang-on A/C			1
75/	G - - hang-on A/C			1
73	F - - integral A/C	C9ZZ 19805-A	*MM-273-incl. wheels	1
74/76	F - - integral A/C	D60Z 19805-B	*MM-363-steel housing	1
77/	F - - integral A/C	D9BZ 19805-A	*MM-382	1
75/78	G - - integral A/C	★ D7DZ 19805-A	*MM-372-r/b D9DZ 19805-A (3/84)	1
79	G - - integral A/C	D9DZ 19805-A	*MM-383	1
73/74	J - - deluxe hang-on A/C	D1RY 19805-A	*MM-299	1
73/74	J - - economy hang-on A/C	D1FZ 19805-A	*MM-300	1
74/77	J - - integral A/C "Before 10/1/77"	D0DZ 19805-A	*MM-281	1
77/78	J - - integral A/C "From 10/1/77"	★ D7RY 19805-A	*MM-377-not replaced (4/83)	1
79	J - - integral A/C	D9BZ 19805-A	*MM-382	1
79	J - - built-in A/C (dealer installed)	D8RZ 19805-A	*MM-376	1
73/74	K - - integral A/C	D20Z 19805-A	*MM-303-incl. wheels	1
75/76	K - - integral A/C	D60Z 19805-B	*MM-363-steel housing	1
77/	K - - integral A/C	D9BZ 19805-A	*MM-382	1
74/	L - - integral A/C	D7ZZ 19805-A	*MM-369	1
73/75	P - - integral A/C	D0DZ 19805-A	*MM-281	1
76/	P - - integral A/C	D9BZ 19805-A	*MM-382	1
78/	P - - built-in A/C-dealer installed	D8RZ 19805-A	*MM-376	1
77/78	V	★ D7DZ 19805-A	*MM-372-r/b D9DZ 19805-A (3/84)	1
79	V	D9DZ 19805-A	*MM-383	1
19D805	SLEEVE (AIR CONDITIONER SUCTION THROTTLE VALVE)			
79	A,F - - integral A/C	D90Z 19D805-A		1
19808	PANEL ASSY. (AIR CONDITIONER CONTROL)			
76	C - - built-in A/C dealer installed	D60Z 19808-A		1
76/	F - - built-in A/C dealer installed	D60Z 19808-A		1
73	J(exc. Ghia) - - integral A/C	D5RY 19808-A		1

YEAR	MODEL/RESTRICTIONS	PART NUMBER	DESCRIPTION	QTY.
19808	PANEL ASSY. (AIR CONDITIONER CONTROL) — Cont'd			
73/74	P - - w/rear window defogger	D3DZ 19808-C	Avocado	1
		D2DZ 19808-EA	Blue	1
		D3DZ 19808-D	Orange	1
		D4DZ 19808-A	Saddle	1
		D4DZ 19808-D	Silver blue	1
		D2DZ 19808-BA	Tan	1
75	P - - w/rear window defogger	D2DZ 19808-EA	Blue	1
		D2DZ 19808-BA	Tan	1
73/74	P - - w/o rear window defogger	D3DZ 19808-A	Avocado	1
		D2DZ 19808-V	Beige	1
		D3DZ 19808-B	Orange	1
		D4DZ 19808-B	Saddle	1
75	P - - w/o rear window defogger	D5DZ 19808-A	Green	1
76	P - - w/o rear window defogger	D6DZ 19808-C	Tan	1
77	P - - w/o rear window defogger	D6DZ 19808-C	Tan	1
19809	PANEL (AIR CONDITIONER CONTROL)			
78/	L - - built-in A/C (dealer installed)-w/tachometer	D7FZ 19809-A		1
78	P - - built-in A/C-dealer installed	D8BZ 19809-A		1
79	J - - built-in A/C (dealer installed)			1
19C811	DEFLECTOR (AIR CONDITIONER EVAPORATOR CASE AIR)			
74/	J - - integral A/C	D4RY 19C811-A		1
19812	BRACKET (AIR CONDITIONER HOSE SUPPORT)			
73/76	K	D2SZ 19812-A		1
74	D			1
74/	L - - integral A/C	D4FZ 19812-A		1
78/	P - - integral A/C	D8BZ 19812-A		1
79	J - - integral A/C			1
19D812	DOOR ASSY. (AIR CONDITIONER EVAPORATOR CASE DAMPER)			
75/	L - - integral A/C	D9FZ 19D812-A		1
19A813	DOOR ASSY. (AIR CONDITIONER AIR INLET)			
79	J,P - - integral A/C	D9BZ 19A813-A		1
79	G,V - - integral A/C	D9DZ 19A813-A		1
19D815	CLAMP ASSY. (BLOWER HOUSING)			
75/	G - - integral A/C	D5DZ 19D815-A		1
77/	V			1
19C820	BRACKET (AIR CONDITIONER INSTRUMENT PANEL)			
74/76	C,F - - integral A/C	D4OZ 19C820-A		1
19B826	SEAL ASSY. (INSTRUMENT PANEL REGULATOR)			
73/74	A,Y - - integral A/C	D3AZ 19B826-A		1
19C827	HARNESS ASSY. (VACUUM HOSE)			
74	A,Y - - heater	D4AZ 19C827-A	2-1-2 nipples	1
73	A,Y - - A.T.C.	D4AZ 19C827-B	9-3-3-2-2-3-1 nipples	1
73/74	A,Y - - A.T.C.	D3AZ 19C827-G	3-3 nipples	1
74	A,Y - - A.T.C.	D4AZ 19C827-B	9-3-3-2-2-3-1 nipples	1
76	Y - - A.T.C. "From 6/1/76"	D7AZ 19C827-A	Part of plenum chamber	1
76/78	A - - A.T.C. "From 6/1/76"	D7AZ 19C827-A	Part of plenum chamber	1
78	A - - A.T.C.	D8AZ 19C827-A	9-9 nipples	1
78	A - - A.T.C.	D8VY 19C827-A	9-2-2-6-3-1 nipples	1
73/74	A,Y - - manual integral A/C	D3AZ 19C827-F	4-4 nipples	1
73/74	A,Y - - manual integral A/C	D3AZ 19C827-J	7-4-1-4-part of plenum chamber	1
79	A - - manual integral A/C and/or heater	D9AZ 19C827-A	7-1-1-1-1-1 nipples	1

COPYRIGHT © 1986 — FORD MOTOR COMPANY — DEARBORN, MICHIGAN

1973/79 LINCOLN-MERCURY CARS

YEAR	MODEL/RESTRICTIONS	PART NUMBER	DESCRIPTION	QTY.
19C827	HARNESS ASSY. (VACUUM HOSE) — Cont'd			
79	A - - manual integral A/C and/or heater	D9AZ 19C827-C	9-7 nipples	1
79	A - - A.T.C.	D9AZ 19C827-B	7-1-1-1-1-1-2-2-1 nipples	1
79	A - - A.T.C.	D9AZ 19C827-D	9-7 nipples	1
73/74	C - - manual integral A/C	D30Z 19C827-A	9-3-1-2-1-2-1-part of plenum chamber	1
75/76	C - - 8 cyl. 460 P/C-integral A/C	D50Z 19C827-B	2-2 nipples	1
74/76	C - - A.T.C.	D40Z 19C827-B	9-1-2-1-2-15-2 nipples	1
75/76	C - - A.T.C. "From 2/24/75"	D50Z 19C827-C	9-9 nipples	1
73/74	D	D1AZ 19C827-B	7-1-1-1-2-3 nipples	1
78/	D	D7AZ 19C827-A	Part of plenum chamber	1
78/	D	D8AZ 19C827-A	9-9 nipples	1
78/	D	D8VY 19C827-A	9-2-2-6-3-1 nipples	1
74	F - - manual integral A/C	D30Z 19C827-A	9-3-1-2-1-2-1-part of plenum chamber	1
74/76	F - - A.T.C.	D40Z 19C827-B	9-1-2-1-2-15-2 nipples	1
74	F - - A.T.C. "Before 2/24/75"	★ D40Z 19C827-C	9-9 nipples-not replaced (12/79)	1
75/76	F - - A.T.C. "From 2/24/75"	D50Z 19C827-C	9-9 nipples	1
77/	F - - manual integral A/C	D70Z 19C827-A	9-1-2 nipples	1
77/	F - - A.T.C.	D70Z 19C827-B	9-4-2-2-3-1-1-2 nipples	1
75/76	F	D50Z 19C827-A	2-2 nipples	1
75/	G - - integral A/C	D5DZ 19C827-B	9-3-7 nipples	1
76	G - - integral A/C	D6DZ 19C827-D	7-1-1-1-1-2 nipples	1
77/78	G - - manual integral A/C "Before 9/1/77"	★ D7DZ 19C827-C	2-6-1 -1-1-1 nipples-not replaced (4/83)	1
78/	G - - manual integral A/C "From 9/1/77"	D8DZ 19C827-A	2-7-2-3-1-2 nipples	1
77	G - - A.T.C. "Before 5/16/77"	★ D7DZ 19C827-A	9-9 nipples-not replaced (11/81)	1
77/	G - - A.T.C. "From 5/16/77"	D7DZ 19C827-D	9-7 nipples	1
77	G - - A.T.C. "Before 5/16/77"	★ D7DZ 19C827-B	2-8-2-3-2 nipples-not replaced (11/81)	1
77/78	G - - A.T.C. "From 5/16/77 to 9/1/77"	★ D7DZ 19C827-E	2-7-2-3-1-2 nipples-not replaced (4/83)	1
78/	G - - A.T.C. "From 9/1/77"	D8DZ 19C827-B	2-7-2-3-1-2 nipples	1
79	J - - integral A/C	D8BZ 19C827-A	8-1-7 nipples	1
79	J - - integral A/C	D9BZ 19C827-A	7-1-1-1-1 nipples	1
79	J - - integral A/C	D8BZ 19C827-B	7-1-2-2 nipples	1
75/76	K	D50Z 19C827-A	2-2 nipples	1
75/76	K	D40Z 19C827-B	9-1-2-1-2-15-2 nipples	1
75	K "Before 2/24/75"	D5SZ 19C827-A	9-9 nipples	1
75/76	K "From 2/24/75"	D5SZ 19C827-C	9-9 nipples	1
77	K	D70Z 19C827-B	9-4-2-2-3-1-1-2 nipples	1
78/	K	D8LY 19C827-A	9-4-2-2-3-1-1-2 nipples	1
74	L - - integral A/C "From 4/15/74"	D4FZ 19C827-D	2-2 nipples	1
74/78	L - - integral A/C "Before 11/1/77"	★ D4FZ 19C827-C	6-2-7 nipples-not replaced (4/83)	1
78/	L - - integral A/C "From 11/1/77"	D8FZ 19C827-A	9-3-7 nipples	1
75/77	L - - integral A/C	★ D5FZ 19C827-A	2-2 nipples-53" long-not replaced (4/83)	1
75/78	L - - integral A/C "Before 9/1/77"	★ D5FZ 19C827-B	2-2 nipples-18" long-not replaced (4/83)	1
78/	L - - integral A/C "From 9/1/77"	D8FZ 19C827-B	2-2 nipples-to water valve	1
78/	L - - integral A/C	D8FZ 19C827-C	7-2-1-2-1 nipples	1

YEAR	MODEL/RESTRICTIONS	PART NUMBER	DESCRIPTION	QTY.
19C827	HARNESS ASSY. (VACUUM HOSE) — Cont'd.			
73/74	P - - integral A/C	D4DZ 19C827-A	2-2-3 nipples	1
75/76	P - - integral A/C "Before 5/3/76"	D5DZ 19C827-D	2-2-3 nipples	1
76/77	P - - integral A/C "From 5/3/76"	★ D6DZ 19C827-F	1-1-1-1-1 nipples-not replaced (11/81)	1
75/76	P - - integral A/C "Before 5/3/76"	D5DZ 19C827-F	6-3-3 nipples	1
76/77	P - - integral A/C "From 5/3/76"	★ D6DZ 19C827-E	6-2-1-2-1 nipples-not replaced (11/81)	1
78/	P - - integral A/C	D8BZ 19C827-A	8-1-7 nipples	1
78/	P - - integral A/C	D8BZ 19C827-B	7-1-2-2 nipples	1
77/	V	D7DZ 19C827-D	9-7 nipples	1
77/78	V "From 5/16/77 to 9/1/77"	D7DZ 19C827-E	2-7-2-3-1-2 nipples	1
78/	V "From 9/1/77"	D8DZ 19C827-B	2-7-2-3-1-2 nipples	1
19A830	INSULATION (AIR CONDITIONING EVAPORATOR CORE REAR)-Improvise			
19833	PLATE (AIR CONDITIONER BLOWER MOTOR MOUNTING)			
78/	P - - built-in A/C-dealer installed	D8BZ 19833-A		1
79	J - - built-in A/C (dealer installed)			1
19834	WHEEL ASSY. (AIR CONDITIONER BLOWER)			
73/76	A,D,Y - - integral A/C	D2AZ 19834-C	Counter clockwise rotation	1
77/	A,D			1
75/	G			1
77/	V			1
73/78	A,Y - - hang-on A/C-Canada only	D2AZ 19834-A	Clockwise rotation	1
73/78	C,F,J,P - - hang-on A/C			1
74/78	L - - hang-on A/C			1
75	G - - hang-on A/C			1
73/78	A,Y - - hang-on A/C-Canada only	D2AZ 19834-B	Counter clockwise rotation	1
73/78	C,F,J,P - - hang-on A/C			1
74/78	L - - hang-on A/C			1
75/78	G - - hang-on A/C			1
79	A,F,G,J,L,P - - built-in or hang-on A/C (dealer installed)	D8AZ 19834-A	Used w/clockwise and counter clockwise rotation	1
73/76	C,K - - integral A/C	D50Z 19834-A		1
74/76	F - - integral A/C			1
77/	F,K,L - - integral A/C	D70Z 19834-A		1
78/	P - - integral A/C			1
79	J - - integral A/C			1
78/	P - - built-in A/C (dealer installed)	D8BZ 19834-A		1
79	J - - built-in A/C (dealer installed)			1
73/	A,D,Y	384260-S	(EE-17-A)-clip	1
19835	Refer to Section 197 for Serviced Refrigerant Line Assemblies and/or replacement details.			
19C836	Refer to Section 197 for Serviced Refrigerant Line Assemblies and/or replacement details.			
19837	Refer to Section 197 for Serviced Refrigerant Line Assemblies and/or replacement details.			
19D842	DOOR ASSY. (AIR CONDITIONER AIR TEMPERATURE CONTROL)			
79	G - - manual integral A/C	D9DZ 19D842-A		1
79	G,V - - A.T.C.	D9DZ 19D842-B		1
78	P - - integral A/C	D9BZ 19D842-A		1
79	J,P - - integral A/C			1
19B847	SEAL (AIR CONDITIONER EVAPORATOR TO CONNECTOR DUCT)			
79	J,P - - integral A/C	D9BZ 19D847-A		1

COPYRIGHT © 1986 — FORD MOTOR COMPANY — DEARBORN, MICHIGAN

1973/79 LINCOLN-MERCURY CARS

YEAR	MODEL/RESTRICTIONS	PART NUMBER	DESCRIPTION	QTY.
19849	VALVE (AIR CONDITIONER EVAPORATOR EXPANSION)			
Note 1	With Certification Label Code AR8 or AR9-Refer to TSB #162 dated 7/25/78			
Note 2	Wtih Certification Label Code A			
73/	A - - hang-on A/C-Canada only	C9ZZ 19849-A	*YG-30	1
73	A - - integral A/C	D0VY 19849-A	*YG-65	1
74/76	A - - integral A/C "Before 1/2/76"	D20Z 19849-A	*YG-32	1
76	A - - integral A/C "From 1/2/76 to 6/1/76"	D6AZ 19849-A	*YG-179	1
76/78	A - - integral A/C "From 6/1/76"	D60Z 19849-A	*YG-196	1
79	A - - integral A/C "Before 10/2/78"	D70Z 19849-A	*YG-209	1
79	A - - integral A/C "From 10/2/78"	D9AZ 19849-B	*YG-219	1
73/76	C - - integral A/C "Before 1/2/76"	D20Z 19849-A	*YG-32	1
76	C - - integral A/C "From 1/2/76"	D6AZ 19849-A	*YG-179	1
73/76	C - - hang-on A/C	C9ZZ 19849-A	*YG-30	1
73	D	D0VY 19849-A	*YG-65	1
74/76	D "Before 1/2/76"	D20Z 19849-A	*YG-32	1
76	D "From 1/2/76 to 6/1/76"	D6AZ 19849-A	*YG-179	1
76/	D "From 6/1/76"	D60Z 19849-A	*YG-196	1
73	F - - integral A/C	E1HZ 19849-A	*YG-236	1
74/76	F - - integral A/C "Before 1/2/76"	D20Z 19849-A	*YG-32	1
76	F - - integral A/C - w/accumulator	D6AZ 19849-A	*YG-179	1
76	F - - integral A/C-w/o accumulator	D60Z 19849-A	*YG-196	1
77/	F - - integral A/C-w/accumulator	D70Z 19849-A	*YG-189	1
78/	F - - integral A/C-w/o accumulator	D60Z 19849-A	*YG-196	1
73/	F - - hang-on A/C	C9ZZ 19849-A	*YG-30	1
75	G - - integral A/C	D5DZ 19849-A	*YG-158	1
76	G - - integral A/C "Before 8/5/76"	D6DZ 19849-A	*YG-175	1
78	G - - integral A/C	D6DZ 19849-A	*YG-175-Note 1	1
76/	G - - integral A/C "From 8/5/76"	D6DZ 19849-B	*YG-194-Note 2	1
75/	G - - hang-on A/C	C9ZZ 19849-A	*YG-30	1
74	J - - integral A/C	D5RY 19849-A	*YG-120-A	1
76/78	J - - integral A/C			1
73/78	J - - hang-on A/C	C9ZZ 19849-A	*YG-30	1
79	J - - integral A/C	D8BZ 19849-A	*YG-202	1
73/76	K "Before 1/2/76"	D20Z 19849-A	*YG-32	1
76	K "From 1/2/76 to 6/1/76"	D6SZ 19849-A	*YG-180	1
76/	K "From 6/1/76"	D60Z 19849-A	*YG-196	1
74/75	L - - integral A/C	D4FZ 19849-A	*YG-119	1
76	L - - integral A/C	★ D6FZ 19849-A	*YG-192-not replaced (3/84)	1
77/79	L - - integral A/C "Before 2/1/79"	D6DZ 19849-A	*YG-175	1
79	L - - integral A/C "From 2/1/79"	D6DZ 19849-B	*YG-194	1
74/	L,P - - hang-on A/C	C9ZZ 19849-A	*YG-30	1
73/77	P	E1HZ 19849-A	*YG-236	1
78/	P - - integral A/C	D8BZ 19849-A		1
77/	V	D6DZ 19849-B	*YG-194-Note 2	1
78	V	D6DZ 19849-A	*YG-175-Note 1	1
73	Y - - integral A/C	D0VY 19849-A	*YG-65	1
74/76	Y - - integral A/C "Before 1/2/76"	D20Z 19849-A	*YG-32	1
76	Y - - integral A/C "From 1/2/76"	D6AZ 19849-A	*YG-179	1
73/76	Y - - hang-on A/C	C9ZZ 19849-A	*YG-30	1
19D849	GASKET (AIR CONDITIONER PLENUM CHAMBER TO EVAPORATOR CASE)			
75/	G - - integral A/C	D9DZ 19D849-A	11" long	1
77/	V			1
75/	G - - integral A/C	D9DZ 19D849-C	3 1/4" long	1
77/	V			1
19D850	Refer to Section 197 for Serviced Refrigerant Line Assemblies and/or replacement details			
19D851	BRACKET (AIR CONDITIONER SUCTION THROTTLING VALVE TO DASH)			
76	G - - integral A/C	D6DZ 19D851-A		1
77/	L - - integral A/C	D7ZZ 19D851-A		1

YEAR	MODEL/RESTRICTIONS	PART NUMBER	DESCRIPTION	QTY.
19D852	TUBE ASSY. (AIR CONDITIONER ACCUMULATOR TO SUCTION VALVE)			
75	G	D5DZ 19D852-A		1
19D857	ADAPTER (AIR CONDITIONER AUTOMATIC TEMPERATURE CONTROL SENSOR)			
77	F	D70Z 19D857-A		1
19858	HOSE (AIR CONDITIONER EVAPORATOR DRAIN)			
73/	A,Y - - hang-on A/C-Canada only	D2AZ 19858-A		2
73/	C,F,G,J,P - - hang-on A/C			2
74/	L - - hang-on A/C			2
73	F - - integral A/C	C7ZZ 19858-C		1
74/77	J - - integral A/C "Before 10/1/76"			1
77/78	J - - integral A/C "From 10/1/76"	★ D7RY 19858-B	Not replaced (11/81)	1
77/78	J - - integral A/C "From 10/1/76"	★ D7RY 19858-C	Not replaced (11/81)	1
76/77	J - - heater "Before 1/3/77"	★ D5RY 19858-A	Not replaced (11/81)	1
77/78	J - - heater "From 1/3/77"	★ D7RY 19858-A	Not replaced (4/83)	1
79	J - - integral A/C	D8BZ 19858-A		1
75/78	G - - integral A/C	D5DZ 19858-A		1
79	G - - integral A/C	D9DZ 19858-A		1
74/	L - - integral A/C	D4FZ 19858-A		1
73/77	P - - integral A/C	D0DZ 19858-A		1
78/	P - - integral A/C	D8BZ 19858-A		1
77/78	V	D5DZ 19858-A		1
79	V	D9DZ 19858-A		1
19A858	CONNECTOR (AIR CONDITIONER DRAIN TUBE)			
78/	P - - built-in A/C (dealer installed)	D8BZ 19A858-A		1
79	J - - built-in A/C (dealer installed)			1
19860	CORE ASSY. (AIR CONDITIONER EVAPORATOR)			
Note 1	With Certification Label Code AR8 or AR9-Refer to TSB #162 dated 7/25/78			
Note 2	With Certification Label Code A			
73/	A,Y - - hang-on A/C-Canada only	D2AZ 19860-A	*YK-35	1
73/78	A - - integral A/C	D70Z 19860-A	*YK-57	1
79	A - - integral A/C	D9AZ 19860-A	*YK-68	1
79	A - - built-in A/C (dealer installed)	★ D9AZ 19860-B	*YK-70-not replaced (3/84)	1
73/76	C - - integral A/C	D20Z 19860-A	*YK-36-Philco core	1
73	C,D	D0VY 19860-A	*YK-1-Harrison core	1
73/76	D	D3AZ 19860-A	*YK-38-Philco core	1
77/	D	D70Z 19860-A	*YK-57	1
73/	C,F,J,P - - hang-on A/C	D2AZ 19860-A	*YK-35	1
74/	L - - hang-on A/C			1
75/	G - - hang-on A/C			1
73	F - - integral A/C	★ D1ZZ 19860-A	*YK-34-not replaced (3/84)	1
74/76	F - - integral A/C	D20Z 19860-A	*YK-36	1
77/	F - - integral A/C	D70Z 19860-A	*YK-57-Note 2	1
78	F - - integral A/C	D8LY 19860-A	*YK-66-Note 1	1
75	G - - integral A/C	D5DZ 19860-A	*YK-53	1
76/	G - - integral A/C	D6DZ 19860-A	*YK-56-Note 2	1
78	G - - integral A/C	D8DZ 19860-A	*YK-67-Note 1	1
79	J - - integral A/C	D8BZ 19860-A	*YK-59	1
79	J - - built-in A/C (dealer installed)	D8BZ 19860-B	*YK-65	1
73	K	★ D3SZ 19860-A	*YK-46-Harrison core-not replaced (4/83)	1
73/76	K	D2SZ 19860-A	*YK-37-Philco core	1
77/	K	D70Z 19860-A	*YK-57	1
74/76	L - - integral A/C	D4FZ 19860-A	*YK-44	1
77/	L - - integral A/C	D7FZ 19860-A	*YK-58	1

COPYRIGHT © 1986 — FORD MOTOR COMPANY — DEARBORN, MICHIGAN

1973/79
LINCOLN-MERCURY CARS

YEAR	MODEL/RESTRICTIONS	PART NUMBER	DESCRIPTION	QTY.
19860	CORE ASSY. (AIR CONDITIONER EVAPORATOR) — Cont'd			
Note 1	with Certification Label Code AR8 or AR9-Refer to TSB #162 dated 7/25/78			
Note 2	with Certification Label Code A			
73	P - - integral A/C "Before 12/15/72"	★ D0DZ 19860-A	*YK-26-not replaced (11/81)	1
73/77	P - - integral A/C "Before 12/15/72"	D3DZ 19860-A	*YK-47	1
78/	P - - integral A/C	D8BZ 19860-A	*YK-59	1
78/	P - - built-in A/C (dealer installed)	D8BZ 19860-B	*YK-65	1
77/	V	D6DZ 19860-A	*YK-56-Note 2	1
78	V - - integral A/C	D8DZ 19860-A	*YK-67-Note 1	1
19C862	CLAMP (AIR CONDITIONER TUBE SUPPORT CLIP)			
79	J - - integral A/C	D9ZZ 19C862-A		1
19B864	BRACKET (AIR CONDITIONER TEMPERATURE CONTROL SWITCH MOUNTING)			
77/	L - - built-in A/C-dealer installed-w/tachometer	D7FZ 19B864-A		1
19A865	BRACKET (AIR CONDITIONER EVAPORATOR CASE MOUNTING)			
73/76	C - - built-in A/C-dealer installed	(RH) D30Z 19A865-A	(LH) D30Z 19A865-B	1
74/76	F - - built-in A/C-dealer installed			1
77/	F - - built-in A/C-dealer installed	(RH) D70Z 19A865-A	(LH) D70Z 19A865-B	1
73/	C,F,P - - hang-on A/C	D1RY 19A865-A		1
75/	G - - built-in A/C-dealer installed	(RH) D5DZ 19A865-A	(LH) D5DZ 19A865-B	1
75/	G - - built-in A/C-dealer installed	D5DZ 19A865-C	Center	1
79	J - - built-in A/C (dealer installed)	D8BZ 19A865-A	R.H.	1
79	J - - built-in A/C (dealer installed)	D8BZ 19A865-B		1
79	J - - built-in A/C (dealer installed)	D8BZ 19A865-C	From blower to instrument panel	1
79	J - - built-in A/C (dealer installed)	D8BZ 19A865-D		1
74/	L - - built-in A/C-dealer installed	(RH) D4FZ 19A865-A	(LH) D4FZ 19A865-B	1
78/	P - - built-in A/C-dealer installed	D8BZ 19A865-A	R.H.	1
78/	P - - built-in A/C-dealer installed	D8BZ 19A865-B		1
78/	P - - built-in A/C-dealer installed	D8BZ 19A865-C	From blower to instrument panel	1
78/	P - - built-in A/C-dealer installed	D8BZ 19A865-D		1
19C866	PANEL ASSY. (AIR CONDITIONER REGISTER TRIM)			
73/76	A,Y - - built-in A/C-dealer installed-Canada only	D5MY 19C866-A		1
77	A - - built-in A/C-dealer installed-Canada only	D7MY 19C866-A		1
77/	F - - built-in A/C-dealer installed	D70Z 19C866-A	Panel	1
77/78	F - - built-in A/C-dealer installed	D70Z 19C866-B	Medium Burl walnut applique	1
78/	F - - built-in A/C (dealer installed)	D80Z 19C866-A	Dark Burl Walnut	1
77/	F - - built-in A/C-dealer installed	D70Z 19C866-C	Rosewood applique	1
75/	G - - built-in A/C-dealer installed	D5DZ 19C866-A		1
79	J - - built-in A/C (dealer installed)	D8BZ 19C866-A		1
74/	L - - built-in A/C-dealer installed w/o tachometer	D4FZ 19C866-A		1
77/	L - - built-in A/C-dealer installed-w/tachometer	D7FZ 19C866-A		1
73/77	P - - built-in A/C-dealer installed	D4DZ 19C866-A		1
78/	P - - built-in A/C-dealer installed	D8BZ 19C866-A		1

YEAR	MODEL/RESTRICTIONS	PART NUMBER	DESCRIPTION	QTY.
19867	Refer to Section 197 for Serviced Refrigerant Line Assemblies and/or replacement details			
19C872	Refer to group 19B968			
19D873	BRACKET (AIR CONDITIONER SERVO MOUNTING AUTOMATIC TEMPERATURE CONTROL)			
79	A	D9AZ 19D873-A		1
19D877	SLEEVE (AIR CONDITIONER MANIFOLD PILOT)			
76/	G - - integral A/C	D6DZ 19D877-A	Upper	1
77/	L,V - - integral A/C			1
76/	G - - integral A/C	D6DZ 19D877-B	Lower	1
77/	L,V - - integral A/C			1
19878	DAMPER ASSY. (AIR CONDITIONER OUTSIDE AIR INTAKE FLUE)			
73/76	A,D,Y - - integral A/C	D1AZ 19878-A		1
77/78	A - - integral A/C			1
77/	D			1
19D878	BODY (AIR CONDITIONER CHARGING VALVE)			
76/	G - - integral A/C	D6DZ 19D878-A		1
79	J - - integral A/C			1
77/	L,V - - integral A/C			1
78/	P - - integral A/C			1
19A884	BRACKET ASSY. (AIR CONDITIONER CONTROL MOUNTING)			
73	F - - integral A/C		Refer to group 19980	
74	P - - integral A/C w/rear window defogger "From 8/1/74"	D4DZ 19A884-B		1
75	P - - integral A/C w/rear window defogger "Before 12/1/74"	★ D5DZ 19A884-B	Repl. by B6A 13466-A,B9MY 13466-A,D3DZ 18541-A, D0DZ 18578-B,D5DZ 19A884-D,D5DZ 19B888-A and D2DZ 19986-A (3/75)	1
19D887	WIRING (AIR CONDITIONER JUMPER)			
79	A - - A.T.C.	D9AZ 19D887-A		1
79	J - - 4 cyl. 140(2300cc)-integral A/C	D8BZ 19D887-A		1
79	J - - 6 cyl. and 8 cyl.-integral A/C	D9ZZ 19D887-A		1
78/	P - - 4 cyl - - 140 (2300cc)-integral A/C	D8BZ 19D887-A		1
78	P - - 6 cyl. - - integral A/C	D8BZ 19D887-C		1
79	J,P - - 6 cyl. 200 A/T exc. Calif.-integral A/C			1
79	J,P - - 6 cyl. 200 M/T exc. Calif.-integral A/C	D9BZ 19D887-A		1
79	P - - 6 cyl. Calif.-integral A/C			1
78/	P - - 8 cyl. - - integral A/C	D8BZ 19D887-B		1

COPYRIGHT © 1986 — FORD MOTOR COMPANY — DEARBORN, MICHIGAN

1973/79
LINCOLN-MERCURY CARS

YEAR	MODEL/RESTRICTIONS	PART NUMBER	DESCRIPTION	QTY.
19B888	SWITCH ASSY. (AIR CONDITIONER DAMPER DOOR)			
73/74	A,Y - - A.T.C.	D3AZ 19B888-A	*YH-13	1
75	A,Y - - A.T.C. "Before 2/24/75"	D5AZ 19B888-B	*YH-246	1
75/76	A,Y - - A.T.C. "From 2/24/75"	D5AZ 19B888-D	*YH-280	1
77	A - - A.T.C.			1
73/74	A,Y - - manual integral A/C	D3AZ 19B888-B	*YH-3	1
75/76	A,Y - - manual integral A/C-	D5AZ 19B888-C	*YH-279	1
77/78	A - - manual integral A/C			1
78	A - - A.T.C.	D7LY 19B888-A	*YH-300	1
79	A - - heater	E0AZ 19B888-A	*YH-373	
79	A - - manual integral A/C	E0AZ 19B888-B	*YH-374	
79	A - - A.T.C.	D9AZ 19B888-C	*YH-355	1
73/74	C - - manual integral A/C	D30Z 19B888-A	*YH-231	1
74	C,F - - A.T.C.	D40Z 19B888-A	*YH-194	1
75	C,F - - A.T.C. "Before 2/24/75"	D50Z 19B888-B	*YH-272	1
75/76	C,F - - A.T.C. "From 2/24/75"	D50Z 19B888-D	*YH-282	1
77/	F - - A.T.C.	D70Z 19B888-A	*YH-294	1
75/76	C,F - - manual integral A/C	D50Z 19B888-C	*YH-281	1
78/	D	D7LY 19B888-A	*YH-300	1
77/	F - - manual integral A/C	D5AZ 19B888-C	*YH-279	1
73	F - - integral A/C	D5DZ 19B888-A	*YH-275	1
73/77	P - - integral A/C			1
74	F - - manual integral A/C	D30Z 19B888-A	*YH-231	1
75	G - - manual integral A/C- "Before 12/15/74"	D50Z 19B888-A	*YH-271	1
75/	G - - manual integral A/C- "From 12/15/74"	D50Z 19B888-C	*YH-281	1
77/	G - - A.T.C.	D7DZ 19B888-A	*YH-295	1
74/78	J - - integral A/C	D5FZ 19B888-A	*YH-274	1
75	K "Before 2/24/75"	D5SZ 19B888-A	*YH-273	1
75/76	K "From 2/24/75"	D5SZ 19B888-B	*YH-283	1
77/	K	D7LY 19B888-A	*YH-300	1
74/77	L - - integral A/C	D5FZ 19B888-A	*YH-274	1
78/	L - - integral A/C	D50Z 19B888-C	*YH-281	1
77/	V	D7DZ 19B888-A	*YH-295	1
19D888	HOSE AND ELBOW ASSY. (AUTOMATIC TEMPERATURE CONTROL SENSOR)			
79	A	D9AZ 19D888-A		1
77/	F,G,K,V	D70Z 19D888-A		1
78	A			1
78/	D			1
19893	REGISTER (AIR CONDITIONER)			
73	A - - hang-on A/C	D2AZ 19893-B	Adjustable	4
73/74	A,Y - - integral A/C	D2SZ 19893-A		4
73/74	A,Y - - heater			2
75/76	A,Y	D20Z 19893-A		4
77/78	A			4
79	A	D9AZ 19893-A	Center	1
73/	A,Y - - built-in A/C (dealer installed)-Canada only	D3AZ 19893-A		2
73	C - - hang-on A/C	D2AZ 19893-B	Adjustable	4
73/76	C - - integral A/C or built-in A/C- dealer installed	D20Z 19893-A	Center	2
73/76	C		R.H.-refer to body group 018B08	
73/76	C - - integral A/C	★ D30Z 19893-A	L.H.-not replaced (3/84)	1

YEAR	MODEL/RESTRICTIONS	PART NUMBER	DESCRIPTION	QTY.
19893	REGISTER (AIR CONDITIONER) — Cont'd			
73	D - - w/o AM/FM tape radio	D0VY 19893-A	Center-R.H. and L.H. intermediate	1
75/	D	D20Z 19893-A		AR
75	D	★ D5VY 19893-B	L.H.-black-Repl. by D5VY 19623-B and D20Z 19893-A (6/76)	1
		★ D5VY 19893-D	L.H.-blue-r/b D5VY 19623-D and D20Z 19893-A(12/79)	1
		D5VY 19893-C	L.H.-gold	1
		★ D5VY 19893-G	L.H.-green-r/b D5VY 19623-A and D20Z 19893-A(12/79)	1
		★ D5VY 19893-A	L.H.-red-r/b D5VY 19623-A and D20Z 19893-A(12/79)	1
		★ D5VY 19893-E	L.H.-tan-Replaced by D5VY 19623-B and D20Z 19893-A	1
		★ D5VY 19893-F	L.H.-taupe-r/b D5VY 19623-F and D20Z 19893-A(12/79)	1
73	F - - hang-on A/C	D2AZ 19893-B	Adjustable	4
73	F - - integral A/C	D1ZZ 19893-A	Center	1
73	F		R.H. and L.H.-refer to body group 01814	
74/	F - - integral A/C or built-in A/C-dealer installed	D20Z 19893-A	Center	1
74/	F		R.H.-refer to body group 018B08	
74/76	F - - integral A/C	★ D30Z 19893-A	L.H.-not replaced (3/84)	1
77/	F - - integral A/C - w/o tachometer	D70Z 19893-A	L.H.	1
77/	F - - integral A/C-w/tachometer	D70Z 19893-B	L.H.	1
75/	G - - heater	D20Z 19893-A	R.H. and L.H.	2
75/	G - - integral A/C	D2SZ 19893-A	Center	2
75/	G - - integral A/C		R.H.	1
75/	G - - integral A/C	D20Z 19893-A	L.H.	1
75/	G - - built-in A/C-dealer installed	D3AZ 19893-A		2
73/78	J - - built-in A/C-dealer installed	★ D3RY 19893-A	Repl. by D3RY 19C784-A (12/73)	2
76/78	J - - built-in A/C-dealer installed	D3AZ 19893-A		1
73/78	J - - hang-on A/C	D2AZ 19893-B	Adjustable	4
74/78	J - - integral A/C	D4RY 19893-A		2
79	J - - integral A/C	D20Z 19893-A		1
73/	K	D2SZ 19893-A		4
74/	L - - built-in A/C-dealer installed	D4FZ 19893-A	Center	1
74/	L - - integral A/C	D3FZ 19893-A	Center-also refer to group 18C366	1
73/77	P - - hang-on A/C	D2AZ 19893-B	Adjustable	4
78	P - - built-in A/C-dealer installed	D3TZ 19893-D		2
73	P - - integral A/C- "Before 2/5/73"	★ D0DZ 19893-A	R.H. and L.H.-outer-round-not replaced (11/81)	2
73/77	P "From 2/5/73"	D20Z 19893-A	R.H. and L.H.-outer-rectangular	2
76/77	P - - integral A/C	★ D6DZ 19893-A	Center-not replaced (11/81)	1
73/75	P - - integral A/C	★ D2DZ 19893-A	Center-complete-incl. (2) D2DZ 19893-B	1
73/75	P - - integral A/C	D2DZ 19893-B	Center-also serviced in assembly-D2DZ 19893-A	2
78/	P	D20Z 19893-A		1
77/	V	D2SZ 19893-A	Center	2
77/	V		R.H.	1
77/	V	D20Z 19893-A	L.H.	1
19A893	GASKET (AIR CONDITIONER REGISTER TO EVAPORATOR CASE CENTER)			
75/	G - - built-in A/C-dealer installed	D5DZ 19A893-A		1
19C896	PAD (AIR CONDITIONER REGISTER LOUVER)			
73/	All	D00Z 19C896-A		AR
19897	Refer to group 19A626			
19B898	DEFLECTOR (AIR CONDITIONER EVAPORATOR CASE AIR)			
77/	F - - integral A/C	D70Z 19B898-A		1
19C898	GROMMET (AIR CONDITIONER CONTROL CABLE)			
73/74	A,D,Y - - integral A/C	C8AZ 19C898-A		1
75/76	A,D,Y - - integral A/C	D5AZ 19C898-A		1
77/78	A - - integral A/C			1
77/	D			1

COPYRIGHT © 1986 — FORD MOTOR COMPANY — DEARBORN, MICHIGAN

1973/79 LINCOLN-MERCURY CARS

YEAR	MODEL/RESTRICTIONS	PART NUMBER	DESCRIPTION	QTY.
19C901	GASKET (PLENUM CHAMBER OUTLET)			
75/	G - - integral A/C	D9DZ 19C901-A		1
77/	V			1
19C904	TEE (AIR CONDITIONER VACUUM HOSE)			
79	F,G,K,P,V - - w/mini tube vacuum harness	D9SZ 19C904-A		1
19A908	DOOR ASSY. (AIR CONDITIONER PLENUM CHAMBER DEFROST)			
79	G,V - - integral A/C	D9DZ 19A908-A		1
19A915	GASKET (AIR CONDITIONER PLENUM CHAMBER FRONT)			
73/74	A,Y - - integral A/C	D3AZ 19A915-A		1
75/	A - - integral A/C	D8VY 19A915-A		1
78/	D			
75/	L - - integral A/C	D5FZ 19A915-A		1
19C917	BRACKET (AIR CONDITIONER CONDENSER TUBE SUPPORT)			
75/76	C,F,K - - integral A/C	D50Z 19C917-A		1
77/	F,K - - integral A/C			1
75/77	G - - integral A/C "Before 2/15/77"	★ D5DZ 19C917-A	Not replaced (11/81)	1
77	V "Before 2/15/77"			1
77/	G,V "From 2/15/77"	D74Y 19C917-A		1
19926	DUCT (AIR CONDITIONER EVAPORATOR TO INSTRUMENT PANEL REGISTER)			
73/	A,Y - - built-in A/C (dealer installed)-Canada only	D3AZ 19926-A		1
73/76	C - - built-in A/C-dealer installed	(RH) D30Z 19926-B	(LH) D30Z 19926-A	1
74/	F - - built-in A/C-dealer installed			1
75/	G - - built-in A/C-dealer installed	(RH) D5DZ 19926-A	(LH) D4FZ 19926-A	1
79	J - - built-in A/C-dealer installed	(RH) D8BZ 19926-A	(LH) D8BZ 19926-B	1
74/	L - - built-in A/C-dealer installed	D4FZ 19926-A	L.H. register	1
74/77	P - - built-in A/C-dealer installed	(RH) D3AZ 19926-A	(LH) D4FZ 19926-A	1
78/	P - - built-in A/C-dealer installed	(RH) D8BZ 19926-A	(LH) D8BZ 19926-B	1
19D926-7	PLATE (AIR CONDITIONER CONDENSER TUBE)			
78/	P - - integral A/C	(RH) D8BZ 19D926-A	(LH) D8BZ 19D927-A	1
19930	HOUSING ASSY. (AIR CONDITIONER BLOWER)			
73/74	C,K - - integral A/C "Before 11/1/73"	★ D20Z 19930-A	Incl. gasket-not replaced (11/81)	1
74	F - - integral A/C "Before 11/1/73"			1
74/76	C - - integral A/C "From 11/1/73"	★ D40Z 19930-A	Not replaced (4/83)	1
74	F,K - - integral A/C "From 11/1/73"	★ D4GY 19930-A	Repl. by D40Z 19930-A and D40Z 19930-B(9/76)	1
74	F,K	D40Z 19930-B	Kit	1
	Consists of 1-D40Z 19B730-A gasket 2-D40H 19C942-AA bracket 1 - instruction sheet			
75/76	F,K - - integral A/C	D40Z 19930-A		1
78/79	J,P - - integral A/C	E1SZ 19930-A		1
19C932	DUCT and CONNECTOR ASSY. (AIR CONDITIONER JUNCTION)			
73	F - - integral A/C	D1ZZ 19C932-A		1
73/75	P - - integral A/C	D0DZ 19C932-B		1
19D933	BRACKET (AIR CONDITIONER CONDENSER INLET MANIFOLD)			
79	A - - integral A/C	D9AZ 19D933-A		1
79	J - - integral A/C	D9ZZ 19D933-A		1
78/	P - - integral A/C	D8BZ 19D933-A		1

1973/79 LINCOLN-MERCURY CARS

YEAR	MODEL/RESTRICTIONS	PART NUMBER	DESCRIPTION	QTY.
19B937	BRACKET (AIR CONDITIONER DEHYDRATOR TANK MOUNTING)			
76/	G - - integral A/C	D6DZ 19B937-A		1
73/78	J - - hang-on A/C	C9RZ 19B937-A		1
75/	L - - integral A/C	D5FZ 19B937-A	Plate	1
77/	V	D6DZ 19B937-A		1
19B942	BRACKET (AIR CONDITIONER INSTRUMENT PANEL REGISTER)			
73	C - - deluxe hang-on A/C	D2DZ 19B942-A	R.H. instrument panel L.H. evaporator	1 1
75/	G - - built-in A/C-dealer installed	D5DZ 19B942-A	Upper and lower	2
79	J - - integral A/C	D8BZ 19B942-A		1
78/	P - - built-in A/C-dealer installed	D8BZ 19B942-A		1
19945	WIRING ASSY. (AIR CONDITIONER BLOWER MOTOR SWITCH FEED)			
77/	F - - A.T.C.	D70Z 19945-A		1
77/	G,V - - A.T.C.	D7DZ 19945-A		1
19D945	WIRING ASSY. KIT (AIR CONDITIONER BLOWER MOTOR FEED)			
78	G,L - - integral A/C	D7FZ 19D945-A	"As listed in TSB No. 143 dated 9/20/77, article 1976"	1
19949	WIRING ASSY. (AIR CONDITIONER BLOWER MOTOR FEED)			
79	A - - integral A/C	D9AZ 19949-A		1
78/	D - - with C.B. radio	D8VY 19949-A		1
78/	P - - integral A/C	D8BZ 19949-A		1
73	F - - integral A/C	D1ZZ 19949-A		1
75/76	J - - integral A/C "Before 8/2/76"	D5RY 19949-A		1
76/78	J - - integral A/C "From 8/2/76"	★ D6RY 19949-A	Not replaced (4/83)	1
79	J - - integral A/C	D8BZ 19949-A		1
19A949	BRACKET (AIR CONDITIONER REGISTER TEMPERATURE SWITCH MOUNTING)			
73/76 74/76	C - - built-in A/C-dealer installed F - - built-in A/C-dealer installed	D30Z 19A949-A		1 1
77/	F - - built-in A/C-dealer installed	D70Z 19A949-A		1
73/78	J - - built-in A/C-dealer installed	D3TZ 19A949-A		1
79	J - - built-in A/C (dealer installed)	D8BZ 19A949-A		1
74/	L - - built-in A/C-dealer installed	D4FZ 19A949-A		1
78/	P - - built-in A/C-dealer installed	D8BZ 19A949-A		1
19A950	RETAINER (REGISTER)			
75/	D	D5MY 19A950-A		1
78/	P - - built-in A/C-dealer installed	D8BZ 19A950-A		1
19959	DEHYDRATOR and RECEIVER TANK (AIR CONDITIONER)			
Note 1	With Certification Label Code AR8 or AR9-Refer to TSB #162 dated 7/25/78			
Note 2	With Certification Label Code A			
76	A,C,F,G,L,P - - hang-on A/C "Before 1/1/76"	★ D27Z 19959-A	Repl. by D6AZ 19959-A (9/76)	1
76/	A,C,F,G,L,P - - hang-on A/C "From 1/1/76"	D6AZ 19959-A	*YL-106	1
73/75	A,Y - - hang-on A/C-Canada only	C7AZ 19959-B	*YL-20	1
73/76 77/78	A,Y - - integral A/C A - - integral A/C	D3AZ 19959-A	*YL-10	1 1
79	A - - integral A/C	D9AZ 19959-A	*YL-117	1

COPYRIGHT © 1986 — FORD MOTOR COMPANY — DEARBORN, MICHIGAN

1973/79 LINCOLN-MERCURY CARS

YEAR	MODEL/RESTRICTIONS	PART NUMBER	DESCRIPTION	QTY.
19959	DEHYDRATOR and RECEIVER TANK (AIR CONDITIONER) — Cont'd			
Note 1	With Certification Label Code AR8 or AR9-Refer to TSB #162 dated 7/25/78			
Note 2	With Certification Label Code A			
73/75	C,F,P - - hang-on A/C	C7AZ 19959-B	*YL-20	1
74/75	L - - hang-on A/C			1
75	G			1
73/76	C	D20Z 19959-A	*YL-9	1
73	D	★ D2VY 19959-A	*YL-31-not replaced (3/84)	1
74/	D	D3AZ 19959-A	*YL-10	1
73	F - - integral A/C	D2ZZ 19959-A	*YL-32	1
74/	F - - integral A/C	D20Z 19959-A	*YL-9-Note 2	1
78	F - - integral A/C	D80Z 19959-A	*YT-116-Note 1	1
75/77	G - - integral A/C "Before 2/15/77"	D5DZ 19959-A	*YL-101	1
77/	G - - integral A/C "From 2/15/77"	D74Y 19959-A	*YL-112-Note 2	1
78	G - - integral A/C	D8DZ 19959-A	*YL-115-Note 1	1
73/74	J - - hang-on A/C	★ C9RZ 19959-A	*YL-50-not replaced (4/83)	1
76	J - - hang-on A/C "Before 1/1/76"	D27Z 19959-A		1
76/78	J - - hang-on A/C "From 1/1/76"	D6AZ 19959-A	*YL-106	1
74/76	J - - integral A/C "Before 8/1/76"	★ D4RY 19959-A	*YL-93-not replaced (3/84)	1
76/78	J - - 4 cyl. 140 (2300 cc) and integral A/C "From 8/1/76"			
76/78	J - - 6 cyl. 171 (2800 cc) and integral A/C "From 8/1/76"	★ D6RY 19959-B	*YL-111-not replaced (3/84)	1
79	J - - integral A/C	D9ZZ 19959-A	*YL-119	1
73/77	K	D20Z 19959-A	*YL-9	1
78/	K	D3AZ 19959-A	*YL-10	1
74	L - - integral A/C	★ D4FZ 19959-B	*YL-94-not replaced (3/84)	1
75	L - - integral A/C	★ D5FZ 19959-A	*YL-102-not replaced (3/84)	1
76/	L - - integral A/C	D6FZ 19959-A	*YL-104	1
73	P - - integral A/C	D2DZ 19959-A	*YL-28	1
74/76	P - - integral A/C "Before 2/23/76"	D4DZ 19959-A	*YL-95	1
76/77	P - - integral A/C "From 2/23/76"	D2DZ 19959-A	*YL-28	1
78/	P - - integral A/C	D8BZ 19959-A	*YL-113	1
77/	V	D74Y 19959-A	*YL-112-Note 2	1
78	V	D8DZ 19959-A	*YL-115-Note 1	1
19C960	SEAL (AIR CONDITIONER TEMPERATURE SENSOR)			
73/76	A,D,Y - - integral A/C	D3AZ 19C960-A		1
79	A - - A.T.C.	D9AZ 19C960-A		1
19A962	KNOB ASSY. (AIR CONDITIONER CONTROL)			
75/	A,Y - - hang-on A/C-Canada only	D1RY 19A962-A		1
73	C,J,P - - deluxe hang-on A/C			1
73	C,F,J,P - - economy hang-on A/C			2
74/	L - - built-in A/C-dealer installed			1
74/77	P - - built-in A/C (dealer installed)			1
76/	G - - built-in A/C-dealer installed			1
73/76	C - - built-in A/C-dealer installed	D30Z 19A962-B	Blower switch	1
74/	F - - built-in A/C-dealer installed			1
73/76	C - - built-in A/C-dealer installed	D30Z 19A962-A	Temperature switch	1
74/	F - - built-in A/C-dealer installed			1
76/78	J - - built-in A/C-dealer installed	D1RY 19A962-A		1
78/	P - - built-in A/C-dealer installed	D8RZ 19A962-A		2
79	J - - built-in A/C (dealer installed)			2

YEAR	MODEL/RESTRICTIONS	ENGINE CYL.	ENGINE C.I.D. (C.C.D.)	PART NUMBER	DESCRIPTION	QTY.
19B968	AIR CONDITIONER KITS FOR COMPLETE INSTALLATION (1) EACH OF THE FOLLOWING GROUP NUMBER IS REQUIRED-19703,19708,19C872,19B968 and 19B969.					
73	A,Y - - Canada only	8	All	★ D2AZ 19C872-B	Bezel for economy hang-on-(incl. controls and ducts)-not replaced (12/79)	1
		8	All	D3MY 19C872-A	Bezel for built-in type-dealer installed-(incl. controls and ducts)	1
		8	All	D2AZ 19703-A	Compressor	1
		8	All	D2AZ 19708-A	Condenser	1
		8	All	D2AZ 19B968-A	Evaporator	1
		8	351C, 400	★ D2AZ 19B969-B	Drive kit-not replaced (11/81)	1
		8	429,460	D4AZ 19B969-A	Drive kit	1
74	A,Y - - Canada only	8	All	★ D2AZ 19C872-B	Bezel for economy hang-on-(incl. controls and ducts)-not replaced (12/79)	1
		8	All	D3MY 19C972-A	Bezel for built-in type-dealer installed-(incl. controls and ducts)	1
		8	All	D2AZ 19703-A	Compressor	1
		8	All	D2AZ 19708-A	Condenser	1
		8	All	D2AZ 19B968-A	Evaporator	1
		8	351,400	★ D2AZ 19B969-B	Drive kit-not replaced (11/81)	1
		8	460	D4AZ 19B969-A	Drive kit	1
75	A,Y - - Canada only	8	All	★ D2AZ 19C872-B	Bezel for economy hang-on-(incl. controls and ducts)-not replaced (12/79)	1
		8	All	D3MY 19C872-A	Bezel for built-in type-dealer installed-(incl. controls and ducts)	1
		8	All	D2AZ 19703-A	Compressor	1
		8	All	D2AZ 19708-A	Condenser	1
		8	All	D2AZ 19B968-A	Evaporator	1
		8	351,400	★ D2AZ 19B969-B	Drive kit-not replaced (11/81)	1
		8	351,M 400	★ D5AZ 19B969-B	Drive kit w/Saginaw P/S pump-not replaced (12/79)	1
		8	460	★ D5AZ 19B969-A	Drive kit-use exc. w/Saginaw P/S pump-not replaced (12/79)	1
76	A,Y - - Canada only	8	All	★ D2AZ 19C872-B	Bezel for economy hang-on (incl. controls and ducts)-not replaced (12/79)	1
		8	All	D5MY 19C872-A	Bezel for built-in type-dealer installed-(incl. controls and ducts)	1
		8	All	D2AZ 19703-A	Compressor and clutch	1
		8	All	D2AZ 19708-A	Condenser	1
		8	All	D2AZ 19B968-A	Evaporator	1
		8	351M 400	★ D5AZ 19B969-B	Drive kit-not replaced (12/79)	
		8	460	★ D5AZ 19B969-A	Drive kit-not replaced (12/79)	
77	A - - Canada only	All	All	★ D7MY 19C872-A	Bezel for built-in type-dealer installed (incl. controls and ducts)-not replaced (4/83)	1
		All	All	D2AZ 19703-A	Compressor kit	1
		All	All	D2AZ 19708-A	Condenser kit	1
		All	All	D2AZ 19B968-A	Evaporator kit	1
		All	351M 400	D7AZ 19B969-A	Drive kit	1
		All	460	★ D5AZ 19B969-A	Drive kit-not replaced (12/79)	

COPYRIGHT © 1986 — FORD MOTOR COMPANY — DEARBORN, MICHIGAN

1973/79 LINCOLN-MERCURY CARS

YEAR	MODEL/RESTRICTIONS	ENGINE CYL.	ENGINE C.I.D. (C.C.D.)	PART NUMBER	DESCRIPTION	QTY.
19B968	AIR CONDITIONER KITS — Cont'd FOR COMPLETE INSTALLATION (1) EACH OF THE FOLLOWING GROUP NUMBER IS REQUIRED-19703,19708,19C872,19B968 and 19B969.					
78	A - - Canada only	All	All	D7MY 19C872-A	Bezel for built-in type-dealer installed (incl. controls and ducts)	1
		All	All	D2AZ 19703-A	Compressor kit	1
		All	All	D2AZ 19708-A	Condenser kit	1
		All	All	D2AZ 19B968-A	Evaporator kit	1
		All	351M,400	★ D8AZ 19B969-C	Drive kit-not replaced (4/83)	1
		All	460	★ D8AZ 19B969-A	Drive kit-not replaced (3/84)	1
79	A - - w/comfort vent	8	All	Not required	Bezel for built-in type-dealer installed (incl. controls and ducts)	1
		8	All	D2AZ 19703-B	Compressor Kit	1
		8	All	D2AZ 19708-A	Condenser Kit	1
		8	All	★ D9AZ 19B968-A	Evaporator Kit-r/b E0AZ 19B968-A(11/81)	1
		8	302	E0AZ 19B969-A	Drive Kit	1
73	C - - w/o console	6&8	exc. Hi-Perf.	★ D20Z 19C872-A Not replaced (9/78)	Bezel for deluxe hang-on-(incl. controls and ducts)	1
73	C	6&8	exc. Hi-Perf.	★ D40Z 19C872-A	Bezel for built-in type-dealer installed-(incl. controls and ducts)-not replaced (11/81)	1
		6&8	All	★ D2AZ 19C872-B	Bezel for economy hang-on-(incl. controls and ducts)-not replaced (12/79)	1
		6&8	All	D2AZ 19703-B	Compressor	1
		6&8	All	D2AZ 19708-A	Condenser	1
		6	250	★ D20Z 19B969-A	Drive kit-not repld. (6/78)	1
		6	250	C8SZ 8600-B	For X/C fan	1
		6	250	D1DZ 8546-A	For X/C spacer	1
		6	250	★	For X/C bolt-5/16"-24 x 2 1/8"	4
		8	302	D50Z 19B969-A	Drive kit	1
		8	351C, 400	★ D2AZ 19B969-B	Drive kit-not replaced (11/81)	1
		8	351C, 400	D2VY 8600-A	For X/C fan	1
73	C	8	351C, 400	C4AZ 8546-G	For X/C spacer	1
		8	351C, 400	★	For X/C bolt-5/16"-24 x 3 1/2"	4
		8	429	★ D2AZ 19B969-A	Drive kit-r/b D4AZ 19B969-A(6-74)	1
		8	429	D2VY 8600-A	For X/C fan	1
		8	429	C4AZ 8546-G	For X/C spacer	1
		8	429	★	For X/C bolt-5/16"-24 x 3 1/2"	4
		6&8	All	D2AZ 19B968-A	Evaporator	1
74	C - - w/o console	6&8	exc. Hi-Perf.	★ D20Z 19C872-A Not replaced (9/78)	Bezel for deluxe hang-on-(incl. controls and ducts)	1

YEAR	MODEL/RESTRICTIONS	ENGINE CYL.	ENGINE C.I.D. (C.C.D.)	PART NUMBER	DESCRIPTION	QTY.
19B968	AIR CONDITIONER KITS — Cont'd FOR COMPLETE INSTALLATION (1) EACH OF THE FOLLOWING GROUP NUMBER IS REQUIRED-19703,19708,19C872,19B968 and 19B969.					
74	C	6&8	All	★ D2AZ 19C872-B	Bezel for economy hang-on-(incl. controls and ducts)-not replaced (12/79)	1
		6&8	All	★ D40Z 19C872-A	Bezel for built-in type-dealer installed-(incl. controls and ducts)-not replaced (11/81)	1
		6&8	All	D2AZ 19703-B	Compressor	1
		6&8	All	D2AZ 19708-A	Condenser	1
		6	250	★ D40Z 19B969-A	Drive kit-r/b D5DZ 19B969-B(6/75)	1
		8	302, 351W	D50Z 19B969-A	Drive kit	1
		8	351C, 400	★ D2AZ 19B969-B	Drive kit-not replaced (11/81)	1
		8	351C, 400	D2VY 8600-A	For X/C fan	1
		8	351C, 400	C4AZ 8546-G	For X/C spacer	1
		8	351C, 400	★	For X/C bolt-5/16"-24 x 3 1/2"	4
		8	460	D4AZ 19B969-A	Drive kit	1
		8	460	C8AZ 8600-B	For X/C fan	1
		8	460	D1DZ 8546-A	For X/C spacer	1
		8	460	45539-S7	For X/C bolt-5/16"-24 x 3 1/4"	4
		6&8	All	D2AZ 19B968-A	Evaporator	1
75	C	8	All	★ D2AZ 19C872-B	Bezel for economy hang-on-(incl. controls and ducts)-not replaced (12/79)	1
		8	All	★ D40Z 19C872-A	Bezel for built-in type-dealer installed-(incl. controls and ducts)-not replaced (11/81)	1
		8	All	D2AZ 19703-B	Compressor	1
		8	All	D2AZ 19708-A	Condenser	1
		8	All	D2AZ 19B968-A	Evaporator	1
		8	351M, 400	★ D2AZ 19B969-B	Drive kit-use exc. w/Saginaw P/S pump-not replaced (11/81)	1
		8	351M, 400	D2VY 8600-A	For X/C fan	1
		8	351M, 400	C4AZ 8546-G	For X/C spacer	1
		8	351M, 400	★	For X/C bolt-5/16"-24 x 3 1/2"	4
		8	351M, 400	★ D5AZ 19B969-B	Drive kit-use w/Saginaw P/S pump-not replaced (12/79)	1
		8	351W	★ D50Z 19B969-A	Drive kit-not replaced (4/83)	1
		8	460	★ D5AZ 19B969-A	Drive kit-not replaced (12/79)	1

COPYRIGHT © 1986 — FORD MOTOR COMPANY — DEARBORN, MICHIGAN

1973/79 LINCOLN-MERCURY CARS

YEAR	MODEL/RESTRICTIONS	ENGINE CYL.	ENGINE C.I.D. (C.C.D.)	PART NUMBER	DESCRIPTION	QTY.
19B968	AIR CONDITIONER KITS — Cont'd FOR COMPLETE INSTALLATION (1) EACH OF THE FOLLOWING GROUP NUMBER IS REQUIRED-19703,19708,19C872,19B968 and 19B969.					
76	C	8	All	★ D40Z 19C872-A	Bezel for built-in type-dealer installed-(incl. controls and ducts)-not replaced (11/81)	1
		8	All	D2AZ 19703-B	Compressor	1
		8	All	D2AZ 19708-A	Condenser	1
		8	All	D2AZ 19B968-A	Evaporator	1
		8	351W	★ D50Z 19B969-A	Drive kit-not replaced (4/83)	1
		8	351M, 400	★ D2AZ 19B969-B	Drive kit-not replaced (11/81)	1
		8	351M, 400	D2VY 8600-A	For X/C fan	1
		8	351M, 400	C4AZ 8546-G	For X/C spacer	1
		8	351M, 400	★	For X/C bolt-5/16"-24 x 3 1/2"	1
		8	460	★ D5AZ 19B969-A	Drive kit-not replaced (12/79)	1
73	F	8	All	Not available	Bezel for deluxe hang-on-(incl. controls and ducts)	1
		8	All	★ D2AZ 19C872-B	Bezel for economy hang-on-(incl. controls and ducts)-not replaced (12/79)	1
		8	All	D2AZ 19703-B	Compressor	1
		8	All	D2AZ 19708-A	Condenser	1
		8	351C	★ D2AZ 19B969-B	Drive kit-not replaced (11/81)	1
		8	351C	D2SZ 8600-A	For X/C fan	1
		8	351C	C4AZ 8546-G	For X/C spacer	1
		8	351C	★	For X/C bolt-5/16"-24 x 3 1/2"	4
		8	All	D2AZ 19B968-A	Evaporator	1
74	F	8	All	★ D2AZ 19C872-B	Bezel for economy hang-on-(incl. controls and ducts)-not replaced (12/79)	1
		8	All	★ D40Z 19C872-A	Bezel for built-in type dealer installed-(incl. controls and ducts)-not replaced (11/81)	1
		8	All	D2AZ 19703-B	Compressor	1
		8	All	D2AZ 19708-A	Condenser	1
		8	351C	★ D2AZ 19B969-B	Drive kit-not replaced (11/81)	1
		8	351C	D2VY 8600-A	For X/C fan	1
		8	351C	C4AZ 8546-G	For X/C spacer	1
		8	351C	★	For X/C bolt-5/16"-24 x 3 1/2"	4
		8	All	D2AZ 19B968-A	Evaporator	1

YEAR	MODEL/RESTRICTIONS	ENGINE CYL.	ENGINE C.I.D. (C.C.D.)	PART NUMBER	DESCRIPTION	QTY.
19B968	AIR CONDITIONER KITS — Cont'd FOR COMPLETE INSTALLATION (1) EACH OF THE FOLLOWING GROUP NUMBER IS REQUIRED-19703,19708,19C872,19B968 and 19B969. ▲ 2000 cc @ 2300 cc ⊕ 2800 cc					
75	F	8	All	★ D2AZ 19C872-B	Bezel for economy hang-on-(incl. controls and ducts)-not replaced (12/79)	1
		8	All	★ D40Z 19C872-A	Bezel for built-in type-dealer installed-(incl. controls and ducts)-not replaced (11/81)	1
		8	All	D2AZ 19703-B	Compressor	1
		8	All	D2AZ 19708-A	Condenser	1
		8	All	D2AZ 19B968-A	Evaporator	1
		8	351M, 400	★ D2AZ 19B969-B	Drive kit-use exc. w/Saginaw P/S pump-not replaced (11/81)	1
		8	351M, 400	D2VY 8600-A	For X/C fan	1
		8	351M, 400	C4AZ 8546-G	For X/C spacer	1
		8	351M, 400	★	For X/C bolt-5/16"-24 x 3 1/2"	1
		8	351M, 400	★ D5AZ 19B969-B	Drive kit-use w/Saginaw P/S pump-not replaced (12/79)	1
		8	351W	★ D50Z 19B969-A	Drive kit-not replaced (4/83)	1
		8	460	★ D5AZ 19B969-A	Drive kit-not replaced (12/79)	1
76	F	8	All	★ D40Z 19C872-A	Bezel for built-in type-dealer installed-(incl. controls and ducts)-not replaced (11/81)	1
		8	All	D2AZ 19703-B	Compressor	1
		8	All	D2AZ 19708-A	Condenser	1
		8	All	D2AZ 19B968-A	Evaporator	1
		8	351W	★ D50Z 19B969-A	Drive kit-not replaced (4/83)	1
		8	351M, 400	★ D2AZ 19B969-B	Drive kit-not replaced (11/81)	1
		8	351M, 400	D2VY 8600-A	For X/C fan	1
		8	351M, 400	C4AZ 8546-G	For X/C spacer	1
		8	351M, 400	★	For X/C bolt-5/16"-24 x 3 1/2"	1
		8	460	★ D5AZ 19B969-A	Drive kit-not replaced (12/79)	1
77	F	8	All	★ D70Z 19C872-A /bD80Z 19C872-A(9/78)	Bezel for built-in type-dealer installed (incl. controls and ducts)	1
		8	All	D2AZ 19703-B	Compressor kit	1
		8	All	D2AZ 19708-A	Condenser kit	1
		8	351M,400	★ D2AZ 19B969-B not replaced (11/81)	Drive kit-exc. w/Saginow P/S pump-	1
				D2VY 8600-A	For X/C fan	1
				C4AZ 8546-G	For X/C spacer	1
				★	For X/C bolt-5/16"-24 x 3 1/2"	1
		8	351M,400	D7AZ 19B969-A	Drive Kit-use w/Saginaw P/S pump	1
		8	302,351W	★ D50Z 19B969-A	Drive kit-not replaced (4/83)	1
		8	All	D2AZ 19B968-A	Evaporator	1
78	F	All	All	★ D80Z 19C872-A	Bezel for built-in type- dealer installed (incl. controls and ducts)-not replaced (4/83)	1
		All	All	D2AZ 19703-B	Compressor kit	1
		All	All	D2AZ 19708-A	Condenser kit	1
		All	All	D2AZ 19B968-A	Evaporator kit	1
		8	302,351W	★ D50Z 19B969-A	Drive kit-not replaced (4/83)	1
		8	351M,400	D8AZ 19B969-B	Drive kit-use exc. w/Saginaw P/S pump	1
		8	351M,400	D8AZ 19B969-A	Drive kit-use w/Saginaw P/S pump	1

COPYRIGHT © 1986 — FORD MOTOR COMPANY — DEARBORN, MICHIGAN

1973/79 LINCOLN-MERCURY CARS

YEAR	MODEL/RESTRICTIONS	ENGINE CYL.	ENGINE C.I.D. (C.C.D.)	PART NUMBER	DESCRIPTION	QTY.
19B968	AIR CONDITIONER KITS — Cont'd FOR COMPLETE INSTALLATION (1) EACH OF THE FOLLOWING GROUP NUMBER IS REQUIRED-19703,19708,19C872,19B968 and 19B969. ▲ 2000 cc @ 2300 cc ⊕ 2800 cc					
79	F	All	All	★ D80Z 19C872-A	Bezel for built-in type-dealer installed (incl. controls and ducts)-not replaced (4/83)	1
		All	All	D2AZ 19703-B	Compressor Kit	1
		All	All	D2AZ 19708-A	Condenser Kit	1
		All	All	D2AZ 19B968-A	Evaporator Kit	1
		8	351M,400	D8AZ 19B969-B	Drive Kit	1
		8	302,351W	★ D80Z 19B969-A	Drive Kit-not replaced (3/84)	1
75	G	6&8	All	★ D2AZ 19C872-B	Bezel for economy hang-on-(incl. controls and ducts)-not replaced (12/79)	1
		6&8	All	D5DZ 19C872-A	Bezel for built-in type-dealer installed-(incl. controls and ducts)	1
		6&8	All	D2AZ 19703-B	Compressor	1
		6&8	All	D2AZ 19708-A	Condenser	1
		6&8	All	D2AZ 19B968-A	Evaporator	1
	"Before 4/12/75"	6	200	★ D5DZ 19B969-A	Drive kit-not repld. (6/76)	1
	"From 4/12/75"	6	200	D5DZ 19B969-C	Drive kit	1
		6	250	★ D5DZ 19B969-B	Drive kit - repl. by D6DZ 19B969-C (6/77)	1
		8	302,351	★ D50Z 19B969-A	Drive kit-not replaced (4/83)	1
76	G	6&8	All	D5DZ 19C872-A	Bezel for built-in type-dealer installed-(incl. controls and ducts)	1
		6&8	All	D2AZ 19703-B	Compressor	1
		6&8	All	D2AZ 19708-A	Condenser	1
		8	All	D2AZ 19B968-A	Evaporator	1
		6	200	★ D6DZ 19B969-A	Drive kit-not replaced (12/79)	1
	"Before 1/1/76"	6	250	★ D5DZ 19B969-B	Drive kit - repl. by D6DZ 19B969-C (6/77)	1
	"From 1/1/76"	6	250	★ D6DZ 19B969-C	Drive kit-not replaced (4/83)	1
		8	302,351	★ D50Z 19B969-A	Drive kit-not replaced (4/83)	1
77	G	All	All	D5DZ 19C872-A	Bezel for built-in type-dealer installed (incl. controls and ducts)	1
		All	All	D2AZ 19703-B	Compressor kit	1
		All	All	D2AZ 19708-A	Condenser kit	1
		All	All	D2AZ 19B968-A	Evaporator kit	1
		6	200	★ D6DZ 19B969-A	Drive kit-not replaced (12/79)	1
		6	250	★ D6DZ 19B969-C	Drive kit-not replaced (4/83)	1
		8	302,351	★ D50Z 19B969-A	Drive kit-not replaced (4/83)	1
78	G	All	All	D5DZ 19C872-A	Bezel for built-in type-dealer installed (incl. controls and ducts)	1
		All	All	D2AZ 19703-B	Compressor kit	1
		All	All	D2AZ 19708-A	Condenser kit	1
		All	All	D2AZ 19B968-A	Evaporator kit	1
		6	200	★ D6DZ 19B969-A	Drive kit-not replaced (12/79)	1
		6	250	★ D6DZ 19B969-C	Drive kit-w/o power steering-not replaced (4/83)	1
		6	250	★ D8DZ 19B969-A	Drive kit-w/power steering without T/E-r/b D8DZ 19B969-BC (12/79)	1
		6	250	★ D8DZ 19B969-B	Drive kit-w/power steering with or without T/E-r/b D9DZ 19B969-A (11/81)	1
		8	302	★ D50Z 19B969-A	Drive kit-not replaced (4/83)	1
79	G	All	All	D5DZ 19C872-A	Bezel for built-in type-dealer installed (incl. controls and ducts)	1
		All	All	D2AZ 19703-B	Compressor Kit	1
		All	All	D2AZ 19708-A	Condenser Kit	1
		All	All	D2AZ 19B968-A	Evaporator Kit	1
		6	250	★ D6DZ 19B969-C	Drive Kit-w/o power steering-not replaced (4/83)	1
		6	250	D9DZ 19B969-A	Drive Kit-w/power steering with or without T/E	1
		8	302	★ D80Z 19B969-A	Drive Kit-not replaced (3/84)	1

YEAR	MODEL/RESTRICTIONS	ENGINE CYL.	ENGINE C.I.D. (C.C.D.)	PART NUMBER	DESCRIPTION	QTY.
19B968	AIR CONDITIONER KITS — Cont'd FOR COMPLETE INSTALLATION (1) EACH OF THE FOLLOWING GROUP NUMBER IS REQUIRED-19703,19708,19C872,19B968 and 19B969. ▲ 2000 cc @ 2300 cc ⊕ 2800 cc					
73	J	4&6	All	★ D3RY 19C872-A not repld. (6/78)	Bezel for built in type-dealer installed-(incl. controls and ducts)	1
		4&6	All	D2FZ 19703-B	Compressor	1
		4&6	All	D2FZ 19708-A	Condenser	1
		4	▲122	D3FZ 19B969-A	Drive kit	1
		6	♦189	★ D3RY 19B969-A	Drive kit-not repld. (6/78)	1
		4&6	All	D2AZ 19B968-A	Evaporator	1
		4	▲122	D2FZ 19700-A	Engine adapter kit-California only	1
74	J	4&6	All	★ D3RY 19C872-A not repld. (6/78)	bezel for built-in type-dealer installed-(incl. controls and ducts)	1
		4&6	All	D2AZ 19703-B	Compressor	1
		4&6	All	D4RY 19708-A	Condenser	1
	"Before 4/1/74"	4	▲122	D4FZ 19B969-B	Drive kit-exc. T/E	1
	"From 4/1/74"	4	▲122	★ D4FZ 19B969-C	Drive kit-exc. T/E-not repld. (6/76)	
		4	▲122	★ D4RY 19B969-A	Drive kit-with T/E-not repld. (6/76)	
		6	⊕171	D4ZZ 19B969-A	Drive kit	1
		4&6	All	D2AZ 19B968-A	Evaporator	1
76	J	4&6	All	★ D5RY 19C872-A	Bezel for built-in type-dealer installed-(incl. controls and ducts.)-not replaced (12/79)	1
		4&6	All	D2AZ 19703-B	Compressor	1
		4&6	All	★ D5RY 19708-A	Condenser-not replaced (11/81)	1
		4&6	All	D2AZ 19B968-A	Evaporator	1
	"Before 1/1/76"	4	140	★ D5RY 19B969-B	Drive kit-not replaced (12/79)	1
	"From 1/1/76"	4	140	★ D6RY 19B969-A	Drive kit-not replaced (12/79)	1
		6	171	★ D5RY 19B969-A	Drive kit-not replaced (12/79)	1
77	J	All	All	★ D5RY 19C872-A	Bezel for built-in type-dealer installed (incl. controls and ducts)-not replaced (12/79)	1
		All	All	D2AZ 19703-B	Compressor kit	1
		All	All	★ D5RY 19708-A	Condenser kit-not replaced (11/81)	1
		All	All	D2AZ 19B968-A	Evaporator kit	1
		4	140	★ D6RY 19B969-A	Drive kit-not replaced (12/79)	1
		6	171	★ D5RY 19B969-A	Drive kit-not replaced (12/79)	1
79	J	All	All	D8BZ 19C872-A	Bezel for built-in type-dealer installed (incl. controls and ducts)	1
		8	302	D9ZZ 19703-A	Compressor Kit	1
		4&6	140,171	D2AZ 19703-B	Compressor Kit	1
		All	All	D2AZ 19708-A	Condenser Kit	1
		All	All	D8BZ 19B968-B	Evaporator Kit	1
		4	140	★ D9ZZ 19B969-B	Drive Kit-w/Turbo charger-not replaced (4/83)	1
		4	140	D9BZ 19B969-A	Drive Kit-w/o Turbo charger and vehicles with eng. calibrations 9-2D-R0N, 9-2S-R0N and 9-2D-R2N	1
		6	171	★ D9ZZ 19B969-A	Drive Kit-not replaced (4/83)	1
		6	200	D9BZ 19B969-C	Drive Kit	1
		8	302	D9ZZ 19B969-C	Drive Kit	1
74	L	4	All	D4FZ 19C872-A	Bezel for built-in type-dealer installed-(incl. controls and ducts)	1
		4	All	D2AZ 19703-B	Compressor	1
		4	All	D2AZ 19708-A	Condenser	1
		4	All	D2AZ 19B968-A	Evaporator	1
		4	▲122	★ D4FZ 19B969-C	Drive kit exc. T/E-not repld. (6/76)	1
		4	@140	★ D4ZZ 19B969-C	Drive kit-not repld. (6/75)	1

COPYRIGHT © 1986 — FORD MOTOR COMPANY — DEARBORN, MICHIGAN

19B968 AIR CONDITIONER KITS — Cont'd
FOR COMPLETE INSTALLATION (1) EACH OF THE FOLLOWING GROUP NUMBER IS REQUIRED-19703,19708,19C872,19B968 and 19B969.
▲ 2000 cc @ 2300 cc ⊕ 2800 cc

YEAR	MODEL/RESTRICTIONS	ENGINE CYL.	ENGINE C.I.D. (C.C.D.)	PART NUMBER	DESCRIPTION	QTY.
75	L - - w/o console	4&6	All	★ D2FZ 19C872-A	Bezel for deluxe hang-on (incl. controls and ducts)-not replaced(6/75)	1
	L	4&6	All	★ D2AZ 19C872-B	Bezel for economy hang-on-(incl. controls and ducts)-not replaced (12/79)	1
		4&6	All	★ D4FZ 19C872-A r/bD7FZ 19C872-A(12/77)	Bezel for built-in type-dealer installed-(incl. controls and ducts)	1
		4&6	All	D2AZ 19703-B	Compressor	1
		4&6	All	D2AZ 19708-A	Condenser	1
		4&6	All	D2AZ 19B968-A	Evaporator	1
		4	@140	D4ZZ 19B969-B	Drive kit	1
		6	⊕171	D4ZZ 19B969-A	Drive kit	1
76	L	4&6	All	★ D4FZ 19C872-A r/bD7FZ 19C872-A(12/77)	Bezel for built-in type-dealer installed-(incl. controls and ducts)	1
		4&6	All	D2AZ 19703-B	Compressor	1
		4&6	All	D2AZ 19708-A	Condenser	1
		4&6	All	D2AZ 19B968-A	Evaporator	1
		4	140	★ D6ZZ 19B969-A	Drive kit-not replaced (4/83)	1
		6	171	★ D6ZZ 19B969-B	Drive kit-not replaced (11/81)	1
77	L	All	All	★ D7FZ 19C872-A r/bD7FZ 19C872-B(9/78)	Bezel for built-in type-dealer installed (incl. controls and ducts)	1
		All	All	D2AZ 19703-B	Compressor kit	1
		All	All	D2AZ 19708-A	Condenser kit	1
		All	All	D2AZ 19B968-A	Evaporator kit	1
		4	140	★ D6ZZ 19B969-A	Drive kit-not replaced (4/83)	1
		6	171	★ D6ZZ 19B969-B	Drive kit-not replaced (11/81)	1
78	L	All	All	D7FZ 19C872-B	Bezel for built-in type- dealer installed (incl. controls and ducts)	1
		All	All	D2AZ 19703-B	Compressor kit	1
		All	All	D2AZ 19708-A	Condenser kit	1
		All	All	D2AZ 19B968-A	Evaporator kit	1
		4	140	★ D6ZZ 19B969-A	Drive kit-not replaced (4/83)	1
		6	171	★ D8ZZ 19B969-B	Drive kit-not replaced (4/83)	1
79	L	All	All	D7FZ 19C872-B	Bezel for built-in type-dealer installed (incl. controls and ducts)	1
		All	All	D2AZ 19703-B	Compressor Kit	1
		All	All	D2AZ 19708-A	Condenser Kit	1
		All	All	D2AZ 19B968-A	Evaporator Kit	1
		4	140	D9FZ 19B969-A	Drive Kit	1
		6	171	★ D9ZZ 19B969-A	Drive Kit-not replaced (4/83)	1
73	P - - w/o floor shift	6&8	All	★ D2AZ 19C872-B	Bezel for economy hang-on-(incl. controls and ducts)-not replaced (12/79)	1
73	P - - w/o console	6&8	All	★ D2DZ 19C872-A	Bezel for deluxe hang-on-(incl. controls and ducts)-Not replaced(6/75)	1
73	P	6&8	All	★ D4DZ 19C872-A	Bezel for built in type-dealer installed-(incl. controls and ducts)-not replaced (4/83)	1
		6&8	All	D2AZ 19703-B	Compressor	1
		6&8	All	D2AZ 19708-A	Condenser	1
		6	200	★ D3DZ 19B969-A	Drive kit-r/b D4DZ 19B969-A (6/74)	1
		6	250	★ D20Z 19B969-A	Drive kit-Not replaced(6/78)	1
		6	250	D2DZ 8600-A	For X/C fan	1
		6	250	D2DZ 8546-A	For X/C spacer	1
		6	250	★	For X/C bolt-5/16"-24 x 2 1/8"	1
		8	302	D50Z 19B969-A	Drive kit	1
		6&8	All	D2AZ 19B968-A	Evaporator	1

YEAR	MODEL/RESTRICTIONS	ENGINE CYL.	ENGINE C.I.D. (C.C.D.)	PART NUMBER	DESCRIPTION	QTY.
19B968	AIR CONDITIONER KITS — Cont'd FOR COMPLETE INSTALLATION (1) EACH OF THE FOLLOWING GROUP NUMBER IS REQUIRED-19703,19708,19C872,19B968 and 19B969. ▲ 2000 cc @ 2300 cc ⊕ 2800 cc					
74	P - - w/o floor shift	6&8	All	★ D2AZ 19C872-B	Bezel for economy hang-on-(incl. controls and ducts)-not replaced (12/79)	1
74	P - - w/o console	6&8	All	★ D2DZ 19C872-A	Bezel for deluxe hang-on-(incl. controls and ducts)-not replaced (6/75)	1
74	P	6&8	All	★ D4DZ 19C872-A	Bezel for built-in type-dealer installed (incl. controls and ducts)-not replaced (4/83)	1
		6&8	All	D2AZ 19703-B	Compressor	1
		6&8	All	D2AZ 19708-A	Condenser	1
		6	200	★ D4DZ 19B969-A	Drive kit-r/b D5DZ 19B969-A(6/75)	1
		6	250	★ D40Z 19B969-A	Drive kit-r/b D5DZ 19B969-B(6/75)	1
		8	302	D50Z 19B969-A	Drive kit	1
		6&8	All	D2AZ 19B968-A	Evaporator	1
75	P - - w/o console	6&8	All	★ D2DZ 19C872-A	Bezel for deluxe hang-on-(incl. controls and ducts)-not replaced (6/75)	1
75	P	6&8	All	★ D2AZ 19C872-B	Bezel for economy hang-on-(incl. controls and ducts)-not replaced (12/79)	1
		6&8	All	★ D4DZ 19C872-A	Bezel for built-in type-dealer installed-(incl. controls and ducts)-not replaced (4/83)	1
		6&8	All	D2AZ 19703-B	Compressor	1
		6&8	All	D2AZ 19708-A	Condenser	1
		6&8	All	D2AZ 19B968-A	Evaporator	1
	"Before 4/12/75"	6	200	★ D5DZ 19B969-A	Drive kit-not replaced (6/76)	1
	"From 4/12/75"	6	200	D5DZ 19B969-C	Drive kit	1
		6	250	★ D5DZ 19B969-B	Drive kit - repl. by D6DZ 19B969-C (6/77)	1
		8	302	D50Z 19B969-A	Drive kit	1
76	P	6&8	All	★ D4DZ 19C872-A	Bezel for built-in type-dealer installed-(incl. controls and ducts)-not replaced (4/83)	1
		6&8	All	D2AZ 19703-B	Compressor	1
		6&8	All	D2AZ 19708-A	Condenser	1
		6&8	All	D2AZ 19B968-A	Evaporator	1
		6	200	★ D6DZ 19B969-A	Drive kit-not replaced (12/79)	1
	"Before 1/1/76"	6	250	★ D5DZ 19B969-B	Drive kit - repl. by D6DZ 19B969-C (6/77)	1
	"From 1/1/76"	6	250	★ D6DZ 19B969-C	Drive kit-not replaced (4/83)	1
		8	302	D50Z 19B969-A	Drive kit	1
77	P	All	All	★ D4DZ 19C872-A	Bezel for built-in type-dealer installed (incl. controls and ducts)-not replaced (4/83)	1
		All	All	D2AZ 19703-B	Compressor kit	1
		All	All	D2AZ 19708-A	Condenser kit	1
		All	All	D2AZ 19B968-A	Evaporator kit	1
		6	200	★ D6DZ 19B969-A	Drive kit-not replaced (12/79)	1
		6	250	★ D6DZ 19B969-C	Drive kit-not replaced (4/83)	1
		8	302	D50Z 19B969-A	Drive kit	1
78	P	All	All	D8BZ 19C872-A	Bezel for built-in type-dealer installed (incl. controls and ducts)	1
		All	All	D2AZ 19703-B	Compressor kit	1
		All	All	D2AZ 19708-A	Condenser kit	1
		All	All	★ D8BZ 19B968-B	Evaporator kit-not replaced (4/83)	1
		4	140	To follow in subsequent change	Drive kit	1
		6	200	★ D8BZ 19B969-A	Drive kit - used exc. with 70 amp. alt.-not replaced (4/83)	1
		6	200	★ D8BZ 19B969-B	Drive kit - used w/70 amp. alt.-not replaced (4/83)	1
		8	302	★ D8ZZ 19B969-A	Drive kit-r/b E0BZ 19B969-A (4/83)	1

COPYRIGHT © 1986 — FORD MOTOR COMPANY — DEARBORN, MICHIGAN

1973/79 LINCOLN-MERCURY CARS

YEAR	MODEL/RESTRICTIONS	ENGINE CYL.	ENGINE C.I.D. (C.C.D.)	PART NUMBER	DESCRIPTION	QTY.
19B968	AIR CONDITIONER KITS — Cont'd FOR COMPLETE INSTALLATION (1) EACH OF THE FOLLOWING GROUP NUMBER IS REQUIRED–19703,19708,19C872,19B968 and 19B969. ▲2000 cc @ 2300 cc ⊕ 2800 cc					
79	P	All	All	D8BZ 19C872-A	Bezel for built-in type-dealer installed (incl. controls and ducts)	1
		All	All	D2AZ 19703-B	Compressor Kit	1
		All	All	D2AZ 19708-A	Condenser Kit	1
		All	All	D8BZ 19B968-B	Evaporator Kit	1
		4	140	★ D9BZ 19B969-A	Drive Kit–not used on vehicles w/eng. calibrations 9-2D-R0N,9-2S-R0N and 9-2S-R2N-r/b E0BZ 19B969-B(11/81)	1
		6	200	D9BZ 19B969-C	Drive Kit–used exc. with 70 amp. alt.	1
		6	200	D9BZ 19B969-B	Drive Kit–used with 70 amp. alt.	1
		8	302	★ D8ZZ 19B969-A	Drive Kit–r/b E0BZ 19B969-A (4/83)	1

YEAR	MODEL/RESTRICTIONS	PART NUMBER	DESCRIPTION	QTY.
19C969	CLIP (AIR CONDITIONER VACUUM HOSE HARNESS)			
73/74	C,K – – integral A/C	D20Z 19C969-A		1
74	F – – integral A/C			1
19972	Refer to Section 197 for Serviced Refrigerant Line Assemblies and/or replacement details			
19C974	CASE ASSY. (AIR CONDITIONER EVAPORATOR UPPER)			
79	G – – manual integral A/C	D9DZ 19C974-A		1
77	G,V – – A.T.C. "Before 6/1/77"	★ D7DZ 19C974-A	Not replaced (11/81)	1
77/78	G,V – – A.T.C. "From 6/1/77 to 10/1/77"	★ D7DZ 19C974-C	Not replaced (4/83)	1
78/	G,V – – A.T.C. "From 10/1/77"	D8DZ 19C974-B		1
79	J – – integral A/C	D9BZ 19C974-A		1
74	L – – integral A/C	D4FZ 19C974-A		1
75/76	L – – integral A/C	D5FZ 19C974-A		1
77	L – – integral A/C "Before 6/1/77"	★ D7FZ 19C974-A	Not replaced (4/83)	
77/78	L – – integral A/C "From 6/1/77 to 11/1/77"	★ D7FZ 19C974-B	Not replaced (4/83)	1
78	L – – integral A/C "From 11/1/77 to 5/1/78"	D8FZ 19C974-A		1
78/	L – – integral A/C "From 5/1/78"	D8FZ 19C974-B		1
78/	P – – integral A/C	★ D8BZ 19C974-A	Upper–not replaced (3/84)	1
19C978	SEAL (AIR CONDITIONER BLOWER MOTOR OUTLET)			
79	J,P – – integral A/C	D9BZ 19C978-A		1
19980	CONTROL ASSY. (AIR CONDITIONER)			
75	A – – manual integral A/C w/o rear window defogger or heated back window "Before 11/1/74"	★ D5AZ 19980-A	R/b C3AZ 13466-D,D3AZ 18502-A,D3AZ 18541-A, D5AZ 19B888-A,D5AZ 19980-E and D5AZ 19986-A (10/74)	1
75	A – – manual integral A/C w/o rear window defogger or heated back window "From 11/1/74"	★ D5AZ 19980-E	R/b D6AZ 19980-H (12/77)	1
75	A – – manual integral A/C w/rear window defogger or heated back window "Before 12/1/74"	★ D5AZ 19980-B	R/b C3AZ 13466-D,D3AZ 18502-A,D3AZ 18541-A, D3AZ 18C622-A,D5AZ 19B888-A,D5AZ 19980-F and D5AZ 19986-A(10/74)	1
75	A – – manual integral A/C w/rear window defogger or heated back window "From 12/1/74"	★ D5AZ 19980-F	R/b D6AZ 19980-G (6/76)	1
75	A – – A.T.C. w/o rear window defogger or heated back window "Before 11/1/74"	★ D5AZ 19980-C	R/b C3AZ 13466-D,D3AZ 18541-A,D5AZ 19B888-B, D5AZ 19980-G and D5AZ 19986-A(10/74)	1

YEAR	MODEL/RESTRICTIONS	PART NUMBER	DESCRIPTION	QTY.
19980	CONTROL ASSY. (AIR CONDITIONER) — Cont'd			
75	A - - A.T.C. w/o rear window defogger or heated back window "From 11/1/74"	★ D5AZ 19980-G	R/b D6AZ 19980-E (12/79)	1
75	A - - A.T.C. w/rear window defogger or heated back window "Before 11/1/74"	★ D5AZ 19980-D	R/b C3AZ 13466-D,D3AZ 18541-A,D3AZ 18C622-A, D5AZ 19B888-B, D5AZ 19980-H and D5AZ 19986-B (10/74)	1
75	A - - A.T.C. w/rear window defogger or heated back window "From 11/1/74"	★ D5AZ 19980-H	R/b D6AZ 19980-F(12/79)	1
76	A - - manual integral A/C w/o rear window defogger or heated back window "Before 3/1/76"	★ D6AZ 19980-C	R/b C3AZ 13466-D, D3AZ 18502-A D3AZ 18541-A, D5AZ 19B888-C, D6AZ 19980-H, and D5AZ 19986-A (12/76)	1
76/77	A - - manual integral A/C w/o rear window defogger or heated back window "From 3/1/76"	D6AZ 19980-H		1
78	A - - manual integral A/C w/o rear window defogger or heated back window	D7DZ 19980-C		1
79	A - - manual integral A/C w/o heated back window	D9AZ 19980-A		1
76	A - - manual integral A/C w/rear window defogger or heated back window "Before 3/1/76"	★ D6AZ 19980-D	R/b C3AZ 13466-D,D3AZ 18502-A, D3AZ 18541-A D3AZ 18C622-A, D5AZ 19B888-C, D6AZ 19980-G, and D5AZ 19986-A(12/79)	1
76/77	A - - manual integral A/C w/rear window defogger or heated back window "From 3/1/76"	D6AZ 19980-G		1
78	A - - manual integral A/C w/rear window defogger or heated back window	D7DZ 19980-D		1
79	A - - manual integral A/C w/heated back window	D9AZ 19980-B		1
76	A - - A.T.C. w/o rear window defogger or heated back window "Before 3/1/76"	★ D6AZ 19980-A	R/b C3AZ 13466-D, D3AZ 18541-A, D5AZ 19B888-D, D6AZ 19980-E and D5AZ 19986-B(12/76)	1
76/77	A - - A.T.C. w/o rear window defogger or heated back window "From 3/1/76"	★ D6AZ 19980-E	Not replaced (4/83)	1
78	A - - A.T.C. w/o rear window defogger or heated back window	D7DZ 19980-A		1
79	A - - A.T.C. w/o heated back window	★ D9AZ 19980-C	Not replaced (3/84)	1
76	A - - A.T.C. w/rear window defogger or heated back window "Before 3/1/76"	★ D6AZ 19980-B	R/b C3AZ 13466-D D3AZ 18541-A, D3AZ 18C622-A, D5AZ 19B888-D, D6AZ 19980-F and D5AZ 19986-D(12/76)	1
76/77	A - - A.T.C. w/rear window defogger or heated back window "From 3/1/76"	★ D6AZ 19980-F	Not replaced (3/84)	1
78	A - - A.T.C.-w/rear window defogger or heated back window	D7DZ 19980-B		1
79	A - - A.T.C. w/heated back window	★ D9AZ 19980-D	Not replaced (3/84)	1
73/74	C - - integral A/C- "Before 7/31/74"	★ D30Z 19980-B	R/b D3SZ 10B870-A B9MY 13466-A,C3AZ 13466-D, D3AZ 18502-A, D30Z 18541-A, D20Z 18578-B, D30Z 19B888-A and D40Z 19980-D(3/76)	1
74	C - - integral A/C- "From 7/31/74"	★ D40Z 19980-D	Not replaced (4/83)	1

COPYRIGHT © 1986 — FORD MOTOR COMPANY — DEARBORN, MICHIGAN

1973/79 LINCOLN-MERCURY CARS

YEAR	MODEL/RESTRICTIONS	PART NUMBER	DESCRIPTION	QTY.
19980	CONTROL ASSY. (AIR CONDITIONER) — Cont'd			
74	C - - A.T.C. "Before 7/31/74"	D40Z 19980-B		1
74	C - - A.T.C. "From 7/31/74"	★ D40Z 19980-C	Not replaced (12/79)	1
75	C - - A.T.C. "Before 12/1/74"	★ D50Z 19980-A	R/b D3SZ 10B870-A, B9MY 13466-A,C3AZ 13466-D, D30Z 18541-A,D50Z 19B888-B,D50Z 19980-C and D50Z 19986-A(10/74)	1
75	C - - A.T.C. "From 12/1/74"	★ D50Z 19980-C	R/b D60Z 19980-C(12/79)	1
76	C - - A.T.C. "Before 3/1/76"	D60Z 19980-A		1
76	C - - A.T.C. "From 3/1/76"	★ D60Z 19980-C	Not replaced (4/83)	1
75	C - - manual integral A/C- "Before 12/1/74"	★ D50Z 19980-B	R/b D3AZ 10B870-A,B9MY 13466-A,C3AZ 13466-D, D3AZ 18502-A,D30Z 18541-A,D50Z 19B888-A, D50Z 19980-D and D50Z 19986-A(10/74)	1
75	C - - manual integral A/C- "From 12/1/74"	D50Z 19980-D		1
76	C - - manual integral A/C "Before 3/1/76"	D60Z 19980-B		1
76	C - - manual integral A/C "From 3/1/76"	★ D60Z 19980-D	Not replaced (3/84)	1
78/	D - - A.T.C. w/heated back window	D7DZ 19980-B		1
78/	D - - A.T.C. w/o heated back window	D7DZ 19980-A		1
74	F - - integral A/C- "Before 7/31/74"	★ D30Z 19980-B	R/B D3SZ 10B870-A, B9MY 13466-A, C3AZ 13466-D, D3AZ 18502-A, D30Z 18541-A, D20Z 18578-B, D30Z 19B888-A and D40Z 19980-D(3/76)	1
74	F - - integral A/C- "From 7/31/74"	★ D40Z 19980-D	Not replaced (4/83)	1
74	F - - A.T.C. "Before 7/31/74"	★ D40Z 19980-B	R/b D3SZ 10B870-A,B9MY 13466-A,C3AZ 13466-D, D30Z 18541-A,D40Z 19B888-A,D40Z 19980-C and D40Z 19986-A(12/74)	1
74	F - - A.T.C. "From 7/31/74"	★ D40Z 19980-C	Not replaced (12/79)	1
75	F - - A.T.C. "Before 12/1/74"	★ D50Z 19980-A	R/b D3SZ 10B870-A,B9MY 13466-A,C3AZ 13466-D, D30Z 18541-A,D50Z 19B888-B,D50Z 19980-C and D50Z 19986-A(10/74)	1
75	F - - A.T.C. "From 12/1/74"	★ D50Z 19980-C	R/b D60Z 19980-C(12/79)	1
76	F - - A.T.C. "Before 3/1/76"	★ D60Z 19980-A	R/b D3SZ 10B870-A, B9MY 13466-A, C3AZ 13466D, D30Z 18541-A, D50Z 19B888-D, D60Z 19980-C and D50Z 19986-A(9/78)	1
76	F - - A.T.C. "From 3/1/76"	★ D60Z 19980-C	Not replaced (4/83)	1
75	F - - manual integral A/C- "Before 12/1/74"	★ D50Z 19980-B	R/b D3SZ 10B870-A, B9MY 13466-A,C3AZ 13466-D, D3AZ 18502-A,D30Z 18541-A,D50Z 19B888-A, D50Z 19980-D and D50Z 19986-A(10/74)	1
75	F - - manual integral A/C- "From 12/1/74"	★ D50Z 19980-D	R/b D60Z 19980-D(9/78)	1
76	F - - manual integral A/C- "Before 3/1/76"	★ D60Z 19980-B	R/b D3SZ 10B870-A, B9MY 13466-A, C3AZ 13466D, D3AZ 18502-A, D30Z 18541-A, D50Z 19B888-C, D60Z 19980-D and D50Z 19986-B(9/78)	1
76	F - - manual integral A/C- "From 3/1/76"	★ D60Z 19980-D	Not replaced (3/84)	1
77/	F - - A.T.C.	D70Z 19980-A		1
77/	F - - manual integral A/C	D70Z 19980-B		1
75	G - - integral A/C- "Before 12/1/74"	★ D5ZZ 19980-A	Without heated back window- r/b C3AZ 13466-D, D3AZ 18502-A,D30Z 18541-A,D50Z 19B888-A, D5ZZ 19980-C and D5AZ 19986-A(10/74)	1
75	G - - integral A/C- "From 12/1/74"	★ D5ZZ 19980-C	Without heated back window -r/b D6AZ 19980-H(9/78)	1

YEAR	MODEL/RESTRICTIONS	PART NUMBER	DESCRIPTION	QTY.
19980	CONTROL ASSY. (AIR CONDITIONER) — Cont'd			
75	G - - integral A/C- "Before 12/1/74"	★ D5ZZ 19980-B	With heated back window-r/b C3AZ 13466-D, D3AZ 18502-A,D3AZ 18541-A,D3AZ 18578-A, D3AZ 18C622-A,D50Z 19B888-A,D5ZZ 19980-D and D5AZ 19986-A(10/74)	1
75	G - - integral A/C- "From 12/1/74"	★ D5ZZ 19980-D	With heated back window-r/b D6AZ 19980-G(9/78)	1
76	G - - integral A/C "Before 3/1/76"	★ D6DZ 19980-A	Without heated back window or rear window defogger-Repl. by C3AZ 13466-D,D3AZ 18502-A, D3AZ 18541-A,D50Z 19B888-C,D6AZ 19980-H and D5AZ 19986-A(6/76)	1
76	G - - integral A/C "From 3/1/76"	D6AZ 19980-H	Without heated back window or rear window defogger	1
76	G - - integral A/C "Before 3/1/76"	★ D6DZ 19980-B	With heated back window-Repl. by C3AZ 13466-D D3AZ 18502-A, D3AZ 18541-A, D3AZ 18C622-A D50Z 19B888-C, D6AZ 19980-G and D5AZ 19986-A	1
76	G - - integral A/C "Before 3/1/76"	★ D6DZ 19980-C	With rear window defogger-r/b C3AZ 13466-D, D3AZ 18502-A, D3AZ 18541-A, D3AZ 18578-C, D3AZ 18C622-A, D50Z 19B888-C, D6AZ 19980-G and D5AZ 19986-A(9/78)	1
76	G - - integral A/C "From 3/1/76"	D6AZ 19980-G	W/rear window defogger or heated back window	1
77/	G - - A.T.C.	D7DZ 19980-A	W/o rear window defogger or heated back window	1
77/	G - - A.T.C.	D7DZ 19980-B	W/rear window defogger or heated back window	1
77/	G - - manual integral A/C	D7DZ 19980-C	W/o rear defogger or heated back window	1
77/	G - - manual integral A/C	D7DZ 19980-D	W/rear window defogger or heated back window	1
79	J - - integral A/C	D8BZ 19980-B	W/o rear window defogger or heated back window	1
79	J - - integral A/C	D8BZ 19980-A	W/rear window defogger or heated back window	1
76/78	J(exc. 64S) - - integral A/C	★ D5RY 19980-A	Not replaced (4/83)	1
76/78	J(64S) - - integral A/C	★ D6RY 19980-A	Not replaced (4/83)	1
73/74	K "Before 7/1/74"	★ D3SZ 19980-A	R/b C3AZ 13466-D, D3AZ 18541-A, D2SZ 19C733-A, D4SZ 19980-B and D4SZ 19986-A(9/78)	1
74	K "From 7/1/74"	D4SZ 19980-B		1
75	K "Before 12/1/74"	★ D5SZ 19980-A	Repl. by D3SZ 10B870-A, B9MY 13466-A, C3AZ 13466-D,D30Z 18541-A,D5SZ 19B888-A, D5SZ 19980-B and D50Z 19986-A(10/74)	1
75	K "From 12/1/74"	D5SZ 19980-B	R/b D60Z-C (9/78)	1
76	K "Before 3/1/76"	★ D6SZ 19980-A	Repl. by D3SZ 10B870-A, B9MY 13466-A, C3AZ 13466-D, D30Z 18541-A, D5SZ 19B888-B, D60Z 19980-C and D50Z 19986-A (12/76)	1
76	K "From 3/1/76"	★ D60Z 19980-C	Not replaced (4/83)	1
77/	K	D70Z 19980-A		1
74	L - - integral A/C "Before 12/15/74"	★ D4FZ 19980-A	Control assy.-r/b C3AZ 13466-D, C60Z 18C311-A, D1FZ 18519-A, D3AZ 18541-A, D4FZ 19B888-A, D4FZ 19980-B and D3FZ 19986-A(12/79)	1
74/75	L - - integral A/C "Before 12/15/74"	★ D4FZ 19980-B	Control only-not replaced (4/83)	1
75	L - - integral A/C "From 12/15/74"	★ D5FZ 19980-A	Control assy.-r/b C3AZ 13466-D, C60Z 18C311-A, D1FZ 18519-A, D3AZ 18541-A, D5FZ 19B888-A and D5FZ 19980-B (3/75)	1
75	L - - integral A/C "From 12/15/74"	★ D5FZ 19980-B	R/b D6FZ 19980-B (12/79)	1
76	L - - integral A/C "Before 3/1/76"	★ D6FZ 19980-A	Repl. by C3AZ 13466-D, C60Z 18C311-A, D1FZ 18519-A, D3AZ 18541-A, D5FZ 19B888-A, D6FZ 19980-B and D3FZ 19986-A (12/76)	1
76/78	L - - integral A/C "From 3/1/76 to 11/1/77"	★ D6FZ 19980-B	Not replaced (3/84)	1
78/	L - - integral A/C "From 11/1/77"	D8FZ 19980-A		1
78/	P - - integral A/C	D8BZ 19980-B	W/o rear window defogger or heated back window	1

COPYRIGHT © 1986 — FORD MOTOR COMPANY — DEARBORN, MICHIGAN

1973/79 LINCOLN-MERCURY CARS

YEAR	MODEL/RESTRICTIONS	PART NUMBER	DESCRIPTION	QTY.
19980	CONTROL ASSY. (AIR CONDITIONER) — Cont'd			
78/	P - - integral A/C	D8BZ 19980-A	W/rear window defogger or heated back window	1
77/	V	D7DZ 19980-B	W/rear window defogger or heated back window	1
73/74	Y - - manual integral A/C w/o rear window defogger or heated back window "Before 6/24/74"	★ D3AZ 19980-A	Repl. by C3AZ 13466-D,D3AZ 18502-A,D3AZ 18541-A, D3AZ 19B888-A,D4AZ 19980-C and D3AZ 19986-A (12/75)	1
74	Y - - manual integral A/C w/o rear window defogger or heated back window "From 6/24/74"	★ D4AZ 19980-C	Not replaced (11/81)	1
73/74	Y - - manual integral A/C and rear window defogger or heated back window "Before 6/24/74"	D3AZ 19980-B		1
74	Y - - manual integral A/C and rear window defogger or heated back window "From 6/24/74"	★ D4AZ 19980-D	Not replaced (11/81)	1
73/74	Y - - A.T.C. w/o rear window defogger or heated back window- "Before 6/24/74"	D3AZ 19980-C		1
74	Y - - A.T.C. w/o rear window defogger or heated back window- "From 6/24/74"	★ D4AZ 19980-A	Not replaced (9/78)	1
73/74	Y - - A.T.C. and rear window defogger or heated back window "Before 6/24/74"	D3AZ 19980-D	R/b C3AZ 13466-D, D5AZ 18541-A D3AZ 18C622-A, D3AZ 19B888-A, D4AZ 19980-B and D3AZ 19986-B (9/78)	1
74	Y - - A.T.C. and rear window defogger or heated back window- "From 6/24/74"	★ D4AZ 19980-B	Not replaced (9/78)	1
75	Y - - manual integral A/C w/o rear window defogger or heated back window "Before 11/1/74"	★ D5AZ 19980-A	Repl. by C3AZ 13466-D, D3AZ 18502-A, D3AZ 18541-A, D3AZ 19B888-A, D5AZ 19980-E and D5AZ 19986-A (12/77)	1
75	Y - - manual integral A/C w/o rear window defogger or heated back window "From 11/1/74"	★ D5AZ 19980-E	R/B D6AZ 19980-H (12/77)	1
75	Y - - manual integral A/C w/rear window defogger or heated back window "Before 12/1/74"	★ D5AZ 19980-B	Repld. by C3AZ 13466-D, D3AZ 18502-A, D3AZ 18541-A, D3AZ 18C622-A, D5AZ 19B888-A, D5AZ 19980-F and D5AZ 19986-A (12/77)	1
75	Y - - manual integral A/C w/rear window defogger or heated back window "From 12/1/74"	★ D5AZ 19980-F	R/b D6AZ 19980-G (6/76)	1
75	Y - - A.T.C. w/o rear window defogger or heated back window- "Before 11/1/74"	★ D5AZ 19980-C	Repld. by C3AZ 13466-D, D3TZ 18541-A, D5AZ 19B888-B, D5AZ 19980-G, and D5AZ 19986-A (12/77)	1
75	Y - - A.T.C. w/o rear window defogger or heated back window- "From 11/1/74"	★ D5AZ 19980-G	R/b D6AZ 19980-E(12/79)	1
75	Y - - A.T.C. w/rear window defogger or heated back window- "Before 11/1/74"	★ D5AZ 19980-D	Repld. by C3AZ 13466-D, D3AZ 18541-A, D3AZ 18C622-A, D5AZ 19B888-B, D5AZ 19980-H and D5AZ 19986-B (12/77)	1
75	Y - - A.T.C. w/rear window defogger or heated back window- "From 11/1/74"	★ D5AZ 19980-H	R/b D6AZ 19980-F(12/79)	1
76	Y - - manual integral A/C w/o rear window defogger or heated back window "Before 3/1/76"	★ D6AZ 19980-C	R/b C3AZ 13466-D, D3AZ 18502-A, D3AZ 18541-A, D5AZ 19B888-C, D6AZ 19980- H, and D5AZ 19986A (12/76)	1
76	Y - - manual integral A/C w/o rear window defogger or heated back window "From 3/1/76"	D6AZ 19980-H		1

YEAR	MODEL/RESTRICTIONS	PART NUMBER	DESCRIPTION	QTY.
19980	CONTROL ASSY. (AIR CONDITIONER) — Cont'd			
76	Y - - manual integral A/C w/rear window defogger or heated back window "Before 3/1/76"	★ D6AZ 19980-D	R/b C3AZ 13466-D, D3AZ 18502-A, D3AZ 18541-A, D3AZ 18C622-A, D5AZ 19B888-C, D6AZ 19980-G, and D5AZ 19986-A(12/79)	1
76	Y - - manual integral A/C w/rear window defogger or heated back window "From 3/1/76"	D6AZ 19980-G		1
76	Y - - A.T.C. w/o rear window defogger or heated back window "Before 3/1/76"	★ D6AZ 19980-A	R/b C3AZ 13466-D, D3AZ 18541-A, D5AZ 19B888-D, D6AZ 19980-E and D5AZ 19986-B (12/76)	1
76	Y - - A.T.C. w/o rear window defogger or heated back window "From 3/1/76"	★ D6AZ 19980-E	Not replaced (4/83)	1
76	Y - - A.T.C. w/rear window defogger or heated back window "Before 3/1/76"	★ D6AZ 19980-B	R/b C3AZ 13466-D, D3AZ 18541-A, D3AZ 18C622-A, D5AZ 19B888-D, D6AZ 19980-F and D5AZ 19986-D (12/76)	1
76	Y - - A.T.C. w/rear window defogger or heated back window "From 3/1/76"	★ D6AZ 19980-F	Not replaced (3/84)	1
19A980	INSERT (AIR CONDITIONER CONTROL NAME PLATE)			
77	F	D70Z 19A980-A	"FAN"	1
73	K - - heated back window	D2LY 19A980-B	"Rear Defrost"	1
73/74	K - - w/o heated back window	D2LY 19A980-A		1
75/76	K - - w/o heated back window	D5LY 19A980-A	"Low-Hi-Max-Auto-Fan"- baby burl walnut	1
75/76	K - - w/o heated back window	D5LY 19A980-C	"Low-Hi-Max-Auto-Fan"- black camera case	1
75/76	K - - w/heated back window	D5LY 19A980-D	"Low-Hi-Max-Auto-Fan"- black camera case	1
77	K - - w/o heated back window	D7LY 19A980-A	"Low-Hi-Fan"-majestic walnut	1
77	K - - w/heated back window	D7LY 19A980-B	"Low-Hi-Elec-De-Ice"-majestic walnut	1
78/	K - - w/heated back window	D8LY 19A980-A	"Low-Hi-Elec-De-ice" macassar ebony	1
19D983	SWITCH ASSY. (AIR CONDITIONER LOW PRESSURE)			
78/	D - - 8 cyl. 400	D8VY 19D983-A		1
19B985	BUSHING (AIR CONDITIONER AIR OUTLET DOOR CONTROL SHAFT)			
73/74	A,Y - - heater only	C9ZZ 19B985-A		1
73/74	C,D,F,K,P - - integral A/C			1
74	L - - integral A/C			1
19986	SWITCH ASSY.-Also refer to group 18578			
73/74	A - - manual integral A/C	D3AZ 19986-A	*YH-2	1
75/78	A - - manual integral A/C	D5AZ 19986-A	*YH-264	1
73/74	A - - A.T.C.	D3AZ 19986-B	*YH-76	1
75/77	A - - A.T.C.	D5AZ 19986-B	*YH-265	1
78/	A - - integral A/C	D5AZ 19986-A	*YH-264	1
73/	A - - hang-on A/C-Canada only	D1RY 19986-A	*YH-210	1
73/74	C - - manual integral A/C	D20Z 19986-B	*YH-75	1
75/76	C - - manual integral A/C	D50Z 19986-B	*YH-267	1
74	C - - A.T.C.	D40Z 19986-A	*YH-195	1
75/76	C - - A.T.C.	D50Z 19986-A	*YH-266	1
73/76	C - - hang-on A/C	D1RY 19986-A	*YH-210	1
73/77	D - - A.T.C.	D4VY 18578-A		1
78/	D	D5AZ 19986-A	*YH-264	1
73	F - - integral A/C	D1ZZ 19986-A	*YH-94	1
74	F - - manual integral A/C	D20Z 19986-B	*YH-75	1
75/76	F - - manual integral A/C	D50Z 19986-B	*YH-267	1
74	F - - A.T.C.	D40Z 19986-A	*YH-195	1
75/76	F - - A.T.C.	D50Z 19986-A	*YH-266	1
77/	F	D50Z 19986-B	*YH-267	1
73/	F - - hang-on A/C	D1RY 19986-A	*YH-210	1

COPYRIGHT © 1986 — FORD MOTOR COMPANY — DEARBORN, MICHIGAN

1973/79 LINCOLN-MERCURY CARS

YEAR	MODEL/RESTRICTIONS	PART NUMBER	DESCRIPTION	QTY.
19986	SWITCH ASSY.-Also refer to group 18578 — Cont'd			
75/	G - - integral A/C	D5AZ 19986-A	*YH-264	1
75/	G - - hang-on A/C	D1RY 19986-A	*YH-210	1
73/	J - - deluxe hang-on A/C	D1RY 19986-A	*YH-210	1
74/78	J - - integral A/C	D3FZ 19986-A	*YH-173	1
79	J - - integral A/C	D8BZ 19986-A	*YH-318	1
73/74	K	D4SZ 19986-A	*YH-202	1
75/76	K	D50Z 19986-A	*YH-266	1
77/	K	D50Z 19986-B	*YH-267	1
74/	L - - built-in A/C-dealer installed	D1RY 19986-A	*YH-210	1
74/77	L - - integral A/C	D3FZ 19986-A	*YH-173	1
78/	L - - integral A/C	D5AZ 19986-A	*YH-264	1
73/75	P - - integral A/C	D2DZ 19986-A	*YH-74	1
76/77	P	D6DZ 19986-A	*YH-291	1
78/	P - - integral A/C	D8BZ 19986-A	*YH-318	1
73/	P - - hang-on A/C	D1RY 19986-A	*YH-210	1
77/	V	D5AZ 19986-A	*YH-264	1
73/74	Y - - manual integral A/C	D3AZ 19986-A	*YH-2	1
75/76	Y - - manual integral A/C	D5AZ 19986-A	*YH-264	1
73/74	Y - - A.T.C.	D3AZ 19986-B	*YH-76	1
75/76	Y - - A.T.C.	D5AZ 19986-B	*YH-265	1
73/76	Y - - hang-on A/C-Canada only	D1RY 19986-A	*YH-210	1
19A986	SHAFT (AIR CONDITIONER CONTROL EXTENSION)			
79	J - - built-in A/C (dealer installed)	D8BZ 19A986-A		1
78/	P - - built-in A/C (dealer installed)			1
19988	CABLE ASSY. (AIR CONDITIONER TEMPERATURE)-Also refer to group 18518			
78	A,D - - A.T.C.	D7DZ 19988-B		1
79	A - - manual A/C or heater	D9AZ 19988-A		1
79	A - - A.T.C.	D9AZ 19988-C		1
73/76	C - - integral A/C	D20Z 19988-A		1
74/76	F - - manual integral A/C			1
77/78	F - - manual integral A/C	D70Z 19988-A		1
79	F - - manual integral A/C	D90Z 19988-A		1
74/76	C,F - - A.T.C.	D40Z 19988-A		1
77/	F - - A.T.C.			1
75/78	G - - manual integral A/C	D5DZ 19988-A		1
77/	G - - A.T.C.	D7DZ 19988-B		1
74	J - - integral A/C	D4RY 19988-A		1
76/78	J - - integral A/C	D5RY 19988-A		1
79	J - - integral A/C	D8BZ 19988-A		1
75/	K	★ D5SZ 19988-B	Not replaced (3/84)	1
74/77	L - - integral A/C "Before 6/1/77"	D4FZ 19988-A		1
79	L - - integral A/C	D9FZ 19988-A		1
73/77	P - - integral A/C	D2DZ 19988-A		1
78/	P - - integral A/C	D8BZ 19988-A		1
77/	V	D7DZ 19988-B		1
19A990	VALVE ASSY. (AIR CONDITIONER COMPRESSOR)-Also refer to group 19752			
73/76	C - - integral A/C	D0AZ 19A990-A	*YF-237-low pressure	1
73/	F,L,P - - integral A/C			1
73/74	A,Y			1
73/	C,F,G,J,L,P - - hang-on A/C	D1FZ 19A990-B	*YF-301-high and low pressure	2
19B992	BRACKET (AIR CONDITIONER EVAPORATOR SUPPORT)			
79	A - - built-in A/C(dealer installed)	D9AZ 19B992-A		1
19B993	BRACKET (AIR CONDITIONER EVAPORATOR CORE MOUNTING)			
79	A - - built-in A/C(dealer installed)	D9AZ 19B993-A		1
19B994	GASKET (AIR CONDITIONER COMPRESSOR VALVE PLATE)			
73/	All - - hang-on A/C	C2SZ 19B994-A		2
19B937	BRACKET (AIR CONDITIONING DEHYDRATOR TANK MOUNTING)			
76/	A,C,F,G,L,P - - hang-on A/C	C9RZ 19B937-A		1
75	G - - integral A/C	D5DZ 19B937-A	Strap	1

19C705-8 REFRIGERANT LINE REPLACEMENT and REPAIR PARTS

GENERAL INFORMATION

To simplify part number determination and complexity and to reduce look-up time for air conditioning hoses the following summary describes the various service methods:

1. Hose originally used in production is serviced.

Example: Original production part number D3AH 19835-AA is supplied for service as part number D3AZ 19835-A as shown on page 13 of the IDENTIFICATION CHART and on page 8 of the APPLICATION CHART.

2. Hose originally used in production is not supplied for service and has been replaced by detail parts i.e. bulk hose (which must be cut to length) and assorted fittings.

Detail parts include:
Push-on type tube fittings (includes clamps and "o" rings) and bulk hose. Original production hose assemblies are fabricated from bulk hose (cut to length indicated) and add necessary fittings (listed by code number and cross-referenced to part number on pages 16 through 21).

Example: Original production part number D0DA 19867-E is replaced by 41 inches of 1/2" I.D. bulk hose (part number D2AZ 19C708-C) and one each of fitting code J55 which cross-references to fitting service part number D2AZ 19D695-AK and fitting code M55 which cross-references to fitting service part number D2AZ 19D695-U. The original production part number D0DA 19867-E is shown on page 14 of the IDENTIFICATION CHART and on page 10 of the APPLICATION CHART. The fitting code number to part number CROSS-REFERENCE CHART is shown on pages 21 through 23.

Air Conditioning hose information is listed as follows:

	PAGE
APPLICATION CHART	6 through 11
FITTING CROSS-REFERENCE CHART	15 through 23
IDENTIFICATION CHART	12 through 14
INSTALLATION INSTRUCTIONS	2 through 4
SIMPLIFIED HOSE ASSEMBLIES	5

More detailed instructions are included with the IDENTIFICATION CHART, APPLICATION CHART and FITTING CROSS-REFERENCE CHART.

COPYRIGHT © 1986 — FORD MOTOR COMPANY — DEARBORN, MICHIGAN

19C705-8 REFRIGERANT LINE REPLACEMENT and REPAIR PARTS — Cont'd

INSTALLATION INSTRUCTIONS

HOSE GUARDS

FOAM RUBBER SLEEVE: To protect 5/8" rubber air conditioner hose from direct rubbing against other parts and to reduce noise vibration noise.

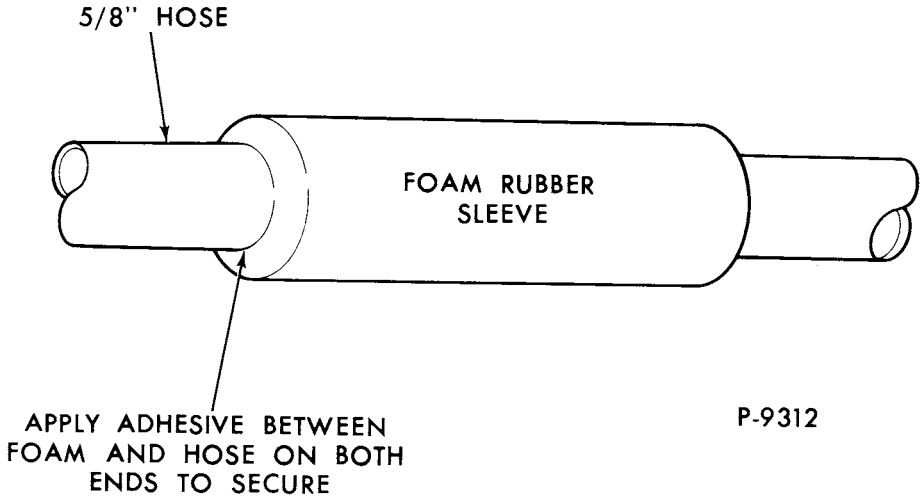

ALUMINUM SLEEVE: To protect 13/32" discharge hose where hose contacts sharp edges in routing through the radiator side support.

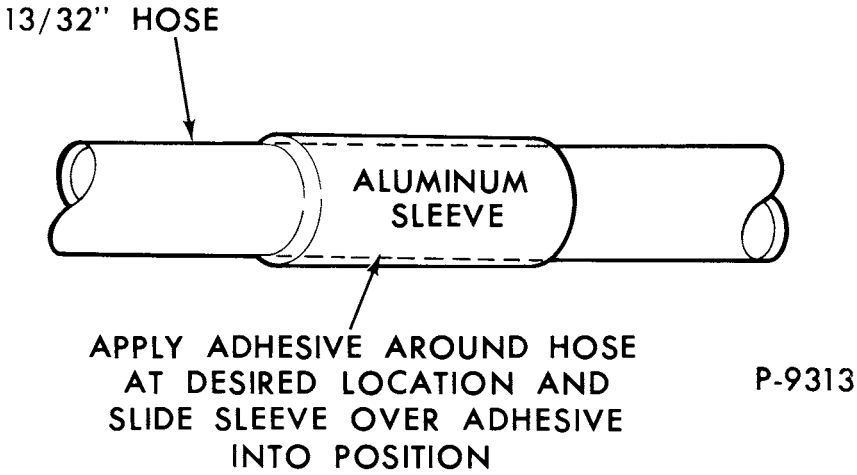

1. Slide sleeve on hose before installing end fittings.
NOTE: Sleeve can be cut lengthwise and formed around other hose sizes.

2. Use COAZ 19552-A or 8A 19552-B adhesive to secure sleeve in desired position.

19C705-8 REFRIGERANT LINE REPLACEMENT and REPAIR PARTS — Cont'd

INSTALLATION INSTRUCTIONS — Cont'd

DETAIL PARTS and HOSE ASSEMBLIES

1. Note defective hose routing before removal.

2. Repair existing rubber or nylon hose on vehicle if feasible.

   a. Repair cuts and similar failures, in otherwise sound existing hose assemblies, by using one push—on hose splicer or two splicers with the required length of bulk hose.

   b. Repair accumulator hose assemblies (Suction Line—Group Number 19C836) starting in 1973 on some models with integral A/C, by cutting the existing hose (6) inches from one or both coupled ends of the accumulator can, and splicing on the required bulk rubber hose and component fittings to replace the defective hose end.

      If the accumulator can is damaged, or if the existing hose is judged unsound, the entire accumulator assembly must be replaced with component parts.

3. Remove defective hose if splicing is not acceptable.

   a. Discharge the system if not completely discharged, following the procedure outlined in the shop manual.

   b. For those liquid lines (5/16" I.D.) having a self—sealing, quick disconnect coupling on one end, the coupling should be left on the vehicle. The new hose assembly will adapt into this coupling with 1/2"—20 male thread and an external o—ring seal.

4. Assemble the new hose as shown below if component parts are used.

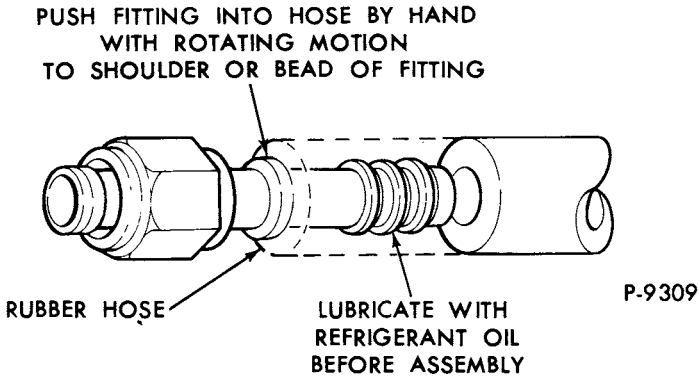

P-9309

a. Select proper end fittings, splicers, hose guards and hose size required to replace the original hose assembly. A visual comparison is required for applications not listed.

b. Cut hose to required length. Keep ends square and remove loose fragments.

c. Lubricate barbed end of fittings and splicers with a few drops of clean refrigerant oil.

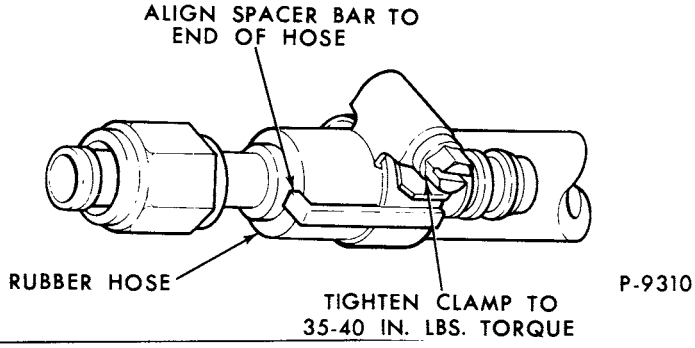

P-9310

d. Slide loose clamps on hose, force fittings into hose (by hand) with rotating motion. CAUTION: Do not go past shoulder or scratch fitting with tools, this fitting must be inserted by hand.

e. Position clamp so that spacer tab is over end or rubber hose and tighten until clamp starts to cut hose. (Tighten to 35—40 in. lbs. torque)

COPYRIGHT © 1986 — FORD MOTOR COMPANY — DEARBORN, MICHIGAN

19C705-8 REFRIGERANT LINE REPLACEMENT and REPAIR PARTS — Cont'd

INSTALLATION INSTRUCTIONS — Cont'd

DETAIL PARTS and HOSE ASSEMBLIES — Cont'd

f. For nylon hose splicers only, position clamp approx. 1/8" from end of hose (tighten to 40–45 in. lbs. torque).

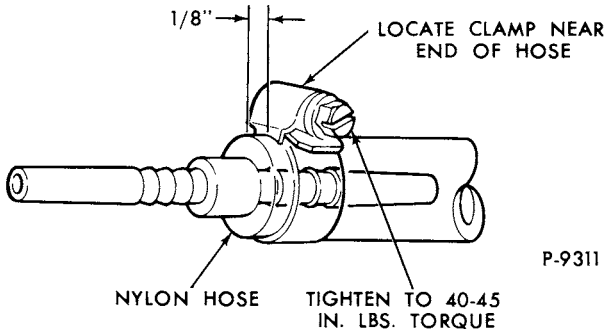

5. Route the new hose, using the original installation as a guide.
If simplified hose with aluminum tubing and splicer is used, bend the tubing as outlined below:

a. Bend the aluminum tubing by hand to replace the bends of the original hose, making the bends as simple as possible.
b. Drill new holes through the radiator support and side shield as required to make the installations using simplified tube bends.

6. Install and torque new hose assembly.
NOTE: When installing assembly, tighten coupling nut finger tight, then torque per chart below using a backup tube wrench. Further tightening may distort fitting and result in an imperfect seal. Be sure that o–ring is in place on o–ring type fittings. Hoses must be installed with no twist in them.

Fitting Size or Description	Thread Size	RECOMMENDED TORQUE (IN FT. LBS.) O–Ring Type	Flare Type
3/8"	5/8"–18	11–13	15–19
1/2"	3/4"–16 or 18	15–20	21–27
5/8"	7/8"–14 or 18	21–27	25–31
3/4"	1 1/16"–14 or 18	28–33	33–40
Adapter for Self–sealing Coupling	1/2"–20	8–12	
	7/8"–20	21–27	
Compressor fitting and service valve	1"–14	20–40	
Block fitting plate bolt		20–30	
Pressure relief valve (into block fitting)	3/8"–24	4–11	

7. Rework the existing hose support clamps if required.

a. Check for correct installation and proper routing for clearance with other vehicle components.

b. Evacuate, charge and leak test the system following the procedure outlined in the vehicle shop manual.

19C705-8 REFRIGERANT LINE REPLACEMENT and REPAIR PARTS — Cont'd

SIMPLIFIED HOSE ASSEMBLIES

SIMPLIFIED HOSE ASSEMBLIES

PART NUMBER	DESCRIPTION	TOTAL LENGTH INCHES
	LIQUID LINES	
D00Z-19837-C *YF-271	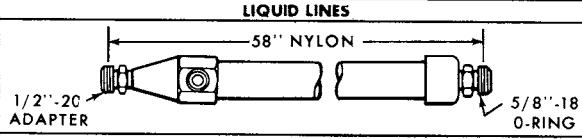	58
C80Z-19837-A *YF-270	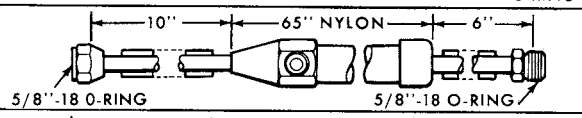	81
C70Z-19837-A *YF-269	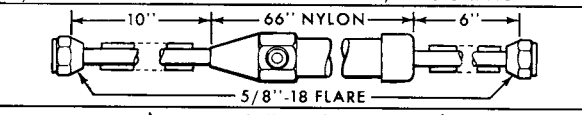	82
C7AZ-19837-A *YF-268	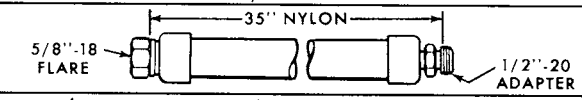	35
C9AZ-19837-A *YF-238	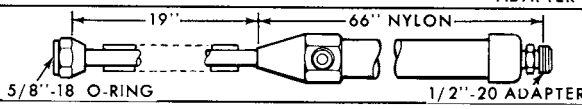	85
D1AZ-19837-B *YF-272	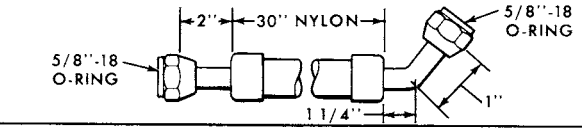	34
	DISCHARGE LINES	
C80Z-19972-A *YF-239	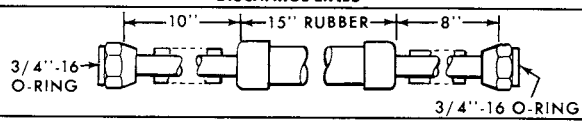	33
C9ZZ-19972-C *YF-277	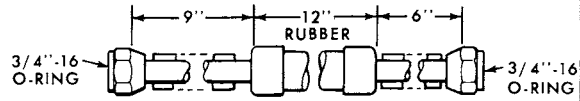	27
C7AZ-19972-A *YF-276	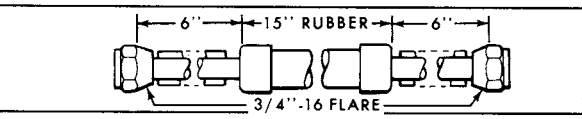	32
	SUCTION LINES	
C7AZ-19867-A *YF-285	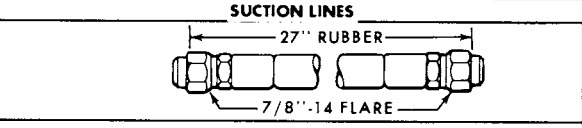	27
D0AZ-19867-A *YF-286	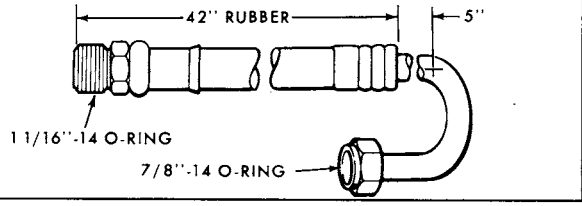	48

P-9877

COPYRIGHT © 1986 — FORD MOTOR COMPANY — DEARBORN, MICHIGAN

19C705–8 REFRIGERANT LINE REPLACEMENT and REPAIR PARTS — Cont'd

APPLICATION CHART

To determine the correct hose part number or detail part numbers you must know:

1. Carline–Mercury (A), Montego (C), etc.
2. Year (1973)
3. Hose function (Discharge Line, Liquid Line or Suction Line)
4. Type of Air Conditioning System (Hang–on or Integral)
5. Engine (number of cylinders and cubic inch displacement)

Example No. 1. If a Discharge Line is required for a 1973 Montego (C) with hang–on air conditioning the Application Chart (page 7) indicates (1) that the hose assembly is serviced as part number D1AZ 19972–B (original production hose) and (2) that the hose may be fabricated from 16" of 13/32" I.D. bulk hose (part number D2AZ 19C708–B); one piece of Fitting Code A44 (part number D2AZ 19D695–E) and one piece of Fitting Code CL6 (part number D0TZ 19B679–A).

Example No. 2 If a Liquid Line is required for a 1973 Mercury (A) with hang–on air conditioning the Application Chart (page 8) indicates (1) that the hose assembly is serviced as either part number D1AZ 19837–A (original production hose) or part number C70Z 19837–A (simplified hose) and (2) that the hose may be fabricated from 82" of 5/16" I.D. bulk hose (part number D2AZ 19C708–A), one piece of Fitting Code A33 (part number D2AZ 19D695–D), one piece of Fitting Code C33 (part number D2AZ 19D695–M) and one piece of Fitting Code SG3 (part number D2AZ 19D695–BK).

Example No. 3 If a Suction Line is required for a 1973 Cougar (F) with hang–on air conditioning the Application Chart (page 10) indicates (1) that the hose assembly is serviced as D1AZ 19867–A (original production hose) and (2) that the hose may be fabricated from 71" of 13/32" I.D. bulk hose (part number D2AZ 19C708–B), one piece of Fitting Code B54 (part number D2AZ 19D695–AU) and one piece of Fitting Code CL6 (part number D0TZ 19B679–A).

REFRIGERANT LINE APPLICATION CHART

YEAR	MODEL	ENGINE		TYPE OF A/C	SERVICE ASSEMBLY	SERVICE DETAILS		
		CYL.	C.I.D. (C.C.D.)			HOSE		FITTINGS REQUIRED
						I.D. (INCHES)	LENGTH (INCHES)	

19C705–8 REFRIGERANT LINE REPLACEMENT and REPAIR PARTS — Cont'd

● Simplified Hose Assy. ▲2000 cc †2800 cc @2300 cc

REFRIGERANT LINE APPLICATION CHART

DISCHARGE LINE–COMPRESSOR TO CONDENSER

73	A,Y	8	All	Integral	★	13/32	30	P44,S04
74	A,Y	8	All	Integral	★	13/32	25	P44,SF4
74	A – – w/frigidaire–swash plate compressor	8	460	Integral	★19972	13/32	33	P44,X4

REFRIGERANT LINE APPLICATION CHART

19C705-8 REFRIGERANT LINE REPLACEMENT and REPAIR PARTS — Cont'd
● Simplified hose assy.

REFRIGERANT LINE APPLICATION CHART

DISCHARGE LINE-COMPRESSOR TO CONDENSER

YEAR	MODEL	ENGINE CYL.	ENGINE C.I.D. (C.C.D.)	TYPE OF A/C	SERVICE ASSEMBLY	SERVICE DETAILS HOSE I.D. (INCHES)	SERVICE DETAILS HOSE LENGTH (INCHES)	SERVICE DETAILS FITTINGS REQUIRED
76/	A,Y - - Canada only	All	All	Hang-on	E2AZ 19972-A *YF-1086			
73/75	C	All	All	Hang-on	★	13/32	40	A44,CL6
76	C	All	All	Hang-on	E2AZ 19972-A *YF-1086			
73	C	All	All	Integral	★19972	13/32	35	P44,S04
74/	C,F	All	All	Integral	★	13/32	25	P44,SF4
73	D	8	460	Integral	★19972	13/32	39	G44,Y4
74/75	D "Before 1/2/75"	8	All	Integral	★19972	13/32	36	P44,Y4
75	D "From 1/2/75"	8	All	Integral	D5SZ 19972-A			
73	F "Before 3/1/73"	8	All	Integral	★●C9ZZ 19972-C *YF-277 Not repld. (3/84)	13/32	24	G44,H44
73	F "From 3/1/73"	8	All	Integral	★19972	13/32	24	G44,S04
73/75	F	8	All	Hang-on	★	13/32	40	A44,CL6
76/	F	All	All	Hang-on	E2AZ 19972-A *YF-1086			
75	G	6	All	Integral	★19972	13/32	33	P44,S04
75	G	8	All	Integral	★19972	13/32	12	P44,SF4
76/	G	All	All	Hang-on	E2AZ 19972-A *YF-1086			
73/74	J	All	All	Hang-on	★	13/32	40	A44,CL6
76/78	J	All	All	Hang-on	★D5RY 19972-C Not repld. (4/83)			
74	J	4	▲122	Integral	★D4RY 19972-B *YF-592 Not repld. (11/81)			
74	J	6	†171	Integral	★D4RY 19972-A *YF-591			
76/78	J	4	@140	Integral	★D5RY 19972-A Not repld. (11/81)			
76/78	J	†6	171	Integral	★D5RY 19972-B Not repld. (11/81)			
79	J	4	All	Integral	D9BZ 19972-A *YF-731			
79	J	6	171	Integral	D9ZZ 19972-A *YF-821			
79	J	6	200	Integral	E0BZ 19972-A			
79	J	8	All	Integral	D9ZZ 19972-B *YF-826			
73/75	K "Before 1/2/75"	8	All	Integral	★19972	13/32	20	P44,SE4,X4
75	K "From 1/2/75"	8	All	Integral	★19972	13/32	20	P44,X4
74	L	4	All	Hang-on	★	13/32	40	A44,CL6
76/	L	All	All	Hang-on	E2AZ 19972-A *YF-1086			
74	L "Before 5/6/74"	All	All	Integral	★	13/32	18	M84,SE4,S04
74	L "From 5/6/74"	All	All	Integral	★	13/32	17	M84,SF4
75	L	4	140	Integral	★D5FZ 19972-A *YF-622 Not repld. (4/83)			
75	L	6	171	Integral	★	13/32	20	Q44,S04
76/79	L "Before 2/16/79"	4	All	Integral	★D6FZ 19772-A			r/b details mat 80095
79	L "From 2/16/79"	4	All	Integral	D9FZ 19972-B *YF-862			
76/77	L "Before 6/27/77"	6	All	Integral	★19972	13/32	27	M84,SF4

COPYRIGHT © 1986 — FORD MOTOR COMPANY — DEARBORN, MICHIGAN

REFRIGERANT LINE APPLICATION CHART

YEAR	MODEL	ENGINE CYL.	ENGINE C.I.D. (C.C.D.)	TYPE OF A/C	SERVICE ASSEMBLY	SERVICE DETAILS HOSE I.D. (INCHES)	SERVICE DETAILS HOSE LENGTH (INCHES)	SERVICE DETAILS FITTINGS REQUIRED

19C705-8 REFRIGERANT LINE REPLACEMENT and REPAIR PARTS — Cont'd

● Simplified hose assy. ▲ 2000 cc † 2800 cc ⊕ With Certification Label Code AR8 or AR9

REFRIGERANT LINE APPLICATION CHART

DISCHARGE LINE-COMPRESSOR TO CONDENSER

77/79	L "From 6/27/77 to 2/16/79"	6	All	Integral	D8FZ 19972-A *YF-735			
79	L "From 2/16/79"	6	All	Integral	★19972	13/32	33	L57,S04
73	P	6	All	Integral	★	13/32	28	H44,SE4,S04
73	P "Before 3/1/73"	8	All	Integral	★●C9ZZ 19972-C *YF-277 Not repld. (3/84)	13/32	20	G44,H44
73	P "From 3/1/73"	8	All	Integral	D3DZ 19972-A *YF-574	13/32	15	H44,SE4,S04
74	P	8	All	Integral	★	13/32	15	H44,SE4,S04
76	P	6	All	Integral	★	13/32	35	H44,SE4,SF4
73/75	P	All	All	Hang-on	★	13/32	40	A44,CL6
76/	P	All	All	Hang-on	E2AZ 19972-A *YF-1086			
74	P - - Calif.	6	All	Integral	★	13/32	33	H44,SE4,S04
74	P - - exc. Calif.	6	All	Integral	★	13/32	28	H44,SE4,S04
78/	P	4	All	Integral	D9BZ 19972-A *YF-839			
78/	P	6	All	Integral	★19972	13/32	20	P44,S04
78/	P	8	All	Integral	D8BZ 19972-B *YF-728			

LIQUID LINE-DRYER TO EVAPORATOR

73/74	A,Y	8	All	Integral	★19835	5/16	30	G33,P33,SG3
74	A - - w/frigidaire swash plate compressor	8	460	Integral	D4MY 19835-A			
75/78	A,Y	8	All	Integral	★19835	5/16	27	F33,P33
75	A,Y	8	All	Integral	★19835	5/16	27	F44,P33
79	A - - dehydrator outlet	All	All	Integral	D9AZ 19835-A			
79	A - - evaporator to dehydrator "Before 4/10/79"	All	All	Integral	★19835	5/16	26	G33,P33
79	A - - evap. to dehyd. "From 4/10/79"	All	All	Integral	D9AZ 19835-C			
76/	A,Y - - Canada only	All	All	Hang-on	D6AZ 19837-A *YF-665			
73	C	All	All	Integral	★	5/16	31	P33,G33,SG3
74	C,F	All	All	Integral	★	5/16	37	G33,P33,SG3
75/	C,F	All	All	Integral	★19835	5/16	36	G33,Q33,SE3
78	F - - dehyd. to evap. front of cond.	All	All	Integral	⊕ D80Z 19835-A			
73/75	C	All	All	Hang-on	● C70Z 19837-A *YF-269	5/16	95	A33,C33,SG3
76	C	All	All	Hang-on	D6AZ 19837-A *YF-665			
73	D	8	460	Integral	★19835	5/16	33	G33,G33,SG3
74	D	8	All	Integral	★	5/16	29	G33,P33,SG3
75/	D	All	All	Integral	★19835	5/16	30	F33,P33

REFRIGERANT LINE APPLICATION CHART

YEAR	MODEL	ENGINE CYL.	ENGINE C.I.D. (C.C.D.)	TYPE OF A/C	SERVICE ASSEMBLY	SERVICE DETAILS HOSE I.D. (INCHES)	SERVICE DETAILS HOSE LENGTH (INCHES)	SERVICE DETAILS FITTINGS REQUIRED

19C705-8 REFRIGERANT LINE REPLACEMENT and REPAIR PARTS — Cont'd
● Simplified hose assy. ▲ 2000 cc † 2800 cc ⊕ With Certification Label Code AR8 or AR9

REFRIGERANT LINE APPLICATION CHART

LIQUID LINE-DRYER TO EVAPORATOR

73	F "Before 3/1/73"	8	All	Integral	★19837	5/16	61	Z3,SG3,M33
73	F "From 3/1/73"	8	All	Integral	★19835 and ★19837 *YF-570	5/16 5/16	12 62	G33,G33,SE3 P33,M33
73/75	F	All	All	Hang-on	● C70Z 19837-A *YF-269	5/16	95	A33,C33,SG3
76/	F	All	All	Hang-on	D6AZ 19837-A *YF-665			
74	F	All	All	Integral	★	5/16	31	D33,G33,SG3
75	G	All	All	Integral	★ D5DZ 19835-A Not repld. (4/83)			
75/77	G - - dehydrator to condenser-inlet "Before 2/15/77"	All	All	Integral	D5DZ 19835-B			
75/77	G - - dehydrator to condenser-outlet "Before 2/15/77"	All	All	Integral	D5DZ 19835-C			
77/	G - - dehydrator outlet "From 2/15/77"	All	All	Integral	D84Y 19835-A			
76/77	G "Before 4/15/77"	All	All	Integral	★19835	5/16	80	G33,P33
77/	G "From 4/15/77"	All	All	Integral	D7DZ 19835-A			
78	G - - att. to dehyd.	All	All	Integral	★⊕D8DZ 19835-A Not repld. (4/83)			
76/	G	All	All	Hang-on	D6AZ 19837-A *YF-665			
73/78	J - - condenser to dryer	All	All	Hang-on	★	5/16	8	A33,A33
74	J	All	All	Hang-on	★ D4RY 19837-A Not repld. (11/81)			
74	J - - dehydrator to evaporator (incl. sight glass)	4	▲122	Integral	★ D4RY 19835-A Not repld. (12/79)			
74/78	J - - dehydrator to condenser	All	All	Integral	★ D4RY 19835-C Not repld. (4/83)			
73/74	J - - dryer to evaporator	All	All	Hang-on	● C70Z 19837-A	5/16	82	A33,C33,SG3
76/78	J - - dryer to evaporator	All	All	Hang-on	★ D5RY 19837-B *YF-660 Not repld. (4/83)			
74	J - - dehydrator to evaporator (incl. sight glass)	6	†171	Integral	★ D4RY 19835-B Not repld. (12/79)			
76/78	J	4	140	Integral	★19837	5/16	50	G33,J33
79	J - - tube cond outlet	All	All	Integral	D9ZZ 19835-A *YF-833			
79	J - - evaporator to dehydrator	All	All	Integral	D9ZZ 19835-B *YF-832			
73	K	8	460	Integral	★19835	5/16	36	L33,G33,SG3
74	K	8	All	Integral	★	5/16	38	F33,P33
75/77	K	All	All	Integral	★19835	5/16	37	F33,Q33,SE3
78/	K	All	All	Integral	★19835	5/16	27	F33,P33
74	L	All	All	Integral	★	5/16	38 or 41	H33,H33

COPYRIGHT © 1986 -- FORD MOTOR COMPANY — DEARBORN, MICHIGAN

REFRIGERANT LINE APPLICATION CHART

YEAR	MODEL	ENGINE CYL.	ENGINE C.I.D. (C.C.D.)	TYPE OF A/C	SERVICE ASSEMBLY	SERVICE DETAILS HOSE I.D. (INCHES)	SERVICE DETAILS HOSE LENGTH (INCHES)	SERVICE DETAILS FITTINGS REQUIRED
19C705-8	REFRIGERANT LINE REPLACEMENT and REPAIR PARTS — Cont'd ● Simplified hose assy. ▲ 2000 cc † 2800 cc ⊕ With Certification Label Code AR8 or AR9							

REFRIGERANT LINE APPLICATION CHART

LIQUID LINE-DRYER TO EVAPORATOR

74/75	L	All	All	Hang-on	● C70Z 19837-A *YF-269	5/16	95	A33,C33,SG3
76/	L	All	All	Hang-on	D6AZ 19837-A *YF-665			
75	L	All	All	Integral	★19835	5/16	39	H33,H33
76	L	All	All	Integral	★19835	5/16	50	H33,H33
77/	L	All	All	Integral	★19835	5/16	46	J33,M33
73	P "Before 12/15/72"	All	All	Integral	D0DZ 19835-B and D0DZ 19837-Aor ★ and D0DZ 19837-A	5/16 5/16	63 63	J33,M33,SG3 J33,M33,SG3
73	P "From 12/15/72 to 3/1/73"	6	All	Integral	D0DZ 19835-B and ★19837	5/16 5/16	9 52	J33,SE3,Z23 M33,SG3,Z23
73	P "From 3/1/73"	6	All	Integral	★19835 and ★19837	5/16 5/16	8 50	G33,J33,SE3 M33,SG3,P33
73	P "From 12/15/72 to 3/1/73"	8	All	Integral	★19835 and ★19837	5/16 5/16	10 55	J33,SE3,Z23 M33,SG3,Z23
73	P "From 3/1/73"	8	All	Integral	D3DZ 19835-A and ★19837	5/16 5/16	10 52	G33,J33,SE3 M33,P33,SG3
74	P	6	All	Integral	★19835 and ★19837	5/16 5/16	8 50	G33,J33,SE3 M33,P33,SG3
74	P	8	All	Integral	★19835 and ★19837	5/16 5/16	10 52	G33,J33,SE3 M33,P33,SG3
74/77	P (Condenser to dehydrator	All	All	Integral	★ D4DZ 19835-A Not repld. (4/83)			
78/	P(dehydrator to evaporator)	All	All	Integral	D8BZ 19835-A			
78/	P(condenser outlet)	All	All	Integral	D8BZ 19835-B			
73/75	P	All	All	Hang-on	● C70Z 19837-A *YF-269	5/16	95	A33,C33,SG3
76	P	All	All	Hang-on	D6AZ 19837-A *YF-665			
77/	V	All	All	Integral	D7DZ 19835-A			

SUCTION LINE-EVAPORATOR TO COMPRESSOR

73/	A,Y	8	All	Integral	D3AZ 19C836→A			
74	A – – w/frigidaire swash plate compressor	8	460	Integral	★19867	5/8	52	J66,Y6
75/76	A,Y	8	400	Integral	D5AZ 19D850-A			
77/78	A	8	351M,400	Integral	D7VY 19D850-A			
77/78	A	8	351W	Integral	★ D7AZ 19D850-D			r/b details mat 7046
75/76	A,Y	8	460	Integral	D5AZ 19D850-B			
77/78	A	8	460	Integral	★ D7AZ 19D850-C			r/b details mat 7045
79	A	8	302	Integral	D9AZ 19D850-B *YF-870			
79	A	8	351W	Integral	D9AZ 19D850-C *YF-886			
75	Y	8	351M	Integral	D5AZ 19D850-A			

REFRIGERANT LINE APPLICATION CHART

YEAR	MODEL	ENGINE CYL.	ENGINE C.I.D. (C.C.D.)	TYPE OF A/C	SERVICE ASSEMBLY	SERVICE DETAILS HOSE I.D. (INCHES)	SERVICE DETAILS HOSE LENGTH (INCHES)	SERVICE DETAILS FITTINGS REQUIRED
19C705-8	REFRIGERANT LINE REPLACEMENT and REPAIR PARTS — Cont'd ● Simplified hose assy. ▲ 2000 cc † 2800 cc ⊕ With Certification Label Code AR8 or AR9							

REFRIGERANT LINE APPLICATION CHART

SUCTION LINE-EVAPORATOR TO COMPRESSOR

73	A	All	All	Hang-on	★19867	13/32	71	B54,CL6
73/74	C "Before 8/27/73"	8	429,460	Integral	★D30Z 19C836-B *YH-555 Not repld. (4/83)			
73/74	C "From 8/27/73"	All	All	Integral	D40Z 19C836-A *YF-597			
75	C	All	All	Integral	D50Z 19C836-A			
76	C	All	All	Integral	D60Z 19C836-A			
73/76	C	All	All	Hang-on	★19867	13/32	74	C54,CL6
73	D	8	460	Integral	★19867	5/8	60	J66,Y6
74	D	8	All	Integral	★19867	5/8	60	J66,Y6
75/	D	8	All	Integral	★19867	5/8	63	J66,Y6
77/78	D "Before 5/1/78"	8	400	Integral	D7VY 19D850-A			
78/	D "From 5/1/78"	8	400	Integral	D8VY 19D850-C *YF-829			
77/78	D "Before 5/1/78"	8	460	Integral	★D7AZ 19D850-C			r/b retails mat 7045
78	D "From 5/1/78"	8	460	Integral	★D8VY 19D850-B Not repld. (3/84)			
79	D	All	All	Integral	D9VY 19D850-A *YF-831			
73	F "Before 3/1/73"	8	All	Integral	D3ZZ 19867-B	1/2	54	J55,M55
73	F "From 3/1/73"	8	All	Integral	★19867	1/2	51	J55,M55,SC5
74	F	8	351,400	Integral	D30Z 19C836-C			
74	F	8	460	Integral	★D30Z 19C836-B *YH-555 Not repld. (4/83)			
75	F	All	All	Integral	D50Z 19C836-A			
76	F	All	All	Integral	D60Z 19C836-A			
76	F - - w/o accumulator	All	All	Integral	D6WY 19867-A			
78	F - - w/o accumulator	All	All	Integral	★⊕D80Z 19867-A Not repld. (4/83)			
77/78	F	All	All	Integral	★D70Z 19C836-A Not repld. (3/84)			
79	F "Before 2/1/79"	All	All	Integral	D90Z 19C836-A *YF-820			
79	F "From 2/1/79"	All	All	Integral	D90Z 19867-A			
73/	F	8	All	Hang-on	★19867	13/32	74	C54,CL6
75	G	6	All	Integral	★D5DZ 19C836-B Not repld. (4/83)			
75	G	8	All	Integral	D5DZ 19C836-A			
75	G	All	All	Integral	★19D852	5/8	11	J66,K56
76	G	6	All	Integral	★19D850	13/32 5/8	52 43	SF4,Y4 HDP,L56,Y6
76	G	8	All	Integral	★19D850	13/32 5/8	24 30	SF4,Y4,Y6 HDP,L56,MU4
77/	G	6	All	Integral	D7DZ 19D850-A			
77/	G	8	All	Integral	D7DZ 19D850-B			
73/78	J	All	All	Hang-on	★19867	13/32	74	C54,CL6
74	J	4	▲122	Integral	★19867			
74	J	6	†171	Integral	★19867			

COPYRIGHT © 1986 — FORD MOTOR COMPANY — DEARBORN, MICHIGAN

REFRIGERANT LINE APPLICATION CHART

YEAR	MODEL	ENGINE CYL.	ENGINE C.I.D. (C.C.D.)	TYPE OF A/C	SERVICE ASSEMBLY	SERVICE DETAILS HOSE I.D. (INCHES)	SERVICE DETAILS HOSE LENGTH (INCHES)	SERVICE DETAILS FITTINGS REQUIRED
19C705-8	REFRIGERANT LINE REPLACEMENT and REPAIR PARTS — Cont'd ● Simplified hose assy. ▲ 2000 cc † 2800 cc ⊕ With Certification Label Code AR8 or AR9							

REFRIGERANT LINE APPLICATION CHART

SUCTION LINE-EVAPORATOR TO COMPRESSOR

76/78	J	4	140	Integral	★D5RY 19867-A Not repld. (4/83)			
76/78	J	6	171	Integral	★D5RY 19867-B Not repld. (4/83)			
79	J	4	All	Integral	D9BZ 19867-A *YF-824			
79	J	6	171	Integral	D9ZZ 19867-A *YF-822			
79	J	6	200	Integral	D9ZZ 19867-C			
79	J	8	All	Integral	D9ZZ 19867-B *YF-825			
74/	K	8	All	Integral	★	5/8	50	J66,Y6
77/78	K	8	400	Integral	★D7LY 19D850-B			r/b details mat 7046
77/78	K	8	460	Integral	★D7LY 19D850-A			r/b details mat 7047
79	K	All	All	Integral	D9LY 19D850-A			
74	L	4	All	Hang-on	★19867	13/32	74	C54,CL6
74	L "Before 5/6/74"	All	All	Integral	★D4FZ 19C836-A *YF-584 Not repld. (4/83)			
74/76	L "From 5/6/74"	All	All	Integral	★D4FZ 19C836-B *YF-621 Not repld. (4/83)			
77/79	L "Before 2/1/79"	All	All	Integral	D7FZ 19C836-A			
79	L "From 2/1/79"	All	All	Integral	D9FZ 19867-A *YF-871			
74	L "Before 3/30/74"	4	140	Integral	★19D742	5/8	24	J66,SD6,SO6
74	L "From 3/30/74"	4	140	Integral	★19D742	5/8	7	H66,SE6,SO6
75/77	L "Before 6/27/77"	6	All	Integral	★19D742	5/8	38	H56,SE6,SO
77/79	L "From 6/27/77 to 2/16/79"	6	All	★Integral	★D8FZ 19D742-A Not repld. (3/84)			
79	L "From 2/16/79"	6	All	Integral	D9FZ 19D742-A			
75/79	L "Before 2/16/79"	4	All	Integral	★19D742	5/8	25	J56,SO6
79	L "From 2/16/79"	4	All	Integral	D9FZ 19D742-B			
73	P "Before 12/15/72"	6	All	Integral	★	1/2	21	H55,L55
73	P "From 12/15/72" to 3/1/73"	6	All	Integral	★19867	1/2	22	H55,L55
73	P "From 3/1/73"	6	All	Integral	★19867 *YF-567	1/2	26	J55,M55,SC5
73	P "Before 12/15/72"	8	All	Integral	★	1/2	41	J55,M55
73	P "From 12/15/72 to 3/1/73"	8	All	Integral	★19867	1/2	41	J55,L55
73	P "From 3/1/73"	8	All	Integral	★19867	1/2	40	M55,J55,SC5
73/	P	All	All	Hang-on	★19867	13/32	74	C54,CL6
74	P	6	All	Integral	★19867 *YF-567	1/2	26	J55,M55,SC5
74	P	8	All	Integral	★19867	1/2	40	J55,M55,SC5
75/77	P	6	All	Integral	★19867	1/2	22	J55,M55,SC5
75/76	P	8	All	Integral	★19867	1/2	40	J55, M55, SC5

REFRIGERANT LINE APPLICATION CHART

YEAR	MODEL	ENGINE CYL.	ENGINE C.I.D. (C.C.D.)	TYPE OF A/C	SERVICE ASSEMBLY	SERVICE DETAILS HOSE I.D. (INCHES)	SERVICE DETAILS HOSE LENGTH (INCHES)	SERVICE DETAILS FITTINGS REQUIRED

19C705-8 REFRIGERANT LINE REPLACEMENT and REPAIR PARTS — Cont'd

● Simplified hose assy. ▲ 2000 cc † 2800 cc ⊕ With Certification Label Code AR8 or AR9

REFRIGERANT LINE APPLICATION CHART

SUCTION LINE-EVAPORATOR TO COMPRESSOR

77	P	8	All	Integral	★19867	1/2	43	L56,SJ6
78	P	4	All	Integral	★19867	1/2	32	K56,S06
79	P	4	All	Integral	D9BZ 19867-A *YF-824			
78/	P	6	All	Integral	★19867	1/2	44	J56,SJ6
78/	P	8	All	Integral	D8BZ 19867-B *YF-733			
77/	V	All	All	Integral	D7DZ 19D850-B			

COPYRIGHT © 1986 — FORD MOTOR COMPANY — DEARBORN, MICHIGAN

19C705-8 REFRIGERANT LINE REPLACEMENT and REPAIR PARTS — Cont'd

IDENTIFICATION CHART

To determine the correct hose part number or detail part numbers you must either:

1. Know the identification number from the existing hose.

or

2. Visually identify the existing hose and select appropriate details from the Fitting Cross-Reference Chart shown on pages 16 through 24.

Example No. 1 If the identification number is D2SA 19972-DF, the Identification Chart (on page 15) indicates (1) that the service assembly number is D2SZ 19972-A and (2) that the hose may be fabricated from 18" of 13/32" I.D. bulk hose (part number D2AZ 19C708-B), one piece of Fitting Code P44 (part number D2AZ 19D695-BC and one piece of Fitting Code X4 (part number D2AZ 19D695-BG.

Example No. 2 If the combined identification numbers are D1ZA 19835-AB and D1ZA 19837-AD the Identification Chart (on page 13) indicates (1) that the service assembly (for the combined hoses) is C8OZ 19837-A and (2) that the combined hoses may be fabricated from-78" of 5/16" I.D. bulk hose (part number D2AZ 19C708-A), one piece of Fitting Code H33 (part number D2AZ 19D695-AE), one piece of Fitting Code L33 (part number D2AZ 19D695-R) and one piece of Fitting Code SG3 (part number D2AZ 19D695-BK).

Example No. 3. If the Identification number is DODA 19867-E, the Identification Chart (on page 14) indicates the hose assembly is not serviced (★) and that the hose must be fabricated from-41" of 1/2" I.D. bulk hose (part number D2AZ 19C708-C), one piece of Fitting Code J55 (part number D2AZ 19D695-AK) and one piece of Fitting Code M55 (part number D2AZ 19D695-U).

REFRIGERANT LINE IDENTIFICATION CHART

IDENTIFICATION	SERVICE ASSEMBLY	SERVICE DETAILS			IDENTIFICATION	SERVICE ASSEMBLY	SERVICE DETAILS		
		HOSE		FITTINGS REQ'D (CODE NUMBER)			HOSE		FITTINGS REQ'D (CODE NUMBER)
		I.D. (Inches)	LENGTH (Inches)				I.D. (Inches)	LENGTH (Inches)	
19C705-8	**REFRIGERANT LINE REPLACEMENT and REPAIR PARTS — Cont'd**								
	● Simplified Hose Assy.								
D8DH 19N585-AA	D8DZ 19835-A				D8BH 19N617-BA	D8BZ 19867-B			
D8OH 19N585-AA	D8OZ 19835-A				D8BH 19N617-CA	D8BZ 19867-C			
D84H 19N585-AA	D84Y 19835-A				D9BH 19N617-AA	D9BZ 19867-A			
D9AH 19N585-AB	D9AZ 19835-A				D9EH 19N617-AA	D9FZ 19867-A			
D9ZH 19N585-AA	D9ZZ 19835-A				D9OH 19N617-AA	D9OZ 19867-A			
D12J 19C596-AA	DORY 19835-A	5/16	8	A33,A33	D9ZH 19N617-AB	D9ZZ 19867-A			
D48A 19C596-AA	D4RY 19835-C				D9ZH 19N617-BB	D9ZZ 19867-B			
D6OH 19N617-AA	D6WY 19867-A				D9ZH 19N617-CA	D9ZZ 19867-C			
D8BH 19N617-AA	D8BZ 19867-A				D48A 19A705-AA	D4RY 19867-A *YF-595			
D8BH 19N617-AB	D8BZ 19867-A								
D8BH 19N617-AC	D8BZ 19867-A								

REFRIGERANT LINE IDENTIFICATION CHART

IDENTIFICATION	SERVICE ASSEMBLY	SERVICE DETAILS HOSE I.D. (Inches)	SERVICE DETAILS HOSE LENGTH (Inches)	SERVICE DETAILS FITTINGS REQ'D (CODE NUMBER)
19C705-8	**REFRIGERANT LINE REPLACEMENT and REPAIR PARTS — Cont'd**			
	● Simplified Hose Assy.			
D48A 19A705-AB	D4RY 19867-A *YF-595			
D48A 19A705-BA	D4RY 19867-B *YF-596			
D42H 19D742-AA	★	5/8	24	J66,SD6, S06
D42H 19D742-AB	D4FZ 19D472-B	5/8	7	H66,SE6, S06
D52H 19D742-AA	★19D742	5/8	38	H56,SE6, S06
D9EH 19D742-AA	D9FZ 19D742-A			
D9EH 19D742-BA	D9FZ 19D742-B			
D0DA 19835-A and D0DA 19837-E	★ D0DZ 19837-A	5/16	63	J33,M33, SG3
D0DA 19835-A and D3DH 19837-BA	★ D3DZ 19837-B	5/16 5/16	10 55	J33,SE3, Z23 M33,SG3, Z23
D0DA 19835-B and D0DA 19837-C	D0DZ 19835-B D0DZ 19837-A	5/16 5/16	9 63	J33,M33, SG3
D0DA 19835-B and D3DH 19837-AA	D0DZ 19835-B ★19837	5/16 5/16	9 52	J33,SG3, Z23 M33,SG3, Z23
D1ZA 19835-AB and D1ZA 19837-AD	★19837	5/16	78	H33,L33, SG3
D20A 19835-BB	★	5/16	37	G33,P33, SG3
D20A 19835-BC	★	5/16	37	G33,P33, SG3
D2SA 19835-AD	D2SZ 19835-A	5/16	34	G33,P33, SG3
D2SA 19835-AE	D2SZ 19835-A	5/16	34	G33,P33, SG3
D2VA 19835-AB	D2VY 19835-A	5/16	34	G33,G33, SG3
D2VA 19835-AC	D2VY 19835-A	5/16	34	G33,G33, SG3
D2VA 19835-AE	D2VY 19835-A	5/16	34	G33,G33, SG3
D3AH 19835-AA	D3AZ 19835-A	5/16	30	G33,P33, SG3
D3DH 19835-AA and D3DH 19837-DA	★19835 ★19837	5/16 5/16	10 52	G33,J33, SE3 M33,P33, SG3
D3DH 19835-BA and D3DH 19837-CA	★19835 ★19837	5/16 5/16	8 50	G33,J33, SE3 M33,P33, SG3
D3SH 19835-AB	D3SZ 19835-A	5/16	34	G33,L33, SG3
D3ZH 19835-AA and D3ZH 19837-DA	★19835 ★19837 *YF-570	5/16 5/16	12 62	G33,SE3, G33 M33,P33
D4MH 19835-AA	★19835	5/16	27	F33,P33
D4SH 19835-AA	★	5/16	38	F33,P33
D4SH 19835-AB	★	5/16	38	F33,P33
D4VH 19835-AA	★	5/16	29	G33,P33, SG3
D4VH 19835-AB	★	5/16	29	G33,P33, SG3
D42H 19835-AC	★	5/16	38	H33,H33
D42H 19835-AD	★	5/16	38	H33,H33
D48A 19835-AA	D4RY 19835-A			
D48A 19835-AB	D4RY 19835-A			
D48A 19835-BA	D4RY 19835-B			
D5AH 19835-AA	D5AZ 19835-A	5/16	27	F44,P33
D5DH 19835-AA	D5DZ 19835-A			
D5OH 19835-AA	D5OZ 19835-A			
D5SH 19835-AA	★19835	5/16	37	F33,Q33, SE3
D5VH 19835-AA	★19835	5/16	30	F33,P33
D52H 19835-AA	★19835	5/16	39	H33,H33
D6EH 19835-AB	★19835	5/16	50	H33,H33
D7EH 19835-AA	★19835	5/16	46	J33,M33
D8DH 19835-AA	D7DZ 19835-A			
D9AH 19835-AB	D9AZ 19835-B			
D9AH 19835-BA	D9AZ 19835-C			
D9ZH 19835-AA	D9ZZ 19835-B			
D0DA 19837-C and D0DA 19835-B	D0DZ 19837-A D0DZ 19835-B	5/16	63	J33,M33, SG3
D0DA 19837-E and D0DA 19835-A	D0DZ 19837-A ★	5/16	63	J33,M33, SG3
D12J 19837-A	D0RY 19837-A	5/16	60	A33,C33
D3DH 19837-AA and D0DA 19835-B	D3DZ 19837-A D0DZ 19835-B	5/16 5/16	52 9	M33,SG3, Z23 J33,SE3, Z23
D3DH 19837A and D0DA 19835-A	★19837 ★	5/16 5/16	55 10	M33,SG3, Z23 J33,SE3, Z23
D3DH 19837-CA and D3DH 19835-BA	★19837 *YF-564 ★19835	5/16 5/16	50 8	M33,P33, SG3 G33,J33, SE3
D3DH 19837-DA and D3DH 19835-AA	★19837 ★19835	5/16 5/16	52 10	M33,P33, SG3 G33,J33, SE3
D3ZH 19837-BA	● C80Z 19837-A *YF-270	1/2	54	J55,M55

COPYRIGHT © 1986 — FORD MOTOR COMPANY — DEARBORN, MICHIGAN

REFRIGERANT LINE IDENTIFICATION CHART

19C705-8 REFRIGERANT LINE REPLACEMENT and REPAIR PARTS — Cont'd

● Simplified Hose Assy.

IDENTIFICATION	SERVICE ASSEMBLY	SERVICE DETAILS HOSE I.D. (Inches)	SERVICE DETAILS HOSE LENGTH (Inches)	SERVICE DETAILS FITTINGS REQ'D (CODE NUMBER)
D3ZH 19837-DA and D3ZH 19835-AA	★19837 *YF-570	5/16	62	M33,P33
	★19835	5/16	12	G33,SE3, G33
D6DH 19D850-AA	★19D850	13/32	24	SF4,Y4,Y6
		5/8	30	HDP,L56,MU4
D6DH 19D850-AC	★19D850	13/32	24	SF4,Y4,Y6
		5/8	30	HDP,L56,MU4
D6DH 19D850-AD	★19D850	13/32	24	SF4,Y4,Y6
		5/8	30	HDP,L56,MU4
D6DH 19D850-AE	★19D850	13/32	24	SF4,Y4,Y6
		5/8	30	HDP,L56,MU4
D6DH 19D850-BA	★19D850	13/32	52	SF4,Y4
		5/8	43	HDP,L56,Y6
D6DH 19D850-BC	★19D850	13/32	52	SF4,Y4
		5/8	43	HDP,L56,Y6
D7AH 19D850-AA	★ D7AZ 19D850-C			
D7DH 19D850-AA	D7DZ 19D850-A			
D7DH 19D850-BA	D7DZ 19D850-B			
D7LH 19D850-AA	★ D7LY 19D850-A			
D7LH 19D850-BA	★ D7LY 19D850-B			
D7VH 19D850-AA	D7VY 19D850-A			
D5DH 19D852-AA	★	5/8	11	J66,K56
D0DA 19867-C	★	1/2	21	H55,L55
D0DA 19867-E	★	1/2	41	J55,M55
D1AJ 19867-A	D1AZ 19867-A	13/32	71	B54,CL6
D1ZA 19867-BC	D1ZZ 19867-B	1/2	49	J55,L55
D12J 19867-AA	D1AZ 19867-A	13/32	71	B54,CL6
D2SA 19867-CD	★	5/8	52	J66,Y6
D2SA 19867-CE	★	5/8	52	J66,Y6
D3DH 19867-AA	★19867	1/2	22	H55,L55
D3DH 19867-BA	★19867	1/2	41	J55,L55
D3DH 19867-CA	D3DZ 19867-C *YF-567	1/2	26	J55,M55, SC5
D3DH 19867-CB	D3DZ 19867-C *YF-567	1/2	26	J55,M55, SC5
D3DH 19867-CD	★	1/2	26	J55,M55, SC5
D3DH 19867-DA	★19867	1/2	40	J55,M55, SC5
D3VH 19867-A	★19867	5/8	60	J66,Y6
D3VH 19867-AA	★19867	5/8	60	J66,Y6
D3ZH 19867-AC	D3ZZ 19867-A	1/2	23	G55,M55
D3ZH 19867-DA	★19867	1/2	51	J55,M55, SC5
D4MH 19867-A	★19867	5/8	52	J66,Y6
D5BH 19867-AA	D5DZ 19867-A *YF-645	1/2	22	J55,M55, SC5
D5BH 19867-BA	D5DZ 19867-B	1/2	40	J55,M55, SC5
D5VH 19867-AA	★19867 *YF-641	5/8	63	J66,Y6

IDENTIFICATION	SERVICE ASSEMBLY	SERVICE DETAILS HOSE I.D. (Inches)	SERVICE DETAILS HOSE LENGTH (Inches)	SERVICE DETAILS FITTINGS REQ'D (CODE NUMBER)
D3AH 19C913-AC	D3AZ 19C836-A			
D3AH 19C913-AD	D3AZ 19C836-A			
D3AH 19C913-AG	D3AZ 19C836-A			
D30H 19C913-BA	D30Z 19C836-B *YF-555			
D30H 19C913-C1A	D30Z 19C836-C			
D40H 19C913-A1A	D40Z 19C836-A *YF-597			
D42H 19C913-AB	D4FZ 19C836-A			
D42H 19C913-AC	D4FZ 19C836-A			
D42H 19C913-AD	D4FZ 19C836-B			
D5DH 19C913-AA	D5DZ 19C836-A			
D5DH 19C913-BA	D5DZ 19C836-B			
D50H 19C913-A1A	D50Z 19C836-A			
D7EH 19C913-AA	D7FZ 19C836-A			
D70H 19C913-AA	D70Z 19C836-A			
EDD70H 19C913-AA	D80Z 19867-A			
D90H 19C913-AA	D90Z 19C836-A			
C9ZA 19972-E	C9ZZ 19972-C *YF-277	13/32	20	G44,H44
D0DA 19972-A	● C80Z 19972-A *YF-239 or D0DZ 19972-A or D0DZ 19972-C	13/32	36	H44,H44
D0DA 19972-C	● C9ZZ 19972-C *YF-277	13/32	20	G44,H44
D0DA 19972-D	● C80Z 19972-A *YF-239 or D0DZ 19972-A or D0DZ 19972-C	13/32	36	H44,H44
D20A 19972-CB	★	13/32	25	P44,SF4
D20A 19972-DC	★19972	13/32	35	P44,S04
D2SA 19972-DF	D2SZ 19972-A	13/32	20	P44,X4
D3AH 19972-AD	★	13/32	25	P44,SF4
D3DH 19972-AB	★	13/32	15	H44,SE4, S04
D3DH 19972-BA	★	13/32	28	H44,SE4, S04
D3VH 19972-AA	D3VY 19972-A	13/32	39	G44,Y4
D3ZH 19972-AA	★19972	13/32	24	G44,S04
D4DH 19972-CA	D4DZ 19972-A *YF-587	13/32	33	H44,SE4, S04
D4MH 19972-AA	★19972	13/32	33	P44,X4
D4VH 19972-AA	★19972	13/32	36	P44,Y4
D42H 19972-AB	★	13/32	18	M44,SE4, S04
D42H 19972-AC	★	13/32	17	
D48A 19972-AA	D4RY 19972-A *YF-591			

REFRIGERANT LINE IDENTIFICATION CHART

IDENTIFICATION	SERVICE ASSEMBLY	SERVICE DETAILS HOSE I.D. (Inches)	SERVICE DETAILS HOSE LENGTH (Inches)	SERVICE DETAILS FITTINGS REQ'D (CODE NUMBER)	IDENTIFICATION	SERVICE ASSEMBLY	SERVICE DETAILS HOSE I.D. (Inches)	SERVICE DETAILS HOSE LENGTH (Inches)	SERVICE DETAILS FITTINGS REQ'D (CODE NUMBER)
19C705-8	REFRIGERANT LINE REPLACEMENT and REPAIR PARTS — Cont'd ● Simplified Hose Assy.								
D48A 19972-BA	D4RY 19972-B *YF-592				D6OH 19972-AA	★	13/32	17	P44,SF4
					D8BH 19972-CA	D9BZ 19972-A			
D5DH 19972-AC	★19972	13/32	12	P44,SF4	D8BH 19972-CB	D9BZ 19972-A			
D5DH 19972-BA	★19972	13/32	33	P44,SO4	D8BH 19972-CC	D9BZ 19972-A			
D52H 19972-AA	D5FZ 19972-A *YF-622				D9BH 19972-AA	D9BZ 19972-A			
					D9EH 19972-AA	D9FZ 19972-A			
D52H 19972-BA	D5FZ 19972-B *YF-623				D9EH 19972-BA	D9FZ 19972-B			
					D9ZH 19972-AB	D9ZZ 19972-A			
D6BH 19972-AA	★	13/32	35	H44,SE4, SF4	D9ZH 19972-BB	D9ZZ 19972-B			
					E0BH 19972-AA	E0BZ 19972-A			

COPYRIGHT © 1986 — FORD MOTOR COMPANY — DEARBORN, MICHIGAN

19C705-8 REFRIGERANT LINE REPLACEMENT and REPAIR PARTS — Cont'd

FITTING CROSS-REFERENCE CHART

There are three ways of selecting hose and fitting part numbers.

1. From Code Number (shown in the Identification or Application Charts) to the Part Number listed below.
2. From a visual inspection of the existing hose and selection of appropriate details using the following instructions:
   a. Determine Fitting Size.
   Diameter of tube at a point behind the nut indicates fitting size, e.g. 3/8" ,1/2" ,5/8" or 3/4".
   Select Fittings and Splicers from the illustrations and text that follows. The necessary Clamps and o-rings are included with all Fittings and Splicers and are also supplied for service as separate parts.

FITTINGS

Determine Fitting size from the information shown below.

ORIGINAL TUBE O.D.	FRACTIONAL FITTING SIZE	INDUSTRY SIZE NO.	THREAD SIZE: SAE 45° FLARE O-RING FEMALE O-RING (MALE FLARE)	THREAD SIZE: O-RING (MALE SWIVEL)
5/16"	3/8"	6	5/8"-18	5/8"-18
13/32"	1/2"	8	3/4"-16	3/4"-18
1/2"	5/8"	10	7/8"-14	7/8"-18
5/8"	3/4"	12	1 1/16"-14	1 1/16"-16

   b. Determine Hose Size.
   Measure end of tube (not barbs). The tube O.D. matches the I.D. of the required hose.
   e.g. tube O.D. is 5/16" and hose I.D. is 5/16" (size No. 6, part number D2AZ 19C708-A).

BULK RUBBER HOSE

Select the appropriate Hose from the sizes listed below:

ORIGINAL TUBE O.D.	REPLACEMENT HOSE I.D.	INDUSTRY SIZE NO.	PART NUMBER	MOTORCRAFT NUMBER
5/16"	5/16"	6	D2AZ 19C708-A(15')	*YF-248
			D4AZ 19C708-A(50')	*YF-599
13/32"	13/32"	8	D2AZ 19C708-B(15')	*YF-249
			D4AZ 19C708-B(50')	*YF-600
1/2"	1/2"	10	D2AZ 19C708-C(15')	*YF-250
			D4AZ 19C708-C(50')	*YF-601
5/8"	5/8"	12	D2AZ 19C708-D(15')	*YF-251
			D4AZ 19C708-D(50')	*YF-602

3. The alphabetical characters of the fitting code number can be used for physical identification by referring to the illustrated fittings shown by type on pages 18 thru 20.
   Examples:

   (A) 44 (part number D2AZ 19D695-E)
   Shown on page

   (SG) 3 (Part number D2AZ 19D695-BK)
   Shown on page

FEMALE FLARE-STRAIGHT

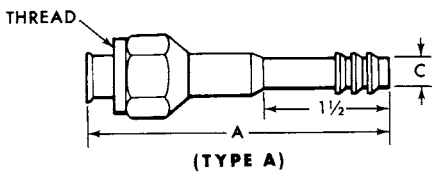

(TYPE A)

SPLICER-WITH SIGHT GLASS

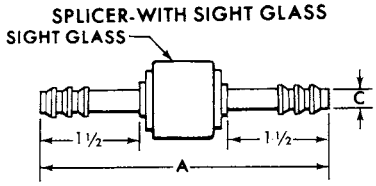

(TYPE SG)

SAE 45° FLARE FITTINGS

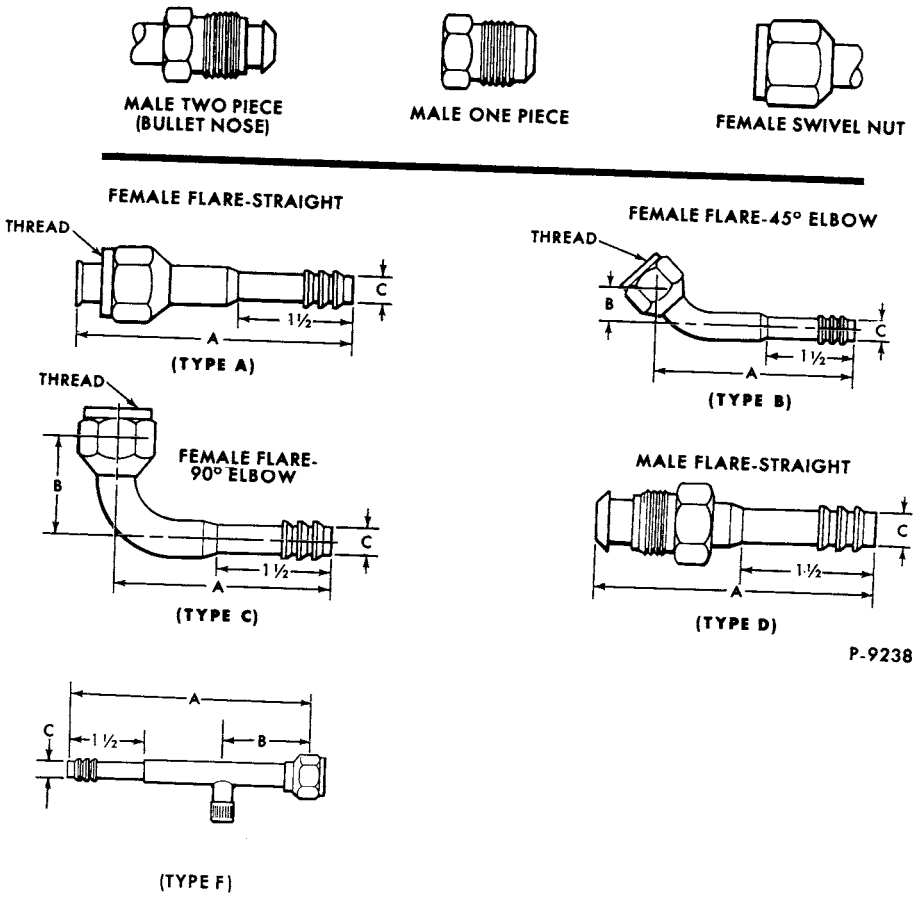

REFRIGERANT LINE FITTINGS

COPYRIGHT © 1986 — FORD MOTOR COMPANY — DEARBORN, MICHIGAN

TUBE O-RING FITTINGS

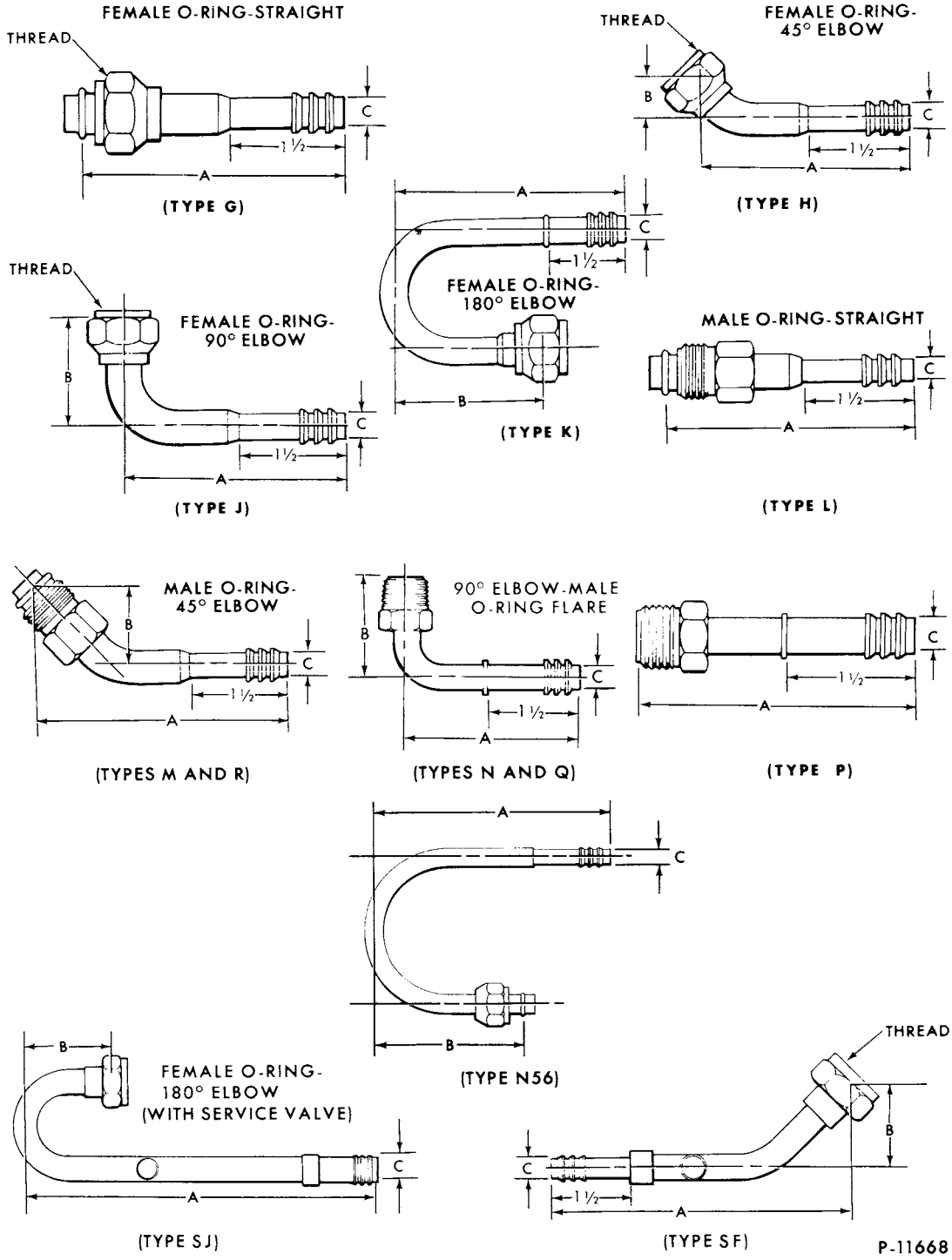

19C705-8 REFRIGERANT LINE REPLACEMENT and REPAIR PARTS — Cont'd

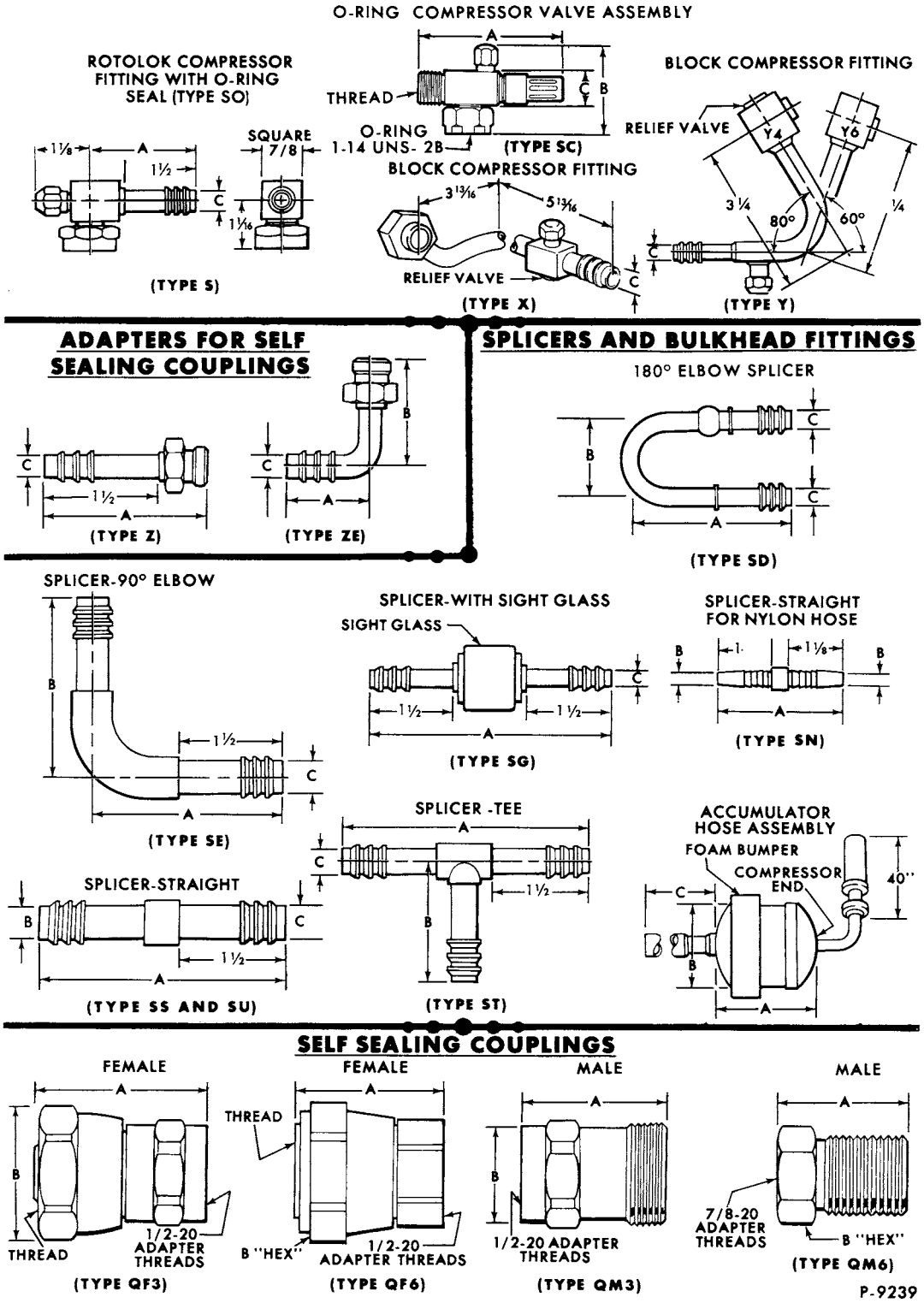

COPYRIGHT © 1986 — FORD MOTOR COMPANY — DEARBORN, MICHIGAN

19C705-8 REFRIGERANT LINE REPLACEMENT and REPAIR PARTS — Cont'd

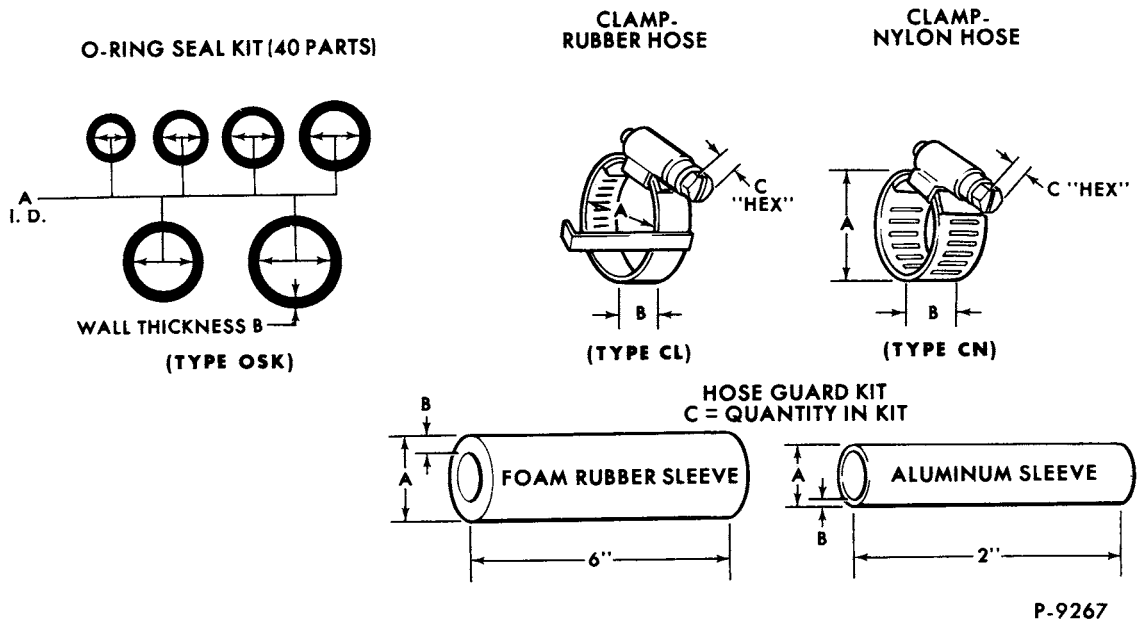

REFRIGERANT LINE FITTINGS

CODE	PART NUMBER	MOTORCRAFT NUMBER	DIMENSIONS (INCHES) THREAD	HOSE I.D.	A	B	C
19C705-8 REFRIGERANT LINE REPLACEMENT and REPAIR PARTS — Cont'd							
ACCUMULATOR HOSE ASSY.							
AC6	D2AZ 19C836-A			5/8	5	4	24
FEMALE FLARE-STRAIGHT							
A33	D2AZ 19D695-D	*YF-357	5/8"-18	5/16	3 3/16		5/16
A44	D2AZ 19D695-E	*YF-358	3/4-16	13/32	3 19/32		13/32
A45	D2AZ 19D695-L	*YF-364	3/4-16	1/2	3 1/2		1/2
A55	D2AZ 19D695-F	*YF-359	7/8-14	1/2	3 1/4		1/2
A56	D2AZ 19D695-AZ	*YF-331	7/8-14	5/8	3 1/2		5/8
A66	D2AZ 19D695-G	*YF-360	1 1/16-14	5/8	3 5/16		5/8

REFRIGERANT LINE FITTINGS

CODE	PART NUMBER	MOTORCRAFT NUMBER	DIMENSIONS (INCHES) THREAD	HOSE I.D.	A	B	C
19C705-8	REFRIGERANT LINE REPLACEMENT and REPAIR PARTS — Cont'd						
	FEMALE FLARE-45° ELBOW						
B33	D2AZ 19D695-H	*YF-361	5/8-18	5/16	3 1/32	15/32	5/16
B44	D2AZ 19D695-J	*YF-362	3/4-16	13/32	3 3/8	19/32	13/32
B54	D2AZ 19D695-AU	*YF-328		13/32			13/32
B55	D2AZ 19D695-K	*YF-363	7/8-14	1/2	3 1/16	5/8	1/2
	CLAMP-RUBBER HOSE						
CL6	D0TZ 19B679-A	*YF-256		All	1/2 to 1 1/4	1/2	5/16
	CLAMP-NYLON HOSE						
CN4	C9AZ 8287-A			5/16 & 13/32	7/32 to 5/8	5/16	1/4
CN6	D2AZ 19B679-B	*YF-255		1/2 & 5/8	3/8 to 25/32	9/16	5/16
	FEMALE FLARE-90° ELBOW						
C33	D2AZ 19D695-M	*YF-365	5/8-18	5/16	2 9/16	7/8	5/16
C44	D2AZ 19D695-N	*YF-366	3/4-16	13/32	2 13/16	1 1/8	13/32
C45	D2AZ 19D695-AR	*YF-326	3/4-16	1/2	2 13/16	1 1/8	1/2
C54	D2AZ 19D695-CF	*YF-450	7/8-14	13/32	3 15/32	1 1/2	13/32
C55	D2AZ 19D695-P	*YF-367	7/8-14	1/2	3 1/8	1 1/2	1/2
	MALE FLARE-STRAIGHT						
D33	D2AZ 19D695-B	*YF-332	5/8-18	5/16	3 1/4		7/8
D44	D2AZ 19D695-A	*YF-311	3/4-16	13/32	3 21/32		13/32
D55	D2AZ 19D695-C	*YF-354	7/8-14	1/2	3 5/16		1/2
	FEMALE "O" RING-WITH VALVE						
F33	D4SZ 19D695-B	*YF-632	5/8-18	5/16	4 27/32	1 3/4	5/16
	FEMALE "O" RING-STRAIGHT						
G33	D2AZ 19D695-Z	*YF-375	5/8-18	5/16	3		5/16
G44	D2AZ 19D695-AA	*YF-312	3/4-16	13/32	3 13/32		13/32
G45	D2AZ 19D695-AC	*YF-314	3/4-16	1/2	3 3/32		1/2
G55	D2AZ 19D695-AB	*YF-313	7/8-14	1/2	3 1/16		1/2
G56	D2AZ 19D695-AD	*YF-315	7/8-14	5/8	3 3/32		5/8
	HOLD DOWN PLATE						
HDP	D5AZ 19D695-E	*YF-650					
	HOSE GUARD KIT						
HG	D2AZ 19B970-A	*YF-267					
	Consists of:						
	(4) foam rubber sleeves			All	1 1/8	1/2	
	(4) aluminum tubing			All	1	1/32	
	FEMALE "O" RING-45° ELBOW						
H33	D2AZ 19D695-AE	*YF-316	5/8-18	5/16	3 27/32	15/32	5/16
H44	D2AZ 19D695-AF	*YF-317	3/4-16	13/32	3 3/16	19/32	5/16
H45	D2AZ 19D695-BA	*YF-333	3/4-16	1/2	3 7/32	19/32	1/2
H55	D2AZ 19D695-AG	*YF-318	7/8-14	1/2	3 13/16	5/8	1/2
H56	D4AZ 19D695-G	*YF-502	7/8-14	5/8	3 45/64	39/64	5/8
H66	D4AZ 19D695-F	*YF-504	1 1/16-14	5/8	4 13/16	7/8	5/8

COPYRIGHT © 1986 — FORD MOTOR COMPANY — DEARBORN, MICHIGAN

REFRIGERANT LINE FITTINGS

19C705-8 REFRIGERANT LINE REPLACEMENT and REPAIR PARTS — Cont'd

CODE	PART NUMBER	MOTORCRAFT NUMBER	DIMENSIONS (INCHES) THREAD	HOSE I.D.	A	B	C
		FEMALE "O" RING-90° ELBOW					
J33	D2AZ 19D695-AH	*YF-319	5/8-18	5/16	2 23/32	1 1/32	5/16
J44	D2AZ 19D695-AJ	*YF-320	3/4-16	13/32	3 1/4	1 11/32	13/32
J55	D2AZ 19D695-AK	*YF-321	7/8-14	1/2	2 29/32	1 1/2	1/2
J56	D2AZ 19D695-AY	*YF-330	7/8-14	5/8	2 13/16	1 1/2	5/8
J66	D2AZ 19D695-BB	*YF-334	1 1/16-14	5/8	3 11/16	1 31/32	5/8
J77	D9AZ 19D695-A	*YF-864	1 1/16-14	5/8	4 1/4	3 1/2	5/8
		FEMALE "O" RING-180° ELBOW					
K33	D5AZ 19D695-D	*YF-649					
K44	D2AZ 19D695-AL	*YF-322	3/4-16	13/32	4 13/16	3 1/8	13/32
K56	D2AZ 19D695-AM	*YF-323	7/8-14	5/8	4 13/16	3 1/8	5/8
K66	D2AZ 19D695-AN	*YF-324	1 1/16-14	5/8	4 13/16	3 1/8	5/8
		MALE "O" RING-STRAIGHT					
L33	D2AZ 19D695-R	*YF-368	5/8-18	5/16	3		5/16
L55	D2AZ 19D695-S	*YF-369	7/8-18	1/2	3 1/16		1/2
L56	D2AZ 19D695-AV	*YF-329	7/8-18	5/8	3 11/32		5/8
L57	D6AZ 19D695-C	*YF-498	3/4-18	13/32			
		MALE "O" RING-90° ELBOW					
MA4	D9AZ 19D695-F	*YF-781	3/4-18	13/32	2 1/2	2	13/32
		MUFFLER-DISCHARGE LINE					
MU4	D5AZ 19D695-F	*YF-453					
		MALE "O" RING-45° ELBOW					
M33	D2AZ 19D695-T	*YF-370	5/8-18	5/16	3 7/32	25/32	5/16
M55	D2AZ 19D695-U	*YF-371	7/8-18	1/2	4 1/4	1 1/16	1/2
M57	D9AZ 19D695-D	*YF-865	7/8-18	5/8	5 1/4	1 3/4	5/8
M84	D4AZ 19D695-B	*YF-515	3/4-18	13/32	3 13/16	1 1/8	13/32
		MALE "O" RING FLARE-45° ELBOW					
NA2	D9AZ 19D695-C	*YF-791	3/4-16	13/32	4 3/16	15/16	13/32
		MALE "O" RING FLARE-90° ELBOW					
N56	D4AZ 19D695-D	*YF-487	7/8-14	5/8	3	2 15/32	5/8
		"O" RING KIT					
OSK	D2AZ 19B596-A	*YF-240					
	Consists of:						
	(8) "O" rings		For 5/8-18		5/16	1/16	
	(8) "O" rings		For 1/2-20		3/8	1/16	
	(8) "O" rings		For 3/4-16		7/16	1/16	
	(8) "O" rings		For 7/8-14		9/16	1/16	
	(4) "O" rings		For 1 1/16-14		11/16	1/16	
	(4) "O" rings		For block fitting		13/16	1/8	
		"O" RING KIT-EXPANSION and STV SEAL					
OST	D6DZ 19B596-A	*YF-667					
		MALE "O" RING FLARE-STRAIGHT					
P33	D2AZ 19D695-BD	*YF-336	5/8-18	5/16	3 7/8		5/16
P44	D2AZ 19D695-BC	*YF-335	3/4-16	13/32	3 23/32		13/32
P45	D2AZ 19D695-V	*YF-372	3/4-16	1/2	4		1/2
P46	D2AZ 19D695-AP	*YF-325	3/4-16	5/8	4		5/8
P56	D2AZ 19D695-W	*YF-373	7/8-14	5/8	4		5/8
P66	D2AZ 19D695-AS	*YF-327	1 1/16-14	5/8	4		5/8

REFRIGERANT LINE FITTINGS

CODE	PART NUMBER	MOTORCRAFT NUMBER	DIMENSIONS (INCHES) THREAD	HOSE I.D.	A	B	C
19C705-8	REFRIGERANT LINE REPLACEMENT and REPAIR PARTS — Cont'd						
	MALE "O" RING FLARE-180° ELBOW						
N56	D5AZ 19D695-B	*YF-654					
	MALE "O" RING FLARE-90° ELBOW						
Q44	D5AZ 19D695-C	*YF-648					
Q56	D9AZ 19D695-E	*YF-799	7/8-14	5/8	3	2 13/32	5/8
Q33	D5AZ 19D695-A	*YF-490	5/8-18	5/16	2 3/4	1 3/8	5/16
	COUPLINGS-SELF SEALING						
QF3	C1SZ 19B596-A	*YF-241	5/8-18		1 9/32	27/32	
QF6	D1HZ 19B596-A	*YF-244	1 1/16-12		1 1/2	1 5/16	
QM3	C1SZ 19B595-A	*YF-252	5/8-18		1 3/16	23/32	
QM6	D1HZ 19B595-A	*YF-254	1 1/16-12		1 7/8	1 1/8	
	VALVE-COMPRESSOR						
S4	D0TZ 19A990-A	*YF-299	1-14	13/32	2 3/16		13/16
S5	D0TZ 19752-A	*YF-308	1-14	1/2	2 3/16		1/2
	"O" RING COMPRESSOR VALVE ASSEMBLY						
SC4	D0AZ 19A990-A	*YF-237	3/4-16	13/32	3 3/4	11/32	7/8
SC5	D0AZ 19752-A	*YF-235	7/8-14	1/2	3 3/4	11/32	7/8
	SPLICER-180° ELBOW						
SD6	D4AZ 19D695-C	*YF-466		5/8	4 1/2	3	5/8
	SPLICER-90° ELBOW						
SE3	D2AZ 19D695-BR	*YF-347		5/16	2 7/16	2 7/16	5/16
SE4	D2AZ 19D695-BS	*YF-348		13/32	2 5/8	2 5/8	13/32
SE6	D4AZ 19D695-E	*YF-471		5/8	3 3/32	3 3/32	5/8
	"O" RING-COMPRESSOR						
SF4	D4AZ 19D695-H	*YF-634	1-14	13/32	51 7/32	4	1 17/32
	SPLICER-WITH SIGHTGLASS						
SG3	D2AZ 19D695-BK	*YF-342		5/16	4		5/16
	"O" RING-COMPRESSOR						
SJ6	D4ZZ 19D695-B	*YF-633	1-14	5/8	8 5/8	2 9/32	2 1/4
	SPLICER-STRAIGHT-NYLON HOSE						
SN3	D2AZ 19D695-BV	*YF-351		5/16	2 5/8	5/16	
SN5	D2AZ 19D695-BY	*YF-352		1/2	2 5/8	1/2	
SN6	D2AZ 19D695-BZ	*YF-353		5/8	2 5/8	5/8	
	"O" RING-COMPRESSOR ROTOLOK FITTING						
S04	D2AZ 19D695-BE	*YF-337	1-14	13/32	2 3/16		13/32
S06	D2AZ 19D695-BF	*YF-338	1-14	5/8	2 3/16		5/8
	SPLICER-STRAIGHT-RUBBER HOSE						
SS3	D2AZ 19D695-BL	*YF-343		5/16	3 7/16		5/16
SS4	D2AZ 19D695-BM	*YF-344		13/32	3 7/16		13/32
SS5	D2AZ 19D695-BN	*YF-345		1/2	3 7/16		1/2

COPYRIGHT © 1986 — FORD MOTOR COMPANY — DEARBORN, MICHIGAN

REFRIGERANT LINE FITTINGS

CODE	PART NUMBER	MOTORCRAFT NUMBER	DIMENSIONS (INCHES) THREAD	HOSE I.D.	A	B	C
19C705-8	REFRIGERANT LINE REPLACEMENT and REPAIR PARTS — Cont'd						
	SPLICER-STRAIGHT-RUBBER HOSE						
SS6	D2AZ 19D695-BP	*YF-346		5/8	4		5/8
	SPLICER-TEE						
ST3	D2AZ 19D695-BT	*YF-349		5/16	3 13/16	1 29/32	3/16
ST6	D2AZ 19D695-BU	*YF-350		5/8	4 1/4	2 7/32	5/8
	SPLICER-STRAIGHT-STEP UP						
SU5		*YF-473		1/2-5/8	7/16	5/8	1/2
	BLOCK-COMPRESSOR FITTING-DOUBLE SWIVEL						
W2	D9AZ 19D695-B	*YF-798					5/8 & 13/32
	BLOCK-COMPRESSOR FITTING-STRAIGHT						
X4	D2AZ 19D695-BG	*YF-339		13/32			13/32
	BLOCK-COMPRESSOR FITTING-90° ELBOW						
Y4	D2AZ 19D695-BH	*YF-340		13/32			13/32
Y6	D2AZ 19D695-BJ	*YF-341		5/8			5/8
	ADAPTER-FOR SELF SEALING COUPLING-STRAIGHT						
Z23	D2AZ 19D695-Y	*YF-374	1/2-20	5/16	2 1/8		5/16
	ADAPTER-FOR SELF SEALING COUPLING-STRAIGHT						
ZE4	D2AZ 19D695-CD	*YF-355	7/8-20	13/32	2 7/8	1 5/8	13/32
ZE6	D2AZ 19D695-CE	*YF-356	7/8-20	5/8	3 3/8	2 1/8	5/8

INDEX

PART NAME	GROUP NUMBER
A	
Absorber (body bolt)	00154-5
Absorber (dash panel sound center)	015A22
Absorber (dash panel sound outer)	01590
Absorber (dash panel steering column cover sound)	01708
Absorber (package tray strainer sound)	46689
Absorber (roof panel sound)	54330
Absorber (spare wheel well sound)	11406
Absorber & bracket (body side)	113B26
Absorber & retainer assy. (body bolt upper)	00396
Actuator (back window regulator)	44085
Actuator (front door latch)	218A42-3
Actuator (rear door electric latch)	26594-5
Actuator (tailgate latch)	431A38
Actuator assy. (front seat back adjusting)	610A02
Adapter (vent air duct)	018B50
Adjuster (front door latch actuating rod)	21816
Adjuster (luggage compartment door hing spring)	42808
Adjuster (rear door latch actuating rod)	21816
Adjuster (tailgate latch actuating rod)	21816
Adjuster (tailgate lock rod)	431F76
Airfoil (front spoiler)	001A06
Anti-rattle (front door window glass)	23314
Anti-rattle (front door window lower guide)	223A58
Anti-rattle (roof panel adjusting lever)	502M40
Anti-rattler (luggage compt. torsion bar)	45028
Arm & bracket assy. (visor)	04144-5
Arm (door check)	23504
Arm assy. (rear seat back pivot)	61316-7
B	
Bar (front door vent window division)	22296-7
Bar (front seat torsion)	604K22
Bar (luggage compt. door hinge torsion)	44890-1
Bar (quarter window division)	30230-1
Bar (tailgate hinge torsion)	44890-1
Base (front seat adjuster regulator)	617C80-1
Base (luggage compt. carrier)	550A30
Base (sliding roof panel adjusting)	502L69
Bellcrank (front door latch control)	21900
Bellcrank (rear door latch)	26448-9
Belt assy. (aux. seat)	612B04
Belt assy. (front seat center passenger)	611B60
Belt assy. (front seat complete)	611A72-3
Belt assy. (rear seat center passenger)	611B66
Belt assy. (rear seat complete)	613B84-5
Bezel (front seat back latch)	62680
Bezel (front seat back latch handle)	62672-3
B — Cont'd	
Bezel (front seat back side)	610C14
Bezel (front seat belt retractor tension adjuster plunger)	612C00
Bezel (front seat shoulder strap opening quarter panel)	60220-1
Bezel (instrument panel glove compt. door lock)	060A12
Bezel (instrument panel heater or air conditioner fan control)	04496
Bezel (luggage compt. vacuum door latch release switch)	43662
Bezel (rear seat back latch)	624A08
Bezel (rear seat belt opening)	611B90
Body (folding top hold down clamp)	50532
Bolt (body mounting)	00394
Bolt (front seat back actuator)	611B40
Bolt (front seat back pivot arm)	60392
Bolt (liftgate door lift on door)	45024
Bolt (tailgate check cable)	44486
Boot (front seat shoulder strap)	60235
Bow (folding top no. 1)	53038
Bow (folding top no. 2)	51274
Bow (folding top no. 3)	51269
Bow (folding top rear no. 4)	51278
Box & snuffer (instrument panel ash receptacle)	04821
Brace (dash panel to frame)	01714-5
Brace (folding top main pivot bracket support)	53152-3
Brace (instrument panel)	04488, 045D56
Brace (instrument panel lower flange to cowl inner panel)	04672
Brace (instrument panel to floor)	04598
Brace (instrument panel upper)	044E00
Brace (lower back panel to floor)	40274
Brace (package tray support)	46916
Brace (package tray strainer to floor)	46674-5
Brace (quarter latch pillar to quarter side member)	29388-9
Brace (quarter latch pillar to wheelhouse)	28258-9
Brace (quarter panel rear reinforcement)	28414-5
Brace (quarter panel to rear floor)	27726-7
Brace (quarter panel to wheelhouse)	27800-1
Brace (spare wheel)	47040
Bracket (assist strap)	312A48
Bracket (back window glass)	422B18-9
Bracket (back window opening inside moulding)	424B30
Bracket (back window regulator arm)	44074-5
Bracket (back window upper stop)	42202-3

COPYRIGHT © 1986— FORD MOTOR COMPANY —DEARBORN, MICHIGAN

INDEX

PART NAME	GROUP NUMBER
B — Cont'd	
Bracket (center floor pan to quarter wheelhouse)	113A70-1
Bracket (coat hook)	29019,
Bracket (console panel mounting center)	045B38
Bracket (console panel mounting front)	045B32
Bracket (console panel mounting rear)	045B34
Bracket (console tray front)	042B52
Bracket (console tray rear)	042B54
Bracket (cowl air control mounting)	01870
Bracket (cowl side to instrument panel)	020A33
Bracket (cowl top inner panel center)	023A32
Bracket (cowl top panel to apron brace)	023A68
Bracket (cowl top inner panel brace upper	023A36
Bracket (cowl vent air control wire)	01822
Bracket (dash panel to accelerator mounting)	016B84
Bracket (door inside pull handle mounting)	22606
Bracket (floor pan to rear seat back strainer)	11456
Bracket (folding top main pivot)	53118-9
Bracket (folding top no. 2 bow)	514A30-1
Bracket (folding top no. 3 bow)	53144-5
Bracket (front body pillar to fender filler lower)	026A32-3
Bracket (front body pillar to fender filler upper)	02656
Bracket (front door arm rest mounting)	24116-7
Bracket (front door latch actuator)	220A14-5
Bracket (front door lock control knob)	21882-3
Bracket (front door vent window division bar)	222A14-5
Bracket (front door vent window lower pivot)	22954
Bracket (front door vent window division bar inner)	22948-9
Bracket (front door window channel)	23288
Bracket (front door window glass run adjusting)	214A54-5
Bracket (front door window glass rear)	21430-1
Bracket (front door window lower stop)	21790
Bracket (front door window regulator drive arm)	21504
Bracket (front door window regulator motor mounting)	23312-3
Bracket (front door window stop)	21760-1
Bracket (front seat adjusting tube)	618A88
Bracket (front seat back latch)	62614, 62634
Bracket (front seat back latch solenoid)	625A56-7
Bracket (front seat back pivot)	618C46-7
Bracket (front seat back side shield upper support)	621A10-1
Bracket (front seat belt boot extension)	612B12
Bracket (front seat head rest mounting)	610B10-1
Bracket (front seat horizontal regulator)	60436
B — Cont'd	
Bracket (front seat track assist spring)	61804-5
Bracket (front seat track motor mounting)	617B48
Bracket (fuel filler door hinge on body)	40586
Bracket (instrument panel center)	045A55
Bracket (instrument panel glove compartment door hinge)	06192
Bracket (instrument panel glove compt. door latch mounting)	06136
Bracket (instrument panel glove compt. moulding)	060K10
Bracket (instrument panel locator)	045F94
Bracket (instrument panel mounting center)	044L53
Bracket (instrument panel outside remote control mirror)	044G08
Bracket (instrument panel to cowl side)	04366-7
Bracket (instrument panel to cowl top mounting)	044C32-3
Bracket (instrument panel upper finish panel)	044B48
Bracket (liftgate hinge stop)	430K48
Bracket (lower back panel)	45450
Bracket (lower back panel upper flange)	403A40
Bracket (luggage compt. door hinge to floor pan)	427A24-5
Bracket (luggage compt. door hinge to hinge support)	41966-7
Bracket (luggage compt. door hinge to wheelhouse)	42738, 42744-5
Bracket (luggage compt. door latch)	43268
Bracket (luggage compt. door latch mounting)	432A48
Bracket (luggage compt. door latch striker)	43235
Bracket (luggage compt. door lift on door)	41836-7
Bracket (luggage compartment door trim panel)	46312
Bracket (package tray strainer to wheelhouse)	46608-9
Bracket (package tray support)	465K02
Bracket (quarter panel garnish moulding)	29028-9
Bracket (quarter trim panel)	311A24
Bracket (quarter trim panel lower)	310A84
Bracket (quarter trim panel retainer rear)	311A22-3
Bracket (quarter trim panel support)	31184
Bracket (quarter trim panel to wheelhouse)	31424
Bracket (quarter wheel opening cover)	28000-2
Bracket (quarter window garnish moulding)	29126-7
Bracket (quarter window garnish moulding front)	29070-1
Bracket (quarter window glass)	305A02-3
Bracket (quarter window glass run retainer)	30046
Bracket (quarter window guide lower)	29778-9, 298A56-7
Bracket (quarter window latch)	30204-5

INDEX

PART NAME	GROUP NUMBER
B — Cont'd	
Bracket (quarter window stop)	21760-1
Bracket (rear door arm rest)	27534-5
Bracket (rear door glass front)	263A52-3
Bracket (rear door glass rear)	257A18-9
Bracket (rear door latch control knob	26554-5
Bracket (rear door trim panel upper)	23834
Bracket (rear door window division bar-center)	263A94
Bracket (rear door window equalizer arm upper)	26348
Bracket (rear door window regulator drive arm)	270A42
Bracket (rear door window regulator motor)	270A02
Bracket (rear door window roller mounting)	257A18-9
Bracket (rear door window stop)	21760-1
Bracket (rear floor cross member)	106A58-9
Bracket (rear seat back spring anchor)	66748
Bracket (rear seat back pivot on wheelhouse)	613A62-3
Bracket (rear seat back stop to wheelhouse)	631A02
Bracket (rear seat belt mounting)	612B00-1
Bracket (rear seat cushion)	606A50
Bracket (roof assist handle retaining)	044L77
Bracket (roof opening glass retainer)	501A06
Bracket (roof outside trim panel front)	537A40
Bracket (roof side outer front rail extension)	51262-3
Bracket (roof side outer rear rail to rail extension)	513A84-5
Bracket (roof side outer wheelhouse rear)	513A56-7
Bracket (roof side rear rail reinforcement)	514B06-7
Bracket (roof side rear reinforcement upper)	514B04-5
Bracket (roof side rear trim panel)	519B96
Bracket (sliding panel housing)	51890
Bracket (spare wheel cover support front)	47178
Bracket (spare wheel mounting)	47076
Bracket (tailgate outside handle dual action)	430A66
Bracket (transmission housing assembly sliding roof tray)	502M56
Bracket (visor arm)	04122-3
Bracket (window regulator equalizer arm)	23230
Bracket assy. (door vent window glass)	22254-5
Bracket assy. (front seat back side extension)	610C08-9
Bumper (aux. floor panel)	155A72-3
Bumper (aux. seat back floor panel)	605A18
Bumper (aux. seat back floor pivot arm)	61506
Bumper (front door)	265A28
Bumper (front door latch bolt)	21800
Bumper (front door outside handle anti-rattle)	22408
Bumper (front door upper)	23030
Bumper (front door window stop)	21762
Bumper (fuel filler door)	405A22
Bumper (instrument panel ash receptacle stop)	048A78
Bumper (instrument panel glove compt.)	06066
Bumper (liftgate rear center pillar)	404K15, 40452

PART NAME	GROUP NUMBER
B — Cont'd	
Bumper (luggage compt. door inside)	43634
Bumper (rear door)	265A28
Bumper (rear door outside handle anti-rattle)	22408
Bumper (rear door upper)	23030
Bumper (rear door window stop)	21762, 26066
Bumper (rear seat back stop)	61082
Bumper (sliding roof panel rear)	502B12
Bumper (tailgate latch)	431B62
Bumper (tailgate upper)	23030
Bumper (tailgate upper hinge on gate)	43082
Bushing (back window guide)	42126
Bushing (folding top)	22841
Bushing (folding top balance link to main pivot bracket)	50664
Bushing (folding top lower link)	507A74
Bushing (folding top main center link)	506A88
Bushing (folding top main pivot bracket)	50473
Bushing (folding top no. 2 bow pivot)	506A84
Bushing (folding top rear side rail to power cyl.)	50412
Bushing (front door hinge)	22841
Bushing (front door latch bellcrank)	21932
Bushing (front door latch rod)	219A38
Bushing (front door vent window pivot)	22960
Bushing (front door window glass)	42138
Bushing (front door window glass bracket)	23258
Bushing (front seat adjusting)	618A67
Bushing (front seat back center arm rest pad)	654A28
Bushing (front seat back latch)	62608
Bushing (front seat back pivot support)	610B82
Bushing (front seat hinge pivot)	61781
Bushing (glove compt. door)	06056
Bushing (instrument panel glove compt. door hinge)	060K89
Bushing (rear door latch rod)	219A38
Bushing (rear door window glass bracket)	23258
Bushing (roof hold down clamp control)	54800
Bushing (sliding roof panel adjusting lever)	502M39
Bushing (spare wheel cover hold down handle)	47112
Bushing (tailgate counterbalance torsion bar on body)	43074
Bushing (tailgate hinge)	22841
Bushing (tailgate window glass)	42138
Button (back window regulator)	44084
Button (rear door window stabilizer)	25754
Button (rear seat back latch release)	62432
Button & pin kit (front door outside handle)	22454
Button & pin kit (rear door outside handle)	22454, 26602

COPYRIGHT © 1986— FORD MOTOR COMPANY —DEARBORN, MICHIGAN

INDEX

PART NAME	GROUP NUMBER
C	
Cable (front seat back pad adjusting)	65502
Cable (glove compt. door check)	060A08
Cable (tailgate check)	43052
Cable assy. (game table)	280C40
Cable assy. (sliding roof)	502L18
Cable & slide assy. (sliding roof)	502B20
Cable & tube (front seat track adjusting)	617B12-5
Cam (instrument panel glove compt. door lock)	061A02
Cam & handwheel set (front seat adjusting)	62622-3
Cap (front seat back to cushion screw	617K71
Cap (quarter window latch retainer)	302K62
Cap (roof luggage carrier rail finish)	55182-3
Cap (sliding roof drive housing shaft)	502L52
Carrier kit (luggage compt.)	55100
Carrier kit (roof luggage)	55100
Case (console glove compt. door lock cylinder)	060B18
Catch (console panel glove compt. door latch)	060A96
Catch (console panel glove compt. door latch striker plate)	06064
Catch (front door window regulator)	234A26
Catch (instrument panel ash receptacle)	048A72
Catch (instrument panel glove compt. door latch striker plate)	06064
Channel (rear door window glass)	26260-1
Channel & retainer assy. (front door glass)	21458-9
Check (console panel glove compt. door hinge)	06222
Check (console rear glove compartment door)	060B50
Check (front door hinge)	22886
Check assy. (rear seat back floor extension)	601A88
Checker table	279B04
Checkers	280C36
Clamp (folding top hold down front)	50508
Clamp (sliding roof panel guide)	502M20
Clip (front door arm rest)	24146
Clip (front door ash receptacle retainer)	23858
Clip (front door check arm pin)	21895
Clip (front door seal)	20930
Clip (front door window top)	222A44
Clip (front door window top outer)	222B08
Clip (headlining)	519D48
Clip (instrument panel moulding)	04878
Clip (instrument panel pad retainer)	04278
Clip (luggage compt. carrier retainer)	46004
Clip (quarter arm rest)	24146
Clip (quarter ash receptacle retaining)	307A14
Clip (quarter trim panel)	31168
Clip (rear door arm rest)	24146
Clip (roof headlining retainer)	51026

PART NAME	GROUP NUMBER
C — Cont'd	
Clip (roof outside covers retainer)	537A34
Clip (shoulder strap stowage)	61262
Clip (roof trim center moulding)	519B18
Clip (sliding roof frame)	502K57
Clip (sliding roof weatherstrip)	502K50
Clip (visor arm)	04131-2
Clip kit (tot guard locking)	61248
Compartment (console panel glove)	06010
Compartment (instrument panel glove)	06010
Compartment (instrument panel map)	060B00
Compartment (quarter panel storage)	31500
Compartment kit (instrument panel glove)	06010
Connector (cowl vent air duct)	01878
Connector (vacuum door latch hose)	22035
Control (instrument panel vent air outlet duct)	01890-1
Control (tailgate latch remote)	43170
Control & link assy. (front door latch remote)	21818-9
Control & link assy. (rear door latch remote)	26404-5
Cover (assist strap retainer)	311A70
Cover (auxiliary seat back latch)	605A16-7
Cover (back panel moulding joint)	423K10
Cover (back window garnish moulding joint)	42458
Cover (back window garnish upper moulding joint)	42353
Cover (back window outside lower corner moulding joint)	42426
Cover (back window outside moulding joint upper)	42450
Cover (back window outside side moulding joint)	42460
Cover (coat hook)	29024
Cover (console panel front)	044D38
Cover (cowl vent air opening)	02109
Cover (dash panel wiring)	017A98-9
Cover (front door ash receptacle)	238A02
Cover (front door inside panel access)	21130
Cover (front door pull handle)	22678
Cover (front door pull handle retainer)	22670
Cover (front door window regulator handle screw)	23362
Cover (front floor pan wire)	112B88-9
Cover (front floor panel wire front)	112A19
Cover (front seat back pivot side inner)	61692-3
Cover (front seat back pivot side outer)	61694-5
Cover (front seat back robe cord retainer)	62808
Cover (front seat belt anchor bolt boot)	61140
Cover (front seat belt boot)	611C16-7
Cover (front seat belt shoulder strap guide)	60262
Cover (front seat shoulder strap opening)	60230
Cover (front seat track liner shield)	619B14
Cover (instrument panel access hole)	044D82
Cover (instrument panel air control opening)	042A88
Cover (instrument panel ash receptacle)	04819

INDEX

PART NAME	GROUP NUMBER
C — Cont'd	
Cover (instrument panel clock)	04428
Cover (instrument panel control opening)	044F58
Cover (instrument panel radio)	04360, 04371
Cover (instrument panel steering column)	04459
Cover (instrument panel to floor brace)	044G02
Cover (instrument panel utility shelf)	13598
Cover (instrument panel utility shelf fuse panel opening)	13599
Cover (instrument panel vent air control register opening)	04514
Cover (liftgate)	425K16
Cover (liftgate hinge)	42946
Cover (lower back panel)	403E36
Cover (lower back panel end)	403E26-7
Cover (luggage compt. door hinge access hole)	427A88
Cover (luggage compt. door latch)	432A30
Cover (luggage compt. door lock mechanism)	43243
Cover (luggage compt. door lock key hole)	43514
Cover (quarter ash receptacle)	238A02
Cover (quarter latch pillar access)	28392
Cover (quarter window latch bracket retainer)	30584
Cover (quarter window regulator handle screw)	23362
Cover (rear door ash receptacle)	238A02
Cover (rear door pull handle)	22678
Cover (rear door pull handle retainer)	22670
Cover (rear door window front stop)	25775
Cover (rear door window regulator handle screw)	23362
Cover (retainer roof sliding panel cable guide)	518A92
Cover (roof drip moulding joint)	51762
Cover (roof luggage carrier retainer)	550A68
Cover (roof opening glass outside moulding joint)	50066
Cover (roof side inner moulding joint)	51744-5
Cover (sliding roof cable drive housing)	502L14
Cover (sliding roof panel handle opening)	50952
Cover (sliding roof panel opening side reinforcement tab)	518A38
Cover (sliding roof panel reinforcement)	50178
Cover (sliding roof stationary frame front cross)	502C88
Cover (spare wheel well)	47042
Cover (storage compartment)	28661
Cover (tailgate at belt)	40212-3
Cover (tailgate panel inside)	40704
Cover (tailgate window regulator access hole)	40790
Cover (windshield moulding joint)	02396
Cover kit (utility shelf)	13542
Cup (front door inside handle)	22634, 226K23
D	
Cup (rear door inside handle)	22634, 266A24-5
Cup (sliding roof handle)	502A96
Decal (back window name)	423A68
Decal (safety standard certification)	20472
Deflector (air front end)	002A20
Deflector (rear air)	11778
Deflector (roof air)	508B08
Deflector (sliding roof panel windshield)	502K94
Door (console glove compt.)	06024
Door (console panel ash receptacle)	04786
Door (fuel filler opening)	405A26
Door (instrument panel ash receptacle)	048A94
Door (instrument panel glove compt.)	06024
Door (luggage compt.)	40110
Door (luggage compt. front access)	45728
Door (quarter panel storage compt.)	31560
Door assy. (front)	20124-5
Door assy. (rear)	24630-1
Dowel (folding top no. 1 bow)	514A38
Drive (front seat back pad adjusting screw)	65516
Drive (front seat track vertical)	60464
Drive assy. (front seat track)	617C94
Drive assy. (quarter window regulator electric)	23394-5, 30304-5
Drive assy. (rear door window regulator electric)	23394-5
Drive assy. (tailgate window regulator electric	23394-5
Duct (cowl vent air outlet)	01934-5
E	
Emblem (luggage compt. door)	42532
Escutcheon (front door inside handle)	22620, 226K21
Escutcheon (front seat center arm rest)	654A04
Escutcheon (rear seat back latch handle)	613B26
Escutcheon (sliding roof cable)	502A98
Escutcheon (window regulator handle)	234K07
Extension (back window upper frame)	42240
Extension (body front panel lower)	00190
Extension (brake pedal support)	015A36
Extension (center body pillar lower)	243K14-5
Extension (cowl top to front fender bracket)	023A18-9
Extension (dash panel to cowl side outer panel)	017A70-1
Extension (dash panel upper center)	016A52
Extension (floor side member front)	101A22-3
Extension (floor side outer member)	10492-3
Extension (folding top main pivot bracket)	531A18-9
Extension (folding top main pivot bracket support)	531A16-7
Extension (front seat backside)	610C06

COPYRIGHT © 1986— FORD MOTOR COMPANY —DEARBORN, MICHIGAN

INDEX

PART NAME	GROUP NUMBER
E — Cont'd	
Extension (front side inner member upper)	100A01
Extension (lower back panel)	40544
Extension (panel cowl top inner)	025A64-5
Extension (lower back panel side)	403B06-7
Extension (luggage compt. door latch)	43283
Extension (quarter latch pillar upper)	28204-5
Extension (quarter panel center rear)	28596-7
Extension (quarter panel latch side reinforcement)	28322-3
Extension (quarter panel lower rear)	279C90-1, 28058-9
Extension (quarter panel rear)	28010-1
Extension (quarter panel to floor pan)	28751
Extension (quarter panel upper rear)	28072-3
Extension (quarter trim panel)	311A96-7
Extension (quarter wheelhouse inner panel rear)	279A51
Extension (quarter wheelhouse rear)	27897
Extension (quarter wheelhouse to roof outer pillar)	28230
Extension (quarter window regulator panel)	30484-5
Extension (rear floor cross member)	106A18
Extension (rear floor cross rear member)	10706-7
Extension (rear floor pan to quarter panel)	11250-1
Extension (rear floor rear sill panel)	10838-9
Extension (rear side member to floor side member)	10784-5
Extension (rear side member to floor side member upper)	104A34-5
Extension (roof luggage carrier side rail rear)	55058-9
Extension (roof outer rear rail to wheelhouse)	513A44-5
Extension (roof panel center reinforcement)	50296-7
Extension (roof side inner rear rail)	513A34-5
Extension (roof side outer rear rail)	51206-7
Extension (roof side rear rail)	513A86-7
Extension (seat belt)	611C22
Extension (sliding roof cable guide)	502M35
Extension (spare wheel well side lower front)	47122
Extension assy. (front seat back side)	610C06
Extension assy. (rear seat back floor panel)	613A82
F	
Fastener (roof luggage carrier support)	55180
Fill (quarter wheelhouse outer)	278B50-1
Filler (console panel pad upper)	060B36-8
Filler (front body pillar to cowl side lower)	025A90-1
Filler (front body pillar to front fender upper)	02654-5
Filler (instrument panel cluster finish panel)	045F58
Filler (quarter panel lower rear)	28034-5
Filler (quarter panel rear lamp opening)	27956-7
Filler (quarter panel upper front)	28060-1
Filler (quarter window garnish)	290K55-8
Filler (quarter window opening rear corner)	29458-9
F — Cont'd	
Filler (rear corner pillar upper)	41050-1
Filler (rear quarter panel rear)	29274-5
Filler (roof side inner rear moulding)	517C74
Filler (tailgate at belt)	43896-7
Filler Assy. (roof outside trim panel)	537A22-3
Filler Assy. (roof outside trim panel side)	537A20-1
Filler kit (quarter panel)	279B97
Frame (back window lower)	42232
Filler assy. (front seat back rear)	64632-3
Frame (back window lower side)	41974-5
Frame (back window upper)	42220
Frame (front door glass)	22220-1
Frame (opera window inner)	30538-9
Frame (back window upper)	42220
Frame (front door glass)	22220-1
Frame (opera window inner)	30538-9
Frame (quarter window)	30218-9, 30504-5
Frame (sliding roof)	502L57, 502L59
Frame (sliding roof headlining)	502A42
Frame & platform assy. (front seat back)	64700-1
G	
Game kit	280C36
Game table	279B04
Game and table kit	279B76
Gasket (air vent duct)	01481
Gasket (vent air duct to cowl top inner panel)	01999
Gasket kit (folding top motor & reservoir)	50745
Gear (sliding roof drive pinion)	502L87
Gear assy. (front seat horizontal regulator)	60471-2
Gear assy. (front seat vertical regulator)	60465-6
Gear box & drive assy. (sliding roof)	502C19
Gear kit (front door window regulator drive)	234A24
Gear kit (quarter window regulator drive)	234A24
Gear kit (rear door window regulator drive)	234A24
Gear kit (tailgate window regulator drive)	234A24
Glass (back window)	42006
Glass (front door window)	21410-1
Glass (front door vent window)	21412-3
Glass (opera window)	29710-1
Glass (quarter window)	29710-1
Glass (quarter window rear)	29740-1
Glass (rear door stationary window)	26870-1
Glass (rear door window)	25712-3
Glass (roof)	50054
Glass (windshield)	03100
Glass kit (hardware)	302A04
Grille (cowl top vent)	02228
Grille (quarter panel lower)	290C38-9

INDEX

PART NAME	GROUP NUMBER
G — Cont'd	
Grille (quarter panel upper)	290C60-1
Grille assy. (quarter pillar vent air)	280B62-3
Grommet (front door latch knob)	21999
Grommet (rear door latch knob)	21999
Grommet (tailgate latch knob)	431A34
Grommet (vacuum door latch hose)	22194
Guide (back window glass)	41960-1
Guide (front door hinge)	23552
Guide (front door vent window stabilizer)	234A92
Guide (front door window latch side)	222A56-7
Guide (front door window lower)	222A92
Guide (front door window upper)	22362
Guide (front seat shoulder strap lower)	60256
Guide (quarter door window)	222A56-7
Guide (quarter window)	29764-5
Guide (quarter window front)	29752-3
Guide (rear door wds. glass channel front)	26232
Guide (rear door window latch side)	222A56-7
Guide (rear door window lower)	222A92
Guide (rear door window rear)	26222-3
Guide (rear door window upper)	22362
Guide (roof sliding panel)	518A02
Guide (sliding roof cable)	502L16-7
Guide (sliding roof front)	502L08-9
Guide (tube base sliding roof panel adjusting)	502K41
Gusset (floor side member to wheelhouse)	103A22
Gusset (front side member front)	100A14-5
Gusset (front side member to dash mounting)	101A72-3
H	
Handle (back window regulator)	44009
Handle (door pull)	22666
Handle (front door inside)	22600-1
Handle (front door window regulator)	23342, 30322
Handle (front seat back latch)	62622
Handle (front seat track adjusting)	61753
Handle (instrument panel grab assist)	045B22
Handle (liftgate)	43400
Handle (quarter window regulator)	23342, 30322
Handle (rear door inside)	22600-1, 266A26-7
Handle (rear door outside)	26604-5
Handle (door window regulator)	23342, 30322
Handle (rear seat back latch)	62418
Handle (reclining seat back adjusting)	61198
Handle (sliding roof crank emergency)	502A50
Handle (sliding roof panel headlining)	502C34
H — Cont'd	
Handle (spare wheel cover hold down)	45849
Handle (tailgate latch release)	431C62
Handle assy. (front door outside)	22404-5
Handle assy. (rear door outside)	22404-5
Handle & housing assy. (tailgate outside latch release)	430A70
Handle & knob assy. (back window regulator manual)	44008
Hinge (console glove compt. door)	06050
Hinge (floor storage compt. door front)	11640-1
Hinge (front door lower on door)	22830
Hinge (front door upper on door)	22814
Hinge (front seat back)	611B84
Hinge (fuel filler door)	40680
Hinge (instrument panel glove compt. door)	06050
Hinge (liftgate)	42900-1
Hinge (luggage compt. door)	42700-1
Hinge (quarter panel storage compt. door)	31518
Hinge (rear seat back center arm rest)	65406
Hinge (rear seat back floor panel)	60615
Hinge (storage compt. door rear)	116A00-1
Hinge (tailgate lower)	43056
Hinge (tailgate lower on body)	430B06
Hinge (tailgate lower on gate)	430B08
Hinge (tailgate upper on body)	43086
Hinge (tailgate upper on gate)	43090
Hinge assy. (front door upper)	22800-2
Hinge assy. (rear door upper)	26800-1
Hinge assy. (rear seat back)	45702
Hinge & check assy. (front door lower)	22810
Hinge & check assy. (rear door lower)	26802-3
Hook (front seat track release cable)	619A02
Hook (luggage compt. cover)	454K58
Hose (folding top hydraulic lift)	53456
Hose (luggage compt. door latch vacuum control)	43240
Hose (sliding roof frame drain front)	502C52-3
Housing (back window regulator handle manual)	44044
Housing (front door arm rest window regulator switch plate)	24039
Housing (front door ash receptacle)	238A06-7
Housing (fuel filler pipe)	27936
Housing (fuel filler pipe inner)	11309
Housing (instrument panel glove compartment door lock cylinder)	06110
Housing (liftgate lock)	43434
Housing (quarter window at rear roof)	525A12-3
Housing (roof rail at quarter window)	52564-5
Housing (sliding roof cable drive)	502L10
Housing (sliding roof panel)	502C22
Housing & handle (quarter vent air)	280B76-7

COPYRIGHT © 1986— FORD MOTOR COMPANY —DEARBORN, MICHIGAN

INDEX

PART NAME	GROUP NUMBER
I	
Insert (center body pillar outside moulding)	24306-7
Insert (door weatherstrip repair on body)	20704
Insert (front door inside handle)	22644
Insert (front seat back rear trim)	61672
Insert (front seat back side shield)	61676-7
Insert (front seat cushion side shield)	61678-9
Insert (instrument panel cluster opening finish lower)	045F32
Insert (instrument panel finish panel)	045F48
Insert (luggage compt. door lock key hole cover)	43584
Insert (quarter wheel opening cover)	29368
Insert (rear door inside handle)	22644
Insert (sliding roof guide rail)	502L31
Insert assy. (front seat back rear trim)	61672
Insulation (front door latch actuator)	21938-9
Insulator (brake pedal support bracket sound)	015A20
Insulator (cowl top panel to fender)	023A46-7
Insulator (dash panel)	01670-1
Insulator (floor pan under front seat-sound)	11492
Insulator (floor pan under rear seat sound)	11493
Insulator (floor side member-sound)	103A92-3
Insulator (front floor pan center sound)	11165-6
Insulator (front body pillar sound)	02688
Insulator (front floor pan front sound)	11181
Insulator (front floor pan sound)	11172
Insulator (front seat track to floor)	61748
Insulator (instrument panel upper sound)	046A25
Insulator (quarter wheelhouse)	29329
Insulator (rear floor pan front sound)	113A74
Insulator (rear seat belt anchor)	60122
K	
Key (front door & ignition lock)-blank	22053
Key (glove & luggage compt. door cyl. lock blank)	43562
Kit-refer to appropriate noun name For example Gear kit (quarter window regulator drive)	234A24
Knob (console glove compartment door)	060B54
Knob (front door latch control rod)	21850
Knob (front door vent window regulator handle)	23334
Knob (front seat back latch bar catch)	61753
Knob (instrument panel glove compt. door)	06164
Knob (quarter vent door handle)	280C72
Knob (rear door latch control rod)	21850
Knob (sliding roof panel handle)	518A06
Knob (tailgate latch control rod)	431A36
Knob (window regulator handle)	23352
L	
Latch (console panel glove compt. door)	061A34
Latch (folding top hold down clamp)	50536-7, 506A48
Latch (glove compt. door)	06072
Latch (luggage compt. door)	43200
Latch (quarter window)	302A08-9, 303A24
Latch (spare wheel cover hold down)	45848
Latch (storage compt. door)	31700
Latch (tailgate)	43150
Latch (tailgate lower)	431D88
Latch assy. (aux. seat back floor)	61142-3
Latch assy. (front door)	21812-3
Latch assy. (front seat back)	62648-9
Latch assy. (rear door)	26412-3
Latch assy. (rear seat back release)	61382-3
Latch kit (luggage compt. door remote control)	432A00
Latch kit (rear door safety)	21850
Letter (lower back panel)	40282
Letter (luggage compt. door)	40282
Letter (tailgate)	40282
Lever (folding top hold down clamp)	50536-7
Lever (front door latch actuating rod)	22384-5
Lever (reclining seat back pivot shaft)	610B70-1
Lever (front door latch operating)	21970
Lever (front seat back latch)	62720
Lever (front seat back pivot shaft)	610B70-1, 610B90
Lever (rear door latch actuating rod)	22384-5
Lever (sliding roof panel adjusting)	502L71-2
Lever (tailgate lock cyl.)	431F60
Lift (folding top)	50600-1
Lift (luggage compt. door hydraulic)	406A10
Liftgate	40010
Link (folding top power)	50352
Link (front door latch control rod lever)	22164-5
Link (front door latch remote control)	21940-1
Link (front seat track front)	62520-1
Link (quarter window fastener)	302K19
Link (rear door latch control rod)	26420-1
Link (rear door latch remote control)	26442-3
Link (sliding roof drive support)	502K19
Link (sliding roof panel adjusting)	502L67
Link (tailgate latch release)	431A50

INDEX

PART NAME	GROUP NUMBER
L — Cont'd	
Link (tailgate upper hinge release)	431E58
Link (tailgate upper latch release)	431B74
Link (tailgate upper latch to lower latch actuator)	431A24
Link assy. (front seat back latch)	62650
Link assy. (front seat track rear)	62512
Link & support assy. (front seat back center arm rest)	65406-7
Link & vertical strainer assy. (rear seat back center arm rest)	67210
Lock kit (rear door safety)	21850
Lock release kit (luggage compt. door electric)	432A00
Lock set	22050
Loop (front seat belt retaining)	61222
Louver (cowl vent air regulator)	018B08
Louver kit (back window)	44268
Louver (quarter vent window outside)	280B10-1
M	
Mat (front floor)	13086
Mat (front & rear floor car set)	13088
Mat (rear floor)	13106
Member (floor side inner)	10116-7
Member (front floor cross)	10852
Member (front floor cross center)	10624
Member (front floor cross no. 1)	10692-3
Member (front floor cross no. 2)	10728
Member (front floor cross no. 2 outer)	10662-3
Member (front floor cross upper)	10672-3
Member (front side rear)	10534-5
Member (front suspension no. 2 cross)	10010
Member (rear floor cross rear)	10780
Member (rear floor side)	10456-7
Motor & drive (tailgate window regulator)	40964
Motor & plate kit (folding top hydraulic lift)	533A00
Moulding (back belt outside center)	423A20-1
Moulding (back belt outside side)	423A18-9
Moulding (back window garnish lower)	42456-7
Moulding (back window garnish side)	42416-7
Moulding (back window garnish upper)	42410-1
Moulding (back window outside lower)	42404-5
Moulding (back window outside side)	42492-3
Moulding (back window outside top)	42430-1
Moulding (body rocker panel)	10176-7
Moulding (center body pillar outside upper)	24458-9
Moulding (front body pillar drip finish)	02512-3
Moulding (front body pillar outside belt)	026A24-5
Moulding (front door outside)	20938-9
Moulding (front door outside belt)	20934-5
Moulding (front door outside front)	20916-7
Moulding (front door outside lower)	20878-9
M — Cont'd	
Moulding (front door outside rear edge)	20940-1
Moulding (front door outside upper)	20932-3
Moulding (front door trim panel)	20942-3, 21110-1
Moulding (front door trim panel-front)	20914
Moulding (front door trim panel lower)	20956
Moulding (front door trim panel-rear)	20920
Moulding (front door window frame rear)	20982-3
Moulding (front door window frame top)	20492-3
Moulding (front seat back side shield)	61402-3
Moulding (front seat back side shield outer)	61422-3
Moulding (front seat cushion side shield)	61400-1
Moulding (fuel filler door)	405A48
Moulding (instrument panel glove compt. door lower)	04792
Moulding (liftgate header rail inside)	41308
Moulding (liftgate outside upper)	42512
Moulding (lower back panel)	423A58-9
Moulding (luggage compt. door)	42512
Moulding (opera window outside)	29796-7
Moulding (package tray finish end)	465A04-5
Moulding (quarter belt garnish)	29380-1
Moulding (quarter belt inside)	29250-1
Moulding (quarter outside)	29038-9
Moulding (quarter outside lower front)	29076-7
Moulding (quarter outside lower rear)	29066-7
Moulding (quarter outside upper rear)	291A48-9
Moulding (quarter panel extension)	29078-9
Moulding (quarter panel lower rear)	291B20-1
Moulding (quarter panel outside)	29034-5
Moulding (quarter panel outside upper)	29140-1
Moulding (quarter panel outside upper front)	29069
Moulding (quarter panel rear extension)	29312-3
Moulding (quarter panel wheel opening cover)	29050-1
Moulding (quarter trim panel front)	290A42-3
Moulding (quarter wheel opening)	29164-5
Moulding (quarter window inside)	291A58
Moulding (quarter window garnish)	29004-5
Moulding (quarter window garnish lower)	29002-3
Moulding (quarter window garnish upper front)	29014-5
Moulding (quarter window outside front)	290A66-7, 29622-3
Moulding (quarter window outside lower)	291C02-3
Moulding (quarter window outside lower rear corner)	290D54-5
Moulding (quarter window outside rear)	290B52-3
Moulding (quarter window outside upper)	290A60-1, 29796-7
Moulding (rear door outside)	25532-3
Moulding (rear door outside belt)	25554-5

COPYRIGHT © 1986— FORD MOTOR COMPANY —DEARBORN, MICHIGAN

INDEX

PART NAME	GROUP NUMBER
M — Cont'd	
Moulding (rear door outside lower)	25556-7
Moulding (rear door outside rear edge)	25510-1
Moulding (rear door outside upper)	25540-1
Moulding (rear door trim panel center)	25502-3
Moulding (rear door trim panel lower)	25578-9
Moulding (rear door trim panel upper front)	25504-5
Moulding (rear door window frame front)	254A12-3
Moulding (rear door window frame top)	25542-3
Moulding (rear floor pan side rear)	112B04
Moulding (rear quarter outside front)	29638-9
Moulding (rear quarter window garnish upper)	290A14-5
Moulding (roof drip side finish)	51726-9
Moulding (roof drip side finish rear corner)	517A48-9
Moulding (roof outside rear)	517A36-7
Moulding (roof outside rear side)	517A02-3
Moulding (roof outside side rear)	517A62-3
Moulding (roof side)	51628-9
Moulding (roof side drip)	51700-1
Moulding (roof trim center)	50036-7
Moulding (sliding roof panel front)	502C28
Moulding (tailgate)	42512
Moulding (tailgate outside)	41018
Moulding (tailgate outside belt)	403A70
Moulding (tailgate outside lower)	425A46
Moulding (tailgate outside side)	42570-1
Moulding (windshield garnish lower corner)	03662-3
Moulding (windshield garnish side)	03598-9
Moulding (windshield garnish upper)	03606
Moulding (windshield outside belt)	03148-9
Moulding (windshield outside side)	03136-7
Moulding (windshield outside side upper)	03192-3
Moulding (windshield outside top)	03144-5
Moulding assy. (lower back panel end)	29078-9
Moulding assy. (roof opening glass outside)	50060
Moulding kit (body side)	21048
Moulding kit (front door outside rear edge)	20910
Moulding kit (rear door outside rear edge)	20910
N	
Numeral (model identification)	291B30
Nut (back belt moulding retaining)	423A66
Nut (front seat adjusting horizontal stop)	618A68
Nut (roof luggage carrier lock)	55026
Nut (sliding roof panel front adjusting)	502B66
Nut (sliding roof panel rear guide adjusting)	518A16
O	
Ornament (console panel)	061A14
Ornament (front door trim panel)	20802
Ornament (luggage compt. door)	42514, 42532
O — Cont'd	
Ornament (quarter panel outside)	28032-3
Ornament (quarter trim panel)	20802
Ornament (rear door trim panel)	20802
Ornament (roof side outside)	517A20-1, 517A56
Ornament (seat back)	64824
Ornament (seat belt buckle)	611C02
Ornament (tailgate)	43500
P	
Pad (back window frame head protector)	422K22
Pad (back window regulator handle)	44011
Pad (console panel)	04620
Pad (front door outside handle large)	22428-9
Pad (front door outside handle small)	22448-9
Pad (front seat back)	64810
Pad (front seat back center arm rest)	65478-9
Pad (front seat cushion)	632A22
Pad (instrument panel grab handle)	043K62
Pad (instrument panel lower)	044C99
Pad (liftgate bumper)	404K20, 404B40
Pad (liftgate door lock striker)	402K18
Pad (luggage compt. door hinge on body)	42840
Pad (luggage compt. door lock cylinder sleeve)	43625
Pad (rear door outside handle large)	22428-9
Pad (rear door outside handle small)	22448-9
Pad (rear seat back center arm rest)	67273
Pad (rear seat cushion)	63840
Pad (roof air deflector panel support)	50870
Pad (roof luggage carrier slat)	55147
Pad (roof luggage carrier support)	55156-7
Pad (sliding roof console header)	519B66
Pad (sliding roof front)	502L40-1
Pad (sliding roof side rail)	519B94-5
Pad (tailgate outside handle)	43539
Pad & retainer (utility shelf)	13536
Pad & retainer assy. (instrument panel end)	044G12-13
Pan (center floor)	11160
Pan (front floor)	11135
Pan (rear floor)	11215-8
Panel (aux. floor center)	115A70
Panel (aux. floor rear)	115A42
Panel (aux. floor side)	115A44-5
Panel (aux. seat back floor)	605A10-1
Panel (back window inside)	42470
Panel (back window opening outside upper)	422A78
Panel (body rocker)	10128-9
Panel (center body pillar inside finish)	24346-7
Panel (center body pillar outside finish)	24416-7, 268A38-9
Panel (center floor finish)	115A58

INDEX

PART NAME	GROUP NUMBER
P — Cont'd	
Panel (console)	045A06, 045A36
Panel (console lower)	044L75
Panel (console panel finish rear)	045B72
Panel (console panel top finish)	04567
Panel (console top panel upper)	045E06
Panel (cowl side)	02038-9
Panel (cowl side outer)	02044-5
Panel (cowl top)	02010
Panel (cowl top outer)	02012
Panel (dash)	01610
Panel (front body pillar)	02042-3
Panel (front door arm rest finish)	24168-9
Panel (front door trim finish)	23712
Panel (front door outer repair)	20200-1
Panel (front seat back trim)	64410
Panel (front seat cushion trim rear)	63218-9
Panel (front seat cushion trim rear corner)	61680-1
Panel (front seat head rest trim)	610B40
Panel (fuel filler door finish)	40513
Panel (instrument)	04320
Panel (instrument panel applique center)	045C38
Panel (instrument panel ash receptacle)	04824
Panel (instrument panel brace to cowl side panel)	045F38
Panel (instrument panel center)	04774
Panel (instrument panel cluster finish)	044D70-1
Panel (instrument panel finish center)	04338-9
Panel (instrument panel finish end)	04334-5, 04392-3
Panel (instrument panel finish lower)	044A10
Panel (instrument panel finish lower extension)	04644-5
Panel (instrument panel finish upper)	044A90
Panel (instrument panel glove compt. top)	06012
Panel (instrument panel upper)	04562
Panel (instrument panel vent air center)	014L03
Panel (lower back)	40324
Panel (lower back finish)	423A42
Panel (lower back outside finish)	403A76
Panel (package tray)	46506
Panel (package tray lower)	46519
Panel (quarter)	27846-7
Panel (quarter arm rest finish)	310A02-3
Panel (quarter inside front)	27790-1, 278A08-9
Panel (quarter latch pillar upper finish)	312A58-9
Panel (quarter pillar upper)	28154-5
Panel (quarter trim finish)	311A58-9
Panel (quarter wheelhouse inner)	27886-7
Panel (quarter wheelhouse outer)	27894-5
Panel (quarter wheel opening cover)	27974-5
Panel (quarter window opening)	278B26-7
Panel (quarter window regulator)	27870-1
Panel (rear corner inner finish upper)	40454-5
Panel (rear corner outer)	41230-1
P — Cont'd	
Panel (rear door arm rest)	27542-3
Panel (rear door arm rest finish rear)	27636-7
Panel (rear door outer repair)	24700-1
Panel (rear door trim finish)	274A30-1
Panel (rear floor extension)	60629
Panel (rear floor sill rear)	11318
Panel (rear plenum chamber)	014K72-4
Panel (rear quarter window outside)	278B64-5
Panel (roof)	50202
Panel (roof air deflector)	50860
Panel (sliding roof extension)	502B46
Panel (sliding roof outer)	502A82
Panel (spare wheel well)	47043
Panel (spare wheel well side inner)	47028
Panel (spare wheel well side lower)	47030
Panel (storage compt. door)	11698-9
Panel (tailgate outside)	40710
Panel (upper back)	40310
Panel (windshield header)	03408
Panel and Cover Assy. (roof outside trim)	537A38
Panel and Extension Assy. (roof outside trim)	537A12-3
Panel assy. (fuel filler door inside)	405A60
Panel assy. (quarter)	27840-1
Panel assy. (rear seat back)	60508
Panel assy. (rear seat back support)	60724
Panel assy. (roof outside trim)	53790
Panel assy. (sliding roof outer)	502A58
Partition (console glove compartment)	061A84
Pawl (front seat back latch)	62606-7
Pillar (front body lower)	02500-1
Pillar (front body upper)	02504-5
Pillar (front body upper inner corner)	02622-3
Pillar (front body upper outer)	02516-7
Pillar (quarter latch lower)	281A34-5
Pillar (quarter latch upper outer)	28324-5
Pillar (quarter wheelhouse to roof inner)	278A36-7
Pillar (quarter wheelhouse to roof inner lower)	28036-7
Pillar (quarter wheelhouse to roof inner upper)	28106-7
Pillar (quarter wheelhouse to roof outer)	278A38-9
Pillar (rear corner)	41038-9
Pillar (rear corner inner)	412A02-3
Pillar (rear corner inner front lower)	41228-9
Pillar (rear corner inner front upper)	41210-1
Pillar assy. (center body)	24300-1
Pillar assy. (quarter latch)	28160-1
Pillar assy. (roof roll outer)	51868-9
Pin (folding top bracket No. 3 bow)	53150
Pin (folding top center side rail front)	50492
Pin (folding top hold down clamp control link)	503A02
Pin (folding top no. 8 bow)	53008
Pin (folding top power link)	53222
Pin (folding top rear side rail)	503A10
Pin (front door check arm)	235K08
Pin (front seat back actuator)	612A46

COPYRIGHT © 1986— FORD MOTOR COMPANY —DEARBORN, MICHIGAN

INDEX

⊕ Refer to Chassis Section

PART NAME	GROUP NUMBER
P — Cont'd	
Pin (front seat back pivot)	611B24
Pin (front seat track)	61880
Pin (fuel filler door hinge)	405A12
Pin (glove compt. door)	06056
Pin (luggage compt. hinge)	43030
Pin (quarter window latch)	30330
Pin (rear seat back floor panel)	613B02
Pin (roof air deflector hinge)	500A56
Pin (sliding roof panel rear guide)	51897
Pin (tailgate hinge)	43030
Pin (visor anchor)	04114
Pivot (front door window regulator arm to glass channel)	23274
Pivot (front seat back adjuster actuator)	618C56
Pivot (quarter window glass)	302K41
Pivot (rear door window regulator arm to glass channel)	23274
Pivot (tailgate lower hinge)	430A20
Pivot kit (tailgate upper hinge on body)	43096
Plate (arm rest mounting)	31658-9
Plate (back window regulator handle anchor)	44048
Plate (belt side rail to wheelhouse reinforcement mounting)	28702-3
Plate (console glove compt. door)	044K83
Plate (console glove compt. door latch)	061A36
Plate (console panel finish insert)	044F44
Plate (console panel gear shift lever opening)	044G24
Plate (console rear glove compt. door latch)	061A36
Plate (door arm rest finger tip)	24142
Plate (dash panel speedo. cable cover)	016B56
Plate (floor pan heater duct cover)	113B14
Plate (floor pan reinforcement)	111A45
Plate (floor side member name)	11609
Plate (floor trans. cover)	12108
Plate (front body pillar hinge anchor)	02638
Plate (front door arm rest mounting)	24228
Plate (front door hinge reinforcement on pillar)	228K37
Plate (front door inside handle)	23370
Plate (front door latch striker)	22008-9
Plate (front door latch striker tapping)	22024-5
Plate (front door scuff)	13208-9
Plate (front door trim panel ornament)	23824
Plate (front door vent window regulator handle)	23294
Plate (front door window catch)	23320-1
Plate (front door window outer stabilizer)	21570-1
Plate (front fender name)	⊕16098, 25622
Plate (front floor lower crossmember)	10962
Plate (front floor pan drain hole cover)	11117
Plate (front floor pan hole cover)	111A74
P — Cont'd	
Plate (front seat back pad adjusting)	65506
Plate (front seat back robe cord end anchor)	62740
Plate (front seat back scuff)	60060
Plate (front side inner member)	104A02
Plate (front side member to dash-gusset hole cover)	102B18-9
Plate (fuel filler door)	405A86
Plate (instrument panel glove compt. door lock cover)	06046
Plate (instrument panel name)	04460
Plate (luggage compt. door hinge anchor on door)	42752
Plate (luggage compt. door latch striker)	43252
Plate (luggage compt. door name)	⊕16098, 42528
Plate (quarter panel name)	25622
Plate (quarter trim panel access hole cover)	312A28-9
Plate (quarter window regulator handle)	23370
Plate (rear corner outer panel end)	41098-9
Plate (rear door inside handle)	23370
Plate (rear floor side member reinforcement)	102B40-1
Plate (rear floor pan drain hole cover)	113B52
Plate (rear door latch striker)	22008-9
Plate (rear door latch striker tapping)	22024-5
Plate (rear door scuff)	13228
Plate (rear door window regulator handle)	23370
Plate (rear seat back hinge)	624K54
Plate (robe cord end anchor)	62740-1
Plate (roof side name)	50398-400
Plate (roof sliding panel handle mounting)	502D14
Plate (sliding roof panel rear guide)	51812
Plate (sliding roof retaining)	502L26
Plate (tailgate counterbalance torsion bar mounting)	430A28
Plate (tailgate name)	⊕16098, 25622
Plate (tailgate striker)	43146
Platform (front seat back)	612K83
Platform (front seat cushion)	63100-1
Plug (floor pan seat belt anchor)	10034
Plug (front door hinge pin)	22826
Plug (front door window frame upper)	222K66
Plug (seat belt retractor cover bolt access)	611B32
Pump repair kit (folding top hydraulic lift)	53337
R	
Rail (back window header)	41302
Rail (folding top front side)	53104-5
Rail (folding top rear side)	53138-9
Rail (folding top rear side inner)	531A08-9
Rail (front door outside finish upper)	20960-1

INDEX

PART NAME	GROUP NUMBER
R — Cont'd	
Rail (quarter belt inside)	28714-5
Rail (quarter outside finish)	28712-3
Rail (quarter panel belt side)	41708-9
Rail (roof luggage carrier front)	55106
Rail (roof luggage carrier rear)	55106
Rail (roof luggage carrier side)	55114-5
Rail (roof side center)	513A74-5
Rail (roof side front)	513A52-3
Rail (roof side front inner)	51180-1
Rail (roof side front outer)	51186-7
Rail (roof side inner rear)	51212-3
Rail (roof side outer rear)	51216-7
Rail (sliding roof)	502A88
Rail (sliding roof panel headlining retainer)	502L19
Rail & guide (sliding roof)	502C06-7
Receptacle (console panel ash)	04788, 30702-3
Receptacle (front door ash)	30702-3
Receptacle (front seat back ash)	62876
Receptacle (instrument panel ash)	04810-1
Receptacle (quarter ash)	30702-3
Receptacle (rear door ash)	30702-3
Reflector (door trim panel)	23820
Regulator (back window)	44000
Regulator (front door vent window)	23402-3
Regulator assy. (front door window electric less motor and drive)	23208-9
Regulator assy. (front door window manual)	23200-1
Regulator assy. (quarter window electric)	30380-1
Regulator assy. (quarter window manual)	30306-7
Regulator assy. (rear door window electric less motor, drive & spring)	27008-9
Regulator assy. (rear door window manual)	27000-1
Reinforcement (aux. seat cushion support)	607A64
Reinforcement (back window side)	42292-3
Reinforcement (body rocker panel)	10142
Reinforcement (body side edge)	104A38-9
Reinforcement (body side inner panel)	28126-7
Reinforcement (brake pedal support dash panel)	01552-3
Reinforcement (center body pillar lower)	24426-7
Reinforcement (center floor at pinion bumper inner)	112A06-7
Reinforcement (center floor pan at pinion bumper)	112A06-7
Reinforcement (center floor pan to seat back strainer)	11192
Reinforcement (console panel front)	044B90
Reinforcement (console panel rear)	04300
Reinforcement (cowl side panel)	02884-5
Reinforcement (cowl top inner panel center)	023A20
Reinforcement (dash panel to frame brace inner)	01766-7
Reinforcement (door inside panel at regulator)	202A46-7

PART NAME	GROUP NUMBER
R — Cont'd	
Reinforcement (floor at seat mounting)	11338
Reinforcement guide assy. (floor at seat mounting)	113B54
Reinforcement (floor plate trans. cover)	12110
Reinforcement (floor to side member)	11178-9
Reinforcement (fresh air vent control)	018A901
Reinforcement (front door outside)	20225
Reinforcement (front door outside handle)	22486
Reinforcement (front door trim panel switch mounting)	23922
Reinforcement (front floor No. 2 cross member)	10648
Reinforcement (front floor pan rear center upper)	102B42
Reinforcement (front floor pan rear center lower)	102B44
Reinforcement (front floor pan seat track)	11246-8, 11634-5
Reinforcement (front seat back frame)	61046-7
Reinforcement (front seat belt anchor to side member)	61216
Reinforcement (front side member extension)	10476
Reinforcement (front side member isolator mounting)	10380
Reinforcement (front side member rear)	103K70
Reinforcement (front side member to dash mounting)	101A68
Reinforcement (fuel filler pipe housing)	405B64
Reinforcement (glove compartment opening)	06198-9
Reinforcement (instrument panel brace to cowl side panel)	045F38
Reinforcement (instrument panel glove compt. door latch)	06172
Reinforcement (instrument panel lower flange center)	04674
Reinforcement (instrument panel lower flange end)	042A60
Reinforcement (instrument panel lower)	04735
Reinforcement (lower back panel)	40440
Reinforcement (luggage compt. door hinge on body)	44850-1
Reinforcement (luggage compt. door upper corner)	44822-3
Reinforcement (package tray to floor pan)	46516
Reinforcement (quarter inside panel)	27946-7
Reinforcement (quarter latch pillar)	28364-5
Reinforcment (quarter latch pillar at belt)	282A18-9
Reinforcement (quarter latch pillar to wheelhouse)	28330-1
Reinforcement (quarter panel at belt)	28700-1
Reinforcement (quarter panel latch side)	28200-1
Reinforcement (quarter panel latch side lower)	28216-7
Reinforcement (quarter panel to rear extension)	280B06-7
Reinforcement (quarter panel to roof rail)	28186-7
Reinforcement (quarter panel to wheelhouse)	29200-1
Reinforcement (quarter panel upper)	28486-7
Reinforcement (quarter trim panel lower)	31296-7
Reinforcement (quarter wheelhouse inner)	277A28

COPYRIGHT © 1986— FORD MOTOR COMPANY —DEARBORN, MICHIGAN

INDEX

PART NAME	GROUP NUMBER
R — Cont'd	
Reinforcement (quarter wheelhouse inner panel)	27798-9
Reinforcement (quarter wdo. regulator panel upper)	279A46
Reinforcement (quarter window opening rear)	29452-3
Reinforcement (rear corner pillar upper)	41056-7
Reinforcement (rear corner pillar lower)	41058-9
Reinforcement (rear door inside panel)	24884
Reinforcement (rear door outside handle)	22486
Reinforcement (rear floor pan shock absorber mounting)	10626
Reinforcement (rear floor pan to quarter panel extension)	113B48
Reinforcement (rear floor rear cross member)	10760
Reinforcement (rear floor rear sill panel)	10816
Reinforcement (rear floor rear sill panel extension)	10974-5
Reinforcement (rear seat back support bracket)	624A34-5
Reinforcement (roof luggage carrier slat)	55124
Reinforcement (roof panel center)	50244
Reinforcement (roof panel front)	50263
Reinforcement (roof panel rear side)	50844-5
Reinforcement (roof side headlining)	513C14-5
Reinforcement (roof side inner rear rail)	51248-9
Reinforcement (roof side rail)	513A06
Reinforcement (tail lamp opening)	27970-1
Reinforcement (tailgate lower hinge on gate)	43024
Reinforcement (tailgate upper hinge on gate)	43060
Reinforcement (tailgate panel hinge)	40718
Reinforcement assy. (door outside panel mirror)	20224
Repair kit (standard belt buckle)	610C26
Reservoir (vacuum door latch control)	219A02
Reservoir repair kit (folding top hydraulic lift)	53376
Retainer (aux. seat cushion frame outer)	607A48
Retainer (back belt moulding)	40248
Retainer (back belt moulding joint cover)	424B02
Retainer (back belt side moulding)	423B06
Retainer (back window garnish side moulding)	4231B18
Retainer (back window headlining side)	41516-7
Retainer (back window lower garnish moulding)	423A06
Retainer (back window upper garnish moulding)	42468
Retainer (back window outside moulding)	42413
Retainer (back window outside side moulding)	42318
Retainer (back window regulator button)	44088
Retainer (back window seal)	420A58
Retainer (body bolt absorber upper)	00163
Retainer (body bolt anchor plate)	113A66
Retainer (body bolt insulator lower)	00151
Retainer (center body pillar inside finish panel)	24498
Retainer (center body pillar upper front weatherstrip)	243A38-9
Retainer (center body pillar upper rear weatherstrip)	243A56-7
Retainer (coat hook)	29232
R — Cont'd	
Retainer (console glove compartment door latch)	044E62
Retainer (console panel ash receptacle)	04780, 30714-5
Retainer (console panel finish panel)	045A28
Retainer (console rear glove compartment door check)	060B52
Retainer (cowl top vent grille)	02316
Retainer (dash insulator)	06191
Retainer (door lock cylinder switch)	220A38
Retainer (folding top bow listing)	50156
Retainer (folding top dust hood front)	54676
Retainer (folding top no. 1 bow rear weatherstrip)	51352-3
Retainer (front body pillar upper weatherstrip)	02594-5
Retainer (front door arm rest finger tip plate)	24170
Retainer (front door arm rest pad)	24124
Retainer (front door ash receptacle)	30714-5
Retainer (front door ash receptacle right front)	23806
Retainer (front door glass run front)	21572
Retainer (front door glass run latch side)	222A00-1
Retainer (front door latch rod)	21952-4
Retainer (front door latch striker anchor plate)	22021
Retainer (front door lock cylinder)	22023
Retainer (front door outside lower moulding rear)	20954-5
Retainer (front door outside moulding)	20818, 20842, 25562
Retainer (front door pull handle)	22676
Retainer (front door vent window guide)	234A96-7
Retainer (front door vent window weatherstrip)	21408-9
Retainer (front door weatherstrip)	20586
Retainer (front door window glass channel bracket)	234A46
Retainer (front seat adjuster spring)	618C28
Retainer (front seat adjuster trans. pinion)	618C26
Retainer (front seat back ash receptacle)	62868
Retainer (front seat back center arm rest cover)	654A54
Retainer (front seat back latch cover)	61144
Retainer (front seat back latch solenoid)	62758
Retainer (front seat back latch spring)	610B66
Retainer (front seat back pad adjusting cable)	65508
Retainer (front seat back trim)	611A44
Retainer (front seat shoulder strap lower)	60236
Retainer (front seat track adjusting handle)	618B58
Retainer (front seat track assist spring)	618C64
Retainer (front seat track handle)	62060
Retainer (fuel tank)	280B54
Retainer (glove compartment door lock)	06088
Retainer (grille cowl top vent)	02316
Retainer (inside lower cover)	407A56
Retainer (instrument panel air control opening cover)	042A86

INDEX

PART NAME	GROUP NUMBER
R — Cont'd	
Retainer (instrument panel ash receptacle)	04826, 048B46
Retainer (instrument panel glove compt. door latch catch)	06125
Retainer (instrument panel finish panel center)	04784
Retainer (liftgate door lift on door)	45588
Retainer (liftgate door lock cylinder)	404B10
Retainer (liftgate latch spring)	404A48
Retainer (liftgate weatherstrip)	43738
Retainer (lower back panel)	40471
Retainer (lower back panel lower moulding)	42364
Retainer (lower back panel moulding)	40368
Retainer (luggage compt. door lock cylinder)	22023, 43629
Retainer (luggage compt. door moulding)	42527, 42533
Retainer (luggage compt. door trim panel)	463K00
Retainer (luggage compartment floor carpet)	454A16
Retainer (luggage compartment front cover)	45408
Retainer (luggage cover)	454A24
Retainer (luggage compartment door hinge spring)	427A54
Retainer (luggage compartment front cover)	45408
Retainer (opera window weatherstrip)	30270-1
Retainer (outside moulding)	20818-42, 20880-4
Retainer (package tray trim panel)	46698-9
Retainer (quarter ash receptacle)	30714-5
Retainer (quarter panel outside upper moulding)	29108
Retainer (quarter panel rear extension moulding)	291B80
Retainer (quarter panel to roof)	290K32
Retainer (quarter trim panel center)	310A04
Retainer (quarter trim panel rear)	31172-3
Retainer (quarter trim panel upper)	31200-1
Retainer (quarter trim panel upper front and rear)	31066
Retainer (quarter vent window handle)	30212
Retainer (quarter window front weatherstrip)	29952-3
Retainer (quarter window garnish upper moulding)	28880
Retainer (quarter window glass)	29664
Retainer (quarter window hinge)	302A12
Retainer (quarter window latch)	302A02
Retainer (quarter window latch anchor plate)	30384
Retainer (quarter window lower weatherstrip)	30134
Retainer (quarter window rear)	29756
Retainer (quarter window weatherstrip)	30270-1
Retainer (rear door ash receptacle)	30714-5
Retainer (rear door glass run front)	25796-7
Retainer (rear door latch rod)	21952-4
Retainer (rear door latch striker anchor plate)	22021
Retainer (rear door lock cylinder)	22023
Retainer (rear door outside lower moulding rear)	20954-5
Retainer (rear door outside moulding)	254A46
R — Cont'd	
Retainer (rear door pull handle)	22676
Retainer (rear door weatherstrip)	20586
Retainer (rear door window glass channel bracket)	234A46
Retainer (rear door window weatherstrip)	262A34
Retainer (rear floor mat)	13144
Retainer (rear seat back floor carpet)	130A18
Retainer (rear seat cushion front)	63370
Retainer (robe cord)	62802-4
Retainer (rocker panel moulding)	10182
Retainer (roof cover)	51716
Retainer (roof drip side finish rear moulding)	517B76
Retainer (roof headlining)	52208
Retainer (roof headlining front)	50980
Retainer (roof headlining rear)	50982
Retainer (roof headlining side front)	52136-7
Retainer (roof headlining side lower)	52138-9
Retainer (roof headlining side lower rear)	519A48-9
Retainer (roof headlining side rear)	52148-9
Retainer (roof headlining side upper)	52152-3
Retainer (roof headlining support)	52182
Retainer (roof headlining support side)	52160
Retainer (roof luggage carrier rear rail)	550A24
Retainer (roof opening panel weatherstrip)	502A92
Retainer (roof outside cover front)	53730-1
Retainer (roof outside cover at hinge)	537A24
Retainer (roof outside cover side)	53728-9
Retainer (roof outside moulding center)	517A78
Retainer (roof outside rear moulding side)	50030
Retainer (roof outside rear moulding upper)	50034
Retainer (roof side inner front moulding)	51756
Retainer (roof side inner rear moulding)	517C40
Retainer (roof side rail weatherstrip front)	513A66-7
Retainer (roof side rail weatherstrip rear)	513A66-7
Retainer (roof sliding panel rear weatherstrip)	502C42
Retainer (roof sliding opening shield)	508A26
Retainer (roof trim moulding)	517C06
Retainer (sliding roof guide rail to frame rear)	502B40
Retainer (sliding roof headlining)	52124
Retainer (sliding roof panel cable guide)	518A42
Retainer (sliding roof panel front moulding)	502C30
Retainer (sliding roof panel headlining)	518A40
Retainer (sliding roof panel opening shield)	508A26
Retainer (sliding roof panel rear guide plate)	51880
Retainer (sliding roof panel rear weatherstrip)	502C42
Retainer (spare wheel well cover rear)	47088
Retainer (steering column opening cover)	017A50
Retainer (storage compt. door lock cylinder)	22023
Retainer (tailgate counterbalance torsion bar)	43050
Retainer (tailgate door latch rod)	21952-4
Retainer (tailgate header rail garnish moulding)	
Retainer (tailgate lock cylinder)	22023
Retainer (tailgate outside moulding)	407A12

COPYRIGHT © 1986— FORD MOTOR COMPANY —DEARBORN, MICHIGAN

INDEX

PART NAME	GROUP NUMBER
R — Cont'd	
Retainer (tailgate vinyl cover)	425K17
Retainer (tailgate weatherstrip)	20586
Retainer (tailgate weatherstrip on body)	41634
Retainer (windshield glass)	03556
Retainer (windshield lower)	030A20-1, 03556
Retainer (windshield outside)	03166
Retainer (windshield outside belt moulding)	03406
Retainer (windshield outside belt moulding end)	03782-3
Retainer (windshield outside moulding)	42413
Retainer (windshield outside side moulding)	03174
Retainer assy. (game table)	280A38
Retainer assy. (quarter latch pillar weatherstrip)	282A04-5
Retainer & division bar assy. (rear door glass run)	26900-1
Retainer & seal assy. (front door check arm)	235K38
Ring (front seat adjuster cam sound absorber)	62672
Ring (luggage cover retainer)	454A26
Rod assy. (tailgate latch cylinder)	43380
Rod (back window regulator handle regulator)	44160
Rod (front door latch actuating)	22152
Rod (front door latch control to cylinder)	22134-5
Rod (front door latch push button)	21852-3
Rod (front seat back adjusting)	61832
Rod (front seat back adjusting actuator)	610B84
Rod (front seat track latch tie)	61726
Rod (rear door latch actuating)	26596-7
Rod (rear door latch push button)	26460-1
Rod (tailgate latch control)	43884
Rod (tailgate latch push button)	431A32
Rod (tailgate lock cylinder to release)	43876
Rod (tailgate outside handle)	431A40
Roller (front door window guide swivel)	270A54
Roller (front door window regulator arm)	262A32
Roller (quarter window guide)	29892
Roller (quarter window guide swivel)	270A54
Roller (quarter window regulator arm)	262A32, 23240
Roller (rear door window guide swivel)	270A54
Roller (rear door window regulator arm)	262A32
Roller (tailgate window regulator arm)	262A32
Run (back window glass)	422A00
Run (front door glass latch side)	21550
Run (front door glass top)	21596
Run (front door vent window division bar glass)	21546
Run (quarter window glass)	30104-5
Run (rear door glass)	25766
Run (rear door glass latch side)	21550
Run (rear door window division bar glass)	26884-5
Run & bracket assy. (rear door glass front)	263A70
S	
Screen (cowl top vent)	018A16-7
Seal (cowl vent air inlet duct)	01988
Screw (folding top balance link adjusting)	50491
Screw (front seat back pad adjusting)	65504
Seal (cowl side vent air duct)	02158
Seal (folding top rear side rail)	54784-5
Seal (front body pillar at belt)	02730-1
Seal (front door at belt)	20264-5
Seal (front door inner panel bottom drain)	20700
Seal (front door inside panel lower)	20272
Seal (front door rear at belt)	20558-9
Seal (fuel filler pipe housing)	405B68
Seal (fuel filler pipe opening)	28630
Seal (liftgate assist spring)	431B06
Seal (luggage compt. door latch cylinder)	43207
Seal (luggage compt. door lock cylinder retaining)	433A28
Seal (quarter latch pillar to window frame)	28182-3
Seal (quarter panel outer rear extension)	27802
Seal (quarter wheel opening cover)	27986-7
Seal (quarter window latch retainer)	297A30
Seal (rear door inner panel bottom drain)	20700
Seal (roof sliding panel rear)	502C76
Seal (sliding roof side rail)	51650
Seal (steering column opening cover plate)	01738
Seal (tailgate inner panel bottom drain)	20700
Seal (tailgate latch cover)	43154
Seal (windshield header)	03208
Seal (windshield glass)	030A28
Seal assy. (inside panel lower)	247A92
Seal kit (quarter window repair)	296K06
Shaft (front seat back pad adjusting)	65510
Shaft (front seat back pivot)	610B68
Shaft (spare wheel cover hold down handle)	47108
Shelf (instrument panel utility)	13504
Shield (back window wiring)	424B04
Shield (front door ash receptacle)	30716
Shield (front door latch)	21978-9
Shield (front door latch remote control)	21876
Shield (front door latch remote control opening)	20334
Shield (front door wiring)	20770
Shield (front floor pan heat)	11442
Shield (front seat adjuster)	62116
Shield (front seat back center arm rest)	654A82-3
Shield (front seat back inside)	610A68-9
Shield (front seat back latch actuator)	62718-9
Shield (front seat back side)	61616-7, 62160-1
Shield (front seat belt)	611A70

INDEX

PART NAME	GROUP NUMBER
S — Cont'd	
Shield (front seat cushion side)	62186-7
Shield (front seat cushion side rear)	62140-1
Shield (front seat track upper)	62162-3
Shield (front seat side)	62184-5
Shield (front seat trac lower)	62126-7
Shield (liftgate latch)	404A68
Shield (quarter ash receptacle)	30716
Shield (quarter window opening sight)	29714, 29726-7
Shield (rear door ash receptacle)	30716
Shield (quarter trim water)	31064-5
Shield (rear door scuff plate wiring)	13218
Shield (roof outside rear)	537A32
Shield (roof outside rear side)	537A36-7
Shim (body bolt mount)	00145
Shim (front door latch striker plate)	265A06
Shim (liftgate latch striker)	43307
Shim (rear door latch striker plate)	265A06
Shim (sliding roof panel housing)	518A56
Shim (tailgate latch striker plate)	265A06, 43152
Shoe (sliding roof panel)	502B54
Slat (roof luggage carrier inner)	55150
Sleeve (front seat head rest guide rod)	610A16
Sleeve (luggage compt. door lock cylinder)	43600-3
Sleeve (rear seat back hinge spring)	624K53
Sleeve (reclining seat back adjusting actuator)	611A98
Sleeve (sliding roof panel drive pinion)	502L93
Sleeve (visor anchor pin)	04115
Slide (front door window stabilizer arm inner)	21528
Slide (front seat track)	619A34
Slide (sliding roof)	502K72
Slide (sliding roof panel)	502M78
Slide (sliding roof panel front guide)	518A10
Solenoid assy. (front seat back latch)	62690
Solenoid & valve assy. (vacuum door latch control)	220A00
Spacer (ash receptacle rear quarter)	274K68
Spacer (back & quarter window glass lower)	29760
Spacer (coat hook)	29156
Spacer (door arm rest)	24052
Spacer (door window glass bracket)	234A44
Spacer (folding top main pivot bracket)	53082
Spacer (front door pull handle)	22694
Spacer (front door vent window handle)	214A02
Spacer (front door window glass roller)	263A86
Spacer (front seat adjuster regulator solenoid retainer)	618C34
Spacer (front seat back pivot arm)	60394
Spacer (front seat back to cushion outer)	617K79
Spacer (front seat belt retractor)	612A16
S — Cont'd	
Spacer (front suspension #2 cross member lower)	10084
Spacer (liftgate assist spring)	43110
Spacer (liftgate door mounting)	40610
Spacer (luggage compt. cover hook)	454K62
Spacer (luggage compt. door hinge-door)	42746
Spacer (quarter panel extension)	280B60
Spacer (quarter trim panel)	31392
Spacer (quarter window glass roller)	263A86
Spacer (quarter window latch retainer)	302A06
Spacer (rear door window glass roller)	263A86
Spacer (rear door window regulator motor bracket)	270A50
Spacer (roof opening glass handle)	502P20
Spacer (roof opening glass hinge)	502P21
Spacer (roof side inner front moulding)	517C30
Spacer (roof sliding panel door housing)	518A34
Spacer (roof sliding panel housing)	502C24
Spacer (shoulder strap anchor plate)	60228
Spacer (sliding roof friction clutch)	502L46
Spacer (tailgate check cable)	444A14
Spacer (tailgate upper hinge on body)	43098
Spacer (visor arm bracket)	04125
Spacer (windshield glass)	030A12
Spacer (windshield outside belt moulding)	03150
Spoiler kit (rear)	44210
Spring (aux. floor cover)	155K26
Spring (back window regulator handle manual)	44036
Spring (console glove compartment door)	060A98
Spring (console rear glove compartment door assist)	060B48
Spring (folding top compt.)	61883
Spring (folding top hold down clamp lever)	50572
Spring (front door ash receptacle retainer cover tension)	30728-9
Spring (front door inside handle)	22624
Spring (front door latch toggle)	21872-3
Spring (front door window regulator catch)	234A74
Spring (front door window regulator counterbalance)	23318
Spring (front door window regulator handle)	22624
Spring (front seat back latch)	61097-8
Spring (front seat back latch catch retracting)	617K74
Spring (front seat back pad adjusting plate)	65512
Spring (front seat track assist)	61828
Spring (front seat track latch)	61883
Spring (front seat track retracting)	61883
Spring (front seat track latch tie rod retainer)	619B06
Spring (front seat track vertical assist)	617A44, 617A64
Spring(front seat track vertical latch	617A52
Spring (fuel filler opening door hinge)	405A24
Spring (glove compt. door check retaining)	06133
Spring (instrument panel glove compt. lock return)	060K75

COPYRIGHT © 1986— FORD MOTOR COMPANY —DEARBORN, MICHIGAN

INDEX

PART NAME	GROUP NUMBER
S — Cont'd	
Spring (liftgate assist)	431B04
Spring (luggage compartment door hinge)	42760
Spring (luggage compt. door lift retainer)	45592
Spring (quarter ash receptacle retainer cover tension)	30728-9
Spring (quarter window regulator counterbalance)	23318, 27048, 30351
Spring (rear door ash receptacle retainer cover tension)	30728-9
Spring (rear door inside handle)	22624
Spring (rear door latch toggle)	21872-3
Spring (rear door window regulator counterbalance)	23318, 27048
Spring (rear seat back)	66700
Spring (rear seat cushion)	63120
Spring (roof air deflector)	500K20
Spring (roof panel latch)	50144
Spring (sliding roof panel guide adjusting)	502C08
Spring (sliding roof panel rear)	518A36
Spring (tailgate check cable)	444A12
Spring (tailgate latch ratchet pawl)	26514
Spring (tailgate outside handle)	430A82
Spring (tailgate window regulator counterbalance)	43318, 40867
Spring assy. (front seat back center arm rest)	64602
Stabilizer (front door vent window)	229A02
Stabilizer (front door window glass inner)	22380
Stablizer (front door window glass rear)	214A30-1
Stabilizer (rear door window)	263A32
Stabilizer (rear door window glass inner)	22380
Stabilizer (tailgate window inner)	41910
Stablizer (tailgate window outer)	41962
Stabilizer assy. (door vent window guide)	234A90-1
Stabilizer assy. (quarter window)	30470
Stem (front seat back adjusting)	610B22
Stem assy. (front seat back latch)	62634
Stop (back window lower)	42308
Stop (back window upper)	41958
Stop (door latch actuator rear)	220A22
Stop (front door vent window pivot)	22992
Stop (front door window upper)	21768-9
Stop (front door window upper rear)	222A54-5
Stop (front seat back to cushion)	60310
Stop (front seat shoulder strap adjusting)	60286
Stop (instrument panel glove compartment door)	06200-1
Stop (quarter window)	29968-9
Stop (quarter window upper)	21768-9
Stop (rear door window rear upper)	262A84-5
Stop (rear door window upper)	21768-9
Stop (rear door window upper front)	262A20-1
S — Cont'd	
Stop (rear seat back)	62426
Stop (sliding roof lever)	502M50
Stop (windshield glass)	03296-7
Strainer (package tray to floor)	46610-1
Strainer (package tray to wheelhouse)	46774-5
Strainer (quarter panel belt to floor)	28788-9
Strainer (quarter panel to rear floor)	28772-3
Strainer (roof side rear rail to floor)	513C10-1
Striker (front door latch)	265A04
Striker (front seat back latch)	62638-9
Striker (liftgate assist spring)	43104
Striker (liftgate latch)	404A42
Striker (rear door latch)	265A04
Striker (rear seat back latch)	62440-1
Striker (storage compt. door latch)	31710
Striker (tailgate upper latch)	431F52
Striker (tailgate lower latch)	431E72
Strap (luggage compt. cover)	454K59
Strip (belt side center tacking)	41878
Strip (belt side front tacking)	41772-3
Strip (roof headlining side rear tacking)	50998-9
Strip (roof headlining side retaining rear lower)	50900-1
Strip (upper back panel anti-rattle)	41248
Strip (windshield)	03243
Strip assy. (roof outside cover retainer)	537A42
Stripe kit (body side)	20000-1
Stripe kit (luggage compartment)	423B70
Stud (sliding roof panel adjusting lever)	502L75
Support (aux. floor side panel)	115A46-7
Support (aux. seat cushion)	607A62
Support (brake pedal)	01508
Support (back window outside lower moulding)	424A02
Support (console panel front)	045B28
Support (console panel glove compt. door catch)	06152
Support (front door pull handle)	22684
Support (front seat back pivot)	617C04-5
Support (front seat back side shield lower)	62296-7
Support (front seat back trim panel)	61606
Support (front seat cushion side shield front)	62168-9
Support (front seat cushion side shield rear)	62194-5
Support (front seat horizontal regulator)	60446
Support (front seat pad adjusting)	65514
Support (front seat regulator horizontal nut)	617A98
Support (front seat shoulder strap retainer)	60292-3
Support (front seat track rear)	61796
Support (glove compt.)	060K81
Support (instrument panel finish upper)	044B24
Support (instrument panel to cowl top bracket)	044F34
Support (instrument panel wiring)	046B10-1
Support (instrument panel pad)	04746
Support (luggage compt. carrier)	55140

INDEX

PART NAME	GROUP NUMBER
S — Cont'd	
Support (luggage compt. door lift bracket)	427A94-5
Support (lower back panel extension)	404B02
Support (package tray to rear roof rail inner)	52566-7
Support (package tray trim panel)	46802
Support (quarter panel upper reinforcement)	278C44
Support (quarter trim panel)	31492-3
Support (quarter window bracket lower)	298A76
Support (quarter window bracket upper)	298A44-5
Support (quarter window guide lower)	29790-1
Support (rear door pull handle)	22684
Support (rear door scuff plate)	13220
Support (rear seat back)	62400
support (rear seat back inner)	62454
Support (roof air deflector panel)	50862
Support (roof headlining)	52101-10
Support (roof luggage carrier front)	55140-1
Support (roof luggage carrier rear)	55140-1
Support (roof side rear trim panel)	519B92-3
Support (roof sliding panel housing)	518B02-3
Support (spare wheel to floor)	47066
Support (storage compt. latch striker)	11510
Support (tailgate side weatherstrip)	41643
Support (visor arm clip)	04002
Support (windshield outside top moulding)	03800
Support assy. (front seat regulator horizontal nut)	617A98-9
Switch assy. (door lock cylinder)	220A40
T	
Table and game kit	279B76
Tailgate (less moulding holes & hinges)	40709
Tip (folding top rear bow)	514A00
Top (folding less trim, motor & lifts)	53000
Track (front seat inner)	61644
Track (roof opening panel headlining)	51524-5
Track assy. (front seat)	61704-5
Transfer (body side)	20748
Transmission assy. (front seat adjusting)	618A48-9
Trough (belt side corner drain)	41882-3
Trough (luggage compt. door lower corner drain)	45118-9
Trough (luggage compt. door side drain)	45114-5
Trough (luggage compt. door upper drain)	44840
Tube (fuel filler housing drain)	280B12
Tube & Cable (front seat track ajusting)	617B12-5
V	
Valve (cowl top with drain)	023A30-1
Valve (front door vent air outer lock side)	014A08
Valve (tailgate drain)	103A58
W	
Washer (back window glass bracket)	422B50
Washer (front door window regulator roller)	270A58
Washer (front seat track link)	618C40
Washer (quarter window regulator roller)	270A58
Washer (rear door window regulator roller)	270A58
Washer (roof luggage carrier rail nut)	550A64
Washer (sliding roof handle)	502B50
Washer (tailgate window regulator roller)	270A58
Weatherstrip (back window glass)	42084
Weatherstrip (back window glass lower side run)	420A20-1
Weatherstrip (folding top front side rail)	53986-7
Weatherstrip (folding top no. 1 bow)	51325
Weatherstrip (folding top side rail center)	51564-5
Weatherstrip (folding top side rail rear)	51566-7
Weatherstrip (door repair on body)	205A28
Weatherstrip (front door)	20530-1
Weatherstrip (front door at belt inner)	20568-9
Weatherstrip (front door at belt inside)	21456-7
Weatherstrip (front door at belt outside)	21452-3
Weatherstrip (front door opening)	20708-9
Weatherstrip (front door vent window-front)	21448-9
Weatherstrip (luggage compt. door)	43720
Weatherstrip (opera window)	29904-5
Weatherstrip (quarter vent window)	30248-9
Weatherstrip (quarter window at belt inner)	29744-5
Weatherstrip (quarter window at belt outer)	29732-3
Weatherstrip (quarter window front)	30146-7
Weatherstrip (quarter window inner rear)	30254-5
Weatherstrip (quarter window rear stationary glass)	29904
Weatherstrip (rear door)	25324-5
Weatherstrip (rear door) on body	253A10-1
Weatherstrip (rear door glass at belt inside)	25860-1
Weatherstrip (rear door glass at belt outside)	25596-7
Weatherstrip (rear door glass front)	25854-5
Weatherstrip (rear door stationary window)	26928
Weatherstrip (roof panel opening)	502A90
Weatherstrip (roof side rail)	51222-3
Weatherstrip (roof side rail rear)	513A68-9
Weatherstrip (sliding roof panel front)	502C50
Weatherstrip (sliding roof panel rear)	502C12
Weatherstrip (tailgate)	41608
Weatherstrip (tailgate inside belt)	42072
Weatherstrip (windshield)	03110
Window assy. (front door vent)	21402-3
Wire (front seat control)	617A45
Wiring (folding top side tension)	52806

COPYRIGHT © 1986— FORD MOTOR COMPANY —DEARBORN, MICHIGAN

1973/79
LINCOLN-MERCURY CARS

YEAR	MODEL/RESTRICTIONS	PART NUMBER	DESCRIPTION	QTY.
00000-1	BODY ASSY.-Order by Description			
001A04	DEFLECTOR (FRONT AIR)			
78/	G	D8DZ 66001A04-A		1
001A06	AIRFOIL (FRONT SPOILER)			
79	A	D9AZ 54001A06-A		1
79	F	D90Z 65001A06-A		1
79	L(Cobra)	D9FZ 64001A06-A	Paint to match	1
00145	SHIM (BODY MOUNT)-Also refer to Body Bolt Chart at end of this Section			
73/76	A,C,D,K,Y	D9AZ 5400145-A	3/32" thick (split)	AR
77/78	A,D,K			AR
79	A,D,K			1
74/	F			AR
73/76	C,D,K	D30Z 6500145-A	29/64" thick	AR
74/	F			AR
77/	D,K			AR
73/76	C,D,K	D30Z 6500145-B	3/32" thick (solid)	AR
77/	D,K			AR
74/	F			AR
73/76	C,K	D20Z 6500145-A	1/16" thick-1 3/4" O.D.	AR
77/	K			AR
74/	F			AR
73/	D	C9AZ 6200145-A	1/16" thick x 2 9/32" O.D.	AR
00154-5	ABSORBER (BODY BOLT)-Also refer to Body Bolt Chart at end of this Section			
73/76	A(53,57,65),Y(53,65)	★ D3AZ 6500154-A	Upper-2 1/4" O.D.	2
77/78	A(53,65)	Not replaced (12/84)		2
		D70Z 6500155-A	Lower-yellow	2
79	A	E2AZ 5400155-A	Lower-2" O.D.-4 bolt holes	2
		D9AZ 5400155-B	Lower-2" O.D.-less holes	2
73/76	C	D70Z 6500155-A	Lower-yellow	2
74	A			2
75/76	F			2
77/78	A(71)	D70Z 6500155-A	Lower-yellow	2
74/76	A,Y	D4AZ 6500155-A	Lower-1 29/32" O.D.	AR
77/78	A			2
73/76	C	D20Z 6500155-C	Lower-2" O.D.-rubber	AR
74/	F			AR
75/76	C,F	D50Z 6500155-A	Lower-2 13/64" O.D.-rubber/steel	AR
77/	F			2
77/	F	D70Z 6500155-A	Lower	2
73	D	D3VY 6500155-A	Lower-2" O.D.	2
73/	D	★	Upper-27/64" I.D. x 1 1/2" O.D.	2
		★	Lower-1 1/4" I.D. x 2 1/8" O.D.	2
		D0VY 6500154-B	Upper and lower-1 7/8" O.D.-rubber	AR
74/	D	D70Z 6500155-A	Lower-yellow	2
		D4VY 6500154-A	Upper-2 9/32" O.D.	2
77/	D	D0VY 6500154-B	Lower	2
77/	D	D6SZ 6500155-A	Lower-2" O.D.-rubber	2
73/	K	D6SZ 6500155-A	Lower-2" O.D.-rubber/steel	2
75/	K	D5SZ 6500155-A	Lower-1/2" O.D.	4
00163	RETAINER (BODY BOLT ABSORBER UPPER)-Also refer to Body Bolt Chart at end of this Section			
73/76	A,Y	D3AZ 6500163-A	2 1/4" O.D.-used to attach body to frame	2
			Used to attach spare tire	1
77/78	A			2
73/76	A(53,65),Y(53,65)	C8AZ 6200163-A	51/64" thick	2
77/78	A(53,65)			2
73/	D			2
73	K			2
73/76	C	D20Z 6500163-A	1 27/32" O.D.	2
74/	F			2
73/	D	C8AZ 6200163-B	1 13/32" x 2 1/4"	2
73/	K			2

COPYRIGHT © 1986— FORD MOTOR COMPANY —DEARBORN, MICHIGAN

NEW ISSUI

1973/79 LINCOLN-MERCURY CARS

YEAR	MODEL/RESTRICTIONS	PART NUMBER	DESCRIPTION	QTY.
002A20	DEFLECTOR (AIR FRONT END)			
77/78	V	D74Y 54002A20-A		2
78/	G			1
78	F	D80Z 65002A20-A		2
79	F	D90Z 65002A20-A		2
00394	BOLT (BODY MOUNTING)-Also refer to Body Bolt Chart at end of this Section			
77/78	A,D "From 12/1/76"	D7AZ 7100394-A	7/16"- 14 X 3" hex hd	AR
79	D			AR
73/76	C,F,K	385123-S2	(BB-196-D)-1/2"-13 x 2 3/4" hex. hd.	AR
73/76	C,D,F,K	389176-S2	7/16"-14 x 2 11/16" hex. hd.	AR
77/	D,F,K,			4
00396	ABSORBER and RETAINER ASSY. (BODY BOLT UPPER)-Also refer to Body Bolt Chart at end of this Section			
73/76	A,Y	★	2 3/4" O.D.	AR
		D3AZ 6500396-A	3" O.D.	AR
77/78	A			AR
77/78	A	D7AZ 7100396-B		AR
79	A	E1AZ 5400396-A	Upper-2 1/2" O.D.-8 holes	4
	A	E1AZ 5400396-B	Upper-2 1/2" O.D.-6 holes	2
	A(74)	★	Upper-2 1/2" O.D.-white	2
	A	E0AZ 5400396-E	Upper-2 1/2" O.D.-12 holes	2
	A	★	Upper-2 1/2" O.D.-orange	2
	A	★	Upper-2 1/2" O.D.-blue	2
73/76	C	D30Z 6500396-A	2 1/2" O.D. with 1/2" hex. shaft	2
74/	F			2
74	D	D3AZ 6500396-A	3" O.D.	1
01481	GASKET (AIR VENT DUCT)			
75/	G	D5DZ 6601481-A		1
01508	SUPPORT (BRAKE PEDAL)			
79	A	E0AZ 5401508-A		1
77/	G - - w/o 4 wheel disc brakes "From 7/4/77"	D7DZ 6601508-A		1
79	J - - A/T	E0BZ 5401508-A		1
79	J - - M/T	E0BZ 5401508-B		1
78/	P - - A/T	E3SZ 6301508-A		1
78/	P - - M/T	E0BZ 5401508-B		1
015A08	Refer to group 01524			
01610	PANEL (DASH)			
79	A	E2AZ 5401610-B		1
76/77	G - - integral A/C	E2BZ 3601610-D		1
77	V			1
79	J - - w/o integral A/C	E2BZ 3601610-A		1
79	J - - integral A/C	E2BZ 3601610-B		1
78	P - - w/o integral A/C	D9ZZ 6601610-A		1
79	P - - w/o integral A/C	E2BZ 3601610-A		1
78/79	P - - integral A/C	E2BZ 3601610-B		1
016A52	EXTENSION (DASH PANEL UPPER CENTER)			
79	A	D9AZ 54016A52-A		1
01670-1	INSULATOR (DASH PANEL)			
79	A	(RH) E1VY 5401670-A	(LH) E1VY 5401671-A	1
79	J - - w/o integral A/C	(RH) D8BZ 5401670-A	(LH) E1ZZ 6601671-A	1
79	J - - integral A/C	(RH) ★	(LH) E1ZZ 6601671-A	1
78/	P - - w/o integral A/C	(RH) E1DZ 5401670-A	(LH) E1DZ 5401671-B	1
78/	P - - integral A/C	(RH) E3DZ 5401670-B	(LH) E1DZ 5401671-B	1

1973/79
LINCOLN-MERCURY CARS

YEAR	MODEL/RESTRICTIONS	PART NUMBER	DESCRIPTION	QTY.
01691	RETAINER (DASH INSULATOR)			
73/76	A,C,K,Y	C8ZZ 6501691-A		AR
77/78	A,K			AR
79	K			AR
73/76	C		Seat belt anchor	AR
74/	F			AR
74/	L			3or4
78/	D			1
78/	P	D8BZ 5401691-A		2
79	J	D8BZ 5401691-A		AR
01714-5	BRACE (DASH PANEL TO FRAME)			
79	A	(RH) D9AZ 5401714-A	(LH) D9AZ 5401715-A	1
017A98	COVER (DASH PANEL WIRING)			
73/76	C,F,K	D50Z 65017A98-A		1
77/	F,K			1
76	D	D6VY 60017A98-A		1
73/	C,K	353675-S2	(GG-325)-clip (spring)	1
018B08	LOUVER (COWL VENT AIR REGULATOR)			
73/76	C	D20Z 65018B08-A		1
74/	F			1
01815	REGISTER (DASH PANEL VENT AIR)			
73/	F - - integral A/C		Center-refer to group 19893 in Chassis Section	
73	F	383938-S2	(UU-52-V)-screw-hex. washer hd.-No. 8-12 x 1/2"	2
018A16-7	SCREEN (COWL TOP VENT)			
73/76	A,D,Y	D1AZ 65018A16-A	R.H. and L.H.	2
77/78	A,D			2
73/76	C	(RH) D50Z 65018A16-A	(LH) D50Z 65018A17-A	1
74/	F			1
018B50	ADAPTER (VENT AIR DUCT)			
75/	G	D5DZ 66018B50-A		1
01878	CONNECTOR (COWL VENT AIR DUCT)-Also refer to group 18C387 in Chassis Section			
78/	P	(RH) D8BZ 5401878-A	(LH) D8BZ 5401878-B	1
79	J	(RH) D8BZ 5401878-A	(LH) D8BZ 5401878-B	1
01890-1	CONTROL (COWL VENT AIR OUTLET DUCT)			
73/76	A,Y	(RH) ★	(LH) D6AZ 6501891-A Black knob	1
77/	A,Y			1
73/76	C	(RH) D30Z 6501890-A	(LH) D30Z 6501891-A	1
74/	F			1
75/	G "From 10/1/74"	(RH) D5DZ 6601890-B	(LH) D5DZ 6601891-A Incl. "Vent" lettering	1
75/	L	(RH) D9FZ 6201890-A	(LH) D9FZ 6201891-A	1
73	P "Before 2/5/73"	(RH) D5DZ 6201890-A	(LH) ★	1
73/75	P "From 2/5/73"	(RH) D5DZ 6201890-A	(LH) D3DZ 6201891-A	1
76/77	P	(RH) D5DZ 6201890-A	(LH) ★	
78/	P	(RH) D8BZ 5401890-A	(LH) D8BZ 5401891-A	1
79	J	(RH) D8BZ 5401890-A	(LH) D8BZ 5401891-A	1
73	F	384353-S4	(MM-173-X)-nut-hex. hd. lock-7/16"-14	1
		383358-S	(MM-260)-nut-spring-3/16"	2
74/	L	383358-S	(MM-260)-nut-spring-3/16"	2
73/77	P	378897-S7-8	(GG-162-A)-clip	1
		376912-S2	(MM-263-F)-nut-spring-2/16"	1
018A90	REINFORCEMENT (FRESH AIR CONTROL)			
79	J,P, - - w/o integral A/C	D9ZZ 66018A90-A	R.H. and L.H.	2
01934-5	DUCT (COWL VENT AIR OUTLET) - Also refer to group 19893 in Chassis Section			
73/76	A,Y - - integral A/C	(RH) C9AZ 6201934-D	(LH) ★ Not repl'd (1/84)	1
77/78	A - - integral A/C			1
73/	D - - integral A/C or A.T.C.	C9AZ 6201934-D	R.H.	1
74/	L - - w/o integral A/C	(RH) D4FZ 6201934-A	(LH) ★	1
78/	P	D8BZ 5401935-A	L.H. R.H.-refer to group 19893 in Chassis Section	1

COPYRIGHT © 1986— FORD MOTOR COMPANY —DEARBORN, MICHIGAN

NEW ISSU

1973/79 LINCOLN-MERCURY CARS

YEAR	MODEL/RESTRICTIONS	PART NUMBER	DESCRIPTION	QTY.
01934-5	DUCT (COWL VENT AIR OUTLET)-Also refer to group 19893 in Chassis Section +5FCont'd			
79	J	D8BZ 5401935-A	L.H. R.H.-refer to group 19893 in Chassis Section	1
73/78	A,F	55914-S2	(U-254-F)-screw-hex. washer hd.-1/4"-14	1
		383358-S	(MM-260)-nut-spring-3/16"	2
		382764-S2	(BB-643-CB)-clip-1/4"-20 x 1"	3
73/	P	376912-S2	(MM-263-F)-nut-spring-cap-3/16"	1
01999	GASKET (COWL VENT AIR DUCT TO COWL TOP PANEL)			
78/	P	(RH) D8BZ 5401999-A	(LH) D8BZ 5401999-C Inlet	1
78/	P	D8BZ 5401999-B	L.H. outlet 1/4" thick	1
79	J	D8BZ 5401999-B	L.H. outlet 1/4" thick	1
79	J	(RH) D8BZ 5401999-A	(LH) D8BZ 5401999-C Inlet	1
02010	PANEL (COWL TOP)			
78/	G - - w/o integral A/C	D8DZ 6602010-A		1
79	J - - w/o integral A/C	E1ZZ 6602010-A		1
79	J - - integral A/C	E1ZZ 6602010-B		1
78/	L "From 6/19/78"	D9FZ 6202010-A		1
78/	P - - w/o integral A/C	D9BZ 5402010-A		1
78/	P - - integral A/C	D9BZ 5402010-B		1
02012	PANEL (COWL TOP OUTER)			
79	A	D9AZ 5402012-A		1
02038-9	PANEL (COWL SIDE)			
78	P "Before 7/12/78"	(RH) ★ D8BZ 5402038-A Not repl'd (3/82)	(LH) D8BZ 5402039-A	1
78/	P "From 7/12/78"	(RH) D9ZZ 6602038-A	(LH) D8BZ 5402039-A	1
79	J	(RH) D9ZZ 6602038-A	(LH) D9ZZ 6602039-A	1
02207	TUBE (COWL TOP INNER PANEL DRAIN)			
79	A	D9AZ 6502207-A		1
02228	GRILLE (COWL TOP VENT)			
78/	P	D9BZ 5402228-B	Paint to match	1
79	J	D9ZZ 6602228-A	Paint to match	1
02316	RETAINER (COWL TOP VENT GRILLE)			
79	J	D9ZZ 6602316-A	Outer	2
		D9ZZ 6602316-B	Inner	2
79	P	★ D9BZ 5402316-A	Repl. by D9BZ 5402316-B (8/84)	8
023A36	BRACKET (COWL TOP INNER PANEL BRACE UPPER)			
79	A	D9AZ 54023A36-A		1
023A38	BRACKET (COWL TOP INNER PANEL BRACE LOWER)			
79	A	D9AZ 54023A38-A		1
023A40	BRACE (COWL TOP INNER PANEL)			
79	A	D9AZ 54023A40-A		1
02396	Refer to Exterior Moulding Section at the end of this catalog			
02500-1	PILLAR (FRONT BODY LOWER)			
79	A	(RH) D9AZ 5402500-A	(LH) D9AZ 5402501-A	1
73/76	C	(RH) D80Z 6502500-A	(LH) ★ D20Z 6502501-A	1
74/77	F		Not repl'd (3/82)	1
78/	F	(RH) D80Z 6502500-A	(LH) D80Z 6502501-A	1
75/	G	(RH) D7DZ 6602500-A	(LH) D7DZ 6602501-A	1
79	J	(RH) E0ZZ 6602500-A	(LH) E0ZZ 6602501-A	1
78/	P(36)	(RH) E1BZ 3602500-A	(LH) E1BZ 3602501-A	1
78/	P(54,66,74)	(RH) E1DZ 5402500-A	(LH) E1DZ 5402501-A	1
77/	V	(RH) D7DZ 6602500-A	(LH) D7DZ 6602501-A	1
73/74	D,F,K	377678-S	(PP-3-E)-plug (button)-1" dia. hole-L.H.	1
02504-5	PILLAR (FRONT BODY UPPER)			
79	A	(RH) D9AZ 5402504-A	(LH) D9AZ 5402505-A	1
02512-3	Refer to Exterior Moulding Section at the end of this catalog			

YEAR	MODEL/RESTRICTIONS	PART NUMBER	DESCRIPTION	QTY.
025A64-5	EXTENSION (PANEL COWL TOP INNER)			
79	A	(RH) D9AZ 54025A64-A	(LH) D9AZ 54025A65-A	1
026A24-5	Refer to Exterior Moulding Section at the end of this catalog			
02638	PLATE (FRONT BODY PILLAR HINGE ANCHOR)			
79	A	D9AZ 5402638-A	R.H. and L.H.-upper and lower	4
73/76	C,K,L	D1FZ 6202638-A	R.H. and L.H.-upper and lower	4
77/	K,L			1
74/	F			4
79	J,P	D9ZZ 6602638-A	R.H. and L.H.-upper and lower	4
030A12	SPACER (WINDSHIELD GLASS)			
78/	G,P,V	D8ZZ 69030A12-A		2
78/	K - - "Diamond Jubilee Edition"		R.H. and L.H.-rear quarter window	2
030A28	SEAL (WINDSHIELD GLASS) - Refer to group 19562 in Paint Section for service replacement			

YEAR	MODEL/RESTRICTIONS	PART NUMBER CLEAR	PART NUMBER TINTED	NAGS NO.	DESCRIPTION	QTY.
03100	GLASS (WINDSHIELD)					
	To convert ball type to flat type mirror bracket use group 17698 in Chassis Section					
73/74	A(53,57,71),Y(53,71)	D3AZ 5303100-A	D3AZ 5303100-B	W798		1
75/76	A(53,71),Y(53,71)					1
77/78	A(53,71)					1
73/76	A(65),Y(65)	D3AZ 6503100-A	D3AZ 6503100-B	W799		1
77/78	A(65)					1
79	A	D9AZ 5403100-A	D9AZ 5403100-B	W899		1
73/76	C	D90Z 6503100-A	D90Z 6503100-B	W791		1
73/74	D		D3VY 6503100-A	W802		1
75/79	D		D9VY 6003100-A	W834		1
73	F	D3ZZ 6503100-A	D3ZZ 6503100-B	W801		1
74/78	F	D20Z 6503100-A	D20Z 6503100-B	W791		1
79	F	D90Z 6503100-A	D90Z 6503100-B	W791		1
75/	G	D5DZ 6603100-A	D5DZ 6603100-B	W835		1
77/	V		D74Y 5403100-A	W882	Gray border	1
74/78	J		D4RY 6203100-A	FCW217		1
73/78	J	D0RY 6203100-A		FCW217		1
79	J	D9ZZ 6603100-A	D9ZZ 6603100-B	W900		1
73/76	K	D2SZ 6503100-B	D2SZ 6503100-A	W792	Unheated	1
77/79	K		D9LY 6503100-A	W868	Unheated	1
74/76	K		D4SZ 6503100-A	W825	Heated	1
74/78	L	D1FZ 6203100-A	D1FZ 6203100-B	W774		1
79	L	D9FZ 6203100-A	D9FZ 6203100-B	W892		1
73/77	P	D2DZ 6203100-A	D2DZ 6203100-B	W797		1
78/	P(36)	D9BZ 3603100-A	D9BZ 3603100-B	W883		1
78/	P(54,66,74)	D9BZ 5403100-A	D9BZ 5403100-B	W884		1

YEAR	MODEL/RESTRICTIONS	PART NUMBER	DESCRIPTION	QTY.
03110	WEATHERSTRIP (WINDSHIELD)-Also refer to group 19562 in Paint Section			
73/78	J	D0RY 6203110-A		2
75/78	L	D5FZ 6203110-A		1
73/77	P	D2DZ 6203110-A		1
03136-49	Refer to Exterior Moulding Section at the end of this catalog			
03166	RETAINER (WINDSHIELD OUTSIDE)			
78/	D,K	D8VY 6003166-A		AR
03243	STRIP (WINDSHIELD)			
73/76	A,C,D,F,K,Y	D3AZ 6503243-A	61" long-cut to fit	1
77/78	A,D,F,K			1
79	A,D,F,K			1

COPYRIGHT © 1986 — FORD MOTOR COMPANY — DEARBORN, MICHIGAN

1973/79 LINCOLN-MERCURY CARS

YEAR	MODEL/RESTRICTIONS	PART NUMBER	DESCRIPTION	QTY.
03296-7	STOP (WINDSHIELD GLASS)			
79/	A	(RH) E0VY 5403296-A	(LH) D9AZ 5403297-A	1
03406	Refer to group 03556			
03408	PANEL (WINDSHIELD HEADER)			
79	A(54,66)	D9AZ 5403408-A		1
79	A(74)	D9AZ 7403408-A		1
79	J	D9ZZ 6603408-A		1
78/	P	D8BZ 5403408-A		1
03552	RETAINER (WINDSHIELD GARNISH MOULDING UPPER)			
79	A	D9AZ 5403552-A		4
03556	RETAINER (WINDSHIELD GLASS)			
79	G	D5DZ 6603406-A		1
79	V "From 8/15/78"			1
03598-9	MOULDING (WINDSHIELD GARNISH SIDE)			
79	A	(RH) D9AZ 5403598-A8Y	(LH) D9AZ 5403599-A8Y Paint to match	1
73/76	C "From 6/15/73"	(RH) D40Z 6503598-A	(LH) D40Z 6503599-A Paint to match	1
78/	D	(RH) D8VY 6003598-A	(LH) ★ Paint to match	1
74/	F	(RH) D40Z 6503598-A	(LH) D40Z 6503599-A Paint to match	1
75/	G	(RH) D7DZ 6603598-A	(LH) D7DZ 6603599-A Paint to match	1
79	J	(RH) D9ZZ 6603598-A4T	(LH) D9ZZ 6603599-A4T Paint to match	1
77/	K	(RH) D7LY 6503598-A	(LH) D7LY 6503599-A Vinyl-paint to match	1
78/	P(36)	(RH) D8BZ 3603598-A	(LH) D8BZ 3603599-A Paint to match	1
78/	P(54,66,74)	(RH) D8BZ 5403598-A	(LH) D8BZ 5403599-A Paint to match	1
77/78	V "Before 10/3/77"	(RH) D7DZ 6603598-A	(LH) ★ Vinyl-paint to match	1
03606	MOULDING (WINDSHIELD GARNISH UPPER) - Incl. attaching parts			
79	A	D9AZ 5403606-A	Paint to match	1
73/76	C "From 6/15/73"	D40Z 6503606-A	Paint to match	1
74/	F			1
79	J	E3ZZ 6103606-A	Paint to match	1
78/	L	D8FZ 6203606-A4T	Chamois "Paint to match"	1
78/	P	E3BZ 3603606-A	Paint to match	1
03836	SPACER (WINDSHIELD GLASS)			
78/	L	D9FZ 6203836-A		AR

BODY BOLT CHART

HOW TO FIND BOLTS and RELATED PARTS

1) To determine Body Bolts and Related Parts you must know

a) YEAR
b) CAR LINE
c) BODY TYPE
d) BODY BOLT LOCATION
e) NAME OF PART

2) Using this information and the typical illustration shown on page 8. refer to the charts beginning on page 8.

3) Locate the appropriate Code Number for Bolts, Nuts, Retainer etc.

4) Translate the Code Number into a Service Part Number by referring to the Cross Reference listing beginning on page 20.

Read down to locate Code Number.

Read across to locate Service Part Number.

EXAMPLE

a) Year	1973
b) Car Line	MERCURY
c) Body Type	53,57,65
d) Body Bolt Location	Number 10
e) Name of Part	Absorber, Bolt, Flat washer, Lockwasher, Retainer, Shim and Spacer

Code Numbers listed are		Parts numbers shown for these Codes are
Absorber	11	D3AZ 6500154-A
Absorber/retainer	12	D3AZ 6500396-A
Bolt	133	D7AZ 7100394-A
Lockwasher	4	★384294-S
Retainer	18	C8AZ 6200163-A
Shim	32	C9AZ 6200145-A

COPYRIGHT © 1986— FORD MOTOR COMPANY —DEARBORN, MICHIGAN

BODY BOLT CHART — Cont'd

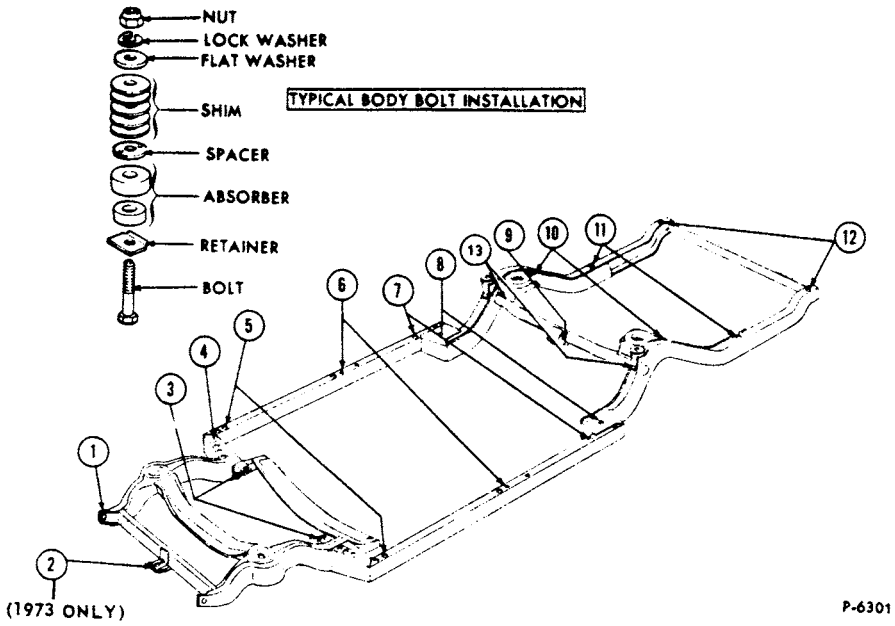

1973/ MERCURY, METEOR, MARK IV and LINCOLN
1973/76 MONTEGO, 1974/ COUGAR

BODY BOLT CHART

BODY TYPE	PART NAME	BODY BOLT LOCATION													
		1	2	3	4	5	6	7	8	9	10	11	12	13	14
		PART CODE NUMBER													
Notes:	● If bolts are removed new bolts must be installed														
1973															
A (Mercury) and (Meteor)															
All	Absorber				11		21						33		
All	Absorber	10			9										
All	Absorber/retainer	22					60								
Exc. 71	Absorber							6			11				
71	Absorber							23	30			30	30		
	Absorber and stud							24							
	Absorber								33			33			
	Absorber/bracket													62	
	Absorber/bracket													63	
Exc. 71	Absorber/retainer										12		13		
	Absorber											7			
All	Bolt	5			15										
71	Bolt								43			16	31		
Exc. 71	Bolt												16		
71	Lockwasher								4		4	4			
All	Nut	1			2			27							
	Nut							29							

BODY BOLT CHART

BODY TYPE	PART NAME	BODY BOLT LOCATION													
		1	2	3	4	5	6	7	8	9	10	11	12	13	14
		PART CODE NUMBER													
Notes:	● If bolts are removed new bolts must be installed — Cont'd														
1973															
A (Mercury) and (Meteor)															
Exc. 71	Retainer										18		17		
71	Retainer											17	34		
71	Shim								32						
All	Shim	37													
71	Spacer							25							
71	Stud							26							
All	Washer				3			28							
C (Montego)															
All	Absorber	38			45	41	46					45	45	45	
	Absorber/retainer	39													
Exc. 71	Absorber						46								
All	Absorber						45								
	● Bolt	5	65		43		43					43	43	43	
	Nut	1													
	Retainer	40													
	Shim	35			42							42	42	42	
	Shim	37													
	Shim	36													
71	Shim						42								
D (Lincoln)															
All	Absorber–upper			67		71		23			8				
	Absorber–lower	10		68		72						68	68		
	Absorber/retainer –upper	66									74				
71	Absorber and stud							24							
All	● Bolt	65		43		70						16	16		
	Lockwasher			4							4	4	4		
	Nut	1						29							
	Retainer	19		34							18	17	17		
	Retainer			69											
	Shim	49													
	Shim	50										32	32		
	Shim	51													
	Spacer							★							
	Stud							77							
	Washer							28							

COPYRIGHT © 1986 — FORD MOTOR COMPANY — DEARBORN, MICHIGAN

1973/79 LINCOLN-MERCURY CARS

BODY BOLT CHART

BODY TYPE	PART NAME	BODY BOLT LOCATION													
		1	2	3	4	5	6	7	8	9	10	11	12	13	14
		PART CODE NUMBER													

Notes: ● If bolts are removed new bolts must be installed — Cont'd

1973

K (Mark IV)

All	Absorber	53			52		48	52			59	52	52		
	Absorber/retainer	57			56			56				58	55		
	● Bolt	5			43			43				43	43		
	Nut	1													
	Retainer	54													
	Shim	49			42							42	42		
	Shim	50													
	Shim	51													

Y (Meteor)

Refer to "A" (Mercury)

1974

A (Mercury) and (Meteor)

All	Absorber				87								30		
	Absorber				88	84	84					70	85		
	Absorber–lower	10					69						67		
	Absorber/retainer	22												83	
71	Absorber/retainer							79					79		
53,57,65	Absorber										11				
71	Absorber				86		90	30							
	Absorber					21		67							
	Absorber/bracket–R.H.													81	
	Absorber/bracket–L.H.													82	
All	● Bolt	64											80		
71	● Bolt							31					31	16	
All	Lockwasher												4		
71	Lockwasher							4						4	
All	Nut	1			2										
71	Nut												★		
All	Retainer	19													
53,57,65	Retainer–lower												17		
	Retainer–upper										18				
71	Retainer–lower							17					34		
All	Shim	37													
71	Shim							32							
All	Stud				66										
	Washer				3										
	Shim	78													

BODY BOLT CHART

BODY TYPE	PART NAME	BODY BOLT LOCATION													
		1	2	3	4	5	6	7	8	9	10	11	12	13	14
		PART CODE NUMBER													

Notes: ● If bolts are removed new bolts must be installed — Cont'd

1974

C (Montego and Cougar)

All	Absorber	38			45		45					45	45		
	Absorber/retainer	39													
53	Absorber					41									
53	Absorber						46							45	
All	● Bolt	65			43		43					43	43		
53	● Bolt													43	
All	Nut	1			★							★	★		
	Retainer	40													
	Shim	35			42		42					42			
	Shim	37													
	Shim	36													
53	Shim													42	

D (Lincoln)

All	Absorber–upper			67		71		23							
	Absorber–lower	10		68		72		76				68	68		
	Absorber/retainer –upper	66									74				
	● Bolt	65		43		70						16	16		
	Lockwasher			4							4	4	4		
	Nut	1						29							
	Retainer	19		34							18	17	17		
	Retainer			69											
	Shim	49													
	Shim	50										32	32		
	Shim	51													
	Spacer							★							
	Stud							77							
	Washer							28							

F (Cougar)

Refer to "C" (Montego)

K (Mark IV)

All	Absorber	53			52		48	52				52	52	59	
	Absorber/retainer	72			56			56				58	58		
	● Bolt	65			43			43				43	43		
	Nut	1													
	Nut				★			★				★	★		
	Retainer	54													
	Shim	50			42			42				42	42		
	Shim	49													
	Shim	51													

COPYRIGHT © 1986 — FORD MOTOR COMPANY — DEARBORN, MICHIGAN

1973/79 LINCOLN-MERCURY CARS

BODY BOLT CHART

BODY TYPE	PART NAME	BODY BOLT LOCATION													
		1	2	3	4	5	6	7	8	9	10	11	12	13	14
		PART CODE NUMBER													

Notes: ● If bolts are removed new bolts must be installed — Cont'd

1974

Y (Meteor)

Refer to "A" (Mercury)

1975

A (Mercury) and (Meteor)

All	Absorber			100	105		100						87		
	Absorber						87								
53,65	Absorber											90			
71	Absorber			103								101			
All	Absorber–lower	10													
53,65	Absorber–upper										11				
All	Absorber/retainer	22													
53,65	Absorber/retainer										83		13		
71	Absorber/retainer						79						79		
71	Absorber/bracket–R.H.													81	
	Absorber/bracket–L.H.													82	
All	● Bolt												16		
	● Bolt						16								
53,65	● Bolt	64													
71	● Bolt	102													
All	Clip						94						94		
	Lockwasher						4				4		4	4	
	Nut	1			2										
	Retainer	19			104		17						17		
53,65	Retainer										18				
71	Retainer												34		
All	Shim	78													
	Shim	37													
	Stud				107										

C (Montego) and F (Cougar)

All	Absorber				41	41	41								
	Absorber/retainer	39													
53,65	Absorber/retainer							110	97						
71	Absorber/retainer					109									
All	Absorber–lower	38		45											
53,65	Absorber–lower							111	45			45			
71	Absorber–lower					111	45	45							
All	● Bolt	65		43				43							
71	● Bolt					43	43								
53,65	● Bolt								43			43			
All	Nut	1													
	Retainer	40				54									
	Shim	35		42				42							
	Shim	37													
	Shim	36													
53,65	Shim								42			42			
71	Shim					42	42								

BODY BOLT CHART

BODY TYPE	PART NAME	BODY BOLT LOCATION													
		1	2	3	4	5	6	7	8	9	10	11	12	13	14
		PART CODE NUMBER													

Notes: ● If bolts are removed new bolts must be installed — Cont'd

1975

D (Lincoln)

All	Absorber–upper	97		98	71			23							
	Absorber–lower	10		92	96			24				68	68		
	Absorber/retainer										74	99	99		
	● Bolt	65		43	70			77				16	16		
	Clip											94	94		
	Lockwasher			4							4	4	4		
	Nut	1			93				29						
	Nut/retainer				91			91							
	Retainer	19		69							18	17	17		
	Retainer			34											
	Shim	37													
	Shim	36										32	32		
	Shim	35													
	Spacer				73			25							
	Washer							28							

F (Cougar)

Refer to "C" (Montego)

K (Mark IV)

All	Absorber						48							59	
	Absorber/retainer	57										109	109		
	Absorber/lower	53			95			95				95	95		
	● Bolt	65			43			43				43	43		
	Nut	1													
	Retainer	107													
	Shim	36			42			42				42	42		
	Shim	35													
	Shim	37													

Y (Meteor)

Refer to "A" (Mercury)

1976

A (Mercury) and (Meteor)

All	Absorber				105		100						87	87	
53,65	Absorber											90			
71	Absorber			103			113					112			
All	Absorber–lower	10													

COPYRIGHT © 1986 — FORD MOTOR COMPANY — DEARBORN, MICHIGAN

BODY BOLT CHART

BODY TYPE	PART NAME	BODY BOLT LOCATION													
		1	2	3	4	5	6	7	8	9	10	11	12	13	14
		PART CODE NUMBER													
Notes:	● If bolts are removed new bolts must be installed — Cont'd														
1976															
A (Mercury) and (Meteor)															
53,65	Absorber–upper										11				
71	Absorber–upper						120					120	120		
All	Absorber/retainer	22					90								
53,65	Absorber/retainer										83		13		
71	Absorber/retainer						112						112		
71	Absorber/bracket–R.H.													81	
	Absorber/bracket–L.H.													82	
All	● Bolt												16		
	● Bolt						16								
53,65	● Bolt	64													
71	● Bolt	102										115		80	
All	Clip						94					94	94		
	Lockwasher						4				4		4		
	Nut	1			2										
	Retainer	19			194		17						17	17	
53,65	Retainer										18				
71	Retainer												34		
All	Shim	37													
	Stud				107										
C (Montego) and F (Cougar)															
All	Absorber				41	41	41								
	Absorber/retainer	39													
53,65	Absorber/retainer					110	109	110				109			
All	Absorber–lower	38		45											
53,65	Absorber–lower							111	45			45			
71	Absorber–lower					111	45	45							
All	● Bolt	65		43				43							
71	● Bolt					43	43								
53,65	● Bolt								43			43			
All	Nut	1													
	Retainer	40													
	Shim	35		42				42							
	Shim	37													
	Shim	36											42		
53,65	Shim								42			42			
71	Shim					42	42								

BODY BOLT CHART

BODY TYPE	PART NAME	BODY BOLT LOCATION													
		1	2	3	4	5	6	7	8	9	10	11	12	13	14
		PART CODE NUMBER													

Notes: ● If bolts are removed new bolts must be installed — Cont'd

1976

D (Lincoln)

All	Absorber–upper	97		98	71			23							
	Absorber–lower	10		92	96			24				68	68		
	Absorber/retainer										74	99	99		
	● Bolt	65		43	70			77			14	16	16		
	Clip											94	94		
	Lockwasher			4							4	4	4		
	Nut	1			93			29							
	Nut/retainer				91			91							
	Retainer	19		69							18	17	17		
	Retainer			34											
	Shim	36										32	32		
	Shim	35													
	Spacer				73			25							
	Washer							28							

F (Cougar)

Refer to C (Montego)

K (Mark IV)

All	Absorber						48								
	Absorber/retainer	116						118				119	119		
	Absorber/lower	117			95			114				95	95		
	● Bolt	65			43			43				43	43		
	Nut	1													
	Retainer	54													
	Shim	36			42			42				42	42		
	Shim	35													
	Shim	37													

Y (Meteor)

Refer to "A" (Mercury)

1977

A (Mercury)

All	Absorber				105								87		
53,65	Absorber											90			
71	Absorber						84	87	113			123			
All	Absorber–lower	10													
53,65	Absorber–upper										11		30		
71	Absorber–upper											105	120		
All	Absorber/retainer	22													
53,65	Absorber/retainer										122				
71	Absorber/retainer						90	124				122	34		

COPYRIGHT © 1986 — FORD MOTOR COMPANY — DEARBORN, MICHIGAN

BODY BOLT CHART

BODY TYPE	PART NAME	BODY BOLT LOCATION													
		1	2	3	4	5	6	7	8	9	10	11	12	13	14
		PART CODE NUMBER													

Notes: ● If bolts are removed new bolts must be installed — Cont'd

1977

A (Mercury)

All	● Bolt	64													
53,65	● Bolt												16		
71 "Before 12/1/76"	● Bolt							16					125		
71 "From 12/1/76"	● Bolt							133					125		
All	Clip							94					94		
	Lockwasher							4			4	4	4		
	Nut	1			2										
	Retainer	19			104										
53,65	Retainer										18		17		
71	Retainer							17							
All	Shim	51													
	Stud				107										

D (Lincoln)

All	Absorber–upper	116			71			23			18	129	68		
	Absorber–lower	117		92	96			24							
	Absorber/retainer			98							74	127	99		
"Before 12/1/76"	● Bolt	65		43	70			77			43	43	16		
"From 12/1/76"	● Bolt	65		43	70			77			43	43	133		
	Clip												94		
	Lockwasher			4							4	4	4		
	Nut	1			93			29							
	Nut/retainer				91			91							
	Retainer			34									17		
	Retainer	54		69								18			
	Shim	51													
	Shim	36											32		
	Shim	35													
	Spacers				73			25							
	Washer							28							

F (Cougar)

All	Absorber						41								
	Absorber/retainer	39				109		110							
	Absorber/retainer											109			
	Absorber–lower	126				45		111				45	45		
53,65	Absorber–lower													45	
All	● Bolt	65				43		43				43	43	43	
	Nut	1													
	Retainer	40													
	Shim	51				42		42				42	42	42	
	Shim	36													
	Shim	35													

BODY BOLT CHART

BODY TYPE	PART NAME	BODY BOLT LOCATION													
		1	2	3	4	5	6	7	8	9	10	11	12	13	14
		PART CODE NUMBER													

Notes: ● If bolts are removed new bolts must be installed — Cont'd

1977

K (Mark IV)

All	Absorber						48								
	Absorber/retainer	116						118				119	131		
	Absorber/lower	117			95			130				95	95		
	● Bolt	65			43			43				43	43		
	Nut	1													
	Retainer	18													
	Shim	36			42			42				42	42		
	Shim	35													
	Shim	51													

Y (Meteor)

Refer to "A" (Mercury)

1978

A (Mercury)

All	Absorber				105								87		
53,65	Absorber											90			
71	Absorber						84	87	113			123			
All	Absorber–lower	10			106										
53,65	Absorber–upper										11		30		
71	Absorber–upper											105	120		
All	Absorber/retainer	22													
53,65	Absorber/retainer										122				
71	Absorber/retainer						90	124				122	34		
All	● Bolt	64													
53,65	● Bolt												16		
71	● Bolt							133					125		
All	Clip							94					94		
	Lockwasher							4			4	4	4		
	Nut	1			2										
	Retainer	19			104										
53,65	Retainer										18		17		
71	Retainer							17							
All	Shim	51													
	Stud				107										

COPYRIGHT © 1986 — FORD MOTOR COMPANY — DEARBORN, MICHIGAN

1973/79 LINCOLN-MERCURY CARS

BODY BOLT CHART

BODY TYPE	PART NAME	BODY BOLT LOCATION													
		1	2	3	4	5	6	7	8	9	10	11	12	13	14
		PART CODE NUMBER													
Notes:	● If bolts are removed new bolts must be installed — Cont'd														
1978															
D (Lincoln)															
All	Absorber–upper	116			71			23			18	29	68		
	Absorber–lower	117		92	96			24							
	Absorber/retainer			98							74	127	99		
	● Bolt	65		43	70			77			43	43	133		
	Clip												94		
	Lockwasher			4							4	4	4		
	Nut	1			93			29							
	Nut/retainer				91			91							
	Retainer			34									17		
	Retainer	54		69								18			
	Shim	51													
	Shim	36											32		
	Shim	35													
	Spacers				73			25							
	Washer							28							
F (Cougar)															
All	Absorber						41								
	Shim	51													
	Absorber/retainer											109			
	Absorber–lower	126				45		111					45		
53,65	Absorber–lower													45	
All	● Bolt	65				43		43				43	43	43	
	Nut	1													
	Retainer	40													
	Shim	51				42		42				42	42	42	
	Shim	36													
	Shim	35													
K (Mark V)															
All	Absorber						48								
	Absorber/retainer	116						118				119	131		
	Absorber/lower	117			95			130				95	95		
	● Bolt	65			43			43				43	43		
	Nut	1													
	Retainer	18													
	Shim	36			42			42				42	42		
	Shim	35													
	Shim	51													
1979															
A (MERCURY)															
54,66	Absorber/retainer	136		135	135		139		140		139	134	138		
74	Absorber/retainer											137			
All	Absorber–lower	141		142	142		142					142	142		
All	Bolt	147		145	145		145		145		145	145	145		

BODY BOLT CHART

BODY TYPE	PART NAME	BODY BOLT LOCATION													
		1	2	3	4	5	6	7	8	9	10	11	12	13	14
		PART CODE NUMBER													

Notes: ● If bolts are removed new bolts must be installed — Cont'd

1979

A (MERCURY)

All	Clip														
All	Nut														
All	Washer	144													
All	Shim	146													

D (LINCOLN)

All	Absorber–upper	116			71			23			18	29	68		
	Absorber–lower	117		92				24							
	Absorber/retainer			98							74	127	99		
	● Bolt	65		43	70			77			43	43	133		
	Clip												94		
	Lockwasher			4							4	4	4		
	Nut	1			93			29							
	Nut/retainer				91			91							
	Retainer			34									17		
	Retainer	54		69								18			
	Shim	51													
	Shim	36											32		
	Shim	35													
	Spacer				73			25							
	Washer							28							

F (COUGAR)

All	Absorber						41								
	Shim	51													
	Absorber/retainer											109			
	Absorber–lower	126				45		111					45		
53,65	Absorber–lower													45	
All	● Bolt	65				43		43				43	43	43	
	Nut	1													
	Retainer	40													
	Shim	51				42		42				42	42	42	
	Shim	36													
	Shim	35													

K (MARK V)

All	Absorber						48								
	Absorber/retainer	116						118				119	131		
	Absorber–lower	117			95			130				95	95		
	● Bolt	65			43			43				43	43		
	Nut	1													
	Retainer	18													
	Shim	36			42			42				42	42		
	Shim	35													
	Shim	51													

COPYRIGHT © 1986 — FORD MOTOR COMPANY — DEARBORN, MICHIGAN

CODE NUMBER TO PART NUMBER LISTING–Quantity As Required

CODE NO.	PART NUMBER	DESCRIPTION	CODE NO.	PART NUMBER	DESCRIPTION

BODY BOLT CHART — Cont'd

1	382599-S100 (MM-173-MZ)	Nut-hex.-1/2"-13	52	D2SZ 6500155-A	Absorber-1 1/2" O.D.
			53	D3SZ 6500155-A	Absorber
2	384353-S4 (MM-173-X)	Nut-hex.-7/16"-14	54	C8AZ 6200163-B	Retainer
			55	D2SZ 6500396-A	Absorber and retainer
3	356583-S100(XX-170)	Washer-flat-7/16"	56	★ D2SZ 6500396-B	Absorber and retainer-2 1/2" O.D.-upper
4	★ 384294-S	Lockwasher			
5	★ 385103-S2	Bolt-1/2"-13 x 3 7/32"	57	D3SZ 6500396-A	Absorber and retainer-2 1/2" O.D.
6	C9AZ 5A103-A	Absorber			
7	C9AZ 5A103-B	Absorber	58	★ D2SZ 6500396-C	Absorber and retainer-upper
9	D3AZ 6500155-B	Absorber-lower	59	D2SZ 5A103-B	Absorber
10	D3AZ 6500155-A	Absorber-lower	60	D3AZ 5C036-A	Absorber-2 1/2" x 14 1/2"
11	D3AZ 6500154-A	Absorber-upper	61	D3AZ 6500396-B	Absorber
12	D3AZ 6500396-A	Absorber and retainer-lower	62	D3AZ 71113B26-A	Absorber and bracket-R.H.
13	D3AZ 6500396-B	Absorber and retainer-upper	63	D3AZ 71113B27-A	Absorber and bracket-L.H.
15	C9AZ 6200394-D	Bolt-hex. hd.-7/16"-14 x 3 5/32"	64	385162-S2(BB-551-DE)	Bolt-hex. hd.-1/2"-13 x 3 13/32"
16	C9AZ 7100394-A	Bolt-hex. hd.-7/16"-14 x 3"	65	385163-S2(BB-551-DF)	Bolt-hex. hd.-1/2"-13 x 4 15/52"
17	C5AZ 6200157-B	Retainer-lower			
18	C8AZ 6200163-A	Retainer-upper	66	★ D3VZ 6500396-A	Absorber and retainer-upper
19	D3AZ 6500163-A	Retainer	67	D0VY 6500396-B	Absorber-upper
21	D3AZ 5A103-A	Absorber	68	D0VY 6500154-B	Absorber-lower and upper
22	D3AZ 6500396-A	Absorber and retainer	69	D0VY 6500157-A	Retainer-upper
23	C5AZ 7600154-A	Absorber-upper	70	D0VY 6500394-B	Bolt
24	C9AZ 7600155-C	Absorber	71	D0VY 6500154-C	Absorber-upper
25	★ C9AA 5A076-C	Spacer	72	D3VY 6500155-B	Absorber-lower
26	★ 380616-S2(WW-127)	Stud-3/8"-16 x 2 5/16"	73	★ D0VA 5A076-A	Spacer
27	★ 383090-S2	Nut	74	C8AZ 6200396-D	Absorber and retainer-lower
28	★ 383091-S2	Washer	77	★ 386745-S2	Bolt
29	380618-S2(MM-173-T)	Nut-3/8"-16	78	D4AZ 6500145-A	Shim
30	D3AZ 6500396-B	Absorber-upper	79	D4AZ 7100396-A	Absorber and retainer
31	★ C9AZ 7100394-B	Bolt-hex. hd.-7/16"-14 x 2 1/2"	80	D4AZ 7100394-A	Bolt
32	C9AZ 6200145-A	Shim	81	D4AZ 71113B26-A	Absorber and bracket-R.H.
33	D3AZ 6500155-C	Absorber-lower	82	D4AZ 71113B27-A	Absorber and bracket-L.H.
34	C9AZ 7100151-A	Retainer	83	D4AZ 6500396-A	Absorber and retainer
35	D30Z 6500145-A	Shim-29/64" thick	84	D3AZ 5A103-A	Absorber
36	D30Z 6500145-B	Shim-3/32" thick	85	D3AZ 5A103-B	Absorber
37	D30Z 6500145-C	Shim-3/32" thick-split	86	D4AZ 5A103-C	Absorber
38	D30Z 6500155-A	Absorber-lower-blue	87	D4AZ 6500155-A	Absorber
39	D30Z 6500396-A	Absorber and retainer-blue	88	D4AZ 6500155-B	Absorber
40	D20Z 6500163-A	Retainer-1 27/32" O.D.	89	★ D4AZ 5A103-A	Absorber-not repl'd (8/82)
41	D20Z 5A103-B	Absorber	90	D4AZ 5A103-B	Absorber
42	D20Z 6500145-A	Shim-.08" thick	91	★ 383423-S2	Nut and retainer
43	D0VY 6500394-A	Bolt-2 11/16" long	92	D5VY 6500154-A	Absorber-lower
45	D20Z 6500155-C	Absorber-lower	93	383406-S100(MM-173-MY)	Nut
46	D20Z 5A103-C	Absorber	94	★ C5AA 6200346-A	Clip
48	D2SZ 5A103-A	Absorber	95	D5SZ 6500155-A	Absorber-lower
49	D30Z 6500145-A	Shim-29/64" thick	96	D5VY 6500155-A	Absorber-lower
50	D30Z 6500145-B	Shim-3/32" thick	97	D5VY 6500396-A	Absorber/retainer
51	D30Z 6500145-C	Shim-3/32" thick	98	D5VY 6500396-B	Absorber/retainer

CODE NUMBER TO PART NUMBER LISTING–Quantity As Required

BODY BOLT CHART — Cont'd

CODE NO.	PART NUMBER	DESCRIPTION	CODE NO.	PART NUMBER	DESCRIPTION
99	D5VY 6500396-C	Absorber/retainer	125	★387300-S100	Bolt 7/16" x 14 x 4.00 hex. wshr. hd.
100	D5AZ 5A103-C	Absorber			
101	D5AZ 5A103-F	Absorber	126	D70Z 6500155-A	Absorber–lower
102	★385859-S2	Bolt–1/2"–13 x 4 3/64"	127	D7VY 6500396-A	Absorber/retainer–lower
103	D5AZ 5A103-E	Absorber	128	C7SZ 6500154-A	Absorber–lower
104	★386179-S2	Retainer	129	D7VY 6500154-A	Absorber–upper
105	D5AZ 5B098-A	Absorber–upper	130	D7LY 6500155-A	Absorber–lower
107	★386168-S2	Stud–hex.–7/16"–14 x 4 1/8"	131	D7LY 6500396-A	Absorber/retainer–upper
109	D50Z 6500396-B	Absorber and retainer	132	D7AZ 7100163-A	Retainer
110	D50Z 6500396-A	Absorber and retainer	133	D7AZ 7100394-A	Bolt 7/16" x 14 x 3.00 hex hd
111	D50Z 6500155-A	Absorber	134	D9AZ 5400396-A	Absorber/retainer–upper
112	D6AZ 7100396-A	Absorber and retainer	135	D9AZ 5400396-B	Absorber/retainer–upper
113	★D6AZ 5A103-A	Absorber–not repl'd (8/82)	136	E1AZ 5400396-B	Absorber/retainer–upper
114	D5SZ 6500155-B	Absorber–lower	137	D9AZ 7400396-D	Absorber/retainer–upper
115	D6AZ 7100394-A	Bolt	138	D9AZ 5400396-E	Absorber/retainer–upper
116	D6SZ 6500396-A	Absorber–upper	139	D9AZ 5400396-F	Absorber/retainer–upper
117	D6SZ 6500155-A	Absorber–lower	140	D9AZ 5400396-G	Absorber/retainer–upper
118	D5SZ 6500396-E	Absorber and retainer	141	E2AZ 5400155-A	Absorber–lower–2" O.D.
119	D5SZ 6500396-D	Absorber and retainer	142	D9AZ 5400155-B	Absorber–lower–2" O.D.
120	D6AZ 6500154-A	Absorber	144	387676-S	Washer–flat–1/2" I.D.
122	D7AZ 7100396-B	Absorber and retainer	145	N800441-S2	Bolt–hex hd.–3"
123	D7AZ 7100154-A	Absorber–upper	146	D9AZ 5400145-A	Shim 3/32" split
124	D7AZ 7100396-A	Absorber and retainer–upper	147	N800898-S2	Bolt–hex hd.–4 1/2"

COPYRIGHT © 1986 — FORD MOTOR COMPANY — DEARBORN, MICHIGAN

1973/79
LINCOLN-MERCURY CARS

YEAR	MODEL/RESTRICTIONS	PART NUMBER	DESCRIPTION	QTY.
04114	PIN (INSIDE VISOR ANCHOR)			
79	A,F	E0SZ 6604114-A	2.8" long	2
75/78	G	C3DZ 7604114-B	Chrome plated – incl. rubber tip	2
73/76	A,D,F,G,K,L,P,Y	D3AZ 6504114-B	4" long x 3/8" dia.-incl. rubber tip-	2
77/78	A,D,F,G,K,L,P,V		gray-paint to match	2
79	D,F,G,K,V			2
04115	SLEEVE (VISOR ANCHOR PIN)			
73/76	A,C,D,F,G,K,L,P	D1DZ 6204115-A		2
77/78	A,D,F,G,K,L,P,V			2
79	D,F,G,K,V			2
04125	SPACER (VISOR ARM BRACKET)			
79	J,P(36,54,66) – – w/flip-up sun roof	D9BZ 5404125-A		2

04132 CLIP (VISOR ARM)-Incl. attaching parts

Notes: ▲ Tobacco ‡ Ginger ∅ "Before 3/5/73" ■ "From 3/5/73" ● Cranberry
$ Gray † Vermillion □ Jade ϕ Taupe ◇ Copper △ Aqua

BODY TYPE		PART NUMBER LESS SUFFIX		AVO-CADO	BEIGE	BLACK	BLUE	GOLD	GREEN	ORANGE	RED	SADDLE	SILVER	TAN	WHITE	OTHER	QTY.
1973																	
A,Y		D3AZ 6504132				A											1
C		D20Z 6504132				C											1
		D30Z 6504132												■A			1
D,F(65)		D3AZ 6504132				A											1
K		D20Z 6504132				C											1
C,F(65)		55928-S2	(U-380-A)-screw-pan head tap.-No. 8-18 x 3/4"														2
1974																	
A,Y		D3AZ 6504132				A											1
C,F,K,P		D20Z 6504132				C											1
D		D3AZ 6504132				A											1
L			Refer to group 13776 in Chassis Section														
1975																	
A,Y		D3AZ 6504132				A											1
C,F,G,P		D20Z 6504132				C											1
D		D3AZ 6504132				A											1
		D5VY 6004132				D											1
L			Refer to group 13776 in Chassis Section														
1976																	
A,Y		D3AZ 6504132				A											1
C,F,G,K,P		D20Z 6204132				C											1
D		D5VY 6004132				D											1
L			Refer to group 13776 in Chassis Section														

COPYRIGHT © 1986 — FORD MOTOR COMPANY — DEARBORN, MICHIGAN

1973/79 LINCOLN-MERCURY CARS

YEAR	MODEL/RESTRICTIONS	PART NUMBER	DESCRIPTION	QTY.
77/	A	D3AZ 6504132-A	Black - paint to match	1
77/	D	D5VY 6004132-D	Black - paint to match	1
77/78	F,G,K,P	D20Z 6504132-C	Black - paint to match	1
79	F,G,K			1
77/	V	D74Y 5404132-A	White - paint to match	1
04144-5	ARM and BRACKET ASSY. (VISOR)-Incl. attaching parts			
73/76	A,Y - - w/o illuminated vanity mirror	C9AZ 6204144-A	R.H. and L.H.-chrome-approx. 9" long	2
77/78	A-w/o illuminated vanity mirror			2
73/76	C - - w/o illuminated vanity mirror		R.H. and L.H.	2
73/74	D		R.H. and L.H.	2
73/	F		R.H. and L.H.	2
73/	K - - w/o illuminated vanity mirror		R.H. and L.H.	2
74/76	L "Before 10/1/75"		R.H. and L.H.	2
73/76	P "Before 10/1/75"		R.H. and L.H.	2
79	A - - w/o illuminated vanity mirror	D9AZ 5404144-A	R.H. and L.H.-approx. 9" long	2
74/76	A,K,Y - - w/illuminated vanity mirror	D6AZ 6004144-A	R.H. and L.H.-approx. 3 21/64" long	2
76	C - - w/illuminated vanity mirror			2
77/	F - - w/illuminated vanity mirror			2
77/78	A,K - - w/illuminated vanity mirror			2
79	K			2
79	A - - w/illuminated vanity mirror	D9AZ 5404144-B	R.H. and L.H.-approx. 3 5/16" long	2
75/76	D - - w/o illuminated vanity mirror "Before 4/19/76"	D5VY 6004144-C	R.H. and L.H.-approx. 9" long	2
76/	D - - w/o illuminated vanity mirror "From 4/19/76"	D6VY 6004144-A	R.H. and L.H-approx. 15" long	2
75/	D - - w/illuminated vanity mirror	D5VY 6004144-D	R.H. and L.H.-approx. 3 17/32" long	2
75/	G - - w/o illuminated vanity mirror	D5DZ 6604144-A	R.H. and L.H.	2
75/	G - - w/illuminated vanity mirror	(RH) D5DZ 6604144-B	(LH) D5DZ 6604145-A	1
77/	V - - w/illuminated vanity mirror			1
79	J	D9BZ 5404144-A	R.H. and L.H.	2
78/	P			2
76/	L "From 10/1/75"	D1FZ 6204144-A	R.H. and L.H.-paint to match	2
77	P			2
042B52	BRACKET (CONSOLE TRAY FRONT)			
79	J,P - - w/Warner SR4 M/T w/floor shift and w/o console	D9ZZ 66042B52-B		1
042B54	BRACKET (CONSOLE TRAY REAR)			
79	J,P - - w/o floor shift and w/o console	E1DZ 54042B54-A		1

YEAR	MODEL/RESTRICTIONS	PART NUMBER	DESCRIPTION	QTY.
042A60	REINFORCEMENT (INSTRUMENT PANEL LOWER FLANGE END)			
79	J,P	E1DZ 54042A60-A		1
04278	CLIP (INSTRUMENT PANEL PAD RETAINER)			
73/76	A,C,D,F,K,Y	D1AZ 6504278-A		3
77/	F	D70Z 6504278-A	Nut No. 8-18 U spring	2
04320	PANEL (INSTRUMENT)-Paint to match			
79	A	D9MY 5404320-A		1
73/76	C	D60Z 6504320-A		1
78/	D "From 6/12/78"	D8VY 6004320-B		1
74/76	F	D60Z 6504320-A		1
77/	F	D80Z 6504320-A		1
75/	G - - w/o integral A/C	D9DZ 6604320-A		1
75/79	G - - w/integral A/C	D9DZ 6604320-B		1
79	J	E1DZ 5404320-A		1
73/76	K	D6SZ 6504320-A		1
77/	K	D8LY 6504320-B	(Also refer to group 10A860 in Chassis Section)	1
78/	P	E1DZ 5404320-A		1
77/	V	E04Y 5404320-A		1
04334-5	PANEL (INSTRUMENT PANEL END)			
79	J	(RH) D8BZ 5404334-A	(LH) D8BZ 5404335-A	1
78/	P			1
04338	PANEL (INSTRUMENT PANEL FINISH)-Incl. attaching parts			
Note:	† Canada only			

G (Monarch)

75/77	G(54H,66H) - - w/o integral A/C "Before 10/4/76"	D6DZ 6604338-C	Light burl walnut wood grain-incl. "Ghia" nameplate	1
75/77	G(54H,66H) - - integral A/C "Before 10/4/76"	D6DZ 6604338-D	Light burl walnut wood grain	1
77	G(54H,K,66) - - w/o integral A/C "From 10/4/76"	D84Y 6604338-E	Light burl walnut wood grain-incl. "Ride Engineered by Lincoln Mercury" nameplate	1
78/	G - - w/o integral A/C	† D84Y 6604338-C	Black	1
	G - - integral A/C	† D84Y 6604338-D	Black	1

J (Capri)

79	J - - w/o integral A/C	D9CY 6104338-C	French burl walnut wood grain w/bright bead border	1
79	J - - integral A/C	D9CY 6104338-D	French burl walnut wood grain w/bright bead border	1
79	J - - w/o integral A/C	D9CY 6104338-E	Engine turn background w/bright bead border -incl. "CAPRI RS" nameplate medallion	1
79	J - - integral A/C	D9CY 6104338-F	Engine turn background w/bright bead border -incl. "CAPRI RS" nameplate medallion	1

K (Mark IV, Mark V)

77	K	D7LY 6504338-A	Incl. "Continental Mark V" nameplate	1
78/	K - - w/o KB,KY or LB trim code			1

L (Bobcat)

77/	L - - w/o integral A/C	D7FZ 6204338-A	Camera case	1
77/	L - - w/o lamp opening	D7FZ 6204338-C	Cherrywood wood grain	1

P (Comet), (Zephyr)

78/	P - - w/o integral A/C	D8KY 5404338-T	Chamois-paint to match	1
78/	P - - w/integral A/C	D8KY 5404338-U	Chamois-paint to match	1
78/	P - - w/o integral A/C	D8KY 5404338-Y	Majestic walnut vertical wood grain-incl. "RIDE-ENGINEERED" nameplate	1
78/	P - - integral A/C	D8KY 5404338-Z	Majestic walnut vertical wood grain-incl. "RIDE-ENGINEERED" nameplate	1

COPYRIGHT © 1986 — FORD MOTOR COMPANY — DEARBORN, MICHIGAN

YEAR	MODEL/RESTRICTIONS	PART NUMBER	DESCRIPTION	QTY.
04338	PANEL (INSTRUMENT PANEL FINISH)-Incl. attaching parts — Cont'd			
Note:	† Canada only			
	P (Comet), (Zephyrs)			
79	P(54,66,74) - - w/o integral A/C and w/o tachometer	D9KY 3604338-A	Kashmir walnut horizontal wood grain-incl. "RIDE ENGINEERED" nameplate	1
79	P(54,66,74) - - integral A/C and w/o tachometer	D9KY 5404338-C	Kashmir walnut horizontal wood grain-incl. "RIDE ENGINEERED" nameplate	1
79	P - - w/o integral A/C and w/ tachometer	D9KY 5404338-A	Majestic walnut wood grain-incl. "RIDE ENGINEERED" nameplate	1
79	P - - integral A/C and w/ tachometer	D9KY 5404338-B	Majestic walnut wood grain-incl. "RIDE ENGINEERED" nameplate	1
	V (Versailles)			
77/	V	D74Y 5404338-B	R.H.-incl."Versailles" nameplate	1
04371	COVER (INSTRUMENT PANEL RADIO OPENING)-Paint to match			
73	A,Y	D4MY 6504371-A		1
74/76	A,Y			1
77/	A			1
73	D		Refer to group 19893	
79	J	D9BZ 5404371-A		1
75/	L		Refer to group 060B00	1
78/	P	D9BZ 5404371-A		1
044G02	COVER (INSTRUMENT PANEL TO FLOOR BRACE)-Paint to match			
74/	L - - w/o integral A/C	D2FZ 62044G02-A	Black	1
74/76	L - - integral A/C "Before 6/7/76"	D8FZ 62044G02-A	Black	1
76/78	L - - integral A/C "From 6/7/76 to 11/1/77"	D7FZ 62044G02-A	Chamois	1
78	L - - w/o integral A/C "From 11/1/77"			1
78/	L - - integral A/C "From 11/1/77"	D8FZ 62044G02-A	Chamois-paint to match	1
044A10	Refer to group 04644-5			
044G24	PLATE (CONSOLE PANEL GEAR SHIFT LEVER OPENING)			
76/	G,V - - w/floor shift w/auto trans.		W/burl walnut wood grain vinyl insert	1
76/	G,V - - w/o floor shift w/auto trans.		W/burl walnut wood grain vinyl insert	1
76/	G,V - - w/floor shift w/man trans.			1
79	J - - w/4/S O/D man trans. w/6 or 8 cyl. engine	D9ZZ 66044G24-H	w/o console	1
79	J,P - - w/4/S O/D man trans. w/4 cyl. engine	D9ZZ 66044G24-G	w/o console	1
79	J - - w/floor shift w/auto trans.	D9ZZ 66044G24-A	w/console	1
79	J - - w/4/S O/D man trans.	D9ZZ 66044G24-D	w/console	1
79	J - - w/4/S man trans.	D9ZZ 66044G24-C	w/console	1
04428	COVER (CLOCK OPENING)			
79	A	D9AZ 5404428-A		1
044F58	COVER (INSTRUMENT PANEL CONTROL)-Also refer to group 04496			
78/	P(54 Taxi, 74)	D8BZ 74044F58-A	Paint to match	1
79	J			1
04459	COVER (INSTRUMENT PANEL STEERING COLUMN)			
79	A(54,66) - - w/o power antenna, w/o trip odometer	D9AZ 5404459-C	Paint to match-drill hole for R.H. remote control mirror	1
79	A - - w/power antenna, w/power tailgate window, w/o trip odometer	D9AZ 5404459-D	Paint to match -drill hole for R.H. remote control mirror	1
78/	D	D8VY 6004459-B	Paint to match	1
79	J	E4ZZ 6104459-A	Paint to match	1
77/	K - - w/o KB,KY or LB trim code	D7LY 6504459-A		1
78/	P	E4ZZ 6104459-A	Paint to match	1
73/	K	384157-S2	(UU-89-FB)-screw-round washer hd.-No. 8-18 x 3/4"	2
		45174-S8	(M-138)-nut-spring-No. 8-18	2
		384154-S9	(UU-66-G)-screw-oval trim hd.-No. 8-18 x 3/4"	2

YEAR	MODEL/RESTRICTIONS	PART NUMBER	DESCRIPTION	QTY.
04460	PLATE (INSTRUMENT PANEL NAME)-Incl. attaching parts			
78/	A	D8MY 5304460-A	"Ride-Engineered"	1
79	A	E0AZ 5404460-A	"Premium-Sound System"	1
78/	F	D8MY 5304460-A	"Ride-Engineered"	1
78/	G	D8MY 5304460-A	"Ride-Engineered"	1
79	J	D9CY 6104460-A	"Capri RS" - incl. taped backing	1
79	J - - w/2.3 litre engine	D9ZZ 6604460-A	"TURBOCHARGED"	1
79	J	E0AZ 5404460-A	"Premium-Sound System"	1
78/	P	D8MY 5304460-A	"Ride-Engineered"	1
79	P	E0AZ 5404460-A	"Premium-Sound System"	1
77/	V		Refer to group 04338	1
044E62	RETAINER (CONSOLE GLOVE COMPARTMENT DOOR LATCH)			
79	J	D9ZZ 66044E62-A		1
044D70-1	PANEL (INSTRUMENT PANEL CLUSTER FINISH)			
NOTE 1-	Insert also required (for heated back window)-refer to group 19A980 in Chassis Section			
NOTE 2-	For vehicles with floor shift also refer to group 7B100 in Chassis Section			

A (Mercury)

79	A - - w/o electronic radio	D9MY 54044D70-C	R.H.-dark teak horizontal wood grain w/2 19/32" x 4 1/4" radio opening	1
79	A - - w/electronic radio	D9MY 54044D70-D	R.H.-dark teak horizontal wood grain w/2 7/32" x 7 7/32" radio opening	1
79	A - - w/o electronic radio-	D9MY 54044D70-E	R.H.-painted w/2 19/32" x 4 1/4" radio-opening-paint to match	1
79	A - - w/electronic radio-	D9MY 54044D70-F	R.H.-painted w/2 7/32" x 7 7/32" radio-opening-paint to match	1
79	A	E0MY 54044D70-A	Center-at cluster-dark teak horizontal wood grain-incls. lens	1
79	A		Refer to "center"	

D (Lincoln)

78	D	D8VY 60044D70-D	R.H.-incl. 7/8" dia. radio knob holes	1
79	D - - w/electronic radio	D9VY 60044D70-A	R.H.-incl. 2 13/16" x 7 3/32" radio opening -w/majestic wood grain	1
79	D - - w/R.H. remote control mirror	D9VY 60044D70-C	Center	1

G (Monarch)

75	G - - w/windshield washer switch on instrument panel "Before 2/17/75"	D5DZ 66044D70-B	Wood grain-paint edge to match-Note 2	1
76/	G(54H,K,66) - - exc. Canada	D7DZ 66044D70-A	Wood grain-w/bright outer edge-paint inner edge to match-Note 2	1
75/	G	56912-S2	(U-413-C)-screw (round washer head-tapping)-No. 8-18 x 3/4"	AR
		56924-S2	(U-413-F) -screw (round washer head -tapping) - No. 8-18 x 1"	AR
		386773-S100	(GG-397-A) -pin-type-7/16" push 1 1/8"	4

J (Capri)

79	J - - w/o intergral A/C	E1CY 61044D70-A	French burl walnut wood grain	1
79	J - - integral A/C	E3CY 61044D70-B	French burl walnut wood grain	1
79	J(61D) - - w/o integral A/C	E1ZZ 61044D70-A	Black-engine turn background	1
79	J(61D) - - integral A/C	E1ZZ 61044D70-B	Black-engine turn background	1

K (Mark IV, Mark V)

77	K - - w/o automatic headlamp dimmer	D7LY 65044D70-E	Majestic walnut wood grain - Note 1	1
77	K - - w/automatic headlamp dimmer	D7LY 65044D70-F	Majestic walnut wood grain - Note 1	1

COPYRIGHT © 1986 — FORD MOTOR COMPANY — DEARBORN, MICHIGAN

1973/79 LINCOLN-MERCURY CARS

YEAR	MODEL/RESTRICTIONS	PART NUMBER	DESCRIPTION	QTY.
044D70-1	PANEL (INSTRUMENT PANEL CLUSTER FINISH) — Cont'd			
NOTE 1-	Insert also required (for heated back window)-refer to group 19A980 in Chassis Section			
NOTE 2-	For vehicles with floor shift also refer to group 7B100 in Chassis Section			

K (Mark IV, Mark V)

78/	K - - w/o automatic headlamp dimmer and w/o KB, KY or LB trim code and w/o electronic radio	D8LY 65044D70-A	Majestic walnut wood grain-Note 1	1
78/	K - - w/automatic headlamp dimmer and w/o KB, KY,LB,MB or MQ trim code and w/o electronic radio	D8LY 65044D70-B	Majestic walnut wood grain-Note 1	1
79	K - - w/automatic headlamp dimmer and w/o LB,MB or MQ trim code and w/electronic radio	D9LY 65044D70-B	Majestic walnut wood grain-Note 1	1

P (Zephyr)

78/	P - - w/o integral A/C and w/o tachometer	E1BZ 36044D70-A	Majestic walnut vertical wood grain	1
78/	P - - integral A/C and w/o tachometer	E1BZ 36044D70-B	Majestic walnut vertical wood grain	1
78/	P(36,54,66) - - w/o integral A/C	E1BZ 54044D70-C	Black anodized aluminum engine turn	1
78/	P(36,54,66) - - integral A/C	E1BZ 54044D70-D	Black anodized aluminum engine turn	1
79	P - - w/o integral A/C and w/o tachometer	E1BZ 54044D70-A	Kashmir walnut horizontal wood grain	1
79	P - - integral A/B and w/o tachometer	E1BZ 54044D70-B	Kashmir walnut horizontal wood grain	1
79	P(36,54,66) - - w/o integral A/C and w/tachometer	E1BZ 54044D70-E	Majestic walnut wood grain	1
79	P(36,54,66) - - integral A/C and w/tachometer	E1BZ 54044D70-F	Majestic walnut wood grain	1
79	P(74) - - w/o integral A/C and w/tachometer	E1BZ 74044D70-A	Majestic walnut wood grain	1
79	P(74) - - integral A/C and w/tachometer	E1BZ 74044D70-B	Majestic walnut wood grain	1

V (Versailles)

77/78 79	V V - - w/AM/FM multiplex stereo tape or cassette	D74Y 54044D70-A	Majestic wood grain-paint edge to match-Note 2	1 1
79	V - - w/o AM/FM multiplex stereo tape or cassette w/electronic radio	D94Y 54044D70-A	Majestic wood grain-paint edge to match-Note 2	1
044D82	COVER (INSTRUMENT PANEL ACCESS HOLE)			
77/	K "From 12/27/76"	D7LY 65044D82-A	Paint to match	1
04488	BRACE (INSTRUMENT PANEL)			
73/76	C		Refer to group 01524	
78/ 79	P J	D8BZ 5404488-A		1 1
044A90	PANEL (INSTRUMENT PANEL FINISH UPPER)-Paint to match			
78/	D	D8VY 60044A90-A		1
044A90	PANEL (INSTRUMENT PANEL FINISH UPPER)-Paint to match — Cont'd			
74/	F	D20Z 65044A90-A		1
75/ 77/	G V	D5DZ 66044A90-A		1 1
044B90	REINFORCEMENT (CONSOLE PANEL FRONT)			
79	J	D9ZZ 66044B90-A	Paint to match	1
045A06	CONSOLE ASSY.			
79	K - - collector's edition	D9LY 65045A06-A	Midnight blue-incl. leather cover	
04514	COVER (INSTRUMENT PANEL VENT AIR CONTROL REGISTER CENTER)			
73	A(53H,K,57H,K,65H,K,71H,K) - - w/o integral A/C	D2MY 6504514-A	Tobacco-paint to match	1

1973/79 LINCOLN-MERCURY CARS

YEAR	MODEL/RESTRICTIONS	PART NUMBER	DESCRIPTION	QTY.
045C22	TRAY (CONSOLETTE)			
79	J,P - - w/o Warner SR4 M/T or 6 and 8 cyl. eng.	D9ZZ 66045C22-A		1
79	J,P - - w/Warner SR4 M/T	D9ZZ 66045C22-B		1
045B32	BRACKET (CONSOLE PANEL MOUNTING FRONT)			
79	J - - w/o Warner SR4 M/T	D9ZZ 66045B32-A		1
045B34	BRACKET (CONSOLE PANEL MOUNTING)			
79	J	D9ZZ 66045B34-A	Rear	1
045A36	CONSOLE (INCLUDES SIDES)-Paint to match			
74/	F	D4WY 65045A36-A	Cut to fit	1
73/78	J		Consolette-refer to group 045A06	1
79	J	E2ZZ 61045A36-B		
78/	K		Refer to group 045A06	1
77/	V		Refer to group 045A06	1
045B56	SUPPORT (CONSOLE PANEL) - Refer to group 045A36			
045D56	BRACE (INSTRUMENT PANEL)			
79	A	D9AZ 54045D56-A	Attaches to cowl top inner	1
79	A	E0VY 54045D56-A	Attaches to cowl and brake pedal support bracket	1
79	J,P	E0SZ 66045D56-A	To cowl	1
		E0SZ 66045D56-B	Attaches to cowl top inner	1
78/	P	D9ZZ 66045D56-B	Attaches to cowl top inner	1
04562	PANEL (INSTRUMENT PANEL UPPER)			
79	A	E0AZ 5404562-B		1
04567	PANEL (CONSOLE PANEL TOP FINISH)			
73	C - - w/floor shift	D20Z 6504567-B		1
79	J	D9ZZ 6604567-A	Paint to match	1
045E68-9	PLATE (INSTRUMENT PANEL FINISH PANEL RETAINER)			
79	A	D9MY 54045E68-A	Outboard	1
		D9MY 54045E69-A	Inboard-incl. hole for mounting luggage compartment door latch control button	1
045F94	BRACKET (INSTRUMENT PANEL LOCATOR)			
78/	P	D8BZ 54045F94-A		1
04598	BRACE (INSTRUMENT PANEL TO FLOOR)			
73/	L	D4FZ 6204598-A		1
		384930-S36	(B-340-B) -screw & washer assy.	2
04620	PAD (CONSOLE PANEL)			
77	F	D7WY 6504620-B	Blue	1
		D7WY 6504620-C	Chamois	1
		D7WY 6504620-D	Gray	1
		D7WY 6504620-E	Jade	1
78	F	D7WY 6504620-B	Blue	1
		D7WY 6504620-C	Chamois	1
		D7WY 6504620-D	Gray	1
		D7WY 6504620-E	Jade	1
79	F	D7WY 6504620-B	Blue	1
		D7WY 6504620-C	Chamois	1
		D9WY 6504620-B	Cordovan	1
		D7WY 6504620-D	Gray	1
		D7WY 6504620-E	Jade	1
		D9WY 6504620-A	Red	1
77/	G "From 3/7/77"	D7DZ 6604620-A	Tan-paint to match	1
77	V	D74Y 5404620-B	Blue	1
		D74Y 5404620-C	Cordovan	1
		D74Y 5404620-D	Gray	1

COPYRIGHT © 1986 — FORD MOTOR COMPANY — DEARBORN, MICHIGAN

YEAR	MODEL/RESTRICTIONS	PART NUMBER	DESCRIPTION	QTY.
04620	PAD (CONSOLE PANEL) — Cont'd			
78	V	D74Y 5404620-B	Blue	1
		D84Y 5404620-G	Champagne	1
		D74Y 5404620-C	Cordovan	1
		D74Y 5404620-D	Gray	1
		D84Y 5404620-E	Red	1
79	V	D94Y 5404620-A	Beryl	1
		D74Y 5404620-B	Blue	1
		D84Y 5404620-G	Champagne	1
		D74Y 5404620-C	Cordovan	1
		D74Y 5404620-D	Gray	1
		D84Y 5404620-E	Red	1
04644-5	PANEL (INSTRUMENT PANEL FINISH LOWER EXTENSION)			
77	F(53,65D,K,71) - - w/o R.H. remote control mirror and w/o tachometer	D70Z 6504644-A	R.H.-rosewood wood grain	1
78/	F(53,65D) - - w/o R.H. remote control mirror and w/o tachometer			1
77	F(65L) - - W/R.H. remote control mirror and w/o tachometer	D7SZ 6004644-B	R.H.-burl walnut wood grain	1
78/	F(65L) - - w/o R.H. remote control mirror	D8SZ 6004644-A	R.H.-dark burl walnut wood grain	1
78/	F(65L) - - w/R.H. remote control mirror	D8SZ 6004644-B	R.H.-dark burl walnut wood grain	1
78/	F(65L) - - w/o heated back window	D8SZ 6004645-A	L.H.-dark burl walnut wood grain	1
78/	F(65L) - - w/heated back window	D8SZ 6004645-B	L.H.-dark burl walnut wood grain w/"Elect Deice" lettering	1
77	F(53,65D,K,71D) - - w/o heated back window, w/o tachometer and w/o R.H. remote control mirror	D70Z 6504645-A	L.H.-rosewood wood grain	1
78/	F(53,65D) - - w/o heated back window, w/o tachometer and w/o R.H. remote control mirror			1
77	F(53,65D,K) - - w/heated back window	D70Z 6504645-C	L.H.-rosewood wood grain-incl. "Elect Deice" lettering	1
78/	F(53,65D) - - w/heated back window			1
76/	G - - integral A/C	D6DZ 6604644-A		1
74/	L - - integral A/C	D7FZ 6204644-A		1
73/75	P - - w/glove compartment	D4DZ 62044A10-A	Paint to match	1
76/77	P	D6DZ 6204644-A	Paint to match	1
77/	V	D6DZ 6604644-A		1
04672	BRACE (INSTRUMENT PANEL LOWER FLANGE TO COWL INNER PANEL)			
79	A	E0VZ 5404672-A		1
79	J	D8BZ 5404672-A		1
78/	P	D8BZ 5404672-A		1
73/76	C	376838-S2	(MM-296-AF)-nut and washer-5/16"-18	1
04674	REINFORCEMENT (INSTRUMENT PANEL LOWER FLANGE CENTER)			
78/	P	D8BZ 5404674-A		1
04774	PANEL (INSTRUMENT PANEL CENTER)			
77/78	D	D7VY 6004774-A		1
04780	RETAINER (CONSOLE PANEL ASH RECEPTACLE)			
79	J	E1ZZ 6604780-A	Incl. door and socket & retainer assy. cigar lighter	1
04788	RECEPTACLE (CONSOLE PANEL ASH)-Paint to match			
79	J - - w/o Warner SR4 M/T	D9ZZ 6604788-A		1
79	J - - w/Warner SR4 M/T	D9ZZ 6604788-B		1

YEAR	MODEL/RESTRICTIONS	PART NUMBER	DESCRIPTION	QTY.
04810	RECEPTACLE (INSTRUMENT PANEL ASH)			
73/76	A,Y	D3MY 6504810-A	Paint to match	1
77/78	A			1
79	A		Refer to groups 04821 and 04824	
73/77	D	D5VY 6004810-A	Paint to match	1
78/	D	D3MY 6504810-A	Paint to match	1
77/	F	D70Z 6504810-A	Paint to match	1
73/74	J - - w/o integral A/C	D3RY 6204810-A	Black	1
76	J(64T) - - w/o integral A/C	D3RY 6204810-A	Black	1
76/78	J(64D,P,S) - - w/o integral A/C	D3RY 6204810-A	Black	1
79	J	E2BZ 3604810-A	Paint to match	1
77/	K	D8LY 6504810-A		1
74/	L - - w/lamp opening	D6FZ 6204810-A	Paint to match-less handle	1
04821	BOX and SNUFFER (INSTRUMENT PANEL ASH RECEPTACLE)			
79	A	D9AZ 5404821-A		1
75/	G	D5DZ 6604821-A		1
77/	V			1
04824	PANEL (INSTRUMENT PANEL ASH RECEPTACLE)			
79	A	E0AZ 5404824-A	Paint to match-r/b E0AZ 5404824-A (11/82)	1
04826	RETAINER (INSTRUMENT PANEL ASH RECEPTACLE)			
73/76	A,Y	D3AZ 6504826-A		1
77/78	A			1
75/	G	D5DZ 6604826-A		1
77/	V			1
048A94	DOOR (INSTRUMENT PANEL ASH RECEPTACLE)			
75/	G	D5DZ 66048A94-A	Paint to match	1
060B00	COMPARTMENT (INSTRUMENT PANEL MAP)			
75/	L - - w/o radio	D4FZ 62060B00-A		1
		56910-S	Screw-pround head-No. 8-18 x 1/2"	4
		57039-S2	(B-340-B)-screw and washer assy.-5/16"-18 x 3/4"	2
060A08	CABLE (GLOVE COMPARTMENT DOOR CHECK)			
74/78	J - - integral A/C	D4RY 62060A08-A	Instrument panel	1
76/	G	D6DZ 66060A08-A	Console	1
06010	COMPARTMENT KIT (INSTRUMENT PANEL GLOVE)			
73/76	Y - - built-in A/C-dealer installed	D3TZ 1006010-B		1
06010	COMPARTMENT (INSTRUMENT PANEL GLOVE)			
73/76	A,Y	D3AZ 6506010-A	Box only-also refer to group 06024	1
77/78	A		if door is required	1
79	A	D9MY 5406010-A	Paint to match-incl. door	1
77/	F	D70Z 6506010-A		1
75/	G - - w/o integral A/C	D5DZ 6606010-A		1
75/	G - - integral A/C	D6DZ 6606010-B		1
79	J	E4ZZ 6106010-A	Paint to match	
74/	L	D4FZ 6206010-A		1
		52540-S13	(U-227)-screw-self tapping fill. hd.-No. 8-18 x 3/8"	4
78	P	D8BZ 5406010-A	Paint to match-incl. door-(1 piece molded design)	1
79	P	E3BZ 3606010-A	Paint to match-incl. door-(1 piece molded design)	1
78	P	44710-S8	(X-10) washer	2
		44720-S8	(X-18) washer	2
06010	COMPARTMENT (CONSOLE PANEL GLOVE)			
73/76	C	D20Z 6506010-A		1
74/	F			1
060A12	BEZEL (INSTRUMENT PANEL GLOVE COMPARTMENT LOCK)-Incl. attaching parts			
73/74	D	D1VY 65060A12-A	Incl. push button	1

COPYRIGHT © 1986— FORD MOTOR COMPANY —DEARBORN, MICHIGAN

1973/79 LINCOLN-MERCURY CARS

YEAR	MODEL/RESTRICTIONS	PART NUMBER	DESCRIPTION	QTY.
06024	DOOR (INSTRUMENT PANEL GLOVE COMPARTMENT)			
75/76	A,Y	D5MY 6006024-A	Paint to match-less hinge-for one piece molded	1
77/78	A		design-refer to group 06010	1
79	A		Refer to group 06010	
73/76	C	D30Z 6506024-A	Paint to match	1
74/	F	D30Z 6506024-A	Paint to match	1
75/	G	D5DZ 6606024-A	Paint to match	1
76/78	J - - integral A/C	D5RY 6406024-E	Cloud (dark)-incl. hinge	1
79	J		Refer to group 06010	
73/	K	D3SZ 6506024-A	Paint to match	1
76/	L	D6FZ 6206024-A		1
73/77	P	D3DZ 6206024-A	Paint to match	1
78/	P		Refer to group 06010	
74	J	E602527-S72	(AB-51)-screw and washer-M6 x 14 (metric)	2
06024	DOOR (CONSOLE PANEL GLOVE COMPARTMENT)			
77/79	F	D7WY 6506024-C	Gray	1
		D7WY 6506024-E	Red	1
76/	G	D6DZ 6606024-A	Tan-paint to match	1
76/78	J	D5RY 6406024-A	Cloud	1
79	J	D9ZZ 6606024-A	Black	1
		D9ZZ 6606024-D	Blue	1
		D9ZZ 6606024-E	Vaquero	1
06050	HINGE (INSTRUMENT PANEL GLOVE COMPARTMENT DOOR)			
79	A	D9AZ 5406050-A		1
79	J,P	D9ZZ 6606050-B		1
06050	HINGE (CONSOLE PANEL GLOVE COMPARTMENT DOOR)			
76/	G	D6DZ 6606050-B		1
77/	V			1
79	J	D9ZZ 6606050-A		1
06064	CATCH (DOOR LATCH STRIKER PLATE)-Also refer to group 060A96			
73/76	A,C,F,K,L,P,Y	C9AZ 6206064-A	Instrument panel	1
			Storage compartment	1
77	A,K,P		Instrument panel	1
78	A,F,K,L		Instrument panel	1
79	D,F,K,L		Instrument panel	1
79	A		Glove compartment-refer to group 14413 in chassis section	
75/	G	D5DZ 6606064-A	Instrument panel	1
77/	V			1
78/	J,P	E1FZ 6106064-A	Glove compartment	1
78/	P(74)		Storage compartment	1
06072	LATCH (GLOVE COMPARTMENT DOOR)			
79	A	D8BZ 5406072-E	Glove compartment locking-less key and cylinder	1
73/78	J "From 6/1/74"	D5RY 6406072-A	Instrument panel	1
74/	L	D1ZZ 6506072-A	Instrument panel-non-locking	1
78/	P	D8BZ 5406072-A	Instrument panel-non locking	1
78/	P	D8BZ 5406072-E	Instrument panel locking-less key and cylinder	1
78/	P(74)		Stowage compartment	1
79	J			1
06081	Refer to group 22050			
06088	RETAINER (GLOVE COMPARTMENT DOOR LOCK)			
79	A,J	D8BZ 5406088-B	Glove compartment	1
78/	P			1
78/	P(74)		Stowage compartment	1
060K89	Refer to group 06056			
060A96	CATCH (CONSOLE PANEL GLOVE COMPARTMENT DOOR LATCH)			
76/	G	D6DZ 66060A96-A		1
79	J	E5ZZ 61060A96-A		1
77/	V	D6DZ 66060A96-A		1

1973/79
LINCOLN-MERCURY CARS

YEAR	MODEL/RESTRICTIONS	PART NUMBER	DESCRIPTION	QTY.
060A98	SPRING (CONSOLE GLOVE COMPARTMENT DOOR)			
79	J	D9ZZ 66060A98-B		1
06117-8	ARM (INSTRUMENT PANEL GLOVE COMPARTMENT DOOR)			
79	A	(RH) D9AZ 5406117-A	(LH) D9AZ 5406118-A	1
06125	RETAINER (INSTRUMENT PANEL GLOVE COMPARTMENT DOOR LATCH CATCH)			
73/76	A,C,F,K,L,P,Y	C9AZ 6206125-A		1
77/	F,K,L,P			1
73/	D			1
75/	G			1
061A34	LATCH (CONSOLE PANEL GLOVE COMPARTMENT DOOR)			
73/76	C	D20Z 65061A34-A	Paint to match	1
74/	F			1
76/	G	D4ZZ 69061A34-A		1
77/	V			1
79	J	D9ZZ 66061A34-A		1
06136	BRACKET (INSTRUMENT PANEL GLOVE COMPARTMENT DOOR LATCH MOUNTING)			
78/	P	E4ZZ 6106136-A		1
061A36	PLATE (CONSOLE GLOVE COMPARTMENT DOOR LATCH)			
76/	G,V	D6DZ 66061A36-A		1
06152	SUPPORT (CONSOLE PANEL GLOVE COMPARTMENT DOOR CATCH)			
73	C	D0GY 6506152-A		1
06164	KNOB (INSTRUMENT PANEL GLOVE COMPARTMENT DOOR)			
73	A,C,Y "Before 4/7/73"	D20Z 6506164-A	Black	1
73/77	D			1
73/76	K,P			1
73/76	A,C,Y "From 4/7/73"	D3AZ 6506164-A	Chrome	1
77/78	A,L			1
79	A			1
74/76	F			1
75/	G			1
77/	V			1
78/	D	D70Z 6506164-A		1
77/	F - - w/o QT trim code			1
77/	K - - w/o KB or KY trim code			1
06172	REINFORCEMENT (INSTRUMENT PANEL GLOVE COMPARTMENT DOOR LATCH)			
79	A	D9MY 5406172-A		1
06192	BRACKET (INSTRUMENT PANEL GLOVE COMPARTMENT DOOR HINGE)			
78/	J,P - - built in A/C (dealer installed)	D8ZZ 6606192-A		1
10010	MEMBER (FRONT SUSPENSION NO. 2 CROSS)			
75/	G	D5DZ 6610010-A		1
77/	V			1
74/	L	D4FZ 6210010-A		1
10034	PLUG (FLOOR PAN SEAT BELT ANCHOR)			
73/76	C(71)	C2AZ 6210034-A		3
10062-3	EXTENSION (FRONT SIDE MEMBER)			
78/	P	(RH) D9ZZ 6610534-B	(LH) D9ZZ 6610535-B	1
10084	SPACER (FRONT SUSPENSION #2 CROSS MEMBER LOWER)			
78/	P	D8BZ 5410084-A		2
10116-7	MEMBER (FLOOR SIDE INNER)			
79	J	(RH) E3ZZ 6110116-A	(LH) E3ZZ 6110117-A	1
10128-9	PANEL (BODY ROCKER)			
79	A	(RH) E0AZ 5410128-A	(LH) E0AZ 5410129-A	1
74/76	C(53B,71K)	(RH) D40Z 5310128-A	(LH) D40Z 5310129-A	1
74/76	C(65)	(RH) D40Z 6510128-A	(LH) D40Z 6510129-A	1
75/	D(53)	(RH) D8VY 5310128-B	(LH) D8VY 5310129-B	1
74/	F(65)	(RH) D40Z 6510128-A	(LH) D40Z 6510129-A	1
77	F(53,71)	(RH) D40Z 5310128-A	(LH) D40Z 5310129-A	1
78	F(53)			1
75/77	G "Before 2/1/77"	(RH) D7DZ 6610128-A	(LH) D7DZ 6610129-A	1

COPYRIGHT © 1986 — FORD MOTOR COMPANY — DEARBORN, MICHIGAN

1973/79 LINCOLN-MERCURY CARS

YEAR	MODEL/RESTRICTIONS	PART NUMBER	DESCRIPTION	QTY.
10128-9	PANEL (BODY ROCKER)+5FCont'd			
77/	G	(RH) D8DZ 6610128-A	(LH) D8DZ 6610129-A	1
79	J	(RH) D9ZZ 6610128-A	(LH) D9ZZ 6610129-A	1
75/	L(62,64)	(RH) D5FZ 6210128-A	(LH) D5FZ 6210129-A	1
73/77	P(54) "From 6/15/73"	(RH) ★ D4DZ 5410128-A	(LH) ★ D4DZ 5410129-A Not repl'd (6/84)	1
73/77	P(62)	(RH) D4DZ 6210128-A	(LH) D4DZ 6210129-A	1
78/	P	(RH) E3BZ 3610128-A	(LH) E0BZ 5410129-A	1
77/	V	(RH) D8DZ 6610128-A	(LH) D8DZ 6610129-A	1
73/	A	379534-S	(PP-6)-plug (button)-1 7/8" dia. hole	2
101A68	REINFORCEMENT (FRONT SIDE MEMBER TO DASH MOUNTING)			
78/	P(54A,B Police and Taxi)	D8BZ 54101A68-A	R.H. and L.H.	2
101A72-3	GUSSET (FRONT SIDE MEMBER TO DASH MOUNTING)			
79	J	(RH) E3BZ 36101A72-A	(LH) E3BZ 36101A73-A	1
78/	P			
10176-7	Refer to Exterior Moulding Section at the end of this catalog			
10182-98	Refer to Exterior Moulding Section "R" for complete retainer information			
102B18-9	PLATE (FRONT SIDE MEMBER TO DASH GUSSET HOLE COVER)			
78/	P	(RH) D8BZ 54102B18-A	(LH) D8BZ 54102B19-A	1
102B40-1	PLATE (REAR FLOOR SIDE MEMBER REINFORCEMENT REAR)			
78/	P(54A,B Police and Taxi)	(RH) D8BZ 54102B40-A	(LH) D8BZ 54102B41-A	1
103A58	VALVE (DRAIN)			
73	C,Y	C4AZ 62103A58-C	Rocker panel	1or2
74/76	C(71)		Tailgate	1or2
73/77	A(71)		Spare wheel well	2
78	A(71)	C4AZ 62103A58-D	Spare wheel well	2
103K70	REINFORCEMENT (FRONT SIDE MEMBER REAR)			
78/	P(54A,B Police and Taxi)	D8BZ 54103K70-A	R.H. and L.H.	2
10380	REINFORCEMENT (FRONT SIDE MEMBER ISOLATOR MOUNTING)			
77/	L	D7FZ 6210380-A		2
10476	REINFORCEMENT (FRONT SIDE MEMBER EXTENSION)			
79	J	D8BZ 5410476-A		2
78/	P			2
10534-5	MEMBER (FRONT SIDE REAR)			
79	J,P	(RH) D9ZZ 6610534-B	(LH) D9ZZ 6610535-B	1
78/	P			1
106A18	EXTENSION (REAR FLOOR CROSS MEMBER)			
78/	P	D8BZ 74106A18-A		1
10626	REINFORCEMENT (REAR FLOOR PAN SHOCK ABSORBER MOUNTING)			
78/	P(54A,B Police and Taxi)	D8BZ 5410626-A	R.H. and L.H.	2
106A58-9	BRACKET (REAR FLOOR CROSS MEMBER)			
79	A(54,66)	(RH) D9AZ 54106A58-A	(LH) D9AZ 54106A59-A	1
10692	MEMBER (FRONT FLOOR CROSS NO. 1)			
79	J	E1ZZ 6610692-A		1
10706-7	EXTENSION (REAR FLOOR CROSS REAR MEMBER)			
79	A(54,66)	(RH) D9MY 5410706-A	(LH) D9MY 5410707-A	1
10746	Refer to group 10780			
10780	MEMBER (REAR FLOOR CROSS REAR)			
78/	P(54)	E1DZ 5410780-A		1
10852	MEMBER (FRONT FLOOR CROSS)			
73	F	D00Z 6510852-B		1
75/	G	D5DZ 6610852-A		1
77/	V			1
73/77	P	D5DZ 6210852-A		1

YEAR	MODEL/RESTRICTIONS	PART NUMBER	DESCRIPTION	QTY.
11117	PLATE (FRONT FLOOR PAN DRAIN HOLE COVER)			
73/76	A,C,D,F,K,L,P	C7ZZ 6511117-A		AR
73/76	Y			AR
75/	G,V			AR
77/	A,D,F,K,L,P			AR
		376389-S101	(UU-82-D)-screw-hex. head-No. 8-18 x 3/4"	AR
79	A,J	D9AZ 5411117-A		4
73/	P	52012-S8	(U-202)-screw-tap-No. 8-15 x 1/2"	AR
11135	PAN (FRONT FLOOR)			
79	J	D9ZZ 6611135-A		1
79	P	E1BZ 5411135-A		1
11155	Refer to group 11160			
111A45	PLATE (FLOOR PAN REINFORCEMENT)			
79	J	E5ZZ 61111A45-A		1
11160	PAN (CENTER FLOOR)			
79	A(54,66)	E0VZ 5411160-A		1
79	A(74)	D9AZ 7411160-A		1
11165-6	INSULATOR (FRONT FLOOR PAN CENTER SOUND)			
78/	P	D8BZ 5411165-A	Front	1
		D8BZ 5411166-A	Rear	1
11172-3	INSULATOR (FLOOR PAN SOUND)			
75/76	A,C,D,F,G,J,K,L,P,V,Y	D5AZ 6011172-B	3' x 6' x 1/8" thick-heat bondable mastic-cut to fit	AR
77/	A,D,F,G,J,K,L,P,V,X			AR
75/76	A,C,D,F,G,J,K,L,P,V,Y	D5AZ 6011172-C	3' x 6' x 1/2" thick-fiber pad-cut to fit	AR
77/	A,D,F,G,J,K,L,P,V,X			AR
76/	A(53H,L,71) "From 6/28/76"	D7AZ 7111172-A		1
77/	A(53,65) - - Canada only			1
75	C(53,65,71)	D50Z 6511172-A	Front floor only	1
76/	F			1
78/	G	D8DZ 6611172-A	Cut to fit	1
77/78	V			1
79	J	(RH) D8BZ 5411172-A	(LH) D8BZ 5411173-A	1
78/	P			1
11181	INSULATOR (FRONT FLOOR PAN FRONT SOUND)			
78/	P	D8BZ 5411181-A		1
11215	PAN (REAR FLOOR)			
78/	P(36,54,66 exc. Police and Taxi)	E1DZ 5411215-A		1
78/	P(54A,B Police and Taxi)	E1BZ 5411215-A		1
78/	P(74)	E1DZ 7411215-A		1
11246-9	REINFORCEMENT (FLOOR PAN SEAT TRACK)			
79	J	D8BZ 5411248-B	R.H. and L.H.	2
78/	P	D8BZ 5411248-B	R.H. and L.H.-approx. 1 23/32" x 4"	2
11250-1	EXTENSION (REAR FLOOR PAN to QUARTER PANEL)			
79	A(54,66)	(RH) D9AZ 5411250-A	(LH) D9AZ 5411251-A	1
75/	D	(RH) D5VY 6011250-A	(LH) D5VY 6011251-B	1
77/	F(53,65)	(RH) D70Z 6511250-A	(LH) D70Z 6511251-A	1
79	J	(RH) D9ZZ 6611250	(LH) D9ZZ 6611251-A	1
78/	P(36,54,66)	(RH) ★	(LH) D8BZ 5411251-A	1
11309	HOUSING (FUEL FILLER PIPE INNER)			
75/	G	D5DZ 6611309-A		1
11318	PANEL (REAR FLOOR REAR SILL)			
78/	P(74)	D8BZ 7411318-B		1
11338	REINFORCEMENT (FLOOR AT SEAT MOUNTING)			
79	J	D8BZ 5411338-A		2
78/	P			2
113B48-9	REINFORCEMENT (REAR FLOOR PAN TO QUARTER PANEL EXTENSION)			
79	A(54,66)	(RH) D9AZ 54113B48-A	(LH) D9AZ 54113B49-A	1
79	J	(RH) D9ZZ 66113B48-A	(LH) D9ZZ 66113B49-A	1

COPYRIGHT © 1986— FORD MOTOR COMPANY —DEARBORN, MICHIGAN

1973/79 LINCOLN-MERCURY CARS

YEAR	MODEL/RESTRICTIONS	PART NUMBER	DESCRIPTION	QTY.
113A66	RETAINER (BODY BOLT ANCHOR PLATE)			
79	A(54,74)	D9AZ 54113A66-C	Approx. 1 3/16" x 2 13/16"	2
113A74	INSULATOR (REAR FLOOR PAN FRONT SOUND)			
78/	P	D8BZ 74113A74-A	Cut to fit	1
11406	ABSORBER (SPARE WHEEL WELL SOUND)-Improvise			
11493	INSULATOR (FLOOR PAN UNDER REAR SEAT SOUND)			
79	J,P	D9BZ 5411493-A		1
78	P	D8BZ 5411493-A		1
115A32	Refer to group 22050			
115A42	PANEL (AUXILIARY FLOOR REAR)-Paint to match			
79	A(74)	D9AZ 74115A42-A		1
115A44-5	PANEL (AUXILIARY FLOOR SIDE)-Paint to match			
79	A(74)	(RH) D9AZ 74115A44-A	(LH) D9AZ 74115A45-A	1
115A46-7	SUPPORT (AUXILIARY FLOOR SIDE PANEL)			
79	A(74)	(RH) D9AZ 74115A46-A	(LH) D9AZ 74115A47-A	1
115A72	BUMPER (AUXILIARY FLOOR PANEL)			
73/76	A(71),Y(71)	C5AZ 71115A72-A	7/32" wide x 1 13/16" long X 19/32" thick	2
77/78	A(71)			2
79	A(74)			2
11598	LATCH (STORAGE COMPARTMENT DOOR)			
73/76	C(71)		Refer to group 31700	
116A00-1	HINGE (STORAGE COMPARTMENT DOOR REAR)			
73/76	A(71),Y(71)	(RH) C9AZ 71116A00-A	(LH) C9AZ 71116A01-A	1
77/78	A(71)		Front-refer to group 11640-1	
79	A(74)			1
11609	PLATE (FLOOR SIDE MEMBER NAME)			
78	P		Refer to group 16228 in Chassis section	
11640-1	HINGE (STORAGE COMPARTMENT DOOR FRONT)			
73/76	A(71),Y(71)	(RH) C9AZ 7111640-A	(LH) C9AZ 7111641-A	1
77/78	A(71)			1
79	A(74)			1
11698-9	PANEL (STORAGE COMPARTMENT DOOR)			
79	A(74)	(RH) D9AZ 7411698-A	(LH) D9AZ 7411699-A / Paint to match	1
12110	REINFORCEMENT (FLOOR PLATE TRANSMISSION COVER)			
79	J - - w/Warner SR4 M/T	E1ZZ 6612110-A		1
13144-5	RETAINER (REAR FLOOR MAT)			
73	C(63,65)	(RH) D30Z 6513144-A	(LH) D30Z 6513145-A / Paint to match	1
74/76	C(65),F			1
77/	F(65L)			1
13208-9	PLATE (FRONT DOOR SCUFF)			
73/74	A(53,57,71),Y(53,71)	D3AZ 5313208-A	R.H. and L.H.	2
75/76	A(53,71),Y(53,71)			2
77/78	A(53,71)			2
73/76	A(65),Y(65)	D3AZ 6513208-A	R.H. and L.H.	2
77/78	A(65)			2
79	A(54,74)	(RH) D9AZ 5413208-G	(LH) D9AZ 5413209-G / Bright finish-incl. 1" x 3" "Ford" oval insert	1
79	A(66)	E1AZ 6613208-A	R.H. and L.H.-blue-less insert	2
		E1AZ 6613208-B	R.H. and L.H.-cordovan-less insert	2
		E1AZ 6613208-F	R.H. and L.H.-green-less insert	2
		E1AZ 6613208-C	R.H. and L.H.-red-less insert	2
79	A(66)	(RH) D9AZ 6613208-G	(LH) ★ / Bright finish-incl. 1" x 3" "Ford" oval insert	1

1973/79 LINCOLN-MERCURY CARS

YEAR	MODEL/RESTRICTIONS	PART NUMBER	DESCRIPTION	QTY.
13208-9	PLATE (FRONT DOOR SCUFF)+5FCont'd			
73/76	C(53,71)	D20Z 5313208-A	R.H. and L.H.	2
73/76	C(63,65)	D20Z 6513208-A	R.H. and L.H.	2
77/	D(53) "From 9/7/76"	D7VY 5313208-A	R.H. and L.H.-incl. plastic insert	2
77/	D(60) "From 9/7/76"	D7VY 6013208-A	R.H. and L.H.-incl. plastic insert	2
77/	F(53)	D20Z 5313208-A	R.H. and L.H.	2
74/	F(65)	D20Z 6513208-A	R.H. and L.H.	2
75/	G(54)	D5DZ 5413208-B	R.H. and L.H.-less rubber insert	2
75/77	G(54)	D74Y 5413208-B	R.H. and L.H.-incl. rubber insert w/"Ford" nameplate	2
73/78	J	(RH) D0RY 6213208-A	(LH) D0RY 6213209-A Natural aluminum	1
76/78	J(64S)	(RH) D6RY 6413208-B	(LH) ★ D6RY 6413209-B-NR Black	1
79	J	D9ZZ 6613208-C	R.H. and L.H.-chamois	2
		E1ZZ 6613208-F	R.H. and L.H.-red	2
		E1ZZ 6613208-G	R.H. and L.H.-vaquero	2
77/	K - - w/o KB or KY trim code	D7LY 6513208-B	R.H. and L.H.-incl. plastic insert	2
74/	L	D1FZ 6213208-A	R.H. and L.H.	2
78/	P(36)	D8BZ 3613208-A	R.H. and L.H.-gold	2
78	P(54,74)	(RH) D8BZ 5413208-A	(LH) D8BZ 5413209-A Black	1
		(RH) D8BZ 5413208-C	(LH) D8BZ 5413209-C Blue	1
		(RH) D8BZ 5413208-D	(LH) D8BZ 5413209-D Chamois	1
		(RH) ★	(LH) D8BZ 5413209-F Russet	1
79	P(54,74)	(RH) D8BZ 5413208-A	(LH) D8BZ 5413209-A Black	1
		(RH) D8BZ 5413208-C	(LH) D8BZ 5413209-C Blue	1
		(RH) D8BZ 5413208-D	(LH) D8BZ 5413209-D Chamois	1
		(RH) D9BZ 5413208-A	(LH) D9BZ 5413209-A Red	1
78	P(36,66)	D8BZ 6613208-A	R.H. and L.H.-black	2
		E1BZ 6613208-A	R.H. and L.H.-blue	2
		D8BZ 6613208-D	R.H. and L.H.-chamois	2
		★ D8BZ 6613208-F Not repl'd (12/83)	R.H. and L.H.-russet	2
79	P(36,66)	D8BZ 6613208-A	R.H. and L.H.-black	2
		E1BZ 6613208-A	R.H. and L.H.-blue	2
		D8BZ 6613208-D	R.H. and L.H.-chamois	2
		E1BZ 6613208-E	R.H. and L.H.-red	2
77/78	V "Before 1/3/78"	D74Y 5413208-B	R.H. and L.H.-incl. rubber insert-w/"Ford" nameplate	2
78/	V "From 1/3/78"	D84Y 5413208-A	R.H. and L.H.-incl. rubber insert-w/"Lincoln Versalles -Ford" nameplate	2
73/78	J	E810029-S79	(AU-12-E)-screw-pan hd. tap.-No. 6-18 x 5/8"	10
13220	SUPPORT (REAR DOOR SCUFF PLATE)			
79	A(54,74)	D9AZ 5413220-A	R.H. and L.H.	2
13228	PLATE (REAR DOOR SCUFF)			
73/74	A(53,57,71),Y(53,71)	D3AZ 5313228-A	R.H. and L.H.	2
75/76	A(53,71),Y(53,71)			2
77/78	A(53,71)			2
79	A(54,74)	D9AZ 5413228-A	R.H. and L.H.	2
73/76	C(53,71)	D20Z 5313228-A	R.H. and L.H.	2
77/	D(53) "From 9/7/76"	D7VY 5313228-A	R.H. and L.H.-incl. plastic insert	2
75/	G(54H)	D5DZ 5413228-A	R.H. and L.H.-less rubber insert	2
77	F(53,71)	D20Z 5313228-A	R.H. and L.H.	2
78/	F(53)			2
77/	V	D74Y 5413228-A	R.H. and L.H.-incl. rubber insert	2
75/77	G(54K)			2
78/	G(54)			2

COPYRIGHT © 1986 — FORD MOTOR COMPANY — DEARBORN, MICHIGAN

1973/79
LINCOLN-MERCURY CARS

YEAR	MODEL/RESTRICTIONS	PART NUMBER	DESCRIPTION	QTY.
20000-2	Refer to Exterior Moulding Section at the end of this catalog			
20124-5	DOOR ASSY. (FRONT)			
79	A(54,74)	(RH) D9AZ 5420124-A	(LH) D9AZ 5420125-A	1
79/	A(66)	(RH) ★ E0AZ 6620124-A r/bE1AZ 6620124-A(7/81)	(LH) E0AZ 6620125-A	1
75/	D(53)	(RH) D7VY 5320124-A	(LH) D7VY 5320125-A	1
75/	D(60)	(RH) D7VY 6020124-A	(LH) D7VY 6020125-A	1
77	F(53,71)	(RH) D70Z 5320124-B	(LH) D70Z 5320125-B	1
78/	F(53)			1
77/	F(65)	(RH) D70Z 6520124-B	(LH) D70Z 6520125-B	1
75/76	G(66) "From 7/7/75"	(RH) D6DZ 6620124-A	(LH) ★ D6DZ 6620125-A r/bD7DZ 6620125-A(6/77)	1
75/77	G(54)	(RH) ★ D7DZ 5420124-C Not replaced (6/84)	(LH) D7DZ 5420125-C	1
75/77	G(66)	(RH) ★ D7DZ 6620124-B Not replaced (6/84)	(LH) ★ D7DZ 6620125-B Not replaced (6/84)	1
78/	G(54)	(RH) D8DZ 5420124-A	(LH) D8DZ 5420125-A	1
78/79	G(66) "Before 5/7/79"	(RH) ★ D8DZ 6620124-A r/bE0DZ 6620124-B (6/84)	(LH) ★ D8DZ 6620125-A r/bE0DZ 6620125-A(3/82)	1
79/	G(66) "From 5/7/79"	(RH) E0DZ 6620124-A	(LH) E0DZ 6620125-A	1
76/78	J	(RH) ★ D5RY 6420124-A Not replaced (6/84)	(LH) D5RY 6420125-A	1
79/	J	(RH) E0ZZ 6620124-A	(LH) E0ZZ 6620125-A	1
77/	K	(RH) D7LY 6520124-A	(LH) D7LY 6520125-A	1
74	L(62,64)	(RH) ★ D4FZ 6220124-A r/b (1) ea. D6FZ 6220124-A and D4FZ 6222800-A	(LH) ★ D4FZ 6220125-A r/b (1) ea. D5FZ 6220125-A and D4FZ 6222800-A	1
74	L(73)	(RH) ★ D4FZ 7320124-A r/b (1) ea. D5FZ 7320124-A and D4FZ 6222800-A	(LH) ★ D4FZ 7320125-A r/b (1) ea. D5FZ 7320125-A and D4FZ 6222800-A	1
75/76	L(62,64) - - w/dual arm window regulator "Before 8/2/76"	(RH) D6FZ 6220124-A	(LH) D6FZ 6220125-A	1
76/77	L(62,64) - - w/single arm window regulator "From 8/2/76 to 6/27/77"	(RH) ★ D7FZ 6220124-B Not replaced (4/85)	(LH) D7FZ 6220125-B	1
77/	L(62,64) "From 6/27/77"	(RH) D8FZ 6220124-A	(LH) D8FZ 6220125-A	1
75/76	L(73) - - w/dual arm window regulator "Before 8/2/76"	(RH) D6FZ 7320124-A	(LH) ★ D6FZ 7320125-A r/bD7FZ 7320125-B(2/78)	1
76/77	L(73) - - w/single arm window regulator "From 8/2/76 to 6/27/77"	(RH) ★ D7FZ 7320124-B Not replaced (6/84)	(LH) D7FZ 7320125-B	1
77/	L(73) "From 6/27/77"	(RH) D8FZ 7320124-A	(LH) D8FZ 7320125-A	1
73	P(54) "Before 12/1/72"	(RH) D2DZ 5420124-B	(LH) D2DZ 5420125-B	1
78/79	P(36)	(RH) E0BZ 3620124-A	(LH) E0BZ 3620125-A	1
78/79	P(54,74)	(RH) E1BZ 5420124-A	(LH) E1BZ 5420125-A	1
78/79	P(66)	(RH) E1BZ 6620124-B	(LH) E1BZ 6620125-B	1
77	V "Before 4/1/77"	(RH) ★ D7DZ 5420124-A r/bD7DZ 5420124-C(2/78)	(LH) D7DZ 5420125-A	1
77	V "From 4/1/77"	(RH) ★ D7DZ 5420124-C Not replaced (6/84)	(LH) D7DZ 5420125-C	1
78/	V	(RH) D8DZ 5420124-A	(LH) D8DZ 5420125-A	1
74	A,Y	★377934-S	Plug-bottom	4
74	A(53,57,71),Y(53,71)	352284-S	(PP-4)-plug-button-1 1/4" dia.	2
74	A,Y	377949-S	(PP-3-F)-plug-7/8" x 3/8"	1
73/76	D	376389-S	(UU-82-D)-screw-self tapping-pan head No. 8 x 3/4"	8
73/76	F(65K)	379560-S	(UU-89-CA)-screw-self tapping-cross recess No. 8 x 3/8"	20
74	K	★377856-S	Plug-13/16" dia.	1

COPYRIGHT © 1986— FORD MOTOR COMPANY —DEARBORN, MICHIGAN

NEW ISSUE

1973/79 LINCOLN-MERCURY CARS

YEAR	MODEL/RESTRICTIONS	PART NUMBER	DESCRIPTION		QTY.
20200-1	**PANEL (FRONT DOOR OUTSIDE)**				
73/74 75/76 77/78	A(53,57,71),Y(53,71) A(53,71),Y(53,71) A(53,71)	(RH) D7MY 5320200-B	(LH) D7MY 5320201-B		1
73/77	A(65),Y(65) "Before 4/1/73/77"	(RH) ★ D7MY 6520200-A r/b D7MY 6520200-B(12/78)	(LH) D7MY 6520201-A		1
77/78	A(65) "From 4/1/77"	(RH) D7MY 6520200-B	(LH) D7MY 6520201-B		1
79	A(54,74)	(RH) D9AZ 5420200-A	(LH) D9AZ 5420201-A		1
79	A(66)	(RH) D9AZ 6620200-A	(LH) D9AZ 6620201-A		1
73/76	C(63,65)	(RH) D3GY 6520200-A	(LH) D3GY 6520201-A		1
75/	D(53)	(RH) D7VY 5320200-A	(LH) D7VY 5320201-A		1
75/	D(60)	(RH) D7VY 6020200-A	(LH) D7VY 6020201-A		1
73	F	(RH) D1WY 6520200-A	(LH) D2WY 6520201-A	Less reinforcement	1
74/76	F	(RH) D3GY 6520200-A	(LH) D3GY 6520201-A		1
77 78/	F(53,71) F(53)	(RH) D70Z 5320200-B	(LH) D70Z 5320201-B		1 1
77/	F(65)	(RH) D70Z 6520200-B	(LH) D70Z 6520201-B		1
75/	G(54)	(RH) D7DZ 5420200-C	(LH) D7DZ 5420201-C		1
75/	G(66)	(RH) D7DZ 6620200-B	(LH) D7DZ 6620201-B		1
79/	J	(RH) E0ZZ 6620200-A	(LH) E0ZZ 6620201-A	For cutting instruction see T.S.B. 168-article 3371 dated October 17, 1978	1
74/76	K	(RH) D4LY 6520200-A	(LH) D4LY 6520201-A		1
77/	K	(RH) D7LY 6520200-A	(LH) ★ D7LY 6520201-A Not replaced (12/85)		1
74/	L	(RH) D7FZ 6220200-A	(LH) D7FZ 6220201-A		1
73/77	P(54)	(RH) ★ D7DZ 5420200-B Not replaced (12/85)	(LH) D7DZ 5420201-B		1
73/77	P(62)	(RH) D7DZ 6220200-A	(LH) D7DZ 6220201-A		1
78/	P(54,74)	(RH) D8BZ 5420200-A	(LH) D8BZ 5420201-A		1
78/	P(36,66)	(RH) D8BZ 6620200-A	(LH) D8BZ 6620201-A		1
77/	V	(RH) D7DZ 5420200-C	(LH) D7DZ 5420201-C		1
20224-5	**REINFORCEMENT (FRONT DOOR OUTSIDE PANEL MIRROR)**				
79	A	D9AZ 5420224-A	R.H. and L.H.		2
77/	F	D70Z 6520224-A	R.H. and L.H.		2
74/75	L	D4FZ 6220224-A	R.H.		1
77/	K	D7LY 6520224-A			2
202A46-7	**REINFORCEMENT (DOOR INSIDE PANEL AT REGULATOR)**				
74/	K - - w/mini-vent	(RH) D4SZ 65202A46-A	(LH) D4SZ 65202A47-A		1
20318	**Refer to Exterior Moulding Section at the end of this catalog**				
20334	**SHIELD (FRONT DOOR LATCH REMOTE CONTROL OPENING)**				
73 73/	A,Y K	D4SZ 6520334-A	R.H. and L.H.		2 2
77/	F(65L)	D7SZ 6020334-A	R.H. and L.H.		2
20394-5	**INSULATOR (FRONT DOOR INSIDE PANEL SOUND)**				
79	A(54,74)	(RH) D9AZ 5420394-A	(LH) D9AZ 5420395-A		1
79	A(66)	(RH) D9AZ 6620394-A	(LH) D9AZ 6620395-A		1

YEAR	MODEL/RESTRICTIONS	PART NUMBER	DESCRIPTION	QTY.
20492-3	Refer to Exterior Moulding Section at the end of this catalog			
205A28	WEATHERSTRIP (DOOR REPAIR ON BODY)			
78/	P	D8BZ 54205A28-A	R.H. and L.H.-12" long	AR
20530-1	WEATHERSTRIP (FRONT DOOR)-Also refer to groups 51222-3 & 20708-9			
73/76	A(53,71),Y(53,71)	(RH) D3AZ 5320530-A	(LH) D3AZ 5320531-A	1
77/78	A(53,71)			1
73	A(65),Y(65) "Before 11/13/72"	(RH) D3AZ 6520530-A	(LH) D3AZ 6520531-A	1
73/76	A(65),Y(65) "From 11/13/72"	(RH) D3AZ 6520530-B	(LH) D3AZ 6520531-B	1
77/78	A(65)			1
73/76	C(53,71)	(RH) D20Z 5320530-A	(LH) D20Z 5320531-A	1
73/76	C(63,65)	(RH) ★ D20Z 6520530-A Not replaced (11/83)	(LH) D20Z 6520531-A	1
73/74	D(65)	(RH) ★ C9AZ 6320530-A Not replaced (6/84)	(LH) ★ C9AZ 6320531-A Not replaced (4/85)	1
75/	D(53)	(RH) D5VY 5320530-A	(LH) D5VY 5320531-A	1
75/	D(60)	(RH) ★ D5VY 6020530-A Not replaced (6/84)	(LH) ★ D5VY 6020531-A Not replaced (12/85)	1
73	F	(RH) D1ZZ 6520530-A	(LH) D1ZZ 6520531-A	1
74/76	F	(RH) ★ D20Z 6520530-A Not replaced (11/83)	(LH) D20Z 6520531-A	1
77	F(53,71)	(RH) D20Z 5320530-A	(LH) D20Z 5320531-A	1
78/	F(53)			1
77/	F(65)	(RH) D70Z 6520530-A	(LH) D70Z 6520531-A	1
75/	G(54)	(RH) D5DZ 5420530-A	(LH) D5DZ 5420531-A	1
75/	G(66)	(RH) D5DZ 6620530-A	(LH) D5DZ 6620531-A	1
73/76	J		Refer to group 02600 in Soft Trim Section	
73	K	(RH) D2SZ 6520530-B	(LH) ★ D5SZ 6520531-A Not replaced (4/85)	1
74/76	K	(RH) D5SZ 6520530-A	(LH) ★ D5SZ 6520531-A Not replaced (4/85)	1
77/	K	(RH) ★ D7LY 6520530-A Not replaced (3/86)	(LH) D7LY 6520531-A	1
74/	L	(RH) D6FZ 6220530-A	(LH) D6FZ 6220531-A	1
73/77	P(54)	(RH) D1DZ 5420530-A	(LH) D1DZ 5420531-A	1
73/77	P(62)	(RH) D0DZ 6220530-A	(LH) D0DZ 6220531-A	1
78/	P		Refer to group 20708-9	
77/	V	(RH) D74Y 5420530-A	(LH) D74Y 5420531-A	1
73/	A,C,F	376389-S	(UU-82-D)-screw-self tapping-pan head No. 8 x 3/4"	14
73/	D			8
74	K			16
73/77	P	382570-S	(HH-8-T)-pin-1/4" x 19/32" drive	4
20550-5	Refer to Exterior Moudling Section at the end of this catalog			
20568-9	WEATHERSTRIP (FRONT DOOR FRONT AT BELT INNER)			
79	A - - w/o vent window	(RH) D9AZ 5420568-A	(LH) D9AZ 5420569-A	1
20586	RETAINER (WEATHERSTRIP)			
73	A,C,F,K,P,Y	C5AZ 6220586-A		AR
78	P		Seat belts	AR
20700	SEAL (INNER PANEL BOTTOM DRAIN)			
73	A(53,57),K,Y(53)	C3AZ 6220700-B	Front and rear door	AR
73	A(71),Y(71)		Tailgate	AR

COPYRIGHT © 1986— FORD MOTOR COMPANY —DEARBORN, MICHIGAN

NEW ISSUE

1973/79 LINCOLN-MERCURY CARS

YEAR	MODEL/RESTRICTIONS	PART NUMBER	DESCRIPTION		QTY.
20704	INSERT (DOOR WEATHERSTRIP REPAIR ON BODY)				
78/	P	D8BZ 5420704-A	R.H. and L.H.-30" long		AR
20708	WEATHERSTRIP (FRONT DOOR OPENING)				
79	A(54,74)	(RH) ★ D9AZ 5420708-A r/b E5AZ 5420708-A(12/85)	(LH) D9AZ 5420709-A		1
79	A(66)	(RH) D9AZ 6620708-A	(LH) ★ D9AZ 6620709-A r/b E5AZ 6620709-A(12/85)		1
79	J	(RH) E1ZZ 6620708-A	(LH) E1ZZ 6620709-A		1
78/	P(36)	(RH) E1BZ 3620708-A	(LH) E1BZ 3620709-A		1
78/	P(54,74)	(RH) E1BZ 5420708-A	(LH) E1BZ 5420709-A		1
78/	P(66)	(RH) E1BZ 6620708-A	(LH) E1BZ 6620709-A		1
20748	Refer to Exterior Moulding Section at the end of this catalog				
20802	ORNAMENT (DOOR TRIM PANEL)				
77/	F(65L)	(RH) ★ D7WY 6520802-A Not replaced (12/85)	(LH) D7WY 6520803-A	Cougar crest	1
79	G,J	D9ZZ 6620802-A	R.H. and L.H.-round ghia crest		2
79	G	D9DZ 6620802-B	R.H. and L.H.-blue		2
		D9DZ 6620802-C	R.H. and L.H.-camel		2
		D9DZ 6620802-D	R.H. and L.H.-cordovan		2
		D9DZ 6620802-E	R.H. and L.H.-gray		2
		D9DZ 6620802-F	R.H. and L.H.-jade		2
		D9DZ 6620802-G	R.H. and L.H.-red		2
79	J(61D)	D9CY 6120802-A	R.H. and L.H.-Capri RS crest		2
20818-42	Refer to Exterior Moulding Section "R" for complete retainer information				
20846-79	Refer to Exterior Moulding Section at the end of this catalog				
20880-4	Refer to Exterior Moulding Section "R" for complete retainer information				
208A80	RETAINER (FRONT WINDOW FRAME)				
74/	L(73)	D2FZ 73208A80-A	R.H. and L.H.		2
208A96-7	Refer to groups 20550-5				
20910-7	Refer to Exterior Moulding Section at the end of the catalog				
20914	MOULDING (FRONT DOOR TRIM PANEL FRONT)				
78	K	D8LY 6520914-A	R.H. and L.H.-blue-11 1/2" long		2
79	K	(RH) D9LY 6520914-A	(LH) D9LY 6520915-A	Blue-11 1/2" long	1
20920	MOULDING (FRONT DOOR TRIM PANEL-REAR)				
78/	K	(RH) D9LY 6520920-A	(LH) D9LY 6520921-A	Blue-11 1/8" long	1
20932-41	Refer to Exterior Moulding Section at the end of this catalog				
20942-3	MOULDING (FRONT DOOR TRIM PANEL)				
73	A(53K)	(RH) D3MY 5320942-A	(LH) D3MY 5320943-A	Wood grain	1
73	A(65K)	(RH) D3MY 6520942-A	(LH) D3MY 6520943-A	Wood grain	1
75	A(53L,71K)	D5AZ 5320942-C	R.H. and L.H.-bright finish		2
76/78	A(53K,L,71K)				2
77/78	A(53K,L,71K)	(RH) D8AZ 5320942-A	(LH) ★ D8AZ 5320943-A Not replaced (4/85)	Wood grain incl. crest-"L" shape	1
77/78	A(65K,L)	(RH) D8AZ 6020942-A	(LH) ★ D8AZ 6020943-A Not replaced (4/85)	Wood grain incl. crest-"L" shape	1
73	C(63R)	(RH) ★ D20Z 6320942-A Not replaced (12/80)	(LH) D20Z 6320943-A		1
73	C(65K)	D30Y 6520942-A	R.H. and L.H.-gold		2
73/74	D(53)	D0VY 5320942-A	R.H. and L.H.		AR
77/	D(53)	D7VY 5320942-A	R.H. and L.H. -front and rear doors-majestic walnut wood grain and gold accent stripe - 25 3/8" long		2or4
77/	D(60)	D7VY 6020942-A	R.H. and L.H. - majestic walnut wood grain and gold accent stripe - 37" long		2
73	F	(RH) D1WY 6520942-A	(LH) D1WY 6520943-A		1
75/78	G(66)		(LH) D5DZ 6620943-A	Wood grain	1

YEAR	MODEL/RESTRICTIONS	PART NUMBER	DESCRIPTION	QTY.
20942-3	MOULDING (FRONT DOOR TRIM PANEL) — Cont'd			
77/	K	D7LY 6520942-A	R.H. and L.H. – majestic walnut wood grain – 33 1/4" long	2
78	P(54,74)	D8BZ 5420942-F	R.H. and L.H.–black–32 1/2" long	2
		D8BZ 5420942-D	R.H. and L.H.–blue	2
		D8BZ 5420942-B	R.H. and L.H.–chamois	2
		D8BZ 5420942-A	R.H. and L.H.–jade	2
		D8BZ 5420942-C	R.H. and L.H.–russet	2
		D8BZ 5420942-E	R.H. and L.H.–white	2
79	P(54,74)	D8BZ 5420942-F	R.H. and L.H.–black	2
		D8BZ 5420942-D	R.H. and L.H.–blue	2
		D9BZ 5420942-B	R.H. and L.H.–chamois	2
		D9BZ 5420942-A	R.H. and L.H.–red	2
78	P(36,66)	D8BZ 6620942-G	R.H. and L.H.–black–44 1/4" long	2
		D8BZ 6620942-D	R.H. and L.H.–blue	2
		D8BZ 6620942-B	R.H. and L.H.–chamois	2
		D8BZ 6620942-F	R.H. and L.H.–cream	2
		D8BZ 6620942-A	R.H. and L.H.–jade	2
		D8BZ 6620942-C	R.H. and L.H.–russet	2
		D8BZ 6620942-E	R.H. and L.H.–white	2
79	P(36,66)	D8BZ 6620942-G	R.H. and L.H.–black	2
		D8BZ 6620942-D	R.H. and L.H.–blue	2
		D9BZ 6620942-B	R.H. and L.H.–chamois	2
		D8BZ 6620942-F	R.H. and L.H.–cream	2
		D9BZ 6620942-A	R.H. and L.H.–red	2
		D8BZ 6620942-E	R.H. and L.H.–white	2
20954-5	Refer to Exterior Moulding Section "R" for complete retainer information			
20960-82	Refer to Exterior Moulding Section at the end of this catalog			
21048	MOULDING KIT (BODY SIDE)			
73/	A,C,D,F,G,J,K,L,P,V,Y	E0AZ 6621048-A	Black–1" wide and 3/8" thick–consists of (2) 11' pieces of vinyl	1
		E0AZ 6621048-E	Blue	1
		E0AZ 6621048-G	Burgundy/Cordovan	1
		E0AZ 6621048-F	Green	1
		E0AZ 6621048-D	Red	1
		E0AZ 6621048-B	Silver	1
		E0AZ 6621048-C	White	1
73/77	P(62)	D1DZ 6221048-A		1
21060-94	Refer to Exterior Moulding Section "R" for complete retainer information			

COPYRIGHT © 1986 — FORD MOTOR COMPANY — DEARBORN, MICHIGAN

1973/79 LINCOLN-MERCURY CARS

YEAR	MODEL/RESTRICTIONS	PART NUMBER	DESCRIPTION		QTY.
21110-1	**MOULDING (FRONT DOOR TRIM PANEL)**				
78/	K	(RH) D9LY 6521110-A Not replaced(4/85)	(LH) ★ D9LY 6521111-A	Ebony wood grain	1
21130	**COVER (FRONT DOOR INSIDE PANEL ACCESS)**				
73/78	J	DORY 6221130-A	Black-paint to match		8

YEAR	MODEL/RESTRICTIONS	PART NUMBER CLEAR	PART NUMBER TINTED	NAGS NO.	DESCRIPTION	QTY.
21402-3	**WINDOW ASSY. (FRONT DOOR VENT)**					
73/77	A(53,57,71),Y(53,71)		D6AZ 5321402-A	V5040	R.H.	1
73/77	A(53,57,71),Y(53,71)		D6AZ 5321403-A	V5041	L.H.	1
73	D(53)		D3VY 5321402-A	V4705	R.H.	1
			D3VY 5321403-A	V4706	L.H.	1
74	D(53)		D4VY 5321402-A	V4705	R.H.	1
			D4VY 5321403-A	V4706	L.H.	1
75/	D		D6VY 6021402-A	V4977	R.H.	1
			D6VY 6021403-A	V4978	L.H.	1
74/76	K		D4SZ 6521402-A	V5031	R.H.	1
			D4SZ 6521403-A	V5032	L.H.	1
77/	K		D7LY 6521402-A	V5518	R.H.	1
			D7LY 6521403-A	V5519	L.H.	1

YEAR	MODEL/RESTRICTIONS	PART NUMBER	DESCRIPTION	QTY.
214A02	**SPACER (FRONT DOOR VENT WINDOW HANDLE)**			
78/	P	D8BZ 54214A02-A	R.H. and L.H.	2

YEAR	MODEL/RESTRICTIONS	PART NUMBER CLEAR	PART NUMBER TINTED	NAGS NO.	DESCRIPTION	QTY.
21410-1	**GLASS (FRONT DOOR WINDOW)-Also refer to group 21400-1**					
73/78	A(53,71) - - w/o mini vent	D3AZ 5321410-A	D3AZ 5321410-B	D4809	R.H.	1
		D3AZ 5321411-A	D3AZ 5321411-B	D4810	L.H.	1
73/74	A(53,71) - - w/mini vent "Before 12/3/73"		★ D3AZ 5321410-D r/b D4AZ 5321410-A(3/86)	D4807	R.H. - w/8 holes	1
			★ D3AZ 5321411-D r/b D4AZ 5321411-A(3/86)	D4808	L.H. - w/8 holes	1
74/77	A(53,71) - - w/mini vent "From 12/3/73"		D4AZ 5321410-A	D5118	R.H. - w/10 holes	1
			D4AZ 5321411-A	D5119	L.H. - w/10 holes	1
73/74	A(57) - - w/o mini vent	D3AZ 5721410-A	★ D3AZ 5721410-B Not replaced(4/85)	D4838	R.H.	1
		★ D3AZ 5721411-A Not replaced(4/85)	D3AZ 5721411-B	D4839	L.H.	1
74	A(57) - - w/mini vent "From 12/3/76"		D4AZ 5721410-A	D5114	R.H. - w/10 holes	1
			D4AZ 5721411-A	D5115	L.H. - w/10 holes	1
73/78	A(65)	★ D3AZ 6521410-A Not replaced(4/85)	D3AZ 6521410-B	D4802	R.H.	1
		★ D3AZ 6521411-A Not replaced(12/85)	D3AZ 6521411-B	D4803	L.H.	1
79	A(54,74) - - w/o sail mirror or vent window	D9AZ 5421410-A	★ D9AZ 5421410-B r/b E0AZ 5421410-B(6/80)	D5851	R.H.	1
		E0AZ 5421411-A	E0AZ 5421411-B	D5852	L.H.	1

1973/79 LINCOLN-MERCURY CARS

YEAR	MODEL/RESTRICTIONS	PART NUMBER CLEAR	PART NUMBER TINTED	NAGS NO.	DESCRIPTION	QTY.
21410-1	GLASS (FRONT DOOR WINDOW)-Also refer to group 21400-1 — Cont'd					
79	A(54,74) - - w/sail mirror and w/o vent window	E0AZ 5421410-C	E0AZ 5421410-D	D5849	R.H.	1
		E0AZ 5421411-C	E0AZ 5421411-D	D5850	L.H.	1
79	A(54,74) - - w/vent window		D9AZ 5421410-E	D5945	R.H.	1
			D9AZ 5421411-E	D5946	L.H.	1
79	A(66) - - w/o sail mirror or vent window	D9AZ 6621410-A	D9AZ 6621410-B	D5843	R.H.	1
		D9AZ 6621411-A	D9AZ 6621411-B	D5844	L.H.	1
79	A(66) - - w/sail mirror and w/o vent window	D9AZ 6621410-C	D9AZ 6621410-D	D5841	R.H.	1
		D9AZ 6621411-C	D9AZ 6621411-D	D5842	L.H.	1
79	A(66) - - w/vent window		D9AZ 6621410-E	D5943	R.H.	1
			D9AZ 6621411-E	D5944	L.H.	1
73	C(53,71) "Before 7/23/73"	★ D20Z 5321410-A r/b D40Z 5321410-A(3/86)	D20Z 5321410-B	D4725	R.H.	1
		D20Z 5321411-A	D20Z 5321411-B	D4726	L.H.	1
73	C(63)	D20Z 6321410-A	★ D20Z 6321410-B Not replaced(2/83)	D4713	R.H.	1
		D20Z 6321411-A	★ D20Z 6321411-B Not replaced(2/83)	D4714	L.H.	1
73	C(65) "Before 7/23/73"	D20Z 6521410-A	D20Z 6521410-B	D4719	R.H.	1
		D20Z 6521411-A	D20Z 6521411-B	D4720	L.H.	1
73/76	C(53,71) "From 7/23/73"	D40Z 5321410-A	D40Z 5321410-B	D5048	R.H.	1
		D40Z 5321411-A	D40Z 5321411-B	D5049	L.H.	1
73/76	C(65) "From 7/23/73"	D40Z 6521410-A	D40Z 6521410-B	D5042	R.H.	1
		D40Z 6521411-A	D40Z 6521411-B	D5043	L.H.	1
73	D(53) - - w/o mini vent "Before 12/1/72"		D1AZ 5321410-B	D4512	R.H.	1
			D1AZ 5321411-B	D4513	L.H.	1
73/74	D(53) - - w/o mini vent "From 12/1/72"		★ D3VY 5321410-A Not replaced(12/83)	D4840	R.H.	1
			D3VY 5321411-A	D4841	L.H.	1
75/	D(53) - - w/o mini vent		D5VY 5321410-A	D5168	R.H.	1
			D5VY 5321411-A	D5169	L.H.	1
73/74	D(53) - - w/mini vent		D2VY 5321410-B	D4707	R.H.	1
			★ D2VY 5321411-B Not replaced (12/85)	D4708	L.H.	1
75/	D(53) - - w/mini vent		D5VY 5321410-B	D5166	R.H.	1
			D5VY 5321411-B	D5167	L.H.	1
73/74	D(65)		D0AZ 6521410-B	D4310	R.H.	1
			D0AZ 6521411-B	D4311	L.H.	1
75/	D(60) - - w/o mini vent		D5VY 6021410-A	D5159	R.H.	1
			D5VY 6021411-A	D5160	L.H.	1
75/	D(60) - - w/mini vent		D5VY 6021410-B	D4986	R.H.	1
			D5VY 6021411-B	D4987	L.H.	1
73	F	D1ZZ 6521410-A	D1ZZ 6521410-B	D4537	R.H.	1
		★ D1ZZ 6521411-A Not replaced (12/85)	D1ZZ 6521411-B	D4538	L.H.	1
74/76	F	D40Z 6521410-A	D40Z 6521410-B	D5042	R.H.	1
		D40Z 6521411-A	D40Z 6521411-B	D5043	L.H.	1
77	F(53,71)	D40Z 5321410-A	D40Z 5321410-B	D5048	R.H.	1
78/	F(53)	D40Z 5321411-A	D40Z 5321411-B	D5049	L.H.	1
77/	F(65L)	D7WY 6521410-A	D7WY 6521410-B	D5659	R.H.	1
		D7WY 6521411-A	D7WY 6521411-B	D5660	L.H.	1
77/	F(65D,K)	★ D70Z 6521410-A Not replaced(4/85)	D70Z 6521410-B	D5482	R.H.	1
		D70Z 6521411-A	D70Z 6521411-B	D5483	L.H.	1

COPYRIGHT © 1986— FORD MOTOR COMPANY —DEARBORN, MICHIGAN

NEW ISSUE

1973/79 LINCOLN-MERCURY CARS

YEAR	MODEL/RESTRICTIONS	PART NUMBER CLEAR	PART NUMBER TINTED	NAGS NO.	DESCRIPTION	QTY.
21410-1	GLASS (FRONT DOOR WINDOW)-Also refer to group 21400-1 — Cont'd					
75/77	G(54)	D8DZ 5421410-A	D84Y 5421410-A	D5833	R.H.	1
			D84Y 5421411-A	D5834	L.H.	1
75/77	G(54)	D7DZ 5421410-A		D5183	R.H.	1
		D7DZ 5421411-A		D5184	L.H	1
78/	G(54)	D8DZ 5421410-A	D84Y 5421410-A	D5833	R.H.	1
		D8DZ 5421411-A	D84Y 5421411-A	D5834	L.H.	1
75/	G(66)	D5DZ 6621410-A	D5DZ 6621410-B	D5174	R.H.	1
		D5DZ 6621411-A	D5DZ 6621411-B	D5175	L.H.	1
73/74	J	D0RY 6221410-A		FD1138	R.H.	1
		D0RY 6221411-A		FD1139	L.H.	1
76/78	J	D8RY 6421410-A	D5RY 6421410-B	FD1151	R.H.	1
		D8RY 6421411-A	D5RY 6421411-B	FD1152	L.H.	1
79	J	E2ZZ 6621410-B	E2ZZ 6621410-C	D5865	R.H.	1
		E2ZZ 6621411-B	E2ZZ 6621411-C	D5866	L.H.	1
73	K		D2SZ 6521410-B	D4734	R.H.	1
			D2SZ 6521411-B	D4735	L.H.	1
74/76	K - - w/o mini vent		D4SZ 6521410-A	D5035	R.H.	1
			D4SZ 6521411-A	D5036	L.H.	1
74/76	K - - w/mini vent		D4SZ 6521410-B	D5033	R.H.	1
			D4SZ 6521411-B	D5034	L.H.	1
77/	K - - w/o mini vent		D7LY 6521410-A	D5522	R.H.	1
			D7LY 6521411-A	D5523	L.H.	1
77/	K - - w/mini vent		D7LY 6521410-B	D5520	R.H.	1
			D7LY 6521411-B	D5521	L.H.	1
74/76	L(62,64) - - w/dual arm window regulator "Before 8/2/76"	D1FZ 6221410-C	D1FZ 6221410-D	D4544	R.H.	1
		D1FZ 6221411-C	D1FZ 6221411-D	D4545	L.H.	1
76/	L(62,64) - - w/single arm window regulator "From 8/2/76"	D7FZ 6221410-A	D7FZ 6221410-B	D5512	R.H.	1
		D7FZ 6221411-A	D7FZ 6221411-B	D5513	L.H.	1
74/76	L(73) - - w/dual arm window regulator "Before 8/2/76"	D2FZ 7321410-A	D2FZ 7321410-B	D4744	R.H.	1
		D2FZ 7321411-A	D2FZ 7321411-B	D4745	L.H.	1
76/	L(73) - - w/single arm window regulator "From 8/2/76"	D7FZ 7321410-A	D7FZ 7321410-B	D5515	R.H.	1
		D7FZ 7321411-A	D7FZ 7321411-B	D5516	L.H.	1
73/77	P(54)	D2DZ 5421410-A	D2DZ 5421410-B	D4551	R.H.	1
		D2DZ 5421411-A	D2DZ 5421411-B	D4552	L.H.	1
73/74	P(62)	D2DZ 6221410-A	D2DZ 6221410-B	D4275	R.H.	1
		D2DZ 6221411-A	D2DZ 6221411-B	D4276	L.H.	1
75/77	P(62)	D5DZ 6221410-A	D5DZ 6221410-B	D5193	R.H.	1
		D5DZ 6221411-A	D5DZ 6221411-B	D5194	L.H.	1
78/	P(36) - - w/o sail type mirror	D8BZ 3621410-A	D8BZ 3621410-B	D5663	R.H.	1
	- - w/sail type mirror	D8BZ 3621410-C	D8BZ 3621410-D	D5661	R.H.	1
		D8BZ 3621411-A	D8BZ 3621411-B	D5662	L.H.	1
78/	P(54,74) - - w/o sail type mirror or vent window	E1DZ 5421410-A	E1DZ 5421410-B	D5685	R.H.	1
	- - w/ sail type mirror and w/vent window	E1DZ 5421410-C	E1DZ 5421410-D	D5681	R.H.	1
	- - w/sail type mirror and w/o vent window	E1DZ 5421410-E	E1DZ 5421410-F	D5683	R.H.	1
	- - w/o sail type mirror or vent window	D8BZ 5421411-E	D8BZ 5421411-F	D5793	L.H.	1
	- - w/ sail type mirror and w/vent window	E1DZ 5421411-A	E1DZ 5421411-B	D5682	L.H.	1
	- - w/sail type mirror and w/o vent window	E1DZ 5421411-C	E1DZ 5421411-D	D5684	L.H.	1

YEAR	MODEL/RESTRICTIONS	PART NUMBER CLEAR	PART NUMBER TINTED	NAGS NO.	DESCRIPTION	QTY.
21410-1	GLASS (FRONT DOOR WINDOW)-Also refer to group 21400-1 — Cont'd					
78/	P(66) - - w/o sail type mirror or vent window	E1BZ 6621410-A	E1BZ 6621410-B	D5674	R.H.	1
	- - w/ sail type mirror and w/vent window	E1BZ 6621410-C	E1BZ 6621410-D	D5670	R.H.	1
	- - w/sail type mirror and w/o vent window	E1BZ 6621410-E	E1BZ 6621410-F	D5672	R.H.	1
	- - w/o sail type mirror or vent window	D8BZ 6621411-E	D8BZ 6621411-F	D5792	L.H.	1
	- - w/ sail type mirror and w/vent window	E1BZ 6621411-A	E1BZ 6621411-B	D5671	L.H.	1
	- - w/sail type mirror and w/o vent window	E1BZ 6621411-C	E1BZ 6621411-D	D5673	L.H.	1
77/78	V	D8DZ 5421410-A	D84Y 5421410-A	D5833	R.H.	1
		D8DZ 5421411-A	D84Y 5421411-A	D5834	L.H.	1
73/76	Y(53,71) - - w/o mini vent	D3AZ 5321410-A	D3AZ 5321410-B	D4809	R.H.	1
		D3AZ 5321411-A	D3AZ 5321411-B	D4810	L.H.	1
73/74	Y(53,71) - - w/mini vent "Before 12/3/73"		★ D3AZ 5321410-D r/b D4AZ 5321410-A(3/86)	D4807	R.H. - w/8 holes	1
			★ D3AZ 5321411-D r/b D4AZ 5321411-A(3/86)	D4808	L.H. - w/8 holes	1
74/76	Y(53,71) - - w/mini vent "From 12/3/73"		D4AZ 5321410-A	D5118	R.H. - w/10 holes	1
			D4AZ 5321411-A	D5119	L.H. - w/10 holes	1
73/76	Y(65)	★ D3AZ 6521410-A Not replaced(4/85)	D3AZ 6521410-B	D4802	R.H.	1
		★ D3AZ 6521411-A Not replaced (12/85)	D3AZ 6521411-B	D4803	L.H.	1
21412-3	GLASS (FRONT DOOR VENT WINDOW)					
79	A		D9AZ 5421412-A	V5941	R.H.	1
			D9AZ 5421413-A	V5942	L.H.	1
78/	P(54,66,74)	D8BZ 5421412-A	D8BZ 5421412-B	V5668	R.H.	1
		D8BZ 5421413-A	D8BZ 5421413-B	V5669	L.H.	1

YEAR	MODEL/RESTRICTIONS	PART NUMBER		DESCRIPTION	QTY.
21430-1	BRACKET (FRONT DOOR WINDOW GLASS REAR)				
73	D(53) - - w/o mini vent "Before 12/1/72"	(RH) D1AZ 5721430-A	(LH) D1AZ 5721431-A		1
21452-3	WEATHERSTRIP (FRONT DOOR AT BELT OUTSIDE)-Incl. clips				
73	A(53,71),Y(53,71)	(RH) D3AZ 5321452-A	(LH) D3AZ 5321453-A	Incl. bright bead	1
73/	A		Belt moulding-serviced only in assy.-group 20934-5		
74	A(53),Y(53,71) - - w/o vinyl roof or two tone paint	(RH) ★ D4AZ 5321452-A Not replaced (4/85)			1
75/76	Y(53,71)				1
73/76	C(53,71)	(RH) D30Z 5321452-A	(LH) ★ D30Z 5321453-A Not replaced (4/85)		1
73	C(63,65) "Before 11/27/72"	(RH) D20Z 6521452-A	(LH) D30Z 6521453-A		1
73/76	C(63,65) "From 11/27/72"	(RH) D30Z 6521452-A	(LH) D30Z 6521453-A		1
73	F(65F)	(RH) D1ZZ 6521452-B	(LH) ★ D1ZZ 6521453-B Not replaced (9/79)		1
74/76	F	(RH) D30Z 6521452-A	(LH) D30Z 6521453-A		1
77	F(71)	(RH) D30Z 5321452-A	(LH) ★ D30Z 5321453-A Not replaced (4/85)		1
78	F		Refer to group 20934-5 in exterior moulding section		
77	G(54H) - - Canada	(RH) ★ D7DZ 5421452-A Not replaced (12/85)			1
78/	G(54)	(RH) D7DZ 5421452-A			1
77	G(66H) - - Canada	(RH) D7DZ 6621452-A	(LH) D7DZ 6621453-A		1
78/	G(66)	(RH) D7DZ 6621452-A	(LH) D7DZ 6621453-A		1
73/	L	(RH) D6FZ 6221452-A	(LH) D6FZ 6221453-A		1

COPYRIGHT © 1986— FORD MOTOR COMPANY —DEARBORN, MICHIGAN

NEW ISSUE

1973/79 LINCOLN-MERCURY CARS

YEAR	MODEL/RESTRICTIONS	PART NUMBER	DESCRIPTION		QTY.
21452-3	WEATHERSTRIP (FRONT DOOR AT BELT OUTSIDE)-Incl. clips — Cont'd				
78/	P(36) - - w/sail type mirror	(RH) D8BZ 3621452-A	(LH) D8BZ 3621453-A	39 3/8" long	1
	- - w/o sail type mirror	D8BZ 6621452-A	R.H.-43 1/2" long		1
78/	P(54,74) - - w/o sail type mirror or vent window	(RH) ★ D8BZ 5421452-A r/bE1DZ 5421452-A (1/82)	(LH) D8BZ 5421453-B	31 5/8" long	1
78/	P(54,74) - - w/sail type mirror and w/vent window	D8BZ 5421452-B	R.H. and L.H.-17" long		2
78/	P(54,74) - - w/sail type mirror and w/o vent window	D8BZ 5421453-A	R.H. and L.H.-28" long		2
78/	P(66) - - w/o sail type mirror or vent window	(RH) D8BZ 6621452-A	(LH) D8BZ 6621453-B	43 1/2" long	1
78/	P(66) - - w/sail type mirror and w/vent window	D8BZ 6621452-B	R.H and L.H.-29" long		2
78/	P(66) - - w/sail type mirror and w/o vent window	D8BZ 6621453-A	R.H. and L.H.-40" long		2
21456-7	WEATHERSTRIP (FRONT DOOR AT BELT INSIDE)				
73	A(53,57,71) - - w/o mini vent	(RH) D3AZ 5321456-B	(LH) D3AZ 5321457-A		1
79	A(54,74)	(LH) D9AZ 5421457-A			1
73/76	C(53,71)	(RH) D20Z 5321456-A	(LH) D20Z 5321457-A		1
75/	D(53)	(RH) D5VY 5321456-A	(LH) D5VY 5321457-A		1
75/	D(60)	(RH) D5VY 6021456-A	(LH) D5VY 6021457-A		1
77	F(53,71)	(RH) D20Z 5321456-A	(LH) D20Z 5321457-A		1
78/	F(53)				1
77/	F(65)	(RH) ★ D70Z 6521456-A Not replaced (4/85)	(LH) D70Z 6521457-A		1
75/	G(66)	(RH) D5DZ 6621456-A	(LH) ★ D5DZ 6621457-A Not replaced (4/85)		1
79	J	D9ZZ 6621456-B	R.H. and L.H.		2
74/	K(65)	(RH) D4LY 6521456-A	(LH) D4LY 6521457-A		1
74/	L	(RH) D1FZ 6221456-B	(LH) D1FZ 6221457-B		1
78/	P(36) - - w/sail type mirror-w/bright bead	(RH) D8BZ 3621456-A	(LH) D8BZ 3621457-A	39 1/2" long	1
78/	P(36) - - w/o sail type mirror - w/o bright bead	D8BZ 6621456-E	R.H.-44" long		1
78/	P(36) - - w/o sail type mirror-w/bright bead	D8BZ 3621456-D	R.H.-43 1/4" long		1
78/	P(54,74) - - incl. bright bead - w/o vent window	(RH) D8BZ 5421456-A	(LH) D8BZ 5421457-A	28 1/8" long	1
78/	P(54,74) - - incl. bright bead - w/vent window	(RH) D8BZ 5421456-B	(LH) D8BZ 5421457-B	17 1/8" long	1
78/	P(54,74) - - w/sail type mirror - w/o vent window - w/o bright bead	(RH) D8BZ 5421456-C	(LH) D8BZ 5421457-C	28 1/4" long	1
78/	P(54,74) - - w/sail type mirror - w/o bright bead - w/vent window	(RH)	(LH) D8BZ 5421457-D	17 1/4" long	1
78/	P(54,74) - - w/o sail type mirror - w/o bright bead - w/o vent window	(RH) D8BZ 5421456-E	(LH) D8BZ 5421457-E	32 1/8" long	1
78/	P(66) - - incl. bright bead - w/o vent window	(RH) D8BZ 6621456-A	(LH) D8BZ 6621457-A	39 3/4" long	1
78/	P(66) - - incl. bright bead - w/vent window	(RH) D8BZ 6621456-B	(LH) D8BZ 6621457-B	28 7/8" long	1
78/	P(66) - - w/sail type mirror - w/o vent window - w/o bright bead	(RH) D8BZ 6621456-C	(LH) D8BZ 6621457-C	40 1/8" long	1
78/	P(66) - - w/sail type mirror - w/o bright bead - w/vent window	(RH) D8BZ 6621456-D	(LH) D8BZ 6621457-D	29 1/8" long	1
78/	P(66) - - w/o sail type mirror - w/o bright bead - w/o vent window	(RH) D8BZ 6621456-E	(LH) D8BZ 6621457-E	44" long	1
73	Y(53,71) - - w/o mini vent	(RH) D3AZ 5321456-B	(LH) D3AZ 5321457-B		1

YEAR	MODEL/RESTRICTIONS	PART NUMBER	DESCRIPTION	QTY.
21458-9	CHANNEL and RETAINER ASSY. (FRONT DOOR WINDOW GLASS)			
73/74	J	D0RY 6221459-B	R.H. and L.H.	2
214A62	FILLER (DOOR WINDOW OPENING FRONT OUTER)			
79	J	D9ZZ 66214A62-A	R.H.-black	1
21528	SLIDE (FRONT DOOR WINDOW STABILIZER ARM INNER)-Incl. attaching parts			
73/75	P(62)	D0GY 5721528-A	R.H. and L.H.	4
21546-7	RUN (DOOR VENT WINDOW DIVISION BAR GLASS)			
79	A	D9AZ 5421546-A	R.H. and L.H.	2
73/76	C(63,65)	D20Z 6521546-A	R.H. and L.H.	2
75/	D	D5VY 6021546-A	R.H. and L.H.	2
74/76	F	D20Z 6521546-A	R.H. and L.H.	2
77/	F(65)	D20Z 6521546-A	R.H. and L.H.	2
75/76	G "Before 5/3/76"	D5DZ 6621546-A	R.H. and L.H.	2
76/	G "From 5/3/76"	D6DZ 6621546-A	R.H. and L.H.	2
79	J	E1ZZ 6621546-A	R.H. and L.H.	2
73/74	K "Before 9/24/73"	D2SZ 6521546-A	R.H. and L.H.	2
77/	K	D7LY 6521546-A	R.H. and L.H.	2
76/	L - - w/single arm window regulator "From 8/2/76"	(RH) ★ D7FZ 6221546-A Not replaced (4/85)	(LH) D7FZ 6221547-A	1
78/	P	D8BZ 5421546-A	R.H. and L.H.	2
77/	V	D6DZ 6621546-A	R.H. and L.H.	2
21572	RETAINER (FRONT DOOR GLASS RUN)			
79	J	(RH) D9ZZ 6621572-A	(LH) ★ D9ZZ 6621573-A Not replaced (4/85)	1
21596	RUN (FRONT DOOR GLASS STOP)			
79	A(54,74) - - w/o vent window	(RH) E0AZ 5421596-A	(LH) E0AZ 5421597-A	1
79	A(54,74) - - w/vent window	(RH) E0AZ 5421596-B	(LH) E0AZ 5421597-B	1
79	A(66) - - w/o vent window	(RH) D9AZ 6621596-A	(LH) D9AZ 6621597-A	1
79	A(66) - - w/vent window	(RH) E1AZ 6621596-A	(LH) E1AZ 6621597-A	1
75/	G(54)	(RH) D8DZ 5421596-A	(LH) D8DZ 5421597-A	1
75/	G(66)	D5DZ 6621596-A	R.H. and L.H.	2
79	J	(RH) E0ZZ 6621596-B	(LH) E0ZZ 6621597-B	1
74/76	L - - w/dual arm window regulator "Before 8/2/76"	D1FZ 6221596-C	R.H. and L.H.	2
76/	L - - w/single arm window regulator "From 8/2/76"	D7FZ 6221596-B	R.H. and L.H.	2
73/77	P(54)	D1DZ 5421596-A	R.H. and L.H.	2
73/77	P(62)	(RH) D1DZ 6221596-A	(LH) D1DZ 6221596-B	1
78/	P(36)	E1BZ 3621596-A	R.H. and L.H.)	2
78/	P(54,74) - - w/o vent window	(RH) E0BZ 5421596-A	R.H. and L.H.	2
78/	P(54,74) - - w/vent window	E1DZ 5421596-B	R.H. and L.H.	2
78/	P(66) - - w/o vent window	(RH) E0BZ 6621596-A	R.H. and L.H.	2
78/	P(66) - - w/vent window	E1BZ 6621596-B	R.H. and L.H.-repl.	2
77/	V	(RH) D8DZ 5421596-A	(LH) D8DZ 5421597-A	1
21608-9	FRAME (FRONT DOOR VENT WINDOW LESS HANDLE AND GLASS)			
79	A	(RH) D9AZ 5421608-A	(LH) D9AZ 5421609-A	1
78/	P	(RH) D8BZ 5421608-A	(LH) D8BZ 5421609-A	1
21758	Refer to group 21768-9			

COPYRIGHT © 1986— FORD MOTOR COMPANY —DEARBORN, MICHIGAN

1973/79 LINCOLN-MERCURY CARS

YEAR	MODEL/RESTRICTIONS	PART NUMBER	DESCRIPTION	QTY.
21760-1	**BRACKET (DOOR WINDOW STOP)**			
73/76	A,Y - - w/o mini vent	D7AZ 6521760-A	R.H. and L.H.-upper	AR
77/78	A - - w/o mini vent			AR
73	C	D7AZ 5321760-A	R.H. and L.H.-front door	AR
74/76	C(53,65,71)		R.H. and L.H.-front door upper	AR
75/	D(53)		R.H.-L.H.-front rear door-upper front	AR
77/	D(60)		R.H.-L.H.-front door-upper rear	AR
73/76	C(53,71)	D20Z 5321760-A	R.H. and L.H.-rear door	2
77	F(53,71)		R.H. and L.H.-front door-upper rear	2
78/	F(53)			2
75/	D(60)	D5VY 6021760-A	R.H. and L.H.-upper front	2
74/	F	D7AZ 5321760-A	R.H. and L.H. - front and rear door - upper front	AR
73	K	D7AZ 5321760-A	R.H. and L.H.-front upper and lower	AR
74/76	K		R.H. and L.H.-upper	AR
73/	K - - w/o mini vent	D2SZ 6521760-A	R.H. and L.H. - upper front	2
77/	K - - w/mini vent	(RH) D7LY 6521760-A	(LH) ★ D7LY 6521761-A Upper front Not replaced (4/85)	1
77/	K	D7LY 6521760-B	R.H. and L.H. - upper rear	2
21762	**BUMPER (DOOR WINDOW STOP)**			
Note:	● Use with plastic bracket, ⊕ Use with metal bracket			
79	A	D7LY 6521762-A	R.H. and L.H.	2
73/74	D(53) - - w/o mini vent	C7ZZ 7621762-A	R.H. and L.H.-front door	2
79	J	D7LY 6521762-A	R.H. and L.H.	2
78/	P - - w/vent window	D8BZ 5421762-A	R.H. and L.H.-1" x 1"	2
78/	P	D7LY 6521762-A	R.H. and L.H.-1 1/4" x 3/4"	2
77/	K - - w/o mini vent "From 6/1/77"	● D7LY 6521762-A	R.H. and L.H.	2
21768-9	**STOP (DOOR WINDOW UPPER)**			
73/76	A(53,57,71),Y(53,71) - - w/mini vent	D3AZ 5321768-B	R.H. AND L.H.-upper rear	2
77	A(53,71) - - w/mini vent		R.H. and L.H.-upper rear	2
73/76	A,Y,D	D3AZ 6521758-A	R.H. and L.H.-lower	AR
77/	A,D		R.H. and L.H.-lower	AR
73	A,C,D(53),F,K,Y	D3AZ 6521768-B	R.H. and L.H.-upper	AR
74	A,C(65),D(53),F,K,Y		Upper	AR
75/76	A,D,K,Y - - w/o mini vent		Upper	AR
75/76	C,F		Upper	AR
77/78	A,D,F,K - - w/o mini vent		Upper	AR
79	D,F,K - - w/o mini vent		Upper	AR
74/76	C	D3AZ 6521758-A	R.H. and L.H.-lower	AR
74/	F	D3AZ 6521758-A	R.H. and L.H.-lower	AR
75/	G(54)	D3AZ 6521758-A	R.H. and L.H. - lower	AR
77/	V	D3AZ 6521758-A	R.H. and L.H.-lower	AR
21790	**BRACKET (FRONT DOOR WINDOW LOWER STOP)**			
73	C(63),F	D1ZZ 6521790-A	R.H. and L.H.	2
21812-3	**LATCH ASSY. (FRONT DOOR)-Incl. attaching parts**			
79	A	(RH) E3AZ 5421812-A	(LH) E3AZ 5421813-A	1
73/74	D(53)	(RH) D3VY 5321812-A	(LH) D3VY 5321813-A	1
73/74	D(65)	(RH) ★ D3VY 6521812-A Not replaced (12/85)	(LH) ★ D3VY 6521813-A Not replaced (6/84)	1
79	J	(RH) E3AZ 5421812-A	(LH) E3AZ 5421813-A	1
73/77	P	(RH) D5DZ 6221812-A	(LH) D5DZ 6221813-A	1
73/78	A	(RH) E3BZ 3621812-A	(LH) E3BZ 3621813-A	1
73/76	C,Y			1
75/78	D			1
73/78	F,G,K,L,V			1
78	P			1
79	D,F,G,K,L,P,V			1
73/76	A,D,F,G,K,L,P	382542-S9	(BB-114-A)-screw & washer-flat hd.-No. 12-24 x 1/2"	6
77	P			6
77/	A,D,F,G,K,L,V	387819-S100	(UU-48-N)-screw flat hd.-No 12-24 x 9/16"	6
78	P			6
73/74	J	388303-GS40	Screw	6
		★34953-S7-8	(X-80)-lockwasher-external tooth-No. 12	6

YEAR	MODEL/RESTRICTIONS	PART NUMBER	DESCRIPTION	QTY.
21816	ADJUSTER (DOOR LATCH ACTUATING ROD)			
73/76	A(71),C(71),Y(71)	C5AZ 6221816-A	Tailgate	AR
77	A(71), F(71)		Tailgate	AR
78	A(71)		Tailgate	AR
73/74	D		Front and rear door	AR
74/75	L		R.H. and L.H.-front door	AR
73/78	P		Front and rear door	AR
21818-9	CONTROL and LINK ASSY.(FRONT DOOR LATCH REMOTE)			
74/76	A,Y	(RH) D4AZ 6521818-A	(LH) D4AZ 6521819-A	1or2
77/78	A			1or2
79	A "Before 11/13/78"	(RH) D9AZ 5421818-A	(LH) ★ D9AZ 5421819-A r/bE0VY 5421819-A(6/82)	Front or rear door 1or2
79	A "From 11/13/78"	(RH) E0VY 5421818-A	(LH) E0VY 5421819-A	Front or rear door 1or2
73/76	C,F,K	(RH) D60Z 6521818-A	(LH) D60Z 6521819-A	Front or rear door w/one mounting hole on lever 1
77	F(53,65D,K,71),K			1or2
78/	F(53,65D),K			1or2
77/	F(65L)	(RH) D4AZ 6521818-A	(LH) D4AZ 6521819-A	1
75/	D	(RH) D5VY 6021818-A	(LH) D5VY 6021819-A	1or2
75/	G	(RH) D2FZ 6221818-B	(LH) D2FZ 6221819-B	Front or rear door 1or2
74/	L			with 16 tooth shaft 1
76/	G	(RH) D6DZ 5421818-A	(LH) D6DZ 5421819-A	Front door with 14 tooth shaft 1
79	J	(RH) E4TZ 1021818-A	(LH) E4TZ 1021819-A	Incl. handle 1
73/77	P	(RH)	(LH) D2FZ 6221819-A	Incl. handle 1or2
78/	P	(RH) E4TZ 1021818-A	(LH) E4TZ 1021819-A	Front or rear door -incl. handle 1or2
77/	V	(RH) D6DZ 5421818-A	(LH) D6DZ 5421819-A	Front door with 14 tooth shaft 1
218A42-3	ACTUATOR (FRONT DOOR LATCH)			
73/74	A(53,57,71),Y(53,71) - - w/power door latch	(RH) ★ D3AZ 53218A42-A Not replaced (6/84)	(LH) D3AZ 53218A43-A	1
73/74	A(65),Y(65) - - w/power door latch	(RH) D3SZ 65218A42-A	(LH) D3SZ 65218A43-A	1
75/76	A(53,71),Y(53,71) - - w/power door latch	(RH) D5AZ 53218A42-A	(LH) D5AZ 53218A43-A	1
77	A(53,71) - - w/power door latch			1
79	A(54,74)	E1AZ 54218A42-B	R.H. and L.H.-front door-incl. rod	2
79	A(74)		Tailgate	1
75/76	A(65),Y(65) - - w/power door latch	(RH) D5SZ 65218A42-A	(LH) D5SZ 65218A43-A	1
77	A(65) - - w/power door latch			1
75/76	C(53,71) - - w/power door latch	(RH) D50Z 53218A42-A		1
75/76	C(65) - - w/power door latch	(RH) D50Z 65218A42-A	(LH) D50Z 65218A43-A	1
73/74	D(53) - - w/power door latch	(RH) ★ D3VY 53218A42-B Not replaced (12/85)	(LH) D3VY 53218A43-B	1
75/77	D(53) - - w/power door latch	(RH) D5VY 53218A42-A	(LH) D5VY 53218A43-A	1
75/77	D(60) - - w/power door latch	(RH) D5VY 60218A42-A	(LH) D5VY 60218A43-A	1
75/76	F - - w/power door latch	(RH) D50Z 65218A42-A	(LH) D50Z 65218A43-A	1
77	F(53,71) - - w/power door latch	(RH) D50Z 53218A42-A		1
77	F(65) - - w/power door latch	(RH) D50Z 65218A42-A	(LH) D50Z 65218A43-A	1
76/79	G(54) - - w/power door latch "Before 12/04/78"	(RH) D6DZ 54218A42-A	(LH) D6DZ 54218A43-A	1
76/79	G(66) - - w/power door latch "Before 12/04/78"	(RH) D6DZ 66218A42-A	(LH) D6DZ 66218A43-A	1
79	G - - w/power door latch "From 12/04/78"	E1ZZ 66218A42-B	R.H. and L.H.-front door-incl. rod	2
73/74	K - - w/power door latch	(RH) D3SZ 65218A42-A	(LH) D3SZ 65218A43-A	1
75/77	K - - w/power door latch "Before 5/2/77"	(RH) D5SZ 65218A42-A	(LH) D5SZ 65218A43-A	1
77/78	K - - w/power door latch "From 5/2/78"	D8LY 65218A42-C	R.H. and L.H.	2

COPYRIGHT © 1986— FORD MOTOR COMPANY —DEARBORN, MICHIGAN

1973/79 LINCOLN-MERCURY CARS

YEAR	MODEL/RESTRICTIONS	PART NUMBER	DESCRIPTION		QTY.
218A42-3	ACTUATOR (FRONT DOOR LATCH) — Cont'd				
79	K - - w/power door latch	D9LY 65218A42-C	R.H. and L.H.-incl.. rod		2
76/79	V - - w/power door latch "Before 12/04/78"	(RH) D6DZ 54218A42-A	(LH) D6DZ 54218A43-A		1
79	V - - w/power door latch "From 12/04/78"	E1ZZ 66218A42-B	R.H. and L.H.-front door-incl. rod		2
78	A(65),F "From 11/21/77"	D8AZ 60218A42-C	R.H. and L.H. - front door		2
79	A(66)	E3AZ 66218A42-A	R.H. and L.H.-front door-incl. rod		2
78	A(53,71)	D8VY 60218A42-C	R.H. and L.H. - front door		2
78	D		R.H. and L.H. - front or rear door		2or4
79	D	D9VY 60218A42-C	R.H. and L.H.-front and rear door-incl.. rod		2or4
79	F,J	E1ZZ 66218A42-B	R.H. and L.H.-front door	Incl. rod	2
78	P(54,74)	D9BZ 54218A42-A	R.H. and L.H.-incl. rod		2
78/79	P(36,66)	(RH) D9BZ 36218A42-B	(LH) D9BZ 36218A43-B	Incl. rod	1
79	P(54,74)	E1AZ 54218A42-A	R.H. and L.H.-front door	Incl. rod	2
21850	KNOB (DOOR LATCH CONTROL ROD)				
73/76	A,C,D,F,G,K,L,P,Y	★ C8AZ 6221850-A	Round head-1 5/8" long-r/b D5TZ 1021850-A (12/85)		2or4
		D3AZ 6521850-A	Round head-2" long		2or4
		D5AZ 6021850-A	Octagonal head-2" long		2or4
		D2AZ 6521850-A	Flat head-2 1/8" long		2or4
73/75	A,C,D,F,G,K,L,P,Y	★ D50Z 6521850-A	Octagonal head-chrome-1-5/8" long -repl. by D50Z 6521850-B (11/85)		2or4
76	A,C,D,F,G,K,L,P,Y	D50Z 6521850-B	Octagonal head-chrome-1-5/8" long		2or4
77/78	A,D,F,G,L,P,V	★ C8AZ 6221850-A	Round head - 1 5/8" long-r/b D5TZ 1021850-A (12/85)		2or4
		D3AZ 6521850-A	Round head - 2" long		2or4
		D2AZ 6521850-A	Flat head - 2 1/8" long		2or4
79	A	D9AZ 5421850-C	R.H. and L.H.-	Bright finish flat top-2" long-less rod	2or4
79	A	E0AZ 5421850-A	R.H. and L.H.	Bright finish w/red and green paint-T shaped-2 1/8" long-less rod. Use with D9AZ 54-6621852-3-A rod.	2 or 4
79	A(54,74)	(RH) ★ D9AZ 5421850-A r/bE3AZ 5421850-A (4/85)	(LH) ★ D9AZ 5421851-A r/bE3AZ 5421851-A (4/85)	Bright finish-flat top-2" long knob-incl. rod	1
79	A(66)	(RH) D9AZ 6621850-A	(LH) D9AZ 6621851-A	Bright finish-flat top-2" long knob -incl. rod	1
76/	D(60)	D6VY 6021850-A	Tapered head-incl. rod (21852)		2
79	D(53),G,V	★ C8AZ 6221850-A	Round head-1 5/8" long-r/b D5TZ 1021850-A (12/85)		4
79	F(53),P(54,74)	D3AZ 6521850-A	Round head-2" long		4
79	F(53D,65D),G(54,66),P	D2AZ 6521850-A	Flat head-2 1/8" long		2or4
77/	K	★ D7LY 6521850-A Not replaced (12/85)	Tapered head- incl. rod (21852)-10" long		2
78/	K	D8LY 6521850-A	Tapered head-incl. rod (21852)-10 3/8" long-black paint on center for ident.		2
76/	D(60),K	C9AZ 71431A36-A	Tapered head-less rod (21852)		2
77/	A,F,G,L,P,V				AR
78/	G(66) - - w/o power door latch	D8DZ 6621850-A	Tapered head-incl. rod (21852)		2
76	A,C,D,G,P,Y	D6AZ 5421850-A	Lock kit-rear door safety		1
73/	A,D,F,G,P,V				1
74/78	J "From 9/3/73"	D4RY 6221850-A	Bright finish		2
76/78	J	D6RY 6421850-A	Black		2
79	J	(RH) D9ZZ 6621850-C	(LH) D9ZZ 6621851-B	Bright finish-tapered head-1 5/8" long knob incl. rod	1
79/	J "From 4/2/79"	(RH) E0ZZ 6621850-A	(LH) E0ZZ 6621851-A	Bright finish-tapered head-1 5/8" long knob -incl. rod	1
78/	A,D,F,G,K,L,P	D8AZ 6021850-A	Lock kit-anti-theft-front and rear door		1or2

YEAR	MODEL/RESTRICTIONS	PART NUMBER	DESCRIPTION		QTY.
21852-3	ROD (FRONT DOOR LATCH PUSH BUTTON)-incl. attaching parts				
73/74	A(53,57,71),Y(53,71) "Before 2/11/74"	(RH) D3AZ 5321852-A	(LH) D3AZ 5321853-A		1
79	A(54,74) - - w/flat top knob		Serviced only in assy. group 21850-1		
79	A(54,74) - - w/T shaped knob	(RH) D9AZ 5421852-A	(LH) D9AZ 5421853-A		1
79	A(66) - - use w/flat top knob		Serviced only in assy. group 21850-1		
79	A(66) - - use w/T shaped knob	(RH) D9AZ 6621852-A	(LH) D9AZ 6621853-A	Refer to 21850 for knob	1
73/76	C(53,71)	(RH) D20Z 5321852-A	(LH) D20Z 5321853-A		1
75/	D(53)	(RH) D5VY 5321852-A	(LH) D5VY 5321853-A		1
76/	D(60) "From 5/17/76"		Refer to group 21850		
73	F	(RH) D1ZZ 6521852-A	(LH) ★ D1ZZ 6521853-A Not replaced (9/79)		1
77	F(53,71)	(RH) D20Z 5321852-A	(LH) D20Z 5321853-A		1
78/	F(53)				1
77/	F(65) - - w/o power door latch	(RH) D70Z 6521852-C	(LH) D70Z 6521853-C	Use w/(431A36) knob	1
77/	F(65) - - w/power door latch	(RH) D70Z 6521852-B	(LH) D70Z 6521853-B		1
76/	G(54) - - w/power door latch		Refer to group 14028-incl. rod.		1
78/	G(66) - - w/o power door latch		Refer to group 21850		
76/	K "From 5/17/76"		Refer to group 21850		
77/	L	(RH) D7FZ 6221852-A	(LH) D7FZ 6221853-A	Use w/(431A36) knob	1
78/	P(54,74)	(RH) D8BZ 5421852-A	(LH) D8BZ 5421853-A	13 1/8" long	1
78/	P(54,74)	(RH) D8BZ 5421852-B	(LH) D8BZ 5421853-B	13 1/2" long	1
78/	P(36,66)	D8BZ 6621852-A	R.H. and L.H.		2
77/	V - - w/power door latch		Refer to group 14028-incl. rod		1
21872-3	SPRING (DOOR LATCH TOGGLE)				
73/74	A,C,F,K,L,Y	(RH) D30Z 6521872-A	(LH) D30Z 6521873-A		1or2
75/76	A,C,D,F,G,K,L,Y				1or2
77/	A,D,F,G,K,L,V				1or2
78/	P				1
73/74	D,P	(RH) D0AZ 6221872-A	(LH) D0AZ 6221873-A		1or2
75/77	P				1or2
21882-3	BRACKET (FRONT DOOR LOCK CONTROL KNOB)				
79	A	(RH) D9AZ 5421882-A	(LH) D9AZ 5421883-A		1
21895	CLIP (DOOR CHECK ARM PIN)				
73/	J	D0RY 6221895-A	R.H. and L.H.		2
21900	BELLCRANK (FRONT DOOR LATCH CONTROL)				
73/76	A(65),Y(65)	D3AZ 6521900-A	R.H. and L.H.		2
77/78	A(65)		R.H. and L.H.		2
73/76	C(63,65) - - w/power door latch	D20Z 6521900-B	R.H. and L.H.		2
75/	D(60)	D3AZ 6521900-A	R.H. and L.H.		2
74/76	F - - w/power door latch	D20Z 6521900-B	R.H. and L.H.		2
77/	F(65)	D70Z 6521900-A	R.H. and L.H.		2
73/76	K	D6SZ 6521900-A	R.H. and L.H.		2
78/	P(36,66)	D8BZ 6621900-A	R.H. and L.H.		2
219A02	RESERVOIR (DOOR LATCH VACUUM CONTROL)				
73	D	D2VY 65219A02-A			1
73	F		Refer to group 19A566 in Chassis Section		

COPYRIGHT © 1986 — FORD MOTOR COMPANY — DEARBORN, MICHIGAN

1973/79 LINCOLN-MERCURY CARS

YEAR	MODEL/RESTRICTIONS	PART NUMBER	DESCRIPTION	QTY.
21932	**BUSHING (FRONT DOOR LATCH BELLCRANK)**			
73/76	A(65),C(63,65) - - w/o power door latch,K,Y(65)	D20Z 6521932-A	R.H. and L.H.	4
75/76	D(60),G(66)			4
74/76	F - - w/o power door latch			4
77/78	A(65)			4
78/	D(60),F(65),G(66),K P(36,66)			4
219A38	**BUSHING (DOOR LATCH ROD)**			
73/75	A(53,57,65),C(53,65),Y(53,65)	★ D2VY 65219A38-A	Flange sleeve-11/64" x 19/64"	AR
73/75	D,K	r/bD2VY 65219A38-B(12/85)		AR
76	A,C,Y			AR
77	A,K,V			AR
74/77	F			AR
75/77	G			AR
78	F,G,K,V		Refer to group 21952	
78/	A			AR
79	D,K "Before 3/19/79"			AR
79	D,K "From 3/19/79"		Refer to group 21952	
73/78	J	D9RZ 64219A38-B		4
76	K - - w/split reclining seat	D6SZ 65219A38-A	Flange sleeve-11/64" I.D. x 11/32"	AR
77/	F,K,P			AR
21940-1	**LINK (FRONT DOOR LATCH REMOTE CONTROL)-Incl. attaching parts**			
73	A(53,57,71),Y(53,71)	(RH) D3AZ 5321940-A	(LH) D3AZ 5321941-A	1
73	A(65),Y(65)	(RH) D3AZ 6521940-A	(LH) D3AZ 6521941-A	1
79	A(54,74)	(RH) D9AZ 5421940-A	(LH) D9AZ 5421941-A	1
79	A(66)	(RH) D9AZ 6621940-A	(LH) D9AZ 6612941-A	1
73	C(53,71) "Before 3/15/73"	(RH) D20Z 5321940-A	(LH) D20Z 5321941-A	1
73/76	C(53,71) "From 3/15/73"	(RH) D40Z 5321940-A	(LH) D40Z 5321941-A	1
73	C(63,65) "Before 4/23/73"	(RH) D20Z 6521940-A	(LH) D20Z 6521941-A	1
75/	D(53)	(RH) D5VY 5321940-A	(LH) D5VY 5321941-A	1
75/	D(60)	(RH) D5VY 6021940-A	(LH) D5VY 6021941-A	1
73	F	(RH) D1ZZ 6521940-A	(LH) D1ZZ 6521941-A	1
77	F(53,71)	(RH) D40Z 5321940-A	(LH) D40Z 5321941-A	1
78/	F(53)			1
77	F(65D,K)	(RH) D70Z 6521940-A	(LH) D70Z 6521941-A	1
78/	F(65D)			1
77/	F(65L)	(RH) D7SZ 6021940-A	(LH) D7SZ 6021941-A	1
79	J	(RH) E0ZZ 6621940-A	(LH) E0ZZ 6621941-A	1
77/	K	(RH) D7LY 6521940-A	(LH) D7LY 6521941-A	1
78/	P(54,74)	(RH) D8BZ 5421940-B	(LH) D8BZ 5421941-B	1
78/	P(36,66)	(RH) D8BZ 6621940-B	(LH) D8BZ 6621941-B	1
21952-4	**RETAINER (DOOR LATCH ROD)**			
73/74	A,Y	★ C5AZ 6221952-A	White-less washer	AR
73/75	C(53,57,65),D,F,K,L,P	r/bC5AZ 6221952-B(12/85)		AR
73/75	K		Split seat back	AR
75	G			AR
73	A(71),Y(71) - - w/o power door latch "Before 4/2/73"	★ D20Z 6521952-A	Not replaced (4/85)	9
73	A(71),Y(71) - - w/power door latch			10
73	A,Y - - w/door alarm			2
73/76	A,Y "From 11/19/73"	★ D4AZ 6521952-A	Nylon-repl. by E3TZ 1021952-A (4/85)	AR
76	A,Y	D6AZ 6021952-A	Steel	AR
77/78	A			AR
73/76	A(71),Y(71)	C5AZ 6221954-A	Tailgate-incl. bushing	2
77/78	A(71)			2
79	A(74)			2
73	C(63,65) - - w/power door latch	★ D20Z 6521952-A	Not replaced (4/85)	4
75/76	C - - w/power door latch			4

YEAR	MODEL/RESTRICTIONS	PART NUMBER	DESCRIPTION	QTY.
21952-4	RETAINER (DOOR LATCH ROD) — Cont'd			
73/76	C(71)	C5AZ 6221954-A	Tailgate-incl. bushing	3
73/75	C,D	★ D4AZ 6521952-A	Nylon-repl. by E3TZ 1021952-A (4/85)	AR
76	C			AR
73/74	D	C5AZ 6221954-A	Front and rear doors-incl. bushing	4
76/78	D "Before 5/1/78"	★ D6VY 6021952-A	Nylon-repl. by E1DZ 5421952-A(4/83)	AR
77/	D(60)	D6AZ 6021952-A	Front seat back latch-steel	AR
74/76	F	★ D4AZ 6521952-A	Nylon-repl. by E3TZ 1021952-A (4/85)	AR
73/75	F	C5AZ 6221952-A		AR
75/76	F - - w/power door latch	★ D20Z 6521952-A	Not replaced (4/85)	AR
77/78	F(65) - - w/power door latch			AR
77/78	F "Before 5/1/78"	★ D6VY 6021952-A	Nylon-repl. by E1DZ 5421952-A(4/83)	
77	F(71)	C5AZ 6221954-A	Tailgate-incl. bushing	2
75/76	G	★ D4AZ 6521952-A	Nylon-repl. by E3TZ 1021952-A (4/85)	AR
77/78	G,V "Before 5/1/78"	★ D6VY 6021952-A	Nylon-repl. by E1DZ 5421952-A(4/83)	
77	G,V	D6AZ 6021952-A	Rear window defogger-steel	AR
73/78	J	D9RZ 6421954-A		4
73/76	K	★ D4AZ 6521952-A	Nylon-repl. by E3TZ 1021952-A (4/85)	AR
77/78	K "Before 5/1/78"	★ D6VY 6021952-A	Nylon-repl. by E1DZ 5421952-A(4/83)	
77/	K	D6AZ 6021952-A	Front seat back latch-steel	AR
74/78	L	C5AZ 6221954-A	R.H. and L.H.-front door-incl. bushing	2
73/77	P		R.H. and L.H.-front door	2
73/77	P(54)		R.H. and L.H.-rear door	2
75	P(54)	C5AZ 6221952-A		AR
76	L,P	D6AZ 6021952-A	Steel	AR
77/78	L "Before 5/1/78"	★ D6VY 6021952-A	Nylon-repl. by E1DZ 5421952-A(4/83)	
77/78	P	D6AZ 6021952-A	Steel	AR
77/78	L "From 6/27/77"	★ D8BZ 5421952-A	Nylon-7/8" x 1/2"-repl. by D9BZ 5421952-B (4/85)	AR
78	A,D,F,G,K,P,V,			
79	A,J,P	★ D9BZ 5421952-A	Repl. by D9BZ 5421952-B (4/85)	AR
79	D,K "Before 3/19/79"		Refer to group 219A38	
79	D,K "From 3/19/79"	★ D9BZ 5421952-A	Repl. by D9BZ 5421952-B (4/85)	AR
78/	D,F,G,K,P "From 5/1/78"	E1DZ 5421952-A		AR
21970	LEVER (FRONT DOOR LATCH OPERATING)			
73/76	A,C,D,F,G,K,L,P,Y - - w/o anti-theft alarm system	D2AZ 6521970-A	Incl. retaining ring	2
77	A,D,F,G,K,L,P,V			2
78/	A,F,G,L,V			2
79	P			2
78/79	D,K "Before 3/19/79"			2
79	D,K "From 3/19/79"	D8BZ 5421970-A		2
79	J	(RH) ★ D9ZZ 6621970-A r/bE3FZ 6121970-A(4/85)	(LH) ★ D9ZZ 6621971-A r/bE3FZ 6121971-A(4/85)	1
78	P	D8BZ 5421970-A	R.H. and L.H.	2
75/	G	97409-S	(Q-5-A)-ring(retaining)-1/4"	3
21984-5	Refer to group 22050			
21999	GROMMET (DOOR LATCH KNOB)			
73/76	A,C,D(exc. Town Car),F,K,Y	★ D0AZ 6221999-A	Stainless steel	2or4
77/78	A,D,K,V	r/bD0AZ 6221999-B(12/85)		2or4
79	D,G,K,P			2or4
73/76	D(Town Car)	C7SZ 6521999-B	Bright finish	2or4
79	F,G,K			2or4
75/	G			2or4
78/	K			2
77/	F	★ D0AZ 6221999-A r/bD0AZ 6221999-B(12/85)	Front and rear doors-stainless steel	2or4
77	F(71)	C7SZ 6521999-B	Tailgate-bright finish	1
79	J	C7SZ 6521999-B	Bright-finish	2
74/78	L	★ D9FZ 6221999-A	Nylon-front and rear doors	2or4
73/77	P		repl. by D9FZ 6221999-B (11/85)	2or4
79	L,P	D9FZ 6221999-B	Nylon	2or4

COPYRIGHT © 1986— FORD MOTOR COMPANY —DEARBORN, MICHIGAN

1973/79 LINCOLN-MERCURY CARS

YEAR	MODEL/RESTRICTIONS	PART NUMBER	DESCRIPTION	QTY.
220A00	SOLENOID and VALVE ASSY. (VACUUM DOOR LATCH CONTROL)			
73	D	D0VY 65220A00-A		1
22008-9	PLATE (DOOR LATCH STRIKER)			
73/74	A,C,F,K,L,Y	D2AZ 6522008-A	R.H. and L.H.	2or4
75/76	A,C,D,F,G,K,L,Y			2or4
77/	A,D,F,G,K,L,V			2or4
79	J			2
78/	P			2or4
73/74	D	C5AZ 6222008-A	R.H. and L.H.	2or4
73/77	P			2or4
22021	RETAINER (DOOR LATCH STRIKER ANCHOR PLATE)			
73/74	C	D0AZ 6222021-A	On quarter pillar	AR
73/77	D,P			AR
78/	D			AR
22023	RETAINER (DOOR LOCK CYLINDER)			
73/74	A,D,L,P,Y	C5AZ 6222023-A	Front door	AR
75/76	A,D,G,L,P,Y		Front door	AR
77	A,D,L,P		Front door	AR
78	A,D,L		Front door	AR
73/76	A(71),C(71),Y(71)		Tailgate	1
77	A(71),F(71)		Tailgate	1
78	A(71)		Tailgate	1
79	A(74)		Tailgate	1
79	D,L		Front door	2
77/	G(66)		Front door	2
79	A,J	★ D1ZZ 6522023-B	Front door	2
73/76	C,F	r/bD1ZZ 6522023-C(4/85)		2
77/	F,G(54)		Front door	2
74/	K			2
77/	V		Front door	2
78/	P		Front door	2
22024-5	PLATE (DOOR LATCH STRIKER TAPPING)			
73/76	A(65),C(65),F,K,Y(65)	D1AZ 6522024-A	R.H. and L.H.-on quarter pillar	2
77/78	A(65)		R.H. and L.H.-on quarter pillar	2
73	A(53,57),Y(53)	D1AZ 5422024-A	R.H. and L.H.	2
74/76	A(53,57,71),Y(53,71)	D1AZ 5422024-A	R.H. and L.H.-on quarter pillar	2
77/78	A(53,71)		R.H. and L.H.-on quarter pillar	2
79	A(54,74)	D9AZ 5422024-A	R.H. and L.H.-on center body pillar	2
79	A(66)	D8BZ 6622024-A	R.H. and L.H.-on quarter pillar	2
79	A(54,74)	D8BZ 5422024-A	R.H. and L.H.-on quarter pillar	2
73/74	D "From 12/4/72"	D3DZ 6222024-A	R.H. and L.H.	2or4
75/	D	D1AZ 5422024-A	R.H. and L.H.-on quarter pillar	2
77/	F	D1AZ 6522024-A	R.H. and L.H.-on quarter pillar	2
75/	G	D1AZ 6522024-A	R.H. and L.H.-on quarter pillar	2
73/74	J "Before 1/2/74"	(RH) ★ D0RY 6222024-A Not replaced(8/82)	(LH) D0RY 6222025-A	1
79	J	D8BZ 6622024-A	R.H. and L.H.-on quarter pillar	2
73/	K	D1AZ 6522024-A	R.H. and L.H.	2
74/	L		R.H. and L.H.	2
73/77	P "From 12/4/72"	D3DZ 6222024-A	R.H. and L.H.	2or4
78/	P(54,74)	D8BZ 5422024-A	R.H. and L.H.-on center pillar	2
78/	P(36,66)	D8BZ 6622024-A	R.H. and L.H.-on quarter pillar	2
77/	V	D1AZ 6522024-A	R.H. and L.H.- on quarter pillar	2
22035	CONNECTOR (VACUUM DOOR LATCH HOSE)			
73	A,D,K - - w/headlamp covers	D0VY 6522035-A		2

COPYRIGHT © 1986 — FORD MOTOR COMPANY — DEARBORN, MICHIGAN

1973/79 LINCOLN-MERCURY CARS

YEAR	MODEL/RESTRICTIONS	PART NUMBER	DESCRIPTION	QTY.
220A38	RETAINER (DOOR LOCK CYLINDER SWITCH)			
73/76	A,K,Y - - w/anti-theft alarm system	D3AZ 65220A38-A		2
74/76	C,D,F,G - - w/anti-theft alarm system			2
77/78	A,D,F,G,K,V - - w/illuminated entry system			2
77/	F,K - - w/illuminated entry system			2
220A40	SWITCH ASSY. (DOOR LOCK CYLINDER)			
75/76	C,F,G - - w/anti-theft alarm system	D50Z 53220A40-A		1

MODEL	CONSISTS OF LOCK CYLINDERS FOR									DESCRIPTION	PART NUMBER	QTY.
	DOOR	G/ COMPT.	HOOD	IGN.	L/ COMPT.	S/COMPT. SIDE	S/COMPT. FLOOR	SPARE WHEEL	TAIL and LIFT GATE			
22050 LOCK SET CHART												
1973												
SINGLE KEY SYSTEM												
A(53B,F,H,65B,F,H), Y(53,65) "Before 5/14/73"	D	G/C		I	L/C						D3MZ 6522050-A	1
DUAL KEY SYSTEM												
⊕ Console ♦ Instrument panel and console												
A,Y - - w/o anti-theft alarm system	D										D2AZ 6521984-A	2
A,Y		G/C									D20Z 9706081-A	1
A,Y "Before 6/1/73"			H								D3AZ 16978-A	1
A,Y "From 6/1/73"			H								D3AZ 16978-B	1
A,Y "Before 5/14/73"				I							D2AZ 11582-B	1
A,Y "From 5/14/73"				I							D4AZ 11582-A	1
A,Y					L/C						D2AZ 6543505-A	1
A(71),Y(71)							S/C				C7AZ 71115A32-B	1
A								S/W			D3FZ 1386-A	1
A(71),Y(71)									T/G		C7DZ 7143505-B	1
A(53,57,65),Y(53,65) - - w/o anti-theft alarm system "Before 5/14/73"	D			I							D2AZ 6522050-A	1
A(53,57,65),Y(53,65) - - w/o anti-theft alarm system "From 5/14/73"	D			I							D3AZ 6522050-D	1
A(53,57,65)		G/C			L/C						D20Z 6543507-A	1
A(71),Y(71) - - w/anti-theft alarm system		G/C					S/C				D4AZ 7106081-A	1
A(71),Y(71) - - w/anti-theft alarm system "From 5/14/73"	D			I					T/G		D3AZ 7122050-C	1
A(53,57,65),Y(53,65)		G/C			L/C			S/W			D3AZ 6543507-C	1
A(71),Y(71)		G/C	H				S/C				D3AZ 7106081-A	1
A(71),Y(71)		G/C					S/C	S/W			D3AZ 7106081-B	1
A(71),Y(71)		G/C	H				S/C	S/W			D3AZ 7106081-C	1
A(71),Y(71)		G/C	H			S/C	S/C				D3AZ 7143507-B	1

22050 LOCK SET CHART — Cont'd

1973

DUAL KEY SYSTEM

⊕ Console ♦ Instrument panel and console

MODEL	CONSISTS OF LOCK CYLINDERS FOR: DOOR	G/ COMPT.	HOOD	IGN.	L/ COMPT.	S/COMPT. SIDE	S/COMPT. FLOOR	SPARE WHEEL	TAIL and LIFT GATE	DESCRIPTION	PART NUMBER	QTY.
A(71),Y(71) "Before 1/2/73"		G/C				S/C	S/C	S/W			D3AZ 7143507-C	1
A(71),Y(71) "From 1/2/73"		G/C				S/C	S/C	S/W			D3AZ 7143507-E	1
A(71),Y(71) "Before 1/2/73"		G/C	H			S/C	S/C	S/W			D3AZ 7143507-D	1
A(71),Y(71) "From 1/2/73 to 6/1/73"		G/C	H			S/C	S/C	S/W			D3AZ 7143507-F	1
C	D										D2AZ 6521984-A	2
C		G/C									D2OZ 9706081-A	1
C "Before 5/14/73"				I							D2AZ 11582-B	1
C "From 5/14/73"				I							D4AZ 11582-A	1
C(53,63,65)					L/C						D2AZ 6543505-A	1
C(71)							S/C				C7AZ 71115A32-B	1
C(71)									T/G		C7DZ 7143505-B	1
C(53,63,65) - - w/o anti-theft alarm system "Before 5/14/73"	D			I							D2AZ 6522050-A	1
C(53,63,65) - - w/o anti-theft alarm system "From 5/14/73"	D			I							D3AZ 6522050-D	1
C(53,63,65)		G/C			L/C						D20Z 6543507-A	1
C(53,63,65)		G/C			L/C			S/W			D3AZ 6543507-C	1
C(71)		G/C					S/C	S/W			D3AZ 7106081-B	1
D - - w/o anti-theft alarm system "From 5/14/73"	D										D4VY 6521984-A	2
D		G/C									D1VY 6506081-A	1
D			H								D3VY 16978-A	1
D "Before 5/14/73"				I							D2VY 11582-B	1
D "From 5/14/73"				I							D4VY 11582-A	1
D					L/C						D2LY 6543505-A	1
D - - w/o anti-theft alarm system "From 5/14/73"	D			I							D4VY 6522050-A	1
F - - w/o anti-theft alarm system	D										D2AZ 6521984-A	2
F		G/C								Locking glove compt.	D10Z 6606081-A	1
F "Before 5/14/73"				I							D2AZ 11582-B	1
F "From 5/14/73"				I							D4AZ 11582-A	1
F					L/C						D2AZ 6543505-A	1
F	D			I							D2AZ 6522050-A	1
F "Before 1/2/73"		G/C			L/C			S/W		Locking glove compt.	D3ZZ 6543507-A	1
F "From 1/2/73"		G/C			L/C			S/W		Locking glove compt.	D3ZZ 6543507-B	1
J				I						Refer to group 3675 in Chassis Section		

COPYRIGHT © 1986— FORD MOTOR COMPANY —DEARBORN, MICHIGAN

1973/79 LINCOLN-MERCURY CARS

MODEL	CONSISTS OF LOCK CYLINDERS FOR									DESCRIPTION	PART NUMBER	QTY.
	DOOR	G/ COMPT.	HOOD	IGN.	L/ COMPT.	S/COMPT. SIDE	S/COMPT. FLOOR	SPARE WHEEL	TAIL and LIFT GATE			
22050 LOCK SET CHART — Cont'd												
1973												
DUAL KEY SYSTEM												
⊕ Console ♦ Instrument panel and console												
J		G/C								Without keys	D3RY 6206081-A	1
J		G/C								With keys	D4RY 6206081-A	1
J	D				L/C						D2RY 6222050-A	1
K - - w/o anti-theft alarm system "From 5/14/73"	D										D4VY 6521984-A	2
K "Before 4/2/73"			H								D3AZ 16978-A	1
K "From 4/2/73"			H								D3VY 16978-A	1
K "Before 5/14/73"				I							D2VY 11582-B	1
K "From 5/14/73"				I							D4VY 11582-A	1
K					L/C						D2LY 6543505-A	1
K - - w/o anti-theft alarm system "From 5/14/73"	D			I							D4VY 6522050-A	1
K "Before 6/1/73"		G/C	H		L/C			S/W			D3LY 6543507-C	1
P	D										D2AZ 6521984-A	2
P		G/C								Locking glove compt.	D20Z 9706081-A	1
P "Before 5/14/73"				I							D2AZ 11582-B	1
P "From 5/14/73"				I							D4AZ 11582-A	1
P					L/C						C8GY 5443505-A	1
P	D			I							D2AZ 6522050-A	1
P		♦G/C			L/C			S/W			D3DZ 6243507-E	1
P "Before 1/2/73"		G/C			L/C			S/W			D3DZ 6243507-A	1

MODEL	CONSISTS OF LOCK CYLINDERS FOR									DESCRIPTION	PART NUMBER	QTY.
	DOOR	G/ COMPT.	HOOD	IGN.	L/ COMPT.	S/COMPT. SIDE	S/COMPT. FLOOR	SPARE WHEEL	TAIL and LIFT GATE			
22050 LOCK SET CHART — Cont'd												
1974												
SINGLE KEY SYSTEM												
A(53,57,65),Y(53,65) - - w/anti-theft alarm system "From 1/7/74 to 4/1/74"	D	G/C	H	I	L/C			S/W			D4AZ 6522050-A	1
A(53,57,65),Y(53,65) - - w/anti-theft alarm system "From 4/1/74"	D	G/C	H	I	L/C			S/W			D4AZ 6522050-D	1
DUAL KEY SYSTEM												
A,Y - - w/o anti-theft alarm system	D										D2AZ 6521984-A	2
A,Y		G/C									D2OZ 9706081-A	1
A,Y			H								D3AZ 16978-B	1
A,Y				I							D4AZ 11582-A	1
A(53,57,65),Y(53,65)					L/C						D2AZ 6543505-A	1
A(71),Y(71)							S/C				C7AZ 71115A32-B	1
A								S/W			D3FZ 1386-A	1
A(71),Y(71)									T/G		C7DZ 7143505-B	1
A(53,57,65),Y(53,65) - - w/o anti-theft alarm system	D			I							D3AZ 6522050-D	1
A(53,57,65),Y(53, 65) - - w/o anti-theft alarm system		G/C			L/C						D2OZ 6543507-A	1
A(71),Y(71) - - w/o anti-theft alarm system		G/C					S/C				D2OZ 7106081-A	1
A(71),Y(71) - - w/anti-theft alarm system		G/C	H				S/C	S/W			D4AZ 7106081-A	1
A(71),Y(71) - - w/anti-theft alarm system "Before 4/1/74"	D			I					T/G		D3AZ 7122050-C	1
A(71),Y(71)		G/C				S/C	S/C	S/W			D3AZ 7143507-E	1
C - - w/o auto-theft alarm system	D										D2AZ 6521984-A	2
C		G/C									D2OZ 9706081-A	1
C			H								D3AZ 16978-B	1
C				I							D4AZ 11582-A	1
C(53,65)					L/C						D2AZ 6543505-A	1
C(71)							S/C				C7AZ 71115A32-B	1
C								S/W			D3FZ 1386-A	1
C(71)									T/G		C7DZ 7143505-B	1
C(53,65) - - w/o anti-theft alarm system	D			I							D3AZ 6522050-D	1
C(53,65) - - w/o anti-theft alarm system		G/C			L/C						D2OZ 6543507-A	1
C(71)		G/C	H				S/C	S/W			D4AZ 7106081-A	1
C(71)		G/C			L/C		S/C	S/W			D3AZ 7106081-B	1
D - - w/o anti-theft alarm system	D										D4VY 6521984-A	2

COPYRIGHT © 1986— FORD MOTOR COMPANY —DEARBORN, MICHIGAN

1973/79 LINCOLN-MERCURY CARS

MODEL	CONSISTS OF LOCK CYLINDERS FOR									DESCRIPTION	PART NUMBER	QTY.
	DOOR	G/ COMPT.	HOOD	IGN.	L/ COMPT.	S/COMPT. SIDE	S/COMPT. FLOOR	SPARE WHEEL	TAIL and LIFT GATE			
22050 LOCK SET CHART — Cont'd												
1974												
DUAL KEY SYSTEM												
D - - w/anti-theft alarm system	D										D5LY 6521984-A	2
D		G/C									D1VY 6506081-A	1
D			H								D3VY 16978-A	1
D				I							D4VY 11582-A	1
D					L/C						D2LY 6543505-A	1
D								S/W			D3FZ 1386-A	1
D - - w/o anti-theft alarm system	D			I							D4VY 6522050-A	1
D - - w/anti-theft alarm system	D			I							D5LY 6522050-A	1
F - - w/o anti-theft alarm system	D										D2AZ 6521984-A	2
F		G/C									D20Z 9706081-A	1
F			H								D3AZ 16978-B	1
F				I							D4AZ 11582-A	1
F					L/C						D2AZ 6543505-A	1
F								S/W			D3FZ 1386-A	1
F - - w/o anti-theft alarm system	D			I							D3AZ 6522050-D	1
F - - w/o anti-theft alarm system		G/C			L/C						D20Z 6543507-A	1
J		G/C								Without keys	D3RY 6206081-A	1
J		G/C								With keys	D4RY 6206081-A	1
J				I						Refer to group 3675 in Chassis Section		
J	D				L/C						D2RY 6222050-A	1
K - - w/anti-theft alarm system	D										D5LY 6521984-A	2
K - - w/o anti-theft alarm system	D										D4VY 6521984-A	2
K			H								D3VY 16978-A	1
K				I							D4VY 11582-A	1
K					L/C						D2LY 6543505-A	1
K								S/W			D3FZ 1386-A	1
K - - w/o anti-theft alarm system	D			I							D4VY 6522050-A	1
K - - w/anti-theft alarm system	D			I							D5LY 6522050-A	1
L - - w/o anti-theft alarm system	D										D2AZ 6521984-A	2
L		G/C								Locking	D10Z 6606081-A	1
L(64,73)		G/C								Non-locking	D1ZZ 6506072-A	1
L			H								D3AZ 16978-B	1
L				I							D4AZ 11582-A	1
L(62,64)					L/C						C8GY 5443505-A	1
L(73)									L/G		D2FZ 7343505-A	1
L								S/W			D3FZ 1386-A	1

1973/79 LINCOLN-MERCURY CARS

MODEL	CONSISTS OF LOCK CYLINDERS FOR									DESCRIPTION	PART NUMBER	QTY.
	DOOR	G/ COMPT.	HOOD	IGN.	L/ COMPT.	S/COMPT. SIDE	S/COMPT. FLOOR	SPARE WHEEL	TAIL and LIFT GATE			
22050 LOCK SET CHART — Cont'd												
1974												
DUAL KEY SYSTEM												
L(62) - - w/o anti-theft alarm system	D			I							D3AZ 6522050-D	1
L(62) - - w/o anti-theft alarm system		G/C			L/C						★ D1ZZ 6543507-A r/b C8GY 5443505-A and D1ZZ 6506072-A(5/75)	1
L(64,73)		G/C			L/C			S/W			D3FZ 6406081-A	1
L(64,73)		G/C	H					S/W			D4FZ 6406081-A	1
P	D										D2AZ 6521984-A	2
P		G/C									D20Z 9706081-A	1
P				I							D4AZ 11582-A	1
P					L/C						C8GY 5443505-A	1
P								S/W			D3FZ 1386-A	1
P	D			I							D3AZ 6522050-D	1
1975												
DUAL KEY SYSTEM												
A,Y - - w/o anti-theft alarm system	D										D2AZ 6521984-A	2
A,Y		G/C									D20Z 9706081-A	1
A,Y			H								D3AZ 16978-B	1
A,Y				I							D4AZ 11582-A	1
A(53,65),Y(53,65) - - w/o anti-theft alarm system					L/C						D2AZ 6543505-A	1
A(71),Y(71)							S/C				C7AZ 71115A32-B	1
A,Y								S/W			D3FZ 1386-A	1
A(71),Y(71)									T/G		C7DZ 7143505-B	1
A(53,65),Y(53,65) - - w/o anti-theft alarm system system	D			I							D3AZ 6522050-D	1
A(53,65),Y(53,65) - - w/o anti-theft alarm system		G/C			L/C						D20Z 6543507-A	1
A(71),Y(71) - - w/anti-theft alarm system		G/C	H				S/C	S/W			D4AZ 7106081-A	1
C - - w/o anti-theft alarm system	D										D2AZ 6521984-A	2
C		G/C									D20Z 9706081-A	1
C(71)							S/C				C7AZ 71115A32-B	1
C			H								D3AZ 16978-B	1

COPYRIGHT © 1986— FORD MOTOR COMPANY —DEARBORN, MICHIGAN

1973/79 LINCOLN-MERCURY CARS

MODEL	CONSISTS OF LOCK CYLINDERS FOR									DESCRIPTION	PART NUMBER	QTY.
	DOOR	G/ COMPT.	HOOD	IGN.	L/ COMPT.	S/COMPT. SIDE	S/COMPT. FLOOR	SPARE WHEEL	TAIL and LIFT GATE			
22050 LOCK SET CHART — Cont'd												
1975												
DUAL KEY SYSTEM												
C				I							D4AZ 11582-A	1
C								S/W			D3FZ 1386-A	1
C(53,65)					L/C						D2AZ 6543505-A	1
C(71)									T/G		C7DZ 7143505-B	1
C(53,65) - - w/o anti-theft alarm system	D			I							D3AZ 6522050-D	1
C(53,65) - - w/o anti-theft alarm system		G/C			L/C						D20Z 6543507-A	1
C(71) - - w/o anti-theft alarm system		G/C			L/C		S/C	S/W			D3AZ 7106081-B	1
C(71) - - w/anti-theft alarm system		G/C	H				S/C	S/W			D4AZ 7106081-A	1
D - - w/o anti-theft alarm system	D										D4VY 6521984-A	2
D		G/C									D5LY 6506081-A	1
D			H								D3VY 16978-A	1
D				I							D4VY 11582-A	1
D					L/C						D2LY 6543505-A	1
D								S/W			D3FZ 1386-A	1
D - - w/o anti-theft alarm system	D			I							D4VY 6522050-A	1
F - - w/o anti-theft alarm system	D										D2AZ 6521984-A	2
F		G/C									D20Z 9706081-A	1
F			H								D3AZ 16978-B	1
F				I							D4AZ 11582-A	1
F					L/C						D2AZ 6543505-A	1
F								S/W			D3FZ 1386-A	1
F - - w/o anti-theft alarm system	D			I							D3AZ 6522050-D	1
F - - w/o anti-theft alarm system		G/C			L/C						D20Z 6543507-A	1
G - - w/o anti-theft alarm system	D										D2AZ 6521984-A	2
G		G/C									D20Z 9706081-A	1
G			H								D3AZ 16978-B	1
G				I							D4AZ 11582-A	1
G					L/C						D5MY 6043505-A	1
G								S/W			D3FZ 1386-A	1
G - - w/o anti-theft alarm system	D			I							D3AZ 6522050-D	1
G - - w/o anti-theft alarm system		G/C			L/C						D5MY 6043507-A	1
K - - w/o anti-theft alarm system	D										D4VY 6521984-A	2

MODEL	CONSISTS OF LOCK CYLINDERS FOR									DESCRIPTION	PART NUMBER	QTY.
	DOOR	G/ COMPT.	HOOD	IGN.	L/ COMPT.	S/COMPT. SIDE	S/COMPT. FLOOR	SPARE WHEEL	TAIL and LIFT GATE			
22050 LOCK SET CHART — Cont'd												
1975												
DUAL KEY SYSTEM												
K		G/C									D5LY 6506081-A	1
K			H								D3VY 16978-A	1
K				I							D4VY 11582-A	1
K					L/C						D2LY 6543505-A	1
K								S/W			D3FZ 1386-A	1
K - - w/o anti-theft alarm system	D			I							D4VY 6522050-A	1
K - - w/o anti-theft alarm system		G/C			L/C			S/W			D5VY 6043507-B	1
L	D										D2AZ 6521984-A	2
L		G/C									D10Z 6606081-A	1
L(64,73)		G/C									D1ZZ 6506072-A	1
L			H								D3AZ 16978-B	1
L				I							D4AZ 11582-A	1
L(62,64)					L/C						C8GY 5443505-A	1
L(73)									L/G		D2FZ 7343505-A	1
L								S/W			D3FZ 1386-A	1
L(62)	D			I							D3AZ 6522050-D	1
L(62)		G/C			L/C						★ D1ZZ 6543507-A r/b C8GY 5443505-A and D1ZZ 6506072-A(5/75)	1
L(64,73)		G/C			L/C			S/W			D3FZ 6406081-A	1
L(64,73)		G/C	H					S/W			D4FZ 6406081-A	1
P	D										D2AZ 6521984-A	1
P		G/C									D20Z 9706081-A	1
P				I							D4AZ 11582-A	1
P								S/W			D3FZ 1386-A	1
P	D			I							D3AZ 6522050-D	1

COPYRIGHT © 1986— FORD MOTOR COMPANY —DEARBORN, MICHIGAN

1973/79 LINCOLN-MERCURY CARS

MODEL	CONSISTS OF LOCK CYLINDERS FOR									DESCRIPTION	PART NUMBER	QTY.
	DOOR	G/ COMPT.	HOOD	IGN.	L/ COMPT.	S/COMPT. SIDE	S/COMPT. FLOOR	SPARE WHEEL	TAIL and LIFT GATE			
22050 LOCK SET CHART — Cont'd												

1976

DUAL KEY SYSTEM

Notes: † Includes nylon door cylinder retainer

A,Y – – w/o anti-theft alarm system	D										D2AZ 6521984-A	2
A,Y		G/C									D20Z 9706081-A	1
A,Y			H								D3AZ 16978-B	1
A,Y "Before 2/2/76"				I							D4AZ 11582-A	1
A,Y "From 2/2/76"				I							D8FZ 11582-A	1
A(53,65),Y(53,65) – – w/o anti-theft system					L/C						D2AZ 6543505-A	1
A(71),Y(71)							S/C				C7AZ 71115A32-B	1
A,Y								S/W			D3FZ 1386-A	1
A(71),Y(71)									T/G		C7DZ 7143505-B	1
A(53,65),Y(53,65) – – w/o anti-theft alarm system "Before 2/2/76"	D			I							D3AZ 6522050-D	1
A(53,65),Y(53,65) – – w/o anti-theft alarm system "From 2/2/76"	D			I							D8FZ 6222050-A	1
A(53,65),Y(53,65) – – w/o anti-theft system		G/C			L/C						D20Z 6543507-A	1
A(71),Y(71) – – w/o anti-theft alarm system "From 2/2/76"	D			I					T/G		† D6AZ 7122050-A	1
C – – w/o anti-theft alarm system	D										D2AZ 6521984-A	2
C		G/C									D20Z 9706081-A	1
C			H								D3AZ 16978-B	1
C "Before 2/2/76"				I							D4AZ 11582-A	1
C "From 2/2/76"				I							D8FZ 11582-A	1

MODEL	CONSISTS OF LOCK CYLINDERS FOR									DESCRIPTION	PART NUMBER	QTY.
	DOOR	G/ COMPT.	HOOD	IGN.	L/ COMPT.	S/COMPT. SIDE	S/COMPT. FLOOR	SPARE WHEEL	TAIL and LIFT GATE			
22050 LOCK SET CHART — Cont'd												

1976

DUAL KEY SYSTEM

Notes: † Includes nylon door cylinder retainer

C(53,65)					L/C						D2AZ 6543505-A	1
C(71)							S/C				C7AZ 71115A32-B	1
C								S/W			D3FZ 1386-A	1
C(71)									T/G		C7DZ 7143505-B	1
C(53,65) - - w/o anti-theft alarm system "Before 2/2/76"	D			I							D3AZ 6522050-D	1
C(53,65) - - w/o anti-theft alarm system "From 2/2/76"	D			I							D8FZ 6222050-A	1
C(71) - - w/o anti-theft alarm system "From 2/2/76"	D			I					T/G		† D6AZ 7122050-A	1
C(53,65) - - w/o anti-theft system		G/C			L/C						D20Z 6543507-A	1
C(71) - - w/anti-theft alarm system		G/C	H				S/C	S/W			D4AZ 7106081-A	1
D - - w/o anti-theft alarm system	D										D4VY 6521984-A	2
D		G/C									D5LY 6506081-A	1
D			H								D3VY 16978-A	1
D "Before 2/2/76"				I							D4VY 11582-A	1
D "From 2/2/76"				I							D6LY 11582-A	1
D					L/C						D2LY 6543505-A	1
D								S/W			D3FZ 1386-A	1
D - - w/o anti-theft alarm system "Before 2/2/76"	D			1							D4VY 6522050-A	1
D - - w/o anti theft alarm system "From 2/2/76"	D			I							D8LY 6522050-A	1
D		G/C			L/C						★ D6VY 6043507-A Not replaced (12/85)	1
F - - w/o anti-theft alarm system	D										D2AZ 6521984-A	2
F		G/C									D20Z 9706081-A	1
F			H								D3AZ 16978-B	1
F "Before 2/2/76"				I							D4AZ 11582-A	1
F "From 2/2/76"				I							D8FZ 11582-A	1
F								S/W			D3FZ 1386-A	1

COPYRIGHT © 1986— FORD MOTOR COMPANY —DEARBORN, MICHIGAN

1973/79 LINCOLN-MERCURY CARS

22050 LOCK SET CHART — Cont'd

1976

DUAL KEY SYSTEM

Notes: † Includes nylon door cylinder retainer

MODEL	CONSISTS OF LOCK CYLINDERS FOR: DOOR	G/ COMPT.	HOOD	IGN.	L/ COMPT.	S/COMPT. SIDE	S/COMPT. FLOOR	SPARE WHEEL	TAIL and LIFT GATE	DESCRIPTION	PART NUMBER	QTY.
F – – w/o anti-theft alarm system "Before 2/2/76"	D			I							D3AZ 6522050-D	1
F – – w/o anti-theft alarm system "From 2/2/76"	D			I							D8FZ 6222050-A	1
F					L/C						D2AZ 6543505-A	1
F – – w/o anti-theft system		G/C			L/C						D20Z 6543507-A	1
G – – w/o anti-theft alarm system	D										D2AZ 6521984-A	2
G		G/C									D20Z 9706081-A	1
G			H								D3AZ 16978-B	1
G "Before 2/2/76"				I							D4AZ 11582-A	1
G "From 2/2/76"				I							D8FZ 11582-A	1
G "Before 2/2/76"					L/C						D5MY 6043505-A	1
G "From 2/2/76"					L/C						D6DZ 6643505-A	1
G								S/W			D3FZ 1386-A	1
G – – w/o anti-theft alarm system "Before 2/2/76"	D			I							D3AZ 6522050-D	1
G – – w/o anti-theft alarm system "From 2/2/76"	D			I							D8FZ 6222050-A	1
G – – w/o anti-theft alarm system "From 2/2/76"		G/C			L/C						D6DZ 6643507-A	1
J(64D,P,T)	D										D5RY 6421984-A	2
J(64S)		G/C									D6RY 6406081-A	1
J				I						Refer to group 3675 in Chassis Section		
J(64D,P,T)					L/C					Less keys	D5RY 6443505-B	1
J(64D,P,T)					L/C					Less housing	D7RY 6443505-C	1
K – – w/o anti-theft alarm system	D										D4VY 6521984-A	2
K		G/C									D5LY 6506081-A	1
K			H								D3VY 16978-A	1
K "Before 2/2/76"				I							D4VY 11582-A	1
K "From 2/2/76"				I							D6LY 11582-A	1
K					L/C						D2LY 6543505-A	1
K								S/W			D3FZ 1386-A	1
K – – w/o anti-theft alarm system "Before 2/2/76"	D			I							D4VY 6522050-A	1
K – – w/o anti-theft alarm system "From 2/2/76"	D			I							D8LY 6522050-A	1
K		G/C			L/C						★ D6VY 6043507-A Not replaced (12/85)	1

MODEL	CONSISTS OF LOCK CYLINDERS FOR									DESCRIPTION	PART NUMBER	QTY.
	DOOR	G/ COMPT.	HOOD	IGN.	L/ COMPT.	S/COMPT. SIDE	S/COMPT. FLOOR	SPARE WHEEL	TAIL and LIFT GATE			
22050 LOCK SET CHART — Cont'd												

1976

DUAL KEY SYSTEM

Notes: † Includes nylon door cylinder retainer

K – – w/o anti-theft system		G/C			L/C			S/W			D5VY 6043507-B	1
L	D										D2AZ 6521984-A	2
L		G/C								Locking	D10Z 6606081-A	1
L		G/C								Non-locking	D1ZZ 6506072-A	1
L			H								D3AZ 16978-B	1
L "Before 2/2/76"				I							D4AZ 11582-A	1
L "From 2/2/76"				I							D8FZ 11582-A	1
L(62,64)					L/C						C8GY 5443505-A	1
L(73)									L/G		D2FZ 7343505-A	1
L								S/W			D3FZ 1386-A	1
L(62) "Before 2/2/76"	D			I							D3AZ 6522050-D	1
L(62) "From 2/2/76"	D			I							D8FZ 6222050-A	1
L(62)		G/C			L/C						★ D1ZZ 6543507-A r/b C8GY 5443505-A and D1ZZ 6506072-A(5/75)	1
L(64) "From 2/2/76"	D			I	L/C						D8FZ 6422050-A	1
L(73) "From 2/2/76"	D			I					L/G		D8FZ 7322050-A	1
L(64,73)		G/C	H					S/W			D4FZ 6406081-A	1
P	D										D2AZ 6521984-A	1
P		G/C									D20Z 9706081-A	1
P "Before 2/2/76"				I							D4AZ 11582-A	1
P "From 2/2/76"				I							D8FZ 11582-A	1
P					L/C						C8GY 5443505-A	1
P								S/W			D3FZ 1386-A	1
P "Before 2/2/76"	D			I							D3AZ 6522050-D	1
P "From 2/2/76"	D			I							D8FZ 6222050-A	1

1977

SINGLE KEY-NON-ILLUMINATED ENTRY SYSTEM

F(53,65) – – Police	D	G/C		I	L/C						D8WY 6522050-A	1

COPYRIGHT © 1986— FORD MOTOR COMPANY —DEARBORN, MICHIGAN

1973/79 LINCOLN-MERCURY CARS

22050 LOCK SET CHART — Cont'd

1977

DUAL KEY-ILLUMINATED ENTRY KEY SYSTEM

MODEL	CONSISTS OF LOCK CYLINDERS FOR: DOOR	G/ COMPT.	HOOD	IGN.	L/ COMPT.	S/COMPT. SIDE	S/COMPT. FLOOR	SPARE WHEEL	TAIL and LIFT GATE	DESCRIPTION	PART NUMBER	QTY.
A	D									R.H.	D7AZ 5321984-A	1
	D									L.H.	D7AZ 5321985-A	1
A(53,65)	D			I							D80Z 6522050-A	1
D	D									R.H.	D7VY 6021984-A	1
	D									L.H.	D7VY 6021985-A	1
D	D			I							D8VY 6022050-B	1
D	D			I							D8VY 6022050-A	1
F(53)	D			I							D80Z 5322050-A	1
F(65)	D									L.H.	D7AZ 5321984-A	1
	D									R.H.	D7AZ 5321985-A	1
F(65)	D			I							D80Z 6522050-A	1
G(54)	D									L.H.	D7AZ 5321984-A	1
	D									R.H.	D7AZ 5321985-A	1
G(54)	D			I							D80Z 6522050-A	1
G(66)	D			I							D80Z 5322050-A	1
K	D									L.H.	D7LY 6521984-A	1
	D									R.H.	D7LY 6521985-A	1
K	D			I							D84Y 5422050-A	1
V	D									L.H.	D7LY 6521984-A	1
	D									R.H.	D7LY 6521985-A	1
V	D			I							D84Y 5422050-A	1

DUAL KEY-NON-ILLUMINATED ENTRY SYSTEM

MODEL	DOOR	G/ COMPT.	HOOD	IGN.	L/ COMPT.	S/COMPT. SIDE	S/COMPT. FLOOR	SPARE WHEEL	TAIL and LIFT GATE	DESCRIPTION	PART NUMBER	QTY.
A(53,65)	D										D2AZ 6521984-A	2
A(53,65)		G/C									D20Z 9706081-A	1
A(53,65)				I							D8FZ 11582-A	1
A(53,65)					L/C						D2AZ 6543505-A	1
A(53,65)								S/W			D3FZ 1386-A	1
A(53,65)	D			I							D8FZ 6222050-A	1
A(53,65) "Before 7/1/77"		G/C			L/C						D20Z 6543507-A	1
A(71)	D										D2AZ 6521984-A	2
A(71)		G/C									D20Z 9706081-A	1
A(71)				I							D8FZ 11582-A	1
A(71)						S/C					D10Z 6606081-A	1
A(71)							S/C				C7AZ 71115A32-B	1

MODEL	CONSISTS OF LOCK CYLINDERS FOR									DESCRIPTION	PART NUMBER	QTY.
	DOOR	G/ COMPT.	HOOD	IGN.	L/ COMPT.	S/COMPT. SIDE	S/COMPT. FLOOR	SPARE WHEEL	TAIL and LIFT GATE			
22050 LOCK SET CHART — Cont'd												
1977												
DUAL KEY-NON-ILLUMINATED ENTRY SYSTEM												
A(71)								S/W			D3FZ 1386-A	1
A(71)									T/G		C7DZ 7143505-B	1
A(71) "Before 12/20/76"	D			I					T/G		D6AZ 7122050-A	1
A(71) "From 12/20/76"	D			I					T/G		D7AZ 7122050-B	1
D	D										D4VY 6521984-A	2
D		G/C									D5LY 6506081-A	1
D				I							D6LY 11582-A	1
D					L/C						D7LY 6543505-A	1
D								S/W			D3FZ 1386-A	1
D	D			I							D8LY 6522050-A	1
D		G/C			L/C						D7LY 6543507-A	1
F(53,65)	D										D2AZ 6521984-A	2
F(53,65)		G/C									D20Z 9706081-A	1
F(53,65)				I							D8FZ 11582-A	1
F(53,65)					L/C						D6DZ 6643505-A	1
F(53,65)								S/W			D3FZ 1386-A	1
F(53,65)	D			I							D8FZ 6222050-A	1
F(53,65)		G/C			L/C						D6DZ 6643507-A	1
F(71)	D										D2AZ 6521984-A	2
F(71)		G/C									D20Z 9706081-A	1
F(71)				I							D8FZ 11582-A	1
F(71)							S/C				C7AZ 71115A32-B	1
F(71)								S/W			D3FZ 1386-A	1
F(71)									T/G		C7DZ 7143505-B	1
F(71) "Before 12/20/76"	D			I					T/G		D6AZ 7122050-A	1
F(71) "From 12/20/76"	D			I					T/G		D7AZ 7122050-B	1
G	D										D2AZ 6521984-A	2
G		G/C									D20Z 9706081-A	1
G				I							D8FZ 11582-A	1
G					L/C						D6DZ 6643505-A	1
G								S/W			D3FZ 1386-A	1
G	D			I							D8FZ 6222050-A	
G		G/C			L/C						D6DZ 6643507-A	1
J(64D,P,T)	D										D5RY 6421984-A	2
J(64S)		G/C									D6RY 6406081-A	1
J				I						Refer to group 3675 in Chassis Section		
J(64D,P,T)					L/C					Incl. housing	D7RY 6443505-C	1

COPYRIGHT © 1986— FORD MOTOR COMPANY —DEARBORN, MICHIGAN

1973/79 LINCOLN-MERCURY CARS

22050 LOCK SET CHART — Cont'd

1977

DUAL KEY-NON-ILLUMINATED ENTRY SYSTEM

MODEL	CONSISTS OF LOCK CYLINDERS FOR: DOOR	G/COMPT.	HOOD	IGN.	L/COMPT.	S/COMPT. SIDE	S/COMPT. FLOOR	SPARE WHEEL	TAIL and LIFT GATE	DESCRIPTION	PART NUMBER	QTY.
K	D										D4VY 6521984-A	2
K		G/C									D5LY 6506081-A	1
K				I							D6LY 11582-A	1
K					L/C						D7LY 6543505-A	1
K								S/W			D3FZ 1386-A	1
K	D			I							D8LY 6522050-A	1
K		G/C			L/C						D7LY 6543507-A	1
L	D										D2AZ 6521984-A	2
L		G/C								Non-locking	D1ZZ 6506072-A	1
L		G/C								Locking	D10Z 6606081-A	1
L				I							D8FZ 11582-A	1
L(62,64)					L/C						C8GY 5443505-A	1
L								S/W			D3FZ 1386-A	1
L(73)									L/G		D2FZ 7343505-A	1
L(62)	D			I							D8FZ 6222050-A	1
L(64)	D			I	L/C						★ D7FZ 6422050-A r/b D8FZ 6422050-A(6/80)	1
L(73)	D			I					L/G		★ D7FZ 7322050-A r/b D8FZ 7322050-A(12/80)	1
L(62)		G/C			L/C					Locking	D1AZ 6543507-A	1
P	D										D2AZ 6521984-A	2
P		G/C									D20Z 9706081-A	1
P				I							D8FZ 11582-A	1
P					L/C						C8GY 5443505-A	1
P								S/W			D3FZ 1386-A	1
P	D			I							D8FZ 6222050-A	1
V		G/C									D74Y 5406081-A	1
V				I							D6LY 11582-A	1
V					L/C						D7LY 6543505-A	1
V								S/W			D3FZ 1386-A	1

1978

SINGLE KEY-NON-ILLUMINATED ENTRY SYSTEM

F(53,65) – – Police	D	G/C		I	L/C						D8WY 6522050-A	1

DUAL KEY-ILLUMINATED ENTRY SYSTEM

A	D									R.H.	D7AZ 5321984-A	1
	D									L.H.	D7AZ 5321985-A	1
A(53,65)	D			I							D80Z 6522050-A	1
D	D									R.H.	D7VY 6021984-A	1
	D									L.H.	D7VY 6021985-A	1
D	D			I							D8VY 6022050-A	1

MODEL	CONSISTS OF LOCK CYLINDERS FOR									DESCRIPTION	PART NUMBER	QTY.
	DOOR	G/ COMPT.	HOOD	IGN.	L/ COMPT.	S/COMPT. SIDE	S/COMPT. FLOOR	SPARE WHEEL	TAIL and LIFT GATE			
22050	LOCK SET CHART — Cont'd											
Note:	▲ Also includes console lock											

1978

DUAL KEY-ILLUMINATED ENTRY SYSTEM

F(53)	D			I							D80Z 5322050-A	1
F(65)	D									L.H.	D7AZ 5321984-A	1
	D									R.H.	D7AZ 5321985-A	1
F(65)	D			I							D80Z 6522050-A	1
G(54)	D									L.H.	D7AZ 5321984-A	1
	D									R.H.	D7AZ 5321985-A	1
G(54)	D			I							D80Z 6522050-A	1
G(66)	D			I							D80Z 5322050-A	1
K	D									L.H.	D7LY 6521984-A	1
	D									R.H.	D7LY 6521985-A	1
K	D			I							D84Y 5422050-A	1
V	D									L.H.	D7LY 6521984-A	1
	D									R.H.	D7LY 6521985-A	1
V	D			I							D84Y 5422050-A	1

DUAL KEY-NON-ILLUMINATED ENTRY SYSTEM

A(53,65)	D										D2AZ 6521984-A	2
A(53,65)		G/C									D20Z 9706081-A	1
A(53,65)				I							D8FZ 11582-A	1
A(53,65)					L/C						D2AZ 6543505-A	1
A(53,65)								S/W			D3FZ 1386-A	1
A(53,65)	D			I							D8FZ 6222050-A	1
A(71)	D										D2AZ 6521984-A	2
A(71)		G/C									D20Z 9706081-A	1
A(71)				I							D8FZ 11582-A	1
A(71)						S/C					D10Z 6606081-A	1
A(71)							S/C				C7AZ 71115A32-B	1
A(71)								S/W			D3FZ 1386-A	1
A(71)									T/G		C7DZ 7143505-B	1
A(71)	D			I					T/G		D7AZ 7122050-B	1
D	D										D4VY 6521984-A	2
D		G/C									D5LY 6506081-A	1
D "Before 7/5/78"				I							D6LY 11582-A	1
D "From 7/5/78"				I							D8LY 11582-A	1
D					L/C						D7LY 6543505-A	1
D								S/W			D3FZ 1386-A	1
D	D			I							D8LY 6522050-A	1
D		G/C			L/C						D7LY 6543507-A	1
F(53,65)	D										D2AZ 6521984-A	2
F(53,65)		G/C									D20Z 9706081-A	1
F(53,65)				I							D8FZ 11582-A	1
F(53,65)					L/C						D6DZ 6643505-A	1
F(53,65)								S/W			D3FZ 1386-A	1
F(53,65)	D			I							D8FZ 6222050-A	1
F(53,65)		G/C			L/C						D6DZ 6643507-A	1
G	D										D2AZ 6521984-A	2
G		G/C									D20Z 9706081-A	1
G				I							D8FZ 11582-A	1
G					L/C						D6DZ 6643505-A	1

COPYRIGHT © 1986— FORD MOTOR COMPANY —DEARBORN, MICHIGAN

1973/79 LINCOLN-MERCURY CARS

22050 LOCK SET CHART — Cont'd

Note: ▲ Also includes console lock

1978

DUAL KEY-NON-ILLUMINATED ENTRY SYSTEM

MODEL	CONSISTS OF LOCK CYLINDERS FOR: DOOR	G/ COMPT.	HOOD	IGN.	L/ COMPT.	S/COMPT. SIDE	S/COMPT. FLOOR	SPARE WHEEL	TAIL and LIFT GATE	DESCRIPTION	PART NUMBER	QTY.
G								S/W			D3FZ 1386-A	1
G	D			I							D8FZ 6222050-A	1
G		G/C			L/C						D6DZ 6643507-A	1
J(64D,P,T)	D										D5RY 6421984-A	2
J(64D,P,T)		G/C									★ D5RY 6406081-C Not replaced (6/82)	1
J(64S)		G/C									D6RY 6406081-A	1
J				I						Refer to group 3675 in Chassis Section		
J(64D,P,T)					L/C					Incl. housing	D7RY 6443505-C	1
J(64S)					L/C					Incl. housing	D7RY 6443505-B	1
K	D										D4VY 6521984-A	2
K		G/C									D5LY 6506081-A	1
K "Before 7/5/78"				I							D6LY 11582-A	1
K "From 7/5/78"				I							D8LY 11582-A	1
K					L/C						D7LY 6543505-A	1
K								S/W			D3FZ 1386-A	1
K	D			I							D8LY 6522050-A	1
K		G/C			L/C						D7LY 6543507-A	1
K		▲G/C			L/C						D8LY 6543507-A	1
L	D										D2AZ 6521984-A	2
L		G/C								Non-locking	D1ZZ 6506072-A	1

1978

DUAL KEY-NON-ILLUMINATED ENTRY SYSTEM

MODEL	DOOR	G/ COMPT.	HOOD	IGN.	L/ COMPT.	S/COMPT. SIDE	S/COMPT. FLOOR	SPARE WHEEL	TAIL and LIFT GATE	DESCRIPTION	PART NUMBER	QTY.
L		G/C								Locking	D10Z 6606081-A	1
L				I							D8FZ 11582-A	1
L(62,64)					L/C						C8GY 5443505-A	1
L								S/W			D3FZ 1386-A	1
L(73)									L/G		D2FZ 7343505-A	1
L(62)	D			I							D8FZ 6222050-A	1
L(64)	D			I	L/C						D8FZ 6422050-A	1
L(73)	D			I					L/G		D8FZ 7322050-A	1
L(62)		G/C			L/C					Locking	D1AZ 6543507-A	1
P(36,54,66)	D										D8BZ 5421984-A	2
P(36,54,66)		G/C									D8BZ 7406081-A	1
P(36,54,66) "Before 7/5/78"				I							D8BZ 11582-A	1
P(36,54,66) "From 7/5/78"				I							D8AZ 11582-A	1
P(36,54,66)					L/C						D6ZZ 6943505-A	1
P(36,54,66)								S/W			D3FZ 1386-A	1
P(36,54,66)	D			I							D8BZ 5422050-B	1
P(36,54,66)		G/C			L/C						D8BZ 5443507-A	1
P(74)	D										D8BZ 5421984-A	2
P(74)		G/C									D8BZ 7406081-A	1
P(74) "Before 7/5/78"				I							D8BZ 11582-A	1
P(74) "From 7/5/78"				I							D8AZ 11582-A	1
P(74)						S/C					D8BZ 7406081-A	1
P(74)								S/W			D3FZ 1386-A	1
P(74)									L/G		D8BZ 7443505-A	1
P(74)	D			I					L/G		D8BZ 7422050-B	1
V		G/C									D74Y 5406081-A	1
V "Before 7/5/78"				I							D6LY 11582-A	1
V "From 7/5/78"				I							D8LY 11582-A	1
V					L/C						D7LY 6543505-A	1
V								S/W			D3FZ 1386-A	1

MODEL	CONSISTS OF LOCK CYLINDERS FOR									DESCRIPTION	PART NUMBER	QTY.
	DOOR	G/ COMPT.	HOOD	IGN.	L/ COMPT.	S/COMPT. SIDE	S/COMPT. FLOOR	SPARE WHEEL	TAIL and LIFT GATE			
22050	LOCK SET CHART — Cont'd											
Note:	▲ Also includes console lock											

1979

SINGLE KEY-NON-ILLUMINATED ENTRY SYSTEM

F(53,65) - - Police	D	G/C		I	L/C						D8WY 6522050-A	1

DUAL KEY-ILLUMINATED ENTRY SYSTEM

A	D									L.H.	D9AZ 5421984-A	1
	D									R.H.	D9AZ 5421985-A	1
A(54,66)	D			I							D9AZ 5422050-A	1
D "Before 3/19/79"	D									R.H.	D7VY 6021984-A	1
	D									L.H.	D7VY 6021985-A	1
D "Before 3/19/79"	D			I							D8VY 6022050-A	1
F(53)	D			I							D80Z 5322050-A	1
F(65)	D									L.H.	D7AZ 5321984-A	1
	D									R.H.	D7AZ 5321985-A	1
F(65)	D			I							D80Z 6522050-A	1
G(54)	D									L.H.	D7AZ 5321984-A	1
	D									R.H.	D7AZ 5321985-A	1
G(54)	D			I							D80Z 6522050-A	1
G(66)	D			I							D80Z 5322050-A	1
K "Before 3/19/79"	D									L.H.	D7LY 6521984-A	1
	D									R.H.	D7LY 6521985-A	1
K "From 3/19/79"	D									L.H.	D9LY 6521984-A	1
	D									R.H.	D9LY 6521985-A	1
K "Before 3/19/79"	D			I							D84Y 5422050-A	1
V	D									L.H.	D7LY 6521984-A	1
	D									R.H.	D7LY 6521985-A	1
V	D			I							D84Y 5422050-A	1

DUAL KEY-NON-ILLUMINATED ENTRY SYSTEM

A(54,66)	D										D8BZ 5421984-A	2
A(54,66)		G/C									D8BZ 7406081-A	1
A(54,66)				I							D9AZ 11582-A	1
A(54,66)					L/C						D6ZZ 6943505-A	1
A(54,66)								S/W			D3FZ 1386-A	1

COPYRIGHT © 1986 — FORD MOTOR COMPANY — DEARBORN, MICHIGAN

1973/79 LINCOLN-MERCURY CARS

MODEL	CONSISTS OF LOCK CYLINDERS FOR									DESCRIPTION	PART NUMBER	QTY.
	DOOR	G/ COMPT.	HOOD	IGN.	L/ COMPT.	S/COMPT. SIDE	S/COMPT. FLOOR	SPARE WHEEL	TAIL and LIFT GATE			
22050	LOCK SET CHART — Cont'd											
Note:	▲ Also includes console lock											

1979

DUAL KEY-NON-ILLUMINATED ENTRY SYSTEM

A(54,66)	D			I							D9AZ 5422050-B	1
A(54,66)		G/C			L/C						D8BZ 5443507-A	1
A(74)	D										D8BZ 5421984-A	2
A(74)		G/C									D8BZ 7406081-A	1
A(74)				I							D9AZ 11582-A	1
A(74)						S/C					D8BZ 7406081-A	1
A(74)							S/C				C7AZ 71115A32-B	1
A(74)								S/W			D3FZ 1386-A	1
A(74)									T/G		D9AZ 7443505-A	1
A(74)	D			I					T/G		D9AZ 7422050-A	1
A(74)		G/C				S/C	S/C				D9AZ 7406081-A	1
D "Before 3/19/79"	D										D4VY 6521984-A	2
D "From 3/19/79"	D										D9LY 6521984-B	2
D		G/C									D5LY 6506081-A	1
D				I							D8LY 11582-A	1
D					L/C						D7LY 6543505-A	1
D								S/W			D3FZ 1386-A	1
D "Before 3/19/79"	D			I							D8LY 6522050-A	1
D "From 3/19/79"	D			I							★ D9LY 6522050-A Not replaced (12/85)	1
D		G/C			L/C						D7LY 6543507-A	1
F(53,65)	D										D2AZ 6521984-A	2
F(53,65)		G/C									D20Z 9706081-A	1
F(53,65)				I							D8FZ 11582-A	1
F(53,65)					L/C						D6DZ 6643505-A	1
F(53,65)								S/W			D3FZ 1386-A	1
F(53,65)	D			I							D8FZ 6222050-A	1
F(53,65)		G/C			L/C						D6DZ 6643507-A	1
G	D										D2AZ 6521984-A	2
G		G/C									D20Z 9706081-A	1
G				I							D8FZ 11582-A	1
G					L/C						D6DZ 6643505-A	1
G								S/W			D3FZ 1386-A	1
G	D			I							D8FZ 6222050-A	1
G		G/C			L/C						D6DZ 6643507-A	1
J	D									R.H.	D9ZZ 6621984-A	1
	D									L.H.	D9ZZ 6621985-A	1
J		G/C									D8BZ 7406081-A	1
J				I							D9AZ 11582-A	1
J					L/C						D6DZ 6643505-A	1
J								S/W			D3FZ 1386-A	1
J	D			I							D9ZZ 6622050-A	1
J		G/C			L/C						D9AZ 5443507-A	1
K "Before 3/19/79"	D										D4VY 6521984-A	2
K "From 3/19/79"	D										D9LY 6521984-B	2
K		G/C									D5LY 6506081-A	1
K				I							D8LY 11582-A	1
K					L/C						D7LY 6543505-A	1
K								S/W			D3FZ 1386-A	1

1973/79
LINCOLN-MERCURY CARS

MODEL	CONSISTS OF LOCK CYLINDERS FOR									DESCRIPTION	PART NUMBER	QTY.
	DOOR	G/ COMPT.	HOOD	IGN.	L/ COMPT.	S/COMPT. SIDE	S/COMPT. FLOOR	SPARE WHEEL	TAIL and LIFT GATE			

22050 LOCK SET CHART — Cont'd

Note: ▲ Also includes console lock

1979

DUAL KEY-NON-ILLUMINATED ENTRY SYSTEM

K "Before 3/19/79"	D			I							D8LY 6522050-A	1
K "From 3/19/79"	D			I							D9LY 6522050-A	1
K		G/C			L/C						D7LY 6543507-A	1
L	D										D2AZ 6521984-A	2
L		G/C								Non-locking	D1ZZ 6506072-A	1
L		G/C								Locking	D10Z 6606081-A	1
L				I							D8FZ 11582-A	1
L(62,64)					L/C						C8GY 5443505-A	1
L								S/W			D3FZ 1386-A	1
L(73)									L/G		D2FZ 7343505-A	1
L(62)	D			I							D8FZ 6222050-A	1
L(64)	D			I	L/C						D8FZ 6422050-A	1
L(73)	D			I					L/G		D8FZ 7322050-A	1
L(62)		G/C			L/C					Locking	D1AZ 6543507-A	1
P(36,54,66)	D										D8BZ 5421984-A	2
P(36,54,66)		G/C									D8BZ 7406081-A	1
P(36,54,66)				I							D9AZ 11582-A	1
P(36,54,66)					L/C						D6ZZ 6943505-A	1
P(36,54,66)								S/W			D3FZ 1386-A	1
P(36,54,66)	D			I							D9AZ 5422050-B	1
P(36,54,66)		G/C			L/C						D8BZ 5443507-A	1
P(74)	D										D8BZ 5421984-A	2
P(74)		G/C									D8BZ 7406081-A	1
P(74)				I							D9AZ 11582-A	1
P(74)						S/C					D8BZ 7406081-A	1
P(74)								S/W			D3FZ 1386-A	1
P(74)									L/G		D8BZ 7443505-A	1
P(74)	D			I					L/G		D9BZ 7422050-A	1
P(74)		G/C				S/C					D8BZ 7406081-B	1
V		G/C									D74Y 5406081-A	1
V				I							D8LY 11582-A	1
V					L/C						D7LY 6543505-A	1
V								S/W			D3FZ 1386-A	1

YEAR	MODEL/RESTRICTIONS	PART NUMBER	DESCRIPTION	QTY.

22053 KEY (BLANK)-For replacement key blanks, order through Rotunda Equipment

22076 KEY KIT (FRONT DOOR, IGNITION and LUGGAGE COMPARTMENT LOCK BLANK)-
For replacement key blanks, order through Rotunda Equipment

22134-5 ROD (FRONT DOOR LATCH CONTROL TO CYLINDER)-Incl. attaching parts

79	A(54,74)		(RH)	E4AZ	5422134-A	(LH)	E4AZ	5422135-A		1
79	A(66)		(RH)	D9AZ	6622134-A	(LH)	D9AZ	6622135-A		1
73	C(53,71)	"Before 4/23/73"	(RH)	D2GY	5322134-A	(LH)	D2GY	5322135-A		1
73/76	C(53,71)	"From 4/23/73"	(RH)	D7WY	5322134-A	(LH)	D7WY	5322135-A		1

COPYRIGHT © 1986 — FORD MOTOR COMPANY — DEARBORN, MICHIGAN

1973/79 LINCOLN-MERCURY CARS

YEAR	MODEL/RESTRICTIONS	PART NUMBER	DESCRIPTION	QTY.
22134-5	ROD (FRONT DOOR LATCH CONTROL TO CYLINDER)-Incl. attaching parts — Cont'd			
73	C(63,65) "Before 4/23/73"	(RH) D2GY 6522134-A	(LH) ★ D2GY 6522135-A Not replaced (3/79)	1
75/79	D(53) "Before 3/19/79"	(RH) D5VY 5322134-A	(LH) D5VY 5322135-A	1
79	D(53) "From 3/19/79"	(RH) D9VY 5322134-B	(LH) D9VY 5322135-B	1
75/79	D(60) "Before 3/19/79"	(RH) ★ D5VY 6022134-A Not replaced (4/85)	(LH) D5VY 6022135-A	1
79	D(60) "From 3/19/79"	(RH) D9VY 6022134-A	(LH) D9VY 6022135-A	1
73	F	(RH) D3WY 6522134-B	(LH) D3WY 6522135-B	1
77	F(53,71)	(RH) D7WY 5322134-A	(LH) D7WY 5322135-A	1
78/	F(53)			1
77/	F(65)	(RH) D70Z 6522134-A	(LH) D70Z 6522135-A	1
73/74	J	(RH) D3RY 6222134-A	(LH) ★ D3RY 6222135-A Not replaced(3/79)	1
79	J	(RH) E2ZZ 6122134-A	(LH) E2ZZ 6122135-A	1
73	K - - w/power door latch "Before 5/20/73"		Refer to group 14028 in Chassis Section	
77/79	K "Before 3/19/79"	(RH) D7LY 6522134-A	(LH) D7LY 6522135-A	1
79	K "From 3/19/79"	(RH) D9LY 6522134-A	(LH) D9LY 6522135-A	1
78/79	P(54,74)	(RH) D9BZ 5422134-A	(LH) D9BZ 5422135-A	1
78/79	P(36,66)	(RH) D9BZ 6622134-A	(LH) D9BZ 6622135-A	1
22152-3	ROD (FRONT DOOR LATCH ACTUATING)-Incl. attaching parts			
73	A(53,57,71),Y(53,71) - - w/power door latch "Before 7/23/73"	D3AZ 5422152-A	R.H. and L.H.	2
79	A(54,74)	(RH) E2AZ 5422152-A	(LH) E2AZ 5422153-A	1
79	A(66)	(RH) E2AZ 6622152-A	(LH) E2AZ 6622153-A	1
73/76	C(53,71)	★ D2GY 5322152-A	R.H. and L.H.-repl. by D7GY 5322152-A(12/80)	2
73	C(63,65) "Before 4/23/73"	D2GY 6522152-A	R.H. and L.H.	2
75/79	D(53) ""Before 9/11/78"	D6VY 5322152-A	R.H. and L.H.-12 3/16" long	2
79	D(53) "From 9/11/78"	D9VY 5322152-A	R.H.-11 7/8" long	1
		D6VY 5322152-A	L.H.-12 3/16" long	1
75/	D(60)	D5VY 6022152-B	R.H. and L.H.-12 3/16" long	2
73	F	D1WY 6522152-A	R.H. and L.H.	2
77	F(53,71)	D80Z 5322152-A	R.H. and L.H.	2
78/	F(53)			2
77/	F(65)	D80Z 6522152-A	R.H. and L.H.	2
73	J	(RH) D3RY 6222152-A	(LH) D3RY 6222153-A	1
76/78	J "Before 2/1/78"	D8RY 6422152-A	R.H. and L.H.	2
79	J	E2ZZ 6122152-A	R.H. and L.H.	2
77/	K	(RH) D7LY 6522152-A	(LH) D7LY 6522153-A	1
78/	P(54,74)	D8BZ 5422152-A	R.H. and L.H.	2
78/	P(36,66)	D8BZ 6622152-A	R.H. and L.H.	2
22161	SPRING (DOOR LATCH RATCHET PAWL)			
77	P	D7DZ 6222161-A	L.H.	2
22164-5	LINK (FRONT DOOR LATCH CONTROL ROD LEVER)			
73	C(63,65) - - w/o power door latch "Before 4/23/73"	(RH) D20Z 6522164-A	(LH) D20Z 6522165-A	1
75/	D(60)	D5VY 6022164-B	R.H. and L.H.	2
77/	F(65) - - w/o power door latch	D70Z 6522164-A	R.H. and L.H.	2
73/	K	D6SZ 6522164-A	R.H. and L.H.	2
78/	P(36,66)	D8BZ 6622164-A	R.H. and L.H.	2
22194	GROMMET (VACUUM DOOR LATCH HOSE)			
73	D - - w/power door latch	D0AZ 6222194-A	Fits 1 3/8" dia. hole-1 tube	1
73	D - - w/power door latch	D0AZ 6222194-B	Fits 1 5/16" dia. hole-1 tube	1
73	D - - w/power door latch	D1AZ 6522194-A	Fits 1" dia. hole-2 tubes	1
222A00-1	RETAINER (FRONT DOOR GLASS RUN LATCH SIDE)			
79	A(66)	(RH) D9AZ 66222A00-A	(LH) D9AZ 66222A01-A	1
78/	P(36)	(RH) D8BZ 36222A00-B	(LH) D8BZ 36222A01-B	1

1973/79
LINCOLN-MERCURY CARS

YEAR	MODEL/RESTRICTIONS	PART NUMBER	DESCRIPTION	QTY.
222B08	CLIP (FRONT DOOR WINDOW TOP OUTER)-Also refer to groups 222A04, 222A44			
73	A(53,57,65),C,D,K,Y(53,65)	D2AZ 65222B08-A		2
74	C(65),F,K			2
75/76	C(65),F			2
77/	F(65)			2
73/74	L,P(62)	D1FZ 62222B08-A		2
78/	P(54,66,74)			2
78/	G(54),V "From 1/3/78"			2
222A14-5	BRACKET (FRONT DOOR VENT WINDOW DIVISION BAR)			
73/76	A(53,57,71),Y(53,71)	(RH)	(LH) D4AZ 53222A15-B Power	1
77	A(53,71)			1
74	D(53)			1
75/	D	(RH) D5VY 60222A14-A	(LH) D5VY 60222A15-A	1
77/	K	(RH) ★ D7LY 65222A14-A Not replaced (4/85)	(LH) D7LY 65222A15-A Outer	1
222A44	CLIP (FRONT DOOR WINDOW TOP)-Also refer to groups 222A04, 222B08			
79	A(54,74)	D9AZ 54222A44-A		2
79	A(66)	D9AZ 66222A44-A		2
79	A(54,74)		Rear door	2
22254-5	BRACKET (DOOR VENT WINDOW GLASS)			
75/	D	(RH) D5VY 6022254-A	(LH) D5VY 6022255-A	1
77/	K - - w/mini vent	(RH) ★ D7LY 6522254-A Not replaced (4/85)	(LH) D7LY 6522255-A	1
222A54-5	STOP (FRONT DOOR WINDOW UPPER REAR)			
73	D(53) - - w/o mini vent "Before 12/1/72"	(RH) C9MY 53222A54-A	(LH) ★ C9MY 53222A55-A Not replaced (12/80)	1
73	D(53) - - w/mini vent "Before 12/1/72"	(RH) ★ D2VY 53222A54-A	(LH) D2VY 53222A55-A Not replaced (4/85)	1
73/	D(53) "From 12/1/72"			1
222A92	GUIDE (DOOR WINDOW LOWER)			
Note	● Use with plastic bracket ⊕ Use with metal bracket			
73/76	A,Y	D3AZ 65222A92-A		AR
77/78	A			AR
79	A	D9AZ 66222A92-A		AR
73/76	C,K	★ D20Z 65222A92-A	Replaced by D20Z 65222A92-B (4/85)	AR
75/	D	D3AZ 65222A92-A		AR
73	F	D1ZZ 65222A92-B		2
74/76	F	★ D20Z 65222A92-A	Replaced by D20Z 65222A92-B (4/85)	2or4
77	F		Front door	2
77	F(53,71)		Rear door	2
78	F(65)			2
79	F(65)	D20Z 65222A92-B		2
78/	F(53)	D3AZ 65222A92-A	Front and rear door	2or4
75/	G	D5DZ 66222A92-A		2
79	J	D9ZZ 66222A92-A		2
77/	K	⊕ D7LY 65222A92-A		2
77/	K	● D3AZ 65222A92-A		2
78/	P(36)	D8BZ 36222A92-A		2
77/	V	D5DZ 66222A92-A		2

COPYRIGHT © 1986— FORD MOTOR COMPANY —DEARBORN, MICHIGAN

1973/79 LINCOLN-MERCURY CARS

YEAR	MODEL/RESTRICTIONS	PART NUMBER	DESCRIPTION		QTY.
22296-7	**BAR (FRONT DOOR VENT WINDOW DIVISION)**				
79	A	(RH) D9AZ 5422296-B	(LH) D9AZ 5422297-B	Incl.-bar assy. retainer and w/strip	1
78/	P "From 9/30/78"	(RH) D9BZ 5422296-A	(LH) D9BZ 5422297-A	Incl.-bar assy. retainer and w/strip	1
22362	**GUIDE (DOOR WINDOW UPPER)**				
Note	● Use with plastic bracket ⊕ Use with metal bracket				
73/76	A,Y	D3AZ 6522362-A			AR
77/78	A	⊕			AR
77	A(53,71) - - w/mini vent "From 5/2/77"	●			AR
77/78	A - - w/o mini vent	●	Refer to groups 23288-9 and 263A52-3		AR
73/76	C	D20Z 6522362-A			2or4
73	D(53) - - w/mini vent "Before 12/1/72"	D2VY 5322362-A			2
73/74	D(53) "From 12/1/72"				2
75/77	D "Before 6/1/77"	⊕			2
77/	D	D3AZ 6522362-A	Front door		2
78/	D(53)	D2VY 5322362-A	Rear door		2
73	F	D1ZZ 6522362-A			2
74/77	F	D20Z 6522362-A	Front door		2
77	F(71)		Rear door		2
77/	F(53)	D3AZ 6522362-A	Front and rear door		2or4
73/76	K				2or4
78/	F(65)	D20Z 6522362-A	Front door		2
77/	K	D3AZ 6522362-A			2
22380-1	**STABILIZER (DOOR WINDOW GLASS INNER)**				
73/76	A(53,57,71),Y(53,71)	(RH) ★ D1ZZ 6522380-B	(LH) ★ D3AZ 5322381-A		1
77/78	A(53,71)	Not replaced(4/85)	Not replaced(8/82)	Front door-center	1
73/76	A(53,57,71),Y(53,71)	D20Z 6522380-B	R.H. and L.H.-front door		2
			R.H. and L.H.-rear door		4
77/78	A(53,71)		R.H. and L.H.-front door-rear		2
			R.H. and L.H.-rear door-front and rear		4
73/76	A(65),Y(65)	D20Z 6522380-B	R.H. and L.H.-front door		4
			R.H. and L.H. quarter panel		2
77/78	A(65)		R.H. and L.H.-front door-center and rear		4
79	A(66) - - w/o vent window	D9AZ 6622380-A	R.H. and L.H.-front door		4
73/76	C(63,65)	D20Z 6522380-B	R.H. and L.H.-front door		4
73	C(53,71) "Before 1/8/73"	D20Z 6522380-B	R.H. and L.H.-front door		4
			R.H. and L.H.-rear door		4
73/76	C(53,71) "From 1/8/73"	D30Z 5322380-A	R.H. and L.H.-front door		2
		D20Z 6522380-B	R.H. and L.H.-rear door		4
73	D(53) - - w/mini vent "Before 12/1/72"	D2VY 5322380-A	R.H. and L.H.		4
73/74	D(53) "From 12/1/72"	D2VY 5322380-A	R.H. and L.H.		4
75/	D				4
73	F	★ D1ZZ 6522380-B	R.H. and L.H.-not replaced (4/85)		4
74/76	F	D20Z 6522380-B	R.H. and L.H.		AR
77	F(53,71)	D30Z 5322380-A	R.H. and L.H.-front door-rear		2
78/	F(53)				2
77	F(53,71)	D20Z 6522380-B	R.H. and L.H.-front door-center		2
			R.H. and L.H.-rear door-front and rear		4
78/	F(53)		R.H. and L.H.-rear door-front and rear		4
77/	F(65)		R.H. and L.H.-front door-front and rear		4
79	J	D9ZZ 6622380-A	R.H. and L.H.		2
73/	K	D20Z 6522380-B	R.H. and L.H.		4

YEAR	MODEL/RESTRICTIONS	PART NUMBER	DESCRIPTION	QTY.
22384-5	LEVER (DOOR LATCH ACTUATING ROD)			
75/	D	D5VY 6022384-A	R.H. and L.H.	2or4
74/	L	D1FZ 6222384-A	R.H. and L.H.	2
73/77	P	C7ZZ 6522384-A	R.H. and L.H.	2
224A02	FILLER (DOOR HANDLE OPENING)			
79	A(54H,66H,74)	D9AZ 54224A02-A		2or4
22404-5	HANDLE ASSY. (DOOR OUTSIDE)-Incl. attaching parts			
73/76	A,C,Y	(RH) D8BZ 5422404-A	(LH) D8BZ 5422405-A Rivet design	1or2
77	A			1or2
79	A "Before 9/18/78"	(RH) D9ZZ 6622404-A	(LH) D9ZZ 6622405-A w/rivet design	1
79	A "From 9/18/78"	(RH) E3FZ 5822404-A	(LH) E3FZ 5822405-A W/rivet design	1
73/	D	(RH) C9AZ 6222404-A	(LH) C9AZ 6222405-A	1or2
73	F	(RH) E25Y 5422404-A	(LH) E25Y 5422405-A	1
73/77	K			1
74/77	F	(RH) D8BZ 5422404-A	(LH) D8BZ 5422405-A Rivet design	1or2
75/77	G	(RH) D8BZ 5422404-A	(LH) D8BZ 5422405-A	1or2
79	J "Before 9/18/78"	(RH) D9ZZ 6622404-A	(LH) D9ZZ 6622405-A w/rivet design	1
79	J "From 9/18/78"	(RH) E3FZ 5822404-A	(LH) E3FZ 5822405-A W/rivet design	1
77/	K "From 2/1/77"	(RH) E25Y 5422404-A	(LH) E25Y 5422405-A	1/2
74/	L	(RH) D1FZ 6222404-A	(LH) D1FZ 6222405-A	1
73/77	P	(RH) C7ZZ 6522404-A	(LH) C7ZZ 6522405-A Front door	1
77	V	(RH) D8BZ 5422404-A	(LH) D8BZ 5422405-A Rivet design	1or2
78	A,F,G,P,V	(RH) D8BZ 5422404-A	(LH) D8BZ 5422405-A w/rivet design	1or2
79	F,G,P,V			1or2
78/	A,F,G,P,V	33769-S2	(M-89-J)-nut - 1/4 -20	AR
		373649-S36B	(BB-935-E)-weld stud-1/4 - 20 x 3/4	AR
		388047-S100	(SS-45-K)-rivet - 1/4 x .50-blind oval head	AR
22408	BUMPER (DOOR OUTSIDE HANDLE ANTI-RATTLE)			
73	F	D2AZ 6522408-A	Rubber	2
73/	K			2
22428-9	PAD (DOOR OUTSIDE HANDLE LARGE)			
73/76	A,C,Y	★ D3AZ 6522428-A	R.H. and L.H.-not replaced (4/85)	2or4
77	A			2or4
73	F	D1AZ 6522428-A	R.H and L.H.	2
74/77	F	★ D3AZ 6522428-A	R.H. and L.H.-not replaced (4/85)	2or4
73/	K	D1AZ 6522428-A	R.H. and L.H.	2
73/76	P	(RH) C7ZZ 6522428-A	(LH) C7ZZ 6522429-AA	1
77	P	(RH) C7ZZ 6522428-B	(LH) C7ZZ 6522429-AA	1
77	V	★ D3AZ 6522428-A	R.H. and L.H.-not replaced (4/85)	2or4
78	A,F,G,P,V	D8BZ 5422428-A	R.H. and L.H.-front or rear door	2or4
79	F,G,P,V			2or4
79	A,J		Serviced in assy. refer to group 22404-5	
22448-9	PAD (DOOR OUTSIDE HANDLE SMALL)			
73/76	P	(RH) C0DZ 6422448-C	(LH) C0DZ 6422449-C	1
77	P	(RH) C0DZ 6422448-D	(LH) C0DZ 6422449-D	1
22454	BUTTON and PIN KIT (DOOR OUTSIDE HANDLE)-Also refer to group 26602			
73/74	D	D4VY 6522454-A	R.H. and L.H.-front and rear door	2or4

Consists of

1-	Clip	2-	Retainers	1-	Sleeve
1-	"O" ring	2-	Screw	1-	Spring
1-	Pin	1-	Button & pin		

74/	L	D1FZ 6222454-A	R.H. and L.H. 2

Consists of

1-	Button and pin assy.	1-	Screw	1-	Sleeve
1-	Clip	1-	Seal	1-	Spring
1-	Retainer				

73/77	P	C9ZZ 6522454-A	R.H. and L.H.-refer to group 26602 for rear door 2

Consists of

1-	Button & pin	1-	Screw	1-	Sleeve
1-	Clip	1-	Seal-"O" ring	1-	Spring
1-	Retainer				

COPYRIGHT © 1986— FORD MOTOR COMPANY —DEARBORN, MICHIGAN

1973/79 LINCOLN-MERCURY CARS

YEAR	MODEL/RESTRICTIONS	PART NUMBER	DESCRIPTION		QTY.
22486	REINFORCEMENT (DOOR OUTSIDE HANDLE)				
73/	D	C5AZ 6222486-A	R.H. and L.H.-front or rear door		2or4
22600-1	HANDLE (DOOR INSIDE)-Incl. attaching parts-Also refer to group 21818-9				
74/75	A,Y	★ D4AZ 6522600-A	R.H. and L.H.-front door		2
74/75	A(53,57,71),Y(53,71)	Not replaced(4/85)	R.H. and L.H.-rear door		2
76	A,Y	D6AZ 6022600-A	R.H. and L.H.-front door		2
77/78	A				2
76	A(53,71),Y(53,71)		R.H. and L.H.-rear door		2
77/78	A(53,71)				2
79	A	(RH) D9AZ 5422600-B	(LH) D9AZ 5422601-B	Front and rear door	2or4
73	C(53,63D,65,71)	(RH) D1AZ 6522600-A	(LH) D1AZ 6522601-A		1
74/76	C				1
75/	D	D5VY 6022600-A	R.H. and L.H.-front door		2
75/	D(53)		R.H. and L.H.-rear door		2
73	F(65D)	(RH) D1AZ 6522600-A	(LH) D1AZ 6522601-A	Rectangular	1
74/76	F				1
77	F(53,65D,K,71)	(RH) D1AZ 6522600-A	(LH) D1AZ 6522601-A	Rectangular-front door	1
77	F(53,71)			Rectangular-rear door	1
78/	F(53,65D)			Rectangular-front door	1
78/	F(53)			Rectangular-rear door	1
77/	F(65L)	D6AZ 6022600-A	R.H. and L.H.		2
75/	G	D6FZ 6222600-A	R.H. and L.H.-front door-one piece design with recess in center of handle(concave)		2
76/	G(54)		R.H. and L.H.-rear door		2
76/77	G(54K)	(RH) D6DZ 5422600-A	(LH) D6DZ 5422601-A	Upper half-two piece design-front door	1
				-rear door	1
76/77	G(54K)	(RH) D6DZ 5422600-B	(LH) D6DZ 5422601-B	Lower half-two piece design-front door	1
				-rear door-refer to group 266A26-7	1
73	J "Before 6/4/73"	(RH) D3RY 6222600-A	(LH) ★ D3RY 6222601-A r/b D3RY 6222601-C(6/84)		1
		E402003-S80	(AB-130)-screw-flanged-pan		6
		★ 50525-S8	(U-159)-screw-pan hd.-No. 10-32 x 5/8"		4
73	J "From 6/4/73 to 7/1/73"	(RH) D3RY 6222600-C	(LH) D3RY 6222601-B		1
73	J "From 7/1/73 to 8/1/73"	(RH) ★ D3RY 6222600-C Not replaced(7/81)	(LH) D3RY 6222601-C	Black plastic	1
73	J "From 8/1/73	(RH) D3RY 6222600-C Not replaced (7/81)	(LH) D3RY 6222601-D		1
74/78	J(64D,P,T)	(LH) D4RY 6222601-A	Incl. housing-bright finish		1
76/78	J(64S) "Before 4/1/78"	(RH) ★ D8RY 6422600-A r/b D8RY 6422600-B(4/85)	Matt black finish		1
78	J(64S) "From 4/1/78"	(RH) D8RY 6422600-B	(LH) D8RY 6422601-A	Matt black finish	1
73/	K	(RH) D2SZ 6522600-B	(LH) D2SZ 6522601-B		1
74/	L	D6FZ 6222600-A	R.H. and L.H.-one piece design with recess in center of handle (concave)		2
77/	V	(RH) D6DZ 5422600-A	(LH) D6DZ 5422601-A	Upper half-two piece design-front door	1
				-rear door	1
77/	V	(RH) D6DZ 5422600-B	(LH) D6DZ 5422601-B	Lower half-two piece design-front door -rear door-refer to group 266A26-7	1
22606	BRACKET (DOOR INSIDE PULL HANDLE MOUNTING)				
73/74	A(53K,57K,65K,X,71H,K)	D3MY 6522606-A	Front door		2
73/74	A(53K,57K,71H,K)		Rear door		2
73/74	C(65D,K)	D4WY 6522606-A	Front door		2or4
74	F	D4WY 6522606-A	Front door		2or4

1973/79
LINCOLN-MERCURY CARS

YEAR	MODEL/RESTRICTIONS	PART NUMBER	DESCRIPTION		QTY.
22620	ESCUTCHEON (FRONT DOOR INSIDE HANDLE)				
73/76	J(64D,P,T)	D4RY 6222620-A	#74GB F226K23-AA	R.H. and L.H.-bright finish	2
76/78	J(64S)	D7RY 6422620-A	#77AB T226K23-AA	R.H. and and L.H.-black finish	2
226K23	ESCUTCHEON (FRONT DOOR INSIDE HANDLE)-Refer to group 22620				
22624	SPRING (WINDOW REGULATOR HANDLE)				
73/76	A,C,F,G,Y - - w/manual windows	D0AZ 6322624-A	R.H. and L.H.		2or4
77/	A,F,G - - w/manual windows				2or4
78/	P - - w/manual windows				2or4
79	J	D0AZ 6322624-A	R.H. and L.H.		2
22634-5	CUP (DOOR INSIDE HANDLE)				
79	A(54K,66K,74K)	(RH) D9AZ 5422634-A	(LH) D9AZ 5422635-A	Front and rear door	1or2
79	A(54L,66L,74K)	(RH) D9MY 5422634-B	(LH) D9MY 5422635-B	Front door-bright finish	1
75/	D	(RH) D5VY 6022634-A	(LH) D5VY 6022635-A		1or2
76/77	G(54K)	(RH) ★ D64Y 5422634-A Not replaced (3/86)	(LH) D64Y 5422635-A	Front door	1
75/	K		Serviced only in assy. group 24144-5 in Soft Trim Section		
78/	P	D8BZ 5422634-A	R.H. and L.H.-black w/camera case grain		2
78/	P	★ D8BZ 5422634-B	R.H. and L.H.-black w/bright finish		2
79	J	r/bE4FZ 5822634-B(12/85)			2
77/	V	(RH) D64Y 5422634-A	(LH) D64Y 5422635-A		1

YEAR	MODEL/RESTRICTIONS	PART NUMBER	DESCRIPTION	QTY.
22666	HANDLE and RETAINER (DOOR PULL)			
Notes:	$ Replace alum. cover if applicable-refer to group 22670			
	¢ Replace dark low gloss baby burl walnut cover if applicable-refer to group 22670			
	▲ Use with trim codes beginning with G			
	⊕ Use with all except trim codes beginning with G			
75	A(65L)	D5AZ 6022666-A	R.H. and L.H.-red	2
		D5AZ 6022666-C	R.H. and L.H.-saddle	2
76	A(65L)	D5AZ 6022666-A	R.H. and L.H.-red	2
		D5AZ 6022666-C	R.H. and L.H.-saddle	2
77	A(65K,L)	D7AZ 6022666-B	R.H. and L.H.-dove gray	2
		D5AZ 6022666-A	R.H. and L.H.-red	2
		D5AZ 6022666-C	R.H. and L.H.-saddle	2
78	A(65K,L)	D7AZ 6022666-B	R.H. and L.H.-dove gray	2
		D5AZ 6022666-A	R.H. and L.H.-red	2
		D5AZ 6022666-C	R.H. and L.H.-saddle	2
79	A(54L,74K) - - w/leather trim-w/color keyed cover	D9AZ 5422666-H	R.H. and L.H.-blue	4
		D9AZ 5422666-G	R.H. and L.H.-camel	4
		D9AZ 5422666-K	R.H. and L.H.-cordovan	4
		D9AZ 5422666-J	R.H. and L.H.-red	4

COPYRIGHT © 1986— FORD MOTOR COMPANY —DEARBORN, MICHIGAN

1973/79 LINCOLN-MERCURY CARS

YEAR	MODEL/RESTRICTIONS	PART NUMBER	DESCRIPTION	QTY.
22666	HANDLE and RETAINER (DOOR PULL) — Cont'd			
Notes:	$ Replace alum. cover if applicable–refer to group 22670			
	¢ Replace dark low gloss baby burl walnut cover if applicable–refer to group 22670			
	▲ Use with trim codes beginning with G			
	⊕ Use with all except trim codes beginning with G			
79	A(54K,74) - - w/o leather trim–w/dark teak cover	E0MY 5422666-B	R.H. and L.H.–blue	4
		D9MY 5422666-G	R.H. and L.H.–camel	4
		E0MY 5422666-D	R.H. and L.H.–cordovan	4
		E0MY 5422666-F	R.H. and L.H.–gray	4
		E0MY 5422666-E	R.H. and L.H.–green	4
		E0MY 5422666-C	R.H. and L.H.–red	4
79	A(66L) - - w/leather trim–w/color keyed cover	D9AZ 6622666-H	R.H. and L.H.–blue	2
		D9AZ 6622666-G	R.H. and L.H.–camel	2
		D9AZ 6622666-K	R.H. and L.H.–cordovan	2
		D9AZ 6622666-M	R.H. and L.H.–gray	2
		D9AZ 6622666-J	R.H. and L.H.–red	2
79	A(66K) - - w/o leather trim–w/dark teak cover	E0MY 6622666-B	R.H. and L.H.–blue	2
		E0MY 6622666-D	R.H. and L.H.–cordovan	2
		E0MY 6622666-F	R.H. and L.H.–gray	2
		E0MY 6622666-C	R.H. and L.H.–red	2
74	C(53K,65K,71K)	D40Z 6522666-B	R.H. and L.H.–gold	2or4
		D40Z 6522666-G	R.H. and L.H.–saddle	2or4
		D40Z 6522666-A	R.H. and L.H.–tan	2or4
75	C(53K,65K,71K)	D40Z 6522666-G	R.H. and L.H.–saddle	2or4
		D40Z 6522666-A	R.H. and L.H.–tan	2or4
76	C(53K,65K,71K)	$ D40Z 6522666-G	R.H. and L.H.–saddle	2or4
		$ D40Z 6522666-A	R.H. and L.H.–tan	2or4
73	D - - w/o minivent	D3SZ 6522666-E	R.H. and L.H.–black–front and rear door	2or4
		D3SZ 6522666-A	R.H. and L.H.–red	2or4
		D3SZ 6522666-B	R.H. and L.H.–white	2or4
74	D(exc. Town Car and Town Coupe)	D3SZ 6522666-E	R.H. and L.H.–black	2or4
		D3SZ 6522666-A	R.H. and L.H.–red	2or4
		D4SZ 6522666-D	R.H. and L.H.–saddle	2or4
		D3SZ 6522666-B	R.H. and L.H.–white	2or4
75	D "Before 9/23/74"	D5VY 5322666-AE	R.H. and L.H.–blue	2or4
		D5VY 5322666-AH	R.H. and L.H.–gold	2or4
		D5VY 5322666-AC	R.H. and L.H.–red	2or4
75	D "From 9/23/74"	D5VY 5322666-AF	R.H. and L.H.–black–vinyl–w/brushed alum. cover	2or4
		D5VY 5322666-AE	R.H. and L.H.–blue	2or4
		D5VY 5322666-AH	R.H. and L.H.–gold	2or4
		D5VY 5322666-AG	R.H. and L.H.–green	2or4
		D5VY 5322666-AC	R.H. and L.H.–red	2or4
		D5VY 5322666-AA	R.H. and L.H.–taupe	2or4
75	D "Before 9/23/74"	D5VY 5322666-V	R.H. and L.H.–jade	2or4

YEAR	MODEL/RESTRICTIONS	PART NUMBER	DESCRIPTION	QTY.
22666	HANDLE and RETAINER (DOOR PULL) — Cont'd			
Notes:	$ Replace alum. cover if applicable–refer to group 22670			
	¢ Replace dark low gloss baby burl walnut cover if applicable–refer to group 22670			
	▲ Use with trim codes beginning with G			
	⊕ Use with all except trim codes beginning with G			
75	D "From 9/23/74"	D5VY 5322666-AN	R.H. and L.H.–gold–cloth–w/vinyl fabric cover	2or4
		D5VY 5322666-AW	R.H. and L.H.–red	2or4
		D5VY 5322666-AK	R.H. and L.H.–tan	2or4
75	D "Before 9/23/74"	D5VY 5322666-U	R.H. and L.H.–gold	2or4
		D5VY 5322666-AR	R.H. and L.H.–tan	2or4
75	D "From 9/23/74"	D5VY 5322666-AU	R.H. and L.H.–gold	2or4
		D5VY 5322666-AR	R.H. and L.H.–tan	2or4
76	D	D5VY 5322666-AE	R.H. and L.H.–blue	2or4
		D5VY 5322666-AH	R.H. and L.H.–gold	2or4
		D5VY 5322666-AC	R.H. and L.H.–red	2or4
		D5VY 5322666-AB	R.H. and L.H.–tan	2or4
76	D	D5VY 5322666-AU	R.H. and L.H.–gold	2or4
		D5VY 5322666-AR	R.H. and L.H.–tan	2or4
77	D	D7LY 6522666-E	R.H. and L.H.–black–w/majestic walnut cover	2or4
		D7LY 6522666-G	R.H. and L.H.–chamois	2or4
		D7LY 6522666-D	R.H. and L.H.–cordovan	2or4
		D7LY 6522666-H	R.H. and L.H.–cream	2or4
		D7LY 6522666-K	R.H. and L.H.–gold	2or4
		D7LY 6522666-J	R.H. and L.H.–pastel dove gray	2or4
		D7LY 6522666-A	R.H. and L.H.–jade	2or4
		D7LY 6522666-B	R.H. and L.H.–red	2or4
		D7LY 6522666-F	R.H. and L.H.–white	2or4
78	D	D7LY 6522666-E	R.H. and L.H.–black–w/majestic walnut cover	2or4
		D8LY 6522666-C	R.H. and L.H.–blue	2or4
		D7LY 6522666-G	R.H. and L.H.–chamois	2or4
		D8LY 6522666-D	R.H. and L.H.–champagne	2or4
		D7LY 6522666-D	R.H. and L.H.–cordovan	2or4
		D7LY 6522666-J	R.H. and L.H.–pastel dove gray	2or4
		D7LY 6522666-A	R.H. and L.H.–jade	2or4
		D7LY 6522666-B	R.H. and L.H.–red	2or4
		D7LY 6522666-F	R.H. and L.H.–white	2or4
79	D - - w/majestic walnut cover	D7LY 6522666-E	R.H. and L.H.–black	2or4
		D9LY 6522666-B	R.H. and L.H.–blue (dark)	2or4
		D8LY 6522666-C	R.H. and L.H.–blue (light)	2or4
		D8LY 6522666-D	R.H. and L.H.–champagne	2or4
		D7LY 6522666-D	R.H. and L.H.–cordovan	2or4
		D7LY 6522666-J	R.H. and L.H.–gray	2or4
		D7LY 6522666-B	R.H. and L.H.–red	2or4
		D7LY 6522666-F	R.H. and L.H.–white	2or4

COPYRIGHT © 1986— FORD MOTOR COMPANY —DEARBORN, MICHIGAN

1973/79
LINCOLN-MERCURY CARS

YEAR	MODEL/RESTRICTIONS	PART NUMBER	DESCRIPTION	QTY.
22666	HANDLE and RETAINER (DOOR PULL) — Cont'd			
Notes:	$ Replace alum. cover if applicable–refer to group 22670			
	¢ Replace dark low gloss baby burl walnut cover if applicable–refer to group 22670			
	▲ Use with trim codes beginning with G			
	⊕ Use with all except trim codes beginning with G			
73	F	D1WY 6522666-A	R.H. and L.H.–black	2
74	F(53K,65K,71)	D40Z 6522666-G	R.H. and L.H.–saddle	2or4
		D40Z 6522666-A	R.H. and L.H.–tan	2or4
75	F	D40Z 6522666-G	R.H. and L.H.–saddle	2
		D40Z 6522666-A	R.H. and L.H.–tan	2
76	F	$ D40Z 6522666-G	R.H. and L.H.–saddle	2
		$ D40Z 6522666-A	R.H. and L.H.–tan	2
78	F(65L)	D8WY 6522666-A	R.H. and L.H.–chamois	2
79	F(65L)	D8WY 6522666-A	R.H. and L.H.–chamois	2
73	K	D2LY 6522666-D	R.H. and L.H.–black	2
		D2LY 6522666-G	R.H. and L.H.–blue	2
		D2LY 6522666-B	R.H. and L.H.–cranberry	2
		D2LY 6522666-F	R.H. and L.H.–red	2
		D3LY 6522666-D	R.H. and L.H.–white	2
74	K	D2LY 6522666-D	R.H. and L.H.–black	2
		D4LY 6522666-C	R.H. and L.H.–blue	2
		D2LY 6522666-B	R.H. and L.H.–cranberry	2
		D2LY 6522666-F	R.H. and L.H.–red	2
		D4LY 6522666-D	R.H. and L.H.–saddle	2
		D4LY 6522666-A	R.H. and L.H.–tan	2
		D3LY 6522666-D	R.H. and L.H.–white	2
75	K	⊕ D5LY 6522666-A	R.H. and L.H.–aqua	2
		⊕ D2LY 6522666-D	R.H. and L.H.black	2
		⊕ D4LY 6522666-C	R.H. and L.H.–blue	2
		⊕ D2LY 6522666-F	R.H. and L.H.–red	2
		⊕ D4LY 6522666-D	R.H. and L.H.–saddle	2
		⊕ D4LY 6522666-A	R.H. and L.H.–tan	2
		⊕ D3LY 6522666-D	R.H. and L.H.–white	2
76	K	⊕ D5LY 6522666-A	R.H. and L.H.–aqua	2
		⊕ D2LY 6522666-D	R.H. and L.H.–black	2
		⊕ D4LY 6522666-C	R.H. and L.H.–blue	2
		⊕ D6LY 6522666-C	R.H. and L.H.–gold	2
		⊕ D6LY 6522666-D	R.H. and L.H.–gray–w/T/C DS,FS	2
76	K	⊕ D2LY 6522666-F	R.H. and L.H.–red	2
		▲ D5LY 6522666-D	R.H. and L.H.–red	2
		⊕ D4LY 6522666-D	R.H. and L.H.–saddle	2
		⊕ D4LY 6522666-A	R.H. and L.H.–tan	2
		⊕ D3LY 6522666-D	R.H. and L.H.–white	2

YEAR	MODEL/RESTRICTIONS	PART NUMBER	DESCRIPTION	QTY.
22666	HANDLE and RETAINER (DOOR PULL) — Cont'd			
Notes:	$ Replace alum. cover if applicable–refer to group 22670			
	¢ Replace dark low gloss baby burl walnut cover if applicable–refer to group 22670			
	▲ Use with trim codes beginning with G			
	⊕ Use with all except trim codes beginning with G			
77	K	D7LY 6522666-E	R.H. and L.H.–black–w/majestic walnut cover	2
		D7LY 6522666-G	R.H. and L.H.–chamois	2
		D7LY 6522666-D	R.H. and L.H.–cordovan	2
		D7LY 6522666-H	R.H. and L.H.–cream	2
		D7LY 6522666-K	R.H. and L.H.–gold	2
		D7LY 6522666-J	R.H. and L.H.–pastel dove gray	2
		D7LY 6522666-A	R.H. and L.H.–jade	2
		D7LY 6522666-B	R.H. and L.H.–red	2
		D7LY 6522666-F	R.H. and L.H.–white	2
78	K	D7LY 6522666-E	R.H. and L.H.–black–w/majestic walnut cover–16" long	2
		D8LY 6522666-C	R.H. and L.H.–blue	2
		D7LY 6522666-G	R.H. and L.H.–chamois	2
		D8LY 6522666-D	R.H. and L.H.–champagne	2
		D7LY 6522666-D	R.H. and L.H.–cordovan	2
		D7LY 6522666-H	R.H. and L.H.–cream	2
		D7LY 6522666-J	R.H. and L.H.–pastel dove gray	2
		D7LY 6522666-A	R.H. and L.H.–jade	2
		D7LY 6522666-B	R.H. and L.H.–red	2
		D7LY 6522666-F	R.H. and L.H.–white	2
78	K	D8LY 6522666-A	R.H. and L.H.–blue–w/color keyed cover– 18" long	2
		D8LY 6522666-B	R.H. and L.H.–gold	2
79	K – – w/majestic walnut cover–16" long	D9LY 6522666-C	R.H. and L.H.–amethyst	2
		D7LY 6522666-E	R.H. and L.H.–black	2
		D9LY 6522666-B	R.H. and L.H.–blue (dark)	2
		D8LY 6522666-C	R.H. and L.H.–blue (light)	2
		D8LY 6522666-D	R.H. and L.H.–champagne	2
		D7LY 6522666-D	R.H. and L.H.–cordovan	2
		D7LY 6522666-H	R.H. and L.H.–cream	2
		D7LY 6522666-J	R.H. and L.H.–gray	2
		D7LY 6522666-B	R.H. and L.H.–red	2
		D7LY 6522666-F	R.H. and L.H.–white	2
79	K – – w/color keyed cover–18" long	D9LY 6522666-D	R.H. and L.H.–blue (dark)	2
77	V	D74Y 5422666-E	R.H. and L.H.–white	4
78	V	D74Y 5422666-E	R.H. and L.H.–white	4
79	V – – w/majestic walnut cover	D84Y 5422666-A	R.H. and L.H.–red	4
YEAR	MODEL/RESTRICTIONS	PART NUMBER	DESCRIPTION	QTY.
22670	COVER (DOOR PULL HANDLE RETAINER)–Also refer to group 22678			
73/77	A(53,57K,65K,L,71H,K)	★ D3MY 6522670-A	Doors and seat backs–bright finish	AR
73/76	C(53K,65K,71K)	r/bD3MY 6522670-B		AR
73/76	D	(12/85)	Front door	AR
73/76	D		Rear door	AR
74/76	F			AR
75/76	K			AR
77/78	A(53K,L,65K,L,71K)	★ D5AZ 6022670-A	Doors – walnut wood grain–not replaced (4/85)	AR
79	A(54L,66L,74)	D9AZ 5422670-K	Cordovan	AR
		D9AZ 5422670-M	Gray	AR
		D9AZ 5422670-L	Green	AR
79	A(54K,66K,74)	D9MY 5422670-M	Dark teak wood grain	AR

COPYRIGHT © 1986— FORD MOTOR COMPANY —DEARBORN, MICHIGAN

1973/79
LINCOLN-MERCURY CARS

YEAR	MODEL/RESTRICTIONS	PART NUMBER	DESCRIPTION	QTY.
22670	COVER (DOOR PULL HANDLE RETAINER)-Also refer to group 2267 — Cont'd			
77/78	D	D7LY 6522670-A	Doors - majestic walnut wood grain	AR
79	D	D3MY 6522670-B	Bright finish	AR
75/76	K	D5VY 6022670-G	Red	AR
77/	K,V	D7LY 6522670-A	Doors - majestic walnut wood grain	AR
78/ 78	F(65L) K	D8WY 6522670-A	Chamois	AR
78	K	D8LY 6522670-A	Wedgewood blue	AR
78/	P(74)	D7LY 6522670-A	Liftgate assist handle-majestic walnut wood grain	2
22678	COVER (DOOR PULL HANDLE)-Also refer to groups 22670 or 62808			
73/76	D	D4VY 5322678-A	Front or rear door-incl. retainer-wood grain	4or8
74/78	D		Seat back	4
22684	SUPPORT (DOOR PULL HANDLE)			
74/	A,C,D,F,G,K,Y	★	Improvise from 1/32" thick steel-1 1/4" x 1 1/4"	

22800-2 HINGE ASSY (FRONT DOOR UPPER)-Also refer to group 26800-1

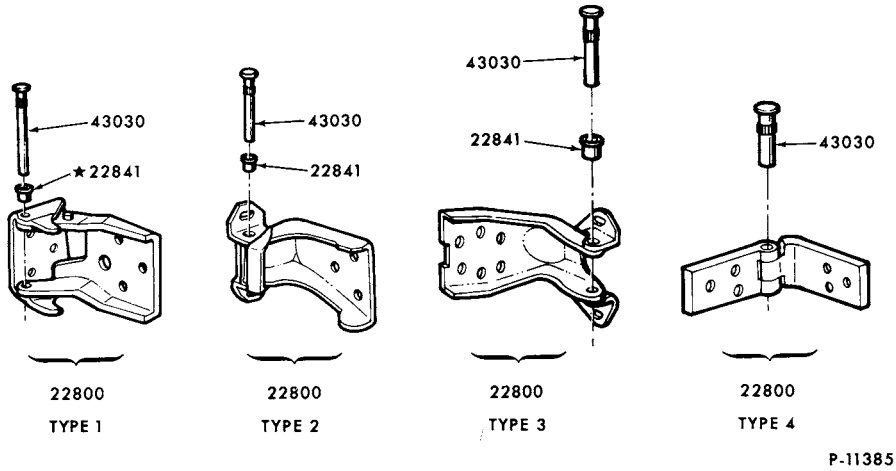

FRONT DOOR HINGES-UPPER

YEAR	MODEL/RESTRICTIONS	PART NUMBER	DESCRIPTION	QTY.
73/76	A,D,P,Y	D3AZ 6522800-A	R.H. and L.H.-type 2	2
77	A,D,P,V			2
78	A			2
78/	D,V			2
75/	G			2
79	A	(RH) D9AZ 5422800-A	(LH) ★ D9AZ 5422801-A Type 1 r/bE0VY 5422801-A(6/80)	1
73/76	C,K	D20Z 6522800-A	R.H. and L.H.-type 1	2
73	F	(RH) D10Z 6522800-A	(LH) D10Z 6522801-A Type 3	1
74/	F	D20Z 6522800-A	R.H. and L.H.-type 1	2
73	J "Before 6/4/73"	D0RY 6222802-A	R.H. and L.H.-upper and lower	4
73/77	J "From 6/4/73"	D3RY 6222802-A	R.H. and L.H.-upper and lower	4
78	J	D8RY 6422802-A	R.H. and L.H.-upper and lower	4
79	J	★	Service details (1) each D9ZZ 6622814-A, D9ZZ 6622820-A and (AR)D9ZZ 6622816-A	
77/	K	D20Z 6522800-A	R.H. and L.H. - type 1	2
74	L	(RH) D10Z 6522800-A	(LH) D10Z 6522801-A Type 3	1
75/	L	D4FZ 6222800-A	R.H. and L.H.-type 3	2
78/	P	E3BZ 3622800-A	R.H. and L.H.-type 3	2
73/74	A,C,D,F,K,L,P	382623-S2	(UU-52-AL)-screw-hex. head tap-5/18-18 x 1 1/8"	AR
75/76	A,C,D,F,G,K,L,P			AR
77/	A,D,F,G,K,L,P			AR

COPYRIGHT © 1986 — FORD MOTOR COMPANY — DEARBORN, MICHIGAN

1973/79 LINCOLN-MERCURY CARS

22810-1 HINGE and CHECK ASSY. (FRONT DOOR LOWER)-Also refer to group 26802-3

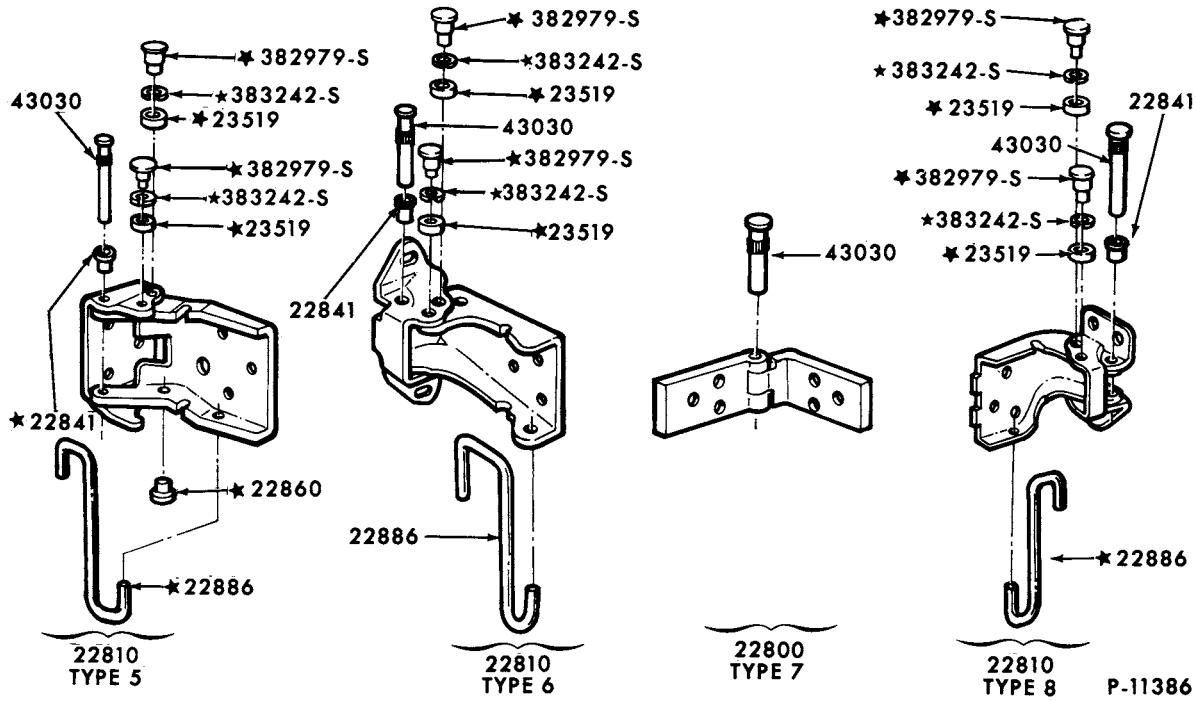

FRONT DOOR HINGES-LOWER

YEAR	MODEL/RESTRICTIONS	PART NUMBER	DESCRIPTION	QTY.
73/76	A,D,P,Y	D3AZ 6522810-A	R.H. and L.H.-type 6	2
77	A,D,P,V			2
78	A			2
78/	D,V			2
75/	G			2
79	A	(RH) E0VY 5422810-A	(LH) E0VY 5422811-A	1
73/76	C,K	D20Z 6522810-A	R.H. and L.H.-type 5	2
77/	K			2
73	F	(RH) D6FZ 6222810-A	(LH) D6FZ 6222811-A Type 8	
74/	F	D20Z 6522810-A	R.H. and L.H.-type 5	2
74/	L	(RH) D6FZ 6222810-A	(LH) D6FZ 6222811-A Type 8	1
73/78	J		Refer to group 22800-1	
78/	P	(RH) E1DZ 5422810-A	(LH) E1DZ 5422811-A Type 6	1
73/74	A,C,D,F,K,L,P	382623-S2	(UU-52-AL)-screw-hex. head tap-5/18-18 x 1 1/8"	AR
75/76	A,C,D,F,G,K,L,P			AR
77/	A,D,F,G,K,L,P			AR

22814 HINGE (FRONT DOOR UPPER ON DOOR)

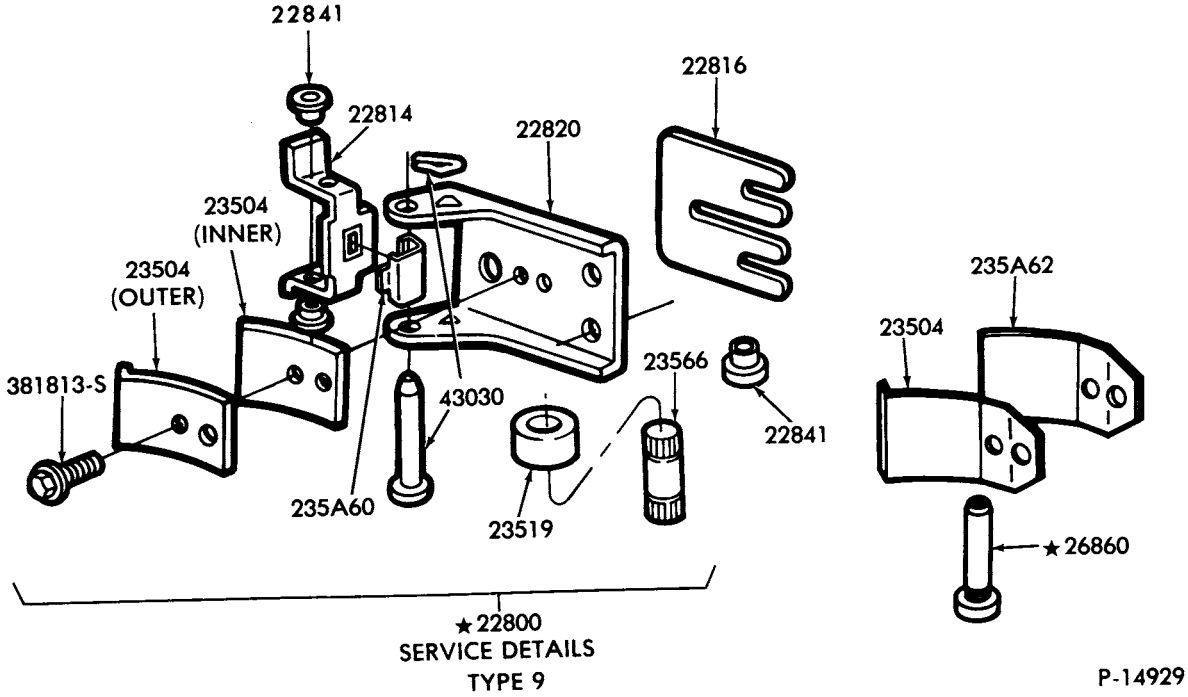

YEAR	MODEL/RESTRICTIONS	PART NUMBER	DESCRIPTION	QTY.
22814	HINGE (FRONT DOOR UPPER ON DOOR)			
73/78	J	★ D5RY 6422814-A Not replaced(6/84)	R.H. and L.H.-upper and lower	4
79	J	E1ZZ 6622814-A	R.H. and L.H.-upper and lower	4
22816	SHIM (DOOR HINGE ON BODY)			
79	J	E2ZZ 6122816-A	R.H. and L.H.-align door to fender	AR
22820	HINGE (DOOR ON BODY)			
79	J	E2ZZ 6122820-B	R.H. and L.H.-upper and lower-type 9	4
22826	PLUG (FRONT DOOR HINGE PIN)			
73/78	J	D3RY 6222826-A	R.H. and L.H.	8
22830	HINGE (FRONT DOOR LOWER ON DOOR)			
76/78	J		Refer to group 22814	
22840	PIN (DOOR HINGE)-Refer to group 43030			

COPYRIGHT © 1986 — FORD MOTOR COMPANY — DEARBORN, MICHIGAN

1973/79 LINCOLN-MERCURY CARS

YEAR	MODEL/RESTRICTIONS	PART NUMBER	DESCRIPTION	QTY.
22841	BUSHING (DOOR HINGE)			
73	A,C,D,F,K,L,P,Y	D1AZ 6522841-A		4or8
74/76	A,D,L,P,Y			4or8
77/	A,D,L,P,V			4or 8
75/	G			4or8
73	F(76)	C3AZ 5422841-A	Folding top	4
79	J	D90Z 6522841-A		2or4
22886	CHECK (FRONT DOOR HINGE)			
78/	P	D8BZ 5422886-A	R.H. and L.H.	2
229A02	STABILIZER (FRONT DOOR VENT WINDOW)			
73/74	A(53,57,71),D(53),Y(53,71) - - w/mini vent	D2VY 53229A02-A	R.H. and L.H.	2
75/76	A(53,71),D,Y(53,71) - - w/mini vent			2
77	A(53,71),D - - w/mini vent			2
78/	D - - w/mini vent			2
22948-9	BRACKET (FRONT DOOR VENT WINDOW DIVISION BAR INNER)			
73	A(53,57,71),D(53),Y(53,71) - - w/mini vent "Before 11/3/72"	(RH) D2VY 5322948-B	(LH) D2VY 5322949-B	1
73/74	A(53,57,71),D(53),Y(53,71) - - w/mini vent "From 11/3/72"	(LH) D4AZ 5322949-B		1
75/76	A(53,71),Y(53,71) - - w/mini vent			1
77	A(53,71) - - w/mini vent			1
75/	D - - w/mini vent	(RH) D5VY 6022948-A	(LH) D5VY 6022949-A	1
77/	K - - w/mini vent	(RH) D7LY 6522948-A	(LH) D7LY 6522949-A	1
22960	BUSHING (FRONT DOOR VENT WINDOW PIVOT)			
75/	D	D5VY 6022960-A	R.H. and L.H.	2
77/	K			2
22992-3	STOP (FRONT DOOR VENT WINDOW PIVOT)			
73	A(53,57,71),D(53),Y(53,71) - - w/mini vent "Before 7/9/73"	D2VY 5322992-A	R.H. and L.H.	2
74/	K - - w/mini vent	(RH) D7LY 6522992-A	(LH) D7LY 6522993-A	1

1973/79
LINCOLN-MERCURY CARS

YEAR	MODEL/RESTRICTIONS	PART NUMBER	DESCRIPTION	QTY.
23030	BUMPER (DOOR UPPER)-Also refer to group 265A28			
73/75	C(53,71)	C7SZ 6523030-A	R.H. and L.H.	4
23200-1	REGULATOR ASSY. (FRONT DOOR WINDOW MANUAL)			
73/76	A(53,57,71),Y(53,71) - - w/o mini vent	(RH) D3AZ 5323200-A	(LH) D3AZ 5323201-A	1
77/78	A(53,71) - - w/o mini vent			1
73/76	A(65),Y(65)	(RH) D3AZ 6523200-A	(LH) D3AZ 6523201-A	1
77/78	A(65)			1
79	A(66)	(RH) D9AZ 6623200-B	(LH) D9AZ 6623201-B	1
73/74	C(53,71)	(RH) D90Z 5323200-A	(LH) D90Z 5323201-A; 1 5/8" stem length	1
74	C(53B,D,71D)			
75/76	C(53,71)			1
73/74	C(63,65) "Before 11/26/73"	(RH) D20Z 6523200-A	(LH) D20Z 6523201-A; 1 5/8" stem length	1
74	C(65B,D) "From 11/26/73"			1
75/76	C(65)			1
77/79	F(53)	(RH) D90Z 5323200-A	(LH) D90Z 5323201-A	1
77	F(71)			1
75/76	F	(RH) D20Z 6523200-A	(LH) D20Z 6523201-A; 1 5/8" stem length	1
77/	F(65)			1
75/79	G(54) "From 11/18/74"	(RH) D9DZ 5423200-A	(LH) D9DZ 5423201-A	1
75/	G(66H)	(RH) D5DZ 6623200-A	(LH) D5DZ 6623201-A; 2 1/16" stem length-use w/handle D5DZ 6623342-A	1
75/77	G(66K)			1
79	J "Before 10/2/78"	(RH) D9ZZ 6623200-A	(LH) D9ZZ 6623201-A	1
79	J "From 10/2/78 to 4/2/79"	(RH) D9ZZ 6623200-B	(LH) D9ZZ 6623201-B	1
79	J "From 4/2/79"	D9ZZ 6623200-C		2
74/76	L "Before 8/2/76"	D1FZ 6223201-B	Dual arm window regulator	1
76/	L "From 8/2/76"	(RH) D7FZ 6223200-A	(LH) D7FZ 6223201-A; Single arm window regulator	1
73/77	P "From 12/16/74"	(RH) D5DZ 6223200-A	(LH) D5DZ 6223201-A	1
78/79	P(54,74)	(RH) E2BZ 5423200-A	(LH) E2BZ 5423201-A	1
78/79	P(36,66)	(RH) E2BZ 3623200-A	(LH) E2BZ 3623201-A	1
23208-9	REGULATOR ASSY. (FRONT DOOR WINDOW ELECTRIC LESS MOTOR and DRIVE)			
73/76	A(53,57,71),Y(53,71) - - w/o mini vent	(RH) D4AZ 5323208-A	(LH) D4AZ 5323209-A	1
73/78	A(53,71)			1
79	A(54,74)	(RH) D9AZ 5423208-A	(LH) D9AZ 5423209-A	1
79	A(66)	(RH) D9AZ 6623208-A	(LH) D9AZ 6623209-A	1
73/76	C(63,65)	(RH) D30Z 6523208-A	(LH) D30Z 6523209-A	1
73/	D - - w/mini vent	D5VY 6023209-A		1
75/	D(53) - - w/mini vent	(RH) D5VY 5323208-A	(LH) D5VY 5323209-A	1
75/	D(60) - - w/mini vent	(RH) D5VY 6023208-B	(LH) D5VY 6023209-B	1
74/76	F	(RH) D30Z 6523208-A	(LH) D30Z 6523209-A	1
77/	F(65)			1
77/79	F(53)	(RH) D90Z 5323208-A	(LH) D90Z 5323209-A	1
77	F(71)			1
75	G(54)	D6DZ 5423209-A		1
76/	G(54)	D6DZ 5423209-A		1
77/	V			1
75/	G(66)	(RH) D5DZ 6623208-A	(LH) D5DZ 6623209-A	1
73/	K - - w/o mini vent	(RH) D30Z 6523208-A	(LH) D30Z 6523209-A	1
74/	K - - w/mini vent	(RH) D7LY 6523208-A	(LH) D7LY 6523209-A	1
78/	P(36)	(RH) D8BZ 3623208-A	(LH) D8BZ 3623209-A	1
78/	P(54,74)	(RH) D8BZ 5423208-A	(LH) D8BZ 5423209-A	1
78/	P(66)	(RH) D8BZ 6623208-A	(LH) D8BZ 6623209-A	1

COPYRIGHT © 1986 — FORD MOTOR COMPANY — DEARBORN, MICHIGAN

1973/79 LINCOLN-MERCURY CARS

YEAR	MODEL/RESTRICTIONS	PART NUMBER	DESCRIPTION	QTY.
23240	**ROLLER (WINDOW REGULATOR ARM)-Also refer to group 262A32**			
73/76	A,C,K,L,Y	D6AZ 5323240-A	Front door and quarter-slide type - requires nut and washer attachment	AR
77/	A,D,F,G,K,L,P		Front door or quarter	AR
76	A,C,D(53),L(73),P(54)		Rear door	AR
77/78	A(53,71),D(53),F(53),L(73),P(54)		Rear door	AR
79	A(54,74),D(53),F(53),L(73),P(54,74)		Rear door	AR
78	P(74)		Rear door	AR
73/76	A(71),C(71)		Tailgate	AR
77	A(71),F(71)		Tailgate	AR
78	A(71)		Tailgate	AR
79	A(74)		Tailgate	AR
76	D,F,G(66),P		Front door	AR
79	J		Front door	AR
77/	V		Front door	AR
23258	**BUSHING (DOOR WINDOW GLASS BRACKET)**			
73/74	A,C,D,K,Y	D0ZZ 6523258-A	R.H. and L.H. - front door - use w/bolt-on design	AR
74	A(53,71),Y(53,71)		Rear door	2
77/78	A(65)		Quarter	4
73	D		Front door	AR
74	D(53)		Rear door	2
73	F		Front door	AR
74/	K - - w/o mini vent		R.H. and L.H.-front door	6
74/	K		R.H. and L.H.-quarter	4
23288-9	**BRACKET (FRONT DOOR WINDOW CHANNEL)**			
Note:	**Order basic numbers 222A92 and/or 22362 upper/lower guide when installing a metal bracket**			
73/76	A,Y	(RH) D3AZ 6523288-C	(LH) D3AZ 6523288-D — Metal type	1
77/78	A			1
79/	A(54,74)	(RH) E1AZ 5423288-A	(LH) E1AZ 5423289-A — Plastic type	1
79/	A(66)	(RH) E1AZ 6623288-A	(LH) E1AZ 6623289-A — Plastic type	1
73/76	C(53,71)	(RH) D30Z 5323288-A	(LH) D30Z 5323288-B	1
73/76	C(63,65)	(RH) D30Z 6523288-A	(LH) D30Z 6523288-B	1
75/	D	(RH) D5VY 6023288-A	(LH) D5VY 6023288-B — Metal type	1
77	F(53,71)	(RH) D30Z 5323288-A	(LH) D30Z 5323288-B — Metal type	1
78/	F(53)			1
74/	F(65)	(RH) D30Z 6523288-A	(LH) D30Z 6523288-B — Metal type	1
75/	G(54)	(RH) D5DZ 5423288-A	(LH) D5DZ 5423288-B — Metal type	1
77/78	V			1
75/	G(66)	(RH) D5DZ 6623288-A	(LH) D5DZ 6623288-B — Metal type	1
79	J	(RH) E1ZZ 6623288-A	(LH) E1ZZ 6623289-A	1
77/	K	(RH) D7LY 6523288-A	(LH) D7LY 6523288-B — Metal type	1
76/	L	(RH) D7FZ 6223288-A	(LH) D7FZ 6223288-B — Use w/single arm window regulator	1
78/	P(36)	(RH) E3BZ 3623288-A	(LH) E3BZ 3623289-A — Plastic type	1
78/	P(54,66,74)	(RH) E3BZ 5423288-A	(LH) E3BZ 5423289-A	1
23294	**PLATE (FRONT DOOR VENT WINDOW REGULATOR HANDLE)**			
79/	A	D8BZ 5423294-A	R.H. and L.H.-1 3/8" dia.-black	2
78/	P(54,66,74)		R.H. and L.H.-1/32" thick	2
23318	**SPRING (WINDOW REGULATOR COUNTERBALANCE) - Also refer to group 27048**			
79	A(54,74) - - w/power windows	D9AZ 5423318-A	Front door	2
79	A(54,74) - - w/manual windows	D9AZ 5423318-B	Front door	2
73/76	A(65),Y(65) - - w/power windows	D3AZ 6523318-A	Front door	2
77/78	A(65) - - w/power windows		Front door	2
79	A(66) - - w/power windows	D9AZ 6623318-A	Front door	2
79	A(66) - - w/manual windows	D9AZ 6623318-B	Front door	2
73/76	A(71),Y(71)	C9WY 6523318-A	Tailgate	1
77/78	A(71)		Tailgate	1
74/76	C(71)	C9WY 6523318-A	Tailgate	1

YEAR	MODEL/RESTRICTIONS	PART NUMBER	DESCRIPTION	QTY.
23318	SPRING (WINDOW REGULATOR COUNTERBALANCE) - Also refer to group 27048 — Cont'd			
77	F(71)	C9WY 6523318-A	Tailgate	1
75/	G(66) - - w/power windows	D3AZ 6523318-A	Front door	2
79	J - - w/manual windows	D9ZZ 6623318-A	Front door	2
23334	KNOB (FRONT DOOR VENT WINDOW REGULATOR HANDLE)			
78/79	P(54,66,74)	D9BZ 5423334-AA	R.H. and L.H.-manual-1 9/16" long	2
23342	HANDLE (WINDOW REGULATOR)-Incl. attaching parts-Also refer to group 30322			
73	A,F,P(62),Y "From 4/2/73"	D3AZ 6523342-A	R.H. and L.H.-front door-incl. clear knob-9/32" shank	2
73/76	A(53,57,71),Y(53,71)		R.H. and L.H.-rear door	2
77/78	A(53,71)		R.H. and L.H.-rear door	2
74/77	A,P(62)		R.H. and L.H.-front door	2
78	A		R.H. and L.H.-front door	2
73/74	C "From 4/2/73 to 11/26/73"		R.H. and L.H.-front door	2
73/74	C(53,71) "Before 11/26/73"		R.H. and L.H.-rear door	2
74	F "Before 11/26/73"		R.H. and L.H.-front door	2
77	F(53,65D,K,71)		R.H. and L.H.-front door	2
78/79	F(53,65)		R.H. and L.H.-front door	2
75/77	P(54)		Refer to group 30322 for front door	
75/77	P(54)		R.H. and L.H.-rear door	2
79	A(54,66,74)	D5DZ 6623342-A	R.H. and L.H.-front door-incl. knob	2or4
74/75	F	D4ZZ 6923342-A	R.H. and L.H.-front door-5" long-incl. knob	2
75	G "Before 11/18/74"		R.H. and L.H.-front door	2or4
75/77	L		R.H. and L.H.-5" long-incl. knob	2or4
75	G(54) "Before 11/18/74"	D2FZ 6223342-A	R.H. and L.H.-rear door-4 3/8" long-incl. knob	2
74/	L		R.H. and L.H.-4 3/8" long-incl. knob	2or4
75/	G(54) "From 11/18/74"		Rear door-refer to group 30322	
75/	G "From 11/18/74"	D5DZ 6623342-A	R.H. and L.H.-front door-incl. knob	2
73/78	J(64P)	D8RY 6423342-A	R.H. and L.H.-paint to match-round shaft	2
73/76	J(64T)			2
		D0RY 6223342-A	R.H. and L.H.-paint to match-square shaft	2
		111595-ESA1	Screw-round head-No. 10-32 x 1/2"	2
		E402004-S80	(AB-3-D)-screw pan head 3/16" x 15/32"	2
76	J(64S)	D6RY 6423342-F	Black	2
76	J(64T)	D5RY 6423342-A	Black	2
		D5RY 6423342-C	Tan	2
78	J(64P)	D8RY 6423342-B	R.H. and L.H.	2
79	J	D9ZZ 6623342-A	R.H. and L.H.-front door-chrome w/black knob	2
78/	P	D8BZ 3623342-A	R.H. and L.H.-incl. knob-chrome w/black knob	2
78/	P	D8BZ 5423342-A	R.H. and L.H.-incl. knob-black w/black knob	2or4
77/	V	D5DZ 6623342-A	R.H. and L.H. - front door-incl. knob	2
			R.H. and L.H. - rear door-refer to group 30322	
23362	COVER (WINDOW REGULATOR HANDLE SCREW)			
73/76	A,C,F,L,P,Y	C8AZ 6223362-A	R.H. and L.H.-aluminum	2or4
77	A,F,L,P		R.H. and L.H.	2or4
78	A,F,L		R.H. and L.H.	2or4
79	A	D9AZ 5423362-A	R.H. and L.H.-aluminum	2or4
74/78	J	D4RY 6223362-A	R.H. and L.H.-2" x 1/2"	2
78/	P(54,66,74)	D8BZ 5423362-B	R.H. and L.H.-bright finish	2
23370	PLATE (WINDOW REGULATOR HANDLE)			
73/76	A(53,54,71H),C,P,Y	D1DZ 6223370-A	Front and rear doors-3/4" I.D. x 1 5/8" O.D. x 1/32" thick	2or4
77	A(53,65K,71K),P			2or4
78	A(53,65H,71K),P(36)		R.H. and L.H.	2or4
79	P(36)		R.H. and L.H.	2
75/76	A(65H),Y(65Y)	D2FZ 6223370-A	Quarter window-1 3/4" O.D.	2or4
75	G "Before 11/18/74"			2or4
73	F	C9ZZ 6523370-AA	Front door and quarter-bright finish	4
75/78	A(53L,60L,71K)		3/4" I.D. x 1 13/16" O.D. x 1/8" thick	4

COPYRIGHT © 1986 — FORD MOTOR COMPANY — DEARBORN, MICHIGAN

1973/79 LINCOLN-MERCURY CARS

YEAR	MODEL/RESTRICTIONS	PART NUMBER	DESCRIPTION	QTY.
23370	PLATE (WINDOW REGULATOR HANDLE) — Cont'd			
74/78	F	D1DZ 6223370-A	R.H. and L.H.-front and rear door	2
79/	F,J	D9ZZ 6623370-A	R.H. and L.H.-plastic	2
75/	G "From 11/18/74"	E1AZ 6623370-A	1 15/16" O.D.-also refer to groups 23342 and 30322	2or4
74/	L	D2FZ 6223370-A	R.H. and L.H.-front door-1 3/4" O.D.	2
78/	P(54,66,74)	D8BZ 5423370-A	R.H. and L.H.-black-1 5/8" O.D.	2or4
77/	V	E1AZ 6623370-A	R.H. and L.H. - 1 15/16" O.D.	2
23394-5	DRIVE ASSY. (WINDOW REGULATOR ELECTRIC)-Also refer to group 30304-5			
73/76	A,Y - - w/o mini vent	(RH) D8TZ 9823394-A	(LH) D3AZ 5723395-A Front door-9 tooth gear-12 1/2" lead	1
77/78	A - - w/o mini vent		Front door	1
73/76	A(53,57,71),Y(53,71)		Rear door	1
77	A(53,71),F(53,71)		Rear door	1
78	A(53,71),F(53)		Rear door	1
79	A(54,74)		Rear door	1
79	F(53)		Rear door	1
79	A	(RH) D3AZ 5723395-A	(LH) ★ D3AZ 5723394-A r/b D8TZ 9823394-A(1/82) Front door	1
79	A(74)	D3AZ 5723395-A	L.H.-tailgate-9 tooth gear	1
73/76	A(65),Y(65)	(RH) D3AZ 6523394-A	(LH) D3AZ 6523395-A Quarter-9 tooth gear	1
77	A(65)			1
73/76	A(71),Y(71) - - w/o wash and wipe	D3AZ 7123394-A	Tailgate-7 tooth gear	1
77/78	A(71) - - w/o wash and wipe			1
73/76	A(71),Y(71) - - w/wash and wipe	D3AZ 7123394-B	Tailgate-7 tooth gear	1
74/76	A(53,57,71),Y(53,71) - - w/mini vent	(RH) D3AZ 7123394-A	(LH) D4AZ 5723395-A Front door-7 tooth gear-8" lead	1
77	A(53,71) - - w/mini vent			1
75/	D - - w/mini vent			1
73/76	C(63,65) - - w/o mini vent	(RH) D0AZ 5723394-A	(LH) D0AZ 5723395-A Front door-9 tooth gear-17" lead	1
73	C(63)		Quarter	1
73/76	C(53,71)		Rear door	1
73/76	C(71) - - w/o wash and wipe	D3AZ 7123394-A	Tailgate-7 tooth gear	1
74/76	C(71) - - w/wash and wipe	D3AZ 7123394-B	Tailgate-7 tooth gear	1
73/74	D - - w/mini vent	(RH) D2VY 5323394-A	(LH) D2VY 5323395-A Front door-7 tooth gear-11 1/2" lead	1
73/	D - - w/o mini vent	(RH) D8TZ 9823394-A	(LH) D3AZ 5723395-A Front door-9 tooth gear-8" lead	1
73/75	D		Quarter	1
73/	D		Rear door	1
73/	F(53)		Front door	1
76/77	F(53,71)		Rear door	1
77/	F(53)		Rear door	1
73	F		Quarter-Refer to group 30304-5	
73/77	F(65)	(RH) D0AZ 5723394-A	(LH) D0AZ 5723395-A Front door-9 tooth gear-17" lead	1
77/	F(65)	(RH) D7WY 6523394-A	(LH) D7WY 6523395-A Front door-reverse rotation - 17" lead hard shell connection	1
77	F(71)	D3AZ 7123394-A	Tailgate-7 tooth gear	1
75/	G	(RH) D8TZ 9923394-A	(LH) D3AZ 5723395-A Front door-9 tooth gear-8" lead	1
75/	G(54)		Rear door	1
77/	V		Front door	1
			Rear door	1
73/	K - - w/o mini vent	(RH) D0AZ 5723394-A	(LH) D0AZ 5723395-A Front door-9 tooth gear-17" lead	1
73/75	K		Quarter	1
74/	K - - w/mini vent	(RH) D2VY 5323394-A	(LH) D2VY 5323395-A Front door-7 tooth gear-11 1/2" lead	1

YEAR	MODEL/RESTRICTIONS	PART NUMBER	DESCRIPTION		QTY.
23394-5	DRIVE ASSY. (WINDOW REGULATOR ELECTRIC)-Also refer to group 30304-5 — Cont'd				
78/	P(36)	(RH) D9BZ 3623395-A	(LH) D9BZ 3623394-A	Front door-9 tooth gear-8" lead	1
78/	P(54,66,74)	(RH) D9BZ 5423394-A	(LH) D9BZ 5423395-A	Front door-9 tooth gear-8" lead	1
78/	P(54,74)			Rear door	1
23402-3	REGULATOR (FRONT DOOR VENT WINDOW)				
79	A	(RH) D9AZ 5423402-A	(LH) D9AZ 5423403-A	Manual	1
78/	P(54,66,74)	(RH) D8BZ 5423402-B	(LH) D8BZ 5423403-B	Manual	1
234A24	GEAR KIT (WINDOW REGULATOR DRIVE)				
73/76	A(71),C(71),Y(71) - - w/o wash and wipe	D0VY 53234A24-A	Tailgate-7 tooth gear		1
77	A(71),F(71) - - w/o wash and wipe				1
78	A(71)				1
73/76	A(53,57,71),Y(53,71) - - w/mini vent	D2VY 53234A24-A	R.H. and L.H.-front door-7 tooth gear		2
77	A(53,71) - - w/mini vent				2
73	A(53,57,71),Y(53,71) - - w/mini vent	D3AZ 57234A24-A	R.H. and L.H.-front door-9 tooth gear		2
73/76	A,D,Y - - w/power windows and w/o mini vent	D0AZ 62234A24-B	R.H. and L.H.-front door-9 tooth gear		2
77/	A,D,F,K - - w/power windows and w/o mini vent		R.H. and L.H. -front door-9 tooth gear		2
73/76	A,D,Y - - w/power windows		R.H. and L.H.-rear door		2
77/	A,D,F - - w/power windows		R.H. and L.H.-rear door		2
73/76	C,F,K - - w/power windows and w/o mini vent		R.H. and L.H. - front and/or rear doors		2or4
79	A(74)		Tailgate		1
73/76	A(71),C(71),Y(71) - - w/wash and wipe	D2VY 53234A24-A	Tailgate-7 tooth gear		1
73/	D(53) - - w/mini vent		R.H. and L.H.-front door		2
74/	K - - w/mini vent		R.H. and L.H.-front door		2
75/	G - - w/power windows and w/o mini vent	D0AZ 62234A24-B	R.H. and L.H.-front door and quarter-9 tooth gear		2
75/	G(54)		R.H. and L.H.-rear door		2
78/	P		R.H. and L.H.-front door		2
234A44	SPACER (DOOR WINDOW GLASS BRACKET)				
73/76	A,C,D,F,K,Y "Before 8/2/76"	D3AZ 65234A44-A	R.H. and L.H.-rivet-on glass-use w/dual arm window regulator		AR
76/79	A,D,F,G,J,K,L,P,V "From 12/18/78"	D9AZ 54234A44-A	R.H. and L.H.-front, rear doors or tailgate		AR
234A46	RETAINER (DOOR WINDOW GLASS CHANNEL BRACKET)				
73/79	A,C,D,F,G,J,K,L,P,V,Y	D9AZ 54234A46-A	R.H. and L.H.-front, rear doors or tailgate		AR
73/74	A(71),Y(71)	D0DZ 62234A46-B	R.H. and L.H.-front and/or rear doors		AR
75/76	A(71),Y(71)		Back window-defogger		AR
77/78	A(71)		Back window-defogger		AR
73/76	L	D1FZ 62234A46-A	R.H. and L.H.-front door		2or4
73/77	P		Front and/or rear doors		AR
234A90-1	STABILIZER ASSY. (DOOR VENT WINDOW GUIDE)				
74/	K - - w/mini vent	(RH) D4SZ 65234A90-B	(LH) D4SZ 65234A91-B		1
23504	ARM (DOOR CHECK)				
79	J	E0ZZ 6623504-A	R.H. and L.H.-outer-black		2
		D9ZZ 6623504-BB	R.H. and L.H.-inner-black		2

COPYRIGHT © 1986 — FORD MOTOR COMPANY — DEARBORN, MICHIGAN

1973/79 LINCOLN-MERCURY CARS

YEAR	MODEL/RESTRICTIONS	PART NUMBER	DESCRIPTION	QTY.
23712-3	PANEL (FRONT DOOR TRIM FINISH)			
79	A(54)	(RH) D9MY 5423712-A	(LH) D9MY 5423713-A Wood grain finish	1
79	A(66)	(RH) D9MY 6623712-A	(LH) D9MY 6623713-A Wood grain finish	1
79	J		Refer to group in Soft Trim Section	
78/	P(54,74)	(RH) D8BZ 5423712-B	(LH) D8BZ 5423713-B Engine turned finish-(2) beads	1
78/	P(54,74) "From 3/13/78"	(RH) D8BZ 5423712-C	(LH) D8BZ 5423713-C Wood grain finish (2) beads	1
78/	P(36,66)	(RH) D8BZ 6623712-B	(LH) D8BZ 6623713-B Engine turned finish-(2) beads	1
78/	P(36,66) "From 3/13/78"	(RH) D8BZ 6623712-C	(LH) D8BZ 6623713-C Wood grain finish (2) beads	1
77/	V	D74Y 5423712-A	Front and rear doors	4
238A02	COVER (ASH RECEPTACLE)-Also refer to groups 238A06-7 & 13C708-9 in Chassis Section			
73/76	A,Y	D3AZ 65238A02-A	R.H. and L.H.	2or4
77/78	A		R.H. and L.H.	2or4
76/77	G(54K) - - w/o power windows	D6DZ 54238A02-A	R.H. and L.H.-3 1/2" long	2
78/79	G(54H) - - w/o power windows			2
76/77	G(54K) - - w/o power windows	D64Z 54238A02-B	R.H. and L.H.-4 1/2" long	2
78/79	G(54H) - - w/o power windows			2
77/	V			2
78/	K	D8LY 65238A02-A	R.H. and L.H.-incl. knob-ebony finish-5 9/16" long	2
		D8LY 65238A02-B	R.H. and L.H.-incl. knob-walnut finish-5 7/8" long	2
		D8LY 65238A02-C	R.H. and L.H.-incl. knob walnut finish-5 9/16" long	2
23806	RETAINER (DOOR ASH RECEPTACLE RIGHT FRONT)-Incl. cover			
73	D		Refer to group 14527-8 in Chassis Section	
238A06-7	HOUSING (DOOR ASH RECEPTACLE)-Also refer to groups 14527-8 & 13C708-9 in Chassis Section			
73/77	A(53B,F,65B,F,71B),Y - - w/manual windows	D3AZ 65238A06-A	R.H. and L.H.-front door-incl. cover-rectangular type	2
73/77	A(53B,F,71B),Y(53,71) - - w/manual windows		R.H. and L.H.-rear door	2
74/76	A(65),Y(65)	D4AZ 65238A06-A	R.H. and L.H.-incl. cover-rear of front door arm rest	2
77/78	A(65)		R.H. and L.H.-incl. cover-rear of front door arm rest	2
79	A(66) - - w/o power windows	(RH) D9AZ 66238A06-A	(LH) D9AZ 66238A07-A Incl. cover-rear of front door arm rest	1
75	K - - w/o BK trim code	(RH) D5SZ 65238A06-A	(LH) ★ D5SZ 65238A07-A Door-incl. cover	1
76	K - - w/o CK and EK trim codes		r/b D5SZ 65238A06-A(7/81)	1
77/78	K	(RH) D8LY 65238A06-A	(LH) D8LY 65238A07-A Incl. cover- rear of front door arm seat "Diamond Jubliee Edition" script ebony finish	1
77/	K	(RH) D8LY 65238A06-B	(LH) D8LY 65238A07-B Incl. cover- rear of front door arm seat walnut finish	1
23820	REFLECTOR (DOOR TRIM PANEL)			
74	A(53K,57K,65K,71H)	D2AZ 6523820-A	R.H. and L.H.	2
75/76	A(53K,65K)			2
73/	K			2
23824	PLATE (FRONT DOOR TRIM PANEL ORNAMENT)			
77/	F(65L)	D7SZ 6023824-A	R.H. and L.H.-use w/20802 arm	2

YEAR	MODEL/RESTRICTIONS	PART NUMBER	DESCRIPTION	QTY.
23922	REINFORCEMENT (FRONT DOOR TRIM PANEL SWITCH MOUNTING)			
79	A(54,74),P(54,74) - - w/power windows	D9AZ 5423922-A	L.H.-use w/14524 plate	1
24039	HOUSING (FRONT DOOR ARM REST WINDOW REGULATOR SWITCH PLATE)			
73	D		Refer to group 14527-8 in Chassis Section	
24052	SPACER (DOOR ARM REST)			
76/78	J(64S)	D6RY 6424052-A	R.H. and L.H.	2
24116-7	BRACKET (FRONT DOOR ARM REST MOUNTING)			
79	A(54,74)	E2MY 5424116-B	Front door front	1
		E2MY 5424116-C	R.H. and L.H.-front door rear	2
		E2MY 5424116-A	R.H. and L.H.-rear door center	2
79	A(66)	E2MY 6624116-B	R.H. and L.H.-front door front	2
		D9MY 6624116-B	R.H. and L.H.-front door rear	2
		(RH) E2MY 6624116-A	(LH) ★ D9MY 6624117-A r/b E2MY 6624117-A(1/82) — Front door center	1
77/	F(65L)	D7SZ 6024116-A	R.H. and L.H.	2
24142	PLATE (DOOR ARM REST FINGER TIP)-Also refer to groups 14527-8 in Chassis Section			
73/78	A	D3AZ 6524142-C	R.H. and L.H.-blue	2
79	A - - w/o power door lock	D9AZ 5424142-A	R.H. and L.H.-front and rear-paint to match	2or4
79	A - - w/power door lock	(RH) D9AZ 5424142-B	(LH) D9AZ 5424143-B — Paint to match	1
24146	CLIP (ARM REST)			
74/76	A(65),Y(65)	D3AZ 6524146-A	R.H. and L.H.-door and quarter	4
77	A(65)		R.H. and L.H.-door and quarter	4
79	A(54,66,74)	D9MY 5424146-A	R.H. and L.H.-door and quarter-ident. w/white paint-5/8 x 45/64"	4or8
		E1FZ 6124146-A	R.H. and L.H.-front and rear doors-37/64" x 1/2"	6
73	C(65D),F(65D)	C6AZ 6224146-B	Door and quarter	AR
74/76	C(53,65,71)			AR
74/76	F			AR
77	F(53,65D,K,71)			AR
78/	F(53,65)			AR
75/	D(53)	C7AZ 6224146-A	Rear door	2
77	F(65D,K)	D70Z 6524146-A	Quarter	2
78/	F(65D)		Quarter	2
75/77	F,G,L,P - - w/audi-type arm rest	D3FZ 6224146-A	R.H. and L.H.-front and rear doors	8
78/	G,P - - w/16" arm rest	E1FZ 6124146-A	R.H. and L.H.-front door-37/64" x 1/2" wide	2
77/78	L "From 6/27/77"		Front door or quarter	AR
79	V		Front door or rear door	AR
73/	G,P	E1DZ 5424146-A	Front door, rear door or quarter	AR
79	J		Front door and quarter	AR
77	L "Before 6/27/77"		Front door or quarter	AR
77/78	V		Front door or rear door	AR
		★45263-S	Door-upper	2
73/	K	C7AZ 6224146-A	Door and quarter	AR
73/77	P - - w/o molded arm rest	C6AZ 6224146-B	Front or rear doors	AR
24168-9	PANEL (DOOR ARM REST FINISH)-Incl. attaching parts			
79	A(54K,74K)	(RH) D9AZ 5424168-A	(LH) D9AZ 5424169-A — Caramel-paint to match	1
79	A(66K)	(RH) D9AZ 6624168-A	(LH) D9AZ 6624169-A — Caramel-paint to match	1
79	A(54L),(74L)	(RH) D9MY 5424168-A	(LH) D9MY 5424169-A — Wood grain-paint stripe to match	1
79	A(66L)	(RH) D9MY 6624168-A	(LH) D9MY 6624169-A — Wood grain-paint stripe to match	1

COPYRIGHT © 1986 — FORD MOTOR COMPANY — DEARBORN, MICHIGAN

1973/79 LINCOLN-MERCURY CARS

YEAR	MODEL/RESTRICTIONS	PART NUMBER			DESCRIPTION				QTY.
24168-9	PANEL (DOOR ARM REST FINISH)-Incl. attaching parts — Cont'd								
77/79	D(60)	(RH)	D7VY	6024168-A	(LH)	D7VY	6024169-A	Wood grain w/ gold accent stripe-rear	1
77/79	D(53)	(RH)	D7VY	5324168-A	(LH)	D7VY	5324169-A	Wood grain w/ gold accent stripe-rear	1
24300-1	PILLAR ASSY. (CENTER BODY)								
74/76	A(53,71),Y(53,71)	(RH)	D5AZ	5324300-A	(LH)	D5AZ	5324301-A		1
77/78	A(53,71)								1
79/	A(54,74) - - w/o coach light	(RH)	D9AZ	5424300-A	(LH)	D9AZ	5424301-A		1
79	A(54,74) - - w/coach light	(RH)	D9MY	5424300-A	(LH)	D9MY	5424301-A		1
74/76	C(53,71)	(RH)	D40Z	5324300-A	(LH)	D40Z	5324301-A		1
77	F(53,71)	(RH)	D40Z	5324300-A	(LH)	D40Z	5324301-A		1
78/79	F(53)								1
75/	G(54)	(RH)	D7DZ	5424300-A	(LH)	D7DZ	5424301-A		1
78/	P(54,74)	(RH)	D8BZ	5424300-A	(LH)	D8BZ	5424301-A		1
24306-7	Refer to Exterior Moulding Section at the end of this catalog								
243K14-5	EXTENSION (CENTER BODY PILLAR LOWER)								
78/	P(54,74)	(RH)	D8BZ	54243K14-A	(LH)	D8BZ	54243K15-A		1
243A38-9	RETAINER (CENTER BODY PILLAR UPPER FRONT WEATHERSTRIP)								
73/76	C(53,71)	(RH)	D20Z	53243A38-A	(LH)	D20Z	53243A39-A		1
77	F(53,71)	(RH)	D20Z	53243A38-A	(LH)	D20Z	53243A39-A		1
78/	F(53)								1
24356-7	Refer to group in Soft Trim Section								
243A56-7	RETAINER (CENTER BODY PILLAR UPPER REAR WEATHERSTRIP)								
73/76	C(53,71)	(RH)	D20Z	53243A56-A	(LH)	D20Z	53243A57-A		1
77	F(53,71)	(RH)	D20Z	53243A56-A	(LH)	D20Z	53243A57-A		1
78/	F(53)								1
24416-7	PANEL (CENTER BODY PILLAR OUTSIDE FINISH)-Incl. attaching parts								
75/76	D(53)				Refer to group 268A38-9				
24448-9	Refer to Exterior Moulding Section at the end of this catalog								
24458-9	Refer to Exterior Moulding Section at the end of this catalog								
24466	PLATE (CENTER BODY PILLAR INSIDE FINISH)								
77/	D(53)		D7VY	5324466-A	R.H. and L.H.				2
				381801-S2	(UU-148)-screw-washer head-No. 8-18x1/2"				4
24498	RETAINER (CENTER BODY PILLAR INSIDE FINISH PANEL)								
79/	A(54,74)		D9AZ	5424498-A	R.H. and L.H.				2
24630-1	DOOR ASSY. (REAR)								
75/78	A(53,71),Y(53,71)	(RH)	D7MY	5324630-B	(LH)	D7MY	5324631-B	Use w/rivet-on handle	1
79	A(54)	(RH)	E0AZ	5424630-A	(LH)	E0AZ	5424631-A	Use 377356-S plug button-if req'd	1
79	A(74)	(RH)	E0AZ	7424630-A	(LH)	E0AZ	7424631-A		1
75/	D(53)	(RH)	D7VY	5324630-A	(LH)	D7VY	5324631-A		1
77/	F(53)	(RH)	D70Z	5324630-B	(LH)	D70Z	5324631-B	Use w/rivet-on handle	1
75/	G(54)	(RH)	E0DZ	5424630-A	(LH)	E0DZ	5424631-A		1
78/79	P(54) "From 11/1/78"	(RH)	E1DZ	5424630-A	(LH)	E1DZ	5424631-A		1
78/79	P(74)	(RH)	E1BZ	7424630-B	(LH)	E1BZ	7424631-A		1
79	V	(RH)	E04Y	5424630-A	(LH)	E04Y	5424631-A		1
24648	HANDLE (REAR DOOR INSIDE ASSIST)								
78/	P(54) - - Taxi		B9A	5824648-A					2
24700-1	PANEL (REAR DOOR OUTER REPAIR)								
77/78	A(53,71) "From 4/1/77"	(RH)	D7MY	5324700-B	(LH)	D7MY	5324701-B	Use w/rivet-on handle	1
79	A(54,74)	(RH)	D9AZ	5424700-A	(LH)	D9AZ	5424701-A		1
75/	D(53)	(RH)	D7VY	5324700-A	(LH)	D7VY	5324701-A		1
75/76	G(54)	(RH)	D7DZ	5424700-C	(LH)	D7DZ	5424701-C	Use w/rivet-on handle	1
77/	G(54)								
73/77	P(54)	(RH)	D7DZ	5424700-A	(LH)	D7DZ	5424701-A		1
78/	P(54,74)	(RH)	E1DZ	5424700-A	(LH)	E1DZ	5424701-A		1
77/	V	(RH)	D7DZ	5424700-C	(LH)	D7DZ	5424701-C	Use w/rivet on-handle	1

YEAR	MODEL/RESTRICTIONS	PART NUMBER	DESCRIPTION		QTY.
25324-5	WEATHERSTRIP (REAR DOOR)-Also refer to groups 513A68-9				
73/76	A(53,71),Y(53,71)	(RH) D3AZ 5325324-A	(LH) D3AZ 5325325-A		1
77/78	A(53,71)				1
79	A(74)	(RH) D9AZ 7425324-A	(LH) D9AZ 7425325-A	On body	1
75/	D(53)	(RH) D5VY 5325324-A	(LH) D5VY 5325325-A		1
77/	F(53)	(RH) D70Z 5325324-A	(LH) D70Z 5325325-A		1
77	F(71)	(RH) D20Z 5325324-A	(LH) D20Z 5325325-A		1
75/	G(54)	(RH) D5DZ 5425324-A	(LH) D5DZ 5425325-A		1
78	P(54,74)	D9BZ 5425324-A	R.H. and L.H. - door opening		2
79	P(54,74)		Refer to group 253A10-1		
254A12-3	Refer to Exterior Moulding Section at the end of this catalog				
254A46	Refer to Exterior Moulding Section "R" for complete retainer information				
25504-5	MOULDING (REAR DOOR TRIM PANEL UPPER FRONT)				
75/	G(54K)	(RH) D5DZ 5425504-A	(LH) D5DZ 5425505-A	Wood grain	1
25510-61	Refer to Exterior Moulding Section at the end of this catalog				
25562	Refer to Exterior Moulding Section "R" for complete retainer information				
255A62-3	Refer to Exterior Moulding Section at the end of this catalog				
25596-7	WEATHERSTRIP (REAR DOOR GLASS AT BELT OUTSIDE)-Incl. clips				
Note:	‡ Canada only				
74	A(53,71),Y(53,71) - - w/o vinyl roof	(RH) D4AZ 5325596-A	(LH) D4AZ 5325597-A		1
75/76	Y(53,71)				1
73/76	A(53,57,71),Y(53,71) - - w/vinyl roof	★	Serviced only in assy.-group 25554-5		
79	A(54,74)	(RH) D9AZ 5425596-A	(LH) D9AZ 5425597-A		1
78/	P(54,74)	D8BZ 5425596-A	R.H. and L.H.-incl. clip-22 3/8" long		2
77/	V		Refer to Exterior Moulding Section		
25622	Refer to Exterior Moulding Section at the end of this catalog				

YEAR	MODEL/RESTRICTIONS	PART NUMBER CLEAR	PART NUMBER TINTED	NAGS NO.	DESCRIPTION	QTY.
25712-3	GLASS (REAR DOOR WINDOW)-Tempered unless otherwise indicated-Also refer to group 25700-1					
73/76	A(53),Y(53)	D3AZ 5325712-A	D3AZ 5325712-B	D4815	R.H.	1
77/78	A(53)					1
79	A(54)	D9AZ 5425712-A	D9AZ 5425712-B	D5853	R.H.	1
		D9AZ 5425713-A	D9AZ 5425713-B	D5854	L.H.	1
73/74	A(57) "Before 10/22/73"	D3AZ 5725712-A	D3AZ 5725712-B	D4811	R.H. - w/7 holes	1
		D3AZ 5725713-A		D4812	L.H.	1
74	A(57) "From 10/22/73"	D4AZ 5725712-A	D4AZ 5725712-B	D5116	R.H. - w/6 holes	1
		D4AZ 5725713-A	D4AZ 5725713-B	D5117	L.H.	1
73/76	A(71),Y(71)	D3AZ 7125712-A	D3AZ 7125712-B	D4817	R.H.	1
77/78	A(71)					1
		D3AZ 7125713-A	D3AZ 7125713-B	D4818	L.H.	1
79	A(74)	D9AZ 7425712-A	D9AZ 7425712-B	D5857	R.H.	1
		D9AZ 7425713-A	D9AZ 7425713-B	D5858	L.H.	1
73/76	C(53)	D20Z 5325712-A	D20Z 5325712-B	D4727	R.H.	1
		D20Z 5325713-A	D20Z 5325713-B	D4728	L.H.	1
73/76	C(71)	D20Z 7125712-A	D20Z 7125712-B	D4729	R.H.	1
		D20Z 7125713-A	D20Z 7125713-B	D4730	L.H.	1
73/74	D(53)		D2VY 5325713-A	D4742	R.H.	1
				D4743	L.H.	1
75/	D(53)		D5VY 5325712-A	D5170	R.H.	1
			D5VY 5325713-A	D5171	L.H.	1
77/	F(53)	D70Z 5325712-A	D70Z 5325712-B	D5492	R.H.	1
		D70Z 5325713-A	D70Z 5325713-B	D5493	L.H.	1

COPYRIGHT © 1986 — FORD MOTOR COMPANY — DEARBORN, MICHIGAN

1973/79 LINCOLN-MERCURY CARS

YEAR	MODEL/RESTRICTIONS	PART NUMBER CLEAR	PART NUMBER TINTED	NAGS NO.	DESCRIPTION	QTY.
25712-3	**GLASS (REAR DOOR WINDOW)-Tempered unless otherwise indicated-Also refer to group 25700-1 — Cont'd**					
77	F(71)	D20Z 7125712-A	D20Z 7125712-B	D4729	R.H.	1
		D20Z 7125713-A	D20Z 7125713-B	D4730	L.H.	1
75/	G(54)	D5DZ 5425712-A	D5DZ 5425712-B	D5185	R.H.	1
77/	V				R.H.	1
		D5DZ 5425713-A	D5DZ 5425713-B	D5186	L.H.	1
73/77	P(54)	D2DZ 5425712-A	D2DZ 5425712-B	D4553	R.H.	1
		D2DZ 5425713-A	D2DZ 5425713-B	D4554	L.H.	1
78/	P(54)	D8BZ 5425712-A	D8BZ 5425712-B	D5686	R.H.	1
		D8BZ 5425713-A	D8BZ 5425713-B	D5687	L.H.	1
78/	P(74)	D8BZ 7425712-A	D8BZ 7425712-B	D5692	R.H.	1
		D8BZ 7425713-A	D8BZ 7425713-B	D5693	L.H.	1

YEAR	MODEL/RESTRICTIONS	PART NUMBER	DESCRIPTION	QTY.
25718-9	**Refer to Group 263A70**			
25754	**BUTTON (DOOR WINDOW STABILIZER)**			
73/76	A,Y - - w/o mini vent	D3AZ 6525754-B	Front door	4or8
77/78	A - - w/o mini vent		Front door	4or8
74/76	C	D3AZ 6525754-B	Front door	4or8
75/	D - - w/mini vent	D5VY 6025754-A	Front door	2
75/	D - - w/o mini vent	D5VY 6025754-B	Front door	4or8
74/	F,K - - w/o mini vent	D3AZ 6525754-B	Front door	4or8
78/	F(53)		Rear door	4
74/	K - - w/ mini vent	D5VY 6025754-B	Front door-on door	2
74/	K - - w/mini vent	D3AZ 6525754-A	Front door-on vent	2
25766	**RUN (REAR DOOR GLASS)**			
79	A(54,74)	(RH) E3AZ 5425766-A	(LH) E3AZ 5425767-A W/flocked weatherstrip & tape	1
77/	G(54)	D7DZ 5425766-A	R.H. and L.H.-w/flocked w/strip	2
77/	V		R.H. and L.H.	2
73/77	P(54)	D1DZ 5425766-A	R.H. and L.H.	2
78/	P(54,74)	D8BZ 5425766-A	R.H. and L.H.-flocked-41 1/4" long	2
25775	**COVER (REAR DOOR WINDOW FRONT STOP)**			
73/74	D(53)	C9AZ 5725775-A	R.H. and L.H.-upper	2
25860-1	**WEATHERSTRIP (REAR DOOR GLASS AT BELT INSIDE)**			
78/	P(54,74)	D8BZ 5425860-A	R.H. and L.H. - w/o bright bead	2
78/	P(54,74)	(RH) D8BZ 5425860-C	(LH) D8BZ 5425861-A w/bright bead	1
262A32	**ROLLER (WINDOW REGULATOR ARM)-Also refer to group 23240**			
73/76	A(53,57,71),D,K,Y(53,71)	C8SZ 57262A32-A	Front door, rear door, quarter or tailgate-incl. attaching parts-1" O.D. x 1/2"	AR
77/78	A(53,71)		R.H. and L.H.-rear door	2
77/78	A(71)		Tailgate	2
77/	K		R.H. and L.H.-quarter	2
73/74	P(62)		R.H. and L.H.-front door	2
26260-1	**CHANNEL (REAR DOOR WINDOW GLASS)**			
79	A(54,74)	D9AZ 5426260-A	R.H. and L.H.	2
78/	P(54,74)	(RH) D8BZ 5426260-A	(LH) D8BZ 5426261-A	1
263A32	**STABILIZER (REAR DOOR WINDOW)-Also refer to group 22380**			
73/74	D(53)	D1AZ 57263A32-A	R.H. and L.H.	2

YEAR	MODEL/RESTRICTIONS	PART NUMBER	DESCRIPTION	QTY.
263A52-3	BRACKET (REAR DOOR GLASS FRONT)			
Note:	Order basic numbers 222A92 and/or 22362 upper/lower guide when installing a metal bracket			
73/76	A(53,71),Y(53,71)	(RH) D3AZ 53263A52-A	(LH) D3AZ 53263A53-A Metal type	1
77/78	A(53,71),D(53),F(53)			1
79	A(54,74)	D9AZ 54263A52-A	R.H. and L.H.	2
75/	D(53)	(RH) D3AZ 53263A52-A	(LH) D3AZ 53263A53-A Metal type	1
77/	F(53)			1
77	F(71)	(RH) D30Z 53263A52-A	(LH) D30Z 53263A53-A	1
75/	G(54)	(RH) D5DZ 54263A52-A	(LH) D5DZ 54263A53-A Metal type	1
77/	V			1
78/	P(54,74)	D8BZ 54263A52-A	R.H. and L.H.	2
263A82	SPACER (DOOR WINDOW GLASS)			
75/	G(54)	D5DZ 54263A82-A	R.H. and L.H.-front and rear door	AR
76/77	L(64)		R.H. and L.H.-front door	AR
263A86	SPACER (WINDOW GLASS ROLLER)			
73	A(57,65),C(65),F,K,Y(65)	D10Z 57263A86-A	R.H. and L.H.	AR
74	A(57,65),K,Y(65)			AR
75	A(53,71),K,Y(53,71)			AR
263A94	BRACKET (REAR DOOR WINDOW DIVISION BAR CENTER)			
78/	P(54,74) - - w/stationary window	D8BZ 54263A94-A	R.H. and L.H.	2
26412-3	LATCH ASSY. (REAR DOOR)-Incl. attaching parts			
73/76	A(53,71),C(53,71),D(53),G(54), Y(53,71) - - w/or w/o door ajar switch	(RH) E3BZ 5426412-A	(LH) E3BZ 5426413-A	1
77	A(53,71),D(53),F(53,71),G(54),V - - w/ or w/o door ajar switch			1
78	A(53,71),D(53),F(53),G(54),P(54,74),V			1
79	D(53),F(53),G(54),P(54,74),V			1
79	A(54,74)	(RH) E1AZ 5426412-A	(LH) E1AZ 5426413-A	1
26420-1	LINK (REAR DOOR LATCH CONTROL ROD)-Incl. attaching parts			
79	A(54,74)	D9AZ 5426420-B	R.H. and L.H.	2
78/	P(54,74)	(RH) D8BZ 5426420-A	(LH) D8BZ 5426421-A	1
26442-3	LINK (REAR DOOR LATCH REMOTE CONTROL)-Incl. attaching parts			
79	A(54,74)	(RH) D9AZ 5426442-A	(LH) D9AZ 5426443-A	1
78/79	P(54,74) "Before 11/1/78"	(RH) D8BZ 5426442-B	(LH) D8BZ 5426443-B 20 5/8" long	1
79	P(54,74) "From 11/1/78"	(RH) D9BZ 5426442-A	(LH) D9BZ 5426443-A	1
26460-1	ROD (REAR DOOR LATCH PUSH BUTTON)-Incl. attaching parts			
79	A(54,74)	D9AZ 5426460-A	R.H. and L.H.	2
77	F(53,71)	D70Z 5326460-A	R.H. and L.H.	2
78/	F(53)			2
78/	P(54,74)	(RH) E1DZ 5426460-A	(LH) E1DZ 5426461-A	1
265A04	STRIKER (TAILGATE LATCH) - also refer to group 22008-9			
73/76	A(71),C(71),Y(71)	C4DZ 54265A04-A	R.H. -upper	1
77	A(71),F(71)		L.H.-refer to group 43146	
78	A(71)			AR
265A06	SHIM (DOOR LATCH STRIKER PLATE)			
73/74	D,P	C4DZ 54265A06-A	R.H.	AR
75/77	P			AR
			L.H.-refer to group 43152	
26514	SPRING (TAILGATE LATCH RATCHET PAWL)			
73/76	A(71),C(71),Y(71)	C6AZ 7126514-A	R.H. and L.H.	2
77	A(71),F(71)			2
78	A(71)			2
265A28	BUMPER (DOOR)			
73/76	A,C,D,F,G,L,P(54),Y	C7AZ 54265A28-A	Front and rear doors	AR
77/78	A(53,71),D,F,G,L,P(54),V		Front and rear doors	AR
78/	P(74)			AR
26594-5	ACTUATOR (REAR DOOR ELECTRIC LATCH)			
75/76	A(53,71),Y(53,71)	(RH) D5AZ 5326594-A	(LH) D5AZ 5326595-A	1
77	A(53,71)			1
78	A(53,71)	D8AZ 5326594-C	R.H. and L.H.	2

COPYRIGHT © 1986 — FORD MOTOR COMPANY — DEARBORN, MICHIGAN

1973/79 LINCOLN-MERCURY CARS

YEAR	MODEL/RESTRICTIONS	PART NUMBER	DESCRIPTION	QTY.
26594-5	ACTUATOR (REAR DOOR ELECTRIC LATCH) — Cont'd			
79/	A(54,74)	E1AZ 5426594-B	R.H. and L.H.	2
75/77	D(53)	(RH) D5VY 5326594-A	(LH) D5VY 5326595-A	1
78/	D(53)		Refer to group 218A42	
77	F(53,71)	(RH) D50Z 5326594-A	(LH) D50Z 5326595-A	1
78	F(53)	D80Z 5326594-C	R.H. and L.H.	2
79	F(53)	D90Z 5326594-C	R.H. and L.H.	2
76/79	G(54) "Before 6/11/79"	(RH) D6DZ 5426594-A	(LH) D6DZ 5426595-A	1
77/79	V			1
79/	G(54),V "From 6/11/79"	D9DZ 5426594-B	R.H. and L.H.	2
78	P(54,74)	D8BZ 5426594-A	R.H. and L.H.	2
79/	P(54,74)	E1BZ 5426594-A	R.H. and L.H.	2
26596-7	ROD (REAR DOOR LATCH ACTUATING)			
79	A(54,74)	(RH) D9AZ 5426596-A	(LH) D9AZ 5426597-A	1
78/	P(54,74)	(RH) D8BZ 5426596-A	(LH) D8BZ 5426597-A	1
26602	BUTTON ASSY. (REAR DOOR OUTSIDE HANDLE)-Also refer to groups 22454-5			
75/	D	D5VY 5326602-A	R.H. and L.H.-front and rear doors	2or4
73/	P(54)	D1DZ 5426602-A	R.H. and L.H.	2
	Consists of 1-Button and pin 1-Screw 1-Sleeve 1-Retainer 1-Seal 1-Spring			
26604-5	HANDLE (REAR DOOR OUTSIDE)-Incl. attaching parts-Also refer to group 22404-5			
73/77	P(54)	(RH) D1DZ 5426604-A	(LH) D1DZ 5426605-A Less button and pin	1
266A24-5	CUP (REAR DOOR INSIDE HANDLE)-Also refer to group 22634			
79	A(54,66,74)	(RH) D9AZ 5422634-A	(LH) D9AZ 5422635-A	1
266A26-7	HANDLE (REAR DOOR INSIDE)-Also refer to group 22600-1			
76/	G(54)	(RH) D6DZ 54266A26-A	(LH) D6DZ 54266A27-A Lower -two piece	1
77/	V		design	1
			Upper-refer to group 22600-1	
26800-1	HINGE ASSY. (REAR DOOR UPPER)-Also refer to group 22800-2			

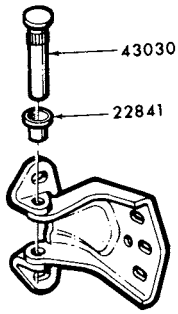

26800
TYPE 9

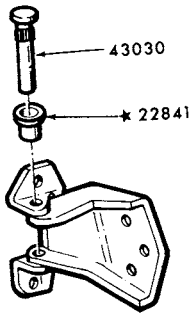

26800
TYPE 10

P-11387

76	A(53,71),D(53),G(54),P(54),Y(53,71)	(RH) D6AZ 5326800-A	(LH) D6AZ 5326801-A	Type 9	1
77	A(53,71),D(53),G(54),P(54),V				1
78	A(53,71),D(53),G(54),V				1
79	D(53),G(54)				1
79	A(54,74)	(RH) D9AZ 5426800-A	(LH) D9AZ 5426801-A	Type 9	1
79	V				1
78/	P(54,74)	(RH) D8BZ 5426800-A	(LH) D8BZ 5426801-A	Type 9	1

26802-3 HINGE and CHECK (REAR DOOR LOWER)-Also refer to group 22810

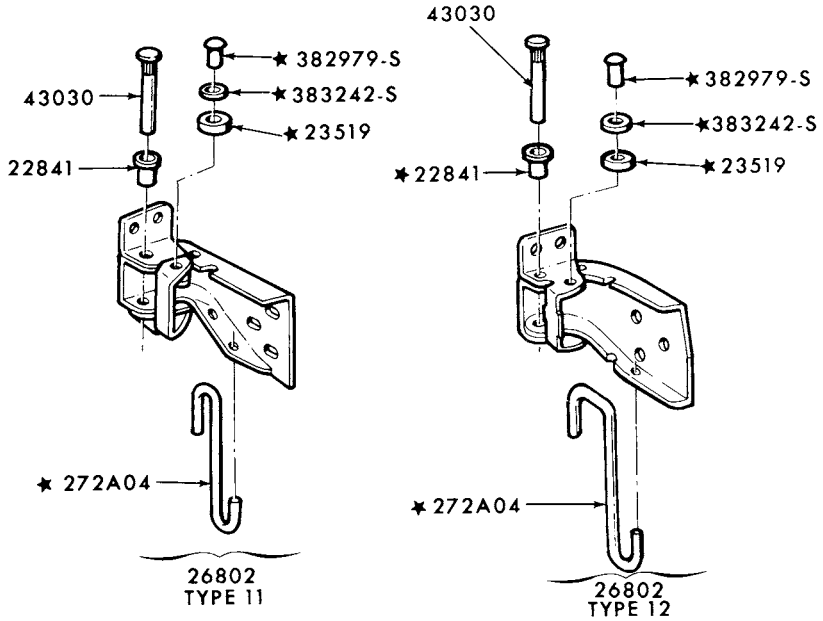

P-11388

YEAR	MODEL/RESTRICTIONS	PART NUMBER	DESCRIPTION		QTY.
26802-3	HINGE and CHECK (REAR DOOR LOWER) - Also refer to group 22810 - Cont'd				
73/76	A(53,71),D(53),G(54),P(54),Y(53,71)	(RH) D6AZ 5326802-A	(LH) D6AZ 5326803-A	Type 11	1
77	A(53,71),D(53),G(54),P(54),V				1
78	A(53,71),D(53),G(54),P(54,74),V				1
79	D(53),G(54),P(54,74),V				1
79	A(54,74)	(RH) E5AZ 5426802-A	(LH) E5AZ 5426803-A	Type 11	1
268A38-9	COVER (REAR DOOR HINGE)				
73/74	D(53)		Refer to group 24416-7		

YEAR	MODEL/RESTRICTIONS	PART NUMBER CLEAR	PART NUMBER TINTED	NAGS NO.	DESCRIPTION	QTY.
26870-1	GLASS (REAR DOOR STATIONARY WINDOW)					
NOTE:	† Canada only					
79	A(54)	D9AZ 5426870-A	D9AZ 5426870-B	V5855	R.H.	1
		D9AZ 5426871-A	D9AZ 5426871-B	V5856	L.H.	1
79	A(54K)		† D9AZ 5426870-C	V5955	R.H.-incl. "Diamond Jubilee" script and black border line	1
			† D9AZ 5426871-C	V5956	L.H.-incl. "Diamond Jubilee" script and black border line	1
79	A(74)	D9AZ 7426870-A	D9AZ 7426870-B	V5859	R.H.	1
		D9AZ 7426871-A	D9AZ 7426871-B	V5860	L.H.	1
75/	G(54)	D5DZ 5426870-A	D5DZ 5426870-B	V5187	R.H.	1
77/78	V					1
		D5DZ 5426871-A	D5DZ 5426871-B	V5188	L.H.	1

COPYRIGHT © 1986 — FORD MOTOR COMPANY — DEARBORN, MICHIGAN

1973/79 LINCOLN-MERCURY CARS

YEAR	MODEL/RESTRICTIONS	PART NUMBER CLEAR	PART NUMBER TINTED	NAGS NO.	DESCRIPTION	QTY.
26870-1	GLASS (REAR DOOR STATIONARY WINDOW) — Cont'd					
NOTE:	† Canada only					
73/77	P(54)	D1DZ 5426870-A	D1DZ 5426870-B	V4555	R.H.	1
		D1DZ 5426871-A	D1DZ 5426871-B	V4556	L.H.	1
78/	P(54)	D8BZ 5426870-A	D8BZ 5426870-B	V5688	R.H.	1
		D8BZ 5426871-A	D8BZ 5426871-B	V5689	L.H.	1
78/	P(74)	D8BZ 7426870-A	D8BZ 7426870-B	V5694	R.H.	1
		D8BZ 7426871-A	D8BZ 7426871-B	V5695	L.H.	1
79	V		D94Y 5426870-A	V5875	R.H.	1
			D94Y 5426871-A	V5876	L.H.	1

YEAR	MODEL/RESTRICTIONS	PART NUMBER		DESCRIPTION	QTY.
26884-5	RUN (REAR DOOR WINDOW DIVISION BAR GLASS)				
79	A(54,74)	D9AZ 5426884-A	R.H. and L.H.-incl. flock		2
78/	P(54,74)	(RH) D8BZ 5426884-A	(LH) D8BZ 5426885-A	Incl. flock	1
26900-1	RETAINER and DIVISION BAR (REAR DOOR GLASS RUN)				
79	A(54,74)	(RH) D9AZ 5426900-A	(LH) D9AZ 5426901-A	Incl. brackets	1
75/	G(54)	(RH) D5DZ 5426900-A	(LH) D5DZ 5426901-A		1
77/	V				1
78/	P(54,74)	(RH) D8BZ 5426900-A	(LH) D8BZ 5426901-A		1
26928-9	WEATHERSTRIP (REAR DOOR STATIONARY WINDOW)				
75/	G(54)	(RH) D5DZ 5426928-A	(LH) D5DZ 5426929-A		1
77/78	V				1
78/	P(54)	(RH) D8BZ 5426928-A	(LH) D8BZ 5426929-A		1
78/	P(74)	(RH) D8BZ 7426928-A	(LH) D8BZ 7426929-A		1

1973/79
LINCOLN-MERCURY CARS

YEAR	MODEL/RESTRICTIONS	PART NUMBER	DESCRIPTION	QTY.
27008-9	REGULATOR ASSY. (REAR DOOR WINDOW ELECTRIC LESS MOTOR, DRIVE and SPRING)			
79	A(54,74)	(RH) D9AZ 5427008-A	(LH) D9AZ 5427009-A	1
75/	G(54)	(RH) D5DZ 5427008-A	(LH) D5DZ 5427009-A	1
77/	V			1
78/	P(54,74)	(RH) D8BZ 5427008-A	(LH) D8BZ 5427009-A	1
27048	SPRING (WINDOW REGULATOR COUNTERBALANCE)			
73/76	A(53,57,71),Y(53,71) - - w/power windows	D3AZ 5327048-A	R.H. and L.H.	2
73/76	A(53,57,71),Y(53,71) - - w/manual windows	D3AZ 5327048-B	R.H. and L.H.	2
77/78	A(53,71)			2
78/	P(54,74)			2
75/	D(53),P(54) - - w/power windows	D3AZ 5327048-A	R.H. and L.H.	2
78/	P(74) - - w/power windows			2
270A54	ROLLER (WINDOW GUIDE SWIVEL)			
73	C(65),F,K	D10Z 57270A54-A	Front door, rear door and quarter	2or4
73/74	D(53)	D1AZ 57270A54-A	Rear door	2
74/76	K		Quarter window	2or4
270A58	WASHER (WINDOW REGULATOR ROLLER)			
73	A,C(65),F,K,Y	D10Z 57270A58-A	R.H. and L.H.	AR
73/78	A(65),F(65)		Quarter	AR
74	C(65)			AR
73/	D(53) - - w/mini-vent			AR
74/	K		Quarter	AR
27144-5	Refer to group 23394-5			
274A30-1	PANEL (REAR DOOR TRIM FINISH)			
79	A(54)	(RH) D9MY 54274A30-A	(LH) D9MY 54274A31-A — Wood grain finish	1
78/79	P(54)	(RH) E0BZ 54274A30-A	(LH) E0BZ 54274A31-A	1
27542-3	PANEL (REAR DOOR ARM REST)			
79	A(54,74)	(RH) D9MY 5427542-A	(LH) D9MY 5427543-A — Teak woodgrain	1
79	A(54,74) - - w/Corinthian grain	(RH) D9AZ 5427542-A	(LH) D9AZ 5427543-A — Paint to match	1
27636-7	PANEL (REAR DOOR ARM REST FINISH REAR)			
77/	D(53)	(RH) D7VY 5327636-A	(LH) D7VY 5327637-A	1
27790-1	PANEL (QUARTER INSIDE FRONT)-Also refer to group 278A08-9			
79	A(66)	(RH) D9AZ 6627790-A	(LH) D9AZ 6627791-A	1
77/	K	(RH) D7LY 6527790-A	(LH) D7LY 6527791-A — Incl. reinf.	1
27800-1	BRACE (QUARTER PANEL TO WHEELHOUSE)			
79	A(54,66)	(RH) D9AZ 5427800-A	(LH) D9AZ 5427801-A	1
78	P(66)	D8BZ 6627800-A	R.H.	1
		381801-S2	(UU-148)-screw & washer-self tap-No. 8-18 x 1/2"	4
27802	Refer to Exterior Moulding Section at the end of this catalog-Also refer to group 16D130 in Chassis Section			
278B26-7	PANEL (QUARTER WINDOW OPENING)			
77/	F(65)	(RH) D8WY 65278B26-A	(LH) D8WY 65278B27-A	1
27840-1	PANEL ASSY. (QUARTER)-Drill holes as required			
75/76	A(53),Y(53)	(RH) D7MY 5327840-A	(LH) D7MY 5327841-A	1
77/78	A(53)			1
79	A(54)	(RH) D9MY 5427840-A	(LH) D9MY 5427841-A	1
75/78	A(65),Y(65)	(RH) D7MY 6527840-A	(LH) D7MY 6527841-A	1
79	A(66)	(RH) D9MY 6627840-A	(LH) D9MY 6627841-A	1
74/76	C(65)	(RH) D4GY 6527840-A	(LH) D4GY 6527841-A	1

COPYRIGHT © 1986 — FORD MOTOR COMPANY — DEARBORN, MICHIGAN

1973/79 LINCOLN-MERCURY CARS

YEAR	MODEL/RESTRICTIONS	PART NUMBER	DESCRIPTION		QTY.
27840-1	PANEL ASSY. (QUARTER)-Drill holes as required — Cont'd				
78/	D(53)	(RH) D8VY 5327840-A	(LH) D8VY 5327841-A		1
78/	D(60)	(RH) D8VY 6027840-A	(LH) D8VY 6027841-A		1
74/76	F	(RH) D4GY 6527840-A	(LH) D4GY 6527841-A		1
77/	F(53) - - w/o opera window	(RH) D70Z 5327840-A	(LH) D70Z 5327841-A		1
77/	F(53) - - w/opera window	(RH) D80Z 5327840-A	(LH) D80Z 5327841-A		1
77/	F(65D) - - w/o opera window	(RH) D70Z 6527840-A	(LH) D70Z 6527841-A		1
77	F(65D,K) - - w/opera window	(RH) D70Z 6527840-B	(LH) D70Z 6527841-B		1
78/	F(65D)				1
77/	F(65L)	(RH) D9WY 6527840-A	(LH) D9WY 6527841-A		1
75/	G(54) "From 10/1/77"	(RH) D8DZ 5427840-B	(LH) D8DZ 5427841-B		1
77/78	V "From 10/1/77"				1
75/	G(66) "From 10/1/77"	(RH) D8DZ 6627840-B	(LH) D8DZ 6627841-B	Incl. trough & reinf.	1
73/74	J	(RH) D3RY 6227840-A	(LH) D3RY 6227841-A		1
76/78	J	(RH) D5RY 6427840-B	(LH) D5RY 6427841-B		1
79	J	(RH) D9CY 6127840-A	(LH) D9CY 6127841-A		1
74/76	K	(RH) D4LY 6527840-A	(LH) D4LY 6527841-A		1
77/	K	(RH) D7LY 6527840-A	(LH) D7LY 6527841-A		1
74/	L(62)	(RH) D7FZ 6227840-A	(LH) D7FZ 6227841-A		1
74/	L(64)	(RH) D7FZ 6427840-A	(LH) D7FZ 6427841-A		1
74/	L(73)		Refer to group 27846-7		
73/77	P(54)	(RH) D7DZ 5427840-A	(LH) D7DZ 5427841-A	Incl. reinf.	1
73/77	P(62)	(RH) D7DZ 6227840-A	(LH) D7DZ 6227841-A		1
78/	P(36)	(RH) D9BZ 3627840-A	(LH) D9BZ 3627841-A		1
78/	P(54)	(RH) D8BZ 5427840-B	(LH) D8BZ 5427841-B		1
78/	P(66)	(RH) D8BZ 6627840-B	(LH) D8BZ 6627841-B		1
78/	P(74)	(RH) E3DZ 7427840-A	(LH) E3DZ 7427841-A		1
79	V	(RH) D94Y 5427840-A	(LH) D94Y 5427841-A	Incl. extension	1
278C44	SUPPORT (QUARTER PANEL UPPER REINFORCEMENT)				
75/	G(66)	D7DZ 66278C44-A	R.H. and L.H.		2
27846-7	PANEL (QUARTER)-Drill holes as required				
73/78	A(71),Y(71)	(RH) D7MY 7127846-A	(LH) D7MY 7127847-A		1
79	A(74)	(RH) D9MY 7427846-A	(LH) D9MY 7427847-A		1
73/	L(73)	(RH) D7FZ 7327846-A	(LH) D7FZ 7327847-A		1
27859	PANEL (QUARTER INSIDE TO FLOOR PAN)				
79	A(74)	(RH) E4AZ 7427859-A	L.H.		1
27886-7	PANEL (QUARTER WHEELHOUSE INNER)-Also refer to group 27894-5				
Note 1:	Use retainer as a template for use w/auxiliary fuel tank				
79	A(54,66)	(RH) D9AZ 5427886-A	(LH) D9AZ 5427887-A		1
74/77	F	(RH) D70Z 6527886-A	(LH) D80Z 6527887-A		1
75/	G	(RH) D5DZ 6627886-A	(LH) D5DZ 6627887-A		1
77/	V				1
79	J	(RH) D9ZZ 6627886-A	(LH) D9ZZ 6627887-A		1
77/79	L(62,64)	(RH) D8ZZ 6927886-A	(LH) ★ D8ZZ 6927887-A Not repl'd. (11/78)		1
74/	L(73)		Serviced only in assy.-group 27970-1		
73/79	P	(RH) D9ZZ 6627886-A	(LH) D9ZZ 6627887-A		1
27894-5	PANEL (QUARTER WHEELHOUSE OUTER)				
73/78	A(53,65)	(RH) D7MY 6527894-A	(LH) D7MY 6527895-A		1
79	A(54,66)	(RH) D9AZ 5427894-A	(LH) D9AZ 5427895-A		1
79	A(74)	(RH) D9AZ 7427894-A	(LH) D9AZ 7427895-A		1
73/76	C(53,63,65)	(RH) D2GY 6527894-A	(LH) D2GY 6527895-A		1
75/	D	(RH) D5VY 6027894-A	(LH) D5VY 6027895-A		1
74/76	F	(RH) D2GY 6527894-A	(LH) D2GY 6527895-A		1
77/	F(53,65)	(RH) D7WY 6527894-A	(LH) D7WY 6527895-A		1
77	F(71)	(RH) D70Z 7127894-A	(LH) D70Z 7127895-A		1
75/	G,V	(RH) D7DZ 6627894-A	(LH) D7DZ 6627895-A		1
76/78	J	(RH) D5RY 6427894-A	(LH) D5RY 6427895-A		1

YEAR	MODEL/RESTRICTIONS	PART NUMBER	DESCRIPTION	QTY.
27894-5	PANEL (QUARTER WHEELHOUSE OUTER) — Cont'd			
79	J	(RH) D9ZZ 6627894-A	(LH) D9ZZ 6627895-A	1
77	K	(RH) D7LY 6527894-A	(LH) D8LY 6527895-A	1
78/	K	(RH) D7LY 6527894-A	(LH) D8LY 6527895-A	1
74/76	L(62,64)	(RH) D7FZ 6227894-A	(LH) D1FZ 6227895-A	1
77/	L(62,64)	(RH) D7FZ 6227894-A	(LH) D7FZ 6227895-A	1
77/	L(73)	(RH) D7FZ 7327894-A	(LH) D7FZ 7327895-A	1
73/77	P	(RH) D7DZ 6227894-A	(LH) D7DZ 6227895-A	1
78/	P	(RH) D8BZ 5427894-A	(LH) D8BZ 5427895-A	1
27897	EXTENSION (QUARTER WHEELHOUSE REAR)			
73/76	A(71),Y(71)	D3AZ 7127897-A	L.H.-cut opening for aux. tank	1
77/78	A(71)			1
27936	HOUSING (FUEL FILLER PIPE)			
79	A(54,66)	D9AZ 5427936-A		1
79	A(74)	D9AZ 7427936-A		1
77	F(53,65)	D4SZ 6527936-A		1
74/77	K			1
78/	F(53,65),K	D80Z 6527936-A		1
79	J	E2CY 6127936-A	Bright finish	1
78/	P	D8BZ 5427936-A		1
27970-1	REINFORCEMENT (TAIL LAMP OPENING)			
73/76	A(71),Y(71)	D3AZ 7127971-A		1
77/78	A(71)			1
79	A(74)	(RH) D9MY 7427970-A	(LH) D9MY 7427971-A	1
73/76	C(71)	(RH) D20Z 7127970-A	(LH) D20Z 7127971-A	1
77	F(71)			1
75/	D	(RH) D5VY 6027970-A	(LH) D5VY 6027971-A	1
75/	G	(RH) D5DZ 6627970-A	(LH) D5DZ 6627971-A	1
77/	V			1
27974-5	Refer to Exterior Moulding Section at the end of this catalog			
27986-7	Refer to Exterior Moulding Section at the end of this catalog			
279C90-1	EXTENSION (QUARTER PANEL LOWER REAR)			
79	A(74)	(RH) D9MY 74279C90-A	(LH) D9MY 74279C91-A	1
74/	L(62,64)	(RH) D1FZ 62279C90-A	(LH) D1FZ 62279C91-A	1
78/	P(74)	(RH) D8BZ 74279C90-A	(LH) D8BZ 74279C91-A	1
279B97	FILLER KIT (QUARTER PANEL)			
74/76	L(62,64)	D1FZ 62279B97-A	R.H. and L.H.	2
28000-2	BRACKET (QUARTER WHEEL OPENING COVER)			
75/	D	D5VY 6028000-A	Front	2
75/77	D	D5VY 6028002-C	Rear	2
28010-1	EXTENSION (QUARTER PANEL REAR)			
75/76	A(53,65),Y(53,65)	(RH) D5MY 6528010-A	(LH) D5MY 6528011-A	1
77/78	A(53,65)			1
79	A(54,66)	(RH) D9MY 5428010-B	(LH) ★ D9MY 5428011-B r/b E2MY 5428011-A(8/82)	1
77	F(53,65D,K)	(RH) D70Z 6528010-C	(LH) D70Z 6528011-C Nylon	1
78/	F(53,65D)			1
77/	F(65L)	(RH) D7WY 6528010-A	(LH) D7WY 6528011-A	1
79/	L(64)	(RH) D9FZ 6428010-A	(LH) D9FZ 6428011-A Upper	1
74/77	P(54)	(RH) D4DZ 5428010-A	(LH) D4DZ 5428011-A Two piece design	1
77	P(54)	(RH) D7DZ 5428010-A	(LH) D7DZ 5428011-A One piece design-paint to match	1
74/77	P(62)	(RH) D4DZ 6228010-A	(LH) D4DZ 6228011-A Two piece design	1
77	P(62)	(RH) D7DZ 6228010-A	(LH) D7DZ 6228011-A One piece design-paint to match	1
78/	P(36)	(RH) D8BZ 3628010-A	(LH) D8BZ 3628011-A	1
78/79	P(74)	(RH) D9BZ 7428010-A	(LH) D9BZ 7428011-A	1
79	A(54,66)	N621926-S36	(AM24-H) Nut & washer M6 x 1	4
28032-3	Refer to Exterior Moulding Section at the end of this catalog			

COPYRIGHT © 1986 — FORD MOTOR COMPANY — DEARBORN, MICHIGAN

1973/79 LINCOLN-MERCURY CARS

YEAR	MODEL/RESTRICTIONS	PART NUMBER	DESCRIPTION	QTY.
28058-9	EXTENSION (QUARTER PANEL LOWER REAR)-Also refer to group 17C837-8 in Chassis Section — Cont'd			
75/	D	(RH) D5VY 6028058-A	(LH) D5VY 6028059-A	1
28060-1	FILLER (QUARTER PANEL UPPER)			
79	J(61)	(RH) D9ZZ 6128060-A	(LH) D9ZZ 6128061-A Front	1
280B60	SPACER (QUARTER PANEL EXTENSION)			
78/	F(65L)	D8WY 65280B60-A	R.H. and L.H.	2
280B62-3	GRILLE (QUARTER PILLAR VENT AIR)			
73/76	C(53)	D20Z 53280B62-A	R.H. and L.H.	2
73/76	C(63,65)	D2SZ 65280B62-A	R.H. and L.H.	2
73/75	K			2
74/	F	D2SZ 65280B62-A	R.H. and L.H.	2
28072-3	EXTENSION (QUARTER PANEL UPPER REAR)			
79	A(74)	(RH) D9MY 7428072-A	(LH) D9MY 7428073-A	1
280C72	KNOB (QUARTER VENT DOOR HANDLE)			
78/	P(36,54,66)	D8KZ 54280C72-A	R.H. and L.H.	2
280B76-7	HOUSING AND HANDLE (QUARTER VENT AIR)			
78/	P(36,54,66)	(RH) D8KZ 54280B76-B	(LH) D8KZ 54280B77-B	1
281A34-5	PILLAR (QUARTER LATCH LOWER)			
78/	P(36)	(RH) D8BZ 36281A34-A	(LH) D8BZ 36281A35-A	1
78/79	P(54,74)	(RH) D9BZ 54281A34-A	(LH) D9BZ 54281A35-A	1
		385622-S(PP-14BM)	Plug-rubber-1" x 2"	2
28160-1	PILLAR ASSY. (QUARTER LATCH)			
76	A(65),Y(65)	(RH) D6MY 6528160-A	(LH) ★ D6MY 6528161-A	1
77/78	A(65)		Not replaced(8/82)	1
73/76	A(71),Y(71)	(RH) D7MY 7128160-A	(LH) D7MY 7128161-A	1
73/76	A(53,57),Y(53)			1
77/78	A(53,71)	(RH) D7MY 7128160-A	(LH) D7MY 7128161-A	1
79	A(54,74) "Before 9/11/78"	(RH) D9AZ 5428160-A	(LH) D9AZ 5428161-A	1
79	A(54,74) "From 9/11/78"	(RH) E0AZ 5428160-A	(LH) E0AZ 5428161-A	1
79	A(66) "Before 8/21/78"	(RH) D9AZ 6628160-A	(LH) D9AZ 6628161-B	1
79	A(66) "From 8/21/78"	(RH) D9AZ 6628160-B	(LH) D9AZ 6628161-B	1
75/79	D(53)	(RH) D8VY 5328160-A	(LH) D8VY 5328161-A	1
75/	D(60)	(RH) D6VY 6028160-A	(LH) D6VY 6028161-A	1
77/	F(53)	(RH) D70Z 5328160-A	(LH) D70Z 5328161-A	1
77/	F(65)	(RH) D70Z 6528160-A	(LH) D70Z 6528161-A	1
75/78	G(54),V	(RH) D7DZ 5428160-B	(LH) D7DZ 5428161-B	1
79	G(54)			1
76/	G(66) "From 3/15/76"	(RH) D7DZ 6628160-A	(LH) D7DZ 6628161-A	1
79	J	(RH) D9ZZ 6628160-A	(LH) D9ZZ 6628161-A	1
73/76	K	(RH) D6LY 6528160-A	(LH) D6LY 6528161-A	1
77/	K	(RH) D7LY 6528160-A	(LH) D7LY 6528161-A	1
74/	L(62,64)	(RH) D6FZ 6228160-A	(LH) D6FZ 6228161-A	1
74/76	L(73)	(RH) D6FZ 7328160-A	(LH) D6FZ 7328161-A	1
73/77	P(54)	(RH) D7DZ 5428160-A	(LH) D7DZ 5428161-A	1
73/77	P(62)	(RH) D0DZ 6228160-A	(LH) D0DZ 6228161-A	1
78/	P(54,74)	(RH) D8BZ 5428160-A	(LH) D8BZ 5428161-A	1
78/	P(66)	(RH) D8BZ 6628160-B	(LH) D8BZ 6628161-B	1
79	V	(RH) D94Y 5428160-A	(LH) D94Y 5428161-A	1
28182-3	SEAL (QUARTER LATCH PILLAR TO WINDOW FRAME)			
77/	F	(RH) D70Z 6528182-A	(LH) D70Z 6528183-A	1
77/	K	(RH) D7LY 6528182-A	(LH) D7LY 6528183-A	1
28186-7	REINFORCEMENT (QUARTER PANEL TO ROOF RAIL)			
79	A(74)	(RH) D9AZ 7428186-B	(LH) D9AZ 7428187-B	1
28204-5	EXTENSION (QUARTER LATCH PILLAR UPPER)			
79	A(74)	(RH) D9AZ 7428204-A	(LH) D9AZ 7428205-A	1
78/	P(74)	(RH) D8BZ 7428204-A	(LH) D8BZ 7428205-A	1

1973/79 LINCOLN-MERCURY CARS

YEAR	MODEL/RESTRICTIONS	PART NUMBER	DESCRIPTION		QTY.
282A18-9	REINFORCEMENT (QUARTER LATCH PILLAR AT BELT)				
79	A(54)	(RH) D9AZ 54282A18-A	(LH) D9AZ 54282A19-A		1
78/	L(73)	(RH) D8FZ 73282A18-A	(LH) D8FZ 73282A19-A		1
78/	P(74)	(RH) D8BZ 74282A18-A	(LH) D8BZ 74282A19-A		1
28230	EXTENSION (QUARTER WHEELHOUSE TO ROOF OUTER PILLAR)				
78/	P(36)	D8BZ 3628230-A	R.H. and L.H.		2
28258-9	BRACE (QUARTER LATCH PILLAR TO WHEELHOUSE)				
75/	G(66)		Refer to group 278C44		
28322-3	EXTENSION (QUARTER PANEL LATCH SIDE REINFORCEMENT)				
75/	D(53)	(RH) D5VY 5328322-A	(LH) D5VY 5328323-A		1
28324-5	PILLAR (QUARTER LATCH UPPER)				
79	A(54)	(RH) E0AZ 5428324-A	(LH) E0AZ 5428325-A		1
79	A(66)	(RH) D9AZ 6628324-A	(LH) D9AZ 6628325-A	Inner	1
79	A(74)	(RH) D9AZ 7428324-A	(LH) D9AZ 7428325-A	Outer	1
		(RH) D9AZ 7428324-B	(LH) D9AZ 7428325-B	Inner	1
78/	P(36)	(RH) D8BZ 3628324-A	(LH) D8BZ 3628325-A	Outer	1
78/	P(54)	(RH) D8BZ 5428160-A	(LH) D8BZ 5428161-A	Outer	1
78/	P(66)	(RH) D8BZ 5428160-A	(LH) D8BZ 5428161-A	Outer	1
78/	P(74)	(RH) D8BZ 7428324-A	(LH) D8BZ 7428325-A	Outer	1
		(RH) D8BZ 7428324-B	(LH) D8BZ 7428325-B	Inner	1
28330-1	REINFORCEMENT (QUARTER LATCH PILLAR TO WHEELHOUSE)				
75/76	G(66) "Before 5/3/76"	(RH) D5DZ 6628330-A	(LH) D5DZ 6628331-A		1
76/	G(66) "From 5/3/76"	(RH) D7DZ 6628330-A	(LH) D7DZ 6628331-A		1
28344	Refer to Chassis Section group 16A550				
28414-5	BRACE (QUARTER PANEL REAR REINFORCEMENT)				
77/	K	(RH) D7LY 6528414-A	(LH) D7LY 6528415-A		1
28596-7	EXTENSION (QUARTER PANEL CENTER REAR)				
78/79	P(74)	(RH) D9BZ 7428596-A	(LH) D9BZ 7428597-A		1
28630	SEAL (FUEL TANK FILLER PIPE)				
73/76	A(53,57,65),Y(53,65)	D3AZ 6528630-B	Round		1
75/76	D,K				1
77/79	A(53,65),D,K				1
78	F				1
79	A	D9AZ 5428630-A			1
73/76	A(71),Y(71)	D3AZ 6528630-A	Rectangular		1
75/76	D,K				1
77/78	A(71),D,K				1
78	F				1
79	D,K				1
78	P	D8BZ 5428630-A			1
28661	COVER (STORAGE COMPARTMENT)				
79	P(74)	D9AZ 7428661-A	L.H.-use w/31500 compartment		1
28700-1	REINFORCEMENT (QUARTER PANEL AT BELT)				
79	A(54)	(RH) D9AZ 5428700-A	(LH) D9AZ 5428701-A		1
79	A(66)	(RH) D9AZ 6628700-A	(LH) D9AZ 6628701-A		1
79	J(61)	(RH) E2FZ 6128700-A	(LH) E2FZ 6128701-A		1
28712-3	Refer to Exterior Moulding Section at the end of this catalog				
28788-9	STRAINER (QUARTER PANEL BELT TO FLOOR)				
75/	D	(RH) D5VY 6028788-A	(LH) D5VY 6028789-A		1
29004-5	MOULDING (QUARTER WINDOW GARNISH)				
79	J	(RH) D9ZZ 6629004-A	(LH) D9ZZ 6629005-A	Chrome	1
29014-5	MOULDING (QUARTER WINDOW GARNISH UPPER FRONT)				
74/	L(62,64)		Body pillar area to be painted		1
78/	P(74)	(RH) D8BZ 7429014-A	(LH) D8BZ 7429015-A	Paint to match	1
76/78	J	E824023-S	Nut-spring- "U" type-M4.2 (Metric)		6

COPYRIGHT © 1986 — FORD MOTOR COMPANY — DEARBORN, MICHIGAN

1973/79 LINCOLN-MERCURY CARS

YEAR	MODEL/RESTRICTIONS	PART NUMBER	DESCRIPTION		QTY.
29019	BRACKET (COAT HOOK)-Also refer to group 292A32				
75/	D(60)	(RH) D5VY 6029019-A	(LH) D5VY 6029019-B		1
77/	K	D7LY 6529019-A	R.H. and L.H.		2
74/	L(62,64)	D2FZ 6229019-A	R.H. and L.H.		2
77/	G	D74Y 5429019-A	R.H. and L.H.		2
77/	V		R.H. and L.H.		2
29024-5	COVER (COAT HOOK)				
73/	A,C,D,F,G,J,K,P,V,Y	E0AZ 5429024-B	White		AR
73/	A,C,D,F,G,J,K,P,V,Y	E0AZ 5429024-A	Black		AR
29034-9	Refer to Exterior Moulding Section at the end of this catalog				
290C38-9	GRILLE (QUARTER PANEL LOWER)				
73/74	J	(RH) D3RY 62290C38-A	(LH) D3RY 62290C39-A		1
290A42-3	MOULDING (QUARTER TRIM PANEL FRONT)				
73	A(65K)	(RH) D3MY 65290A42-A	(LH) D3MY 65290A43-A	Front	1
75/76	A(65L)	D5MY 65290A42-B	R.H. and L.H.-burl walnut wood grainfinish		2
77/	D(60)	(RH) D7VY 60290A42-A	(LH) D7VY 60290A43-A	Incl. gold accent stripe & walnut grain	1
74/76	K	(RH) D5LY 65290A42-B	(LH) D5LY 65290A43-B	Tan	1
77/	K(exc. Diamond Jubilee Edition or Collectors Edition)	(RH) D7LY 65290A42-A	(LH) D7LY 65290A43-A	Chrome finish-w/black mylar insert	1
78	K(Diamond Jubilee Edition)	D8LY 65290A42-A	R.H. and L.H.-blue		2
79	K (Collectors Edition)				2
		D8LY 65290A42-B	R.H. and L.H.-gold		2
29050-1	Refer to Exterior Moulding Section at the end of this catalog				
29060-1	Refer to Exterior Moulding Section at the end of this catolog				
29066-9	Refer to Exterior Moulding Section at the end of this catalog				
291A55	Refer to Exterior Moulding Section at the end of this catalog				
29156	SPACER (COAT HOOK)				
77/	G,V	D74Y 5429156-A	Clear		2
291A58	MOULDING (QUARTER LATCH PILLAR INSIDE)				
79	V	D94Y 54291A58-A	R.H. and L.H.		2
291A65-92	Refer to Exterior Moulding Section "R" for complete retainer information				
29200-1	REINFORCEMENT (QUARTER PANEL TO WHEELHOUSE)				
79	J	(RH) D9ZZ 6129200-A	(LH) D9ZZ 6129201-A		1
29232	RETAINER (COAT HOOK)				
73/76	A,C,D,F,K,L,P,Y	C8AZ 6229232-A	For cover refer to group 29024		4
77/	A,D,F,K,L,P				4
75/	G				4
79	J				4
77/	V				4
		52554-S8	(U-230)-screw-self tapping-No. 8-18 x 5/8"		2
29274-5	FILLER (REAR QUARTER PANEL REAR)				
77/78	V	(RH) D74Y 5429274-A	(LH) D74Y 5429275-A	Chrome type between tail lamps & qtr. panel extension	1
29278-313	Refer to Exterior Moulding Section at the end of this catalog				
29316	Refer to Exterior Moulding Section "R" for complete retainer information				
29329	INSULATOR (QUARTER WHEELHOUSE SOUND)				
78/	P	D8BZ 5429329-A	R.H. and L.H.-approx. 36 1/2" long		2
29388-9	BRACE (QUARTER LATCH PILLAR TO QUARTER TO SIDE MEMBER)				
79	J	(RH) D8BZ 5429388-A	(LH) D8BZ 5429389-A		1
78/	P				1

YEAR	MODEL/RESTRICTIONS	PART NUMBER	DESCRIPTION		QTY.
29452-3	REINFORCEMENT (QUARTER WINDOW OPENING)				
79	A(74)	(RH) D9AZ 7429452-A	(LH) D9AZ 7429453-A	Front	1
79	A(74)	(RH) D9AZ 7429452-B	(LH) D9AZ 7429453-B	Rear-use as patch on quarter panel	1
78/	P(54,66)	(RH) D8BZ 5429452-B	(LH) D8BZ 5429453-B	Rear	1
296K06	SEAL KIT (QUARTER WINDOW REPAIR)				
76	J "Before 11/1/75"	D5RY 62296K06-B			2
29622-39	Refer to Exterior Moulding Section at the end of this catalog				
29664	RETAINER (QUARTER WINDOW GLASS)				
78/	P(54,74)	D8BZ 5429664-A	Front		6
78/	P(66)	D8BZ 6629664-A	Lower		8
		D8BZ 6629664-B	R.H. and L.H.-upper-13" long		2

YEAR	MODEL/RESTRICTIONS	PART NUMBER CLEAR	PART NUMBER TINTED	NAGS NO.	DESCRIPTION	QTY.
29706-11	GLASS (QUARTER WINDOW)					
Notes:	◊ The following parts are also required: washer (270A58), seal (297A30), retainer (302A02), link (302K19), cap (302K62), † Canada only					
73/76	A(65),Y(65)	D3MY 6529710-A	D3MY 6529710-B	Q4823	R.H.	1
77/78	A(65)	D3MY 6529711-A	D3MY 6529711-B	Q4824	L.H.	1
79	A(66)	D9AZ 6629710-A	D9AZ 6629710-B	Q5845	R.H.	1
		D9AZ 6629711-A	D9AZ 6629711-B	Q5846	L.H.	1
79	A(66K)	† D9MY 6629710-A	† D9MY 6629710-B	Q5957	R.H.-incl. "Diamond Jubilee" script	1
		† D9MY 6629711-A	† D9MY 6629711-B	Q5958	L.H.-incl. "Diamond Jubilee" script	1
74/76	C(65)	D40Z 6529710-A	D40Z 6529710-B	Q5044	R.H.	1
		D40Z 6529711-A	D40Z 6529711-B	Q5045	L.H.	1
73/74	D(65)		D1VY 6529710-B	Q4566	R.H.	1
75/	D(60) - - w/o coach roof		D5VY 6029710-A	Q5162	R.H.-w/black band & "Linc." emblem	1
			D5VY 6029711-A	Q5163	L.H.	1
77/78	D(60) - - w/coach roof		D7VY 6029710-A	Q5564	R.H. -w/black/gold bands & "Linc." emblem	1
			D7VY 6029711-A	Q5565	L.H.	1
78/	D(60) - - w/coach roof		D8VY 6029710-A	Q5838	R.H.-w/black & gold bands & "Linc" emblem	1
			D8VY 6029711-A	Q5839	L.H.-w/black & gold bands & "Linc" emblem	1
73	F(65)	D1ZZ 6529710-A	D1ZZ 6529710-B	Q4539	R.H.	1
		D1ZZ 6529711-A	D1ZZ 6529711-B	Q4540	L.H.	1
73	F(76)	D1ZZ 7629710-A	D1ZZ 7629710-B	Q4542	R.H.	1
		D1ZZ 7629711-A	D1ZZ 7629711-B	Q4543	L.H.	1
74/76	F	D40Z 6529710-A	D40Z 6529710-B	Q5044	R.H.	1
		D40Z 6529711-A	D40Z 6529711-B	Q5045	L.H.	1
77/	F(53D)		D70Z 5329706-A	Q5496	R.H.-incl. frame, mldg and w/strip	1
			D70Z 5329707-A	Q5497	L.H.-incl. frame, mldg and w/strip	1
77	F(53K)		D70Z 5329706-B	Q5494	R.H.-incl. frame and "Brougham" design	1
			D70Z 5329707-B	Q5495	L.H.-incl. frame and "Brougham" design	1
77 78/	F(65D,K) F(65D)	D70Z 6529710-A	D70Z 6529710-B	Q5484	R.H.	1
		D70Z 6529711-A	D70Z 6529711-B	Q5485	L.H.	1
77	F(65K)		D70Z 6529710-D	Q5486	R.H-rear-incl. "Brougham" design	1
			D70Z 6529711-D	Q5487	L.H.-rear-incl. "Brougham" design	1

COPYRIGHT © 1986 — FORD MOTOR COMPANY — DEARBORN, MICHIGAN

1973/79 LINCOLN-MERCURY CARS

29700-11 GLASS (QUARTER WINDOW) — Cont'd

Notes: ◊ The following parts are also required: washer (270A58), seal (297A30), retainer (302A02), link (302K19), cap (302K62)

YEAR	MODEL/RESTRICTIONS	PART NUMBER CLEAR	PART NUMBER TINTED	NAGS NO.	DESCRIPTION	QTY.
77/	F(65L)	D7WY 6529710-A	D7WY 6529710-B	Q5500	R.H.-front	1
		D7WY 6529711-A	D7WY 6529711-B	Q5501	L.H.-front	1
75	G(66H)	D5DZ 6629710-A	D5DZ 6629710-B	Q5179	R.H.-less design	1
		D5DZ 6629711-A	D5DZ 6629711-B	Q5180	L.H.-less design	1
76/	G(66H)	D6DZ 6629710-A	D6DZ 6629710-B	Q5385	R.H.-less design	1
		D6DZ 6629711-A	D6DZ 6629711-B	Q5386	L.H.-less design	1
75	G(66K)		D5DZ 6629710-C	Q5177	R.H.-incl. "Ghia" design	1
			D5DZ 6629711-C	Q5178	L.H.-incl. "Ghia" design	1
76/77	G(66K)		D6DZ 6629706-A	Q5383	R.H.-incl. "Ghia" design	1
			D6DZ 6629707-A	Q5384	L.H.-incl. "Ghia" design	1
78/	G(66)		D8DZ 6629710-A	Q5700	R.H.-w/ctr. bar	1
			D8DZ 6629711-A	Q5701	L.H.-w/ctr. bar	1
73/74	J - - w/moveable window	◊ D4RY 6229710-A		FCQ1145	R.H.	1
		◊ D4RY 6229711-A		FCQ1146	L.H.	1
73/74	J - - w/moveable window	D4RY 6229700-B		FQ1140	R.H.-kit incl. glass, link, ret., spacer, seal & cap	1
		D4RY 6229701-B		FQ1I41	L.H.-kit incl. glass, link, ret., spacer, seal & cap	1
74	J - - w/stationary window	D4RY 6229710-B		FQ1159	R.H.	1
		D4RY 6229711-B		FQ1160	L.H.	1
76/78	J - - w/moveable window	◊ D5RY 6429710-A	D5RY 6429710-B	FQ1153	R.H.	1
		◊ D5RY 6429711-A	D5RY 6429711-B	FQ1154	L.H.	1
76/78	J - - w/stationary window	D5RY 6429710-C	D5RY 6429710-D	FQ1155	R.H.	1
		D5RY 6429711-C	D5RY 6429711-D	FQ1156	L.H.	1
79	J	D9ZZ 6129710-A	D9ZZ 6129710-B	Q5871	R.H.	1
		D9ZZ 6129711-A	D9ZZ 6129711-B	Q5872	L.H.	1
73	K		D2LY 6529710-B	Q4740	R.H.	1
			D2LY 6529711-B	Q4741	L.H.	1
74/76	K		D4SZ 6529710-B	Q5037	R.H.	1
			D4SZ 6529711-B	Q5038	L.H.	1
77/	K		D7LY 6529710-B	Q5525	R.H.-front-less design	1
			D7LY 6529711-B	Q5526	L.H.-front-less design	1
74/	L(62,64) - - w/stationary window	D1FZ 6229710-A	D1FZ 6229710-B	Q4548	R.H.	1
		D1FZ 6229711-A	D1FZ 6229711-B	Q4549	L.H.	1
74/76	L(62,64) - - w/moveable window	D2FZ 6229706-A	D2FZ 6229706-B	Q4798	R.H.-incl. bright frame and hinge	1
		D2FZ 6229707-A	D2FZ 6229707-B	Q4799	L.H.	1
76/	L(62,64) - - w/moveable window	D6FZ 6429706-A	D6FZ 6429706-B	Q5480	R.H.-incl. dull frame and hinge	1
		D6FZ 6429707-A	D6FZ 6429707-B	Q5481	L.H.-incl. dull frame and hinge	1
74/	L(73)	D2FZ 7329706-A	D2FZ 7329706-B	Q4796	R.H.-incl. frame and hinge-bright	1
		D2FZ 7329707-A	D2FZ 7329707-B	Q4797	L.H.	1
78/	L(73)	D8YZ 7329706-A	D8YZ 7329706-B	Q5879	R.H.-incl. frame and hinge-black	1
		D8YZ 7329707-A	D8YZ 7329707-B	Q5880	L.H.-incl. frame and hinge-black	1

YEAR	MODEL/RESTRICTIONS	PART NUMBER CLEAR	PART NUMBER TINTED	NAGS NO.	DESCRIPTION	QTY.
29700-1	GLASS (QUARTER WINDOW) — Cont'd					
Notes:	◊ The following parts are also required: washer (270A58), seal (297A30), retainer (302A02), link (302K19), cap (302K62)					
73/77	P(62)	D0DZ 6229710-C	D0DZ 6229710-D	Q4277	R.H.	1
		D0DZ 6229711-C	D0DZ 6229711-D	Q4278	L.H.	1
78/	P(36)	D8BZ 3629706-A	D8BZ 3629706-B	Q5664	R.H.-incl. mldg. w/strip and seal	1
		D8BZ 3629707-A	D8BZ 3629707-B	Q5665	L.H.-incl. mldg. w/strip and seal	1
78/	P(54)	D8BZ 5429710-A	D8BZ 5429710-B	Q5690	R.H.	1
		D8BZ 5429711-A	D8BZ 5429711-B	Q5691	L.H.	1
78/	P(66)	D8KZ 6629710-A	D8KZ 6629710-B	Q5675	R.H.-use w/louvers	1
		D8KZ 6629711-A	D8KZ 6629711-B	Q5676	L.H.-use w/louvers	1
78/	P(66)	D8BZ 6629710-A	D8BZ 6629710-B	Q5677	R.H.-use w/o louvers	1
		D8BZ 6629711-A	D8BZ 6629711-B	Q5678	L.H.-use w/o louvers	1
78/	P(74)	D8BZ 7429710-A	D8BZ 7429710-B	Q5696	R.H.-rear	1
		D8BZ 7429711-A	D8BZ 7429711-B	Q5697	L.H.-rear	1
74/	L - - w/moveable window	385350-S	(NN-63-E)-pin-3/8" x 31/32"			4
29700-11	GLASS (OPERA WINDOW)					
Notes:	† Includes glass, retainer and weatherstrip					
74	C(65)		D4GY 6529710-A	Q5046	R.H.-incl. two border stripes	1
			D4GY 6529711-A	Q5047	L.H.-incl. two border stripes	1
74/76	C(65)		D4GY 6529710-B	Q5138	R.H.-incl. one border stripe	1
			D4GY 6529711-B	Q5139	L.H.-incl. one border stripe	1
74/76	C(65)		D40Z 6529710-C	Q5050	R.H.-incl."Brougham" script	1
			D40Z 6529711-C	Q5051	L.H.-incl. "Brougham" script	1
75/	D(53) "From 10/13/74"		D5VY 5329710-B	Q5329	R.H. and L.H.	2
74/76	F		ϕ D4WY 6529710-D	2658 T	R.H.	1
			ϕ D4WY 6529711-D	2658 T	L.H.	1
77/	F(65D)		D70Z 6529710-C	Q5488	R.H.-less design	1
			D70Z 6529711-C	Q5489	L.H.-less design	1
77/	F(65L)		D7WY 6529706-A	Q5502	R.H.-incl. louver mldgs. & w/strip	1
			D7WY 6529707-A	Q5503	L.H.-incl. louver mldgs. & w/strip	1
73/76	K		D2LY 6529710-C	2627	R.H. and L.H.	2
76	K		D6LY 6529710-B	Q5432	R.H. and L.H.-incl. "Cartier" and gold star	2
			D6LY 6529710-C	Q5434	R.H. & L.H.-incl. "Emilio Pucci" and gold star	2
			D6LY 6529710-D	Q5431	R.H. & L.H.-incl. "Bill Blass" and gold star	2
			D6LY 6529710-E	Q5433	R.H. & L.H.-incl. "Givenchy" and gold star	2
77/	K		D7LY 6529710-A	Q5527	R.H. and L.H.-rear incl. design	2

COPYRIGHT © 1986 — FORD MOTOR COMPANY — DEARBORN, MICHIGAN

1973/79 LINCOLN-MERCURY CARS

YEAR	MODEL/RESTRICTIONS	PART NUMBER CLEAR	PART NUMBER TINTED	NAGS NO.	DESCRIPTION	QTY.
29700-11	GLASS (OPERA WINDOW) — Cont'd					
Notes:	† Includes glass, retainer and weatherstrip					
77/	K		D7LY 6529710-C	Q5566	R.H. - incl."Bill Blass" and orn.	1
			D7LY 6529711-C	Q5567	L.H. - incl. "Bill Blass" and orn.	1
			D7LY 6529710-D	Q5568	R.H.-incl. "Cartier" and orn.	1
			D7LY 6529711-D	Q5569	L.H. - incl "Cartier" and orn.	1
			D7LY 6529710-E	Q5636	R.H. - incl. "Emilio Pucci" and orn.	1
			D7LY 6529711-E	Q5637	L.H. - incl. "Emilio Pucci" and orn.	1
			D7LY 6529710-F	Q5643	R.H. - incl "Givenchy" and orn.	1
			D7LY 6529711-F	Q5644	L.H.-incl "Givenchy" and orn.	1
78/	K				Refer to group 29740-1 for Diamond Jubilee Edition	
78/	K		D8LY 6529710-A	Q5837	R.H. & L.H.-incl. vanity mirror	2

YEAR	MODEL/RESTRICTIONS	PART NUMBER	DESCRIPTION		QTY.
29726-7	SHIELD (QUARTER WINDOW OPENING SIGHT)				
77/	D(60) - - w/coach roof	(RH) D7VY 6029726-A	(LH) D7VY 6029727-A	Black	1
78/	P(54)	E1BZ 5429726-A	R.H. and L.H.-use w/o louvers & w/mouldings-7 1/4" long-7 9/32" long		2
78/	P(66)	D8BZ 6629726-A	R.H. and L.H.-use w/louvers and bright qtr. mldgs. -29 7/16" long		2
		D8BZ 6629726-B	R.H. and L.H.-use w/louvers & w/o mouldings-19 3/4" long		2
297A30	SEAL (QUARTER WINDOW LATCH RETAINER)				
73/78	J	D5RY 64297A30-A	R.H. and L.H.		2
73/	L,P(62)	D1DZ 62297A30-A	R.H. and L.H.		2
29732-3	WEATHERSTRIP (QUARTER WINDOW AT BELT OUTER)-Also refer to group 19562 in Paint Section				
77/	F(65L)	(RH) D7WY 6529732-A	(LH) D7WY 6529733-A		1
76/	G(66)		Refer to group 19562 in Paint Section		
74/	L(62,64)	(RH) D2FZ 6229732-A	(LH) D2FZ 6229733-A		1

YEAR	MODEL/RESTRICTIONS	PART NUMBER CLEAR	PART NUMBER TINTED	NAGS NO.	DESCRIPTION	QTY.
29740-1	GLASS (QUARTER WINDOW REAR)					
79	A(74)	D9AZ 7429740-A	D9AZ 7429740-B	Q5861	R.H.	1
		D9AZ 7429741-A	D9AZ 7429741-B	Q5862	L.H.	1
73/76 77	C(71) F(71)	D20Z 7129740-A	D20Z 7129740-B	Q4731	R.H.	1
		D20Z 7129741-A	D20Z 7129741-B	Q4732	L.H.	1
78/	K		D8LY 6529740-A	Q5702	R.H.-w/"Diamond Jubilee Edition insignia and ornament	1
			D8LY 6529741-A	Q5703	L.H.-w/"Diamond Jubilee Edition insignia and ornament	1

YEAR	MODEL/RESTRICTIONS	PART NUMBER CLEAR	PART NUMBER TINTED	NAGS NO.	DESCRIPTION	QTY.
29740-1	GLASS (QUARTER WINDOW REAR) — Cont'd					
74/	L(73)	D2FZ 7329740-A	D2FZ 7329740-B	Q4748	R.H.	1
		D2FZ 7329741-A	D2FZ 7329741-B	Q4749	L.H.	1
78/	P(74)				Refer to groups 29706-11	

YEAR	MODEL/RESTRICTIONS	PART NUMBER	DESCRIPTION	QTY.
29744-5	WEATHERSTRIP (QUARTER WINDOW AT BELT INNER)			
75/	D(60)	D5VY 6029744-A	R.H. and L.H.	2
77/	F(65L)	(RH) D7WY 6529744-A	(LH) D7WY 6529745-A	1
77/	K	(RH) D7LY 6529744-A	(LH) D7LY 6529745-A	1
29756	RETAINER (QUARTER WINDOW REAR)-Also refer to group 29664			
78/	P(36)	D8BZ 5429756-A	R.H. and L.H. front door glass	2
78/	P(54,66)		R.H. and L.H.	2
29760	SPACER (WINDOW GLASS LOWER)			
79	A(66)	D9AZ 6629760-A	R.H. and L.H.-quarter	6
77/	G(66)	D7DZ 6629760-A	Back	6
78/	K,P(66)			6
78/	P(54)	D8BZ 5429760-A	R.H. and L.H.-back	4
29764-5	GUIDE (QUARTER WINDOW)			
73/74	D(65)	(RH) C9AZ 6529764-A	(LH) C9AZ 6529765-A	1
29778-9	BRACKET (QUARTER WINDOW GUIDE LOWER)			
73/74	D(65)	(RH) C9AZ 6529778-A	(LH) C9AZ 6529779-A	1
29796-7	Refer to Exterior Moulding Section at the end of this section			
298A44-5	SUPPORT (QUARTER WINDOW BRACKET UPPER)			
76/	K	(RH) D6SZ 65298A44-A	(LH) D6SZ 65298A45-A	1
29904-5	WEATHERSTRIP (QUARTER WINDOW)			
75/	D(60)	D5VY 6029904-A	R.H. and L.H.-rubber	2
74/	L(73)	(RH) D2FZ 7329904-C	(LH) D2FZ 7329905-C	1
29910-1	FILLER (QUARTER WINDOW OPENING)			
77/	D(60) - - w/coach roof	(RH) D7VY 6029910-A	(LH) D7VY 6029911-A	1
77/	F(65L)	(RH) D8WY 6529910-A	(LH) D8WY 6529911-A	1
29952-3	RETAINER (QUARTER WINDOW FRONT WEATHERSTRIP)			
73/78	A(65),Y(65)	D3AZ 6529952-A	R.H. and L.H.	2
73/76	C(65)	D20Z 6529952-A	R.H. and L.H.	2
73/74	D(65)	(RH) D1VY 6529952-A	(LH) D1VY 6529953-A	1
74/76	F	D20Z 6529952-A	R.H. and L.H.	2
77	F(65D,K)	D70Z 6529952-A	R.H. and L.H.	2
78/	F(65D)			2
77/	K			2
77/	F(65L)	D7WY 6529952-A	R.H. and L.H.	2
73/76	K	D2SZ 6529952-A	R.H. and L.H.	2
30046	BRACKET (QUARTER WINDOW GLASS RUN RETAINER)			
79	A(66)	D9AZ 6630046-A	R.H. and L.H.	2
75/	D(60)	D5VY 6030046-A	R.H. and L.H.	2
30086	SPACER (REAR QUARTER WINDOW GLASS)			
77	F(65K)	D70Z 6530086-A		4
78/	F(65L)			6
79	J	D7SZ 6030086-A		4
77/	P			6
30104-5	RUN (QUARTER WINDOW GLASS)			
75/	D(60) - - w/o coach light	(RH) D5VY 6030104-B	(LH) D5VY 6030105-B	Front 1
		(RH) D5VY 6030104-A	(LH) D5VY 6030105-A	Rear -upper 1
77/	D(60) - - w/coach light	(RH) D7VY 6030104-C	(LH) D7VY 6030105-C	Front 1
		(RH) D7VY 6030104-A	(LH) D7VY 6030105-A	Rear-upper 1
30138-9	RETAINER (FRONT QUARTER WINDOW UPPER FRONT)			
77/	F(65L)	(RH) D7WY 6530138-A	(LH) D7WY 6530139-A	1
77/	K	D7LY 6530138-A	R.H. and L.H.	2

COPYRIGHT © 1986 — FORD MOTOR COMPANY — DEARBORN, MICHIGAN

1973/79 LINCOLN-MERCURY CARS

YEAR	MODEL/RESTRICTIONS	PART NUMBER	DESCRIPTION	QTY.
30146-7	WEATHERSTRIP (QUARTER WINDOW FRONT)			
73/76	A(65),Y(65)	(RH) D3AZ 6530146-A	(LH) D3AZ 6530147-A	1
77/78	A(65)			1
75/76	C(65)	(RH) D50Z 6530146-A	(LH) D50Z 6530147-A	1
73/74	D(65)	(RH) D1VY 6530146-A	(LH) D1VY 6530147-A	1
73	F	(RH) D1ZZ 6530146-A	(LH) D1ZZ 6530147-A	1
75/76	F	(RH) D50Z 6530146-A	(LH) D50Z 6530147-A	1
77	F(65D,K)	(RH) D70Z 6530146-B	(LH) D70Z 6530147-B	1
78/	F(65D)			1
77/	F(65L)	(RH) D7WY 6530146-A	(LH) D7WY 6530147-A	1
73/76	K	(RH) D3AZ 6530146-A	(LH) D3AZ 6530147-A	1
77/	K	(RH) D7LY 6530146-A	(LH) D7LY 6530147-A	1
302A02	RETAINER (QUARTER WINDOW LATCH)			
73/77	P(62)	D0DZ 62302A02-B	R.H. and L.H.	2
302A06	SPACER (QUARTER WINDOW LATCH RETAINER)			
74/78	J		Refer to group 270A58	
73/77	L,P(62)	D0DZ 62302A06-A	R.H. and L.H. use w/o removeable sun roof	4
78/	L			4
77/	L	D4TZ 10302A06-A	Use w/removeable sun roof	6
78/	P(36,54,66)			2
79	J			2
302A08-9	LATCH (QUARTER WINDOW)			
73/74	J	(RH) D3RY 62302A08-A	(LH) D3RY 62302A09-A	1
76/78	J	D5RY 64302A08-B	R.H. and L.H.	2
302A12	RETAINER (QUARTER WINDOW HINGE)			
74/	L(62,64)	D2FZ 62302A12-A	R.H. and L.H.	4
73/	L(73)	D5FZ 73302A12-A	R.H. and L.H.	2
30230-1	BAR (QUARTER WINDOW DIVISION)			
78/	P(54,66)	(RH) D8KZ 6630230-B	(LH) D8KZ 6630231-B	1
302K41	PIVOT (QUARTER WINDOW GLASS)			
76	J - - w/moveable window	D5RY 64302K41-A		4
30248-9	WEATHERSTRIP (QUARTER WINDOW)			
74/	L(73)	(RH) D3FZ 7330248-A	(LH) D3FZ 7330249-A	1
30270-1	RETAINER (QUARTER WINDOW WEATHERSTRIP)-Also refer to group 51238-9			
75/	D(53)	D4LY 6530270-A	R.H. and L.H.	2
74/	K	D4LY 6530270-A	R.H. and L.H.	2
30322	HANDLE (WINDOW REGULATOR)-Incl. attaching parts-Also refer to group 23342			
73	A(65),C(63,65),F,Y(65) "Before 4/2/73"	D2AZ 7630322-A	Quarter windows	2
73	F,P(54) "Before 4/2/73"		Front and rear doors	2or4
73	A(65),C(63,65),F,Y(65) "From 4/2/73"	D3AZ 6530322-A	Quarter windows-chrome w/clear knob	2
73	F,P(54) "From 4/2/73"		Front and rear doors	2or4
74/75	A(65),C(65),Y(65)		Quarter windows	2or4
74/75	P(54)		Front and rear doors	2or4
75/77	P(54)		Rear doors-refer to group 23342	
76/	P(54)		Front doors	2
75	G(54) "Before 11/18/74"		Refer to group 23342	
75/	G(54) "From 11/18/74"	D5DZ 5430322-A	Rear doors	2
77/	V		Rear doors	2
303A24	LATCH (QUARTER WINDOW)			
73/	L(62,64)	D0DZ 62303A24-C	R.H. and L.H.	2
74/	L(73)	D2FZ 73303A24-A	R.H. and L.H.	2
		★ 57257-S	Screw and washer-No. 8-32 x 1/2"	2
73/77	P(62)	D00Z 62303A24-C	R.H. and L.H.	2
30330	PIN (QUARTER WINDOW LATCH)			
73/77	L,P(62)	D0DZ 6230330-A	3/4" long	4
78/	L			4
73/77	L,P(62)	D0DZ 6230330-B	1/2" long	2
78/	L			2

1973/79 LINCOLN-MERCURY CARS

YEAR	MODEL/RESTRICTIONS	PART NUMBER	DESCRIPTION	QTY.
305A02-3	BRACKET (QUARTER WINDOW GLASS)			
79	J	D9ZZ 66305A02-A	R.H. and L.H.-front	4
305A04-5	BRACKET (QUARTER WINDOW GLASS LOWER)			
79	J	D9ZZ 66305A04-A	R.H. and L.H.-rear	10
		385843-S101	(MM-284-DA)-U nut-1/4"-20	AR
77/	K	D7LY 65305A04-A	R.H. and L.H.-rear- use w/mirrored opera window	2
30584	COVER (QUARTER WINDOW LATCH BRACKET RETAINER)			
73/77	L(62,64),P(62)	D0DZ 6230584-B	R.H. and L.H.	2
78/	L(62,64)			2
30702	RECEPTACLE (ASH)-Also refer to groups 238A02 and 62876			
73/76	A,Y	D3AZ 6530702-A	R.H. and L.H.-front or rear door-less cover	2or4
77/78	A,F		R.H. and L.H.	2or4
79	F(65L)		R.H. and L.H.	2
76/77	G(54K)		R.H. and L.H.-rear door	2
77/	V		R.H. and L.H.-rear door	2
79	A(54K,L,66K,L,74K) - - w/power windows	D5VY 6030702-A	L.H.-front door-less cover R.H. and L.H.-front or rear doors	1 2
75/	D		R.H. and L.H.-front door R.H. and L.H.-rear door or quarter	2 2
73	F	C5AZ 6230702-A	R.H. and L.H.-quarter	2
75/	G(54K)		R.H.-front door	1
76/	L(73)		R.H. and L.H.-quarter arm rest	2
73/74	P(62)		Quarter arm rest	2
77/	V		R.H.-front door	1
76	J	D6RY 6430702-C	Cloud-quarter-w/top rib	2
		D6RY 6430702-J	Black-quarter-w/top rib-grain finish	2
		D6RY 6430702-B	Saddle brown-quarter-w/top rib	2
76/78	J(64P)	D6RY 6430702-G	Cloud-quarter-w/center rib	2
73/74	K	D1MY 6530702-A	Quarter and R.H. front door	3
75/	K	D5VY 6030702-A	R.H.-door-less cover L.H.-door-less cover	2 1
30714-5	RETAINER (ASH RECEPTACLE)-Also refer to group 62868			
73/	D(53) "From 10/2/72"		Rear door-incl. cover-refer to group 14527 in Chassis Section	
73	F	E0FZ 7330714-A	Quarter	2
76/79	L(73)		R.H. and L.H.-quarter arm rest	2
76/78	J(64D)	D5RY 6430714-A	Quarter-cloud-w/center rib	2
76/78	J(64D)	D6RY 6430714-J	Cloud-quarter-w/top rib	2
76	J(64P,S,T)	D6RY 6430714-B	R.H. and L.H. - blue - w/(1) hole	2
73	K(65)		Refer to group 238A06-7	
73/74	P(54) - - w/reclining seat	C5AZ 6230714-A	At tunnel	AR
73/74	P(62)		Quarter arm rest	AR
30716	SHIELD (ASH RECEPTACLE)			
73/	D	C2VY 5730716-A	Front door, rear door and quarter	AR
79	J,P		Console	1
78/	K			AR
30728	SPRING (ASH RECEPTACLE RETAINER COVER TENSION)			
73/76	A,Y	D3AZ 6530728-A		1
77/78	A			1
78/	F(65L)			1
73/	D,K	C8VZ 5330728-A	R.H. and L.H.	2
75/77	G(54K) - - w/power windows		R.H.-front door	1
75/77	G(54K)		R.H. and L.H.-rear door	2
77/	V		R.H.-front door	1
310A02-3	PANEL ASSY. (QUARTER ARM REST FINISH)			
77/	D(60)	(RH) D7VY 60310A02-A	(LH) D7VY 60310A03-A	1
310A04	RETAINER (QUARTER TRIM PANEL CENTER)			
75	D(60)	D5VY 60310A04-A	R.H. and L.H.	2

COPYRIGHT © 1986 — FORD MOTOR COMPANY — DEARBORN, MICHIGAN

1973/79 LINCOLN-MERCURY CARS

YEAR	MODEL/RESTRICTIONS	PART NUMBER	DESCRIPTION	QTY.
310A84	BRACKET (QUARTER TRIM PANEL LOWER)			
75/	D(60)	D5VY 60310A84-A	R.H. and L.H.	2
311A24-5	BRACKET (QUARTER TRIM PANEL)			
79	A(54)	D9AZ 54311A24-A	R.H. and L.H.	2
77/	F(65L)	D7WY 65311A24-A	R.H. and L.H.	2
77/	K	D7LY 65311A24-A	R.H. and L.H.	2
78/	P(36)	D8BZ 36311A24-A	R.H. and L.H.	4
311A58-9	PANEL (QUARTER TRIM FINISH)			
79	A(66)	(RH) D9MY 66311A58-A	(LH) D9MY 66311A59-A Wood grain finish	1
311A70	COVER (ASSIST STRAP RETAINER)			
76/78	J	D5RY 64311A70-A	At roof	4
31172-3	RETAINER (QUARTER TRIM PANEL REAR)-Paint to match			
74/	L(64)	(RH) D4FZ 6431172-A	(LH) D4FZ 6431173-A	1
74/	L(73)	(RH) D4FZ 7331172-A	(LH) D4FZ 7331173-A	1
31184	BRACKET (QUARTER TRIM PANEL SUPPORT)			
79	J,P(66)	D9ZZ 6631184-A	R.H. and L.H.	2
76/	D(60)	D6VY 6031184-A	R.H. and L.H.	2
		55907-S2	(U-254-B)-screw-hex. hd.-No. 8-18 x 1/2"	4
311A96-7	EXTENSION (QUARTER TRIM PANEL)-Paint to match			
74/	L(62)	(RH) D2FZ 62311A96-B	(LH) D2FZ 62311A97-B	1
73/77	P(54)	(RH) D2DZ 54311A96-B	(LH) D2DZ 54311A97-B	1
73/77	P(62)	(RH) D2DZ 62311A96-B	(LH) D2DZ 62311A97-B	1
31200-1	RETAINER (QUARTER TRIM PANEL UPPER)-Paint to match			
79	A(74)	(RH) D9AZ 7431200-A	(LH) D9AZ 7431201-A	1
78/	P(66)	D8BZ 6631200-A	R.H. and L.H.	4
312A28-9	Refer to group in Soft Trim Section			
312A48	BRACKET (ASSIST STRAP)			
78	V "Before 7/17/78"	D74Y 54312A48-B	R.H. and L.H.-one piece design	2
78/	V "From 7/17/78"	D84Y 54312A48-A	R.H. and L.H.	3
312A58-9	PANEL (QUARTER LATCH PILLAR UPPER FINISH)			
78/	P(66)	(RH) D8BZ 66312A58-K	(LH) D8BZ 66312A59-K Chamois-paint to match	1
31296-7	REINFORCEMENT (QUARTER TRIM PANEL LOWER)			
79	J	D9ZZ 6631296-B	R.H. and L.H.	2
31392	SPACER (QUARTER TRIM PANEL)			
78/	P(74)	D8BZ 7431392-A	R.H. and L.H.	2
31424	BRACKET (QUARTER TRIM PANEL TO WHEELHOUSE)			
79	A(74)	D9AZ 7431424-A	R.H. and L.H.	2
31492-3	SUPPORT (QUARTER TRIM PANEL)			
75/	D(60)	(RH) D5VY 6031492-A	(LH) D5VY 6031493-A	1
31500	COMPARTMENT (STORAGE)-Paint to match			
73/78	A(71),Y(71) - - w/padding		Serviced only in assy.-refer to group 31012-3 in the Soft Trim Section	
77/78	A(71)			
79	A(74)	D9AZ 7431500-A	L.H.-upper and lower	1
78/	P(74)	D8BZ 7431500-A	Upper	1
		D8BZ 7431500-B	Lower	1
31518	HINGE (STORAGE COMPARTMENT DOOR)			
79	A(74)	D9AZ 7431518-A	Cordovan-paint to match	1
78/	P(74)	D8BZ 7431518-B	Chamois-paint to match	1
31560	DOOR (STORAGE COMPARTMENT)-Paint to match			
79	A(74)	D9AZ 7431560-A	L.H.-paint to match	1
78/	P(74)	D8BZ 7431560-A	L.H.-paint to match	1
31658-9	PLATE (ARM REST MOUNTING)			
75	D(60)	(RH) D5VY 6031658-A	(LH) D5VY 6031659-A	1
31700	LATCH (STORAGE COMPARTMENT DOOR)			
73/78	A(71),Y(71)		Refer to group 11598	
31710	STRIKER (STORAGE COMPARTMENT DOOR LATCH)			
73/78	A(71),Y(71)		Refer to group 105A90	
75	D(60)		Refer to group 310A84	

YEAR	MODEL/RESTRICTIONS	PART NUMBER	DESCRIPTION	QTY.
40010	LIFTGATE-Less paint, trim and glass			
74/	L(73)	D7FZ 7340010-A	Less handle	1
			Handle-refer to group 43400	
78	P(74)	D8BZ 7440010-A		1
		385877-S36	(UU-52-AX)-screw and washer 11/32" x 3/4"	2
79	P(74)	D9BZ 7440010-A		1
		385877-S36	(UU-52-AX)-screw and washer 11/32" x 3/4"	2
40110	DOOR (LUGGAGE COMPARTMENT LESS LATCH and HINGES)-Drill holes as required			
74	A(53H,K,57H,K,65H,K)	D7MY 5340110-C		1
75/76	A(53,65),Y(53,65)			1
77/78	A(53,65) "From 5/2/77"	D7MY 5340110-C		1
77/	D "From 5/2/77"	D7VY 6040110-C		1
77/	F(65L)	D7WY 6540110-B		1
77/	F(53,65D,K)	D80Z 6540110-A		1
75/	G	D7DZ 6640110-B		1
79	J(61) - - w/o washer wiper	D9ZZ 6140110-A		1
79	J(61) - - w/washer wiper	D9ZZ 6140110-B		1
74/76	K	D4LY 6540110-A		1
77/	K	D7LY 6540110-A		1
74/	L(62)	D7FZ 6240110-A		1
76/	L(64)	D7FZ 6440110-A		1
77	P(54)	D7DZ 5440110-A		1
73/77	P(62)	D7DZ 6240110-A		1
78/79	P(36,54,66)	D9BZ 5440110-A		1
77/78	V	D74Y 5440110-A		1
79	V	D94Y 5440110-A		1
40166	KIT (HYDRAULIC LIFT HARDWARE)			
79	F(61)	E1ZZ 6140166-A		2
40168	CLIP (HYDRAULIC LIFT REINFORCEMENT)			
79	F(61)	E1ZZ 6140168-A		2
40212-3	COVER (TAILGATE AT BELT)			
79	A(74)	(RH) D9AZ 7440212-A	(LH) D9AZ 7440213-A	1
40248	Refer to Exterior Moulding Section "R" for complete retainer information			
40274	BRACE (LOWER BACK PANEL TO FLOOR)			
78/	P(36)	D8BZ 3640274-A	R.H. and L.H.	2
78/	P(54,66)	D8BZ 5440274-A	R.H. and L.H.	2
40282	Refer to Exterior Moulding Section at the end of this catalog			
403B06-7	EXTENSION (LOWER BACK PANEL SIDE)			
73	A(53,57,65)		Refer to group 27970-1	
40320	PANEL (LOWER BACK)			
75/76	A(53,65),Y(53,65)	D5MY 6040320-A		1
77/78	A(53,65)			1
79	A(54,66)	D9MY 5440320-A		1
79	A(74)	D9AZ 7440324-A		1
75/	D	D5VY 6040320-A		1
77/	F(53,65D,K)	D70Z 6540320-D		1
77/	F(65L)	D7WY 6540320-A		1
75/77	G	D5DZ 6640320-A		1
78/	G	D8DZ 6640320-B		1
79	J	D9ZZ 6640320-A		1
74/	L(73)	D4FZ 7340320-A		1
79	L(62)	D7FZ 6240320-A		1
79	L(64)	D7FZ 6440320-A		1
77/	K	D7LY 6540320-A		1
74/77	P	D44Y 6240320-A		1
78/	P(36)	D8BZ 3640320-A		1
78/	P(54,66)	E1DZ 5440320-A		1
78/	P(74)	D8BZ 7440320-A		1
77/	V	D84Y 5440320-A		1

COPYRIGHT © 1986 — FORD MOTOR COMPANY — DEARBORN, MICHIGAN

1973/79 LINCOLN-MERCURY CARS

YEAR	MODEL/RESTRICTIONS	PART NUMBER	DESCRIPTION	QTY.
403A22	Refer to Exterior Moulding Section at the end of this catalog			
40324	Refer to group 40320			
403E26-7	COVER (LOWER BACK PANEL END)			
79	A(54,66) "Before 1/15/79"	(RH) D9MY 54403E26-A	(LH) D9MY 54403E27-A	1
79	A(54,66) "From 1/15/79"	(RH) E0MY 54403E26-A	(LH) E0MY 54403E27-A Incl. moulding	1
40338-9	REINFORCEMENT (LOWER BACK CENTER PANEL)			
79	J	D9ZZ 6640338-A		1
403A40	BRACKET (LOWER BACK PANEL)-UPPER FLANGE			
74/76	K	★	Serviced only in assy. group 40320	
40368	RETAINER (LOWER BACK PANEL MOULDING) -Also refer to Exterior Moulding Section "R" for complete retainer information			
77/	K	D7LY 6540368-A		8
403A70	Refer to Exterior Moulding Section at the end of this catalog			
40374	Refer to Soft Trim Section			
403A76	Refer to Exterior Moulding Section at the end of this catalog			
404B02	SUPPORT (LOWER BACK PANEL EXTENSION)			
77/	L(64) - - w/all glass rear door	D7FZ 64404B02-A		1
404A06	WEATHERSTRIP (LIFTGATE)			
74/	L(73)		Refer to group 43720	
404B10	RETAINER (LIFTGATE DOOR LOCK CYLINDER)			
78/	P(74)	D8BZ 74404B10-A		1
404A42	STRIKER (LIFTGATE LATCH)			
74/	L(73)	D3FZ 73404A42-A		1
78/	P(74)	D8BZ 74404A42-A		1
40452	BUMPER (LIFTGATE REAR CENTER PILLAR)			
78/	P(74)	D8BZ 7440452-A		1
40454-5	PANEL (REAR CORNER INNER FINISH UPPER)			
Notes:	@ Paint to match			
79	A(74)	(RH) D9AZ 7440454-A	(LH) D9AZ 7440455-A Paint to match	1
78/	P(74)	(RH) D8BZ 7440454-A	(LH) D8BZ 7440455-A Paint to match	1
404B66	FILLER (LOWER BACK PANEL EXTENSION)			
77/	L(64) - - w/all glass rear door	D7FZ 64404B66-A		1
404A68	SHIELD (LIFTGATE LATCH)			
78/	P(74)	D8BZ 74404A68-A		1
40492	PANEL (LOWER BACK INSIDE)			
77/	F(53,65D,K)	D70Z 6540492-A		1
77/	L(64)	D7FZ 6440492-A		1
40513	Refer to Exterior Moulding Section at the end of this catalog			
405A24	SPRING (FUEL FILLER DOOR HINGE)			
73/	A(53,57,65),D,Y(53,65)	C8AZ 62405A24-A		1
74/	K			1
77/	F(53,65)	C8AZ 62405A24-A		1
76/78	J	D5RY 64405A24-A		1
79	J	C8AZ 62405A24-A		1
77/	V	D74Y 54405A24-A		1
78/	P	C8AZ 62405A24-A		1

1973/79
LINCOLN-MERCURY CARS

YEAR	MODEL/RESTRICTIONS	PART NUMBER	DESCRIPTION	QTY.
405A26	DOOR (FUEL FILLER)			
73/76	A(53,57,65),Y(53,65)	D3AZ 65405A26-A		1
77/78	A(53,65)	D3AZ 65405A26-A		1
79	A(54,66)	D9AZ 54405A26-A		1
79	A(74)	D9AZ 74405A26-A		1
73	C(53,63,65)		Refer to group 13422 in Chassis Section	
75/	D	D5VY 60405A26-A		1
77/	F(53,65)	D3AZ 65405A26-A		1
75/	G		Refer to Exterior Moulding Section at the end of this catalog	
76/78	J	D5RY 64405A26-A		1
79	J	D9CY 61405A26-A		1
74/	K	D4LY 65405A26-A		1
78/	P	E0BZ 54405A26-A		1
77/78	V	D74Y 54405A26-A		1
40544-5	EXTENSION (LOWER BACK PANEL)			
73	C(53,63,65)	D3GY 6540544-A		1
73	F	D1WY 6540544-A		1
77/	L(64) - - w/all glass rear door	(RH) D7FY 6440544-A	(LH) D7FY 6440545-A	1
		387461-S	(VV-1-AL) -spacer 9/32" long x 5/8" O.D. x 3/16" I.D.	4
73/77	P	D3DZ 6240544-A		1
405A48	Refer to Exterior Moulding Section at the end of this catalog			
405B64	REINFORCEMENT (FUEL FILLER PIPE HOUSING)			
73/76	A,Y	D3AZ 65405B64-A		1
77/	A			1
75/	D		Refer to assy. group 27936	
74/	K	D3AZ 65405B64-A		1
77/	L(62,64)	★	Improvise	1
40586	BRACKET (FUEL FILLER DOOR HINGE ON BODY)			
77/	V	D74Y 5440586-A		1
405A86	Refer to Exterior Moulding Section at the end of this catalog			
40610	SPACER (LIFTGATE DOOR MOUNTING)			
76/78	J	D6RY 6440610-A		4
77/	L(64)	D7FZ 6440610-A		1
406A10	LIFT (LUGGAGE COMPARTMENT DOOR HYDRAULIC)			
76/78	J - - w/heated back window w/o wiper	(RH) D5RY 64406A10-C	(LH) D5RY 64406A10-D	1
76/78	J - - w/heated back window w/wiper	D5RY 64406A10-D	R.H. and L.H.	2
76/78	J - - w/o heated back window w/o wiper	D5RY 64406A10-C	R.H. and L.H.	2
76/78	J - - w/o heated back window w/wiper	D5RY 64406A10-D	R.H. and L.H.	2
79	J - - w/o rear window washer wiper, rear window louver or rear spoiler w/o heated back window	E1ZZ 61406A10-A	R.H. and L.H.-may require use of 2-D2FZ 6445592-A spring retainers	2
79	J - - w/rear window washer wiper, or rear window louver or rear spoiler w/heated back window	E0ZZ 61406A10-C	R.H. and L.H.-may require use of 2-D2FZ 6445592-A spring retainers	2

COPYRIGHT © 1986 — FORD MOTOR COMPANY — DEARBORN, MICHIGAN

1973/79 LINCOLN-MERCURY CARS

YEAR	MODEL/RESTRICTIONS	PART NUMBER	DESCRIPTION	QTY.
406A10	LIFT (LUGGAGE COMPARTMENT DOOR HYDRAULIC) — Cont'd			
74/	L(64) - - w/o all glass rear door and w/ or w/o heated back window	D7FZ 64406A10-A	R.H. and L.H.-r/b D7FZ 64406A10-A (6/82)	2
77/	L(64) - - w/all glass rear door and w/o heated back window	D7FZ 64406A10-A	R.H. and L.H.	2
77/	L(64) - - w/all glass rear door and w/heated back window "From 12/1/76"	D7FZ 64406A10-C	R.H. and L.H.	2
78/	P(74) - - w/o back window wiper	E2BC 74406A10-B		2
78/	P(74) - - w/back window wiper	E1BC 74406A10-B		2
40680	HINGE (FUEL FILLER DOOR)-Paint to match			
76	G	D64Y 6640680-A		1
40704	COVER (TAILGATE PANEL INSIDE)-Paint to match			
73/76	A(71), Y(71)	D2AZ 7140704-A		1
77/78	A(71)			1
79	A(74)	D9AZ 7440704-A		1
40709	TAILGATE (LESS MOULDING HOLES and HINGES)-Less paint and trim			
79	A(74)	D9AZ 7440709-A		1
40710	PANEL (TAILGATE OUTSIDE)			
73/76	A(71), Y(71)	D4AZ 7140710-A		1
77/78	A(71)			1
79	A(74)	D9AZ 7440710-A		1
407A12	Refer to Exterior Moulding Section "R" for complete retainer information			
40718	REINFORCEMENT (TAILGATE PANEL HINGE)			
79	A(74)	D9AZ 7440718-A	Lower	1
79	A(74)	D9AZ 7440718-B	Upper	1
40740	Refer to Exterior Moulding Section "R" for complete retainer information			
407A56	RETAINER (INSIDE LOWER COVER)			
78/	P(74)	D8BZ 74407A56-A	Liftgate-paint to match	2
40790-1	COVER (TAILGATE WINDOW REGULATOR ACCESS HOLE)			
79	A(74)	(RH) D9AZ 7440790-A	(LH) D9AZ 7440791-A	1
73/76	C(71)			1
77	F(71)			1
40867	SPRING (TAILGATE WINDOW REGULATOR COUNTERBALANCE)			
73	C(71)	D30Z 7140867-A		1
40964	MOTOR and DRIVE (TAILGATE WINDOW REGULATOR)-Refer to group 23394-5			
41006-7	Refer to Exterior Moulding Section at the end of this catalog			
41018	Refer to Exterior Moulding Section at the end of this catalog			
41038-9	PILLAR (REAR CORNER)			
79	A(74)	(RH) D9AZ 7441038-A	(LH) D9AZ 7441039-A	1
74/76	L(73)	(RH) D4FZ 7341038-A	(LH) D4FZ 7341039-A	1
78/	P(74)	(RH) E0BZ 7441038-A	(LH) E0BZ 7441039-A	1
41050-1	FILLER (REAR CORNER PILLAR UPPER)			
79	A(74)	(RH) D9AZ 7441050-A	(LH) D9AZ 7441051-A	1
41056	REINFORCEMENT (REAR CORNER PILLAR UPPER)			
79	A(74)	D9AZ 7441056-A		1
41058	REINFORCEMENT (REAR CORNER PILLAR LOWER)			
79	A(74)	D9AZ 7441059-A		1
412A02-3	PILLAR (REAR CORNER INNER)			
79	A(74)	(RH) D9AZ 74412A02-A	(LH) D9AZ 74412A03-A	1
41210-1	PILLAR (REAR CORNER INNER FRONT UPPER)			
79	A(74)	(RH) D9AZ 7441210-A	(LH) D9AZ 7441211-A	1
41228-9	PILLAR (REAR CORNER INNER FRONT LOWER)			
79	A(74)	(RH) D9AZ 7441228-A	(LH) D9AZ 7441229-A	1

1973/79
LINCOLN-MERCURY CARS

YEAR	MODEL/RESTRICTIONS	PART NUMBER	DESCRIPTION	QTY.
41230-1	PANEL (REAR CORNER OUTER)			
73/76	A(71),Y(71)	(RH) D3AZ 7141230-A	(LH) D3AZ 7141231-A	1
77/	A(71)			1
41302	RAIL (BACK WINDOW HEADER)			
79	A(74)	D9AZ 7441302-A		1
78/79	P(74)	E0BZ 7441302-A		1
41308	MOULDING (LIFTGATE HEADER RAIL INSIDE)			
79	A(74)	D9AZ 7441308-A	Paint to match	1
78/	P(74)	D8BZ 7441308-A	Paint to match	1
41608	WEATHERSTRIP (TAILGATE)			
73/76	A(71),Y(71)	D3AZ 7141608-A		1
77/78	A(71)			1
79	A(74)	D9AZ 7441608-A		1
73/76	C(71)	D40Z 7141608-A		1
77	F(71)			1
74/	L(73)		Refer to group 43720	
41634	RETAINER (TAILGATE WEATHERSTRIP ON BODY)			
79	A(74)	D9AZ 7441634-A		1
41676	WEATHERSTRIP (TAILGATE INSIDE AT BELT)			
	A(74)	D9AZ 7441676-A		1
41708-9	RAIL (BELT SIDE)			
79	A(74)	(RH) D9AZ 7441708-A	(LH) D9AZ 7441709-A	1
76/	G(66)	(RH) D7DZ 6641708-A	(LH) D7DZ 6641709-A	1
78/	P(36)	(RH) D8BZ 3641708-A	(LH) D8BZ 3641709-A	1
78/	P(54)	(RH) E0BZ 5441708-A	(LH) E0BZ 5441709-A	1
78/	P(66)	(RH) D8BZ 6641708-A	(LH) D8BZ 6641709-A	1
78/	P(74)	(RH) D8BZ 7441708-A	(LH) D8BZ 7441709-A	1
41736-7	Refer to group 41708-9			
41836-7	BRACKET (LUGGAGE COMPARTMENT DOOR LIFT ON DOOR)			
74/	L(64)	(RH) D2FZ 6441836-A	(LH) D2FZ 6441837-A	1
41878	STRIP (BELT SIDE CENTER TACKING)			
73	F(76)	★	Improvise	
41960-1	GUIDE (BACK WINDOW GLASS)			
73/76	A(71),Y(71)	D3AZ 7141960-B	4 1/8" long	1
77/78	A(71)	D3AZ 7141960-B	4 1/8" long	1
		★	3 1/8" long	3
79	A(74)	(RH) D9AZ 7441960-A	(LH) D9AZ 7441961-A	1
73/76	C(71)	★	L.H. R.H.-refer to group 222A92	1
77	F(71)	★	L.H. R.H.-refer to group 222A92	1
41962	STABILIZER (BACK WINDOW OUTER)			
79	A(74)	D9AZ 7441962-A		AR
41966-7	BRACKET (LUGGAGE COMPARTMENT DOOR HINGE TO HINGE SUPPORT)			
73	D	★	Improvise from sheet metal	

YEAR	MODEL/RESTRICTIONS	PART NUMBER CLEAR	PART NUMBER TINTED	NAGS NO.	DESCRIPTION	QTY.
42006	GLASS (BACK WINDOW)					
73/76	A(65),Y(65)	★	D3MY 6542006-B	B4826	Unheated	1
			D3MY 6542006-C	B4825	Heated	1
73/76	A(71)Y(71)	D3AZ 7142006-A	D3AZ 7142006-B	B4822	Unheated	1
			D3AZ 7142006-C	B4821	Heated	1
77/78	A(53)	D3AZ 5342006-A	D3AZ 5342006-B	B4814	Unheated	1
			D3AZ 5342006-C	B4813	Heated	1
77/78	A(65)	★	D3MY 6542006-B	B4826	Unheated	1
			D3MY 6542006-C	B4825	Heated	1
77/78	A(71)	D3AZ 7142006-A	D3AZ 7142006-B	B4822	Unheated	1
			D3AZ 7142006-C	B4821	Heated	1
79	A(54,66)	D9AZ 5442006-B	D9AZ 5442006-C	B5848	Unheated	1
			D9AZ 5442006-A	B5847	Heated	1

COPYRIGHT © 1986 — FORD MOTOR COMPANY — DEARBORN, MICHIGAN

1973/79 LINCOLN-MERCURY CARS

YEAR	MODEL/RESTRICTIONS	PART NUMBER CLEAR	PART NUMBER TINTED	NAGS NO.	DESCRIPTION	QTY.
42006	GLASS (BACK WINDOW) — Cont'd					
79	A(74)	D9AZ 7442006-B	D9AZ 7442006-C	B5864	Unheated	1
			D9AZ 7442006-A	B5863	Heated	1
73/76	C(53,65)	D20Z 6542006-B	D20Z 6542006-C	B4724	Unheated	1
			D20Z 6542006-A	B4723	Heated	1
73	C(63)	★	D20Z 6342006-C	B4718	Unheated	1
73/76	C(71)	D20Z 7142006-C	D20Z 7142006-D	B4733	Unheated	1
			D30Z 7142006-A	B4835	Heated	1
73/74	D(53)		D0VY 5342006-B	B4377	Unheated	1
			D3VY 5342006-A	B4830	Heated	1
75/76	D(53)		D5VY 5342006-B	B5173	Unheated	1
			D5VY 5342006-A	B5172	Heated	1
75/76	D(60)		D5VY 6042006-B	B5165	Unheated	1
			D5VY 6042006-A	B5164	Heated	1
77/	D(60)		D7VY 6042006-B	B5532	Unheated	1
			D7VY 6042006-A	B5531	Heated	1
77/	D(53)		D7VY 5342006-B	B5534	Unheated	1
			D9VY 5342006-A	B5533	Heated	1
73	F(65)	D1ZZ 6542006-B	D1ZZ 6542006-C	1109T	Unheated	1
			★	B4801	Heated	1
74/76	F	★	D20Z 6542006-C	B4724	Unheated	1
			D20Z 6542006-A	B4723	Heated	1
77/	F(53,65)	D70Z 6542006-A	D70Z 6542006-B	B5491	Unheated	1
			D70Z 6542006-C	B5490	Heated	1
77	F(71)	D20Z 7142006-C	D20Z 7142006-D	B4733	Unheated	1
			D30Z 7142006-A	B4835	Heated	1
75/	G(54)	D5DZ 5442006-B	D5DZ 5442006-C	B5190	Unheated	1
			D5DZ 5442006-A	B5189	Heated	1
75/	G(66)	D5DZ 6642006-B	D5DZ 6642006-C	B5182	Unheated	1
			D5DZ 6642006-A	B5181	Heated	1
73/74	J	D0RY 6242006-A		FCB1142	Unheated	1
		D0RY 6242006-B		FCB1144	Heated	1
76/78	J	D5RY 6442006-B	D5RY 6442006-D	FB1158	Heated	1
		D5RY 6442006-A	D5RY 6442006-C	FB1157	Unheated	1
79	J(61)	D9ZZ 6142006-B	D9ZZ 6142006-C	B5874	Unheated	1
			D9ZZ 6142006-A	B5873	Heated	1
73	K		D2SZ 6542006-B	B4739	Unheated	1
			D2SZ 6542006-A	B4738	Heated	1
74/76	K	D4SZ 6542006-A		B5039	Heated -less grid lines	1
			D2SZ 6542006-A	B4738	Heated -incl. grid lines	1
			D2SZ 6542006-B	B4739	Unheated	1
77/	K		D7LY 6542006-A	B5529	Unheated	1
			D7LY 6542006-B	B5528	Heated	1
74/	L(62)	D1FZ 6242006-A	D1FZ 6242006-B	B4550	Unheated	1
			D2FZ 6242006-B	B4794	Heated	1
74/75	L(64)	D2FZ 6442006-B	D2FZ 6442006-A	B4752	Unheated	1
			D2FZ 6442006-C	B4795	Heated	1
76/	L(64) - - w/o all glass rear door	D2FZ 6442006-B	D2FZ 6442006-A	B4752	Unheated	1
			D6FZ 6442006-A	B5435	Heated	1
77/	L (64) - - w/all glass rear door		D7FZ 6442006-B	B5536	Unheated-incl. decal	1
			D7FZ 6442006-A	B5535	Heated-incl. decal	1
74/	L(73)	D2FZ 7342006-A	D2FZ 7342006-B	B4751	Unheated	1
			D2FZ 7342006-C	B4750	Heated	1
73/77	P(54)	D1DZ 5442006-A	D1DZ 5442006-B	B4557		1

1973/79 LINCOLN-MERCURY CARS

YEAR	MODEL/RESTRICTIONS	PART NUMBER CLEAR	PART NUMBER TINTED	NAGS NO.	DESCRIPTION	QTY.
42006	GLASS (BACK WINDOW) — Cont'd					
73/77	P(62)	D0DZ 6242006-A	D0DZ 6242006-B	B4279		1
78/	P(36)		D8BZ 3642006-B	B5667	Unheated	1
			D8BZ 3642006-C	B5666	Heated	1
78/	P(54,66)	D8BZ 5442006-A	D8BZ 5442006-B	B5680	Unheated	1
			D8BZ 5442006-C	B5679	Heated	1
78/	P(74)		D8BZ 7442006-B	B5699	Unheated	1
			D8BZ 7442006-C	B5698	Heated	1
77/78	V		D74Y 5442006-B	B5648	Unheated	1
			D74Y 5442006-A	B5647	Heated	1
79	V		D94Y 5442006-B	B5878	Unheated	1
			D94Y 5442006-A	B5877	Heated	1

YEAR	MODEL/RESTRICTIONS	PART NUMBER	DESCRIPTION	QTY.
420A20-1	WEATHERSTRIP (BACK WINDOW GLASS LOWER SIDE RUN)			
73/76	A(71),Y(71)	(RH) D1AZ 71420A20-A	(LH) D1AZ 71420A21-A	1
77/	A(71)			1
420A22	SPACER (BACK WINDOW GLASS LOWER)-also refer to group 29760			
79	J(61)	D9ZZ 61420A22-A	R.H. and L.H.	2
78/	P(36,54,66)	D8BZ 54420A22-A	R.H. and L.H.	2
420A58	RETAINER (BACK WINDOW SEAL)			
79	J(61)	D9ZZ 61420A58-A	Cut to fit	1
78/	P(74)	D9ZZ 61420A58-A	Cut to fit	1
42072	WEATHERSTRIP (TAILGATE INSIDE BELT)			
73/76	A(71),Y(71)	D3AZ 7142072-A		1
77/	A(71)			1

BODY TYPE		PART NUMBER LESS SUFFIX		AVO-CADO	BEIGE	BLACK	BLUE	GOLD	GREEN	ORANGE	RED	SADDLE	SILVER	TAN	WHITE	OTHER	QTY.
			COLORS AND APPLICABLE PART NUMBER SUFFIXES														
42084		WEATHERSTRIP (BACK WINDOW GLASS)															
Notes:		△ Aqua, $ Ginger, @ Gray, ϕ Jade, ■ Silver blue, ● Tobacco, † Cordovan, % Camel, ▲ Refer to group 19562 in Paint Section															
1973																	
C(53,65)		D20Z 6542084				D											1
D		▲															1
P(54)		▲															1
1974																	
C(53,65)		D20Z 6542084				D											1
D		▲															1
F		D20Z 6542084				D											1
L(62)		D1FZ 6242084				B											1
L(64)		D2FZ 6442084				A											1
L(73)		D2FZ 7342084				A											1
P(54)		▲															1
1975																	
C(53,65)		D20Z 6542084				D											1
D		▲															1
F		D20Z 6542084				D											1
G(54)		D5DZ 5442084									D						1
		▲															1
L(62)		D1FZ 6242084				B											1
L(64)		D2FZ 6442084				A											1
L(73)		D2FZ 7342084				A											1
P(54)		▲															1

COPYRIGHT © 1986 — FORD MOTOR COMPANY — DEARBORN, MICHIGAN

1973/79 LINCOLN-MERCURY CARS

42084 WEATHERSTRIP (BACK WINDOW GLASS) — Cont'd

Notes: △ Aqua, $ Ginger, @ Gray, ϕ Jade, ■ Silver blue, ● Tobacco, † Cordovan, % Camel, ▲ Refer to group 19562 in Paint Section

BODY TYPE		PART NUMBER LESS SUFFIX		COLORS AND APPLICABLE PART NUMBER SUFFIXES													QTY.
					AVO-CADO	BEIGE	BLACK	BLUE	GOLD	GREEN	ORANGE	RED	SADDLE	SILVER	TAN	WHITE	OTHER	
1976																	
C(53,65)		D20Z	6542084				D											1
D		▲																1
F		D20Z	6542084				D											1
G(54)		D5DZ	5442084									D						1
		D6DZ	5442084													▲	▲	1
		D6DZ	5442084														ϕB	1
G(66)		D6DZ	6642084				B					E						1
		D7DZ	6642084														@B	1
		D7DZ	6642084														ϕD	1
L(62)		D1FZ	6242084				B											1
L(64)		D2FZ	6442084				A											1
L(73)		D2FZ	7342084				A											1
P(54)		▲																1

42084 WEATHERSTRIP (BACK WINDOW GLASS) — Cont'd

Notes: △ Aqua, $ Ginger, @ Gray, ϕ Jade, ■ Silver blue, ● Tobacco, † Cordovan, % Camel, ▲ Refer to group 19562 in Paint Section

BODY TYPE		PART NUMBER LESS SUFFIX		COLORS AND APPLICABLE PART NUMBER SUFFIXES													QTY.
					BLACK	BLUE	CHAM-OIS	CREAM	GRAY	GREEN	GOLD	JADE	RED	SADDLE	TAN	WHITE	OTHER	
1977																	
F(53,65)		▲																1
G(54)		D5DZ	5442084										D		▲			1
		D6DZ	5442084									B						1
		D7DZ	5442084			C			B									1
G(66)		D7DZ	6642084			C		A	B			D			E			1
J		D5RY	6442084		A													1
L(62)		D1FZ	6242084		B													1
L(64) – – w/o all glass rear door		D2FZ	6442084		A													1
L(73)		D2FZ	7342084		A													1
P(54)		▲																1
V		D74Y	5442084		A													1
1978																	
F(53,65)		▲																1
G(54)		D5DZ	5442084										D					1
		D6DZ	5442084									B						1
		D7DZ	5442084			C			B									1
		D8DZ	5442084														†A	1
		D8DZ	5442084														%B	1
G(66)		D7DZ	6642084			C			B			D			E			1
		D8DZ	6642084														†A	1
		D8DZ	6642084														%B	1
J		D5RY	6442084		A													1
L(62)		D1FZ	6242084		B													1
L(64) – – w/o all glass rear door		D2FZ	6442084		A													1
L(73)		D2FZ	7342084		A													1
P(36,54,66)		▲																1
P(74)		D8BZ	7442084		A													1
V		D74Y	5442084		A													1

BODY TYPE		PART NUMBER LESS SUFFIX	COLORS AND APPLICABLE PART NUMBER SUFFIXES													QTY.
			BERYL	BLACK	BLUE	CAMEL	CHAM-OIS	CORD-OVAN	GOLD	GRAY	JADE	PINE GREEN	RED	WHITE	OTHER	
42084		WEATHERSTRIP (BACK WINDOW GLASS) — Cont'd														
Notes:		△ Aqua, $ Ginger, @ Gray, ϕ Jade, ■ Silver blue, ● Tobacco, † Cordovan, % Camel, ▲ Refer to group 19562 in Paint Section														
		1979														
F(53,65)		▲														
G(54)		D5DZ 5442084											D			1
		D6DZ 5442084									B					1
		D7DZ 5442084			C					B						1
		D8DZ 5442084				B		A								1
G(66)		D7DZ 6642084			C					B						1
		D8DZ 6642084				B		A								1
J		▲														
L(62)		D1FZ 6242084		B												1
L(64) – – w/o all glass rear door		D2FZ 6442084		A												1
L(73)		D2FZ 7342084		A												1
P(36,54,66)		▲														
P(74)		D8BZ 7442084		A												1

YEAR	MODEL/RESTRICTIONS	PART NUMBER	DESCRIPTION	QTY.
422A00	RUN (BACK WINDOW GLASS)			
73/76	A(71),Y(71) "From 3/23/73"	D3AZ 71422A00-B		2
77/78	A(71)			2
79	A(74)	D9AZ 74422A00-A		2
42202-3	BRACKET (BACK WINDOW UPPER STOP)			
79	A(74)	D9AZ 7442202-A	R.H. and L.H.	2
422B18-9	BRACKET (BACK WINDOW GLASS)			
79	A(74)	(RH) D9AZ 74422B18-A	(LH) D9AZ 74422B19-A	1
42220	FRAME (BACK WINDOW UPPER)			
79	A(54,66)	D9AZ 5442220-A		1
79	J	D9ZZ 6142220-A		1
78/	P(36)	E0BZ 3642220-A		1
78/	P(54,66)	E0BZ 5442220-A		1
423A04	Refer to Exterior Moulding Section "R" for complete retainer information			
423B06	Refer to Exterior Moulding Section "R" for complete retainer information			
423K10	COVER (BACK PANEL MOULDING JOINT)			
73/78	J	D0RY 62423K10-A		1
		113233-ES	Washer	1
42318	RETAINER (BACK WINDOW OUTSIDE SIDE MOULDING)			
73	A(71),Y(71)	C9AZ 7142318-B		2
423A18-9	Refer to Exterior Moulding Section at the end of this catalog			
423B18	RETAINER (BACK WINDOW GARNISH SIDE MOULDING)			
79	A(54)	D9AZ 54423B18-A		4
79	J			2
423A20-1	Refer to Exterior Moulding Section at the end of this catalog			
423A42	PANEL (LOWER BACK)-Also refer to Exterior Moulding Section at the end of this catalog			
79	A(54,66)	D9MY 54423A42-A		1
423A58	MOULDING (LOWER BACK PANEL)-Also refer to Exterior Moulding Section at the end of this catalog			
77/	K	D7LY 65423A58-A		1
42364	Refer to Exterior Moulding Section "R" for complete retainer information			
423A66	NUT (BACK BELT MOULDING RETAINING)-Also refer to Exterior Moulding Section "R" for complete retainer information			
73/78	J	D0RY 62423A66-A	For lower back panel refer to group 40320	12
		E804110-S	Clip	12

COPYRIGHT © 1986 — FORD MOTOR COMPANY — DEARBORN, MICHIGAN

1973/79 LINCOLN-MERCURY CARS

YEAR	MODEL/RESTRICTIONS	PART NUMBER	DESCRIPTION	QTY.
423A70	Refer to Exterior Moulding Section at the end of this catalog			
424A02	SUPPORT (BACK WINDOW OUTSIDE LOWER MOULDING)			
79	V	D94Y 54424A02-A		1
424B02	Refer to Exterior Moulding Section "R" for complete retainer information			
42404-5	Refer to Exterior Moulding Section at the end of this catalog			
42410-1	MOULDING (BACK WINDOW GARNISH UPPER) - Paint to match when color is not indicated			
79	A(54,66)	D9AZ 5442410-A	Paint to match	1
79	D(53)	(RH) D9VY 5342410-A	(LH) D9VY 5342411-A Blue-cloth	1
79	J	D9ZZ 6142410-A	Paint to match	1
78/	P(36)	D8BZ 3642410-A		1
78/	P(54,66)	D8BZ 5442410-A		1
42413	Refer to Exterior Moulding Section "R" for complete retainer information			
42416-7	MOULDING (BACK WINDOW GARNISH SIDE)-Paint to match when color is not indicated			
Notes:	@ Paint to match			
79	A(54)	(RH) D9AZ 5442416-A	(LH) D9AZ 5442417-A	1
76/78	J(64S)		Refer to Exterior Moulding Section	
78/	P(36)	(RH) D8BZ 3642416-A	(LH) D8BZ 3642417-A	1
78/	P(54)	(RH) D8BZ 5442416-A	(LH) D8BZ 5442417-A	1
42426	Refer to Exterior Moulding Section at the end of this catalog			
42430-1	Refer to Exterior Moulding Section at the end of this catalog			
424A44	Refer to group 423A58			
42450	Refer to Exterior Moulding Section at the end of this catalog			
42456-7	MOULDING (BACK WINDOW GARNISH LOWER)-Paint to match when color is not indicated			
79	A(54,66)	(RH) D9AZ 5442456-A	(LH) D9AZ 5442457-A	1
42458	Refer to Exterior Moulding Section at the end of this catalog			
42468	RETAINER (BACK WINDOW UPPER GARNISH MOULDING)			
79	A(54,66)	D9AZ 5442468-A		4
79	J	D9ZZ 6642468-A		3
42492-3	Refer to Exterior Moulding Section at the end of this catalog			
425A00	Refer to Exterior Moulding Section "R" for complete retainer information			
42512-5K17	Refer to Exterior Moulding Section at the end of this catalog			
42527	Refer to Exterior Moulding Section "R" for complete retainer information			
42528-32	Refer to Exterior Moulding Section at the end of this catalog			
42533	Refer to Exterior Moulding Section "R" for complete retainer information			
425B34	RETAINER (TAILGATE HEADER RAIL GARNISH MOULDING)			
79	A(74)	D9AZ 74425B34-A		4
425A46	Refer to Exterior Moulding Section at the end of this catalog			
42570-1	Refer to Exterior Moulding Section at the end of this catalog			
425A92-4	Refer to Exterior Moulding Section "R" for complete retainer information			
42700-1	HINGE (LUGGAGE COMPARTMENT DOOR)			
75/76	A(53,65),Y(53,65)	D5AZ 6042701-A		1
77/78	A(53,65)			1
79	A(54,66) - - w/spring	(RH) D9AZ 5442700-A	(LH) D9AZ 5442701-A	1
79	A(54,66) - - w/o spring	(RH) D9AZ 5442700-B	(LH) D9AZ 5442701-B	1
77/	D	(RH) D7VY 6042700-B	(LH) D7VY 6042701-B	1

YEAR	MODEL/RESTRICTIONS	PART NUMBER	DESCRIPTION	QTY.
42700-1	HINGE (LUGGAGE COMPARTMENT DOOR) — Cont'd			
77/	F(53,65)	(RH) D70Z 6542700-B	(LH) D70Z 6542701-B	1
75/	G	(RH) D7DZ 6642700-A	(LH) D7DZ 6642701-A	1
76/78	J		Refer to group 42900-1	
79	J	D9ZZ 6142700-A	R.H. and L.H.	2
74/	L(62)	(RH) D4FZ 6242700-A	(LH) D4FZ 6242701-A	1
74/	L(64) - - w/o all glass rear door	(RH) D2FZ 6442700-A	(LH) D2FZ 6442701-A	1
77/	L(64) - - w/all glass rear door	(RH) D7FZ 6442700-B	(LH) D7FZ 6442701-B	1
77/	K	(RH) D7LY 6542700-B	(LH) D7LY 6542701-B	1
78/	P(36,54,66)	(RH) D8BZ 5442700-A	(LH) D8BZ 5442701-A	1
77/	V	(RH) D74Y 5442700-A	(LH) D74Y 5442701-A	1
74/	L(64)	383278-S2	(MM-296-AG)-nut and washer-1/4"-20 x 3/4"	4
		376838-S2	(MM-296-AF)-nut and washer-5/16"-18	2
427A24-5	BRACKET (LUGGAGE COMPARTMENT DOOR HINGE TO FLOOR PAN)			
73/76	A(53,57,65),Y(53,65)	(RH) C9MY 63427A24-A	(LH) C9MY 63427A25-A	1
77/	A(53,65)			1
77/	D	D7VY 60427A24-A	R.H. and L.H.	2
42738-9	BRACKET (LUGGAGE COMPARTMENT DOOR HINGE TO WHEELHOUSE)			
79	A(54,66)	(RH) D9AZ 5442738-A	(LH) D9AZ 5442739-A	1
79	J	(RH) D9ZZ 6642738-A	(LH) D9ZZ 6642739-A	1
77/	F(53,65)	(RH) D70Z 6542738-A	(LH) D70Z 6542739-A	1
75/	G	D5DZ 6642738-A	R.H. and L.H.	2
78/	P(36,54,66)	D8BZ 5442738-A	R.H. and L.H.	2
77/	V	D5DZ 6642738-A	R.H. and L.H.	2
42744-5	BRACKET (LUGGAGE COMPARTMENT DOOR HINGE TO WHEELHOUSE)			
77/	K	(RH) D7LY 6542744-A	(LH) D7LY 6542745-A	1
42746	SPACER (LUGGAGE COMPARTMENT DOOR HINGE ON DOOR)			
77/	L(64) - - w/all glass rear door	D7FZ 6442746-B		6
427A48	BRACKET (LUGGAGE COMPARTMENT DOOR LIFT ON BODY)-Paint to match			
79	J	D9ZZ 61427A48-A	R.H. and L.H.	2
74/	L(64)	D7FZ 64427A48-A	R.H. and L.H.	2
42752	PLATE (LUGGAGE COMPARTMENT DOOR HINGE ANCHOR ON DOOR)			
73/76	A(53,57,65),C(53,63,65),F,G,K,P	C9AZ 6242752-A		2
77/78	A(53,65),D,F(53,65),P,V			2
79	A(54,66),D,F(53,65),P,V			2
427A54	RETAINER (LUGGAGE COMPARTMENT DOOR HINGE SPRING)			
79	A(54,66)	D9AZ 54427A54-A		2
42760	SPRING (LUGGAGE COMPARTMENT DOOR HINGE)			
79	A(54,66)	D9AZ 5442760-A		2
427A88	COVER (LUGGAGE COMPARTMENT DOOR HINGE ACCESS HOLE)			
74/75	L(64)	D3FZ 64427A88-C	Tan-paint to match	AR
76	L(64)	D3FZ 64427A88-C	Tan-paint to match	AR
77/	L(64)	D3FZ 64427A88-C	Tan-paint to match	1
427A94-5	SUPPORT (LUGGAGE COMPARTMENT DOOR LIFT BRACKET)			
74/	L(64)	(RH) D2FZ 64427A94-A	(LH) D2FZ 64427A95-A	1
42808	ADJUSTER (LUGGAGE COMPARTMENT DOOR HINGE SPRING)			
79	A(54,66)	D9AZ 5442808-A		2
42840	PAD (LUGGAGE COMPARTMENT DOOR HINGE ON BODY)			
74/	L(64) - - w/o all glass rear door	D2FZ 6442840-A	R.H. and L.H.	2
77/	L(64) - - w/all glass rear door	D7FZ 6442840-A	R.H. and L.H.	2
79	J	D9ZZ 6142840-B	R.H. and L.H.	2
42842-3	PAD (LUGGAGE COMPARTMENT DOOR HINGE ON DOOR)			
74/	L(64) - - w/o all glass rear door	(RH) D2FZ 6442842-A	(LH) D2FZ 6442843-A	1
77/	L(64) - - w/all glass rear door	D7FZ 6442842-A	R.H. and L.H.	2
42900-1	HINGE (LIFTGATE)			
74/	L(73)	(RH) D4FZ 7342900-A	(LH) D4FZ 7342901-A	1
		371492-S2	(BB-569)-screw and washer-1/4"-20 x 3/4"	8
78/	P(74)	D8BZ 7442900-A	R.H. and L.H.	2

COPYRIGHT © 1986 — FORD MOTOR COMPANY — DEARBORN, MICHIGAN

1973/79 LINCOLN-MERCURY CARS

YEAR	MODEL/RESTRICTIONS	PART NUMBER	DESCRIPTION	QTY.
42946	COVER (LIFTGATE HINGE)			
74/	L(73)	D3FZ 7342946-A	Black-paint to match	1
430A20	PIVOT (TAILGATE LOWER HINGE)			
73/76	A(71),C(71),Y(71)	C9AZ 71430A20-A	2 3/16" long	1
77	A(71),F(71)			1
78	A(71)			1
43024	REINFORCEMENT (TAILGATE LOWER HINGE ON GATE)			
79	A(74)	D9AZ 7443024-A		1
430A28	PLATE (TAILGATE COUNTERBALANCE TORSION BAR MOUNTING)			
79	A(74)	D9AZ 74430A28-A		1
43030	PIN (TAILGATE or LUGGAGE COMPARTMENT HINGE)			
73/76	A,C,P,Y	B9A 5943030-A	Door hinge-cut to fit	AR
77/	A,F			AR
79	J	D9ZZ 6643030-A	R.H. and L.H. Upper and Lower	4
430A30	BRACKET (TAILGATE COUNTERBALANCE TORSION BAR)			
79	A(74)	D9AZ 74430A30-A		AR
43050	RETAINER (TAILGATE COUNTERBALANCE TORSION BAR)			
79	A(74)	D9AZ 7443050-A		1
43052	CABLE (TAILGATE CHECK)			
73/76	A(71),Y(71)	D3AZ 7143052-A		1
77/78	A(71)			1
79	A(74)	D9AZ 7443052-A		1
43056	HINGE (TAILGATE LOWER)			
73/76	A(71),Y(71)	D3AZ 7143056-A		1
77/78	A(71)			1
79	A(74)	D9AZ 7443056-A	Upper and lower	1
43060	REINFORCEMENT (TAILGATE UPPER HINGE ON GATE)			
79	A(74)	D9AZ 7443060-A		1
430A70	HANDLE and HOUSING ASSY. (TAILGATE OUTSIDE LATCH RELEASE)-Incl. attaching parts			
73/76	A(71),Y(71)	C9AZ 71430A70-A		1
77/78	A(71)			1
79	A(74)	D9AZ 74430A70-A		1
43086	HINGE (TAILGATE UPPER ON BODY)-Also refer to groups 43090 and 43096			
73/76	A(71),Y(71)	C9AZ 7143086-A		1
77/78	A(71)			1
43090	HINGE (TAILGATE UPPER ON GATE)			
76/78	A(71) "From 7/1/76"	D6AZ 7143090-A		1
79	A(74)	D9AZ 7443090-A		1
43098	SPACER (TAILGATE UPPER HINGE ON BODY)			
79	J	D9ZZ 6143098-A		AR
74/	L(64) - - w/o all glass rear door	D2FZ 6443098-A	R.H. and L.H. - liftgate door	2
79	P(74)	D9ZZ 6143098-A		AR
431B04	SPRING (LIFTGATE ASSIST)			
78/	P(74)	D8BZ 74431B04-A	R.H. and L.H.	2
		381671-S45X	(UU-89-C)-washer head screw 8-18 x 3/8"	2
		387894-S	(CC-49-E)-bumper 5/32" x 39/64" O.D.	2
431B06	SEAL (LIFTGATE ASSIST SPRING)			
74/	L(73)	D3FZ 73431B06-A		1
431A24	LINK (TAILGATE UPPER LATCH TO LOWER LATCH ACTUATOR)			
79	A(74)	D9AZ 74431A24-A		1
431A32	ROD (TAILGATE LATCH PUSH BUTTON)			
79	A(74)	D9AZ 74431A32-A		1
431A34	GROMMET (TAILGATE LATCH KNOB)			
73/76	A(71),C(71),Y(71)	C9AZ 71431A34-A		1
77/78	A(71)			1
77	F(71)		Refer to group 21999	
431A36	KNOB (TAILGATE LATCH CONTROL ROD)-Also refer to group 21850			
73/76	A(71),C(71),Y(71)	C9AZ 71431A36-AA		1
77/78	A(65,71),F(65),G(66),L			AR
79	A(66,74)F,G,L			AR
77	F(71)			AR

YEAR	MODEL/RESTRICTIONS	PART NUMBER	DESCRIPTION	QTY.
431A38	ACTUATOR (TAILGATE LATCH)			
75/76	A(71),Y(71) - - w/power latch	D5AZ 71431A38-A		1
77/78	A(71) - - w/power latch			1
431A40	ROD (TAILGATE OUTSIDE HANDLE)			
79	A(74)	D9AZ 74431A40-A		1
43146	PLATE (TAILGATE STRIKER)			
79	A(74)	D9AZ 7443146-A		1
43150	LATCH (TAILGATE)			
73/76	A(71),Y(71)	D4AZ 7143150-A		1
77/78	A(71)			1
79	A(74)	D9AZ 7443150-B		1
77/	L(73) "From 5/16/77"	D8FZ 7343150-A		1
78/	P(74)	D8BZ 7443150-B	Less cover	1
431C50	Refer to group 22050			
43152	SHIM (TAILGATE LATCH STRIKER PLATE)			
73/76	A(71),C(71),Y(71)	C6AZ 7143152-A	Lower	AR
		C6AZ 7143152-B	Upper	AR
77/78	A(71)	C6AZ 7143152-A	Lower	AR
		C6AZ 7143152-B	Upper	AR
79	A(74)	C6AZ 7143152-A	Lower	AR
77	F(71)	C6AZ 7143152-A	Lower	AR
		C6AZ 7143152-B	Upper	AR
431F52	STRIKER (TAILGATE UPPER LATCH)			
79	A(74)	D9AZ 74431F52-A		1
431E58	LINK (TAILGATE UPPER HINGE RELEASE)-Incl. anti-rattle			
79	A(74)	D9AZ 74431E58-A		1
431B62	BUMPER (TAILGATE LATCH)			
73/76	A(71),C(71),Y(71)	C6AZ 71431B62-A	Lower-rubber-3/4" x 1"	1
		C6AZ 71431B62-B	Upper-rubber-3/4" x 15/16"	1
77/78	A(71)	C6AZ 71431B62-A	Lower-rubber-3/4" x 1"	1
		C6AZ 71431B62-B	Upper-rubber-3/4" x 15/16"	1
79	A(74)			1
77	F(71)	C6AZ 71431B62-A	Lower-rubber-3/4" x 1"	1
		C6AZ 71431B62-B	Upper-rubber-3/4" x 5/16"	1
431C62	HANDLE (TAILGATE LATCH RELEASE)-Incl. attaching parts			
73/76	A(71),C(71),Y(71)	D7AZ 71431C62-A		1
77	A(71)			1
77/78	A(71)			1
79	A(74)	D9AZ 74431C62-A		1
77	F(71)	D7AZ 71431C62-A		1
43170	CONTROL (TAILGATE LATCH RELEASE)			
77/78	A(71) "From 6/1/77"	D7AZ 7143170-A		1
79	A(74)	D9AZ 7443170-A		1
77	F(71) "From 6/1/77"	D7AZ 7143170-A		1
431E72	STRIKER (TAILGATE LOWER LATCH)			
79	A(74)	D9AZ 74431E72-B		1
431F76	ADJUSTER (TAILGATE LOCK ROD)			
79	A(74)	D9AZ 74431F76-A		3
431D88	LATCH (TAILGATE LOWER)-Incl. attaching parts			
79	A(74)	D9AZ 74431D88-A		1
43200	LATCH (LUGGAGE COMPARTMENT DOOR)			
73/76	A(53,57,65),Y(53,65) - - w/o power latch	D7FZ 6243200-A		1
75/76	A(53,65),Y(53,65) - - w/power latch	D6LZ 6543200-A		1
77/78	A(53,65) - - w/o power latch	D7FZ 6243200-A		1
79	A(54,66) - - w/o power latch	D9ZZ 6643200-A		1

COPYRIGHT © 1986 — FORD MOTOR COMPANY — DEARBORN, MICHIGAN

1973/79 LINCOLN-MERCURY CARS

YEAR	MODEL/RESTRICTIONS	PART NUMBER	DESCRIPTION	QTY.
43200	LATCH (LUGGAGE COMPARTMENT DOOR) — Cont'd			
77/78	A(53,65) - - w/ power latch	D6LZ 6543200-A		1
79	A(54,66) - - w/power latch	D9BZ 5443200-A		1
73/75	C(53,63,65)	D20Z 6543200-A	Use w/D4GY 6540110-A	1
76	C(53,65) - - w/power latch	D6LZ 6543200-A	Use w/D60Z 6540110-B	1
76	C(53,65) - - w/o power latch	D5DZ 6643200-A	Use w/D60Z 6540110-B	1
73/74	D - - w/power latch	D1MY 6543200-A		1
75/	D - - w/power latch	D6LZ 6543200-A		1
76	D - - w/o power latch	D5ZZ 6943200-A		1
73	F	D7FZ 6243200-A		1
74/75	F	D20Z 6543200-A	Use w/D4GY 6540110-A	1
76	F - - w/o power latch	D5DZ 6643200-A	Use w/D60Z 6540110-B	1
76	F - - w/power latch	D6LZ 6543200-A	Use w/D60Z 6540110-B	1
77/	F(53,65) - - w/o power latch	D5DZ 6643200-A		1
77/	F(53,65) - - w/power latch	D6LZ 6543200-A		1
75/	G - - w/o anti-theft alarm system	D5DZ 6643200-A		1
75/	G - - w/anti-theft alarm system	D5DZ 6643200-B	Incl. switch	1
76/78	J	D5RY 6443200-A		1
79	J - - w/manual latch	D9ZZ 6643200-A		1
79	J - - w/power latch	D9ZZ 6643200-B		1
73/76	K - - w/o power latch	D7FZ 6243200-A		1
77/	K - - w/o power latch	D5DZ 6643200-A		1
73/74	K - - w/power latch	D1MY 6543200-A		1
75/	K - - w/power latch	D6LZ 6543200-A		1
74/	L(62,64) - - w/o power latch and w/o vis/lt grp	D7FZ 6243200-A		1
76/	L(62,64) - - w/power latch	D6LZ 6543200-A		1
77/	L(64) - - w/o power latch and w/ vis/lt grp	D5ZZ 6943200-A	Also refer to group 14018	1
73/78	P - - w/o power latch	D7FZ 6243200-A		1
75/78	P - - w/power latch	D6LZ 6543200-A		1
79	P - - w/power latch	D9BZ 5443200-A		1
79	P - - w/o power latch	D9ZZ 6643200-A		1
77/	V - - w/manual latch	D5DZ 6643200-A		1
43207	SEAL (LUGGAGE COMPARTMENT DOOR LATCH CYLINDER)			
73/76	D	★	Improvise-cut to fit from vinyl foam-7/8" x 11/16" x 1/8"	
43216	PLATE (LUGGAGE COMPARTMENT DOOR LOCK MOUNTING)			
75/	D	D7VY 6043216-A		1
78/	P(36,54,66)	D8BZ 5443216-A		1
43235	BRACKET (LUGGAGE COMPARTMENT DOOR LATCH STRIKER)			
79	A(54,66)	D9MY 5443235-A		1
74/76	C(53,65)	D40Z 6543235-A		1
73	D	D0VY 6543235-A		1
76/	D	D6VY 6043235-A		1
77/	F(53,65D,K)	D70Z 6543235-A		1
77/	F(65L)	D7WY 6543235-A		1
75/	G "From 3/2/75"	D5DZ 6643235-B		1
79	J	E1ZZ 6643235-A		1
74/78	K	D4LY 6543235-A		1
78/	P(36)	D8BZ 3643235-A		1
78/	P(54,66)	D8BZ 5443235-A		1
77/	V	D74Y 5443235-A		1
43240	Improvise from bulk hose (17543)			
43243	COVER (LUGGAGE COMPARTMENT DOOR LOCK MECHANISM)			
78/	P(74)	D8BZ 7443243-A		1

1973/79 LINCOLN-MERCURY CARS

YEAR	MODEL/RESTRICTIONS	PART NUMBER	DESCRIPTION	QTY.
432A48	SUPPORT (LUGGAGE COMPARTMENT DOOR LOCK)			
79	A(54,66)	D9MY 54432A48-A		1
75/	D	D5DZ 66432A48-A		1
77/78	F(53,65) - - w/o power latch	D5DZ 66432A48-A		1
79	F	D5DZ 66432A48-A		1
75/	G - - w/o power latch	D5DZ 66432A48-A		1
77/	G - - w/power latch	E0AZ 54432A48-A	Plate-door latch mounting	1
79	J	D9ZZ 66432A48-A		1
77/	K - - w/o power latch	D5DZ 66432A48-A		1
77/	K - - w/power latch	E0AZ 54432A48-A	Plate-door latch mounting	2
78/	P(36,54,66)	D5DZ 66432A48-A		1
77/	V - - w/o power latch	D5DZ 66432A48-A		1
77/	V - - w/power latch	E0AZ 54432A48-A	Plate-door latch mounting	1
43252	PLATE (LUGGAGE COMPARTMENT DOOR LATCH STRIKER)			
73/75	A(53,57,65),C(53,63,65),F, Y(53,65)	D3AZ 6543252-A		1
73/74	D	C5AZ 6243252-B		1
75	D	D3AZ 6543252-A		1
73	K	C7ZZ 6543252-A		1
74/76	K	C5AZ 6243252-B	Zinc plate	1
77/	K			1
73/77	P	C7ZZ 6543252-A		1
74/	L(62,64) - - w/o all glass rear door	D1FZ 6243252-B		1
77/	L(64) - - w/all glass rear door	D7FZ 6443252-A		1
77/	V	D74Y 5443252-A		1
43268	BRACKET (LUGGAGE COMPARTMENT DOOR LATCH)			
79	A(54,66)	D9MY 5443268-A		1
77/	F(53,65)	D5DZ 6643268-A		1
75/	G			1
79	J	D9ZZ 6643268-A		1
77/	K	D8LY 6543268-A	Chrome plate	1
79	P(36,54,66)	D8BZ 5443268-A		1
43275	Refer to group 43235			
432A76	SLEEVE (LUGGAGE COMPARTMENT DOOR LATCH STRIKER)			
79	J	D9ZZ 61432A76-A		1
43283	EXTENSION (LUGGAGE COMPARTMENT DOOR LATCH)			
73/76	A(53,57,65),Y(53,65)	D3MY 6543283-A		1
77/78	A(53,65)			1
79	A	D9MY 5443283-A		1
73/76	C(53,63,65)	D20Z 6543283-A		1
73/	D	D6VY 6043283-A	4 1/2" long	1
77/	D	D7VY 6043283-A	4" long	1
74/76	F	D20Z 6543283-A		1
77/	F(53,65)	D70Z 6543283-B		1
75/	G	D7DZ 6643283-A		1
79	J	D9ZZ 6643283-A		1
73	K	D00Z 6343283-A		1
74/	K	D4LY 6543283-A		1
74/	L(62,64)	D1FZ 6243283-A		1
73/77	P	D00Z 6343283-A		1
78/	P(36,54,66)	D8BZ 5443283-A		1
77/	V	D74Y 5443283-AA		1

COPYRIGHT © 1986 — FORD MOTOR COMPANY — DEARBORN, MICHIGAN

1973/79 LINCOLN-MERCURY CARS

YEAR	MODEL/RESTRICTIONS	PART NUMBER	DESCRIPTION	QTY.
433A28	SEAL (LUGGAGE COMPARTMENT DOOR LOCK CYLINDER RETAINER)			
73/76	A(53,57,65),C(53,63,65),D,F,K,	D20Z 65433A28-A		1
	Y			
77/	A(53,65),D,J,K			1
75/	G	D2ZZ 65433A28-A		1
77/	F(53,65),V			1
43380	ROD ASSEMBLY (TAIL GATE LATCH CYLINDER)			
79	A(74)	D9AZ 7443380-A		1
43400	HANDLE (LIFTGATE)-Incl. attaching parts			
77/	L(64)	D7FY 6443400-A	Black	1
74/	L(73)	D7FZ 7343400-A	Also use 379556-S-not included w/attaching parts	1
43500	Refer to Exterior Moulding Section at the end of this catalog			
43505-7	Refer to group 22050			
43534	SPACER (LUGGAGE COMPARTMENT DOOR LOCK CYLINDER COVER)			
78/	F	D8WY 6543534-A		1
43539	PAD (TAILGATE OUTSIDE HANDLE)			
73/76	A(71),Y(71)	C9AZ 7143539-A		1
77/	A(71)			1
77/	L(64)	(RH) D7FZ 6443539-A	(LH) D7FZ 6443539-B Liftgate	1
43562	Key (Blank)-For Replacement Key Blanks, Order Through Rotunda Equipment			
43584	INSERT (LUGGAGE COMPARTMENT DOOR LOCK KEYHOLE COVER)			
73/74	D	C6VY 5343584-A		1
43600-3	SLEEVE (LUGGAGE COMPARTMENT DOOR LOCK CYLINDER)-Also refer to group 43514			
74/78	A(53,65)	D7MY 6543600-A		1
79	A(54,66)	D9MY 5443600-B	Incl. cover	1
73	C(53K,65K)	D30Z 6543603-A	Incl. attaching parts	1
73/74	D	D0VY 6543600-A	Incl. cover and attaching parts	1
75/	D	D5VY 6043600-A		1
77/	F(65L)	D7WY 6543600-A		1
73/	K(Exc. Diamond Jubilee Edition)	D2LY 6543600-A	Red	1
79	K(Diamond Jubilee Edition)	D9LY 6543600-A	Blue	1
		D9LY 6543600-B	White	1
77/	V	D74Y 5443600-A		1
43625	PAD (LUGGAGE COMPARTMENT DOOR LOCK CYLINDER SLEEVE)			
73/75	A(53,57,65),K,Y(53,65)	C7AZ 6243625-A	Round-incl. (3) 3/8" notches and (1) 1/2" notch	1
76	A(53,65),Y(53,65) "From 12/15/75"	D6AZ 6043625-A		1
77/78	A(53,65)			1
79	A(54,66)			1
73/76	C(53,65)	C7AZ 6243625-A	Round	1
73/74	D			1
73/79	D	D0VY 6543625-A	Oblong type	1
75/	D,G,K	D6AZ 6043625-A	Round	1
73/	F	C7AZ 6243625-A		1
73/	K	D2LY 6543625-A	Oblong type	1
73/75	L,P	C7AZ 6243625-A		1
79	J			1
76/	L,P	D6AZ 6043625-A	Round	1
77/	V			1
77/	V	D74Y 5443625-A	Oblong type	1

1973/79 LINCOLN-MERCURY CARS

YEAR	MODEL/RESTRICTIONS	PART NUMBER	DESCRIPTION	QTY.
43629	**RETAINER (LUGGAGE COMPARTMENT DOOR LOCK CYLINDER)**			
79	A(54,66)	D8BZ 5443629-A		1
73/76	C(53,63,65)	D20Z 6543629-A		1
73/	D	D2VY 6543629-A		1
74/76	F	D20Z 6543629-A		1
77/	F(53,65D,K)	D5DZ 6643629-A		1
75/	G	D5DZ 6643629-A		1
79	J	D9ZZ 6643629-A		1
73/76	K	D2LY 6543629-A		1
77/	K	D7LY 6543629-A		1
74/	L(62)	D2FZ 6243629-A		1
74/	L(64)	D2FZ 6443629-A		1
73/77	P	D2DZ 6243629-A		1
78/	P(36,54,66)	D8BZ 5443629-A		1
43634	**BUMPER (LUGGAGE COMPARTMENT DOOR INSIDE)**			
79	J	D9ZZ 6143634-A		AR
74/	L(73)	D3FZ 7343634-A	R.H. and L.H.	2
43720	**WEATHERSTRIP (LUGGAGE COMPARTMENT DOOR)**			
73/76	A(53,57,65),C(53,63,65),D,F,Y(53,65)	D0AZ 6243720-A	219" long-cut to fit	1
		380511-S	(KK-73)-grommet-3/16"	1
77/78	A(53,65),D,F(53,65)	D0AZ 6243720-A	219" long-cut to fit	1
79	A(54,66)	D9MY 5443720-A		1
79	D,F	D0AZ 6243720-A	219" long-cut to fit	2
75/	G	D5DZ 6643720-A	170" long-cut to fit	1
73/78	J	D5RY 6443720-B	170" long-cut to fit	1
79	J	D9ZZ 6143720-A		1
73/	K	D0AZ 6243720-A	219" long-cut to fit	1
74/	L(62)	D5DZ 6643720-A	170" long-cut to fit	1
75/76	L(73)	D7FZ 6443720-D		1
74/76	L(64)	D6FZ 6443720-A	155" long	1
77/	L(64,73) - - w/o all glass rear door	D7FZ 6443720-D	155" long	1
77/	L(64) - - w/all glass rear door	D7FZ 6443720-C	206" long	1
73/77	P	D5DZ 6643720-A	170" long-cut to fit	1
78/	P	D8BZ 5443720-A	Cut to fit	1
77/	V	D5DZ 6643720-A	170" long-cut to fit	1
43876	**ROD (TAILGATE LOCK CYLINDER TO RELEASE)**			
79	A(74)	D9AZ 7443876-A		1
44000	**REGULATOR (BACK WINDOW)**			
73/76	A(71),Y(71)	D1AZ 7144000-B	Power-less motor	1
77/78	A(71)			1
79	A(74)	D9AZ 7444000-A		1
73/76	C(71)	D20Z 7144000-A	Manual	1
77	F(71)	D20Z 7144000-A	Manual	1
44009	**HANDLE (BACK WINDOW REGULATOR)-Incl. attaching parts**			
73/76	C(71) - - w/manual regulator	D20Z 7144009-A		1
77	F(71) - - w/manual regulator			1
44074-5	**BRACKET (BACK WINDOW REGULAR ARM)**			
73/76	A(71),Y(71) "From 3/1/73"	(RH) D3AZ 7144074-A	(LH) D3AZ 7144075-A	1
77/78	A(71)			1
79	A(74)	D9AZ 7444074-A		1
44084	**BUTTON (BACK WINDOW REGULATOR)**			
79	A(74)	D9AZ 7444084-A		2
442A26	**PAD (REAR WINDOW LOUVER SUPPORT)**			
79	J	D9ZZ 61442A26-A	With screw attachment	2
442A54	**HARDWARE KIT (BACK WINDOW LOUVER)**			
79	J(61)	E2FZ 61442A54-A	Used w/tape attachment design louver kit	1

Consists of

2-	Washer	2-	Springs
2-	Studs	1-	Installation Sketch
2-	Grommets		

COPYRIGHT © 1986 — FORD MOTOR COMPANY — DEARBORN, MICHIGAN

1973/79 LINCOLN-MERCURY CARS

YEAR	MODEL/RESTRICTIONS	PART NUMBER	DESCRIPTION	QTY.
44268	LOUVER KIT (BACK WINDOW)			
Note:	17682 R.H. outside rear view mirror is required with installation of rear window louver kits			
79	J(61)	D9ZZ 6144268-A	Screw attachment	1
79	J(61)	E0ZZ 6144268-A	With tape attachment	1
79	L(73)	D9FZ 7344268-A		1
44272-3	HINGE (REAR WINDOW LOUVER)			
79	J	(RH) D9ZZ 6144272-A	(LH) D9ZZ 6144273-A With screw attachment	1
444A14	SPACER (TAILGATE CHECK CABLE)			
79	A(74)	D9AZ 74444A14-A		1
44486	BOLT (TAILGATE CHECK CABLE)			
73/76	A(71),C(71),Y(71)	C6AZ 7144486-C	Upper-on body-3/8"-16 x 2 13/64" hex. head	1
		C6AZ 7144486-B	Lower-on gate-7/16"-14 x 1 9/32"- cross recess head	1
77/	A(71)	C6AZ 7144486-C	Upper-on body-3/8"- 16 x 2 13/64" hex head	1
		C6AZ 7144486-B	Lower-on gate-7/16"-14 x 1 9/32"- cross recess head	1
77	F(71)	C6AZ 7144486-C	Upper-on body-3/8"-16 x 2 13/64" hex hd	1
		C6AZ 7144486-B	Lower-on gate-7/16"-14 x 1 9/32"- cross recess hd	1
44890-1	BAR (LUGGAGE COMPARTMENT DOOR or TAILGATE HINGE TORSION)			
Notes:	† Color coded yellow, ● Color coded red, $ Color coded red/yellow			
79	A(74)	D9AZ 7444890-A		1
75/	G	(RH) † D7DZ 6644890-B	(LH) D5DZ 6644891-A	1
77/	K(Exc. Diamond Jubilee Edition)	(RH) † D7LY 6544890-A	(LH) D7LY 6544891-A	1
78	K(Diamond Jubilee Edition)	(RH) † D8LY 6544890-A	(LH) D8LY 6544891-A	1
74/	L(73)	(RH) † D2FZ 7344890-A	(LH) D2FZ 7344891-A	1
78/	P	(RH) † D8BZ 5444890-A	(LH) D8BZ 5444891-A	1
77/	V	(RH) † D74Y 5444890-A	(LH) D74Y 5444891-A	1
45024	BOLT (LIFTGATE DOOR LIFT ON DOOR)			
77/	L(64)	D7FZ 6445024-B	R.H. and L.H.	2
45114-5	TROUGH (LUGGAGE COMPARTMENT DOOR SIDE DRAIN)			
73/76	C(53,65)		Serviced only in assy.-group 27840-1	
75/	D	(RH) D5VY 6045114-A	(LH) D5VY 6045115-A	1
77	F(53,65)		Serviced only in assy.-group 27840-1	
45118-9	TROUGH (LUGGAGE COMPARTMENT DOOR LOWER CORNER DRAIN)			
73/76	C		Serviced only in assy.- group 27840-1	
74	D		Serviced only in assy.- group 27840-1	
77	F(53,65)		Serviced only in assy.-group 27840-1	
78/	P		Serviced only in assy.-group 27840-1	
454A20	BRACKET (LUGGAGE COMPARTMENT FLOOR REAR COVER)			
75/	D	D5VY 60454A20-A		2
454A26	RING (LUGGAGE COVER RETAINER)			
77/	L(64)	D7FZ 64454A26-A	R.H. and L.H.	2
45588	RETAINER (LIFTGATE DOOR LIFT ON DOOR)			
79	J	E1ZZ 6145588-A	R.H. and L.H.	2
77/	L(64) - - w/all glass rear door	D7FZ 6445588-A	R.H. and L.H.	2
78/	P(74)	D7ZZ 6945588-A	R.H. and L.H.	2
45592	SPRING (LUGGAGE COMPARTMENT DOOR LIFT RETAINER)			
74/	L(64)	D2FZ 6445592-A		4
78/	P(74)			AR
45792	COVER (LUGGAGE COMPARTMENT DOOR ACCESS HOLE)-Paint to match			
74/	L(64)	D1FZ 6445792-A	R.H. and L.H.-rubber and steel	2
45849	HANDLE (AUXILIARY FLOOR)			
76/78	J(64D,P)	D6RY 6445849-A		1
46004	CLIP (LUGGAGE COMPARTMENT CARRIER RETAINER)			
74/	L(62,64)	D1FZ 6246004-A	1" long	8
463K00	RETAINER (LUGGAGE COMPARTMENT DOOR TRIM PANEL)-Paint to match			
79	J	D9ZZ 61463K00-A	Outer	2
79	J	D9ZZ 61463K00-B	Inner	2
79	J	D9ZZ 61463K00-C	Lower	2

YEAR	MODEL/RESTRICTIONS	PART NUMBER	DESCRIPTION	QTY.
46312	BRACKET (LUGGAGE COMPARTMENT DOOR TRIM PANEL)			
79	J	D9ZZ 6146312-A		2
46506	PANEL (PACKAGE TRAY)-Also refer to group 46668 in Soft Trim Section			
79	A(54,66)	D9AZ 5446506-A		1
78/	P(36,54,66)	E0BZ 5446506-A		1
46510	Refer to group 46506			
46516	REINFORCEMENT (PACKAGE TRAY TO FLOOR PAN)			
73/76	C(53,63,65)	D20Z 6546516-A		1
77/	F(53,65),K			1
46608-9	BRACKET (PACKAGE TRAY STRAINER TO WHEELHOUSE)			
79	A(54,66)	D9AZ 5446608-A		1
75/	D(60)	(RH) D5VY 6046608-A	(LH) D5VY 6046609-A	1
46610-1	STRAINER (PACKAGE TRAY TO FLOOR)			
79	A(54,66)	D9AZ 5446610-A		1
78/	P(36)	D8BZ 3646610-A		1
78/	P(54,66)	E1DZ 5446610-A		1
46668	Refer to Soft Trim Section			
46674-5	BRACE (PACKAGE TRAY STRAINER TO FLOOR)			
79	A(54,66),D,K	(RH) D9AZ 5446674-A	(LH) D9AZ 5446675-A	1
78/	P(36)	D8BZ 3646674-A	R.H. and L.H.	2
78/	P(54,66)	D8BZ 5446674-A	R.H. and L.H.	2
46774-5	STRAINER (PACKAGE TRAY TO WHEELHOUSE)			
79	A(54,66)	(RH) D9AZ 5446774-A	(LH) D9AZ 5446775-A	1
75/	G(54)	(RH) D5DZ 5446774-A	(LH) D5DZ 5446775-A	1
75/	G(66)	(RH) D5DZ 6646774-A	(LH) D5DZ 6646775-A	1
78/	P(36)	(RH) D8BZ 3646774-A	(LH) D8BZ 3646775-A	1
79	P(54,66)	(RH) D9ZZ 6646774-A	(LH) D9ZZ 6646775-A	1
77/	V	(RH) D5DZ 5446774-A	(LH) D5DZ 5446775-A	1
46814	ABSORBER (PACKAGE TRAY TRIM SIDE SOUND)-Improvise			
47030	PANEL (SPARE WHEEL WELL SIDE LOWER)			
73/76	A(71),Y(71)	D3AZ 7147030-A	R.H. L.H.-refer to group 27859	1
77/78	A(71)	D3AZ 7147030-A	R.H. L.H.-refer to group 27859	1
73/76	A(71),C(71)	377678-S	(PP-3-E)-plug-button-1" dia. hole	1
77/78	A(71)			1
77/	F(71)			1
47042	COVER (SPARE WHEEL WELL)-Also refer to Soft Trim Section			
74/	L(73)	D6FZ 7347042-A		1
78/	P	D8BZ 7447042-A		1
47043	PANEL (SPARE WHEEL WELL)			
79	A(74)	D9AZ 7447043-A		1
78/	P	D8BZ 5447043-A		1
47076	BRACKET (SPARE WHEEL MOUNTING)			
74/76	C(53,65)	D40Z 6547076-A		1
77/	D	C7AZ 6247076-A		1
73	F(65,76)	C7AZ 6247076-A		1
74/76	F	D40Z 6547076-A		1
77/	F(53,65)			1
75/	G - - w/o collapsible tire			1
75/	G - - w/collapsible tire	D7DZ 6647076-A	Support-includes C7AZ 6247076-A bracket	1
79	J	C7AZ 6247076-A		1
75/	K	D40Z 6547076-A		1
74/	L	C7AZ 6247076-A		1
73/	P			1
77/	V - - w/o collapsible tire	D40Z 6547076-A		1
77/	V - - w/collapsible tire	D7DZ 6647076-A	Support-includes C7AZ 6247076-A bracket	1

COPYRIGHT © 1986 — FORD MOTOR COMPANY — DEARBORN, MICHIGAN

1973/79 LINCOLN-MERCURY CARS

YEAR	MODEL/RESTRICTIONS	PART NUMBER	DESCRIPTION	QTY.
47088	RETAINER (SPARE WHEEL WELL COVER REAR)			
73/76	A(71),C(71),Y(71)	D3AZ 7147088-A		1
77/78	A(71)			1
77	F(71)	D3AZ 7147088-A		1
79	A(74)			2
77/	L(73)	D8BZ 5447088-A		1
78/	P			1
47122	EXTENSION (SPARE WHEEL WELL SIDE LOWER FRONT)			
79	A(74)	D9AZ 7447122-A		1

1973/79
LINCOLN-MERCURY CARS

YEAR	MODEL/RESTRICTIONS	PART NUMBER	DESCRIPTION	QTY.
50002	Refer to Exterior Moulding Section "R" for complete retainer information			
500K20	SPRING (ROOF AIR DEFLECTOR)			
79	J - - w/removable glass panel	D9ZZ 66500K20-A		2
50030	Refer to Exterior Moulding Section "R" for complete retainer information			
50036	MOULDING (ROOF TRIM CENTER) - Paint to match			
79	A(74)	(RH) D9AZ 7450036-A	(LH) D9AZ 7450037-A	1
78/	P(74)	D9BZ 7450036-A	One piece design	1
50054	GLASS (PANEL)			
77/	D(53) - - w/fixed glass and w/o Coach Roof D(60) - - w/fixed glass	D7VY 5350054-G	Silver 36 3/4 x 55-incl. moulding and chemicals	1 1
77/	D(53) - - w/fixed glass and Coach Roof	D7VY 5350054-H	Silver 24" x 55"-incl. moulding and chemicals	1
79 78/	J - - w/removable glass panel P - - w/removable glass panel	E0BZ 5450054-A	R5840	1 1
77/	L - - w/removable glass panel	D7FZ 6250054-A	R5514	1
500A56	PIN (ROOF AIR DEFLECTOR HINGE)			
79	J - - w/removable glass panel	D9ZZ 66500A56-A		2
500A58	BRACKET (ROOF OPENING REINFORCEMENT)			
79	V - - w/sliding roof	D94Y 54500A58-A		2
50060	MOULDING ASSY. (ROOF OPENING GLASS OUTSIDE)			
77/ 77/	D(53) - - w/fixed glass and w/o Coach Roof D(60) - - w/fixed glass	D7VY 5350060-C		1 1
77/	D(53) - - w/fixed glass and Coach Roof	D7VY 5350060-D		1
78/	F - - w/sliding roof	D8SZ 6050060-A		1
50066	COVER (ROOF OPENING GLASS OUTSIDE MOULDING JOINT)			
77/	D - - w/fixed glass	D7VY 5350066-A		1
501A06	BRACKET (ROOF OPENING GLASS RETAINER)			
77/	L(62)	D7FZ 62501A06-A		2
78/	P - - w/removable glass panel	D9ZZ 66501A06-A		2
50144	SPRING (ROOF PANEL LATCH)			
79 77/ 78/	J - - w/removable glass panel L - - w/removable glass panel P - - w/removable glass panel	D8RZ 6450144-A		1
502P00-1	RETAINER (ROOF OPENING GLASS HINGE SPRING)			
79	J - - w/removable glass panel	(RH) D9ZZ 66502P00-A	(LH) D9ZZ 66502P01-A	1
77/	L - - w/removable glass panel	(RH) D7FZ 62502P00 A	(LH) D7FZ 62502P01-A	1
78/	P - - w/removable glass panel	(RH) D9ZZ 66502P00-A	(LH) D9ZZ 66502P01-A	1
50202	PANEL (ROOF)			
79	A(54,66)	D9AZ 5450202-A		1
79	A(74)	D9AZ 7450202-A		1
75/76	D(53)	D6VY 5350202-A		1
77/	D(53) - - w/o sliding roof	D6VY 5350202-A		1
77/	D(53) - - w/sliding roof	D7VY 5350202-A		1
75/	D(60) - - w/o sliding roof	D5VY 6050202-A		1
77/	D(60) - - w/sliding roof	D7VY 6050202-A		1
77/	F(53)	D70Z 5350202-A		1
77/	F(65) - - w/o sliding roof	D70Z 6550202-A		1
78/	F(65) - - w/sliding roof	D8WY 6550202-A		1
75/	G(54)	D5DZ 5450202-A		1
75/	G(66)	D5DZ 6650202-A		1
73/74	J - - w/o sliding roof	D0RY 6250202-A		1

COPYRIGHT © 1986 — FORD MOTOR COMPANY — DEARBORN, MICHIGAN

1973/79 LINCOLN-MERCURY CARS

YEAR	MODEL/RESTRICTIONS	PART NUMBER	DESCRIPTION	QTY.
50202	PANEL (ROOF) — Cont'd			
76/78	J - - w/o sliding roof	★ D5RY 6450202-A	Not repl. (7/81)	1
76/78	J - - w/sliding roof	★ D5RY 6450202-B	Not repl. (7/81)	1
79	J(61) - - w/o removable glass panel	D9ZZ 6150202-A		1
79	J(61) - - w/removable glass panel	D9ZZ 6150202-B		1
77/	K - - w/o sliding roof	D7LY 6550202-A		1
77/78	K - - w/sliding roof, w/o roof moulding	★ D7LY 6550202-B	Not repl. (7/81)	1
78/	K - - w/sliding roof w/ roof moulding	D8LY 6550202-A		1
74/	L(62,64) - - w/o sliding roof or removable glass panel	D1FZ 6250202-A		1
74	L(62,64) - - w/sliding roof	D4FZ 6250202-A		1
77/	L(62,64) - - w/removable glass panel	D7FZ 6250202-A		1
74/	L(73)	D2FZ 7350202-A		1
78/	P(36) - - w/o removable glass panel	D8BZ 3650202-A		1
78/	P(36) - - w/removable glass panel	D9BZ 3650202-A		1
78/	P(54,66) - - w/o removable glass panel	D8BZ 5450202-A		1
78/	P(54,66) - - w/removable glass panel	D9BZ 5450202-A		1
78/	P(74)	D8BZ 7450202-A		1
77/78	V	D5DZ 5450202-A		1
79	V - - w/o sliding roof	D94Y 5450202-A		1
79	V - - w/sliding roof	D94Y 5450202-B		1
502C06-7	RAIL and GUIDE (SLIDING ROOF)-Incl. attaching parts			
73/75	A(53,57),F,G,Y(53)	(RH) C8WY 65502C06-A	(LH) C8WY 65502C07-A 37 5/8" long	1
75/78	A(53)	(RH) D5WZ 65502C06-A	(LH) D5WZ 65502C07-A 36 7/8" long	1
75/77	F			1
75/	G			1
77/78	V			1
75/76	Y(53)			1
73	D	(RH) C9SZ 65502C06-A	(LH) C9SZ 65502C07-A 42 3/4" long	1
77/	D,K	(RH) D7LY 65502C06-A	(LH) D7LY 65502C07-A	1
78/	F(65)	(RH) D8SZ 60502C06-A	(LH) D8SZ 60502C07-A	1
79	V - - w/sliding roof	(RH) D94Y 54502C06-A	(LH) D94Y 54502C07-A	1
502P07	SEAL (ROOF OPENING PANEL HINGE SPRING RETAINER)			
79	J - - w/removable glass panel	D9ZZ 66502P07-A		2
77/	L(62,64) - - w/removable glass panel	D7FZ 62502P07 A		2
78/	P - - w/removable glass panel	D9ZZ 66502P07-A		2
502B08	DEFLECTOR (ROOF AIR BICYCLE ADAPTER)			
79	J - - w/"4 Seasons Rack"	D9ZZ 66502B08-A		1
502C08	SPRING (SLIDING ROOF PANEL GUIDE ADJUSTING)			
75/78	A	D5WZ 65502C08-A	Includes retainer and washer	2
75/76	D,K,Y			2
75/77	F			2
75/	G			2
77/78	V			2
502L08-9	GUIDE (SLIDING ROOF FRONT)-Incl. attaching parts			
75/78	A	D2FZ 62502L08-A	R.H. and L.H.-Type 2-single adjusting nut	2
75/76	D,K,Y			2
75/77	F			2
75/	G			2
74/77	L			2
77/78	V			2
77/	D,K	D7LY 65502L08-A	R.H. and L.H.	2
78/	F(65)	D8SZ 60502L08-A	R.H. and L.H.	2
79	V	D8SZ 60502L08-A		2
502L10	HOUSING (SLIDING ROOF CABLE DRIVE)-Incl. attaching parts			
73/76	A,D,F,G,K,Y	C9SZ 65502L10-A		1
77	A,F,G,V			1
78	A,G,V			1
79	G			1

1973/79
LINCOLN-MERCURY CARS

YEAR	MODEL/RESTRICTIONS	PART NUMBER	DESCRIPTION	QTY.
502B12	BUMPER (SLIDING ROOF PANEL REAR)			
73/76	K - - w/sliding roof	★	Improvise	1
502C12	WEATHERSTRIP (SLIDING ROOF PANEL REAR)			
73/76	A,D,F,Y	★ D3LZ 65502C12-A	Rear-black-45" long-cut to fit	1
75/76	G,K			1
		D3LZ 65502C12-B	Rear-gray-45" long-cut to fit	1
		D4SZ 65502C12-A	Rear-ivory-45" long-cut to fit	1
77/78	A,F,G,V	D7AZ 65502C12-A	Black	1
79	G			1
77/	D,K	D7LY 65502C12-A		1
73/75	A(65),D,K,Y(65)	★ D3SZ 65502C12-A	Rear-flange rubber-r/b D6SZ 65502C12-A (7/81)	1
76	A,D,F,G,K,Y	D6SZ 65502C12-A	Rear-flange rubber	1
77	F,G,V			1
78/	G			1
78	V			1
78/	F	D8SZ 60502C12-B		1
73/78	J	D0RY 62502C12-A	Rear	1
73/74	K	D3LZ 65502C12-A	Rear-black	1
74/77	L(62,64)	D7FZ 62502C12-A	Rear-rubber w/steel insert - 33" long	1
74/77	L(62,64)	D2FZ 62502C12-B	Rear-flange rubber	1
79	V	D8SZ 60502C12-B		1
502D14	ADJUSTER (SLIDING ROOF PANEL GUIDE)			
75/78	A,D,F,G,K,V,Y	D5LZ 65502D14-A	R.H. and L.H.-incl. retainer and washer-1 1/2" long	2
		D5LZ 65502D14-B	R.H. and L.H.-incl. retainer and washer-1 3/8" long	2
79	G	D5LZ 65502D14-B	R.H.andL.H.-incl. retainer and washer- 1 3/8" long	2
79	J - - w/removable glass panel	D7FZ 62502D14-A		2
77/	L - - w/removable glass panel			2
78/	P - - w/removable glass panel			2
502L14	COVER (SLIDING ROOF CABLE DRIVE HOUSING) - Incl. attaching parts			
73/78	A	C8WY 65502L14-A		1
73/76	D,K,Y			1
73/77	F			1
73/	G			1
77/78	V			1
77/	D,K	D7LY 65502L14-A		1
78	F	D8SZ 60502L14-A		1
79	V	D8SZ 60502L14-A		1
502L16-7	GUIDE (SLIDING ROOF CABLE) - Incl. attaching parts			
74	A(53,57,65),Y(53,65)	(RH) D4LZ 65502L16-A	(LH) D4LZ 65502L17-A Corner-upper	1
		(RH) D4LZ 65502L16-B	(LH) D4LZ 65502L17-B Corner-lower	1
74	A(53,57),Y(53)	(RH) D40Z 65502L16-A	(LH) D40Z 65502L17-A Front	1
75/76	A(53,65),Y(53,65)	(RH) D4LZ 65502L16-A	(LH) D4LZ 65502L17-A Corner-upper	1
77/78	A			1
		(RH) D4LZ 65502L16-B	(LH) D4LZ 65502L17-B Corner-lower	1
75/76	A(53),Y(53)	(RH) D40Z 65502L16-A	(LH) D40Z 65502L17-A Front	1
77/78	A(53)			1
75/76	A(65),Y(65)	(RH) D4SZ 65502L16-A	(LH) ★ Front	1
74/76	D	(RH) D4LZ 65502L16-A	(LH) D4LZ 65502L17-A Corner-upper	1
		(RH) D4LZ 65502L16-B	(LH) D4LZ 65502L17-B Corner-lower	1
77/	D,K	(RH) D7LY 65502L16-A	(LH) D7LY 65502L17-A	1
74/77	F,G	(RH) D4LZ 65502L16-A	(LH) D4LZ 65502L17-A Corner-upper	1
78/	G			
77	V			
		(RH) D4LZ 65502L16-B	(LH) D4LZ 65502L17-B Corner-lower	1
		(RH) D40Z 65502L16-A	(LH) D40Z 65502L17-A Front	1
78/	F	(RH) D8SZ 60502L16-A	(LH) D8SZ 60502L17-A	1
79	V	(RH) D8SZ 60502L16-A	(LH) D8SZ 60502L17-A	1
74/76	K	(RH) D4LZ 65502L16-A	(LH) D4LZ 65502L17-A Corner-upper	1
		(RH) D4LZ 65502L16-B	(LH) D4LZ 65502L17-B Corner-lower	1
79	V	(RH) D8SZ 60502L16-A	(LH) D8SZ 60502L17-A	1

COPYRIGHT © 1986 — FORD MOTOR COMPANY — DEARBORN, MICHIGAN

1973/79 LINCOLN-MERCURY CARS

YEAR	MODEL/RESTRICTIONS	PART NUMBER	DESCRIPTION	QTY.
50217	Refer to group 50244			
502L18	CABLE ASSY. (SLIDING ROOF)			
76/78	J	★ D5RY 64502L18-A	Not repl. (7/81)	1
		E840121-S100	(AN-6-E)-pin grooved-M2 x 5 x 10 (Metric)	1
502C19	GEAR BOX and DRIVE ASSY. (SLIDING ROOF)-Incl. attaching parts			
73/78	J	D0RY 62502C19-A		1
		50860-GS37	Screw-oval head-M4 x 15 (Metric)	2
74	L(62,64)	D2FZ 62502C19-A		1
75/77	L(62,64)	D4ZZ 60502C19-A		1
502B20-1	CABLE and SLIDE ASSY. (SLIDING ROOF)			
73/76	A,D,F,G,Y	(RH) D5WZ 65502B20-A	(LH) D5WZ 65502B21-A; Incl. long (Trico) adjuster	1
77	A,F,G,V			
78	A,G,V			1
79	G			1
77/	D,K	(RH) D7LY 65502B20-A	(LH) D7LY 65502B21-A	1
78/	F	(RH) D8SZ 60502B20-A	(LH) D8SZ 60502B21-A	1
76/78	J	(RH) ★ D5RY 64502B20-A Not repl. (7/81)	(LH) ★ D5RY 64502B21-A Not repl. (7/81)	1
		E866101-S	(AG-57-G-clip)	1
73	K	(RH) D3SZ 65502B20-A	(LH) D3SZ 65502B20-B	1
74/76	K	(RH) D5WZ 65502B20-A	(LH) D5WZ 65502B21-A; Incl. long (Trico) adjuster	1
74/77	L(62,64)	(RH) D2FZ 62502B20-B	(LH) D2FZ 62502B21-B	1
79	V	(RH) D8SZ 60502B20-A	(LH) D8SZ 60502B21-A	1
502M20	CLAMP (SLIDING ROOF PANEL GUIDE)			
76/78	J	★ D5RY 64502M20-A Not repl. (7/81)		3
502P20	SPACER (ROOF OPENING GLASS HANDLE)			
79	J - - w/removable glass panel	D7FZ 62502P20-A		1
77/	L - - w/removable glass panel			1
78/	P - - w/removable glass panel			1
502P21	SPACER (ROOF OPENING GLASS HINGE)			
79	J - - w/removable glass panel	D7FZ 62502P21-A		2
77/	L - - w/removable glass panel			2
78/	P - - w/removable glass panel			2
50222	Refer to group 50244			
502C22	HOUSING (SLIDING ROOF PANEL)			
77/	D,K	D7LY 65502C22-A		1
78/	F	D8SZ 60502C22-A		1
74	L(62,64) "Before 6/24/74"	★ D2FZ 62502C22-B Not repl. (7/81)		1
74/77	L(62,64) "From 6/24/74"	D5FZ 62502C22-A		1
77/	L(62,64) - - w/removable glass panel	D7FZ 62502C22-A		1
502C24	SPACER (ROOF SLIDING PANEL HOUSING)			
77/	D,K	D7LY 65502C24-A		1
502L26	PLATE (SLIDING ROOF RETAINING)			
73/76	A,D,F,G,K,Y	C8WY 65502L26-A		1
77	A,F,G,V			1
78	A,G,V			1
79	G			1
502C28	MOULDING (SLIDING ROOF PANEL-FRONT)			
77/78	A(53),G,V - - w/glass sliding roof	D5WZ 65502C28-B	Brown	1
77	F			
77/	G			
		D7SZ 65502C28-A	Gold	1
		D7SZ 65502C28-C	Jade	1
		D7SZ 65502C28-B	Rose	1
		D5WZ 65502C28-A	Silver	1
75/76	F,G - - w/glass sliding roof	D5WZ 65502C28-B	Brown	1
		D5WZ 65502C28-A	Silver	1

YEAR	MODEL/RESTRICTIONS	PART NUMBER	DESCRIPTION	QTY.
502C30	RETAINER (SLIDING ROOF PANEL FRONT MOULDING)			
73/76	K - - w/glass sliding roof	★	Serviced only in assy.-group 502A82	
502L31	COVER (SLIDING ROOF PANEL CABLE SIDE)			
77/	D,K - - w/sliding roof	D7LY 65502L31-A		2
78/	F	(RH) D8SZ 60502L31-A	(LH) D8SZ 60502L31-B	1
79	V - - with sliding roof	(RH) D8SZ 60502L31-A	(LH) D8SZ 60502L31-B	1
502C32	RETAINER (SLIDING ROOF OUTER PANEL)			
73/76	K - - w/glass sliding roof	★	Serviced only in assy.-group 502A82	
502C34	HANDLE (SLIDING ROOF PANEL HEADLINING)			
77/78	A,V - - w/glass sliding roof	D3LY 65502C34-A		1
74/76	D,K - - w/glass sliding roof			1
74/77	F,G - - w/glass sliding roof			1
77/	G - - w/glass sliding roof			1
77/	D,K - - w/glass sliding roof	D7LY 65502C34-A		1
78/	F - - w/glass sliding roof			1
77/	D - - w/fixed glass	D5ZZ 60502C34-A		1
79	V - - with sliding roof	D94Y 54502C34-A		1
502M35	EXTENSION (SLIDING ROOF CABLE GUIDE)			
76/78	J	★ D5RY 64502M35-A	Not repl. (7/81)	1
502M39	BUSHING (SLIDING ROOF PANEL ADJUSTING LEVER)			
76/78	J	★ D5RY 64502M39-A	Not repl. (7/81)	1
502B40	RETAINER (SLIDING ROOF GUIDE RAIL TO FRAME REAR)			
75/78	A	(RH) D5WZ 65502B40-A	(LH) D5WZ 65502B41-A 4" long	1
75/76	D,K,Y			1
75/77	F			1
75/	G			1
77/78	V			1
79/	V	D8SZ 60502B40-A		2
77/	D,K	D7LY 65502B40-A		2
78/	F	D8SZ 60502B40-A		2
502A42	FRAME (SLIDING ROOF HEADLINING)-Incl. attaching parts			
75/76	A,D,F,G,K,Y		Refer to group 519A02 in Soft Trim Section	
502C42	RETAINER (ROOF SLIDING PANEL REAR WEATHERSTRIP)			
77/	D,K	D7LY 65502C42-A		1
78/	F	D8SZ 60502C42-A		1
79	V			1
50244	REINFORCEMENT (ROOF PANEL)			
74	A(53,57),Y(53)	D4AZ 5350244-A	Center	1
79	A(54,66)	D9AZ 5450244-A		2
79	A(74)	D9AZ 7450217-A	Rear	1
79	A(74)	D9AZ 7450222-A	Front	1
73/76	C(53)	D90Z 5350244-A		1
73	C(63)	D20Z 6350217-A	Rear	1
73/76	C(63,65)	D90Z 6550244-A	Center	1
75/	D	D5VY 5350217-A	Rear	1
75/78	D	D5VY 6050244-A	Center	1
79	D	D9VY 6050244-A		1
74/	F	D90Z 6550244-A	Center	1
77/78	F(53)	D20Z 5350244-A		1
79	F	D90Z 5350244-A		1
75/	G	D9DZ 6650244-A	Center	1
76/	G(66) - - w/half vinyl roof	D8DZ 6650217-B	Rear	1
73/74	J	D0RY 6250222-A	Front	1
79	J	D9ZZ 6650244-A		1
77/	K	D9LY 6550244-A		1
75/	L(62,64)	D5FZ 6250222-B		1 or 2
74/	L(73)	D2FZ 7350217-A	Rear	1
78/	P(36) - - w/removable glass panel	D9BZ 3650244-A	Center	1
79	P(36) - - w/o removable glass panel	D9BZ 3650244-B	Center	1

COPYRIGHT © 1986 — FORD MOTOR COMPANY — DEARBORN, MICHIGAN

1973/79 LINCOLN-MERCURY CARS

YEAR	MODEL/RESTRICTIONS	PART NUMBER	DESCRIPTION	QTY.
50244	REINFORCEMENT (ROOF PANEL) — Cont'd			
78/	P(54,66)	D8BZ 5450217-A	Rear	1
78/	P(54,66) - - w/removable glass panel	D9BZ 5450244-A		1
79	P(54,66) - - w/o removable glass panel	D9BZ 5450244-B		1
78/	P(74)	D8BZ 7450217-A	Rear	2
79	P(74)	D8BZ 7450244-A	Center	1
77/78	V	D5DZ 6650244-A	Center	1
502A46	RETAINER (ROOF OPENING GLASS HANDLE)			
79	J - - w/removable glass panel	E1FZ 61502A46-A	Repl. by E1FZ 61502A46-A (12/81)	2
77/	L - - w/removable glass panel			2
78/	P - - w/removable glass panel			2
502L46	WASHER (SLIDING ROOF FRICTION CLUTCH)			
73/76	A,D,F,G,K,Y	C8WY 65502L46-A		AR
77	A,F,G,V			AR
502A50	CRANK HANDLE (SLIDING ROOF EMERGENCY)			
75/78	A	D5WZ 65502A50-A		1
75/	D,F,G,K			1
77/	V			1
75/76	Y			1
73/74	J	D0RY 62502A50-B		1
76/78	J "Before 2/1/77"	D5RY 64502A50-A	Chrome	1
77/	J "From 8/1/77"	D7RY 64502A50-A	Black	1
77/	J "From 2/1/77"	D7RY 64502A50-B	Chrome	1
74/77	L(62,64)	D2FZ 62502A50-A		1
502B50	WASHER (SLIDING ROOF HANDLE)			
73	A,D,F,K,Y	D7AZ 65502B50-A		1
502C50	WEATHERSTRIP (SLIDING ROOF PANEL)			
73/74	A,D,F,Y	D7AZ 65502C50-A	Black-front	1
		★ D2AZ 65502C50-B Not repl'd (6/80)	Gray-front	1
74	D	D4SZ 65502C50-A	Ivory-front	1
75/76	A,D,F,G,K,Y	D7AZ 65502C50-A	Black-front-90" long-cut to fit	1
		D3LZ 65502C50-B	Gray-front-90" long-cut to fit	1
		D4SZ 65502C50-A	Ivory-front-90" long-cut to fit	1
77/78	A,F,V	D7AZ 65502C50-A	Black	1
77/	D,K - - w/o full vinyl roof	D7LY 65502C50-A		1
77/	D,K - - w/full vinyl roof-exc. white	D7LY 65502C50-B		1
77/	D,K - - w/white full vinyl roof	D7LY 65502C50-C		1
78/	F - - w/painted roof	D8SZ 60502C50-A		1
79	V - - w/painted roof	D8SZ 60502C50-A		1
78/	F - - w/full vinyl roof	D8SZ 60502C50-B		1
77/	G	D7AZ 65502C50-A	Black	1
76/78	J - - w/o vinyl roof	D8RY 64502C50-A		1
79	J, - - w/removable glass panel and w/vinyl roof	D9ZZ 66502C50-A		1
79	J, - - w/removable glass panel w/o vinyl roof	D9ZZ 66502C50-B		1
73/74	K	D7AZ 65502C50-A	Black-front-90" long-cut to fit	1
		D3LZ 65502C50-B	Gray-front-90" long-cut to fit	1
		D4SZ 65502C50-A	Ivory-front-90" long-cut to fit	1
74/77	L(62,64) - - w/o vinyl roof "Before 10/1/76"	D2FZ 62502C50-A	Front - 68" long	1
77	L(62,64) - - w/o vinyl roof "From 10/1/76"	D7FZ 62502C50-B	66" long	
77	L(62,64) - - w/vinyl roof "From 10/1/76"	D7FZ 62502C50-C	66" long	1

YEAR	MODEL/RESTRICTIONS	PART NUMBER	DESCRIPTION	QTY.
502C50	WEATHERSTRIP (SLIDING ROOF PANEL) — Cont'd			
77/	L(62,64) - - w/removable glass panel	D7FZ 62502C50-A	101" long	1
78/	P - - w/removable glass panel and w/vinyl roof	D9ZZ 66502C50-A		1
78/	P - - w/removable glass panel w/o vinyl roof	D9ZZ 66502C50-B		1
79	V - - w/vinyl roof	D8SZ 60502C50-B		1
502C52-3	HOSE (SLIDING ROOF FRAME DRAIN)			
73/74	A,D,F,Y	C8WY 65502C52-A	R.H. and L.H.-front-48" long	2
		C8WY 65502C53-A	R.H. and L.H.-rear	2
75	A,D,F,G,Y	(RH) D4SZ 65502C52-A	(LH) D4SZ 65502C53-A Front and rear	2
79	F,J - - w/removable glass panel	★	Front-improvise from 3/8" I.D. bulk hose 9291	
		★	Rear-improvise from 1/2" I.D. bulk hose 9324	
73	K	C8WY 65502C52-A	R.H. and L.H.-front-48" long	2
		C8WY 65502C53-A	R.H. and L.H.-rear	2
74/76	K	(RH) D4SZ 65502C52-A	(LH) D4SZ 65502C53-A Front and rear	2
77/ 78	D,K,V - - w/sliding roof F - - w/sliding roof	★	Front-improvise from 3/8" I.D. bulk hose (9291) Rear-improvise from 5/8" I.D. bulk hose (9324)	
74/	L(62,64) - - w/sliding roof or removable glass panel	★	Front-improvise from 3/8" I.D. bulk hose (9291)	
	L(62,64) - - w/sliding roof	★	Rear-improvise from 5/8" I.D. bulk hose (9324)	
77/	L(62,64) - - w/removable glass panel	★	Rear-improvise from 1/2" I.D. bulk hose (9324)	
78/	P - - w/removable glass panel	★ ★	Front-improvise from 3/8" I.D. bulk hose (9291) Rear-improvise from 1/2" I.D. bulk hose (9324)	
502L52	CAP (SLIDING ROOF DRIVE HOUSING SHAFT)			
73/76	A,D,F,G,K,Y	D5VZ 60502L52-A	Cover with headlining material or paint to match	1
77/78	A,D,F,G,K,V			1
79	D,F,G,K			1
502D60	HINGE (ROOF OPENING GLASS SPRING)			
79	J - - w/removable glass panel	D9ZZ 66502D60-B		2
77/	L(62,64) - - w/removable glass panel	D7FZ 62502D60-A		2
78/79	P - - w/removable glass panel	D9ZZ 66502D60-B		2
502B62	HANDLE (ROOF OPENING GLASS)			
79	J - - w/removable glass panel	D7FZ 62502B62-A		1
77/	L(62,64) - - w/removable glass panel			1
78/	P - - w/removable glass panel			1
50263	REINFORCEMENT (ROOF PANEL FRONT)			
74	L(62,64)	D4FZ 6250263-A		1
75/76	L(62,64)	D5FZ 6250263-B		1
74	L(73)	D4FZ 7350263-A		1
75/	L(73)	D5FZ 7350263-A		1
502L63	Refer to group 8287 in Chassis Section			
502B66	NUT (SLIDING ROOF PANEL FRONT ADJUSTING)			
73/76	A,D,F,G,K,L,Y	D2FZ 62502B66-A	Type 2-single adjusting nut	2
77/	A,D,F,G,K,V			2
79	D,F,G,K			2
79	V			2
502M70	BRACKET (ROOF OPENING GLASS HANDLE)			
77/	L	D7FZ 62502M70-A		1
78/	P			1
79	J			1

COPYRIGHT © 1986 — FORD MOTOR COMPANY — DEARBORN, MICHIGAN

1973/79 LINCOLN-MERCURY CARS

YEAR	MODEL/RESTRICTIONS	PART NUMBER	DESCRIPTION	QTY.
502C76	SEAL (ROOF SLIDING PANEL REAR)			
78/	F	D8SZ 60502C76-A		2
79/	V	D8SZ 60502C76-A		2
502A82	PANEL (SLIDING ROOF OUTER)			
73/74	J - - w/steel sliding roof	D0RY 62502A82-A		1
73/77	L - - w/sliding roof	D7FZ 62502A82-A		1
77/78	A(53),V - - w/glass sliding roof	D5WZ 65502A82-B	Brown	1
77	F			
77/	G	D7SZ 65502A82-A	Gold	1
		D7SZ 65502A82-B	Jade	1
		D7SZ 65502A82-C	Rose	1
		D5WZ 65502A82-A	Silver	1
77/78	A(65) - - w/glass sliding roof	★	Brown-not replaced(6/82)	1
		★	Gold-not replaced(6/82)	1
		★	Jade-not replaced(6/82)	1
		★	Rose-not replaced(6/82)	1
		D5VY 60502A82-A	Silver	1
75/76	D - - w/glass sliding roof	★	Brown-not replaced(6/82)	1
		★	Gold-not replaced(6/82)	1
		D5VY 60502A82-A	Silver	1
77/78	D - - w/glass sliding roof	D7VY 60502A82-C	Brown	1
		★	Gold-not replaced(6/82)	1
		D7VY 60502A82-D	Jade	1
		D7VY 60502A82-E	Rose	1
		D7VY 60502A82-A	Silver	1
79	D - - w/glass sliding roof	D9VY 60502A82-A	Blue	1
		D7VY 60502A82-C	Brown	1
		★	Gold-not replaced(6/82)	1
		D7VY 60502A82-E	Rose	1
		D7VY 60502A82-A	Silver	1
75/76	F,G - - w/glass sliding roof	D5WZ 65502A82-B	Brown	1
		D5WZ 65502A82-A	Silver	1
78/	F - - w/glass sliding roof	D8SZ 60502A82-A	Brown	1
79	V - - w/glass sliding roof	D8SZ 60502A82-B	Gold	1
		D8SZ 60502A82-C	Jade	1
		D8SZ 60502A82-D	Rose	1
		D8SZ 60502A82-E	Silver	1
73/74	K - - w/glass sliding roof	D5VY 60502A82-A	Silver	1
75/76	K - - w/glass sliding roof	★	Brown-not replaced(6/82)	1
		★	Gold-not replaced(6/82)	1
		D5LZ 65502A82-B	Silver w/aqua moulding	1
76	K - - w/glass sliding roof	★ D6LY 65502A82-B	Jade-not replaced(6/82)	1
		★ D6LY 65502A82-A	Rose-not replaced(6/82)	1
		D5VY 60502A82-A	Silver w/silver moulding	1
77/78	K - - w/glass sliding roof	D7LY 65502A82-C	Brown	1
		D7LY 65502A82-B	Gold	1
		D8LY 65502A82-A	Gold Diamond Jubilee	1
		D7LY 65502A82-D	Jade	1
		D7LY 65502A82-E	Rose	1
		D7LY 65502A82-A	Silver	1
79	K - - w/glass sliding roof	D7LY 65502A82-C	Brown	1
		D8LY 65502A82-A	Gold	1
		D7LY 65502A82-D	Jade	1
		D7LY 65502A82-E	Rose	1
		D7LY 65502A82-A	Silver	1
502L82	Refer to group 502L08-9			

1973/79 LINCOLN-MERCURY CARS

YEAR	MODEL/RESTRICTIONS	PART NUMBER	DESCRIPTION	QTY.
502M85-6	LEVER (ROOF SLIDING PANEL LIFTER)			
77/	J,L	(RH) D8RZ 64502M85-A	(LH) D8RZ 64502M86-A	1
78/	P			1
502L87	GEAR (SLIDING ROOF DRIVE PINION)			
73	A,D,F,K,Y	C8WY 65502L87-A		1
75/76	A,D,F,K,Y	D4LZ 65502L87-A	12 teeth internal spline	1
77/	A,V			1
77	F			1
75/	G			1
77/	D,K	D7VY 60502L87-A		1
78/	F			1
76/78	J	★ D5RY 64502L87-A Not repl'd (7/81)		1
502A88	RAIL (SLIDING ROOF)			
73/74	A,F,Y	D1WY 65502A88-A		1
76/78	J	★ D5RY 64502A88-A Not repl'd (7/81)		1
502C88	COVER (SLIDING ROOF STATIONARY FRAME FRONT CROSS)			
74	F - - w/steel sliding roof	D40Z 65502C88-F	Blue	1
		D40Z 65502C88-G	Gold	1
		D40Z 65502C88-E	Green	1
502A90	WEATHERSTRIP (ROOF PANEL OPENING)			
77	D - - w/fixed glass	D7VY 53502A90-A	Black	1
		★	Blue-not replaced(6/82)	1
		★	Chamois-not replaced(6/82)	1
		D7VY 53502A90-D	Cordovan	1
		★	Cream-not replaced(6/82)	1
		★	Gold-not replaced(6/82)	1
		D7VY 53502A90-F	Gray	1
		★	Jade-not replaced(6/82)	1
		D7VY 53502A90-H	Red	1
		D7VY 53502A90-J	White	1
78	D - - w/fixed glass	D7VY 53502A90-A	Black	1
		D8VY 53502A90-B	Blue	1
		D8VY 53502A90-A	Champagne	1
		★	Chamois-not replaced(6/82)	1
		D7VY 53502A90-D	Cordovan	1
		D8VY 53502A90-C	Gold	1
		D7VY 53502A90-F	Gray	1
		★	Jade-not replaced(6/82)	1
		D7VY 53502A90-H	Red	1
		D7VY 53502A90-J	White	1
79	D - - w/fixed glass	D9VY 53502A90-B	Beryl	1
		D7VY 53502A90-A	Black	1
		D9VY 53502A90-A	Blue (dark)	1
		D8VY 53502A90-B	Blue (light)	1
		D8VY 53502A90-A	Champagne	1
		D7VY 53502A90-D	Cordovan	1
		D8VY 53502A90-C	Gold	1
		D7VY 53502A90-F	Gray	1
		D7VY 53502A90-H	Red	1
		D7VY 53502A90-J	White	1
502A92	RETAINER (ROOF OPENING PANEL WEATHERSTRIP)			
77/	D - - w/fixed glass	D7VY 53502A92-A		2
502A96	CUP (SLIDING ROOF HANDLE)			
76/78	J	D5RY 64502A96-C	Cloud-pale	1
		D6RY 64502A96-B	Cloud (pastel)	1
74/77	L	D2FZ 62502A96-A		1

COPYRIGHT © 1986 — FORD MOTOR COMPANY — DEARBORN, MICHIGAN

1973/79 LINCOLN-MERCURY CARS

YEAR	MODEL/RESTRICTIONS	PART NUMBER	DESCRIPTION	QTY.
502A98	ESCUTCHEON (SLIDING ROOF CABLE)			
77/78	J "From 9/20/77"	D7RY 64502A98-A	Parchment	1
50304	CATCH (ROOF OPENING TRIM PANEL) - Paint to match			
79	J - - w/removable glass panel	D9ZZ 6650304-B		2
77/	L(62,64) - - w/removable glass panel	D9ZZ 6650304-B		2
78/	P - - w/removable glass panel			2
50362	COVER (ROOF OPENING GLASS RETAINER)			
79	J - - w/removable glass panel	D7FZ 6250362-AA		1
77/	L - - w/removable glass panel			1
78/	P - - w/removable glass panel			1
50384	RETAINER (ROOF OPENING GLASS HINGE SPRING)			
79	J - - w/removable glass panel	D7FZ 6250384-A		2
77/	L - - w/removable glass panel			2
78/	P - - w/removable glass panel			2
50398-400	Refer to Exterior Moulding Section at the end of this catalog			
50412	BUSHING (FOLDING TOP REAR SIDE RAIL TO POWER CYLINDER)			
73	F(76)	C3AZ 7650412-A		AR
50536-7	LATCH (FOLDING TOP HOLD DOWN CLAMP)			
73	F(76)	(RH) D1ZZ 7650536-A	(LH) ★	1
50572	SPRING (FOLDING TOP HOLD DOWN CLAMP LEVER)			
73	F(76)	C5ZZ 7650572-A	R.H. and L.H.	2
508B08	DEFLECTOR (ROOF AIR)			
79	J - - w/removable glass panel	D9ZZ 66508B08-A		2
508A26	RETAINER (ROOF SLIDING PANEL OPENING SHIELD)			
77/	D,K	D7LY 65508A26-A		2
		45185-S32	(M-140-A)-spring nut 3/8"-16	
		50811-S8-9	(U-150-A)-screw and washer 12-24 x 1/2"	
50844-5	REINFORCEMENT (ROOF PANEL REAR SIDE)			
74/	L(64)	(RH) D1FZ 6450844-A	(LH) D1FZ 6450845-A	1
50860	PANEL (ROOF AIR DEFLECTOR)			
73/76	A(71),Y(71)	D3AZ 7150860-A	Cherry wood grain	1
77/78	A(71)			
76/78	A(71)	★ D8AZ 7150860-A	Kit-not replaced(11/81)	1
	Consists of			
	1-D3AZ 7150860-A	Panel	2-383141-S45	Screw
	1-D0AZ 7155058-A	Ext R.H.	4-	Screw
	1-D0AZ 7155059-A	Ext L.H.	1-	Installation Sketch
79	A(74) - - w/luggage carrier	E1AZ 7450860-A		1
	Consists of			
	1-E1AZ 7455058-A	Extension	4-	Pan head screws
	1-E1AZ 7455059-A	Extension	4-	Screws
	1-E1AJ 7450822-AA	Venturi	1-	Installation sketch
74/	L(73)	D3FZ 7350860-A	Panel-Cherry wood grain	1
74/	L(73)	D4FZ 7350860-A	Kit	1
	Consists of			
	1-D3FZ 7350860-A	Panel	2-51775-S43B	Screw
	1-D3FZ 7350862-A	Support R.H.	1-57016-S2	Screw
	1-D3FZ 7350863-A	Support L.H.	2-57356-S39	Screw
	1-D4FZ 7350870-A	Pad	4-375377-S100	Screw
	1-D4FZ 7350871-A	Pad	2-382167-S36	Rivet nut
	1-34656-S2	Nut and washer	1-	Installation sketch

YEAR	MODEL/RESTRICTIONS	PART NUMBER	DESCRIPTION	QTY.
50860	PANEL (ROOF AIR DEFLECTOR) — Cont'd			
78/	P(74)	D8BZ 7450860-B	Panel	1
79	P(74) "From 12/1/78"	D9BZ 7450860-A	Kit	1

Consists of

1-D8BZ 7450860-B	Panel	2-34790-S2	Washer
2-D8BZ 7450862-A	Support	1-44720-S2	Washer
2-D8BZ 7450870-B	Pad	1-304718-S2	Bolt
2-D8BZ 7450870-C	Pad	2-	Screw #10
2-D0AZ 6455180-A	Rivet nut	2-	Screw 1/4
1-33797-S8	Nut	1-	Installation sketch

YEAR	MODEL/RESTRICTIONS	PART NUMBER	DESCRIPTION	QTY.
50862-3	SUPPORT (ROOF AIR DEFLECTOR PANEL)			
74/	L(73)	(RH) D3FZ 7350862-A	(LH) D3FZ 7350863-A	1
78/	P(74)	D8BZ 7450862-B	R.H. and L.H.	2
50870-1	PAD (ROOF AIR DEFLECTOR PANEL SUPPORT)			
74/	L(73)	(RH) D4FZ 7350870-A	(LH) D4FZ 7350871-A	1
78/	P(74)	D8BZ 7450870-B	2.94"	2
	P(74)	D8BZ 7450870-C	.95"	2
508A96	SCREW (SLIDING ROOF PANEL MOTOR CLUTCH ADJUSTING)			
74/78	A	E0WY 54508A96-A		
74/76	D,K,Y			1
74/77	F			1
74/	G			1
77/78	V			1
50956	STRIP (ROOF HEADLINING RETAINER)			
78/	P(36,54,66)	D8BZ 5450956-A		3
78/	P(74)			5
50980	RETAINER (ROOF HEADLINING FRONT)			
78/	P(36,54,66)	D8BZ 5450980-A		1
78/	P(74)			2
78/	V	D8TZ 9850980-A	Use on luggage compartment cover	1
50982	RETAINER (ROOF HEADLINING REAR)			
79	A(66)	D9AZ 6650982-A		2
74/	L(73)	D5FZ 7350982-A		1
50998-9	STRIP (ROOF HEADLINING SIDE REAR TACKING)			
75/	D(53)	D5VY 5350998-A	R.H. and L.H.	2
73/74	D(65)	(RH) C9AZ 6550998-A	(LH) C9AZ 6550999-A	1
51026	CLIP (ROOF HEADLINING RETAINER)			
79	A(74)	D9AZ 7451026-A		1
79	P(74)			1
73/76	C(53,63,65),D,F,K	D60Z 6551026-A		5
77	F(53,65)			5
51154-5	Refer to groups 53104-5 or 53138-9			

YEAR	MODEL/RESTRICTIONS	PART NUMBER	DESCRIPTION	QTY.
51180-1	RAIL (ROOF SIDE FRONT INNER)			
73	D(53)	(RH) ★	(LH) C9AZ 5751181-A	1
73	D(65) "Before 6/15/73"	(RH) C9AZ 6351180-A	(LH) ★	1
74	L(62,64)	(RH) D4FZ 6251180-A	(LH) D4FZ 6251181-A	1
75/	L(62,64)	(RH) D5FZ 6251180-A	(LH) ★	1
74	L(73)	(RH) D4FZ 7351180-A	(LH) D4FZ 7351181-A	1
75/	L(73)	(RH) D5FZ 7351180-A	(LH) D5FZ 7351181-A	1
78/	P(36)	(RH) D8BZ 3651180-A	(LH) D8BZ 3651181-A	1
78/	P(54)	(RH) D8BZ 5451180-A	(LH) D8BZ 5451181-A	1
78/	P(66)	(RH) D8BZ 6651180-A	(LH) D8BZ 6651181-A	1
78/	P(74)	(RH) D8BZ 7451180-A	(LH) D8BZ 7451181-A	1

COPYRIGHT © 1986 — FORD MOTOR COMPANY — DEARBORN, MICHIGAN

1973/79 LINCOLN-MERCURY CARS

YEAR	MODEL/RESTRICTIONS	PART NUMBER	DESCRIPTION	QTY.
51186-7	RAIL (ROOF SIDE FRONT OUTER)			
73	A(65),Y(65) "Before 11/5/73"	(RH) ★	(LH) D1AZ 6551187-A	1
73/76	A(65),Y(65) "From 11/5/73"	(RH) ★	(LH) D4AZ 6551187-A	1
77/78	A(65)			1
79	A(54)	(RH) D9AZ 5451186-A	(LH) D9AZ 5451187-A	1
74	A(57)	(RH) D4AZ 5751186-A	(LH) D4AZ 5751187-A	1
79	A(66)	(RH) D9AZ 6651186-A	(LH) D9AZ 6651187-A	1
79	A(74)	(RH) D9AZ 7451186-A	(LH) D9AZ 7451187-A	1
75/	D(53)	(RH) D5VY 5351186-A	(LH) D5VY 5351187-A	1
75/	D(60)	(RH) D5VY 6051186-A	(LH) D5VY 6051187-A	1
77/	F(53)	(RH) D70Z 5351186-A	(LH) D70Z 5351187-A	1
74/	F(65)	(RH) D70Z 6551186-A	(LH) D70Z 6551187-A	1
75/77	G(54)	(RH) D8DZ 5451186-A	(LH) D8DZ 5451187-A	1
78/	G(54)	(RH) D8DZ 5451186-A	(LH) D8DZ 5451187-A	1
75/	G(66)	(RH) D5DZ 6651186-A	(LH) D5DZ 6651187-A	1
79	J	(RH) E0ZZ 6651186-A	(LH) D9ZZ 6651187-A	1
75/76	K	(RH) D5SZ 6551186-A	(LH) D5SZ 6551187-A	1
77/	K	(RH) D7LY 6551186-A	(LH) D7LY 6551187-A	1
74/	L(62,64)	(RH) D4FZ 6451186-A	(LH) D4FZ 6451187-A	1
74/	L(73)	(RH) D5FZ 7351186-B	(LH) D5FZ 7351187-B	1
78/	P(36)	(RH) D8BZ 3651186-A	(LH) D8BZ 3651187-A	1
78/	P(54,66)	(RH) D8BZ 5451186-A	(LH) D8BZ 5451187-A	1
78/	P(74)	(RH) D8BZ 7451186-A	(LH) D8BZ 7451187-A	1
77/	V	(RH) D8DZ 5451186-A	(LH) D8DZ 5451187-A	1
51206-7	EXTENSION (ROOF SIDE OUTER REAR RAIL)			
77/	F(65)	(RH) D70Z 6551206-A	(LH) D70Z 6551207-A	1
51212-3	RAIL (ROOF SIDE INNER REAR)			
79	A(54)	(RH) D9AZ 5451212-A	(LH) D9AZ 5451213-A	1
79	A(66)	(RH) D9AZ 6651212-A	(LH) D9AZ 6651213-A	1
79	A(74)	(RH) D9AZ 7451212-A	(LH) D9AZ 7451213-A	1
73	C(65)		Refer to group 51216-7	
79	J	(RH) D9ZZ 6151212-A	(LH) E0ZZ 6151213-A	1
74/	L(62)	(RH) D3FZ 6251212-A	(LH) D1FZ 6251213-A	1
74/	L(64)	(RH) D2FZ 6451212-A	(LH) D2FZ 6451213-A	1
78/	P(36)	(RH) D8BZ 3651212-A	(LH) D8BZ 3651213-A	1
78/	P(54)	(RH) D8BZ 5451212-A	(LH) D8BZ 5451213-A	1
78/	P(66)	(RH) D8BZ 6651212-A	(LH) D8BZ 6651213-A	1
78/	P(74)	(RH) D8BZ 7451212-A	(LH) D8BZ 7451213-A	1
74	L	381801-S2	(UU-148)-screw-round head-No. 8-18" x 1/2"	2
51216-7	RAIL (ROOF SIDE OUTER REAR)			
73/74	A(53,57),Y(53)	(RH) D3AZ 5351216-A	(LH) D3AZ 5351217-A	1
77/	D	(RH) D7VY 5351216-A	(LH) D7VY 5351217-A	1
75/	D(60)	(RH) D5VY 6051216-A	(LH) D5VY 6051217-A	1
77/	F(53)	(RH) D70Z 5351216-A	(LH) D70Z 5351217-A	1
77/	F(65D,K)	(RH) D70Z 6551216-A	(LH) D70Z 6551217-A	1
77/	F(65L)	(RH) D8WY 6551216-A	(LH) D8WY 6551217-A	1
75/	G(54)	(RH) D7DZ 5451216-A	(LH) D7DZ 5451217-A	1
76/77	G(66) "From 5/3/76"	(RH) D7DZ 6651216-A	(LH) D8DZ 6651217-A	1
78/	F(66)	(RH) D8DZ 6651216-A	(LH) D8DZ 6651217-A	1
77/	K	(RH) D7LY 6551216-A	(LH) D7LY 6551217-A	1
77/78	V	(RH) D7DZ 5451216-A	(LH) D7DZ 5451217-A	1
79	V	(RH) D94Y 5451216-A	(LH) D94Y 5451217-A	1
51222-3	WEATHERSTRIP (ROOF SIDE RAIL)-Also refer to group 20530-1			
73/76	A(65),Y(65)	(RH) D3MY 6551222-A	(LH) D3MY 6551223-A	1
77/78	A(65)			1
73/76	A(53,71),Y(53,71) - - w/o mini vent	(RH) D3AZ 5351222-A	(LH) D3AZ 5351223-A Front	1
77/78	A(53,71) - - w/o mini vent			1

1973/79
LINCOLN-MERCURY CARS

YEAR	MODEL/RESTRICTIONS	PART NUMBER	DESCRIPTION		QTY.
51222-3	WEATHERSTRIP (ROOF SIDE RAIL)-Also refer to group 20530-1 — Cont'd				
73/76	A(53,71),Y(53,71) - - w/ mini vent	(RH) D3AZ 5351222-B	(LH) D3AZ 5351223-B	Front	1
77/78	A(53,71) - - w/mini vent				1
73/74	A(57) - - w/o mini vent	(RH) D3AZ 5751222-A	(LH) D3AZ 5751223-A		1
73/76	C(53,71)	(RH) D70Z 5351222-A	(LH) D70Z 5351223-A		1
73	C(63) "Before 10/23/72"	(RH) ★ D30Z 6351222-A Not repl'd. (6/80)	(LH) D20Z 6351223-B		1
73	C(63) "From 10/23/72"	(RH) ★ D30Z 6351222-A Not repl'd. (6/80)	(LH) D30Z 6351223-A		1
73/74	D(65)	(RH) D2VY 6551222-B	(LH) ★		1
73/76	C(65)	(RH) D30Z 6551222-A	(LH) D30Z 6551223-A		1
75/	D(53)	(RH) D8VY 5351222-A	(LH) D8VY 5351223-A		1
75/	D(60)	(RH) D8VY 6051222-A	(LH) D8VY 6051223-A		1
73	F(65)	(RH) D1ZZ 6551222-A	(LH) D1ZZ 6551223-A		1
74/76	F	(RH) D30Z 6551222-A	(LH) D30Z 6551223-A		1
77/	F(53,71)	(RH) D70Z 5351222-A	(LH) D70Z 5351223-A		1
77/	F(65D,K)	(RH) D70Z 6551222-A	(LH) D70Z 6551223-A		1
77/	F(65L)	(RH) D7WY 6551222-A	(LH) D7WY 6551223-A		1
73	K	(RH) D3SZ 6551222-A	(LH) D3SZ 6551223-A		1
74/76	K	(RH) D4SZ 6551222-A	(LH) D4SZ 6551223-A		1
77/	K - - w/o mini vent	(RH) D8LY 6551222-A	(LH) D8LY 6551223-A		1
78/	K - - w/mini vent "From 2/1/78"	(RH) D8LY 6551222-B	(LH) D8LY 6551223-B		1
73/74	P(62)	(RH) D0DZ 6251222-A	(LH) D0DZ 6251223-A	Incl. black windlace	1
		(RH) D0DZ 6251222-B	(LH) D4DZ 6251223-D	Incl. blue windlace	1
		(RH) D2DZ 6251222-A	(LH) D2DZ 6251223-A	Incl. ginger windlace	1
		(RH) D3DZ 6251222-B	(LH) D3DZ 6251223-B	Incl. orange windlace	1
		(RH) ★	(LH) D3DZ 6251223-A	Incl. tan windlace	1
74	P(62) "From 12/1/73"	(RH) ★	(LH) D4DZ 6251223-C	Incl. avocado windlace	1
		(RH) D6DZ 6251222-A	(LH) D4DZ 6251223-E	Incl. black windlace	1
		(RH) D4DZ 6251222-D	(LH) D4DZ 6251223-D	Incl. blue windlace	1
		(RH) D4DZ 6251222-A	(LH) ★	Incl. orange windlace	1
		(RH) D4DZ 6251222-B	(LH) ★	Incl. tan windlace	1
75/76	P(54) "Before 11/3/75"	(RH) D6DZ 5451222-A	(LH) D6DZ 5451223-A	Incl. black windlace	1
76	P(54) "From 11/3/75"	(RH) D6DZ 5451222-A	(LH) D6DZ 5451223-A	Incl. black windlace	1
77	P(54)	(RH) D6DZ 5451222-A	(LH) D6DZ 5451223-A	Incl. black windlace	1
75/76	P(62) "Before 11/3/75"	(RH) D6DZ 6251222-A	(LH) ★	Incl. black windlace	1
		(RH) D4DZ 6251222-D	(LH) ★	Incl. blue windlace	1
		(RH) D5DZ 6251222-A	(LH) ★	Incl. green windlace	1
76	P(62) "From 11/3/75"	(RH) ★	(LH) ★	Incl. black windlace	1
77	P(62)	(RH) D6DZ 6251222-A	(LH) ★	Incl. black windlace	1
73/76	A,F,Y	376389-S101	(UU-89-D)-screw (pan head)-No. 8-18 x 1/2"		AR
77	A,F				A/R
51248-9	REINFORCEMENT (ROOF SIDE INNER REAR RAIL)				
79	A(54)	(RH) D9AZ 5451248-A	(LH) D9AZ 5451249-A		1
79	A(66)	(RH) D9AZ 6651248-A	(LH) D9AZ 6651249-A		1
51325	WEATHERSTRIP (FOLDING TOP NO. 1 BOW)				
73	F(76)	D1ZZ 7651325-A	48 3/4" long		1
513A34-5	EXTENSION (ROOF SIDE INNER REAR RAIL)				
75/	D(53)	(RH) D5VY 53513A34-A	(LH) D5VY 53513A35-A		1
75/	D(60)	(RH) D5VY 60513A34-A	(LH) D5VY 60513A35-A		1
79	F(66)	(RH) D9ZZ 66513A34-A	(LH) D9ZZ 66513A35-A		1
77/	K	(RH) D7LY 65513A34-A	(LH) D7LY 65513A35-A		1
78/	P(36,54,66)	(RH) D8BZ 54513A34-A	(LH) D8BZ 54513A35-A		1
51338	Refer to group 51338 in Soft Trim Section				

COPYRIGHT © 1986 — FORD MOTOR COMPANY — DEARBORN, MICHIGAN

1973/79 LINCOLN-MERCURY CARS

YEAR	MODEL/RESTRICTIONS	PART NUMBER	DESCRIPTION	QTY.
513A44-5	**EXTENSION (ROOF OUTER REAR RAIL TO WHEELHOUSE)**			
73	A(65),Y(65) "Before 6/15/73"	(RH) D3MY 65513A44-A	(LH) D3MY 65513A45-A	1
74/76	C(65)	(RH) D4WY 65513A44-A	(LH) D4WY 65513A45-A	1
75/	D(53)	(RH) D5VY 53513A44-A	(LH) D5VY 53513A45-A	1
75/	D(60)	(RH) D5VY 60513A44-A	(LH) D5VY 60513A45-A	1
77/	F(65)	(RH) D70Z 65513A44-A	(LH) D70Z 65513A45-A	1
75/	G(54)	(RH) D5DZ 54513A44-A	(LH) D5DZ 54513A45-A	1
77/	V	(RH) D5DZ 54513A44-A	(LH) D5DZ 54513A45-A	1
513B44	**FILLER (ROOF SIDE QUARTER REAR RAIL)**			
79	P	D9BZ 74513B44-A		2
51346	**WEATHERSTRIP (ROOF)**			
79	J	D9ZZ 6651346-A		1
77/	L(62,64) - - w/removable glass panel	D8FZ 6251346-A		1
78/	P - - w/removable glass panel	D9ZZ 6651346-A		1
513A66-7	**RETAINER (ROOF SIDE RAIL WEATHERSTRIP)-Incl. attaching parts**			
73/76	A(53,71),Y(53,71) "Before 2/15/73"	(RH) D3AZ 53513A66-E	(LH) D3AZ 53513A67-E Front	1
77/78	A(53,71)			
73	A(71),Y(71) "Before 4/2/73"	(RH) D3AZ 71513A66-A	(LH) D4AZ 71513A67-A Rear	1
73	A(71),Y(71) "From 4/2/73"	(RH) D3AZ 71513A66-B	(LH) D4AZ 71513A67-A Rear	1
73	A(57) "Before 2/15/73"	(RH) D3AZ 57513A66-B	(LH) ★ Front	1
73/74	A(57) "From 2/15/73"	(RH) ★	(LH) D3AZ 57513A67-E Front-rustless steel	1
73	A(57) "Before 4/2/73"	(RH) D3AZ 57513A66-A	(LH) ★	1
73	A(57) "From 4/2/73"	(RH) D4AZ 57513A66-A	(LH) D3AZ 57513A67-D Rear	1
73/76	A(65),Y(65) "Before 10/1/75"	(RH) D3MY 65513A66-C	(LH) D3MY 65513A67-C	1
74/76	A(53),Y(53)	(RH) D4AZ 53513A66-A	(LH) D4AZ 53513A67-A Rear	1
77/78	A(53)			1
74	A(57)	(RH) D4AZ 57513A66-A	(LH) D4AZ 57513A67-A Rear	1
75/	D(53)	(RH) D5VY 53513A66-A	(LH) D5VY 53513A67-A Front	1
		(RH) D5VY 53513A66-B	(LH) D5VY 53513A67-B Rear	1
75/	D(60)	(RH) D5VY 60513A66-A	(LH) D5VY 60513A67-A Front	1
77/	F(53)	(RH) D70Z 53513A66-B	(LH) D70Z 53513A67-B Front	1
		(RH) D70Z 53513A66-A	(LH) D70Z 53513A67-A Rear	1
77/	F(65D,K)	(RH) D70Z 65513A66-B	(LH) D70Z 65513A67-B Front	1
77/	F(65L)	(RH) D7WY 65513A66-A	(LH) D7WY 65513A67-A Front	1
77/	F(65)	(RH) D70Z 65513A66-A	(LH) D73Z 65513A67-A Rear	1
77	F(71)	(RH) D70Z 53513A66-B	(LH) D70Z 53513A67-B Front	1
77/	K	(RH) D7LY 65513A66-C	(LH) D7LY 65513A67-C Front	1
77/	K	(RH) D7LY 65513A66-B	(LH) D7LY 65513A67-B Rear	1
513A68-9	**WEATHERSTRIP (ROOF SIDE RAIL REAR)**			
73/76	A(53),Y(53)	(RH) D3AZ 53513A68-A	(LH) D3AZ 53513A69-A	1
77/78	A(53)			1
73/76	A(71),Y(71)	(RH) D3AZ 71513A68-B	(LH) D3AZ 71513A69-B	1
77/78	A(71)			1
73/76	C(53,71)	(RH) D30Z 53513A68-A	(LH) D30Z 53513A69-A	1
73/74	D(53)	(RH) ★	(LH) ★ D2VY 53513A69-B Not replaced(6/82)	1
75/	D(53)	(RH) D6VY 53513A68-A	(LH) D6VY 53513A69-A	1
77/	F(53)	(RH) D70Z 53513A68-A	(LH) D70Z 53513A69-A	1
77	F(71)	(RH) D30Z 53513A68-A	(LH) D30Z 53513A69-A	1
75/	G(54)		Refer to group 25324-5	
73/74	P(54)	(RH) ★	(LH) ★ Incl. beige windlace	1
		(RH) D4DZ 54513A68-E	(LH) ★ Incl. black windlace	1
		(RH) D4DZ 54513A68-D	(LH) ★ Incl. blue windlace	1
		(RH) ★	(LH) ★ Incl. ginger windlace	1
		(RH) ★	(LH) ★ Incl. saddle windlace	1
		(RH) ★	(LH) ★ Incl. silver windlace	1
77	V		Refer to group 25324-5	

YEAR	MODEL/RESTRICTIONS	PART NUMBER	DESCRIPTION	QTY.
513A74-5	RAIL (ROOF SIDE CENTER)			
78/	P(36)	(RH) D8BZ 36513A74-A	(LH) D8BZ 36513A75-A	1
78/	P(54)	(RH) D8BZ 54513A74-A	(LH) D8BZ 54513A75-A	1
78/	P(66)	(RH) D8BZ 66513A74-A	(LH) D8BZ 66513A75-A	1
78/	P(74)	(RH) D8BZ 74513A74-A	(LH) D8BZ 74513A75-A	1
514A00	TIP (FOLDING TOP REAR BOW)			
73	F(76)	C3AZ 76514A00-B		1
514A38	DOWEL (FOLDING TOP NO. 1 BOW)			
73	F(76)	C70Z 76514A38-A		2
51524-5	TRACK (ROOF OPENING PANEL HEADLINING)			
77/	D(53) - - w/fixed glass and w/o Coach Roof	(RH) D7VY 5351524-A	(LH) D7VY 5351525-A	1
77/	D(53) - - w/fixed glass and Coach Roof	(RH) D7VY 5351524-B	(LH) D7VY 5351525-B	1
77/	D(60) - - w/fixed glass	(RH) D7VY 6051524-A	(LH) D7VY 6051525-A	1
51536	BRACKET (ROOF INTERIOR LAMP MOUNTING)			
79	A	D9AZ 5451536-A		1
51564-5	WEATHERSTRIP (FOLDING TOP SIDE RAIL CENTER)			
73	F(76)	(RH) D1ZZ 7651564-A	(LH) D1ZZ 7651565-A	1
51566-7	WEATHERSTRIP (FOLDING TOP SIDE RAIL REAR)			
73	F(76)	(RH) D1ZZ 7651566-A	(LH) ★	1
51628-9	Refer to Exterior Moulding Section at the end of this catalog			
51650	SEAL (SLIDING ROOF SIDE RAIL)			
74/76	A(53,57),F,G,K,Y(53)	D40Z 6551650-A		2
51700-1	MOULDING (ROOF SIDE DRIP)-Also refer to the Exterior Moulding Section at the end of this catalog			
74/	L(73)	(RH) D2FZ 7351700-A	(LH) D2FZ 7351701-A	1
517A02-3	Refer to Exterior Moulding Section at the end of this catalog			
517C06	RETAINER (ROOF TRIM MOULDING)			
78/	P(74) - - w/2 pc. moulding	D8BZ 74517C06-A		5
517A20	ORNAMENT (ROOF SIDE OUTSIDE)-Also refer to Exterior Moulding Section at the end of this catalog			
75/78	A(53L,65L)	C9MY 65517A20-A	Use on headlamp doors	2
75/78	A(53H,K,65H,K,71H,K)	D0MY 65517A20-A	Use on headlamp doors	2
51726-9	Refer to Exterior Moulding Section at the end of this catalog			
517A36-7	Refer to Exterior Moulding Section at the end of this catalog			
517C40	RETAINER (ROOF SIDE INNER REAR MOULDING)			
79	A(74)	D9AZ 74517C40-A		6
75/	D(53)	D5VY 53517C40-A		2
77/	F(53)	(RH) D70Z 53517C40-A	(LH) D70Z 53517C41-A	1
77/	F(65D,K)	(RH) D70Z 65517C40-A	(LH) D70Z 65517C41-A	1
51744	COVER (ROOF SIDE INNER MOULDING JOINT)			
73	C(53,63,71)	D20Z 6351744-A	R.H. and L.H.	2
517C46	PAD (ROOF OUTSIDE REAR MOULDING KIT)			
79	V	D94Y 54517C46-A		1
	Consists of			
	1- Pad-center			
	1- Pad-R.H.			
	1- Pad-L.H.			
517A48-9	Refer to Exterior Moulding Section at the end of this catalog			
51752-3	MOULDING (ROOF SIDE INNER FRONT)-Paint to match			
73/74	A(57)	(RH) D3AZ 5751752-A	(LH) D3AZ 5751753-A	1
79	A(54)	D9AZ 5451752-A	R.H. and L.H.	2
79	A(66)	D9AZ 6651752-A	R.H. and L.H.	2
79	A(74)	(RH) D9AZ 7451752-A	(LH) D9AZ 7451753-A	1
73/76	C(65)	(RH) D20Z 6551752-A	(LH) D20Z 6551753-A	1
74/76	C(53)	(RH) D40Z 5351752-A	(LH) D40Z 5351753-A	1
75/	D(53)	(RH) D5VY 5351752-A	(LH) D5VY 5351753-A	1

COPYRIGHT © 1986 — FORD MOTOR COMPANY — DEARBORN, MICHIGAN

1973/79 LINCOLN-MERCURY CARS

YEAR	MODEL/RESTRICTIONS	PART NUMBER			DESCRIPTION				QTY.
51752-3	MOULDING (ROOF SIDE INNER FRONT)-Paint to match — Cont'd								
79	D(53)	(RH)	D9VY	5351752-A	(LH)	D9VY	5351753-A	Blue cloth	1
75/	D(60)		D5VY	6051752-A	R.H. and L.H.				2
75/76	F	(RH)	D20Z	6551752-A	(LH)	D20Z	6551753-A		1
77/	F(53)	(RH)	D40Z	5351752-A	(LH)	D40Z	5351753-A		1
77/	F(65D,K)	(RH)	D20Z	6551752-A	(LH)	D20Z	6551753-A		1
77/	F(65L)	(RH)	D7WY	6551752-A	(LH)	D7WY	6551753-A		1
75/	G(54)	(RH)	D5DZ	5451752-A	(LH)	D5DZ	5451753-A		1
75/	G(66)	(RH)	D5DZ	6651752-A	(LH)	D5DZ	6651753-A		1
79	J		D9ZZ	6651752-A	R.H. and L.H.				2
77/	K		D7LY	6551752-A	R.H. and L.H.				2
78/79	K - - "From 7/5/78"		D9LY	6551753-A	R.H. and L.H.				2
75/	L(73)	(RH)	D3FZ	7351752-H	(LH)	D3FZ	7351753-H		1
78/	P(36)	(RH)	D8BZ	3651752-B	(LH)	D8BZ	3651753-B		1
78/	P(54)	(RH)	D8BZ	5451752-A	(LH)	D8BZ	5451753-A		1
78/	P(66)	(RH)	D8BZ	6651752-A	(LH)	D8BZ	6651753-A		1
78/	P(74)	(RH)	D8BZ	7451752-A	(LH)	D8BZ	7451753-A		1
77/78	V	(RH)	D74Y	5451752-A	(LH)	D74Y	5451753-A	Blue	1
		(RH)	D74Y	5451752-C	(LH)	D74Y	5451753-C	Cordovan	1
		(RH)	D74Y	5451752-D	(LH)	D74Y	5451753-D	Gray	1
		(RH)	D84Y	5451752-A	(LH)	D84Y	5451753-A	Red	1
79	V	(RH)	D94Y	5451752-A	(LH)	D94Y	5451753-A	Beryl	1
		(RH)	D74Y	5451752-A	(LH)	D74Y	5451753-A	Blue	1
		(RH)	D94Y	5451752-B	(LH)	D94Y	5451753-B	Champagne	1
		(RH)	D74Y	5451752-C	(LH)	D74Y	5451753-C	Cordovan	1
		(RH)	D74Y	5451752-D	(LH)	D74Y	5451753-D	Gray	1
		(RH)	D84Y	5451752-A	(LH)	D84Y	5451753-A	Red	1
51754-5	MOULDING (ROOF SIDE INNER REAR)-Paint to match								
73/76	A(65),Y(65)	(RH)		★	(LH)	D3MY	6551755-A		1
77/78	A(65)								1
79	A(74)	(RH)	D9AZ	7451754-A	(LH)	D9AZ	7451755-A		1
73/76	C(65)	(RH)	D30Z	6551754-A	(LH)	D30Z	6551755-A		1
75/	D(53)	(RH)	D5VY	5351754-F	(LH)	D5VY	5351755-F		1
79	D(53)	(RH)	D9VY	5351754-A	(LH)	D9VY	5351755-A	Blue cloth	1
77/	F(53)	(RH)	D70Z	5351754-A	(LH)	D70Z	5351755-A		1
77/	F(65D,K)	(RH)	D70Z	6551754-A	(LH)	D70Z	6551755-A		1
75/	G(54)	(RH)	D5DZ	5451754-A	(LH)	D5DZ	5451755-A		1
75/	G(66)	(RH)	D5DZ	6651754-B	(LH)	D5DZ	6651755-B		1
78/	P(74)	(RH)	D8BZ	7451754-A	(LH)	D8BZ	7451755-A		1
51756	RETAINER (ROOF SIDE INNER FRONT MOULDING)								
79	A		D9AZ	5451756-A					AR
73/76	C		D20Z	6551756-A					6
75/	D		D5VY	6051756-A					AR
75/	F		D20Z	6551756-A					AR
79	J		D9ZZ	6651756-A					4
73/76	K			★					4
77/	K		D7LY	6551756-A					4
517A56	Refer to group 517A20								
51762	COVER (ROOF DRIP MOULDING JOINT)								
74/	L(73)		B5A	7051762-A	R.H. and L.H.				2
517A62-3	Refer to Exterior Moulding Section at the end of this catalog								

1973/79 LINCOLN-MERCURY CARS

YEAR	MODEL/RESTRICTIONS	PART NUMBER	DESCRIPTION	QTY.
517C74	FILLER (ROOF SIDE INNER REAR MOULDING)			
79	V	D94Y 54517C74-E	Beryl	2
		D94Y 54517C74-A	Blue	2
		D94Y 54517C74-F	Champagne	2
		D94Y 54517C74-C	Cordovan	2
		D94Y 54517C74-D	Gray	2
		D94Y 54517C74-B	Red	2
51776-7	MOULDING (QUARTER OPERA WINDOW INSIDE)			
73/76	K	(RH) D3SZ 6551776-A	(LH) D3SZ 6551777-A	1
77/79	K	D9LY 6551776-A	R.H. and L.H.-cut to fit	2
517B76	Refer to Exterior Moulding Section at the end of this catalog			
517A78	Refer to Exterior Moulding Section "R" for complete retainer information			
51790-1	SEAL (ROOF DRIP SIDE FINISH REAR)			
79	A(54)	(RH) E0AZ 5451790-A	(LH) E0AZ 5451791-A	1
79	A(74)	(RH) E0AZ 7451790-A	(LH) E0AZ 7451791-A	1
78/	P(54,74)		Refer to group 51822-3 front seal	
518A02	GUIDE (ROOF SLIDING PANEL)			
74/78	A	(RH) D4LZ 65518A02-A	(LH) D4LZ 65518A02-B	1
74/76	D,K,Y			1
74/77	F			1
74/	G			1
77/78	V			1
518B02-03	SUPPORT (ROOF SLIDING PANEL HOUSING)			
78/	F	(RH) D8SZ 60518B02-A	(LH) D8SZ 60518B03-A	1
518A06	KNOB (SLIDING ROOF PANEL HANDLE)-Incl. attaching parts			
74/77	L(62,64)	D2FZ 62518A06-A		1
518A10	SLIDE (SLIDING ROOF PANEL FRONT GUIDE)			
75/78	A	D5VZ 65518A10-A	R.H. and L.H.	2
75/76	D,K,Y			2
75/77	F			2
75/	G			2
77/78	V			2
77/	D,K	D7LY 65518A10-A	R.H. and L.H.	2
78/	F			2
51812	PLATE (SLIDING ROOF PANEL REAR GUIDE)			
77/	D,K	D4ZZ 6051812-A		2
78/	F			2
79	V			2
518A16	NUT (SLIDING ROOF PANEL REAR GUIDE ADJUSTING)			
77/	D,K	D7LY 65518A16-A		2
74	L(62,64)	D2FZ 62518A16-A		1
51822-3	SEAL (ROOF DRIP SIDE FINISH FRONT)			
79	A(54,74)	(RH) D9AZ 5451822-A	(LH) D9AZ 5451823-A	1
79	A(66)	(RH) D9AZ 6651822-A	(LH) D9AZ 6651823-A	1
79	J(61)	(RH) D9ZZ 6151822-A	(LH) D9ZZ 6151823-A	1
78/	P(36)	(RH) E0BZ 3651822-A	(LH) E0BZ 3651823-A	1
	P(54)	(RH) E0BZ 5451822-A	(LH) E0BZ 5451823-A Includes 51790-1 rear seal	1
	P(66)	(RH) E0BZ 6651822-A	(LH) E0BZ 6651823-A	1
	P(74)	(RH) E0BZ 7451822-A	(LH) E0BZ 7451823-A Includes 51790-1 rear seal	1
518A34	SPACER (ROOF SLIDING PANEL DOOR HOUSING)			
77/	D,K	D7LY 65518A34-A		1
78/	F			1
79	V			1

COPYRIGHT © 1986 — FORD MOTOR COMPANY — DEARBORN, MICHIGAN

1973/79 LINCOLN-MERCURY CARS

YEAR	MODEL/RESTRICTIONS	PART NUMBER	DESCRIPTION	QTY.
518A36	SPRING (SLIDING ROOF PANEL REAR)			
77/	D,K	D2FZ 62518A36-A		1
78/	F			2
74/77	L(62,64)			2
79	V			2
518A40	RETAINER (SLIDING ROOF PANEL HEADLINING)			
79	J - - w/removable glass panel	D7FZ 62518A40-A		2
77/	L - - w/removable glass panel	D7FZ 62518A40-A		2
78/	P - - w/removable glass panel			2
518A42	RETAINER (SLIDING ROOF PANEL CABLE GUIDE)			
77/	D,K	D7LY 65518A42-A		1
74	L(62,64)	D2FZ 62518A42-A		1
		385035-S2	(BB-893)-screw-hex. head-No. 8-32 x 25/64"	1
75/77	L(62,64)	D4ZZ 60518A42-A		1
79	V	D7LY 65518A42-A		1
518A62-3	EXTENSION (ROOF ROLL INNER PILLAR LOWER)			
77/	K	(RH) D7LY 65518A62-A	(LH) D7LY 65518A63-A	1
518A66	COVER (SLIDING ROOF PANEL REINFORCEMENT)			
78	A(65) - - w/glass sliding roof	D5VY 60518A66-A	Paint to match	1
75/76	D			1
77/78	A(53),V	D5WZ 65518A66-A	Paint to match	1
75/77	F			1
75/	G			1
78/	F	D8SZ 60518A66-A		1
79	V	D8SZ 60518A66-A		1
73/76	K - - w/glass sliding roof	D5VY 60518A66-A	Paint to match	1
77/	D,K	D7LY 65518A66-A	Paint to match	1
51868-9	PILLAR ASSY. (ROOF ROLL OUTER)			
75/	D(60)	(RH) D5VY 6051868-A	(LH) D5VY 6051869-A	1
77/	K	(RH) D7LY 6551868-A	(LH) D7LY 6551869-A	1
51880	RETAINER (SLIDING ROOF PANEL REAR GUIDE PLATE)			
77	D,K	D2FZ 6251880-A		2
74/77	L(62,64)			2
78/	F(65)	D8SZ 6051880-A		2
79	V	D8SZ 6051880-A		2
51890	BRACKET (SLIDING PANEL HOUSING)			
77/	D	D7VY 6051890-A		2
518A90	BRACKET ASSY. (ROOF OPENING PANEL LATCH)			
79	J - - w/removable glass panel	D9ZZ 66518A90-A		1
77/	L(62,64) - - w/removable glass panel			1
78/	P - - w/removable glass panel	D9ZZ 66518A90-A		1
518A92	COVER (RETAINER ROOF SLIDING PANEL CABLE GUIDE)			
77/	D,K - - w/sliding roof	D7LY 65518A92-A		1
78/	F			1
79	V	D7LY 65518A92-A		1
518A94	RETAINER (ROOF OPENING TRIM PANEL)			
79	J - - w/removable glass panel	D7FZ 62518A94-A		2
77/	L - - w/removable glass panel			2
78/	P - - w/removable glass panel			2
51897	Refer to group 502B20-1			

1973/79
LINCOLN-MERCURY CARS

YEAR	MODEL/RESTRICTIONS	PART NUMBER	DESCRIPTION	QTY.
518A98	RETAINER (ROOF OPENING GLASS)			
79	J - - w/removable glass panel	D7FZ 62518A98-A		1
77/	L(62,64) - - w/removable glass panel			1
78/	P - - w/removable glass panel			1
519B18	CLIP (ROOF TRIM CENTER MOULDING)			
79	A(74)	D9AZ 74519B18-A		5
79	P(74)			5
519A48-9	RETAINER (ROOF HEADLINING SIDE LOWER REAR)			
79	A(66)	D9AZ 66519A48-A	R.H. and L.H.	2
77/	D(53) - - w/opera window	D7VY 53519A48-A		2
519B66	PAD (SLIDING ROOF CONSOLE HEADER)			
73	A(53,57),Y(53)	D3AZ 57519B66-A		1
75/76	A(53),F,G,Y(53)	D5WZ 65519B66-A		1
77/78	A(53)			1
77/	D,K - - w/sliding roof	D7LY 65519B66-A		1
77	F,G,V	D5WZ 65519B66-A		1
78/	G			1
78	V			1
78/	F	D8SZ 60519B66-A		1
79	V			1
519B92-3	SUPPORT (ROOF SIDE REAR TRIM PANEL)			
77/	F(53) - - w/o opera window	(RH) D70Z 53519B92-A	(LH) D70Z 53519B93-A	1
77/	F(65) - - w/o opera window	(RH) D70Z 65519B92-A	(LH) D70Z 65519B93-A	1
519B94-5	PAD (SLIDING ROOF SIDE RAIL)			
73/76	A(53,57),Y(53)	D3AZ 57519B94-A		1
73	F(65)	D2WY 65519B94-A		1
74/77	F,G,V			1
78/	G,V			1

COPYRIGHT © 1986 — FORD MOTOR COMPANY — DEARBORN, MICHIGAN

52101 SUPPORT (ROOF HEADLINING)

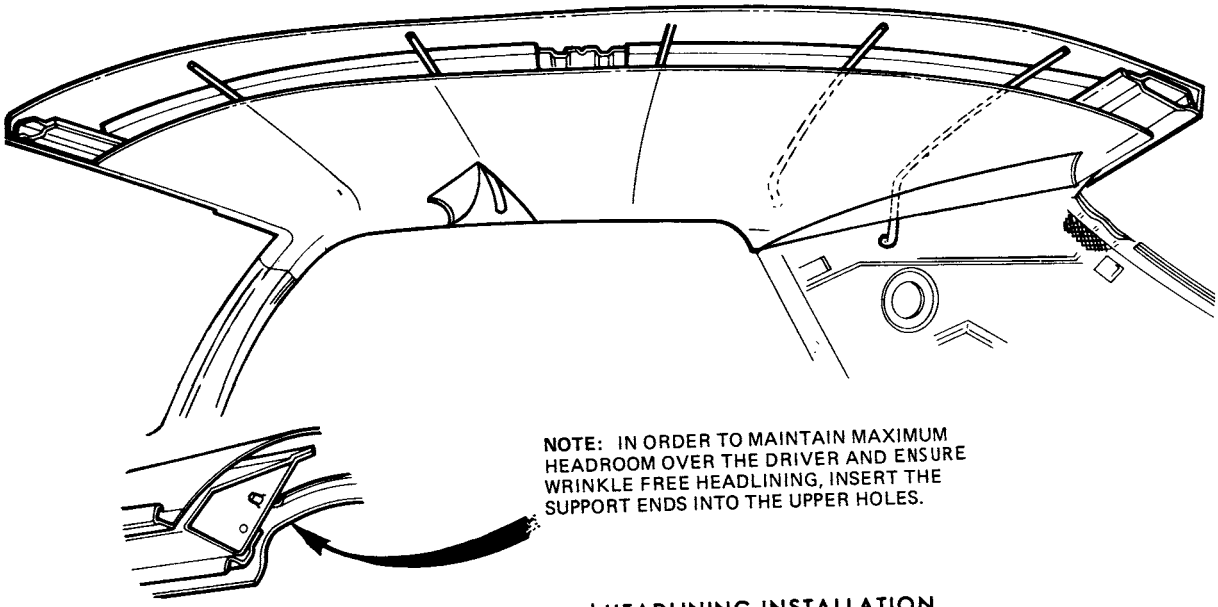

TYPICAL ROOF BOW and HEADLINING INSTALLATION

D4AZ 6552101 -A

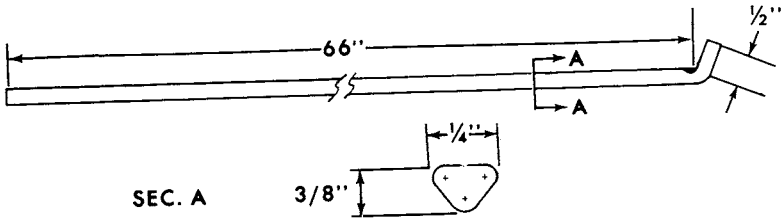

USED FOR ALL HEADLINING LOCATIONS EXCEPT SLIDING ROOF PANEL ON 1974/ MUSTANG AND 1971/ BOBCAT AND PINTO

P-11625-A

52101 SUPPORT (ROOF HEADLINING) — Cont'd

STEP NO.1

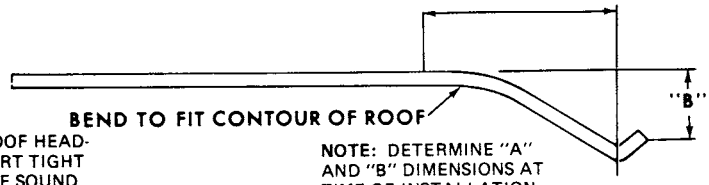

NOTE: FIT ROOF HEADLINING SUPPORT TIGHT AGAINST ROOF SOUND ABSORBER WHEN CUSTOM BENDING AND CUTTING ARE COMPLETED.

NOTE: DETERMINE "A" AND "B" DIMENSIONS AT TIME OF INSTALLATION BY BENDING TO FIT CONTOUR OF ROOF

STEP NO. 2

STEP NO.3

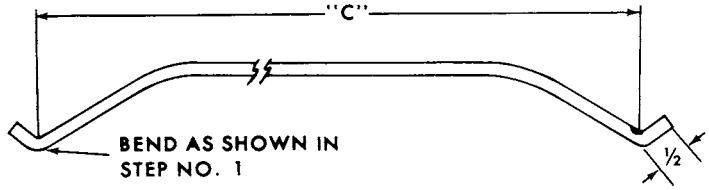

NOTE: DETERMINE "C" DIMENSION AT TIME OF INSTALLATION.

STEP NO. 4

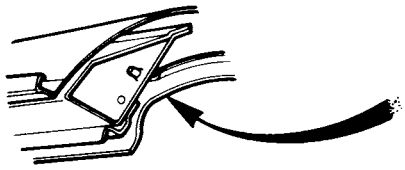

NOTE: IN ORDER TO MAINTAIN MAXIMUM HEADROOM OVER THE DRIVER AND ENSURE WRINKLE FREE HEADLINING, INSERT THE SUPPORT ENDS INTO THE UPPER HOLES.

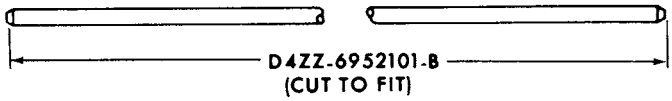

USED ONLY FOR SLIDING ROOF PANEL ON 1974/ MUSTANG AND 1971/ BOBCAT AND PINTO AND 1979 VERSAILLES

YEAR	MODEL/RESTRICTIONS	PART NUMBER	DESCRIPTION	QTY.
52118	RETAINER (ROOF TRIM PANEL FRONT)			
79	J - - w/removable glass panel	D9ZZ 6652118-A		1
77/	L(62,64) - - w/removable glass panel	D7FZ 6252118-A		1
78/	P - - w/removable glass panel	D9ZZ 6652118-A		1

COPYRIGHT © 1986 — FORD MOTOR COMPANY — DEARBORN, MICHIGAN

1973/79 LINCOLN-MERCURY CARS

YEAR	MODEL/RESTRICTIONS	PART NUMBER	DESCRIPTION	QTY.
52124	RETAINER (SLIDING ROOF HEADLINING)			
77	D,K	D7LY 6552124-B	Black	1
		D7LY 6552124-A	Blue	1
		D7LY 6552124-J	Chamois	1
		D7LY 6552124-G	Cordovan	1
		D7LY 6552124-K	Cream	1
		D7LY 6552124-H	Gray	1
		D7LY 6552124-E	Jade	1
		D7LY 6552124-C	Red	1
		D7LY 6552124-F	White	1
78	D,K	D7LY 6552124-B	Black	1
		D8LY 6552124-A	Blue	1
		D8LY 6552124-B	Champagne	1
		D7LY 6552124-J	Chamois	1
		D7LY 6552124-G	Cordovan	1
		D7LY 6552124-K	Cream	1
		D8LY 6552124-C	Gold	1
		D7LY 6552124-E	Jade	1
		D7LY 6552124-C	Red	1
		D7LY 6552124-F	White	1
79	D	D9LY 6552124-C	Beryl	1
		D7LY 6552124-B	Black	1
		D9LY 6552124-A	Blue (dark)	1
		D8LY 6552124-A	Blue (light)	1
		D8LY 6552124-B	Champagne	1
		D7LY 6552124-G	Cordovan	1
		D8LY 6552124-C	Gold	1
		D7LY 6552124-H	Gray	1
		D7LY 6552124-C	Red	1
		D7LY 6552124-F	White	1
78	F	D8SZ 6052124-B	Blue	1
		D8SZ 6052124-G	Chamois	1
		D8SZ 6052124-F	Gray	1
		D8SZ 6052124-A	Jade	1
		D8SZ 6052124-D	Russet	1
		D8SZ 6052124-C	Saddle	1
		D8SZ 6052124-E	White	1
79	F	D7LY 6552124-A	Blue	1
		D8SZ 6052124-G	Chamois	1
		D7LY 6552124-G	Cordovan	1
		D8SZ 6052124-F	Gray	1
		D7LY 6552124-E	Jade	1
		D7LY 6552124-C	Red	1
		D8SZ 6052124-E	White	1
79	K	D9LY 6552124-D	Amethyst	1
		D9LY 6552124-C	Beryl	1
		D7LY 6552124-B	Black	1
		D9LY 6552124-A	Blue (dark)	1
		D8LY 6552124-A	Blue (light)	1
		D8LY 6552124-B	Champagne	1
		D7LY 6552124-G	Cordovan	1
		D7LY 6552124-K	Cream	1
		D7LY 6552124-H	Gray	1
		D7LY 6552124-C	Red	1
		D7LY 6552124-F	White	1

1973/79 LINCOLN-MERCURY CARS

YEAR	MODEL/RESTRICTIONS	PART NUMBER	DESCRIPTION	QTY.
52124	RETAINER (SLIDING ROOF HEADLINING) — Cont'd			
74	L(62,64)	D2FZ 6252124-D	Avocado	1
		D2FZ 6252124-G	Beige	1
		D2FZ 6252124-H	Black	1
		D3FZ 6252124-C	Blue	1
		D2FZ 6252124-C	Ginger	1
		D3FZ 6252124-B	Orange	1
		D4FZ 6252124-A	Saddle	1
		D3FZ 6252124-A	Yellow	1
		D2FZ 6252124-A	White	1
75	L(62,64)	D5FZ 6252124-C	Black	1
		D3FZ 6252124-C	Blue	1
		D5FZ 6252124-D	Green	1
76	L(62,64)	D7LY 6552124-B	Black	1
		D7LY 6552124-A	Blue	1
		D5FZ 6252124-D	Green	1
		D6FZ 6252124-A	Red	1
77	L(62,64)	D5FZ 6252124-C	Black	1
		D3FZ 6252124-C	Blue	1
		D7LY 6552124-J	Chamois	1
		D5FZ 6252124-D	Green	1
		D6FZ 6252124-A	Red	1
79	V	D94Y 5452124-K	Beryl	1
		D94Y 5452124-B	Blue-Wedge wood	1
		D94Y 5452124-U	Champagne	1
		D94Y 5452124-F	Cordovan	1
		D94Y 5452124-P	Gray	1
		D94Y 5452124-D	Red	1
52136-7	RETAINER (ROOF HEADLINING SIDE FRONT)			
73	A(71),Y(71) "Before 6/15/73"	(RH) D3AZ 7152136-A	(LH) D3AZ 7152137-A	1
73/76	C(53)	(RH) D20Z 5352136-A	(LH) D20Z 5352137-A	1
75/	D(53)	(RH) D5VY 5352136-A	(LH) D5VY 5352137-A	1
75/	D(60)	(RH) D5VY 6052136-A	(LH) D5VY 6052137-A	1
77/	F(53)	(RH) D20Z 5352136-A	(LH) D20Z 5352137-A	1
77/	F(65D,K)	(RH) D70Z 6552136-A	(LH) D70Z 6552137-A	1
77/	F(65L)	(RH) D7WY 6552136-A	(LH) D7WY 6552137-A	1
75/	G(54)	(RH) D5DZ 5452136-A	(LH) D5DZ 5452137-A	1
75/	G(66)	(RH) D5DZ 6652136-A	(LH) D5DZ 6652137-A	1
77/	K	(RH) D7LY 6552136-A	(LH) D7LY 6552137-A	1
74/	L(73)	(RH) D4FZ 7352136-A	(LH) D4FZ 7352137-A	1
73/78	A,C	376389-S101	(UU-82-D)-screw-hex. hd.-No. 8-18 x 1/2"	AR
52138-9	RETAINER (ROOF HEADLINING SIDE LOWER)			
75/	G(54)	(RH) D5DZ 5452138-A	(LH) D5DZ 5452139-A	1
52148-9	RETAINER (ROOF HEADLINING SIDE REAR)			
73	C(63)	(RH) D20Z 6352148-A	(LH) D20Z 6352149-A	1
75/	D(60)	(RH) D5VY 6052148-A	(LH) D5VY 6052149-A	1
77/	F(53)	(RH) D70Z 5352148-A	(LH) D70Z 5352149-A	1
77/	F(65D,K)	(RH) D70Z 6552148-A	(LH) D70Z 6552149-A	1
77/	F(65L)	(RH) D7WY 6552148-A	(LH) D7WY 6552149-A	1
75/	G(54)	(RH) D5DZ 5452148-A	(LH) D5DZ 5452149-A	1
76/	G(66)	(RH) D6DZ 6652148-A	(LH) D6DZ 6652149-A	1
77/	K	(RH) D7LY 6552148-A	(LH) D7LY 6552149-A	1
78/	P(36)	(RH) D8BZ 3652148-A	(LH) D8BZ 3652149-A	1
78/	P(54,66)	(RH) D8BZ 5452148-A	(LH) D8BZ 5452149-A	1
73/	C,K	376389-S101	(UU-82-D)-screw-hex. hd. No. 8-18 x 1/2"	AR
52182-3	RETAINER (ROOF HEADLINING SUPPORT)			
73/74	A(65),Y(65)	D1AZ 6552182-A		1
73	C(63)	D20Z 6352182-A		1
74/	L(62,64)	(RH) D4FZ 6252182-A	(LH) D4FZ 6252183-A	1

COPYRIGHT © 1986 — FORD MOTOR COMPANY — DEARBORN, MICHIGAN

1973/79 LINCOLN-MERCURY CARS

YEAR	MODEL/RESTRICTIONS	PART NUMBER	DESCRIPTION		QTY.
52566-7	SUPPORT (ROOF RAIL INNER TO PACKAGE TRAY)				
77/	K - - w/o sliding roof	(RH) D7LY 6552208-A	(LH) D7LY 6552208-B		1
77/	K - - w/sliding roof	(RH) D7LY 6552208-C	(LH) D7LY 6552208-D		1
52208	RETAINER (ROOF HEADLINING SIDE)				
79	A(54,66)	(RH) D9AZ 5452566-A	(LH) D9AZ 5452567-A		1
75/	D(53)	(RH) D5VY 5352566-A	(LH) D5VY 5352567-A		1
75/	D(60)	(RH) D5VY 6052566-A	(LH) D5VY 6052567-A		1
77/	F(53)	(RH) D70Z 5352566-A	(LH) D70Z 5352567-A		1
77/	F(65)	(RH) D70Z 6552566-A	(LH) D70Z 6552567-A		1
75/	G(54)	(RH) D5DZ 5452566-A	(LH) D5DZ 5452567-A		1
75/	G(66)	(RH) D5DZ 6652566-A	(LH) D5DZ 6652567-A		1
77/	K	(RH) D7LY 6552566-A	(LH) D7LY 6552567-A		1
74/	L(62)	(RH) D1FZ 6252566-A	(LH) D1FZ 6252567-A		1
78/	P(36)	(RH) D8BZ 3652566-A	(LH) D8BZ 3652567-A		1
78/	P(54,66)	(RH) D8BZ 5452566-A	(LH) D8BZ 5452567-A		1
77/	V(54)	(RH) D5DZ 5452566-A	(LH) D5DZ 5452567-A		1
52806	WIRING (FOLDING TOP SIDE TENSION)				
73	F(76)	D1ZZ 7652806-A			2
533A00	MOTOR and PLATE KIT (FOLDING TOP HYDRAULIC LIFT)				
73	F(76)	D1AZ 76533A00-A			1
53337	PUMP REPAIR KIT (FOLDING TOP HYDRAULIC LIFT)				
73	F(76)	C4DZ 7653337-A			1
	Consists of				
	1- Plate assy.		2- "O" ring		
	1- Reservoir and bracket assy.		1- "O" ring		
	1- "O" ring		1- Outer rotor		
53376	RESERVOIR REPAIR KIT (FOLDING TO HYDRAULIC LIFT)				
73	F(76)	D1WY 7653376-A			1
53712	BRACKET (ROOF OPENING GLASS HANDLE SPRING)				
79	J - - w/removable glass panel	(RH) ★ D9ZZ 6653712-A r/b E1DZ 6653712-A(12/81) (includes hinge)	(LH) E1DZ 6653713-A (includes hinge)	Bracket-requires D9ZZ 66502-D60-B hinge	1
77/	L(62,64) - - w/removable glass panel	D7FZ 6253712-A	R.H. and L.H.		2
78/	P - - w/removable glass panel	(RH) ★ D9ZZ 6653712-A r/b E1DZ 6653712-A(12/81) (includes hinge)	(LH) E1DZ 6653713-A (includes hinge)	Bracket-requires D9ZZ 66502-D60-B hinge	1
537A12-3	PANEL and EXTENSION ASSY. (ROOF OUTSIDE TRIM)				
77/78	V	(RH) D84Y 54537A12-A	(LH) D84Y 54537A13-A		1
53716	RETAINER (ROOF COVER) - Also refer to group 51728-9				
74/76	A(53,57,65),C(65),F,K	D3AZ 6553716-A			AR
77/78	A(53,65), F(53,65)				AR
77/	D,K				AR

YEAR	MODEL/RESTRICTIONS	PART NUMBER	DESCRIPTION	QTY.
537A26	FILLER (ROOF OUTSIDE TRIM PANEL)			
77/78	V	D84Y 54537A26-A		2
77/	D(60) - - w/o sliding roof	D7VY 6053728-A		8
53730-1	RETAINER (ROOF OUTSIDE COVER FRONT)			
76/78	J - - w/sliding roof	(RH) D5RY 6453730-A	(LH) D5RY 6453731-A	1
537A32	SHIELD (ROOF OUTSIDE REAR)			
78/	K - - w/carriage roof	D8LY 65537A32-A	Center	1
79	V	D94Y 54537A32-A		1
	Consists of			
	1- Shield-upper			
	1- Shield-lower			
	1- Shield-R.H.			
	1- Shield-L.H.			
537A34	CLIP (ROOF OUTSIDE COVER RETAINER)			
78/	P - - w/removable glass panel	D9ZZ 66537A34-A		8
537A36-7	SHIELD (ROOF OUTSIDE REAR SIDE)			
78/	K - - w/carriage roof	(RH) D8LY 65537A36-A	(LH) D8LY 65537A37-A	1
537A40	BRACKET (ROOF OUTSIDE TRIM PANEL FRONT)			
78/	K - - w/carriage roof	D8LY 65537A40-A		5
537A42	STRIP ASSY. (ROOF OUTSIDE COVER RETAINER)			
79	J - - w/removable glass panel and w/vinyl roof	D9ZZ 66537A42-A		1
78/	P - - w/removable glass panel and w/vinyl roof	(RH) D9BZ 54537A42-A	(LH) D9BZ 54537A43-A	1
53790	PANEL ASSY. (ROOF OUTSIDE TRIM)			
78/	K - - w/carriage roof	D8LY 6553790-A		1
79	V - - w/o sliding roof	D94Y 5453790-A		1
79	V - - w/sliding roof	D94Y 5453790-B		1
53946	HANDLE (ROOF OPENING GLASS)			
77/	J,L	D7FZ 6253946-A		1
78/	P			1
53986-7	WEATHERSTRIP (FOLDING TOP RAIL)			
73	F(76)	(RH) D1ZZ 7653986-A	(LH) D1ZZ 7653987-A	1
54254-5	RETAINER (ROOF OUTSIDE COVER CENTER)			
77/	K - - w/sliding roof	(RH) D7LY 6554254-A	(LH) D7LY 6554255-A	1
55018	STRAP (SKI CARRIER ADJUSTING)			
79	A(74),J,L(62,73),P(74)	D9AZ 6655018-A		2
550K18	LEVER (SKI CARRIER LOCK)			
79	A(74),J,L(62,73),P(74)	D9AZ 66550K18-A		1
550A20	EYELET (SCREW FASTNER)			
79	J - - w/"4 Seasons Roof Rack"	D9ZZ 66550A20-A		4
550A24-5	RETAINER (ROOF LUGGAGE CARRIER REAR RAIL)			
75/76	A(71),Y(71)	(RH) D5AZ 71550A24-A	(LH) ★ Black nylon	1
77/78	A(71)			
79	A(74)	(RH) D9AZ 74550A24-A	(LH) D9AZ 74550A25-A	1
78/	F(53,65), G(54,66),P(54,66) - - w/luggage compartment carrier	D80Z 65550A24-A		8
79	D - - w/luggage compartment carrier			8
79	J - - w/luggage compartment carrier			5

COPYRIGHT © 1986 — FORD MOTOR COMPANY — DEARBORN, MICHIGAN

1973/79 LINCOLN-MERCURY CARS

YEAR	MODEL/RESTRICTIONS	PART NUMBER	DESCRIPTION	QTY.
55026	NUT (ROOF LUGGAGE CARRIER RAIL LOCK)			
78/	F(53,65), G(54,66),P(54,66) - - w/luggage compartment carrier	D80Z 6555026-A		8
79	D - - w/luggage compartment carrier			8
79	J - - w/luggage compartment carrier			5
79	A(74),J,L(62,73),P(74)	D9ZZ 6655026-A	w/"4 Seasons Roof Rack" w/bike or ski rack	12
550A26	ADAPTER ASSY. (ROOF LUGGAGE SKI CARRIER)			
79	A(74),J,L(62,73),P(74)	D9AZ 66550A26-A	Upper adapter	2
		D9AZ 66550A26-B	Lower adapter	2
550A30	BASE (LUGGAGE COMPARTMENT CARRIER)			
75	G,P	D5DZ 62550A30-A		6
76	A,C,D,F,G,P,Y			6
77	A,D,G,P			6
78	A,D,G			6
55044	SPRING (SKI CARRIER LOCK)			
79	A(74),J,L(62,73),P(74)	D9AZ 6655044-A		2
55054	CLIP (LUGGAGE CARRIER RETAINER)			
79	A(74),J,L(62,73),P(74) - - w/"4 Seasons Roof Rack" w/bike or ski carrier	D9ZZ 6655054-A		4
55058-9	EXTENSION (ROOF LUGGAGE CARRIER SIDE RAIL REAR)			
73/76	A(71),C(71),Y(71)	(RH) D0AZ 7155058-A	(LH) D0AZ 7155059-A w/deflector	1
77	A(71),F(71)			1
78	A(71)			1
79	A(74) - - w/o air deflector	(RH) D9AZ 7455058-A	(LH) D9AZ 7455059-A Oakwood grain	1
		(RH) D9MY 7455058-A	(LH) D9MY 7455059-A Rosewood grain	1
79	A(74) - - w/air deflector	(RH) E1AZ 7455058-A	(LH) E1AZ 7455059-A	1
550A64	WASHER (ROOF LUGGAGE CARRIER RAIL NUT)			
73/76	A(71),Y(71)	D0AZ 71550A64-A		2
77/	A(71)			2
75/76	C(71)			2
77	F(71)			2
55068-9	RETAINER (ROOF LUGGAGE CARRIER FRONT RAIL) - Incl. attaching parts			
75/76	A(71),Y(71)	(RH) D5AZ 7155068-A	(LH) D5AZ 7155069-A Black nylon	1
77/	A(71)			
79	A(74)	(RH) D9AZ 7455068-A	(LH) D9AZ 7455069-A	1
79	J - - w/"4 Seasons Roof Rack"	D9AZ 6655068-A	Front and rear	4
550A68	COVER (ROOF LUGGAGE CARRIER RETAINER)			
73/76	C(71)	D00Z 71550A68-A	Rubber	6
77	F(71)			6
55074	RETAINER (ROOF LUGGAGE CARRIER SLAT)			
79	A(74),J,L(62,73),P(74) - - w/"4 Seasons Roof Rack"	D9AZ 6655074-A		4
550A76-7	ARM ASSY. (BICYCLE ADAPTER)			
79	J - - w/"4 Seasons Rack"	(RH) D9ZZ 66550A76-A	(LH) D9ZZ 66550A77-A	1
550A82	TRACK ASSY. (BICYCLE ADAPTER)			
79	J - - w/"4 Seasons Rack"	D9ZZ 66550A82-A		2
550A84	HOOK (BICYCLE ADAPTER)			
79	J - - w/"4 Seasons Rack"	D9ZZ 66550A84-A		2
550A86	SUPPORT ASSY. (BICYCLE ADAPTER)			
79	J - - w/"4 Seasons Rack"	D9ZZ 66550A86-A		2
550A88	STRAP ASSY. (BICYCLE ADAPTER)			
79	J - - w/"4 Seasons Rack"	D9ZZ 66550A88-A		4
550A90	BRACE ASSY. (BICYCLE ADAPTER ARM)			
79	J - - w/"4 Seasons Rack"	(RH) D9ZZ 66550A90-A	(LH) D9ZZ 66550A90-B	1

YEAR	MODEL/RESTRICTIONS	PART NUMBER	DESCRIPTION	QTY.
55092	PAD (SKI CARRIER)			
79	J	D9AZ 6655092-A	Upper end rail	4
		D9AZ 6655092-B	Lower end rail	4
55100	CARRIER KIT (ROOF LUGGAGE)			
76/78	A(71)	D8AZ 7155100-A	w/o deflector	1

Consists of

1-D5AZ 71550A24-A	Retainer R.H.-rear	1-D20Z 7155157-A	Pad-L.H.-rear
1-D5AZ 71550A25-A	Retainer L.H.-rear	1-D3AZ 7155157-B	Pad-L.H.-front
2-D0AZ 7155026-A	Nut	8-D0AZ 6455180-A	Fastener
2-D0AZ 71550A64-A	Washer	1-D0MY 7155182-A	Cap-R.H.
1-D5AZ 7155068-A	Retainer R.H.-front	1-D0MY 7155183-A	Cap-L.H.
1-D5AZ 7155069-A	Retainer L.H.-front	1-33797S8	Nut
1-D5AZ 7155106-A	Rail-front	3-34790S2	Washer
1-D6AZ 7155114-B	Rail R.H.-side	2-44720S2	Washer
1-D6AZ 7155115-B	Rail L.H.-side	2-304718S2	Bolt
1-D4AZ 7155138-A	Rail-rear	8-375223-S100	Screw
1-D0AZ 7155140-C	Support-R.H.-front	8-376608545	Screw
1-D0AZ 7155140-D	Support-R.H.-rear	8-383141S45	Screw
1-D0AZ 7155141-C	Support-L.H.-front	2-384654S4SX	Screw
1-D0AZ 7155141-D	Support-L.H.-rear	8-	Sealer
4-D3AZ 7155147-A	Pad	1	Installation sketch
4-D3AZ 7155150-A	Slat		
1-D20Z 7155156-A	Pad-R.H.-rear		
1-D3AZ 7155156-B	Pad-R.H.-front		

79	A(74)	D9AZ 7455100-A	w/o deflector	1

Consists of

5-D9AB 7455022-AA	Slat	3-34790-S2	Washer
1-D9AB 7455104-AB	Rail R.H. side	2-44720-S2	Washer
1-D9AB 7455105-AB	Rail L.H. side	2-304718-S2	Bolt
2-D9AB 7455106-AA	Rail-cross	15-384439-S47X	Screw
2-D9AB 7455156-AA	Pad	8-	Bolt
2-D9AB 7455157-AA	Pad	8-	Sealer
1-33797-S8	Nut	4-	Screw
		1-	Installation sketch

79	A(74),J,L(62,73),P(74)	★ D9AZ 6655100-A	Ski adapter kit-for two sets ski's and poles-r/b E1AZ 6655100-A(3/84)	1

Consists of

2-D9AZ 6655018-A	Strap	4-D9AZ 6655092-A	Pad
2-D9AZ 66550K18-A	Lever	4-D9AZ 6655092-B	Pad
2-D9AZ 66550A26-A	Adapter	4-	Screws
2-D9AZ 66550A26-B	Adapter	10-	Washers
4-D9ZZ 6655026-A	Nut	8-	Nuts
2-D9AZ 6655044-A	Spring	8-	Ph. Head Screw
4-D9ZZ 6655054-A	Clip	1-	Installation Sketch
4-D9AZ 6655074-A	Retainer		

73/76	C(71)	D20Z 7155100-A		1
77	F(71)			1

Consists of

8-D0AZ 6455180-A	Rivet nut	1-D20Z 7155156-A	Pad-R.H.-rear
1-D2GY 7150860-A	Panel (air deflector)	1-D20Z 7155156-B	Pad-R.H.-front
2-D0AZ 7155026-A	Nut	1-D20Z 7155157-A	Pad-L.H.-rear
1-D0AZ 7155058-A	Extension-R.H.	1-D20Z 7155157-B	Pad-L.H.-front
1-D0AZ 7155059-A	Extension-L.H.	8-BAE 6455180-A	Fastener
2-D0AZ 71550A64-A	Washer	1-33797-S	Nut
1-D20Z 7155106-A	Rail-front	2-★34790-S	Washer
1-D2GY 7155114-A	Rail-R.H.-side	1-44720-S	Washer
1-D2GY 7155115-A	Rail-L.H.-side	1-★304718-S	Bolt
1-D20Z 7155138-A	Rail-rear	2-★306400-S	Screw
1-D0AZ 7155140-C	Support-R.H.-front	8-376608-S	Screw
1-D0AZ 7155140-D	Support-R.H.-rear	8-383141-S	Screw
1-D0AZ 7155141-C	Support-L.H.-front	12-384654-S	Screw
1-D0AZ 7155141-D	Support-L.H.-rear	1-	Installation sketch
4-D20Z 7155150-A	Slat		

COPYRIGHT © 1986 — FORD MOTOR COMPANY — DEARBORN, MICHIGAN

1973/79 LINCOLN-MERCURY CARS

YEAR	MODEL/RESTRICTIONS	PART NUMBER	DESCRIPTION	QTY.
55100	CARRIER KIT (ROOF LUGGAGE) — Cont'd			
73/78	J - - collapsible	D0RY 6255100-A		1
75/78	L			1
79	J	D9ZZ 6655100-B	"4 Seasons Rack"-r/b E1ZZ 6655100-A (3/84)	1

Consists of

2-D9ZZ 6655150-B	Slat	8-D9ZZ 66550A20-A	Eyelet
2-D9ZZ 6655114-A	Rail	2-304718-S2	Bolt
2-D9ZZ 6655106-A	Rail	3-34790-S2	Washer
4-D9ZZ 6655068-A	Retainer	1-33797-S8	Nut
2-D9ZZ 6655156-A	Pad	4-	Hex head screws
2-D9ZZ 6655147-C	Pad	4-	Pan head screws
4-D9ZZ 6655140-A	Support	4-Ph. head screws	
4-D9ZZ 6655182-A	Cap	4-	Screws
8-D0AZ 6455180-A	Fastner	8-	Sealer
12-D9ZZ 6655026-A	Nut	8-	Sealer
12-D9ZZ 6655054-A	Clip	1-	Installation sketch

79	J	D9ZZ 6655100-C	BICYLCE ADAPTER	1

Consists of

1-D9ZZ 66502B08-A	Deflector	4-	Bolts
4-D9ZZ 6655026-A	Nut	8-	Bolts
4-D9ZZ 6655054-A	Clip	4-	Bolts
1-D9ZZ 66550A76-A	Arm	1-	Bolt
1-D9ZZ 66550A77-A	Arm	11-	Nuts
2-D9ZZ 66550A82-A	Track	1-	Nut
2-D9ZZ 66550A84-A	Hook	4-	Screws
2-D9ZZ 66550A86-A	Support	4-	Washers
4-D9ZZ 66550A88-A	Strap	20-	Washers
1-D9ZZ 66550A90-A	Brace	8-	Washers
1-D9ZZ 66550A90-B	Brace	8-	Washers
1-D9ZJ 6600014-AA	Decal	2-	Washers
		2-	Washers
		2-	Wing nut

74/	L(73)	★ D2FZ 7355100-A	(12/81)	1

Consists of

1-D2FZ 7355106-A	Rail-front	2-D2FZ 7355157-A	Pad-support-L.H.
2-D2FZ 7355114-A	Rail-side	8-D0AZ 6455180-A	Rivet-nut
4-D22B 7355078-AA	Retainer	16-	Screws
1-D2FZ 7355138-A	Rail-rear	1-	Bolt
2-D1FZ 6255140-A	Support-R.H.	3-	Washers
2-D1FZ 6255141-A	Support-L.H.	1-	Nut
4-D2FZ 7355150-A	Slat	8-	Sealer
2-D2FZ 7355156-A	Pad-support-R.H.	1-	Installation sketch

78	P(74) "Before 6/1/78"	D8BZ 7455100-A		1

Consists of

2-D8BZ-7455106-A	Rail-cross	1-33797-S8	Nut
2-D8BZ-7455114-A	Rail-side	2-34790-S2	Washer
4-D8BZ-7455124-A	Reinforcement	1-44720-S2	Washer
2-D8BZ-7455140-A	Support	8-54504-S45	Screw
2-D8BZ-7455141-A	Support	12-55934-S47X	Screw
4-D8BZ-7455150-A	Slat	1-304718-S2	Bolt
2-D8BZ-7455156-A	Pad	8-376662-S45	Screw
2-D8BZ-7455157-A	Pad	8-	Sealer
8-D0AZ-6455180-A	Rivet-nut	1-	Installation sketch

YEAR	MODEL/RESTRICTIONS	PART NUMBER	DESCRIPTION	QTY.
55100	CARRIER KIT (ROOF LUGGAGE) — Cont'd			
78/	P(74) "From 6/1/78"	D8BZ 7455100-B	w/wood grain-★ r/b D9BZ 7455100-A (7/81)	
	Consists of			
	2-D8BZ 7455106-B Rail-cross		1-33797-S8 Nut	
	2-D8BZ 7455114-A Rail-side		2-34790-S2 Washer	
	4-D8BZ 7455124-A Reinforcement		1-44720-S2 Washer	
	2-D8BZ 7455140-B Support		8-54504-S45 Screw	
	2-D8BZ 7455141-B Support		12-55934-S47X Screw	
	4-D8BZ 7455150-A Slat		1-304718-S2 Bolt	
	2-D8BZ 7455156-A Pad		8-376662-S45 Screw	
	2-D8BZ 7455157-A Pad		8- Sealer	
	8-D0AZ 6455180-A Rivet-nut		1- Installation sketch	
79	P(74)	D9BZ 7455100-A	w/o wood grain	1
	Consists of			
	2-D8BZ 7455106-B Rail-cross		2-34790-S2 Washer	
	2-D9BZ 7455114-A Rail-side		1-44720-S2 Washer	
	2-D8BZ 7455140-B Support		8-54504-S45 Screw	
	2-D8BZ 7455141-B Support		12-55934-S47X Screw	
	4-D8BZ 7455150-B Slat		1-304718-S2 Bolt	
	2-D8BZ 7455156-A Pad		8-376662-S45 Screw	
	2-D8BZ 7455157-A Pad		8- Sealer	
	8-D0AZ 6455180-A Rivet-nut		1- Installation sketch	
	1-33797-S8 Nut			
79	A(74),J,L(73),P(66)	★ D9RZ 6455100-B	w/Cover	1
	Consists of			
	1-D9RJ 4055060-AA Carrier			
	1- Installation sketch			
55100	CARRIER KIT (LUGGAGE COMPARTMENT)			
78/	F(53,65)	D80Z 6555100-A		1
	Consists of			
	8-D80Z 65550A24-A Retainer		8-D80Z 6555182-A Cap	
	8-D80Z 6555026-A Nut		2-383141-S45 Screw	
	1-D80Z 6555138-A Rail		1- Kit-rev-nut	
	1-D80Z 6555140-A Support R.H.		10- Rev-nut	
	1-D80Z 6555141-A Support L.H.		2- Screw	
	3-D80Z 6555147-A Pad-inner		8- Screw	
	2-D80Z 6555147-B Pad-outer		8- Screw	
	5-D80Z 6555150-A Slat		1- Installation sketch	
78/	G(54,66),P(54,66)	D8DZ 6655100-A		1
79	D(54,66)			1
	Consists of			
	8-D80Z 65550A24-A Retainer		8-D80Z 6555182-A Cap	
	8-D80Z 6555026-A Nut		2-383141-S45 Screw	
	1-D8DZ 6655138-A Rail		1- Kit-rev-nut	
	1-D80Z 6555140-A Support R.H.		10- Rev-nut	
	1-D80Z 6555141-A Support L.H.		2- Screw	
	3-D8DZ 6655147-A Pad-inner		8- Screw	
	2-D8DZ 6655147-B Pad-outer		8- Screw	
	5-D8DZ 6655150-A		1- Installation sketch	
79	J	D9ZZ 6655100-A		1
	Consists of			
	5-D80Z 65550A24-A Retainer		8-D80Z 6555182-A Cap	
	5-D80Z 6555026-A Nut		2-383141-S45 Screw	
	1-D8DZ 6655138-A Rail		8- Screw	
	1-D80Z 6555140-A Support		2- Screw	
	1-D80Z 6555141-A Support		10- Rev-nut	
	3-D9ZZ 6655147-A Pad		2- Kit-rev-nut	
	2-D9ZZ 6655147-B Pad		5- Screw	
	5-D9ZZ 6655150-A Slat		1- Installation sketch	

COPYRIGHT © 1986 — FORD MOTOR COMPANY — DEARBORN, MICHIGAN

1973/79 LINCOLN-MERCURY CARS

YEAR	MODEL/RESTRICTIONS	PART NUMBER	DESCRIPTION		QTY.
55106	**RAIL (ROOF LUGGAGE CARRIER)**				
		FRONT	REAR		
75/76	A(71),Y(71)	★ D5AZ 7155106-A	D4AZ 7155138-A	Less retainers	1
77/78	A(71)				1
79	A(74)	D9AZ 7455106-A	Front and rear		1
78/	F(53,65) - - w/ luggage compartment carrier		D80Z 6555138-A		1
78/	G(54,66),P(54,66) - - w/ luggage compartment carrier		D8DZ 6655138-A		1
79	D(54,66) - - w/luggage compartment carrier				1
79	J - - w/luggage compartment carrier				1
79/	J - - w/"4 Seasons Roof Rack"	D9ZZ 6655106-A			2
74/	L(62,64)	D4FZ 6255106-A	D4FZ 6255138-A	Bright finish	1
74/	L(73)	D4FZ 7355106-A	D4FZ 7355138-A	Bright finish	1
79	L(73)	D9FZ 7355106-A	D9FZ 7355138-A	Black finish	1
73/77	P(62)	D4FZ 6255106-A	D4FZ 6255138-A	Bright finish	1
78	P(74)	D8BZ 7455106-A	Front and rear-end 1 1/8" x 5/8		2
78/	P(74)	D8BZ 7455106-B	Front and rear-end 1 1/2" x 1/2		2
55114-5	**RAIL (ROOF LUGGAGE CARRIER SIDE)**				
79	A(74)	(RH) E0AZ 7455114-A	(LH) E0AZ 7455115-A	Oakwood grain	1
		(RH) E0MY 7455114-A	(LH) E0MY 7455115-A	Rosewood grain	1
76	C(71)	★ D6GY 7155114-A Not repl'd (6/80)	R.H. and L.H.-w/o deflector		1
79	J - - w/"4 Seasons Roof Rack"	D9ZZ 6655114-A			2
74/	L(62,64)	D1FZ 6255114-A	R.H. and L.H.		2
74/	L(73)	D2FZ 7355114-A	R.H. and L.H.-bright finish		2
79	L(73)	D9FZ 7355114-A	R.H. and L.H.-black finish		2
73/77	P(62)	D1FZ 6255114-A	R.H. and L.H.		2
78/	P(74)	D8BZ 7455114-A	R.H. and L.H.	w/wood grain	2
79	P(74)	D9BZ 7455114-A	R.H. and L.H.	w/o wood grain	2
55124	**REINFORCEMENT (ROOF LUGGAGE CARRIER SLAT)**				
74/77	P(62)	D1FZ 6255124-A			4
74/	L(62,64)				4
74/	L(73)	D7FZ 7355124-A			3or4
78/	P(74)		Refer to group 55150		4
55138	**Refer to group 55106**				
55140	**SUPPORT (LUGGAGE COMPARTMENT CARRIER)**				
75/77	A,D,G,P(54)	D5DZ 5455140-A	1" long cylinder		6
75/77	A,D,G				6
75/77	P(62)				2
75/76	C,F				6
78/	F(53,65),G(54,66)	(RH) D80Z 6555140-A	(LH) D80Z 6555141-A	Zinc die cast	1
78/	P(54,66)				1
79	D				1
79	J				1
75/77	P(62)	D5DZ 6255140-A	1 1/4" long		4
55140-1	**SUPPORT (ROOF LUGGAGE CARRIER)**				
79	A(74)	(RH) D9AZ 7455140-B	(LH) D9AZ 7455141-B	Front-Oakwood grain	1
		(RH) D9MY 7455140-A	(LH) D9MY 7455141-A	Front-Rosewood grain	1
		(RH) D9AZ 7455140-A	(LH) D9AZ 7455141-A	Rear	1
73/	L	(RH) D1FZ 6255140-A	(LH) D1FZ 6255141-A	Rear-bright finish	1
73/77	P(62)				1
		(RH) D1FZ 6255141-A	(LH) D1FZ 6255140-A	Front-bright finish	1
		376903-S40	(MM-120-BF)-nut-rivet-1/4"-20		1
79	L(73)	(RH) D9FZ 7355140-A	(LH) D9FZ 7355141-A	Rear-black finish	1
		(RH) D9FZ 7355141-A	(LH) D9FZ 7355140-A	Front-black finish	1
79	J - - w/"4 Seasons Roof Rack"	D9ZZ 6655140-A			4

YEAR	MODEL/RESTRICTIONS	PART NUMBER	DESCRIPTION		QTY.
55140-1	SUPPORT (ROOF LUGGAGE CARRIER) — Cont'd				
78	P(74)	(RH) D8BZ 7455140-A	(LH) D8BZ 7455141-A	Rear-embossment 1 1/8" x 5/8"	1
		(RH) D8BZ 7455141-A	(LH) D8BZ 7455140-A	Front-embossment 1 1/8" x 5/8"	1
78/	P(74)	(RH) D8BZ 7455140-B	(LH) D8BZ 7455141-B	Rear-embossment 1 1/2" x 1/2"	1
		(RH) D8BZ 7455141-B	(LH) D8BZ 7455140-B	Front-embossment 1 1/2" x 1/2"	1
79	P(74)	(RH) D9BZ 7455140-A	(LH) D9BZ 7455141-A	Rear-chrome-w/o wood grain	1
		(RH) D9BZ 7455141-A	(LH) D9BZ 7455140-A	Front-chrome-w/o wood grain	1
55147	PAD (ROOF LUGGAGE CARRIER SLAT)				
73/78	A(71)	D3AZ 7155147-A			4
78/	F(53,65) - - w/luggage compartment carrier	D80Z 6555147-A	Inner		3
		D80Z 6555147-B	Outer		2
78/ 79	G(54,66), P(54,66) - - w/ luggage compartment carrier D - - w/luggage compartment carrier	D8DZ 6655147-A	Inner		3
		D8DZ 6655147-B	Outer		2
79	J - - w/luggage compartment carrier	D9ZZ 6655147-A	Inner		3
		D9ZZ 6655147-B	Outer		2
79	J - - w/"4 Seasons Roof Rack"	D9ZZ 6655147-C			2
77/ 74/77	L(62,64) P(62)	D1FZ 6255147-A			4 4
55150	SLAT (ROOF LUGGAGE CARRIER)				
73/78	A(71)	D3AZ 7155150-A			4
79	A(74)	D9AZ 7455150-A	Includes insulator		5
78/	F(53,65) - - w/luggage compartment carrier	D80Z 6555150-A			5
78/ 79	G(54,66) - - w/luggage compartment carrier D - - w/luggage compartment carrier	D8DZ 6655150-A			5 5
79	J - - w/luggage compartment carrier	D9ZZ 6655150-A			5
79	J - - w/"4 Seasons Roof Rack"	D9ZZ 6655150-B			2
74/	L(62,64)	D1FZ 6255150-A			4
74/	L(73)	D2FZ 7355150-A			3/4
79	L(73)	D9FZ 7355150-A	Black finish		3
73/77	P(62)	D1FZ 6255150-A			4
78/	P(74)	D8BZ 7455150-B	Incl. insulator		4
55156-7	PAD (ROOF LUGGAGE CARRIER SUPPORT)				
73/76 77/79	A(71),Y(71) A(71)	(RH) D3AZ 7155156-B	(LH) D3AZ 7155157-B	Front	1
73/76 77 78	A(71),C(71),Y(71) A(71),F(71) A(71)	(RH) D20Z 7155156-A	(LH) D20Z 7155157-A	Rear	1 1
76	A(71),Y(71)	(RH) D3AZ 7155156-B	(LH) D3AZ 7155157-B	Front w/o deflector	1
		(RH) D3AZ 7155157-B	(LH) D3AZ 7155156-B	Rear w/o deflector	1
79	A(74)	(RH) D9AZ 7455156-A	(LH) D9AZ 7455157-A	Front	1
		(RH) D9AZ 7455157-A	(LH) D9AZ 7455156-A	Rear	1
79	J - - w/"4 Seasons Roof Rack"	D9ZZ 6655156-A			2

COPYRIGHT © 1986 — FORD MOTOR COMPANY — DEARBORN, MICHIGAN

1973/79 LINCOLN-MERCURY CARS

YEAR	MODEL/RESTRICTIONS	PART NUMBER	DESCRIPTION	QTY.
55156-7	PAD (ROOF LUGGAGE CARRIER SUPPORT)— Cont'd			
74/	L(62,64)	(RH) D1FZ 6255156-A	(LH) D1FZ 6255157-A Front and rear	2
74/	L(73)	(RH) D2FZ 7355156-A	(LH) D2FZ 7355157-A Front and rear	2
73/77	P(62)	(RH) D1FZ 6255156-A	(LH) D1FZ 6255157-A	2
78/	P(74)	(RH) D8BZ 7455156-A	(LH) D8BZ 7455157-A Front	1
		(RH) D8BZ 7455157-A	(LH) D8BZ 7455156-A Rear	1
55180	FASTENER (ROOF LUGGAGE CARRIER SUPPORT)			
73/76	A(71),C(71),F(71),L,P,Y(71)	D0AZ 6455180-A	Rivet nut-dealer installed carrier	8
77/78	A(71),P			8
77/	L			8
55182	CAP (LUGGAGE CARRIER RAIL FINISH)			
73/74	A(53,57,65),C(53,63,65), D,F,P,Y(53,65) - - w/luggage compartment carrier	D5DZ 6255182-A	Black rubber	AR
75/78	A,D,G,P - - w/luggage compartment carrier			8
78	A(71)	(RH) ★	(LH) D0MY 7155183-A	1
78/	F(53,65), G(54,66),P(54,66) - - w/luggage compartment carrier	D80Z 6555182-A	Chrome plate	8
79	D - - w/luggage compartment carrier			8
79	J - - w/luggage compartment carrier			8
79	J - - w/"4 Seasons Roof Rack"	D9ZZ 6655182-A		4

YEAR	MODEL/RESTRICTIONS	PART NUMBER	DESCRIPTION	QTY.
60060	PLATE (FRONT SEAT BACK SCUFF)–Also refer to group 61642			
79	J	D1ZZ 6560060–A		8
74/	L			8
73/	P – – w/bucket seats			8
60122	INSULATOR (REAR SEAT BELT ANCHOR)–Cut to fit as required.			
75/	A,C,D,F,G,K,L,P,Y,V	D5AZ 6060122–A		2
60220–1	BEZEL (FRONT SEAT SHOULDER STRAP OPENING)			
75/	D(60)	(RH) D5VY 6060220–B	(LH) D5VY 6060221–B Black	1
		(RH) D5VY 6060220–H	(LH) D5VY 6060221–H Tan	1
		(RH) D5VY 6060220–J	(LH) D5VY 6060221–J Taupe	1
76/77	J	D5RY 6460220–A	R.H. and L.H.–black chrome	2
78	J	E0RY 6460220–A	R.H. and L.H.	2
75	K	(RH) D5LY 6560220–B	(LH) D5LY 6560221–B Aqua	1
		(RH) D5SZ 6560220–B	(LH) D5SZ 6560221–B Black	1
		(RH) D5SZ 6560220–C	(LH) D5SZ 6560221–C Blue	1
		(RH) D5SZ 6560220–G	(LH) D5SZ 6560221–G Green	1
		(RH) D5SZ 6560220–D	(LH) D5SZ 6560221–D Saddle	1
		(RH) D5SZ 6560220–H	(LH) D5SZ 6560221–H Silver	1
		(RH) D5LY 6560220–A	(LH) D5LY 6560221–A Tan	1
		(RH) D5SZ 6560220–A	(LH) D5SZ 6560221–A White	1
76	K	(RH) D5LY 6560220–B	(LH) D5LY 6560221–B Aqua	1
		(RH) D5SZ 6560220–B	(LH) D5SZ 6560221–B Black	1
		(RH) D5SZ 6560220–C	(LH) D5SZ 6560221–C Blue	1
		(RH) D6SZ 6560220–A	(LH) D6SZ 6560221–A Gold	1
		(RH) D6SY 6560220–A	(LH) D6SY 6560221–A Gray	1
		(RH) D5SZ 6560220–E	(LH) D5SZ 6560221–E Red	1
		(RH) D5SZ 6560220–D	(LH) D5SZ 6560221–D Saddle	1
		(RH) D5LY 6560220–A	(LH) D5LY 6560221–A Tan	1
		(RH) D6SZ 6560220–B	(LH) D6SZ 6560221–B White	1
76/	L(62,64)	(RH) D6FZ 6260220–A	(LH) D6FZ 6260221–A Black	1
		(RH) D6FZ 6260220–D	(LH) D6FZ 6260221–D Tan	1
76/	L(73)	(RH) D7FZ 7360220–D	(LH) ★ Black	1
78	P(36)	(RH) D8BZ 3660220–G	(LH) D8BZ 3660221–G Black	1
		(RH) D8BZ 3660220–A	(LH) D8BZ 3660221–A Blue	1
		(RH) D8BZ 3660220–C	(LH) D8BZ 3660221–C Chamois	1
		(RH) D8BZ 3660220–D	(LH) D8BZ 3660221–D Cream	1
		(RH) D8BZ 3660220–E	(LH) D8BZ 3660221–E Jade	1
		(RH) D8BZ 3660220–F	(LH) D8BZ 3660221–F Russet	1
		(RH) D8BZ 3660220–B	(LH) D8BZ 3660221–B White	1
79	P(36)	(RH) D8BZ 3660220–G	(LH) D8BZ 3660221–G Black	1
		(RH) D8BZ 3660220–A	(LH) D8BZ 3660221–A Blue	1
		(RH) D8BZ 3660220–C	(LH) D8BZ 3660221–C Chamois	1
		(RH) D8BZ 3660220–D	(LH) D8BZ 3660221–D Cream	1
		(RH) D9BZ 3660220–A	(LH) D9BZ 3660221–A Red	1
		(RH) D8BZ 3660220–B	(LH) D8BZ 3660221–B White	1
60228	SPACER (SHOULDER STRAP ANCHOR PLATE)			
73	A,D,Y	C7AZ 6260228–B		2
73/74	K			2
73	C,F,P	D2FZ 6260228–A		2
60230–1	COVER (FRONT SEAT SHOULDER STRAP OPENING)			
75	K	D6SY 6560230–B	R.H. and L.H.–aqua	2
		D6SZ 6560230–D	R.H. and L.H.–black	2
		D6SZ 6560230–E	R.H. and L.H.–blue	2
		D5SZ 6560230–G	R.H. and L.H.–green	2
		D6SZ 6560230–F	R.H. and L.H.–saddle	2
		D5SZ 6560230–H	R.H. and L.H.–silver	2
		D6SY 6560230–A	R.H. and L.H.–tan	2
		D6SZ 6560230–J	R.H. and L.H.–white	2

COPYRIGHT © 1986 — FORD MOTOR COMPANY — DEARBORN, MICHIGAN

1973/79 LINCOLN-MERCURY CARS

YEAR	MODEL/RESTRICTIONS	PART NUMBER	DESCRIPTION		QTY.
60230-1	COVER (FRONT SEAT SHOULDER STRAP OPENING) — Cont'd				
76	K	D6SY 6560230-B	R.H. and L.H.-aqua		2
		D6SZ 6560230-D	R.H. and L.H.-black		2
		D6SZ 6560230-E	R.H. and L.H.-blue		2
		D6SZ 6560230-H	R.H. and L.H.-gold		2
		D6SY 6560230-C	R.H. and L.H.-gray		2
		D6SZ 6560230-C	R.H. and L.H.-jade		2
		D6SZ 6560230-G	R.H. and L.H.-red		2
		D6SZ 6560230-F	R.H. and L.H.-saddle		2
		D6SY 6560230-A	R.H. and L.H.-tan		2
		D6SZ 6560230-J	R.H. and L.H.-white		2
77	K - - w/o sliding roof	(RH) D7LY 6560230-W	(LH) D7LY 6560231-W	Black	1
		(RH) ★	(LH) D7LY 6560231-G	Cordovan	1
		(RH) ★	(LH) D7LY 6560231-J	Grey	1
		(RH) ★	(LH) D7LY 6560231-C	Jade	1
		(RH) ★	(LH) D7LY 6560231-A	Red	1
		(RH) ★	(LH) D7LY 6560231-F	White	1
77	K - - w/sliding roof	(RH) D7LY 6560230-R	(LH) D7LY 6560231-R	Black	1
		(RH) ★	(LH) D7LY 6560231-T	Cordovan	1
		(RH) ★	(LH) D7LY 6560231-U	Grey	1
		(RH) ★	(LH) D7LY 6560231-N	Jade	1
		(RH) ★	(LH) D7LY 6560231-L	Red	1
		(RH) ★	(LH) D7LY 6560231-S	White	1
78	K - - w/o sliding roof	(RH) D7LY 6560230-W	(LH) D7LY 6560231-W	Black	1
		(RH) ★	(LH) D8LY 6560231-B	Blue (exc. Diamond Jubilee)	1
		(RH) D8LY 6560230-N	(LH) ★	Blue (Diamond Jubilee)	1
		(RH) ★	(LH) D7LY 6560231-K	Chamois	1
		(RH) ★	(LH) D7LY 6560231-G	Cordovan	1
		(RH) D8LY 6560230-P	(LH) ★	Gold (Diamond Jubilee)	1
		(RH) ★	(LH) D7LY 6560231-J	Grey	1
		(RH) ★	(LH) D7LY 6560231-C	Jade	1
		(RH) ★	(LH) D7LY 6560231-A	Red	1
		(RH) ★	(LH) D7LY 6560231-F	White	1
78	K - - w/sliding roof	(RH) D7LY 6560230-R	(LH) D7LY 6560231-R	Black	1
		(RH) D8LY 6560230-L	(LH) ★	Blue (Diamond Jubilee)	1
		(RH) ★	(LH) D7LY 6560231-T	Cordovan	1
		(RH) D8LY 6560230-M	(LH) ★	Gold (Diamond Jubilee)	1
		(RH) ★	(LH) D7LY 6560231-U	Grey	1
		(RH) ★	(LH) D7LY 6560231-N	Jade	1
		(RH) ★	(LH) D7LY 6560231-L	Red	1
		(RH) ★	(LH) D7LY 6560231-S	White	1
79	K - - w/o sliding roof	(RH) ★	(LH) D9LY 6560231-G	Amethyst	1
		(RH) ★	(LH) D9LY 6560231-H	Beryl	1
		(RH) D7LY 6560230-W	(LH) D7LY 6560231-W	Black	1
		(RH) ★	(LH) D9LY 6560231-C	Blue (exc. Collector's)	1
		(RH) D9LY 6560230-B	(LH) D9LY 6560231-B	Blue (Collector's)	1
		(RH) ★	(LH) D7LY 6560231-G	Cordovan	1
		(RH) ★	(LH) D7LY 6560231-J	Gray	1
		(RH) ★	(LH) D7LY 6560231-A	Red	1
		(RH) ★	(LH) D7LY 6560231-F	White	1

YEAR	MODEL/RESTRICTIONS	PART NUMBER	DESCRIPTION		QTY.
60230-1	COVER (FRONT SEAT SHOULDER STRAP OPENING) — Cont'd				
79	K - - w/sliding roof	(RH) ★	(LH) D9LY 6560231-D	Amethyst	1
		(RH) ★	(LH) D9LY 6560231-E	Beryl	1
		(RH) D7LY 6560230-R	(LH) D7LY 6560231-R	Black	1
		(RH) ★	(LH) D9LY 6560231-F	Blue (exc. Collector's)	1
		(RH) D9LY 6560230-A	(LH) D9LY 6560231-A	Blue (Collector's)	1
		(RH) ★	(LH) D7LY 6560231-T	Cordovan	1
		(RH) ★	(LH) D7LY 6560231-U	Gray	1
		(RH) ★	(LH) D7LY 6560231-L	Red	1
		(RH) ★	(LH) D7LY 6560231-S	White	1

BODY TYPE		PART NUMBER LESS SUFFIX	COLORS AND APPLICABLE PART NUMBER SUFFIXES													QTY.
			AVO-CADO	BEIGE	BLACK	BLUE	GOLD	GREEN	ORANGE	RED	SADDLE	SILVER BLUE	TAN	WHITE	OTHER	
60234-5	BOOT (FRONT SEAT SHOULDER STRAP)															
Notes:	R-Right hand, L-Left hand															
1973																
A,Y	R/L	D1AZ 6560235			H			D		F					A(ginger)	2
	R/L	D2AZ 6560235		B											A(tobacco)	2
C	R/L	D2AZ 6560235		B											A(tobacco)	2
	R/L	D1AZ 6560235			H			D							A(ginger)	2
	R/L	D2DZ 6560235											A			2
	R/L	D3GY 6560235					A									2
D - - w/o integral seat belt and shoulder harness	R/L	D1AZ 6560235			H	M		L		F					A(ginger)	2
	R/L	D2AZ 6560235		B											A(tobacco)	2
	R/L	D3GY 6560235					A									2
	R/L	D3AY 6560235										A				2
D - - w/integral seat belt and shoulder harness	R/L	D3VY 5360235			J	G		E							A(ginger)	2
	R/L	D3VY 5360235													H(tobacco)	2
	R/L	D4AZ 5360235								G		M				2
F	R/L	D1AZ 6560235			H										A(ginger)	2
	R/L	D1AZ 6560235													B(parchment)	2
	R/L	D2DZ 6560235											A			2
	R/L	D2FZ 6560235	A													2
J	R/L	D3RY 6260234			A											2
K	R/L	D1AZ 6560235			H	M		L		F					A(ginger)	2
	R/L	D2AY 6560235													B(cranberry)	2
	R/L	D2AZ 6560235		B											A(tobacco)	2
	R/L	D3AY 6560235										A			B(grey)	2
	R/L	D3GY 6560235					A									2
P	R/L	D1AZ 6560235			H										A(ginger)	2
	R/L	D2AZ 6560235		B												2
	R/L	D2DZ 6560235											A			2
	R/L	D2FZ 6560235	A						B							2
1974																
A(53,71),C(53,71), D(53),P,Y	R/L	D4AZ 5360235		F			E	B								2
	R/L	D6AZ 6060235			D	E										2
D(53)	R/L	D4AY 5360235										A				2
	R/L	D3VY 5360235													A(ginger)	2
	R/L	D6AZ 6060235								G					M(silver)	2
J	R/L	D4RY 6260234			A											2
P - - w/reclining seat	R/L	D6AZ 6060235			D	E									M(silver)	2
	R/L	D3DZ 5460235		G												2

COPYRIGHT © 1986 — FORD MOTOR COMPANY — DEARBORN, MICHIGAN

1973/79 LINCOLN–MERCURY CARS

BODY TYPE		PART NUMBER LESS SUFFIX	COLORS AND APPLICABLE PART NUMBER SUFFIXES													QTY.
			BLACK	BLUE	CRAN–BERRY	GOLD	GREEN	GREY	JADE	RED	SADDLE	SILVER BLUE	TAN	TAUPE	OTHER	
60234–5	BOOT (FRONT SEAT SHOULDER STRAP) — Cont'd															
Notes:	R–Right hand, L–Left hand															
1975																
A(53,71),Y(53,71)	R/L	D6AZ 6060235	D	E			K			G						2
C(53,71),D(53)	R/L	D6AZ 6060235	D	E			K									2
D(60) – – flat "D" ring "Before 10/1/74"	R/L	D6AZ 6060235	D	E			K			G						2
	R/L	D6AY 6060235												A		2
– – wire "D" ring "From 10/1/74"	R/L	D6SZ 6060235	D	E		B			C							2
	R/L	D6SY 6060235											A	B		2
	R/L	D5LY 6060235													A(white)	2
	R/L	D6TZ 6060235					A									2
G(54)	R/L	D6AZ 6060235	D				K			G						2
	R/L	D6AY 6060235													C(tobacco)	2
K – – flat "D" ring "Before 10/1/74"	R/L	D5AY 5360235													B(aqua)	2
	R/L	D6AZ 6060235	D	E			K			G						2
	R/L	D4AZ 5360235										H				2
– – wire "D" ring "From 10/1/74"	R/L	D6SZ 6060235	D	E							F					2
	R/L	D6TZ 6060235					A									2
	R/L	D6SY 6060235											A		C(aqua)	2
	R/L	D5LY 6060235													A(white)	2
	R/L	D5SZ 6060235													C(silver)	2
P(54)	R/L	D6AZ 6060235	D	E												2
1976																
A(53,71)Y,(53,71)	R/L	D6AZ 6060235	D	E			K			G						2
C(53,71)	R/L	D6AZ 6060235	D	E			K									2
D(53)	R/L	D6AZ 6060235	D	E						G						2
	R/L	D6AY 6060235												A		2
D(60) – – w/o bolt hole	R/L	D6SZ 6060235	D	E		B			C							2
	R/L	D6SY 6060235						D					A	B		2
– – w/bolt hole	R/L	D7AZ 6060235	D	E				J		H			B			2
	R/L	D6EZ 6260235							J							2
	R/L	D6EY 6260235												B		2
G – – w/o continuous loop seat belts "Before 5/3/76"	R/L	D6AZ 6060235	D							G		M				2
	R/L	D6AY 6060235													C(tobacco)	2
– – w/continuous loop seat belts "From 5/3/76"	R/L	D7AZ 6060235	D	E				J	C	H			B			2
F	R/L	D6AZ 6060235	D	E			K			G						2
J	R/L	D4RY 6260234	A													2
K – – w/o bolt hole	R/L	D6SZ 6060235	D	E		B			C		F				H(white)	2
	R/L	D6SY 6060235						D					A		C(aqua)	2
K – – w/bolt hole	R/L	D6EZ 6260235								F						2
	R/L	D7AZ 6060235	D	E				J	C	H			B			2
	R/L	D6EY 6260235													C(aqua)	2
L	R/L	D7AZ 6060235	D	E									B			2
	R/L	D6TZ 6260235								D						2
P(54)	R/L	D6AZ 6060235	D	E												2

1973/79 LINCOLN–MERCURY CARS

BODY TYPE		PART NUMBER LESS SUFFIX	COLORS AND APPLICABLE PART NUMBER SUFFIXES													QTY.
			AQUA	BLACK	BLUE	CHAM-OIS	CREAM	GOLD	GREEN	GREY	JADE	RED	SADDLE	TAN	OTHER	
60234–5	BOOT (FRONT SEAT SHOULDER STRAP) — Cont'd															
Notes:	R–Right hand, L–Left hand, ♦ Dark, ◊ Light															

1977

A(53,71)	R/L	D6AZ 6060235		D	E							G				2
D(53)	R/L	D6AZ 6060235		D	E							♦G				2
D(60)	R/L	D7AZ 6060235		D	E	K				J	C	H				2
	R/L	D7AY 6060235													C(white)	2
	R/L	D7AY 6060235													D(cordovan)	2
F(53,65,71)	R/L	D6AZ 6060235		D	E											2
G	R/L	D7AZ 6060235		D	E		M			J	C	H		B		2
J	R/L	D4RY 6060234		A												2
L "Before 6/27/77"	R/L	D7AZ 6060235		D	E	K						L				2
L "From 6/27/77"			Refer to 1978													
P	R/L	D6AZ 6060235		D	E											2
V	R/L	D7AY 6060235													D(cordovan)	2
	R/L	D7AZ 6060235				K			J			H				2
	R/L	D8AY 6060235			F											2

BODY TYPE		PART NUMBER LESS SUFFIX	COLORS AND APPLICABLE PART NUMBER SUFFIXES													QTY.
			BLACK	BLUE	CAMEL	CHAM-OIS	CHAM-PAGNE	CORD-OVAN	GOLD	GREY	JADE	RED	RUSSET	SADDLE	OTHER	
60234–5	BOOT (FRONT SEAT SHOULDER STRAP) — Cont'd															
Notes:	R–Right hand, L–Left hand, ♦ Dark, ◊ Light, ⊕ Use black															

1978

A(53,71) – – 4" wide	R/L	D6AZ 6060235	D	E								G				2
D(53) – – 4" wide	R/L	D6AZ 6060235	D													2
D(60) – – 4" wide	R/L	D7AZ 6060235	D			K				J	C	H				2
	R/L	D8AZ 6060235			B											2
	R/L	D7AY 6060235						D								2
	R/L	D8AY 6060235		F			G									2
D(60) – – 3" wide	R/L	D8FZ 6260235	E	A	M	K	N	J	R	V	C	H				2
F(53) – – 4" wide	R/L	D6AZ 6060235		E												2
G – – 4" wide	R/L	D7AZ 6060235	D	E		K				J	C	H				2
	R/L	D7AY 6060235						D								2
	R/L	D8AZ 6060235			B											2
G – – 3" wide	R/L	D8FZ 6260235	E	◊A	⊕	K		J		V	C	H				2
	R/L	D8FZ 6260235		♦F												2
J	R/L	D4RY 6260234	A													2
L – – 4" wide	R/L	D7AZ 6060235	D			K										2
	R/L	D8AY 6060235		F												2
	R/L	D7AY 6060235													C(white)	2
	R/L	D8AZ 6060235													E(tangerine)	2
L – – 3" wide	R/L	D8FZ 6260235	E	A		K		J			C	S			D(tangerine)	2
P – – 4" wide	R/L	D7AZ 6060235	D	♦B		K									M(cream)	2
	R/L	D8AY 6060235		◊F												2
	R/L	D7AY 6060235													C(white)	2
P – – 3" wide	R/L	D8FZ 6260235	E	◊A		K					P		T		U(cream)	2
	R/L	D8FZ 6260235		♦F											G(white)	2
V – – 4" wide	R/L	D7AZ 6060235				K				J	C	H				2
	R/L	D8AY 6060235		F												2
	R/L	D7AY 6060235						D								2
V – – 3" wide	R/L	D8FZ 6260235		A		K		J		V	C	H				2

COPYRIGHT © 1986 — FORD MOTOR COMPANY — DEARBORN, MICHIGAN

1973/79 LINCOLN–MERCURY CARS

BODY TYPE		PART NUMBER LESS SUFFIX	COLORS AND APPLICABLE PART NUMBER SUFFIXES: BERYL	BLACK	BLUE	CAMEL	CHAM-OIS	CORD-OVAN	GOLD	GRAY	JADE	PINE GREEN	RED	WHITE	OTHER	QTY.
60234–5	BOOT (FRONT SEAT SHOULDER STRAP)															
Notes:	R–Right hand, L–Left hand, ◊ Light ♦ Dark															
1979																
D(53)	R/L	D6AZ 6060235		D									G			2
	R/L	D7AY 6060235						D								2
D(60)	R/L	D8FZ 6260235		E	◊A			J	M	V	C		H	G	N(champagne)	2
	R/L	D9FY 6260235	A		♦B											2
F(53)	R/L	D6AZ 6060235		D	E								G			2
G – – 3" wide	R/L	D8FZ 6260235		E	◊A	L	K	J		V	C		H			2
	R/L	D8FZ 6260235			♦F											2
G – – 4" wide	R/L	D7AY 6060235						D								2
	R/L	D7AZ 6060235		D	E		K			J	C		H			2
	R/L	D8AZ 6060235				B										2
J	R/L	D9ZZ 6660235		A	D		B						C		E(vaquero)	2
L – – 3" wide	R/L	D8FZ 6260235		E	A		K	J			C		S		D(tangerine)	2
L – – 4" wide	R/L	D7AY 6060235												C		2
	R/L	D7AZ 6060235		D			K									2
	R/L	D8AY 6060235			F											2
	R/L	D8AZ 6060235													E(tangerine)	2
P	R/L	D9ZZ 6660235		A	D		B						C			2
V – – 3" wide	R/L	D8FZ 6260235			A		K	J		V	C		H			2
V – – 4" wide	R/L	D7AY 6060235						D								2
	R/L	D7AZ 6060235					K			J	C		H			2
	R/L	D8AY 6060235			F											2

YEAR	MODEL/RESTRICTIONS	PART NUMBER	DESCRIPTION	QTY.
60236	RETAINER (FRONT SEAT SHOULDER STRAP LOWER)			
74	A(57)	D4AZ 5360236–A	On pillar	2
60256	GUIDE (FRONT SEAT SHOULDER STRAP LOWER)			
75/	D(60)	D5VY 6060256–A	R.H. and L.H.	2

BODY TYPE		PART NUMBER LESS SUFFIX	COLORS AND APPLICABLE PART NUMBER SUFFIXES: AVO-CADO	BEIGE	BLACK	BLUE	GOLD	GREEN	ORANGE	RED	SADDLE	SILVER BLUE	TAN	WHITE	OTHER	QTY.
60262	COVER (FRONT SEAT BELT SHOULDER STRAP GUIDE)															
Notes:	R–right hand, L–left hand															
1974																
A(57,65),C(65), D(65),F,K,L,P(62), Y(65)	R/L	D4AZ 6560262	E	J	G	H	D	F	A		K		B		C(yellow)	2
	R/L	D4AY 6560262										B			A(cranberry)	2
	R/L	D4AY 6560262													C(silver)	2

BODY TYPE		PART NUMBER LESS SUFFIX	COLORS AND APPLICABLE PART NUMBER SUFFIXES: BLACK	BLUE	CRAN-BERRY	GOLD	GREEN	GREY	JADE	RED	SADDLE	SILVER BLUE	TAN	TAUPE	OTHER	QTY.
60262	COVER (FRONT SEAT BELT SHOULDER STRAP GUIDE) — Cont'd															
Notes:	R–right hand, L–left hand															
1975																
A(65),C(65),F,Y(65)	R/L	D4AZ 6560262	G	H							K					2
	R/L	D5AZ 6560262					A									2
G(66)	R/L	D4AZ 6560262	G	H									B			2
	R/L	D5AZ 6560262					A									2
	R/L	D5DZ 6560262										A				2
L	R/L	D4AZ 6560262		H												2
	R/L	D5FZ 6560262	A													2
P(62)	R/L	D5DZ 6560262					B									2
	R/L	D4AZ 6560262	G	H												2

BODY TYPE		PART NUMBER LESS SUFFIX	COLORS AND APPLICABLE PART NUMBER SUFFIXES													QTY.
			BLACK	BLUE	CRAN-BERRY	GOLD	GREEN	GREY	JADE	RED	SADDLE	SILVER BLUE	TAN	TAUPE	OTHER	
60262	COVER (FRONT SEAT BELT SHOULDER STRAP GUIDE) — Cont'd															
Notes:	R-right hand, L-left hand															

1976

A(65),C(65),F(65)	R/L	D4AZ 6560262		H							K					2
	R/L	D5AZ 6560262					A									2
	R/L	D5FZ 6560262	A													2
	R/L	D6AZ 6560262													C(aqua)	2
L,P(62)	R/L	D4AZ 6560262		H		A									A(orange)	2
	R/L	D5FZ 6560262	A													2
	R/L	D5DZ 6560262					B									2
	R/L	D6FZ 6560262								A						2

BODY TYPE		PART NUMBER LESS SUFFIX	COLORS AND APPLICABLE PART NUMBER SUFFIXES													QTY.
			AQUA	BLACK	BLUE	CHAM-OIS	CREAM	GOLD	GREEN	GREY	JADE	RED	SADDLE	TAN	OTHER	
60262	COVER (FRONT SEAT BELT SHOULDER STRAP GUIDE) — Cont'd															
Notes:	R-Right hand, L-Left hand, ♦ Dark, ◇ Light															

1977

A(65)	R/L	D4AZ 6560262			H								K			2
F(65)	R/L	D4AZ 6560262		G	H								K			2
P	R/L	D4AZ 6560262		G	H											2
	R/L	D5AZ 6560262												H		2

BODY TYPE		PART NUMBER LESS SUFFIX	COLORS AND APPLICABLE PART NUMBER SUFFIXES													QTY.
			BLACK	BLUE	CAMEL	CHAM-OIS	CHAM-PAGNE	CORD-OVAN	GOLD	GREY	JADE	RED	RUSSET	SADDLE	OTHER	
60262	COVER (FRONT SEAT BELT SHOULDER STRAP GUIDE) — Cont'd															
Notes:	R-Right hand, L-Left hand															

1978

A(65)	R/L	D4AZ 6560262	G	H										K		2
F(65)	R/L	D4AZ 6560262	G	H										K		2
	R/L	D8AY 6560262				C										2
	R/L	D6FZ 6560262										F				2

BODY TYPE		PART NUMBER LESS SUFFIX	COLORS AND APPLICABLE PART NUMBER SUFFIXES													QTY.
			BERYL	BLACK	BLUE	CAMEL	CHAM-OIS	CORD-OVAN	GOLD	GRAY	JADE	PINE GREEN	RED	WHITE	OTHER	
60262	COVER (FRONT SEAT BELT SHOULDER STRAP GUIDE) — Cont'd															
Notes:	R-Right hand, L-Left hand															

1979

F(65)	R/L	D4AZ 6560262		G	H											2
	R/L	D8AY 6560262					C									2
	R/L	D9AZ 6560262											B			2

YEAR	MODEL/RESTRICTIONS	PART NUMBER	DESCRIPTION	QTY.
60286	STOP (FRONT SEAT SHOULDER STRAP ADJUSTING)			
74/78	A,C,D,F,G,K,L,P,V,Y - - w/o continuous loop seat belts	D7LZ 6560286-AA	R.H. and L.H.-available in black only-rectangular	2
76/	G,L,P - - w/continuous loop seat belts	D6FZ 6260286-A	R.H. and L.H.-available in black only-round	2
79	D,F,G,K,L,P,V - - w/o continuous loop seat belts	D7LZ 6560286-AA	R.H. and L.H.-available in black only-rectangular	2
79	V	D6FZ 6260286-A	R.H. and L.H.-available in black only-round	1
60292-3	SUPPORT (FRONT SEAT SHOULDER STRAP RETAINER)			
76/	G,V	(RH) D6DZ 6660292-A	(LH) D6DZ 6660293-A	1
79	J	(RH) E0ZZ 6660292-A	(LH) D9ZZ 6660293-A	1
76/	L(62,64)	(RH) D9FZ 6260292-A	(LH) D9FZ 6260293-A	1
78/	P	(RH) D8BZ 6660292-A	(LH) D8BZ 6660293-A	1

COPYRIGHT © 1986— FORD MOTOR COMPANY —DEARBORN, MICHIGAN

1973/79 LINCOLN-MERCURY CARS

YEAR	MODEL/RESTRICTIONS	PART NUMBER	DESCRIPTION	QTY.
60310	STOP (FRONT SEAT BACK TO CUSHION)			
73/76	A(65),Y(65)	C8AZ 6260310-A	To frame-15/64" x 1" x 1 1/2"	4
77	A(65)			4
73	A(65)	C8ZZ 6560310-A	To cushion	4
74	A(53K,57K,71K)			4
75/76	A(65),Y(65)			4
77	A(65)			4
60392	BOLT (FRONT SEAT BACK PIVOT ARM)			
73/74	F,P	D1ZZ 6560392-A		4
79	J			4
74/	L,P			4
60394	SPACER (FRONT SEAT BACK PIVOT ARM)			
73	A(65B,F,H,X),P,C,Y	C80Z 6260394-A	1" O.D. x 1/2" thick	2
74/76	A(65),P,Y			2
77	A(65),P			2
604K22	BAR (FRONT SEAT TORSION)			
75/	G,P,V - - w/bucket seats	(RH) D5DZ 66604K22-A	(LH) D5DZ 66604K22-B	1
60436	BRACKET (FRONT SEAT HORIZONTAL REGULATOR)			
73/	D(Town Car) - - w/6 way full width seat	C7AZ 6260436-A		2
604K36	Refer to group 604K22			
60446	SUPPORT (FRONT SEAT HORIZONTAL REGULATOR)			
73	F	D1WY 6560446-A		1
60464	DRIVE (FRONT SEAT TRACK VERTICAL)			
73	F - - w/4 way seat	D1WY 6560464-A	Driver	1
60465-6	GEAR ASSY. (FRONT SEAT VERTICAL REGULATOR)			
73/	D(Town Car, Town Coupe) - - w/6 way full width seat	(RH) D0VY 6560466-B	(LH) D0VY 6560465-B Rear-less stud	1
73/	D(Town Car, Town Coupe) - - w/6 way full width seat	(RH) D0SZ 6560465-B	(LH) D0SZ 6560466-B Front-incl. stud	1
60471-2	BAR ASSY. (FRONT SEAT TRACK HORIZONTAL)			
73/74	A - - w/6 way split seats	D3AZ 6560472-A	Driver and passenger-17 7/8" long	1
79	A - - w/6 way split seats		Refer to group 618A48	
75/76	C - - w/6 way split seats	D5LZ 6060472-A	Driver	1
73	D - - w/2 way full width seat	(RH) D0VY 6560471-A	(LH) D0VY 6560472-A	2
73/	D(Town Car, Town Coupe) - - w/6 way full width seat			2
75/	D - - w/6 way split seats	D5VY 6060472-A	Driver and passenger	2
75/	F - - w/6 way split seats	D5LZ 6060472-A	Driver	1
75/	K - - w/6 way split seats	D5LZ 6060472-A	Driver and passenger	2
60508	PANEL ASSY. (REAR SEAT BACK)-Paint to match			
73/76	A(71),Y(71)	D3AZ 7160508-A	Textured panel	1
77/78	A(71)			1
79	A(74)	D9AZ 7460508-A		1
73/76	C(71)	D20Z 7160508-B	Textured panel	1
77	F(71) "Before 12/13/76"			1
77	F(71) "From 12/13/76"	★ D70Z 7160508-B	Non-textured panel	1
79	J(61)	E0ZZ 6160508-A		1
78	P(74) "Before 7/17/78"	★ D8BZ 7460508-A		1
78/	P(74) "From 7/17/78"	E0BZ 7460508-A		1
605A10-1	PANEL (AUXILIARY SEAT BACK FLOOR)			
79	A(74)	(RH) D9AZ 74605A10-A	(LH) D9AZ 74605A11-A	1
605A16-7	COVER (AUXILIARY SEAT BACK LATCH)-Paint to match			
73/76	A(71),Y(71)	(RH) C8AZ 71605A16-A	(LH) C8AZ 71605A17-A	1
77/78	A(71)			1
79	A(74)			1

1973/79
LINCOLN-MERCURY CARS

YEAR	MODEL/RESTRICTIONS	PART NUMBER	DESCRIPTION	QTY.
605A18	BUMPER (AUXILIARY SEAT BACK FLOOR PANEL)			
73/76	A(71),Y(71)	C5AZ 71605A18-B	Rubber-11/16" x 1 1/8" x 1"	2
77/78	A(71)			1
79	A(74)			1
60615-6	HINGE (REAR SEAT BACK FLOOR PANEL)			
79	J(61)	(RH) D8BZ 7460615-A	(LH) D8BZ 7460616-A	1
78/	P(74)			1
60629	PANEL (REAR FLOOR EXTENSION)			
73/76	A(71),Y(71)	D3AZ 7160629-A	Textured panel-steel	1
77/78	A(71)			1
79	A(74)			1
79	A(74) "Before 1/18/79"	D9AZ 7460629-A		1
79	A(74) "From 1/18/79"	D9AZ 7460629-B		1
606A50	BRACKET (REAR SEAT CUSHION)			
75/	G	D5DZ 66606A50-A	R.H. and L.H.-on floor	2
77/	V			1
60738-9	SUPPORT (REAR SEAT BACK FLOOR)			
74/	L(64,73)		Serviced only in assy.-45728	
607A48	RETAINER (AUXILIARY SEAT CUSHION FRAME OUTER)			
77/78	A(71) - - removable cushion	D8AZ 71607A48-A	Mounted on side of well	2
77/78	A(71) - - removable cushion	D8AZ 71607A48-B	Mounted on rear of well	2
79	A(74)	D8AZ 71607A48-A	Mounted on side of well	2
		D8AZ 71607A48-B	Mounted on rear of well	2
607A62	SUPPORT (AUXILIARY SEAT CUSHION)			
79	A(74)	D9AZ 74607A62-A	R.H. and L.H.	2
607A64	REINFORCEMENT (AUXILIARY SEAT CUSHION SUPPORT)			
73/76	C(71)	D60Z 71607A64-A		2
77	F(71)			2
610A02	ACTUATOR ASSY. (RECLINING SEAT BACK ADJUSTING)			
73/77	A "Before 7/5/77"	D4AZ 65610A02-A		1
77/78	A "From 7/5/77"	D8AZ 53610A02-A		1
74/76	C	D4LZ 65610A02-A		1
78/	D(53)	D8VY 53610A02-A		1
76/77	D(60)	D6VY 60610A02-A		1
78/	D(60)	D8VY 60610A02-A		1

COPYRIGHT © 1986 — FORD MOTOR COMPANY — DEARBORN, MICHIGAN

1973/79 LINCOLN-MERCURY CARS

YEAR	MODEL/RESTRICTIONS	PART NUMBER	DESCRIPTION	QTY.
610A02	ACTUATOR ASSY. (RECLINING SEAT BACK ADJUSTING) — Cont'd			
76	F	D4LZ 65610A02-A		1
77	F	D70Z 65610A02-A		1
78/	F	D80Z 65610A02-A		1
74/76	K	D4LZ 65610A02-A		1
77	K	D70Z 65610A02-A		1
78/	K - - w/bucket seats "From 10/3/77"	D8LY 65610A02-B		1
78/	K - - w/split seats	D80Z 65610A02-A		1

BODY TYPE		PART NUMBER LESS SUFFIX	COLORS AND APPLICABLE PART NUMBER SUFFIXES													QTY.
			AVO-CADO	BEIGE	BLACK	BLUE	GOLD	GREEN	ORANGE	RED	SADDLE	SILVER BLUE	TAN	WHITE	OTHER	
610C06		EXTENSION (FRONT SEAT BACK SIDE)														
Notes:		R-Right hand, L-Left hand														
1974																
A(65),Y(65)	R/L	D4AY 65610C06		D			C			E			F	A		2
	R/L	D4AZ 65610C06			C	D		B			F					2
C(65)	R/L	D40Z 65610C06			G											2
D(65)	R/L	D4AY 65610C06		D			C			E				A		2
	R/L	D4AZ 65610C06			C	D		B			F					2
F	R/L	D40Z 65610C06			G			F		L						2
K	R/L	D40Y 65610C06										B				2
	R/L	D40Z 65610C06			G			F		L						2
L(62)	R/L	D40Z 65610C06	E		G				B						D(yellow)	2
P(62)	R/L	D40Y 65610C06										B				2
	R/L	D40Z 65610C06	E		G				B							2

BODY TYPE		PART NUMBER LESS SUFFIX	COLORS AND APPLICABLE PART NUMBER SUFFIXES													QTY.
			BLACK	BLUE	CRAN-BERRY	GOLD	GREEN	GREY	JADE	RED	SADDLE	SILVER BLUE	TAN	TAUPE	OTHER	
610C06		EXTENSION (FRONT SEAT BACK SIDE) — Cont'd														
Notes:		R-Right hand, L-Left hand														
1975																
A(65),Y(65) - - at head rest	R/L	D5AZ 60610C06													H(white)	2
	R/L	D6AZ 60610C06	K	L						M	N		J			2
A(65),Y(65) - - at seat frame- "Before 2/2/75"	R/L	D4AY 65610C06								E			F		A(white)	2
	R/L	D4AZ 65610C06	C	D							F					2
	R/L	D5AZ 65610C06					A									2
"From 2/2/75"	R/L	D6AZ 60610C06	K	L						M	N		J			2
	R/L	D5AZ 60610C06													H(white)	2
C(65)	R/L	D40Z 65610C06								L						2
	R/L	D50Z 65610C06					E									2
D(60) "Before 2/2/75"	R/L	D5AZ 60610C06													H(white)	2
	R/L	D5AY 60610C06				A								B		2
	R/L	D6AZ 60610C06	K	L						M			J			2
"From 2/2/75"	R/L	D5AZ 60610C06													H(white)	2
	R/L	D6AZ 60610C06	K	L						M			J	C		2
F	R/L	D40Z 65610C06								L						2
	R/L	D50Z 65610C06					E									2
G(66)	R/L	D6AZ 60610C06	K							M			J			2

BODY TYPE		PART NUMBER LESS SUFFIX	COLORS AND APPLICABLE PART NUMBER SUFFIXES													QTY.
			BLACK	BLUE	CRAN-BERRY	GOLD	GREEN	GREY	JADE	RED	SADDLE	SILVER BLUE	TAN	TAUPE	OTHER	
610C06	EXTENSION (FRONT SEAT BACK SIDE) — Cont'd															
Notes:	R-Right hand, L-Left hand															
1975																
K "Before 2/2/75"	R/L	D6AZ 60610C06	K	L						M	N					2
	R/L	D5AY 60610C06													D(aqua)	2
	R/L	D5AZ 60610C06													H(white)	2
"From 2/2/75"	R/L	D6AZ 60610C06	K	L						M	N		J		G(aqua)	2
	R/L	D5AZ 60610C06													H(white)	2
L,P(62)	R/L	D50Z 65610C06					D									2
1976																
A(65),Y(65)	R/L	D4AZ 65610C06	C	D							F					2
	R/L	D4AY 65610C06								E						2
	R/L	D5AZ 65610C06					A									2
	R/L	D6AY 65610C06													B(white)	2
C(65)	R/L	D40Z 65610C06								L						2
	R/L	D50Z 65610C06					E									2
	R/L	D60Z 65610C06				D										2
D(60)	R/L	D6AZ 60610C06	K	L						M			J	C		2
	R/L	D6AY 60610C06						A								2
F	R/L	D40Z 65610C06								L						2
	R/L	D50Z 65610C06					E									2
	R/L	D60Z 65610C06				C									A(white)	2
G(66)	R/L	D6AZ 60610C06	K							M			J			2
K	R/L	D6AZ 60610C06	K	L						M		N	J		G(aqua)	2
	R/L	D6AY 65610C06						A								2
L(62)	R/L	D50Z 65610C06					D									2
	R/L	D60Z 65610C06								B						2
P(62)	R/L	D50Z 65610C06					D									2

BODY TYPE		PART NUMBER LESS SUFFIX	COLORS AND APPLICABLE PART NUMBER SUFFIXES													QTY.
			AQUA	BLACK	BLUE	CHAM-OIS	CREAM	GOLD	GREEN	GREY	JADE	RED	SADDLE	TAN	OTHER	
610C06-7	EXTENSION ASSY. (FRONT SEAT BACK SIDE) — Cont'd															
Notes:	R-Right hand, L-Left hand															
1977																
D(60),K "Before 12/6/76"	R/L	D6AZ 60610C06		K	L							M				2
	R/L	D6AY 60610C06								A						2
D(60),K "From 12/6/76"	R	D7AZ 60610C06		G	D			B		F	C	A			H(white)	2
	L	D7AZ 60610C07		G	D					F	C	A			H(white)	2
	R	D7AY 60610C06				B									A(cordovan)	2
	L	D7AY 60610C07													A(cordovan)	2

COPYRIGHT © 1986 — FORD MOTOR COMPANY — DEARBORN, MICHIGAN

1973/79 LINCOLN-MERCURY CARS

610C06-7 EXTENSION ASSY. (FRONT SEAT BACK SIDE) — Cont'd
Notes: R-Right hand, L-Left hand

1978

BODY TYPE		PART NUMBER LESS SUFFIX	BLACK	BLUE	CAMEL	CHAM-OIS	CHAM-PAGNE	CORD-OVAN	GOLD	GREY	JADE	RED	RUSSET	SADDLE	OTHER	QTY.
D,K	R	D7AZ 60610C06	G						B	F	C	A			H(white)	2
	L	D7AZ 60610C07	G							F	C	A			H(white)	2
	R	D8AZ 60610C06		B											D(tan)	2
	L	D8AZ 60610C07		B											D(tan)	2
	R	D7AY 60610C06				B		A								2
	L	D7AY 60610C07						A								2
	R	D8LY 60610C06													A(cream)	2

610C06-7 EXTENSION ASSY. (FRONT SEAT BACK SIDE) — Cont'd
Notes: R-Right hand, L-Left hand, ◇ Light, ♦ Dark

1979

BODY TYPE		PART NUMBER LESS SUFFIX	BERYL	BLACK	BLUE	CAMEL	CHAM-OIS	CORD-OVAN	GOLD	GRAY	JADE	PINE GREEN	RED	WHITE	OTHER	QTY.
D,K	R	D7AY 60610C06						A								1
	L	D7AY 60610C07						A								1
	R	D7AZ 60610C06		G						F	C		A	H		1
	L	D7AZ 60610C07		G						F	C		A	H		1
	R	D8AZ 60610C06			◇B										D(champagne)	1
	L	D8AZ 60610C07			◇B										D(champagne)	1
	R	D8LY 60610C06													A(cream)	1
	R	D9AY 60610C06	C		♦A										B(amethyst)	1
	L	D9AY 60610C07	C		♦A										B(amethyst)	1

YEAR	MODEL/RESTRICTIONS	PART NUMBER	DESCRIPTION	QTY.
610B10	BRACKET (FRONT SEAT HEAD REST MOUNTING)			
73/76	A,C,D,K,P,Y	C9AZ 62610B10-A	R.H. and L.H.	2
74/	F			2
77/78	A,C,D,K,P			2
79	A,D,K,P			2
75/	G			2
77/	V			2
76/78	G – – w/full width seat and center arm rest			2
75/	L			2
73/74	P – – w/full width seat	D3DZ 62610B10-A	R.H. and L.H.	2
75/	P	C9AZ 62610B10-A	R.H. and L.H.	2

1973/79 LINCOLN-MERCURY CARS

BODY TYPE		PART NUMBER LESS SUFFIX	COLORS AND APPLICABLE PART NUMBER SUFFIXES													QTY.
			BLACK	BLUE	CRAN-BERRY	GOLD	GREEN	GREY	JADE	RED	SADDLE	SILVER BLUE	TAN	TAUPE	OTHER	
610C14-5	BEZEL (FRONT SEAT BACK SIDE)															
Notes:	R-Right, L-Left hand															
1975																
D(60)	R/L	D5AZ 60610C14					J									2
	R/L	D6AY 60610C14							D					C		2
	R/L	D4AZ 60610C14										G				2
G(66)	R	D6DZ 66610C14	C				R					J				2
	L	D6DZ 66610C14	D				S					K				2
K	R	D5LY 66610C14													A(aqua)	2
	L	D5LY 66610C14													B(aqua)	2
	R	D5SZ 66610C14										C				1
	L	D5SZ 66610C14										D				1
	R	D5DZ 66610C14		E							L				N(white)	1
	L	D5DZ 66610C14		F							M				P(white)	1
	R	D6DZ 66610C14	C				R									1
	L	D6DZ 66610C14	D				S									1
1976																
D(60) - - w/23" vinyl headrest	R/L	D6AY 60610C14	G			B		K	D					C		2
D(60) - - w/15" vinyl headrest	R	D6VY 60610C14												A		1
D(60) - - w/cloth headrest	R/L	D6AY 60610C14											F			2
G(66)	R	D6DZ 66610C14	C				R	E				J				1
	L	D6DZ 66610C14	D				S	F				K				1
K	R	D6DZ 66610C14	C													1
	L	D6DZ 66610C14	D			M										1
	R	D6LY 66610C14						E							C(aqua)	1
	L	D6LY 66610C14													D(aqua)	1

BODY TYPE		PART NUMBER LESS SUFFIX	COLORS AND APPLICABLE PART NUMBER SUFFIXES													QTY.
			AQUA	BLACK	BLUE	CHAM-OIS	CREAM	GOLD	GREEN	GREY	JADE	RED	SADDLE	TAN	OTHER	
610C14-5	BEZEL (FRONT SEAT BACK SIDE) — Cont'd															
Notes:	R-Right, L-Left hand															
1977																
D(60),K "Before 12/6/76"	R	D6DZ 66610C14		C												1
	L	D6DZ 66610C14		D				M								1
	R	D6LY 66610C14								E						1
	R	D7VY 60610C14				G									E(cordovan)	1
	L	D7VY 60610C14				H									F(cordovan)	1
"From 12/6/76"			Refer to group 610C06-7, one piece design													

COPYRIGHT © 1986 — FORD MOTOR COMPANY — DEARBORN, MICHIGAN

1973/79 LINCOLN-MERCURY CARS

YEAR	MODEL/RESTRICTIONS	PART NUMBER	DESCRIPTION	QTY.
610A16	SLEEVE (FRONT SEAT HEAD REST GUIDE ROD)			
73	A,Y	D3AZ 65610A16-D	Beige	2
		D3AZ 65610A16-C	Ginger	2
		D3AZ 65610A16-F	Green	2
		D3AZ 65610A16-G	Tobacco	2
73/76	A,Y "Before 5/14/73"	D3AZ 65610A16-A	Black	2
		D3AZ 65610A16-B	Blue	2
73/76	A,Y,D,F,K,L "From 5/14/73"	D4AZ 65610A16-C	Black -paint to match	2
77/78	A,D,F,G,K,L,P,V			2
74	A,Y	D3AZ 65610A16-K	Tan	2
73	A,D,K	C9MZ 65610A16-A	Chrome	2
79	A	D9AZ 54610A16-A	R.H. and L.H.-black	2
73	C	D3AZ 65610A16-D	Beige	2
		D3AZ 65610A16-C	Ginger	2
		D3AY 65610A16-A	Gold	2
		D3AZ 65610A16-F	Green	2
		D3AZ 65610A16-K	Tan	2
		D3AZ 65610A16-G	Tobacco	2
73	C "Before 5/14/73"	D3AZ 65610A16-A	Black	2
		D3AZ 65610A16-B	Blue	2
73/76	C "From 5/14/73"	D4AZ 65610A16-C	Black-paint to match	2
73	C	C9AZ 62610A16-A	Paint to match	2
79	D,F,G,J,K,L,P,V	D4AZ 65610A16-C	R.H. and L.H.-black-paint to match	2
76	J(64D,P,T)	D5RY 64610A16-A	Black-chrome-4 5/8" long-sleeve	2
76	J(64S)	D6RY 64610A16-A	Black-chrome-8 5/32" long-bar	2
76	J(64T)	D6RY 64610A16-B	Bright-chrome-8 5/32" long-bar	2
73	P	D3AZ 65610A16-J	Avocado	2
		D3AZ 65610A16-D	Beige	2
		D3AZ 65610A16-B	Blue	2
		D3AZ 65610A16-C	Ginger	2
		D3AZ 65610A16-H	Orange	2
		D3AZ 65610A16-K	Tan	2
		C9AZ 62610A16-A	Paint to match	2
73	P "Before 6/11/73"	D3AZ 65610A16-A	Black	2
73/	P "From 6/11/73"	D4AZ 65610A16-C	Black	2
610C26	REPAIR KIT-STD. BELT BUCKLE			
74	A,C,F,L,P,Y	D5AZ 60610C26-A		4
610B40	PANEL (FRONT SEAT HEAD REST TRIM)-Paint to match			
73/74	A,Y	C9AZ 62610B40-A		2
61046-7	REINFORCEMENT (FRONT SEAT BACK FRAME)			
79	A(54,74)	(RH) D9AZ 5461046-A	(LH) D9AZ 5461047-A	1
73/76	C(53K,71K) - - w/split seats	(RH) D20Z 5361046-A	(LH) D20Z 5361047-A	1
77	F(53K,71K)			1
78/	F(53)			1

1973/79 LINCOLN-MERCURY CARS

YEAR	MODEL/RESTRICTIONS	PART NUMBER	DESCRIPTION	QTY.
610B66	RETAINER (FRONT SEAT BACK LATCH SPRING)			
73	C(63,65D) - - w/bucket seats	D20Z 65610B66-A		2
75/76	C(65)			2
73/74	F - - w/manual seat back latch	D1FZ 62610B66-A	Outboard-5/16" x 2 3/8"	2
74/	F - - w/bucket seats	D20Z 65610B66-A	R.H. and L.H.-washer-5/8" x 1" x 1/16"	2
74/	F	D3ZZ 65610B66-A	Outboard-5/16" x 2 5/8"	2
75/	F - - w/split seats	D20Z 65610B66-A		2
75/	K	D20Z 65610B66-A		2
74/75	L	D3ZZ 65610B66-A	R.H. and L.H.-use w/D1FZ 6262606-A	2
73/74	P	D3ZZ 65610B66-A	Outboard-5/16" x 2 5/8"	2
610A68-9	SHIELD (FRONT SEAT BACK INSIDE)			
73	A(65),Y(65) - - w/full width seat	(RH) C9AZ 65610A68-A	(LH) C9AZ 65610A69-A	1
73	A(53,65),Y(53,65) - - w/full width seat and center arm rest			1
75/76	A(65H),Y(53,65)			1
77/78	A(65H)			1
75/	K - - w/Lumbar seat		improvise from polyethylene-9 1/4" x 11 1/4" x 1/16"	
610B68	SHAFT (RECLINING SEAT BACK PIVOT)			
73/75	D "Before 6/2/75"	★ D3VY 65610B68-A Not repl'd. (6/79)		1
75/76	D "From 6/2/75"	D6VY 60610B68-A		1
77/	D(53)			1
73/	F,K - - w/split seats	D80Z 65610B68-A	W/o threads	1
78/	F,K - - w/bucket seats	D2LZ 65610B68-A	W/threads	1
610B70-1	LEVER (RECLINING SEAT BACK PIVOT SHAFT)			
73/	D	D6VY 60610B70-A		1
73/78	J	(RH) D0RY 62610B70-A	(LH) D0RY 62610B71-A Inner	1
		120592-ES2	Screw	4
		113257-ES2	Washer-flat-3/8"	4
61082	BUMPER (REAR SEAT BACK STOP)			
73/76	A(71),Y(71)	D3AZ 7161082-A		1
77/78	A(71)			1
79	A(74)			1
610B82	BUSHING (FRONT SEAT BACK PIVOT SUPPORT)			
73/74	A - - w/reclining seat	D1AZ 65610B82-A		1
73/	D - - w/reclining seat	D3VY 65610B82-A		1
610B84	ROD (FRONT SEAT BACK ADJUSTING ACTUATOR)			
73/	K - - w/reclining split seats	D2LY 65610B84-B	5/16" x 5/8" x 5.0"	1
77/	F(53,65)			1
78/	K - - w/reclining bucket seat	D8LY 65610B84-A	5/16" x 5/8" x 3 3/8	1
610B90	LEVER (RECLINING SEAT BACK PIVOT SHAFT)			
77/	F(53K,65K,L)	D3SZ 65610B90-A		1
73	K "Before 1/3/73"	★ D2SZ 65610B90-A Not repl'd. (6/79)		1
73/	K "From 1/3/73"	D3SZ 65610B90-A		1

COPYRIGHT © 1986 — FORD MOTOR COMPANY — DEARBORN, MICHIGAN

1973/79 LINCOLN–MERCURY CARS

YEAR	MODEL/RESTRICTIONS	PART NUMBER	DESCRIPTION	QTY.
61097–8	SPRING (FRONT SEAT BACK LATCH)			
73/76	A(65),Y(65)	D0AZ 6261097–A		1
77/78	A			2or4
79	A(66)		Serviced only in assy.–62648–9	
73/76	C(63R,65B,D) – – w/bucket seats–reclining	(RH) D20Z 6561097–A	(LH) D20Z 6561097–B 5 1/4 coils	1
73/76	C – – w/reclining seat	(RH) D20Z 6561097–B	5 1/4 coils	1
73/	D(60,65)	D0AZ 6261097–A	10 3/4 coils	1
74/	F – – w/bucket seats exc. recliner	(RH) D20Z 6561097–A	(LH) D20Z 6561097–B 5 1/4 coils	1
74/	F – – w/reclining seat	D20Z 6561097–B		1
75/76	G(66) – – w/bucket seats	D5DZ 6661097–A	R.H. and L.H.–19 coils	2
		(RH) D6DZ 6661097–A	(LH) D6DZ 6661097–B 2 1/2 coils	1
75/	G(66) – – w/full width seat and center arm rest	(RH) D5DZ 6661097–D	(LH) D5DZ 6661097–E 4 1/2 coils	2
76	G – – w/full width seat w/center arm rest or bucket seats	(RH) D6DZ 6661097–A	(LH) D6DZ 6661097–B 3 coils–use on handle	1
76/	G – – w/full width seat w/o center arm rest	(RH) D0DZ 6261097–A	(LH) D0DZ 6261098–A 2 1/2 coils	1
77/	V			1
79	J	D4ZZ 6961097–A	R.H. and L.H.	2
73/	K – – w/o split seats	(RH) D20Z 6561097–A	(LH) D20Z 6561097–B 5 1/4 coils	1
73/	K – –w/split seats	(RH) D20Z 6561097–B	5 1/4 coils	2
74/	L	D4ZZ 6961097–A	R.H. and L.H. 3 7/8 coils	2
73	P(62) – – w/reclining seat	(RH) D3DZ 6261097–A	(LH) D3DZ 6261098–A	1
73/78	P(62) – – w/full width seat	(RH) D0DZ 6261097–A	(LH) D0DZ 6261098–A 2 1/2 coils	1
75/78	P(62) – – w/bucket seats	D5DZ 6661097–A	R.H. and L.H.–19 coils	2
76/	P – – w/full width seat or bucket seats	(RH) D6DZ 6661097–A	(LH) D6DZ 6661097–B 3 coils–use on handle	1
78/	P(66) – – w/bucket seats	(RH) D8BZ 6661097–A	(LH) D8BZ 6661098–A 4 1/2 coils	1
78/	P(66) – – w/full width seat	D8BZ 6661097–B	R.H. and L.H.–3.5 coils	2

1973/79
LINCOLN-MERCURY CARS

YEAR	MODEL/RESTRICTIONS	PART NUMBER	DESCRIPTION	QTY.
611C02	ORNAMENT (SEAT BELT BUCKLE)			

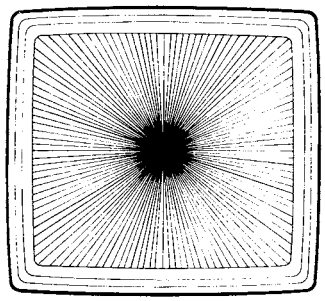

TYPE 2

73/74	A,C,D,F,K,L,P,Y		D2AZ	65611C02-C					AR
611C16-7	COVER (FRONT SEAT BELT BOOT)								
75	G,P	(RH)	D5DZ	66611C16-B	(LH)	D5DZ	66611C17-B	Black	1
		(RH)	D5DZ	66611C16-E	(LH)	D5DZ	66611C17-E	Blue	1
		(RH)	D5DZ	66611C16-D	(LH)	D5DZ	66611C17-D	Green	1
		(RH)	D5DZ	66611C16-H	(LH)	D5DZ	66611C17-C	Red	1
		(RH)	D5DZ	66611C16-A	(LH)	D5DZ	66611C17-A	Tan	1
		(RH)	D5DZ	66611C16-C	(LH)	D5DZ	66611C17-H	Tobacco	1
76	G	(RH)	D5DZ	66611C16-B	(LH)	D5DZ	66611C17-B	Black	1
		(RH)	D5DZ	66611C16-E	(LH)	D5DZ	66611C17-E	Blue	1
		(RH)	D6DZ	66611C16-A	(LH)	D6DZ	66611C17-A	Gray	1
		(RH)	D6DZ	66611C16-B	(LH)	D6DZ	66611C17-B	Green	1
		(RH)	D5DZ	66611C16-H	(LH)	D5DZ	66611C17-C	Red	1
		(RH)	D5DZ	66611C16-A	(LH)	D5DZ	66611C17-A	Tan	1
		(RH)	D5DZ	66611C16-C	(LH)	D5DZ	66611C17-H	Tobacco	1
77	V	(RH)	D74Y	54611C16-A	(LH)	D74Y	54611C17-A	Blue	1
		(RH)	D74Y	54611C16-C	(LH)	D74Y	54611C17-C	Chamois	1
		(RH)	D74Y	54611C16-B	(LH)	D74Y	54611C17-B	Cordovan	1
		(RH)	D6DZ	66611C16-A	(LH)	D6DZ	66611C17-A	Gray	1
78	V	(RH)	D74Y	54611C16-A	(LH)	D74Y	54611C17-A	Blue	1
		(RH)	D74Y	54611C16-B	(LH)	D74Y	54611C17-B	Cordovan	1
		(RH)	D6DZ	66611C16-A	(LH)	D6DZ	66611C17-A	Gray	1
		(RH)	D5DZ	66611C16-H	(LH)	D5DZ	66611C17-H	Red	1
79	V	(RH)	D74Y	54611C16-A	(LH)	D74Y	54611C17-A	Beryl	1
		(RH)	D94Y	54611C16-A	(LH)	D94Y	54611C17-A	Blue	1
		(RH)	D94Y	54611C16-B	(LH)	D94Y	54611C17-B	Champagne	1
		(RH)	D74Y	54611C16-B	(LH)	D74Y	54611C17-B	Cordovan	1
		(RH)	D6DZ	66611C16-A	(LH)	D6DZ	66611C17-A	Gray	1
		(RH)	D5DZ	66611C16-H	(LH)	D5DZ	66611C17-H	Red	1

COPYRIGHT © 1986 — FORD MOTOR COMPANY — DEARBORN, MICHIGAN

1973/79
LINCOLN-MERCURY CARS

YEAR	MODEL/RESTRICTIONS	PART NUMBER	DESCRIPTION	QTY.
611C22	EXTENSION (SEAT BELT)			
Notes:	▲ Incl. bright finish buckle			
75/79 76	A,D,F,G,K,L,P,V C,Y	▲ E3FZ 61611C22-A	R.H. and L.H.-use as extender for 611A72-3 and/or 613B84-5 seat belts manufactured by Robbins or Allied Chemical Corp. as shown on label.	AR
		▲ E3FZ 61611C22-B	R.H. and L.H.-use as extender for 611A72-3 and/or 613B84-5 seat belts manufactured by Firestone, Hamill, or Decor Division as shown on label.	AR
		▲ E2VZ 54611C22-C	R.H. and L.H.-use as extender for 611A72-3 and/or 613B84-5 seat belts manufactured by American Safety Co. as shown on label.	AR
611B24	PIN (FRONT SEAT BACK PIVOT W/AUTOMATIC SEAT BACK LATCH)			
73/74	C(63,65)	D20Z 65611B24-A	R.H. and L.H.	2
75/76	C(65)			2
74/	F(65),K			2
73/75	D			2
76/	D(60)			2

BODY TYPE		PART NUMBER LESS SUFFIX	COLORS AND APPLICABLE PART NUMBER SUFFIXES													QTY.
			AVO-CADO	BEIGE	BLACK	BLUE	GOLD	GREEN	ORANGE	RED	SADDLE	SILVER BLUE	TAN	WHITE	OTHER	
611B32	PLUG (SEAT BELT RETRACTOR COVER BOLT ACCESS)															
Notes:	R-right hand, L-left hand, ◇ Light, ◆ Dark															

1973

ROUND

A,Y	R/L	D0AZ 62611B32			A											2
	R/L	D2AY 62611B32		A												2
	R/L	D2AZ 62611B32						B							A(tobacco)	2
	R/L	D3AY 62611B32					A									2

BODY TYPE		PART NUMBER LESS SUFFIX	COLORS AND APPLICABLE PART NUMBER SUFFIXES													QTY.
			AVO-CADO	BEIGE	BLACK	BLUE	GOLD	GREEN	ORANGE	RED	SADDLE	SILVER BLUE	TAN	WHITE	OTHER	
611B32	PLUG (SEAT BELT RETRACTOR COVER BOLT ACCESS) — Cont'd															
Notes:	R-right hand, L-left hand, ◇ Light, ◆ Dark															

1973

ROUND

C	R/L	D0AZ 62611B32			A												2
	R/L	D2AY 62611B32		◆A													2
	R/L	D2AZ 62611B32						B							A(tobacco)	2
	R/L	D2DZ 62611B32		◇B												2
	R/L	D3AY 62611B32					A									2
	R/L	D6AZ 65611B32				E										2
D	R/L	D0AZ 62611B32			A	J				G					F(gray)	2
	R/L	D1AZ 62611B32						A								2
	R/L	D2AY 62611B32		A												2
	R/L	D2AZ 62611B32													A(tobacco)	2
	R/L	D3AY 62611B32					A								B(silver)	2
F	R/L	D0AZ 62611B32			A										B(ginger)	2
	R/L	D2AZ 62611B32						B								2
	R/L	D2FZ 62611B32	A													2
K	R/L	D0AZ 62611B32			A	J				G						2
	R/L	D1AZ 62611B32						A								2
	R/L	D2AZ 62611B32													A(tobacco)	2
	R/L	D2DZ 62611B32		B												2
	R/L	D2LY 62611B32													A(cranberry)	2
	R/L	D3AY 62611B32					A								B(silver)	2
P	R/L	D0AZ 62611B32			A										B(ginger)	2
	R/L	D2AY 62611B32		A												2
	R/L	D2FZ 62611B32	A						B							2
"Before 8/7/72"	R/L	D6AZ 65611B32											A			2
"From 8/7/72"	R/L	D6AZ 65611B32											B			2

SQUARE

A,Y	R/L	D2SZ 65611B32						F							D(tobacco)	2
	R/L	D3SY 65611B32		C			A									2
C	R/L	D2SZ 65611B32						F								2
	R/L	D3SY 65611B32		◆C			A									2
	R/L	D3SY 65611B32		◇E												2
D	R/L	D2SZ 65611B32				C		A							D(tobacco)	2
	R/L	D3SY 65611B32		C			A								B(silver)	2
K	R/L	D2SY 62611B32													A(cranberry)	2
	R/L	D2SZ 65611B32				C		A		B					D(tobacco)	2
	R/L	D3SY 65611B32		C			A								B(silver)	2
	R/L	D3SY 65611B32													F(gray)	2

COPYRIGHT © 1986 — FORD MOTOR COMPANY — DEARBORN, MICHIGAN

1973/79 LINCOLN-MERCURY CARS

BODY TYPE		PART NUMBER LESS SUFFIX	COLORS AND APPLICABLE PART NUMBER SUFFIXES													QTY.
			AVO-CADO	BEIGE	BLACK	BLUE	GOLD	GREEN	ORANGE	RED	SADDLE	SILVER BLUE	TAN	WHITE	OTHER	
611B32	PLUG (SEAT BELT RETRACTOR COVER BOLT ACCESS) — Cont'd															
Notes:	R–right hand, L–left hand, ◇ Light, ◆ Dark															

1974

ROUND

A(53,71),Y(53,71)	R/L	D2AY 62611B32		A												2
	R/L	D2AZ 62611B32						B								2
	R/L	D3AY 62611B32					A									2
	R/L	D6AZ 62611B32			D	E					F				B(silver)	2
C(53,71)	R/L	D2AZ 62611B32						B								2
	R/L	D2FZ 62611B32							B							2
	R/L	D40Z 62611B32					A									2
	R/L	D6AZ 65611B32											A			2
D(53)	R/L	D2AY 62611B32		A												2
	R/L	D2AZ 62611B32						B								2
	R/L	D3AY 62611B32					A								B(silver)	2
	R/L	D6AZ 65611B32								G						2
L	R/L	D2FZ 62611B32							B							2
	R/L	D4DZ 62611B32	A													2
	R/L	D4FZ 62611B32													A(yellow)	2
	R/L	D6AZ 65611B32											◆B			2
	R/L	D6AZ 65611B32											◇A			2
P	R/L	D2FZ 62611B32							B							2
	R/L	D3AY 62611B32													C(silver)	2
	R/L	D4DZ 62611B32	A													2
	R/L	D6AZ 65611B32											A			2

SQUARE

A(53,71),Y(53,71)	R/L	D3SY 65611B32		C			A								B(silver)	2
	R/L	D4AZ 60611B32				G		F		B						2
	R/L	D6AY 60611B32											B			2
	R/L	D6AZ 60611B32			B						D					2
D(53)	R/L	D2SZ 65611B32						F								2
	R/L	D3SY 65611B32		C			A								B(silver)	2
L	R/L	D2FZ 62611B32	C													2

BODY TYPE		PART NUMBER LESS SUFFIX	COLORS AND APPLICABLE PART NUMBER SUFFIXES													QTY.
			BLACK	BLUE	CRAN-BERRY	GOLD	GREEN	GREY	JADE	RED	SADDLE	SILVER BLUE	TAN	TAUPE	OTHER	
611B32	PLUG (SEAT BELT RETRACTOR COVER BOLT ACCESS) — Cont'd															
Notes:	R–right hand, L–left hand, ◇ Light, ◆ Dark, ⊕ Use black															

1975

ROUND

A(53,71),Y(53,71)	R/L	D6AZ 65611B32					J			G						2
C(53,71)	R/L	D6AZ 65611B32					J						A			2
D	R/L	D6AY 65611B32												A		2
	R/L	D6AZ 65611B32				L				G						2
K	R/L	D4ZZ 65611B32													B(white)	2
	R/L	D5FZ 65611B32													B(silver)	2
	R/L	D5SZ 65611B32													B(copper)	2
	R/L	D6AZ 65611B32											B			2
L	R/L	D2FZ 62611B32													B(orange)	2
	R/L	D6AZ 65611B32											A			2
P	R/L	D6AZ 65611B32											A			2

BODY TYPE		PART NUMBER LESS SUFFIX	BLACK	BLUE	CRAN-BERRY	GOLD	GREEN	GREY	JADE	RED	SADDLE	SILVER BLUE	TAN	TAUPE	OTHER	QTY.
			COLORS AND APPLICABLE PART NUMBER SUFFIXES													
611B32	PLUG (SEAT BELT RETRACTOR COVER BOLT ACCESS) — Cont'd															
Notes:	R–right hand, L–left hand, ◇ Light, ◆ Dark, ⊕ Use black															
1975																
SQUARE																
A(53,71)	R/L	D6AY 60611B32											B			2
	R/L	D6AZ 60611B32	B				F									2
D	R/L	D5SZ 65611B32					A									2
	R/L	D6AY 60611B32											B		C(aqua)	2
	R/L	D6AY 65611B32												A		2
	R/L	D6AZ 60611B32	B													2
K	R/L	D3SY 65611B32						F								2
	R/L	D5LY 65611B32													B(white)	2
	R/L	D5LY 65611B32													A(copper)	2
	R/L	D6AY 65611B32											B			2
	R/L	D6AZ 60611B32	B				F									2
1976																
ROUND																
A,Y	R/L	D6AZ 65611B32					J			G						2
C	R/L	D6AZ 65611B32					J			G			A			2
D	R/L	D6AY 65611B32												A		2
	R/L	D6AZ 65611B32								G						2
K	R/L	D6AY 65611B32								◇D					B(aqua)	2
	R/L	D6AZ 65611B32								◆G						2
L	R/L	D6AZ 65611B32											A			2
P	R/L	D6AZ 65611B32											A			2
SQUARE																
A,Y	R/L	D6AZ 60611B32	B				F									2
D	R/L	D6AY 60611B32											B	A		2
	R/L	D6AZ 60611B32	B													2
K	R/L	D6AY 60611B32								◇E					C(aqua)	2
	R/L	D6AZ 60611B32	B													2

YEAR	MODEL/RESTRICTIONS	PART NUMBER	DESCRIPTION	QTY.
611B32	PLUG (SEAT BELT RETRACTOR COVER BOLT ACCESS)			
77/79	A,D,F,K,P	D6AZ 65611B32-G	R.H. and L.H.-red (round)	2
		D6AZ 65611B32-A	R.H. and L.H.-tan (round)	2
		D6AZ 60611B32-B	R.H. and L.H.-black (square)	2

COPYRIGHT © 1986 — FORD MOTOR COMPANY — DEARBORN, MICHIGAN

1973/79 LINCOLN-MERCURY CARS

BODY TYPE		PART NUMBER LESS SUFFIX	COLORS AND APPLICABLE PART NUMBER SUFFIXES: AVO-CADO	BEIGE	BLACK	BLUE	GOLD	GREEN	ORANGE	RED	SADDLE	SILVER BLUE	TAN	WHITE	OTHER	QTY.
61140	COVER (FRONT SEAT BELT ANCHOR BOLT BOOT)															
Notes:	R-right hand, L-left hand, ◇ Light, @ Medium															
1973																
A,Y	R/L	D3AZ 6561140		K		M		L							J(tobacco)	2
C	R/L	D3GY 6561140					A									2
C - - w/bucket seats	R/L	D2AZ 6561140			T				G				S			2
	R/L	D3AZ 6561140		S												2
C - - w/full width seat	R/L	D3AZ 6561140		K	N	M		L							J(tobacco)	2
D - - w/o integral seat belt and shoulder harness	R/L	D2AZ 6561140		H	T	L				K						2
	R/L	D3AZ 6561140					A									2
D - - w/integral seat belt and shoulder harness	R/L	D4VY 6561140										B				1
	R/L	D4AZ 6561140		L	F		D			K						2
F	R/L	D2AZ 6561140	M		T	D		J							P(ginger)	2
K	R/L	D2AY 6561140													B(cranberry)	2
	R/L	D2AZ 6561140		H	T	L		J		K						2
	R/L	D3AY 6561140													A(silver)	2
P - - w/o reclining seats "Before 10/27/72"	R/L	D2AZ 6561140			T	G										2
	R/L	D3AZ 6561140		R				H	G				P			2
"From 10/27/72"	R/L	D3DZ 6561140	D	E					B				A		C(ginger)	2
P - - w/reclining seats	R/L	D3AY 6561140											B			2
1974																
A,C,D,F,Y	R/L	D4AZ 6561140		L			D	E								2
	R/L	D6AZ 6061140			C	D				F		K				2
K	R/L	D4AY 6561140											@C		A(cranberry)	2
	R/L	D4AZ 6561140					D	E					◇B			2
	R/L	D6AY 6061140													G(gray)	2
	R/L	D6AZ 6061140			C	D				F		K				2
P	R/L	D4AZ 6561140	H						A							2
	R/L	D6AZ 6061140			C	D						K				2

BODY TYPE		PART NUMBER LESS SUFFIX	COLORS AND APPLICABLE PART NUMBER SUFFIXES: BLACK	BLUE	CRAN-BERRY	GOLD	GREEN	GREY	JADE	RED	SADDLE	SILVER BLUE	TAN	TAUPE	OTHER	QTY.
61140	COVER (FRONT SEAT BELT ANCHOR BOLT BOOT) — Cont'd															
Notes:	R-right hand, L-left hand, ◇ Light, ♦ Dark															
1975																
A,C,D,F,G,Y	R/L	D6AZ 6061140	C	D			G			F						2
D	R/L	D6AY 6061140												C		2
G	R/L	D4AY 6561140										B				2
	R/L	D6AY 6061140													H(tobacco)	2
K	R/L	D4AY 6561140													D(silver)	2
	R/L	D5LY 6561140													A(white)	2
	R/L	D6AZ 6061140	C	D						F						2
P	R/L	D6AZ 6061140	C	D												2

BODY TYPE		PART NUMBER LESS SUFFIX	COLORS AND APPLICABLE PART NUMBER SUFFIXES													QTY.
			BLACK	BLUE	CRAN-BERRY	GOLD	GREEN	GREY	JADE	RED	SADDLE	SILVER BLUE	TAN	TAUPE	OTHER	
61140	COVER (FRONT SEAT BELT ANCHOR BOLT BOOT) — Cont'd															
Notes:	R-right hand, L-left hand, ◇ Light, ◆ Dark															
1976																
A,C,D,F,G,Y – – w/o continuous loop seat belts mounted on tunnel	R/L	D6AZ 6061140	C	D			G			F						2
D,F,G,K – – w/o continuous loop seat belts mounted on tunnel	R/L	D6AY 6061140						G								2
F G – – w/o continuous loop seat belts mounted on tunnel	R/L	D6AZ 6061140													L(aqua)	2
	R/L	D6AY 6061140													H(tobacco)	2
G – – w/continuous loop seat belts mounted on sill	R/L	D6DZ 6661140	C													2
K	R/L	D6AZ 6061140	C	D						◆F						2
L	R/L	D6FZ 6261140	B													2
P	R/L	D6AZ 6061140	C	D												2

BODY TYPE		PART NUMBER LESS SUFFIX	COLORS AND APPLICABLE PART NUMBER SUFFIXES													QTY.
			AQUA	BLACK	BLUE	CHAM-OIS	CREAM	GOLD	GREEN	GREY	JADE	RED	SADDLE	TAN	OTHER	
61140	COVER (FRONT SEAT BELT ANCHOR BOLT BOOT) — Cont'd															
Notes:	R-right hand, L-left hand															
1977																
A,D,F,G,K,P – – at tunnel	C	D6AZ 6061140		C	D							◆F				2
D,F,G,K – – at tunnel	C	D6AY 6061140								G						2
D,F,K – – at tunnel	C	D7AY 6061140				B									A(cordovan)	2
G – – at sill	R/L	D6DZ 6661140		C												2
L – – at sill "Before 6/27/77"	R/L	D6FZ 6261140		B												2
"From 6/27/77"		Refer to 1978														
P – – at tunnel	R/L	D7AZ 6061140										B				2
V – – at tunnel	R/L	D6AY 6061140								G						2
	R/L	D7AY 6061140													A(cordovan)	2
	R/L	D7AZ 6061140			D											2

BODY TYPE		PART NUMBER LESS SUFFIX	COLORS AND APPLICABLE PART NUMBER SUFFIXES													QTY.
			BLACK	BLUE	CAMEL	CHAM-OIS	CHAM-PAGNE	CORD-OVAN	GOLD	GREY	JADE	RED	RUSSET	SADDLE	OTHER	
61140	COVER (FRONT SEAT BELT ANCHOR BOLT BOOT) — Cont'd															
Notes:	R-right hand, L-left hand															
1978																
A – – at tunnel	R/L	D6AY 6061140								G						2
	R/L	D6AZ 6061140	C	D								F				2
D,K – – at tunnel	R/L	D6AZ 6061140	C	D												2
	R/L	D7AY 6061140						A								2
F – – at tunnel	R/L	D6AY 6061140								G						2
	R/L	D6AZ 6061140	C	D												2

COPYRIGHT © 1986 — FORD MOTOR COMPANY — DEARBORN, MICHIGAN

1973/79 LINCOLN-MERCURY CARS

BODY TYPE		PART NUMBER LESS SUFFIX	BLACK	BLUE	CAMEL	CHAM-OIS	CHAM-PAGNE	CORD-OVAN	GOLD	GREY	JADE	RED	RUSSET	SADDLE	OTHER	QTY.
			COLORS AND APPLICABLE PART NUMBER SUFFIXES													
61140	COVER (FRONT SEAT BELT ANCHOR BOLT BOOT) — Cont'd															
Notes:	R-right hand, L-left hand															

1978

G - - at sill	R/L	D6DZ 6661140	C													2
	R/L	D8AZ 6661140			A			B								2
G - - at tunnel	R/L	D6AY 6061140								G						2
	R/L	D6AZ 6061140	C	D								F				2
L - - at sill	R/L	D6FZ 6261140	B													2
	R/L	D7FZ 6261140										E				2
P - - at sill	R/L	D8BZ 6661140	C	G		D			H				F			2
P - - at tunnel	R/L	D6AZ 6061140	C	D												2

BODY TYPE		PART NUMBER LESS SUFFIX	BERYL	BLACK	BLUE	CAMEL	CHAM-OIS	CORD-OVAN	GOLD	GRAY	JADE	PINE GREEN	RED	WHITE	OTHER	QTY.
			COLORS AND APPLICABLE PART NUMBER SUFFIXES													
61140	COVER (FRONT SEAT BELT ANCHOR BOLT BOOT) — Cont'd															
Notes:	R-Right hand, L-Left hand, ◇ Light, ◆ Dark															

1979

A	R/L	D9AZ 5461140		C	A	B		F		G		D				2
	R/L	E3AY 5461140											D			2
D	R/L	D6AY 6061140								G						2
	R/L	D6AZ 6061140		C	◇D								F			2
	R/L	D7AY 6061140						A								2
	R/L	D8AY 6061140													B(champagne)	2
	R/L	D8AY 6061140													C (cream)	2
	R/L	D9MY 6061140	C		◆A											2
F	R/L	D6AY 6061140								G						2
	R/L	D6AZ 6061140		C	D								F			2
	R/L	D7AY 6061140						A								2
G	R/L	D6AY 6061140								G						2
	R/L	D6AZ 6061140		C	D								F			2
	R/L	D7AY 6061140						A								2
K	R/L	D6AZ 6061140		C	◇D											2
	R/L	D7AY 6061140						A								2
	R/L	D8AY 6061140													C(cream)	2
	R/L	D9MY 6061140	C		◆A											2
P	R/L	D6AZ 6061140		C	D											2

YEAR	MODEL/RESTRICTIONS	PART NUMBER	DESCRIPTION	QTY.
611B40	BOLT (FRONT SEAT BACK ACTUATOR)			
73/	D	DOVY 65611B40-A		1
78	A			1
61142-3	LATCH ASSY. (AUXILIARY SEAT BACK FLOOR)			
73/76	A(71),Y(71)	(RH) C9AZ 7161142-A	(LH) C9AZ 7161143-A	1
77/78	A(71) - - w/fixed cushion			1
79	A(74)	(RH) D9AZ 7461142-A	(LH) D9AZ 7461143-A — Seat cushion	1
		(RH) C9AZ 7161142-A	(LH) C9AZ 7161143-A — Seat back	1
61144	RETAINER (FRONT SEAT BACK LATCH COVER)-Refer to group 61694-5			
611A44	RETAINER (FRONT SEAT BACK TRIM)			
78/	P	D8BZ 54611A44-A	7/8" x 11/16" x 1"	2
		D8BZ 54611A44-B	13/16" x 1/2" x 3/16"	2

BODY TYPE	PART NUMBER LESS SUFFIX	COLORS AND APPLICABLE PART NUMBER SUFFIXES: AVO-CADO	BEIGE	BLACK	BLUE	GOLD	GREEN	ORANGE	RED	SADDLE	SILVER BLUE	TAN	WHITE	OTHER	QTY.
611B60-6	BELT ASSY. (CENTER PASSENGER)														
Notes:	† Incl. black buckle, ▲Incl. bright finish buckle, ⊕ Use black														
1973															
FRONT SEAT															
A,Y	† D3AZ 65611B60			R											1
	▲ D3AZ 65611B60		T	Y	S		V							U(ginger)	1
	▲ D3AZ 65611B60													W(tobacco)	1
C - - w/full width seat	† D3AZ 65611B60			R											1
C - - w/full width seat "Before 11/1/72"	▲ D3VZ 65611B60		A	G	J	⊕	K					⊕		C(ginger)	1
	▲ D3VZ 65611B60													F(tobacco)	1
"From 11/1/72"	▲ D3AZ 65611B60		T	G	S		V							U(ginger)	1
	▲ D3AZ 65611B60													W(tobacco)	1
	▲ D3AY 65611B60					E						C			1
D "Before 11/1/72"	▲ D3VZ 65611B60		A	G	H	B	E		D					C(ginger)	1
	▲ D3VY 65611B60										B			F(tobacco)	1
D - - w/split seats and w/o integral seat belt and shoulder harness "From 11/1/72 To 6/15/73"	▲ D3AY 65611B60				K	E	H		G		F				1
	▲ D3AZ 65611B60		T	Y										U(ginger)	1
	▲ D3AZ 65611B60													W(tobacco)	1
D - - w/full width seat and w/o integral seat belt and shoulder harness- "From 11/1/72 to 6/15/73"	▲ D3VY 65611B60		C	K	L	D	H		G		E			F(ginger)	1
	▲ D3VY 65611B60													J(tobacco)	1
D - - w/integral seat belt and shoulder harness "From 6/15/73	▲ D3VY 65611B60				W		T		S					R(ginger)	1
	▲ D4VY 65611B60										C				1
	▲ D3VY 65611B60													U(tobacco)	1
	▲ D4SZ 65611B60		E			C									1
	▲ D4VZ 65611B60			D											1
K "Before 11/1/72"	▲ D3VZ 65611B60		A	G	H	B	E		D					C(ginger)	1
	▲ D3VZ 65611B60													F(tobacco)	1
	▲ D3VY 65611B60										B				1
K - - w/full width seat "From 11/1/72"	▲ D3VZ 65611B60		A	G	H	B	E		D					C(ginger)	1
	▲ D3VZ 65611B60													F(tobacco)	1
	▲ D3VY 65611B60													A(cranberry)	1
	▲ D4VY 65611B60										C				1
K - - w/split seats- "From 11/1/72 to 12/1/72"	▲ D3AZ 65611B60		T	Y										U(ginger)	1
	▲ D3AY 65611B60				K	E	H		G		F				1
	▲ D3AZ 65611B60													W(tobacco)	1
"From 12/1/72"	▲ D3AZ 65611B60		T	Y										U (ginger)	1
	▲ D3AY 65611B60				K	E	H		G		L				1
	▲ D3AY 65611B60													D(cranberry)	1
	▲ D3AZ 65611B60													W(tobacco)	1

COPYRIGHT © 1986 — FORD MOTOR COMPANY — DEARBORN, MICHIGAN

1973/79 LINCOLN-MERCURY CARS

611B60-6 BELT ASSY. (CENTER PASSENGER) — Cont'd

Notes: † Incl. black buckle, ▲Incl. bright finish buckle, ⊕ Use black

1973

REAR SEAT

BODY TYPE	PART NUMBER LESS SUFFIX	AVO-CADO	BEIGE	BLACK	BLUE	GOLD	GREEN	ORANGE	RED	SADDLE	SILVER BLUE	TAN	WHITE	OTHER	QTY.
A	† D3AZ 65611B60			A											1
	▲ D3AZ 65611B60		C	G	B		E							D(ginger)	1
	▲ D3AZ 65611B60													F(tobacco)	1
C	† D30Z 65611B66			A											1
	▲ D30Z 65611B66		K	G	J	B	L							C(ginger)	1
	▲ D30Y 65611B66											C			1
	▲ D30Z 65611B66													F(tobacco)	1
D – – w/o integral seat belt and shoulder harness	▲ D3AZ 65611B60		C		L	H	K		J			⊕			1
	▲ D3AY 65611B60										A				1
D – – w/integral seat belt and shoulder harness	▲ D3DZ 62611B66		B	E	A							C		D(ginger)	1
	▲ D3VY 65611B66					A			C		B				1
K	▲ D30Y 65611B66		K	G	H	B	E				A			B(cranberry)	1
	▲ D30Z 65611B66								D					C(ginger)	1
	▲ D30Y 65611B66													D(gray)	1
	▲ D30Z 65611B66													F(tobacco)	1
P	† D3AZ 65611B60			A											1
	▲ D3AZ 65611B60	P	C	G	B			N				M		D(ginger)	1

1974

FRONT SEAT

BODY TYPE	PART NUMBER LESS SUFFIX	AVO-CADO	BEIGE	BLACK	BLUE	GOLD	GREEN	ORANGE	RED	SADDLE	SILVER BLUE	TAN	WHITE	OTHER	QTY.
A,Y	† D4AZ 65611B60			A											1
	▲ D4VZ 65611B60		E	G	A		C			D		B			1
	▲ D4SZ 65611B60					C									1
C	† D4AZ 65611B60			A											1
	▲ D4SZ 65611B60			G	A		F			H		D			1
	▲ D40Z 65611B60					F			H						1
D	▲ D4VY 65611B60		E			F			D		C			A(cranberry)	1
	▲ D4VZ 65611B60						C			D		B			1
F	† D4AZ 65611B60			A											1
	▲ D4SZ 65611B60			G	A		F			H		D			1
	▲ D40Z 65611B60								H						1
K	▲ D4SZ 65611B60			G	A	C	F		E	H		D			1
	▲ D4SY 65611B60										B			A(cranberry)	1

REAR SEAT

BODY TYPE	PART NUMBER LESS SUFFIX	AVO-CADO	BEIGE	BLACK	BLUE	GOLD	GREEN	ORANGE	RED	SADDLE	SILVER BLUE	TAN	WHITE	OTHER	QTY.
A,Y	† D4AZ 65611B66			A											1
	▲ D3DZ 62611B66		B	E	A							C			1
	▲ D3VY 65611B66					A									1
	▲ D4VY 65611B66						A			B					1
C	† D40Z 65611B66			A											1
	▲ D40Z 65611B66			E	B	G	D			F		C			1
D	▲ D3DZ 62611B66		B	E	A										1
	▲ D3VY 65611B66					A			C		B				1
	▲ D4VY 65611B66						A			B					1
	▲ D3AY 65611B60									A					1
F	† D40Z 65611B66			A											1
	▲ D40Z 65611B66			E	B		D		H	F		C			1
K	▲ D40Z 65611B66			E	B	G	D		H	F		C			1
	▲ D40Y 65611B66										A			B(silver)	1
	▲ D30Y 65611B66													B(cranberry)	1
P	† D4AZ 65611B66			A											1
	▲ D3DZ 62611B66	G		E	A			F				C			1
	▲ D4VY 65611B66									B					1
	▲ D3VY 65611B66										B				1

BODY TYPE		PART NUMBER LESS SUFFIX	BLACK	BLUE	CRAN-BERRY	GOLD	GREEN	GREY	JADE	RED	SADDLE	SILVER BLUE	TAN	TAUPE	OTHER	QTY.
			COLORS AND APPLICABLE PART NUMBER SUFFIXES													
611B60-6		BELT ASSY. (CENTER PASSENGER)														
Notes:		† Incl. black buckle, ▲ Incl. bright finish buckle, ⊕ Use black, ⅄ Tan w/saddle retractor cover														
1975																
FRONT SEAT																
A,Y		† D5AZ 60611B60	A													1
		▲ D5AZ 60611B60	F	C			B			⊕	G		D			1
		▲ D5AZ 60611B60											⅄H			1
C		† D50Z 65611B60	A													1
		▲ D50Z 65611B60	G	C			B			F	D		E			1
D		▲ D5AZ 60611B60	F	C			B			⊕			D			1
		▲ D5AY 60611B60				A			C					B		1
F		† D50Z 65611B60	A													1
		▲ D50Z 65611B60	G	C			B			F	D		E			1
K		▲ D5SZ 65611B60	G	B			A			D	H	F	C			1
		▲ D5SY 65611B60													C(lipstick red)	1
		▲ D5SY 65611B60													B(aqua)	1
		▲ D5SY 65611B60													A(white)	1
REAR SEAT																
A,Y		† D5AZ 60611B66	A													1
		▲ D5VZ 60611B66	E	B			A			D	F		C			1
C		† D50Z 65611B66	A													1
		▲ D50Z 65611B66		C			B				K	H	E			1
D		▲ D5VZ 60611B66	E	B			A			D			C			1
		▲ D5VY 60611B66				A			C					B		1
F		† D50Z 65611B66	A													1
		▲ D50Z 65611B66		C			B			F	K	H	E			1
G,P(54)		† D5AZ 60611B66	A													1
		▲ D5VZ 60611B66	E	B			A			D			C			1
		▲ D5DZ 54611B66										C				1
K		▲ D50Z 65611B66	J	C			B			F	K	H	E			1
		▲ D50Y 65611B66													B(aqua)	1
		▲ D50Y 65611B66													C(lipstick red)	1
		▲ D50Y 65611B66													A(white)	1
1976																
FRONT SEAT																
A,Y		† D7AZ 53611B60	A													1
		▲ D6AZ 60611B60	B	C		D	E			F						1
C		† D7AZ 53611B60	A													1
		▲ D6AZ 60611B60	B	C		D	E			F	G		H			1
D		▲ D6SZ 65611B60	G	B		C			D	E						1
		▲ D6SY 65611B60						C					E	F		1
F		† D7AZ 53611B60	A													1
		▲ D6AZ 60611B60	B	C		D	E		J	F	G				K(aqua)	1
K		▲ D6SZ 65611B60	G	B		C			D	E	F					1
		▲ D6SY 65611B60						C					E		G(aqua)	1
		▲ D6SY 65611B60													D(lipstick red)	1

COPYRIGHT © 1986 — FORD MOTOR COMPANY — DEARBORN, MICHIGAN

1973/79 LINCOLN-MERCURY CARS

611B60-6 BELT ASSY. (CENTER PASSENGER) — Cont'd

Notes: † Incl. black buckle, ▲ Incl. bright finish buckle, ⊕ Use black, ⅄ Tan w/saddle retractor cover

1976

REAR SEAT

BODY TYPE		PART NUMBER LESS SUFFIX	BLACK	BLUE	CRAN-BERRY	GOLD	GREEN	GREY	JADE	RED	SADDLE	SILVER BLUE	TAN	TAUPE	OTHER	QTY.
A,Y		† D7AZ 53611B66	G													1
		▲ D6AZ 60611B66	B			D	E			G	H					1
		▲ D8VY 60611B66		D												1
C		† D70Z 65611B66	C													1
		▲ D60Z 65611B66		C		D	E			G	H		J			1
		▲ D70Z 65611B66	G													1
D		▲ D6AZ 60611B66	B			D				G			K			1
		▲ D6AY 60611B66												C		1
		▲ D8VY 60611B66		D				E	M							1
F		† D70Z 65611B66	C													1
		▲ D60Z 65611B66		C		D	E		F	G	H					1
		▲ D60Y 65611B66													E(aqua)	1
		▲ D70Z 65611B66	G													1
G		† D7AZ 53611B66	G													1
		▲ D6AZ 60611B66	B							G	L	J	K			1
		▲ D6AY 60611B66							B							1
K		▲ D60Z 65611B66		C		D			F	G	H		J			1
		▲ D60Y 65611B66						C							E(aqua)	1
		▲ D60Y 65611B66													D(lipstick red)	1
		▲ D70Z 65611B66	G													1
P		† D7AZ 53611B66	G													1
		▲ D6AZ 60611B66	B				F						K			1
		▲ D8VY 60611B66		D												1

611B60-6 BELT ASSY. (CENTER PASSENGER)

Notes: † Incl. black buckle, ▲ Incl. bright finish buckle, ◆ Dark, ◇ Light

1977

FRONT SEAT

BODY TYPE		PART NUMBER LESS SUFFIX	AQUA	BLACK	BLUE	CHAM-OIS	CREAM	GOLD	GREEN	GREY	JADE	RED	SADDLE	TAN	OTHER	QTY.
A "Before 10/1/76"		† D7AZ 53611B60		A												1
		▲ D6AZ 60611B60						D			J	F				1
"From 10/1/76"		† D7AZ 53611B60		A												1
D,F,K "Before 10/1/76"		▲ D6SZ 65611B60		G	B			C				◆E	F			1
		▲ D80Z 65611B60				H					C				D(lipstick red)	1
		▲ D6SY 65611B60								C						1
		▲ D90Z 65611B60													A(cordovan)	1
"From 10/1/76"		▲ D7SZ 65611B60													A(cordovan)	1
		▲ D80Y 65611B60		G												1
		▲ D80Z 65611B60			D	H				E	C	◆K	G		J(lipstick red)	1
F		† D80Z 65611B60		B												1

REAR SEAT

A "Before 10/1/76"		† D6AZ 60611B60		A												1
"From 10/1/76"		† D7AZ 53611B66		G												1

611B60-6 BELT ASSY. (CENTER PASSENGER) — Cont'd

Notes: † Incl. black buckle, ▲ Incl. bright finish buckle, ◆ Dark, ◇ Light

1977

REAR SEAT

BODY TYPE	PART NUMBER LESS SUFFIX	AQUA	BLACK	BLUE	CHAMOIS	CREAM	GOLD	GREEN	GREY	JADE	RED	SADDLE	TAN	OTHER	QTY.
A,D "Before 10/1/76"	▲ D6AZ 60611B66		B				D				G	H			1
	▲ D6AY 60611B66									B					1
	▲ D8VY 60611B66			D	N				L						1
"From 10/1/76"	▲ D7AZ 60611B66			C			B		E	A	D	F			1
	▲ D8VY 60611B66		K		N										1
F	† D70Z 65611B66		C												1
F,K "Before 10/1/76"	▲ D60Z 65611B66			C			D			F	◆G	H			1
	▲ D60Y 65611B66								C					D(lipstick red)	1
	▲ D80Z 65611B66				F										1
	▲ D80Y 65611B66		J											G(cordovan)	1
"From 10/1/76"	▲ D80Y 65611B66						B							G(cordovan)	1
	▲ D80Z 65611B66			D	F					C		H		J(lipstick red)	1
	▲ D80Y 65611B66		J								◆D				1
G "Before 10/1/76"	† D7AZ 53611B66		G												1
	▲ D6AZ 60611B66						D				G		K		1
	▲ D8VY 60611B66			D					L	M					1
"From 10/1/76"	† E0DZ 66611B66		D												1
	▲ E0DZ 66611B66								G						1
	▲ D8DZ 66611B66			D						C	E				1
P "Before 10/1/76"	† D6AZ 66611B60		A												1
	▲ D6AZ 60611B66		B					F					K		1
	▲ D8VY 60611B66			D											1
"From 10/1/76"	† D7DZ 54611B66		A												1
	▲ D7DZ 54611B66			D											1
V	▲ E0DZ 66611B66								G						1
	▲ D74Y 54611B66				B										1
	▲ D84Y 54611B66			E							D			F(cordovan)	1

611B60-6 BELT ASSY. (CENTER PASSENGER)

Notes: † Incl. black buckle, ▲ Incl. bright finish buckle, ◇ Light, $ Medium, ◆ Dark, ⊕ Use black

1978

FRONT SEAT

BODY TYPE	PART NUMBER LESS SUFFIX	BLACK	BLUE	CAMEL	CHAMOIS	CHAMPAGNE	CORDOVAN	GOLD	GREY	JADE	RED	RUSSET	SADDLE	OTHER	QTY.
A	† D7AZ 53611B60	A													1
D "Before 6/1/78"	▲ D7SZ 65611B60										E				1
	▲ D80Y 65611B60	G	◇A			F		H							1
	▲ D7SY 65611B60						A								1
	▲ D80Z 65611B60		$D		H				G	C					1
D "From 6/1/78"	▲ D80Y 65611B60	G	◇D			F		H							1
	▲ D80Z 65611B60		$D		H				E	C	K				1
	▲ D90Z 65611B60						A								1
F "Before 6/15/78"	† D70Z 65611B60	A													1
	▲ D7SZ 65611B60								G						1
	▲ D80Z 65611B60		D		H					C				J(lipstick red)	1
F "From 6/15/78"	▲ D80Y 65611B60	G													1
	▲ D80Z 65611B60		D		H				E	C			G	J(lipstick red)	1

COPYRIGHT © 1986 — FORD MOTOR COMPANY — DEARBORN, MICHIGAN

1973/79 LINCOLN-MERCURY CARS

611B60-6 BELT ASSY. (CENTER PASSENGER) — Cont'd

Notes: † Incl. black buckle, ▲ Incl. bright finish buckle, ◇ Light, $ Medium, ♦ Dark, ⊕ Use black

1978

BODY TYPE		PART NUMBER LESS SUFFIX	BLACK	BLUE	CAMEL	CHAM-OIS	CHAM-PAGNE	CORD-OVAN	GOLD	GREY	JADE	RED	RUSSET	SADDLE	OTHER	QTY.
			COLORS AND APPLICABLE PART NUMBER SUFFIXES													
FRONT SEAT																
K "Before 6/1/78"		▲ D7SZ 65611B60										E				1
		▲ D80Y 65611B60	G	◇D			F		H							1
		▲ D80Z 65611B60		$D		H				G	C					1
		▲ D7SY 65611B60						F								1
K "From 6/1/78"		▲ D80Y 65611B60	G	◇D			F		H							1
		▲ D80Z 65611B60		$D		H				E	C	K				1
		▲ D90Z 65611B60						A								1
REAR SEAT																
A		† D7AZ 53611B66	G													1
		▲ D8VY 60611B66		D						L	M	E				1
D		▲ D8VY 60611B66	K	$D		N	J	H	G	L	M	E				1
		▲ D8VY 60611B66		◇F												1
F "Before 6/15/78"		† D70Z 65611B66	C													1
		▲ D70Z 65611B66		E												1
		▲ D80Z 65611B66				F					C		G	H	J(lipstick red)	1
F "From 6/15/78"		† D80Z 65611B66	B													1
		▲ D80Z 65611B66		D		F					C		G	⊕	J(lipstick red)	1
G "Before 6/15/78"		† D7DZ 54611B66	A													1
		▲ D7DZ 54611B66		D							G	J				1
		▲ D8DZ 54611B66			F											1
		▲ D8DZ 66611B66						A								1
		▲ E0DZ 66611B66								G						1
G "From 6/15/78"		† E0DZ 66611B66	D													1
		▲ D8DZ 66611B66		D	F						C					1
		▲ E0DZ 66611B66						F		G		E				1
K "Before 6/1/78"		▲ D70Z 65611B66		$E												1
		▲ D80Y 65611B66	J	◇E			H					D			F(cream)	1
		▲ D70Y 65611B66						F								1
		▲ D80Z 65611B66				F					C					1
K "From 6/1/78"		▲ D80Y 65611B66	J	◇E			H	G				D			F(cream)	1
		▲ D80Z 65611B66		$D		F					C					1
P(36)		▲ D8BZ 36611B66	J	H		K							L		G(cream)	1
P(54,66,74)		† D8BZ 54611B66	H													1
		▲ D8BZ 54611B66	M	K		L							N		J(cream)	1
V "Before 6/15/78"		▲ D74Y 54611B66		◇C		B		A		E						1
		▲ E04Y 54611B66										B				1
V "From 6/15/78"		▲ D84Y 54611B66		◇C												1
		▲ D84Y 54611B66		♦E												1
		▲ D74Y 54611B66				B										1
		▲ E04Y 54611B66						C		F		B				1

BODY TYPE		PART NUMBER LESS SUFFIX	COLORS AND APPLICABLE PART NUMBER SUFFIXES													Q T Y.
			BERYL	BLACK	BLUE	CAMEL	CHAM-OIS	CORD-OVAN	GOLD	GRAY	JADE	PINE GREEN	RED	WHITE	OTHER	
611B60-6	BELT ASSY. (CENTER PASSENGER)															
Notes:	† Incl. black buckle, ▲ Incl. bright finish buckle, ◇ Light, ♦ Dark, @ Medium															
1979																
FRONT SEAT																
F		† E1AZ 54611B60		F												1
		▲ D9AZ 54611B60				D		G		F						1
		▲ E1AZ 54611B60			K							L	H			1
D		▲ D80Y 65611B60		G	◇D				H						F(champagne)	1
		▲ D80Z 65611B60			@D					E			K			1
		▲ D90Y 65611B60	B													1
		▲ D90Z 65611B60						A								1
F		† D80Z 65611B60		B												1
		▲ D80Z 65611B60			D		H			E	C		K			1
		▲ D90Z 65611B60						A								1
K		▲ D80Y 65611B60		G	◇D			E	H						F(champagne)	1
		▲ D80Z 65611B60			@D					E			K			1
		▲ D90Y 65611B60	B												C(amethyst)	1
REAR SEAT CENTER BELTS																
A		† D9AZ 54611B66		A												1
		▲ D9AZ 54611B66			C	D		G		F		E	B			1
D		▲ D8VY 60611B66		K	@D			H	G	L			E		J(champagne)	1
		▲ D8VY 60611B66			◇F											1
		▲ D9VY 60611B66	B		♦A											1
F		† D80Z 65611B66		B												1
		▲ D80Z 65611B66			D		F				C					1
		▲ D80Y 65611B66						G					D			1
G		† E0DZ 66611B66		D												1
		▲ D8DZ 66611B66			D	F					C					1
		▲ E0DZ 66611B66						F		G			E			1
K		▲ D80Z 65611B66			@D						C					1
		▲ D80Y 65611B66		J	◇E			G					D		F(cream)	1
		▲ D80Y 65611B66													H(champagne)	1
		▲ D90Y 65611B66	C												B(amethyst)	1
P(36)		▲ D8BZ 36611B66		J	H		K								G(cream)	1
		▲ D9BZ 36611B66											A			1
P(54,66,74)		† D8BZ 54611B66		H												1
		▲ D8BZ 54611B66		M	K		L								J(cream)	1
		▲ D9BZ 54611B66											A			1
V		▲ D84Y 54611B66			E								D			1
		▲ E04Y 54611B66	D					C		F					E(champagne)	1

BODY TYPE		PART NUMBER LESS SUFFIX	COLORS AND APPLICABLE PART NUMBER SUFFIXES													Q T Y.
			AVO-CADO	BEIGE	BLACK	BLUE	GOLD	GREEN	ORANGE	RED	SADDLE	SILVER BLUE	TAN	WHITE	OTHER	
611A70	SHIELD (FRONT SEAT BELT)															
Notes:	R-right hand, L-left hand, ● Non-metallic, □ Metallic															
1973																
A,C,Y	R/L	D2AY 65611A70													B(ginger)	2
	R/L	D2AZ 65611A70				C		D								2
	R/L	D3AZ 65611A70		B											G(tobacco)	2
	R/L	D5DZ 66611A70			C											2
D,K	R/L	D2AZ 65611A70				J		H		B					G(tobacco)	2
	R/L	D3AZ 65611A70		B			C									2
	R/L	D5DZ 66611A70			C										E(silver)	2
1974																
A,C,D,K,Y	R/L	D4AZ 65611A70		G			●E	D						H		2
	R/L	D6AZ 60611A70			A	B				F	G		D			2

COPYRIGHT © 1986 — FORD MOTOR COMPANY — DEARBORN, MICHIGAN

1973/79 LINCOLN-MERCURY CARS

611A70 SHIELD (FRONT SEAT BELT) — Cont'd
Notes: R-right hand, L-left hand, ● Non-metallic, □ Metallic

1974

BODY TYPE		PART NUMBER LESS SUFFIX	AVO-CADO	BEIGE	BLACK	BLUE	GOLD	GREEN	ORANGE	RED	SADDLE	SILVER BLUE	TAN	WHITE	OTHER	QTY.
K	R/L	D4AY 65611A70					□D					A			C(silver)	2
	R/L	D4AY 65611A70													E(cranberry)	2
P	R/L	D4DZ 62611A70	C		A	B							D		F(copper)	2

611A70 SHIELD (FRONT SEAT BELT) — Cont'd
Notes: R-right hand, L-left hand

1975

BODY TYPE		PART NUMBER LESS SUFFIX	BLACK	BLUE	CRAN-BERRY	GOLD	GREEN	GREY	JADE	RED	SADDLE	SILVER BLUE	TAN	TAUPE	OTHER	QTY.
A,C,F,Y	R/L	D4AY 65611A70										A				2
	R/L	D4AZ 65611A70													H(white)	2
	R/L	D5AZ 65611A70					D									2
	R/L	D6AZ 60611A70	A	B						F	G		D			2
D	R/L	D5VY 65611A70				B								A		2
	R/L	D5AZ 65611A70		A			D			C			B			2
	R/L	D6AZ 60611A70	A													2
G	R/L	D5DZ 66611A70	C				B			D		E	A			2
K	R/L	D5AZ 65611A70		A			D			C			B			2
	R/L	D5SZ 65611A70									A					2
	R/L	D6AZ 60611A70	A													2
P	R/L	D4DZ 62611A70	A	B											D(beige)	2
	R/L	D4DZ 62611A70													C(avocado)	2

1976

BODY TYPE		PART NUMBER LESS SUFFIX	AQUA	BLACK	BLUE	CHAM-OIS	CREAM	GOLD	GREEN	GREY	JADE	RED	SADDLE	TAN	OTHER	QTY.
A,Y	R/L	D6AZ 60611A70	A	B		C	D			F	G				H(white)	2
D	R/L	D6AY 60611A70											D	E	F(white)	2
	R/L	D6AY 60611A70													A(aqua)	2
	R/L	D6AZ 60611A70	A			C			E	F						2
G - - w/full width seat-w/o center arm rest	R/L	D6DZ 62611A70								D		E	F		G(white)	2
-w/center arm rest	R/L	D6DZ 66611A70	A			C				D		E	F		G(white)	2
	R/L	D7DZ 66611A70		B												2
K	R/L	D6AY 60611A70						B					D		F(white)	2
	R/L	D6AY 60611A70													A(aqua)	2
	R/L	D6AZ 60611A70	A	B		C			E	F						2

611A70 SHIELD (FRONT SEAT BELT) — Cont'd
Notes: R-right hand, L-left hand, ◇ Light, ◆ Dark

1977

BODY TYPE		PART NUMBER LESS SUFFIX	AQUA	BLACK	BLUE	CHAM-OIS	CREAM	GOLD	GREEN	GREY	JADE	RED	SADDLE	TAN	OTHER	QTY.
A,D,F,K	R/L	D6AZ 60611A70		A	B			C			E	◆F	G			2
	R/L	D6AY 60611A70													F(white)	2
	R/L	D7WY 60611A70										◇A				2
	R/L	D7AZ 60611A70				B	A			C						2
	R/L	D70Z 60611A70													A(cordovan)	2
G	R/L	D6DZ 66611A70										D		F		2
	R/L	D7DZ 66611A70			B	E	D			F					C(cordovan)	2
	R/L	D8DZ 66611A70									D					2

BODY TYPE		PART NUMBER LESS SUFFIX	COLORS AND APPLICABLE PART NUMBER SUFFIXES													QTY.
			AQUA	BLACK	BLUE	CHAM-OIS	CREAM	GOLD	GREEN	GREY	JADE	RED	SADDLE	TAN	OTHER	
611A70	SHIELD (FRONT SEAT BELT) — Cont'd															
Notes:	R–right hand, L–left hand, ◇ Light, ◆ Dark															
1977																
P	R/L	D6DZ 62611A70												F		2
	R/L	D7DZ 62611A70			C	A			D			B				2
V	R/L	D7DY 66611A70			A										B(white)	2
	R/L	D7DZ 66611A70				E				F	C					2

BODY TYPE		PART NUMBER LESS SUFFIX	COLORS AND APPLICABLE PART NUMBER SUFFIXES													QTY.
			BLACK	BLUE	CAMEL	CHAM-OIS	CHAM-PAGNE	CORD-OVAN	GOLD	GREY	JADE	RED	RUSSET	SADDLE	OTHER	
611A70	SHIELD (FRONT SEAT BELT) — Cont'd															
Notes:	R–right hand, L–left hand, ◇ Light, ◆ Dark															
1978																
A	R/L	D6AZ 60611A70		B							E	F		G		2
	R/L	D7AZ 60611A70								C						2
	R/L	D8AZ 60611A70			A											2
D	R/L	D6AY 60611A70													F(white)	2
	R/L	D6AZ 60611A70	A								E	F				2
	R/L	D7AZ 60611A70				B										2
	R/L	D70Z 60611A70						A								2
	R/L	D8AY 60611A70		A			B								C(cream)	2
	R/L	D8AZ 60611A70			A											2
G	R/L	D6DZ 66611A70										D				2
	R/L	D7DY 66611A70		◆A											B(white)	2
	R/L	D7DZ 66611A70		◇B		E		C		F						2
	R/L	D8DZ 66611A70			A						D					2
K	R/L	D6AY 60611A70													F(white)	2
	R/L	D6AZ 60611A70	A								E	F				2
	R/L	D7AZ 60611A70				B				C						2
	R/L	D70Z 60611A70						A								2
	R/L	D8AY 60611A70		A			B								C(cream)	2
	R/L	D8AZ 60611A70			A											2
P	R/L	D6DZ 66611A70	A													2
	R/L	D7DY 66611A70		A											B(white)	2
	R/L	D7DZ 66611A70				E										2
	R/L	D8DZ 66611A70							E		D		B		C(cream)	2
V	R/L	D6DZ 66611A70										D				2
	R/L	D7DY 66611A70		A											B(white)	2
	R/L	D7DZ 66611A70				E		C		F						2

BODY TYPE		PART NUMBER LESS SUFFIX	COLORS AND APPLICABLE PART NUMBER SUFFIXES													QTY.
			BERYL	BLACK	BLUE	CAMEL	CHAM-OIS	CORD-OVAN	GOLD	GRAY	JADE	PINE GREEN	RED	WHITE	OTHER	
611A70	SHIELD (FRONT SEAT BELT)															
Notes:	R–Right hand, L–Left hand, ◇ Light ◆ Dark															
1979																
D	R/L	D6AY 60611A70												F		2
	R/L	D6AZ 60611A70		A									F			2
	R/L	D7AZ 60611A70								C						2
	R/L	D70Z 60611A70						A								2
	R/L	D8AY 60611A70			A				C						B(champagne)	2
	R/L	D9AY 60611A70	C													2

COPYRIGHT © 1986 — FORD MOTOR COMPANY — DEARBORN, MICHIGAN

1973/79 LINCOLN-MERCURY CARS

611A70 SHIELD (FRONT SEAT BELT) — Cont'd

Notes: R-Right hand, L-Left hand, ◇ Light ◆ Dark

1979

BODY TYPE		PART NUMBER LESS SUFFIX	BERYL	BLACK	BLUE	CAMEL	CHAM-OIS	CORD-OVAN	GOLD	GRAY	JADE	PINE GREEN	RED	WHITE	OTHER	QTY.
G	R/L	D6DZ 66611A70											D			2
	R/L	D7DZ 66611A70			B			C		F	A					2
	R/L	D8DZ 66611A70				A										2
K	R/L	D6AY 60611A70												F		2
	R/L	D6AZ 60611A70		A							E		F			2
	R/L	D7AZ 60611A70								C						2
	R/L	D70Z 60611A70						A								2
	R/L	D8AY 60611A70			◇A				C						B(champagne)	2
	R/L	D9AY 60611A70	C		◆B										A(amethyst)	2
P	R/L	D6DZ 66611A70		A									D			2
	R/L	D7DY 66611A70			A											2
	R/L	D7DZ 66611A70					E									2
V	R/L	D6DZ 66611A70											D			2
	R/L	D7DZ 66611A70						C		F						2
	R/L	D7DY 66611A70			A											2
	R/L	D9DZ 66611A70	A												B(champagne)	2

611A72-3 BELT ASSY. (FRONT SEAT)

Notes: † Incl. black buckle, ▲ Incl. bright finish buckle, @ extra length belt, ⊕ Use black, Θ Also requires one retractor wire-refer to basic 14A380 in Chassis Section

1973

BODY TYPE		PART NUMBER LESS SUFFIX	AVO-CADO	BEIGE	BLACK	BLUE	GOLD	GREEN	ORANGE	RED	SADDLE	SILVER BLUE	TAN	WHITE	OTHER	QTY.
A,Y	R	† D3AZ 65611A72			A											1
	L	† D3AZ 65611A73			A											1
	R	†@ D3AZ 65611A72			H											1
	L	†@ D3AZ 65611A73			★H											1
	R	▲@ D3SZ 65611A72			L											1
	L	▲@ D3AZ 65611A73			J											1
	R	▲ D3AZ 65611A72		L		K		P								1
	R	▲ D3LZ 65611A72			F										B(ginger)	1
	L	▲ D3AZ 65611A73		L	S	K		⊕							N(ginger)	1
	R	▲ D3AZ 65611A72													R(tobacco)	1
	L	▲ D3AZ 65611A73													R(tobacco)	1
C(53,71)	R	† D30Z 53611A72			A											1
	L	† D30Z 53611A73			A											1
	R	†@ D30Z 53611A72			H											1
	L	†@ D30Z 53611A73			H											1
	R	▲@ D30Z 53611A72			D											1
	L	▲@ D3SZ 65611A73			J											1
	R	▲ D30Z 53611A72		C	G	⊕		E							D(ginger)	1
	L	▲ D30Z 53611A73		⊕	G	⊕		E							D(ginger)	1
	R	▲ D30Z 53611A72													F(tobacco)	1
	L	▲ D30Z 53611A73													⊕(tobacco)	1

611A72-3 BELT ASSY. (FRONT SEAT) — Cont'd

Notes: † Incl. black buckle, ▲ Incl. bright finish buckle, @ extra length belt, ⊕ Use black, ⊖ Also requires one retractor wire–refer to basic 14A380 in Chassis Section

1973

BODY TYPE		PART NUMBER LESS SUFFIX	AVOCADO	BEIGE	BLACK	BLUE	GOLD	GREEN	ORANGE	RED	SADDLE	SILVER BLUE	TAN	WHITE	OTHER	QTY.
C(63,65) – – w/full width seat	R	▲ D3LZ 65611A72			F										B(ginger)	1
	L	▲ D3AZ 65611A73			S										N(ginger)	1
	R	▲ D3GY 65611A72					A									1
	L	▲ D3GY 65611A73					A									1
	R	▲ D3AY 65611A72											F			1
	L	▲ D3AY 65611A73											F			1
	R	▲ D3AZ 65611A72													R(tobacco)	1
	L	▲ D3AZ 65611A73													R(tobacco)	1
C(63,65) – – w/full width seat "Before 12/1/72"	R	† D3AZ 65611A72			A											1
	L	† D3AZ 65611A73			A											1
	R	†@ D30Z 65611A72			S											1
	L	†@ D30Z 65611A73			S											1
	R	▲@ D30Z 65611A72			T											1
	L	▲@ D3AZ 65611A73			J											1
	R	▲ D3AZ 65611A72		L		K		E								1
	L	▲ D3AZ 65611A73		C		K		E								1
"From 12/1/72"	R	† D3AZ 65611A72			A											1
	L	† D3AZ 65611A73			A											1
	R	†@ D3AZ 65611A72			H											1
	L	†@ D3AZ 65611A73			H											1
	R	▲@ D3SZ 65611A72			L											1
	L	▲@ D3AZ 65611A73			J											1
	R	▲ D3AZ 65611A72		L		K		P								1
	L	▲ D3AZ 65611A73		L		K		⊕								1
C(63,65) – – w/bucket seats	R	†@ D30Z 65611A72			N											1
	L	†@ D30Z 65611A73			N											1
	R	▲@ D30Z 65611A72			P											1
	L	▲@ D30Z 65611A73			P											1
	R	▲ D30Z 65611A72		H	M	G		K							J(ginger)	1
	L	▲ D30Z 65611A73		H	★M	G		K								1
	L	▲ D3SZ 65611A73													D(ginger)	1
	R	▲ D30Z 65611A72													L(tobacco)	1
	L	▲ D30Z 65611A73													L(tobacco)	1
D – – w/full width seat "Before 12/1/72"	R	▲@ D3SZ 65611A72			L											1
	L	▲@ D3AZ 65611A73			J											1
"From 12/1/72"	R	▲@ D3VY 65611A72			L											1
	L	▲@ D3VY 65611A73			L											1
D – – w/full width seat–3 point system "Before 12/1/72"	R	▲ D3VY 65611A72		A	D										B(ginger)	1
	L	▲ D3VY 65611A73		A	D										B(ginger)	1
	R	▲ D3AY 65611A72				E	A	D		C		B				1
	L	▲ D3AY 65611A73				E	A	D		C		B				1
	R	▲ D3VY 65611A72													C(tobacco)	1
	L	▲ D3VY 65611A73													C(tobacco)	1

COPYRIGHT © 1986 — FORD MOTOR COMPANY — DEARBORN, MICHIGAN

1973/79 LINCOLN-MERCURY CARS

611A72-3 BELT ASSY. (FRONT SEAT) — Cont'd

Notes: † Incl. black buckle, ▲ Incl. bright finish buckle, @ extra length belt, ⊕ Use black, ⊖ Also requires one retractor wire–refer to basic 14A380 in Chassis Section

1973

BODY TYPE		PART NUMBER LESS SUFFIX	AVO-CADO	BEIGE	BLACK	BLUE	GOLD	GREEN	ORANGE	RED	SADDLE	SILVER BLUE	TAN	WHITE	OTHER	QTY.
			COLORS AND APPLICABLE PART NUMBER SUFFIXES													
D – – w/full width seat–2 point system "From 12/1/72"	R	▲ D3VY 65611A72		A	H	J	B	F		E		C			G(tobacco)	1
	R	▲ D3VY 65611A73		A	H	J	B	F		E		C			G(tobacco)	1
	R	▲ D3VY 65611A72													D(ginger)	1
	L	▲ D3VY 65611A73													D(ginger)	1
D – – w/split seats	R	▲@ D3SZ 65611A72			L											1
	L	▲@ D3SZ 65611A73			L											1
D – – w/split seats–3 point system "Before 12/1/72"	R	▲ D3LY 65611A72		P								N			B(cranberry)	1
	L	▲ D3LY 65611A73		P								N			B(cranberry)	1
	R	▲ D3LZ 65611A72			F	G	A	D		C					E(tobacco)	1
	L	▲ D3LZ 65611A73			F	G	A	D		⊕					E(tobacco)	1
	R	▲ D3LZ 65611A72													B(ginger)	1
	L	▲ D3LZ 65611A73													B(ginger)	1
D – – w/split seats–2 point system "From 12/1/72"	R	▲ D3VY 65611A72		M	V	W	N	T		S		P			R(ginger)	1
	L	▲ D3VY 65611A73		M	V	W	N	T		S		P			R(ginger)	1
	R	▲ D3VY 65611A72													U(tobacco)	1
	L	▲ D3VY 65611A73													U(tobacco)	1
F(65)	R/L	†@ D3ZZ 65611A72			B											2
	R/L	▲@ D3ZZ 65611A72			C											2
	R/L	▲ D3ZY 65611A72	B		E	A							G		C(ginger)	2
F(76)	R/L	▲ D3ZZ 76611A72	B		D	A									C(ginger)	2
	R/L	▲ D3ZY 65611A72											G			2
	R/L	▲@ D3ZZ 76611A72			E											2
J	R	⊖ D4RY 62611A72			A											1
	L	D3RY 62611A73			A											1
K	R	▲ D3LY 65611A72		P												1
	L	▲ D3LY 65611A73		P												1
	R	▲ D3LZ 65611A72			★F	G	A	D		C					B(ginger)	1
	L	▲ D3LZ 65611A73			F	G	A	D		C					B(ginger)	1
	R	▲ D3LZ 65611A72													E(tobacco)	1
	L	▲ D3LZ 65611A73													E(tobacco)	1
	R	▲@ D3SZ 65611A72			L											1
	L	▲@ D3SZ 65611A73			L											1
	L	▲ D3LY 65611A73													R(gray)	1
P – – w/full width seat	R/L	† D3DZ 62611A72			A											2
	R/L	†@ D3DZ 62611A72			G											2
	R/L	▲ D3DZ 62611A72	L	C	E	B			K						D(ginger)	2
P – – w/bucket seats –non reclining	R/L	† D3DZ 62611A72			M											2
	R/L	▲@ D3DZ 62611A72			N											2
–reclining	R/L	▲ D3DZ 62611A72	S	U		R			P				⊕		T(ginger)	2
	R/L	▲@ D3DZ 62611A72			J											2

1973/79 LINCOLN-MERCURY CARS

MODEL/RESTRICTIONS	PART NUMBER	DESCRIPTION	QTY.
1973			
SEAT BELT ATTACHING HARDWARE IS ILLUSTRATED BY VEHICLE AND YEAR IN SECTION 620 OF THE LINCOLN-MERCURY BODY ILLUSTRATION CATALOG			
OUTBOARD BELT			
A,D,K,Y	383608-S100	(UU-160)-bolt-torx head-tapping-7/16"-20 x 7/8"	2
F	386582-S100	(UU-170-A)-bolt-torx head-tapping-7/16"-20 x 1 3/8"	2
J	111761-ES	Plug	2
INBOARD BELT			
A,D,F,K,Y	386624-S100	(UU-156-A)-bolt-torx head-tapping-7/16"-20 x 1 3/4"	2
A,D,F,K,Y	382629-S100	(XX-173-AA)-washer-flat-7/16"	2
SHOULDER STRAP			
A,D,F,K,Y	382626-S100	(UU-175)-bolt-torx head-tapping-3/8"-16 x 1 1/2"	2
A,D,F,K,Y		Spacer-refer to group 60228	
P(62)	385675-S100	(XX-369-C)-washer spring-19/32"	2
	385709-S36	(BB-817-WF)-bolt-pan shoulder-1/2"-13 x 1 1/4"	AR

BODY TYPE		PART NUMBER LESS SUFFIX	COLORS AND APPLICABLE PART NUMBER SUFFIXES													QTY.
			AVOCADO	BEIGE	BLACK	BLUE	GOLD	GREEN	ORANGE	RED	SADDLE	SILVER BLUE	TAN	WHITE	OTHER	
611A72-3		BELT ASSY. (FRONT SEAT)-also refer to 610C06-7														
Notes:		† Incl. black buckle, ▲ Incl. bright finish buckle, ⊕ Use black														
1974																
A(53,71), Y(53,71)	R	† D4AZ 53611A72			A											1
	L	† D4AZ 53611A73			A											1
	R	▲ D4AZ 53611A72		C	★G	B	D	F			H		E			1
	L	▲ D4AZ 53611A73		C	G	B	D	F			⊕		E			1
A(57)	R	† D4AZ 57611A72			A											1
	L	† D4AZ 57611A73			A											1
	R	▲ D4AZ 57611A72		C	G	B	D	F			H		E			1
	L	▲ D4AZ 57611A73		C	G	B	D	F			H		E			1
A(65),Y(65)	R	† D4AZ 65611A72			A											1
	L	† D4AZ 65611A73			A											1
	R	▲ D4AZ 65611A72		C	★G	B	D	⊕			⊕		E			1
	L	▲ D4AZ 65611A73		C	★G	⊕	D	F			H		E			1
C(53,71)	R	† D40Z 53611A72			A											1
	L	† D40Z 53611A73			A											1
	R	▲ D40Z 53611A72			F	B	C	E			G		D			1
	L	▲ D40Z 53611A73			F	B	C	E			G		⊕			1
C(65)	R	† D40Z 65611A72			G											1
	L	† D40Z 65611A73			G											1
	R	▲ D40Z 65611A72			M	H	J	L			N		K			1
	L	▲ D40Z 65611A73			M	H	J	L			N		K			1
D(53)	R	▲ D3VY 53611A72		A	H		B			E		C				1
	L	▲ D3VY 53611A73		A	H		B			E		C				1
	R	▲ D4VY 53611A72				A		C			D					1
	L	▲ D4VY 53611A73				A		C			D					1
D(65)	R	▲ D3VY 65611A72		M	V		N			S		P				1
	L	▲ D3VY 65611A73		M	V		N			S		P				1
	R	▲ D4VY 65611A72				⊕		C			D					1
	L	▲ D4VY 65611A73				A		C			D					1
F - - w/split seats	R	† D40Z 65611A72			G											1
	L	† D40Z 65611A73			G											1
	R	▲ D40Z 65611A72			M	H	J	L		P	N		K			1
	L	▲ D40Z 65611A73			M	H	J	L		P	N		K			1

COPYRIGHT © 1986 — FORD MOTOR COMPANY — DEARBORN, MICHIGAN

1973/79 LINCOLN-MERCURY CARS

611A72-3 BELT ASSY. (FRONT SEAT)–also refer to group 610C06-7 — Cont'd

Notes: † Incl. black buckle, ▲ Incl. bright finish buckle, ⊕ Use black

1974

BODY TYPE		PART NUMBER LESS SUFFIX	AVO-CADO	BEIGE	BLACK	BLUE	GOLD	GREEN	ORANGE	RED	SADDLE	SILVER BLUE	TAN	WHITE	OTHER	QTY.
F – – w/bucket seats	R	† D4WZ 65611A72			A											1
	L	† D4WZ 65611A73			A											1
	R	▲ D40Z 65611A72			E	A	B	D			F		C			1
	L	▲ D40Z 65611A73			E	A	B	D			F		C			1
	R	▲ D40Y 65611A72								B						1
	L	▲ D40Y 65611A73								B						1
J	R	▲ D4RY 62611A72			A											1
	L	▲ D4RY 62611A73			A											1
K	R	▲ D4LZ 65611A72			E	A	B	D			F		C			1
	L	▲ D4LZ 65611A73			E	A	B	D			F		C			1
	R	▲ D4LY 65611A72								C		B			D(silver)	1
	L	▲ D4LY 65611A73								⊕		B			D(silver)	1
	R	▲ D4LY 65611A72													A(cranberry)	1
	L	▲ D4LY 65611A73													A(cranberry)	1
L – – w/black belt and color keyed boot	R	† D4FZ 62611A72	K								M		J			1
	L	† D4FZ 62611A73	K			L					M		J			1
	R	† D5FZ 62611A72			D	B										1
	L	† D5FZ 62611A73			D											1
L – – w/color keyed belt and boot	R	▲ D4FZ 62611A72	E		G	⊕			C		H		⊕		B(yellow)	1
	L	▲ D4FZ 62611A73	E			⊕			C		H		⊕		B(yellow)	1
	L	▲ D5FZ 62611A73			J											1
P(54) – – w/bucket seats–reclining	R	▲ D3DZ 54611A72											G			1
	L	▲ D3DZ 54611A73											G			1
	R	▲ D4DZ 54611A72										★C				1
	L	▲ D4DZ 54611A73										C				1
P(54) – – w/full width seat–w/black belt and color keyed boot	R	† D4DZ 54611A72	E		A	F							D			1
	R	† D4DZ 54611A73	E			F							D			1
P(54) – – w/full width seat–w/color keyed belt and boot	R	▲ D3DZ 54611A72	F		D	A							E			1
	L	▲ D3DZ 54611A73	F		D	A							E			1
	R	▲ D4DZ 54611A72									G					1
	L	▲ D4DZ 54611A73									G					1
P(62) – – w/bucket seats–reclining	R	▲ D3DZ 62611A72											AB			1
	L	▲ D3DZ 62611A73											G			1
	R	▲ D4DZ 62611A72										M				1
	L	▲ D4DZ 62611A73										M				1
P(62) – – w/bucket seats–non–reclining	R	▲ D3DZ 62611A72	AE		AG	AD			AC							1
	L	▲ D3DZ 62611A73	K		M	J			H							1
	R	▲ D4DZ 62611A72									N		D			1
	L	▲ D4DZ 62611A73									N		D			1
P(62) – – w/full width seat–w/black belt and color keyed boot	R	† D4DZ 62611A72	J			K			B				H			1
	L	† D4DZ 62611A73	J			K			B				H			1

BODY TYPE		PART NUMBER LESS SUFFIX	COLORS AND APPLICABLE PART NUMBER SUFFIXES													QTY.
			AVO-CADO	BEIGE	BLACK	BLUE	GOLD	GREEN	ORANGE	RED	SADDLE	SILVER BLUE	TAN	WHITE	OTHER	
611A72-3	BELT ASSY. (FRONT SEAT)-also refer to group 610C06-7 — Cont'd															
Notes:	† Incl. black buckle, ▲ Incl. bright finish buckle, ⊕ Use black															

1974

P(62) - - w/full width seat - - w/color keyed belt and boot	R	▲ D3DZ 62611A72	AA		Y	V										1
	L	▲ D3DZ 62611A73	F		D	A										1
	R	▲ D4DZ 62611A72							B		P		F			1
	L	▲ D4DZ 62611A73							B		P		F			1

MODEL/RESTRICTIONS	PART NUMBER	DESCRIPTION	QTY.

1974

SEAT BELT ATTACHING HARDWARE IS ILLUSTRATED BY VEHICLE AND YEAR IN SECTION 620 OF THE LINCOLN-MERCURY BODY ILLUSTRATION CATALOG

OUTBOARD BELT			
A(65),C,D,(65),F,K,Y A(53,57,71),Y(53,71)	383608-S100	(UU-160)-bolt-torx head-tapping-7/16"-20 x 7/8"	4 2
L,P(62) P(54)	386582-S100	(UU-170-A)-bolt-torx head-tapping-7/16"-20 x 1 3/8"	6 4
J	120680-ES100	Bolt-7/16" x 20 x 1 1/4"	AR
	E830298-S71	Washer-flat	AR
	111761-ES	Plug	2
INBOARD BELT			
A,C,D,F,K,Y	385567-S100	(UU-156-F)-bolt-pan shoulder-tapping-7/16"-20 x 1 3/4"-3/4 shoulder	2
C,F,L,P	385681-S	(XX-197-G)-washer-rubber-9/16" x 5/8"	2
L,P	386277-S100	(UU-156-C)-bolt-pan shoulder-tapping-7/16"-20 x 1 3/8"-1/2" shoulder	2
J	120680-ES100	Bolt-7/16" x 20 x 1 1/4"	AR
	E830298-S71	Washer-flat	AR
	113433-ES100	Washer-flat	AR
SHOULDER STRAP			
A,C,D,F,K,L,P,Y	386277-S100	(UU-156-C)-bolt-pan shoulder-tapping-7/1 6"-20 x 1 3/8"-1/2" shoulder	2
P(54)	383608-S100	(UU-160)-bolt-torx head-tapping-7/16" x 20 x 7/8"	2
J	120680-ES100	Bolt-7/16" x 20 x 1 1/4"	AR
	E830298-S71	Washer-flat	AR
	111761-ES	Plug	2

BODY TYPE		PART NUMBER LESS SUFFIX	COLORS AND APPLICABLE PART NUMBER SUFFIXES													QTY.
			BLACK	BLUE	CRAN-BERRY	GOLD	GREEN	GRAY	JADE	RED	SADDLE	SILVER BLUE	TAN	TAUPE	OTHER	
611A72-3	BELT ASSY. (FRONT SEAT)-also refer to group 610C06-7															
Notes:	† Incl. black buckle, ▲ Incl. bright finish buckle, ⊕ Use black															

1975

Wire in right-hand retractor not required for non-interlock systems

A(53,71), Y(53,71)	R	† D5AZ 53611A72	A													1
	L	† D5AZ 53611A73	A													1
	R	▲ D5AZ 53611A72	F	C			B		E		G		D			1
	L	▲ D5AZ 53611A73	F	C			B		E		G		D			1
A(65), Y(65)	R	† D5MY 65611A72	A													1
	L	† D5MY 65611A73	A													1
	R	▲ D5MY 65611A72	F	C			B		E		G		D			1
	L	▲ D5MY 65611A73	F	C			B		E		G		D			1

COPYRIGHT © 1986 — FORD MOTOR COMPANY — DEARBORN, MICHIGAN

1973/79 LINCOLN-MERCURY CARS

BODY TYPE		PART NUMBER LESS SUFFIX	BLACK	BLUE	CRAN-BERRY	GOLD	GREEN	GRAY	JADE	RED	SADDLE	SILVER BLUE	TAN	TAUPE	OTHER	QTY.
			COLORS AND APPLICABLE PART NUMBER SUFFIXES													
611A72-3	BELT ASSY. (FRONT SEAT)-also refer to group 610C06-7 — Cont'd															
Notes:	† Incl. black buckle, ▲ Incl. bright finish buckle, ⊕ Use black															

1975

Wire in right-hand retractor not required for non-interlock systems

C(53,71)	R	† D50Z 53611A72	A													1
	L	† D50Z 53611A73	A													1
	R	▲ D50Z 53611A72	E	C			B				F		D			1
	L	▲ D50Z 53611A73	E	C			B				F		D			1
C(65)	R	† D50Z 65611A72	A													1
	L	† D50Z 65611A73	A													1
	R	▲ D50Z 65611A72	M	J			H			L	N		K			1
	L	▲ D50Z 65611A73		J			H			L	N		K			1
D(53) - - w/flat "D" ring	R	▲ D5VY 53611A72	H	E		B	C		A	G			F	D		1
	L	▲ D5VY 53611A73	H	E		B	C		A	G			F	D		1
D(60) - - w/flat "D" ring- "Before 10/1/74"	R	▲ D5VY 60611A72	G	D		A	B			F			E	C		1
	L	▲ D5VY 60611A73	★													1
D(60) - - w/1/2" thick wire "D" ring "From 10/1/74"	R	▲ D5VY 60611A72	R	M		J	K		S	P			N	L		1
	L	▲ D5VY 60611A73	★													1
F - - w/split seats	R	† D50Z 65611A72	A													1
	L	† D60Z 65611A73	A													1
	R	▲ D50Z 65611A72	M	J			H			L	N		⊕			1
	L	▲ D50Z 65611A73		J			H			L	N		K			1
- - w/bucket seats	R	▲ D50Z 65611A72	F	C			B			E	G		D			1
	L	▲ D50Z 65611A73	F	C			B			E	G		⊕			1
G - - w/bucket seats	R	† D5DZ 54611A72	M													1
	L	† D5DZ 54611A73	M													1
	R	▲ D5DZ 54611A72	L				G			K		⊕	J		AM(tobacco)	1
	L	▲ D5DZ 54611A73	L				G			K		H	J		AM(tobacco)	1
G(54) - - w/full width seat	R	▲ D5DZ 54611A72	AL				AG			AK		AH	AJ			1
	L	▲ D5DZ 54611A73	AL				AG			AK		AH	AJ			1
G(66) - - w/bucket seat	R	† D5DZ 66611A72	G													1
	L	† D5DZ 66611A73	G													1
	R	▲ D5DZ 66611A72	M				H			L		J	K			1
	L	▲ D5DZ 66611A73	M				H			L		J	K			1
G(66) - - w/full width seat	R	† D5DZ 66611A72	V													1
	L	† D5DZ 66611A73	V													1
	R	▲ D5DZ 66611A72	AA				W			Z		X	Y			1
	L	▲ D5DZ 66611A73	AA				W			Z		X	Y			1
K - - w/flat "D" ring "Before 10/1/74"	R	▲ D5SZ 65611A72	H	B			A			D		F			⊕(aqua)	1
	L	▲ D5SZ 65611A73	H	B			A			D		F			G(aqua)	1
	R	▲ D5SY 65611A72									C		A		B(white)	1
	L	▲ D5SY 65611A73									C		A		B(white)	1
	R	▲ D5SY 65611A72													L(lipstick red)	1
	L	▲ D5SY 65611A73													L(lipstick red)	1

1973/79
LINCOLN-MERCURY CARS

BODY TYPE		PART NUMBER LESS SUFFIX	COLORS AND APPLICABLE PART NUMBER SUFFIXES													QTY.
			BLACK	BLUE	CRAN-BERRY	GOLD	GREEN	GRAY	JADE	RED	SADDLE	SILVER BLUE	TAN	TAUPE	OTHER	
611A72-3	BELT ASSY. (FRONT SEAT)-also refer to group 610C06-7 — Cont'd															
Notes:	† Incl. black buckle, ▲ Incl. bright finish buckle, ⊕ Use black															

1975

Wire in right-hand retractor not required for non-interlock systems

K - - w/1/2" wire "D" ring "From 10/1/74"	R	▲ D5SZ 65611A72	S	K			J			M		P			R(aqua)	1
	L	▲ D5SZ 65611A73	S	K			J			M		P			R(aqua)	1
	R	▲ D5SY 65611A72									F		⊕		E(white)	1
	L	▲ D5SY 65611A73									⊕		D		E(white)	1
	R	▲ D5SY 65611A72													G(lipstick red)	1
	L	▲ D5SY 65611A73													G(lipstick red)	1
L	R	▲ D5FZ 62611A72		G			E						H		F(orange)	1
	L	▲ D5FZ 62611A73		G			E						H		F(orange)	1
P(54) - - w/full width seat-w/black belt and color keyed boot	R	† D5DZ 54611A72	S	P			R						N			1
	L	† D5DZ 54611A73	S	P			R						N			1
P(54) - - w/full width seat and color keyed belt and boot	R	▲ D5DZ 54611A72	W	U			T						V			1
	L	▲ D5DZ 54611A73	W	U			T						V			1
P(54) - - w/bucket seats	R	▲ D5DZ 54611A72		X									Y			1
	L	▲ D5DZ 54611A73		X									Y			1
P(62) - - w/full width seat-w/black belt and color keyed boot	R	† D5DZ 62611A72	D	B			L						A			1
	L	† D5DZ 62611A73	D	B			L						A			1
P(62) - - w/full width seat-w/color keyed belt and boot	R	▲ D5DZ 62611A72	H	F			E						G			1
	L	▲ D5DZ 62611A73	H	F			E						G			1
P(62) - - w/bucket seats	R	▲ D5DZ 62611A72	M	J									⊕			1
	L	▲ D5DZ 62611A73	M	J									K			1

MODEL/RESTRICTIONS	PART NUMBER	DESCRIPTION	QTY.
611A72-3 BELT ASSY. (FRONT SEAT COMPLETE) — Cont'd			

1975

SEAT BELT ATTACHING HARDWARE IS ILLUSTRATED BY VEHICLE AND YEAR IN SECTION 620 OF THE LINCOLN-MERCURY BODY ILLUSTRATION CATALOG

OUTBOARD			
A,C,F,G,P,Y	386582-S100	(UU-170-A)-bolt-pan head-tapping-7/16"-20 x 1 3/4"	2
A(71),Y(71)	386272-S100	(UU-156-D)-bolt-pan hd.-tapping-7/16"-20 x 7/8"	2
C(71)	383608-S100	(UU-160)-bolt-torx head-tapping-7/16"-20 x 7/8"	2
D,K	386272-S100	(UU-156-D)-bolt-pan hd.-tapping-7/16"-20 x 7/8"	2 or 4
D,K	386276-S100	(UU-156-E)-bolt pan head-tapping-7/16"-20 x 2"	2
INBOARD			
A,C,F,Y	386582-S100	(UU-170-A)-bolt-pan head-tapping-7/16"-20 x 1 3/4"	2
D,K	386276-S100	(UU-156-E)-bolt-pan head-tapping-7/16"-20 x 2"	2
G,P	386277-S100	(UU-158-C)-bolt-pan head-tapping-7/16"-20 x 1 3/8"	2
G,P - - w/bucket seats	385681-S	(XX-197-G)-washer-rubber-9/16" x 5/8" thick	2
SHOULDER STRAP			
A,Y	386276-S100	(UU-156-E)-bolt-pan head-tapping-7/16"-20 x 2"	2
C,F	385567-S100	(UU-156-F)-bolt-pan shoulder-tapping-7/16"-20 x 1 3/4" x 3/4" shoulder	2 or 4

COPYRIGHT © 1986 — FORD MOTOR COMPANY — DEARBORN, MICHIGAN

1973/79 LINCOLN-MERCURY CARS

MODEL/RESTRICTIONS	PART NUMBER	DESCRIPTION	QTY.
611A72-3 BELT ASSY. (FRONT SEAT COMPLETE) — Cont'd			

1975

SEAT BELT ATTACHING HARDWARE IS ILLUSTRATED BY VEHICLE AND YEAR IN SECTION 620 OF THE LINCOLN-MERCURY BODY ILLUSTRATION CATALOG

SHOULDER STRAP

C,F	385681-S	(XX-197-G)-washer-rubber-9/16" x 5/8" thick	2
D	386276-S100	(UU-156-E)-bolt-pan head-tapping-7/16"-20 x 2"	2
G,K,P	386277-S100	(UU-158-C)-bolt-upper-pan head-tapping-7/16"-20 x 1 3/8"	2
G,K,P	386582-S100	(UU-170-A)-bolt-lower-pan head-tapping-7/16"-20 x 1 3/4"	2

BODY TYPE		PART NUMBER LESS SUFFIX	COLORS AND APPLICABLE PART NUMBER SUFFIXES													QTY.
			BLACK	BLUE	CRAN-BERRY	GOLD	GREEN	GREY	JADE	RED	SADDLE	SILVER BLUE	TAN	TAUPE	OTHER	
611A72-3		BELT ASSY. (FRONT SEAT)-also refer to group 610C06-7														
Notes:		† Incl. black buckle, ▲ Incl. bright finish buckle, ⊕ Use black														

1976

A(53,71), Y(53,71)	R	† D6AZ 53611A72	B													1
	L	† D6AZ 53611A73	B													1
	R	▲ D6AZ 53611A72	C	D		E	F			G	H					1
	L	▲ D6AZ 53611A73	C	D		E	F			G	H					1
A(65), Y(65)	R	† D6MY 65611A72	B													1
	L	† D6MY 65611A73	B													1
	R	▲ D6MY 65611A72	C	D		E	F			G	H					1
	L	▲ D6MY 65611A73	C	D		E	F			⊕	H					1
C(53,71)	R	† D60Z 53611A72	A													1
	L	† D60Z 53611A73	A													1
	R	▲ D60Z 53611A72	B	C			D				E					1
	L	▲ D60Z 53611A73	B	C			D				E					1
C(65)	R	† D60Z 65611A72	C													1
	L	† D60Z 65611A73	C													1
	R	▲ D60Z 65611A72	D	E			F			G	H					1
	L	▲ D60Z 65611A73	D	E			F			G	H					1
D(53) - - w/flat "D" ring	R	▲ D6VY 53611A72	A	B		C		H	D	E			F	G		1
	L	▲ D6VY 53611A73	A	B		C		H	D	E			⊕F	G		1
D(60) - - w/1/2" wire "D" ring "Before 1/5/76"	R	▲ D6VY 60611A72	A	B		C		E	D	F			G	H		1
	L	▲ D6VY 60611A73	A	B		C		E	D	F			G	H		1
D(60) - - w/3/8" wire "D" ring "From 1/5/76"	R	▲ D6VY 60611A72	R	M		K		S	J	P			N	L		1
	L	▲ D6VY 60611A73	R	M		K		S	J	P			N	L		1
F - - w/bucket seats	R	† D6WY 65611A72	A													1
	L	† D6WY 65611A73	A													1
	R	▲ D60Z 65611A72	J	K		⊕	M		U	N	P				V(aqua)	1
	L	▲ D60Z 65611A73	J	K		L	M		U	N	P				V(aqua)	1
F - - w/full width or split seats	R	† D60Z 65611A72	C													1
	R	▲ D60Z 65611A72	D	E		⊕	F		S	G	H				T(aqua)	1
	L	▲ D60Z 65611A73	D	E		R	F		S	G	H				T(aqua)	1

BODY TYPE		PART NUMBER LESS SUFFIX	COLORS AND APPLICABLE PART NUMBER SUFFIXES													QTY.
			BLACK	BLUE	CRAN-BERRY	GOLD	GREEN	GREY	JADE	RED	SADDLE	SILVER BLUE	TAN	TAUPE	OTHER	
611A72-3	BELT ASSY. (FRONT SEAT)-also refer to group 610C06-7 — Cont'd															
Notes:	† Incl. black buckle, ▲ Incl. bright finish buckle															
1976																
G(54) - - w/bucket seats w/o continuous loop seat belts "Before 5/3/76"	R	† D6DZ 54611A72	J													1
	L	† D6DZ 54611A73	J													1
	R	▲ D6DZ 54611A72	K						AJ	L		M	N		AK(tobacco)	1
	L	▲ D6DZ 54611A73	K						AJ	L		M	N		AK(tobacco)	1
G(54) - - w/bucket seats and continuous loop seat belts- "From 5/3/76"	R	† D6DZ 54611A72	AR													1
	L	† D6DZ 54611A73	AR													1
	R	▲ D6DZ 54611A72	AX					AY				AU			AW(tobacco)	1
	L	▲ D6DZ 54611A73	AX					AY				AU			AW(tobacco)	1
G(54) - - w/full width seat w/or w/o center arm rest and w/o continuous loop seat belts "Before 5/3/76"	R	† D6DZ 54611A72	R													1
	L	† D6DZ 54611A73	R													1
	R	▲ D6DZ 54611A72	S					AG	AH	U		V	W			1
	L	▲ D6DZ 54611A73	S					AG	AH	U		V	W			1
G(54) - - w/full width seat and continuous loop seat belts- "From 5/3/76"	R	† D6DZ 54611A72	AZ													1
	L	† D6DZ 54611A73	AZ													1
	R	▲ D6DZ 54611A72	BD									BB				1
	L	▲ D6DZ 54611A73	BD									BB				1
	R	▲ D7DZ 54611A72													BE(tobacco)	1
	L	▲ D7DZ 54611A73													BE(tobacco)	1
G(66) - - w/bucket seats and w/o continuous loop seat belts "Before 5/3/76"	R	† D6DZ 66611A72	M													1
	L	† D6DZ 66611A73	M													1
	R	▲ D6DZ 66611A72	N					V	X	R		S	T			1
	L	▲ D6DZ 66611A73	N					V	X	R		S	T			1
G(66) - - w/bucket seats and continuous loop seat belts- "From 5/3/76"	R	† D6DZ 66611A72	Y													1
	L	† D6DZ 66611A73	Y													1
	R	▲ D6DZ 66611A72	Z									AB				1
	L	▲ D6DZ 66611A73	Z									AB				1
G(66) - - w/full width seat-w/o continuous loop seat belts "Before 5/3/76"	R	† D6DZ 66611A72	G													1
	R	▲ D6DZ 66611A72	H					U	W	J		K	L			1
	L	▲ D6DZ 66611A73	H					U	W	J		K	L			1

COPYRIGHT © 1986 — FORD MOTOR COMPANY — DEARBORN, MICHIGAN

1973/79 LINCOLN-MERCURY CARS

BODY TYPE		PART NUMBER LESS SUFFIX	COLORS AND APPLICABLE PART NUMBER SUFFIXES													QTY.
			BLACK	BLUE	CRAN-BERRY	GOLD	GREEN	GREY	JADE	RED	SADDLE	SILVER BLUE	TAN	TAUPE	OTHER	
611A72-3	BELT ASSY. (FRONT SEAT)-also refer to group 610C06-7 — Cont'd															
Notes:	† Incl. black buckle, ▲ Incl. bright finish buckle, ⊕ Use black															
1976																
G(66) - - w/full width seat and continuous loop seat belts "From 5/3/76"	R	† D6DZ 66611A72	AF													1
	L	† D6DZ 66611A73	AF													1
	R	▲ D6DZ 66611A72	AG					AK	AL			AJ	AM			1
	L	▲ D6DZ 66611A73	AG									AJ				1
J(64D,P)	L	D5RY 64611A73	A													1
J(64T)	R	D5RY 64611A72	B													1
	L	D5RY 64611A73	B													1
K - - w/1/2" thick wire "D" ring "Before 2/2/76"	R	▲ D6SY 65611A72						D					F		⊕B(aqua)	1
	L	▲ D6SY 65611A73						D					F		B(aqua)	1
	R	▲ D6SY 65611A72													E(lipstick red)	1
	L	▲ D6SY 65611A73													E(lipstick red)	1
	R	▲ D6SZ 65611A72	B	C		D			E	F	G					1
	L	▲ D6SZ 65611A73	B	C		D			E	F	G					1
K - - w/3/8" thick wire "D" ring "From 2/2/76"	R	▲ D6SZ 65611A72	H	J		⊕			L	M	N					1
	L	▲ D6SZ 65611A73		J		K			L	M	N					1
	R	▲ D6SY 65611A72						J					L		G(aqua)	1
	L	▲ D6SY 65611A73						J					L		G(aqua)	1
	R	▲ D6SY 65611A72													K(lipstick red)	1
	L	▲ D6SY 65611A73													K(lipstick red)	1
L - - w/o continuous loop seat belts-w/black belt and colored keyed boot "Before 2/2/76"	R	† D6FZ 62611A72		C			D						E			1
	L	† D6FZ 62611A73	B	C			D						E			1
L - - w/o continuous loop seat belts-w/color keyed belt and boot "Before 2/2/76"	R	▲ D6FZ 62611A72	F	G			H			J			K			1
	L	▲ D6FZ 62611A73	F	G			H			J			K			1
L - - w/continuous loop seat belts "From 2/2/76"	R	† D6FZ 62611A72	N													1
	L	† D6FZ 62611A73	N													1
	R	▲ D6FZ 62611A72	V	T			S			R			U			1
	L	▲ D6FZ 62611A73	V	T			S			R			U			1
P(54) - - w/bucket seats w/black belt and color keyed boot	R	† D6DZ 54611A72	P	AN			AP						AM			1
	L	† D6DZ 54611A73	P	AN			AP						AM			1
P(54) - - w/bucket seats -w/color keyed belt and boot	R	▲ D6DZ 54611A72	AF	AC			AE						AD			1
	L	▲ D6DZ 54611A73	AF	AC			AE						AD			1

BODY TYPE		PART NUMBER LESS SUFFIX	COLORS AND APPLICABLE PART NUMBER SUFFIXES													QTY.
			BLACK	BLUE	CRAN-BERRY	GOLD	GREEN	GREY	JADE	RED	SADDLE	SILVER BLUE	TAN	TAUPE	OTHER	
611A72-3	BELT ASSY. (FRONT SEAT)-also refer to group 610C06-7 — Cont'd															
Notes:	† Incl. black buckle, ▲ Incl. bright finish buckle ⊕ Use black															

1976

P(54) - - w/full width seat	R	† D6DZ 54611A72	X													1
	L	† D6DZ 54611A73	X													1
	R	▲ D6DZ 54611A72	⊕	Z			AA						AB			1
	L	▲ D6DZ 54611A73	⊕	Z			AA						⊕			1
P(62) - - w/bucket seats	R	† D6DZ 62611A72	J													1
	L	† D6DZ 62611A73	J													1
	R	▲ D6DZ 62611A72	K	L			N						M			1
	L	▲ D6DZ 62611A73	K	L			N						M			1
P(62) - - w/full width seat-w/black belt and color keyed boot	R	† D6DZ 62611A72	A	B			C						D			1
	L	† D6DZ 62611A73	A	B			C						D			1
P(62) - - w/full width seat-w/color keyed belt and boot	R	▲ D6DZ 62611A72		F			G									1
	L	▲ D6DZ 62611A73		F			G						H			1
	R	▲ D7DZ 62611A72	T										S			1
	L	▲ D7DZ 62611A73	T													1

MODEL/RESTRICTIONS	PART NUMBER	DESCRIPTION	QTY.

1976

FRONT SEAT BELT ATTACHING HARDWARE IS ILLUSTRATED BY VEHICLE AND YEAR IN SECTION 620 OF THE LINCOLN-MERCURY BODY ILLUSTRATION CATALOG

OUTBOARD			
A,C,F,G,P,Y	386582-S100	(UU-170-A)-bolt-pan head-tapping-7/16"-20 x 1 3/4"	2
A(71),Y(71)	386272-S100	(UU-156-D)-bolt-pan head-tapping-7/16"-20 x 7/8"	2
C(71)	383608-S100	(UU-160)-bolt-torx head-tapping-7/16"-20 x 7/8"	2
D,K	386272-S100	(UU-156-D)-bolt-pan head-tapping-7/16"-20 x 7/8"	2 or 4
D,K	386276-S100	(UU-156-E)-bolt-pan head-tapping-7/16"-20 x 2"	2
INBOARD			
A,C,F,Y	386582-S100	(UU-170-A)-bolt-pan head-tapping-7/16"-20 x 1 3/4"	2
D,K	386276-S100	(UU-156-E)-bolt-pan head-tapping-7/16"-20 x 2"	2
G,P	386277-S100	(UU-158-C)-bolt-pan head-tapping-7/16"-20 x 1 3/8"	2
	385681-S	(XX-197-G)-washer-rubber-9/16" x 5/8" thick	2
A,Y	386276-S100	(UU-156-E)-bolt-pan head-tapping-7/16"-20 x 2"	2
C,F	385567-S100	(UU-156-F)-bolt-pan shoulder-tapping-7/16"-20 x 1 3/4" x 3/4" shoulder	2 or 4
C,F	385681-S	(XX-197-G)-washer-rubber-9/16" x 5/8" thick	2
D	386276-S100	(UU-156-E)-bolt-pan head-tapping-7/16"-20 x 2"	2

COPYRIGHT © 1986 — FORD MOTOR COMPANY — DEARBORN, MICHIGAN

1973/79 LINCOLN-MERCURY CARS

MODEL/RESTRICTIONS	PART NUMBER	DESCRIPTION	QTY.
1976			
FRONT SEAT BELT ATTACHING HARDWARE IS ILLUSTRATED BY VEHICLE AND YEAR IN SECTION 620 OF THE LINCOLN-MERCURY BODY ILLUSTRATION CATALOG			
INBOARD			
G,K,P	386277-S100	(UU-158-C)-bolt-upper-pan head-tapping-7/16"-20 x 1 3/8"	2
G,K,P	386582-S100	(UU-170-A)-bolt-lower-pan head-tapping-7/16"-20 x 1 3/4"	2

BODY TYPE		PART NUMBER LESS SUFFIX	COLORS AND APPLICABLE PART NUMBER SUFFIXES													QTY.
			AQUA	BLACK	BLUE	CHAM-OIS	CREAM	GOLD	GREEN	GRAY	JADE	RED	SADDLE	TAN	OTHER	
611A72-3		BELT ASSY. (FRONT SEAT)-also refer to group 610C06-7														
Notes:		† Incl. black buckle, ▲ Incl. bright finish buckle, ◇ Light, ♦ Dark, ⊕ Use black														
1977																
A(53,71)	R	† D7AZ 53611A72		A												1
	L	† D7AZ 53611A73		A												1
	R	▲ D8AZ 53611A72			C					G	B	D	F			1
	L	▲ D8AZ 53611A73			C					G	B	D	F			1
A(65)	R	† D8MY 65611A72		A												1
	L	† D8MY 65611A73		A												1
	R	▲ D7MY 65611A72						B				D				1
	L	▲ D7MY 65611A73						B				D				1
	R	▲ D8MY 65611A72			C					G	B		F			1
	L	▲ D8MY 65611A73			C					G	B		F			1
D(53)	R	▲ D7VY 53611A72		F												1
	R	▲ D8VY 53611A72			R	H					A	B			E(cordovan)	1
	L	▲ D8VY 53611A73		G	M	Z					A	B			E(cordovan)	1
D(60)	R	▲ D8VY 60611A72		G	J	H					A	B			E(cordovan)	1
	L	▲ D8VY 60611A73		G	J	H					A	B			E(cordovan)	1
F(53,71)"Before 10/1/76"	R	† D70Z 53611A72		H												1
	L	† D70Z 53611A73		A												1
	R	▲ D70Z 53611A72											E			1
	R	▲ D80Z 53611A72			C	G				F	B					1
	L	▲ D80Z 53611A73			C	G				F	B					1
"From 10/1/76"	R	† D70Z 53611A72		H												1
	L	† D90Z 53611A73		C												1
	R	▲ D70Z 53611A72											E			1
	L	▲ D70Z 53611A73								F						1
	R	▲ D80Z 53611A72			C	G				F	B					1
	L	▲ D80Z 53611A73			L	G					B					1

BODY TYPE		PART NUMBER LESS SUFFIX	COLORS AND APPLICABLE PART NUMBER SUFFIXES													QTY.
			AQUA	BLACK	BLUE	CHAMOIS	CREAM	GOLD	GREEN	GRAY	JADE	RED	SADDLE	TAN	OTHER	
611A72-3		BELT ASSY. (FRONT SEAT)-also refer to group 610C06-7 — Cont'd														
Notes:		† Incl. black buckle, ▲ Incl. bright finish buckle, ◇ Light, ♦ Dark, ⊕ Use black														
1977																
F(65) - - w/full width or split seats- "Before 10/1/76"	R	† D90Z 65611A72		J												1
	L	† D70Z 65611A73		A												1
	R	▲ D70Z 65611A72			D					G			F			1
	L	▲ D70Z 65611A73			D	Z				G			F			1
	R	▲ D90Z 65611A72				H					E					1
	L	▲ D90Z 65611A73				H					E					1
"From 10/1/76"	R	† D80Z 65611A72		A												1
	L	† D80Z 65611A73		A												1
	R	▲ D80Z 65611A72			C					F			E			1
	L	▲ D80Z 65611A73			V					F			E			1
	R	▲ D90Z 65611A72				H					E					1
	L	▲ D90Z 65611A73				H					E					1
F(65) - - w/bucket seats	R	† D8WZ 65611A72		A												1
	L	† D8WZ 65611A73		A												1
	R	▲ D70Z 65611A72			L					P						1
	L	▲ D70Z 65611A73														1
	R	▲ D80Z 65611A72				X							Z			1
	L	▲ D80Z 65611A73			J	N				M	H		L			1
G(54) - - w/full width seat	R	† D6DZ 54611A72		AZ												1
	L	† D6DZ 54611A73		AZ												1
G(54) - - w/bucket seats	R	† D6DZ 54611A72		AR												1
	L	† D6DZ 54611A73		AR												1
G(66) - - w/full width seat	R	† D6DZ 66611A72		AF												1
	L	† D6DZ 66611A73		AF												1
	R	▲ D7DZ 66611A72			D			C								1
	R	▲ D6DZ 66611A72								AK	AL	AH		AM		1
G(66) - - w/bucket seats	R	† D6DZ 66611A72		Y												1
	L	† D6DZ 66611A73		Y												1
	R	▲ D6DZ 66611A72								AC	AD	AA		AE		1
	L	▲ D6DZ 66611A73								AC	AD	AA		AE		1
J	L	D5RY 64611A73		A												1

COPYRIGHT © 1986 — FORD MOTOR COMPANY — DEARBORN, MICHIGAN

1973/79 LINCOLN-MERCURY CARS

611A72-3 BELT ASSY. (FRONT SEAT)-also refer to group 610C06-7 — Cont'd

Notes: † Incl. black buckle, ▲ Incl. bright finish buckle, ◇ Light, ♦ Dark, ⊕ Use black

1977

BODY TYPE		PART NUMBER LESS SUFFIX	AQUA	BLACK	BLUE	CHAM-OIS	CREAM	GOLD	GREEN	GRAY	JADE	RED	SADDLE	TAN	OTHER	QTY.
K	R	▲ D7LY 65611A72		F	C											1
	L	▲ D7LY 65611A73		F												1
	R	▲ D8LY 65611A72				J		H		R	U	D			F(cordovan)	1
	L	▲ D8LY 65611A73			P	J		H		R	U	D			F(cordovan)	1
L "Before 6/2/77"	R	† D7FZ 62611A72		A												1
	L	† D7FZ 62611A73		A												1
	R	▲ D7FZ 62611A72		E												1
	L	▲ D7FZ 62611A73		E												1
"From 6/27/77"		Refer to 1978														
P(54) - - w/full width seat, black belt and color keyed boot "Before 10/1/76"	L	† D7DZ 54611A73		W	S									R		1
"From 10/1/76"	L	† D7DZ 54611A73		W												1
P(54) - - w/full width seat, color keyed belt and boot	R	▲ D6DZ 54611A72		Y	Z									AB		1
	L	▲ D6DZ 54611A73		Y	Z									AB		1
P(62) - - w/full width seat-colored keyed belt and boot "Before 10/1/76	R	▲ D6DZ 62611A72		E										H		1
	L	▲ D6DZ 62611A73		E	F									H		1
	R	▲ D7DZ 62611A72										F				1
	L	▲ D7DZ 62611A73							G			F				1

BODY TYPE		PART NUMBER LESS SUFFIX	COLORS AND APPLICABLE PART NUMBER SUFFIXES													QTY.
			AQUA	BLACK	BLUE	CHAM-OIS	CREAM	GOLD	GREEN	GRAY	JADE	RED	SADDLE	TAN	OTHER	
611A72-3	BELT ASSY. (FRONT SEAT)-also refer to group 610C06-7 — Cont'd															
Notes:	† Incl. black buckle, ▲ Incl. bright finish buckle, ◇ Light, ◆ Dark															

1977

V - - w/full width seat	R	▲ D84Y 54611A72			B	E				D					C(cordovan)	1
	L	▲ D84Y 54611A73			B	E									C(cordovan)	1
V - - w/bucket seats	R	▲ D84Y 54611A72			G					J					H(cordovan)	1
	L	▲ D84Y 54611A73			G					J					H(cordovan)	1
	R	▲ D74Y 54611A72				G										1
	L	▲ D84Y 54611A73				R										1

MODEL/RESTRICTIONS	PART NUMBER	DESCRIPTION	QTY.

1977

FRONT SEAT BELT ATTACHING HARDWARE IS ILLUSTRATED BY VEHICLE AND YEAR IN SECTION 620 OF THE LINCOLN-MERCURY BODY ILLUSTRATION CATALOG

P	55974-S45X	(BB-574-E)-screw-oval head 8-18 X 3/4"	2
D	381801-S2	(UU-148)-screw-round washer head-drill point 8-18 x 1/2"	2
V	382553-S100	(XX-197-Z)-washer 1/2" flat	2
P	381863-S2	(MM-275-J)-nut-spring 8-18	2
G,P	385681-S	(XX-197-G)-washer-37/64" x 29/32"	2
K	385906-S36	(UU-52-NP)-screw and washer-hex head tapping-8-32 x 5/8"	2
A,D,F,G,K,L,P,V	386272-S100	(UU-156-D)-bolt-pan head tapping 7/16-20 x 57/64"	2
A,F,G,K,P,V	386582-S100	(UU-170-A)-bolt-pan head tapping 7/16-20 x 1 3/8"	2
A,D,F,G,P	386274-S100	(UU-156-A)-bolt-pan head shoulder tapping 7/16-20 x 1 3/4"	2
D	386276-S100	(UU-156-E)-bolt-pan head tapping 7/16-20 x 1 3/4 x 3/4 shoulder	2
A,F,G,L,P,V	386277-S100	(UU-156-C)-bolt-pan head shoulder tapping 7/16-20 x 1 3/8"	2
F,V	386993-S	(VV-2-CE)-spacer-19/32" x 7/8" x 3/4"	2
G,L	387194-S	(XX-196F)-washer-rubber-19/32" x 57/64" x 3/8"	2
L	387215-S2	(MM-357-E)-nut-3/16" sleeve	2

BODY TYPE		PART NUMBER LESS SUFFIX	COLORS AND APPLICABLE PART NUMBER SUFFIXES													QTY.
			BLACK	BLUE	CAMEL	CHAM-OIS	CHAM-PAGNE	CORD-OVAN	GOLD	GREY	JADE	RED	RUSSET	SADDLE	OTHER	
611A72-3	BELT ASSY. (FRONT SEAT)-also refer to group 610C06-7															
Notes:	† Incl. black buckle, ▲ Incl. bright finish buckle, ◇ Light, $ Medium															

1978

A(53,71)	R	† D8AZ 53611A72	A													1
	L	† D8AZ 53611A73	A													1
	R	▲ D8AZ 53611A72		C	E					G	B	D		F		1
	L	▲ D8AZ 53611A73		C	E					G	B	D		F		1
A(65)	R	† D8MY 65611A72	A													1
	L	† D8MY 65611A73	A													1
	R	▲ D8MY 65611A72		C	E					G	B	D		F		1
	L	▲ D8MY 65611A73		C	E					G	B	D		F		1

COPYRIGHT © 1986 — FORD MOTOR COMPANY — DEARBORN, MICHIGAN

1973/79 LINCOLN-MERCURY CARS

611A72-3 BELT ASSY. (FRONT SEAT)-also refer to group 610C06-7 — Cont'd

Notes: † Incl. black buckle, ▲ Incl. bright finish buckle, ◇ Light, $ Medium, ⊕ Use black

1978

BODY TYPE		PART NUMBER LESS SUFFIX	BLACK	BLUE	CAMEL	CHAMOIS	CHAMPAGNE	CORDOVAN	GOLD	GREY	JADE	RED	RUSSET	SADDLE	OTHER	QTY.
D(53) "Before 6/1/78"	R	▲ D8VY 53611A72	G	$R		H	W	E	D	N	A	B				1
	L	▲ D8VY 53611A73	G	$R		H	F	V	D	Y	A	B				1
	R	▲ D8VY 53611A72		◇C												1
	L	▲ D8VY 53611A73		◇C												1
D(53) "From 6/1/78"	R	▲ D8VY 53611A72	X	$R		Z	W	V	U	Y	P					1
	L	▲ D8VY 53611A73	X	$R		Z		V	U	Y	P	S				1
	R	▲ D8VY 53611A72		◇T												1
	L	▲ D8VY 53611A73		◇T												1
	R	▲ D9VY 53611A72										F				1
	L	▲ D9VY 53611A73					F									1
D(60) "Before 6/1/78"	R	▲ D8VY 60611A72	U	◇W		M	F		D	V	A	B				1
	L	▲ D8VY 60611A73	U	◇C			T	E	R	V	A	B				1
	R	▲ D9VY 60611A72		$B				D								1
	L	▲ D8VY 60611A73		$J												1
D(60) "From 6/1/78"	R	▲ D8VY 60611A72	U			M	T		R	V	L	P				1
	L	▲ D8VY 60611A73	U	$N			T	S	R	V	L	P				1
	R	▲ D8VY 60611A72		◇W												1
	L	▲ D8VY 60611A73		◇W												1
	R	▲ D9VY 60611A72		$B				D								1
F(53) "Before 6/15/78"	R	† D80Z 53611A72	J													1
	L	† D90Z 53611A73	C													1
	R	▲ D80Z 53611A72		L		N				M	B		⊕	R		1
	L	▲ D80Z 53611A73		L		N				F	K		P	R		1
F(53) "From 6/15/78"	R	† D90Z 53611A72	C													1
	L	† D80Z 53611A73	J													1
	R	▲ D80Z 53611A72		L		N				M	K		⊕	R		1
	L	▲ D80Z 53611A73		L		N				M	K		P	R		1
F(65) - - w/bucket seats "Before 6/15/78"	R	† D8WZ 65611A72	A													1
	L	† D8SZ 60611A73	R													1
	R	▲ D80Z 65611A72		V		X				W	U	T	Y	Z		1
	L	▲ D80Z 65611A73		V		X				M	U	T	Y	Z		1
"From 6/15/78"	R	† D8SZ 60611A72	R													1
	L	† D8SZ 60611A73	R													1
	R	▲ D80Z 65611A72		V		X				W	U	T	Y	Z		1
	L	▲ D80Z 65611A73		V		X				W	U	T	Y	Z		1
F(65) - - w/full width and split seats "Before 6/15/78"	R	† D80Z 65611A72	AB													1
	L	† D80Z 65611A73	AB													1
	R	▲ D80Z 65611A72				G				AE	AC	S	AG	AH		1
	R	▲ D90Z 65611A72		F												1
	L	▲ D90Z 65611A73		F												1
	L	▲ D80Z 65611A73				AF				AE	AC	S	AG	AH		1
"From 6/15/78"	R	† D80Z 65611A72	AB													1
	L	† D80Z 65611A73	AB													1
	R	▲ D80Z 65611A72								AE	AC	S	AG	AH		1
	R	▲ D90Z 65611A72		F		H										1
	L	▲ D90Z 65611A73		F												1
	L	▲ D80Z 65611A73				AF				AE	AC	S	AG	AH		1

BODY TYPE		PART NUMBER LESS SUFFIX	COLORS AND APPLICABLE PART NUMBER SUFFIXES													QTY.
			BLACK	BLUE	CAMEL	CHAM-OIS	CHAM-PAGNE	CORD-OVAN	GOLD	GREY	JADE	RED	RUSSET	SADDLE	OTHER	
611A72-3	BELT ASSY. (FRONT SEAT)-also refer to group 610C06-7 — Cont'd															
Notes:	† Incl. black buckle, ▲ Incl. bright finish buckle, ◇ Light, $ Medium															
1978																
G(54) - - w/bucket seats	R	† D8DZ 54611A72	A													1
"Before 6/15/78"	L	† D8DZ 54611A73	A													1
"From 6/15/78"	R	† D8DZ 54611A72	Y													1
	L	† D8DZ 54611A73	AA													1
	R	▲ D8DZ 54611A72			V			N		P	J	L				1
	L	▲ D8DZ 54611A73		V	M					P		L				1
	R	▲ D9DZ 54611A72		B												1
	L	▲ D9DZ 54611A73						F			B					1
G(54) - - w/full width seat "Before 6/15/78"	R	† D8DZ 54611A72	H													1
	L	† D8DZ 54611A73	H													1
"From 6/15/78"	R	† D8DZ 54611A72	Z													1
	L	† D8DZ 54611A73	AB													1
"Before 4/1/78"	R	▲ D8DZ 54611A72			E			F		G	B					1
	R	▲ D9DZ 54611A72		H								K				1
	L	▲ D8DZ 54611A73			E			F			X					1
	L	▲ D9DZ 54611A73		J						N		K				1
"From 4/1/78"	R	▲ D8DZ 54611A72						F		G	B					1
	R	▲ D9DZ 54611A72		H								J				1
	L	▲ D8DZ 54611A73			E			F			X					1
	L	▲ D9DZ 54611A73		J	K					N		K				1
G(66) - - w/bucket seats "Before 6/15/78"	R	† D8DZ 66611A72	A													1
	L	† D8DZ 66611A73	A													1
"From 6/15/78"	R	† D8DZ 66611A72	AC													1
	L	† D8DZ 66611A73	AD													1
"Before 4/1/78"	R	▲ D8DZ 66611A72		C	E			F		G	B	D				1
	L	▲ D8DZ 66611A73		C	E			F		W		D				1
	L	▲ D8DZ 66611A73									C					1
"From 4/1/78"	R	▲ D8DZ 66611A72		C	E			F		G	B	V				1
	L	▲ D8DZ 66611A73		C	E			F		W		V				1
	L	▲ D8DZ 66611A73									C					1
G(66) - - w/full width seat	R	† D8DZ 66611A72	AD													1
	L	† D8DZ 66611A73	AE													1
"Before 4/1/78"	R	▲ D8DZ 66611A72		AB	L			M		N	AA	W				1
	L	▲ D8DZ 66611A73			X			Y		N	H	AC				1
	L	▲ D9DZ 66611A73		A												1
"From 4/1/78"	R	▲ D8DZ 66611A72		AB	X			Y		Z	AA	W				1
	L	▲ D8DZ 66611A73			X			Y		Z	AA	AC				1
	L	▲ D9DZ 66611A73		A												1
J	L	D5RY 64611A73	A													1
K - - w/split seats "Before 6/1/78"	R	▲ D8LY 65611A72	AA	◇W		J	Z	Y		AB	U				X(cream)	1
	L	▲ D8LY 65611A73	AA			AG	Z			AB	U				K(cream)	1
	R	▲ D8LY 65611A72		$AD												1
	L	▲ D8LY 65611A73		$AD												1
	R	▲ D9LY 65611A72										E				1
	L	▲ D9LY 65611A73		◇E												1
"From 6/1/78"	R	▲ D8LY 65611A72	AA	◇W		AC	Z	Y		AB	U				X(cream)	1
	L	▲ D8LY 65611A73	AA			AC	Z			AB	U					1
	R	▲ D9LY 65611A72										E				1
	L	▲ D9LY 65611A73		◇E											F(cream)	1
	R	▲ D8LY 65611A72		$AD												1
	L	▲ D8LY 65611A73		$AD												1

COPYRIGHT © 1986 — FORD MOTOR COMPANY — DEARBORN, MICHIGAN

1973/79 LINCOLN-MERCURY CARS

611A72-3 BELT ASSY. (FRONT SEAT)-also refer to group 610C06-7 — Cont'd

Notes: † Incl. black buckle, ▲ Incl. bright finish buckle, ◇ Light, $ Medium

1978

BODY TYPE		PART NUMBER LESS SUFFIX	BLACK	BLUE	CAMEL	CHAMOIS	CHAMPAGNE	CORDOVAN	GOLD	GREY	JADE	RED	RUSSET	SADDLE	OTHER	QTY.
K - - w/bucket seats "Before 6/1/78"	R	▲ D8LY 65611A72		S					B							1
	L	▲ D8LY 65611A73							B							1
K - - w/bucket seats "From 6/1/78"	R	▲ D8LY 65611A72		S					T							1
	L	▲ D8LY 65611A73							T							1
L	R	† D8FZ 62611A72	L													1
	L	† D9FZ 62611A73	A													1
"Before 4/1/78"	R	▲ D8FZ 62611A72	E	D		M					N	B			C(tangerine)	1
	L	▲ D8FZ 62611A73				R					S	T			M(tangerine)	1
	L	▲ D9FZ 62611A73	D	C												1
"From 4/1/78"	R	▲ D8FZ 62611A72	E	D		M					N	B			P(tangerine)	1
	L	▲ D8FZ 62611A73				R					S	T			M(tangerine)	1
	L	▲ D9FZ 62611A73	D	C												1
P(54) - - w/bucket seats "Before 6/15/78"	R	† D8BZ 54611A72	G													1
	L	† D8BZ 54611A73	AA													1
"From 6/15/78"	R	† D8BZ 54611A72	AA													1
	L	† D8BZ 54611A73	AA													1
"Before 4/1/78"	R	▲ D8BZ 54611A72	X	M		V							L			1
	L	▲ D8BZ 54611A73	N	M		H							Y			1
"From 4/1/78"	R	▲ D8BZ 54611A72	X	W		V							Y			1
	L	▲ D8BZ 54611A73		W		V							Y			1
	L	▲ D9BZ 54611A73	G													1
P(54,74) - - w/full width seat	R	† D8BZ 54611A72	Z													1
	L	† D8BZ 54611A73	Z													1
	R	▲ D8BZ 54611A72	U	T		R							S			1
	L	▲ D8BZ 54611A73	U			R							S			1
	L	▲ D9BZ 54611A73		D												1
P(36,66) - - w/bucket seats "Before 6/15/78"	R	† D8BZ 66611A72	G													1
	L	† D9BZ 66611A73	K													1
"From 6/15/78"	R	† D8BZ 66611A72	AE													1
	L	† D9BZ 66611A73	K													1
	R	▲ D8BZ 66611A72	AB	AA		Y							AC		Z(cream)	1
	L	▲ D8BZ 66611A73	AB	AA		Y							AC		Z(cream)	1
P(36,66) - - w/full width seat "Before 6/15/78"	R	† D8BZ 66611A72	AD													1
"From 6/15/78"	R	† D8BZ 66611A72	AD													1
"Before 4/1/78"	R	▲ D8BZ 66611A72	W	V		T							X		U(cream)	1
	L	▲ D8BZ 66611A73											X		U(cream)	1
	L	▲ D9BZ 66611A73	E	D		C										1
"From 4/1/78"	R	▲ D8BZ 66611A72	W	V		T							X		U(cream)	1
	L	▲ D8BZ 66611A73				T							X		U(cream)	1
	L	▲ D9BZ 66611A73	E	D												1
V - - w/bucket seats	R	▲ D84Y 54611A72		G				H		J		F				1
	L	▲ D84Y 54611A73		G		R		H		J		F				1
	R	▲ D74Y 54611A72				G										1
V - - w/full width seat	R	▲ D84Y 54611A72		B		E		C		D		A				1
	L	▲ D84Y 54611A73		B		E		C				A				1

MODEL/RESTRICTIONS	PART NUMBER	DESCRIPTION	QTY.
1978			
FRONT SEAT BELT ATTACHING HARDWARE IS ILLUSTRATED BY VEHICLE AND YEAR IN SECTION 620 OF THE LINCOLN-MERCURY BODY ILLUSTRATION CATALOG			
D,P	381801-S2	(UU-148)-screw-washer head 8-18 x 1/2"	2
A	382583-S100	(XX-340-AC)-washer-flat 1/2"	2
L	385681-S	(XX-197-G)-washer 19/32" Dia. x 29/32"	2
K	385906-S36	(UU-52-NP)-Screw and washer-8-32 x 5/8"	2
A,D,F,G,K,L,P,V	386272-S100	(UU-156-D)-Bolt-pan head tapping 7/16"-20 x 57/64"	2
A,D,F,G,K,P,V	386582-S100	(UU-170-A)-Bolt-pan head tapping 7/16-20 x 1 3/8"	2
A,D,F	386274-S100	(UU-156-A)-Bolt-pan head shoulder tapping 7/16-20 x 1 3/4"	2
A,F,G,L,P,V	386277-S100	(UU-156-C)-Bolt-pan head shoulder tapping 7/16-20 x 1 3/8"	2
P,V	386993-S	(VV-2-CE)-Spacer-19/32" I.D. x 7/8 O.D. x 3/4" long	2
L	387215-S2	(MM-357-E)-Nut-3/16 sleeve	2

BODY TYPE		PART NUMBER LESS SUFFIX	COLORS AND APPLICABLE PART NUMBER SUFFIXES													QTY.
			BERYL	BLACK	BLUE	CAMEL	CHAMOIS	CORDOVAN	GOLD	GRAY	JADE	PINE GREEN	RED	WHITE	OTHER	
611A72-3	BELT ASSY. (FRONT SEAT)-also refer to group 610C06-7															
Notes:	R-Right hand, L-Left hand, † Incl. black buckle, ▲ Incl. bright finish buckle, ◇ Light, ◆ Dark, @ Medium															
1979																
A(54,74)	R	† D9AZ 54611A72		H												1
	L	† D9AZ 54611A73		H												1
	R	▲ D9AZ 54611A72								M						1
	L	▲ D9AZ 54611A73				P				M			J			1
	R	▲ E1AZ 54611A72			A			F				B	D			1
	L	▲ E1AZ 54611A73			A			F				B				1
A(66) "Before 6/1/79"	R	† D9AZ 66611A72		A												1
	L	† D9AZ 66611A73		H												1
	R	▲ D9AZ 66611A72			K	P		N		M		L				1
	L	▲ D9AZ 66611A73			C	P		N		M		L	J			1
"From 6/1/79"	R	† D9AZ 66611A72		H												1
	L	† D9AZ 66611A73		H												1
	R	▲ D9AZ 66611A72			K	P		N		M		L				1
	L	▲ D9AZ 66611A73			K	P		N		M		L	J			1
D(53) "Before 12/4/78"	R	▲ D8VY 53611A72		X	@R			V	U	Y			S		W(champagne)	1
	L	▲ D8VY 53611A73		X	@R			V	U	Y			S		W(champagne)	1
	R	▲ D8VY 53611A72			◇T											1
	L	▲ D8VY 53611A73			◇T											1
	R	▲ D9VY 53611A72	B		◆A											1
	L	▲ D9VY 53611A73	B		◆A											1
D(53) "From 12/4/78"	R	▲ D8VY 53611A72		X	@R			V	U	Y					W(champagne)	1
	L	▲ D8VY 53611A73		X	@R			V	U	Y			S			1
	R	▲ D8VY 53611A72			◇T											1
	L	▲ D8VY 53611A73			◇T											1
	R	▲ D9VY 53611A72	B		◆A						E		F			1
	L	▲ D9VY 53611A73	B		◆A						E				F(champagne)	1
D(60) "Before 12/4/78"	R	▲ D8VY 60611A72		U	@N			S	R	V			P		T(champagne)	1
	L	▲ D8VY 60611A73		U	@N			S	R	V			P		T(champagne)	1
	R	▲ D8VY 60611A72			◇W											1
	L	▲ D8VY 60611A73			◇W											1
	R	▲ D9VY 60611A72	A													1
	L	▲ D9VY 60611A73	A													1
"From 12/4/78"	R	▲ D8VY 60611A72		U					R				P		T(champagne)	1
	L	▲ D8VY 60611A73		U	@N			S	R	V					T(champagne)	1
	R	▲ D9VY 60611A72	A					D		E						1
	L	▲ D9VY 60611A73	A		◇C								B			1
	R	▲ D9VY 60611A72			◇C											1

COPYRIGHT © 1986 — FORD MOTOR COMPANY — DEARBORN, MICHIGAN

1973/79 LINCOLN-MERCURY CARS

611A72-3 BELT ASSY. (FRONT SEAT)-also refer to group 610C06-7 — Cont'd

Notes: R-Right hand, L-Left hand, † Incl. black buckle, ▲ Incl. bright finish buckle, ◇ Light, ◆ Dark, @ Medium

1979

BODY TYPE		PART NUMBER LESS SUFFIX	BERYL	BLACK	BLUE	CAMEL	CHAM-OIS	CORD-OVAN	GOLD	GRAY	JADE	PINE GREEN	RED	WHITE	OTHER	QTY.
			COLORS AND APPLICABLE PART NUMBER SUFFIXES													
F(53) "Before 12/4/78"	R	† D80Z 53611A72		J												1
	L	† D80Z 53611A73		J												1
	R	▲ D80Z 53611A72			L		N			M	K					1
	L	▲ D80Z 53611A73			L		N			M	K					1
	R	▲ D90Z 53611A72						B					A			1
	L	▲ D90Z 53611A73						B					A			1
"From 12/4/78"	R	† D90Z 53611A72		C												1
	L	† D90Z 53611A73		C												1
	R	▲ D90Z 53611A72			E		G	B		F	D		A			1
	L	▲ D90Z 53611A73			E		G	B		F	D		A			1
F(65) - - w/bucket seats "Before 12/4/78"	R	† D8SZ 60611A72		R												1
	L	† D8SZ 60611A73		R												1
"Before 12/4/78"	R	† D9SZ 60611A72		G												1
	L	† D8SZ 60611A73		R												1
F(65) - - w/bucket seats	R	▲ D80Z 65611A72			V		X			W	U					1
	L	▲ D80Z 65611A73			V		X			W	U					1
	R	▲ D90Z 65611A72						D					C			1
	L	▲ D90Z 65611A73						D					C			1
F(65) - - w/full width and split seats "Before 12/4/78"	R	† D80Z 65611A72		AB												1
	L	† D80Z 65611A73		AB												1
	R	▲ D80Z 65611A72			AD		AF			AE	AC					1
	L	▲ D80Z 65611A73			AD		AF			AE	AC					1
	R	▲ D90Z 65611A72						B					A			1
	L	▲ D90Z 65611A73						B					A			1
"From 12/4/78"	R	† D90Z 65611A72		J												1
	L	† D90Z 65611A73		J												1
	R	▲ D90Z 65611A72			F		H	B		G	E		A			1
	L	▲ D90Z 65611A73			F		H	B		G	E		A			1
G(54) - - w/bucket seats "Before 12/4/78"	R	† D8DZ 54611A72		Y												1
	L	† D8DZ 54611A73		AA												1
	R	▲ D8DZ 54611A72			K	V		N		P	J		L			1
	L	▲ D8DZ 54611A73			V	M				P			L			1
	L	▲ D9DZ 54611A73						F			B					1
"From 12/4/78"	R	† D8DZ 54611A72		Y												1
	L	† D9DZ 54611A73		A												1
	R	▲ D9DZ 54611A72			B	D		E		F	A		C			1
	L	▲ D9DZ 54611A73			C	E		F		G	B		D			1

BODY TYPE		PART NUMBER LESS SUFFIX	COLORS AND APPLICABLE PART NUMBER SUFFIXES													QTY.
			BERYL	BLACK	BLUE	CAMEL	CHAM-OIS	CORD-OVAN	GOLD	GRAY	JADE	PINE GREEN	RED	WHITE	OTHER	
611A72-3	BELT ASSY. (FRONT SEAT)-also refer to group 610C06-7 — Cont'd															
Notes:	R-Right hand, L-Left hand, † Incl. black buckle, ▲ Incl. bright finish buckle, ◇ Light, ♦ Dark, @ Medium															
1979																
G(54) – – w/full full width seat "Before 12/4/78"	R	† D8DZ 54611A72		Z												1
	L	† D8DZ 54611A73		AB												1
	R	▲ D8DZ 54611A72						F		G	B					1
	L	▲ D8DZ 54611A73				E		F			X					1
	R	▲ D9DZ 54611A72			H	K							J			1
	L	▲ D9DZ 54611A73			J					N			K			1
"From 12/4/78"	R	† D8DZ 54611A72		Z												1
	L	† D9DZ 54611A73		H												1
	R	▲ D9DZ 54611A72			H	K		L		M	G		J			1
	L	▲ D8DZ 54611A73									X					1
	L	▲ D9DZ 54611A73			J	L		M		N			K			1
G(66) – – w/bucket seats	R	† D8DZ 66611A72		AC												1
	L	† D8DZ 66611A73		AD												1
"Before 12/4/78"	R	▲ D8DZ 66611A72			C	E		F		G	B		V			1
	L	▲ D8DZ 66611A73			C	E		F		W	B		V			1
"From 12/4/78"	R	▲ D8DZ 66611A72			C	E		F		G	B		V			1
	L	▲ D8DZ 66611A73								W			V			1
	L	▲ D9DZ 66611A73			D	E		F			C					1
G(66) – – w/full width seat	R	† D8DZ 66611A72		AD												1
	L	† D8DZ 66611A73		AE												1
"Before 12/4/78"	R	▲ D8DZ 66611A72			AB	X		Y		Z	AA		W			1
	L	▲ D8DZ 66611A73			AB	X		Y		Z	AA		AC			1
"From 12/4/78"	R	▲ D8DZ 66611A72			AB	X		Y		Z	AA		W			1
	L	▲ D8DZ 66611A73				X				Z	AA		AC			1
	L	▲ D9DZ 66611A73			A			B								1
J	R	† D9ZZ 66611A72		A												1
	L	† D9ZZ 66611A73		A												1
	R	▲ D9ZZ 66611A72		F			B						C			1
	L	▲ D9ZZ 66611A73			D		B						C		E(vaquero)	1
	R	▲ E0ZZ 66611A72			G										E(vaquero)	1
	L	▲ E0ZZ 66611A73		F												1
K – – w/split seats "Before 12/4/78"	R	▲ D8LY 65611A72		AA	@AD			Y		AB					X(cream)	1
	L	▲ D8LY 65611A73		AA	@AD			Y		AB			V		X(cream)	1
	R	▲ D8LY 65611A72			◇W										Z(champagne)	1
	L	▲ D8LY 65611A73			◇W										Z(champagne)	1
	R	▲ D9LY 65611A72	D		♦B										C(amethyst)	1
	L	▲ D9LY 65611A73	D		♦B										C(amethyst)	1
"From 12/4/78"	R	▲ D8LY 65611A72		AA	@AD			Y							X(cream)	1
	L	▲ D8LY 65611A73		AA	@AD			Y					V			1
	R	▲ D8LY 65611A72			◇W										Z(champagne)	1
	L	▲ D8LY 65611A73								AB					Z(champagne)	1
	R	▲ D9LY 65611A72	D		♦B					F					C(amethyst)	1
	L	▲ D9LY 65611A73	D		♦B										C(amethyst)	1
	L	▲ D9LY 65611A73			◇E										F(cream)	1

COPYRIGHT © 1986 — FORD MOTOR COMPANY — DEARBORN, MICHIGAN

1973/79 LINCOLN-MERCURY CARS

BODY TYPE		PART NUMBER LESS SUFFIX	COLORS AND APPLICABLE PART NUMBER SUFFIXES													QTY.
			BERYL	BLACK	BLUE	CAMEL	CHAM-OIS	CORD-OVAN	GOLD	GRAY	JADE	PINE GREEN	RED	WHITE	OTHER	
611A72-3	BELT ASSY. (FRONT SEAT)-also refer to group 610C06-7 — Cont'd															
Notes:	R-Right hand, L-Left hand, † Incl. black buckle, ▲ Incl. bright finish buckle, ◇ Light ♦ Dark, @ Medium															
1979																
K - - w/bucket seats	R	▲ D9LY 65611A72			A											1
	L	▲ D9LY 65611A73			A											1
L "Before 12/4/78"	R	† D8FZ 62611A72		L												1
	L	† D8FZ 62611A73		L												1
	R	▲ D8FZ 62611A72		E	D		M						B		P(tangerine)	1
	L	▲ D8FZ 62611A73		P	N		R						T		M(tangerine)	1
L "From 12/4/78"	R	† D8FZ 62611A72		L												1
	L	† D9FZ 62611A73		A												1
	R	▲ D8FZ 62611A72		E	D		M						B		P(tangerine)	1
	L	▲ D8FZ 62611A73					R						T			1
	L	▲ D9FZ 62611A73		D	C										B(tangerine)	1
P(36,66) - - w/bucket seats "Before 12/4/78"	R	† D8BZ 66611A72		AE												1
	L	† D8BZ 66611A73		AE												1
	R	▲ D8BZ 66611A72		AB	AA		Y								Z(cream)	1
	L	▲ D8BZ 66611A73		AB	AA		Y								Z(cream)	1
	R	▲ D9BZ 66611A72											B			1
	L	▲ D9BZ 66611A73											B			1
"From 12/4/78"	R	† D8BZ 66611A72		AE												1
	L	† D9BZ 66611A73		K												1
	R	▲ D8BZ 66611A72		AB	AA		Y								Z(cream)	1
	L	▲ D8BZ 66611A73					Y									1
	R	▲ D9BZ 66611A72											B			1
	L	▲ D9BZ 66611A73		H	G								B		F(cream)	1
P(36,66) - - w/full width seat "Before 12/4/78"	R	† D8BZ 66611A72		AD												1
	L	† D8BZ 66611A73		AD												1
	R	▲ D8BZ 66611A72		W	V		T								U(cream)	1
	L	▲ D8BZ 66611A73		W	V		T								U(cream)	1
	R	▲ D9BZ 66611A72											A			1
	L	▲ D9BZ 66611A73											A			1
"From 12/4/78"	R	† D8BZ 66611A72		AD												1
	R	▲ D8BZ 66611A72		W	V		T								U(cream)	1
	L	▲ D8BZ 66611A73													U(cream)	1
	R	▲ D9BZ 66611A72											A			1
	L	▲ D9BZ 66611A73		E	D		C						A			1
P(54,74) - - w/bucket seats	R	† D8BZ 54611A72		AA												1
	L	† D8BZ 54611A73		AA												1
"Before 12/4/78"	R	▲ D8BZ 54611A72		X	W		V									1
	L	▲ D8BZ 54611A73		X	W		V									1
	R	▲ D9BZ 54611A72											B			1
	L	▲ D9BZ 54611A73											B			1
"From 12/4/78"	R	▲ D8BZ 54611A72		X	W		V									1
	L	▲ D8BZ 54611A73					V									1
	R	▲ D9BZ 54611A72											B			1
	L	▲ D9BZ 54611A73		G	F								B			1

BODY TYPE		PART NUMBER LESS SUFFIX	COLORS AND APPLICABLE PART NUMBER SUFFIXES													QTY.
			BERYL	BLACK	BLUE	CAMEL	CHAMOIS	CORDOVAN	GOLD	GRAY	JADE	PINE GREEN	RED	WHITE	OTHER	
611A72-3	BELT ASSY. (FRONT SEAT)-also refer to group 610C06-7 — Cont'd															
Notes:	R-Right hand, L-Left hand, † Incl. black buckle, ▲ Incl. bright finish buckle, ◇ Light ◆ Dark, @ Medium															

1979

P(54,74) - - w/full width seat	R	† D8BZ 54611A72		Z												1
	L	† D8BZ 54611A73		Z												1
"Before 12/4/78"	R	▲ D8BZ 54611A72		U	T		R									1
	L	▲ D8BZ 54611A73		U	T		R									1
	R	▲ D9BZ 54611A72											A			1
	L	▲ D9BZ 54611A73											A			1
"From 12/4/78"	R	▲ D8BZ 54611A72		U	T		R									1
	R	▲ D9BZ 54611A72											A			1
	L	▲ D9BZ 54611A73		E	D		C						A			1
V - - w/bucket seats	R	▲ D94Y 54611A72	K		H			J		M			G		L(champagne)	1
	L	▲ D94Y 54611A73	K		H			J		M			G		L(champagne)	1
V - - w/full width seat	R	▲ D94Y 54611A72	D		B			C		F			A		E(champagne)	1
	L	▲ D94Y 54611A73	D		B			C		F			A		E(champagne)	1

YEAR	MODEL/RESTRICTIONS	PART NUMBER	DESCRIPTION	QTY.

1979

FRONT SEAT BELT ATTACHING HARDWARE IS ILLUSTRATED BY VEHICLE AND YEAR IN SECTION 620 OF THE LINCOLN-MERCURY BODY ILLUSTRATION CATALOG

79	J	378770-S2	(PP-13-B)-plug button 3/4" x 1"	2
79	D	381801-S2	(UU-148)-screw washer hd. drill 8-18 x 1/2"	8
79	L	385681-S	(XX-197-G)-washer 19/32" dia. x 29/32"	2
79	K	385906-S36	(UU-52-NP)-washer 19/32" I.D. x 29/32"	2
79	A,D,F,G,J,K,L,P	386272-S100	(UU-156-D)-bolt pan head tapping 7/16-20" x 57/64"	2or4
79	D,F	386274-S100	(UU-156-A)-bolt pan hd. shldr. tap 7/16-20 x 1 3/4"	2or4
79	D	386276-S100	(UU-156-E)-bolt	2
79	A,F,G,J,L,P	386277-S100	(UU-156-C)-bolt pan hd. shldr. tap 7/16-20 x 1 3/8"	2or6
79	A,F,J,P	386993-S	(VV-2-CE)-spacer 19/32" I.D. x 7/8" O.D. x 3/4" long	2or4
79	G,L	387194-S	(XX-196-F)-washer	2
79	K	387893-S9	(UU-140-E)-screw washer hd. drill 8-18	4
611B84	HINGE (FRONT SEAT BACK)			
73/	K		Serviced only in assy.-group 617C04-5	

BODY TYPE	LOC. ‡	PART NUMBER LESS SUFFIX	COLORS AND APPLICABLE PART NUMBER SUFFIXES														QTY.
				AVOCADO	BEIGE	BLACK	BLUE	GOLD	GREEN	ORANGE	RED	SADDLE	SILVER	TAN	WHITE	OTHER	
611B90	BEZEL (REAR SEAT BELT OPENING)																
Notes:	‡ Loc.-Location, R-Right hand, L-Left hand, ■ Silver blue, $ Ginger, ‡‡ Yellow, ◇Cranberry, ⚠ Russet, Θ Tangerine																

1973

F	R/L	D2ZZ 76611B90				D	E								A	$B	2
F(65)	R/L	D3ZZ 65611B90		C													2
F(76)	R/L	D2FZ 76611B90		H													2
P - - w/o reclining seats	R/L	D2DZ 62611B90			E											$B	2
	R/L	D3DZ 62611B90		C						A							2
	R/L	D6DZ 62611B90				F											2
F	R/L	D2ZZ 76611B90				D	E								A	$B	2

COPYRIGHT © 1986 — FORD MOTOR COMPANY — DEARBORN, MICHIGAN

1973/79 LINCOLN-MERCURY CARS

BODY TYPE	LOC. ‡	PART NUMBER LESS SUFFIX	COLORS AND APPLICABLE PART NUMBER SUFFIXES													QTY.
				AVO-CADO	BEIGE	BLACK	BLUE	GOLD	GREEN	ORANGE	RED	SADDLE	SILVER	TAN	WHITE	OTHER	
611B90		BEZEL (REAR SEAT BELT OPENING) — Cont'd															
Notes:		‡ Loc.-Location, R-Right hand, L-Left hand, ■ Silver blue, $ Ginger, ‡‡ Yellow, ◇ Cranberry, ⅄ Russet, Θ Tangerine															
1974																	
L	R/L	D3DZ 62611B90		C						A							2
	R/L	D4DZ 62611B90										A					2
	R/L	D4FZ 62611B90														‡‡A	2
	R/L	D6DZ 62611B90				F											2
P – – w/ reclining seats	R/L	D4DZ 54611B90														■E	2
P – – w/o reclining seats	R/L	D3DZ 65611B90		C						A							2
	R/L	D4DZ 62611B90														■B	2
	R/L	D6DZ 62611B90				F											2
1975																	
L	R/L	D6DZ 62611B90				F											2
	R/L	D3DZ 62611B90								A							2
1976																	
L	R/L	D6DZ 62611B90				F											2
P(62)	R/L	D6DZ 62611B90				F											2

BODY TYPE	LOC. ‡	PART NUMBER LESS SUFFIX	COLORS AND APPLICABLE PART NUMBER SUFFIXES													QTY.
				BLACK	BLUE	CHAM-OIS	CREAM	GRAY	GREEN	GOLD	JADE	RED	SADDLE	TAN	WHITE	OTHER	
611B90		BEZEL (REAR SEAT BELT OPENING)															
Notes:		‡ Loc.-Location, R-Right hand, L-Left hand, ■ Silver blue, $ Ginger, ‡‡ Yellow, ◇ Cranberry, ⅄ Russet															
1977																	
L "Before 6/27/77"	R/L	D6DZ 62611B90		C	B									A			2
"From 6/27/77"		Refer to 1978															
L,P(62)	R/L	D6DZ 62611B90		C	B												2
L	R/L	D6DZ 62611B90		F													2
P(74)	R/L	D8BZ 74611B90			B	A					C					⅄D	2
1978																	
L	R/L	D6DZ 62611B90		F													2
P(74)	R/L	D8BZ 74611B90		E	B	A										⅄D	2
		D7VY 6050074-A	Retainer – 5/16" dia. – nylon														AR

BODY TYPE		PART NUMBER LESS SUFFIX	BERYL	BLACK	BLUE	CAMEL	CHAM-OIS	CORD-OVAN	GOLD	GRAY	JADE	PINE GREEN	RED	WHITE	OTHER	QTY.
611B90		BEZEL (REAR SEAT BELT OPENING) — Cont'd														
Notes:		R–Right hand, L–Left hand														
1979																
L	R/L	D6DZ 62611B90		F												2
P(74)	R/L	D8BZ 74611B90		E	B		A									2
	R/L	D9BZ 74611B90											A			2
		D7VY 6050074-A	Retainer – 5/16" dia. – nylon													AR

YEAR	MODEL/RESTRICTIONS	PART NUMBER	DESCRIPTION	QTY.
61198	HANDLE (RECLINING SEAT BACK ADJUSTING)			
75	G	D5DZ 6661198-A	R.H. and L.H.	2
76/	G	D6DZ 6661198-A	R.H. and L.H.–chrome	2
77/	V			2
73	P "Before 9/18/72"	D0RY 6261198-A		4
73/74	P "From 9/18/72"	★ D3DZ 6261198-A		2
75	P	D5DZ 6661198-A	R.H. and L.H.	2
76/78	P	D6DZ 6661198-A	R.H. and L.H.–chrome	2
73/78	G,J,P,V	E802039-S75	Screw–self locking	2
79	G,P,V			2
611A98	SLEEVE (RECLINING SEAT BACK ADJUSTING ACTUATOR)			
73/	K – – w/reclining seat	D2SZ 65611A98-A		1
74/76	C			1
77/	F			1
612B00-1	BRACKET (REAR SEAT BELT MOUNTING)			
73/75	A(71),C(71),Y(71) "Before 1/27/75"	(RH) D2AZ 71612B00-A	(LH) D2AZ 71612B01-A	1
612C00	BEZEL (FRONT SEAT BELT RETRACTOR TENSION ADJUSTER PLUNGER)			
79	A(66)	D9AZ 66612C00-A	R.H. and L.H.	2
79	J			2

BODY TYPE	LOC. ‡	PART NUMBER LESS SUFFIX		AVO-CADO	BEIGE	BLACK	BLUE	GOLD	GREEN	ORANGE	RED	SADDLE	SILVER	TAN	WHITE	OTHER	QTY.
612B04		BELT ASSY. (AUXILIARY SEAT)															
Notes:		‡ Loc.–Location, R–Right hand, L–Left hand, C–Center, $ Ginger, ● Tobacco, ■ Silver blue, † Incl. black buckle, ▲ Incl. bright finish buckle, ⊕ Use black															
1973																	
A(71)	R/L	★															
C(71)	R/L	† D30Z 65611B66				A											2
	R/L	▲ D30Z 65611B66			K	G	J		L							$C	2
	R/L	▲ D30Z 65611B66														●F	2
A(71),C(71),Y(71)		382624-S100	(UU-170)–bolt–torx head tapping–7/16"–20 x 1 3/8"														4
1974																	
A(71), Y(71)	C	† D4AZ 71612B04				A											2
C(71)	C	▲ D40Z 65611B66				E	B	G	D			F		C			1
	C	† D40Z 65611B66				A											1
A(71), Y(71)		382624-S100	(UU-170)–bolt–torx head–tapping–7/16"–20 x 1 3/8"														4
A(71), Y(71)		382583-S100	(XX-340-AC)–washer														4
C(71)		386582-S100	(UU-170-A)–bolt–pan head–tapping–7/16"–20 x 1 3/8"														3

COPYRIGHT © 1986 — FORD MOTOR COMPANY — DEARBORN, MICHIGAN

1973/79 LINCOLN-MERCURY CARS

BODY TYPE	LOC. ‡	PART NUMBER LESS SUFFIX	COLORS AND APPLICABLE PART NUMBER SUFFIXES													QTY.
				AVO-CADO	BEIGE	BLACK	BLUE	GOLD	GREEN	ORANGE	RED	SADDLE	SILVER	TAN	WHITE	OTHER	
612B04		BELT ASSY. (AUXILIARY SEAT)															
Notes:		‡ Loc.-Location, R-Right hand, L-Left hand, C-Center, $ Ginger, ● Tobacco, ■ Silver blue, † Incl. black buckle, ▲ Incl. bright finish buckle, ⊕ Use black															
1975																	
A(71), Y(71)	R/L	† D5AZ 71612B04				A											2
C(71)	R/L	† D50Z 65611B66				A											2
	R/L	▲ D50Z 65611B66				J	C		B			K		E		■H	2
A(71), Y(71)		386582-S100	(UU-170-A)-bolt-pan head-tapping-7/16"-20 x 1 3/8"														4
C(71)		382624-S100	(UU-170)-bolt-torx head-tapping-7/16"-20 x 1 3/8"														3
1976																	
A(71), Y(71)	R/L	† D6AZ 71612B04				A											2
C(71)	R/L	† D60Z 65611B66				K											2
A(71), Y(71)		386582-S100	(UU-170-A)-bolt-pan head-tapping-7/16"-20 x 1 3/8"														AR
1977																	
A(71)	R/L	† D7AZ 71612B04				A											2
F(71) "Before 10/1/76"	R/L	† D60Z 65611B66				K											2
"From 10/1/76"	R/L	† D70Z 65611B66				C											2
1978																	
A(71)	R/L	† D7AZ 71612B04				A											2
A(71)		386582-S100	(UU-170-A)-bolt-pan head-tapping-7/16"-20 x 1 3/8"														AR

BODY TYPE		PART NUMBER LESS SUFFIX	COLORS AND APPLICABLE PART NUMBER SUFFIXES												QTY.
			BERYL	BLACK	BLUE	CAMEL	CHAM-OIS	CORD-OVAN	GOLD	GRAY	JADE	PINE GREEN	RED	WHITE	OTHER	
612B04		BELT ASSY. (AUXILIARY SEAT) — Cont'd														
Notes:		R-Right hand, L-Left hand, † Incl. black buckle														
1979																
A(74)	R/L	† D9AZ 74612B04		A												2
A(74)		386582-S100	(UU-170-A)-bolt pan head tapping 7/16"-20 x 1 3/8"													4

YEAR	MODEL/RESTRICTIONS	PART NUMBER	DESCRIPTION	QTY.
612B12	BRACKET (FRONT SEAT BELT BOOT EXTENSION)			
73	F(76)	D2ZZ 76612B12-A		2
61216	REINFORCEMENT (FRONT SEAT BELT ANCHOR TO SIDE MEMBER)			
78	J	D8RZ 6461216-A		2
79	J	D9ZZ 6661216-A		1
74/	L	C7AZ 7161216-A	Front seat inboard	2
612A16	SPACER (FRONT SEAT BELT RETRACTOR)			
73/75	P(54)	382553-S100	(XX-197-Z)-washer, flat	2
61222	LOOP (FRONT SEAT BELT RETAINING)			
73	A - - w/split seats	C4AZ 6261222-AAB		2
612A46	PIN (FRONT SEAT BACK ACTUATOR)			
73/	D - - w/reclining seat	D0VY 65612A46-A		1
61248	CLIP KIT (TOT GUARD LOCKING)			
76/78	G,L - - w/continuous loop seat belts "From 2/2/76"	D6FZ 6061248-A		1
79	A,G,J,L			1

1973/79
LINCOLN-MERCURY CARS

YEAR	MODEL/RESTRICTIONS	PART NUMBER	DESCRIPTION	QTY.
613B02	PIN (REAR SEAT BACK FLOOR PANEL)			
73/76	A(71),Y(71),B(71),L	C5AZ 71613B02-A	Steel-46 1/2" long	2
77	A(71),F(71)			2
79	A(74),L			2
78/	P			2
61316-7	ARM ASSY. (REAR SEAT BACK PIVOT)			
79	A(74)	(RH) D9AZ 5461316-A	(LH) D9AZ 5461317-A	1
613B26	ESCUTCHEON (REAR SEAT BACK LATCH HANDLE)			
79	J	D8BZ 74613B26-B		1
78	P(74) "Before 7/17/77"	D8BZ 74613B26-A		1
78/	P(74) "From 7/17/77"	D8BZ 74613B26-B		1
613A62-3	BRACKET (REAR SEAT BACK PIVOT ON WHEELHOUSE)			
79	A(74)	(RH) D9AZ 74613A62-A	(LH) D9AZ 74613A63-A	1
61382-3	LATCH ASSY. (REAR SEAT BACK RELEASE)			
79	J	D9BZ 7461382-A		1
74	L(64,73) - - w/folding rear seat- "Before 6/3/74"	(RH) D4FZ 6461382-A	(LH) D4FZ 6461383-A	1
74/	L(64,73) - - w/folding rear seat- "From 6/3/74"	(RH) D7FZ 6461382-A	(LH) D4FZ 6461383-A	1
78	P(74) "Before 7/17/77"	D8BZ 7461382-A	R.H. and L.H.	2
78/	P(74) "From 7/17/77"	D9BZ 7461382-A		1
613A82	EXTENSION ASSY. (REAR SEAT BACK FLOOR PANEL)			
79	J	E0ZZ 61613A82-A		1
74/76	L(64,73)	D4FZ 64613A82-A	Steel	1
77/	L(64) - - exc. California			1
77/	L(64) - - California only	D7FY 64613A82-A	Aluminum	1
77/	L(73)	D4FZ 64613A82-A	Steel	1
78/	P(74)	E0BZ 74613A82-A	Paint to match	1

COPYRIGHT © 1986 — FORD MOTOR COMPANY — DEARBORN, MICHIGAN

1973/79 LINCOLN-MERCURY CARS

BODY TYPE		PART NUMBER LESS SUFFIX	COLORS AND APPLICABLE PART NUMBER SUFFIXES: AVO-CADO	BEIGE	BLACK	BLUE	GOLD	GREEN	ORANGE	RED	SADDLE	SILVER BLUE	TAN	WHITE	OTHER	QTY.
613B84-5	BELT ASSY. (REAR SEAT)															
Notes:	† Incl. black buckle, ▲ Incl. bright finish buckle															
1973																
A(53,57),Y(53)	R/L	† D3AZ 53613B84			A											2
	R/L	▲ D3AZ 53613B84			H	B										2
A(65),Y(65)	R/L	† D3MY 65613B84			A											2
	R/L	▲ D3MY 65613B84		C	G	B		E							F(tobacco)	2
A(71),Y(71)	R/L	† D3AZ 71613B84			A											2
	R/L	▲ D3AZ 71613B84			G											2
C(53,63,65)	R	† D40Z 65613B84			A											1
	L	† D40Z 65613B85			A											1
	R	▲ D30Z 65613B84			G	B										1
	L	▲ D30Z 65613B85				B										1
	R	▲ D30Y 65613B84					B									1
	L	▲ D30Y 65613B85					B									1
C(71)	R/L	† D40Z 71613B84			A											2
D(53)	R/L	▲ D3VY 53613B84		J	G	H	A	E		D		B			C(ginger)	2
	R/L	▲ D3VY 53613B84													F(tobacco)	2
D(65)	R/L	▲ D3VY 65613B84		E	C	D	F	A				G			B(ginger)	2
	R/L	▲ D3VY 65613B84													H(tobacco)	2
F(65)	R/L	† D3ZZ 65613B84			A											2
J	R/L	D2RY 62613B84			C											2
		111761-ES	Plug-black													
K	R	▲ D3LY 65613B84		C								A			B(lipstick red)	1
	L	▲ D3LY 65613B85		C								A			B(lipstick red)	1
	R	▲ D3LZ 65613B84			F	G	A	D		C					B(ginger)	1
	L	▲ D3LZ 65613B85			F	G	A	D		C					B(ginger)	1
	R	▲ D3LZ 65613B84													E(tobacco)	1
	L	▲ D3LZ 65613B85													E(tobacco)	1
	R	▲ D3LY 65613B84													D(gray)	1
	L	▲ D3LY 65613B85													D(gray)	1

MODEL/RESTRICTIONS	PART NUMBER	DESCRIPTION	QTY.
1973			
Note:	SEAT BELT ATTACHING HARDWARE IS ILLUSTRATED BY VEHICLE AND YEAR IN SECTION 620 OF THE LINCOLN-MERCURY BODY ILLUSTRATION CATALOG		
OUTBOARD BELT			
A(53,57,65),D,F,K,Y(53,57,65)	386582-S100	(UU-170-A)-bolt-torx head-tapping-7/16"-20 x 1 3/8"	2
A(71)	383608-S100	(UU-160)-bolt-torx head-tapping-7/16"-20 x 7/8"	2
INBOARD BELT			
A,D,F,K,Y	386582-S100	(UU-170-A)-bolt-torx head-tapping-7/16"-20 x 1 3/8"	2
F	382583-S100	(XX-340-AC)-washer	2

BODY TYPE		PART NUMBER LESS SUFFIX	COLORS AND APPLICABLE PART NUMBER SUFFIXES: AVO-CADO	BEIGE	BLACK	BLUE	GOLD	GREEN	ORANGE	RED	SADDLE	SILVER BLUE	TAN	WHITE	OTHER	QTY.
613B84-5	BELT ASSY. (REAR SEAT) — Cont'd															
Notes:	† Incl. black buckle, ▲ Incl. bright finish buckle, ⊕ Use black															
1974																
A(53,57),Y(53)	R/L	† D4AZ 53613B84			A											2
	R/L	▲ D4AZ 53613B84		C	F	B	D	E			G					2
	R/L	▲ D4AY 53613B84											A			2

BODY TYPE		PART NUMBER LESS SUFFIX	COLORS AND APPLICABLE PART NUMBER SUFFIXES: AVOCADO	BEIGE	BLACK	BLUE	GOLD	GREEN	ORANGE	RED	SADDLE	SILVER BLUE	TAN	WHITE	OTHER	QTY.
613B84-5	BELT ASSY. (REAR SEAT) — Cont'd															
Notes:	† Incl. black buckle, ▲ Incl. bright finish buckle, ⊕ Use black															

1974

A(65),Y(65)	R/L	† D4MY 65613B84			A											2
	R/L	▲ D4MY 65613B84		C	G	B	D	F			H		E			2
A(71),Y(71)	R/L	† D4AZ 71613B84			A											2
	R/L	▲ D4AZ 71613B84			F	B		E			G		D			2
C(53,65)	R	† D40Z 65613B84			A											1
	L	† D40Z 65613B85			A											1
	R	▲ D40Z 65613B84			F	B	C	E			G		D			1
	L	▲ D40Z 65613B85			F	B	C	E			G		D			1
C(71)	R/L	† D40Z 71613B84			A											2
	R/L	▲ D40Z 71613B84			D	B		C			E					2
D(53)	R/L	▲ D4VY 53613B84		B	H	A	C	G		F	J	E				2
D(65)	R/L	▲ D4VY 65613B84		B	H	A	C	G		F	J	E	D			2
F	R	† D40Z 65613B84			A											1
	L	† D40Z 65613B85			A											1
	R	▲ D40Z 65613B84			F	B	C	E			G		D			1
	L	▲ D40Z 65613B85			F	B	C	E			G		D			1
K	R	▲ D4LZ 65613B84			F	A	B	E		D	G		C			1
	L	▲ D4LZ 65613B85			F	A	B	E		D	G		C			1
	R	▲ D4LY 65613B84										B			C(silver)	1
	L	▲ D4LY 65613B85										B			C(silver)	1
	R	▲ D4LY 65613B84													A(lipstick red)	1
	L	▲ D4LY 65613B85													A(lipstick red)	1
L	R/L	† D5FZ 62613B84			F											2
	R/L	▲ D4FZ 62613B84	E		J	D			C		K		L		B(yellow)	2
P(54) – – w/o reclining seats	R/L	† D4DZ 54613B84			A											2
	R/L	▲ D3DZ 54613B84	N		M	H							K			2
	R/L	▲ D4DZ 54613B84									D					2
– – w/reclining seats	R/L	▲ D4DZ 54613B84										C				2
P(62)	R/L	† D4DZ 62613B84			A											2
	R/L	▲ D3DZ 62613B84	R		N	J			P				L			2
	R/L	▲ D4DZ 62613B84									D	C				2

MODEL/RESTRICTIONS	PART NUMBER	DESCRIPTION	QTY.

1974

Note: SEAT BELT ATTACHING HARDWARE IS ILLUSTRATED BY VEHICLE AND YEAR IN SECTION 620 OF THE LINCOLN-MERCURY BODY ILLUSTRATION CATALOG

OUTBOARD BELT			
A,C,D,F,K,L,Y	386582-S100	(UU-170-A)-bolt-torx head-tapping-7/16"-20 x 1 3/8"	2
C(71),P	383608-S100	(UU-160)-bolt-torx head-tapping-7/16"-20 x 7/8"	2
INBOARD BELT			
A,C,D,F,K,L,P(62),Y	386582-S100	(UU-170-A)-bolt-torx head-tapping-7/16' '-20 x 1 3/8"	2
L	382583-S100	(XX-340-AC)-washer	4
P(54)	386274-S100	(UU-156-A)-bolt-torx head-tapping-7/16"-20 x 1 3/4"	2

COPYRIGHT © 1986 — FORD MOTOR COMPANY — DEARBORN, MICHIGAN

1973/79 LINCOLN–MERCURY CARS

613B84–5 BELT ASSY. (REAR SEAT) — Cont'd

Notes: † Incl. black buckle, ▲ Incl. bright finish buckle, ⊕ Use black ■ Dark, □ Light

1975

BODY TYPE		PART NUMBER LESS SUFFIX	BLACK	BLUE	CRAN-BERRY	GOLD	GREEN	GRAY	JADE	RED	SADDLE	SILVER BLUE	TAN	TAUPE	OTHER	QTY.
			COLORS AND APPLICABLE PART NUMBER SUFFIXES													
A(53),Y(53)	R/L	† D5AZ 53613B84	A													2
	R/L	▲ D5AZ 53613B84	F	C			⊕			E	G		D			2
A(65),Y(65)	R/L	† D5MY 60613B84	A													2
	R/L	▲ D5MY 60613B84	F	C			B			E	G		D			2
A(71),Y(71)	R/L	† D5AZ 71613B84	A													2
	R/L	▲ D5AZ 71613B84		C			B			E	F		G			2
C(53,65)	R	† D50Z 65613B84	A													1
	L	† D50Z 65613B85	A													1
	R	▲ D50Z 65613B84	F	C			B				G		E			1
	L	▲ D50Z 65613B85	F	C			B				G		E			1
C(71)	R/L	† D50Z 71613B84	A													2
	R/L	▲ D50Z 71613B84		C			B				E		D			2
D(Town Car and Town Coupe)	R/L	▲ D5AZ 60613B84	F	C			B			E			D			2
	R/L	▲ D5VY 53613B84				B			A					D		2
D(exc. Town Car and Town Coupe)	R/L	▲ D5VY 60613B84	H	E		B	C		A	G			F	D		2
F	R	▲ D50Z 65613B84	F	C			B			D	G		E			1
	L	▲ D50Z 65613B85	F	C			B			D	G		E			1
G(54)	R	† D5DZ 54613B84	A													1
	L	† D5DZ 54613B85	A													1
	R	▲ D5DZ 54613B84	F				B			E		C	D		G(tobacco)	1
	L	▲ D5DZ 54613B85	F				B			E		G	D		H(tobacco)	1
G(66)	R	† D5DZ 66613B84	A													1
	L	† D5DZ 66613B85	A													1
	R	▲ D5DZ 66613B84	F				B			E		C	D			1
	L	▲ D5DZ 66613B85	F				B			E		C	D			1
K	R	▲ D5SZ 65613B84	G	B			A			■D	H	F	C			1
	L	▲ D5SZ 65613B85	G	B			A			■D	H	F	C			1
	R	▲ D5SY 65613B84								□C					A(white)	1
	L	▲ D5SY 65613B85								□C					A(white)	1
	R	▲ D5SY 65613B84													B(aqua)	1
	L	▲ D5SY 65613B85													B(aqua)	1
L	R/L	† D5FZ 62613B84	F													2
	R/L	▲ D4FZ 62613B84	J	D									L		C(orange)	2
	R/L	▲ D5FZ 62613B84					A									2
P(54)	R/L	† D5BZ 54613B84	A													2
	R/L	▲ D5BZ 54613B84	E	C			B						D			2
P(62)	R/L	† D5BZ 62613B84	A													2
	R/L	▲ D5BZ 62613B84	E	C			B						D			2

1975

Note: SEAT BELT ATTACHING HARDWARE IS ILLUSTRATED BY VEHICLE AND YEAR IN SECTION 620 OF THE LINCOLN–MERCURY BODY ILLUSTRATION CATALOG

OUTBOARD BELT

MODEL/RESTRICTIONS	PART NUMBER	DESCRIPTION	QTY.
A(71),C(71),Y(71)	383608–S100	(UU–160)–bolt–torx head–tapping–7/16"– 20 x 7/8"	2
A,C,D,F,G,Y	386582–S100	(UU–170–A)–bolt–pan hd.–tapping–7/16"–20 x 1 3/8"	2
P	386272–S100	(UU–156–D)–bolt–pan hd.–tapping–7/16"–20 x 7/8"	2

MODEL/RESTRICTIONS	PART NUMBER	DESCRIPTION	QTY.

1975

Note: SEAT BELT ATTACHING HARDWARE IS ILLUSTRATED BY VEHICLE AND YEAR IN SECTION 620 OF THE LINCOLN-MERCURY BODY ILLUSTRATION CATALOG

INBOARD BELT

A,C,D,F,G,K,P(62)	386582-S100	(UU-170-A)-bolt-pan hd.-tapping-7/16"-20 x 1 3/8"	2
P(54)	386274-S100	(UU-156-A)-bolt-pan hd.-tapping-7/16"-20 x 2"	2

BODY TYPE		PART NUMBER LESS SUFFIX	COLORS AND APPLICABLE PART NUMBER SUFFIXES													QTY.
			BLACK	BLUE	CRAN-BERRY	GOLD	GREEN	GRAY	JADE	RED	SADDLE	SILVER BLUE	TAN	TAUPE	OTHER	
613B84-5	BELT ASSY. (REAR SEAT) — Cont'd															

Notes: † Incl. black buckle, ▲ Incl. bright finish buckle, ⊕ Use black, ■ Dark, □ Light

1976

A(53),Y(53)	R/L	† D7AZ 53613B84	G															2
	R/L	▲ D6AZ 53613B84	C	D		E	F				H							2
A(65),Y(65)	R/L	† D7MY 65613B84	G															2
	R/L	▲ D6MY 65613B84	C	D		E	F			G	H							2
A(71),Y(71)	R/L	† D7AZ 71613B84	B															2
	R/L	▲ D6AZ 71613B84		C		D	E			F	G							2
C(53,65)	R	† D90Z 65613B84	E															1
	L	† D90Z 65613B85	D															1
	R	▲ D60Z 65613B84	C			E	F		L	G						K(aqua)		1
		▲ D60Z 65613B85	C			E	F				H					K(aqua)		1
	R	▲ D70Z 65613B84		E							G							1
	L	▲ D80Z 65613B85							F									1
	L	▲ D90Z 65613B85		C														1
D(Town Car and Town Coupe)	R/L	▲ D6AZ 60613B84	B	C		D	E			F	G							2
	R/L	▲ D6AY 60613B84						A	B				C					2
D(exc. Town Car and Town Coupe)	R/L	▲ D6VY 60613B84	B	C	E	D			G	H			J	K				2
F	R	† D90Z 65613B84	E															1
	L	† D90Z 65613B85	D															1
	R	▲ D60Z 65613B84	C			E	F		L	G						K(aqua)		1
	R	▲ D70Z 65613B84		E							G							1
	L	▲ D60Z 65613B85	C	D		E	F		L	G	H					K(aqua)		1
G(54)	R	† E0DZ 54613B84	G															1
	L	† E0DZ 54613B85	G															1
	R	▲ D6DZ 54613B84	B					N	M	C		D				F(tobacco)		1
	L	▲ D6DZ 54613B85	B					H		C		D	E			F(tobacco)		1
	L	▲ E0DZ 54613B85							G									1
G(66)	R	† D7DZ 66613B84	C															1
	L	† D9DZ 66613B85	A															1
	R	▲ D6DZ 66613B84	C					H	G			E	F					1
	R	▲ D7DZ 66613B84								F								1
	L	▲ D6DZ 66613B85	C									E						1
	L	▲ D7DZ 66613B85						G	D									1
J	R/L	D5RY 64613B84	A															2
K	R	▲ D6SZ 65613B84										G						1
	L	▲ D6SZ 65613B85										G						1
	R	▲ D6SY 65613B84						D		E			F			B(aqua)		1
	L	▲ D6SY 65613B85								F			F			B(aqua		1
	R	▲ D7LY 65613B84	H	F					D	G								1
	L	▲ D7LY 65613B85	H	F				B										1
	R	▲ D6SY 65613B84														E(lipstick red)		1
	L	▲ D6SY 65613B85														E(lipstick red)		1
	L	▲ D8LY 65613B85							C	E								1

COPYRIGHT © 1986 — FORD MOTOR COMPANY — DEARBORN, MICHIGAN

1973/79 LINCOLN-MERCURY CARS

613B84-5 BELT ASSY. (REAR SEAT) — Cont'd

Notes: † Incl. black buckle, ▲ Incl. bright finish buckle, ⊕ Use black, ■ Dark, □ Light

1976

BODY TYPE		PART NUMBER LESS SUFFIX	BLACK	BLUE	CRAN-BERRY	GOLD	GREEN	GRAY	JADE	RED	SADDLE	SILVER BLUE	TAN	TAUPE	OTHER	QTY.
L	R/L	▲ D6ZZ 60613B84	D	E			H			J			K			2
P(54)	R/L	▲ D7DZ 54613B84	M	K			P						L			2

MODEL/RESTRICTIONS	PART NUMBER	DESCRIPTION	QTY.

1976

NOTE: SEAT BELT ATTACHING HARDWARE IS ILLUSTRATED BY VEHICLE AND YEAR IN SECTION 620 OF THE LINCOLN-MERCURY BODY ILLUSTRATION CATALOG

OUTBOARD BELT			
A(71),C(71),Y(71)	383608-S100	(UU-160)-bolt-torx head-tapping-7/16"- 20 x 7/8"	2
A,C,D,F,G,K,Y	386582-S100	(UU-170-A)-bolt-pan hd.-tapping-7/16"-20 x 1 3/8"	2
P	386272-S100	(UU-156-D)-bolt-pan hd.-tapping-7/16"-20 x 7/8"	2
INBOARD BELT			
A,C,D,F,G,K,P(62),Y	386582-S100	(UU-170-A)-bolt-pan hd.-tapping-7/16"-20 x 1 3/8"	2
P(54)	386274-S100	(UU-156-A)-bolt-pan hd.-tapping-7/16"-20 x 2"	2

613B84-5 BELT ASSY. (REAR SEAT) — Cont'd

Notes: † Incl. black buckle, ▲ Incl. bright finish buckle ⊕ Use black

1977

BODY TYPE		PART NUMBER LESS SUFFIX	AQUA	BLACK	BLUE	CHAM-OIS	CREAM	GOLD	GREEN	GRAY	JADE	RED	SADDLE	TAN	OTHER	QTY.
A(53) "Before 11/8/76"	R/L	† D7AZ 53613B84		G												2
	R/L	▲ D6AZ 53613B84			D			E					H			2
"From 11/8/76"	R/L	† D7AZ 53613B84		G												2
A(65) "Before 11/8/76"	R/L	† D7MY 65613B84		G												2
	R/L	▲ D6MY 65613B84			D			E				G	H			2
"From 11/8/76"	R/L	† D7MY 65613B84		G												2
A(71) "Before 11/8/76"	R/L	▲ D6AZ 71613B84			C			D				F	G			2
D(Town Car and Town Coupe) "Before 11/8/76"	R/L	▲ D6AZ 60613B84		B	C			D				F				2
	R/L	▲ D6AY 60613B84								A	B					2
	R/L	▲ D7VY 60613B84				B										2
	R/L	▲ D8VY 60613B84				AB										2
	R/L	▲ D9VY 60613B84													E(cordovan)	2
"From 11/8/76"	R/L	▲ D8VY 60613B84		Z	T	AB				AA	AC	U				2
	R/L	▲ D9VY 60613B84													E(cordovan)	2
D(Exc. Town Car and Town Coupe) "Before 11/8/76"	R/L	▲ D6VY 60613B84		B	C			D		E	G	H				2
	R/L	▲ D7VY 60613B84				D									C(cordovan)	2
"From 11/18/76"	R/L	▲ D7VY 60613B84		K	H	D									C(cordovan)	2
	R/L	▲ D8VY 60613B84								R		G				2

BODY TYPE		PART NUMBER LESS SUFFIX	COLORS AND APPLICABLE PART NUMBER SUFFIXES													QTY.
			AQUA	BLACK	BLUE	CHAMOIS	CREAM	GOLD	GREEN	GRAY	JADE	RED	SADDLE	TAN	OTHER	
613B84-5	BELT ASSY. (REAR SEAT) — Cont'd															
Notes:	† Incl. black buckle, ▲ Incl. bright finish buckle															
1977																
F "Before 11/8/76"	R	† D90Z 65613B84		E												1
	L	† D90Z 65613B85		D												1
	R	▲ D60Z 65613B84									L	G	H			1
	L	▲ D60Z 65613B85											H			1
	R	▲ D70Z 65613B84													A(lipstick red)	1
	R	▲ D80Z 65613B84			G	J				H						1
	L	▲ D80Z 65613B85				J				H	F				E(lipstick red)	1
	L	▲ D90Z 65613B85			C											1
"From 11/8/76"	R	† D80Z 65613B84		B												1
	L	† D80Z 65613B85		B												1
	R	▲ D70Z 65613B84													A(lipstick red)	1
	R	▲ D80Z 65613B84			G	J				H	F		D			1
	L	▲ D80Z 65613B85			E	J				H	F		D		E(lipstick red)	1
G(54) "Before 11/8/76"	R	† E0DZ 54613B84		G												1
	L	† E0DZ 54613B85		G												1
	R	▲ D6DZ 54613B84								N	M	C		E		1
	L	▲ D6DZ 54613B85								H	G	C		E		1
	R	▲ D8DZ 54613B84			E											1
	L	▲ D7DZ 54613B85			D											1
"From 11/8/76"	R	† D7DZ 54613B84		D												1
	L	† D7DZ 54613B85		D												1
	R	▲ D8DZ 54613B84			E					J	D	F				1
	L	▲ D8DZ 54613B85			E					J	D	F				1
G(66) "Before 11/8/76"	R	† D7DZ 66613B84		C												1
	L	† D7DZ 66613B85		C												1
	R	▲ D6DZ 66613B84								H	G			F		1
	R	▲ D7DZ 66613B84			B			A								1
	L	▲ D7DZ 66613B85								G	D					1
	R	▲ D8DZ 66613B84										F				1
	L	▲ D8DZ 66613B85			E							F				1
"From 11/8/76"	R	† D7DZ 66613B84		C												1
	L	† D7DZ 66613B85		C												1
	R	▲ D7DZ 66613B84			B			A						E		1
	L	▲ D7DZ 66613B85										F				1
	R	▲ D8DZ 66613B84								J	D	F				1
	L	▲ D8DZ 66613B85			E						D					1
	L	▲ D9DZ 66613B85								D						1
J	R/L	D5RY 64613B84		A												2
K	R	▲ D8LY 65613B84		K	D	M				L	C	E			H(cordovan)	1
	L	▲ D8LY 65613B85		K		M				L	C	E			H(cordovan)	1
L "Before 11/8/76"	R/L	▲ D6ZZ 60613B84		D	E				H			J				2
	R/L	▲ D7ZZ 60613B84				B										2
"From 11/8/76 to 6/27/77"	R/L	† D7FZ 62613B84		A												2
	R/L	▲ D7FZ 62613B84		G		J						B				2

COPYRIGHT © 1986 — FORD MOTOR COMPANY — DEARBORN, MICHIGAN

1973/79 LINCOLN-MERCURY CARS

613B84-5 BELT ASSY. (REAR SEAT) — Cont'd

Notes: † Incl. black buckle, ▲ Incl. bright finish buckle

1977

BODY TYPE		PART NUMBER LESS SUFFIX	AQUA	BLACK	BLUE	CHAMOIS	CREAM	GOLD	GREEN	GRAY	JADE	RED	SADDLE	TAN	OTHER	QTY.
"From 6/27/77"		Refer to 1978														
P(54) "Before 11/8/76"	R/L	▲ D6DZ 54613B84		H	J				K							1
	R/L	▲ D7DZ 54613B84												L		1
"From 11/8/76"	R/L	▲ D7DZ 54613B84		M	K				P			J		L		1
P(62) "Before 11/8/76"	R/L	† D6DZ 62613B84		A												2
	R/L	▲ D6DZ 62613B84		B	C				D					E		2
V	R	▲ D74Y 54613B84			A										B(cordovan)	1
	L	▲ D74Y 54613B85			A										B(cordovan)	1
	R	▲ D8DZ 54613B84								J						1
	L	▲ D7DZ 54613B85								H						1

1977

NOTE: REAR SEAT ATTACHING HARDWARE IS ILLUSTRATED BY VEHICLE AND YEAR IN SECTION 620 OF THE LINCOLN-MERCURY BODY ILLUSTRATION CATALOG

FOR APPLICATION REFER TO BODY ILLUSTRATION SECTION 620

MODEL/RESTRICTIONS	PART NUMBER	DESCRIPTION	QTY.
G,P	382553-S100	(XX-197-Z)-washer-flat serrated 1/2"	2
A,L	382583-S100	(XX-340-AC)-washer-flat serrated 1/2"	2
K	382629-S100	(XX-173-AA)-washer-flat 7/16" x 1 5/16" x 3/16"	2
K	385906-S36	(UU-52-NP)-washer 19/32" I.D. x 29/32" thick	2
A,D,F,G,K,L,P	386272-S100	(UU-156-D)-bolt-pan head-tapping 7/16-20 x 7/8"	2
A,F,G,K,P	386582-S100	(UU-170-A)-bolt-pan head-tapping 7/16-20 x 1 3/8"	2
A,D,F,G,K,P	386274-S100	(UU-156-A)-bolt-pan head-tapping 7/16-20 x 1 3/4"	2
A,F,G,L,P	386277-S100	(UU-156-C)-bolt-pan head-shoulder tapping 7/16-20 x 1 3/8"	2

613B84-5 BELT ASSY. (REAR SEAT) — Cont'd

Notes: † Incl. black buckle, ▲ Incl. bright finish buckle, ◇ Light, $ Medium, ♦ Dark

1978

BODY TYPE		PART NUMBER LESS SUFFIX	BLACK	BLUE	CAMEL	CHAMOIS	CHAMPAGNE	CORDOVAN	GOLD	GRAY	JADE	RED	RUSSET	SADDLE	OTHER	QTY.
A(53)	R/L	† D7AZ 53613B84	G													2
A(65)	R/L	† D7MY 65613B84	G													2
A(71)	R/L	† D7AZ 71613B84	B													2
D(Town Car) "Before 6/1/78"	R/L	▲ D8VY 60613B84		$T												2
	R/L	▲ D7VY 60613B84	E													2
	R/L	▲ D8VY 60613B84		◇D		AB	F		W		AC	U				2
	R/L	▲ D9VY 60613B84						E								2
D(Town Car) "From 6/1/78"	R/L	▲ D8VY 60613B84	Z	$T		AB	Y		W	AA	AC	U				2
	R/L	▲ D8VY 60613B84		◇V												2
	R/L	▲ D9VY 60613B84						E								2

613B84-5 BELT ASSY. (REAR SEAT) — Cont'd

Notes: † Incl. black buckle, ▲ Incl. bright finish buckle, ◇ Light, $ Medium, ♦ Dark

1978

BODY TYPE		PART NUMBER LESS SUFFIX	BLACK	BLUE	CAMEL	CHAMOIS	CHAMPAGNE	CORDOVAN	GOLD	GRAY	JADE	RED	RUSSET	SADDLE	OTHER	QTY.
D(exc. Town Car)	R/L	▲ D8VY 60613B84	M	$P		S	L	K	J	R	N	G				2
	R/L	▲ D8VY 60613B84		◇H												2
F(53,65) "Before 6/15/78"	R	† D70Z 65613B84	H													1
	L	† D70Z 65613B85	H													1
	R	▲ D70Z 65613B84		E		C								G	A(lipstick red)	1
	L	▲ D70Z 65613B85		E		C								G	A(lipstick red)	1
	R	▲ D80Z 65613B84								H	F		C			1
	L	▲ D80Z 65613B85								H	F		C			1
"From 6/15/78"	R	† D80Z 65613B84	B													1
	L	† D90Z 65613B85	D													1
	R	▲ D80Z 65613B84		G		J				H	F		C	D	E(lipstick red)	1
	L	▲ D80Z 65613B85		G		J				H	F		C	D	E(lipstick red)	1
G(54) "Before 6/15/78"	R	† D7DZ 54613B84	D													1
	L	† D7DZ 54613B85	D													1
	R	▲ D7DZ 54613B84										G				1
	L	▲ D7DZ 54613B85								H	E					1
	R	▲ D8DZ 54613B84		E	G			H		J	D					1
	L	▲ D8DZ 54613B85		E	G			H				F				1
"From 6/15/78"	R	† D9DZ 54613B84	A													1
	L	† D9DZ 54613B85	A													1
	R	▲ D8DZ 54613B84		E	G			H		J	D					1
	L	▲ D8DZ 54613B85		E	G			H		J	D	F				1
G(66) "Before 6/15/78"	R	† D7DZ 66613B84	C													1
	L	† D7DZ 66613B85	C													1
	R	▲ D7DZ 66613B84		B						G	D	F				1
	L	▲ D7DZ 66613B85		B						G	D					1
	R	▲ D8DZ 66613B84			G		H									1
	L	▲ D8DZ 66613B85			G		H					F				1
"From 6/15/78"	R	† D8DZ 66613B84	C													1
	L	† D9DZ 66613B85	A													1
	R	▲ D8DZ 66613B84		E	G		H			J	D					1
	L	▲ D8DZ 66613B85		E	G		H				D	F				1
	R	▲ E0DZ 66613B84										D				1
	L	▲ D9DZ 66613B85								D						1
J	R/L	D5RY 64613B84	A													2
K	R	▲ D8LY 65613B84	K	$D		M	J	H		L	C	E			G(cream)	1
	L	▲ D8LY 65613B85	K			M	J	H		L	C	E			G(cream)	1
	R	▲ D8LY 65613B84		◇F												1
	L	▲ D8LY 65613B85		◇F												1

COPYRIGHT © 1986 — FORD MOTOR COMPANY — DEARBORN, MICHIGAN

1973/79 LINCOLN-MERCURY CARS

613B84-5 BELT ASSY. (REAR SEAT) — Cont'd

Notes: † Incl. black buckle, ▲ Incl. bright finish buckle, ◇ Light, $ Medium, ♦ Dark

1978

BODY TYPE		PART NUMBER LESS SUFFIX	BLACK	BLUE	CAMEL	CHAMOIS	CHAMPAGNE	CORDOVAN	GOLD	GRAY	JADE	RED	RUSSET	SADDLE	OTHER	QTY.
L "Before 10/3/77"	R/L	† D7FZ 62613B84	A													2
	R/L	▲ D7FZ 62613B84	G			J						B				2
	R/L	▲ D8FZ 62613B84		B							M				A(tangerine)	2
"From 10/3/77 to 6/1/78"	R/L	† D9FZ 62613B84	D													2
	R/L	▲ D8FZ 62613B84		G		W					S	D			F(tangerine)	2
	R/L	▲ D9FZ 62613B84	B													2
"From 6/1/78"	R/L	† D9FZ 62613B84	D													2
	R/L	▲ D8FZ 62613B84		U		W					S	N			T(tangerine)	2
	R/L	▲ D9FZ 62613B84	B													2
P(36)	R	▲ D8BZ 36613B84	J	H		K							L		G(cream)	1
	L	▲ D8BZ 36613B85	J	H		K							L		G(cream)	1
P(54,66) "Before 6/15/78"	R	† D8BZ 54613B84	H													1
	L	† D8BZ 54613B85	H													1
	R	▲ D8BZ 54613B84	L	K		M							N		J(cream)	1
	L	▲ D8BZ 54613B85	L	K		B							N		J(cream)	1
"From 6/15/78"	R	† D8BZ 54613B84	H													1
	L	† D8BZ 54613B85	H													1
	R	▲ D8BZ 54613B84	L	K		M							N		J(cream)	1
	L	▲ D8BZ 54613B85	L	K		M							N		J(cream)	1
P(74)	R/L	† D8BZ 74613B84	G													2
	R/L	▲ D8BZ 74613B84	J	H		K							L			2
V	R	▲ D84Y 54613B84		♦A								B				1
	L	▲ D84Y 54613B85		♦A								B				1
	R	▲ D74Y 54613B84		◇A				B								1
	L	▲ D74Y 54613B85		◇A				B								1
	R	▲ D8DZ 54613B84								J						1
	L	▲ D7DZ 54613B85								H						1

1978

Note: SEAT BELT ATTACHING HARDWARE IS ILLUSTRATED BY VEHICLE AND YEAR IN SECTION 620 OF THE LINCOLN-MERCURY BODY ILLUSTRATION CATALOG

YEAR	MODEL/RESTRICTIONS	PART NUMBER	DESCRIPTION	QTY.
78	A,G,L,V	382583-S100	(XX-340-AC)-Washer-flat 1/2	2
78	A	386272-S100	(UU-156-D)-Bolt-pan head topping 7/16-20 x 57/64"	2
78	A,D,F,G,K,L,P,V	386273-S100	(UU-170-A)-Bolt-pan head topping 7/16-20 x 1 3/8"	2
78	F	386277-S100	(UU-156-C)-bolt-pan head shoulder topping 7/16-20 x 1 3/8"	2

613B84-5 BELT ASSY. (REAR SEAT)

Notes: R-Right hand, L-Left hand, † Incl. black buckle, ▲ Incl. bright finish buckle
◇ Light, ♦ Dark, @ Medium

1979

BODY TYPE		PART NUMBER LESS SUFFIX	BERYL	BLACK	BLUE	CAMEL	CHAMOIS	CORDOVAN	GOLD	GRAY	JADE	PINE GREEN	RED	WHITE	OTHER	QTY.
A(54,66) "Before 6/1/79"	R/L	† D9AZ 54613B84		H												2
	R/L	▲ D9AZ 54613B84			J	M		G								2
	R/L	▲ E0VY 54613B84										C	A			2
"From 6/1/79"	R/L	† D9AZ 54613B84		H												2
	R/L	▲ D9AZ 54613B84				M		L								2
	R/L	▲ E0VY 54613B84										C	A			2
	R/L	▲ E0AZ 54613B84			C					E						2

BODY TYPE		PART NUMBER LESS SUFFIX	COLORS AND APPLICABLE PART NUMBER SUFFIXES													QTY.
			BERYL	BLACK	BLUE	CAMEL	CHAM-OIS	CORD-OVAN	GOLD	GRAY	JADE	PINE GREEN	RED	WHITE	OTHER	
613B84-5	BELT ASSY. (REAR SEAT) — Cont'd															
Notes:	R-Right hand, L-Left hand, † Incl. black buckle, ▲ Incl. bright finish buckle															
	◊ Light, ♦ Dark, @ Medium															
1979																
A(74) "Before 6/1/79"	R/L	† E0AZ 74613B84		B												2
	R/L	▲ D9AZ 74613B84			C	M		L				K	H			2
"From 6/1/79"	R/L	† E0AZ 74613B84		B												2
	R/L	▲ D9AZ 74613B84			J	M		L				K	H			2
D(exc. Town Car)	R/L	▲ D8VY 60613B84		M	H			K	J				G		L(champagne)	2
	R/L	▲ D9VY 60613B84	A													2
D(Town Car) "Before 12/4/78"	R/L	▲ D8VY 60613B84		Z	◊T				W	AA			U		Y(champagne)	2
	R/L	▲ D8VY 60613B84			@V											2
	R/L	▲ D9VY 60613B84	C		♦B			E								2
"From 12/4/78"	R/L	▲ D8VY 60613B84		Z	◊T								U			2
	R/L	▲ D8VY 60613B84			@V											2
	R/L	▲ D9VY 60613B84			♦B			E	D	G					F(champagne)	2
F "Before 12/4/78"	R	† D80Z 65613B84		B												1
	L	† D80Z 65613B85		B												1
	R	▲ D80Z 65613B84			G		J			H	F					1
	L	▲ D80Z 65613B85			G		J			H	F					1
	R	▲ D90Z 65613B84						B					A			1
	L	▲ D90Z 65613B85											A			1
F "From 12/4/78"	R	† D90Z 65613B84		E												1
	L	† D90Z 65613B85		D												1
	R	▲ D80Z 65613B84								H	F					1
	L	▲ D80Z 65613B85					J			H	F					1
	R	▲ D90Z 65613B84			C		D	B					A			1
	L	▲ D90Z 65613B85			C								A			1
G(54) "Before 12/4/78"	R	† D8DZ 54613B84		C												1
	L	† D8DZ 54613B85		C												1
	R	▲ D8DZ 54613B84			E	G		H		J	D		F			1
	L	▲ D8DZ 54613B85			E	G		H		J	D		F			1
"From 12/4/78"	R	† E0DZ 54613B84		G												1
	L	† E0DZ 54613B85		G												1
	R	▲ D8DZ 54613B84			E	G		H		J	D		F			1
	L	▲ D8DZ 54613B85			E	G		H			D		F			1
	L	▲ D9DZ 54613B85								B						1
G(66) "Before 12/4/78"	R	† D8DZ 66613B84		C												1
	L	† D8DZ 66613B85		C												1
	R	▲ D8DZ 66613B84			E	G		H		J	D		F			1
	L	▲ D8DZ 66613B85			E	G		H			D		F			1
	L	▲ D9DZ 66613B85								D						1
"From 12/4/78"	R	† D9DZ 66613B84		A												1
	L	† E0DZ 66613B85		G												1
	R	▲ D8DZ 66613B84				G		H		J			F			1
	L	▲ D8DZ 66613B85				G		H					F			1
	R	▲ D9DZ 66613B84			C						B					1
	L	▲ D9DZ 66613B85			C					D	B					1
J	R	† D9ZZ 66613B84		A												1
	L	† D9ZZ 66613B85		G												1
	R	▲ D9ZZ 66613B84		K	H		B						C		J(vaquero)	1
	L	▲ D9ZZ 66613B85		K	H		B						C		J(vaquero)	1

COPYRIGHT © 1986 — FORD MOTOR COMPANY — DEARBORN, MICHIGAN

1973/79 LINCOLN-MERCURY CARS

613B84-5 BELT ASSY. (REAR SEAT) — Cont'd

Notes: R-Right hand, L-Left hand, † Incl. black buckle, ▲ Incl. bright finish buckle
◇ Light, ♦ Dark, @ Medium

1979

BODY TYPE		PART NUMBER LESS SUFFIX	BERYL	BLACK	BLUE	CAMEL	CHAMOIS	CORDOVAN	GOLD	GRAY	JADE	PINE GREEN	RED	WHITE	OTHER	QTY.
K	R	▲ D8LY 65613B84		K	@D			H		L	C		E		G(cream)	1
	L	▲ D8LY 65613B85		K				H		L	C		E		G(cream)	1
	R	▲ D8LY 65613B84			◇F											1
	L	▲ D8LY 65613B85			◇F											1
	R	▲ D9LY 65613B84	C		♦A										B(amethyst)	1
	L	▲ D9LY 65613B85	C		♦A										B(amethyst)	1
"Before 12/4/78"	R	▲ D8LY 65613B84													J(champagne)	1
	L	▲ D8LY 65613B85													J(champagne)	1
"From 12/4/78"	R	▲ D8LY 65613B84													J(champagne)	1
	L	▲ D9LY 65613B85													D(champagne)	1
L	R/L	† D8FZ 62613B84		X												2
	R/L	▲ D8FZ 62613B84		V	U		W								T(tangerine)	2
	R/L	▲ D9FZ 62613B84											A			2
L "From 12/4/78"	R/L	† D9FZ 62613B84		D												2
	R/L	▲ D8FZ 62613B84			U										T(tangerine)	2
	R/L	▲ D9FZ 62613B84		B			C						A			2
P(36)	R	▲ D8BZ 36613B84		J	H		K								G(cream)	1
	L	▲ D8BZ 36613B85		J	H		K								G(cream)	1
	R	▲ D9BZ 36613B84											A			1
	L	▲ D9BZ 36613B85											A			1
P(54,66)	R	† D8BZ 54613B84		H												1
	L	† D8BZ 54613B85		H												1
	R	▲ D8BZ 54613B84		L	K		M								J(cream)	1
	L	▲ D8BZ 54613B85		L	K		M								J(cream)	1
	R	▲ D9BZ 54613B84											A			1
	L	▲ D9BZ 54613B85											A			1
P(74)	R/L	† D8BZ 74613B84		G												2
	R/L	▲ D8BZ 74613B84		J	H		K									2
	R/L	▲ D9BZ 74613B84											A			2
V	R	▲ D94Y 54613B84	D		B			C					A		E(champagne)	1
	L	▲ D94Y 54613B85	D		B			C		F			A			1
	R	▲ E04Y 54613B84								F						1
	L	▲ E04Y 54613B85													E(champagne)	1

1979

Note: REAR SEAT BELT ATTACHING HARDWARE IS ILLUSTRATED BY VEHICLE AND YEAR IN SECTION 620 OF THE LINCOLN-MERCURY BODY ILLUSTRATION CATALOG

YEAR	MODEL/RESTRICTIONS	PART NUMBER	DESCRIPTION	QTY.
79	G	382553-S	(XX-197-Z)-washer flat serrated 1/2"	2
79	A,D,F,J,K,L,P	386582-S100	(UU-170-A)-bolt pan head tapping 7/16-20 x 1 3/8"	4
79	G	386274-S	(UU-156-A)-bolt pan hd. shldr. tap 7/16-20 x 1 3/4"	2
79	G	386582-S	(UU-170-A)-bolt pan hd. tapping 7/16-20 x 1 3/8"	2

61400-1 MOULDING (FRONT SEAT CUSHION SIDE SHIELD)-Incl. attaching parts

74/76	C - - w/split seats	(RH) D2LZ 6561400-A	(LH) D2LZ 6561401-A		1
73/74	D - - w/full width seat	(RH) D7VY 6061400-A	(LH) D0VY 6561401-A		1
73/74	D - - w/split seats	(RH) D2LZ 6561400-A	(LH) D2LZ 6561401-A		1
75/76	D	(RH) D0VY 6561400-A	(LH) D7VY 6061401-A		1
77/	D	(RH) D7VY 6061400-A	(LH) D7VY 6061401-A		1
74/	F - - w/reclining seat	(RH) D2LZ 6561400-A	(LH) D2LZ 6561401-A		1
73/	K				1

1973/79 LINCOLN-MERCURY CARS

YEAR	MODEL/RESTRICTIONS	PART NUMBER	DESCRIPTION		QTY.
61402-3	MOULDING (FRONT SEAT BACK SIDE SHIELD)				
73	C(63R,65K) - - w/split seats	D2LZ 6561402-A	R.H. and L.H.-chrome		2
74/76	C(53K,65K),F - - w/split seats				2
77/	F				2
73/	K - - w/split seats				2
75/	D	(RH) D6VY 6061402-A	(LH) D6VY 6061403-A		1
61422-31	MOULDING (FRONT SEAT BACK SIDE SHIELD OUTER)-Incl. attaching parts				
73/75	D(60,65)	(RH) D0VY 6561430-A	(LH) D0VY 6561431-A	Lower-w/latch hole rustless steel	1
77/	D(60)				1
73/74	D(65) - - w/non-reclining seat	(RH) D0VY 6561422-A	(LH) D0VY 6561423-A	Upper	1
75/	D(60)				1
73/	D(53) - - w/reclining seat	(RH) D0VY 6561422-B	(LH) D0VY 6561423-B		1
73/75	D(60) - - w/reclining seat				1
61506	BUMPER (AUXILIARY SEAT BACK FLOOR PIVOT ARM)				
73/	A(71)	D3AZ 7161506-A			2
73/76	C(71)				2
77	F(71)				2
73/76	Y(71)				2
61616-7	SHIELD (FRONT SEAT BACK SIDE) — Cut opening for ash receptacle when required-Paint to match				
73/76	A(65H,K) - - w/split seats	(RH) D2AZ 6561616-A	(LH) ★	Incl. seat back latch hole	1
73/76	A(65),Y(65) - - w/full width seat and center arm rest				1
77/78	A(65K,L)				1
79	A(54,74)	(RH) D9MY 5461616-A	(LH) D9MY 5461617-A	Woodgrain insert	1
79	A(66)	(RH) D9AZ 6661616-A	(LH) D9AZ 6661617-A	w/o insert	1
73/76	C(53K,65K,71K)	D3LZ 6561616-B	Black-w/o ash receptacle opening		2
74	F - - w/bucket seats	★ D3LZ 6561616-B	Black-w/o ash receptacle opening		2
75/76	F - - w/bucket or split seats	★ D3LZ 6561616-B	Black		2
77/79	F	★ D7LZ 6561616-B	Chamois		2
73	K	★ D3LY 6561616-B	Beige-incl. chrome moulding		2
73/74	K	★ D3LZ 6561616-B	Black-incl. chrome moulding		2
74	K	★ D3LY 6561616-E	Blue-incl. chrome moulding		2
75/76	K	★ D3LZ 6561616-B	Black-incl. chrome moulding		2
76	K	★ D3LZ 6561616-B	Black-w/o ash receptacle opening-incl. chrome moulding - - w/o cloth cover		2
77	K - - w/reclining seat	(RH) ★ D5LY 6561616-Z	(LH) ★ D5LY 6561616-V	Tan	1
78	K - - w/split seats	★ D3LZ 6561616-B	Black-w/o ash receptacle opening-incl. chrome moulding w/o cloth covering		2
77	K - - w/reclining seat	(RH) ★	(LH) ★ D6LY 6561616-A	Jade	1
		(RH) ★	(LH) ★ D5LY 6561616-T	Red	1
78	K - - w/split seats	★ D3LZ 6561616-B	Black-w/o ash receptacle opening incl. chrome moulding		2
79	K - - w/bucket seats	(RH) ★ D9LY 6561616-D	(LH) ★ D9LY 6561617-A	Blue	1
79	K - - w/split seats	★ D3LZ 6561616-B	Black		2
61644-5	TRACK (FRONT SEAT INNER)				
73/78	A - - w/6 way split seats	D2AZ 6561644-A	Driver and passenger		2
74/76	A,Y - - w/6 way full width seat	(RH) D4AZ 6561644-A	(LH) D4AZ 6561645-A		1
77/	A				1
79	A - - w/6 way split seats	D9AZ 5461644-A			1
		D9AZ 5461645-A			1
74/76	C,F - - w/6 way split seats	D3LZ 6561644-A	Driver and passenger		2
77	F				2
75/76	C - - w/6 way full width seat	(RH) D50Z 6561644-A	(LH) D50Z 6561645-A		1
77/	F				2
73/	D - - w/6 way split seats	D2AZ 6561644-A	Driver and passenger		2
74	D - - w/6 way full width seat	(RH) D4AZ 6561644-A	(LH) D4AZ 6561645-A		1
73/	K - - w/6 way split seats	D3LZ 6561644-A	Driver and passenger		2

COPYRIGHT © 1986— FORD MOTOR COMPANY —DEARBORN, MICHIGAN

NEW ISSUE

1973/79 LINCOLN-MERCURY CARS

YEAR	MODEL/RESTRICTIONS	PART NUMBER	DESCRIPTION		QTY.
61672	INSERT (FRONT SEAT BACK REAR TRIM)				
78/	K	D8LY 6561672-A	R.H. and L.H.		2
61676-7	INSERT (FRONT SEAT BACK SIDE SHIELD)				
79	A	(RH) D9MY 5461676-A	(LH) D9MY 5461677-A		1
61678-9	INSERT (FRONT SEAT CUSHION SIDE SHIELD)				
79	A	(RH) D9MY 5461678-A	(LH) D9MY 5461679-A		1
61680-1	PANEL (FRONT SEAT CUSHION TRIM REAR CORNER)				
79	A - - w/split seats	(RH) D9AZ 5461680-A	(LH) D9AZ 5461681-A	Blue	1
		(RH) D9AZ 5461680-F	(LH) D9AZ 5461681-F	Camel	1
		(RH) D9AZ 5461680-D	(LH) D9AZ 5461681-D	Cordovan	1
		(RH) D9AZ 5461680-E	(LH) D9AZ 5461681-E	Gray	1
		(RH) D9AZ 5461680-B	(LH) D9AZ 5461681-B	Green	1
		(RH) D9AZ 5461680-C	(LH) D9AZ 5461681-C	Red	1
61682	COVER (FRONT SEAT CUSHION TRIM REAR PANEL JOINT)				
79	A	D9AZ 5461682-A	Blue		1
		D9AZ 5461682-F	Camel		1
		D9AZ 5461682-D	Cordovan		1
		D9AZ 5461682-E	Gray		1
		D9AZ 5461682-B	Green		1
		D9AZ 5461682-C	Red		1
61692-3	COVER (FRONT SEAT BACK PIVOT SIDE INNER)-Paint to match				
73	A,Y - - w/full width seat	(RH) ★ D1AZ 6561692-A	(LH) ★ D1AZ 6561693-A	Black	1
73	A - - w/split seats-non-reclining	(RH) ★ D1MY 6561692-A	(LH) ★ D1MY 6561693-A	Black	1
73	A - - w/split seats-reclining-arm rest pivot	(RH) ★ D1MY 6561692-A	(LH) ★ D1MY 6561693-A	Black	1
73	A - - w/split seats-reclining-seat pivot	(RH) ★ D1AZ 6561692-L	(LH) ★ D1AZ 6561693-A	Black	1
73	A - - w/split seats-non-reclining "Before 1/8/73"	(RH) ★ D3AY 6561692-A	(LH) ★ D3AY 6561693-A	White-outboard	1
	"From 1/8/73"	(RH) ★ D4MZ 6561692-C	(LH) ★ D4MY 6561693-C	White-inboard	1
		(RH) ★ D3AY 6561692-B	(LH) ★ D3AY 6561693-A	White-outboard	1
74	A - - w/split seats-non-reclining-pivot cover	(RH) D1AZ 6561692-A	(LH) D1AZ 6561693-A	Black	
74	A - - w/split seats-reclining-pivot cover	(RH) ★ D1AZ 6561692-L	(LH) ★ D1AZ 6561693-A	Black	1
74	A - - w/split seats-arm rest pivot "Before 2/4/74"	(RH) ★ D1MY 6561692-A	(LH) ★ D1MY 6561693-A	Black	1
74	A - - w/split seats-arm rest pivot "From 2/4/74"	(RH) ★ D4AZ 6561692-P	(LH) ★ D4AZ 6561693-K	Black	1
74	A - - bench seat-arm rest pivot	(RH) ★ D3AZ 6561692-A	(LH) ★ D1AZ 6561693-A	Black	1
75	A - - w/split seats-non-reclining	(RH) ★ D4AZ 6561692-P	(LH) ★ D4AZ 6561693-K	Black-inboard	1
75	A - - w/split seats-non-reclining	(RH) ★ D1AZ 6561692-A	(LH) ★ D1AZ 6561693-A	Black-outboard	1
75	A - - w/split seats-reclining	(RH) ★ D1AZ 6561692-L	(LH) ★ D1AZ 6561693-A	Black	1
76	A,Y - - w/split seats-non-reclining	(RH) ★ D1AZ 6561692-A	(LH) ★ D1AZ 6561693-A	Black-passenger outboard	1
76	A,Y - - w/split seats-reclining	(RH) ★ D1AZ 6561692-L	(LH) ★ D1AZ 6561693-A	Black-passenger outboard	1
76	A,Y - - w/full width seat and center arm rest or split seats	(RH) ★ D4AZ 6561692-P	(LH) ★ D4AZ 6561693-K	Black-inboard	1
77	A - - w/split seats-reclining	(RH) ★	(LH) ★ D1AZ 6561693-B	Blue-passenger outboard	1
77	A - - w/split seats	(RH) ★ D4AZ 6561692-L	(LH) ★	Blue-inboard	1
78	A - - w/split seats non-reclining	(RH) ★ D1AZ 6561692-B	(LH) ★	Blue	1
78	A - - w/split seats	(RH) ★ D4AZ 6561692-L	(LH) ★	Blue-inboard	1
74	C - - w/split seats-back pivot	(RH) ★ D2LZ 6561692-C	(LH) ★ D2LZ 6561693-C	Black	1
74	C - - arm rest pivot	(RH) ★ D2LZ 6561692-C	(LH) ★ D2LZ 6561693-C	Black	1
75	C - - w/split seats-arm rest pivot	(RH) ★ D2LZ 6561692-C	(LH) ★ D2LZ 6561693-C	Black	1
75	C - - w/split seats-back pivot	(RH) ★ D2LZ 6561692-C	(LH) ★ D2LZ 6561693-C	Black	1
76	C - - w/split seats-back pivot	(RH) ★ D4LZ 6561692-A	(LH) ★ D4LZ 6561693-A	Tan-inner	1
76	C - - w/split seats-arm rest pivot	(RH) ★ D2LZ 6561692-C	(LH) ★ D2LZ 6561693-C	Black	1

1973/79 LINCOLN-MERCURY CARS

YEAR	MODEL/RESTRICTIONS	PART NUMBER	DESCRIPTION		QTY.
61692-3	COVER (FRONT SEAT BACK PIVOT SIDE INNER)-Paint to match — Cont'd				
76/79	D	(RH) ★ D4AZ 6561692-P	(LH) ★ D4AZ 6561693-K	Black	1
74	F - - w/split seats-back pivot	(RH) ★ D2LZ 6561692-C	(LH) ★ D2LZ 6561693-C	Black	1
74	F - - arm rest pivot	(RH) ★ D2LZ 6561692-C	(LH) ★ D2LZ 6561693-C	Black	1
75	F - - w/split seats-back pivot	(RH) ★ D2LZ 6561692-C	(LH) ★ D2LZ 6561693-C	Black	1
75	F - - w/split seats-arm rest pivot	(RH) ★ D2LZ 6561692-C	(LH) ★ D2LZ 6561693-C	Black	1
76	F - - w/split seats-back pivot	(RH) ★ D5LY 6561692-A	(LH) ★ D5LY 6561693-A	Aqua-inner	1
76	F - - w/split seats-arm rest pivot	(RH) ★ D2LZ 6561692-C	(LH) ★ D2LZ 6561693-C	Black	1
77	F - - w/split seats	(RH) ★ D2LZ 6561692-C	(LH) ★ D2LZ 6561693-C	Black	1
78	F - - w/split seats	(RH) ★ D2LZ 6561692-K	(LH) ★ D2LZ 6561693-K	Blue	1
79	F - - w/split seats	(RH) ★ D2LZ 6561692-K	(LH) ★ D2LZ 6561693-K	Blue	2
76/78	J - - w/full reclining seat	(RH) ★ D5RY 6461692-A	(LH) ★ D5RY 6461693-A	Black	1
73	K	(RH) ★ D2LZ 6561692-C	(LH) ★ D2LZ 6561693-C	Black	1
73	K - - w/reclining seat- "Before 6/15/73"	(RH) ★ D3LY 6561692-A	(LH) ★ D3LY 6561693-A	Silver	1
73	K - - w/reclining seat- "From 6/15/73"	(RH) ★ D4LZ 6561692-C	(LH) ★ D4LZ 6561693-C	Silver	1
74/79	K	(RH) D2LZ 6561692-C	(LH) D2LZ 6561693-C	Black	1
61694-5	COVER (FRONT SEAT BACK PIVOT SIDE OUTER)-Paint to match				
73	F	(RH) ★ D2ZZ 6561694-A	(LH) ★ D2ZZ 6561695-A	Black	1
75	G - - w/full width seat	(RH) ★ D5DZ 6261694-C	(LH) ★ D5DZ 6261695-C	Silver blue	1
75	G - - w/bucket seats	(RH) ★ D5DZ 6661694-C	(LH) ★ D5DZ 6661695-C	Black	1
76	G - - w/bucket seats	(RH) ★ D6DZ 6661694-C	(LH) ★ D6DZ 6661695-C	Black	1
77	G - - w/full width seat	(RH) ★ D3DZ 6261694-D	(LH) ★ D3DZ 6261695-D	Tan	1
77	G - - w/bucket seats	(RH) ★	(LH) ★ D6DZ 6661695-A	Tan	1
78/	G - - w/bucket seats	(RH) ★ D6DZ 6661694-L	(LH) ★ D6DZ 6661695-L	Gray	1
73/74	J(GT)	(RH) ★ D3RY 6261694-A	(LH) ★ D3RY 6261695-A	Black	1
73/74	J(exc. GT)	(RH) ★	(LH) ★ D3RY 6261695-B	Black	1
74	J(exc. GT)	(RH) ★	(LH) ★ D4RY 6261695-B	Saddle brown	2
76	J(GT) - - w/full reclining seats	(RH) ★ D3RY 6261694-A	(LH) ★ D3RY 6261695-A	Black	1
	"From 7/28/75"	(RH) ★ D6RY 6261694-A	(LH) ★ D6RY 6261695-A	Chocolate	1
76	J(64T) - - w/full reclining seats	(RH) ★ D5RY 6461694-A	(LH) ★ D5RY 6461695-A	Black	1
76	J(64D,P) - - w/partial reclining seats	(RH) ★ D3RY 6261694-B	(LH) ★ D3RY 6261695-B	Black	1
		(RH) ★	(LH) ★ D4RY 6261695-B	Brown	1
		(RH) ★ D6RY 6261694-C	(LH) ★ D6RY 6261695-D	Chocolate	1
73/76	J	★ 130055-ESFA	Black-Button		2
		★ D3DZ 6261144-A	Retainer-paint to match		2
79	J	(RH) ★ D8ZZ 6961694-F	(LH) ★ D8ZZ 6961695-F	Black	1
74	L	(RH) ★ D4FZ 6261694-D	(LH) ★ D4FZ 6261695-D	Black	1
75/76	L(62B,64B,73B)	(RH) ★ D4FZ 6261694-D	(LH) ★ D4FZ 6261695-D	Black	1
75/76	L(64H,73H)	(RH) ★ D8ZZ 6961694-F	(LH) ★ D8ZZ 6961695-F	Black	1
77	L	(RH) ★ D8ZZ 6961694-F	(LH) ★ D8ZZ 6961695-F	Black	1
73	P - - w/full width seat	(RH) ★ D2DZ 6261694-A	(LH) ★ D2DZ 6261695-A	Beige	1
73	P - - w/bucket seats-non-reclining	(RH) ★ D2FZ 6261694-A	(LH) ★ D2FZ 6261695-A	Black	1
73	P - - w/bucket seats-reclining	(RH) ★ D3DZ 6261694-C	(LH) ★ D3DZ 6261695-C	Tan	1
73	P - - w/bucket seats-reclining- "Before 9/18/72"	★ 130055-ESJX	Button-tan		2
73/74	P - - w/bucket seats-reclining- "From 9/18/72"	★ D3DZ 6261144-A	Retainer-tan		4
74	P - - w/full width seat	(RH) ★ D3DZ 6261694-B	(LH) ★ D3DZ 6261695-B	Avocado	1
74	P - - w/bucket seats-non-reclining	(RH) ★ D4FZ 6261694-D	(LH) ★ D4FZ 6261695-D	Black	1
74	P - - w/bucket seats-reclining	(RH) ★ D3DZ 6261694-C	(LH) ★ D3DZ 6261695-C	Tan	1
75	P - - w/full width seat	(RH) ★	(LH) ★ D3DZ 6261695-D	Tan	1
75	P - - w/bucket seats	(RH) ★ D5DZ 6661694-C	(LH) ★ D5DZ 6661694-C	Black	1
76	P(62) - - w/bucket seats	(RH) ★ D6DZ 6661694-C	(LH) ★ D6DZ 6661695-C	Black	1
76	P(62) - - w/full width seat	(RH) ★	(LH) ★ D5DZ 6261695-A	Green	1
77	P - - w/bucket seats	(RH) ★ D6DZ 6661694-C	(LH) ★ D6DZ 6661695-C	Black	1
78/79	P - - w/bucket seats	(RH) D4ZZ 6961694-D	(LH) D4ZZ 6961695-B	Black	1or2
77/79	V - - w/bucket seats	(RH) ★ D6DZ 6661694-L	(LH) ★ D6DZ 6661695-L	Gray	1

COPYRIGHT © 1986— FORD MOTOR COMPANY —DEARBORN, MICHIGAN

1973/79 LINCOLN-MERCURY CARS

YEAR	MODEL/RESTRICTIONS	PART NUMBER	DESCRIPTION		QTY.
61704-5	TRACK ASSY. (FRONT SEAT)-Also refer to groups 61644-5 and 617C80-1				
Note:	● Incl. handle				
73	A - - w/manual split seat- "Before 10/16/72"	(RH) D2AZ 6561704-A	(LH) D2AZ 6561705-A	Passenger	1
73	A - - w/manual split seat- "From 10/16/72"	(RH) D3AZ 6561704-A	(LH) D2AZ 6561705-A	Passenger	1
73	A - - w/manual split seats- "Before 10/16/72"	(RH) D4AZ 6561704-A	(LH) ★	Driver	1
73	A - - w/manual split seat- "From 10/16/72"	(RH) D4AZ 6561704-A	(LH) ★	Driver	1
74/78	A - - w/manual split seats	(RH) D4AZ 6561704-C	(LH) D4AZ 6561705-B	Driver	1
		(RH) D4AZ 6561704-A	(LH) D4AZ 6561705-A	Passenger	1
74/76	A,Y - - w/manual full width seat	(RH) D4AZ 6561704-B	(LH) D4AZ 6561705-B		1
77/78	A - - w/manual full width seat				1
79	A - - w/manual seats	(RH) D9AZ 5461704-A	(LH) D9AZ 5461705-A		1or2
79	A - - w/6 way split seats		Refer to group 61644-5		
73/76	C - - w/manual seat	(RH) D20Z 6561704-A	(LH) D20Z 6561705-A		1
74	C - - w/6 way full width seat	(RH) D40Z 6561710-A	(LH) D40Z 6561711-A		1
75/76	C - - w/6 way split seats	D5LZ 6561710-A	Driver		1
73/	D - - w/6 way full width seat	(RH) C7AZ 6261710-A	(LH) C7AZ 6261711-A		1
73/	D - - w/6 way split seats	D2AZ 6561710-A	Driver		1
		D3VY 6561710-A	Passenger		1
76/77	D - - w/manual seat	(RH) D4AZ 6561704-B	(LH) D4AZ 6561705-B		1
		384872-S2	(UU-52-AH)-bolt-5/16"-18 washer hd hex		4
		382629-S100	(XX-173-AA)-washer		8
		353766-S2	(MM-269)-nut-5/16"-18 flat		4
79	D - - w/manual full width seat	(RH) D4AZ 6561704-B	(LH) D4AZ 6561705-B		1
73	F - - w/manual seat	(RH) ★	(LH) D2ZZ 6561705-A		1or2
74/	F - - w/manual seat	(RH) D20Z 6561704-A	(LH) D20Z 6561705-A		2
75/	F - - w/6 way split seats	D5LZ 6561710-A	Driver		1
79	F	383531-S36	(BB-609-M)-bolt 1/2" outboard		2
75/	G - - w/4 way power bucket seat	D5DZ 6661710-A	Driver		1
75	G - - w/ 2 way manual bucket seats- "Before 5/8/75"	(RH) D4DZ 6261704-A	(LH) D2DZ 6261705-B	Driver	1
		(RH) D4DZ 6261704-A	(LH) ★	Passenger	1
75/	G - - w/ 2 way manual bucket seats- "From 5/8/75"	(RH) D4DZ 6261704-A	(LH) D2DZ 6261705-B	Driver	1
		(RH) D4DZ 6261704-A	(LH) D6DZ 6261705-A	Passenger	1
75/	G - - w/full width seat and center arm rest	(RH) D5DZ 6661704-A	(LH) D5DZ 6661705-A		1
75/	G - - w/full width seat and w/o center arm rest	(RH) D5DZ 6261704-A	(LH) D2DZ 6261705-B		1
77/	G - - w/ 4 way manual bucket seats	D7DZ 6661705-A	Driver		1
73	J	(RH) D0RY 6261705-D	(LH) ● D0RY 6261705-C	Driver	1
		(RH) ★	(LH) ★	Passenger	1
		112198-ES8	Bolt and lockwasher assy.-hex. head-1/4"-20 x 1"		8
		44719-S8	(X-17)-washer-flat-1/4"		8
		E800049-S74	(AB-56)-bolt hex. head-M8 x 14 (Metric)		16
74	J "Before 2/1/74"	(RH) D0RY 6261705-D	(LH) ● D0RY 6261705-C	Driver	1
		(RH) ★	(LH) ★	Passenger	1
74	J "From 2/1/74"	(RH) ★	(LH) ★	Driver	1
		(RH) ★	(LH) D4RY 6261704-B	Passenger	1
76/77	J "Before 1/3/77"	(RH) D7RY 6461704-A	(LH) ● D5RY 6461705-A	Driver	1
		(RH) ● D5RY 6461704-B	(LH) D7RY 6461704-A	Passenger	1

COPYRIGHT © 1986 — FORD MOTOR COMPANY — DEARBORN, MICHIGAN

1973/79 LINCOLN-MERCURY CARS

YEAR	MODEL/RESTRICTIONS	PART NUMBER	DESCRIPTION	QTY.
61704-5	TRACK ASSY. (FRONT SEAT)-Also refer to groups 61644-5 and 617C80-1 — Cont'd			
Note:	● Incl. handle			
77/78	J "From 1/3/77"	(RH) D7RY 6461704-A	(LH) ● D5RY 6461705-A	Driver 1
		(RH) ● D5RY 6461704-B	(LH) D7RY 6461704-A	Passenger 1
79	J - - w/2 way manual seat	(RH) D9ZZ 6661704-A	(LH) D9ZZ 6661705-A	2
79	J - - w/4 way manual seat	D9ZZ 6661705-B	Driver	1
75/	K	D5LZ 6561710-A	Driver and passenger	2
77/	K - - w/manual seats	(RH) D20Z 6561704-A	(LH) D20Z 6561705-A	1
74	L	(RH) D2FZ 6261704-A	(LH) D2FZ 6261705-A	Driver and passenger 2
75/	L - - w/2 way manual seat	(RH) D2FZ 6261704-A	(LH) D2FZ 6261705-A	Driver 1
		(RH) D5FZ 6261704-C	(LH) D2FZ 6261704-A	Passenger 1
77/	L - - w/ 4 way manual seat	D7FZ 6261705-A	Driver	1
73/74	P - - w/full width seat	(RH) ★	(LH) D2DZ 6261705-B	1
73/74	P - - w/bucket seats-reclining	(RH) ★	(LH) D2DZ 6261705-D	Driver 1
		(RH) D4DZ 6261704-A	(LH) D2DZ 6261705-C	Passenger 1
75	P - - w/2 way manual bucket seats- "Before 5/8/75"	(RH) ★	(LH) D2DZ 6261705-B	Driver 1
		(RH) D4DZ 6261704-A	(LH) ★	Passenger 1
75/77	P - - w/2 way manual bucket seats- "From 5/8/75"	(RH) ★	(LH) D2DZ 6261705-B	Driver 1
		(RH) D4DZ 6261704-D	(LH) D6DZ 6261705-A	Passenger 1
75/77	P - - w/full width seat w/o center arm rest	(RH) D5DZ 6261704-A	(LH) D2DZ 6261705-B	1
77	P - - w/full width seat and w/center arm rest	(RH) D5DZ 6661704-A	(LH) D5DZ 6661705-A	1
78/	P - - w/full width seat	(RH) E0BZ 5461704-A	(LH) E0BZ 5461705-A	1
78/	P - - w/bucket seats	(RH) E1DZ 5461704-D	(LH) E1DZ 5461705-D	1
77/	V - - w/4 way manual bucket seat	D7DZ 6661705-A	Driver	1
77/	V - - w/4 way power bucket seat	D5DZ 6661710-A	Driver	1
77/	V - - w/2 way manual bucket seat	(RH) D4DZ 6261704-A	(LH) D6DZ 6261705-A	Passenger 1
617C04-5	SUPPORT (FRONT SEAT BACK PIVOT)			
73/	A,Y - - w/full width seat	D0AZ 62617C04-A	R.H. and L.H.	2
79	A - - w/split seats reclining	(RH) D9AZ 54617C04-A	(LH) D9AZ 54617C05-A	1
73/76	C(65) - - w/auto. seat back latch	(RH) D30Z 65617C04-A	(LH) D30Z 65617C05-A	1
73/	D - - w/reclining seat	D5VY 60617C04-A	R.H. and L.H.	2
76/	F - - w/auto. seat back latch	(RH) D30Z 65617C04-A	(LH) D30Z 65617C05-A	1
78/	G(54) - - w/full width seat and center arm rest "From 11/1/77"	(RH) D8BZ 54617C04-A	(LH) D8BZ 54617C05-A	1
73/78	J		Serviced only in assy.-group 64700-1	
73	K	D2SZ 65617C04-A		1
78/	P(54,74)	(RH) D8BZ 54617C04-A	(LH) D8BZ 54617C05-A	1
78/	V - - w/full width seat and center arm rest "From 11/1/77"	(RH) D8BZ 54617C04-A	(LH) D8BZ 54617C05-A	1
73/76	Y - - w/full width seat	D0AZ 62617C04-A	R.H. and L.H.	2

1973/79 LINCOLN–MERCURY CARS

YEAR	MODEL/RESTRICTIONS	PART NUMBER	DESCRIPTION	QTY.
61710–1	Refer to group 61704–5			
617B10	Refer to group 617B12–5			

MODEL/RESTRICTIONS	CABLE PART NUMBER	LENGTH (INCHES)	TUBE PART NUMBER	LENGTH (INCHES)	QTY.
617B12–5 CABLE AND TUBE (FRONT SEAT TRACK ADJUSTING)					
1973					
A,Y – –w/6 way full width seat	D2LZ 65617B12–A	12"	D2LZ 65618A92–A	11"	3
	C7AZ 62617B14–A	39"	C7AZ 62618A86–A	38"	3
A – – w/6 way split seats	D3VY 65617B14–A	9 1/2"	D3VY 65618A86–A	8 3/8"	2
	D2LZ 65617B12–A	12"	D2LZ 65618A92–A	11"	4
C – – w/6 way full width seat	D0SZ 65617B14–A	37"	D0SZ 65618A86–A	36"	3
	D2LZ 65617B12–A	12"	D2LZ 65618A92–A	11"	2
	D2LZ 65617B14–A	15 9/16"	D2LZ 65618A86–A	14 5/16"	1
D – – w/2 way full width seat	★	35"	★	34"	1
	C7AZ 62617B15–A	7 5/8"	C7AZ 62618A87–A	6 1/2"	1
D – –w/6 way full width seat	C7AZ 62617B14–A	39"	C7AZ 62618A86–A	38"	3
	C7AZ 62617B10–A	7 3/4"	C7AZ 62618A90–A	6 3/4"	1
	C7AZ 62617B12–A	9 1/2"	C7AZ 62618A87–A	6 1/2"	1
D – – w/6 way split seats	D2LZ 65617B12–A	12"	D2LZ 65618A92–A	11"	2
	D3VY 65617B14–A	9 1/2"	D3VY 65618A86–A	8 3/8"	1
F – – w/4 way bucket seat	D1WY 65617B10–A	4 3/8"	★	3 1/2"	1
K – – w/6 way split seats	D2LZ 65617B12–A	12"	D2LZ 65618A92–A	11"	2
	D2LZ 65617B14–A	15 9/16"	D2LZ 65618A86–A	14 5/16"	1
1974					
A,Y – – w/6 way full width seat	D2LZ 65617B12–A	12"	D2LZ 65618A92–A	11"	3
	C7AZ 62617B14–A	39"	C7AZ 62618A86–A	38"	3
A – – w/6 way split seats	D3VY 65617B14–A	9 1/2"	D3VY 65618A86–A	8 3/8"	2
	D2LZ 65617B12–A	12"	D2LZ 65618A92–A	11"	4
C – – w/6 way full width seat	D0SZ 65617B14–A	37"	D0SZ 65618A86–A	36"	3
	D2LZ 65617B12–A	12"	D2LZ 65618A92–A	11"	2
	D2LZ 65617B14–A	15 9/16"	D2LZ 65618A86–A	14 5/16"	1
D – – w/6 way full width seat	D2LZ 65617B12–A	12"	D2LZ 65618A92–A	11"	3
	C7AZ 62617B14–A	39"	C7AZ 62618A86–A	38"	3
D – – w/6 way split seats	D2LZ 65617B12–A	12"	D2LZ 65618A92–A	11"	1
	D3VY 65617B14–A	9 1/2"	D3VY 65618A86–A	8 3/8"	1
K – – w/6 way split seats	D2LZ 65617B12–A	12"	D2LZ 65618A92–A	11"	2
	D2LZ 65617B14–A	15 9/16"	D2LZ 65618A86–A	14 5/16"	1
1975/1976					
A,Y – – w/6 way full width seat	D2LZ 65617B12–A	12"	D2LZ 65618A92–A	11"	3
	C7AZ 62617B14–A	39"	C7AZ 62618A86–A	38"	3
A – – w/6 way split seats	D3VY 65617B14–A	9 1/2"	D3VY 65618A86–A	8 3/8"	2
	D2LZ 65617B12–A	12"	D2LZ 65618A92–A	11"	4
C – – w/6 way full width seat	D0SZ 65617B14–A	37"	D0SZ 65618A86–A	36"	3
	D2LZ 65617B12–A	12"	D2LZ 65618A92–A	11"	2
	D2LZ 65617B14–A	15 9/16"	D2LZ 65618A86–A	14 5/16"	1
C – – w/6 way split seats	D2LZ 65617B12–A	12"	D2LZ 65618A92–A	11"	2
	D2LZ 65617B14–A	15 9/16"	D2LZ 65618A86–A	14 5/16"	1
D – – w/6 way full width seat	C7AZ 62617B14–A	39"	C7AZ 62618A86–A	38"	3
	C7AZ 62617B12–A	9 1/2"	C7AZ 62618A85–A	8 3/8"	1
	C7AZ 62617B10–A	7 3/4"	C7AZ 62618A90–A	6 3/4"	1
	C7AZ 62617B15–A	7 5/8"	C7AZ 62618A87–A	6 1/2"	1
D – – w/6 way split seats	D2LZ 65617B12–A	12"	D2LZ 65618A92–A	11"	1
	D5VY 60617B14–A	13 1/2"	D5VY 60618A86–A	12 1/4"	1
	D3VY 65617B14–A	9 1/2"	D3VY 65618A86–A	8 3/8"	1

COPYRIGHT © 1986 — FORD MOTOR COMPANY — DEARBORN, MICHIGAN

1973/79 LINCOLN—MERCURY CARS

617B12-5 CABLE AND TUBE (FRONT SEAT TRACK ADJUSTING) — Cont'd

1975/1976

MODEL/RESTRICTIONS	CABLE PART NUMBER	LENGTH (INCHES)	TUBE PART NUMBER	LENGTH (INCHES)	QTY.
F — — w/6 way split seats	D2LZ 65617B12-A	12"	D2LZ 65618A92-A	11"	1
	D2LZ 65617B14-A	15 9/16"	D2LZ 65618A86-A	14 5/16"	1
G — — w/4 way full width seat	D0SZ 65617B14-A	37"	D0SZ 65618A86-A	36"	2
	D2LZ 65617B12-A	12"	D2LZ 65618A92-A	11"	1
G — — w/4 way bucket seat	D5DZ 66617B15-B	12 5/8"	D5DZ 66618A86-B	11 1/2"	1
	D2LZ 65617B12-A	12"	D2LZ 65618A92-A	11"	1
K — — w/6 way split seats	D2LZ 65617B12-A	12"	D2LZ 65618A92-A	11"	2
	D2LZ 65617B14-A	15 9/16"	D2LZ 65618A86-A	14 5/16"	1

1977

MODEL/RESTRICTIONS	CABLE PART NUMBER	LENGTH (INCHES)	TUBE PART NUMBER	LENGTH (INCHES)	QTY.
A — — w/6 way full width seat	D2LZ 65617B12-A	12"	D2LZ 65618A92-A	11"	3
	C7AZ 62617B14-A	39"	C7AZ 62618A86-A	38"	3
A — — w/6 way split seats	D3VY 65617B14-A	9 1/2"	D3VY 65618A86-A	8 3/8"	2
	D2LZ 65617B12-A	12"	D2LZ 65618A92-A	11"	4
D — — w/6 way full width seat	C7AZ 62617B14-A	39"	C7AZ 62618A86-A	38"	3
	C7AZ 62617B12-A	9 1/2"	C7AZ 62618A85-A	8 3/8"	1
	C7AZ 62617B10-A	7 3/4"	C7AZ 62618A90-A	6 3/4"	1
	C7AZ 62617B15-A	7 5/8"	C7AZ 62618A87-A	6 1/2"	1
D — — w/6 way split seats	D2LZ 65617B12-A	12"	D2LZ 65618A92-A	11"	1
	D5VY 60617B14-A	13 1/2"	D5VY 60618A86-A	12 1/4"	1
	D3VY 65617B14-A	9 1/2"	D3VY 65618A86-A	8 3/8"	1
F — — w/6 way full width seat	D0SZ 65617B14-A	37"	D0SZ 65618A86-A	36"	3
	D2LZ 65617B12-A	12"	D2LZ 65618A92-A	11"	2 or 3
	D2LZ 65617B14-A	15 9/16"	D2LZ 65618A86-A	14 5/16"	1
F — — w/6 way bucket or split seats	D2LZ 65617B12-A	12"	D2LZ 65618A92-A	11"	2
G — — w/4 way full width seat	D0SZ 65617B14-A	37"	D0SZ 65618A86-A	36"	2
	D2LZ 65617B12-A	12"	D2LZ 65618A92-A	11"	1
G — — w/4 way bucket seat	D5DZ 66617B15-B	12 5/8"	D5DZ 66618A86-B	11 1/2"	1
	D2LZ 65617B12-A	12"	D2LZ 65618A92-A	11"	1
K — —w/6 way bucket or split seats	D2LZ 65617B12-A	12"	D2LZ 65618A92-A	11"	2
V — — w/4 way full width seat	D0SZ 65617B14-A	37"	D0SZ 65618A86-A	36"	2
	D2LZ 65617B12-A	12"	D2LZ 65618A92-A	11"	1
V — — w/4 way bucket seat	D5DZ 66617B15-B	12 5/8"	D5DZ 66618A86-B	11 1/2"	1
	D2LZ 65617B12-A	12"	D2LZ 65618A92-A	11"	1

1978

MODEL/RESTRICTIONS	CABLE PART NUMBER	LENGTH (INCHES)	TUBE PART NUMBER	LENGTH (INCHES)	QTY.
A — — w/6 way full width seat	D2LZ 65617B12-A	12"	D2LZ 65618A92-A	11"	3
	C7AZ 62617B14-A	39"	C7AZ 62618A86-A	38"	3
A — — w/6 way split seats	D3VY 65617B14-A	9 1/2"	D3VY 65618A86-A	8 3/8"	2
	D2LZ 65617B12-A	12"	D2LZ 65618A92-A	11"	4
D — — w/6 way full width seat	C7AZ 62617B14-A	39"	C7AZ 62618A86-A	38"	3
	C7AZ 62617B12-A	9 1/2"	C7AZ 62618A85-A	8 3/8"	1
	C7AZ 62617B10-A	7 3/4"	C7AZ 62618A90-A	6 3/4"	1
	C7AZ 62617B15-A	7 5/8"	C7AZ 62618A87-A	6 1/2"	1
D — — w/6 way split seats	D2LZ 65617B12-A	12"	D2LZ 65618A92-A	11"	1
	D5VY 60617B14-A	13 1/2"	D5VY 60618A86-A	12 1/4"	1
	D3VY 65617B14-A	9 1/2"	D3VY 65618A86-A	8 3/8"	1
F — — w/6 way full width seat	D0SZ 65617B14-A	37"	D0SZ 65618A86-A	36"	3
	D2LZ 65617B12-A	12"	D2LZ 65618A92-A	11"	2 or 3
	D2LZ 65617B14-A	15 9/16"	D2LZ 65618A86-A	14 5/16"	1
F — — w/6 way bucket or split seats	D2LZ 65617B12-A	12"	D2LZ 65618A92-A	11"	3
G — — w/4 way full width seat	D0SZ 65617B14-A	37"	D0SZ 65618A86-A	36"	2
	D2LZ 65617B12-A	12"	D2LZ 65618A92-A	11"	1
G — — w/4 way bucket seat	D5DZ 66617B15-B	12 5/8"	D5DZ 66618A86-B	11 1/2"	1
	D2LZ 65617B12-A	12"	D2LZ 65618A92-A	11"	1

617B12–5 CABLE AND TUBE (FRONT SEAT TRACK ADJUSTING) — Cont'd

MODEL/RESTRICTIONS	CABLE PART NUMBER	LENGTH (INCHES)	TUBE PART NUMBER	LENGTH (INCHES)	QTY.
1978					
K – – w/6 way bucket or split seats	D2LZ 65617B12–A	12"	D2LZ 65618A92–A	11"	3
P – – w/4 way full width seat	D0SZ 65617B14–A	37"	D0SZ 65618A86–A	36"	2
	D8BZ 54617B14–A	12"	D2LZ 65618A92–A	11"	1
	D2LZ 65617B12–A	12"	D2LZ 65618A92–A	11"	1
V – – w/4 way full width seat	D0SZ 65617B14–A	37"	D0SZ 65618A86–A	36"	2
	D2LZ 65617B12–A	12"	D2LZ 65618A92–A	11"	1
V – – w/4 way bucket seat	D5DZ 66617B15–B	12 5/8"	D5DZ 66618A86–B	11 1/2"	1
	D2LZ 65617B12–A	12"	D2LZ 65618A92–A	11"	1
1979					
A – – w/6 way full width seat	D8BZ 54617B14–A	12"	D2LZ 65618A92–A	11"	3
	C7AZ 62617B14–A	39"	C7AZ 62618A86–A	38"	3
A – – w/6 way split seats	D9AZ 54617B14–A	16"	D9AZ 54618A86–A	15"	3
D – – w/6 way full width seat	C7AZ 62617B14–A	39"	C7AZ 62618A86–A	38"	3
	C7AZ 62617B12–A	9 1/2"	C7AZ 62618A85–A	8 3/8"	1
	C7AZ 62617B10–A	7 3/4"	C7AZ 62618A90–A	6 3/4"	1
	C7AZ 62617B15–A	7 5/8"	C7AZ 62618A87–A	6 1/2"	1
D – – w/6 way split seats	D2LZ 65617B12–A	12"	D2LZ 65618A92–A	11"	1
	D5VY 60617B14–A	13 1/2"	D5VY 60618A86–A	12 1/4"	1
	D3VY 65617B14–A	9 1/2"	D3VY 65618A86–A	8 3/8"	1
F – – w/6 way full width seat	D0SZ 65617B14–A	37"	D0SZ 65618A86–A	36"	3
	D2LZ 65617B12–A	12"	D2LZ 65618A92–A	11"	AR
	D2LZ 65617B14–A	15 9/16"	D2LZ 65618A86–A	14 5/16"	1
F – – w/6 way bucket or split seats	D2LZ 65617B12–A	12"	D2LZ 65618A92–A	11"	3
G – – w/4 way full width seat	D0SZ 65617B14–A	37"	D0SZ 65618A86–A	36"	2
	D2LZ 65617B12–A	12"	D2LZ 65618A92–A	11"	1
G – – w/4 way bucket seat	D5DZ 66617B15–B	12 5/8"	D5DZ 66618A86–B	11 1/2"	1
	D2LZ 65617B12–A	12"	D2LZ 65618A92–A	11"	1
K – – w/6 way bucket or split seats	D2LZ 65617B12–A	12"	D2LZ 65618A92–A	11"	3
P – – w/4 way full width seat	D0SZ 65617B14–A	37"	D0SZ 65618A86–A	36"	2
	D8BZ 54617B14–A	12"	D2LZ 65618A92–A	11"	1
	D2LZ 65617B12–A	12"	D2LZ 65618A92–A	11"	1
V – – w/4 way full width seat	D0SZ 65617B14–A	37"	D0SZ 65618A86–A	36"	2
	D2LZ 65617B12–A	12"	D2LZ 65618A92–A	11"	1
V – – w/4 way bucket seat	D5DZ 66617B15–B	12 5/8"	D5DZ 66618A86–B	11 1/2"	1
	D2LZ 65617B12–A	12"	D2LZ 65618A92–A	11"	1

61726 ROD (FRONT SEAT TRACK LATCH TIE)

YEAR	MODEL/RESTRICTIONS	PART NUMBER	DESCRIPTION	QTY.
73/78	A – – w/ split seats	C9MZ 6561726–B	14" long	2
73/78	A – – w/ full width seat	D7VY 6061726–A	48" long	1
79	A – – w/full width seat	D9AZ 5461726–B	44 1/4" long	1
79	A – – w/split seats	D9AZ 5461726–A	12 5/8" long	1
73/76	C – – w/ full width seat	D20Z 6561726–A	41 1/8" long	1
73/76	C – – w/ bucket seats	D20Z 6561726–B	9 1/4" long	2
76/	D – – w/full width seat	D7VY 6061726–A	47" long	1
74/	F – – w/ bucket seats	D20Z 6561726–B	9 1/4" long	2
76	F – – w/ full width seat	D20Z 6561726–A	41 1/8" long	1
77/	F – – w/ full width seat	D70Z 6561726–A	42" long	1
75/	G – – w/full width seat and w/o center arm rest	D0DZ 6261726–A	39" long	1

COPYRIGHT © 1986 — FORD MOTOR COMPANY — DEARBORN, MICHIGAN

1973/79 LINCOLN–MERCURY CARS

YEAR	MODEL/RESTRICTIONS	PART NUMBER	DESCRIPTION	QTY.
61726	ROD (FRONT SEAT TRACK LATCH TIE) — Cont'd			
75/	G – – w/full width seat and center arm rest	D5DZ 6661726–A	38" long	1
77/	G – – w/4 way seat	D7DZ 6261726–A	7 3/4" long	1
79	J	D7ZZ 6961726–A	7" long	1
77/	K – – w/split seats	D20Z 6561726–B	9 1/4" long	1
77/	L – – w/4 way seat	D7FZ 6261726–A	6" long	1
73	P – – w/o reclining seat	D0DZ 6261726–A	39" long	1
73	P – – w/reclining seat		Serviced only in assy.–group 61704–5	
74/77	P – – w/2 way seat	D0DZ 6261726–A	39" long	1
77	P – – w/4 way seat	D7DZ 6261726–A	7 3/4" long	1
78/	P – – w/full width seat	D8BZ 5461726–A	41 1/4" long	1
77/	V – – w/full width seat and center arm rest	D5DZ 6661726–A	38" long	1
77/	V – – w/4 way seat	D7DZ 6261726–A	7 3/4" long	1
73/76	Y – – w/ full width seat	C9AZ 6261726–A	48" long	1
61738–9	TRACK (FRONT SEAT INNER)			
79	A – – w/6 way full width seat	(RH) D9AZ 5461738–A	(LH) D9AZ 5461739–A	1
75/	G – – w/4 way full width seat and center arm rest	(RH) D5DZ 6661738–A	(LH) D5DZ 6661739–A	1
75/	G – – w/4 way bucket seat	D5DZ 6661739–B		1
78/	P – – w/4 way full width seat	(RH) D5DZ 6661738–A	(LH) D5DZ 6661739–A	1
77/	V – – w/4 way full width seat and center arm rest			1
77/	V – – w/4 way bucket seat	D5DZ 6661739–B		1
617A44	SPRING (FRONT SEAT TRACK VERTICAL ASSIST)			
73	F – – w/4 way seat	D2WY 65617A44–A		1
617K45–6	WIRE (FRONT SEAT CONTROL)			
79	A	(RH) D9AZ 54617K45–A	(LH) D9AZ 54617K46–A	1
75	G(66) – – w/bucket seats	(RH) D5DZ 66617K45–A	(LH) D5DZ 66617K46–A	1
75/	G(66) – – w/full width seat and center arm rest	(RH) D5DZ 66617K45–C	(LH) D5DZ 66617K46–C	1
76/	G – – w/bucket seats	(RH) D7DZ 66617K45–A	(LH) D7DZ 66617K46–A	1
73/78	J – – w/full reclining seat	D3RY 62617K46–A	Short–17 1/4" long	2
		D3RY 62617K46–B	Long–26 3/4" long	2
73/78	J – – w/partial reclining seat	D3RY 62617K45–A	R.H.–26 7/16" long	2
73/78	J – – w/partial reclining seat	D3RY 62617K46–C	L.H.–17 7/8" long	2
73/	L	D6ZZ 69617K45–A	R.H. and L.H.–20 5/8" long	2
75/77	P – – w/reclining seats	(RH) D5DZ 66617K45–A	(LH) D5DZ 66617K46–A	1
77/	V – – w/full width seat and center arm rest	(RH) D5DZ 66617K45–C	(LH) D5DZ 66617K46–C	1
77/	V – – w/bucket seats	(RH) D7DZ 66617K45–A	(LH) D7DZ 66617K46–A	1
61748–9	INSULATOR (FRONT SEAT TRACK TO FLOOR)			
79	A	D9AZ 5461748–A	Blue	2or4
		D9AZ 5461748–B	Camel	2or4
		D9AZ 5461748–E	Cordovan	2or4
		D9AZ 5461748–F	Gray	2or4
		D9AZ 5461748–C	Green	2or4
		D9AZ 5461748–D	Red	2or4
75/77	G "Before 11/1/76"	D5DZ 6261748–B	3 1/2" x 3 1/2"	AR
77/	G "From 11/1/76"	D7DZ 6261748–A	2 3/16" x 4 3/8"	AR
		D5DZ 6261748–B	3 1/2" x 3 1/2"	AR
79	J – – w/4 way manual seat	D8BZ 5461748–A		2
79	J – – w/o 4 way manual seat	(RH) D9ZZ 6661748–A	(LH) D9ZZ 6661749–A	2
77/	K	(RH) D7LY 6561748–A	(LH) D7LY 6561749–A	2
75/	L – – w/2 way seat	D5DZ 6261748–A	Driver and passenger	2

YEAR	MODEL/RESTRICTIONS	PART NUMBER	DESCRIPTION	QTY.
61748–9	INSULATOR (FRONT SEAT TRACK TO FLOOR) — Cont'd			
77/	L – – w/4 way seat	D7FZ 6261748–A	Driver	2
75/77	P "Before 11/1/76"	D5DZ 6261748–B	3 1/2" x 3 1/2"	AR
77	P "From 11/1/76"	D7DZ 6261748–A	2 3/16" x 4 3/8"	AR
		D5DZ 6261748–B	3 1/2" x 3 1/2"	AR
78/	P – – w/bucket seats	D8BZ 5461748–A	R.H. and L.H.	2
77/	V	D7DZ 6261748–A	2 3/16" x 4 3/8"	AR
		D5DZ 6261748–B	3 1/2" x 3 1/2"	AR
617B48	BRACKET (FRONT SEAT TRACK MOTOR MOUNTING)			
73/	A – – w/6 way split seats	D3VY 65617B48–A	Driver and passenger	2
73	A,D,Y – – w/6 way full width seat	D20Z 65617B48–A		1
74/76	A,Y – – w/6 way full width seat			1
77/78	A – – w/6 way full width seat			1
79	A – – w/6 way full width seat	D9AZ 54617B48–A		1
73/76	C – – w/6 way full width seat	D20Z 65617B48–A		1
73	D – – w/2 way full width seat	D0VY 65617B48–A	Less terminal bracket	1
73	D – – w/2 way full width seat	D0VY 65617B48–C	Incl. terminal bracket	1
74	D(exc. Town Car and Town Coupe) – – w/6 way full width seat	D20Z 65617B48–A		1
73/	D(Town Car and Town Coupe) – – w/6 way full width seat	D0VY 65617B48–A	Less terminal bracket	1
73/74	D(Town Car, Town Coupe) – – w/6 way full width seat	D0VY 65617B48–C	Incl. terminal bracket	1
73/75	D – – w/6 way split seats– "Before 10/11/74"	D3VY 65617B48–A	Driver and passenger	2
75/	D – – w/6 way split seats– "From 10/11/74"	D5VY 60617B48–A	Driver and passenger	2
73	F – – w/4 way seat	D1WY 65617B48–A		1
77/	F – – w/6 way full width seat	D20Z 65617B48–A		1
75/	G – – w/4 way full width seat and center arm rest	D5DZ 66617B48–A		1
78/	P – – w/4 way full width seat	D8BZ 54617B48–A		1
77/	V – – w/4 way full width seat and center arm rest	D5DZ 66617B48–A		1
617A52	SPRING (FRONT SEAT TRACK VERTICAL LATCH)			
77/	G,L,V – – w/4 way manual seat	D7FZ 62617A52–A		1
79	J			1
77	P – – w/4 way seat			1
61753	HANDLE (FRONT SEAT TRACK ADJUSTING)			
73/76	A,Y – – w/manual seats	D1AZ 6561753–A	R.H. and L.H.	2
77/	A – – w/manual seats			2
73/76	C,D,F,G,L,P – – w/manual seats	C5AZ 6261753–B	R.H. and L.H.	2
77/	D,F,G,K,L,P,V – – w/2 way manual seats			2
77/	G,L,V – – w/4 way manual seat	D7FZ 6261753–B	L.H.	1
79	J			1
77	P – – w/4 way seat			1
61753	KNOB (FRONT SEAT BACK LOCKING BAR CATCH)			
73/78	J	D0RY 6261753–A	R.H. and L.H.	2
61753	KNOB (FRONT SEAT TRACK RELEASE)			
73/74	J "Before 2/1/74"	D0RY 6261753–B	R.H. and L.H.	2
74/78	J "From 2/1/74"	D4RY 6261753–A	R.H. and L.H.	2

COPYRIGHT © 1986 — FORD MOTOR COMPANY — DEARBORN, MICHIGAN

1973/79 LINCOLN-MERCURY CARS

YEAR	MODEL/RESTRICTIONS	PART NUMBER	DESCRIPTION	QTY.
617A64	SPRING (FRONT SEAT TRACK VERTICAL ASSIST)			
73/	A,D - - w/6 way split seats	D2LZ 65617A64-A	Driver and passenger-clock type	2
74/76	C,F - - w/6 way split seats		Driver	2
77/	F - - w/6 way split seats		Driver	2
73/	K - - w/6 way bucket or split seats		Driver and passenger	2
73/76	A,Y - - w/6 way full width seat	D3AZ 65617A64-A	R.H. and L.H.-coil type	2
77/	A - - w/6 way full width seat		R.H. and L.H.- coil type	2
74/75	D - - w/6 way full width or split seats		Driver and passenger	2
76/	D - - w/6 way split seats		Driver and passenger	2
76/	D - - w/6 way full width seat	C9AZ 62617A64-A	Coil type-7" long	1
75/	G - - w/4 way bucket seats	D2LZ 65617A64-A	Driver	1
75/	G - - w/4 way full width seat and center arm rest	D5DZ 66617A64-A		2
78/	P - - w/4 way full width seat			2
77/	V			2
61781	BUSHING (FRONT SEAT TRACK PIVOT)			
73	D - - w/2 way full width seat	C7AZ 6261781-A		4
73/	D(Town Car, Town Coupe) - - w/6 way full width seat			4
61781	BUSHING (FRONT SEAT HINGE PIVOT)			
73/78	J	D3RY 6261781-A	Black	4

YEAR	MODEL/RESTRICTIONS	PART NUMBER						DESCRIPTION	QTY.
617C80-1	BASE (FRONT SEAT ADJUSTER REGULATOR)								
73	A,Y - - w/6 way full width seat	(RH)	D3VY	65617C80-A	(LH)	D3VY	65617C81-B		1or2
73	A - - w/6 way split seats	(RH)	D3VY	65617C80-B	(LH)	D3VY	65617C81-B	Driver and passenger	1or2
74/78	A - - w/6 way split seats	(RH)		★	(LH)	D3VY	65617C81-B	Driver	1
		(RH)	D3VY	65617C80-B	(LH)		★	Passenger	1
79	A - - w/6 way full width seat	(RH)	D9AZ	54617C80-A	(LH)	D9AZ	54617C81-A		1
79	A - - w/6 way split seats	(RH)	D9AZ	54617C80-A	(LH)	D9AZ	54617C81-A		1
73	C - - w/6 way full width seat	(RH)	D30Z	65617C80-A	(LH)	D30Z	65617C81-A		1
74	C - - w/6 way split seats	(RH)	D30Z	65617C80-A	(LH)	D30Z	65617C81-A	Driver	1
75/76	C - - w/6 way split seats	(RH)	D70Z	65617C80-B	(LH)	D70Z	65617C81-B		1
73	D - - w/2 way full width seat	(RH)	D1VY	65617C80-A	(LH)	D1VY	65617C81-A		1
73/	D - - w/6 way split seats	(RH)	D3VY	65617C80-B	(LH)	D3VY	65617C81-B	Driver	1or2
		(RH)	D3VY	65617C80-A	(LH)	D3VY	65617C81-A	Passenger	1
73	D(exc. Town Car and Town Coupe) - - w/6 way full width seat	(RH)	D3VY	65617C80-A	(LH)	D3VY	65617C81-B		1
73/74	D(Town Car and Town Coupe) - - w/6 way full width seat	(RH)	D3VY	65617C80-C	(LH)	D3VY	65617C81-C		1
75/	D - - w/6 way full width seat	(RH)	D3VY	65617C80-C	(LH)	D3VY	65617C81-C		1
74	F - - w/6 way split seats	(RH)	D30Z	65617C80-A	(LH)	D30Z	65617C81-A	Driver	1
75/	F - - w/6 way bucket or split seats	(RH)	D70Z	65617C80-B	(LH)	D70Z	65617C81-B		1

YEAR	MODEL/RESTRICTIONS	PART NUMBER	DESCRIPTION	QTY.
617C80-1	BASE (FRONT SEAT ADJUSTER REGULATOR) — Cont'd			
77/	F – – w/6 way full width seat "From 2/1/77"	(RH) D70Z 65617C80-A	(LH) D70Z 65617C81-A	1
75/	G – – w/4 way bucket seat	(RH) D5DZ 66617C80-A	(LH) D5DZ 66617C81-A	1
75/	G – – w/4 way full width seat and center arm rest	(RH) D6DZ 66617C80-B	(LH) D5DZ 66617C81-A	1
73/74	K – – w/6 way split seats	(RH) D30Z 65617C80-A	(LH) D30Z 65617C81-A	1
75/	K – – w/6 way bucket or split seats	(RH) D70Z 65617C80-B	(LH) D70Z 65617C81-B	1
78/	P – – w/4 way full width seat	(RH) D8BZ 54617C80-A	(LH) D8BZ 54617C81-A	1
77/	V – – w/4 way bucket seat	(RH) D5DZ 66617C80-A	(LH) D5DZ 66617C81-A	1
77/	V – – w/4 way full width seat and center arm rest	(RH) D6DZ 66617C80-B	(LH) D5DZ 66617C81-A	1
61796	SUPPORT (FRONT SEAT TRACK REAR)			
73/74	P	D7DZ 6261796-A		1
617A98-9	SUPPORT (FRONT SEAT REGULATOR HORIZONTAL NUT)			
73	F – – w/4 way seat	(RH) D1WY 65617A98-A	(LH) D1WY 65617A99-A	1
61804-5	BRACKET (FRONT SEAT TRACK ASSIST SPRING)			
76	A,C,Y – – w/6 way full width seat	D5VY 6061804-A	R.H.	1
77/78	A – – w/6 way full width seat			1
79	A – – w/6 way full width seat	D9AZ 5461804-A		1
75/76	D – – w/6 way split seats– "Before 12/1/75"	(RH) D5VY 6061804-A	(LH) D5VY 6061805-A	1
76/	D – – w/6 way split seats– "From 12/1/75"	D5VY 6061805-A	Driver and passenger	2
618C26	RETAINER (FRONT SEAT ADJUSTER TRANSMISSION PINION)			
73/76	A,Y – – w/6 way full width seat	D3AZ 65618C26-A		2or4
73/78	A – – w/6 way split seats		Driver and passenger	2
77/78	A – – w/6 way full width seat			2or4
79	A – – w/6 way full width or split seats	D9AZ 54618C26-A		2
74/76	C – – w/6 way full width or split seats	D3AZ 65618C26-A		2
73	D – – w/full width seat	D2VY 65618C26-A		2
73/	D – – w/6 way full width or split seats	D3AZ 65618C26-A	Driver and passenger	2or4
74/	F – – w/6 way split seats			2
77/	F – – w/6 way full width or split seats			2or4
75/	G – – w/4 way full width seat and center arm rest or bucket seats	D5DZ 66618C26-A	R.H. and L.H.	2
		387254-S	Ring-5/8" retaining	1or2
73/	K – – w/6 way bucket or split seats	D3AZ 65618C26-A		2
78/	P – – w/4 way full width seat	D5DZ 66618C26-A	R.H. and L.H.	2
		387254-S	(QQ-75-M)-ring-5/8 retaining	2
77/	V – – w/4 way full width seat and center arm rest or bucket seats	D5DZ 66618C26-A	R.H. and L.H.	2
		387254-S	(QQ-75-M)-ring-5/8" retaining	1or2
61828	SPRING (FRONT SEAT TRACK ASSIST)			
73/76	A,Y – – w/manual full width seat	C1SY 6361828-A		2
73	A – – w/manual split seats	D2SZ 6561828-A		2
73/76	A,Y – – w/6 way full width seat	D3AZ 6561828-A	Coil type	1
74/76	A,Y – – w/6 way full width seat	D2LZ 6561828-A	Clock type	2

COPYRIGHT © 1986 — FORD MOTOR COMPANY — DEARBORN, MICHIGAN

1973/79 LINCOLN-MERCURY CARS

YEAR	MODEL/RESTRICTIONS	PART NUMBER	DESCRIPTION	QTY.
61828	SPRING (FRONT SEAT TRACK ASSIST) — Cont'd			
74/78	A - - w/manual full width or split seats	C1SY 6361828-A		2
77/78	A - - w/6 way full width seat	D3AZ 6561828-A	Coil type	1
		D2LZ 6561828-A	Clock type	2
79	A - - w/manual seats	D9AZ 5461828-A		2
79	A - - w/6 way full width seat	D9AZ 5461828-B		1
73/76	C - - w/manual bucket or split seats	D20Z 6561828-A		2
73/76	C - - w/6 way full width seat	D2SZ 6561828-A	R.H.-horizontal- coil type	1
74/76	C - - w/6 way full width seat	D2LZ 6561828-A	Clock type	2
73/74	D(exc. Town Car and Town Coupe) - - w/6 way full width seats			1
74	D - - w/6 way full width seat	D3AZ 6561828-A	Coil type	1
75/	D - - w/6 way split seats			1
76/	D - - w/manual full width seat	C1SY 6361828-A		2
73	F - - w/manual seats	D1ZZ 6561828-A		2
73	F - - w/4 way seat	D1WY 6561828-A		2
74	F - - w/6 way full width seat	D2SZ 6561828-A		1
74	F - - w/6 way split seats	D2LZ 6561828-A		2
74/	F - - w/manual seats	D20Z 6561828-A		2
77/	F - - w/6 way full width seat	D2SZ 6561828-A	R.H.- horizontal-coil type	1
		D2LZ 6561828-A	R.H. and L.H.-clock type	1
75/	G - - w/2 way manual seat	C1SY 6361828-A	R.H. and L.H.-6" long	2
		D2DZ 6561828-A	R.H. and L.H.-8 1/4" long	2
75/	G - - w/4 way power full width seat and center arm rest or bucket seats	D5DZ 6661828-A		1or2
77/	G - - w/4 way manual seat	D7FZ 6261828-A	L.H. - driver - 8" long	1
73/78	J - - w/o reclining seat	D3RY 6261828-B		2
79	J	D7FZ 6261828-A		1
73	K	D2SZ 6561828-A	R.H.-horizontal	1
		D2LZ 6561828-A	R.H. and L.H.-rear	1or2
77/	K	D20Z 6561828-A		1
74/	L - - w/2 way manual seat	D1ZZ 6561828-A	R.H. and L.H.	2
77/	L - - w/4 way manual seat	D7FZ 6261828-A	L.H. - driver - 8" long	1
73/	P - - w/2 way manual seat	C1SY 6361828-A	R.H. and L.H.-6" long	2
73/74	P - - w/bucket seats-non-reclining	D1ZZ 6561828-A	R.H. and L.H.-9 1/2" long	2
74/	P - - w/bucket seats-reclining	D2DZ 6561828-A	R.H. and L.H.-8 1/4" long	2
77/	P - - w/4 way manual seat	D7FZ 6261828-A	L.H. - driver - 8" long	1
78/	P - - w/4 way full width seat	D5DZ 6661828-A		2
77/	V - - w/2 way manual seat	C1SY 6361828-A	R.H. and L.H. - 6" long	2
		D2DZ 6561828-A	R.H. and L.H. - 8 1/4" long	2
77/	V - - w/4 way power full width seat and center arm rest or bucket seats	D5DZ 6661828-A		1or2
77/	V - - w/4 way manual seat	D7FZ 6261828-A	L.H.-driver -8" long	1
618C28	RETAINER (FRONT SEAT ADJUSTER SPRING)			
73/	D(Town Car, Town Coupe) - - w/6 way full width seat	C7AZ 63618C28-B		2
618C34	SPACER (FRONT SEAT ADJUSTER REGULATOR SOLENOID RETAINER)			
73	D - - w/2 way full width seat	C7AZ 62618C34-A		3
74/	D(Town Car, Town Coupe) - - w/6 way full width seat			3
618C40	WASHER (FRONT SEAT TRACK LINK)			
73	D - - w/2 way seat	C7AZ 62618C40-A		4
73/	D - - w/6 way full width seat			2or4

YEAR	MODEL/RESTRICTIONS	PART NUMBER	DESCRIPTION	QTY.
618C46-7	BRACKET (FRONT SEAT BACK PIVOT)			
73	D - - w/full width or split seats	D2LZ 65618C46-A		1
73	F	D7ZZ 69618C46-A	Driver-Incl. attaching parts-also used for years 1968/72	1
		D7ZZ 69618C47-A	Passenger	1
618A48-9	TRANSMISSION ASSY. (FRONT SEAT ADJUSTING)			
74/76	A,Y - - w/6 way full width seat	D4AZ 65618A48-A		2
75/78	A - - w/6 way split seats	D5VY 60618A48-A	Driver and passenger	2
77/78	A - - w/6 way full width seat	D4AZ 65618A48-A		2
79	A - - w/6 way full width seat	D9AZ 54618A48-A	R.H. and L.H.	2
79	A - - w/6 way split seat	D9AZ 54618A48-B	R.H. and L.H.	2
75/76	C - - w/6 way full width seat	D50Z 65618A48-A		2
75/76	C - - w/6 way split seats	D5LZ 65618A48-A		1
74	D(exc. Town Car, Town Coupe) - - w/6 way full width seat	D4AZ 65618A48-A		1
73/74	D - - w/6 way split seat- "From 12/1/73"	D5VY 60618A48-A	Passenger	1
75/	D - - w/6 way split seats		Driver and passenger	1
75/	F - - w/6 way split seats	D5LZ 65618A48-A	Driver	1
77/	F - - w/6 way full width seat	D50Z 65618A48-A		2
75/	G - - w/4 way full width seat and center arm rest	(RH) D5DZ 66618A48-B	(LH) D5DZ 66618A48-C	1
75/	G - - w/4 way bucket seat	D5DZ 66618A48-A		1
75/	K - - w/6 way bucket or split seats	D5LZ 65618A48-A	Driver and passenger	2
78/	P - - w/4 way full width seat	(RH) D8BZ 54618A48-A	(LH) D8BZ 54618A49-A	1
77/	V - - w/4 way bucket seat	D5DZ 66618A48-A		1
77/	V - - w/4 way full width seat and center arm rest	(RH) D5DZ 66618A48-B	(LH) D5DZ 66618A48-C	1
618C56	PIVOT (FRONT SEAT BACK ADJUSTER ACTUATOR)			
77/78	F - - w/reclining seat	D2LY 65618C56-A	Passenger	1
73/	K - - w/reclining seat			1
618B58	RETAINER (FRONT SEAT TRACK ADJUSTING HANDLE)			
77/	A,G,K,L,P,V	D7AZ 53618B58-A	3/4" long	1or2
618A67	BUSHING (FRONT SEAT ADJUSTING)			
73/	D(Town Car, Town Coupe) - - w/6 way full width seat	C7AZ 62618A67-A		2or4
73	F - - w/4 way seat			2
618A68	NUT (FRONT ADJUSTING HORIZONTAL STOP)			
73	F - - w/4 way seat	D1WY 65618A68-A		1
61880	PIN (FRONT SEAT TRACK)			
73/	D(Town Car, Town Coupe) - - w/6 way full width seat	C8SZ 6561880-A		2
74	A,Y - - w/6 way full width seat			2
618A82	Refer to group 617B12-5			
61882-3	SPRING (FRONT SEAT TRACK LATCH)-Also refer to group 617K74			
73/74	A - - w/manual full width or split seats	C5AZ 6261883-A	R.H. and L.H.	2
73/76	C	D20Z 6561883-B	R.H.-18 coils	1
		E2ZZ 6161883-A	L.H.-40 coils	1
76/77	D - - w/manual full width seat	C5AZ 6261883-A	R.H. and L.H.	2
73	F(76)	C0DZ 6461883-A	Folding top compartment	2
73/	F - - w/bucket seats-non-reclining	D1DZ 6261883-A	R.H. and L.H.	2
75/78	F,G - - w/2 way manual seat	D20Z 6561883-B	R.H.-18 coils	1
		E2ZZ 6161883-A	L.H.-40 coils	1
77/	G - - w/4 way manual seat	D7FZ 6261883-A	L.H. - 23 coils	2
79	G - - w/2 way manual seat	D20Z 6561883-B	R.H.-18 coils	1
		E2ZZ 6161883-A	L.H.-40 coils	1
79	J - - w/2 way manual seat	D9ZZ 6661883-A	40-coils	1
79	J - - w/4 way manual seat	D7FZ 6261882-A	R.H.-5 3/4" long	1
		D7FZ 6261883-B	L.H.-3 3/4" long	1
74/	L - - w/2 way manual seat	D1DZ 6261883-A	R.H. and L.H. - 16 coils	2

COPYRIGHT © 1986 — FORD MOTOR COMPANY — DEARBORN, MICHIGAN

1973/79 LINCOLN-MERCURY CARS

YEAR	MODEL/RESTRICTIONS	PART NUMBER	DESCRIPTION	QTY.
61882-3	SPRING (FRONT SEAT TRACK LATCH)-Also refer to group 617K74 — Cont'd			
77/	L - - w/4 way manual seat	D7FZ 6261882-A	R.H.-5 3/4" long	1
		D7FZ 6261883-B	L.H.-3 3/4" long	1
73/74	P - - w/bucket seats - non-reclining	D1DZ 6261883-A	R.H. and L.H. - 16 coils	2
73/77	P - - w/full width seat or bucket seats-reclining	D20Z 6561883-B	R.H.-18 coils	1
		E2ZZ 6161883-A	L.H.-40 coils	1
77	P - - w/4 way manual seat	D7FZ 6261883-A	L.H. - 23 coils	2
78/	P	E2ZZ 6161883-A	R.H. and L.H.-40 coils	2
77/	V - - w/2 way manual seat	D20Z 6561883-B	R.H.-18 coils	1
		E2ZZ 6161883-A	L.H.-40 coils	1
77/	V - - w/4 way manual seat	D7FZ 6261883-A	L.H.-23 coils	2
73/74	Y - - w/manual full width seat	C5AZ 6261883-A	R.H. and L.H.	2
61883	SPRING (FRONT SEAT TRACK RETRACTING)			
73/78	J	D0RY 6261883-A	Seat track	4
73/76	J "Before 4/14/76"	D3RY 6261883-A	Seat latch -14 coils	2
76/78	J "From 4/14/76"	D6RY 6461883-A	Seat latch	2
73/74	P - - w/reclining seat	D3RY 6261883-A		2
618A85-7	Refer to group 617B12-5			
618A88-90	BRACKET (FRONT SEAT ADJUSTING TUBE)			
73/74	A - - w/6 way split seats	D2AZ 65618A88-A	Driver and passenger	1or2
73/74	A - - w/6 way split seats	D3AZ 65618A90-A	Driver and passenger	1or2
73/74	A,Y - - w/6 way full width seat	D2AZ 65618A88-A	Incl. 5 holes	1or2
73/74	A,Y - - w/6 way full width seat	C7AZ 62618A88-A	Incl. 10 holes	1or2
75/76	A,Y - - w/6 way full width or split seats	D5AZ 60618A88-A	Driver and passenger	1or2
77/	A - - w/6 way full width or split seats		Driver and passenger	1or2
73/76	C - - w/6 way full width seat	C7AZ 62618A88-A	Incl. 10 holes	1
73/74	C - - w/6 way full width seat	D2LZ 65618A88-A	Incl. 5 holes	1
74	C - - w/6 way split seats		Driver	2
75/76	C - - w/6 way full width seat	D5AZ 60618A88-A		1
75/76	C - - w/6 way split seats	D5LZ 65618A88-A		1
73/	D - - w/6 way full width seat	C7AZ 62618A88-A	10 holes	1
73/74	D - - w/6 way split seats-	D2AZ 65618A88-A	L.H.-driver	1or2
73/74	D(exc. Town Car and Town Coupe) - - w/6 way full width seats-		Driver and passenger	1or2
73/	D(Town Car, Town Coupe) - - w/6 way full width seats	C7AZ 62618A90-A		1
74	D - - w/6 way split seats	D3AZ 65618A90-A	Driver and passenger	1or2
75/	D - - w/6 way full width seat	D5VY 60618A88-B		1
75/76	D - - w/6 way split seats- "Before 12/1/75"	D5AZ 60618A88-A	Driver	1
76/	D - - w/6 way split seats- "From 12/1/75"	D5AZ 60618A88-A	Driver and passenger	2
74	F - - w/6 way split seats	D2LZ 65618A88-A	Driver	1
75/	F - - w/6 way bucket or split seats	D5LZ 65618A88-A		1
77/	F - - w/6 way full width seat	C7AZ 62618A88-A	Incl. 10 holes	1
		D5AZ 60618A88-A	Incl. 6 holes	1
75/	G - - w/4 way full width seat and center arm rest	D5DZ 66618A88-A		2
75/	G - - w/4 way bucket seat	D5DZ 66618A88-B	Located on motor	1
		D5DZ 66618A88-C	Located on track	1
73/74	K - - w/6 way split seats	D2LZ 65618A88-A	Driver and passenger	2
75/	K - - w/6 way bucket or split seats	D5LZ 65618A88-A	Driver and passenger	2
78	P - - w/4 way full width seat	D5DZ 66618A88-A		2
77/	V - - w/4 way bucket seat	D5DZ 66618A88-B	Located on motor	1
		D5DZ 66618A88-C	Located on track	1
77/	V - - w/4 way full width seat and center arm rest	D5DZ 66618A88-A		2

1973/79 LINCOLN-MERCURY CARS

YEAR	MODEL/RESTRICTIONS	PART NUMBER	DESCRIPTION	QTY.
618A92	Refer to group 617B12-5			
619A02	HOOK (FRONT SEAT TRACK RELEASE CABLE)			
73/76	A,C,G,P,Y	D0AZ 62619A02-A	2 1/4" long	1
76/77	D			1
77/78	A,F,G,V	D0AZ 62619A02-A	2 1/4" long	1
		C9AZ 62619A02-A	2 1/2" long	1
79	A,D	D9AZ 54619A02-A	2" long	1
77/	F,G,V	D0AZ 62619A02-A	2 1/4" long	1
		C9AZ 62619A02-A	2 1/2" long	1
73/77	P	D0AZ 62619A02-A	2 1/4" long	1
		C9AZ 62619A02-A	2 1/2" long	1
78/	P	★	Improvise form steel wire	
619B06	SPRING (FRONT SEAT TRACK LATCH TIE ROD RETAINER)			
77/	G,L,V - - w/4 way manual seat	D7FZ 62619B06-A		2
79	J			1
77	P - - w/4 way manual seat			2

BODY TYPE		PART NUMBER LESS SUFFIX	COLORS AND APPLICABLE PART NUMBER SUFFIXES													QTY.
			BERYL	BLACK	BLUE	CAMEL	CHAM-OIS	CORD-OVAN	GOLD	GRAY	JADE	PINE GREEN	RED	WHITE	OTHER	
619B14	COVER (FRONT SEAT TRACK LINER SHIELD)															

1979

A			D9AZ 54619B14			A	F		D		E		B	C			A/R

YEAR	MODEL/RESTRICTIONS	PART NUMBER	DESCRIPTION	QTY.
619A34	SLIDE (FRONT SEAT TRACK)			
73	A,Y - - w/6 way full width seat	D2AZ 65619A34-A		4or8
73/	A - - w/6 way split seats		Driver and passenger	4or8
74/76	A,Y - - w/6 way full width seat	D40Z 65619A34-A		4or8
77/	A - - w/6 way full width seat	D40Z 65619A34-A		4or8
73	C - - w/6 way full width seat	D2AZ 65619A34-A		4
74/76	C - - w/6 way full width seat	D40Z 65619A34-A		4
74/76	C - - w/6 way split seats	D2AZ 65619A34-A	Driver	4
73	D - - w/2 way full width seat	C9AZ 62619A34-A		2
73/	D(Town Car, Town Coupe) - - w/6 way full width seat	C9AZ 62619A34-A		4
73	D(exc. Town Car and Town Coupe) - - w/6 way full width seat	D2AZ 65619A34-A		4
74	D(exc. Town Car and Town Coupe) - - w/6 way full width seat	D40Z 65619A34-A	Driver and passenger	4
73/	D - - w/6 way split seats	D2AZ 65619A34-A	Driver and passenger	4
74/	F - - w/6 way bucket or split seats	D2AZ 65619A34-A	Driver	4
77/	F - - w/6 way full width seat	D40Z 65619A34-A		4
75/	G - - w/4 way full width seat and center arm rest or bucket seats	D5DZ 66619A34-A		4or8
73/	K - - w/6 way bucket or split seats	D2AZ 65619A34-A	Driver and passenger	8
78/	P - - w/4 way full width seat	D8BZ 54619A34-A		4or8
77/	V - - w/4 way full width seat and center arm rest or bucket seats	D5DZ 66619A34-A		4or8
62060	RETAINER (FRONT SEAT TRACK HANDLE)			
73/76	C,F,G,L,P	C5AZ 6262060-A	7/8" long	1or2
76/	D			1
77/	F,G,L,P,V			1or2
79	J			1
621A10-1	BRACKET (FRONT SEAT BACK SIDE SHIELD UPPER SUPPORT)			
79	A - - w/full width or split seats	(RH) D9AZ 54621A10-A	(LH) D9AZ 54621A11-A	1

COPYRIGHT © 1986 — FORD MOTOR COMPANY — DEARBORN, MICHIGAN

1973/79 LINCOLN-MERCURY CARS

YEAR	MODEL/RESTRICTIONS	PART NUMBER	DESCRIPTION	QTY.
62116	SHIELD (FRONT SEAT ADJUSTER)			
73/76	A,C,D,F,K,Y - - w/6 way seats	D3LZ 6562116-A		2or4
77/78	A,D,F,K - - w/6 way seats			2or4
79	A - - w/6 way split or full width seat	D9AZ 5462116-A		2
79	D,F,K - - w/6 way seats	D3LZ 6562116-A		2or4
75/	G,V - - w/4 way full width seat and center arm rest or bucket seats	D5DZ 6662116-A		1or2
78/	P - - w/4 way full width seat			1
62126-7	SHIELD (FRONT SEAT TRACK LOWER)			
79	A	(RH) D9AZ 5462126-A	(LH) D9AZ 5462127-A Blue	AR
		(RH) D9AZ 5462126-F	(LH) D9AZ 5462127-F Camel	AR
		(RH) D9AZ 5462126-D	(LH) D9AZ 5462127-D Cordovan	AR
		(RH) D9AZ 5462126-E	(LH) D9AZ 5462127-E Gray	AR
		(RH) D9AZ 5462126-B	(LH) D9AZ 5462127-B Green	AR
		(RH) D9AZ 5462126-C	(LH) D9AZ 5462127-C Red	AR
62140-1	SHIELD (FRONT SEAT CUSHION SIDE REAR)			
79	A	(RH) D9AZ 5462140-A	(LH) D9AZ 5462141-A Blue	1
		(RH) D9AZ 5462140-F	(LH) D9AZ 5462141-F Camel	1
		(RH) D9AZ 5462140-D	(LH) D9AZ 5462141-D Cordovan	1
		(RH) D9AZ 5462140-E	(LH) D9AZ 5462141-E Gray	1
		(RH) D9AZ 5462140-B	(LH) D9AZ 5462141-B Green	1
		(RH) D9AZ 5462140-C	(LH) D9AZ 5462141-C Red	1
62160-1	SHIELD (FRONT SEAT BACK)-Paint to match			
75/77	D	(RH) ★ D7VY 6062160-G	(LH) ★ D5VY 6062161-G Red	1
78/79	D	(RH) ★ D7VY 6062160-E	(LH) ★ D7VY 6062161-E Black	1
62162-3	SHIELD (FRONT SEAT TRACK UPPER)-Paint to match			
79	A	(RH) ★ D9AZ 5462162-A	(LH) ★ D9AZ 5462163-A Blue	1
62168-9	SUPPORT (FRONT SEAT CUSHION SIDE SHIELD FRONT)			
79	A	(RH) D9AZ 5462168-A	(LH) D9AZ 5462169-A	1
73/76	C - - w/full width seat	(RH) D2GZ 6562168-A	(LH) D2GZ 6562169-A	1
74/76	C - - w/split seats	(RH) D2LZ 6562168-A	(LH) D2LZ 6562169-A	1
74/	F - - w/split seats	(RH) D2LZ 6562168-A	(LH) D2LZ 6562169-A	1
74/	F - - w/bucket seats	D2SZ 6562168-A	R.H. and L.H.	2
77/	F - - w/full width seat	(RH) D2GZ 6562168-A	(LH) D2GZ 6562169-A	1
73/	K	(RH) D2LZ 6562168-A	(LH) D2LZ 6562169-A	1
62186-7	SHIELD (FRONT SEAT CUSHION SIDE) - Cut opening for seat latch or power switch when required.			
Notes:	† For woodgrain insert refer to group 61678-9-Paint to match			
79	A(54,74) - - w/o reclining seat	(RH) D9AZ 5462186-A	(LH) D9AZ 5462187-A Aluminum	1
79	A(54,74) - - w/reclining seat	(RH) E0MZ 5462186-A	(LH) E0MZ 5462187-A Aluminum	1
79	A(66)	(RH) D9AZ 6662186-A	(LH) D9AZ 6662187-A Aluminum	1
		(RH) † D9AZ 5462186-C	(LH) E0MZ 5462187-A Woodgrain	1
73	C(53K,71K) - - w/full width seat	(RH) ★ D2GZ 5362186-A	(LH) ★ D4GY 5362187-E Blue	1
73	C(63R,65K) - - w/6 way full width seat-w/o center arm rest	(RH) ★ D2GZ 5362186-A	(LH) ★ D4GY 5362187-E Blue	1
73	C(63R, 65K) - - w/manual full width seat-w/o center arm rest	(RH) ★ D3GZ 5362186-A	(LH) ★ D3GZ 5362187-A Beige	1
74	C(53K) - - w/manual split seats	(RH) ★ D4OZ 5362186-C	(LH) ★ D4OZ 5362187-C Blue	1
74	C(53K) - - w/6 way split seats	(RH) ★ D4OZ 5362186-C	(LH) ★ ★ Blue	1
74	C(53K,71K) - - w/6 way full width seat	(RH) ★ D2GZ 5362186-A	(LH) ★ D4GY 5362187-E Blue	1
74	C(53K,71K) - - w/manual full width seat	(RH) ★ D2GZ 5362186-A	(LH) ★ ★ Blue	1
74	C(65K) - - w/split seats	(RH) ★ D2LZ 6562186-C	(LH) ★ D2LZ 6562187-C Black	1
74	C(65K) - - w/full width or split seats	(RH) ★ D2GZ 5362186-A	(LH) ★ D4GY 5362187-E Blue	1
74	C(65K) - - w/manual split seats-non-reclining	(RH) ★ D4SZ 6562186-C	(LH) ★ D4SZ 6562187-C Blue	1

YEAR	MODEL/RESTRICTIONS	PART NUMBER	DESCRIPTION		QTY.
62186-7	SHIELD (FRONT SEAT CUSHION SIDE) - Cut opening for seat latch or power switch when required. Paint to match — Cont'd				
74	C(65K) - - w/6 way seats-non-reclining	(RH) ★ D2GZ 5362186-A	(LH) ★ D4GY 5362187-E	Blue	1
74	C(65K) - - w/6 way seats-reclining	(RH) ★ D2GZ 5362186-A	(LH) ★	Blue	1
75	C(65K) - - w/manual split seats-non-reclining	(RH) ★ D4SZ 6562186-C	(LH) ★ D4SZ 6562187-C	Blue	1
75	C(65K) - - w/manual full width seat and center arm rest	(RH) ★ D2GZ 5362186-A (RH)	(LH) ★ D4GY 5362187-E (LH)	Blue	1
75	C(65K) - - w/6 way full width seat and center arm rest	(RH) ★ D2GZ 5362186-A	(LH) ★ D4GY 5362187-E	Blue	1
75	C(53K,71K) - - w/manual split seats	(RH) ★ D40Z 5362186-C	(LH) ★	Blue	1
75	C(53K,71K) - - w/6 way split seats	(RH) ★ D40Z 5362186-C	(LH) ★	Blue	1
75/76	C(53D,K,65D,K,71K) - - w/full width seat	(RH) ★ D2GZ 5362186-A (RH)	(LH) D4GY 5362187-E (LH)	Blue	1
76	C(53K,71K) - - w/6 way split seats	(RH) ★ D40Z 5362186-C	(LH) ★ ★	Blue	1
76	C(53,71K) - - w/manual split seats	(RH) ★ D40Z 5362186-C	(LH) ★ D40Z 5362187-C	Blue	1
76	C(65K) - - w/reclining seat	(RH) ★ D2SZ 6562186-C	(LH) ★	Black-incl. chrome moulding	1
76	C(65K) - - w/o reclining seat	(RH) ★ D2LZ 6562186-C	(LH) ★	Black-incl. chrome moulding	1
73	D	(RH) ★	(LH) ★ D1VY 6562187-J	Blue	1
73/79	D	(RH) ★ D1VY 6562186-F	(LH) ★ D1VY 6562187-F	Black	1
74	F - - w/manual seats	(RH) ★ D2LZ 6562186-C	(LH) ★ D2LZ 6562187-C	Black	1
74	F - - w/6 way seats-non-reclining	(RH) ★ D2LZ 6562186-C	(LH) ★	Black	1
74	F - - w/6 way seats-reclining	(RH) ★ D2GZ 5362186-B	(LH) ★	Black	1
75	F - - w/6 way split seats-non-reclining	(RH) ★ D2LZ 6562186-C	(LH) ★ D2LZ 6562187-C	Black	1
75	F - - w/6 way split seats-reclining	(RH) ★ D2LZ 6562186-C	(LH) ★	Black	1
76	F - - w/bucket or split seats-reclining	(RH) ★ D4SZ 6562186-G	(LH) ★	Blue	1
76	F - - w/bucket or split seats-non-reclining	(RH) D2LZ 6562186-C	(LH) ★	Black-incl. moulding	1
76	F - - w/full width seat and center arm rest	(RH) ★	(LH) ★ D4GY 5362187-D	Black	1
77	F - - w/full width seat	(RH) ★ D2GZ 5362186-A	(LH) ★ D4GY 5362187-E	Blue	1
77	F(53K,71K) - - w/6 way split seats	(RH) ★ D40Z 5362186-C	(LH) ★ D70Z 5362187-F	Blue	1
77	F(53K,71K) - - w/manual split seats	(RH) ★ D40Z 5362186-C	(LH) ★ D40Z 5362187-C	Blue	1
77	F(65K,L) - -w/split seats - non-reclining	(RH) ★ D4SZ 6562186-C	(LH) ★ D4SZ 6562187-C	Blue-incl. chrome moulding	1
77	F(65K,L) - - w/split seats reclining	(RH) ★ D4SZ 6562186-G	(LH) ★ D4SZ 6562187-C	Blue-incl. chrome moulding	1
77	F - - w/bucket seats	(RH) ★ D4SZ 6562186-C	(LH) ★ D70Z 6562187-B	Blue	1
78	F - - w/full width seat	(RH) ★ D2GZ 5362186-A	(LH) ★ D4GY 5362187-E	Blue	1
78	F(53) - - w/6 way split seats	(RH) ★ D40Z 5362186-C	(LH) ★ D70Z 5362187-F	Blue	1
78	F(53) - - w/manual split seats	(RH) ★ D40Z 5362186-C	(LH) ★ D40Z 5362187-C	Blue	1
78	F(65K,L) - - w/split seats-non-reclining	(RH) ★ D4SZ 6562186-C	(LH) ★ D4SZ 6562187-C	Blue-incl. chrome moulding	1
78	F(65K,L) - - w/split seats-reclining	(RH) ★ D80Z 6562186-F	(LH) ★ D4SZ 6562187-C	Blue-incl. chrome moulding	1
78	F - - w/bucket seats	(RH) ★ D4SZ 6562186-G	(LH) ★ D70Z 6562187-B	Blue	1
79	F - - w/full width seat	(RH) ★ D2GZ 5362186-A	(LH) ★ D4GY 5362187-E	Blue	1
79	F(53) - - w/6 way split seats	(RH) ★ D40Z 5362186-C	(LH) ★ D70Z 5362187-F	Blue	1
79	F(53) - - w/manual split seats	(RH) ★ D40Z 5362186-C	(LH) ★ D40Z 5362187-C	Blue	1
79	F(65) - - w/split seats-non-reclining	(RH) ★ D4SZ 6562186-C	(LH) ★ D4SZ 6562187-C	Blue-incl. chrome moulding	1

COPYRIGHT © 1986— FORD MOTOR COMPANY —DEARBORN, MICHIGAN

1973/79 LINCOLN-MERCURY CARS

YEAR	MODEL/RESTRICTIONS	PART NUMBER	DESCRIPTION		QTY.
62186-7	SHIELD (FRONT SEAT CUSHION SIDE) – Cut opening for seat latch or power switch when required Paint to match — Cont'd				
79	F(65) – – w/split seats –reclining	(RH) ★ D80Z 6562186-F	(LH) ★ D4SZ 6562187-C	Blue–incl. chrome moulding	1
79	F – – w/bucket seats	(RH) ★ D4SZ 6562186-G	(LH) ★ D70Z 6562187-B	Blue	1
75	G – – w/manual bucket seats	(RH) ★ D5DZ 6662186-C	(LH) ★	Black	1
75	G – – w/full width seat and center arm rest	(RH) ★ D7DZ 6662186-H	(LH) ★ D5DZ 6662187-K	Red	1
75	G – – w/4 way bucket seats	(RH) ★ D5DZ 6662186-D	(LH) ★ D5DZ 6662187-S	Red	1
76	G – – w/manual bucket seats	(RH) ★ D6DZ 6662186-F	(LH) ★ D6DZ 6662187-H	Gray	1
76	G – – w/full width seat and center arm rest	(RH) ★ D7DZ 6662186-J	(LH) ★ D7DZ 6662187-C	Gray	1
76	G – – w/4 way bucket seats	(RH) ★	(LH) D5DZ 6662187-R	Black	1
77	G – – w/manual bucket seats	(RH) ★ D5DZ 6662186-F	(LH) ★ D5DZ 662187-F	Blue	1
77	G – – w/full width seat and center arm rest	(RH) ★ D7DZ 6662186-B	(LH) ★ D7DZ 6662187-B	Blue	1
77	G – – w/4 way bucket seats	(RH) ★ D7DZ 6662186-D	(LH) ★ D7DZ 6662187-D	Blue	1
78	G – – w/manual bucket seats	(RH) ★ D5DZ 6662186-F	(LH) ★ D5DZ 6662187-F	Blue	1
78	G – – w/full width seat and center arm rest	(RH) ★ D7DZ 6662186-B	(LH) ★ D7DZ 6662187-B	Blue	1
78	G – – w/4 way bucket seats	(RH) ★ D5DZ 6662186-F	(LH) ★ D7DZ 6662187-D	Blue	1
79	G – – w/manual bucket seats	(RH) ★ D8DZ 6662186-F	(LH) ★ D8DZ 6662187-F	Camel	1
79	G – – w/full width seat and center arm rest	(RH) ★ D8DZ 6662186-E	(LH) ★ D8DZ 6662187-E	Camel	1
79	G – – w/4 way bucket seats	(RH) ★ D8DZ 6662186-F	(LH) ★ D8DZ 6662187-G	Camel	1
73/74	J	(RH) ★ D3RY 6262186-A	(LH) ★	Tan	1
76	J(64T) "Before 11/28/75"	(RH) ★ D5RY 6462186-F	(LH) ★ D5RY 6462187-F	Cloud–front	1
		(RH) ★ D5RY 6462186-A	(LH) ★ D5RY 6462187-A	Cloud–side	1
76	J(64T) "From 11/28/75"	(RH) ★ D5RY 6462186-F	(LH) ★ D5RY 6462187-F	Cloud–front	1
		(RH) ★ D5RY 6462186-A	(LH) ★ D5RY 6462187-A	Cloud–side	1
73/74	K – – w/o reclining seats	(RH) ★ D2LZ 6562186-C	(LH) ★ D2LZ 6562187-C	Black	1
74	K – – w/o reclining seats	(RH) ★ D4SZ 6562186-C	(LH) ★ D4SZ 6562187-C	Blue	1
73/74	K – – w/reclining seats	(RH) ★ D2SZ 6562186-C	(LH) ★ D2LZ 6562187-C	Black	1
74	K – – w/reclining seats	(RH) ★ D4SZ 6562186-G	(LH) ★ D4SZ 6562187-C	Blue	1
75	K – – w/o reclining seats– "From 9/9/74"	(RH) ★ D2LZ 6562186-C	(LH) ★ D2LZ 6562187-C	Black–plastic–incl. chrome moulding	1
75	K – – w/reclining seat– "From 9/9/74"	(RH) ★ D2SZ 6562186-C	(LH) ★ D2LZ 6562187-C	Black–plastic–incl. chrome moulding	1
76	K – – w/o reclining seat	(RH) ★ D2LZ 6562186-C	(LH) ★ D2LZ 6562187-C	Black–plastic–incl. chrome moulding	1
76	K – – w/reclining seat	(RH) ★ D2SZ 6562186-C	(LH) ★ D2LZ 6562187-C	Black–plastic–incl. chrome moulding	1
76/77	K – – w/o reclining seat	(RH) ★	(LH) ★ D6LY 6562187-B	Gray (light)–cloth	1
76/77	K – – w/reclining seat	(RH) ★	(LH) ★ D6LY 6562187-B	Gray (light)–cloth	1
77	K – – w/o reclining seat	(RH) ★ D2LZ 6562186-C	(LH) ★ D2LZ 6562187-C	Black–plastic–incl. chrome moulding	1
77	K – – w/reclining seat	(RH) ★ D2SZ 6562186-C	(LH) ★ D2LZ 6562187-C	Black–plastic–incl. chrome moulding	1
78	K – – w/o reclining seat	(RH) ★ D2LZ 6562186-C	(LH) ★ D2LZ 6562187-C	Black–incl. chrome moulding	1
78	K – – w/reclining seat	(RH) ★ D80Y 6562186-B	(LH) ★ D2LZ 6562187-C	Black–incl. chrome moulding	1
79	K – – w/o reclining seat	(RH) ★ D2LZ 6562187-C	(LH) ★ D2LZ 6562187-C	Black	1
79	K – – w/reclining seat	(RH) ★ D80Y 6562186-B	(LH) ★ D2LZ 6562187-C	Black	1
75	P(62) – – w/bucket seats	(RH) ★ D5DZ 6662186-F	(LH) ★ D5DZ 6662187-F	Blue	1
76/77	P(62) – – w/bucket seats	(RH) ★ D5DZ 6662186-F	(LH) ★ D5DZ 6662187-F	Blue	1
77	P – – w/full width seat and center arm rest	(RH) ★ D7DZ 6662186-B	(LH) ★ D7DZ 6662187-B	Blue	1

YEAR	MODEL/RESTRICTIONS	PART NUMBER	DESCRIPTION		QTY.
62186-7	SHIELD (FRONT SEAT CUSHION SIDE) - Cut opening for seat latch or power switch when required. Paint to match — Cont'd				
77	V - - w/manual bucket seats	(RH) ★ D5DZ 6662186-F	(LH) ★ D5DZ 6662187-F	Blue	1
77	V - - w/full width seat and center arm rest	(RH) ★ D7DZ 6662186-B	(LH) ★ D7DZ 6662187-B	Blue	1
77	V - - w/4 way bucket seats	(RH) ★ D7DZ 6662186-D	(LH) ★ D7DZ 6662187-D	Blue	1
78	V - - w/manual bucket seats	(RH) ★ D8DY 6662186-B	(LH) ★ D8DY 6662187-B	Cordovan	1
78	V - - w/full width seat and center arm rest	(RH) ★	(LH) ★ D8DZ 6662187-D	Chamois	1
78	V - - w/4 way bucket seats	(RH) ★ D8DY 6662186-B	(LH) ★ D8DY 6662187-E	Cordovan	1
79	V - - w/manual bucket seats	(RH) ★ D6DZ 6662186-F	(LH) ★ D6DZ 6662187-H	Gray	1
79	V - - w/full width seat and center arm rest	(RH) ★ D9DZ 6662186-C	(LH) ★ D9DZ 6662187-C	Beryl	1
79	V - - w/4 way bucket seats	(RH) ★ D6DZ 6662186-F	(LH) ★ D6DZ 6662187-J	Beryl	1
73/76	Y(65) - - w/manual full width seat	(RH) ★	(LH) ★ D3MZ 6562187-A		1
62194-5	SUPPORT (FRONT SEAT CUSHION SIDE SHIELD REAR)				
79	A	(RH) D9AZ 5462194-A	(LH) ★		AR
62296-7	SUPPORT (FRONT SEAT BACK SIDE SHIELD LOWER)				
73/76	A(53,57,71), Y(53,71) - - w/6 way full width seat-non-reclining	(RH) D1AZ 5462296-A	(LH) D1AZ 5462297-A		1
77/78	A(53,71) - - w/6 way full width seat-non-reclining				1
79	A				1
73/74	A(65), Y(65) - - w/full width seat-non-reclining	D1AZ 6562296-A	R.H. and L.H.		2
73/	A - - w/full width seat and center arm rest or split seats	(RH) D1AZ 6562296-C	(LH) D1AZ 6562297-C		1
62400	SUPPORT (REAR SEAT BACK)				
73	F(76)	D1WY 7662400-A			1
78/	P(36)	D8BZ 3662400-A	R.H. and L.H.		2
624A08	BEZEL (REAR SEAT BACK LATCH)				
73/	A(71), Y(71)	D3AZ 71624A08-E	Beige		1
		D3AZ 71624A08-B	Green		1
		D3AZ 71624A08-A	Ginger		1
		D4AZ 71624A08-A	Tan		1
79	A(74)	E0AZ 74624A08-A	R.H.-paint to match		1
73/	C(71)	D20Z 71624A08-C	Black		2
		D20Z 71624A08-A	Ginger		2
		D20Z 71624A08-B	Green		2
62418	HANDLE (REAR SEAT BACK LATCH)				
76/78	J(64P,T)	D5RY 6462418-B	R.H. and L.H.-lower		2
76/78	J(64P,T)	D5RY 6462418-A	R.H. and L.H.-upper		2
76/78	J(64S)	D6RY 6462418-A	R.H. and L.H.		2
79	J	D8BZ 7462418-A			1
78/	P(74)	D8BZ 7462418-A	Black		1
62426	STOP (REAR SEAT BACK)-Also refer to group 613B94				
79	A(74)	D9AZ 7462426-A			1

COPYRIGHT © 1986— FORD MOTOR COMPANY —DEARBORN, MICHIGAN

1973/79 LINCOLN-MERCURY CARS

YEAR	MODEL/RESTRICTIONS	PART NUMBER	DESCRIPTION	QTY.
62432	BUTTON (REAR SEAT BACK LATCH RELEASE)			
73/76	A(71),C(71),Y(71)	C60Z 7162432-B		1
77/78	A(71)			1
79	A(74)	D9AZ 7462432-A		1
77	F(71)	C60Z 7162432-B		1
624A34-5	REINFORCEMENT (REAR SEAT BACK SUPPORT BRACKET)			
78/	J,P(74)	(RH) D8BZ 74624A34-A	(LH) D8BZ 74624A35-A	1
62440-1	STRIKER (REAR SEAT BACK LATCH)			
79	A(74)	D9AZ 7462440-A		1
77	F(71)	D3AZ 7162440-A		1
74/	L(64,73)	(RH) D4FZ 6462440-A	(LH) D4FZ 6462441-A	1
79	J(61)	D8BZ 7462440-A		1 or 2
78/	P(74)	D8BZ 7462440-A		1
62442-3	BRACKET (REAR SEAT SUPPORT TO FLOOR)			
74/	L(64,73) - - w/folding rear seat	(RH) D4FZ 6462442-A	(LH) D4FZ 6462443-A	1
62454	SUPPORT (REAR SEAT BACK INNER)			
78/	P(36)	D8BZ 3662454-A		1
62512	LINK ASSY. (FRONT SEAT TRACK REAR)			
73/	D (Town Car, Town Coupe) - - w/6 way full width seat	(RH) C7AZ 6262512-A	(LH) C7AZ 6262512-B	1
62520-1	LINK (FRONT SEAT TRACK FRONT)			
74/	D - - w/6 way full width seat	(RH) C9AZ 6262520-A	(LH) C9AZ 6262521-A	1
625A56-7	BRACKET (FRONT SEAT BACK LATCH SOLENOID)			
73/76	A,Y	(RH) D0AZ 62625A56-A	(LH) D0AZ 62625A57-A	1
77/	A			1
73	C	D20Z 65625A56-A	R.H. and L.H.	2
78	K			2
74/77	P			2
62606	PAWL (FRONT SEAT BACK LATCH)			
73/78	A(65) - - w/full width seat w/o center arm rest	D0AZ 6262606-B	R.H. and L.H.	2
79	A(66) - - w/full width seat w/o center arm rest			2
73/78	A(65) - - w/split seats	D0SZ 6562606-A	R.H. and L.H.	2
79	A(66) - - w/split seats			2
73/78	A(65) - - w/full width seat and center arm rest			2
79	A(66) - - w/full width seat and center arm rest			2
73	C(63,65) - - w/bucket seats- "Before 5/1/73"	★ D20Z 6562606-B	R.H. and L.H. - Repl. by (1) each of D50Z 6562606-A (Pawl) and D30Z 6562622-A(Handle)	2
73	C(63,65) - - w/bucket seats- "From 5/1/73"	D50Z 6562606-A	R.H. and L.H.	2
76	C	D6SZ 6562606-A	R.H. and L.H.-w/plastic tip	2
73/	D	D3VY 6562606-A	R.H. and L.H.	2
73	F	D5YY 6462606-A	Outboard mounted latch	2
74/	F	D50Z 6562606-A	R.H. and L.H.-w/mounting hole for handle	2
76/	F	D6SZ 6562606-A	R.H. and L.H.-w/plastic tip	2
74/	F	D2SZ 6562606-A	R.H. and L.H. - oval shaped	2
75	G(66)	D5DZ 6662606-A	R.H. and L.H.	2
79	J	D5YY 6462606-A	R.H. and L.H.	2
73	K - - w/split seats-reclining- "Before 5/1/73"	D2SZ 6562606-A	R.H. and L.H.	2
73	K - - w/split seats-reclining- "From 5/1/73"	D50Z 6562606-A	R.H. and L.H.	2
74/	K - - w/split seats-reclining	D2SZ 6562606-A	R.H. and L.H.	2
74/	L	D5YY 6462606-A	R.H. and L.H.	2
73/74	P - - w/bucket seats	D5YY 6462606-A	Outboard mounted latch	2
75	P(62)	D5DZ 6662606-A	R.H. and L.H.	2
74/76	Y(65) - - w/full width seat	D0AZ 6262606-B	R.H. and L.H.	2

1973/79 LINCOLN-MERCURY CARS

YEAR	MODEL/RESTRICTIONS	PART NUMBER	DESCRIPTION	QTY.
62608	BUSHING (FRONT SEAT BACK LATCH)			
73	A,D,Y - - w/auto. seat back latch	D0VZ 6562608-A	R.H. and L.H.	4
74	A(65),D(65)-w/auto. seat back latch			4
75/76	A(65),D(60),Y(65) - - w/auto seat back latch			4
77/78	A(65),D(60) - - w/auto seat back latch			4
79	A(66),D(60) - - w/auto seat back latch			4
73/	A - - w/split seats-reclining	C8AZ 6262608-A	R.H and L.H.	2
73/	K - - w/split seats-reclining			2
73/76	C - - w/auto seat back latch	D2FZ 6262608-A	R.H. and L.H.	2
73/	K - - w/auto seat back latch			2
75	F			2
74	P			2
75/	L(64H,73H)			2
62614-5	BRACKET (FRONT SEAT BACK LATCH)			
73	F - - w/o auto. seat back latch	D1FZ 6262614-A	R.H. and L.H.	2
74/	F - - w/bucket seats and auto. seat back latch	D2SZ 6562614-A	R.H. and L.H.	2
75	G(66)	(RH) D5DZ 6662614-A	(LH) D5DZ 6662614-B	1
77/	G(66) "From 10/15/76"	(RH) D7DZ 6662614-A	(LH) D7DZ 6662615-A	1
73	K - - w/auto. seat back latch	D2SZ 6562614-A	R.H. and L.H.	2
73/75	L "Before 3/1/75"	D1FZ 6262614-A	R.H. and L.H.	2
75/	L "From 3/1/75"	(RH) ★	(LH) D6ZZ 6962614-A	1
73/74	P	D1FZ 6262614-A	R.H. and L.H.	2
62622	HANDLE (FRONT SEAT BACK LATCH)-Incl. attaching parts			
73/77	A - - w/reclining seat	D8AZ 6062622-A	R.H.-passenger	1
73/77	A(65) - - w/o auto. seat back latch "From 4/11/77"	D8AZ 6062622-A		2
74/76	A(65),Y(65) - - w/auto. seat back	C8AZ 6262622-B		2
77	A(65) - - w/auto. seat back latch			2
78/	A	D8AZ 6062622-A	R.H. and L.H.	2
73/76	C(63,65) - - w/manual latch	D30Z 6562622-A	Use on latches with 1/8" dia. hole on cam	2
73/77	D(60) "Before 4/11/77"	C9AZ 6262622-A	R.H. and L.H. - 2 5/8" long	2
77/	D(60) "From 4/11/77"	D8AZ 6062622-A	R.H. and L.H. - 2 1/16" long	2
73/	D - - w/reclining seats	D0VZ 6562622-A	Located at seat back side shield - 2" long	2
73	F	(RH) D1FZ 6262622-B	(LH) D1FZ 6262622-C Outboard mounted latch	1
74/76	F	D30Z 6562622-A	R.H. and L.H. - "T" shaped	2
77/	F	D8AZ 6062622-A	R.H. and L.H. - 2 1/16" long	2
75/76	G - - w/bucket seats- "Before 11/3/75"	D5DZ 6262622-A	R.H. and L.H.	2
76/77	G - - w/bucket seats- "From 11/3/75"	D5DZ 6662622-A	R.H. and L.H.-chrome	2
75/77	G - - w/full width seat w/center arm rest			2
75/77	G - - w/full width seat w/o center arm rest	D5DZ 6262622-B	R.H. and L.H.-w/plastic tip	2
78/	G - - w/full width seat and w/ or w/o center arm rest	D8AZ 6062622-A	R.H. and w/ L.H.	2
78/	G - - w/bucket seats	D5DZ 6662622-A	R.H. and L.H.	2
73/78	J	D9ZZ 6662622-A	R.H. and L.H.-black	2

COPYRIGHT © 1986— FORD MOTOR COMPANY —DEARBORN, MICHIGAN

1973/79 LINCOLN-MERCURY CARS

YEAR	MODEL/RESTRICTIONS	PART NUMBER	DESCRIPTION	QTY.
62622	HANDLE (FRONT SEAT BACK LATCH)-Incl. attaching parts — Cont'd			
79	J	D5FZ 6262622-A	R.H. and L.H.-incl. bracket, rod and plastic tip	2
73/74	K - - w/manual latch	D30Z 6562622-A	Use on latch with 1/8" dia. hole on cam	2
73/76	K - - w/reclining seats	D0VZ 6562622-A	Located at seat back side shield - 2" long	2
73/76	K - - w/reclining seats	C8AZ 6262622-B	R.H. and L.H. - 2" long	2
77/	K	D8AZ 6062622-A	R.H. and L.H. - 2 1/16" long	2
74	L(62) - - w/bucket seats-non-reclining	(RH) D1FZ 6262622-B	(LH) D1FZ 6262622-C Outboard mounted latch	1
74/	L(64,73) - - w/folding rear seat	D4FZ 6462622-B	Chrome	1
75/	L(62B,64B,73B)	D5FZ 6262622-A	R.H. and L.H.	2
73/74	P(62) - - w/bucket seats-non-reclining	(RH) D1FZ 6262622-B	(LH) D1FZ 6262622-C Outboard mounted latch	1
73	P - - w/reclining seat-"Before 9/18/72"	D3RY 6262622-A	R.H. and L.H.-black	2
73/74	P - - w/reclining seat-"From 9/18/72"	★	R.H. and L.H.-tan	2
73/74	P - - w/reclining seat	E864288-S	(AG-15)-clip M5.0 (Metric)	2
75/77	P - - w/bucket seats	D5DZ 6262622-A	R.H. and L.H.	2
75/77	P - - w/full width seat	D5DZ 6262622-B	R.H. and L.H.	2
78/ 78/	P - - w/full width seat P - - w/bucket seats	D8AZ 6062622-A	R.H. and L.H. Serviced in assy.-group 62648-9	2
62622-3	CAM and HANDWHEEL SET (FRONT SEAT ADJUSTING)			
73/78	J - - w/partial reclining seat	D0RY 6262622-A	R.H.-passenger side	1
		D0RY 6262623-A	L.H.-driver side	1
62634	STEM ASSY. (FRONT SEAT BACK LATCH)-Incl. attaching parts-Also refer to group 62614			
73/74 73/74 75/	A(65F,H) - - w/full width seat A(53X,57X,65X) - - w/full width seat and center arm rest A(65B,H) - - w/auto. seat back latch	D0AZ 6262634-A		1 2 2
73/74 73/74 75/78 79	A(65H) - - w/split seats A(65B,K,X) - - w/full width seat and center arm rest A(65K,L) - - w/split seats A - - w/split seats	D1AZ 6562634-A		2 2 2 2
73	C - - w/bucket seats and auto. seat back latch	D20Z 6562634-B		2
73	C - - w/bucket seats and manual seat back latch	D50Z 6562634-B		2
74/76	C(65) - - w/auto. seat back latch		Serviced in assy. group 62648-9	
73/	D	D0VY 6562634-A		2
73	F - - w/auto. seat back latch	D1ZZ 6562634-E		2
74/	F - - w/full width or split seats and w/o auto seat back latch		Serviced in assy. group 62648-9	
77/	F - - w/full width or split seats and auto. seat back latch	D2SZ 6562634-B		2
77/	F - - w/bucket seats and auto seat back latch	D20Z 6562634-B	R.H. and L.H. - 3 1/2" long	2
74/	F - - w/o auto seat back latch	D50Z 6562634-B		2
73/	K	D2SZ 6562634-B		2
75 76/	L(64H,73H) L(62B,64B,73B)	D5YY 6462634-A		2 2
74/76	Y(65) - - w/full width seat and center arm rest or w/auto. seat back latch	D0AZ 6262634-A		2
75/76	Y(71)	D1AZ 6562634-A		2

YEAR	MODEL/RESTRICTIONS	PART NUMBER	DESCRIPTION	QTY.
62638	STRIKER (FRONT SEAT BACK LATCH)			
73	F - - w/bucket seats	D1ZZ 6562638-A	R.H. and L.H.	2
74	L			2
79	J	D8BZ 6662638-A	R.H. and L.H.	2
75/	L(64H,73H)	D4ZZ 6962638-A	R.H. and L.H.	2
75/	L(62B,64B,73B)	D1ZZ 6562638-A	R.H. and L.H.	2
73/74	P - - w/bucket seats	D1ZZ 6562638-A	R.H. and L.H.	2
78/	P(66)	D8BZ 6662638-A	R.H. and L.H.	2
62648-9	LATCH ASSY. (FRONT SEAT BACK)			
79	A(66) - - w/split seats-non-reclining	(RH) D9AZ 6662648-A	(LH) D9AZ 6662649-A	1
79	A(66) - - w/split seats--reclining	(RH) D9AZ 6662648-B	(LH) D9AZ 6662649-B	1
73/74	C(63,65) - - w/full width seat and center arm rest and auto. seat back latch	(RH) D5SZ 6562648-B	(LH) D5SZ 6562649-B	1
73/74	C(63R,65K) - - w/full width seat and center arm rest and manual seat back latch	(RH) ★	(LH) D5GZ 6562649-A	1
73/74	C(65) - - w/full width seat w/o center arm rest and manual seat back latch	(RH) D30Z 6562648-A	(LH) D30Z 6562649-A	1
76	C(65) - - w/full width seat and center arm rest or split seats and manual seat back latch- "From 2/2/76"	(RH) D6GZ 6562648-A	(LH) D6GZ 6562649-A	1
76	C(65) - - w/full width seat w/o center arm rest and w/manual seat back latch- "From 2/2/76"	(RH) D60Z 6562648-A	(LH) D60Z 6562649-A	1
75/76	C - - w/auto. seat back latch	(RH) D5SZ 6562648-B	(LH) D5SZ 6562649-B	1
74/	F - - w/auto. seat back latch	(RH) D5SZ 6562648-B	(LH) D5SZ 6562649-B	1
76/	F - - w/bucket or split seats and manual seat back latch- "From 2/2/76"	(RH) D6GZ 6562648-A	(LH) D6GZ 6562649-A	1
76/	F - - w/full width seat and manual seat back latch- "From 2/2/76"	(RH) D60Z 6562648-A	(LH) D60Z 6562649-A	1
75/77	G(66) - -w/o auto seat back latch	(RH) D5DZ 6662648-A	(LH) D5DZ 6662649-A	1
76/77	G(66) - - w/auto. seat back latch	(RH) D6DZ 6662648-B	(LH) D6DZ 6662649-B	1
78/	G(66) - - w/full width seat	(RH) D8BZ 6662648-A	(LH) D8BZ 6662649-A	1
78/	G(66) - - w/bucket seats and w/o auto. seat back latch	(RH) D5DZ 6662648-A	(LH) D5DZ 6662649-A	1
78/	G(66) - - w/bucket seats and w/auto. seat back latch	(RH) D6DZ 6662648-B	(LH) D6DZ 6662649-B	1

COPYRIGHT © 1986— FORD MOTOR COMPANY —DEARBORN, MICHIGAN

1973/79 LINCOLN-MERCURY CARS

YEAR	MODEL/RESTRICTIONS	PART NUMBER	DESCRIPTION	QTY.
62648-9	LATCH ASSY. (FRONT SEAT BACK) — Cont'd			
79	J	D8BZ 6662648-B	R.H. and L.H.	2
73/	K - - w/auto. seat back latch	(RH) D5SZ 6562648-B	(LH) D5SZ 6562649-B	1
78/	P - - w/full width seat	(RH) D8BZ 6662648-A	(LH) D8BZ 6662649-A	1
78/	P - - w/bucket seats	D8BZ 6662648-B	R.H. and L.H.	2
62650	LINK ASSY. (FRONT SEAT BACK LATCH)			
73/	D(65)	D3VY 6562650-A		2
62672	RING (FRONT SEAT ADJUSTER CAM SOUND ABSORBER)			
73/78	J - - w/partial reclining seat	D0RY 6262672-A		4
62672	BEZEL (FRONT SEAT BACK LATCH HANDLE)			
73/76	A(65),Y(65)	D1AZ 6562672-A	R.H. and L.H.-chrome-1 1/4" dia.	2
76	A(65),Y(65)	C8AZ 6262672-A	R.H. and L.H.-chrome-1 3/16" dia.	2
77/78	A(65)	D1AZ 6562672-A	R.H. and L.H.-chrome-1 1/4" dia.	2
		C8AZ 6262672-A	R.H. and L.H.-chrome-1 3/16" dia.	2
79	A(66)	D9AZ 6662672-A	R.H. and L.H.	2
73	C	D20Z 6562672-A	Bright finish	2
		D2SZ 6562672-E	Gray gold	2
74	C(65B,D) - - w/bucket seats-reclining	D20Z 6562672-A		2
73	D	C8AZ 6262672-A	R.H. and L.H.-bright finish 1 3/16" dia.	2
76/	F	D4SZ 6562672-A	R.H. and L.H.-bright finish 1" dia.	2
		C8AZ 6262672-A	R.H. and L.H.-bright finish 1 3/16" dia.	2
75	G - - w/bucket seats	D4TZ 1062672-C	R.H. and L.H.-black	2
75/	G - - w/bucket seats-	D5DZ 6662672-D	R.H. and L.H.-chrome	2
75/	G - - w/full width seat			2
73/74	J	D3RY 6262672-A	Black	2
76/78	J(64S)	D6RY 6462672-A	R.H. and L.H.	2
79	J	D9ZZ 6162672-A	R.H. and L.H.-blue	2
		D9ZZ 6162672-D	R.H. and L.H.-vaquero	2
		D9ZZ 6162672-C	R.H. and L.H.-white	2
73/	K	C8AZ 6262672-A	R.H. and L.H.-bright finish 1 3/16" dia.	2
73	K "Before 6/22/73"	D20Z 6562672-A	R.H. and L.H.-bright finish-rectangular-1 3/8" wide x 2 3/4" long	2
73/	K "From 6/22/73"	D4SZ 6562672-A	R.H. and L.H.-bright finish 1" dia.	2
73	K	D2SZ 6562672-B	Black	2
		D2SZ 6562672-H	Blue	2
		D2SZ 6562672-J	Cranberry	2
		D2SZ 6562672-E	Gray gold	2
		D3LY 6562672-A	Gray (light)	2
		D2SZ 6562672-G	Red	2
		D2SZ 6562672-D	Tobacco	2
		D2SZ 6562672-C	White	2
75	K - - w/reclining seat	D5LY 6562672-A	Chrome-1" dia.	1
78/	K	D8LY 6562672-A	R.H. and L.H.-blue-rectangular-1 1/4" wide x 2 1/2" long	2
		D8LY 6562672-B	R.H. and L.H.-gold	2
79	K	D9LY 6562672-A	R.H. and L.H.-blue (dark)	2
74	L	D4FZ 6262672-C	R.H. and L.H.-black	2
		D4FZ 6262672-D	R.H. and L.H.-blue	2
		D4FZ 6262672-E	R.H. and L.H.-saddle	2
		D4FZ 6262672-A	R.H. and L.H.-tan-paint to match	2

1973/79
LINCOLN-MERCURY CARS

YEAR	MODEL/RESTRICTIONS	PART NUMBER	DESCRIPTION	QTY.
62672	BEZEL (FRONT SEAT BACK LATCH HANDLE) — Cont'd			
75	L	D4FZ 6262672-C	R.H. and L.H.-black	2
		D3FZ 6262672-E	R.H. and L.H.-blue	2
		D5FZ 6262672-A	R.H. and L.H.-silver blue	2
		D4FZ 6262672-A	R.H. and L.H.-tan-paint to match	2
76	L	D6FZ 6262672-D	R.H. and L.H.-green	2
77/	L	D7FZ 6262672-C	R.H. and L.H.-chamois	2
73	P - - w/reclining seat	D3RY 6262672-A	Black	2
73/75	P - - w/reclining seat	D3DZ 6262672-A	Tan-paint to match	2
75	P - - w/reclining seat	D4TZ 1062672-C	Black	2
76/77	P	D5DZ 6662672-D	R.H. and L.H.-rectangular-3/4" wide x 3" long	2
62680	BEZEL (FRONT SEAT BACK LATCH)			
75/76	C - - w/split seats-reclining	C8LY 6562680-A		1
73/	D(65) - - w/split seats-reclining			1
74/	K - - w/split seats-reclining			1
62690-1	SOLENOID ASSY. (FRONT SEAT BACK LATCH)			
73/76	A(65),Y(65) - - w/full width seat seat back latch	D0AZ 6262690-A		2
76/	G(66) - - w/full width seat	(RH) D6DZ 6662690-A	(LH) D6DZ 6662691-A	1
74/	F - - w/reclining seats	D3SZ 6562690-A		2
76/	G(66) - - w/bucket seats	(RH) D6DZ 6662690-B	(LH) D6DZ 6662691-B	1
73/74	K - - w/non-reclining seats	D5SZ 6562690-A	R.H. and L.H.	2
75/	K(Exc. Diamond Jubilee Edition) - - w/non-reclining seats	D5SZ 6562690-A	R.H. and L.H.	2
73/	K(Exc. Diamond Jubilee Edition) - - w/reclining seat	D3SZ 6562690-A		1
78/	K(Diamond Jubilee Edition)	(RH) D3SZ 6562690-A	(LH) D20Z 6562690-A	1
62718-9	SHIELD (FRONT SEAT BACK LATCH ACTUATOR)			
73	C - - w/bucket seats	(RH) D2SZ 6562718-B	(LH) D2SZ 6562719-B	1
74/76	C - - w/full width seat	(RH) D2LZ 6562718-A	(LH) D2LZ 6562719-A	1
74/	F - - w/bucket seats	(RH) D2SZ 6562718-B	(LH) D2SZ 6562719-B	1
74/	F - - w/split seats	(RH) D2LZ 6562718-A	(LH) D2LZ 6562719-A	1
73/	K - - w/split seats	(RH) D2LZ 6562718-A	(LH) D2LZ 6562719-A	1
62720	LEVER (FRONT SEAT BACK LATCH)			
77/	F	D2SZ 6562720-B		1
73/	K - - w/split seats-reclining			2
62730	SHIELD (FRONT SEAT BACK LATCH)			
73	P - - w/reclining seat	D2DZ 6262730-A		2
62740-1	PLATE (ROBE CORD END ANCHOR)-Also refer to group 22676			
73	A (53K,57K,65K)	D1MY 6562740-A	R.H. and L.H.	4
79	A	(RH) D9AZ 5462740-A	(LH) D9AZ 5462741-A Outboard	1
		(RH) D9AZ 5462740-B	(LH) D9AZ 5462741-B Inboard	1
78/	K	D8LY 6562740-A	R.H. and L.H.	4

COPYRIGHT © 1986— FORD MOTOR COMPANY —DEARBORN, MICHIGAN

NEW ISSUE

1973/79 LINCOLN-MERCURY CARS

YEAR	MODEL/RESTRICTIONS	PART NUMBER	DESCRIPTION	QTY.
62758-9	RETAINER (FRONT SEAT BACK LATCH SOLENOID)			
77/	G(66) "From 10/1/76"	(RH) D7DZ 6662758-A	(LH) D7DZ 6662759-A	1
62762	KNOB (FRONT SEAT BACK LATCH HANDLE)			
79	A(66)	D9AZ 6662762-A		2
62802	RETAINER (ROBE CORD)			
73	A(53K,57K,65K)	D1MY 6562802-B	End-1" x 2 3/4"	4
75/78	A	★	Improvise from 1/8" steel 2 3/4" x 2 7/16"	
79	A	D9AZ 5462802-A		2
73/74	D(Town Car and Town Coupe)	D2VY 5362802-A		4
75/	D		Refer to group 22678	
75/	G - - w/full width seat and center arm rest	(RH) D5DZ 6662802-B	(LH) D5DZ 6662802-C	2
76/	G - - w/bucket seats	D6DZ 6662802-A	R.H. and L.H.	4
62808-9	COVER (FRONT SEAT BACK ROBE CORD END)-Also refer to group 22678			
73	A(53K,57K,65K)	D1MY 6562808-A	R.H. and L.H.	4
79	A	(RH) D9AZ 5462808-A	(LH) D9AZ 5462809-A Woodgrain-outboard	1
		D9AZ 5462808-B	R.H. and L.H.-woodgrain-inboard	2
		(RH) D9AZ 5462808-C	(LH) D9AZ 5462809-B Aluminum-outboard	1
		D9AZ 5462808-D	R.H. and L.H.-aluminum-inboard	2
75/	D	D5VY 6062808-A	R.H. and L.H.	4
78/	K	D8LY 6562808-A	R.H. and L.H.-robe cord	4
78/	K		R.H. and L.H.-door pull	4
77/	V	D74Y 5462808-A	R.H. and L.H.	4
62868	RETAINER (FRONT SEAT BACK ASH RECEPTACLE)-Also refer to group 30714			
79	A - - w/split or flight bench seat	D5DZ 6662868-A	Front seat back	AR
79	A - - w/full bench seat	D2AZ 6562868-A	Front seat back	1 or 2
73/76	C - - w/full width seat	D2AZ 6562868-A		1
74/76	C - - w/split seats	D5DZ 6662868-A		2
74	D(53)	D2AZ 6562868-A		1
75/	D			1
74/	F - - w/split seats	D5DZ 6662868-A		2
74/	F - - w/full width seat	D2AZ 6562868-A		1
77/	F		On console	1
75/	G	D5DZ 6662868-A	Door panel	2
75/	G	D2AZ 6562868-A	Front seat back	1
79	J	D5DZ 6662868-A	Console	1or2
75/	L	D5DZ 6662868-A	Quarter panel-chrome	2
76/	L(73)		Arm rest-refer to group 30702	
73/77	P(54)	D5DZ 6662868-A	Rear door	2
73/77	P(62)		Quarter panel	2
73/77	P(54)	D2AZ 6562868-A	Front seat back	1
78/	P(54,74) - - w/full width seat and w/o center arm rest	D2AZ 6562868-A	Front seat back	1
78/	P(36,66) - - w/full width seat and w/o center arm rest	D5DZ 6662868-A	Front seat back	2
78/	P - - w/full width seat and w/center arm rest or bucket seats	D5DZ 6662868-A	Front seat back	1 or 2
77/	V	D5DZ 6662868-A	Door panel	2
62876	RECEPTACLE (FRONT SEAT BACK ASH)-Also refer to group 62868			
79	A	C8AZ 6262876-A	Front seat back-paint to match	1or2
79	A - - w/full bench seat	D2AZ 6562876-A	Front seat back-paint to match	1 or 2
73	C - - w/full width seat	D2AZ 6562876-A		1
74/76	C(53K,65K,71K) - - w/split seats	D2FZ 6262876-A	Chrome	2
74/76	C - - w/full width seat	D30Z 6562876-A		1
74	C - - w/bucket seats	D2AZ 6562876-A	On console	1
74/	F - - w/split seats	D2FZ 6262876-A	Chrome	2

1973/79 LINCOLN-MERCURY CARS

YEAR	MODEL/RESTRICTIONS	PART NUMBER	DESCRIPTION	QTY.
62876	RECEPTACLE (FRONT SEAT BACK ASH)-Also refer to group 62868 — Cont'd			
73/	F	D2AZ 6562876-A	On console-paint to match	1
76/	F - - w/full width seat	D30Z 6562876-A	Chrome	1
75/	G	C8AZ 6262876-A	Door panel-paint to match	1
75/	G	D2AZ 6562876-A	Front seat back-paint to match	1
76/	G	D2FZ 6262876-A	Chrome	2
79	J	C8AZ 6262876-A	Console-paint to match	1
74/	L	D2FZ 6262876-A	Quarter panel-chrome	1
73/77	P(54)	D2AZ 6562876-A	Front seat back	1
73/77	P(62)	D2FZ 6262876-A	Quarter panel-chrome	1
73/77	P(54)		Rear door	2
78/	P(54,74) - - w/full width seat and w/o center arm rest	D2AZ 6562876-A	Front seat back-paint to match	1
		D30Z 6562876-A	Front seat back-chrome	1
78/	P(36,66) - - w/full width seat and w/o center arm rest	C8AZ 6262876-A	Front seat back-paint to match	2
		D2FZ 6262876-A	Front seat back-chrome	2
78/	P - - w/full width seat and w/center arm rest or bucket seats	C8AZ 6262876-A	Front seat back-paint to match	1or2
		D2FZ 6262876-A	Front seat back-chrome	1or2
77/	V	C8AZ 6262876-A	Door panel-paint to match	2
		D2FZ 6262876-A	Door panel-chrome	2
631A02-3	BRACKET (REAR SEAT BACK STOP TO WHEELHOUSE)			
79	A(74)	D9AZ 74631A02-A		1
73/76	C(71)	D20Z 71631A02-A		1
77	F(71)			1
74	L(64)	(RH) D4FZ 64631A02-A	(LH) D4FZ 64631A03-A	1
78/	P(74)	(RH) D8BZ 74631A02-A	(LH) D8BZ 74631A03-A	1
63120	SPRING (REAR SEAT CUSHION)-Refer to group in Soft Trim Section			

BODY TYPE	R/L	PART NUMBER LESS SUFFIX	COLORS AND APPLICABLE PART NUMBER SUFFIXES														QTY.
				AVO-CADO	BEIGE	BLACK	BLUE	GOLD	GREEN	ORANGE	RED	SADDLE	SILVER	TAN	WHITE	OTHER	
63218-9		PANEL (FRONT SEAT CUSHION TRIM REAR)															
Notes:		R-Right hand, L-Left hand-Paint to match															
1973																	
C(53B,D,71D)	R	D30Z 5363218			★A												1
	L	D30Z 5363219			★A												1
C(63,65B,D)	R	D20Z 6563218				★G											1
	L	D20Z 6563219				★G											1
C(53K,63R,65K, 71K)		D2GZ 6563218				★E											1
C(65K) - - w/lo-back full width seat		D3GY 6563218															1
1974																	
C(53B,D,71D)	R	D40Z 5363218						★B									1
	L	D40Z 5363219						★B									1
C(53K,65K,71K)		D2GZ 6563218				★E											1
C(65B,D)	R	D20Z 6563218				★G											1
	L	D20Z 6563219				★G											1
F		D2GZ 6563218				★E											1
K - - w/split seats non-reclining	R	D4SZ 6563218													★A		1
	L	D4SZ 6563219													★A		1
K - - w/split seats -reclining	R	D4SZ 6563218													★B		1
	L	D4SZ 6563219													★A		1

COPYRIGHT © 1986— FORD MOTOR COMPANY —DEARBORN, MICHIGAN

1973/79 LINCOLN-MERCURY CARS

BODY TYPE	R/L	PART NUMBER LESS SUFFIX	COLORS AND APPLICABLE PART NUMBER SUFFIXES														QTY.
				AVO-CADO	BEIGE	BLACK	BLUE	GOLD	GREEN	ORANGE	RED	SADDLE	SILVER	TAN	WHITE	OTHER	
63218-9		PANEL (FRONT SEAT CUSHION TRIM REAR) — Cont'd															
Notes:		R-Right hand, L-Left hand-Paint to match															
1975																	
C(53K,65K,71K)		D2GZ 6563218				★E											1
C(53B,D,71D)	R	D20Z 5363218					★C										1
	L	D20Z 5363219					★C										1
C(65B,D)	R	D20Z 6563218				★G											1
	L	D20Z 6563219				★G											1
F	R	D4SZ 6563218													★A		1
	L	D4SZ 6563219													★A		1
G - - w/full width seat and center arm rest		D5DZ 6663218									★D						1
K - - w/split seats non-reclining	R	D4SZ 6563218													★A		1
	L	D4SZ 6563219													★A		1
K - - w/split seats -reclining	R	D4SZ 6563218													★B		1
	L	D4SZ 6563219													★A		1
1976																	
C(53B,D,71D)	R	D20Z 5363218					★C										1
	L	D20Z 5363219					★C										1
C(53K,65K,71K)		D3GZ 6563218												★A			1
C(65B,D)	R	D20Z 6563218				★G											1
	L	D20Z 6563219				★G											1
F - - w/bucket or split seats	R	D4SZ 6563218													★A		1
	L	D4SZ 6563219													★A		1
F - - w/full width seat and center arm rest		D2GZ 6563218				★E											1
F - - w/full width seat and w/o center arm rest	R	D20Z 6563218				★G											1
	L	D20Z 6563219				★G											1
G - - w/full width seat and center arm rest		D5DZ 6663218									★D						1
K - - w/split seats non-reclining	R	D4SZ 6563218													★A		1
	L	D4SZ 6563219													★A		1
K - - w/split seats -reclining	R	D4SZ 6563218													★B		1
	L	D4SZ 6563219													★A		1

BODY TYPE	R/L	PART NUMBER LESS SUFFIX	COLORS AND APPLICABLE PART NUMBER SUFFIXES														QTY.
				BLACK	BLUE	CHAMOIS	CREAM	GRAY	GREEN	GOLD	JADE	RED	SADDLE	TAN	WHITE	OTHER	
63218-9		PANEL (FRONT SEAT CUSHION TRIM REAR) — Cont'd															
Notes:		R-right hand, L-left hand-Paint to match															
1977																	
F(53,71) - - w/full width seat and w/o center arm rest	R	D70Z 5363218				★C											1
	L	D70Z 5363219				★C											1

BODY TYPE	R/L	PART NUMBER LESS SUFFIX	COLORS AND APPLICABLE PART NUMBER SUFFIXES														QTY.
				BLACK	BLUE	CHAM-OIS	CREAM	GRAY	GREEN	GOLD	JADE	RED	SADDLE	TAN	WHITE	OTHER	
63218-9	PANEL (FRONT SEAT CUSHION TRIM REAR) — Cont'd																
Notes:	R-right hand, L-left hand, Paint to match																
1977																	
F(65) - - w/full width seat and w/o center arm rest	R	D70Z 6563218				★C											1
	L	D70Z 6563219				★C											1
F - - w/full width seat and center arm rest		D7WY 6563218				★C											1
G - - w/full width seat and center arm rest		D6DZ 6663218						★C									1
K - - w/split seats non-reclining	R	D4SZ 6563218													★A		1
	L	D4SZ 6563219													★A		1
K - - w/split seats -reclining	R	D4SZ 6563218													★B		1
	L	D4SZ 6563219													★A		1
V - - w/full width seat and center arm rest		D7DZ 5463218						★D									1
1978																	
F(53) - - w/full width seat and w/o center arm rest	R	D70Z 5363218				★C											1
	L	D70Z 5363219				★C											1
F(65) - - w/full width seat and w/o center arm rest	R	D70Z 6563218				★C											1
	L	D70Z 6563219				★C											1
F - - w/full width seat and center arm rest		D7WY 6563218				★C											1
F - - w/split seats non-reclining	R	D4SZ 6563218													★A		1
	L	D4SZ 6563219													★A		1
F - - w/split seats -reclining	R	D4SZ 6563218													★B		1
	L	D4SZ 6563219													★A		1
G - - w/full width seat and center arm rest	R	D8DZ 6663218						★J									1
	L	D8DZ 6663219						★E									1
G - - w/4 way full width seat	R	D8BZ 5463218		★J													1
	L	D8BZ 5463219		★J													1
K - - w/split seats non-reclining	R	D4SZ 6563218													★A		1
	L	D4SZ 6563219													★A		1
K - - w/split seats -reclining	R	D4SZ 6563218													★B		1
	L	D4SZ 6563219													★A		1
P - - w/manual full width seat	R	D8BZ 5463218		★F													1
	L	D8BZ 5463219		★F											★B		1

COPYRIGHT © 1986— FORD MOTOR COMPANY —DEARBORN, MICHIGAN

1973/79 LINCOLN-MERCURY CARS

BODY TYPE	R/L	PART NUMBER LESS SUFFIX	COLORS AND APPLICABLE PART NUMBER SUFFIXES														QTY.
				BLACK	BLUE	CHAM-OIS	CREAM	GRAY	GREEN	GOLD	JADE	RED	SADDLE	TAN	WHITE	OTHER	
63278-9		PANEL (FRONT SEAT CUSHION TRIM REAR) — Cont'd															
Notes:		R-right hand, L-left hand, Paint to match															

1978

P - - w/4 way full width seat	R	D8BZ 5463218		★J													1
	L	D8BZ 5463219		★J													1
V - - w/full width seat and center arm rest		D7DZ 5463218				★C											1

BODY TYPE		PART NUMBER LESS SUFFIX	COLORS AND APPLICABLE PART NUMBER SUFFIXES													QTY.
			BERYL	BLACK	BLUE	CAMEL	CHAM-OIS	CORD-OVAN	GOLD	GRAY	JADE	PINE GREEN	RED	WHITE	OTHER	
63218-9		PANEL (FRONT SEAT CUSHION TRIM REAR)														
NOTES:		R-right hand, L-left hand. Paint to match														

1979

A - - w/split seats	R	D9AZ 5463218				★F											1
	L	D9AZ 5463219				★F											1
A - - w/full width seats		D9AZ 5463218				★M											1
F(53) - - w/full width seat and w/o center arm rest	R	D70Z 5363218					★C										1
	L	D70Z 5363219					★C										1
F(65) - - w/full width seat and w/o center arm rest	R	D70Z 6563218					★C										1
	L	D70Z 6563219					★C										1
F - - w/full width seat and center arm rest		D7WY 6563218					★C										1
G,P - - w/manual or 4/way full width seat	R	D9BZ 5463218				★D											1
	L	D9BZ 5463219				★D											1
K - - w/split seats non-reclining	R	D4SZ 6563218												★A			1
	L	D4SZ 6563219												★A			1
K - - w/split seats -reclining	R	D4SZ 6563218												★B			1
	L	D4SZ 6563219												★A			1
V - - w/full width seat and center arm rest		D7DZ 5463218						★B									1

YEAR	MODEL/RESTRICTIONS	PART NUMBER	DESCRIPTION	QTY.
632A22	Refer to Soft Trim Section			
63370	RETAINER (REAR SEAT CUSHION FRONT)			
73/76	A(65,71),Y(65,71)	C9AZ 6263370-A	R.H. and L.H.	1or2
77	A(65,71)	C9AZ 6263370-A	R.H. and L.H.	1or 2
78	A(65)			1or2
79	A(54,74)	D9AZ 7463370-A		1
73/76	C(53,63,65),F,K	D20Z 6563370-A	R.H. and L.H.	2
77/	F,K			2
73	D,P	C9AZ 6263370-A	R.H. and L.H.	1or2
77/	D			1or2
78/	P(36,54,66)	D8BZ 5463370-A	R.H. and L.H.	1or2
63840	PAD (REAR SEAT CUSHION)-Refer to group in Soft Trim Section			
64416-7	COVER (FRONT SEAT BACK)-Refer to group in Soft Trim Section			
64632-3	FILLER (FRONT SEAT BACK REAR)			
77/	V - - w/full width seat and center arm rest	(RH) D74Y 5464632-A	(LH) D74Y 5464633-A	1
77/	V - - w/bucket seats	(RH) D74Y 5464632-B	(LH) D74Y 5464633-B	1
64700-1	FRAME and PLATFORM (FRONT SEAT BACK)-Refer to group in Soft Trim Section			
64810	PAD (FRONT SEAT BACK)-Refer to group in Soft Trim Section			
64822	SLIDE (FRONT SEAT BACK TRIM COVER)			
76/	K	D5LZ 6564822-A	R.H. and L.H.	2
64824	ORNAMENT (SEAT BACK)			
73	A(65F,H)	C8MY 6364824-A	Front and rear seat	AR
654A04	ESCUTCHEON (FRONT SEAT CENTER ARM REST)			
75/	G - - w/full width seat and center arm rest	D5DZ 66654A04-A	R.H. and L.H.-black	2
78/	P			2
77/	V - - w/full width seat and center arm rest			2
65406-7	LINK and SUPPORT ASSY. (FRONT SEAT BACK CENTER ARM REST)			
73	A(53,57,71),Y(53,71) - - w/full width seat	C9MZ 5765406-A		1
74/78	A(53,71)	D5AZ 5365406-A		1
79	A(54,74)			1
74/78	A(65H) - - w/full width seat	D5AZ 6065406-A	R.H. and L.H.	2
79	A(66)			2
73	D - - w/full width seat- "Before 6/15/73"	D0VY 6565406-A		1
73/75	D - - w/full width seat- "From 6/15/73"	★		1
73	D - - w/split seats- "Before 6/15/73"	(RH) D0VY 6565406-B	(LH) D0VY 6565407-A	1
74	D - - w/split seats "From 4/1/74"	D3VY 6565406-B	R.H. and L.H.	2
654A28	BUSHING (FRONT SEAT BACK CENTER ARM REST PAD)			
73/76	A,C,D,F,G,K,Y,	C5ZZ 65654A28-A		AR
77/	A,D,F,G,K,V			AR
78/	P			AR
654A54	RETAINER (FRONT SEAT BACK CENTER ARM REST COVER)			
73/74	A(65),Y(53,65)	C7MY 63654A54-A		2
75/76	A(65H),Y(65)			2
77/78	A(65)			2
79	A(66)			2

COPYRIGHT © 1986— FORD MOTOR COMPANY —DEARBORN, MICHIGAN

1973/79 LINCOLN-MERCURY CARS

YEAR	MODEL/RESTRICTIONS	PART NUMBER	DESCRIPTION	QTY.
65478-9	PAD (FRONT SEAT BACK CENTER ARM REST)			
73/74	A - - w/split seats	(RH) D4AZ 6565478-A	(LH) D4AZ 6565479-A	1
73	A(53,57),Y(53) - - w/full width seat	D3MY 5365478-A		1
73	A(65),Y(65) - - w/full width seat	D3MY 6565478-A		1
73/76	A,Y - - w/full width seat	D3MY 6565478-A	R.H. and L.H. - 4 1/2" wide	2
77/78	A - - w/full width seat			2
74/76	A,Y - - w/full width seat	D3MY 5365478-A	8 1/2" wide	1
77/78	A - - w/full width seat			1
74/76	A,Y - - w/full width seat	D3AZ 6565478-B	10" wide	1
77/78	A - - w/full width seat			1
75/76	A,Y - - w/split seats	(RH) D5AZ 6565478-A	(LH) D5AZ 6565479-A 5" wide	1
77/78	A - - w/split seats			1
79	A - - w/split seats	(RH) D9AZ 5465478-A	(LH) D9AZ 5465479-A	1
79	A - - w/full width seat	D9AZ 5465478-B		1
74/76	C - - w/split seats	(RH) D4SZ 6565478-A	(LH) D4SZ 6565479-A	1
73/76	C(53K,65K,71K) - - w/full width seat	D50Z 6565478-A		1
77	D - - w/full width seat - "From 12/20/76"	D7VY 6065478-B		1
73/76	D - - w/split seats- "Before 3/15/76"	D0VY 6565478-A		2
76/77	D - - w/split seats- "From 3/15/76 to 12/20/76"	(RH) ★	(LH) D6VY 6065479-A	1
77	D - - w/split seats - "From 12/20/76"	(RH) D7VY 6065478-A	(LH) D6VY 6065479-A	1
78/	D - - w/full width seat	D8VY 6065478-A		1
78/	D - - w/split seats	D8VY 6065478-B	R.H. and L.H.	2
74/78	F - - w/split seats	(RH) D4SZ 6565478-A	(LH) D4SZ 6565479-A	1
79	F - - w/split seats	(RH) D7LY 6565478-A	(LH) D7LY 6565479-A	1
76/	F - - w/full width seat	D50Z 6565478-A		1
78/	G	D8DZ 6665478-A		1
75/77	G	D5DZ 6665478-A		1
74/	K - - w/split seats	(RH) D4SZ 6565478-A	(LH) D4SZ 6565479-A 5 1/2" wide	1
77/	K - - w/split seats "From 1/17/77"	(RH) D7LY 6565478-A	(LH) D7LY 6565479-A 4 1/8" wide	1
77	P	D5DZ 6665478-A		1
78/	P	D8DZ 6665478-A		1
77/	V	D74Y 5465478-A		1
654A82	SHIELD (FRONT SEAT BACK CENTER ARM REST)			
73	C - - w/full width seat- "Before 3/5/73"	D3GZ 65654A82-C	Blue	1
73	C - - w/full width seat- "From 3/5/73"	★		
75/76	C	D3GZ 65654A82-C	Blue	1
		D4GY 65654A82-A	Saddle	1
		D4WY 65654A82-A	Red	1
		D6GY 65654A82-A	White	1
74	F	D4WY 65654A82-A	Red	1
		D4GY 65654A82-A	Saddle	1
75/76	F	D3GZ 65654A82-C	Blue	1
		D4WY 65654A82-A	Red	1
		D4GY 65654A82-A	Saddle	1
		D6GY 65654A82-A	White	1
77	F	D7WY 65654A82-C	Chamois	1
		D7WY 65654A82-B	Gray	1
		D7WY 65654A82-A	Jade	1
		D4WY 65654A82-A	Red	1
		D4GY 65654A82-A	Saddle	1

YEAR	MODEL/RESTRICTIONS	PART NUMBER	DESCRIPTION	QTY.
654A82	SHIELD (FRONT SEAT BACK CENTER ARM REST) — Cont'd			
78	F	D7WY 65654A82-C	Chamois	1
		D7WY 65654A82-B	Gray	1
		D7WY 65654A82-A	Jade	1
		D4WY 65654A82-A	Red	1
		D8WY 65654A82-A	Russet	1
		D4GY 65654A82-A	Saddle	1
		D6GY 65654A82-A	White	1
79	F	D7WY 65654A82-C	Chamois	1
		D9WY 65654A82-A	Cordovan	1
		D7WY 65654A82-B	Gray	1
		D7WY 65654A82-A	Jade	1
		D4WY 65654A82-A	Red	1
		D6GY 65654A82-A	White	1
65502	CABLE (FRONT SEAT BACK PAD ADJUSTING)			
75/	K - - w/lumbar seat	D5LY 6565502-A		1
65504	SCREW (FRONT SEAT BACK PAD ADJUSTING)			
75/	K - - w/lumbar seat	D5LY 6565504-A		1
65506	PLATE (FRONT SEAT BACK PAD ADJUSTING)			
75/	K - - w/lumbar seat	D5LY 6565506-A		2
65508	RETAINER (FRONT SEAT BACK PAD ADJUSTING CABLE)			
75/	K - - w/lumbar seat	D5LY 6565508-A		1
65510	SHAFT (FRONT SEAT BACK PAD ADJUSTING)			
75/	K - - w/lumbar seat	D5LY 6565510-A		1
65512	SPRING (FRONT SEAT BACK PAD ADJUSTING PLATE)			
75/	K - - w/lumbar seat	D5LY 6565512-A		2
65514	SUPPORT (FRONT SEAT PAD ADJUSTING)			
75/	K - - w/lumbar seat	D5LY 6565514-A		1
65516	DRIVE (FRONT SEAT BACK PAD ADJUSTING SCREW)			
75/	K - - w/lumbar seat	D5LY 6565516-A		1
66700	SPRING (REAR SEAT BACK)			
73/74	J - - w/o simulated bucket seats	D0RY 6266700-A		1
66748	BRACKET (REAR SEAT BACK SPRING ANCHOR)			
73/74	D(53)	D0VY 5366748-A		2
75/	D	D0VY 5366748-A		2
67204	BASE (REAR SEAT BACK CENTER ARM REST)			
73/74	A(53K,57K,65K)	C5MY 6367204-A		1
75/	A(53K,L,65K,L)			1
73/	D	★	Improvise from 5/8" plywood-12 1/2" x 6 7/8"	
76	G(54K)	★	Improvise from 5/8" plywood-12 1/4" x 4 1/2"	
73/	K	★	Improvise from 5/8" plywood-12 1/2" x 6 7/8"	
77/	V	★	Improvise from 5/8" plywood-12 1/4" x 4 1/2"	
67210	LINK and VERTICAL STRAINER ASSY. (REAR SEAT BACK CENTER ARM REST)			
73/74	A(53F,H,K,X,57H,K,X, 65F,H,K,X),Y	C5AZ 6367210-A		1
79	A(54K,66K)	D9AZ 5467210-A		1
73/	D	C5AZ 6367210-A		1
75/76	A(53K,L,65K,L)			1
76/	G(54K)	D64Y 5467210-A		1
73/	K	D2SZ 6567210-A		1
77/	V	D64Y 5467210-A		1
67273	PAD (REAR SEAT BACK CENTER ARM REST)			
73/76	A(53,57,65),Y(53,65)	D3MY 6567273-A		1
79	A	D9AZ 5467273-A		1
73/	D	D3VY 6567273-A		1
76	G(54K)	D6DZ 5467273-A		1
73/	K	D3VY 6567273-A		1
77/	V	D6DZ 5467273-A		1

COPYRIGHT © 1986— FORD MOTOR COMPANY —DEARBORN, MICHIGAN

INDEX

PART NAME	GROUP NUMBER
A	
Arm rest (front door)	24140–1
Arm rest (quarter)	31600–1
Arm rest (rear door)	27540–1
B	
Back kit (aux. seat)	60096
Back kit (front seat)	60136–7
Back kit (rear seat)	60032
Bar assy. (passenger assist)	045B22
Base (arm rest)	24144–5, 27578–9, 31604–5
Button (door and quarter trim panels)	237A14
Button (front seat back)	63500
Button (front seat cushion)	63500
Button (rear seat back)	63500
Button (rear seat cushion)	63500
Button (seat back ornament)	63522, 64824
C	
Carpet (aux. floor)	13048–9, 13065
Carpet (front floor)	13000–1
Carpet (rear floor)	13046
Carpet (rear seat back floor)	60579
Case (folding top back stay pad)	54212–3
Case (folding top side quarter)	52874–5
Container (folding to dust hood)	54486
Container (glass roof panel storage)	50124
Cord (front seat back assist)	62800
Cover (aux. seat back)	66640
Cover (aux. seat cushion)	63822
Cover (back window opening outside lower)	52788
Cover (center body pillar outside finish)	243A70
Cover (front seat back)	64416–7
Cover (front seat back center arm rest)	644A18–9
Cover (front seat cushion)	62900–1
Cover (jack column in luggage compt.)	45400
Cover (luggage)	45440
Cover (luggage compt. floor)	45455–6, 45476, 45494
Cover (luggage compartment front)	45443
Cover (luggage compt. side)	45422–3
Cover (quarter latch pillar flange)	281A74–5
Cover (quarter trim panel)	31040–1
Cover (quarter wheelhouse in luggage compt.)	31750
Cover (rear seat back)	66600–1
Cover (rear seat back center arm rest)	67244
Cover (rear seat back center arm rest opening)	67299
Cover (rear seat cushion)	63804
Cover (roof outside)	53700
Cover (roof side rear trim)	52018–9
C	
Cover (roof sliding panel outside)	53701
Cover (sliding roof panel flange)	518A54
Cover (spare tire)	45026
Cover (spare wheel well panel)	47014
Cover (storage compt. door)	11760
Cover & pad assy. (aux. seat back)	60103
Cover & pad assy. (aux. seat cushion)	60107
Cushion kit (aux. seat)	60090
Cushion kit (front seat)	60050–1
Cushion kit (rear seat)	60080
E	
Extension (quarter trim panel upper)	310A32–3
Extension (roof side rear trim panel)	518B06
F	
Filler (quarter trim panel to rear seat)	31116–7
Filler (roof outside cover side)	53718
Flap (front seat back center arm rest)	644A16
Flap (rear seat back center arm rest)	67286
Frame (front seat back)	61018–9, 64700–1
Frame (front seat cushion)	60336–7
Frame (rear seat back)	66700–1
Frame assy. (front seat cushion)	63100
H	
Handle (door pull)	22666
Handle (liftgate assist)	54251
Handle (roof side rail assist)	54251
Head rest assy. (front seat back)	611A08
Headlining (roof)	51916
Headlining (roof sliding panel)	519A02, 519B02
Hood (folding top dust)	54400
I	
Insert assy. (door trim)	23724–5
Insert (door trim panel)	23996–7
Insert (quarter trim panel)	31076–7
K	
KIT—refer to appropriate noun name	
For example	
Back kit (rear seat)	60032
L	
Lining board (luggage compt. rear)	45522
M	
Mat (front floor)	13000, 13086
Mat (rear floor)	13046

COPYRIGHT © 1986 — FORD MOTOR COMPANY — DEARBORN, MICHIGAN

INDEX

PART NAME	GROUP NUMBER
M	
Mat (rear floor)	13106, 13182
Moulding (folding top No. 4 bow outside)	51416
P	
Pad (console panel)	04620
Pad (front door arm rest)	24100–1
Pad (front seat back)	64810–1
Pad (front seat back upper)	664K64
Pad (front seat cushion)	632A22
Pad (instrument panel end)	044G12
Pad (instrument panel lower)	045A58
Pad (instrument panel upper)	04282
Pad (passenger assist bar)	043K62
Pad (quarter arm rest)	31718
Pad (quarter lock pillar)	281A84
Pad (rear door arm rest)	24100–1, 27618–9
Pad (rear seat back)	66800–1
Pad (rear seat back center)	66830
Pad (roof outside cover side)	537A00, 537A02–3, 53738, 53740
Pad assy. (rear seat cushion)	63840
Panel (back trim lower)	40374–5
Panel (center body pillar inside finish lower)	243A52–3
Panel (center body pillar lower)	24346–7
Panel (center body pillar upper)	24356–7
Panel (cowl trim)	02344–5
Panel (front door trim lower)	23936–7
Panel (front seat back rear trim panel insert)	60762–3, 61632
Panel (liftgate trim)	46404
Panel (luggage compartment door inside)	45594
Panel (luggage compartment door outside)	425A38
Panel (package tray trim)	46668
Panel (package tray trim end)	46918–9
Panel (quarter trim)	31070–1
Panel (quarter trim finish)	311A58–9
Panel (quarter trim lower)	31486–7
Panel (rear door arm rest trim)	27542–3
Panel (roof outside trim)	50460
Panel (roof opening trim)	519A02
Panel (spare wheel well)	47042
Panel (storage compartment)	116A42
Panel assy. (front door trim)	23942–3
P	
Panel assy. (quarter trim)	31012–3
Panel assy. (quarter trim rear)	31148–9
Panel assy. (rear door trim)	27406–7
Plate (quarter trim panel access hole cover)	312A28–9
Platform (front seat cushion)	600M54
Pocket (door)	23718
R	
Rest (front door arm)	24140–1
Rest (quarter arm)	31600–1
Rest (rear door arm)	27540–1
Retainer (rear floor mat)	13144–5
S	
Seat back assy. (rear)	672A18
Shield (front seat belt cushion)	611A70
Shield (roof outside rear)	537A32 537A36
Spring (front seat back)	64700–1
Spring–No. 1 (front seat cushion)	631A44
Spring–No. 2 (front seat cushion)	631A46
Spring (rear seat cushion)	63120
Spring assy. (front seat cushion)	63100
Strap (assist)	31406
Strap (roof opening glass container)	501A80
T	
Top (folding less back curtain & bows)	52700
Trim (folding top compt.)	54602
V	
Visor assy.	04104–5
W	
Weatherstrip (folding top No. 1 bow)	51338
Welt (rear belt moulding)	40249
Welt (roof outside moulding)	517C66
Windlace (center body pillar)	24486–7
Windlace (front door opening)	02600, 31290–1
Windlace (quarter pillar)	02600, 31290–1
Window (folding top back curtain)	52500
Z	
Zipper (folding top back curtain)	53278

INSTRUCTIONS

Determine correct Group Number by referring to an appropriate illustration in the Interior Trim Illustration Section or to the Soft Trim Index. Identify Model, Year, Body Type and Trim Code by referring to the sample Certification Label shown and refer to the General Information Section for a complete listing of Series and Body Type Codes.

"BEFORE 10/6/78"

SERIES CODES: (EXCEPT CAPRI)
THE THIRD AND FOURTH DIGITS OF THE VEHICLE IDENTIFICATION NUMBER IDENTIFY THE BODY SERIES.

BODY TYPE CODES: (EXCEPT CAPRI)
THIS CODE APPEARS BELOW "BODY" AND IDENTIFIES THE BODY TYPE OF THE UNIT.

VINYL ROOF CODES (1975/79 ONLY)-EXCEPT CAPRI
THE THIRD AND FOURTH POSITIONS OF THE COLOR CODE INDICATE THE ROOF STYLE AND TYPE OF GRAIN (THIRD POSITION) AND THE COLOR (FOURTH POSITION).

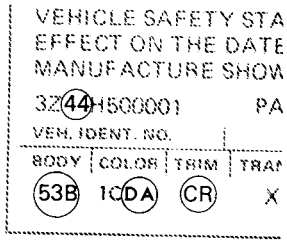

"FROM 10/6/78"

SERIES CODES;

THE THIRD AND FOURTH DIGITS OF THE VEHICLE IDENTIFICATION NUMBER IDENTIFY THE BODY SERIES.

BODY TYPE CODES;

THIS CODE APPEARS BELOW "BODY" AND IDENTIFIES THE BODY TYPE OF THE UNIT.

VINYL ROOF CODES (1979 ONLY);

THIS CODE APPEARS BELOW "VR" AND IDENTIFIES THE VINYL ROOF OF THIS UNIT. THE FIRST POSITION IDENTIFIES TYPE OF GRAIN. THE SECOND POSITION IDENTIFIES COLOR.

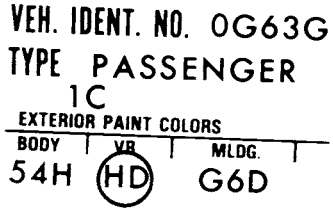

TRIM CODES: (EXCEPT CAPRI)
THE CODE SHOWN BELOW "TRIM" IDENTIFIES THE COLOR AND TYPE OF MATERIALS USED IN THE INTERIOR UPHOLSTERY AS WELL AS THE COLOR OF THE INTERIOR PAINT.

BODY TYPE CODES: (CAPRI)
THE FIRST AND SECOND DIGITS UNDER "TYP/TYPE" IDENTIFY BODY TYPE OF THE UNIT.

TRIM CODES: (CAPRI)
THE CODE SHOWN BELOW "POLST/TRIM" IDENTIFIES THE COLOR AND TYPE OF MATERIALS USED IN THE INTERIOR UPHOLSTERY AS WELL AS THE COLOR OF THE INTERIOR PAINT.

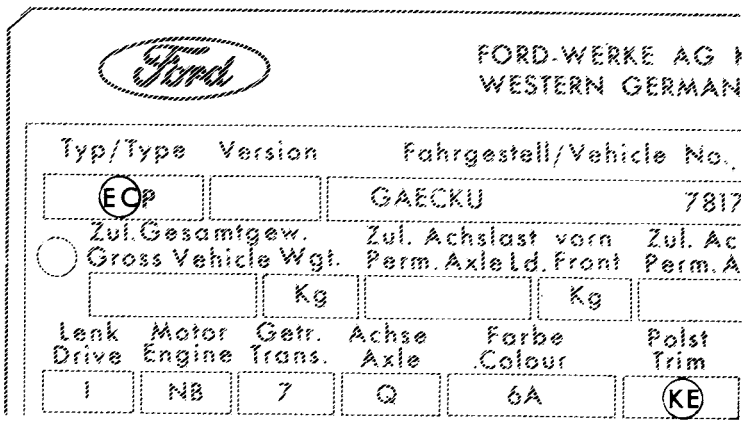

COPYRIGHT © 1986 — FORD MOTOR COMPANY — DEARBORN, MICHIGAN

For your convenience the Soft Trim Sections are arranged according to year and car line. For example, each year (1973, 1974, 1975, 1976 etc.) is sequenced according to catalog model code, i.e., A (Mercury), C (Montego), D (Lincoln), etc., and each section contains all applicable Soft Trim Parts.

Soft Trim Section consists: (1) Trim Scheme Codes. (2) Swatches (1973/74). (3) Vinyl Roof Cover Codes (1975/ only). (4) Listing of Soft Trim Parts.

IMPORTANT

THE SOFT TRIM SECTION INCLUDES ONLY THOSE ITEMS WHICH WERE AVAILABLE FOR SERVICE AT THE TIME OF PRINTING. ITEMS NOT SHOWN IN THE CATALOG MUST BE IMPROVISED OR PROCURED LOCALLY.

TRIM SCHEME CODES

Consists of: (1) Listing of Trim Scheme Code arranged in alphabetical order for each model, i.e. Mercury Section (A), Montego Section (C), etc.
(2) Description of Trim Schemes.
(3) Color Swatches identified by a number beside the swatch (1973/74).
(4) Type of Seat indicated (1975/).

How to use for 1973/74: (1) Identify Model, Body Type and Trim Code and apply this information to listing of Trim Scheme Codes. (2) Determine Swatch Identification Numbers and refer to Colored Swatches on Page B, etc. (3) Locate appropriate swatches to verify the color and/or pattern of the principle materials used in the unit.
Colored Swatch pages are primarily for verification of color and/or pattern and do not indicate the type or weight of material.

For example:
To determine which Swatches make up Trim Code CB on a 1974 Mercury Four Door Pillared Hardtop, refer to pages 1.2, etc. of the 1974 Soft Trim Section A. As shown on page 1, Trim Code CB indicates (1) Body types (53B,65B). (2) Trim scheme description (Medium blue vinyl and medium blue cloth). (3) Door and Quarter material (swatch No.15), bolster material (swatch No.15), cushion and back material (swatch No.15 and 261) and headlining material (swatch No.13).

CODE	BODY TYPE	TRIM SCHEME	DOORS and QTR'S.	SEATS BOLSTER	SEATS CUSHION and BACK	HEADLINING
MERCURY (A)						
CA	53B,65B	Black vinyl and black cloth				
CB	53B,65B	Medium blue vinyl and medium	4	4	4 & 260	1
			15	15	15 & 261	13
					49 & 262	

How to use for 1975/: Identify Model, Body type and Trim Code and apply this information to listing of Trim Scheme Codes. (For material identification refer to Salesman's Color and Upholstery Guide).

For example:
To determine description of trim scheme and type of seat for Trim Code CB on a Mercury Four Door Pillared Hardtop, refer to pages 1.2, etc. of the 1975 Soft Trim Section A. As shown on page 1, Trim Code CB indicates (1) Body Types (53H,65H); (2) Trim scheme description (Medium blue vinyl and medium blue cloth); and (3) Type of seat (FW-Full width).

CODE(S)	BODY TYPE	TRIM SCHEME	●TYPE OF SEAT
MERCURY (A)			
CA	53H,65H	Black vinyl and black cloth	FW
CB	53H,65H	Medium blue vinyl and medium blue cloth	FW
	53H,65H		

SOFT TRIM PARTS FOR ALL MODELS

Consists of: (1) Parts cataloged by trim code and color (e.g. groups 02344-5, 62900, etc.).
(2) Parts cataloged by trim code only (e.g. groups 23942-3, 62900, etc.)
(3) Miscellaneous parts (e.g. groups 45422-3, 47042, etc.)

PARTS CATALOGED BY COLOR (EXCEPT CAPRI)

(1) Identify Model, Year, Body Type and Color of desired part. (2) Determine Group Number of part. (3) Locate appropriate Trim Code and Color listed at top of page. Second character of trim code generally applicable to each color is also shown above the color as an additional aid. When color of part is in doubt refer to the list of Trim Codes for further identification. (4) Match Color with Model and Body Type to select desired part number.

For example: Should a Blue cut pile Rear Floor Carpet, Group 13046) be desired for a 1975 Mercury Four Door Pillared Hardtop -
(1) Refer to Group 13046 in the 1975 Soft Trim Section A. (2) Read list of Colors above title to find Blue.
(3) Read down to find A(53)--cut pile. (4) Part number shown is D5MY 5313046 and suffix in "Blue" column is B.

COLORS →																	
							BLUE				SILVER	TAN					
13046	CARPET (REAR FLOOR)																
A(53)--cut pile	D5MY 5313046		B				D				A	C					1
-shag	D5MY 5313046		G		F		H		•		J	E					1
	D5MY 6513046						D										

PARTS CATALOGED BY COLOR (CAPRI)

(1) Identify Body Type (1976 only) and Color of desired part. (2) Determine Group Number of part.
(3) Locate appropriate Trim Code and Color listed at top of page. First character of Trim Code generally applicable to each color is also shown above as an additional aid. When color of part is in doubt refer to the list of Trim Codes for further identifications. (4) Match Color with Body Type to select desired part number (1976 only).

For example. Should a Black Floor Carpet. (Group 13000-1) be desired for a 1976 with Decor Option -
(1) Refer to Group 13046 in the 1976 Soft Trim Section J. (2) Read list of Colors above title to find Black.
(3) Read down to find J(64P). (4) Part number shown is D5RY 6413000 and suffix in "Black" column is R.

COLORS →																
			-A or U		---C					-L or T		CODES				
			BLACK		CLOUD (BLUE)		RED		TAN		SADDLE		PARCH-MENT	SEE FOOT-NOTE	FOOT-NOTE	
J(64P)		D5RY 6413000	R													
J(64T)	R	D5RY	K						N		P					1

COPYRIGHT © 1986 — FORD MOTOR COMPANY — DEARBORN, MICHIGAN

SOFT TRIM PARTS FOR ALL MODELS- cont'd.

PARTS CATALOGED BY TRIM CODE

(1) Identify Model, Year, Body Type and Trim Code. (2) Determine Group Number of part. (3) Locate appropriate Trim Code (listing of Trim Codes precedes each Body Type). (4) Match Model and Body Type with Trim Code to select part number.

For example: Should a R.H. Rear Door Trim Panel, (Group 27406) be required for a 1975 Lincoln Four Door Pillared Hardtop, Trim Code BB -
(1) Refer to Group 27406 in the 1975 Soft Trim Section D. (2) Read down to locate D(53). (3) Read trim codes (listed alphabetically) to find Trim Code BB. (4) Part number shown is D5VY 5327406 and suffix listed is ABB.

BODY TYPE	R/L	PART NUMBER LESS SUFFIX	TRIM CODES AND APPLICABLE PART NUMBER SUFFIXES							
27406-7		PANEL ASSY. (REAR DOOR TRIM) cont'd.								
		TRIM CODES →	BA	BB	BD	BG	BJ	BU	BY	
D(53)	R	D5VY 5327406	ABA	ABB	ABD	ABG	ABJ	ABU	ABY	1
	L	D5VY 5327407	ABA	ABB	ABD	ABG	ABJ	ABU	ABY	

3 DIGIT TRIM CODES

Parts for 3 digit trim codes ending with an alphabet (e.g. BBA) are listed with parts cataloged by trim code. Parts for 3 digit trim codes ending with a numeral (e.g. BB1) normally are not cataloged. Refer to the listing of Trim Codes to determine which parts are available through service. For parts Which are not available for service contact your Service Representative, who will process in accordance with General ICC bulletin No. 7526.

1973 SOFT TRIM SCHEME CODES

AS LISTED ON CERTIFICATION LABEL

● For swatch identification, refer to Page B, etc.

A (MERCURY)

NOTE 1 For replacement of door and quarter trim panels (23942–3, 27406–7 and 31012–3) refer to this code in the 1973 Soft Trim Section. For replacement of cushion covers (62900 and 63804) and covers (64416 and 66600) contact your Service Rpresentative who will process in accordance with ICC bulletin No. 7526 All other parts are included in the 1973 Soft Trim Section.

CODE	BODY TYPE	TRIM SCHEME	●CONSISTS OF SWATCH IDENTIFICATION NUMBERS: DOORS and QTR'S	SEATS: BOLSTER	SEATS: CUSHION and BACK	HEAD-LINING
CA, CAA, CAC	53B,65B	Black vinyl and black cloth	4	4	4 & 142	1
CB, CBA, CBC	53B,65B	Medium blue vinyl and medium blue cloth	15	15	15 & 151	13
CR, CRA, CRC	53B,65B	Medium green vinyl and medium green cloth	49	49	49 & 166	47
CT, CTA, CTC	53B,65B	Light beige vinyl and light beige cloth	82	82	82 & 185	98
DA, DAA	53B,65B,71B	Black all vinyl	4	4	3 & 4	1
DB, DBA	53B,65B,71B	Medium blue all vinyl	15	15	14 & 15	13
DR, DRA	53B,65B,71B	Medium green all vinyl	49	49	48 & 49	47
DT	53B,65B,71B	Light beige all vinyl	82	82	82 & 99	98
DZ, DZA	53B,65B	Dark tobacco all vinyl	102	102	172	61
GA, GAA	53F,65F	Black vinyl and black cloth	4	4	139	1
GB, GBA	53F,65F	Medium blue vinyl and medium blue cloth	15	15	155	13
GR, GRA	53F,65F	Medium green vinyl and medium green cloth	49	49	193	47
GRC	53F,65F	Medium green vinyl and medium green cloth	49	49	244	47
GT, GTA	53F,65F	Light beige vinyl and light beige cloth	82	82	194	98
GTC	53F,65F	Light beige vinyl and light beige cloth	82	82	210	98
HA, HAA	53F,65F	Black all vinyl	4	4	3	1
HB, HBA	53F,65F	Medium blue all vinyl	15	15	14	13
HR, HRA	53F,65F	Medium green all vinyl	49	49	48	47
HT, HTA	53F,65F	Light beige all vinyl	82	82	99	98
JA	53H,57H,65H	Black vinyl and black cloth	4 & 11	4	132 & 144	1
JAA, JAB	53H,57H,65H	Black vinyl and black cloth	4 & 11	4	132 & 230	1
JB	53H,57H,65H	Medium blue vinyl and medium blue cloth	15 & 20	15	152 & 153	13
JBA, JBB	53H,57H,65H	Medium blue vinyl and medium blue cloth	15 & 20	15	152 & 229	13
JR	53H,57H,65H	Medium green vinyl and medium green cloth	49 & 53	49	124 & 167	4

COPYRIGHT © 1986 — FORD MOTOR COMPANY — DEARBORN, MICHIGAN

AS LISTED ON CERTIFICATION LABEL

CODE	BODY TYPE	TRIM SCHEME	●CONSISTS OF SWATCH IDENTIFICATION NUMBERS			
			DOORS and QTR'S	SEATS		HEAD-LINING
				BOLSTER	CUSHION and BACK	

● For swatch identification, refer to Page B, etc.

A (MERCURY) — Cont'd

NOTE 1 For replacement of door and quarter trim panels (23942–3, 27406–7 and 31012–3) refer to this code in the 1973 Soft Trim Section. For replacement of cushion covers (62900 and 63804) and covers (64416 and 66600) contact your Service Representative, who will process in accordance with ICC bulletin No. 7526. All other parts are included in the 1973 Soft Trim Section.

JRA, JRB	53H,57H,65H	Medium green vinyl and medium green cloth	49 & 53	49	167 & 231	47
JT	53H,57H,65H	Light beige vinyl and light beige cloth	82 & 134	82	186 & 202	98
JTA, JTB	53H,57H,65H	Light beige vinyl and light beige cloth	82 & 134	82	186 & 232	98
JZ	53H,57H,65H	Dark tobacco vinyl and dark tobacco cloth	67 & 102	102	122 & 175	61
JZA, JZB	53H,57H,65H	Dark tobacco vinyl and dark tobacco cloth	67 & 102	102	175 & 233	61
JZ1	53H,57H,65H	(Code JZ – see Note 1)				
KA, KAA	53H,57H,65H	Black vinyl and black cloth	4 & 11	4	139	1
KB, KBA	53H,57H,65H	Medium blue vinyl and medium blue cloth	15 & 20	15	155	13
KR, KRA	53H,57H,65H	Medium green vinyl and medium green cloth	49 & 53	49	193	47
KRC	53H,57H,65H	Medium green vinyl and medium green cloth	49 & 53	49	244	47
KT, KTA	53H,57H,65H	Light beige vinyl and light beige cloth	82 & 134	82	194	98
KTC	53H,57H,65H	Light beige vinyl and light beige cloth	82 & 134	82	210	98
KZ, KZA	53H,57H,65H	Dark tobacco vinyl and dark tobacco cloth	67 & 102	102	173	61
KZC	65H	Dark tobacco vinyl and dark tobacco cloth	67 & 102	102	241	61
LA, LAA	53H,57H,65H,71H,K	Black all vinyl	4 & 11	4	3	1
LB, LBA	53H,57H,65H,71H,K	Medium blue all vinyl	15 & 20	15	14	13
LF	71H,K	Medium ginger all vinyl	42 & 67	42	41	38
LR, LRA	53H,57H,65H,71H,K	Medium green all vinyl	49 & 53	49	48	47
LT, LTA	53H,57H,65H,71H,K	Light beige all vinyl	82 & 134	82	99	98
LZ, LZA	53H,57H,65H	Dark tobacco all vinyl	67 & 102	102	172	61
MA	53K,57K,65K	Black vinyl and black cloth	4,12 & 132	4	132 & 144	1
MAA, MAB, MAC	53K,57K,65K	Black vinyl and black cloth	4, 12 & 132	4	132 & 230	1
MB	53K,57K,65K	Medium blue vinyl and medium blue cloth	15,21 & 152	15	152 & 153	13
MBA, MBB, MBC	53K,57K,65K	Medium blue vinyl and medium blue cloth	15, 21 & 152	15	152 & 229	13
MR	53K,57K,65K	Medium green vinyl and medium green cloth	49, 96 & 167	49	124 & 167	47
MRA, MRB,	53K,57K,65K	Medium green vinyl and medium green cloth	49, 96 & 167	49	167 & 231	47

AS LISTED ON CERTIFICATION LABEL

CODE	BODY TYPE	TRIM SCHEME	●CONSISTS OF SWATCH IDENTIFICATION NUMBERS			
			DOORS and QTR'S	SEATS		HEAD-LINING
				BOLSTER	CUSHION and BACK	

● For swatch identification, refer to Page B, etc.

A (MERCURY) — Cont'd

NOTE 1 For replacement of door and quarter trim panels (23942-3, 27406-7 and 31012-3) refer to this code in the 1973 Soft Trim Section. For replacement of cushion covers (62900 and 63804) and covers (64416 and 66600) contact your Service Representative, who will process in accordance with ICC bulletin No. 7526. All other parts are included in the 1973 Soft Trim Section.

MT MRC	53K,57K,65K	Light beige vinyl and light beige cloth	82, 186 & 203	82	186 & 202	98
MTA, MTB, MTC	53K,57K,65K	Light beige vinyl and light beige cloth	82, 186 & 203	82	186 & 233	98
MZ	53K,57K,65K	Dark tobacco vinyl and dark tobacco cloth	68, 102 & 175	102	122 & 175	61
MZA, MZB, MZC	53K,57K,65K	Dark tobacco vinyl and dark tobacco cloth	68, 102 & 175	102	175 & 232	61
MZ1	53K,57K,65K	(Code MZ – see Note 1)				
NA	53K,57K,65K	Black vinyl and black cloth	4, 12 & 132	4	132 & 144	1
NAA, NAB, NAC	53K,57K,65K	Black vinyl and black cloth	4, 12 & 132	4	132 & 230	1
NB	53K,57K,65K	Medium blue vinyl and medium blue cloth	15, 21 & 152	15	152 & 153	13
NBA, NBB, NBC	53K,57K,65K	Medium blue vinyl and medium blue cloth	15, 21 & 152	15	152 & 229	13
NR	53K,57K,65K	Medium green vinyl and medium green cloth	49, 96 & 167	49	124 & 167	47
NRA, NRB, NRC	53K,57K,65K	Medium green vinyl and medium green cloth	49, 96 & 167	49	167 & 231	47
NT	53K,57K,65K	Light beige vinyl and light beige cloth	82, 186 & 203	82	186 & 202	98
NTA, NTB, NTC	53K,57K,65K	Light beige vinyl and light beige cloth	82, 186 & 203	82	186 & 233	98
NZ	53K,57K,65K	Dark tobacco vinyl and dark tobacco cloth	68, 102 & 175	102	122 & 175	61
NZA, NZB, NZC	53K,57K,65K	Dark tobacco vinyl and dark tobacco cloth	68, 102 & 175	102	122 & 232	61
NZ1	53K,57K,65K	(Code NZ – see Note 1)				
SA, SAA, SAB	53K,57K,65K,71H, 71K	Black all vinyl	4, 12 & 137	4	4 & 137	1
SB, SBA, SBB	53K,57K,65K,71H, 71K	Medium blue all vinyl	15, 21 & 146	15	15 & 146	13
SF SFA, SFB	71 H,K	Medium ginger all vinyl	42,68 & 158	42	42&158	38

COPYRIGHT © 1986 — FORD MOTOR COMPANY — DEARBORN, MICHIGAN

AS LISTED ON CERTIFICATION LABEL

CODE	BODY TYPE	TRIM SCHEME	●CONSISTS OF SWATCH IDENTIFICATION NUMBERS			
			DOORS and QTR'S	SEATS		HEAD-LINING
				BOLSTER	CUSHION and BACK	

● For swatch identification, refer to Page B, etc.

A (MERCURY) — Cont'd

NOTE 1– For replacement of door and quarter trim panels (23942-3, 27406-7 and 31012-3) refer to this code in the 1973 Soft Trim Section. For replacement of cushion covers (62900 and 63804) and covers (64416 and 66600) contact your Service Representative, who will process in accordance with ICC bulletin No. 7526. All other parts are included in the 1973 Soft Trim Section.

SQ, SQA, SQB	53K,57K,65K	White vinyl with blue appointments	34	32	22 & 243	29
SR, SRA, SRB	53K,57K,65K,71H, 71K	Medium green all vinyl	49, 50 & 96	49	49 & 50	47
ST, STA, STB	53K,57K,65K,71H, 71K	Light beige all vinyl	82, 183 & 203	82	82 & 183	98
SW, SWA, SWB	53K,57K,65K	White vinyl with black appointments	34	32	22 & 243	29
SZ, SZA, SZB	53K,57K,65K	Dark tobacco all vinyl	68, 102 & 123	102	102 & 123	61
S5, S5A, S5B	53K,57K,65K	White vinyl with green appointments	34	32	22 & 243	29
S9, S9A, S9B	53K,57K,65K	White vinyl with tobacco appointments	34	32	22 & 243	29
VA, VAA	53X,57X,65X	Black vinyl and black cloth	4	4	4 & 197	1
VB, VBA	53X,57X,65X	Medium blue vinyl and medium blue cloth	15	15	15 & 199	13
VR, VRA	53X,57X,65X	Medium green vinyl and medium green cloth	49	49	49 & 200	47
VT, VTA	53X,57X,65X	Light beige vinyl and light beige cloth	82	82	82 & 198	98
VZ	53X,57X,65X	Dark tobacco vinyl and dark tobacco cloth		102	172 & 233	
YA, YAA	53X,57X,65X	Black all vinyl	4	4	3 & 4	1
YB, YBA	53X,57X,65X	Medium blue all vinyl	15	15	14 & 15	13
YR, YRA	53X,57X,65X	Medium green all vinyl	49	49	48 & 49	47
YT, YTA	53X,57X,65X	Light beige all vinyl	82	82	82 & 99	98
YZ	53X,57X,65X	Dark tobacco vinyl and dark tobacco cloth		102	172 & 233	
ZA, ZAA	53H,57H,65H,71K	Black all vinyl	4 & 11	4	4 & 137	1
ZB, ZBA	53H,57H,65H,71K	Medium blue all vinyl	15 & 20	15	15 & 146	13
ZF, ZFA	71K	Medium ginger all vinyl	42 & 67	42	42 & 158	38

1973 SOFT TRIM SCHEME CODES

AS LISTED ON CERTIFICATION LABEL

CODE	BODY TYPE	TRIM SCHEME	●CONSISTS OF SWATCH IDENTIFICATION NUMBERS			
			DOORS and QTR'S	SEATS		HEAD–LINING
				BOLSTER	CUSHION and BACK	

● For swatch identification, refer to Page B, etc.

A (MERCURY) — Cont'd

NOTE 1– For replacement of door and quarter trim panels (23942–3, 27406–7 and 31012–3) refer to this code in the 1973 Soft Trim Section. For replacement of cushion covers (62900 and 63804) and covers (64416 and 66600) contact your Service Representative, who will process in accordance with ICC bulletin No. 7526. All other parts are included in the 1973 Soft Trim Section.

ZQ, ZQA	53H,57H,65H	White vinyl with blue appointments	34	32	22 & 243	29
ZR, ZRA	53H,57H,65H,71K	Medium green all vinyl	49 & 53	49	49 & 50	47
ZT, ZTA	53H,57H,65H,71K	Light beige all vinyl	82 & 134	82	82 & 183	98
ZW, ZWA	53H,57H,65H	White vinyl with black appointments	34	32	22 & 243	29
ZZ, ZZA	53H,57H,65H	Dark tobacco all vinyl	67 & 102	102	102 & 123	61
Z5, Z5A	53H,57H,65H	White vinyl with green appointments	34	32	22 & 243	29
Z9, Z9A	53H,57H,65H	White vinyl with tobacco appointments	34	32	22 & 243	29

THE SOFT TRIM SECTION INCLUDES ONLY THOSE ITEMS WHICH WERE AVAILABLE FOR SERVICE AT TIME OF PRINTING. ITEMS NOT SHOWN OR INDICATED WITH A BLACK STAR (★) IN THE CATALOG MUST BE IMPROVISED OR PROCURED LOCALLY.

COPYRIGHT © 1986 — FORD MOTOR COMPANY — DEARBORN, MICHIGAN

1973/79 LINCOLN-MERCURY CARS

BODY TYPE	R/L	PART NUMBER LESS SUFFIX	TRIM CODES, COLORS AND APPLICABLE PART NUMBER SUFFIXES														QTY.
		TRIM CODES ▶		SECOND CHARACTER OF TRIM CODE											ALL CODES	ALL CODES	OTHER	
				-B or L	-C	-D or N	-F or 3	-G or 6	-R or 5	-T	-U	-Y or 8	-Z or 9				
		COLORS ▶		BLUE	ORANGE	RED	GIN-GER	AVO-CADO	GREEN	BEIGE	TAN	GRAY GOLD	TOB-ACCO	BLACK	WHITE	SEE NOTE	
04104-5	VISOR (LESS ARM and BRACKET)																
A(exc. 53K,57K,65K)	R/L	D40Z 6504104		B			★		★				★	A			AR
04282	PAD (INSTRUMENT PANEL UPPER)																
A		D4MY 6504282		A			★		★	★			★	★			1
13000	MAT (FRONT FLOOR)																
A		D3AZ 5313000												A			1
24144-5	BASE (ARM REST) - Incl. attaching parts - also serviced in assembly group 24140-1																
A(65) - - door-w/o power equipment	R	D3AZ 6524144		B					★	★			★	★			1
	L	D3AZ 6524145		★					★	★			★	C			1

BODY TYPE	R/L	PART NUMBER	DESCRIPTION	QTY
45522-3	LINING BOARD (LUGGAGE COMPARTMENT REAR)			
A(53,57,65)	R	D5MY 6545522-A		1
	L	D5MY 6545523-A		1

1973 SOFT TRIM SCHEME CODES

AS LISTED ON CERTIFICATION LABEL

THE SOFT TRIM SECTION INCLUDES ONLY THOSE ITEMS WHICH WERE AVAILABLE FOR SERVICE AT THE TIME OF PRINTING. ITEMS NOT SHOWN OR INDICATED WITH A BLACK STAR (★) IN THE CATALOG MUST BE IMPROVISED OR PROCURED LOCALLY.

● For swatch identification, refer to Page B, etc.

C (Montego)

NOTE 1 –For replacement of door and quarter trim panels (23942–3, 27406–7 and 31012–3) and cushion covers (62900 and 63804) refer to this code in the 1973 Soft Trim Section. For replacement of back covers (64416 and 66600) contact your Service Representative. All other parts are included in the 1973 Soft Trim Section.

CODE	BODY TYPE	TRIM SCHEME	●CONSISTS OF SWATCH IDENTIFICATION NUMBERS: DOORS and QTR'S	SEATS: BOLSTER	SEATS: CUSHION and BACK	HEAD–LINING
AA	53B,65B	Black vinyl and black cloth	4	4	4 & 9	1
AAA, AAB	53B,65B	Black vinyl and black cloth				1
AB	53B,65B	Medium blue vinyl and medium blue cloth	15	15	15 & 19	13
ABA, ABB	53B,65B	Medium blue vinyl and medium blue cloth				13
AR	53B,65B	Medium green vinyl and medium green cloth	49	49	49 & 52	47
ARA, ARB	53B,65B	Medium green vinyl and medium green cloth				47
BA	53B,65B	Black all vinyl	4	4	4 & 138	1
BB	53B,65B	Medium blue all vinyl	15	15	15 & 148	13
BR	53B,65B	Medium green all vinyl	49	49	49 & 162	47
CA, CAA	53D,65D	Black vinyl and black cloth	4	4	4 & 9	1
CAB	53D,65D	Black vinyl and black cloth	4	4	4 & 260	1
CB, CBA	53D,65D	Medium blue vinyl and medium blue cloth	15	15	15 & 19	13
CBB	53D,65D	Medium blue vinyl and medium blue cloth	15	15	15 & 261	13
CR, CRA	53D,65D	Medium green vinyl and medium green cloth	49	49	49 & 52	47
CRB	53D,65D	Medium green vinyl and medium green cloth	49	49	49 & 262	47
CT, CTA	53D,65D	Light beige vinyl and light beige cloth	82	82	82 & 83	98
CTB	53D,65D	Light beige vinyl and light beige cloth	82	82	82 & 235	98
CZ, CZA	53D,65D	Dark tobacco vinyl and dark tobacco cloth	102	102	102 & 65	61
CZB	53D,65D	Dark tobacco vinyl and dark tobacco cloth	102	102	102 & 220	61
DA, DAA	53D,65D,71D	Black all vinyl	4	4	3	1
DB, DBA	53D,65D,71D	Medium blue all vinyl	15	15	14	13
DF, DFA	53D,65D,71D	Medium ginger all vinyl	42	42	41	38
DQ, DQA	65D	White vinyl with blue appointments	34 & 15			13
DR, DRA	53D,65D,71D	Medium green all vinyl	49	49	48	47
DT, DTA	53D,65D,71D	Light beige all vinyl	82	82	99	98
DW, DWA	65D	White vinyl with black appointments	4 & 34	32	31	1
D5, D5A	65D	White vinyl with green appointments	34 & 15			47
D9, D9A	65D	White vinyl with tobacco appointments	34 & 102			61

COPYRIGHT © 1986 — FORD MOTOR COMPANY — DEARBORN, MICHIGAN

1973 SOFT TRIM SCHEME CODES

AS LISTED ON CERTIFICATION LABEL

THE SOFT TRIM SECTION INCLUDES ONLY THOSE ITEMS WHICH WERE AVAILABLE FOR SERVICE AT THE TIME OF PRINTING ITEMS NOT SHOWN OR INDICATED WITH A BLACK STAR (★) IN THE CATALOG MUST BE IMPROVISED OR PROCURED LOCALLY.

● For swatch identification, refer to Page B, etc. — Cont'd

C (Montego)

NOTE 1 –For replacement of door and quarter trim panels (23942–3, 27406–7 and 31012–3) and cushion covers (62900 and 63804) refer to this code in the 1973 Soft Trim Section. For replacement of back covers (64416 and 66600) contact your Service Representative. All other parts are included in the 1973 Soft Trim Section.

CODE	BODY TYPE	TRIM SCHEME	●CONSISTS OF SWATCH IDENTIFICATION NUMBERS: DOORS and QTR'S	SEATS: BOLSTER	SEATS: CUSHION and BACK	HEAD–LINING
EA	63R	Black all vinyl	4 & 192	4	4 & 137	1
EB	63R	Medium blue all vinyl	15	15	15 & 146	13
EF	63R	Medium ginger all vinyl	42 & 157	42	42 & 158	38
ER	63R	Medium green all vinyl	49	49	49 & 50	47
ET	63R	Light beige all vinyl	79 & 82	82	82 & 183	98
FA	63R	Black all vinyl	4 & 192	4	4 & 6	1
FB	63R	Medium blue all vinyl	15	15	15 & 16	13
FF	63R	Ginger all vinyl	42 & 157	42	39 & 42	38
FR	63R	Medium green all vinyl	49	49	49 & 51	47
FT	63R	Light beige all vinyl	79 & 82	82	80 & 82	98
GA	53K,65K	Black vinyl and black cloth	4 & 11	4	140 & 144	1
GB	53K,65K	Medium blue vinyl and medium blue cloth	15 & 20	15	150 & 153	13
GB1	53K,65K	(Code GB–see Note 1)				
GR	53K,65K	Medium green vinyl and medium green cloth	49 & 53	49	124 & 165	47
GT	53K,65K	Light beige vinyl and light beige cloth	82 & 134	82	117 & 202	98
GZ	53K,65K	Tobacco vinyl and tobacco cloth	67 & 102	102	122 & 174	61
GZ1	53K,65K	(Code GZ–see Note 1)				
HA	53K,65K,71K	Black all vinyl	4 & 11	4	4 & 137	1
HB	53K,65K,71K	Medium blue all vinyl	15 & 20	15	15 & 146	13
HF	53K,65K,71K	Medium ginger all vinyl	42 & 67	42	42 & 158	38
HQ	65K	White vinyl with blue appointments				13
HR	53K,65K,71K	Medium green all vinyl	49 & 53	49	49 & 50	47
HT	53K,65K	Light beige all vinyl	82 & 134	82	82 & 183	98
HW	65K	White vinyl with black appointments				1
H5	65K	White vinyl with green appointments				47
H9	65K	White vinyl with tobacco appointments				61
JA, JAA	65B,D	Black all vinyl	4	4	4 & 6	1
JB, JBA	65B,D	Medium blue all vinyl	15	15	15 & 16	13
JF, JFA	65D	Medium ginger all vinyl	42	42	39 & 42	38
JR, JRA	65B,D	Medium green all vinyl	49	49	49 & 51	47
JT, JTA	65D	Light beige all vinyl	82	82	80 & 82	98
KU	65D	Light and medium tan all vinyl	60	60	60 & 236	220
LY	65K	Light gold vinyl and medium gold cloth		87	259 & 279	84

1973/79 LINCOLN-MERCURY CARS

BODY TYPE	R/L	PART NUMBER LESS SUFFIX		TRIM CODES, COLORS AND APPLICABLE PART NUMBER SUFFIXES													QTY.
		TRIM CODES ▶		SECOND CHARACTER OF TRIM CODE										ALL CODES	ALL CODES	OTHER	
				-B or L	-C	-D or N	-F or 3	-G or 6	-R or 5	-T	-U	-Y or 8	-Z or 9				
		COLORS ▶		BLUE	ORANGE	RED	GIN-GER	AVO-CADO	GREEN	BEIGE	TAN	GOLD	TOB-ACCO	BLACK	WHITE	SEE NOTE	
04104	VISOR (LESS ARM and BRACKET)																
C	R/L	D40Z 6504104		B			★		★	★		★	★	A			2
04282	PAD (INSTRUMENT PANEL UPPER)																
Notes:	◊ Use Tobacco																
C		D40Z 6504282		★			♦		★	★	E	★	★	★			1
13086	MAT (FRONT FLOOR)																
Notes:	∅Cut to form twin mats if so desired, %Clear, @ Brown, $ Ivy gold																
TWIN (less carpet insert)																	
C - - rubber		D60Z 6213086		B					F					A		$D	1
13106	MAT (REAR FLOOR)																
Notes:	@ Brown																
TWIN (Less carpet insert)																	
C - - rubber-		D6FZ 6213106							F					A		@C	1
plain		D7FZ 6213106										A					1
24100-1	PAD (DOOR ARM REST)-Incl. attaching parts																
C(53,71) - - front door	R/L	D3DZ 6224100	8 3/4	D			★		★	★			★	F	★		2
C(63,65)	R	D3DZ 6224100	11	J			★		★		★			★	★		1
	L	D3DZ 6224101	11	B		★	★	★	★	★	E	★	★	A	★		1
C(65B,D,K) - - quarter	R/L	D3DZ 6224100	8 3/4	D			★		★	★	V		★	F	★		2
24140-1	REST (ARM)-Incl. attaching parts																
C(63R) - - door	L	D30Z 6324141		★			C		★	★				★			1
24144	BASE (ARM REST)-Incl. attaching parts																
Notes:	⊕ Chrome																
C(53,71)	R/L	D3DZ 6224144		L					★					K		⊕★	2
C(63,65) - - front door	R/L	D3DZ 6224144		B			★		★		D		★	★	★		2
C(65K) - - door	R/L	D1AZ 5724144														⊕H	2
46668	PANEL (PACKAGE TRAY TRIM)																
Notes	‡ Use with or without speakers, $ Paint to match																
C(53,65)	‡	D40Z 6546668														$N	1
BODY TYPE	R/L	PART NUMBER	DESCRIPTION														QTY
60136-7	BACK KIT (FRONT SEAT)																
C(53K,63R,65K,71)	R/L	D3GY 6560136-C	Pad-full width seat-w/center arm rest														2

COPYRIGHT © 1986— FORD MOTOR COMPANY —DEARBORN, MICHIGAN

NEW ISSUE

1973 SOFT TRIM SCHEME CODES

AS LISTED ON CERTIFICATION LABEL

CODE	BODY TYPE	TRIM SCHEME	●CONSISTS OF SWATCH IDENTIFICATION NUMBERS			
			DOORS and QTR'S	SEATS		HEAD-LINING
				BOLSTER	CUSHION and BACK	

ALL ITEMS SHOWN IN THIS SOFT TRIM SECTION ARE OBSOLETE, NOT REPLACED.
ALL ITEMS MUST BE IMPROVISED OR PROCURED LOCALLY.

●For swatch identification, refer to Page B, etc.

D (Lincoln)

AF	53,65	Medium ginger vinyl and medium ginger cloth with tobacco appointments	42,68 & 159	42	159	136
AP	53,65	Light silver vinyl and light silver cloth	76,119 & 181	76	181	180
AY	53,65	Light gray gold vinyl and light gray gold cloth	87,90 & 191	87	191	188
BA	53,65	Black vinyl and black cloth	4,5 & 12	4	10	136
BB	53,65	Dark blue vinyl and dark blue cloth	23,24 & 25	23	135	154
BP	53,65	Light silver vinyl and light silver cloth				
BR	53,65	Dark green vinyl and dark green cloth	55,56 & 97	55	57	168
BY	53,65	Light gold vinyl and light gold cloth				
BZ	53	Tobacco vinyl and tobacco cloth	63,68 & 102	102	66	171
CA	53,65	Black vinyl and black cloth	4,5 & 12	4	10	136
CB	53,65	Dark blue vinyl and dark blue cloth	23,24 &25	23	135	154
CP	53,65	Light silver vinyl and light silver cloth				
CR	53,65	Dark green vinyl and dark green cloth	55,56 & 97	55	57	168
CY	53,65	Light gold vinyl and light gold cloth				
CZ	53	Tobacco vinyl and tobacco cloth	63,68 & 102	102	66	171
DA	53,65	Black leather and black vinyl	4,5 & 12	5	2	136
DB	53,65	Dark blue leather and dark blue vinyl	23,24 & 25	24	22	154
DD	53	Dark red leather and dark red vinyl	27,28 & 37	28	26	128
DF	53,65	Medium ginger leather and medium ginger vinyl with tobacco appointments	42,43 & 68	43	40	127
DP	53,65	Light silver leather and light silver vinyl	76,77 & 119	77	75	180
DQ	53,65	White leather and white vinyl with blue appointments	23,24 & 25	33	30	129
DR	53,65	Dark green leather and dark green vinyl	55,56 & 97	56	54	168
DT	53,65	Light beige leather and light beige vinyl	82,118 & 203	118	81	182
DW	53,65	White leather and white vinyl with black appointments	33,34	33	30	129
DY	53,65	Light gray gold leather and light gray gold vinyl	87,88 & 90	88	85	188
DZ	53	Tobacco leather and tobacco vinyl	63,68 & 102	63	62	171
D5	53,65	White leather and white vinyl with green appointments	33,34 & 97	33	30	129
D9	53,65	White leather and white vinyl with tobacco appointments	33,34 & 68	33	30	129

COPYRIGHT © 1986 — FORD MOTOR COMPANY — DEARBORN, MICHIGAN

1973 SOFT TRIM SCHEME CODES

AS LISTED ON CERTIFICATION LABEL

CODE	BODY TYPE	TRIM SCHEME	●CONSISTS OF SWATCH IDENTIFICATION NUMBERS			
			DOORS and QTR'S	SEATS		HEAD-LINING
				BOLSTER	CUSHION and BACK	

ALL ITEMS SHOWN IN THIS SOFT TRIM SECTION ARE OBSOLETE, NOT REPLACED.
ALL ITEMS MUST BE IMPROVISED OR PROCURED LOCALLY.

●For swatch identification, refer to Page B, etc. — Cont'd

D (Lincoln)

EA	53,65	Black leather and black vinyl	4,5 & 12	5	2	136
EB	53,65	Dark blue leather and dark blue vinyl	23,24 & 25	24	22	154
ED	53	Dark red leather and dark red vinyl	27,28 & 37	28	26	128
EF	53,65	Medium ginger leather and medium ginger vinyl with tobacco appointments	42,43 & 68	43	40	127
EP	53,65	Light silver leather and light silver vinyl	76,77 & 119	77	75	180
EQ	53,65	White leather and white vinyl with blue appointments	25,33 & 34	33	30	129
ER	53,65	Dark green leather and dark green vinyl	55,56 & 97	56	54	168
ET	53,65	Light beige leather and light beige vinyl	82,118 & 203	118	81	182
EW	53,65	White leather and white vinyl with black appointments	33 & 34	33	30	129
EY	53,65	Light gray gold leather and light gray gold vinyl	87,88 & 90	88	85	188
EZ	53	Tobacco leather and tobacco vinyl	63,68 & 102	63	62	171
E5	53,65	White leather and white vinyl with green appointments	33,34 & 97	33	30	129
E9	53,65	White leather and white vinyl with tobacco appointments	33,34 & 68	33	30	129
FF	53,65	Medium ginger vinyl and medium ginger cloth	42,68 & 159	42	159	127
FP	53,65	Light silver vinyl and light silver cloth	76,119 & 181	76	181	180
FY	53,65	Light gray gold vinyl and light gray gold cloth	87,90 & 191	87	191	188
GA, GAB	53,65	Black vinyl and black cloth	4,12 & 141	4	141	136
GP, GPA, GPB	53,65	Light silver vinyl and light silver cloth	76,119 & 120	76	120	180
GT, GTA, GTB	53,65	Light beige vinyl and light beige cloth	82,116 & 203	82	116	182
HA, HAB	53,65	Black leather and black vinyl	4,12 & 141	4	2	136
HP, HPB	53,65	Light silver leather and light silver vinyl	76,119 & 120	76	75	180
HT, HTB	53,65	Beige leather and beige vinyl	82,116 & 203	82	81	182

1973 SOFT TRIM SCHEME CODES

AS LISTED ON CERTIFICATION LABEL

THE SOFT TRIM SECTION INCLUDES ONLY THOSE ITEMS WHICH WERE AVAILABLE FOR SERVICE AT THE TIME OF PRINTING. ITEMS NOT SHOWN OR INDICATED WITH A BLACK STAR (★) IN THE CATALOG MUST BE IMPROVISED OR PROCURED LOCALLY.

● For swatch identification, refer to Page B, etc.

F (Cougar)

CODE	BODY TYPE	TRIM SCHEME	●CONSISTS OF SWATCH IDENTIFICATION NUMBERS			
			DOORS and QTR'S	SEATS		HEAD–LINING
				BOLSTER	CUSHION and BACK	
AA	65D	Black all vinyl	4	4	3	136
AB	65D	Medium blue all vinyl	15	15	14	131
AF	65D	Medium ginger all vinyl	42	42	41	127
AG	65D	Medium and light avocado all vinyl	69	69	69 & 72	176
AQ	65D	White all vinyl with blue appointments	34	15	14 & 31	129
AW	65D	White all vinyl with black appointments	34	4	3 & 31	129
A3	65D	White all vinyl with ginger appointments	34	42	31 & 41	129
A6	65D	White all vinyl with avocado appointments	34	69	31 & 69	129
BA	65D	Black vinyl and black cloth	4	4	8	136
BB	65D	Medium blue vinyl and medium blue cloth	15	15	18	131
BF	65D	Medium ginger vinyl and medium ginger cloth	42	42	45	127
BG	65D	Medium and light avocado vinyl and medium and light avocado cloth	69 & 73	69	74	176
CA	65D,76D	Black all vinyl	4	4	6	136
CAA	65D,76D	Black all vinyl	4	4	4	136
CB	65D,76D	Medium blue all vinyl	15	15	16	131
CBA	65D,76D	Medium blue all vinyl	15	15	15	131
CF	65D,76D	Medium ginger all vinyl	42	42	39	127
CFA	65D,76D	Medium ginger all vinyl	42	42	42	127
CG	65D,76D	Medium and light avocado all vinyl	69 & 73	69	71	176
CGA	65D,76D	Medium and light avocado all vinyl	69 & 73	69	69	176
CQ	65D,76D	White all vinyl with blue appointments	34	32	35	129
CQA	65D,76D	White all vinyl with blue appointments	34	32	32	129
CW	65D,76D	White all vinyl with black appointments	34	32	35	129
CWA	65D,76D	White all vinyl with black appointments	34	32	32	129
C3	65D,76D	White all vinyl with ginger appointments	34	32	35	129
C3A	65D,76D	White all vinyl with ginger appointments	34	32	32	129
C6	65D,76D	White all vinyl with avocado appointments	34	32	35	129
C6A	65D,76D	White all vinyl with avocado appointments	34	32	32	129
DA	65F,76F	Black leather and black vinyl	4	5	2	136
DB	65F,76F	Medium blue leather and medium blue vinyl	15	147	145	131
DF	65F,76F	Medium ginger leather and medium ginger vinyl	42	43	40	127
DG	65F,76F	Medium and light avocado leather and medium and light avocado vinyl	69 & 73	177	178	176
DQ	65F,76F	White leather and white vinyl with blue appointments	34	33	30 & 147	129
DW	65F,76F	White leather and white vinyl with black appointments	34	33	30	129
D3	65F,76F	White leather and white vinyl with ginger appointments	34	33	30 & 43	129
D6	65F,76F	White leather and white vinyl with avocado appointments	34	33	30 & 179	129
EA	65F	Black vinyl and black cloth	4	4	8	136
EB	65F	Medium blue vinyl and medium blue cloth	15	15	18	131
EF	65F	Medium ginger vinyl and medium ginger cloth	42	42	45	127
EG	65F	Medium and light avocado vinyl and medium and light avocado cloth	69 & 73	69	74	176
FU	65D	Light and medium tan vinyl				

COPYRIGHT © 1986 — FORD MOTOR COMPANY — DEARBORN, MICHIGAN

1973/79 LINCOLN-MERCURY CARS

BODY TYPE	R/L	PART NUMBER LESS SUFFIX	TRIM CODES, COLORS AND APPLICABLE PART NUMBER SUFFIXES														QTY.
		TRIM CODES ➧		SECOND CHARACTER OF TRIM CODE										ALL CODES	ALL CODES	OTHER	
				-B or L	-C	-D or N	-F or 3	-G or 6	-R or 5	-T	-U	-Y or 8	-Z or 9				
		COLORS ➧		BLUE	ORANGE	RED	GIN-GER	AVO-CADO	GREEN	BEIGE	TAN	GOLD	TOB-ACCO	BLACK	WHITE	SEE NOTE	
24100-1	**PAD (DOOR ARM REST)-Includes attaching parts**																
F(65D,76D)	R	D3DZ 6224100	11	J			★	★			★			★	★		1
	L	D3DZ 6224101	11	B			★	★			E			A	★		1
24144	**BASE (ARM REST)**																
F(65D,76D) - - front door	R/L	D3DZ 6224144		B			★	★			D			★	★		2

1973 SOFT TRIM SCHEME CODES

AS LISTED ON CERTIFICATION LABEL

CODE	BODY TYPE	TRIM SCHEME	●CONSISTS OF SWATCH IDENTIFICATION NUMBERS			
			DOORS and QTR'S	SEATS		HEAD–LINING
				BOLSTER	CUSHION and BACK	

THE SOFT TRIM SECTION INCLUDES ONLY THOSE ITEMS WHICH WERE AVAILABLE FOR SERVICE AT THE TIME OF PRINTING. ITEMS NOT SHOWN OR INDICATED WITH A BLACK STAR (★) IN THE CATALOG MUST BE IMPROVISED OR PROCURED LOCALLY.

● For swatch identification, refer to Page B, etc.

J (Capri)

AE		Black all vinyl				
KE		Tan all vinyl				

COPYRIGHT © 1986 — FORD MOTOR COMPANY — DEARBORN, MICHIGAN

1973/79 LINCOLN-MERCURY CARS

BODY TYPE	R/L	PART NUMBER LESS SUFFIX	TRIM CODES, COLORS and APPLICABLE PART NUMBER SUFFIXES													QTY.
		TRIM CODES ➧		FIRST CHARACTER of TRIM CODE									ALL CODES	OTHER	OTHER	
				-A or U		-C		-J		K-W		-L or T				
		COLORS ➧		BLACK		CLOUD (BLUE)		DARK BROWN		TAN		SADDLE		PARCH-MENT	SEE NOTE	SEE NOTE	
02600	WINDLACE (DOOR OPENING)																
J	R/L	D4RY 6202600		B						★							2
04104	VISOR (LESS ARM and BRACKET)																
J	R/L	D4RY 6204104		A						C				B			2
04282	PAD (INSTRUMENT PANEL UPPER)																
J		D3RY 6204282		★						B							1
J		E824105-S	Nut-U type														2
13000	CARPET (FRONT FLOOR)																
J - - M/T		D4RY 6213000		T						★							1
13046	CARPET (REAR FLOOR)-Serviced only in assy.-group 13000																

BODY TYPE	R/L	PART NUMBER LESS SUFFIX	TRIM CODES, COLORS and APPLICABLE PART NUMBER SUFFIXES													QTY.
		TRIM CODES ➧		FIRST CHARACTER of TRIM CODE									ALL CODES	OTHER	OTHER	
				-A or U		-C		-J		K-W		-L or T				
		COLORS ➧		BLACK		CLOUD (BLUE)		DARK BROWN		TAN		SADDLE		PARCH-MENT	SEE NOTE	SEE NOTE	
46668	PANEL (PACKAGE TRAY TRIM)																
J - - w/simulated bucket seats		D2RY 6246668		A													1
		D3RY 6246668								A							1
		130069-ESFA	Black-retaining button														AR
		130069-ESJX	Tan-retaining button														AR
		111761-ESFA	Black-plug														AR
BODY TYPE	R/L	PART NUMBER	DESCRIPTION													QTY
60050	CUSHION KIT (FRONT SEAT)															
J		D3RY 6263100-A	Frame assy.-w/fully reclining seat													2
60136-7	BACK KIT (FRONT SEAT)															
J	R	D3RY 6264700-B	Frame-w/reclining seat-full													1
	L	D3RY 6264701-B	Frame-w/reclining seat-full													1
63100	Refer to group 60050															
64700-1	Refer to group 60136-7															

1973 SOFT TRIM SCHEME CODES

AS LISTED ON CERTICICATION LABEL

CODE	BODY TYPE	TRIM SCHEME	●CONSISTS OF SWATCH IDENTIFICATION NUMBERS			
			DOORS and QTR'S	SEATS		HEAD-LINING
				BOLSTER	CUSHION and BACK	

THE SOFT TRIM SECTION INCLUDES ONLY THOSE ITEMS WHICH WERE AVAILABLE FOR SERVICE AT THE TIME OF PRINTING. ITEMS NOT SHOWN OR INDICATED WITH A BLACK STAR (★) IN THE CATALOG MUST BE IMPROVISED OR PROCURED LOCALLY.

● For swatch identification, refer to Page B, etc.

K (Mark IV)

AA	65	Black vinyl and black cloth	4,10 &12	4	10	7
AB	65	Dark blue vinyl and dark blue cloth	23,25 & 135	23	135	94
AD	65	Dark red vinyl and dark red cloth	27,36 & 37	27	36	156
AH, AHA	65	Cranberry vinyl and cranberry cloth	169 & 170	169	59	58
AP	65	Light silver vinyl and light silver cloth	76,78 & 119	76	78	213
AR	65	Dark green vinyl and dark green cloth	55,57 & 97	55	57	212
AT	65	Light beige vinyl and light beige cloth	82,89 & 203	82	214	98
AY	65	Light gray gold vinyl and light gray gold cloth	87,89 & 90	87	89	84
AZ	65	Dark tobacco vinyl and dark tobacco cloth	66,68 & 102	102	66	64
BA	65	Black leather and black vinyl	4 & 12	5	2	7
BB	65	Dark blue leather and dark blue vinyl	23&25	24	22	94
BD	65	Dark red leather and dark red vinyl	27&37	28	26	156
BF	65	Medium ginger leather and medium ginger vinyl with tobacco appointments	42 & 68	43	40	44
BL	65	Silver gray leather and silver gray vinyl				
BP	65	Light silver leather and light silver vinyl	76&119	77	75	213
BQ	65	White leather and white vinyl with blue appointments	25&34	33	30	29
BR	65	Dark green leather and dark green vinyl	55&97	56	54	212
BT	65	Light beige leather and light beige vinyl	82&203	118	81	98
BW	65	White leather and white vinyl with black appointments	12&34	33	30	29
BY	65	Light gray gold leather and light gray gold vinyl	87&90	88	85	84
BZ	65	Dark tobacco leather and dark tobacco vinyl	68&102	63	62	64
B5	65	White leather and white vinyl with green appointments	34&97	33	30	29
B9	65	White leather and white vinyl with tobacco appointments	34&68	33	30	29

COPYRIGHT © 1986 — FORD MOTOR COMPANY — DEARBORN, MICHIGAN

1973/79 LINCOLN-MERCURY CARS

BODY TYPE	R/L	PART NUMBER LESS SUFFIX	TRIM CODES, COLORS AND APPLICABLE PART NUMBER SUFFIXES														QTY.
		TRIM CODES ▶		SECOND CHARACTER OF TRIM CODE										ALL CODES	ALL CODES	OTHER	
			LGTH.	-B or L	-C	-D or N	-F or 3	-G or 6	-R or 5	-T	-U	-Y or 8	-Z or 9				
		COLORS ▶	(IN.)	BLUE	ORANGE	RED	GIN-GER	AVO-CADO	GREEN	BEIGE	TAN	GRAY GOLD	TOB-ACCO	BLACK	WHITE	SEE NOTE	
24100-1	PAD (DOOR ARM REST)-Incl. attaching parts																
K - - door	L	D3SZ 6524101		★		★	★		★	★		★	★	★	J		1
24144-5	BASE (ARM REST)-Incl. attaching parts																
K	R	D5SZ 6524144		★		E	★		★	★		★	★	★	★		1
	L	D5SZ 6524145				E											1
	L	D3SZ 6524145		S			★		★	★		★	★	★	★		1

1973 SOFT TRIM SCHEME CODES

AS LISTED ON CERTIFICATION LABEL

CODE	BODY TYPE	TRIM SCHEME	●CONSISTS OF SWATCH IDENTIFICATION NUMBERS			
			DOORS and QTR'S	SEATS		HEAD–LINING
				BOLSTER	CUSHION and BACK	

THE SOFT TRIM SECTION INCLUDES ONLY THOSE ITEMS WHICH WERE AVAILABLE FOR SERVICE AT THE TIME OF PRINTING. ITEMS NOT SHOWN OR INDICATED WITH A BLACK STAR (★) IN THE CATALOG MUST BE IMPROVISED OR PROCURED LOCALLY.

● For swatch identification refer to Page B, etc.

COMET (P)

BA	54,62	Black vinyl and black cloth	4	4	8	1
BB	54,62	Medium blue vinyl and medium blue cloth	15	15	18	13
BF	54,62	Medium ginger vinyl and medium ginger cloth	42	42	45	38
BG	54,62	Avocado vinyl and avocado cloth	69	69	74	217
BT	54,62	Light beige vinyl and light beige cloth	82	82	184	98
CU	62	Light tan and medium ginger vinyl	60	60	207	60
HA	54,62	Black all vinyl	4	4	204	1
HB	54,62	Medium blue all vinyl	15	15	206	13
HC	62	Medium orange all vinyl	210	210	209	216
HF	54,62	Medium ginger all vinyl	42	42	207	38
HG	54,62	Avocado all vinyl	69	69	208	217
HT	54,62	Light beige all vinyl	82	82	204	98
JA	54,62	Black vinyl and black cloth	4	4	133	1
JB	54,62	Medium blue vinyl and blue cloth	15 & 215	15	130	13
JF	54,62	Medium ginger vinyl and ginger cloth	42 & 215	42	126	38
JG	54,62	Light avocado vinyl and avocado cloth	69 & 215	69	121	217
JT	54,62	Light beige vinyl and beige cloth	82 & 215	82	211	98
KA	54,62	Black all vinyl	4 & 215	4	4	1
KB	54,62	Medium blue all vinyl	15 & 215	15	15	13
KC	62	Medium orange all vinyl	210 & 215	210	210	216
KF	54,62	Medium ginger all vinyl	42 & 215	42	42	38
KG	54,62	Avocado all vinyl	69 & 215	69	73	217
KT	54,62	Light beige all vinyl	82 & 215	82	82	98
LA	62	Black all vinyl	4 & 215	4	4	1
LB	62	Medium blue all vinyl	15 & 215	15	15	13
LC	62	Medium orange all vinyl	210 & 215	210	210	216
LF	62	Medium ginger all vinyl	42 & 215	42	42	38
LG	62	Avocado all vinyl	69 & 215	69	73	217
LT	62	Light beige all vinyl	82 & 215	82	82	98
PU	54,62	Light tan all vinyl	60	60	60	60

COPYRIGHT © 1986 — FORD MOTOR COMPANY — DEARBORN, MICHIGAN

1973/79 LINCOLN-MERCURY CARS

BODY TYPE	R/L	PART NUMBER LESS SUFFIX	TRIM CODES, COLORS AND APPLICABLE PART NUMBER SUFFIXES														QTY.
		TRIM CODES ▶		SECOND CHARACTER OF TRIM CODE										ALL CODES	ALL CODES	OTHER	
				-B or L	-C	-D or N	-F or 3	-G or 6	-R or 5	-T	-U	-Y or 8	-Z or 9				
		COLORS ▶		BLUE	ORANGE	RED	GIN-GER	AVO-CADO	GREEN	BEIGE	TAN	GRAY GOLD	TOB-ACCO	BLACK	WHITE	SEE NOTE	
04282	PAD (INSTRUMENT PANEL UPPER)																
P		D3DZ 6204282		A	★		★	★		★	F			D			1
24100	PAD (DOOR ARM REST) - Includes attaching parts																
P - - front door			Refer to group 24140-1														
P - - rear door	R/L	D3DZ 6224100	8 3/4	D			★	★		★	★			F			2
24140-1	REST (ARM) - Incl. attaching parts																
P - - front door	R	D3FZ 6224140					P	★	★	★							1
	L	D3FZ 6224141					L	M	D	★							1
	R	D5FZ 6224140		G	★						H			F			1
	L	D5FZ 6224141		E	★						F			D			1
P - - rear door			Refer to groups 24100 and 31604														

BODY TYPE	R/L	PART NUMBER	DESCRIPTION	QTY
45494	COVER (LUGGAGE COMPARTMENT FLOOR)			
P "From 7/73"		D3DZ 6245494-A	Gray mat	1
60136-7	BACK KIT (FRONT SEAT)			
P(62)	R/L	D3FZ 6264810-A	Pad assy. - bucket seat - w/o reclining seat	2
64810	Refer to group 60136-7			

1973 SOFT TRIM SCHEME CODES

AS LISTED ON CERTIFICATION LABEL

CODE	BODY TYPE	TRIM SCHEME	●CONSISTS OF SWATCH IDENTIFICATION NUMBERS			
			DOORS and QTR'S	SEATS		HEAD-LINING
				BOLSTER	CUSHION and BACK	
● For swatch identification, refer to Page B, etc.						
Y (Meteor)						
AA, AAA	53,65	Black vinyl and black cloth	4	4	4 & 221	1
AB, ABA	53,65	Medium blue vinyl and medium blue cloth	15	15	15 & 222	13
AR, ARA	53,65	Medium green vinyl and medium green cloth	49	49	49 & 223	47
AT, ATA	53,65	Light beige vinyl and light beige cloth	82	82	82 & 224	98
AZ, AZA	53,65	Dark tobacco vinyl and dark tobacco cloth	102	102	102 & 342	61
BA, BAA	53,71	Black all vinyl	4	4	4 & 226	1
BB, BBA	53,71	Medium blue all vinyl	15	15	15 & 227	13
BR, BRA	53,71	Medium green all vinyl	49	49	49 & 225	47
BT, BTA	53,71	Light beige all vinyl	82	82	82 & 228	98
CA, CAA	53,65	Black vinyl and black cloth	4	4	142	1
CB, CBA	53,65	Medium blue vinyl and medium blue cloth	15	15	151	13
CR, CRA	53,65	Medium green vinyl and medium green cloth	49	49	166	47
CT, CTA	53,65	Light beige vinyl and light beige cloth	82	82	185	98
CZ, CZA	53,65	Dark tobacco vinyl and dark tobacco cloth	102	102	172	61
DA, DAA	53,65,71	Black all vinyl	4	4	3	1
DB, DBA	53,65,71	Medium blue all vinyl	15	15	14	13
DR, DRA	53,65,71	Medium green all vinyl	49	49	48	47
DT, DTA	53,65,71	Light beige all vinyl	82	82	99	98
DZ, DZA	53,65	Dark tobacco all vinyl	102	102	172	61
EA, EAA	53,65	Black vinyl and black cloth	4 & 11	4	4,139 & 144	1
EB, EBA	53,65	Medium blue vinyl and medium blue cloth	15 & 20	15	15,152 & 153	13
FA	53,65	Black vinyl and black cloth		4	4 & 237	1

COPYRIGHT © 1986 — FORD MOTOR COMPANY — DEARBORN, MICHIGAN

1973 SOFT TRIM SCHEME CODES

AS LISTED ON CERTIFICATION LABEL

CODE	BODY TYPE	TRIM SCHEME	●CONSISTS OF SWATCH IDENTIFICATION NUMBERS			
			DOORS and QTR'S	SEATS		HEAD–LINING
				BOLSTER	CUSHION and BACK	

● For swatch identification, refer to Page B, etc.

Y (Meteor) — Cont'd

NOTE 1– For replacement of door and quarter trim panels (23942–3,27406–7 and 31012–3), refer to this code in the 1973 Soft Trim Section. For replacement of cushion covers (62900 and 63804) and back covers (64416–7 and 66600), Contact your Service Representative,who will proceed in accordance with I.C.C. bulletin No. 7526. All other parts are included in the 1973 Soft Trim Section.

FB	53,65	Medium blue vinyl and medium blue cloth		15	15 & 239	13
FBA	53,65	Medium blue vinyl and medium blue cloth				13
FR	53,65	Medium green vinyl and medium green cloth		49	49 & 240	47
FR1	53,65	(Code FR–see Note 1)				
FT	53,65	Light beige vinyl and light beige cloth		82	82 & 238	98
WA, WAA	53,65	Black all vinyl	4	4	3 & 4	1
WB, WBA	53,65	Medium blue all vinyl	15	15	14 & 15	13
WR, WRA	53,65	Medium green all vinyl	49	49	48 & 49	47
WT, WTA	53,65	Light beige all vinyl	82	82	41 & 42	98
WZ, WZA	53,65	Dark tobacco all vinyl	102	102	102 & 172	61

THE SOFT TRIM SECTION INCLUDES ONLY THOSE ITEMS WHICH WERE AVAILABLE FOR SERVICE AT TIME OF PRINTING. ITEMS NOT SHOWN OR INDICATED WITH A BLACK STAR (★) IN THE CATALOG MUST BE IMPROVISED OR PROCURED LOCALLY.

BODY TYPE	R/L	PART NUMBER LESS SUFFIX	TRIM CODES, COLORS AND APPLICABLE PART NUMBER SUFFIXES														QTY.
		TRIM CODES ▶		SECOND CHARACTER OF TRIM CODE										ALL CODES	ALL CODES	OTHER	
				-B or L	-C	-D or N	-F or 3	-G or 6	-R or 5	-T	-U	-Y or 8	-Z or 9				
		COLORS ▶		BLUE	ORANGE	RED	GIN-GER	AVO-CADO	GREEN	BEIGE	TAN	GRAY GOLD	TOB-ACCO	BLACK	WHITE	SEE NOTE	
13000	MAT (FRONT FLOOR)																
Y		D3AZ 5313000												A			1
24142	PLATE (DOOR ARM REST FINGER TIP)																
Y		D3AZ 6524142		C			★		★	★			★	★			AR
24144-5	BASE (ARM REST)-Incl. attaching parts																
Y(65) - - door-w/o power equipment	R	D3AZ 6524144		B					★	★			★	★			1
	L	D3AZ 6524145		★					★	★			★	C			1
BODY TYPE	R/L	PART NUMBER	DESCRIPTION														QTY
45522-3	LINING BOARD (LUGGAGE COMPARTMENT REAR)																
Y(53,65)	R	D5MY 6545522-A															1
	L	D5MY 6545523-A															1

COPYRIGHT © 1986 — FORD MOTOR COMPANY — DEARBORN, MICHIGAN

1974 SOFT TRIM SCHEME CODES

AS LISTED ON CERTIFICATION LABEL

CODE	BODY TYPE	TRIM SCHEME	●CONSISTS OF SWATCH IDENTIFICATION NUMBERS			
			DOORS and QTR'S	SEATS		HEAD-LINING
				BOLSTER	CUSHION and BACK	

● For swatch identification, refer to Page B, etc.

Note 1– For replacement of Door and Quarter Trim Panels (23942–3, 27406–7 and 31012–3) and Cushion Covers (62900 and 63804) and Back Covers (64416–7 and 66600), contact your Service Representative,who will process in accordance **with I.C.C. bulletin No. 7526. All other parts are included in the 1974 Soft Trim Section.**

Note 2– For replacement of Cushion Covers (62900 and 63804) and Back Covers (64416–7 and 66600), refer to this code in the 1974 Soft Trim Section. For replacement of Door Trim Panels (23942–3 and 27406–7), contact your Service **Representative, who will process in accordance with I.C.C. bulletin No. 7526.**
All other parts are included in the 1974 Soft Trim Section

Note 3– For replacement of Door Trim Panels (23942–3 and 27406–7), refer to code in the 1974 Soft Trim Section. For replacement of Cushion Covers (62900 and 63804) and Back Covers (64416–7 and 66600), contact your Service **Representative, who will process in accordance with I.C.C. bulletin No. 7526.**
All other parts are included in the 1974 Soft Trim Section.

A (Mercury)

CA	53B,65B	Black vinyl and black cloth	4	4	4 & 260	1
CB	53B,65B	Medium blue vinyl and medium blue cloth	15	15	15 & 261	13
CR	53B,65B	Medium green vinyl and medium green cloth	49	49	49 & 262	47
CT	53B,65B	Light beige vinyl and light beige cloth	82	82	82 & 235	98
CZ	53B,65B	Medium saddle vinyl and medium saddle cloth	224	224	207 & 224	214
DA	53B,65B	Black all vinyl	4	4	3 & 4	1
DB	53B,65B	Medium blue all vinyl	15	15	14 & 15	13
DR	53B,65B	Medium green all vinyl	49	49	48 & 49	14
DT	53B,65B,71B	Light beige all vinyl	82	82	82 & 99	98
DU	71B	Light tan all vinyl	60	60	60 & 206	
DZ	53B,65B	Medium saddle all vinyl	224	224	217 & 224	214
FU, FUA	53K,57K,65K,71H,K	Light tan leather and light tan vinyl	218 & 219	219	205 & 219	274
GA	53F,65F	Black vinyl and black cloth	4	4	4 & 242	1
GB	53F,65F	Medium blue vinyl and medium blue cloth	15	15	15 & 243	13
GR	53F,65F	Medium green vinyl and medium green cloth	49	49	49 & 244	47
GT	53F,65F	Light beige vinyl and light beige cloth	82	82	82 & 210	98
GY	53F,65F	Light gold vinyl and light gold cloth	87	87	87 & 237	84
GZ	53F,65F	Medium saddle vinyl and medium saddle cloth	224	224	224 & 241	214
HA	53F,X,57X,65F,X	Black all vinyl	4	4	3 & 4	1
HB	53F,X,57X,65F,X	Medium blue all vinyl	15	15	14 & 15	13
HR	53F,X,57X,65F,X	Medium green all vinyl	49	49	48 & 49	47
HT	53F,X,57X,65F,X	Light beige all vinyl	82	82	82 & 99	98
HY	53F,X,57X,65F,X	Light gold all vinyl	87	87	86 & 87	84
HZ	53F,X,57X,65F,X	Medium saddle all vinyl	224	224	217 & 224	214
JU, JUA	53K,57K,65K	Light tan vinyl and light tan cloth	218 & 219	219	205 & 314	274
KA	53H,57H,65H	Black vinyl and black cloth	4 & 12	4	4 & 242	1
KB	53H,57H,65H	Medium blue vinyl and medium blue cloth	15 & 21	15	15 & 243	13
KR	53H,57H,65H	Medium green vinyl and medium green cloth	49 & 96	49	49 & 244	47
KT	53H,57H,65H	Light beige vinyl and light beige cloth	82 & 198	82	82 & 210	98
KY	53H,57H,65H	Light gold vinyl and light gold cloth	87 & 90	87	87 & 237	84
KZ	53H,57H,65H	Medium saddle vinyl and medium saddle cloth	224 & 213	224	224 & 241	214
LA	53H,57H,65H,71H,K	Black all vinyl	4 & 12	4	3 & 4	1
LB	53H,57H,65H,71H,K	Medium blue all vinyl	15 & 21	15	14 & 15	13
LR	53H,57H,65H,71H,K	Medium green all vinyl	49 & 96	49	48 & 49	47
LT	53H,57H,65H,71H,K	Light beige all vinyl	82 & 198	82	82 & 99	98

COPYRIGHT © 1986 — FORD MOTOR COMPANY — DEARBORN, MICHIGAN

1974 SOFT TRIM SCHEME CODES

AS LISTED ON CERTIFICATION LABEL

A (Mercury)

● For swatch identification, refer to Page B, etc. — Cont'd

Note 1– For replacement of Door and Quarter Trim Panels (23942–3, 27406–7 and 31012–3) and Cushion Covers (62900 and 63804) and Back Covers (64416–7 and 66600), contact your Service Representative, Who will process in accordance with I.C.C. bulletin No. 7526. All other parts are included in the 1974 Soft Trim Section.

Note 2– For replacement of Cushion Covers (62900 and 63804) and Back Covers (64416–7 and 66600), refer to this code in the 1974 Soft Trim Section. For replacement of Door Trim Panels (23942–3 and 27406–7), contact your Service Representative, who will process in accordance with I.C.C. bulletin No. 7526. All other parts are included in the 1974 Soft Trim Section.

Note 3– For replacement of Door Trim Panels (23942–3 and 27406–7), refer to code in the 1974 Soft Trim Section. For replacement of Cushion Covers (62900 and 63804) and Back Covers (64416–7 and 66600), contact your Service Representative, who will process in accordance with I.C.C. bulletin No. 7526. All other parts are included in the 1974 Soft Trim Section.

CODE	BODY TYPE	TRIM SCHEME	●CONSISTS OF SWATCH IDENTIFICATION NUMBERS: DOORS and QTR'S	SEATS: BOLSTER	SEATS: CUSHION and BACK	HEAD-LINING
LU	71H,K	Light tan all vinyl	60 & 218	60	60 & 206	215
LY	53H,57H,65H	Light gold all vinyl	87 & 90	87	86 & 87	84
LZ	53H,57H,65H,71H,K	Medium saddle all vinyl	224 & 213	224	217 & 224	214
PA	53H,57H,65H	Black vinyl and black cloth	4 & 12	4	225 & 266	1
PB	53H,57H,65H	Medium blue vinyl and medium blue cloth	15 & 21	15	226 & 267	13
PR	53H,57H,65H	Medium green vinyl and medium green cloth	49 & 96	49	227 & 268	47
PT	53H,57H,65H	Light beige vinyl and light beige cloth	82 & 198	82	229 & 253	98
PY	53H,57H,65H	Light gold vinyl and light gold cloth	87 & 90	87	230 & 269	84
PZ	53F,H,57H,65F,H	Medium saddle vinyl and medium saddle cloth	224 & 213	224	228 & 270	214
QB	71H,K	Medium blue all vinyl	15,21 & 146	15	15 & 200	13
QB1	71H,K	(Code QB–see Note 3)				
QR	71H,K	Medium green all vinyl	49,50 & 96	49	49 & 204	47
QR1	71)H,K	(Code QR–see Note 1)				
QZ	71H,K	Medium saddle all vinyl	213,224 & 293	224	209 & 224	214
QZ1	71H,K	(Code QZ–see Note 3)				
RA	53K,X,57K,X,65K,X	Black vinyl and black cloth	4,12 & 266	4	225 & 226	1
RB	53K,X,57K,X,65K,X	Medium blue vinyl and medium blue cloth	15,21 & 267	15	226 & 267	13
RR	53K,X,57K,X,65K,X,	Medium green vinyl and medium green cloth	49,96 & 268	49	227 & 268	47
RT	53K,X,57K,X,65K,X	Light beige vinyl and light beige cloth	82,198 & 253	82	229 & 253	98
RY	53K,X,57K,X,65K,X	Light gold vinyl and light gold cloth	87,90 & 269	87	230 & 269	84
RZ	53K,X,57K,X,65K,X	Medium saddle vinyl and medium saddle cloth	213,224 & 270	224	228 & 270	214
SA	53K,57K,65K,71H,K	Black all vinyl	4,12 & 137	4	4 & 137	1
SB	53K,57K,65K,71H,K	Medium blue all vinyl	15,21 & 146	15	15 & 146	13

1974 SOFT TRIM SCHEME CODES

AS LISTED ON CERTIFICATION LABEL

CODE	BODY TYPE	TRIM SCHEME	●CONSISTS OF SWATCH IDENTIFICATION NUMBERS			
			DOORS and QTR'S	SEATS		HEAD-LINING
				BOLSTER	CUSHION and BACK	

● For swatch identification, refer to Page B, etc. — Cont'd

Note 1– For replacement of Door and Quarter Trim Panels (23942–3, 27406–7 and 31012–3) and Cushion Covers (62900 and 63804) and Back Covers (64416–7 and 66600), contact your Service Representative, who will process in accordance with I.C.C. bulletin No. 7526. All other parts are included in the 1974 Soft Trim Section.

Note 2– For replacement of Cushion Covers (62900 and 63804) and Back Covers (64416–7 and 66600), refer to this code in the 1974 Soft Trim Section. For replacement of Door Trim Panels (23942–3 and 27406–7), contact your Service Representative, who will process in accordance with I.C.C. bulletin No. 7526. All other parts are included in the 1974 Soft Trim Section.

Note 3– For replacement of Door Trim Panels (23942–3 and 27406–7), refer to code in the 1974 Soft Trim Section. For replacement of Cushion Covers (62900 and 63804) and Back Covers (64416–7 and 66600), contact your Service Representative, who will process in accordance with I.C.C. bulletin No. 7526. All other parts are included in the 1974 Soft Trim Section.

A (Mercury)

SQ	53K,57K,65K	White all vinyl with blue appointments	34 & 273	32	32 & 273	29
SQ1	65K	(Code SQ–see Note 1)				
SR	53K,57K,65K,71H,K	Medium green all vinyl	49,50 & 96	49	49 & 50	47
SR1	53K,57K,65K	(Code SR–see Note 1)				
SR1	71H,K	(Code SR–see Note 2)				
ST	53K,57K,65K,71H,K	Light beige all vinyl	82,183 & 198	82	82 & 183	98
SU	71H,K	Light tan all vinyl	60,218 295	60	60 & 295	215
SW	53K,57K,65K	White all vinyl with black appointments	34 & 273	32	32 & 273	29
SW1	65K	(Code SW–see Note 1)				
SY	53K,57K,65K	Light gold all vinyl	87,90 & 189	87	87 & 189	84
SZ	53K,57K,65K,71H,K	Medium saddle all vinyl	213,224 & 293	224	224 & 293	214
S5	53K,57K,65K	White all vinyl with green appointments	34 & 273	32	32 & 273	29
S51	65K	(Code S5–see Note 1)				
S8	53K,57K,65K	White all vinyl with gold appointments	34 & 273	32	32 & 273	29
S81	65K	(Code S8–see Note 1)				
S9	53K,57K,65K	White all vinyl with saddle appointments	34 & 273	32	32 & 273	29
S91	65K	(Code S9–see Note 1)				
TA	53K,57K,65K	Black vinyl and black cloth	4,12 & 266	4	225 & 266	1
TB	53K,57K,65K	Medium blue vinyl and medium blue cloth	15,21 & 267	15	226 & 267	13
TR	53K,57K,65K	Medium green vinyl and medium green cloth	49,96 & 268	49	227 & 268	47
TT	53K,57K,65K	Light beige vinyl and light beige cloth	82,198 & 253	82	229 & 253	98
TY	53K,57K,65K	Light gold vinyl and light gold cloth	87,90 & 269	87	230 & 269	84

COPYRIGHT © 1986 — FORD MOTOR COMPANY — DEARBORN, MICHIGAN

1974 SOFT TRIM SCHEME CODES

AS LISTED ON CERTIFICATION LABEL

A (Mercury)

● For swatch identification, refer to Page B, etc. — Cont'd

Note 1– For replacement of Door and Quarter Trim Panels (23942–3, 27406–7 and 31012–3) and Cushion Covers (62900 and 63804) and Back Covers (64416–7 and 66600), contact your Service Repesentative, who will process in accordance with I.C.C. bulletin No. 7526. All other parts are included in the 1974 Soft Trim Section.

Note 2– For replacement of Cushion Covers (62900 and 63804) and Back Covers (64416–7 and 66600), refer to this code in the 1974 Soft Trim Section. For replacement of Door Trim Panels (23942–3 and 27406–7), contact your Service Representative, who will process in accordance with I.C.C. bulletin No. 7526. All other parts are inccuded in the 1974 Soft Trim Section

Note 3– For replacement of Door Trim Panels (23942–3 and 27406–7), refer to code in the 1974 Soft Trim Section. For replacement of Cushion Covers (62900 and 63804) and Back Covers (64416–7 and 66600), contact your Service Representative, who will process in accordance with I.C.C. bulletin No. 7526. All other parts are included in the 1974 Soft Trim Section.

CODE	BODY TYPE	TRIM SCHEME	●CONSISTS OF SWATCH IDENTIFICATION NUMBERS: DOORS and QTR'S	SEATS: BOLSTER	SEATS: CUSHION and BACK	HEAD–LINING
ZW1	65H	(Code ZW–see Note 1)				
TZ	53K,57K,65K	Medium saddle vinyl and medium saddle cloth	213,224 & 270	224	228 & 270	214
WA	53X,57X,65X	Black vinyl and black cloth	4	4	4 & 237	1
WB	53X,57X,65X	Medium blue vinyl and medium blue cloth	15	15	15 & 242	13
WR	53X,57X,65X	Medium green vinyl and medium green cloth	49	49	49 & 250	47
WT	53X,57X,65X	Light beige vinyl and light beige cloth	82	82	82 & 263	98
WZ	53X,57X,65X	Medium saddle vinyl and medium saddle cloth	224	224	224 & 278	214
ZA	53H,57H,65H,71H,K	Black all vinyl	4 & 12	4	4 & 137	1
ZB	53H,57H,65H,71H,K	Medium blue all vinyl	15 & 21	15	15 & 146	13
ZQ	53H,57H,65H	White all vinyl with blue appointments	34	32	32 & 273	29
ZQ1	65H	(Code ZQ–see Note 1)				
ZR	53H,57H,65H,71H,K	Medium green all vinyl	49 & 96	49	49 & 50	47
ZR1	65H	(Code ZR–see Note 1)				
ZR1	53H,57H	(Code ZR–see Note 3)				
ZT	53H,57H,65H	Light beige all vinyl	82 & 198	82	82 & 183	98
ZU	71H,K	LIght tan all vinyl	60 & 218	60	60 & 295	215
ZW	53H,57H,65H	White all vinyl with black appointments	34	32	32 & 273	29
ZY	53H,57H,65H	Light gold all vinyl	87 & 90	87	87 & 189	84
ZZ	53F,H,57H,65F,H, 71H,K	Medium saddle all vinyl	224 & 213	224	224 & 293	214
Z5	53H,57H,65H	White all vinyl with green apointments	34	32	32 & 273	29
Z51	65H	(Code Z5–see Note 1)				
Z8	53H,57H,65H	White all vinyl with gold appointments	34	32	32 & 273	29
Z81	65H	(Code Z8–see Note 1)				
Z9	53F,H,57H,65F,H	White all vinyl with saddle appointments	34	32	32 & 273	29
Z91	65H	(Code Z9–see Note 1)				

THE SOFT TRIM SECTION INCLUDES ONLY THOSE ITEMS WHICH WERE AVAILABLE FOR SERVICE AT TIME OF PRINTING. ITEMS NOT SHOWN OR INDICATED WITH A BLACK STAR (★) IN THE CATALOG MUST BE IMPROVISED OR PROCURED LOCALLY.

BODY TYPE	R/L	PART NUMBER LESS SUFFIX	TRIM CODES, COLORS and APPLICABLE PART NUMBER SUFFIXES														QTY.
		TRIM CODES ▶	SECOND CHARACTER of TRIM CODE									ALL CODES	ALL CODES	OTHER	OTHER		
			-B or L	-C	-D or N	-G or 6	-R or 5	-T	-M or U	-Y or 8	-Z or 9						
		COLORS ▶	BLUE	ORANGE	RED	AVO-CADO	GREEN	BEIGE	TAN	GOLD	SADDLE	BLACK	WHITE	SEE NOTE	SEE NOTE		
04104	VISOR ASSY.																
		LESS ARM and BRACKET															
A - - w/o vanity mirror	R/L	D40Z 6504104		B				★	★	★		★	A				AR
04282	PAD (INSTRUMENT PANEL UPPER)																
A		D4MY 6504282		A				★	★	★	★	F	★				1
13000	MAT (FRONT FLOOR)																
A - - heavy duty		D3AZ 5313000											A				1
24140-1	REST (ARM)-Incl. attaching parts																
Notes:	⊕ Includes one ash receptacle opening % Includes two ash receptacle openings																
A(53,57,71) door - - w/o power equipment and ash receptacle openings	R	D7AZ 5324140		B5B				★	★	★	★	B8Z	★				1
	L	D7AZ 5324141		B5B				★	★	★	★	B8Z	★				1
- - w/power equipment and ash receptacle openings	R	D7AZ 5324140		A5B				★	★	★	★	A8Z	★	★			1
	L	D7AZ 5324141		A5B				★	★	★	★	A8Z	★	★			1
A(53,57,71)-rear door		★															
A(65)-door - - w/o power equipment	⊕R	D7AZ 6024140		A5B				★	★	★	★	A8Z	★	★			1
	L	D7AZ 6024141						★	★	★	★	A8Z	★	★			1
- - w/power equipment	%R	D7AZ 6024140		B5B				★	★	★	★	B8Z	★	★			1
	L	D7AZ 6024141		B5B				★	★	★	★	B8Z	★	★			1
24346-7	PANEL (CENTER BODY PILLAR INSIDE FINISH)																
Notes:	$ Use tan and paint to match																
A(53,71) - - lower-	R	★															1
	L	★															1
- - upper	R	★															1
	L	D4AZ 5324357		$				$	$	A	$	$	$	$			1
24356-7	Refer to group 24346-7																

COPYRIGHT © 1986 — FORD MOTOR COMPANY — DEARBORN, MICHIGAN

1974 SOFT TRIM SCHEME CODES

AS LISTED ON CERTIFICATION LABEL

CODE	BODY TYPE	TRIM SCHEME	●CONSISTS OF SWATCH IDENTIFICATION NUMBERS			
			DOORS and QTR'S	SEATS		HEAD–LINING
				BOLSTER	CUSHION and BACK	

THE SOFT TRIM SECTION INCLUDES ONLY THOSE ITEMS WHICH WERE AVAILABLE FOR SERVICE AT THE TIME OF PRINTING. ITEMS NOT SHOWN OR INDICATED WITH A BLACK STAR (★) IN THE CATALOG MUST BE IMPROVISED OR PROCURED LOCALLY.

● For swatch identification, refer to Page B, etc.

Note 1– For replacement of Door and Quarter Trim Panels (23942–3, 27406–7 and 31012–3), refer to this code in the 1974 Soft Trim Section. For replacement of Cushion Covers (62900 and 63804) and Back Covers (64416–7 and 66600), contact your Service Representative. All other parts are included in the 1974 Soft Trim Section.

C (Montego)

AA	53B,65B	Black vinyl and black cloth	4	4	4 & 260	1
AB	53B,65B	Medium blue vinyl and medium blue cloth	15	15	15 & 261	13
AU	53B,65B	Light tan vinyl and light tan cloth with saddle appointments	60	60	60 & 310	215
BA	53B,65B	Black all vinyl	4	4	4 & 138	1
BB	53B,65B	Medium blue all vinyl	15	15	15 & 148	13
BU	53B,65B	Light tan all vinyl with saddle appointments	60	60	60 & 283	215
CA	53D,65D	Black vinyl and black cloth	4	4	4 & 260	1
CB	53D,65D	Medium blue vinyl and medium blue cloth	15	15	15 & 261	13
CR	53D,65D	Medium green vinyl and medium green cloth	49	49	49 & 262	47
CR2	53D,65D	(Code CR–see Note 1)				
CU	53D,65D	Light tan vinyl and light tan cloth with saddle appointments	60	60	60 & 310	215
CY	53D,65D	Light gold vinyl and light gold cloth	87	87	87 & 258	84
CZ	53D,65D	Medium saddle vinyl and medium saddle cloth	224	224	207 & 224	214
DA	53D,65D,71D	Black all vinyl	4	4	3 & 4	1
DB	53D,65D,71D	Medium blue all vinyl	15	15	14 & 15	13
DM	65D	White all vinyl with tan appointments	34	32	31 & 32	29
DQ	65D	White all vinyl with blue appointments	34	32	31 & 32	29
DR	53D,65D,71D	Medium green all vinyl	49	49	48 & 49	47
DU	53D,65D	Light tan all vinyl with saddle appointments	60	60	60 & 206	215
DW	65D	White all vinyl with black appointments	34	32	31 & 32	29
DY	53D,65D	Light gold all vinyl	87	87	86 & 87	84
DZ	53D,65D,71D	Medium saddle all vinyl	224	224	217 & 224	214
D5	65D	White all vinyl with green appointments	34	32	31 & 32	29
D8	65D	White all vinyl with gold appointments	34	32	31 & 32	29
D9	65D	White all vinyl with saddle appointments	34	32	31 & 32	29
EA, EAA	71K	Black all vinyl	4,5 & 12	4	4 & 5	1
EB, EBA, EBB	71K	Medium blue all vinyl	15,21 & 147	15	15 & 147	13
ER, ERA, ERB	71K	Medium green all vinyl	49,96 & 161	49	49 & 161	47
EZ, EZA, EZB	71K	Medium saddle all vinyl	213 & 224	224	203 & 224	214
GA	53K,65K	Black vinyl and black cloth	4,12 & 137	4	4,140 & 144	1
GB	53K,65K	Medium blue vinyl and medium blue cloth	15,21 & 149	15	15,150 & 153	13
GR	53K,65K	Medium green vinyl and medium green cloth	49,96 & 163	49	49,124 & 165	47

COPYRIGHT © 1986 — FORD MOTOR COMPANY — DEARBORN, MICHIGAN

1974 SOFT TRIM SCHEME CODES

AS LISTED ON CERTIFICATION LABEL

CODE	BODY TYPE	TRIM SCHEME	●CONSISTS OF SWATCH IDENTIFICATION NUMBERS			
			DOORS and QTR'S	SEATS		HEAD–LINING
				BOLSTER	CUSHION and BACK	

THE SOFT TRIM SECTION INCLUDES ONLY THOSE ITEMS WHICH WERE AVAILABLE FOR SERVICE AT THE TIME OF PRINTING. ITEMS NOT SHOWN OR INDICATED WITH A BLACK STAR (★) IN THE CATALOG MUST BE IMPROVISED OR PROCURED LOCALLY.

● For swatch identification, refer to Page B, etc.

Note 1– For replacement of Door and Quarter Trim Panels (23942–3, 27406–7 and 31012–3), refer to this code in the 1974 Soft Trim Section. For replacement of Cushion Covers (62900 and 63804) and Back Covers (64416–7 and 66600), contact your Service Representative. All other parts are included in the 1974 Soft Trim Section.

C (Montego) — Cont'd

GU	53K,65K	Light tan vinyl and light tan cloth	60,213 & 295	60	60,252 & 297	215
GUA	53K,65K	Light tan vinyl and light tan cloth with saddle appointments				
GY	53K,65K	Light gold vinyl and light gold cloth	87,90 & 189	87	87,115 & 313	84
GZ	53K,65K	Medium saddle vinyl and medium saddle cloth	224,213 & 293	224	224,233 & 239	214
HA, HAA	53K,65K,71K	Black all vinyl	4,12 & 137	4	4 & 137	1
HB, HBA	53K,65K,71K	Medium blue all vinyl	15,21 & 149	15	15 & 146	13
HM, HMA	65K	White all vinyl with tan appointments	34 & 308	32	32 & 273	29
HQ, HQA	65K	White all vinyl with blue appointments	34 & 308	32	32 & 273	29
HR, HRA	53K,65K,71K	Medium green all vinyl	49,96 & 163	49	49 & 50	47
HU, HUA	53K,65K	Light tan all vinyl	60,213 & 295	60	60 & 275	215
HUB	53K,65K	Light tan all vinyl with saddle appointments				
HW, HWA	65K	White all vinyl with black appointments	34	32	32 & 273	29
HY, HYA	53K,65K	Light gold all vinyl	87,90 & 189	87	87 & 189	84
HZ, HZA	53K,65K,71K	Medium saddle all vinyl	224,213 & 293	224	224 & 293	214
H5, H5A	65K	White all vinyl with green appointments	34 & 308	32	32 & 273	29
H8, H8A	65K	White all vinyl with gold appointments	34 & 308	32	32 & 273	29
H9, H9A	65K	White all vinyl with saddle appointments	34 & 308	32	32 & 273	29
KB	53K,65K	Medium blue vinyl and medium blue cloth	15,21 & 240	15	15,240 & 307	13
KY	53K,65K	Light gold vinyl and light gold cloth	87,90 & 245	87	87,245 & 279	84
NU, NUA	53B,D,65B,D	Tan all vinyl with saddle appointments				

BODY TYPE	R/L	PART NUMBER LESS SUFFIX	TRIM CODES, COLORS and APPLICABLE PART NUMBER SUFFIXES															QTY.
		TRIM CODES ➧		SECOND CHARACTER of TRIM CODE									ALL CODES	ALL CODES	OTHER	OTHER		
				-B or L	-C	-D or N	-G or 6	-R or 5	-T	-M or U	-Y or 8	-Z or 9						
		COLORS ➧		BLUE	ORANGE	RED	AVO-CADO	GREEN	BEIGE	TAN	GOLD	SADDLE	BLACK	WHITE	SEE NOTE	SEE NOTE		
02344-5	PANEL (COWL TRIM)																	
C	R	D70Z 6502344		A9B		A2D		★		★	★	★	★					1
	L	D70Z 6502345		A9B		A2D		★		★	★	A1Z	★					1
04104-5	VISOR ASSY.																	
Notes:	●Matching sun visor (less vanity mirror) for R.H. sun visor which includes illuminated vanity mirror																	
LESS ARM and BRACKET																		
C - - w/o vanity mirror	R/L	D40Z 6504104		B				★		★		★	A	★				2
04282	PAD (INSTRUMENT PANEL UPPER)																	
C		D40Z 6504282		★				★		★	★	★	D					1
13086	MAT (FRONT FLOOR)																	
Notes:	‡ Brown																	
TWIN (less carpet insert)																		
C - - rubber		D60Z 6213086		B				F					A		‡C			1
		D70Z 6213086								A								1
13106	MAT (REAR FLOOR)																	
Notes:	‡ Brown																	
TWIN (less carpet insert)																		
C - - rubber-plain		D6FZ 6213106		B		E		F					A		‡C			1
		D7FZ 6213106								★								1

BODY TYPE	R/L	PART NUMBER LESS SUFFIX	TRIM CODES, COLORS and APPLICABLE PART NUMBER SUFFIXES															QTY.
		TRIM CODES ➧		SECOND CHARACTER of TRIM CODE									ALL CODES	ALL CODES	OTHER	OTHER		
				-B or L	-C	-D or N	-G or 6	-R or 5	-T	-M or U	-Y or 8	-Z or 9						
		COLORS ➧	LGTH. (Inches)	BLUE	ORANGE	RED	AVO-CADO	GREEN	BEIGE	TAN	GOLD	SADDLE	BLACK	WHITE	SEE NOTE	SEE NOTE		
24100-1	PAD (DOOR ARM REST)-Incl. attaching parts																	
C(53,71) - - front door	R/L	D3DZ 6224100	8 3/4	D				★		★	★		F					2
	R/L	D40Z 6524100	8 3/4									B						2
- - rear door	R/L	D30Z 5324100	8 3/4	C				★					★					2
	R/L	D40Z 5324100	8 3/4							★	★	B						2
C(65) - - door	R	D3DZ 6224100	11	J				★		★	★	★	★	★				1
	L	D3DZ 6224101	11	B				★		E	★		A					1
	L	D40Z 6524101	11									A						1
- - quarter	R/L	D3DZ 6224100	8 3/4	D				★		★	★		F					2
	R/L	D40Z 6524100	8 3/4									B						2
24144	BASE (ARM REST)-Incl. attaching parts																	
Notes:	● Chrome																	
C(53B,D,71D)		D3DZ 6224144		L				★		★	★	★	★					4
C(65B,D) - - door	R/L	D40Z 6524144									★	B						2
	R/L	D3DZ 6224144		B				★		D			★	★				2
C(65K) - - door	R/L	D1AZ 5724144													●H			2
24346-7	PANEL (CENTER BODY PILLAR INSIDE FINISH)																	
Notes:	$Paint to match																	
C(53,71) - - lower	R	D40Z 5324346						★		★	★	★	★					1
	L	D40Z 5324347						★		★	★	★	★					1
- - upper	R	D40Z 5324356								$A								1
	L	D40Z 5324357																1
24356-7	Refer to group 24346-7																	

COPYRIGHT © 1986— FORD MOTOR COMPANY —DEARBORN, MICHIGAN

NEW ISSUE

1973/79 LINCOLN-MERCURY CARS

BODY TYPE	R/L	PART NUMBER	DESCRIPTION	QTY
45422-3	COVER (LUGGAGE COMPARTMENT SIDE)			
C(53,65)	R	D4GY 6545422-A		1
60136-7	BACK KIT (FRONT SEAT)			
C(53,65)	R/L	D3GY 6560136-C	Pad-full width seat-w/center arm rest	2

BODY TYPE	R/L	PART NUMBER LESS SUFFIX	TRIM CODES AND APPLICABLE PART NUMBER SUFFIXES														QTY
64416	COVER (FRONT SEAT BACK)																
		TRIM CODES ▶	AA	AB	AU	BA	BB	BU	NU, NUA								
C(53B)		D4GY 5364416	★	★	AAU	★	★	★	★								

1974 SOFT TRIM SCHEME CODES

AS LISTED ON CERTIFICATION LABEL

CODE	BODY TYPE	TRIM SCHEME	●CONSISTS OF SWATCH IDENTIFICATION NUMBERS			
			DOORS and QTR'S	SEATS		HEAD-LINING
				BOLSTER	CUSHION and BACK	

ALL ITEMS SHOWN IN THIS SOFT TRIM SECTION ARE OBSOLETE, NOT REPLACED.
ALL ITEMS MUST BE IMPROVISED OR PROCURED LOCALLY.

● For swatch identification, refer to Page B, etc.

D (Lincoln)

BA	53A,65A	Black vinyl and black cloth	4 & 12	4	4 & 10	136
BB	53A,65A	Medium blue vinyl and medium blue cloth	15 & 21	15	15 & 221	131
BE	53A,65A	Light silver blue vinyl and medium silver blue cloth	76 & 119	76	76 & 265	180
BR	53A,65A	Medium green vinyl and medium green cloth	49 & 96	49	49 & 222	160
BY	53A,65A	Light gold vinyl and medium gold cloth	87 & 90	87	87 & 89	188
BZ	53A,65A	Medium saddle vinyl and medium saddle cloth	213 & 224	224	223 & 224	276
DA	53A,65A	Black leather and black vinyl	4 & 12	5	2 & 5	136
DB	53A,65A	Medium blue leather and medium blue vinyl	15 & 21	147	145 & 147	131
DD	53A,65A	Dark red leather and dark red vinyl	27 & 37	28	26 & 28	128
DE	53A,65A	Light silver blue leather and light silver blue vinyl	76 & 119	77	75 & 77	180
DN	53A,65A	White leather and vinyl with red appointments	34	33	30 & 33	129
DQ	53A,65A	White leather and vinyl with blue appointments	34	33	30 & 33	129
DR	53A,65A	Medium green leather and medium green vinyl	49 & 96	161	125 & 161	160
DT	53A,65A	Light beige leather and light beige vinyl	82 & 198	118	81 & 118	182
DW	53A,65A	White leather and vinyl with black appointments	34	33	30 & 33	129
DY	53A,65A	Light gold leather and light gold vinyl	87 & 90	88	85 & 88	188
DZ	53A,65A	Medium saddle leather and medium saddle vinyl	213 & 224	203	203 & 216	276
D5	53A,65A	White leather and vinyl with green appointments	34	33	30 & 33	129
D8	53A,65A	White leather and vinyl gold appointments	34	33	30 & 33	129
D9	53A,65A	White leather and vinyl with saddle appointments	34	33	30 & 33	129
EA	53A,65A	Black leather and black vinyl	4 & 12	5	2 & 5	136
EB	53A,65A	Medium blue leather and medium blue vinyl	15 & 21	147	145 & 147	131
ED	53A,65A	Dark red leather and dark red vinyl	27 & 37	28	26 & 28	128
EE	53A,65A	Light silver blue leather and light silver blue vinyl	76 & 119	77	75 & 77	180
EN	53A,65A	White leather and vinyl with red appointments	34	33	30 & 33	129
EQ	53A,65A	White leather and vinyl with blue appointments	34	33	30 & 33	129
ER	53A,65A	Medium green leather and medium green vinyl	49 & 96	161	125 & 161	160
ET	53A,65A	Light beige leather and light beige vinyl	82 & 198	118	81 & 118	182
EW	53A,65A	White leather and vinyl with black appointments	34	33	30 & 33	129
EY	53A,65A	Light gold leather and light gold vinyl	87 & 90	88	85 & 88	188
EZ	53A,65A	Medium saddle leather and medium saddle vinyl	213 & 224	203	203 & 216	276
E5	53A,65A	White leather and vinyl with green appointments	34	33	30 & 33	129
E8	53A,65A	White leather and vinyl with gold appointments	34	33	30 & 33	129
E9	53A,65A	White leather and vinyl and saddle appointments	34	33	30 & 33	129
FA	53A,65A	Black vinyl and black cloth	4 & 12	4	4 & 10	136
FB	53A,65A	Medium blue vinyl and medium blue cloth	15 & 21	15	15 & 221	131
FE	53A,65A	Light silver blue vinyl and medium silver blue cloth	76 & 119	76	76 & 265	180

COPYRIGHT © 1986 — FORD MOTOR COMPANY — DEARBORN, MICHIGAN

1974 SOFT TRIM SCHEME CODES

AS LISTED ON CERTIFICATION LABEL

CODE	BODY TYPE	TRIM SCHEME	●CONSISTS OF SWATCH IDENTIFICATION NUMBERS			
			DOORS and QTR'S	SEATS		HEAD-LINING
				BOLSTER	CUSHION and BACK	

ALL ITEMS SHOWN IN THIS SOFT TRIM SECTION ARE OBSOLETE, NOT REPLACED.
ALL ITEMS MUST BE IMPROVISED OR PROCURED LOCALLY.

● For swatch identification, refer to Page B, etc.

D (Lincoln) — Cont'd.

FR	53A,65A	Medium green vinyl and medium green cloth	49 & 96	49	49 & 222	160
FY	53A,65A	Light gold vinyl and medium gold cloth	87 & 90	87	87 & 89	188
FZ	53A,65A	Medium saddle vinyl and medium saddle cloth	213 & 224	224	223 & 224	276
HA	53A,65A	Black leather and black vinyl	4,5 & 12	5	2 & 5	136
HE	53A,65A	Light silver blue leather and light silver blue vinyl	76,77 & 119	77	75 & 77	180
HR	53A,65A	Medium green leather and medium green vinyl	49,96 & 161	161	125 & 161	160
HT	53A,65A	Light beige leather and light beige vinyl	82,118 & 198	118	81 & 118	182
HY	53A,65A	Light gold leather and light gold vinyl	87,88 & 90	88	85 & 88	188
JA	53A,65A	Black all cloth	4,12 & 236	246	246	136
JD	53A,65A	Dark red all cloth	27,248 & 37	248	248	128
JE	53A,65A	Light silver blue all cloth	76,119 & 251	251	251	180
JR	53A,65A	Medium green all cloth	49,96 & 249	249	249	160
JT	53A,65A	Light beige all cloth	82,198 & 250	250	250	182
JY	53A,65A	Light goid all cloth	87,90 & 238	238	238	188
KA	53A,65A	Black leather and vinyl	4,5 & 12	5	2 & 5	136
KD	53A,65A	Dark red leather and vinyl	27,28 & 37	28	28 & 26	128
KE	53A,65A	Light silver blue leather and vinyl	76,77 & 119	77	75 & 77	180
KR	53A,65A	Medium green leather and vinyl	49,96 & 161	161	125 & 161	160
KT	53A,65A	Light beige leather and vinyl	82,118 & 198	118	81 & 118	182
KY	53A,65A	Light gold leather and vinyl	87,88 & 90	88	85 & 88	188

1974 SOFT TRIM SCHEME CODES

AS LISTED ON CERTIFICATION LABEL

CODE	BODY TYPE	TRIM SCHEME	●CONSISTS OF SWATCH IDENTIFICATION NUMBERS			
			DOORS and QTR'S	SEATS		HEAD–LINING
				BOLSTER	CUSHION and BACK	

THE SOFT TRIM SECTION INCLUDES ONLY THOSE ITEMS WHICH WERE AVAILABLE FOR SERVICE AT THE TIME OF PRINTING. ITEMS NOT SHOWN OR INDICATED WITH A BLACK STAR (★) IN THE CATALOG MUST BE IMPROVISED OR PROCURED LOCALLY.

● For swatch identification, refer to Page B, etc.

Note 1– For replacement of Door and Quarter Trim Panels (23942–3 and 31012–3), refer to this code in the 1974 Soft Trim Section. For replacement of Cushion Covers (62900–1 and 63804) and Back Covers (64416–7 and 66600), contact your Service Representative. All other parts are included in the 1974 Soft Trim Section.

F (Cougar)

AA	65F	Black all vinyl	4	4	4	1
AB	65F	Medium blue and light silver all vinyl	15	15	15 & 76	13
AD	65F	Dark red all vinyl				
AM	65F	White all vinyl with tan appointments	34	32	32	29
AQ	65F	White all vinyl with blue appointments	34	32	32	29
AR	65F	Medium green all vinyl	49	49	49	47
AU	65F	Light tan all vinyl	60	60	60	215
AW	65F	White all vinyl with black appointments	34	32	32	29
AZ	65F	Medium saddle and light tan all vinyl	224	224	60 & 224	214
A5	65F	White all vinyl with green appointments	34	32	32	29
A9	65F	White all vinyl with saddle appointments	34	32	32	29
DA	65F	Black leather and black vinyl	4	4	2 & 4	1
DB	65F	Medium blue leather and light silver vinyl	15	15	15,75 & 76	13
DD	65F	Dark red leather and dark red vinyl				
DR	65F	Medium green leather and medium green vinyl	49	49	49 & 125	47
DU	65F	Light tan leather and light tan vinyl	60	60	60 & 205	215
DW	65F	White leather and vinyl with black appointments	34	32	30 & 32	29
DZ	65F	Medium saddle leather and light tan vinyl	224	224	60,205 & 224	214
EB	65F	Medium blue vinyl and medium silver cloth	15	15	15,76 & 333	13
ED	65F	Dark red vinyl and dark red cloth				
EDA	65F	Dark red vinyl and dark red cloth				
ER	65F	Medium green vinyl and medium green cloth	49	49	49 &	47
EU	65F	Light tan vinyl and light tan cloth	60	60	60 & 340	215
EU1	65F	(Code EU–see Note 1)				
EZ	65F	Medium saddle vinyl and light tan cloth	224	224	60,224 & 340	214
FA	65F	Black leather and black vinyl	4	4	2 & 4	1
FB	65F	Medium blue leather and light silver vinyl	15	15	15,75 & 76	13
FD	65F	Dark red leather and dark red vinyl				
FM	65F	White leather and vinyl with tan appointments				
FQ	65F	White leather and vinyl with blue appointments				
FU	65F	Light tan leather and light tan vinyl	60	60	60	215
FW	65F	White leather and vinyl with black appointments	34	32	30 & 32	29
FZ	65F	Medium saddle leather and light tan vinyl	224	224	60,205 & 224	214
F5	65F	White leather and vinyl with green appointments				
F9	65F	White leather and vinyl with saddle appointments				

COPYRIGHT © 1986 — FORD MOTOR COMPANY — DEARBORN, MICHIGAN

1974 SOFT TRIM SCHEME CODES

AS LISTED ON CERTIFICATION LABEL

CODE	BODY TYPE	TRIM SCHEME	●CONSISTS OF SWATCH IDENTIFICATION NUMBERS			
			DOORS and QTR'S	SEATS		HEAD–LINING
				BOLSTER	CUSHION and BACK	

THE SOFT TRIM SECTION INCLUDES ONLY THOSE ITEMS WHICH WERE AVAILABLE FOR SERVICE AT THE TIME OF PRINTING. ITEMS NOT SHOWN OR INDICATED WITH A BLACK STAR (★) IN THE CATALOG MUST BE IMPROVISED OR PROCURED LOCALLY.

● For swatch identification, refer to Page B, etc.

F (Cougar) — Cont'd

HA	65F	Black all vinyl	4	4	4	1
HB	65F	Medium blue and light silver all vinyl	15	15	15 & 76	13
HC	65F	Medium copper all vinyl	211	278	278	212
HD	65F	Dark red all vinyl				
HR	65F	Medium green all vinyl	49	49	49	47
HU	65F	Light tan all vinyl	60	60	60 & 205	215
HW	65F	White all vinyl with black appointments	34	32	32	29
HZ	65F	Medium saddle and light tan all vinyl	224	224	60 & 224	214

BODY TYPE	R/L	PART NUMBER LESS SUFFIX	TRIM CODES, COLORS and APPLICABLE PART NUMBER SUFFIXES															QTY.
		TRIM CODES ▶		SECOND CHARACTER of TRIM CODE									ALL CODES	ALL CODES	OTHER	OTHER		
				-B or L	-C	-D or N	-G or 6	-R or 5	-T	-M or U	-Y or 8	-Z or 9						
		COLORS ▶		BLUE	ORANGE	RED	AVO-CADO	GREEN	BEIGE	TAN	GOLD	SADDLE	BLACK	WHITE	SEE NOTE	SEE NOTE		
02344-5	PANEL (COWL TRIM)																	
F	R	D7OZ 6502344		A9B		A2D		★		★		A1Z						1
	L	D7OZ 6502345		A9B		A2D		★		★		A1Z	★					1
04104-5	VISOR ASSY.																	
Notes:	⊕ Use with or w/o non-illuminated vanity mirror-refer to group 17A679 in Chassis Section for mirror, ●Matching sun visor (less vanity mirror) for R.H. sun visor which includes illuminated vanity mirror																	

LESS ARM and BRACKET

F - - w/o vanity mirror	⊕	D40Z 6504104		B		★		C		★		E	A					2
04282	PAD (INSTRUMENT PANEL UPPER)																	
F		D40Z 6504282		A				★		★	★	★	D					1
		D40Y 6504282				H												1
13086	MAT (FRONT FLOOR)																	
Notes:	‡ Brown																	

TWIN (less carpet insert)

F - - rubber		D60Z 6213086		B		F		E					A		‡C			1
		D70Z 6213086									A							1
13106	MAT (REAR FLOOR)																	
Notes:	‡ Brown																	

TWIN (LESS CARPET INSERT)

F - - rubber-plain		D6FZ 6213106						F					A		‡C			1
		D7FZ 6213086									A							1
24100-1	PAD (DOOR ARM REST)-Incl. attaching parts																	
Notes:	♦ Silver blue, $ Use tan																	
F - - door	R	D3DZ 6224100	11	J				★		★		$	★	★				1
	L	D3DZ 6224101	11	B				★		E		$	A					1
	R	D4WZ 6524100	11			A									♦★			1
	L	D4WZ 6524101	11			A									♦★			1
- - quarter	R/L	D4WY 6531718	8 3/4			K												2
	R/L	D3DZ 6224100	8 3/4	D				★		V		$	F		♦★			2
24144	BASE (ARM REST)-Incl. attaching parts																	
Notes:	● Chrome																	
F - - door	R/L	D1AZ 5724144													●H			2
BODY TYPE	R/L	PART NUMBER	DESCRIPTION															QTY
31718-9	Refer to group 24100-1																	
45422-3	COVER (LUGGAGE COMPARTMENT SIDE)																	
F	R	D4GY 6545422-A																1
45455	COVER (LUGGAGE COMPARTMENT FLOOR)																	
F		D60Z 6545455-A0P	Gray burloom															1
45494	Refer to group 45455																	

BODY TYPE	R/L	PART NUMBER LESS SUFFIX	TRIM CODES, COLORS and APPLICABLE PART NUMBER SUFFIXES															QTY.
		TRIM CODES ▶		SECOND CHARACTER of TRIM CODE									ALL CODES	ALL CODES	OTHER	OTHER		
				-B or L	-C	-D or N	-G or 6	-R or 5	-T	-M or U	-Y or 8	-Z or 9						
		COLORS ▶		BLUE	ORANGE	RED	AVO-CADO	GREEN	BEIGE	TAN	GOLD	SADDLE	BLACK	WHITE	SEE NOTE	SEE NOTE		
46668	PANEL (PACKAGE TRAY TRIM)																	
Notes:	‡ Use with or without speakers, $ Paint to match																	
F	‡	D40Z 6546668										$N						1

COPYRIGHT © 1986 — FORD MOTOR COMPANY — DEARBORN, MICHIGAN

1974 SOFT TRIM SCHEME CODES

CODE	BODY TYPE	TRIM SCHEME	●CONSISTS OF SWATCH IDENTIFICATION NUMBERS			
			DOORS and QTR'S	SEATS		HEAD–LINING
				BOLSTER	CUSHION and BACK	

THE SOFT TRIM SECTION INCLUDES ONLY THOSE ITEMS WHICH WERE AVAILABLE FOR SERVICE AT THE TIME OF PRINTING. ITEMS NOT SHOWN OR INDICATED WITH A BLACK STAR (★) IN THE CATALOG MUST BE IMPROVISED OR PROCURED LOCALLY.

CAPRI (J)

AE		Black all vinyl				
KE		Tan all vinyl				
LE		Saddle all vinyl				

COPYRIGHT © 1986 — FORD MOTOR COMPANY — DEARBORN, MICHIGAN

1973/79 LINCOLN-MERCURY CARS

BODY TYPE	R/L	PART NUMBER	DESCRIPTION	QTY
04104	VISOR ASSY.-Less arm and bracket			
J	R/L	D4RY 6204104-A	Black	2
	R/L	D4RY 6204104-B	Parchment	2
	R/L	D4RY 6204104-C	Tan	2
04282	PAD (INSTRUMENT PANEL UPPER)			
J "Before 1/1/74"		★	Black	1
		★	Saddle	1
		D3RY 6204282-B	Tan (dark)	1
		D4RY 6204282-B	Tan (medium)	1
"From 1/1/74"		D4RY 6204282-D	Black	1
		★	Saddle	1
		★	Tan (dark)	1
		D4RY 6204282-B	Tan (medium)	1
13000	CARPET (FRONT FLOOR)			
J - - M/T exc. GT		D4RY 6213000-T	Black - front and rear	1
24140-1	REST (ARM)-Incl. attaching parts			
J	R	D4RY 6224140-A	Black	1
	L	D4RY 6224141-A	Black	1
	L	D4RY 6224141-C	Saddle	1
46668	PANEL (PACKAGE TRAY TRIM)			
J - - w/simulated bucket seats		D2RY 6246668-A	Black	1
		D3RY 6246668-A	Tan	1
J		130069-ESFA	Black - retaining button	AR
		111761-ESTA	Black - plug	AR
60050-1	CUSHION KIT (FRONT SEAT)			
J	R/L	D3RY 6263100-A	Frame assy. - w/fully reclining seat	2
60136-7	BACK KIT (FRONT SEAT)			
J	R	D3RY 6264700-B	Frame - w/reclining seat - full	1
	L	D3RY 6264701-B	Frame - w/reclining seat - full	1
63100	Refer to group 60050-1			
64700-1	Refer to group 60136-7			

1974 SOFT TRIM SCHEME CODES

AS LISTED ON CERTIFICATION LABEL

THE SOFT TRIM SECTION INCLUDES ONLY THOSE ITEMS WHICH WERE AVAILABLE FOR SERVICE AT THE TIME OF PRINTING. ITEMS NOT SHOWN OR INDICATED WITH A BLACK STAR (★) IN THE CATALOG MUST BE IMPROVISED OR PROCURED LOCALLY.

● For swatch identification refer to Page B, etc.

K (Mark IV)

Note 1– For replacement of Cushion Covers (62900–1 and 63804) and Back Covers (64416–7 and 66600), refer to this code in the 1974 Soft Trim Section. For replacement of Door and Quarter Trim Panels (23942–3 and 31012–3), contact your Service Representative, who will process in accordance with General ICC Bulletin No. 7526. All other parts are included in the 1974 Soft Trim Section.

CODE	BODY TYPE	TRIM SCHEME	●CONSISTS OF SWATCH IDENTIFICATION NUMBERS: DOORS and QTR'S	SEATS: BOLSTER	SEATS: CUSHION and BACK	HEAD-LINING
AE	65D	Light silver cloud all cloth	76,251 &119	251	251	280
AH	65D	Dark cranberry all cloth	169,263 &170	263	263	58
AR	65D	Medium green all cloth	49,249 &96	249	249	232
AU	65D	Light tan all cloth	60,314 &218	314	314	215
AY	65D	Light gold all cloth	87,238 &90	238	238	84
BA	65D	Black leather and vinyl	4 & 12	5	2 & 5	7
BB	65D	Medium blue leather and vinyl	15 & 21	147	145 & 147	231
BB1	65D	(Code BB–see Note 1)				
BD	65D	Dark red leather and vinyl	27 & 37	28	26 & 28	156
BE	65D	Light silver cloud leather and vinyl	76 & 119	77	75 & 77	280
BN	65D	White leather and vinyl with red appointments	34	33	30 & 33	29
BQ	65D	White leather and vinyl with blue appointments	34	33	30 & 33	29
BR	65D	Medium green leather and vinyl	49 & 96	161	125 & 161	232
BU	65D	Light tan leather and vinyl	60 & 218	219	205 & 219	215
BW	65D	White leather and vinyl with black appointments	34	33	30 & 33	29
BY	65D	Light gold leather and vinyl	87 & 90	88	85 & 88	84
BZ	65D	Medium saddle leather and medium saddle vinyl	213 & 224	203	203 & 216	214
B5	65D	White leather and vinyl with green appointments	34	33	30 & 33	29
B8	65D	White leather and vinyl with gold appointments	34	33	30 & 33	29
B9	65D	White leather and vinyl with saddle appointments	34	33	30 & 33	29
CP	65D	Light silver gray leather and vinyl	199,202 & 315	202	202 & 277	201
DU	65D	Light tan leather and vinyl	60 & 218	219	205,216 & 219	215
DZ	65D	Saddle and white leather and vinyl	224 & 213	203	30,203 & 216	214
EA	65D	Black vinyl and black cloth	4,10 & 12	4	4 & 10	7
EB	65D	Medium blue vinyl and medium blue cloth	15,21 & 221	15	15 & 221	231
EB1	65D	(Code EB – see Note 1)				
ED	65D	Dark red vinyl and dark red cloth	27,36 & 37	27	27 & 36	156
EE	65D	Medium silver cloud vinyl and medium silver cloud cloth	76,78 & 119	76	76 & 265	280

COPYRIGHT © 1986 — FORD MOTOR COMPANY — DEARBORN, MICHIGAN

1974 SOFT TRIM SCHEME CODES

AS LISTED ON CERTIFICATION LABEL

CODE	BODY TYPE	TRIM SCHEME	●CONSISTS OF SWATCH IDENTIFICATION NUMBERS			
			DOORS and QTR'S	SEATS		HEAD-LINING
				BOLSTER	CUSHION and BACK	

THE SOFT TRIM SECTION INCLUDES ONLY THOSE ITEMS WHICH WERE AVAILABLE FOR SERVICE AT THE TIME OF PRINTING. ITEMS NOT SHOWN OR INDICATED WITH A BLACK STAR (★) IN THE CATALOG MUST BE IMPROVISED OR PROCURED LOCALLY.

● For swatch identification refer to Page B, etc.

Note 1– For replacement of Cushion Covers (62900–1 and 63804) and Back Covers (64416–7 and 66600), refer to this code in the 1974 Soft Trim Section. For replacement of Door and Quarter Trim Panels (23942–3 and 31012–3), contact **your Service Representative, who will process in accordance with General ICC Bulletin No. 7526.** All other parts are included in the 1974 Soft Trim Section.

K (Mark IV) — Cont'd

ER	65D	Medium green vinyl and medium green cloth	49,96 & 222	49	49 & 222	232
EU	65D	Medium tan vinyl and medium tan cloth	60,208 & 218	60	60 & 208	215
EY	65D	Medium gold vinyl and medium gold cloth	87,89 & 90	87	87 & 89	84

1973/79 LINCOLN-MERCURY CARS

BODY TYPE	R/L	PART NUMBER LESS SUFFIX	TRIM CODES, COLORS and APPLICABLE PART NUMBER SUFFIXES														QTY.
		TRIM CODES ▶		SECOND CHARACTER of TRIM CODE									ALL CODES	ALL CODES	OTHER	OTHER	
				-B or L	-C	-D or N	-G or 6	-R or 5	-T	-M or U	-Y or 8	-Z or 9					
		COLORS ▶		BLUE	ORANGE	RED	AVO-CADO	GREEN	BEIGE	TAN	GOLD	SADDLE	BLACK	WHITE	SEE NOTE	SEE NOTE	
04104-5		VISOR ASSY.															
Notes:		⊕ Use with or without non-illuminated vanity mirror-refer to group 17A679 in Chassis Section for mirror,															
		LESS ARM & BRACKET															
K - - cloth-w/o vanity mirror	⊕ R/L	D40Z 6504104		★		★		★					A				2
24100-1		PAD (DOOR ARM REST)-Incl. attaching parts															
Notes:		⚠ Cranberry, ▲ Silver cloud, ● Silver gray															
K - - door	R	D5SZ 6524100		★		★		★		★	★	★	★	C	●★	▲★	1
K - - quarter	R	D5SZ 6531718		★		D		★		★	★	★	A	★	●★	⚠★	1
	L	D5SZ 6531719		★		D		★		★	★	★	A	★	●★	⚠★	1
24144-5		BASE (ARM REST)-Incl. attaching parts															
K	L	D4SZ 6524145						★		★	★		★	D			1
	R	D5SZ 6524144		★		E		★		★	★	★	★	★			1
	L	D5SZ 6524145		F		E						★					1
31718-9		Refer to group 24100-1															
53700		COVER (ROOF OUTSIDE)															

ROOF COVER MATERIAL

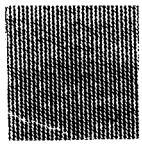

TYPE 1 (CAVALRY TWILL)

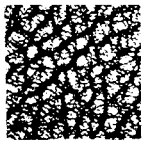

TYPE 2 (ODENSE)

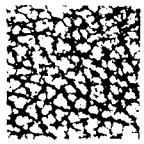

TYPE 3 (LEVANT)

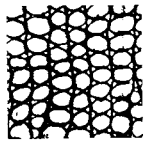

TYPE 4 (CAYMAN)

TYPE 5 (KIWI)

TYPE 6 (LUGANA)

TYPE 7 (CROSSHATCH)

TYPE 8 (NORMANDE)

P-10269

BODY TYPE	PART NUMBER LESS SUFFIX	GRAIN TYPES, COLORS / AND APPLICABLE PART NUMBER SUFFIXES														QTY.
		GRAIN TYPE	AVO-CADO	BEIGE	BLACK	BLUE	BROWN	COPPER	GOLD	GREEN	ORANGE	RED	TAN	WHITE	OTHER SEE NOTE	
53700	COVER (ROOF OUTSIDE) — Cont'd															
Notes:	♦ Silver blue															
K	D4LY 6553700	1			★	★	★		★	★			★	A	♦★	1

COPYRIGHT © 1986— FORD MOTOR COMPANY —DEARBORN, MICHIGAN

NEW ISSUE

1974 SOFT TRIM SCHEME CODES

AS LISTED ON CERTIFICATION LABEL

CODE	BODY TYPE	TRIM SCHEME	●CONSISTS OF SWATCH IDENTIFICATION NUMBERS			
			DOORS and QTR'S	SEATS		HEAD-LINING
				BOLSTER	CUSHION and BACK	

● For swatch identification refer to Page B, etc.

L (BOBCAT)

BA	62,64,73	Black vinyl and black cloth	4	4	4 & 92	1
BB	62,64,73	Medium blue vinyl and medium blue cloth	15	15	15 & 93	13
BC	62,64,73	Medium orange vinyl and medium orange cloth	288	288	288 & 345	287
BG	62,64,73	Light avocado vinyl and medium avocado cloth	69	69	69 & 346	290
BU	62,64,73	Light tan vinyl and light tan cloth with saddle appointments	60	60	60 & 347	215
BZ	62,64,73	Medium saddle vinyl and medium saddle cloth	224	224	224 & 348	214
BY	62,64,73	Medium yellow vinyl and medium yellow cloth	343	343	343 & 349	344
CA	62,64,73	Black all vinyl	4	4	4	1
CB	62,64,73	Medium blue all vinyl	15	15	15	13
CG	62,64,73	Light avocado all vinyl	69	69	69	290
CU	62,64,73	Light tan all vinyl with saddle appointments	60	60	60	215
CZ	62,64,73	Medium saddle all vinyl	224	224	224	214

THE SOFT TRIM SECTION INCLUDES ONLY THOSE ITEMS WHICH WERE AVAILABLE FOR SERVICE AT THE TIME OF PRINTING. ITEMS NOT SHOWN OR INDICATED WITH A BLACK STAR (★) IN THE CATALOG MUST BE IMPROVISED OR PROCURED LOCALLY.

COPYRIGHT © 1986 — FORD MOTOR COMPANY — DEARBORN, MICHIGAN

1973/79 LINCOLN-MERCURY CARS

BODY TYPE	R/L	PART NUMBER LESS SUFFIX	TRIM CODES, COLORS and APPLICABLE PART NUMBER SUFFIXES														QTY.
		TRIM CODES ▶		SECOND CHARACTER of TRIM CODE									ALL CODES	ALL CODES	OTHER	OTHER	
				-B or L	-C	-D or N	-G or 6	-R or 5	-T	-M or U	-Y or 8	-Z or 9					
		COLORS ▶		BLUE	ORANGE	RED	AVO-CADO	GREEN	BEIGE	TAN	GOLD	SADDLE	BLACK	WHITE	SEE NOTE	SEE NOTE	
02344-5	PANEL (COWL TRIM)																
L	R	D4FZ 6202344		★	★		★			B		★	★				1
	L	D4FZ 6202345		★	★		★			B		★	★				1
04104	VISOR ASSY. Less arm, bracket and mirror																
Notes:	⊕ Use with or without vanity mirror - refer to group 17A679 in Chassis Section for mirror																
L	⊕ R/L	D6FZ 6204104		B	★		★			★		★	A				2
24140-1	REST (ARM) - Incl. attaching parts																
L	R	D3FZ 6224140					R										1
	L	D3FZ 6224141					M										1
	R	D4FZ 6224140										A					1
	L	D4FZ 6224141										A					1
	R	D5FZ 6224140		G	A					H			F				1
	L	D5FZ 6224141		E	A					F			D				1
312A28-9	PLATE (QUARTER TRIM PANEL ACCESS HOLE COVER)																
L(64)	R	D3FZ 64312A28		★	★		★			★		★	D				1
	L	D3FZ 64312A29		★	★		★			★		★	D				1
31290	WINDLACE (QUARTER PILLAR and DOOR OPENING)																
L(73)	R/L	D2FZ 7331290		★	★		★			★		★	D				2

BODY TYPE	R/L	PART NUMBER	DESCRIPTION	QTY
40374-5	PANEL (BACK TRIM LOWER)			
L(64)	R	D7FZ 6440374-B4T	Paint to match	1
	L	D7FZ 6440375-A4T	Paint to match	1
45026	COVER (LUGGAGE COMPARTMENT SPARE TIRE) - Serviced only in assy. - group 45455			
45455	COVER (LUGGAGE COMPARTMENT FLOOR)			
L(62)		D4FZ 6245455-A	Moulded rubber	1
46668	PANEL (PACKAGE TRAY TRIM)			
L(62)		D5FZ 6246668-B	Paint to match	1

BODY TYPE	R/L	PART NUMBER LESS SUFFIX	TRIM CODES, COLORS and APPLICABLE PART NUMBER SUFFIXES														QTY.
		TRIM CODES ▶		SECOND CHARACTER of TRIM CODE									ALL CODES	ALL CODES	OTHER	OTHER	
				-B or L	-C	-D or N	-G or 6	-R or 5	-T	-M or U	-Y or 8	-Z or 9					
		COLORS ▶		BLUE	ORANGE	RED	AVO-CADO	GREEN	BEIGE	TAN	GOLD	SADDLE	BLACK	WHITE	SEE NOTE	SEE NOTE	
51916	HEADLINING (ROOF)																
L(62,64) - - w/o sliding roof		D3FZ 6251916		★	★		★			★			A4A				1
L(73)		D4FZ 7351916		★	★		★			★		★	A4A				1

BODY TYPE	R/L	PART NUMBER	DESCRIPTION	QTY
60136-7	BACK KIT (FRONT SEAT)			
L	R/L	D4FZ 6261018-A	Frame	2
	R/L	D3FZ 6264810-A	Pad	2
61018	Refer to group 60136-7			
64810-1	Refer to group 60136-7			

1974 SOFT TRIM SCHEME CODES

AS LISTED ON CERTIFICATION LABEL

CODE	BODY TYPE	TRIM SCHEME	●CONSISTS OF SWATCH IDENTIFICATION NUMBERS			
			DOORS and QTR'S	SEATS		HEAD–LINING
				BOLSTER	CUSHION and BACK	

THE SOFT TRIM SECTION INCLUDES ONLY THOSE ITEMS WHICH WERE AVAILABLE FOR SERVICE AT THE TIME OF PRINTING. ITEMS NOT SHOWN OR INDICATED WITH A BLACK STAR (★) IN THE CATALOG MUST BE IMPROVISED OR PROCURED LOCALLY.

● For swatch identification refer to Page B, etc.

P (COMET)

Note 1– For replacement of Door Trim Panels (23942–3 and 27406–7) and Quarter Trim Panels (31012–3), refer to this code in the 1974 Soft Trim Section. For replacement of Cushions Covers (62900 and 63804) and Back Covers (64416–7 and 66600), contact your Service Representative, who will process in accordance with General ICC bulletin No. 7526. All other parts are included in the 1974 Soft Trim Section.

BA	54,62	Black vinyl and black cloth	4	4	4 & 8	1
BB	54,62	Medium blue vinyl and medium blue cloth	15	15	15 & 18	13
BG	54,62	Avocado vinyl and avocado cloth	69	69	69 & 74	290
BU	54,62	Light tan vinyl and light tan cloth	60	60	60 & 304	215
BZ	54,62	Saddle vinyl and saddle cloth				
HA	54,62	Black leather and black vinyl	4	4	4 & 285	1
HAA	54,62	Black all vinyl	4	4	4	1
HB	54,62	Medium blue leather and medium blue vinyl	15	15	15 & 286	13
HBA	54,62	Medium blue all vinyl	15	15	15	13
HC	62	Medium orange leather and medium orange vinyl	288	288	288 & 289	287
HCA	62	Medium orange all vinyl	288	288	288	287
HG	54,62	Avocado leather and avocado vinyl	69	69	69 & 291	290
HGA	54,62	Light avocado all vinyl	69	69	69	290
HU	54,62	Light tan leather and light tan vinyl	60	60	60 & 303	215
HUA	54,62	Light tan all vinyl	60	60	60	215
HZ	54,62	Saddle leather and saddle vinyl				
JA	54,62	Black vinyl and black cloth	4 & 311	4	4 & 177	1
JB	54,62	Medium blue vinyl and medium blue cloth	15 & 311	15	15 & 130	13
JB1	54,62	(Code JB – see Note 1)				
JG	54,62	Avocado vinyl and avocado cloth	69 & 311	69	69 & 121	290
JU	54,62	Light tan vinyl and light tan cloth	60 & 311	60	60	215
JZ	54,62	Saddle vinyl and saddle cloth				
KA	54,62	Black all vinyl	4 & 311	4	4	1
KB	54,62	Medium blue all vinyl	15 & 311	15	15	13
KC	62	Medium orange all vinyl	288 & 311	288	288	287
KG	54,62	Light avocado all vinyl	69 & 311	69	69	290
KU	54,62	Light tan all vinyl	60 & 311	60	60	215
KZ	54,62	Saddle all vinyl				
LA	62	Black all vinyl	4 & 311	4	4	1
LC	62	Medium orange all vinyl	288 & 311	288	288	287
LG	62	Avocado all vinyl	69 & 311	69	69	290
LU	62	Light tan all vinyl	60 & 311	60	60	215
LZ	54,62	Saddle all vinyl				
PE	54,62	Silver blue all vinyl	76	76	76	76
PU	54,62	Tan all vinyl	60	60	60	60

COPYRIGHT © 1986 — FORD MOTOR COMPANY — DEARBORN, MICHIGAN

1973/79 LINCOLN-MERCURY CARS

BODY TYPE	R/L	PART NUMBER LESS SUFFIX		TRIM CODES, COLORS and APPLICABLE PART NUMBER SUFFIXES													QTY.
		TRIM CODES ♦		SECOND CHARACTER of TRIM CODE									ALL CODES	ALL CODES	OTHER	OTHER	
				-B or L	-C	-D or N	-G or 6	-R or 5	-T	-M or U	-Y or 8	-Z or 9					
		COLORS ♦		BLUE	ORANGE	RED	AVO-CADO	GREEN	BEIGE	TAN	GOLD	SADDLE	BLACK	WHITE	SEE NOTE	SEE NOTE	
04104	VISOR ASSY. - Less arm and bracket																
P - - cloth weave vinyl	R/L	D4DZ 6204104		B			★					★	A				2
04282	PAD (INSTRUMENT PANEL UPPER)																
P		D3DZ 6204282		A			★			F		★	D				1
24100	PAD (DOOR ARM REST) - Incl. attaching parts																
P - - rear door	R/L	D3DZ 6224100	8 3/4	D			★			★		★	F				2
24140-1	REST (ARM) - Incl. attaching parts																
Notes:	♦ Silver blue																
P - - front door	R	D3FZ 6224140					★					★					1
	L	D3FZ 6224141					M					★					1
	R	D5FZ 6224140		G	★					H			F		♦★		1
	L	D5FZ 6224141		E	★					F			D		♦C		1
BODY TYPE	R/L	PART NUMBER	DESCRIPTION														QTY
45494	COVER (LUGGAGE COMPARTMENT FLOOR)																
P		D3DZ 6245494-A	Gray rayon mat														1
46668	PANEL (PACKAGE TRAY TRIM)																
Notes:	‡ Use with or without speakers																
P(54)		D4DZ 5446668-C	Paint to match														1
60136-7	BACK KIT (FRONT SEAT)																
P(62)	R/L	D3FZ 6264810-A	Pad assy. bucket seat - w/o reclining seat														1
64810-1	Refer to group 60136-7																

1974 SOFT TRIM SCHEME CODES

AS LISTED ON CERTIFICATION LABEL

CODE	BODY TYPE	TRIM SCHEME	●CONSISTS OF SWATCH IDENTIFICATION NUMBERS			
			DOORS and QTR'S	SEATS		HEAD–LINING
				BOLSTER	CUSHION and BACK	
	● For swatch identification, refer to Page B, etc.					
		Y (Meteor)				
BB	53B,71B	Medium blue all vinyl	15	15	15 & 275	13
BR	53B,71B	Medium green all vinyl	49	49	49	47
BT	53B	Light beige all vinyl	82	82	82 & 294	98
BU	71B	Light tan all vinyl	60	60	60 & 341	215
CA	53B,65B	Black vinyl and black cloth	4	4	4 & 260	1
CB	53B,65B	Medium blue vinyl and medium blue cloth	15	15	15 & 261	13
CR	53B,65B	Medium green vinyl and medium green cloth	49	49	49 & 262	47
CT	53B,65B	Light beige vinyl and light beige cloth	82	82	82 & 235	98
CZ	53B,65B	Medium saddle vinyl and medium saddle cloth	224	224	207 & 224	84
DA	53B,65B,71B	Black all vinyl	4	4	3 & 4	1
DB	53B,65B,71B	Medium blue all vinyl	15	15	14 & 15	13
DR	53B,65B,71B	Medium green all vinyl	49	49	48 & 49	47
DT	53B,65B,71B	Light beige all vinyl	82	82	82 & 99	98
DU	71B	Light tan all vinyl	60	60	60 & 206	215
DZ	53B,65B	Medium saddle all vinyl	224	224	217 & 224	84
GA	53B,65B	Black vinyl and black cloth	4	4	4 & 242	1
GB	53B,65B	Medium blue vinyl and medium blue cloth	15	15	15 & 243	13
GR	53B,65B	Medium green vinyl and medium green cloth	49	49	49 & 224	47
GT	53B,65B	Light beige vinyl and light beige cloth	82	82	82 & 210	98
GY	53B,65B	Light gold vinyl and light gold cloth	87	87	87 & 237	84
GZ	53B,65B	Medium saddle vinyl and medium saddle cloth	224	224	224 & 241	214
HA	53B,65B,71B	Black all vinyl	4	4	3 & 4	1
HB	53B,65B,71B	Medium blue all vinyl	15	15	14 & 15	13
HR	53B,65B,71B	Medium green all vinyl	49	49	48 & 49	47
HT	53B,65B	Light beige all vinyl	82	82	82 & 99	98
HU	71B	Light tan all vinyl	60	60	60 & 206	215
HY	53B,65B	Light gold all vinyl	87	87	86 & 87	84
HZ	53B,65B,71B	Medium saddle all vinyl	224	224	217 & 224	214
ZA	71B	Black all vinyl	4 & 12	4	4 & 137	1
ZB	71B	Medium blue all vinyl	15 & 21	15	15 & 146	13
ZR	71B	Medium green all vinyl	49 & 96	49	49 & 50	47
ZT	71B	Light beige all vinyl		82	82 & 183	98
ZU	71B	Light tan all vinyl	60 & 218	60	60 & 295	215
ZZ	71B	Medium saddle all vinyl	224 & 213	224	224 & 293	214

THE SOFT TRIM SECTION INCLUDES ONLY THOSE ITEMS WHICH WERE AVAILABLE FOR SERVICE AT TIME OF PRINTING. ITEMS NOT SHOWN OR INDICATED WITH A BLACK STAR (★) IN THE CATALOG MUST BE IMPROVISED OR PROCURED LOCALLY.

COPYRIGHT © 1986 — FORD MOTOR COMPANY — DEARBORN, MICHIGAN

1973/79 LINCOLN-MERCURY CARS

BODY TYPE	R/L	PART NUMBER LESS SUFFIX	TRIM CODES, COLORS and APPLICABLE PART NUMBER SUFFIXES														Q T Y.
		TRIM CODES ➧		SECOND CHARACTER of TRIM CODE									ALL CODES	ALL CODES	OTHER	OTHER	
				-B or L	-C	-D or N	-G or 6	-R or 5	-T	-M or U	-Y or 8	-Z or 9					
		COLORS ➧		BLUE	ORANGE	RED	AVO-CADO	GREEN	BEIGE	TAN	GOLD	SADDLE	BLACK	WHITE	SEE NOTE	SEE NOTE	
04104	VISOR ASSY.																

LESS ARM and BRACKET

Y - - w/o vanity mirror	R/L	D40Z 6504104		B				★	★	★		★	A				AR
04282	PAD (INSTRUMENT PANEL UPPER)																
Y		D4MY 6504282		A				★	★	★	★	F	★				1
13000	MAT (FRONT FLOOR)																
Y - - heavy duty		D3AZ 5313000											A				1
BODY TYPE	R/L	PART NUMBER LESS SUFFIX	TRIM CODES AND APPLICABLE PART NUMBER SUFFIXES														QTY
23942-3	PANEL ASSY. (FRONT DOOR TRIM)																
		TRIM CODES ➧	BB	BR	BU	DA	DB	DR	DT	DU							
Y(71)	R	★															1
	L	D4MY 5323943	★	★	ABU	★	★	★	★	★							1

BODY TYPE	R/L	PART NUMBER LESS SUFFIX	TRIM CODES, COLORS and APPLICABLE PART NUMBER SUFFIXES														Q T Y.
		TRIM CODES ➧		SECOND CHARACTER of TRIM CODE									ALL CODES	ALL CODES	OTHER	OTHER	
				-B or L	-C	-D or N	-G or 6	-R or 5	-T	-M or U	-Y or 8	-Z or 9					
		COLORS ➧		BLUE	ORANGE	RED	AVO-CADO	GREEN	BEIGE	TAN	GOLD	SADDLE	BLACK	WHITE	SEE NOTE	SEE NOTE	
24140-1	REST (ARM)-Incl. attaching parts																
Notes:	⊕ Incl. one ash receptacle opening % Incl. two ash receptacle openings																
Y(53,71)-front door - - w/o power equipment and ash receptacle openings	R	D7AZ 5324140		B5B				★	★	★	★	B8Z	★				1
	L	D7AZ 5324141		B5B				★	★	★	★	B8Z	★				1
- - w/power equipment and ash receptacle openings	R	D7AZ 5324140		A5B				★	★	★	★	A8Z	★	★			1
	L	D7AZ 5324141		A5B				★	★	★	★	A8Z	★	★			1
Y(53,71)-rear door		★															1
Y(65)-door - - w/o power equipment	⊕R	D7AZ 6024140		A5B				★	★		★	A8Z	★	★			1
- - w/power equipment	%R	D7AZ 6024140		B5B				★	★		★	B8Z	★	★			1
	⊕L	D7AZ 6024141		B5B				★	★		★	B8Z	★	★			1
24346-7	PANEL (CENTER BODY PILLAR INSIDE FINISH)																
Notes:	$ Use tan and paint to match																
Y(53,71) - - lower-	R	★															1
	L	★															1
- - upper	R	★															1
	L	D4AZ 5324357		$				$	$	A	$	$	$				1
24356-7	Refer to group 24346-7																

1975 SOFT TRIM SCHEME CODES

AS LISTED ON CERTIFICATION LABEL

FOR MATERIAL IDENTIFICATION
REFER to SALESMAN'S
COLOR and UPHOLSTERY SELECTION GUIDE

●FW–Full width seat without center arm rest, FWA–Full width seat with center arm rest, S/B–Split seat, B–Bucket seats

A (MERCURY)

NOTE 1 –For replacement of door and quarter trim panels (23942–3, 27406–7 and 31012–3) refer to this code in the 1975 Soft Trim Section. For replacement of cushion covers (62900 and 63804) and back covers (64416 and 66600) contact your Service Representative, who will process in accordance with ICC bulletin No. 7526. All other parts are included in the 1975 Soft Trim Section.

CODE	BODY TYPE	TRIM SCHEME	● TYPE OF SEAT
CA	53H,65H	Black vinyl and black cloth	FW
CB	53H,65H	Medium blue vinyl and medium blue cloth	FW
CG	53H,65H	Green vinyl and green cloth	FW
CU	53H,65H	Tan vinyl and tan cloth	FW
DB	53H,65H,71H	Medium blue all vinyl	FW
DG	53H,65H,71H	Green all vinyl	FW
DU	53H,65H,71H	Tan all vinyl	FW
DZ	71H	Saddle all vinyl	FW
EB	71K	Medium blue all vinyl	FWA
ED	71K	Dark red all vinyl	FWA
EG	71K	Green all vinyl	FWA
EU	71K	Tan all vinyl	FWA
EZ	71K	Saddle all vinyl	FWA
FA,FAA	53L,65L	Black leather and black vinyl	S/B
FB,FBA	53L,65L,71K	Medium blue leather and medium blue vinyl	S/B
FD,FDA	53L,65L,71K	Dark red leather and dark red vinyl	S/B
FG,FGA	53L,65L,71K	Green leather and green vinyl	S/B
FN	53L,65L	White leather and vinyl with red appointments	S/B
FQ	53L,65L	White leather and vinyl with blue appointments	S/B
FU	53L,65L,71K	Tan leather and tan vinyl	S/B
FUA	53L	Tan leather and tan vinyl	S/B
FW	53L,65L	White leather and vinyl with black appointments	S/B
F5	53L,65L	White leather and vinyl with green appointments	S/B
F9	53L,65L	White leather and vinyl with saddle appointments	S/B
GA	53H,65H	Black vinyl and black cloth	FWA
GB	53H,65H	Medium blue vinyl and medium blue cloth	FWA
GB1	53H,65H	(Code GB – see Note 1)	
GG	53H,65H	Green vinyl and green cloth	FWA
GU	53H,65H	Tan vinyl and tan cloth	FWA
GZ	53H	Saddle vinyl and saddle cloth	FWA
HB	53H,65H,71H	Medium blue all vinyl	FWA
HD	71H	Dark red all vinyl	FWA
HG	53H,65H,71H	Green all vinyl	FWA
HU	53H,65H,71H	Tan all vinyl	FWA
HZ	71H	Saddle all vinyl	FWA
JA	53L,65L	Black vinyl and black cloth	FWA
JB	53L,65L	Medium blue vinyl and medium blue cloth	S/B
JD	53L,65L	Red vinyl and red cloth	S/B
JG	53L,65L	Green vinyl and green cloth	S/B
JU	53L,65L	Tan vinyl and tan cloth	S/B

COPYRIGHT © 1986 — FORD MOTOR COMPANY — DEARBORN, MICHIGAN

1975 SOFT TRIM SCHEME CODES

AS LISTED ON CERTIFICATION LABEL

CODE	BODY TYPE	DESCRIPTION OF TRIM SCHEME	● TYPE OF SEAT

FOR MATERIAL IDENTIFICATION
REFER TO SALESMAN'S
COLOR AND UPHOLSTERY SELECTIONS GUIDE

A (MERCURY) — Cont'd

KA	53L,65L	Black leather and black vinyl	S/B
KB	53L,65L	Medium blue leather and medium blue vinyl	S/B
KD	53L,65L	Dark red leather and dark red vinyl	S/B
KG	53L,65L	Green leather and green vinyl	S/B
KN	53L,65L	White leather and white vinyl with red appointments	S/B
KQ	53L,65L	White leather and white vinyl with blue appointments	S/B
KU	53L,65L	Tan leather and tan vinyl	S/B
KW	53L,65L	White leather and white vinyl with black appointments	S/B
K5	53L,65L	White leather and white vinyl with green appointments	S/B
K9	53L,65L	White leather and white vinyl with saddle appointments	S/B
QB,QBA	71K	Blue vinyl and blue cloth	S/B
QD,QDA	71K	Dark red vinyl and dark red cloth	S/B
QG	71K	Green vinyl and green cloth	S/B
QU	71K	Tan vinyl and tan cloth	S/B
RB	53K,65K	Medium blue vinyl and medium blue cloth	FWA
RD	53K,65K	Dark red vinyl and dark red cloth	FWA
RG	53K,65K	Green vinyl and green cloth	FWA
RU	53K,65K	Tan vinyl and tan cloth	FWA
RZ	53K,65K	Saddle vinyl and saddle cloth	FWA
SA	53K,65K	Black all vinyl	S/B
SB	53K,65K	Medium blue all vinyl	S/B
SD	53K,65K	Dark red all vinyl	S/B
SG	53K,65K	Green all vinyl	S/B
SN	53K,65K	White all vinyl with red appointments	S/B
SQ	53K,65K	White all vinyl with blue appointments	S/B
SU	53K,65K	Tan all vinyl	S/B
SW	53K,65K	White all vinyl with black appointments	S/B
SZ	53K,65K	Saddle all vinyl	S/B
S5	53K,65K	White all vinyl with green appointments	S/B
S9	53K,65K	White all vinyl with saddle appointments	S/B
TA,TAA	53K,65K	Black vinyl and black cloth	S/B
TB,TBA	53K,65K	Medium blue vinyl and medium blue cloth	S/B
TD,TDA	53K,65K	Dark red vinyl and dark red cloth	S/B
TG,TGA	53K,65K	Green vinyl and green cloth	S/B
TU,TUA	53K,65K	Tan vinyl and tan cloth	S/B
TZ,TZA	53K,65K	Saddle vinyl and saddle cloth	S/B
VB	71K	Medium blue all vinyl	S/B
VD	71K	Dark red all vinyl	S/B
VG	71K	Green all vinyl	S/B
VU	71K	Tan all vinyl	S/B
VZ	71K	Saddle all vinyl	S/B

THE SOFT TRIM SECTION INCLUDES ONLY THOSE ITEMS WHICH WERE AVAILABLE FOR SERVICE AT TIME OF PRINTING. ITEMS NOT SHOWN OR INDICATED WITH A BLACK STAR (★) IN THE CATALOG MUST BE IMPROVISED OR PROCURED LOCALLY.

1975 VINYL ROOF COVER CODES
AS LISTED ON CERTIFICATION LABEL

BODY TYPE	CODE	GRAIN and TYPE of ROOF	COLOR
A (MERCURY)			
53	CA	Cross–hatch – halo	Black
53	CB	Cross–hatch – halo	Blue
53	CD	Cross–hatch – halo	Red
53	CG	Cross–hatch – halo	Green
53	CT	Cross–hatch – halo	Brown
53	CU	Cross–hatch – halo	Tan
53	CW	Cross–hatch – halo	White
65	BA	Cross–hatch – full	Black
65	BB	Cross–hatch – full	Blue
65	BD	Cross–hatch – full	Red
65	BG	Cross–hatch – full	Green
65	BT	Cross–hatch – full	Brown
65	BU	Cross–hatch – full	Tan
65	BW	Cross–hatch – full	White
71	GG	Odense – full	Green
71	GT	Odense – full	Brown
71	GU	Odense – full	Tan

COPYRIGHT © 1986 — FORD MOTOR COMPANY — DEARBORN, MICHIGAN

1973/79 LINCOLN-MERCURY CARS

BODY TYPE	R/L	PART NUMBER LESS SUFFIX	TRIM CODES, COLORS AND APPLICABLE PART NUMBER SUFFIXES														QTY.
		TRIM CODES ➧		SECOND CHARACTER OF TRIM CODE									ALL CODES	ALL CODES	OTHER	OTHER	
				-B or Q	-C	-D or N	-E or S	-G or 5	-P	-U or 4	-Y or 8	-Z or 9					
		COLORS ➧		BLUE	ORANGE	RED	SILVER BLUE	GREEN	SILVER	TAN	GOLD	SADDLE	BLACK	WHITE	SEE NOTE	SEE NOTE	
04104-5	VISOR ASSY.																
Notes:	⊕ Use with or without non-illuminated vanity mirror, refer to group 17A679 in Chassis section for mirror																
LESS ARM and BRACKET																	
A - - w/non-illuminated vanity mirror- "Before 6/2/75"	⊕	D40Z 6504104		B		★		★		★		★	A	★			AR
"From 6/2/75"	⊕	D5AZ 6004104		D		E		★		★		F	★	★			AR
04282	PAD (INSTRUMENT PANEL UPPER)																
A		D4MY 6504282		A						★		F	★				1
		D5MY 6504282				A		★									1
13000	CARPET (FRONT FLOOR)																
Notes:	● Use saddle																
A - - cut pile		D5AZ 6013000		B		F		★		●		C	★				1
13000	MAT (FRONT FLOOR)																
A - - heavy duty		D3AZ 5313000											A				1
13048	CARPET (AUXILIARY FLOOR)																
A(71)		D5AZ 7113048		★		★		★		★		AG					1
24140-1	REST (ARM)-Incl. attaching parts																
Notes:	⊕ Includes one ash receptacle opening △ Includes two ash receptacle openings																
A(53,71)-front door - - w/o power equipment	R	D7AZ 5324140		B5B		B4D		★		★		B8Z	★				1
	L	D7AZ 5324141		B5B		B4D		★		★		B8Z	★				1
- - w/power equipment	R	D7AZ 5324140		A5B		A4D		★		★		A8Z	★	★			1
	L	D7AZ 5324141		A5B		A4D		★		★		A8Z	★	★			1
A(53,71)-rear door		★															1
A(65)-door - - w/o power equipment	⊕R	D7AZ 6024140		A5B		A4D		★		★		A8Z	★	★			1
	⊕L	D7AZ 6024141		A5B		A4D		★		★		A8Z	★	★			1
- - w/power equipment	△R	D7AZ 6024140		B5B		B4D		★		★		B8Z	★	★			1
	⊕L	D7AZ 6024141		B5B		B4D		★		★		B8Z	★	★			1
24346-7	PANEL (CENTER BODY PILLAR INSIDE FINISH)																
Notes:	$ Use tan and paint to match																
A(53,71) - - lower	R	★															1
	L	★															1
- - upper-	R	★															1
	L	D4AZ 5324357		$		$		$		A		$	$				1
24356-7	Refer to group 24346-7																

BODY TYPE	R/L	PART NUMBER	DESCRIPTION	QTY
45522-3	LINING BOARD (LUGGAGE COMPARTMENT REAR)			
A(53,65)	R	D5MY 6545522-A	Gray	1
	L	D5MY 6545523-A	Gray	1

1975 SOFT TRIM SCHEME CODES

AS LISTED ON CERTIFICATION LABEL

CODE	BODY TYPE	DESCRIPTION OF TRIM SCHEME	● TYPE OF SEAT

FOR MATERIAL IDENTIFICATION
REFER TO SALESMAN'S
COLOR AND UPHOLSTERY SELECTIONS GUIDE

● FW–Full width seat without center arm rest, FWA–Full width seat with center arm rest, S/B–Split bench seat, B–Bucket seats

THE SOFT TRIM SECTION INCLUDES ONLY THOSE ITEMS WHICH WERE AVAILABLE FOR SERVICE AT THE TIME OF PRINTING. ITEMS NOT SHOWN OR INDICATED WITH A BLACK STAR (★) IN THE CATALOG MUST BE IMPROVISED OR PROCURED LOCALLY.

C (Montego)

NOTE 1 –For replacement of Door and Quarter Trim Panels (23942–3 and 31012–3), refer to this code in the 1975 Soft Trim Section. For replacement of Cushion Cover (62900 and 63804) and Back Covers (64416–7) and 66600), contact your Service Representative. All other parts are included in the 1975 Soft Trim Section.

AA	53B,65B	Black vinyl and black cloth	FW
AB	53B,65B	Medium blue vinyl and medium blue cloth	FW
AU	53B,65B	Tan vinyl and tan cloth	FW
BA	53B,65B	Black all vinyl	FW
BB	53B,65B	Medium blue all vinyl	FW
BU	53B,65B	Tan all vinyl	FW
CA	53D,65D	Black vinyl and black cloth	FW
CA1	53D,65D	(Code CA see Note 1)	
CB	53D,65D	Medium blue vinyl and medium blue cloth	FW
CB1	53D,65D	(Code CB see Note 1)	
CG	53D,65D	Green vinyl and green cloth	FW
CU	53D,65D	Tan vinyl and tan cloth	FW
CZ	53D,65D	Saddle vinyl and saddle cloth	FW
CZA	53D	(Code CZ see Note 1)	
CZ1	65D	(Code CZ see Note 1)	
DA	53D,65D	Black all vinyl	FW
DB	53D,65D,71D	Medium blue all vinyl	FW
DG	53D,65D,71D	Green all vinyl	FW
DQ	65D	White all vinyl with blue appointments	FW
DU	53D,65D,71D	Tan all vinyl	FW
DW	65D	White all vinyl with black appointments	FW
DZ	53D,65D,71D	Saddle all vinyl	FW
D5	65D	White all vinyl with green appointments	FW
D9	65D	White all vinyl with saddle appointments	FW
EB,EBA	71K	Medium blue all vinyl	S/B
EG,EGA	71K	Green all vinyl	S/B
EU,EUA	71K	Tan all vinyl	S/B
EZ,EZA	71K	Saddle all vinyl	S/B
GA	53K,65K	Black vinyl and black cloth	FWA
GB	53K,65K	Medium blue vinyl and medium blue cloth	FWA
GG	53K,65K	Green vinyl and green cloth	FWA
GU	53K,65K	Tan vinyl and tan cloth	FWA
GZ	53K,65K	Saddle vinyl and saddle cloth	FWA
HA	53K,65K	Black all vinyl	FWA
HB	53K,65K,71K	Medium blue all vinyl	FWA
HG	53K,65K,71K	Green all vinyl	FWA
HQ	65K	White all vinyl with blue appointments	FWA
HU	53K,65K,71K	Tan all vinyl	FWA
HW	65K	White all vinyl with black appointments	FWA

COPYRIGHT © 1986 — FORD MOTOR COMPANY — DEARBORN, MICHIGAN

1975 SOFT TRIM SCHEME CODES

AS LISTED ON CERTIFICATION LABEL

CODE	BODY TYPE	DESCRIPTION OF TRIM SCHEME	● TYPE OF SEAT

FOR MATERIAL IDENTIFICATION REFER TO SALESMAN'S COLOR AND UPHOLSTERY SELECTIONS GUIDE

● FW–Full width seat without center arm rest, FWA–Full width seat with center arm rest, S/B–Split bench seat, B–Bucket seats

THE SOFT TRIM SECTION INCLUDES ONLY THOSE ITEMS WHICH WERE AVAILABLE FOR SERVICE AT THE TIME OF PRINTING. ITEMS NOT SHOWN OR INDICATED WITH A BLACK STAR (★) IN THE CATALOG MUST BE IMPROVISED OR PROCURED LOCALLY.

C (Montego)

HZ	53K,65K,71K	Saddle all vinyl	FWA
H5	65K	White all vinyl with green appointments	FWA
H9	65K	White all vinyl with saddle appointments	FWA
KB,KBA	53K,65K	Medium blue vinyl and medium blue cloth	S/B
KG,KGA	53K,65K	Green vinyl and green cloth	S/B
KU,KUA	53K,65K	Tan vinyl and tan cloth	S/B
MA	53K,65K	Black vinyl and black cloth	FWA
MB,MBA	53K,65K	Blue vinyl and blue cloth	FWA
MZ,MZA	53K,65K	Saddle vinyl and saddle cloth	FWA
NA,NAA	53B,65B	Black vinyl and black cloth	FW
NB,NBA	53B,65B	Blue vinyl and blue cloth	FW
PB,PBA	71D	Blue vinyl and blue cloth	FW
PG	71D	Green vinyl and green cloth	FW
PU	71D	Tan vinyl and tan cloth	FW

1975 VINYL ROOF COVER CODES

AS LISTED ON CERTIFICATION LABEL

CODE	BODY TYPE	GRAIN and TYPE of ROOF	COLOR
DA	53,65	Levant grain full	Black
DB	53,65	Levant grain full	Blue
DG	53,65	Levant grain full	Green
DT	53,65	Levant grain full	Brown
DU	53,65	Levant grain full	Tan
DW	53,65	Levant grain full	White
JA	65	Odense grain 2 piece	Black
JB	65	Odense grain 2 piece	Blue
JG	65	Odense grain 2 piece	Green
JT	65	Odense grain 2 piece	Brown
JU	65	Odense grain 2 piece	Tan
JW	65	Odense grain 2 piece	White

1973/79 LINCOLN-MERCURY CARS

BODY TYPE	R/L	PART NUMBER LESS SUFFIX		TRIM CODES, COLORS AND APPLICABLE PART NUMBER SUFFIXES													QTY.
		TRIM CODES ▶		SECOND CHARACTER OF TRIM CODE									ALL CODES	ALL CODES	OTHER	OTHER	
				-B or Q	-C	-D or N	-E or S	-G or 5	-P	-U or 4	-Y or 8	-Z or 9					
		COLORS ▶		BLUE	ORANGE	RED	SILVER BLUE	GREEN	SILVER	TAN	GOLD	SADDLE	BLACK	WHITE	SEE NOTE	SEE NOTE	
02344-5		PANEL (COWL TRIM)															
Notes		● Use saddle															
C	R	D70Z 6502344		A9B				★		●		A1Z	★				1
	L	D70Z 6502345		A9B				★		●		A1Z	★				1
04104-5		VISOR ASSY.															
Notes:		⊕ Use with or w/o non-illuminated vanity mirror - refer to group 17A679 in chassis section for mirror															
		LESS ARM and BRACKET															
C - - w/o vanity mirror	⊕	D40Z 6504104		B				★		★		E	A	★			2
04282		PAD (INSTRUMENT PANEL UPPER)															
Notes:		● Use saddle															
C		D40Z 6504282		A				★		●		★	D				1
13000		CARPET (FRONT FLOOR)															
Notes:		● Use saddle															
C - - cut pile-		D50Z 6513000		F				★		●		G	H				1
13000		MAT (FRONT FLOOR)															
C - - heavy duty		D50Z 6513000											A				1
24100-1		PAD (DOOR ARM REST)-Incl. attaching parts															
C(53,71) - - front door		D3DZ 6224100	8 3/4	D				★		V			F	★			2
		D40Z 6524100	8 3/4									B					2
C(53,71) - - rear door		D30Z 5324100	8 3/4	C									★				2
		D40Z 5324100	8 3/4					★		★		B					2
C(65) - - door	R	D3DZ 6224100	11	J				★		★			★	★			1
	L	D3DZ 6224101	11	B						E			A	★			1
	L	D40Z 6524101	11									A					1
	L	D5DZ 6224101	11					A									1
C(65) - - quarter		D3DZ 6224100	8 3/4	D				★		V			F	★			2
		D40Z 6524100	8 3/4									B					2
24144		BASE (ARM REST)-Incl. attaching parts															
Note:		⊕ Chrome															
C(53,71)		D3DZ 6224144		L									K		⊕★		4
		D5DZ 6224144						★		★		★					4
C(65) - - door		D1AZ 5724144													⊕H		2
		D3DZ 6224144		B						D			★	★			2
		D40Z 6524144						★				B					2
24346-7		PANEL (CENTER BODY PILLAR INSIDE FINISH)															
Note:		$ Paint to match															
C(53,71) - - lower	R	D40Z 5324346		D				★		★		★	★				1
	L	D40Z 5324347		D				★		★		★	★				1
- - upper	R	D40Z 5324356													$A		1
	L	D40Z 5324357													$A		1
24356-7		Refer to group 24346-7															

COPYRIGHT © 1986 — FORD MOTOR COMPANY — DEARBORN, MICHIGAN

1973/79 LINCOLN-MERCURY CARS

BODY TYPE	R/L	PART NUMBER	DESCRIPTION	QTY
45026		COVER (SPARE TIRE)		
C(53,65)		D50Z 6545026-A	Gray-cut pile carpet	1
45422-3		COVER (LUGGAGE COMPARTMENT SIDE)		
C(53,65)	R	D4GY 6545422-A	Gray-lining board	1

BODY TYPE	R/L	PART NUMBER LESS SUFFIX	TRIM CODES, COLORS AND APPLICABLE PART NUMBER SUFFIXES														QTY.
		TRIM CODES ▶	SECOND CHARACTER OF TRIM CODE									ALL CODES	ALL CODES	OTHER	OTHER		
			-B or Q	-C	-D or N	-E or S	-G or 5	-P	-U or 4	-Y or 8	-Z or 9						
		COLORS ▶	BLUE	ORANGE	RED	SILVER BLUE	GREEN	SILVER	TAN	GOLD	SADDLE	BLACK	WHITE	SEE NOTE	SEE NOTE		
46668		PANEL (PACKAGE TRAY TRIM)															
Notes:		‡ Use with or without speakers, $ Paint to match															
C(53,65)	‡	D40Z 6546668													$N	1	

BODY TYPE	R/L	PART NUMBER	DESCRIPTION	QTY
60136-7		BACK KIT (FRONT SEAT)		
C(53,65,71)		D3GY 6560136-C	Pad-full width seat-w/center arm rest	1

TYPE	SIZE (Inches) STUD LENGTH	SIZE (Inches) HEAD	C/V ●	PART NUMBER LESS SUFFIX	TRIM CODES, COLORS AND APPLICABLE PART NUMBER SUFFIXES														QTY.
				TRIM CODES ▶		SECOND CHARACTER OF TRIM CODE									ALL CODES	ALL CODES	OTHER	OTHER	
						-B OR Q	-C	-D OR N	-E OR S	-G OR 5	-P	-U OR 4	-Y OR 8	-Z OR 9					
				COLORS ▶	LGTH, (Inches)	BLUE	ORANGE	RED	SILVER BLUE	GREEN	SILVER	TAN	GOLD	SADDLE	BLACK	WHITE	SEE NOTE	SEE NOTE	
63500				BUTTON (FRONT and REAR SEAT CUSHION and BACK)															
Notes:				@ C-Cloth, V-Vinyl															
3	3/8"	5/8"	V	D40Z 6563500		★				★		★		★	M				AR

1975 SOFT TRIM SCHEME CODES

AS LISTED ON CERTIFICATION LABEL

FOR MATERIAL IDENTIFICATION
REFER TO SALESMAN'S
COLOR AND UPHOLSTERY SELECTIONS GUIDE

THE SOFT TRIM SECTION INCLUDES ONLY THOSE ITEMS WHICH WERE AVAILABLE FOR SERVICE AT THE TIME OF PRINTING. ITEMS NOT SHOWN OR INDICATED WITH A BLACK STAR (★) IN THE CATALOG MUST BE IMPROVISED OR PROCURED LOCALLY.

● FW—Full width seat without center arm rest, FWA—Full width seat with center arm rest, S/B—Split bench seat.

Lincoln (D)

CODE	BODY TYPE	DESCRIPTION OF TRIM SCHEME	● TYPE OF SEAT
BA	53,60	Black vinyl and black cloth	FWA
BB,BBA	53,60	Medium blue vinyl and medium blue cloth	FWA
BD,BDA	53,60	Dark red vinyl and dark red cloth	FWA
BG,BGA	53,60	Green vinyl and green cloth	FWA
BJ,BJA	53,60	Taupe vinyl and taupe cloth	FWA
BU,BUA	53,60	Tan vinyl and tan cloth	FWA
BY,BYA	53,60	Gold vinyl and gold cloth	FWA
DA	53,60	Black leather and black vinyl	FWA
DB	53,60	Medium blue leather and medium blue vinyl	FWA
DD	53,60	Dark red leather and red vinyl	FWA
DG	53,60	Green leather and green vinyl	FWA
DJ	53,60	Taupe leather and taupe vinyl	FWA
DN	53,60	White leather and vinyl with red appointments	FWA
DQ	53,60	White leather and vinyl with blue appointments	FWA
DU	53,60	Tan leather and tan vinyl	FWA
DW	53,60	White leather and vinyl with black appointments	FWA
DY	53,60	Gold leather and gold vinyl	FWA
D3	53,60	White leather and vinyl with taupe appointments	FWA
D4	53,60	White leather and vinyl with tan appointments	FWA
D5	53,60	White leather and vinyl with green appointments	FWA
D8	53,60	White leather and vinyl with gold appointments	FWA
EA	53,60	Black leather and black vinyl	S/B
EB	53,60	Medium blue leather and medium blue vinyl	S/B
ED	53,60	Dark red leather and red vinyl	S/B
EG	53,60	Green leather and green vinyl	S/B
EJ	53,60	Taupe leather and taupe vinyl	S/B
EN	53,60	White leather and vinyl with red appointments	S/B
EQ	53,60	White leather and vinyl with blue appointments	S/B
EU	53,60	Tan leather and tan vinyl	S/B
EW	53,60	White leather and vinyl with black appointments	S/B
EY	53,60	Gold leather and gold vinyl	S/B
E3	53,60	White leather and vinyl with taupe appointments	S/B
E4	53,60	White leather and vinyl with tan appointments	S/B
E5	53,60	White leather and vinyl with green appointments	S/B
E8	53,60	White leather and vinyl with gold appointments	S/B
FA	53,60	Black vinyl and black cloth	S/B
FB,FBA	53,60	Medium blue vinyl and medium blue cloth	S/B
FD,FDA	53,60	Dark red vinyl and dark red cloth	S/B
FG,FGA	53,60	Green vinyl and green cloth	S/B
FJ,FJA	53,60	Taupe vinyl and taupe cloth	S/B
FU,FUA	53,60	Tan vinyl and tan cloth	S/B
FY,FYA	53,60	Gold vinyl and gold cloth	S/B

COPYRIGHT © 1986 — FORD MOTOR COMPANY — DEARBORN, MICHIGAN

1975 SOFT TRIM SCHEME CODES

AS LISTED ON CERTIFICATION LABEL

FOR MATERIAL IDENTIFICATION
REFER TO SALESMAN'S
COLOR AND UPHOLSTERY SELECTIONS GUIDE

THE SOFT TRIM SECTION INCLUDES ONLY THOSE ITEMS WHICH WERE AVAILABLE FOR SERVICE AT THE TIME OF PRINTING. ITEMS NOT SHOWN OR INDICATED WITH A BLACK STAR (★) IN THE CATALOG MUST BE IMPROVISED OR PROCURED LOCALLY.

● FW—Full width seat without center arm rest, FWA—Full width seat with center arm rest, S/B—Split bench seat,

Lincoln (D) — Cont'd

CODE	BODY TYPE	DESCRIPTION OF TRIM SCHEME	● TYPE OF SEAT
HA	53,60	Black leather and black vinyl	FWA
HB	53,60	Medium blue leather and medium blue vinyl	FWA
HD	53,60	Dark red leather and red vinyl	FWA
HG	53,60	Green leather and green vinyl	FWA
HJ	53,60	Taupe leather and taupe vinyl	FWA
HU	53,60	Tan leather and tan vinyl	FWA
HY	53,60	Gold leather and gold vinyl	FWA
JA	53,60	Black all cloth	S/B
JB	53,60	Medium blue all cloth	S/B
JD	53,60	Dark red all cloth	S/B
JG	53,60	Green all cloth	S/B
JJ	53,60	Taupe all cloth	S/B
JR	53,60	Jade all cloth	S/B
JU	53,60	Tan all cloth	S/B
JY	53,60	Gold all cloth	S/B
KA	53,60	Black leather and black vinyl	S/B
KB	53,60	Medium blue leather and medium blue vinyl	S/B
KD	53,60	Dark red leather and red vinyl	S/B
KG	53,60	Green leather and green vinyl	S/B
KJ	53,60	Taupe leather and taupe vinyl	S/B
KN	53,60	White leather and vinyl with red appointments	S/B
KQ	53,60	White leather and vinyl with blue appointments	S/B
KR	53,60	Jade leather and jade vinyl	S/B
KU	53,60	Tan leather and tan vinyl	S/B
KW	53,60	White leather and vinyl with black appointments	S/B
KY	53,60	Gold leather and gold vinyl	S/B
K3	53,60	White leather and vinyl cloth with taupe appointments	S/B
K4	53,60	White leather and vinyl with tan appointments	S/B
K5	53,60	White leather and vinyl with green appointments	S/B
K8	53,60	White leather and vinyl with gold appointments	S/B

1975 VINYL ROOF COVER CODES

AS LISTED ON CERTIFICATION LABEL

CODE	BODY TYPE	GRAIN and TYPE of ROOF	COLOR
		D (Lincoln)	
FA	53,60	Normandie grain–full	Black
FB	53,60	Normandie grain–full	Blue
FD	53,60	Normandie grain–full	Red
FG	53,60	Normandie grain–full	Green
FJ	53,60	Normandie grain–full	Taupe
FP	53,60	Normandie grain–full	Silver
FR	53,60	Normandie grain–full	Jade
FS	53,60	Normandie grain–full	Silver blue
FU	53,60	Normandie grain–full	Tan
FW	53,60	Normandie grain–full	White
FY	53,60	Normandie grain–full	Gold
FZ	53,60	Normandie grain–full	Saddle
LA	60	Normandie grain–1/2	Black
LB	60	Normandie grain–1/2	Blue
LD	60	Normandie grain–1/2	Red
LG	60	Normandie grain–1/2	Green
LJ	60	Normandie grain–1/2	Taupe
LP	60	Normandie grain–1/2	Silver
LR	60	Normandie grain–1/2	Jade
LS	60	Normandie grain–1/2	Silver blue
LU	60	Normandie grain–1/2	Tan
LW	60	Normandie grain–1/2	White
LY	60	Normandie grain–1/2	Gold
LZ	60	Normandie grain–1/2	Saddle

COPYRIGHT © 1986 — FORD MOTOR COMPANY — DEARBORN, MICHIGAN

1973/79 LINCOLN-MERCURY CARS

BODY TYPE	R/L	PART NUMBER LESS SUFFIX	TRIM CODES, COLORS AND APPLICABLE PART NUMBER SUFFIXES													QTY.
		TRIM CODES ▶		SECOND CHARACTER OF TRIM CODE									ALL CODES	ALL CODES	OTHER	OTHER	
				-B or Q	-C	-D or N	-E or S	-G or 5	-P	-U or 4	-Y or 8	-Z or 9					
		COLORS ▶		BLUE	ORANGE	RED	SILVER BLUE	GREEN	SILVER	TAN	GOLD	SADDLE	BLACK	WHITE	SEE NOTE	SEE NOTE	
02344-5		PANEL (COWL TRIM)															
Notes:		◇ Taupe, ♦ Jade															
D	R	D5VY 6002344		D		E		★		★	★		C		◇★	♦★	1
	L	D5VY 6002345		D		E		★		★	★		C		◇★	♦★	1
04282		PAD (INSTRUMENT PANEL UPPER)															
Notes:		◇ Taupe, ♦ Jade															
D		D5VY 6004282		★		★		★		★	★		★		◇★	♦J	1
24140-1		REST (ARM)-Incl. attaching parts															
Notes:		◇ Taupe, ♦ Jade															
D(53) - - front door	R	D5VY 5324140		★		F		★		★	★		C	★	◇★	♦★	1
- - rear door	R	D5VY 5327540		★		F		★		★	★		C	★	◇★	♦A	1
	L	D5VY 5327541		★		F		★		★	★		C	★	◇★	♦★	1
D(60) - - door	R	D5VY 6024140		★		F		★		★	★		★	★	◇★	♦★	1
- - quarter	R	D5VY 6031600		★		F		★		★	★		C	★	◇★	♦★	1
	L	D5VY 6031601		★		F		★		★	★		C	★	◇★	♦★	1
24356-7		PANEL (CENTER BODY PILLAR INSIDE FINISH)															
NOtes:		$ Paint to match															
D(53)- - upper	R	D5VY 5324356														$★	1
	L	D5VY 5324357														$A	1
27540-1		Refer to group 24140-1															
281A74-5		COVER (QUARTER LATCH PILLAR FLANGE)-Also refer to group 02600															
Notes:		◇ Taupe, ♦ Jade															
D(60)	R	D5VY 60281A74		★		G		★		★	★		E		◇★	♦★	1
	L	D5VY 60281A75		★		G		★		★	★		E		◇★	♦★	1
	R	D6VY 60281A74												A			1
	L	D6VY 60281A75												A			1
31012-3		PANEL ASSY. (QUARTER TRIM)															
Notes:		◇ Taupe, ♦ Jade															
D(53)	R	D5VY 5331012		★		A		★		★	★		H		◇★	♦★	1
	L	D5VY 5331013		★		★		★		★	★		★		◇★	♦★	1
	R	D6VY 5331012												A			1
	L	D6VY 5331013												A			1
D(60)	R	D5VY 6031012		★		★		★		★	★		D	★	◇★	♦★	1
	L	D5VY 6031013		★		★		★		★	★		D	★	◇★	♦★	2
31600-1		Refer to group 24140-1															

BODY TYPE	R/L	PART NUMBER	DESCRIPTION	QTY
46668		PANEL (PACKAGE TRAY TRIM)		
D(53)		D5VY 5346668-D	Paint to match	1
60032		BACK KIT (REAR SEAT)		
D(Town Car and Town Coupe)		D5VY 5360032-B		1

1975 TRIM SCHEME CODES

AS LISTED ON CERTIFICATION LABEL

CODE	BODY TYPE	DESCRIPTION OF TRIM SCHEME	● TYPE OF SEAT

FOR MATERIAL IDENTIFICATION
REFER TO SALESMAN'S
COLOR AND UPHOLSTERY SELECTIONS GUIDE
THE SOFT TRIM SECTION INCLUDES ONLY THOSE ITEMS WHICH WERE AVAILABLE FOR SERVICE AT THE TIME OF PRINTING. ITEMS NOT SHOWN OR INDICATED WITH A BLACK STAR (★) IN THE CATALOG MUST BE IMPROVISED OR PROCURED LOCALLY.

● S/B–Split bench seat, B–Bucket seats

F (COUGAR)

Note 1 –For replacement of Door and Quarter trim panels (23942–3 and 31012–3), refer to this code in the 1975 Soft Trim Section. For replacement of Cushion Covers (62900–1 and 63804) and Back Covers (64416–7 and 66600), contact your Service Representative. All other parts are included in the 1975 Soft Trim Section.

AA,AAA	65	Black all vinyl	B
AD,ADA	65	Dark red all vinyl	B
AG	65	Green all vinyl	B
AN	65	White all vinyl with red appointments	B
AQ	65	White all vinyl with blue appointments	B
AS	65	Silver blue and medium blue all vinyl	B
AU,AUA	65	Tan all vinyl	B
AW	65	White all vinyl with black appointments	B
AZ	65	Saddle and tan all vinyl	B
A5	65	White all vinyl with green appointments	B
A9	65	White all vinyl with saddle appointments	B
BBA	65	Blue all vinyl	S/B
BDA	65	Red all vinyl	S/B
BGA	65	Green all vinyl	S/B
BUA	65	Saddle and tan all vinyl	S/B
CBA	65	Blue vinyl and blue cloth	S/B
CDA	65	Red vinyl and red cloth	S/B
CGA	65	Green vinyl and green cloth	S/B
CUA	65	Saddle vinyl and tan cloth	S/B
DA	65	Black leather and black vinyl	S/B
DB,DBA	65	Medium blue leather and medium blue vinyl	S/B
DD,DDA	65	Dark red leather and red vinyl	S/B
DG	65	Green leather and green vinyl	S/B
DN	65	White leather and vinyl with red appointments	S/B
DQ	65	White leather and vinyl with blue appointments	S/B
DS	65	Silver blue leather and medium blue vinyl	S/B
DU	65	Tan leather and tan vinyl	S/B
DW,DWA	65	White leather and vinyl with black appointments	S/B
DZ	65	Saddle vinyl and tan leather	S/B
D5	65	White leather and vinyl with green appointments	S/B
D9	65	White leather and vinyl with saddle appointments	S/B
EB	65	Medium blue vinyl and medium blue cloth	S/B
ED	65	Dark red vinyl and dark red cloth	S/B
EG	65	Green vinyl and green cloth	S/B
ES	65	Medium blue vinyl and silver blue cloth	S/B
EU,EUA	65	Tan vinyl and tan cloth	S/B
EU1	65	(Code EU – see Note 1)	
EZ,EZA	65	Saddle vinyl and tan cloth	S/B
EZ1	65	(Code EZ – see Note 1)	
HA	65	Black all vinyl	S/B
HB	65	Medium blue all vinyl	S/B
HD	65	Dark red all vinyl	S/B
HG	65	Green all vinyl	S/B

COPYRIGHT © 1986 — FORD MOTOR COMPANY — DEARBORN, MICHIGAN

1975 TRIM SCHEME CODES

AS LISTED ON CERTIFICATION LABEL

CODE	BODY TYPE	DESCRIPTION OF TRIM SCHEME	● TYPE OF SEAT

FOR MATERIAL IDENTIFICATION
REFER TO SALESMAN'S
COLOR AND UPHOLSTERY SELECTIONS GUIDE
THE SOFT TRIM SECTION INCLUDES ONLY THOSE ITEMS WHICH WERE AVAILABLE FOR SERVICE AT THE TIME OF PRINTING. ITEMS NOT SHOWN OR INDICATED WITH A BLACK STAR (★) IN THE CATALOG MUST BE IMPROVISED OR PROCURED LOCALLY.

● S/B–Split bench seat, B–Bucket seats

F (COUGAR) — Cont'd

HN	65	White all vinyl with red appointments	S/B
HQ	65	White all vinyl with Blue appointments	S/B
HS	65	Silver blue and medium blue all vinyl	S/B
HU	65	Tan all vinyl	S/B
HW	65	White all vinyl with black appointments	S/B
HZ	65	Saddle and tan all vinyl	S/B
H5	65	White all vinyl with green appointments	S/B
H9	65	White all vinyl with saddle appointments	S/B
JZ	65	Saddle and tan all vinyl	B

1975 VINYL ROOF COVER CODES

AS LISTED ON CERTIFICATION LABEL

CODE	BODY TYPE	GRAIN and TYPE of ROOF	COLOR

F (COUGAR)

GA	65	Odense – full	Black
GD	65	Odense – full	Red
GG	65	Odense – full	Green
GP	65	Odense – full	Silver
GS	65	Odense – full	Silver blue
GT	65	Odense – full	Brown
GU	65	Odense – full	Tan
GW	65	Odense – full	White
HA	65	Odense – 3/4	Black
HD	65	Odense – 3/4	Red
HG	65	Odense – 3/4	Green
HP	65	Odense – 3/4	Silver
HS	65	Odense – 3/4	Silver blue
HT	65	Odense – 3/4	Brown
HU	65	Odense – 3/4	Tan
HW	65	Odense – 3/4	White
LY	65	Normandie – 1/2	Gold

BODY TYPE	R/L	PART NUMBER LESS SUFFIX	TRIM CODES, COLORS AND APPLICABLE PART NUMBER SUFFIXES														Q T Y.
		TRIM CODES ▶		SECOND CHARACTER OF TRIM CODE									ALL CODES	ALL CODES	OTHER	OTHER	
				-B or Q	-C	-D or N	-E or S	-G or 5	-P	-U or 4	-Y or 8	-Z or 9					
		COLORS ▶		BLUE	ORANGE	RED	SILVER BLUE	GREEN	SILVER	TAN	GOLD	SADDLE	BLACK	WHITE	SEE NOTE	SEE NOTE	
02344-5	PANEL (COWL TRIM)																
Notes:	● Use saddle																
F	R	D70Z 6502344		A9B		A2D		★		●		A1Z	★				1
	L	D70Z 6502345		A9B		A2D		★		●		A1Z	★				1
04104-5	VISOR ASSY.																
Notes:	$ Matching sun visor (less vanity mirror) for R.H. sun visor which includes illuminated vanity mirror, ⊕ Use with or w/o non-illuminated vanity mirror – refer to group 17A679 in Chassis Section for mirror																

LESS ARM, BRACKET and MIRROR

F – – w/non-illuminated vanity mirror	⊕	D40Z 6504104		B		★		★		★		E	A	★			2
04282	PAD (INSTRUMENT PANEL UPPER)																
Notes:	● Use saddle, ▲ Use blue																
F		D40Y 6504282				★											1
		D40Z 6504282		A			▲	★		●		★	D				1

BODY TYPE	R/L	PART NUMBER LESS SUFFIX	TRIM CODES, COLORS AND APPLICABLE PART NUMBER SUFFIXES														Q T Y.
		TRIM CODES ▶		SECOND CHARACTER OF TRIM CODE									ALL CODES	ALL CODES	OTHER	OTHER	
			LGTH.	-B or Q	-C	-D or N	-E or S	-G or 5	-P	-U or 4	-Y or 8	-Z or 9					
		COLORS ▶	(Inches)	BLUE	ORANGE	RED	SILVER BLUE	GREEN	SILVER	TAN	GOLD	SADDLE	BLACK	WHITE	SEE NOTE	SEE NOTE	
24100-1	PAD (DOOR ARM REST) – Incl. attaching parts																
F – – door	R	D3DZ 6224100	11	J			★	★		★			★	★			1
	L	D3DZ 6224101	11	B		★	★	★		E		A	★	★			1
	R	D4WZ 6524100	11			A											1
	L	D4WZ 6524101	11			A											1
F – – quarter	R/L	D3DZ 6224100	8 3/4	D			★	★		V			F	★			2
	R/L	D4WY 6531718	8 3/4			K											2
	R/L	D40Z 6524100	8 3/4									B					2
24144	BASE (ARM REST) – Incl. attaching parts																
Notes:	⊕ Chrome																
F – – door	R/L	D1AZ 5724144													⊕H		2
31718	Refer to group 24100-1																

BODY TYPE	R/L	PART NUMBER	DESCRIPTION	QTY
45026	COVER (SPARE TIRE)			
F		D50Z 6545026-A	Gray-cut pile carpet	1
45422-3	COVER (LUGGAGE COMPARTMENT SIDE)			
F	R	D4GY 6545422-A	Gray-lining board	1

BODY TYPE	R/L	PART NUMBER LESS SUFFIX	TRIM CODES, COLORS AND APPLICABLE PART NUMBER SUFFIXES														Q T Y.
		TRIM CODES ▶		SECOND CHARACTER OF TRIM CODE									ALL CODES	ALL CODES	OTHER	OTHER	
				-B or Q	-C	-D or N	-E or S	-G or 5	-P	-U or 4	-Y or 8	-Z or 9					
		COLORS ▶		BLUE	ORANGE	RED	SILVER BLUE	GREEN	SILVER	TAN	GOLD	SADDLE	BLACK	WHITE	SEE NOTE	SEE NOTE	
46668	PANEL (PACKAGE TRAY TRIM)																
Notes:	‡ Use with or without speakers, $ Paint to match																
F	‡	D40Z 6546668														$N	1
519A02	HEADLINING (ROOF SLIDING PANEL)																
F – – w/sliding roof-glass		D5WZ 65519A02		★		F		★		★		★	★	★			1

COPYRIGHT © 1986— FORD MOTOR COMPANY —DEARBORN, MICHIGAN

1975 TRIM SCHEME CODES

AS LISTED ON CERTIFICATION LABEL

CODE	BODY TYPE	DESCRIPTION OF TRIM SCHEME	● TYPE OF SEAT

FOR MATERIAL IDENTIFICATION REFER TO SALESMAN'S COLOR AND UPHOLSTERY SELECTIONS GUIDE

THE SOFT TRIM SECTION INCLUDES ONLY THOSE ITEMS WHICH WERE AVAILABLE FOR SERVICE AT THE TIME OF PRINTING. ITEMS NOT SHOWN OR INDICATED WITH A BLACK STAR (★) IN THE CATALOG MUST BE IMPROVISED OR PROCURED LOCALLY.

● FW–Full width seat without center arm rest, FWA–Full width seat with center arm rest, S/B–Split bench seat, B–Bucke seats

G (Monarch)

Note 1– For replacement of Door and Quarter Trim Panels (23942–3 and 31012–3), refer to this code in the 1975 Soft Trim Section. For replacement of Cushion Covers (62900 and 63804) and Back Covers (64416–7 and 66600), contact your **Service Representative. Who will process in accordance with General ICC Bulletin No. 7526. All other parts are included in the 1975 Soft Trim Section.**

AA,AAA	54H,66H	Black all vinyl	B
AD,ADA	54H,66H	Dark red all vinyl	B
AE,AEA	54H,66H	Silver blue all vinyl	B
AG,AGA	54H,66H	Medium green all vinyl	B
AU,AUA	54H,66H	Tan all vinyl	B
BD	54K,66K	Dark red vinyl and dark red cloth	FWA
BE,BEA	54K,66K	Silver blue vinyl and silver blue cloth	FWA
BG	54K,66K	Medium green vinyl and medium green cloth	FWA
BU	54K,66K	Tan vinyl and tan cloth	FWA
CA	54,66	Black all vinyl	B
CD	54,66	Dark red all vinyl	B
CE	54,66	Silver blue all vinyl	B
CG	54,66	Medium green all vinyl	B
CU	54,66	Tan all vinyl	B
DD	54K,66K	Dark red vinyl and dark red cloth	B
DE,DEA	54K,66K	Silver blue vinyl and silver blue cloth	B
DG	54K,66K	Medium green vinyl and medium green cloth	B
DU	54K,66K	Tan vinyl and tan cloth	B
EA,EAA	54H,66H	Black all vinyl	FWA
EA1	54H,66H	(Code EA–see Monarch Note 1)	
ED,EDA	54H,66H	Dark red all vinyl	FWA
ED1	54H,66H	(Code ED–see Monarch Note 1)	
EE,EEA	54H,66H	Silver blue all vinyl	FWA
EE1	54H,66H	(Code EE–see Monarch Note 1)	
EG,EGA	54H,66H	Medium green all vinyl	FWA
EU,EUA	54H,66H	Tan all vinyl	FWA
EU1	54H,66H	(Code EU–see Monarch Note 1)	
FD	54K,66K	Dark red all leather	B
FE	54K,66K	Silver blue all leather	B
FU	54K,66K	Tan all leather	B
F9	54K	White all leather with tobacco appointments	B
GA	54,66	Black all vinyl	FWA
GD	54,66	Dark red all vinyl	FWA
GE	54,66	Silver blue all vinyl	FWA
GG	54,66	Medium green all vinyl	FWA
GU	54,66	Tan all vinyl	FWA

COPYRIGHT © 1986 — FORD MOTOR COMPANY — DEARBORN, MICHIGAN

1975 TRIM SCHEME CODES

AS LISTED ON CERTIFICATION LABEL

CODE	BODY TYPE	DESCRIPTION OF TRIM SCHEME	● TYPE OF SEAT

FOR MATERIAL IDENTIFICATION REFER TO SALESMAN'S COLOR AND UPHOLSTERY SELECTIONS GUIDE

THE SOFT TRIM SECTION INCLUDES ONLY THOSE ITEMS WHICH WERE AVAILABLE FOR SERVICE AT THE TIME OF PRINTING. ITEMS NOT SHOWN OR INDICATED WITH A BLACK STAR (★) IN THE CATALOG MUST BE IMPROVISED OR PROCURED LOCALLY.

● FW–Full width seat without center arm rest, FWA–Full width seat with center rest, S/B–Split bench seat, B–Bucke seats

G (Monarch) — Cont'd

Note 1– For replacement of Door and Quarter Trim Panels (23942–3 and 31012–3), refer to this code in the 1975 Soft Trim Section. For replacement of Cushion Covers (62900 and 63804) and Back Covers (64416–7 and 66600), contact your **Service representative. Who will process in accordance with General ICC Bulletin No. 7526. All other parts are included in the 1977 Soft Trim Section.**

HD,HDA	54H,66H	Cranberry/red vinyl and cranberry/red cloth	FWA
HD1	54H,66H	(Code HD–see Monarch Note 1)	
HE,HEA	54H,66H	Silver blue vinyl and silver blue cloth	FWA
HE1	54H,66H	(Code HE–see Monarch Note 1)	
HG,HGA	54H,66H	Green vinyl and green cloth	FWA
HU,HUA	54H,66H	Tan vinyl and tan cloth	FWA
HU1	54H,66H	(Code HU–see Monarch Note 1)	
JD,JDA	54H,66H	Dark red all vinyl	FW
JE	54H,66H	Silver blue all vinyl	FW
JU,JUA	54H,66H	Tan all vinyl	FW
LD	54K,66K	Dark red all leather	FWA
LE	54K,66K	Silver blue all leather	FWA
LU	54K,66K	Tan all leather	FWA

1975 VINYL ROOF COVER CODES

AS LISTED ON CERTIFICATION LABEL

CODE	BODY TYPE	GRAIN and TYPE of ROOF	COLOR
G (Monarch)			
GA	54,66	Odense grain–full	Black
GD	54,66	Odense grain–full	Red
GG	54,66	Odense grain–full	Green
GP	54,66	Odense grain–full	Silver
GS	54,66	Odense grain–full	Silver blue
GT	54,66	Odense grain–full	Brown
GU	54,66	Odense grain–full	Tan
GW	54,66	Odense grain–full	White
FZ	54K	Normandie grain–full	Tobacco

COPYRIGHT © 1986 — FORD MOTOR COMPANY — DEARBORN, MICHIGAN

1973/79 LINCOLN-MERCURY CARS

BODY TYPE	R/L	PART NUMBER LESS SUFFIX	TRIM CODES, COLORS AND APPLICABLE PART NUMBER SUFFIXES														QTY.
		TRIM CODES ▶		SECOND CHARACTER OF TRIM CODE									ALL CODES	ALL CODES	OTHER	OTHER	
				-B or Q	-C	-D or N	-E or S	-G or 5	-P	-U or 4	-Y or 8	-Z or 9					
		COLORS ▶		BLUE	ORANGE	RED	SILVER BLUE	GREEN	SILVER	TAN	GOLD	SADDLE	BLACK	WHITE	SEE NOTE	SEE NOTE	
02344-5		PANEL (COWL TRIM)															
G	R	D5DZ 6602344				D	★	★		★			★				1
	L	D5DZ 6602345				D	★	★		★			★				1
04104-5		VISOR ASSY.															
Notes:		⊕ Use with or without non-illuminated vanity mirror-refer to group 17A679 in Chassis Section for mirror ▲ Tobacco															
		LESS ARM and BRACKET															
G - - w/non- illuminated vanity mirror ⊕	R/L	D5DZ 6604104				R	★	★		P			★				2
		INCLUDES ARM and BRACKET															
G - - w/illuminated vanity mirror	R	D5DZ 6604104				H	★	★		★			★		▲★		1
	L	D5DZ 6604105				★	★	★		★			★		▲★		1
04282		PAD (INSTRUMENT PANEL UPPER)															
Notes:		▲ Tobacco															
G		D6DZ 6604282				A3D	★	★		A5U			★		▲★		1
24140-1		REST (ARM)-Incl. attaching parts															
Notes:		† Use with trim codes beginning with A,E,H or J															
G(54H) - - front door	†R	D5FZ 6224140				★	★			H			F				1
	†L	D5FZ 6224141				★	C			F			D				1
G(54K) - - front door	L	D6DZ 6224141				★	★	★		★			★	A6W			1
G(54) - - rear door		D5DZ 5427540				D	★	★		★			★	★			2
G(66) - - door	R	D5FZ 6224140	16			★	★			H			F				1
	L	D5FZ 6224141	16			★	C			F			D				1

BODY TYPE	R/L	PART NUMBER LESS SUFFIX	TRIM CODES AND APPLICABLE PART NUMBER SUFFIXES														QTY
27406-7		PANEL ASSY. (REAR DOOR TRIM)															
		TRIM CODES ▶	AA, AAA	AD, ADA	AE, AEA	AG, AGA	AU, AUA	BD	BE	BEA	BG	BU					
G(54)	L	D5DZ 5427407	★	AAD	★	★	★	★	★	★	★	★					1
		TRIM CODES ▶	EA, EAA	ED, EDA	EE, EEA	EG, EGA	EU, EUA	FD	FE	FU	F9						
G(54)	L	D5DZ 5427407	★	AAD	★	★	★	★	★	★	★						1
		TRIM CODES ▶	GA	GD	GE	GG	GU	HD, HDA	HE, HEA	HG, HGA	HU, HUA						
G(54)	L	D5DZ 5427407	★	★	★	★	★	AAD	★	★	★						1
		TRIM CODES ▶	JD, JDA	JE	JU, JUA	LD	LE	LU									
G(54)	L	D5DZ 5427407	AJD	★	★	★	★	★									1
27540-1		Refer to group 24140-1															

BODY TYPE	R/L	PART NUMBER	DESCRIPTION	QTY
45422-3	COVER (LUGGAGE COMPARTMENT SIDE)			
G - - w/shelf mounted spare tire	R	D5DZ 6645422-A	Gray-lining board	1
	L	D5DZ 6645423-A	Gray-lining board	1
45455	COVER (LUGGAGE COMPARTMENT FLOOR)			
G - - w/quarter wheelhouse mounted spare tire-		D8DZ 6645494-A0P	Gray-burloom	1
45494	Refer to group 45455			
45522-3	LINING BOARD (LUGGAGE COMPARTMENT REAR)			
G	R	D5DZ 6645522-A	Gray	1
46668	PANEL (PACKAGE TRAY TRIM)			
Notes	‡ Use with or without speakers			
G(54)	‡	D5DZ 5446668-E	Paint to match	1
G(66)	‡	D5DZ 6646668-B	Paint to match	1

COPYRIGHT © 1986— FORD MOTOR COMPANY —DEARBORN, MICHIGAN

1975 TRIM SCHEME CODES

AS LISTED ON CERTIFICATION LABEL

FOR MATERIAL IDENTIFICATION
REFER TO SALESMAN'S
COLOR AND UPHOLSTERY SELECTIONS GUIDE

THE SOFT TRIM SECTION INCLUDES ONLY THOSE ITEMS WHICH WERE AVAILABLE FOR SERVICE AT THE TIME OF PRINTING. ITEMS NOT SHOWN OR INDICATED WITH A BLACK STAR (★) IN THE CATALOG MUST BE IMPROVISED OR PROCURED LOCALLY.

● S/B—Split bench seat

K (Mark IV)

CODE	BODY TYPE	DESCRIPTION OF TRIM SCHEME	● TYPE OF SEAT
AD	65	Dark red all cloth	S/B
BA	65	Black leather and black vinyl	S/B
BB	65	Medium blue leather and medium blue vinyl	S/B
BD	65	Dark red leather and red vinyl	S/B
BG	65	Green leather and green vinyl	S/B
BK	65	Aqua leather and aqua vinyl	S/B
BN	65	White leather and vinyl with red appointments	S/B
BP	65	Silver leather and silver vinyl	S/B
BQ	65	White leather and vinyl with blue appointments	S/B
BU	65	Tan leather and tan vinyl	S/B
BW	65	White leather and vinyl with black appointments	S/B
BZ	65	Saddle leather and saddle vinyl	S/B
B5	65	White leather and vinyl with green appointments	S/B
B9	65	White leather and vinyl with saddle appointments	S/B
DN	65	White and red leather and vinyl with red appointments	S/B
DU	65	Tan leather and tan vinyl	S/B
DZ	65	White and saddle leather and vinyl with saddle appointments	S/B
EA,EAB	65	Black vinyl and black cloth	S/B
EB,EBB	65	Medium blue vinyl and medium blue cloth	S/B
ED,EDB	65	Dark red vinyl and dark red cloth	S/B
EG,EGB	65	Green vinyl and green cloth	S/B
EU,EUB	65	Tan vinyl and tan cloth	S/B
FK	65	Aqua vinyl and aqua cloth	S/B
GB	65	Blue all cloth	S/B
GD	65	Red all cloth	S/B
GG	65	Green all cloth	S/B
GU	65	Tan all cloth	S/B

COPYRIGHT © 1986 — FORD MOTOR COMPANY — DEARBORN, MICHIGAN

1975 VINYL ROOF COVER CODES

AS LISTED ON CERTIFICATION LABEL

CODE	BODY TYPE	GRAIN and TYPE of ROOF	COLOR
K (Mark IV)			
FA	65	Normandie grain—full	Black
FB	65	Normandie grain—full	Blue
FD	65	Normandie grain—full	Red
FG	65	Normandie grain—full	Green
FL	65	Normandie grain—full	Aqua
FM	65	Normandie grain—full	Gold flare
FP	65	Normandie grain—full	Silver
FS	65	Normandie grain—full	Silver blue
FU	65	Normandie grain—full	Tan
FW	65	Normandie grain—full	White
FY	65	Normandie grain—full	Gold
FZ	65	Normandie grain—full	Saddle
LA	65	Normandie grain—1/2	Black
LB	65	Normandie grain—1/2	Blue
LD	65	Normandie grain—1/2	Red
LG	65	Normandie grain—1/2	Green
LL	65	Normandie grain—1/2	Aqua
LM	65	Normandie grain—1/2	Gold flare
LP	65	Normandie grain—1/2	Silver
LS	65	Normandie grain—1/2	Silver blue
LU	65	Normandie grain—1/2	Tan
LW	65	Normandie grain—1/2	White
LY	65	Normandie grain—1/2	Gold
LZ	65	Normandie grain—1/2	Saddle

BODY TYPE	R/L	PART NUMBER LESS SUFFIX	TRIM CODES, COLORS AND APPLICABLE PART NUMBER SUFFIXES													Q T Y.
		TRIM CODES ➧	SECOND CHARACTER OF TRIM CODE									ALL CODES	ALL CODES	OTHER	OTHER	
			-B or Q	-C	-D or N	-E or S	-G or 5	-P	-U or 4	-Y or 8	-Z or 9					
		COLORS ➧	BLUE	ORANGE	RED	SILVER BLUE	GREEN	SILVER	TAN	GOLD	SADDLE	BLACK	WHITE	SEE NOTE	SEE NOTE	
04104	VISOR ASSY.															
Notes:	⊕ Use with or without non-illuminated vanity mirror – refer to group 17A679 in Chassis Section for mirror ϕ Aqua															

LESS ARM and BRACKET

K – – vinyl-w/o	⊕	D40Z 6504104		B		★			★	★		★	A		ϕ★		2
vanity mirror–	⊕	D50Z 6504104						★									2
"Before 6/2/75"																	
"From 6/2/75"	⊕	D5AZ 6004104		D		E		★		★		F	★	★	ϕ★		2
24100-1	PAD (DOOR ARM REST)-Incl. attaching parts																
Notes:	ϕ Aqua,																
K – – door	R	D5SZ 6524100		★		D		★	★	★		★	★	C	ϕ★		1
	L	D5SZ 6524101		★		D		★	★	★		★	★	★	ϕ★		1
K – – quarter	R	D5SZ 6531718		★		D		★	★	★		★	A	★	ϕ★		1
	L	D5SZ 6531719		★		D		★	★	★		★	A	★	ϕ★		1
24144-5	BASE (ARM REST)-Incl. attaching parts																
Notes:	ϕ Aqua, % Use with all except trim codes beginning with G																
K	%R	D5SZ 6524144		★		E		★	★	★		★	C	★	ϕ★		1
	%L	D5SZ 6524145		F		E		★	★	★		★	C	★	ϕ★		1
31718-9	Refer to group 24100-1																

COPYRIGHT © 1986— FORD MOTOR COMPANY —DEARBORN, MICHIGAN

1975 TRIM SCHEME CODES

AS LISTED ON CERTIFICATION LABEL

CODE	BODY TYPE	DESCRIPTION OF TRIM SCHEME	● TYPE OF SEAT

**FOR MATERIAL IDENTIFICATION
REFER TO SALESMAN'S
COLOR AND UPHOLSTERY SELECTIONS GUIDE**

● Bucket seat

L (BOBCAT)

NOTE 1– For replacement of Door Trim Panels (23942–3) and Quarter Trim Panels (31012–3), refer to this code in the 1975 Soft Trim Section. For replacement of Cushion Covers (62900 and 63804) and Front Seat Back Covers **(64416–7) and Rear Seat Back Assy. (672A18) contact your Service Representative, who will process in accordance with General ICC bulletin No. 7526. All other parts are included in the 1975 Soft Trim Section.**

AA	64H,73H	Black all vinyl	B
AB	64H,73H	Medium blue all vinyl	B
AG	64H,73H	Light green all vinyl	B
AU	64H,73H	Tan all vinyl	B
BA,BC	64H,73H	Black all vinyl with orange vinyl insert	B
CB	64H,73H	Blue vinyl and blue cloth	B
CG	64H,73H	Green vinyl and green cloth	B
CG1	64H,73H	(Code CG – see Note 1)	
CU	64H,73H	Tan vinyl and tan cloth	B
DA	62B,64B,73B	Black vinyl and black cloth	B
DB	62B,64B,73B	Blue vinyl and blue cloth	B
DG	62B,64B,73B	Green vinyl and green cloth	B
DU	62B,64B,73B	Tan vinyl and tan cloth	B
EA	62B,64B,73B	Black all vinyl	B
EB	62B,64B,73B	Blue all vinyl	B
EG	62B,64B,73B	Green all vinyl	B
EU	62B,64B,73B	Tan all vinyl	B

THE SOFT TRIM SECTION INCLUDES ONLY THOSE ITEMS WHICH WERE AVAILABLE FOR SERVICE AT THE TIME OF PRINTING. ITEMS NOT SHOWN OR INDICATED WITH A BLACK STAR (★) IN THE CATALOG MUST BE IMPROVISED OR PROCURED LOCALLY.

COPYRIGHT © 1986 — FORD MOTOR COMPANY — DEARBORN, MICHIGAN

1975 VINYL ROOF COVER CODES

AS LISTED ON CERTIFICATION LABEL

CODE	BODY TYPE	GRAIN and TYPE of ROOF	COLOR
L (BOBCAT)			
DA	62,64	Levant – full	Black
DB	62,64	Levant – full	Blue
DC	62,64	Levant – full	Orange
DG	62,64	Levant – full	Light green
DW	62,64	Levant – full	White
GT	62,64	Odense – full	Brown

1973/79 LINCOLN-MERCURY CARS

BODY TYPE	R/L	PART NUMBER LESS SUFFIX	TRIM CODES, COLORS AND APPLICABLE PART NUMBER SUFFIXES													QTY.
		TRIM CODES ➧		SECOND CHARACTER OF TRIM CODE								ALL CODES	ALL CODES	OTHER	OTHER	
				-B or Q	-C	-D or N	-E or S	-G or 5	-P	-U or 4	-Y or 8	-Z or 9					
		COLORS ➧		BLUE	ORANGE	RED	SILVER BLUE	GREEN	SILVER	TAN	GOLD	SADDLE	BLACK	WHITE	SEE NOTE	SEE NOTE	
02344-5		PANEL (COWL TRIM)															
L	R	D4FZ 6202344		★				★		B			★				1
	L	D4FZ 6202345		★				★		B			★				1
04104		VISOR ASSY. - Less arm, bracket and mirror															
Note:		⊕ Use with or without vanity mirror - refer to group 17A679 in Chassis Section for mirror															
L	⊕	D4FZ 6204104			★					E							2
	⊕	D6FZ 6204104		B				★					A				2
04282		PAD (INSTRUMENT PANEL UPPER)															
L		D3FZ 6204282		★						F			★				1
13000		CARPET (FRONT FLOOR)															
L - - cut pile		D5FZ 6413000		B				D		A			C				1
13000		MAT (FRONT FLOOR)															
L(62)		D5FZ 6213000											A				1
13046		CARPET (REAR FLOOR) - Serviced only in assy. - group 13000															
13048		CARPET (AUXILIARY FLOOR)															
L(73)		D5FZ 7313048		C				★		★			D				1
24140-1		REST (ARM) - Incl. attaching parts															
L	R	D5FZ 6224140		G	A			B		H			F				1
	L	D5FZ 6224141		E	A			B		F			D				1
312A28-9		PLATE (QUARTER TRIM PANEL ACCESS HOLE COVER)															
L(64)	R	D3FZ 64312A28		★	★			★		★			D				1
	L	D3FZ 64312A29		★	★			★		★			D				1
31290		WINDLACE (QUARTER PILLAR)															
L(73)	R/L	D2FZ 7331290		★	★			★		★			D				2

BODY TYPE	R/L	PART NUMBER	DESCRIPTION	QTY
40374-5		PANEL (BACK TRIM LOWER)		
L(64)	R	D7FZ 6440374-B4T	Paint to match	1
	L	D7FZ 6440375-A4T	Paint to match	1
45026		COVER (SPARE TIRE) - Serviced only in assy. - group 45455		
45455		COVER (LUGGAGE COMPARTMENT FLOOR)		
L(62)		D4FZ 6245455-A	Moulded-rubber	1
		D5FZ 6245455-A	Burloom	1
L(64)		D5FZ 6445455-G	Black-cut pile carpet	1
		D5FZ 6445455-E	Blue-cut pile carpet	1
46668		PANEL (PACKAGE TRAY TRIM)		
L(62)		D5FZ 6246668-B	Paint to match	1

COPYRIGHT © 1986— FORD MOTOR COMPANY —DEARBORN, MICHIGAN

NEW ISSUE

1973/79 LINCOLN-MERCURY CARS

BODY TYPE	R/L	PART NUMBER LESS SUFFIX	TRIM CODES, COLORS AND APPLICABLE PART NUMBER SUFFIXES														Q T Y.
		TRIM CODES ➧		SECOND CHARACTER OF TRIM CODE									ALL CODES	ALL CODES	OTHER	OTHER	
				-B or Q	-C	-D or N	-E or S	-G or 5	-P	-U or 4	-Y or 8	-Z or 9					
		COLORS ➧		BLUE	ORANGE	RED	SILVER BLUE	GREEN	SILVER	TAN	GOLD	SADDLE	BLACK	WHITE	SEE NOTE	SEE NOTE	
51916	**HEADLINING (ROOF)**																
L(62,64) - - w/o sliding roof		D3FZ 6251916		★	★			★		★			A4A				1
L(73)		D4FZ 7351916		★	★			★		★			A4A				1

BODY TYPE	R/L	PART NUMBER	DESCRIPTION	QTY
60032	**BACK KIT (REAR SEAT) - Serviced only in assy. - group 672A18**			
60050-1	**CUSHION KIT (FRONT SEAT)**			
L(64H,73H)	R	D5YY 6460050-A		1
	L	D5YY 6460051-A		1
60136-7	**BACK KIT (FRONT SEAT)**			
L(62B,64B,73B)	R/L	D4FZ 6261018-A	Frame	2
	R/L	D3FZ 6264810-A	Pad	2
L(64H,73H)	R/L	★	Frame	2
	R/L	D6YY 6464810-A	Pad	2

BODY TYPE	R/L	PART NUMBER LESS SUFFIX	TRIM CODES, COLORS AND APPLICABLE PART NUMBER SUFFIXES														Q T Y.
		TRIM CODES ➧		SECOND CHARACTER OF TRIM CODE									ALL CODES	ALL CODES	OTHER	OTHER	
				-B or Q	-C	-D or N	-E or S	-G or 5	-P	-U or 4	-Y or 8	-Z or 9					
		COLORS ➧		BLUE	ORANGE	RED	SILVER BLUE	GREEN	SILVER	TAN	GOLD	SADDLE	BLACK	WHITE	SEE NOTE	SEE NOTE	
60579	**CARPET (REAR SEAT BACK FLOOR)**																
L(64,73) - - cut pile		D6FZ 6460579		A0B				★		★			A5A				1

BODY TYPE	R/L	PART NUMBER LESS SUFFIX	TRIM CODES AND APPLICABLE PART NUMBER SUFFIXES														QTY
60762-3	**PANEL (FRONT SEAT BACK REAR TRIM INSERT)**																
		TRIM CODES ➧	AA	AB	AG	AU	BA, BC	CB	CG	CU							
L	R	D5YY 6460762	A	★	★	★	A	★	★	★							1
	L	D5YY 6460763	A	★	★	★	A	★	★	★							1
61018	**Refer to group 60136-7**																

BODY TYPE	R/L	PART NUMBER LESS SUFFIX	TRIM CODES, COLORS AND APPLICABLE PART NUMBER SUFFIXES															Q T Y.
		TRIM CODES ➧	LGTH. (Inches)	SECOND CHARACTER OF TRIM CODE									ALL CODES	ALL CODES	OTHER	OTHER		
				-B or Q	-C	-D or N	-E or S	-G or 5	-P	-U or 4	-Y or 8	-Z or 9						
		COLORS ➧		BLUE	ORANGE	RED	SILVER BLUE	GREEN	SILVER	TAN	GOLD	SADDLE	BLACK	WHITE	SEE NOTE	SEE NOTE		
63500	**BUTTON (FRONT and REAR SEAT CUSHION and BACK)**																	
Notes:	■ Rectangular head																	
			VINYL															
L	■	D5YY 6463500	5/16	★	★			★		★			C				AR

BODY TYPE	R/L	PART NUMBER LESS SUFFIX	TRIM CODES AND APPLICABLE PART NUMBER SUFFIXES	QTY
64810-1	**Refer to group 60136-7**			
66600	**COVER (REAR SEAT BACK) - Serviced only in assy. - group 672A18**			

1975 SOFT TRIM SCHEME CODE

AS LISTED ON CERTIFICATION LABEL

CODE	BODY TYPE	DESCRIPTION OF TRIM SCHEME	● TYPE OF SEAT

FOR MATERIAL IDENTIFICATION
REFER TO SALESMAN'S
COLOR AND UPHOLSTERY SELECTIONS GUIDE

THE SOFT TRIM SECTION INCLUDES ONLY THOSE ITEMS WHICH WERE AVAILABLE FOR SERVICE AT THE TIME OF PRINTING. ITEMS NOT SHOWN OR INDICATED WITH A BLACK STAR (★) IN THE CATALOG MUST BE IMPROVISED OR PROCURED LOCALLY.

● FW–Full width seat without center arm rest, B–Bucket seats

P (COMET)

KA	54,62	Black all vinyl	FW
KB	54,62	Medium blue all vinyl	FW
KG	54,62	Light green all vinyl	FW
KU	54,62	Tan all vinyl	FW
LA	62	Black all vinyl	B
LB	62	Medium blue all vinyl	B
LU	62	Tan all vinyl	B
MA	54,62	Black vinyl and black cloth	FW
MB	54,62	Medium blue vinyl and medium blue cloth	FW
MG	54,62	Light green vinyl and light green cloth	FW
MU	54,62	Tan vinyl and tan cloth	FW
PB	54,62	Medium blue all vinyl	B
PU	54,62	Tan all vinyl	B

COPYRIGHT © 1986 — FORD MOTOR COMPANY — DEARBORN, MICHIGAN

1975 VINYL ROOF COVER CODES

AS LISTED ON CERTIFICATION LABEL

CODE	BODY TYPE	GRAIN and TYPE of ROOF	COLOR
P (COMET)			
DY	54,62	Levant – full	Yellow
GA	54,62	Odense – full	Black
GB	54,62	Odense – full	Blue
GG	54,62	Odense – full	Green
GT	54,62	Odense – full	Brown
GW	54,62	Odense – full	White

1973/79 LINCOLN-MERCURY CARS

BODY TYPE	R/L	PART NUMBER LESS SUFFIX	TRIM CODES, COLORS AND APPLICABLE PART NUMBER SUFFIXES													QTY.
		TRIM CODES ▶		SECOND CHARACTER OF TRIM CODE									ALL CODES	ALL CODES	OTHER	OTHER	
				-B or Q	-C	-D or N	-E or S	-G or 5	-P	-U or 4	-Y or 8	-Z or 9					
		COLORS ▶		BLUE	ORANGE	RED	SILVER BLUE	GREEN	SILVER	TAN	GOLD	SADDLE	BLACK	WHITE	SEE NOTE	SEE NOTE	
04104	VISOR ASSY. - Less arm and bracket																
P - - cloth weave vinyl	R/L	D4DZ 6204104		B									A				2
	R/L	D5DZ 6204104						C		A							2
04282	PAD (INSTRUMENT PANEL UPPER)																
P		D3DZ 6204282		A						F			D				1
24100	PAD (DOOR ARM REST) - Incl. attaching parts																
P - - rear door	R/L	D3DZ 6224100		D				★		★			F				2
24140-1	REST (ARM) - Incl. attaching parts																
P - - front door	R	D5FZ 6224140		G				B		H			F				1
	L	D5FZ 6224141		E				B		F			D				1
BODY TYPE	R/L	PART NUMBER	DESCRIPTION														QTY
45494	COVER (LUGGAGE COMPARTMENT FLOOR)																
P		D3DZ 6245494-A	Gray burloom														1
46668	PANEL (PACKAGE TRAY TRIM)																
Notes:	‡ Use with or without speakers																
P(54)	‡	D4DZ 5446668-C	Paint to match														1

COPYRIGHT © 1986— FORD MOTOR COMPANY —DEARBORN, MICHIGAN

1975 TRIM SCHEME CODES

AS LISTED ON CERTIFICATION LABEL

CODE	BODY TYPE	DESCRIPTION OF TRIM SCHEME	● TYPE OF SEAT

**FOR MATERIAL IDENTIFICATION
REFER TO SALESMAN'S
COLOR AND UPHOLSTERY SELECTIONS GUIDE**

● FW–Full width seat without center arm rest, FWA–Full width seat with center rest, S/B–Split bench seat, B–Bucket seats

Y (METEOR)

AA,AAA	53,65	Black vinyl and black cloth	FW
AB,ABA	53,65	Medium blue vinyl and medium blue cloth	FW
AG,AGA	53,65	Medium green vinyl and medium green cloth	FW
AU,AUA	53,65	Tan vinyl and tan cloth	FW
AZ	53,65	Saddle vinyl and saddle cloth	FW
BB,BBA	53,65,71	Medium blue all vinyl	FW
BG,BGA	53,65,71	Medium green all vinyl	FW
BU,BUA	53,65,71	Tan all vinyl	FW
BZ	53,65,71	Saddle all vinyl	FW
UB,UBA	71	Medium blue vinyl and medium blue cloth	S/B
UD,UDA	71	Dark red vinyl and dark red cloth	S/B
UG	71	Medium green vinyl and medium green cloth	S/B
UU	71	Tan vinyl and tan cloth	S/B
WA	53,65	Black vinyl and black cloth	FW
WB	53,65	Medium blue vinyl and medium blue cloth	FW
WG	53,65	Green vinyl and green cloth	FW
WU	53,65	Tan vinyl and tan cloth	FW
YB	53,65,71	Medium blue all vinyl	FW
YG	53,65,71	Green all vinyl	FW
YU	53,65,71	Tan all vinyl	FW
YZ	53,65,71	Saddle all vinyl	FW

THE SOFT TRIM SECTION INCLUDES ONLY THOSE ITEMS WHICH WERE AVAILABLE FOR SERVICE AT TIME OF PRINTING. ITEMS NOT SHOWN OR INDICATED WITH A BLACK STAR (★) IN THE CATALOG MUST BE IMPROVISED OR PROCURED LOCALLY.

COPYRIGHT © 1986 — FORD MOTOR COMPANY — DEARBORN, MICHIGAN

1975 VINYL ROOF COVER CODES

AS LISTED ON CERTIFICATION LABEL

CODE	BODY TYPE	GRAIN and TYPE of ROOF	COLOR
Y (METEOR)			
BA	65	Cross – hatch – full	Black
BB	65	Cross – hatch – full	Blue
BD	65	Cross – hatch – full	Red
BG	65	Cross – hatch – full	Green
BT	65	Cross – hatch – full	Brown
BU	65	Cross – hatch – full	Tan
BW	65	Cross – hatch – full	White
CA	53	Cross – hatch – halo	Black
CB	53	Cross – hatch – halo	Blue
CD	53	Cross – hatch – halo	Red
CG	53	Cross – hatch – halo	Green
CT	53	Cross – hatch – halo	Brown
CU	53	Cross – hatch – halo	Tan
CW	53	Cross – hatch – halo	White
GG	71	Odense – full	Green
GT	71	Odense – full	Brown
GU	71	Odense – full	Tan

BODY TYPE	R/L	PART NUMBER LESS SUFFIX	TRIM CODES, COLORS AND APPLICABLE PART NUMBER SUFFIXES														Q T Y.
		TRIM CODES ➧		SECOND CHARACTER OF TRIM CODE									ALL CODES	ALL CODES	OTHER	OTHER	
				-B or Q	-C	-D or N	-E or S	-G or 5	-P	-U or 4	-Y or 8	-Z or 9					
		COLORS ➧		BLUE	ORANGE	RED	SILVER BLUE	GREEN	SILVER	TAN	GOLD	SADDLE	BLACK	WHITE	SEE NOTE	SEE NOTE	
04104-5		VISOR ASSY.															
Notes:		● Matching Sun Visor (less vanity mirror) for R.H. Sun Visor which includes illuminated vanity mirror.															
		⊕ Use with or w/o non-illuminated vanity mirror-refer to group 17A679 in Chassis Section															
		LESS ARM and BRACKET															
Y - - w/non/ illuminated vanity mirror- "Before 6/2/75"	⊕	D40Z 6504104		B		★				★		★	A				2
"From 6/2/75"	⊕	D5AZ 6004104		D		E		★		★		F	★	★			2
04282		PAD (INSTRUMENT PANEL UPPER)															
Y		D4MY 6504282		A						★		F	★				1
		D5MY 6504282				A		★									1
13000-1		CARPET (FRONT FLOOR)															
Notes:		● Use saddle															
Y - - cut pile		D5AZ 6013000		B		F		★		●		C	★				1
13000		MAT (FRONT FLOOR)															
Y - - heavy duty		D3AZ 5313000											A				1
13048		CARPET (AUXILIARY FLOOR)															
Y(71)		D5AZ 7113048		★		★		★		★		AG					1
BODY TYPE	R/L	PART NUMBER LESS SUFFIX	TRIM CODES AND APPLICABLE PART NUMBER SUFFIXES														QTY
23942-3		PANEL ASSY. (FRONT DOOR TRIM)															
		TRIM CODES ➧	AA	AB	AG	AU	AZ	BB	BG	BU	BZ						
Y(53) - - w/o ornament	R	★															
	L	D4MY 5323943	★	★	★	ABU	★	★	★	ABU	★						1
		TRIM CODES ➧	AA, AAA	AB, ABA	AG, AGA	AU, AUA	AZ	BB, BBA	BG, BGA	BU, BUA	BZ						
Y(65)	R	★															
	L	D5MY 6523943	★	★	★	AAU	★	★	★	AAU	★						1
		TRIM CODES ➧	BB	BG	BU	BZ											
Y(71) - - w/o ornament	R	★															
	L	D4MY 5323943	★	★	ABU	★											1

COPYRIGHT © 1986 — FORD MOTOR COMPANY — DEARBORN, MICHIGAN

1973/79 LINCOLN-MERCURY CARS

BODY TYPE	R/L	PART NUMBER LESS SUFFIX	TRIM CODES, COLORS AND APPLICABLE PART NUMBER SUFFIXES														QTY.
		TRIM CODES ➧		SECOND CHARACTER OF TRIM CODE									ALL CODES	ALL CODES	OTHER	OTHER	
				-B or Q	-C	-D or N	-E or S	-G or 5	-P	-U or 4	-Y or 8	-Z or 9					
		COLORS ➧		BLUE	ORANGE	RED	SILVER BLUE	GREEN	SILVER	TAN	GOLD	SADDLE	BLACK	WHITE	SEE NOTE	SEE NOTE	
24140-1	**REST (ARM)-Incl. attaching parts**																
Notes:	**† Includes one ash receptacle opening % Includes two ash receptacle openings**																
Y(53,71)-front door - - w/o power equip.	R	D7AZ 5324140		B5B		B4D		★		★		B8Z	★				1
	L	D7AZ 5324141		B5B		B4D		★		★		B8Z	★				1
- - w/power equip.	R	D7AZ 5324140		A5B		A4D		★		★		A8Z	★				1
	L	D7AZ 5324141		A5B		A4D		★		★		A8Z	★				1
Y(53,71)-rear door		★															
Y(65)-door - - w/o power equip.	†R	D7AZ 6024140		A5B		A4D		★		★		A8Z	★				1
	†L	D7AZ 6024141		A5B		A4D		★		★		A8Z	★				1
- - w/power equip.	%R	D7AZ 6024140		B5B		B4D		★		★		B8Z	★				1
	†L	D7AZ 6024141		B5B		B4D		★		★		B8Z	★				1
24346-7	**PANEL (CENTER BODY PILLAR INSIDE FINISH)**																
Notes:	**$ Use tan and paint to match**																
Y(53,71) - - lower		★															1
- - upper	R	★															1
	L	D4AZ 5324357		$		$		$		A		$	$				1
24356-7	**Refer to group 24346-7**																

BODY TYPE	R/L	PART NUMBER	DESCRIPTION	QTY
45522-3	**LINING BOARD (LUGGAGE COMPARTMENT REAR)**			
Y(53,65)	R	D5MY 6545522-A	Gray	1
	L	D5MY 6545523-A	Gray	1

BODY TYPE	R/L	PART NUMBER LESS SUFFIX	TRIM CODES AND APPLICABLE PART NUMBER SUFFIXES														QTY
62900-1	**COVER (FRONT SEAT CUSHION)**																
		TRIM CODES ➧	BB	BG	BU	BZ	UG	UU	YB	YG	YU						
Y(71)		D5AZ 5362900	★	★	★	BEZ	★	★	★	★	★						1
64416-7	**COVER (FRONT SEAT BACK)**																
		TRIM CODES ➧	AA	AAA	AB	ABA	AG	AGA	AU	AUA	AZ						
Y(65)	R	D5AZ 6064416	★	★	★	BAB	★	★	★	★	★						1
	L	D5AZ 6064417	★	★	★	BAB	★	★	★	★	★						1

1976 TRIM SCHEME CODES

AS LISTED ON CERTIFICATION LABEL

FOR MATERIAL IDENTIFICATION
REFER to SALESMAN'S
COLOR and UPHOLSTERY SELECTION GUIDE

● FW–Full width seat without center arm rest, FWA–Full width seat with center arm rest S/B–Split bench seat

MERCURY (A)

CODE	BODY TYPE	TRIM SCHEME	● TYPE OF SEAT
EB,EBA,EBB	71K	Blue all vinyl	FWA
ED,EDA,EDB	71K	Red all vinyl	FWA
EG,EGA,EGB	71K	Green all vinyl	FWA
EU,EUA,EUB	71K	Tan vinyl and saddle vinyl	FWA
EV,EVA,EVB	71K	Cream vinyl and gold vinyl	FWA
FA,FAA	53L,65L	Black vinyl and black leather	S/B
FB,FBA	53L,65L,71K	Blue vinyl and blue leather	S/B
FD,FDA	53L,65L,71K	Red vinyl and red leather	S/B
FG,FGA	53L,65L,71K	Green vinyl and green leather	S/B
FN,FNA	53L,65L,71K	White vinyl and white leather with red appointments	S/B
FQ,FQA	53L,65L	White vinyl and white leather with blue appointments	S/B
FU,FUA	53L,65L,71K	Tan vinyl and saddle leather	S/B
FV,FVA	53L,65L	Cream vinyl and gold leather	S/B
FW,FWA	53L,65L	White vinyl and white leather with black appointments	S/B
F5,F5A	53L,65L	White vinyl and white leather with green appointments	S/B
F8,F8A	53L,65L	White vinyl and white leather with gold appointments	S/B
F9,F9A	53L,65L	White vinyl and white leather with saddle appointments	S/B
GA,GAA,GAD	53H,65H	Black vinyl and black cloth	FW
GB,GBA,GBB,GBD	53H,65H	Blue vinyl and blue cloth	FW
GG,GGA,GGB,GGD	53H,65H	Green vinyl and green cloth	FW
GZ,GZA,GZD,GZB	53H,65H	Saddle vinyl and saddle cloth	FW
HB,HBA	53H,65H,71H	Blue all vinyl	FW
HD,HDA	53H,65H,71H	Red all vinyl	FW
HG,HGA	53H,65H,71H	Green all vinyl	FW
HN,HNA	65H	White all vinyl with red appointments	FW
HQ,HQA	65H	White all vinyl with blue appointments	FW
HW,HWA	65H	White all vinyl with black appointments	FW
HY,HYA	53H,65H,71H	Gold all vinyl	FW
HZ,HZA	53H,65H,71H	Saddle all vinyl	FW
H5,H5A	65H	White all vinyl with green appointments	FW
H8,H8A	65H	White all vinyl with gold appointments	FW
H9,H9A	65H	White all vinyl with saddle appointments	FW
JB,JBA	53L,65L	Blue vinyl and blue cloth	S/B
JD,JDA,JDB	53L,65L	Red vinyl and red cloth	S/B
JG,JGA	53L,65L	Green vinyl and green cloth	S/B
JY,JYA,JYB	53L,65L	Gold vinyl and gold cloth	S/B
JZ,JZA	53L,65L	Saddle vinyl and saddle cloth	S/B
QB,QBA,QBB	71K	Blue vinyl and blue cloth	S/B
QD,QDA,QDB	71K	Red vinyl and red cloth	S/B
QG,QGA,QGB	71K	Green vinyl and green cloth	S/B
QU,QUA,QUB	71K	Tan vinyl and saddle cloth	S/B
RB,RBA,RBB	53K,65K	Blue vinyl and blue cloth	FWA
RD,RDA,RDB	53K,65K	Red vinyl and red cloth	FWA
RG,RGA,RGB	53K,65K	Green vinyl and green cloth	FWA
RY,RYA,RYB,RYC	53K,65K	Gold vinyl and gold cloth	FWA
RZ,RZA,RZB	53K,65K	Saddle vinyl and saddle cloth	FWA
SA,SAA,SAB	53K,65K	Black all vinyl	S/B

COPYRIGHT © 1986 — FORD MOTOR COMPANY — DEARBORN, MICHIGAN

1976 TRIM SCHEME CODES

AS LISTED ON CERTIFICATION LABEL

CODE	BODY TYPE	DESCRIPTION OF TRIM SCHEME	● TYPE OF SEAT

FOR MATERIAL IDENTIFICATION
REFER TO SALESMAN'S
COLOR AND UPHOLSTERY SELECTIONS GUIDE

● FW–Full width seat without center arm rest, FWA–Full width seat with center arm rest S/B–Split bench seat

MERCURY (A)

SB,SBA,SBB	53K,65K	Blue all vinyl	S/B
SD,SDA,SDB	53K,65K	Red all vinyl	S/B
SG,SGA,SGB	53K,65K	Green all vinyl	S/B
SN,SNA,SNB	53K,65K	White all vinyl with red appointments	S/B
SQ,SQA,SQB	53K,65K	White all vinyl with blue appointments	S/B
SU,SUA,SUB	53K,65K	Tan vinyl and saddle vinyl	S/B
SV,SVA,SVB	53K,65K	Cream vinyl and gold vinyl	S/B
SW,SWA,SWB	53K,65K	White all vinyl with black appointments	S/B
S5,S5A,S5B	53K,65K	White all vinyl with green appointments	S/B
S8,S8A,S8B	53K,65K	White all vinyl with gold appointments	S/B
S9,S9A,S9B	53K,65K	White all vinyl with saddle appointments	S/B
TA,TAA,TAB	53K,65K	Black vinyl and black cloth	S/B
TB,TBA,TBB	53K,65K	Blue vinyl and blue cloth	S/B
TD,TDA,TDB	53K,65K	Red vinyl and red cloth	S/B
TG,TGA,TGB	53K,65K	Green vinyl and green cloth	S/B
TY,TYA,TYB,TYC	53K,65K	Gold vinyl and gold cloth	S/B
TZ,TZA,TZB	53K,65K	Saddle vinyl and saddle cloth	S/B
VB,VBA,VBB	71K	Blue all vinyl	S/B
VD,VDA,VDB	71K	Red all vinyl	S/B
VG,VGA,VGB	71K	Green all vinyl	S/B
VU,VUA,VUB	71K	Tan vinyl and saddle vinyl	S/B
VV,VVA,VVB	71K	Cream vinyl and gold vinyl	S/B

THE SOFT TRIM SECTION INCLUDES ONLY THOSE ITEM WHICH WERE AVAILABLE FOR SERVICE AT TIME OF PRINTING. ITEMS NOT SHOWN OR INDICATED WITH A BLACK STAR (★) IN THE CATALOG MUST BE IMPROVISED OR PROCURED LOCALLY.

1976 VINYL ROOF COVER CODES

AS LISTED ON CERTIFICATION LABEL

CODE	BODY TYPE	GRAIN and TYPE of ROOF	COLOR
		A (Mercury)	
BA	65	Crosshatch—full	Black
BB	65	Crosshatch—full	Blue
BD	65	Crosshatch—full	Red
BG	65	Crosshatch—full	Green
BP	65	Crosshatch—full	Silver
BT	65	Crosshatch—full	Brown
BW	65	Crosshatch—full	White
BY	65	Crosshatch—full	Gold
CA	53	Crosshatch—halo	Black
CG	53	Crosshatch—halo	Green
CP	53	Crosshatch—halo	Silver
CT	53	Crosshatch—halo	Brown
CW	53	Crosshatch—halo	White
CY	53	Crosshatch—halo	Gold
GT	71	Odense—full	Brown
RA	65	Crosshatch—1/2	Black
RB	65	Crosshatch—1/2	Blue
RD	65	Crosshatch—1/2	Red
RG	65	Crosshatch—1/2	Green
RP	65	Crosshatch—1/2	Silver
RT	65	Crosshatch—1/2	Brown
RW	65	Crosshatch—1/2	White
RY	65	Crosshatch—1/2	Gold

COPYRIGHT © 1986 — FORD MOTOR COMPANY — DEARBORN, MICHIGAN

1973/79 LINCOLN-MERCURY CARS

BODY TYPE	R/L	PART NUMBER LESS SUFFIX	TRIM CODES, COLORS and APPLICABLE PART NUMBER SUFFIXES														QTY.
		TRIM CODES ♦		SECOND CHARACTER of TRIM CODE									ALL CODES	ALL CODES	OTHER	OTHER	
				-B or Q	-D or N	-E	-G or 5	-R	-U	-V	-Y or 8	-Z or 9					
		COLORS ♦		BLUE	RED	SILVER BLUE	GREEN	JADE	TAN	CREAM	GOLD	SADDLE	BLACK	WHITE	SEE NOTE	SEE NOTE	
04104-5	VISOR ASSY.																
Notes:	⊕ Use with or without illuminated vanity mirror refer to group 17A679 in Chassis section for mirror, ♦ Use gold, ● Use saddle, † Matching Sun visor (less vanity mirror) for R.H. Sun Visor which includes illuminated vanity mirror.																

LESS ARM, BRACKET and MIRROR

A - - w/non-illuminated vanity mirror	⊕	D5AZ 6004104		D	E		G		●			F	C				2
	⊕	D6AZ 6004104								♦	B						2
04282	PAD (INSTRUMENT PANEL UPPER)																
Notes:	● Use saddle, ♦ Use gold																
A		D4MY 6504282		A					●			F	★				1
		D5MY 6504282			A		★										1
		D6MY 6504282								♦	A						1
13000	CARPET (FRONT FLOOR)																
Notes:	● Use saddle, ♦ Use gold																
A - - cut pile		D5AZ 6013000		B	F		★		●	★	★	C	★				1
13000	MAT (FRONT FLOOR)																
A - - heavy duty		D3AZ 5313000											A				1
13048	CARPET (AUXILIARY FLOOR)																
A(71) - - cut pile		D5AZ 7113048		★	★		★		★			AG					1
24140-1	ARM REST - Includes attaching parts																
Notes:	● Use saddle																
A(53,71)-front door - - w/o power equipment	R	D7AZ 5324140		B5B	B4D		★		●			B8Z	★				1
	L	D7AZ 5324141		B5B	B4D		★		●			B8Z	★				1
- - w/power equipment	R	D7AZ 5324140		A5B	A4D		★		●			A8Z	★				1
	L	D7AZ 5324141		A5B	A4D		★		●			A8Z	★				1
A(53,71)-rear door		★															
A(65)-door - - w/o power equipment	R	D7AZ 6024140		A5B	A4D		★		●	★	★	A8Z	★	★			1
	L	D7AZ 6024141		A5B	A4D		★		●	★	★	A8Z	★	★			1
- - w/power equipment	R	D7AZ 6024140		B5B	B4D				●	B2Y	★	B8Z	★	★			1
	L	D7AZ 6024141		B5B	B4D				●	★	★	B8Z	★	★			1
24346-7	PANEL (CENTER BODY PILLAR INSIDE FINISH)																
Notes:	$ Paint to match																
A(53,71) - - lower		★															
- - upper	R	★															1
	L	D4AZ 5324357														$A	1
24356-7	Refer to group 24346-7																

BODY TYPE	R/L	PART NUMBER	DESCRIPTION	QTY
45522-3	LINING BOARD (LUGGAGE COMPARTMENT REAR)			
A(53,65)	R	D5MY 6545522-A	Gray	1
	L	D5MY 6545523-A	Gray	1

BODY TYPE	R/L	PART NUMBER LESS SUFFIX	TRIM CODES, COLORS and APPLICABLE PART NUMBER SUFFIXES														QTY.
		TRIM CODES ▶		SECOND CHARACTER of TRIM CODE									ALL CODES	ALL CODES	OTHER	OTHER	
				-B or Q	-D or N	-E	-G or 5	-R	-U	-V	-Y or 8	-Z or 9					
		COLORS ▶		BLUE	RED	SILVER BLUE	GREEN	JADE	TAN	CREAM	GOLD	SADDLE	BLACK	WHITE	SEE NOTE	SEE NOTE	
63500	**BUTTON (FRONT and REAR SEAT CUSHION and BACK)**																
Notes:	● Round head																
			VINYL														
A(53H,65H,71H)	●	**D40Z 6563500**		★	AB												AR
	●	**D60Z 6563500**									★			A			AR

COPYRIGHT © 1986 — FORD MOTOR COMPANY — DEARBORN, MICHIGAN

1976 SOFT TRIM SCHEME CODES

AS LISTED ON CERTIFICATION LABEL

CODE	BODY TYPE	DESCRIPTION OF TRIM SCHEME	● TYPE OF SEAT

FOR MATERIAL IDENTIFICATION
REFER TO SALESMAN'S
COLOR AND UPHOLSTERY SELECTIONS GUIDE

THE SOFT TRIM SECTION INCLUDES ONLY THOSE ITEMS WHICH WERE AVAILABLE FOR SERVICE AT THE TIME OF PRINTING. ITEMS NOT SHOWN OR INDICATED WITH A BLACK STAR (★) IN THE CATALOG MUST BE IMPROVISED OR PROCURED LOCALLY.

Montego (C)

NOTE 1– For replacement of Door and Quarter Trim Panels (23942–3 and 31012–3), refer to this code in the 1976 Soft Trim Section. For replacement of Cushion Cover (62900 and 63804) and Back Covers 64416–7 and 66600), contact your Service Representative. All other parts are included in the 1976 Soft Trim Section

AA	53B,65B	Black vinyl and black cloth	FW
AB	53B,65B	Blue vinyl and blue cloth	FW
AZ	53B,65B	Saddle vinyl and saddle cloth	FW
BA	53B,65B	Black all vinyl	FW
BB	53B,65B	Blue all vinyl	FW
BZ	53B,65B	Saddle all vinyl	FW
CA,CAA,CAB	53D,65D	Black vinyl and black cloth	FW
CB,CBA,CBB	53D,65D	Blue vinyl and blue cloth	FW
CD,CDB	53D,65D	Red vinyl and red cloth	FW
CG,CGA,CGB	53D,65D	Green vinyl and green cloth	FW
CZ,CZA,CZB	53D,65D	Saddle vinyl and saddle cloth	FW
DA,DAA,DAB	53D,65D	Black all vinyl	FW
DB,DBA,DBB	53D,65D,71D	Blue all vinyl	FW
DD	53D,65D,71D	Red all vinyl	FW
DG,DGA,DGB	53D,65D,71D	Green all vinyl	FW
DN,DNA,DNB	65D	White all vinyl with red appointments	FW
DQ,DQA,DQB	65D	White all vinyl with blue appointments	FW
DU,DUA,DUB	71D	Tan all vinyl	FW
DW,DWA,DWB	65D	White all vinyl with black appointments	FW
DZ,DZA,DZB	53D,65D,71D	Saddle all vinyl	FW
D5,D5A,D5B	65D	White all vinyl with green appointments	FW
D8,D8A,D8B	65D	White all vinyl with gold appointments	FW
D9,D9A,D9B	65D	White all vinyl with saddle appointments	FW
EB,EBB	71K	Blue all vinyl	S/B
ED,EDB	71K	Red all vinyl	S/B
EG,EGB	71K	Green all vinyl	S/B
EU,EUB	71K	Tan all vinyl	S/B
EZ,EZB	71K	Saddle all vinyl	S/B
GA,GAA,GAB	53K,65K	Black vinyl and black cloth	FWA
GB,GBA,GBB	53K,65K	Blue vinyl and blue cloth	FWA
GD,GDB	53K,65K	Red vinyl and red cloth	FWA
GD1	53K,65K	(Code GD–see Note 1)	FWA
GG,GGA,GGB	53K,65K	Green vinyl and green cloth	FWA
GZ,GZA,GZB	53K,65K	Saddle vinyl and saddle cloth	FWA
GZC	53K,65K	Saddle vinyl and saddle cloth	FWA
HA,HAB	53K,65K	Black all vinyl	FWA
HB,HBB	53K,65K,71K	Blue all vinyl	FWA
HD,HDB	53K,65K,71K	Red all vinyl	FWA
HG,HGB	53K,65K,71K	Green all vinyl	FWA
HN,HNB	65K	White all vinyl with red appointments	FWA
HQ,HQB	65K	White all vinyl with blue appointments	FWA

COPYRIGHT © 1986 — FORD MOTOR COMPANY — DEARBORN, MICHIGAN

1976 SOFT TRIM SCHEME CODES

AS LISTED ON CERTIFICATION LABEL

CODE	BODY TYPE	DESCRIPTION OF TRIM SCHEME	● TYPE OF SEAT

FOR MATERIAL IDENTIFICATION
REFER TO SALESMAN'S
COLOR AND UPHOLSTERY SELECTIONS GUIDE

THE SOFT TRIM SECTION INCLUDES ONLY THOSE ITEMS WHICH WERE AVAILABLE FOR SERVICE AT THE TIME OF PRINTING. ITEMS NOT SHOWN OR INDICATED WITH A BLACK STAR (★) IN THE CATALOG MUST BE IMPROVISED OR PROCURED LOCALLY.

MONTEGO (C) — Cont'd

NOTE 1– For replacement of Door and Quarter Trim Panels (23942–3 and 31012–3), refer to this code in the 1976 Soft Trim Section. For replacement of Cushion Cover (62900 and 63804) and Back Covers (64416–7 and 66600), contact your Service Representative. All other parts are included in the 1976 Soft Trim Section

HU	71K	Tan all vinyl	FWA
HW,HWB	65K	White all vinyl with black appointments	FWA
HZ,HZB	53K,65K,71K	Saddle all vinyl	FWA
H5,H5B	65K	White all vinyl with green appointments	FWA
H8,H8B	65K	White all vinyl with gold appointments	FWA
KA,KAA,KAB	53K,65K	Black vinyl and black cloth	S/B
KB,KBA,KBB	53K,65K	Blue vinyl and blue cloth	S/B
KD,KDA,KDB	53K,65K	Red vinyl and red cloth	S/B
KG,KGA,KGB	53K,65K	Green vinyl and green cloth	S/B
KZ,KZA,KZB	53K,65K	Saddle vinyl and saddle cloth	S/B
LA,LAB	53K,65K	Black all vinyl	S/B
LB,LBB	53K,65K	Blue all vinyl	S/B
LD,LDB	53K,65K	Red all vinyl	S/B
LG,LGB	53K,65K	Green all vinyl	S/B
LN,LNB	65K	White all vinyl with red appointments	S/B
LQ,LQB	65K	White all vinyl with blue appointments	S/B
LW,LWB	65K	White all vinyl with black appointments	S/B
LZ,LZB	53K,65K	Saddle all vinyl	S/B
L5,L5B	65K	White all vinyl with green appointments	S/B
L8,L8B	65K	White all vinyl with gold appointments	S/B
L9,L9B	65K	White all vinyl with saddle appointments	S/B
MA	53K,65K	Black vinyl and black cloth	FWA
MBA	53K,65K	Blue vinyl and blue cloth	FWA
MZA	53K,65K	Saddle vinyl and saddle cloth	FWA
PB,PBA,PBB	71D	Blue vinyl and blue cloth	FWA
PD,PDA,PDB	71D	Red vinyl and red cloth	FWA
PG,PGA,PGB	71D	Green vinyl and green cloth	FWA
PU,PUA,PUB	71D	Tan vinyl and tan cloth	FWA
QB,QBA	53D,65D	Blue vinyl and blue cloth	FWA
QBB,QBC	53D,65D	Blue vinul and blue cloth	FWA
QD,QDA,QDB	53D,65D	Red vinyl and red cloth	FWA
QD1	53D,65D	(Code QD–See Note 1)	FWA
QZ,QZA	53D,65D	Saddle vinyl and saddle cloth	FWA
QZB,QZC,QZD	53D,65D	Saddle vinyl and saddle cloth	FWA
RB,RBB	53D,65D	Blue all vinyl	FWA
RD,RDB	53D,65D	Red all vinyl	FWA
RN,RNB	65D	White all vinyl with red appointments	FWA
RQ,RQB	65D	White all vinyl with blue appointments	FWA
RZ,RZB	53D,65D	Saddle all vinyl	FWA
R9,R9B	65D	White all vinyl with saddle appointments	FWA

1976 SOFT TRIM SCHEME CODES

AS LISTED ON CERTIFICATION LABEL

CODE	BODY TYPE	GRAIN and TYPE of ROOF	COLOR
MONTEGO (C)			
DA	53,65	Levant–full	Black
DB	53,65	Levant–full	Blue
DG	53,65	Levant–full	Green
DT	53,65	Levant–full	Brown
DU	53,65	Levant–full	Tan
DW	53,65	Levant–full	White
GA	53,65	Odense–full	Black
GB	53,65	Odense–full	Blue
GD	53,65	Odense–full	Red
GG	65	Odense–full	Green
GP	53,65	Odense–full	Silver
GT	53,65	Odense–full	Brown
GU	65	Odense–full	Tan
GW	65	Odense–full	White
NA	65	Odense–1/2	Black
NB	65	Odense–1/2	Blue
ND	65	Odense–1/2	Red
NG	65	Odense–1/2	Green
NT	65	Odense–1/2	Brown
NU	65	Odense–1/2	Tan
NW	65	Odense–1/2	White

COPYRIGHT © 1986 — FORD MOTOR COMPANY — DEARBORN, MICHIGAN

1973/79 LINCOLN-MERCURY CARS

BODY TYPE	R/L	PART NUMBER LESS SUFFIX	TRIM CODES, COLORS and APPLICABLE PART NUMBER SUFFIXES														Q T Y.
		TRIM CODES ➧		SECOND CHARACTER of TRIM CODE									ALL CODES	ALL CODES	OTHER	OTHER	
				-B or Q	-D or N	-E	-G or 5	-R	-U	-V	-Y or 8	-Z or 9					
		COLORS ➧		BLUE	RED	SILVER BLUE	GREEN	JADE	TAN	CREAM	GOLD	SADDLE	BLACK	WHITE	SEE NOTE	SEE NOTE	
02344-5	PANEL (COWL TRIM)																
Notes:	● Use saddle																
C	R	D70Z 6502344		A9B	A2D		★	A6R	●		★	A1Z	★				
	L	D70Z 6502345		A9B	A2D		★	A6R	●		★	A1Z	★				1
04104-5	VISOR ASSY.																
Notes:	⊕ Use with or without non-illuminated vanity mirror refer to group 17A679 in Chassis Section for mirror,																

LESS ARM and BRACKET

C - - w/non-illuminated vanity mirror ⊕	R/L	D60Z 6504104		B	E				★			C		H			2
04282	PAD (INSTRUMENT PANEL UPPER)																
Notes:	● Use saddle																
C		D40Z 6504282		A			★		●		★	★	D				1
		D40Y 6504282			H												1
13000	CARPET (FRONT FLOOR)																
Notes:	● Use saddle																
C - - cut pile		D50Z 6513000		F	★		★		●			G	H				1
13000	MAT (FRONT FLOOR)																
C - - heavy duty		D50Z 6513000											A				1
13086	MAT (FRONT FLOOR)																

TWIN (Less carpet insert)

C - - rubber Ford Oval		D60Z 6213086		B	F								A		@C		1
13106	MAT (REAR FLOOR)																
Notes:	@ Brown																

TWIN (Less carpet insert)

C - - rubber		D6FZ 6213106		B	E								A		@C		1

BODY TYPE	R/L	PART NUMBER LESS SUFFIX	TRIM CODES, COLORS and APPLICABLE PART NUMBER SUFFIXES														Q T Y.
		TRIM CODES ➧		SECOND CHARACTER of TRIM CODE									ALL CODES	ALL CODES	OTHER	OTHER	
				-B or Q	-D or N	-E	-G or 5	-R	-U	-V	-Y or 8	-Z or 9					
		COLORS ➧	LGTH. (Inches)	BLUE	RED	SILVER BLUE	GREEN	JADE	TAN	CREAM	GOLD	SADDLE	BLACK	WHITE	SEE NOTE	SEE NOTE	
24100-1	PAD (ARM REST)																
C(53,71) - - front door	R/L	D3DZ 6224100	8 3/4	D			★		V				F				2
	R/L	D40Z 6524100	8 3/4									B					2
	R/L	D4WZ 6524100			A												2
C(53,71) - - rear door	R/L	D30Z 5324100	8 3/4	C									★				2
	R/L	D40Z 5324100	8 3/4				★		★			B					2
	R/L	D60Z 5324100	8 3/4		A2D												2
C(65) - - door	R	D3DZ 6224100	11	J			★		★				★				1
	L	D3DZ 6224101	11	B			★		E				A				1
	R	D40Z 6524100	11									★		★			1
	L	D40Z 6524101	11									A		★			1
	R	D4WZ 6524100	11		A												1
	L	D4WZ 6524101	11		A												1
C(65) - - quarter	R/L	D3DZ 6224100	8 3/4	D			★		V				F				2
	R/L	D40Z 6524100	8 3/4									B		★			2
	R/L	D4WY 6531718	8 3/4		K												2

BODY TYPE	R/L	PART NUMBER LESS SUFFIX	TRIM CODES, COLORS and APPLICABLE PART NUMBER SUFFIXES															Q T Y.
		TRIM CODES ▶		SECOND CHARACTER of TRIM CODE									ALL CODES	ALL CODES	OTHER	OTHER		
				-B or Q	-D or N	-E	-G or 5	-R	-U	-V	-Y or 8	-Z or 9						
		COLORS ▶	LGTH. (Inches)	BLUE	RED	SILVER BLUE	GREEN	JADE	TAN	CREAM	GOLD	SADDLE	BLACK	WHITE	SEE NOTE	SEE NOTE		
24144	BASE (ARM REST)																	
C(53,71) - - doors	R/L	D3DZ 6224144		L			★		★			★	K					4
	R/L	D6DZ 6224144			A6D													4
C(65) - - door	R/L	D3DZ 6224144		B			★		D				★					2
	R/L	D6DZ 6224144			C6D							B		A				2
24346-7	PANEL (CENTER BODY PILLAR INSIDE FINISH)																	
Notes:	$ Paint to match																	
C(53,71) - - lower	R	D40Z 5324346		D			★		★			★	★					1
	L	D40Z 5324347		D			★		★			★	★					1
	R	D60Z 5324346			A2D													1
	L	D60Z 5324347			A2D													1
- - upper	R	D40Z 5324356													$A			1
	L	D40Z 5324357													$A			1
24356-7	Refer to group 24346-7																	

BODY TYPE	R/L	PART NUMBER	DESCRIPTION	QTY
45026	COVER (SPARE TIRE)			
C - - w/14" wheel		D50Z 6545026-A	Gray-cut pile carpet	1
- - w/15" wheel		D5LY 6545026-J	Gray-cut pile carpet	1
45422-3	COVER (LUGGAGE COMPARTMENT SIDE)			
C(53,65)	R	D4GY 6545422-A	Gray-lining board	1
45455	COVER (LUGGAGE COMPARTMENT FLOOR)			
C(53,65)		D60Z 6545455-A0P	Gray-burloom	1

BODY TYPE	R/L	PART NUMBER LESS SUFFIX	TRIM CODES, COLORS and APPLICABLE PART NUMBER SUFFIXES															Q T Y.
		TRIM CODES ▶		SECOND CHARACTER of TRIM CODE									ALL CODES	ALL CODES	OTHER	OTHER		
				-B or Q	-D or N	-E	-G or 5	-R	-U	-V	-Y or 8	-Z or 9						
		COLORS ▶	LGTH. (Inches)	BLUE	RED	SILVER BLUE	GREEN	JADE	TAN	CREAM	GOLD	SADDLE	BLACK	WHITE	SEE NOTE	SEE NOTE		
46668	PANEL (PACKAGE TRAY TRIM)																	
Notes:	$ Paint to match, ‡ Use with or without speakers																	
C(53,65)	‡	D40Z 6546668													$N			1

BODY TYPE	R/L	PART NUMBER	DESCRIPTION	QTY
60136-7	BACK KIT (FRONT SEAT)			
C(53)		D60Z 5361018-A	Frame-split seat-reclining	1
		D3GY 6560136-C	Pad-full width seat-w/center arm rest	1
C(53)		D60Z 5364700-A	Spring-full width seat-heavy duty	1
C(65)	R	D60Z 6564700-A	Spring-full width seat-heavy duty	1
C(71)	R	D60Z 5361018-A	Frame-split seat-reclining	1
	R/L	D3GY 6560136-C	Pad-full width seat-w/center arm rest	2
61018-9	Refer to group 60136-7			

TYPE	SIZE (INCHES) STUD LENGTH	SIZE (INCHES) HEAD	C/V ●	PART NUMBER LESS SUFFIX	TRIM CODES, COLORS and APPLICABLE PART NUMBER SUFFIXES														Q T Y.
				TRIM CODES ▶		SECOND CHARACTER of TRIM CODE									ALL CODES	ALL CODES	OTHER	OTHER	
						-B or Q	-D or N	-E	-G or 5	-R	-U	-V	-Y or 8	-Z or 9					
				COLORS ▶		BLUE	RED	SILVER BLUE	GREEN	JADE	TAN	CREAM	GOLD	SADDLE	BLACK	WHITE	SEE NOTE	SEE NOTE	
63500				BUTTON (FRONT and REAR SEAT CUSHION and BACK) — Cont'd															
Notes:				@-C Cloth, V Vinyl															
3	3/8"	5/8"	V	D40Z 6563500		★					★			★	M				AR
			V	D60Z 6563500												A			AR
64700-1	Refer to group 60136-7																		

COPYRIGHT © 1986 — FORD MOTOR COMPANY — DEARBORN, MICHIGAN

1976 SOFT TRIM SCHEME CODES

AS LISTED ON CERTIFICATION LABEL

CODE	BODY TYPE	DESCRIPTION OF TRIM SCHEME	● TYPE OF SEAT

FOR MATERIAL IDENTIFICATION
REFER TO SALESMAN'S
COLOR AND UPHOLSTERY SELECTIONS GUIDE

THE SOFT TRIM SECTION INCLUDES ONLY THOSE ITEMS WHICH WERE AVAILABLE FOR SERVICE AT THE TIME OF PRINTING, ITEMS NOT SHOWN OR INDICATED WITH A BLACK STAR (★) IN THE CATALOG MUST BE IMPROVISED OR PROCURED LOCALLY.

● SB–Split bench seat, FWA–Full width seat with center armrest

LINCOLN (D)

BB,BBA,BBB	53,60	Blue vinyl and blue cloth	FWA
BD,BDA,BDB	53,60	Red vinyl and red cloth	FWA
BJ,BJA	53,60	Taupe vinyl and taupe cloth	FWA
BR,BRA,BRB	53,60	Jade vinyl and jade cloth	FWA
BU,BUA	53,60	Tan vinyl and tan cloth	FWA
BY,BYA,BYB	53,60	Gold vinyl and gold cloth	FWA
DA,DAA,DAB	53,60	Black vinyl and black leather	FWA
DB,DBA,DBB	53,60	Blue vinyl and blue leather	FWA
DD,DDA,DDB	53,60	Red vinyl and red leather	FWA
DJ,DJA	53,60	Taupe vinyl and taupe leather	FWA
DN,DNA,DNB	53,60	White vinyl and white leather with red appointments	FWA
DQ,DQA,DQB	53,60	White vinyl and white leather with blue appointments	FWA
DR,DRA,DRB	53,60	Jade vinyl and jade leather	FWA
DU,DUA	53,60	Tan vinyl and tan leather	FWA
DW,DWA,DWB	53,60	White vinyl and white leather with black appointments	FWA
DY,DYA,DYB	53,60	Gold vinyl and gold leather	FWA
D3,D3A	53,60	White vinyl and white leather with taupe appointments	FWA
D4,D4A	53,60	White vinyl and white leather with tan appointments	FWA
D5,D5A,D5B	53,60	White vinyl and white leather with jade appointments	FWA
D8,D8A,D8B	53,60	White vinyl and white leather with gold appointments	FWA
EA,EAA,EAB	53,60	Black vinyl and black leather	SB
EB,EBA,EBB	53,60	Blue vinyl and blue leather	SB
ED,EDA,EDB	53,60	Red vinyl and red leather	SB
EJ,EJA,EJB	53,60	Taupe vinyl and taupe leather	SB
EN,ENA,ENB	53,60	White vinyl and white leather with red appointments	SB
EQ,EQA,EQB	53,60	White vinyl and white leather with blue appointments	SB
ER,ERA,ERB	53,60	Jade vinyl and jade leather	SB
EU,EUA,EUB	53,60	Tan vinyl and tan leather	SB
EW,EWA,EWB	53,60	White vinyl and white leather with black appointments	SB
EY,EYA,EYB	53,60	Gold vinyl and gold leather	SB
E3,E3A,E3B	53,60	White vinyl and white leather with taupe appointments	SB
E4,E4A,E4B	53,60	White vinyl and white leather with tan appointments	SB
E5,E5A,E5B	53,60	White vinyl and white leather with jade appointments	SB
E8,E8A,E8B	53,60	White vinyl and white leather with gold appointments	SB
FB,FBA,FBB	53,60	Blue vinyl and blue cloth	SB
FD,FDA,FDB	53,60	Red vinyl and red cloth	SB
FJ,FJA,FJB	53,60	Taupe vinyl and taupe cloth	SB
FR,FRA,FRB	53,60	Jade vinyl and jade cloth	SB
FU,FUA,FUB	53,60	Tan vinyl and tan cloth	SB
FY,FYA,FYB	53,60	Gold vinyl and gold cloth	SB
HA,HAA,HAB	53,60	Black vinyl and black leather	FWA
HB,HBA,HBB	53,60	Blue vinyl and blue leather	FWA
HD,HDA,HDB	53,60	Red vinyl and red leather	FWA
HJ,HJA,HJB	53,60	Taupe vinyl and taupe leather	FWA
HR,HRA,HRB	53,60	Jade vinyl and jade leather	FWA
HU,HUA,HUB	53,60	Tan vinyl and tan leather	FWA

COPYRIGHT © 1986 — FORD MOTOR COMPANY — DEARBORN, MICHIGAN

1976 SOFT TRIM SCHEME CODES

AS LISTED ON CERTIFICATION LABEL

FOR MATERIAL IDENTIFICATION
REFER TO SALESMAN'S
COLOR AND UPHOLSTERY SELECTIONS GUIDE

THE SOFT TRIM SECTION INCLUDES ONLY THOSE ITEMS WHICH WERE AVAILABLE FOR SERVICE AT THE TIME OF PRINTING, ITEMS NOT SHOWN OR INDICATED WITH A BLACK STAR (★) IN THE CATALOG MUST BE IMPROVISED OR PROCURED LOCALLY.

● SB–Split bench seat, FWA–Full width seat with center armrest

LINCOLN (D) — Cont'd

CODE	BODY TYPE	DESCRIPTION OF TRIM SCHEME	● TYPE OF SEAT
HY,HYA,HYB	53,60	Gold vinyl and gold leather	FWA
JA,JAA,JAB	53,60	Black all cloth	SB
JB,JBA,JBB	53,60	Blue all cloth	SB
JD,JDA,JDB	53,60	Red all cloth	SB
JJ,JJA,JJB	53,60	Taupe all cloth	SB
JR,JRA,JRB	53,60	Jade all cloth	SB
JS,JSA,JSB	53,60	Gray all cloth	SB
JU,JUA,JUB	53,60	Tan all cloth	SB
JY,JYA,JYB	53,60	Gold all cloth	SB
KA,KAA,KAB	53,60	Black vinyl and black leather	SB
KB,KBA,KBB	53,60	Blue vinyl and blue leather	SB
KD,KDA,KDB	53,60	Red vinyl and red leather	SB
KJ,KJA,KJB	53,60	Taupe vinyl and taupe leather	SB
KN,KNA,KNB	53,60	White vinyl and white leather with red appointments	SB
KQ,KQA,KQB	53,60	White vinyl and white leather with blue appointments	SB
KR,KRA,KRB	53,60	Jade vinyl and jade leather	SB
KS,KSA,KSB	53,60	Gray vinyl and gray leather	SB
KU,KUA,KUB	53,60	Tan vinyl and tan leather	SB
KW,KWA,KWB	53,60	White vinyl and white leather with black appointments	SB
KY,KYA,KYB	53,60	Gold vinyl and gold leather	SB
K3,K3A,K3B	53,60	White vinyl and white leather with taupe appointments	SB
K4,K4A,K4B	53,60	White vinyl and white leather with tan appointments	SB
K5,K5A,K5B	53,60	White vinyl and white leather with jade appointments	SB
K8,K8A,K8B	53,60	White vinyl and white leather with gold appointments	SB
LB,LBA	60	Blue all vinyl	FWA
LD,LDA	60	Red all vinyl	FWA
LR,LRA	60	Jade all vinyl	FWA
LU,LUA	60	Tan all vinyl	FWA
MU,MUA,MUB	60	Saddle vinyl and tan leather	SB

1976 VINYL ROOF COVER CODES

AS LISTED ON CERTIFICATION LABEL

CODE	BODY TYPE	GRAIN and TYPE of ROOF	COLOR
		LINCOLN (D)	
FA	53,60	Normandie–full	Black
FB	53,60	Normandie–full	Blue
FD	53,60	Normandie–full	Red
FJ	53,60	Normandie–full	Taupe
FM	53,60	Normandie–full	Jade (light)
FP	53,60	Normandie–full	Silver
FQ	53,60	Normandie–full	Gold flare
FR	53,60	Normandie–full	Jade (dark)
FS	53,60	Normandie–full	Silver blue
FV	53,60	Normandie–full	Cream
FW	53,60	Normandie–full	White
FY	53,60	Normandie–full	Gold
FZ	53,60	Normandie–full	Saddle
GS	53	Odense–full	Silver
JA	53,60	Cayman–1/2	Black
LA	60	Normandie–1/2	Black
LB	60	Normandie–1/2	Blue
LD	60	Normandie–1/2	Red
LJ	60	Normandie–1/2	Taupe
LP	60	Normandie–1/2	Silver
LR	60	Normandie–1/2	Jade
LS	60	Normandie–1/2	Silver blue
LW	60	Normandie–1/2	White
LY	60	Normandie–1/2	Gold
LZ	60	Normandie–1/2	Saddle
MA	53,60	Normandie–coach	Black
MB	53,60	Normandie–coach	Blue
MD	53,60	Normandie–coach	Red
MJ	53,60	Normandie–coach	Taupe
MM	53,60	Normandie–coach	Jade (light)
MP	53,60	Normandie–coach	Silver
MQ	53,60	Normandie–coach	Gold flare
MR	53,60	Normandie–coach	Jade (dark)
MS	53,60	Normandie–coach	Silver blue
MV	53,60	Normandie–coach	Cream
MW	53,60	Normandie–coach	White
MY	53,60	Normandie–coach	Gold
MZ	53,60	Normandie–coach	Saddle
TE	53,60	Valino–coach	Gray
VE	53,60	Valino–full	Gray

COPYRIGHT © 1986 — FORD MOTOR COMPANY — DEARBORN, MICHIGAN

1973/79 LINCOLN-MERCURY CARS

BODY TYPE	R/L	PART NUMBER LESS SUFFIX	TRIM CODES, COLORS and APPLICABLE PART NUMBER SUFFIXES													QTY.
		TRIM CODES ▶	SECOND CHARACTER of TRIM CODE									ALL CODES	ALL CODES	OTHER	OTHER	
			-B or Q	-D or N	-E	-G or 5	-R	-U	-V	-Y or 8	-Z or 9					
		COLORS ▶	BLUE	RED	SILVER BLUE	GREEN	JADE	TAN	CREAM	GOLD	SADDLE	BLACK	WHITE	SEE NOTE	SEE NOTE	
02344-5		PANEL (COWL TRIM)														
Notes:		◊ Taupe ♦ Gray														
D	R	D5VY 6002344		D	E			★	★		★		C		◊★		1
	L	D5VY 6002345		D	E			★	★		★		C		◊★		1
	R	D6VY 6002344													♦A2P		1
	L	D6VY 6002345													♦A2P		1
04104-5		VISOR ASSY.														
Notes:		● With vinyl edge bead, ⊕ Without vinyl edge bead, ◊ Taupe, ♦ Gray														
		INCLUDES ARM and BRACKET														
D - - w/illuminated vanity mirror	●R	D5VY 6004104		★	★			★	★		★		★	★	◊★		1
	●L	D5VY 6004105		★	★			★	★		★		★	★	◊★		1
	⊕R	D6VY 6004104		★	A0D			★	★		★		★	A9W	◊★	♦B9P	1
	⊕L	D6VY 6004105		★	A0D			★	★		★		A4A	A9W	◊★	♦★	1
04282		PAD (INSTRUMENT PANEL UPPER)														
Notes:		◊ Taupe, ♦ Gray														
D		D5VY 6004282		★	F			J	★		★		★		♦★	◊★	1
24140-1		REST (ARM) - Incl. attaching parts														
Notes:		◊ Taupe, ♦ Gray														
D(53) - - front door	R	D5VY 5324140		★	F			★	★		★		C		◊★		1
	R	D6VY 5324140												★	♦A8P		1
- - rear door	R	D5VY 5327540		★	F			A	★		★		C		◊★		1
	L	D5VY 5327541		★	F			★	★		★		C		◊★		1
	R	D6VY 5327540												A	♦A8P		1
	L	D6VY 5327541												A	♦A8P		1
D(60) - - door	R	D5VY 6024140		★	F			★	★		★		★		◊★		1
	R	D6VY 6024140												A	♦A8P		1
- - quarter	R	D5VY 6031600		★	F			★	★		★		C		◊★		1
	L	D5VY 6031601		★	F			★	★		★		C		◊★		1
	R	D6VY 6031600												★	♦A8P		1
	L	D6VY 6031601												★	♦A8P		1
24346-7		PANEL (CENTER BODY PILLAR INSIDE FINISH)														
Notes:		$ Paint to match														
D(53) - - upper	L	D5VY 5324357													$A		1
24356-7		Refer to group 24346-7														
27540-1		Refer to group 24140-1														

BODY TYPE	R/L	PART NUMBER LESS SUFFIX	TRIM CODES, COLORS and APPLICABLE PART NUMBER SUFFIXES													QTY.
		TRIM CODES ▶		SECOND CHARACTER of TRIM CODE									ALL CODES	ALL CODES	OTHER	OTHER	
				-B or Q	-D or N	-E	-G or 5	-R	-U	-V	-Y or 8	-Z or 9					
		COLORS ▶		BLUE	RED	SILVER BLUE	GREEN	JADE	TAN	CREAM	GOLD	SADDLE	BLACK	WHITE	SEE NOTE	SEE NOTE	
281A74-5		COVER (QUARTER LATCH PILLAR FLANGE)															
Notes:		◊ Taupe ♦ Gray															
D(60)	R	D5VY 60281A74		★	G			★	★		★		E		◊★		1
	L	D5VY 60281A75		★	G			★	★		★		E		◊★		1
	R	D6VY 60281A74												A	♦A4P		1
	L	D6VY 60281A75												A	♦A4P		1
281A84		Refer to group 537A02															
31012-3		PANEL ASSY. (QUARTER TRIM)															
Notes:		◊ Taupe, ♦ Gray															
D(53)	R	D5VY 5331012		★	A			★	★		★		H		◊★		1
	L	D5VY 5331013		★	★			★	★		★		★		◊★		1
	R	D6VY 5331012												A	♦A4P		1
	L	D6VY 5331013												A	♦A4P		1
D(60)	R	D5VY 6031012		★	★			★	★		★		D		◊★		1
	L	D5VY 6031013		★	★			★	★		★		D		◊★		1
	R	D6VY 6031012												A	♦A6P		1
	L	D6VY 6031013												A	♦A6P		1
31600-1		Refer to group 24140-1															

BODY TYPE	R/L	PART NUMBER	DESCRIPTION	QTY
45026		COVER (SPARE TIRE)		
D		D5LY 6545026-J	Gray-carpet	1
46668		PANEL (PACKAGE TRAY TRIM)		
D(53)		D5VY 5346668-D	Paint to match	1

BODY TYPE	R/L	PART NUMBER	DESCRIPTION	QTY
60032		BACK KIT (REAR SEAT)		
D(Town Car and Town Coupe)		D5VY 5360032-B		1

COPYRIGHT © 1986— FORD MOTOR COMPANY —DEARBORN, MICHIGAN

1976 TRIM SCHEME CODES

AS LISTED ON CERTIFICATION LABEL

CODE	BODY TYPE	DESCRIPTION OF TRIM SCHEME	● TYPE OF SEAT

FOR MATERIAL IDENTIFICATION
REFER TO SALESMAN'S
COLOR AND UPHOLSTERY SELECTIONS GUIDE

THE SOFT TRIM SECTION INCLUDES ONLY THOSE ITEMS WHICH WERE AVAILABLE FOR SERVICE AT THE TIME OF PRINTING. ITEMS NOT SHOWN OR INDICATED WITH A BLACK STAR (★) IN THE CATALOG MUST BE IMPROVISED OR PROCURED LOCALLY.

●FW–Full width seat without center arm rest, FWA–Full width seat with center arm rest B–Bucket seats SB–Split Bench seat

F (COUGAR)

Note 1 For replacement of Door and Quarter Trim Panels (23942–3 and 31012–3) refer to this code in the 1976 Soft Trim Section. For replacement of Cushion Cover (62900 and 63804) and Back Covers (64416–7 and 66600), contact your Service Representative. All other parts are included in the 1976 Soft Trim Section.

AA,AAB	65	Black all vinyl	B
AB,ABB	65	Blue all vinyl	B
AD,ADB	65	Red all vinyl	B
AG,AGB	65	Green all vinyl	B
AN,ANB	65	White all vinyl with red appointments	B
AQ,AQB	65	White all vinyl with blue appointments	B
AU,AUB	65	Tan vinyl and saddle vinyl	B
AV,AVB	65	Cream vinyl and gold vinyl	B
AW,AWB	65	White all vinyl with black appointments	B
A2,A2B	65	White all vinyl with jade appointments	B
A5,A5B	65	White all vinyl with green appointments	B
A7,A7B	65	White all vinyl with aqua appointments	B
A8,A8B	65	White all vinyl with gold appointments	B
A9,A9B	65	White all vinyl with saddle appointments	B
BA,BAB	65	Black all vinyl	SB
BB,BBB	65	Blue all vinyl	SB
BD,BDB	65	Red all vinyl	SB
BG,BGB	65	Green all vinyl	SB
BN,BNB	65	White all vinyl with red appointments	SB
BQ,BQB	65	White all vinyl with blue appointments	SB
BU,BUB	65	Tan vinyl and saddle vinyl	SB
BV,BVB	65	Cream vinyl and gold vinyl	SB
BW,BWB	65	White all vinyl with black appointments	SB
B2,B2B	65	White all vinyl with jade appointments	SB
B5,B5B	65	White all vinyl with green appointments	SB
B7,B7B	65	White all vinyl with aqua appointments	SB
B8,B8B	65	White all vinyl with gold appointments	SB
B9,B9B	65	White all vinyl with saddle appointments	SB
CB,CBA,CBB,CBC	65	Blue vinyl and blue cloth	SB
CD,CDB,CDC	65	Red vinyl and red cloth	SB
CD1	65	(Code CD–see Note 1)	
CG,CGB	65	Green vinyl and green cloth	SB
CG1	65	(Code CG–see Note 1)	
CU,CUB	65	Tan vinyl and saddle cloth	SB
CU1	65	(Code CU–see Note 1)	
CY,CYB,CYC	65	Gold vinyl and gold cloth	SB
CY1	65	(Code CY–see Note 1)	
DA,DAB	65	Black all leather	SB
DB,DBB	65	Blue all leather	SB
DD,DDB	65	Red all leather	SB
DG,DGB	65	Green all leather	SB

COPYRIGHT © 1986 — FORD MOTOR COMPANY — DEARBORN, MICHIGAN

1976 TRIM SCHEME CODES

AS LISTED ON CERTIFICATION LABEL

FOR MATERIAL IDENTIFICATION
REFER TO SALESMAN'S
COLOR AND UPHOLSTERY SELECTIONS GUIDE

THE SOFT TRIM SECTION INCLUDES ONLY THOSE ITEMS WHICH WERE AVAILABLE FOR SERVICE AT THE TIME OF PRINTING. ITEMS NOT SHOWN OR INDICATED WITH A BLACK STAR (★) IN THE CATALOG MUST BE IMPROVISED OR PROCURED LOCALLY

●FW–Full width seat without center arm rest, FWA–Full width seat with center arm rest B–Bucket seats SB–Split Bench seat

F (COUGAR) — Cont'd

CODE	BODY TYPE	DESCRIPTION OF TRIM SCHEME	● TYPE OF SEAT
DK,DKB	65	Aqua all leather	SB
DN,DNB	65	White all leather with red appointments	SB
DQ,DQB	65	White all leather with blue appointments	SB
DU,DUB	65	Tan leather and saddle leather	SB
DV,DVB	65	Cream leather and gold leather	SB
DW,DWB	65	White all leather with black appointments	SB
D2,D2B	65	White all leather with jade appointments	SB
D5,D5B	65	White all leather with green appointments	SB
D7,D7B	65	White all leather with aqua appointments	SB
D8,D8B	65	White all leather with gold appointments	SB
D9,D9B	65	White all leather with saddle appointments	SB
EA,EAB	65	Black all vinyl	FW
EB,EBB	65	Blue all vinyl	FW
ED,EDB	65	Red all vinyl	FW
EG,EGB	65	Green all vinyl	FW
FK,FKB	65	Aqua vinyl and aqua cloth	SB
GB	65	Blue vinyl and blue cloth	B
GD	65	Red vinyl and red cloth	B
GY	65	Gold vinyl and gold cloth	B
HB	65	Blue all vinyl	B
HD	65	Red all vinyl	B
HK	65	Aqua all vinyl	B
HY	65	Gold all vinyl	B

1976 VINYL ROOF COVER CODES

AS LISTED ON CERTIFICATION LABEL

CODE	BODY TYPE	GRAIN and TYPE of ROOF	COLOR
GA	65	Odense–full	Black
GB	65	Odense–full	Blue
GD	65	Odense–full	Red
GG	65	Odense–full	Green
GP	65	Odense–full	Silver
GU	65	Odense–full	Tan
GW	65	Odense–full	White
GY	65	Odense–full	Gold
LV	65	Odense – 1/2	Cream
NA	65	Odense–1/2	Black
NB	65	Odense–1/2	Blue
ND	65	Odense–1/2	Red
NG	65	Odense–1/2	Green
NP	65	Odense–1/2	Silver
NR	65	Odense–1/2	Jade
NU	65	Odense–1/2	Tan
NW	65	Odense–1/2	White
NY	65	Odense–1/2	Gold

COPYRIGHT © 1986 — FORD MOTOR COMPANY — DEARBORN, MICHIGAN

1973/79 LINCOLN-MERCURY CARS

BODY TYPE	R/L	PART NUMBER LESS SUFFIX	TRIM CODES, COLORS and APPLICABLE PART NUMBER SUFFIXES														Q T Y.
		TRIM CODES ➧		SECOND CHARACTER of TRIM CODE									ALL CODES	ALL CODES	OTHER	OTHER	
				-B or Q	-D or N	-E	-G or 5	-R	-U	-V	-Y or 8	-Z or 9					
		COLORS ➧		BLUE	RED	SILVER BLUE	GREEN	JADE	TAN	CREAM	GOLD	SADDLE	BLACK	WHITE	SEE NOTE	SEE NOTE	
02344-5		PANEL (COWL TRIM)															
Notes:		● Use saddle, ☆ Aqua, $ Jade, @ Use gold															
F	R	D70Z 6502344		A9B	A2D		★	A6R	●	@	★	A1Z	★		☆★		1
	L	D70Z 6502345		A9B	A2D		★	A6R	●	@	★	A1Z	★		☆★		1
04104		VISOR ASSY.															
Notes:		⊕ Use with or without non-illuminated vanity mirror-refer to group 17A679 in Chassis Section for mirror,															

LESS ARM and BRACKET

F - - w/non-illuminated vanity mirror	⊕R/L	D60Z 6504104		B	E					★		C		H	★		2
04282		PAD (INSTRUMENT PANEL UPPER)															
F		D40Z 6504282		A			★	★		★	★	★	D				1
		D40Y 6504282			H												1
13086		MAT (FRONT FLOOR)															
Notes:		@ Brown															

TWIN (Less carpet insert)

F - - rubber		D60Z 6213086		B	F								A			@C	
-Ford Oval		D70Z 6213086									A						1
13106		MAT (REAR FLOOR)															
Notes:		@ Brown															

TWIN (Less carpet insert)

F - - rubber-		D6FZ 6213106		B	E		F						A		@C		1
		D7FZ 6213106									A						1

BODY TYPE	R/L	PART NUMBER LESS SUFFIX	TRIM CODES, COLORS and APPLICABLE PART NUMBER SUFFIXES														Q T Y.
		TRIM CODES ➧		SECOND CHARACTER of TRIM CODE									ALL CODES	ALL CODES	OTHER	OTHER	
				-B or Q	-D or N	-E	-G or 5	-R	-U	-V	-Y or 8	-Z or 9					
		COLORS ➧	LGTH. (Inches)	BLUE	RED	SILVER BLUE	GREEN	JADE	TAN	CREAM	GOLD	SADDLE	BLACK	WHITE	SEE NOTE	SEE NOTE	
24100-1		PAD (ARM REST) - Incl. attaching parts															
F - - door	R	D3DZ 6224100	11	J			★		★				★				1
	L	D3DZ 6224101	11	B			★		E				A				1
	R	D4WZ 6524100	11		A					★	★			★			1
	L	D4WZ 6524101	11		A					★	★			★			1
F - - quarter	R/L	D3DZ 6224100	8 3/4	D			★		V				F				2
		D40Z 6524100	8 3/4									B					2
	R/L	D4WY 6531718	8 3/4		K					★	★			★			2
24144		BASE (ARM REST)-Incl. attaching parts															
Notes:		⊕ Chrome															
F - - door	R/L	D1AZ 5724144													⊕H		2
	R/L	D3DZ 6224144		B									★				2
	R/L	D6DZ 6224144			C6D						★			A			2
	R/L	D40Z 6524144										B					2
31718		Refer to group 24100-1															

1973/79 LINCOLN-MERCURY CARS

BODY TYPE	R/L	PART NUMBER	DESCRIPTION	QTY
45026	COVER (SPARE TIRE)			
F – – with 14" wheel		D50Z 6545026-A	Gray-cut pile carpet	1
– – with 15" wheel		D5LY 6545026-J	Gray-cut pile carpet	1
45422-3	COVER (LUGGAGE COMPARTMENT SIDE)			
F	R	D4GY 6545422-A	Gray-lining board	1

BODY TYPE	R/L	PART NUMBER LESS SUFFIX	TRIM CODES, COLORS and APPLICABLE PART NUMBER SUFFIXES														QTY.
		TRIM CODES ▶		SECOND CHARACTER of TRIM CODE									ALL CODES	ALL CODES	OTHER	OTHER	
				-B or Q	-D or N	-E	-G or 5	-R	-U	-V	-Y or 8	-Z or 9					
		COLORS ▶	LGTH. (Inches)	BLUE	RED	SILVER BLUE	GREEN	JADE	TAN	CREAM	GOLD	SADDLE	BLACK	WHITE	SEE NOTE	SEE NOTE	
46668	PANEL (PACKAGE TRAY TRIM)																
Notes:	‡ Use w/or w/o speaker, $ Paint to match																
F	‡	D40Z 6546668													$N		1
519A02	HEADLINING ROOF SLIDING PANEL																
F – – w/sliding roof-glass		D5WZ 65519A02		B	F		★			★	★	★	★				1

COPYRIGHT © 1986 — FORD MOTOR COMPANY — DEARBORN, MICHIGAN

1976 SOFT TRIM SCHEME CODES

AS LISTED ON CERTIFICATION LABEL

FOR MATERIAL IDENTIFICATION
REFER TO SALESMAN'S
COLOR AND UPHOLSTERY SELECTIONS GUIDE

THE SOFT TRIM SECTION INCLUDES ONLY THOSE ITEMS WHICH WERE AVAILABLE FOR SERVICE AT THE TIME OF PRINTING, ITEMS NOT SHOWN OR INDICATED WITH A BLACK STAR (★) IN THE CATALOG MUST BE IMPROVISED OR PROCURED LOCALLY.

● FW–Full width seat without center arm rest, FWA–Full width seat with center arm rest, B–Bucket seats

Monarch (G)

CODE	BODY TYPE	DESCRIPTION OF TRIM SCHEME	● TYPE OF SEAT
AA,AAA	54H,66H	Black all vinyl	B
AD,ADA	54H,66H	Red all vinyl	B
AE,AEA	54H,66H	Silver blue all vinyl	B
AN,ANA	54H,66H	White all vinyl with red appointments	B
AU,AUA	54H,66H	Tan all vinyl	B
AW,AWA	54H,66H	White all vinyl with black appointments	B
A4,A4A	54H,66H	White all vinyl with tan appointments	B
A7,A7A	54H,66H	White all vinyl with silver blue appointments	B
BD	54K,66K	Red vinyl and red cloth	FWA
BE	54K,66K	Silver blue vinyl and silver blue cloth	FWA
BR	54K,66K	Jade vinyl and jade cloth	FWA
BS,BSA	54K,66K	Gray vinyl and gray cloth	FWA
BU	54K,66K	Tan vinyl and tan cloth	FWA
CA	54K,66K	Black all vinyl	B
CD	54K,66K	Red all vinyl	B
CE	54K,66K	Silver blue all vinyl	B
CN	54K,66K	White all vinyl with red appointments	B
CR	54K,66K	Jade all vinyl	B
CS	54K,66K	Gray all vinyl	B
CU	54K,66K	Tan all vinyl	B
CW	54K,66K	White all vinyl with black appointments	B
C4	54K,66K	White all vinyl with tan appointments	B
C5	54K,66K	White all vinyl with jade appointments	B
C7	54K,66K	White all vinyl with silver blue appointments	B
DD	54K,66K	Red vinyl and red cloth	B
DE	54K,66K	Silver blue vinyl and silver blue cloth	B
DU	54K,66K	Tan vinyl and tan cloth	B
EA,EAA	54H,66H	Black all vinyl	FWA
ED,EDA	54H,66H	Red all vinyl	FWA
EE,EEA	54H,66H	Silver blue all vinyl	FWA
EN,ENA	54H,66H	White all vinyl with red appointments	FWA
EU,EUA	54H,66H	Tan all vinyl	FWA
EW,EWA	54H,66H	White all vinyl with black appointments	FWA
E4,E4A	54H,66H	White all vinyl with tan appointments	FWA
E7,E7A	54H,66H	White all vinyl with silver blue appointments	FWA
FD	54K,66K	Red all leather	B
FE	54K,66K	Silver blue all leather	B
FN	54K,66K	White all leather with red appointments	B
FR	54K,66K	Jade all leather	B
FS	54K,66K	Gray all leather	B
FU	54K,66K	Tan all leather	B
FW	54K,66K	White all leather with black appointments	B
F4	54K,66K	White all leather with tan appointments	B
F5	54K,66K	White all leather with jade appointments	B
F7	54K,66K	White all leather with silver blue appointments	B
GA	54K,66K	Black all vinyl	FWA
GD	54K,66K	Red all vinyl	FWA
GE	54K,66K	Silver blue all vinyl	FWA
GN	54K,66K	White all vinyl with red appointments	FWA
GR	54K,66K	Jade all vinyl	FWA

COPYRIGHT © 1986 — FORD MOTOR COMPANY — DEARBORN, MICHIGAN

1976 SOFT TRIM SCHEME CODES

AS LISTED ON CERTIFICATION LABEL

FOR MATERIAL IDENTIFICATION
REFER TO SALESMAN'S
COLOR AND UPHOLSTERY SELECTIONS GUIDE

THE SOFT TRIM SECTION INCLUDES ONLY THOSE ITEMS WHICH WERE AVAILABLE FOR SERVICE AT THE TIME OF PRINTING, ITEMS NOT SHOWN OR INDICATED WITH A BLACK STAR (★) IN THE CATALOG MUST BE IMPROVISED OR PROCURED LOCALLY.

● FW–Full width seat without center arm rest, FWA–Full width seat with center arm rest, B–Bucket seats

Monarch (G) — Cont'd

CODE	BODY TYPE	DESCRIPTION OF TRIM SCHEME	● TYPE OF SEAT
GS	54K,66K	Gray all vinyl	FWA
GU	54K,66K	Tan all vinyl	FWA
GW	54K,66K	White all vinyl with black appointments	FWA
G4	54K,66K	White all vinyl with tan appointments	FWA
G5	54K,66K	White all vinyl with jade appointments	FWA
G7	54K,66K	White all vinyl with silver blue appointments	FWA
HD,HDA	54H,66H	Cranberry vinyl and cranberry cloth	FWA
HE,HEA	54H,66H	Silver blue vinyl and silver blue cloth	FWA
HU,HUA	54H,66H	Tan vinyl and tan cloth	FWA
JD,JDA,JDB,	54H,66H	Red all vinyl	FW
JDC	54H,66H	Red all vinyl	FW
JE,JEA,JEB,	54H,66H	Silver blue all vinyl	FW
JEC	54H,66H	Silver blue all vinyl	FW
JU,JUA,JUB,	54H,66H	Tan all vinyl	FW
JUC	54H,66H	Tan all vinyl	FW
LD	54,66	Red all leather	FWA
LE	54,66	Silver blue all leather	FWA
LN	54,66	White all leather with red appointments	FWA
LU	54,66	Tan all leather	FWA
LW	54,66	White all leather with black appointments	FWA
L4	54,66	White all leather with tan appointments	FWA
L7	54,66	White all leather with silver blue appointments	FWA
MD	54K	Red all leather	B
MS	54K	Gray all leather	B
M5	54K	White all leather with jade appointments	B
M9	54K	White all leather with tobacco appointments	B
ND,NDA	54K	Red vinyl and red cloth	B
NR,NRA	54K	Jade vinyl and jade cloth	B
NS,NSA	54K	Gray vinyl and gray cloth	B
PA	66H	Black all vinyl	B
PN	66H	White all vinyl with red appointments	B
PU,PUA	66H	Tan all vinyl	B
P4	66H	White all vinyl with tan appointments	B
QD	54K	Red vinyl and red cloth	FWA
QR	54K	Jade vinyl and jade cloth	FWA
QS	54K	Gray vinyl and gray cloth	FWA
RD	54K	Red all leather	FWA
RS	54K	Gray all leather	FWA
R5	54K	White all leather with jade appointments	FWA
R9	54K	White all leather with tobacco appointments	FWA
SD	54H,66H	Red all vinyl	FWA
SE	54H,66H	Silver blue all vinyl	FWA
SU	54H,66H	Tan all vinyl	FWA
TD	54H,66H	Red vinyl and red cloth	FWA
TE	54H,66H	Silver blue vinyl and silver blue cloth	FWA
TU	54H,66H	Tan vinyl and tan cloth	FWA
UD	54H,66H	Red all vinyl	B
UE	54H,66H	Silver blue all vinyl	B
UU	54H,66H	Tan all vinyl	B

1976 VINYL ROOF COVER CODES

AS LISTED ON CERTIFICATION LABEL

CODE	BODY TYPE	GRAIN and TYPE of ROOF	COLOR
		Monarch (G)	
FD	54K	Normandie–full	Red
FM	54K	Normandie–full	Red
FR	54K	Normandie–full	Jade
FW	54K	Normandie–full	White
FZ	54K	Normandie–full	Saddle
GA	54,66	Odense–full	Black
GD	54,66	Odense–full	Red
GG	54,66	Odense–full	Green
GP	54,66	Odense–full	Silver
GS	54,66	Odense–full	Silver blue
GU	54,66	Odense–full	Tan
GW	54,66	Odense–full	White
LQ	66	Normandie–1/2	Gold flare
NA	66	Odense–1/2	Black
ND	66	Odense–1/2	Red
NG	66	Odense–1/2	Green
NP	66	Odense–1/2	Silver
NS	66	Odense–1/2	Silver blue
NU	66	Odense–1/2	Tan
NW	66	Odense–1/2	White
VE	54	Valino–full	Gray

COPYRIGHT © 1986 — FORD MOTOR COMPANY — DEARBORN, MICHIGAN

1973/79 LINCOLN-MERCURY CARS

BODY TYPE	R/L	PART NUMBER LESS SUFFIX	TRIM CODES, COLORS and APPLICABLE PART NUMBER SUFFIXES															QTY.
		TRIM CODES ➧		SECOND CHARACTER of TRIM CODE									ALL CODES	ALL CODES	OTHER	OTHER		
				-B or Q	-D or N	-E	-G or 5	-R	-U	-V	-Y or 8	-Z or 9						
		COLORS ➧	LGTH (inches)	BLUE	RED	SILVER BLUE	GREEN	JADE	TAN	CREAM	GOLD	SADDLE	BLACK	WHITE	SEE NOTE	SEE NOTE		
02344-5	PANEL (COWL TRIM)																	
Notes:	◊ Gray																	
G	R	D5DZ 6602344			D	★			★			★	★				1
	L	D5DZ 6602345			D	★			★			★	★				1
	R	D6DZ 6602344						A6R							◊A2P		1
	L	D6DZ 6602345						★							◊★		1
04104-5	VISOR ASSY.																	
Notes:	⊕ Use with or without non-illuminated vanity mirror-refer to group 17A679 in Chassis Section for mirror, ▲ Tobacco, ◊ Gray, ● Matching sun visor (less vanity mirror) for R.H. sun visor which includes illuminated vanity mirror																	
LESS ARM and BRACKET																		
G - - w/non-illuminated vanity mirror	⊕R/L	D5DZ 6604104			R	S			P				★				2
	⊕R/L	D6DZ 6604104						B5R						★	▲★	◊B9P	2
INCLUDES ARM and BRACKET																		
G - - w/illuminated vanity mirror	R	D5DZ 6604104			H	★			★				★		▲★		1
	R	D6DZ 6604104						A5R						★	◊A9P		1
04282	PAD (INSTRUMENT PANEL UPPER)																	
Notes:	◊ Gray, ▲ Tobacco																	
G		D6DZ 6604282			A3D	A2P		A5R	A5U				★		▲★	◊★	1
13086	MAT (FRONT FLOOR)																	
TWIN (Less carpet insert)																		
G - - rubber		D60Z 6213086		B	F		★						A				1
		D70Z 6213086									A						1
13106	MAT (REAR FLOOR)																	
Notes:	@ Brown																	
TWIN (Less carpet insert)																		
G - - rubber -plain		D6FZ 6213106		B	E		F				★		A		@C		1
24140-1	REST (ARM)-Incl. attaching parts																	
Notes:	† Use with trim codes beginning with A,E,H,J,S,T or U, ◊ Gray																	
G(54H) - - front door	†R	D5FZ 6224140	16		★	★			H				F	★			1
	†L	D5FZ 6224141	16		★	C			F				D				1
	†L	D6DZ 6224141	16											A6W			1
G(54) - - rear door	R/L	D5DZ 5427540	12 1/2		D	★			★				★				2
	R/L	D6DZ 5427540	12 1/2					B6R						★	◊★		2
G(66) - - door	L	D4ZZ 6024141	25 3/4		★	★		★	★				★	★	◊★		1
	R	D6ZZ 6024140	25 3/4					B6R						★	◊B4P		1
	R	D5FZ 6224140	16		★	★			H				F	★			1
	L	D5FZ 6224141	16		★	C			F				D				1
	L	D6DZ 6224141	16											A6W			1
27540-1	Refer to group 24140-1																	

BODY TYPE	R/L	PART NUMBER LESS SUFFIX	TRIM CODES, COLORS and APPLICABLE PART NUMBER SUFFIXES														QTY.
		TRIM CODES ▶		SECOND CHARACTER of TRIM CODE									ALL CODES	ALL CODES	OTHER	OTHER	
				-B or Q	-D or N	-E	-G or 5	-R	-U	-V	-Y or 8	-Z or 9					
		COLORS ▶		BLUE	RED	SILVER BLUE	GREEN	JADE	TAN	CREAM	GOLD	SADDLE	BLACK	WHITE	SEE NOTE	SEE NOTE	
31012-3	PANEL (QUARTER TRIM)																
Notes:	◊ Gray, ● Tobacco																
G(54)	R	D6DZ 5431012			★	★		★	★				★	★	◊★		1
	L	D6DZ 5431013			★	★		★	★				★	★	◊A4P		1
G(66) - - w/integral arm rest - "Before 5/76"	R	D5DZ 6631012			★	★		★	★				★	★	◊★		1
	L	D5DZ 6631013			★	★		★	★				★	★	★		1
"From 5/76"	R	D7DZ 6631012			A2D	★		★	★				★	★	◊★		1
	L	D7DZ 6631013			★	★		A6R	★				★	★	◊★		1

BODY TYPE	R/L	PART NUMBER	DESCRIPTION	QTY
45026	COVER (SPARE TIRE)			
G- - w/collapsible spare tire		D5DZ 6645026-D	Gray carpet	1
45422-3	COVER (LUGGAGE COMPARTMENT SIDE)			
G - - w/shelf mounted spare tire	R	D5DZ 6645422-A	Gray	1
	L	D5DZ 6645423-A	Gray	1
45455	COVER (LUGGAGE COMPARTMENT FLOOR)			
G - - w/shelf mounted spare tire		D5DZ 6645455-C	Gray carpet	1
45494	Refer to group 45455			
45522-3	LINING BOARD (LUGGAGE COMPARTMENT REAR)			
G "Before 8/76"	R	D5DZ 6645522-A	Gray	1
"From 8/76"	R	D7DZ 6645522-A3P	Gray	1
	L	D7DZ 6645523-A3P	Gray	1
46668	PANEL (PACKAGE TRAY TRIM)			
Notes:	‡ Use with or without speakers			
G(54)	‡	D5DZ 5446668-E	Paint to match	1
G(66)	‡	D5DZ 6646668-B	Paint to match	1
BODY TYPE	R/L	PART NUMBER	DESCRIPTION	QTY
52018-9	COVER (ROOF SIDE REAR TRIM)			
G(66) "From 5/76"	R	D6DZ 6652018-A2U	Paint to match	1
	L	★	Paint to match	1
60032	BACK KIT (REAR SEAT)			
G(54)		D6DZ 5466800-A	Pad-Use w/all trim codes beginning with M,N,Q or R	1
60136-7	BACK KIT (FRONT SEAT)			
G	R/L	D6DZ 6664810-C	Pad-full width seat-w/center arm rest-Use w/trim codes beginning with E	2
	L	D7DZ 5461019-A	Frame-bucket seat	1
	R/L	D6DZ 6664810-A	Pad-bucket seat	2
	R/L	D6DZ 6664810-C	Pad-full width seat-w/center arm rest-use w/trim codes beginning with E	2
61018-9	Refer to group 60137-7			

COPYRIGHT © 1986— FORD MOTOR COMPANY —DEARBORN, MICHIGAN

1976 TRIM SCHEME CODES

AS LISTED ON CERTIFICATION LABEL

FOR MATERIAL IDENTIFICATION
REFER TO SALESMAN'S
COLOR AND UPHOLSTERY SELECTIONS GUIDE

THE SOFT TRIM SECTION INCLUDES ONLY THOSE ITEMS WHICH WERE AVAILABLE FOR SERVICE AT THE TIME OF PRINTING. ITEMS NOT SHOWN OR INDICATED WITH A BLACK STAR (★) IN THE CATALOG MUST BE IMPROVISED OR PROCURED LOCALLY.

● B–Bucket seats

J (CAPRI)

CODE	BODY TYPE	DESCRIPTION OF TRIM SCHEME	● TYPE OF SEAT
AE	64D,P,S,T	Black all vinyl	B
A3	64T	Black vinyl and black cloth	B
CE	64T	Cloud all vinyl	B
HE	64P,T	Red and black all vinyl	B
H3	64P,T	Red vinyl and red cloth	B
JE	64D,P	Brown all vinyl	B
KE	64D,P,T	Tan all vinyl	B
K3	64T	Tan vinyl and tan cloth	B
LE	64D,P	Saddle all vinyl	B
ME	64D,P,T	Green all vinyl	B
M3	64T	Green vinyl and green cloth	B
NE	64D,P	Orange all vinyl	B
PE	64D	White and brown all vinyl	B
Q3	64S	Black and gold all vinyl	B
TE	64P	White and saddle all vinyl	B
UE	64P,T	Red and black all vinyl	B
WE	64D,P,T	Tan all vinyl	B
W3	64T	Tan vinyl and tan cloth	B

COPYRIGHT © 1986 — FORD MOTOR COMPANY — DEARBORN, MICHIGAN

1973/79 LINCOLN-MERCURY CARS

BODY TYPE	R/L	PART NUMBER LESS SUFFIX	TRIM CODES, COLORS and APPLICABLE PART NUMBER SUFFIXES													QTY.
		TRIM CODES ▶	FIRST CHARACTER of TRIM CODE												OTHER	
			-A or U	-C	-J1	K-W	L-T	-M	-N							
		COLORS ▶	BLACK	CLOUD (BLUE)	DARK BROWN	TAN	SADDLE	GREEN	ORANGE							
02344-5	**PANEL (COWL TRIM)**															
J(64T)	R	D5RY 6402344	★	A		★										1
	L	D5RY 6402345	★	A		★										1
04105	**VISOR**															
J	L	D8RZ 6404105	★			★	★								C(black and parchment)	1
04282	**PAD (INSTRUMENT PANEL UPPER)**															
J "Before 8/1/75"		D4RY 6204282	D			B	★									1
		D5RY 6404282		A												1
"From 8/1/75"		D4RY 6204282	D		★	★										1
13000-1	**CARPET (FRONT FLOOR)**															
J(64D) - - w/manual trans.		D5RY 6413000	W				T									1
		D6RY 6413000				D										1
- - w/automatic trans.		D5RY 6413000	U			★	T									1
J(64P) "Before 8/1/75"		D5RY 6413000	R			★	P									1
"From 8/1/75"		D6RY 6413000	C		★											1
J(64S) - - w/manual trans.		D6RY 6413000	C													1
- - w/automatic trans.		D6RY 6413000	D													1
J(64T)	L	D5RY 6413001	★	B		★										1
	R	D6RY 6413000	F													1
13046	**CARPET (REAR FLOOR) - Serviced only in assy-group 13000-1**															

BODY TYPE	R/L	PART NUMBER LESS SUFFIX	TRIM CODES AND APPLICABLE PART NUMBER SUFFIXES														QTY
23942-3	**PANEL ASSY. (FRONT DOOR TRIM)**																
		TRIM CODES ▶	AE	A3	CE	HE	KE	K3									
J(64T)	R	D5RY 6423942	★	★	J	★	★	★									1
	L	D5RY 6423943	★	★	J	★	★	★									1

BODY TYPE	R/L	PART NUMBER LESS SUFFIX	TRIM CODES, COLORS and APPLICABLE PART NUMBER SUFFIXES													QTY.
		TRIM CODES ▶	FIRST CHARACTER of TRIM CODE												OTHER	
			-A or U	-C	-J1	K-W	L-T	-M	-N							
		COLORS ▶	BLACK	CLOUD (BLUE)	DARK BROWN	TAN	SADDLE	GREEN	ORANGE							
24140-1	**REST (ARM) - Incl. attaching parts**															
J - - door	R	D4RY 6224140	A			★	★									1
	L	D4RY 6224141	A			★	★									1
J - - quarter	R	D5RY 6431600	★	A		★										1
	L	D5RY 6431601	★	A		★										1

BODY TYPE	R/L	PART NUMBER LESS SUFFIX	TRIM CODES AND APPLICABLE PART NUMBER SUFFIXES														QTY
31012-3	**PANEL ASSY. (QUARTER TRIM)**																
		TRIM CODES ▶	AE	A3	CE	C3	HE	KE	K3	ME	UE	WE	W3				
J(64T)	R	D5RY 6431012	★	★	K	★	★	★	★	★	★	★	★				1
	L	D5RY 6431013	★	★	R	★	★	★	★	★	★	★	★				1
31148-9	**PANEL (QUARTER REAR TRIM)**																
		TRIM CODES ▶	AE	A3	CE	C3	HE	KE	K3	ME	M3	UE	U3	WE	W3		
J(64T) "Before 4/1/76" - - w/o stereo	R	D5RY 6431148	★	★	★	★	★	★	★								1
	L	D5RY 6431149	★	★	G	G	★	★	★								1
"From 4/1/76" - - w/o stereo	R	D6RY 6431148	★	★	AB	AB						★	★	★	★		1
	L	D6RY 6431149	★	★	AB	AB						★	★	★	★		1

BODY TYPE	R/L	PART NUMBER LESS SUFFIX	TRIM CODES, COLORS and APPLICABLE PART NUMBER SUFFIXES														QTY.
		TRIM CODES ➧	FIRST CHARACTER of TRIM CODE													OTHER	
			-A or U	-C	-J1	K-W	L-T	-M	-N								
		COLORS ➧	BLACK	CLOUD (BLUE)	DARK BROWN	TAN	SADDLE	GREEN	ORANGE								
31600-1		Refer to group 24140-1															
40374-5		PANEL (BACK LOWER TRIM)															
J	R	D5RY 6440374		★	E	★	★	★									1
	L	D5RY 6440375		★	A	★	★	★									1
BODY TYPE	R/L	PART NUMBER	DESCRIPTION														QTY
45455		COVER (LUGGAGE COMPARTMENT FLOOR)															
J(64D,P,S)		D5RY 6445455-G	Black carpet w/o glide rails														1
BODY TYPE	R/L	PART NUMBER LESS SUFFIX	TRIM CODES, COLORS and APPLICABLE PART NUMBER SUFFIXES														QTY.
		TRIM CODES ➧	FIRST CHARACTER of TRIM CODE													OTHER	
			-A or U	-C	-J1	K-W	L-T	-M	-N								
		COLORS ➧	BLACK	CLOUD (BLUE)	DARK BROWN	TAN	SADDLE	GREEN	ORANGE								
46404		PANEL (LIFTGATE TRIM)															
J - - w/back window wiper		D5RY 6446404		★	E		★	★									1
60579		CARPET (REAR SEAT BACK FLOOR)															
J(64T)	R	D5RY 6460579		★	C		★										1
	L	D5RY 6460579		★	M		★										1
BODY TYPE	R/L	PART NUMBER LESS SUFFIX	TRIM CODES AND APPLICABLE PART NUMBER SUFFIXES														QTY
60762		PANEL (FRONT SEAT BACK REAR TRIM PANEL INSERT)															
		TRIM CODES ➧	AE	A3	CE	C3	HE	H3	KE	K3	ME	M3	UE	U3	WE	W3	
J(64T)	R/L	D5RY 6460762	★	★	B	B	★	★	★	★			★	★			2
BODY TYPE	R/L	PART NUMBER LESS SUFFIX	TRIM CODES, COLORS and APPLICABLE PART NUMBER SUFFIXES														QTY.
		TRIM CODES ➧	FIRST CHARACTER of TRIM CODE													OTHER	
			-A or U	-C	-J1	K-W	L-T	-M	-N								
		COLORS ➧	BLACK	CLOUD (BLUE)	DARK BROWN	TAN	SADDLE	GREEN	ORANGE								
611A08		HEAD REST ASSY. (FRONT SEAT BACK) - Incl. guide rods															
J(64T)	R/L	D5RY 64611A08		★	D	★	★		★								2
BODY TYPE	R/L	PART NUMBER LESS SUFFIX	TRIM CODES AND APPLICABLE PART NUMBER SUFFIXES														QTY
62900		COVER (FRONT SEAT CUSHION)															
		TRIM CODES ➧	AE	A3	CE	C3	HE	H3	KE	K3	ME	M3	UE	U3	WE	W3	
J(64T)	R/L	D5RY 6462900	★	★	L	★	★	★	★	★	★	★	★	★	★	★	2
63804		COVER (REAR SEAT CUSHION)															
		TRIM CODES ➧	AE	A3	CE	HE	H3	KE	K3	ME	UE	U3	WE	W3			
J(64T)		D5RY 6463804	★	★	K	★	★	★	★	★	★	★	★	★			1
64416-7		COVER (FRONT SEAT BACK)															
		TRIM CODES ➧	AE	A3	CE	HE	H3	KE	K3	ME	UE	U3	WE	W3			
J(64T)	R	D5RY 6464416	★	★	L	★	★	★	★	★	★	★	★	★			1
	L	D5RY 6464417	★	★	H	★	★	★	★	★	★	★	★	★			1
66600-1		COVER (REAR SEAT BACK)															
		TRIM CODES ➧	AE	HE	JE	KE	LE	ME	NE	PE	TE	UE	WE				
J(64P)	R	D5RY 6466600	★	★	★	★	★	★	★	★	★	★	★				1
	L	D5RY 6466601	F	★	★	★	★	★	★	★	★	★	★				1
		TRIM CODES ➧	AE	A3	CE	HE	KE	K3	ME	M3	UE	U3	WE	W3			
J(64T)	R	D5RY 6466600	★	★	L	★	★	★	★	★	★	★	★	★			1
	L	D5RY 6466601	★	★	H	★	★	★	★	★	★	★	★	★			1

COPYRIGHT © 1986 — FORD MOTOR COMPANY — DEARBORN, MICHIGAN

1976 SOFT TRIM SCHEME CODES

AS LISTED ON CERTIFICATION LABEL

FOR MATERIAL IDENTIFICATION
REFER TO SALESMAN'S
COLOR AND UPHOLSTERY SELECTIONS GUIDE

THE SOFT TRIM SECTION INCLUDES ONLY THOSE ITEMS WHICH WERE AVAILABLE FOR SERVICE AT THE TIME OF PRINTING. ITEMS NOT SHOWN OR INDICATED WITH A BLACK STAR (★) IN THE CATALOG MUST BE IMPROVISED OR PROCURED LOCALLY.

● SB–Split bench seat

Mark IV (K)

CODE	BODY TYPE	DESCRIPTION OF TRIM SCHEME	● TYPE OF SEAT
BA	65	Black vinyl and black leather	SB
BB	65	Blue vinyl and blue leather	SB
BD	65	Red vinyl and red leather	SB
BN	65	White vinyl and white leather with red appointments	SB
BQ	65	White vinyl and white leather with blue appointments	SB
BU	65	Tan vinyl and tan leather	SB
BW	65	White vinyl and white leather with black appointments	SB
BY	65	Gold vinyl and gold leather	SB
BZ	65	Saddle vinyl and saddle leather	SB
B5	65	White vinyl and white leather with jade appointments	SB
B8	65	White vinyl and white leather with gold appointments	SB
B9	65	White vinyl and white leather with saddle appointments	SB
CK	65	Aqua all cloth	SB
DA	65	Black vinyl and black leather	SB
DH	65	Rose vinyl and cranberry leather	SB
DN	65	White vinyl and white leather with red appointments	SB
DR	65	Jade vinyl and jade leather	SB
DS	65	Gray vinyl and gray leather	SB
DV	65	Cream vinyl and gold leather	SB
DZ	65	Saddle vinyl and saddle leather	SB
D5	65	White vinyl and white leather with jade appointments	SB
D9	65	White vinyl and white leather with saddle appointments	SB
EK	65	Aqua all leather	SB
FS	65	Gray vinyl and gray cloth	SB
GB	65	Blue vinyl and blue cloth	SB
GD	65	Red vinyl and red cloth	SB
GU	65	Tan vinyl and tan cloth	SB
GR	65	Jade vinyl and jade cloth	SB
GS,GSA	65	Gray vinyl and gray cloth	SB
LA	65	Black vinyl and black cloth	SB
LB	65	Blue vinyl and blue cloth	SB
LD	65	Red vinyl and red cloth	SB
LU	65	Tan vinyl and tan cloth	SB
LY	65	Gold vinyl and gold cloth	SB
LZ	65	Saddle vinyl and saddle cloth	SB
NB	65	Blue vinyl and blue leather	SB
PN	65	White vinyl and white leather with red appointments	SB
QA	65	Black vinyl and black cloth	SB

COPYRIGHT © 1986 — FORD MOTOR COMPANY — DEARBORN, MICHIGAN

1976 VINYL ROOF COVER CODES

AS LISTED ON CERTIFICATION LABEL

CODE	BODY TYPE	GRAIN and TYPE of ROOF	COLOR
Mark IV (K)			
FA	65	Normandie–full	Black
FB	65	Normandie–full	Blue
FD	65	Normandie–full	Red (dark)
FH	65	Normandie–full	Rose
FL	65	Normandie–full	Aqua
FM	65	Normandie–full	Jade (light)
FN	65	Normandie–full	Red (bright)
FP	65	Normandie–full	Silver
FR	65	Normandie–full	Jade (dark)
FU	65	Normandie–full	Tan
FV	65	Normandie–full	Cream
FW	65	Normandie–full	White
FY	65	Normandie–full	Gold
FZ	65	Normandie–full	Saddle
JA	65	Cayman–1/2	Black
JN	65	Cayman–1/2	Red (lipstick)
LA	65	Normandie–1/2	Black
LB	65	Normandie–1/2	Blue
LD	65	Normandie–1/2	Red (dark)
LH	65	Normandie–1/2	Rose
LL	65	Normandie–1/2	Aqua
LM	65	Normandie–1/2	Jade (light)
LN	65	Normandie–1/2	Red (bright)
LP	65	Normandie–1/2	Silver
LR	65	Normandie–1/2	Jade (dark)
LU	65	Normandie–1/2	Tan
LV	65	Normandie–1/2	Cream
LW	65	Normandie–1/2	White
LY	65	Normandie–1/2	Gold
LZ	65	Normandie–1/2	Saddle
TE	65	Valino–1/2	Gray
UA	65	Cayman–1/2	Black
UN	65	Cayman–1/2	Red (lipstick)
VE	65	Valino–full	Gray

BODY TYPE	R/L	PART NUMBER LESS SUFFIX	TRIM CODES, COLORS and APPLICABLE PART NUMBER SUFFIXES														QTY.
		TRIM CODES ➧		SECOND CHARACTER of TRIM CODE									ALL CODES	ALL CODES	OTHER	OTHER	
				-B or Q	-D,H,N	-G or 5	-K	-R	-U	-V	-Y or 8	-Z or 9					
		COLORS ➧		BLUE	RED/ ROSE	GREEN	AQUA	JADE	TAN	CREAM	GOLD	SADDLE	BLACK	WHITE	SEE NOTE	SEE NOTE	
02344-5		PANEL (COWL TRIM)															
Notes:		⊕ Use with trim code DN or PN, ‡ Except trim code DN or PN, ♦ Gray, $ Use gold, % Use saddle															
K	R	D5SZ 6502344		★	‡★			★	%	$	★	★	★				1
	L	D5SZ 6502345		★	‡★			H	%	$	★	★	★				1
	R	D7LY 6502344			⊕★		★								♦★		1
	L	D6LY 6502345			⊕★		★								♦A2P		1
04104-5		VISOR ASSY.															
Notes:		♦ Gray, △ Use with or without non-illuminated vanity mirror-refer to group 17A679 in Chassis section for mirror,															
LESS ARM and BRACKET																	
K - - w/non-illuminated vanity mirror	△R/L	D5AZ 6004104		D	E		★		★			F	★				2
	△R/L	D6AZ 6004104						C			B			★	♦A9P		2
13086		MAT (FRONT FLOOR)															
Notes:		@ Brown															
TWIN (less carpet insert)																	
K - - rubber - Ford oval		D60Z 6213086		B	F								A		@C		1
13106		MAT (REAR FLOOR)															
Notes:		@ Brown															
TWIN (less carpet insert)																	
K - - rubber -Ford oval		D6FZ 6213106		B	E	F							A		@C		1
24100-1		PAD (ARM REST)-Incl. attaching parts															
Notes:		♦ Gray, $ Use Gold															
K - - door	R	D5SZ 6524100		★	D		★	K	★			★	★		♦★		1
	L	D5SZ 6524101		★	D		★	K	★			★	★		♦★		1
	R	D6SZ 6524100								$	★			A			1
	L	D6SZ 6524101								$	B			A			1
K - - quarter	R	D5SZ 6531718		★	D		★	K	★			★	A				1
	L	D5SZ 6531719		★	D		★	K	★			★	A				1
	R	D6SZ 6531718								$	★			A			1
	L	D6SZ 6531719								$	★			A			1
	R	D6SY 6531718													♦A8P		1
	L	D6SY 6531719													♦★		1
24144-5		BASE (ARM REST)-Incl. attaching parts															
Notes:		♦ Gray, $ Use Gold, % Use with all except trim codes beginning with G															
K	%R	D5SZ 6524144		★	E		★	L				★	C				1
	%L	D5SZ 6524145		F	E		★	L				★	C				1
	%R	D4SZ 6524144							★								1
	%L	D4SZ 6524145							★								1
	%R	D6SZ 6524144								$	★			B			1
	%L	D6SZ 6524145								$	A			B			1
	%R	D6SY 6524144													♦B4P		1
	%L	D6SY 6524145													♦B4P		1
31070-1		PANEL (QUARTER TRIM LOWER)															
Notes:		♦ Gray															
K - - vinyl	L	D6SY 6531071		★	★			★	★	★	★	★	★	★	♦A4P		1
31718-9		Refer to group 24100-1															

COPYRIGHT © 1986— FORD MOTOR COMPANY —DEARBORN, MICHIGAN

NEW ISSUE

1976 SOFT TRIM SCHEME CODES

AS LISTED ON CERTIFICATION LABEL

CODE	BODY TYPE	DESCRIPTION OF TRIM SCHEME	● TYPE OF SEAT

FOR MATERIAL IDENTIFICATION
REFER TO SALESMAN'S
COLOR AND UPHOLSTERY SELECTIONS GUIDE

● B–Bucket seats

THE SOFT TRIM SECTION INCLUDES ONLY THOSE ITEMS WHICH WERE AVAILABLE FOR SERVICE AT THE TIME OF PRINTING. ITEMS NOT SHOWN OR INDICATED WITH A BLACK STAR (★) IN THE CATALOG MUST BE IMPROVISED OR PROCURED LOCALLY.

L (BOBCAT)

Note 1– For replacement of Door Trim Panels (23942–3) and Quarter Trim Panels (31012–3), refer to this code in the 1976 Soft Trim Section. For replacement of Cushion Covers (62900–1 and 63804) and Front Seat Back Covers (64416–7) and Rear Seat Back Assy. (672A18) contact your Service Representative, who will process in accordance with General ICC bulletin No. 7526. All other parts are included in the 1976 Soft Trim Section.

AA	62,64,73	Black all vinyl	B
AB	62,64,73	Blue all vinyl	B
AG	62,64,73	Green all vinyl	B
AG1	64H	(Code AG – see Note 1)	
AG2	64H	(Code AG – see Note 1)	
AU	62,64,73	Tan all vinyl	B
DB,DBB	62,64,73	Blue vinyl and blue cloth	B
DD,DDA,DDB	62,64,73	Red vinyl and red cloth	B
DG,DGB	62,64,73	Green vinyl and green cloth	B
DU,DUB	62,64,73	Tan vinyl and tan cloth	B
GA	62,64,73	Black vinyl and black cloth	B
GB	62,64,73	Blue vinyl and blue cloth	B
GG	62,64,73	Green vinyl and green cloth	B
GU	62,64,73	Tan vinyl and tan cloth	B
HA	62,64,73	Black all vinyl	B
HB	62,64,73	Blue all vinyl	B
HD	62,64,73	Red all vinyl	B
HG	62,64,73	Green all vinyl	B
HU	62,64,73	Tan all vinyl	B

COPYRIGHT © 1986 — FORD MOTOR COMPANY — DEARBORN, MICHIGAN

1976 VINYL ROOF COVER CODES

AS LISTED ON CERTIFICATION LABEL

CODE	BODY TYPE	GRAIN and TYPE of ROOF	COLOR
L (BOBCAT)			
EA	62,64	Levant – 1/2	Black
EB	62,64	Levant – 1/2	Blue
ED	62,64	Levant – 1/2	Red
EG	62,64	Levant – 1/2	Green
EU	62,64	Levant – 1/2	Tan
EW	62,64	Levant – 1/2	White
NA	62,64	Odense – 1/2	Black
NB	62,64	Odense – 1/2	Blue

1973/79 LINCOLN-MERCURY CARS

BODY TYPE	R/L	PART NUMBER LESS SUFFIX	TRIM CODES, COLORS and APPLICABLE PART NUMBER SUFFIXES														QTY.
		TRIM CODES ▶		SECOND CHARACTER of TRIM CODE									ALL CODES	ALL CODES	OTHER	OTHER	
				-B or Q	-D or N	-E	-G or 5	-R	-U	-V	-Y or 8	-Z or 9					
		COLORS ▶		BLUE	RED	SILVER BLUE	GREEN	JADE	TAN	CREAM	GOLD	SADDLE	BLACK	WHITE	SEE NOTE	SEE NOTE	
02344-5		PANEL (COWL TRIM)															
L	R	D4FZ 6202344					★		B								1
	L	D4FZ 6202345					★		B								1
	R	D8FZ 6202344		A9B	A9D								A9A				1
	L	D8FZ 6202345		A9B	A9D								A9A				1
04104		VISOR ASSY. - Less arm, bracket and mirror															
Notes:		⊕ Use with or without vanity mirror - refer to group 17A679 in Chassis section for mirror															
L	⊕ R/L	D6FZ 6204104		B	E		★		★				A				2
04282		PAD (INSTRUMENT PANEL UPPER)															
L		D3FZ 6204282		★	★				F				★				1
		D5FZ 6204282					A										1
13000		CARPET (FRONT FLOOR)															
L - - cut pile		D5FZ 6413000		B			★		A				C				1
		D6FZ 6413000			A												1
13046		CARPET (REAR FLOOR) - Serviced only in assy. - group 13000															
13048		CARPET (AUXILIARY FLOOR)															
L(73)		D5FZ 7313048		C			★		★				D				1
		D6FZ 7313048			A												1
13086		MAT (FRONT FLOOR)															
		TWIN (less carpet insert)															
L - - rubber		D6FZ 6213086		B	E								A				1
-Ford oval		D7FZ 6213086									K						1
13106		MAT (REAR FLOOR)															
		TWIN (less carpet insert)															
L - - rubber		D6FZ 6213106		B	E		F						A				1
-plain		D7FZ 6213106									A						1
24140-1		REST (ARM)															
L	R	D5FZ 6224140		G			B		H				F				1
	L	D5FZ 6224141		E			B		F				D				1
	R	D6FZ 6224140			★												1
	L	D6FZ 6224141			E												1
31012-3		PANEL (QUARTER TRIM)															
L(62)	R	D6FZ 6231012		★	★		★		★				★				1
	L	D6FZ 6231013		★	★		★		★				★				1
L(62)	R	D6FZ 6431012		★	A5D		★		★				A9A				1
	L	D6FZ 6431013		★	★		★		★				A9A				1
L(73)	R	D6FZ 7331012		★	★		★		★				A9A				1
	L	D6FZ 7331013		★	★		★		★				A9A				1
31290		WINDLACE (QUARTER PILLAR)															
L(73)	R/L	D2FZ 7331290		★	★		★		★				D				2

BODY TYPE	R/L	PART NUMBER	DESCRIPTION	QTY
40374-5		PANEL (BACK LOWER TRIM)		
L(64)	R	D7FZ 6440374-B4T	Paint to match	1
	L	D7FZ 6440375-A4T	Paint to match	1
45026		COVER (SPARE TIRE) - Serviced only in assy. - group 45455		

COPYRIGHT © 1986 — FORD MOTOR COMPANY — DEARBORN, MICHIGAN

1973/79 LINCOLN-MERCURY CARS

BODY TYPE	R/L	PART NUMBER	DESCRIPTION	QTY
45455		**COVER (LUGGAGE COMPARTMENT FLOOR)**		
L(62)		D5FZ 6245455-A	Burloom	1
L(64)		D5FZ 6445455-G	Black cut pile carpet	1
		D5FZ 6445455-E	Blue cut pile carpet	1
		D6FZ 6445455-L	Red cut pile carpet	1
46668		**PANEL (PACKAGE TRAY TRIM)**		
L(62)		D5FZ 6246668-B	Paint to match	1

BODY TYPE	R/L	PART NUMBER LESS SUFFIX	TRIM CODES, COLORS and APPLICABLE PART NUMBER SUFFIXES														QTY.
		TRIM CODES ➧		SECOND CHARACTER of TRIM CODE									ALL CODES	ALL CODES	OTHER	OTHER	
				-B or Q	-D or N	-E	-G or 5	-R	-U	-V	-Y or 8	-Z or 9					
		COLORS ➧		BLUE	RED	SILVER BLUE	GREEN	JADE	TAN	CREAM	GOLD	SADDLE	BLACK	WHITE	SEE NOTE	SEE NOTE	
51916		**HEADLINING (ROOF)**															
L(62,64) - - w/o sliding roof		D3FZ 6251916		★	★		★		★				A4A				1
L(73)		D4FZ 7351916		★	★		★		★				A4A				1

BODY TYPE	R/L	PART NUMBER	DESCRIPTION	QTY
60032		**BACK KIT (REAR SEAT) - Serviced only in assy. - group 672A18**		
60050-1		**CUSHION KIT (FRONT SEAT)**		
L	R	D6FZ 6260050-A	Bucket seat - hi-back	1
	L	D6FZ 6260051-A	Bucket seat - hi-back	1
	R	D5YY 6460050-A	Bucket seat - lo-back	1
	L	D5YY 6460051-A	Bucket seat - lo-back	1
60136-7		**BACK KIT (FRONT SEAT)**		
L	R/L	D4FZ 6261018-A	Frame - bucket seat - hi-back	2
	R/L	D3FZ 6264810-A	Pad - bucket seat - hi-back	2
"Before 3/15/76"	R/L	★	Frame-bucket seat - lo-back	2
	R/L	D6YY 6464810-A	Pad - bucket seat - lo-back	2
"From 3/15/76"	R/L	D8ZZ 6961018-A	Frame - bucket seat - lo-back	2
	R/L	D6YY 6464810-A	Pad - bucket seat - lo-back	2

BODY TYPE	R/L	PART NUMBER LESS SUFFIX	TRIM CODES, COLORS and APPLICABLE PART NUMBER SUFFIXES														QTY.
		TRIM CODES ➧		SECOND CHARACTER of TRIM CODE									ALL CODES	ALL CODES	OTHER	OTHER	
				-B or Q	-D or N	-E	-G or 5	-R	-U	-V	-Y or 8	-Z or 9					
		COLORS ➧		BLUE	RED	SILVER BLUE	GREEN	JADE	TAN	CREAM	GOLD	SADDLE	BLACK	WHITE	SEE NOTE	SEE NOTE	
60579		**CARPET (REAR SEAT BACK FLOOR)**															
L (64,73) - - cut pile		D6FZ 6460579		A0B	C5D		★		★				A5A				1

BODY TYPE	R/L	PART NUMBER LESS SUFFIX	TRIM CODES AND APPLICABLE PART NUMBER SUFFIXES														QTY
60762-3		**PANEL (FRONT SEAT BACK REAR TRIM INSERT)**															
		TRIM CODES ➧	AA	AB	AG	AU	DB, DBB	DD, DDA, DDB	DG, DGB	DU, DUB							
L	R/L	D3FZ 6261632	AA	AA	AA	AA	★	★	★	★							2
		TRIM CODES ➧	GA	GB	GG	GU	HA	HB	HD	HG	HU						
L	R/L	D3FZ 6261632	AA	AA	AA	AA											2
	R	D5YY 6460762					A	★	★	★	★						1
	L	D5YY 6460763					A	★	★	★	★						1
61018		**Refer to group 60136-7**															

BODY TYPE	R/L	PART NUMBER LESS SUFFIX	TRIM CODES AND APPLICABLE PART NUMBER SUFFIXES	QTY
61632	Refer to group 60762-3			

BODY TYPE	R/L	PART NUMBER LESS SUFFIX	TRIM CODES, COLORS and APPLICABLE PART NUMBER SUFFIXES															QTY.
		TRIM CODES ▶		SECOND CHARACTER of TRIM CODE									ALL CODES	ALL CODES	OTHER	OTHER		
				-B or Q	-D or N	-E	-G or 5	-R	-U	-V	-Y or 8	-Z or 9						
		COLORS ▶	LGTH. (Inches)	BLUE	RED	SILVER BLUE	GREEN	JADE	TAN	CREAM	GOLD	SADDLE	BLACK	WHITE	SEE NOTE	SEE NOTE		
63500	BUTTON (FRONT and REAR SEAT CUSHION and BACK)																	
Notes:	■ Rectangular head																	

VINYL

L - - front and rear seat cushion and back	■	D5YY 6463500	5/16	★	★		★		★				C					AR

BODY TYPE	R/L	PART NUMBER LESS SUFFIX	TRIM CODES AND APPLICABLE PART NUMBER SUFFIXES	QTY
64810-1	Refer to group 60136-7			
66600	COVER (REAR SEAT BACK) - Serviced only in assy. - group 672A18			
672A18	BACK ASSY. (REAR SEAT)			

COPYRIGHT © 1986 — FORD MOTOR COMPANY — DEARBORN, MICHIGAN

1976 SOFT TRIM SCHEME CODES

AS LISTED ON CERTIFICATION LABEL

CODE	BODY TYPE	TRIM SCHEME	● TYPE OF SEAT

FOR MATERIAL IDENTIFICATION
REFER to SALESMAN'S
COLOR and UPHOLSTERY SELECTION GUIDE

THE SOFT TRIM SECTION INCLUDES ONLY THOSE ITEMS WHICH WERE AVAILABLE FOR SERVICE AT THE TIME OF PRINTING. ITEMS NOT SHOWN OR INDICATED WITH A BLACK STAR (★) IN THE CATALOG MUST BE IMPROVISED OR PROCURED LOCALLY.

● FW–Full width seat without center arm rest, B–Bucket seats

P (COMET)

Note 1– **For replacement of Door Trim Panels (23942–3 and 27406,7) and Quarter Trim Panels (31012–3), refer to this code in the 1976 Soft Trim Section. For replacement of Cushion Covers (62900–1 and 63804) and Back Covers (64416–7 and 66600) contact your Service Representative, who will process in accordance with General ICC bulletin No. 7526. All other parts are included in the 1976 Soft Trim Section.**

BA	54,62	Black vinyl and black cloth	FW
BA1	54	(Code BA – see Note 1)	
BB	54,62	Blue vinyl and blue cloth	FW
BB1	54	(Code BB – see Note 1)	
BG	54,62	Green vinyl and green cloth	FW
BU	54,62	Tan vinyl and tan cloth	FW
HA	54,62	Black all vinyl	FW
HA1	54	(Code HA – see Note 1)	
HB	54,62	Blue all vinyl	FW
HB1	54	(Code HB – see Note 1)	
HG	54,62	Green all vinyl	FW
HU	54,62	Tan all vinyl	FW
JA,JAB	54,62	Black vinyl and black cloth	FW
JB,JBB	54,62	Blue vinyl and blue cloth	FW
JG,JGB	54,62	Green vinyl and green cloth	FW
JU,JUB	54,62	Tan vinyl and tan cloth	FW
KA,KAA	54,62	Black all vinyl	FW
KB,KBA	54,62	Blue all vinyl	FW
KG,KGA	54,62	Green all vinyl	FW
KU,KUA	54,62	Tan all vinyl	FW
LA,LAA	54,62	Black all vinyl	B
LB,LBA	54,62	Blue all vinyl	B
LU,LUA	54,62	Tan all vinyl	B
PB,PBA	54,62	Blue all vinyl	B
PU,PUA	54,62	Tan all vinyl	B
QB	54,62	Blue vinyl and blue cloth	B
QG	54,62	Green vinyl and green cloth	B
QU	54,62	Tan vinyl and tan cloth	B
RB	54,62	Blue vinyl and blue cloth	B
RG	54,62	Green vinyl and green cloth	B
RU	54,62	Tan vinyl and tan cloth	B

COPYRIGHT © 1986 — FORD MOTOR COMPANY — DEARBORN, MICHIGAN

1976 VINYL ROOF COVER CODES

AS LISTED ON CERTIFICATION LABEL

CODE	BODY TYPE	GRAIN and TYPE of ROOF	COLOR
P (COMET)			
GA	54	Odense – full	Black
GB	54	Odense – full	Blue
GG	54	Odense – full	Green
GT	54	Odense – full	Brown
GW	54	Odense – full	White
GA	62	Odense – 3/4	Black
GB	62	Odense – 3/4	Blue
GG	62	Odense – 3/4	Green
GT	62	Odense – 3/4	Brown
GW	62	Odense – 3/4	White

BODY TYPE	R/L	PART NUMBER LESS SUFFIX	TRIM CODES, COLORS and APPLICABLE PART NUMBER SUFFIXES														QTY.
		TRIM CODES ▶		SECOND CHARACTER of TRIM CODE									ALL CODES	ALL CODES	OTHER	OTHER	
				-B or Q	-D or N	-E	-G or 5	-R	-U	-V	-Y or 8	-Z or 9					
		COLORS ▶		BLUE	RED	SILVER BLUE	GREEN	JADE	TAN	CREAM	GOLD	SADDLE	BLACK	WHITE	SEE NOTE	SEE NOTE	
04104		VISOR ASSY. - Less arm, bracket and mirror															
Notes:		⊕ Use with or without vanity mirror - refer to group 17A679 in Chassis section for mirror															
P	⊕ R/L	D4DZ 6204104		B									A				2
	⊕ R/L	D5DZ 6204104					C		A								2
04282		PAD (INSTRUMENT PANEL UPPER)															
P		D3DZ 6204282		A			★		F				D				1
13086		MAT (FRONT FLOOR)															
Notes:		@ Brown															
TWIN (less carpet insert)																	
P - - rubber -Ford oval		D60Z 6213086		B	F		★						A		@C		1
		D70Z 6213086									A						1
13106		MAT (REAR FLOOR)															
TWIN (less carpet insert)																	
P - - rubber -plain		D6FZ 6213106		B	E		★				★		A				1
24100		PAD (ARM REST)															
P(54) - - rear door	R/L	D3DZ 6224100		D			★		★				F				2
24140-1		REST (ARM) - Incl. attaching parts															
P - - front door	R	D5FZ 6224140		G			B		H				F				1
	L	D5FZ 6224141		E			B		F				D				1

BODY TYPE	R/L	PART NUMBER	DESCRIPTION	QTY
45494		COVER (LUGGAGE COMPARTMENT FLOOR)		
P		D3DZ 6245494-A	Gray burloom	1
46668		PANEL (PACKAGE TRAY TRIM)		
P(54)		D4DZ 5446668-C	Paint to match - use with or without speakers	1
60136-7		BACK KIT (FRONT SEAT)		
P(54)	L	D7DZ 5461019-A	Frame - bucket seat	1
	R/L	D6DZ 6664810-A	Pad - bucket seat	2
P(62)	L	D7DZ 6661019-A	Frame - bucket seat	1
	R/L	D6DZ 6664810-A	Pad - bucket seat	2
61018-9		Refer to group 60136-7		

COPYRIGHT © 1986— FORD MOTOR COMPANY —DEARBORN, MICHIGAN

1976 SOFT TRIM SCHEME CODES

AS LISTED ON CERTIFICATION LABEL

CODE	BODY TYPE	TRIM SCHEME	● TYPE OF SEAT

FOR MATERIAL IDENTIFICATION
REFER to SALESMAN'S
COLOR and TRIM SELECTION GUIDE

● FW-Full width seat without center arm rest, FWA-Full width seat with center arm rest, S/B-Split seat, B-Bucket seats

METEOR (Y)

NOTE 1- For replacement of Door and Quarter Trim Panels (23942-3 and 31012-3), refer to this code in the 1976 Soft Trim Section. For replacement of Cushion Covers (62900 and 63804) and Back Covers (64416-7 and 66600), contact your Service Representative. All other parts are included in the 1976 Soft Trim Section.

AA	53,65	Black vinyl and black cloth	FW
AB	53,65	Blue vinyl and blue cloth	FW
AG	53,65	Green vinyl and green cloth	FW
AZ	53,65	Saddle vinyl and saddle cloth	FW
BB	53,65,71	Blue all vinyl	FW
BG	53,65,71	Green all vinyl	FW
BZ	53,65,71	Saddle all vinyl	FW
WA	53,65	Black vinyl and black cloth	FW
WB	53,65	Blue vinyl and blue cloth	FW
WD	53,65	Red vinyl and red cloth	FW
WG	53,65	Green vinyl and green cloth	FW
WG1	53B	(Code WG See note 1)	FW
WY	53,65	Gold vinyl and gold cloth	FW
WZ,WZA	53,65	Saddle vinyl and saddle cloth	FW
YB	53,65,71	Blue all vinyl	FW
YD	53,65,71	Red all vinyl	FW
YG	53,65,71	Green all vinyl	FW
YN	65	White all vinyl with red appointments	FW
YQ	65	White all vinyl with blue appointments	FW
YW	65	White all vinyl with black appointments	FW
YY	53,65,71	Gold all vinyl	FW
YZ	53,65,71	Saddle all vinyl	FW
Y5	65	White all vinyl with green appointments	FW
Y8	65	White all vinyl with gold appointments	FW
Y9	65	White all vinyl with saddle appointments	FW
ZB,ZBA	53,65,71	Blue vinyl and blue cloth	FW
ZD	53,65,71	Red vinyl and red cloth	FW
ZG	53,65,71	Green vinyl and green cloth	FW
ZU	53,65,71	Saddle vinyl and saddle cloth	FW

THE SOFT TRIM SECTION INCLUDES ONLY THOSE ITEMS WHICH WERE AVAILABLE FOR SERVICE AT TIME OF PRINTING. ITEMS NOT SHOWN OR INDICATED WITH A BLACK STAR (★) IN THE CATALOG MUST BE IMPROVISED OR PROCURED LOCALLY.

COPYRIGHT © 1986 — FORD MOTOR COMPANY — DEARBORN, MICHIGAN

1976 VINYL ROOF COVER CODES

AS LISTED ON CERTIFICATION LABEL

CODE	BODY TYPE	GRAIN and TYPE of ROOF	COLOR
		Meteor (Y)	
BA	65	Crosshatch–full	Black
BB	65	Crosshatch–full	Blue
BD	65	Crosshatch–full	Red
BG	65	Crosshatch–full	Green
BP	65	Crosshatch–full	Silver
BT	65	Crosshatch–full	Brown
BW	65	Crosshatch–full	White
BY	65	Crosshatch–full	Gold
CA	53	Crosshatch–halo	Black
CB	53	Crosshatch–halo	Blue
CD	53	Crosshatch–halo	Red
CG	53	Crosshatch–halo	Green
CP	53	Crosshatch–halo	Silver
CT	53	Crosshatch–halo	Brown
CW	53	Crosshatch–halo	White
CY	53	Crosshatch–halo	Gold
GT	71	Odense–full	Brown
RA	65	Crosshatch–1/2	Black
RB	65	Crosshatch–1/2	Blue
RD	65	Crosshatch–1/2	Red
RG	65	Crosshatch–1/2	Green
RP	65	Crosshatch–1/2	Silver
RT	65	Crosshatch–1/2	Brown
RW	65	Crosshatch–1/2	White
RY	65	Crosshatch–1/2	Gold

BODY TYPE	R/L	PART NUMBER LESS SUFFIX	TRIM CODES, COLORS and APPLICABLE PART NUMBER SUFFIXES														QTY.
		TRIM CODES ▶		SECOND CHARACTER of TRIM CODE									ALL CODES	ALL CODES	OTHER	OTHER	
				-B or Q	-D or N	-E	-G or 5	-R	-U	-V	-Y or 8	-Z or 9					
		COLORS ▶		BLUE	RED	SILVER BLUE	GREEN	JADE	TAN	CREAM	GOLD	SADDLE	BLACK	WHITE	SEE NOTE	SEE NOTE	
04104-5		VISOR ASSY.															
Notes:		⊕ Use with or without non/illuminated vanity mirror, refer to group 17A679 in Chassis Section for mirror. ● Use saddle, ♦ gold, # Matching sun visor (less vanity mirror) for R.H. sun visor which includes illuminated vanity mirror															
		LESS ARM and BRACKET															
Y - - w/non-illuminated vanity mirror	⊕	D5AZ 6004104		D	E		G		●			F	C				2
	⊕	D6AZ 6004104								♦	B						2
04282		PAD (INSTRUMENT PANEL UPPER)															
Notes:		● Use saddle, ♦ Use gold															
Y		D4MY 6504282		A					●			F	★				1
		D5MY 6504282			A		★										1
		D6MY 6504282								♦	A						1
13000		CARPET (FRONT FLOOR)															
Notes:		● Use saddle															
Y - - cut pile		D5AZ 6013000		B	F		★		●	★	★	C	★				1
13000		MAT (FRONT FLOOR)															
Y - - heavy duty		D3AZ 5313000											A				1
13048		CARPET (AUXILIARY FLOOR)															
Y(71) - - cut pile		D5AZ 7113048		★	★		★		★		★	AG					1
24140-1		REST (ARM)															
Notes:		● Use saddle															
Y(53,71) - - front door-w/o power equipment	R	D7AZ 5324140		B5B	B4D		★		●			B8Z	★				1
	L	D7AZ 5324141		B5B	B4D		★		●			B8Z	★				1
-w/power equipment	R	D7AZ 5324140		A5B	A4D		★		●			A8Z	★				1
	L	D7AZ 5324141		A5B	A4D		★		●			A8Z	★				1
Y(53,71) - - rear door		★															1
Y(65) - - door -w/o power equipment	R	D7AZ 6024140		A5B	A4D		★		●		★	A8Z	★	★			1
	L	D7AZ 6024141		A5B	A4D		★		●		★	A8Z	★	★			1
-w/power	R	D7AZ 6024140		B5B	B4D		★		●		★	B8Z	★	★			1
	L	D7AZ 6024141		B5B	B4D		★		●		★	B8Z	★	★			1
24346-7		PANEL (CENTER BODY PILLAR INSIDE FINISH)															
Notes:		$ Paint to match															
Y(53,71) - - lower		★															
- - upper	R	★															1
	L	D4AZ 5324357													$A		1
24356-7		Refer to group 24346-7															

BODY TYPE	R/L	PART NUMBER	DESCRIPTION	QTY
45522-3		LINING BOARD (LUGGAGE COMPARTMENT REAR)		
A(53,65)	R	D5MY 6545522-A	Gray	1
	L	D5MY 6545523-A	Gray	1

BODY TYPE	R/L	PART NUMBER LESS SUFFIX	TRIM CODES AND APPLICABLE PART NUMBER SUFFIXES														QTY
64416-7		COVER (FRONT SEAT BACK)															
		TRIM CODES ▶	AA	AB	AG	AZ	BB	BG	BZ	WA	WB	WD	WG	WY	WZ	WZA	
Y(65)	R	D5AZ 6064416	★	BAB	★	★	★	★	★	★	★	★	★	★	★	★	1
	L	D5AZ 6064417	★	BAB	★	★	★	★	★	★	★	★	★	★	★	★	1

COPYRIGHT © 1986 — FORD MOTOR COMPANY — DEARBORN, MICHIGAN

1977 SOFT TRIM SCHEME CODES

AS LISTED ON CERTIFICATION LABEL

FOR MATERIAL IDENTIFICATION
REFER TO SALESMAN'S
COLOR AND UPHOLSTERY SELECTIONS GUIDE

● FW—Full width seat without center armrest, SB—Split Bench seat, FWA—Full width seat with center armrest

MERCURY (A)

CODE	BODY TYPE	DESCRIPTION OF TRIM SCHEME	● TYPE OF SEAT
FB	53L,65L,71K	Blue all leather	SB
FD	53L,65L,71K	Red all leather	SB
FR,FRA	53L,65L,71K	Jade all leather	SB
FS	53L,65L	Gray all leather	SB
FV	53L,65L	Gold and Cream all leather	SB
FZ	53L,65L,71K	Saddle all leather	SB
F3	53L,65L	Saddle and white all leather	SB
GB,GBA	53H,65H	Blue vinyl and blue cloth	FW
GD,GDA	53H,65H	Red vinyl and red cloth	FW
GR	53H,65H	Jade vinyl and jade cloth	FW
GS	53H,65H	Gray vinyl and gray cloth	FW
GY	53H,65H	Gold vinyl and gold cloth	FW
GZ,GZA	53H,65H	Saddle vinyl and saddle cloth	FW
HB	53H,65H,71K	Blue all vinyl	FWA
HD	53H,65H,71K	Red all vinyl	FWA
HR	53H,65H,71K	Jade all vinyl	FWA
HY	53H,65H,71K	Gold all vinyl	FWA
HZ	53H,65H,71K	Saddle all vinyl	FWA
JB	53L,65L	Blue leather and blue cloth	SB
JD	53L,65L	Red leather and red cloth	SB
JR	53L,65L	Jade leather and jade cloth	SB
JS	53L,65L	Gray leather and gray cloth	SB
JY	53L,65L	Gold leather and gold cloth	SB
JZ	53L,65L	Saddle leather and saddle cloth	SB
KB	53H,65H	Blue all vinyl	FW
KD	53H,65H	Red all vinyl	FW
KR	53H,65H	Jade all vinyl	FW
KS	53H,65H	Gray all vinyl	FW
KY	53H,65H	Gold all vinyl	FW
KZ	53H,65H	Saddle all vinyl	FW
LB	53H,65H	Blue vinyl and blue cloth	FWA
LD	53H,65H	Red vinyl and red cloth	FWA
LR	53H,65H	Jade vinyl and jade cloth	FWA
LZ	53H,65H	Saddle vinyl and saddle cloth	FWA
MB	53K,65K	Blue vinyl and blue cloth	SB
MD	53K,65K	Red vinyl and red cloth	SB
MR	53K,65K	Jade vinyl and jade cloth	SB
MS	53K,65K	Gray vinyl and gray cloth	SB
MY	53K,65K	Gold vinyl and gold cloth	SB
MZ	53K,65K	Saddle vinyl and saddle cloth	SB
NS	53K	Gray cloth	SB
RB	53K,65K	Blue vinyl and blue cloth	FWA
RD	53K,65K	Red vinyl and red cloth	FWA
RR	53K,65K	Jade vinyl and jade cloth	FWA
RY	53K,65K	Gold vinyl and gold cloth	FWA
RZ	53K,65K	Saddle vinyl and saddle cloth	FWA
SB	71K	Blue all vinyl	FWA
SD	71K	Red all vinyl	FWA

COPYRIGHT © 1986 — FORD MOTOR COMPANY — DEARBORN, MICHIGAN

1973/79
LINCOLN-MERCURY CARS

1977 SOFT TRIM SCHEME CODES

AS LISTED ON CERTIFICATION LABEL

CODE	BODY TYPE	DESCRIPTION OF TRIM SCHEME	● TYPE OF SEAT

FOR MATERIAL IDENTIFICATION
REFER TO SALESMAN'S
COLOR AND UPHOLSTERY SELECTIONS GUIDE

● FW-Full width seat without center armrest, SB-Split Bench seat, FWA-Full width seat with center armrest

MERCURY (A)

SR	71K	Jade all vinyl	FWA
SV	71K	Gold and cream all vinyl with gold appointments	FWA
SZ	71K	Saddle all vinyl	FWA
VB	53K,65K,71K	Blue all vinyl	SB
VD	53K,65K,71K	Red all vinyl	SB
VR	53K,65K,71K	Jade all vinyl	SB
VS	53K,65K	Gray all vinyl	SB
VV	53K,65K,71K	Gold and cream all vinyl with gold appointments	SB
VZ	53K,65K,71K	Saddle all vinyl	SB

THE SOFT TRIM SECTION INCLUDES ONLY THOSE ITEMS WHICH WERE AVAILABLE FOR SERVICE AT TIME OF PRINTING. ITEMS NOT SHOWN OR INDICATED WITH A BLACK STAR (★) IN THE CATALOG MUST BE IMPROVISED OR PROCURED LOCALLY.

1977 VINYL ROOF COVER CODES

AS LISTED ON CERTIFICATION LABEL

CODE	BODY TYPE	GRAIN and TYPE of ROOF	COLOR
		MERCURY (A)	
BA	53,65	Crosshatch – full	Black
BB	53,65	Crosshatch – full	Blue
BD	53,65	Crosshatch – full	Red
BP	53,65	Crosshatch – full	Silver
BR	53,65	Crosshatch – full	Jade
BT	53,65	Crosshatch – full	Brown
BV	53,65	Crosshatch – full	Cream
BW	53,65	Crosshatch – full	White
DA	53,65	Milano – full	Black
DD	56,65	Milano – full	Red
DE	53,65	Milano – full	Grey
DP	53,65	Milano – full	Silver
DR	53,65	Milano – full	Jade
DT	53,65	Milano – full	Brown
DW	53,65	Milano – full	White
EA	65	Milano – 1/2	Black
ED	65	Milano – 1/2	Red
EE	65	Milano – 1/2	Grey
EP	65	Milano – 1/2	Silver
ER	65	Milano – 1/2	Jade
ET	65	Milano – 1/2	Brown
EW	65	Milano – 1/2	White
RA	65	Crosshatch – 1/2	Black
RB	65	Crosshatch – 1/2	Blue
RD	65	Crosshatch – 1/2	Red
RP	65	Crosshatch – 1/2	Silver
RR	65	Crosshatch – 1/2	Jade
RT	65	Crosshatch – 1/2	Brown
RV	65	Crosshatch – 1/2	Cream
RW	65	Crosshatch – 1/2	White
VB	53,65	Valino – full	Blue
VE	53,65	Valino – full	Grey
VV	53,65	Valino – full	Cream
YB	65	Valino – 1/2	Blue
YE	65	Valino – 1/2	Grey
YV	65	Valino – 1/2	Cream

COPYRIGHT © 1986 — FORD MOTOR COMPANY — DEARBORN, MICHIGAN

1973/79 LINCOLN-MERCURY CARS

BODY TYPE	R/L	PART NUMBER LESS SUFFIX	TRIM CODES, COLORS and APPLICABLE PART NUMBER SUFFIXES													QTY
		TRIM CODES ➧		SECOND CHARACTER of TRIM CODE									ALL CODES	ALL CODES	OTHER	
				-Bor-Q	-Dor-N	-G	M,Ror5	-S	-U	-V	-Yor-8	-Z,3or9				
		COLORS ➧		BLUE	RED	GREEN	JADE	GRAY	TAN	CREAM	GOLD	SADDLE	BLACK	WHITE		
04104-5	VISOR ASSY.															
Notes:	⊕ Use with or without illuminated vanity mirror refer to group 17A679 IN Chassis section for mirror, ♦ Use gold, ● Use saddle, † Matching sun visor (less vanity mirror) for R.H. sun visor which includes illuminated vanity mirror.															
		LESS ARM, BRACKET and MIRROR														
A - - vinyl-w/non-illuminated vanity mirror	⊕	D5AZ 6004104		D	E				●			F				2
	⊕	D6AZ 6004104					C	A9P		♦	B					2
04282	PAD (INSTRUMENT PANEL UPPER)															
Notes:	● Use saddle, ♦ Use gold															
A		D4MY 6504282		A					●			F				1
		D5MY 6504282			A											1
		D6MY 6504282								♦	A					1
		D7MY 6504282					A5R	★								1
13000	CARPET (FRONT FLOOR)															
Notes:	● Use saddle,♦ Use gold															
A - - cut pile		D5AZ 6013000		B	F				●			C				1
		D6AZ 6013000								♦	A					1
		D7AZ 6013000					A9R	★								1
13000	CARPET (FLOOR FRONT and REAR ONE PIECE DESIGN)															
Notes:	● Use saddle															
A(53 H,K)		D7MY 5313000		A2B	A4D		A9R	A7P	●	★	●	A5Z				1
A(53L)		D7MY 5313000		B2B	B4D		B9R	B7P	●	★	●	B5Z				1
A(65H,K)		D7MY 6513000		B2B	B4D		B9R	B7P	●	★	★	B5Z				1
A(65L)		D7MY 6513000		A2B	A4D		A9R	A7P	●	★	★	A5Z				1
A(71) exc. Colony Park		D7AZ 7113000		A2B	A4D		A9R		●	★	★	A5Z				1
A(71) - - Colony Park		D7AZ 7113000		B2B	B4D		B9R		●	★	★	B5Z				1
13000	MAT (FRONT FLOOR)															
A - - heavy duty		D3AZ 5313000											A			1
13048	CARPET (AUXILIARY FLOOR)															
A(71)		D5AZ 7113048		★	★		★				★	AG				1
24140-1	ARM REST - Includes attaching parts															
Notes:	● Use saddle, ♦ Use gold															
A(53,71) - - front door - - w/o power equip.	R	D7AZ 5324140		B5B	B4D		★	★	●	♦	★	B8Z				1
	L	D7AZ 5324141		B5B	★		★	★	●	♦	★	B8Z				1
A(53,71) - - front door - - w/power equip.	R	D7AZ 5324140		A5B	A4D		★	★	●	♦	★	A8Z				1
	L	D7AZ 5324141		A5B	A4D		★	C4P	●	♦	★	A8Z				1
A(53,71) - rear door		★														

BODY TYPE	R/L	PART NUMBER LESS SUFFIX	TRIM CODES, COLORS and APPLICABLE PART NUMBER SUFFIXES													QTY
		TRIM CODES ▶		SECOND CHARACTER of TRIM CODE									ALL CODES	ALL CODES	OTHER	
				-Bor-Q	-Dor-N	-G	M,Ror5	-S	-U	-V	-Yor-8	-Z,3or9				
		COLORS ▶		BLUE	RED	GREEN	JADE	GRAY	TAN	CREAM	GOLD	SADDLE	BLACK	WHITE		
24140-1	ARM REST - Includes attaching parts — Cont'd															
Notes:	● Use saddle, ♦ Use gold															
A(65) - door - - w/o power equip.	R	D7AZ 6024140		A5B	A4D		A8R	A4P	●	♦	★	A8Z				1
	L	D7AZ 6024141		A5B	A4D		A8R	A4P	●	♦	★	A8Z				1
	R	D7AZ 6024140		B5B	B4D		B8R	★	●	♦	B2Y	B8Z				1
	L	D7AZ 6024141		B5B	B4D		B8R	B4P	●	♦	★	B8Z				1
24346-7	PANEL (CENTER BODY PILLAR INSIDE FINISH)															
A(53,71) - - lower - - upper		★														
	R	★														1
	L	D4AZ 5324357													A(paint to match)	1
24356-7	Refer to group 24346-7															

BODY TYPE	R/L	PART NUMBER	DESCRIPTION	QTY
45522-3	LINING BOARD (LUGGAGE COMPARTMENT REAR)			
A(53,65)	R	D5MY 6545522-A	Gray	1
	L	D5MY 6545523-A	Gray	1

BODY TYPE	R/L	PART NUMBER LESS SUFFIX	TRIM CODES, COLORS and APPLICABLE PART NUMBER SUFFIXES													QTY
		TRIM CODES ▶		SECOND CHARACTER of TRIM CODE									ALL CODES	ALL CODES	OTHER	
				-Bor-Q	-Dor-N	-G	M,Ror5	-S	-U	-V	-Yor-8	-Z,3or9				
		COLORS ▶		BLUE	RED	GREEN	JADE	GRAY	TAN	CREAM	GOLD	SADDLE	BLACK	WHITE		
519A02	HEADLINING (ROOF SLIDING PANEL)															
A(53) - - w/ glass sliding roof		D6WZ 65519A02		★	★		A5R	★			★	★				1

COPYRIGHT © 1986— FORD MOTOR COMPANY —DEARBORN, MICHIGAN

NEW ISSUE

1977 SOFT TRIM SCHEME CODES

AS LISTED ON CERTIFICATION LABEL

FOR MATERIAL IDENTIFICATION
REFER TO SALESMAN'S
COLOR AND UPHOLSTERY SELECTIONS GUIDE

THE SOFT TRIM SECTION INCLUDES ONLY THOSE ITEMS WHICH WERE AVAILABLE FOR SERVICE AT THE TIME OF PRINTING. ITEMS NOT SHOWN OR INDICATED WITH A BLACK STAR (★) IN THE CATALOG MUST BE IMPROVISED OR PROCURED LOCALLY.

● SB–Split bench seat, FWA – Full width seat with center armrest

LINCOLN (D)

CODE	BODY TYPE	DESCRIPTION OF TRIM SCHEME	● TYPE OF SEAT
BA	53	Black vinyl and black cloth	FWA
BB	53,60	Blue vinyl and blue cloth	FWA
BD	53,60	Red vinyl and red cloth	FWA
BF	53,60	Cordovan vinyl and cordovan cloth	FWA
BR	53,60	Jade vinyl and jade cloth	FWA
BT	53,60	Chamois vinyl and chamois cloth	FWA
BY	53,60	Gold vinyl and gold cloth	FWA
DA	53,60	Black vinyl and black leather	FWA
DB	53,60	Blue vinyl and blue leather	FWA
DD	53,60	Red vinyl and red leather	FWA
DF	53,60	Cordovan vinyl and cordovan leather	FWA
DN	53,60	White vinyl and white leather with red appointments	FWA
DQ	53,60	White vinyl and white leather with blue appointments	FWA
DR	53,60	Jade vinyl and jade leather	FWA
DT	53,60	Chamois vinyl and chamois leather	FWA
DW	53,60	White vinyl and white leather with black appointments	FWA
DY	53,60	Gold vinyl and gold leather	FWA
D2	53,60	White vinyl and white leather with chamois appointments	FWA
D5	53,60	White vinyl and white leather with jade appointments	FWA
D6	53,60	White vinyl and white leather with cordovan appointments	FWA
D8	53,60	White vinyl and white leather with gold appointments	FWA
EA	53,60	Black vinyl and black leather	SB
EB	53,60	Blue vinyl and blue leather	SB
ED	53,60	Red vinyl and red leather	SB
EF	53,60	Cordovan vinyl and cordovan leather	SB
EN	53,60	White vinyl and white leather with red appointments	SB
EQ	53,60	White vinyl and white leather with blue appointments	SB
ER	53,60	Jade vinyl and jade leather	SB
ET	53,60	Chamois vinyl and chamois leather	SB
EW	53,60	White vinyl and white leather with black appointments	SB
EY	53,60	Gold vinyl and gold leather	SB
E2	53,60	White vinyl and white leather with chamois appointments	SB
E5	53,60	White vinyl and white leather with jade appointments	SB
E6	53,60	White vinyl and white leather with corodovan appointments	SB
E8	53,60	White vinyl and white leather	SB
FA	53	Black vinyl and black cloth	SB
FB	53,60	Blue vinyl and blue cloth	SB
FD	53,60	Red vinyl and red cloth	SB
FF	53,60	Cordovan vinyl and cordovan cloth	SB
FR	53,60	Jade vinyl and jade cloth	SB
FT	53,60	Chamois vinyl and chamois cloth	SB
FY	53,60	Gold vinyl and gold cloth	SB
HA	53,60	Black vinyl and black leather	FWA
HB	53,60	Blue vinyl and blue leather	FWA
HD	53,60	Red vinyl and red leather	FWA
HF	53,60	Cordovan vinyl and cordovan leather	FWA
HR	53,60	Jade vinyl and jade leather	FWA
HT	53,60	Chamois vinyl and chamois leather	FWA
HY	53,60	Gold vinyl and gold leather	FWA
JA	53	Black all cloth	SB

COPYRIGHT © 1986 — FORD MOTOR COMPANY — DEARBORN, MICHIGAN

1977 SOFT TRIM SCHEME CODES

AS LISTED ON CERTIFICATION LABEL

CODE	BODY TYPE	DESCRIPTION OF TRIM SCHEME	● TYPE OF SEAT

FOR MATERIAL IDENTIFICATION REFER TO SALESMAN'S COLOR AND UPHOLSTERY SELECTIONS GUIDE

THE SOFT TRIM SECTION INCLUDES ONLY THOSE ITEMS WHICH WERE AVAILABLE FOR SERVICE AT THE TIME OF PRINTING. ITEMS NOT SHOWN OR INDICATED WITH A BLACK STAR (★) IN THE CATALOG MUST BE IMPROVISED OR PROCURED LOCALLY.

● SB–Split bench seat, FWA – Full width seat with center armrest

LINCOLN (D) — Cont'd

JB	53,60	Blue all cloth	SB
JD	53,60	Red all cloth	SB
JF	53,60	Cordovan all cloth	SB
JR	53,60	Jade all cloth	SB
JS	53,60	Gray all cloth	SB
JT	53,60	Chamois all cloth	SB
JY	53,60	Gold all cloth	SB
KA	53,60	Black vinyl and black leather	SB
KB	53,60	Blue vinyl and blue leather	SB
KD	53,60	Red vinyl and red leather	SB
KF	53,60	Cordovan vinyl and cordovan leather	SB
KN, KNA	53,60	White vinyl and white leather with red appointments	SB
KQ, KQA	53,60	White vinyl and white leather with blue appointments	SB
KR	53,60	Jade vinyl and jade leather with jade appointments	SB
KS	53,60	Gray vinyl and gray leather	SB
KT	53,60	Chamois vinyl and chamois leather	SB
KW, KWA	53,60	White vinyl and white leather with black appointments	SB
KY	53,60	Gold vinyl and gold leather	SB
K2, K2A	53,60	White vinyl and white leather with chamois appointments	SB
K5, K5A	53,60	White vinyl and white leather with jade appointments	SB
K6, K6A	53,60	White vinyl and white leather with cordovan appointments	SB
K8, K8A	53,60	White vinyl and white leather with gold appointments	SB
LF	60	Cordovan/white leather and vinyl with cordovan appointments	FWA
MF	60	Cordovan/white leather and vinyl with cordovan appointments	SB
NV	53,60	Cream and cordovan all leather	SB

1977 VINYL ROOF COVER CODES

AS LISTED ON CERTIFICATION LABEL

CODE	BODY TYPE	GRAIN and TYPE of ROOF	COLOR
		LINCOLN (D)	
TA	53,60	Valino – coach	Black
TB	53,60	Valino – coach	Blue (dark)
TC	53,60	Valino – coach	Ember
TD	53,60	Valino – coach	Red
TE	53,60	Valino – coach	Gray
TF	53,60	Valino – coach	Cordovan
TM	53,60	Valino – coach	Jade (light)
TP	53,60	Valino – coach	Silver
TR	53,60	Valino – coach	Jade (dark)
TS	53,60	Valino – coach	Blue (light)
TU	53,60	Valino – coach	Chamois (Cinnamon)
TV	53,60	Valino – coach	Cream
TY	53,60	Valino – coach	Gold
TW	53,60	Valino – coach	White
VA	53,60	Valino – full	Black
VB	53,60	Valino – full	Blue (dark)
VC	53,60	Valino – full	Ember
VD	53,60	Valino – full	Red
VE	53,60	Valino – full	Gray
VF	53,60	Valino – full	Cordovan
VM	53,60	Valino – full	Jade (light)
VP	53,60	Valino – full	Silver
VR	53,60	Valino – full	Jade (dark)
VS	53,60	Valino – full	Blue (light)
VU	53,60	Valino – full	Chamois (Cinnamon)
VV	53,60	Valino – full	Cream
VY	53,60	Valino – full	Gold
VW	53,60	Valino – full	White

COPYRIGHT © 1986 — FORD MOTOR COMPANY — DEARBORN, MICHIGAN

1973/79 LINCOLN-MERCURY CARS

BODY TYPE	R/L	PART NUMBER LESS SUFFIX	TRIM CODES, COLORS and APPLICABLE PART NUMBER SUFFIXES													QTY.
		TRIM CODES ▶		SECOND CHARACTER of TRIM CODE									ALL CODES	ALL CODES	OTHER	
				-B or Q	-D or N	F or 6	-H	-M,R or 5	-S	-T or -2	-V	-Y or 8				
		COLORS ▶		BLUE	RED	CORD-OVAN	ROSE	JADE	GRAY	CHAMOIS	CREAM	GOLD	BLACK	WHITE		
02344-5	PANEL (COWL TRIM)															
Notes:	● Use cordovan															
D	R	D5VY 6002344		D	E			★				★	C			1
	L	D5VY 6002345		D	E			★				★	C			1
	R	D6VY 6002344							A2P							1
	L	D6VY 6002345							A2P							1
	R	D7VY 6002344				A8F				★	●					1
	L	D7VY 6002345				★				★	●					1
04104-5	VISOR ASSY.															
Notes:	△ Use with or without non-illuminated vanity mirror, refer to group 17A679 in Chassis section for mirror															
	‡ Garage door opener not offered on R.H. (pass) side															
		LESS ARM and BRACKET														
D - - w/non-illuminated vanity mirror	△R/L	D7VY 6004104		★	★	A8F		★	★	★	★	★	★	★		2
		INCLUDES ARM and BRACKET														
D - - w/illuminated vanity mirror-w/o garage door opener	R	D6VY 6004104		★	A0D	★		★	B9P	★	★	★	★	A9W		1
	L	D6VY 6004105		★	A0D	★		★	★	★	★	★	A4A	A9W		1
- - w/illuminated vanity mirror-w/ garage door opener	‡R	D6VY 6004104		★	A0D	★		★	B9P	★	★	★	★	A9W		1
	L	D7VY 6004105		★	C0D	C8F		★	C9P			★	C4A	C9W		1
04282	PAD (INSTRUMENT PANEL UPPER)															
Notes:	● Use cordovan															
D		D5VY 6004282		★	F	★		J	★	★	●	★	★			1
24140-1	ARM REST-Incl. attaching parts															
D(53) - - front door	R	D5VY 5324140		★	F			★				★	C	★		1
	R	D7VY 5324140				A4F				★	★					1
- - rear door	R	D5VY 5327540		★	F			A				★	C			1
	L	D5VY 5327541		★	F			★				★	C			1
	R	D7VY 5327540				A4F				★	★					1
	L	D7VY 5327541				A4F				★	★					1
	R	D6VY 5327540							A8P					A		1
	L	D6VY 5327541							A8P					A		1
D(60) - - front door	R	D5VY 6024140		★	F			★				★	★			1
	R	D7VY 6024140				A4F										1
	R	D6VY 6024140							★					A		1
- - quarter	R	D5VY 6031600		★	F			★				★	C			1
	L	D5VY 6031601		★	F			★				★	C			1
	R	D7VY 6031600				A4F				★	★					1
	L	D7VY 6031601				A4F				★	★					1
	R	D6VY 6031600							A8P					A		1
	L	D6VY 6031601							A8P					★		1
27540-1	Refer to group 24140-1															

BODY TYPE	R/L	PART NUMBER LESS SUFFIX	TRIM CODES, COLORS and APPLICABLE PART NUMBER SUFFIXES													QTY.
		TRIM CODES ➧		SECOND CHARACTER of TRIM CODE									ALL CODES	ALL CODES	OTHER	
				-B or Q	-D or N	F or 6	-H	-M,R or 5	-S	-T or -2	-V	-Y or 8				
		COLORS ➧		BLUE	RED	CORD-OVAN	ROSE	JADE	GRAY	CHAMOIS	CREAM	GOLD	BLACK	WHITE		
281A74-5	COVER (QUARTER LATCH PILLAR FLANGE)															
D(60)	R	D5VY 60281A74		★	G			★				★	E			1
	L	D5VY 60281A75		★	G			★				★	E			1
	R	D7VY 60281A74				A8F				★	★					1
	L	D7VY 60281A75				A8F				★	★					1
	R	D6VY 60281A74							A4P					A		1
	L	D6VY 60281A75							A4P					A		1
281A84	Refer to group 537A02-3															
31012-3	PANEL ASSY. (QUARTER TRIM)															
D(53)	R	D5VY 5331012		★	A			★				★	H			1
	L	D5VY 5331013		★	A			★				★	★			1
	R	D7VY 5331012				A8F				★	★					1
	L	D7VY 5331013				A8F				★	★					1
	R	D6VY 5331012							A4P					A		1
	L	D6VY 5331013							A4P					A		1
D(60)	R	D5VY 6031012		★	★			★				★	D			1
	L	D5VY 6031013		★	★			★				★	D			1
	R	D7VY 6031012				★				★	★					1
	L	D7VY 6031013				A0F				★	★					1
	R	D6VY 6031012							A6P					A		1
	L	D6VY 6031013							A6P					A		1

BODY TYPE	R/L	PART NUMBER LESS SUFFIX	TRIM CODES AND APPLICABLE PART NUMBER SUFFIXES														QTY
311A58-9	PANEL (QUARTER TRIM FINISH)																
		TRIM CODES ➧	BA	BB	BD	BF	BR	BT	BY								
D(60)	R	D7VY 60311A58	★	★	★	A7F	★	★	★								1
		TRIM CODES ➧	DA	DB	DD	DF	DN	DQ	DR	DT	DW	DY	D2	D5	D6	D8	
D(60)	R	D7VY 60311A58	★	★	★	A7F	★	★	★	★	★	★	★	★	★	★	1
		TRIM CODES ➧	EA	EB	ED	EF	EN	EQ	ER	ET	EW	EY	E2	E5	E6	E8	
D(60)	R	D7VY 60311A58	★	★	★	A7F	★	★	★	★	★	★	★	★	★	★	1
		TRIM CODES ➧	FA	FB	FD	FF	FR	FT	FY	HA	HB	HD	HF	HR	HT	HY	
D(60)	R	D7VY 60311A58	★	★	★	A7F	★	★	★	★	★	★	★	★	★	★	1
31600-1	Refer to group 24140-1																

BODY TYPE	R/L	PART NUMBER	DESCRIPTION	QTY
31750	COVER (QUARTER WHEELHOUSE-IN LUGGAGE COMPARTMENT)			
D		D9VY 6031750-A0P	Gray-burloom	1
45455	COVER (LUGGAGE COMPARTMENT FLOOR)			
D		D7VY 6045455-A	Gray-carpet	1

COPYRIGHT © 1986— FORD MOTOR COMPANY —DEARBORN, MICHIGAN

NEW ISSUE

1973/79 LINCOLN-MERCURY CARS

BODY TYPE	R/L	PART NUMBER	DESCRIPTION	QTY
46668	**PANEL (PACKAGE TRAY TRIM)**			
D(53)		D5VY 5346668-D	Paint to match	1

BODY TYPE	R/L	PART NUMBER LESS SUFFIX	TRIM CODES, COLORS and APPLICABLE PART NUMBER SUFFIXES													QTY.
		TRIM CODES ▶		SECOND CHARACTER of TRIM CODE									ALL CODES	ALL CODES	OTHER	
				-B or Q	-D or N	F or 6	-H	-M,R or 5	-S	-T or -2	-V	-Y or 8				
		COLORS ▶		BLUE	RED	CORD-OVAN	ROSE	JADE	GRAY	CHAMOIS	CREAM	GOLD	BLACK	WHITE		
519A02	**HEADLINING (ROOF SLIDING PANEL)**															
D(53) - - w/sliding glass roof		D7LY 65519A02		★	B0D	★		B5R	B9P	★	B5V	★	B4A	B9W		1
D(53) - - w/fixed glass roof and coach roof		D7VY 53519A02		★	B0D	B8F		★	B9P	★	★	★	B4A	B9W		1
D(53) - - w/fixed glass roof and w/o coach roof		D7VY 53519A02		★	A0D	A8F		★	A9P	★	★	★	A4A	A9W		1
D(60) - - w/sliding glass roof		D7LY 65519A02		★	B0D	★		B5R	B9P	★	B5V	★	B4A	B9W		1
D(60) - - w/fixed glass roof		D7VY 60519A02		★	C0D	C8F		★	C9P	★	★	★	C4A	C9W		1

BODY TYPE	R/L	PART NUMBER	DESCRIPTION	QTY
537A00	**Refer to group 537A02-3**			
537A02-3	**PAD (ROOF OUTSIDE COVER SIDE)**			
D(53) - - w/full roof	R/L	D7VY 53537A02-B	Rear-side	2
	R/L	D7VY 60281A84-A	Quarter lock pillar	2
D(53) - - w/coach roof		D7VY 53537A00-A	Rear-lower	1
	R/L	D7VY 53537A02-A	Rear	2
D(60) - - w/full roof	R/L	D7VY 60537A02-B	Rear	2
	R/L	D7VY 60281A84-A	Quarter lock pillar	2
D(60) - - w/coach roof		D7VY 6053738-A	Center	1
	R/L	D7VY 60537A02-B	Rear	2
		D7VY 60537A00-A	Rear-lower	1
53738	**Refer to group 537A02-3**			
60032	**BACK KIT (REAR SEAT)**			
D(Town Car and Town Coupe)		D5VY 5360032-B		1

TYPE	SIZE (INCHES) STUD LENGTH	HEAD	C/V @	PART NUMBER LESS SUFFIX	TRIM CODES, COLORS AND APPLICABLE PART NUMBER SUFFIXES													QTY.
				TRIM CODES ▶		SECOND CHARACTER OF TRIM CODE									ALL CODES	ALL CODES	OTHER	
						-B or Q	-D or N	-F or 6	-H	-M,R or 5	-S	-T or -2	-V	-Y or -8				
				COLORS ▶		BLUE	RED	CORD-OVAN	ROSE	JADE	GRAY	CHAMOIS	CREAM	GOLD	BLACK	WHITE		
63500				**BUTTON (FRONT and REAR SEAT CUSHION and BACK)**														
Notes:				**@ C-Cloth, V-Vinyl**														
4	1	1 x 1 1/2	C	D7VY 6063500		★	★	B0F		★	★	★	★	★	★	★		AR

1977 SOFT TRIM SCHEME CODES

AS LISTED ON CERTIFICATION LABEL

FOR MATERIAL IDENTIFICATION
REFER TO SALESMAN'S
COLOR AND UPHOLSTERY SELECTIONS GUIDE

THE SOFT TRIM SECTION INCLUDES ONLY THOSE ITEMS WHICH WERE AVAILABLE FOR SERVICE AT THE TIME OF PRINTING. ITEMS NOT SHOWN OR INDICATED WITH A BLACK STAR (★) IN THE CATALOG MUST BE IMPROVISED OR PROCURED LOCALLY.

COUGAR (F)

CODE	BODY TYPE	DESCRIPTION OF TRIM SCHEME	● TYPE OF SEAT
AB	65L	Blue vinyl and blue cloth	FWA
AD	65L	Red vinyl and red cloth	FWA
AR	65L	Jade vinyl and jade cloth	FWA
AS	65L	Gray vinyl and gray cloth	FWA
AT	65L	Chamois vinyl and chamois cloth	FWA
AZ	65L	Saddle vinyl and saddle cloth	FWA
BB	65L	Blue all vinyl	FWA
BD	65L	Red all vinyl	FWA
BL	65L	White all vinyl with bright red appointments	FWA
BN	65L	White all vinyl with red appointments	FWA
BQ	65L	White all vinyl with blue appointments	FWA
BR	65L	Jade all vinyl	FWA
BS	65L	Gray all vinyl	FWA
BT	65L	Chamois all vinyl	FWA
BZ	65L	Saddle all vinyl	FWA
B2	65L	White all vinyl with chamois appointments	FWA
B5	65L	White all vinyl with jade appointments	FWA
B9	65L	White all vinyl with saddle appointments	FWA
CB,CBB	65L	Blue all cloth	SB
CD,CDB	65L	Red all cloth	SB
CR,CRB	65L	Jade all cloth	SB
CS,CSB	65L	Gray all cloth	SB
CT,CTB	65L	Chamois all cloth	SB
CZ,CZB	65L	Saddle all cloth	SB
DB,DBB	65L	Blue all vinyl	SB
DD,DDB	65L	Red all vinyl	SB
DL,DLA,DLB	65L	White all vinyl with bright red appointments	SB
DN,DNA,DNB	65L	White all vinyl with red appointments	SB
DQ,DQA,DQB	65L	White all vinyl with blue appointments	SB
DR,DRB	65L	Jade all vinyl	SB
DS,DSB	65L	Gray all vinyl	SB
DT,DTB	65L	Chamois all vinyl	SB
DZ,DZB	65L	Saddle all vinyl	SB
D2,D2A,D2B	65L	White all vinyl with chamois appointments	SB
D3,D3B	65L	Saddle and white vinyl with saddle appointments	SB
D5,D5A,D5B	65L	White all vinyl with jade appointments	SB
D9,D9A,D9B	65L	White all vinyl with saddle appointments	SB
EB,EBB	65L	Blue all leather	SB
ED,EDB	65L	Red all leather	SB
EL,ELA,ELB	65L	White all vinyl with bright red appointments	SB
EN,ENA,ENB	65L	White all vinyl with red appointments	SB
EQ,EQA,EQB	65L	White all vinyl with blue appointments	SB
ER,ERB	65L	Jade all vinyl	SB
ES,ESB	65L	Gray all vinyl	SB
ET,ETB	65L	Chamois all vinyl	SB
EZ,EZB	65L	Saddle all vinyl	SB
E2,E2A,E2B	65L	White all vinyl with chamois appointments	SB
E3,E3B	65L	Saddle and white vinyl with saddle appointments	SB

COPYRIGHT © 1986 — FORD MOTOR COMPANY — DEARBORN, MICHIGAN

1977 SOFT TRIM SCHEME CODES

AS LISTED ON CERTIFICATION LABEL

FOR MATERIAL IDENTIFICATION
REFER TO SALESMAN'S
COLOR AND UPHOLSTERY SELECTIONS GUIDE

THE SOFT TRIM SECTION INCLUDES ONLY THOSE ITEMS WHICH WERE AVAILABLE FOR SERVICE AT THE TIME OF PRINTING. ITEMS NOT SHOWN OR INDICATED WITH A BLACK STAR (★) IN THE CATALOG MUST BE IMPROVISED OR PROCURED LOCALLY.

COUGAR (F) — Cont'd

CODE	BODY TYPE	DESCRIPTION OF TRIM SCHEME	● TYPE OF SEAT
E5,E5A,E5B	65L	White all vinyl with jade appointments	SB
E9,E9A,E9B	65L	White all vinyl with saddle appointments	SB
FB,FBB	65L	Blue all vinyl	B
FD	65L	Red all vinyl	B
FL,FLA,FLB	65L	White all vinyl with bright red appointments	B
FN,FNA,FNB	65L	White all vinyl with red appointments	B
FQ,FQA,FQB	65L	White all vinyl with blue appointments	B
FR,FRB	65L	Jade all vinyl	B
FS,FSB	65L	Gray all vinyl	B
FT,FTB	65L	Chamois all vinyl	B
FZ,FZB	65L	Saddle all vinyl	B
F2,F2A,F2B	65L	White all vinyl with chamois appointments	B
F3	65L	Saddle and white vinyl with saddle appointments	B
F5,F5A,F5B	65L	White all vinyl with jade appointments	B
F9,F9A,F9B	65L	White all vinyl with saddle appointments	B
GB,GBB	65L	Blue all vinyl and blue cloth	B
GD	65L	Red all vinyl and red cloth	B
GR,GRB	65L	Jade all vinyl and jade cloth	B
GS,GSB	65L	Gray all vinyl and gray cloth	B
GT,GTB	65L	Chamois all vinyl and chamois cloth	B
GZ,GZB	65L	Saddle all vinyl and saddle cloth	B
HB,HBB	53D,65D,71D	Blue all vinyl	FWA
HD,HDB	53D,65D,71D	Red all vinyl	FWA
HR,HRB	53D,65D,71D	Jade all vinyl	FWA
HS,HSB	53D,65D	Gray all vinyl	FWA
HT,HTB	53D,65D,71D	Chamois all vinyl	FWA
HZ,HZB	53D,65D,71D	Saddle all vinyl	FWA
JB,JBB	53D,65D	Blue all vinyl and blue cloth	FW
JD,JDB	53D,65D	Red all vinyl and red cloth	FW
JR,JRB	53D,65D	Jade all vinyl and jade cloth	FW
JT,JTB	53D,65D	Chamois all vinyl and chamois cloth	FW
KB	65L	Blue all vinyl	FW
KD	65L	Red all vinyl	FW
KR	65L	Jade all vinyl	FW
LB	71D,K	Blue all vinyl and blue cloth	FWA
LD	71D,K	Red all vinyl and red cloth	FWA
LR	71D,K	Jade all vinyl and jade cloth	FWA
LZ	71D,K	Saddle all vinyl and saddle cloth	FWA
KT	65L	Chamois all vinyl	FW
N2,N2A,N2B	65L	White vinyl and chamois cloth with chamois appointments	FWA
P2,P2A,P2B	65L	White vinyl and chamois cloth with chamois appointments	B
QT,QTB	53K,65K	Chamois vinyl and chamois cloth	SB
RB,RBB,RBC	53D,65D	Blue vinyl and blue cloth	FW
RD,RDB	53D,65D	Red vinyl and red cloth	FW
RR,RRB,RRC	53D,65D	Jade vinyl and jade cloth	FW
RS,RSB,RSC	53D,65D	Gray vinyl and gray cloth	FW
RT,RTB,RTC	53D,65D	Chamois vinyl and chamois cloth	FW
RZ,RZB,RZC	53D,65D	Saddle vinyl and saddle cloth	FW

1977 SOFT TRIM SCHEME CODES

AS LISTED ON CERTIFICATION LABEL

FOR MATERIAL IDENTIFICATION
REFER TO SALESMAN'S
COLOR AND UPHOLSTERY SELECTIONS GUIDE

THE SOFT TRIM SECTION INCLUDES ONLY THOSE ITEMS WHICH WERE AVAILABLE FOR SERVICE AT THE TIME OF PRINTING. ITEMS NOT SHOWN OR INDICATED WITH A BLACK STAR (★) IN THE CATALOG MUST BE IMPROVISED OR PROCURED LOCALLY.

COUGAR (F) — Cont'd

CODE	BODY TYPE	DESCRIPTION OF TRIM SCHEME	● TYPE OF SEAT
SB,SBB,SBC	53D,65D,71D	Blue all vinyl	FW
SD,SDB	53D,65D,71D	Red all vinyl	FW
SR,SRB,SRC	53D,65D,71D	Jade all vinyl	FW
SS,SSB,SSC	53D,65D	Gray all vinyl	FW
ST,STB,STC	53D,65D,71D	Chamois all vinyl	FW
SZ,SZB,SZC	53D,65D,71D	Saddle all vinyl	FW
TB	53K,65K	Blue vinyl and blue cloth	FWA
TD	53K,65K	Red vinyl and red cloth	FWA
TR	53K,65K	Jade vinyl and jade cloth	FWA
TS	53K,65K	Gray vinyl and gray cloth	FWA
TT	53K,65K	Chamois vinyl and chamois cloth	FWA
TZ	53K,65K	Saddle vinyl and saddle cloth	FWA
UB	53K,65K,71K	Blue all vinyl	FWA
UD	53K,65K,71K	Red all vinyl	FWA
UR	53K,65K,71K	Jade all vinyl	FWA
US	53K,65K	Gray all vinyl	FWA
UT	53K,65K,71K	Chamois all vinyl	FWA
UZ	53K,65K,71K	Saddle all vinyl	FWA
VB	53K,65K8	Blue vinyl and blue cloth	SB
VD	53K,65K,	Red vinyl and red cloth	SB
VR	53K,65K,	Jade vinyl and jade cloth	SB
VS	53K,65K,	Gray vinyl and gray cloth	SB
VT	53K,65K,	Chamois vinyl and chamois cloth	SB
VZ	53K,65K,	Saddle vinyl and saddle cloth	SB
WB	53K,65K,71K	Blue all vinyl	SB
WD	53K,65K,71K	Red all vinyl	SB
WR,WRC	53K,65K,71K	Jade all vinyl	SB
WS	53K,65K	Gray all vinyl	SB
WT	53K,65K,71K	Chamois all vinyl	SB
WZ	53K,65K,71K	Saddle all vinyl	SB
W3	65K	Saddle and white vinyl with saddle appointments	SB
YB,YBB	65D	Blue all vinyl	B
YD	65D	Red all vinyl	B
YR,YRB	65D	Jade all vinyl	B
YS,YSB	65D	Gray all vinyl	B
YT,YTB	65D	Chamois all vinyl	B
YZ,YZB	65D	Saddle all vinyl	B
Y3	65D	Saddle and white vinyl with saddle appointments	B
ZB,ZBB	65K	Blue all vinyl	B
ZD	65K	Red all vinyl	B
ZR,ZRB	65K	Jade all vinyl	B
ZS,ZSB	65K	Gray all vinyl	B
ZT,ZTB	65K	Chamois all vinyl	B
ZZ,ZZB	65K	Saddle all vinyl	B
Z3	65K	Saddle and white vinyl with saddle appointments	B

COPYRIGHT © 1986 — FORD MOTOR COMPANY — DEARBORN, MICHIGAN

1977 VINYL ROOF COVER CODES

AS LISTED ON CERTIFICATION LABEL

CODE	BODY TYPE	GRAIN and TYPE of ROOF	COLOR
		COUGAR (F)	
DU	65D,K	Levant—full	Chamois
EU	65D,K	Levant—1/2	Chamois
GA	53,65D,K	Odense—full	Black
GB	53,65D,K	Odense—full	Blue
GD	53,65D,K	Odense—full	Red
GP	53,65D,K	Odense—full	Silver
GR	53,65D,K	Odense—full	Jade
GT	53,65D,K	Odense—full	Brown
GV	53,65D,K	Odense—full	Cream
GW	53,65D,K	Odense—full	White
NA	65D,K	Odense—1/2	Black
NB	65D,K	Odense—1/2	Blue
ND	65D,K	Odense—1/2	Red
NP	65D,K	Odense—1/2	Silver
NR	65D,K	Odense—1/2	Jade
NT	65D,K	Odense—1/2	Brown
NV	65D,K	Odense—1/2	Cream
NW	65D,K	Odense—1/2	White
VU	65D,K	Valino—full	Chamois
VW	65L	Valino—full	White
WU	53	Lugano—full	Chamois
XU	65	Lugano—1/2	Chamois
YA	65L	Valino—1/2	Black
YB	65L	Valino—1/2	Blue
YD	65L	Valino—1/2	Red
YE	65L	Valino—1/2	Gray
YN	65L	Valino—1/2	Bright red
YP	65L	Valino—1/2	Silver
YR	65L	Valino—1/2	Jade
YT	65L	Valino—1/2	Brown
YU	65L	Valino—1/2	Chamois
YV	65L	Valino—1/2	Cream

BODY TYPE	R/L	PART NUMBER LESS SUFFIX	LGTH. (Inches)	-B or Q	-D or N	-L	-M,Ror5	-S	-Tor-2	-U	-V	-Zor3	ALL CODES	ALL CODES	OTHER	QTY.
		TRIM CODES ▶		SECOND CHARACTER of TRIM CODE												
		COLORS ▶		BLUE	RED	BRIGHT RED	JADE	GRAY	CHAMOIS	TAN	CREAM	SADDLE	BLACK	WHITE		
02344-5		PANEL (COWL TRIM)														
F	R	D70Z 6502344		★	★	★	★	A2P	A9T			★				1
	L	D70Z 6502345		★	★	★	★	B2P	B9T			★				1
04104		VISOR ASSY.														
Notes:		⊕ Use with or without non-illuminated vanity mirror - refer to group 17A679 in chassis Section for mirror														
		● Matching sun visor (less vanity mirror) for R.H. sun visor which includes illuminated vanity mirror														
		LESS ARM, BRACKET and MIRROR														
F - - w/non-illuminated vanity mirror	⊕	D60Z 6504104		B	E							C		H		2
	⊕	D70Z 6504104					B5R	B9P	B8T		★					2
04282		PAD (INSTRUMENT PANEL UPPER)														
F		D70Z 6504282		★	A3D	A8D	A5R	★	A6T			A0Z				1
13000		CARPET (FRONT FLOOR)														
F(53D) - - cut pile		D70Z 5313000		A0B	A3D		A9R	A4P	A2T			A2Z				1
F(53K) - - shag		D70Z 5313000		B0B	B3D		B9R	B4P	B2T			B2Z				1
F(65D) - - cut pile		D70Z 6513000		A0B	A3D		A9R	A4P	A2T			A2Z				1
F(65K,L) - - shag -w/o console		D7SZ 6013000		A0B	A3D	A6D	A9R	A4P	A2T			A2Z				1
F(65K,L) - - shag -w/console		D70Z 6513000		E0B	E3D	E6D	E9R	E4P	E2T			E2Z				1
13000		MAT (FRONT FLOOR)														
F(53,65)		D70Z 6513000											C6A			1
13046		CARPET (REAR FLOOR) - Serviced only in assy. - group 13000														
13046		MAT (REAR FLOOR)														
F(53)		D70Z 5313046											A6A			1
13086		MAT (FRONT FLOOR)														
		TWIN (Less carpet insert)														
F - - rubber		D60Z 6213086		B	F								A		C(brown)	1
13106		MAT (REAR FLOOR)														
		TWIN (Less carpet insert)														
F - - rubber		D6FZ 6213106		B	E								A		C(brown)	1
		D6FZ 6213106													F(green)	1
24100-1		PAD (ARM REST) - Incl. attaching parts														
F(53,71) - - front door	R/L	D3DZ 6224100	8 3/4	D												2
	R/L	D7DZ 6224100	8 3/4				B6R	B4P	B4T							2
	R/L	D40Z 6524100	8 3/4									B				2
	R/L	D4WY 6531718	8 3/4		K											2
F(53,71) - - rear door	R/L	D30Z 5324100	8 3/4	C												2
	R/L	D40Z 5324100	8 3/4									B				2
	R/L	D60Z 5324100	8 3/4		A2D		★	★	★							2

COPYRIGHT © 1986— FORD MOTOR COMPANY —DEARBORN, MICHIGAN

NEW ISSUE

1973/79 LINCOLN-MERCURY CARS

BODY TYPE	R/L	PART NUMBER LESS SUFFIX	LGTH. (Inches)	-B or Q	-D or N	-L	-M,Ror5	-S	-Tor-2	-U	-V	-Zor3	ALL CODES	ALL CODES	OTHER	QTY.
		TRIM CODES ▶		SECOND CHARACTER of TRIM CODE												
		COLORS ▶		BLUE	RED	BRIGHT RED	JADE	GRAY	CHAMOIS	TAN	CREAM	SADDLE	BLACK	WHITE		
24100-1	PAD (ARM REST) - Incl. attaching parts — Cont'd															
F(65D,K) - - door	R	D3DZ 6224100	11	J												1
	L	D3DZ 6224101	11	B												1
	R	D7DZ 6224100	11				A6R		A4T							1
	L	D7DZ 6224101	11				A6R	A4P	A4T							1
	R	D40Z 6524100	11									★				1
	L	D40Z 6524101	11									A				1
	R	D4WZ 6524100	11		A											1
	L	D4WZ 6524101	11		A											1
F(65L) - - door	R/L	D7SZ 6024100		A1B	A0D		A2R	A8P	A8T			A8Z		A7W		2
F(65D,K) - - quarter	R/L	D3DZ 6224100	8 3/4	D												2
	R/L	D7DZ 6224100	8 3/4				B6R	B4P	B4T							2
	R/L	D40Z 6524100	8 3/4									B				2
	R/L	D4WY 6531718	8 3/4		K											2
24144-5	BASE (ARM REST) - Incl. attaching parts															
F(53,71) - - front and rear door	R/L	D3DZ 6224144		L												4
	R/L	D5DZ 6224144														4
	R/L	D6DZ 6224144			A6D											4
	R/L	D7DZ 6224144					A7R	A9P	A0T							4
F(65D,K) - - door	R/L	D3DZ 6224144		B												2
	R/L	D6DZ 6224144			C6D											2
	R/L	D7DZ 6224144					C7R		★							2
	R/L	D40Z 6524144										B				2
	R/L	D1AZ 5724144													H(chrome)	2
F(65L) - - door	R	D7SZ 6024144													A(paint to match)	1
	L	D7SZ 6024145													A(paint to match)	1
24346-7	PANEL (CENTER BODY PILLAR INSIDE FINISH)															
F(53,71) - - lower	R	D40Z 5324346		★												1
	L	D40Z 5324347		★												1
	R	D60Z 5324346			★											1
	L	D60Z 5324347			★											1
	R	D70Z 5324346					★	★	★							1
	L	D70Z 5324347					★	★	★							1
F(53,71) - - upper	R	D40Z 5324356													A (paint to match)	1
	L	D40Z 5324357													★	1
24356-7	Refer to group 24346-7															
31012-3	PANEL ASSY. (QUARTER TRIM)															
F(53)	R	D70Z 5331012		★	★		A6R	★	A4T			★				1
31290-1	WINDLACE (QUARTER PILLAR)															
Notes:	● Use red															
F(65L)	L	D7SZ 6031291		A9B	A2D	●	A6R	A4P	A4T			A1Z		A6W		1
31718	Refer to group 24100-1															

BODY TYPE	R/L	PART NUMBER	DESCRIPTION	QTY
45026	COVER (SPARE TIRE)			
F(53,65)		D5LY 6545026-J	Gray-cut pile carpet-w/o-collapsible spare tire	1
		D50Z 6545026-A	Gray-cut pile carpet-w/collapsible spare tire	1
45455	COVER (LUGGAGE COMPARTMENT FLOOR)			
F(53,65)		D70Z 6545455-APA	Gray rubber	1
		D7WY 6545455-AEP	Gray	1
45522	LINING BOARD (LUGGAGE COMPARTMENT REAR)			
F(53,65D,K)	R	D70Z 6545522-A3P	Gray	1
	L	D70Z 6545523-A3P	Gray	1
F(65L)	R	D7WY 6545522-A3P	Gray	1
	L	D7WY 6545523-A3P	Gray	1

BODY TYPE	R/L	PART NUMBER LESS SUFFIX	TRIM CODES, COLORS and APPLICABLE PART NUMBER SUFFIXES													QTY.
		TRIM CODES ▶		SECOND CHARACTER of TRIM CODE									ALL CODES	ALL CODES	OTHER	
				-B or Q	-D or N	-L	-M,Ror5	-S	-Tor-2	-U	-V	-Zor3				
		COLORS ▶	LGTH. (Inches)	BLUE	RED	BRIGHT RED	JADE	GRAY	CHAMOIS	TAN	CREAM	SADDLE	BLACK	WHITE		
46668	PANEL (PACKAGE TRAY TRIM)															
F(53,65)		D70Z 6546668													B0Z(paint to match)	1
519A02	HEADLINING (ROOF SLIDING PANEL)															
F		D5WZ 65519A02		B	★				★			★				1
		D6WZ 65519A02					A5R	A9P						★		1
52018-9	COVER (ROOF SIDE REAR TRIM)															
F(53) - - w/o opera window	R	D70Z 5352018													B9P(paint to match)	1
	L	D70Z 5352019													B9P(paint to match)	1
F(53) - - w/opera window	R	D70Z 5352018													A4P(paint to match)	1
	L	D70Z 5352019													A4P(paint to match)	1
F(65D,K) - - w/o opera window	R	D70Z 6552018													★(paint to match)	1
	L	D70Z 6552019													B9P(paint to match)	1
F(65D,K) - - w/opera window	R	D70Z 6552018													A4P(paint to match)	1
	L	D70Z 6552019													A4P(paint to match)	1

BODY TYPE	R/L	PART NUMBER LESS SUFFIX	VINYL ROOF CODES AND APPLICABLE PART NUMBER SUFFIXES	QTY
537A02	PAD (ROOF OUTSIDE COVER SIDE)			
F(65L)		D8WY 65537A02-A	Rear	1

BODY TYPE	R/L	PART NUMBER	DESCRIPTION	QTY
60050-1	CUSHION KIT (FRONT SEAT)			
F		D70Z 6563100-A	Spring-full width seat-heavy duty	1
60080	CUSHION KIT (REAR SEAT)			
F(53K,65K) - - w/split front seats		D70Z 6560080-A		1
60136-7	BACK KIT (FRONT SEAT)			
F(53,71)	R/L	D7SZ 6064810-A	Pad	2
F(65)	R/L	D7SZ 6064810-A	Pad-split seat	2

COPYRIGHT © 1986 — FORD MOTOR COMPANY — DEARBORN, MICHIGAN

1977 SOFT TRIM SCHEME CODES

AS LISTED ON CERTIFICATION LABEL

FOR MATERIAL IDENTIFICATION
REFER TO SALESMAN'S
COLOR AND UPHOLSTERY SELECTIONS GUIDE
THE SOFT TRIM SECTION INCLUDES ONLY THOSE ITEMS WHICH WERE AVAILABLE FOR SERVICE AT THE TIME OF PRINTING. ITEMS NOT SHOWN OR INDICATED WITH A BLACK STAR (★) IN THE CATALOG MUST BE IMPROVISED OR PROCURED LOCALLY.

● FW–Full width seat without center armrest, FWA– Full width seat with center armrest, B – Bucket seats

MONARCH (G)

Note 1– For replacement of Door Trim Panels (23942–3), refer to this code in the 1977 Soft Trim Section. For replacement of Cushion Covers (62900 and 63804) and Back Covers (64416–7 and 66600), refer to this code in the 1976 Soft Trim Section. All other parts are included in the 1977 Trim Section.

CODE	BODY TYPE	DESCRIPTION OF TRIM SCHEME	● TYPE OF SEAT
AB	54H,66H	Blue all vinyl	B
AD	54H,66H	Red all vinyl	B
AR	54H,66H	Jade all vinyl	B
AS	54H,66H	Gray all vinyl	B
AU	54H,66H	Tan all vinyl	B
AV	54H,66H	Cream all vinyl	B
BB,BBA	54K,66K	Blue vinyl and blue cloth	FWA
BD,BDA	54K,66K	Red vinyl and red cloth	FWA
BR,BRA	54K,66K	Jade vinly and jade cloth	FWA
BS,BSA	54K,66K	Gray vinyl and gray cloth	FWA
BU	54K,66K	Tan vinyl and tan cloth	FWA
CB	54K,66K	Blue all vinyl	B
CD	54K,66K	Red all vinyl	B
CD1	54K	(Code CD – see Note 1)	
CR	54K,66K	Jade all vinyl	B
CR1	54K	(Code CR – see Note 1)	
CS	54K,66K	Gray all vinyl	B
CU	54K,66K	Tan all vinyl	B
CU1	54K	(Code CU – see Note 1)	
CV	54K,66K	Cream all vinyl	B
EB	54H,66H	Blue all vinyl	FWA
ED	54H,66H	Red all vinyl	FWA
ER	54H,66H	Jade all vinyl	FWA
ES	54H,66H	Gray all vinyl	FWA
EU	54H,66H	Tan all vinyl	FWA
EV	54H,66H	Cream all vinyl	FWA
FB	54K,66K	Blue all leather	B
FD	54K,66K	Red all leather	B
FD1	54K	(Code FD – see Note 1)	
FR	54K,66K	Jade all leather	B
FS	54K,66K	Gray all leather	B
FU	54K,66K	Tan all leather	B
FV	54K,66K	Cream all leather	B
GB,GBA	54K,66K	Blue all vinyl	FWA
GD,GDA	54K,66K	Red all vinyl	FWA
GD1	66K	(Code GD – see Note 1)	
GR,GRA	54K,66K	Jade all vinyl	FWA
GS,GSA	54K,66K	Gray all vinyl	FWA
GU	54K,66K	Tan all vinyl	FWA
GV	54K,66K	Cream all vinyl	FWA

COPYRIGHT © 1986 — FORD MOTOR COMPANY — DEARBORN, MICHIGAN

1977 SOFT TRIM SCHEME CODES

AS LISTED ON CERTIFICATION LABEL

FOR MATERIAL IDENTIFICATION
REFER TO SALESMAN'S
COLOR AND UPHOLSTERY SELECTIONS GUIDE
THE SOFT TRIM SECTION INCLUDES ONLY THOSE ITEMS WHICH WERE AVAILABLE FOR SERVICE AT THE TIME OF PRINTING. ITEMS NOT SHOWN OR INDICATED WITH A BLACK STAR (★) IN THE CATALOG MUST BE IMPROVISED OR PROCURED LOCALLY.

● FW–Full width seat without center armrest, FWA– Full width seat with center armrest, B – Bucket seats

MONARCH (G) — Cont'd

Note 1– For replacement of Door Trim Panels (23942–3), refer to this code in the 1977 Soft Trim Section. For replacement of Cushion Covers (62900 and 63804) and Back Covers (64416–7 and 66600), refer to this code in the 1976 Soft Trim Section. All other parts are included in the 1977 Trim Section.

CODE	BODY TYPE	DESCRIPTION OF TRIM SCHEME	● TYPE OF SEAT
HB	54H,66H	Blue vinyl and blue cloth	FWA
HD	54H,66H	Red vinyl and red cloth	FWA
HR	54H,66H	Jade vinyl and jade cloth	FWA
HU	54H,66H	Tan vinyl and tan cloth	FWA
JB	54H,66H	Blue all vinyl	FW
JD	54H,66H	Red all vinyl	FW
JR	54H,66H	Jade all vinyl	FW
JU	54H,66H	Tan all vinyl	FW
JV	54H,66H	Cream all vinyl	FW
KB	54H,66H	Blue all vinyl	FWA
KD	54H,66H	Red all vinyl	FWA
KU	54H,66H	Tan all vinyl	FWA
KV	54H,66H	Cream all vinyl	FWA
LB	54H,66H	Blue vinyl and blue cloth	FWA
LD	54H,66H	Red vinyl and red cloth	FWA
LU	54H,66H	Tan vinyl and tan cloth	FWA
MB	54H,66H	Blue all vinyl	B
MD	54H,66H	Red all vinyl	B
MU	54H,66H	Tan all vinyl	B
MV	54H,66H	Cream all vinyl	B
PD	66H	Red all vinyl	B
PU	66H	Tan all vinyl	B
PV	66H	Cream all vinyl	B
WB	54H,66H	Blue vinyl and blue cloth	FW
WD	54H,66H	Red vinyl and red cloth	FW
WU	54H,66H	Tan vinyl and tan cloth	FW

1977 VINYL ROOF COVER CODES

AS LISTED ON CERTIFICATION LABEL

CODE	BODY TYPE	GRAIN and TYPE of ROOF	COLOR
MONARCH (G)			
FR	54	Normandie–full	Jade
FW	54	Normandie–full	White
GA	54,66	Odense–full	Black
GB	54,66	Odense–full	Blue
GD	54,66	Odense–full	Red
GP	54,66	Odense–full	Silver
GR	54,66	Odense–full	Jade
GT	54,66	Odense–full	Brown
GV	54,66	Odense–full	Cream
GW	54,66	Odense–full	White
GY	54,66	Odense–full	Gold flare
LY	66	Normandie–1/2	Gold flare
NA	66	Odense–1/2	Black
NB	66	Odense–1/2	Blue
ND	66	Odense–1/2	Red
NP	66	Odense–1/2	Silver
NR	66	Odense–1/2	Jade
NT	66	Odense–1/2	Brown
NV	66	Odense–1/2	Cream
NW	66	Odense–1/2	White
NY	66	Odense–1/2	Gold flare
VA	54,66	Valino–full	Black
VB	54,66	Valino–full	Blue
VD	54,66	Valino–full	Red
VE	54,66	Valino–full	Gray
VP	54,66	Valino–full	Silver
VR	54,66	Valino–full	Jade
VT	54,66	Valino–full	Brown
VV	54,66	Valino–full	Cream
VW	54,66	Valino–full	White
YA	66	Valino–1/2	Black
YB	66	Valino–1/2	Blue
YD	66	Valino–1/2	Red
YE	66	Valino–1/2	Gray
YP	66	Valino–1/2	Silver
YR	66	Valino–1/2	Jade
YT	66	Valino–1/2	Brown
YV	66	Valino–1/2	Cream
YW	66	Valino–1/2	White

COPYRIGHT © 1986 — FORD MOTOR COMPANY — DEARBORN, MICHIGAN

1973/79 LINCOLN-MERCURY CARS

BODY TYPE	R/L	PART NUMBER LESS SUFFIX	TRIM CODES, COLORS and APPLICABLE PART NUMBER SUFFIXES														QTY.
		TRIM CODES ▶		SECOND CHARACTER of TRIM CODE									ALL CODES	ALL CODES	OTHER		
				-B or Q	-D or N	-L	-M,Ror5	-S	-Tor-2	-U	-V	-Zor3					
		COLORS ▶	LGTH. (Inches)	BLUE	RED	BRIGHT RED	JADE	GRAY	CHAMOIS	TAN	CREAM	SADDLE	BLACK	WHITE			
02344-5	PANEL (COWL TRIM)																
G	R	D5DZ 6602344			D					★							1
	L	D5DZ 6602345			D					★							1
	R	D6DZ 6602344					A6R	A2P									1
	R	D7DZ 6602344		A9B							★						1
	L	D7DZ 6602345		A9B			★	★			★						1
04104-5	VISOR ASSY.																
Notes:	⊕ Use with or without non-illuminated vanity mirror-refer to group 17A679 in chassis section for mirror,																
	LESS ARM, BRACKET AND MIRROR																
G - - w/non-illuminated vanity mirror	⊕ R/L	D5DZ 6604104			R					P							2
	⊕ R/L	D6DZ 6604104					B5R	B9P									2
	⊕ R/L	D7DZ 6604104		B4B							B5V						2
	INCLUDES ARM AND BRACKET																
G - - w/illuminated vanity mirror	R	D5DZ 6604104			H					★							1
	R	D6DZ 6604104					A5R	A9P									1
04282	PAD (INSTRUMENT PANEL UPPER)																
G		D6DZ 6604282			A3D		A5R	★		A5U							1
		D7DZ 6604282		A9B							★						1
13086	MAT (FRONT FLOOR)																
	TWIN (less carpet insert)																
G - - rubber		D60Z 6213086		B	F								A		C(brown)		1
		D70Z 6213086													A(gold)		1
13106	MAT (REAR FLOOR)																
	TWIN (less carpet insert)																
G - - rubber -plain		D6FZ 6213106		B	★								A		C(brown)		2
24140-1	ARM REST-Includes attaching parts																
G(54) - - front door	R	D5FZ 6224140		G	★		★	★		H	★						1
	L	D5FZ 6224141		E	★		★	★		★	★						1
G(54) - - rear door	R/L	D7DZ 5427540	12 1/2	A9B	★		★	★		★	★						2
G(66)	R	D5FZ 6224140	16	G	★		★	★		H	★						1
	L	D5FZ 6224141	16	E	★		★	★		★	★						1
	R	D6ZZ 6024140	25 3/4	★	★		B6R	B4P		★	★		★	★			1

BODY TYPE	R/L	PART NUMBER LESS SUFFIX	TRIM CODES, COLORS and APPLICABLE PART NUMBER SUFFIXES													QTY.
		TRIM CODES ▶		SECOND CHARACTER of TRIM CODE									ALL CODES	ALL CODES	OTHER	
				-B or Q	-D or N	-L	-M,Ror5	-S	-Tor-2	-U	-V	-Zor3				
		COLORS ▶	LGTH. (Inches)	BLUE	RED	BRIGHT RED	JADE	GRAY	CHAMOIS	TAN	CREAM	SADDLE	BLACK	WHITE		
27540-1	Refer to group 24140-1															
31012-3	PANEL (QUARTER TRIM)															
G(54)	R	D6DZ 5431012			★		★	A4P								1
	L	D6DZ 5431013		★	★		★	A4P		★	★					1
	R	D7DZ 5431012		A9B							★					1
G(66)	R	D7DZ 6631012		★	A2D		★	★		★	★					1
	L	D7DZ 6631013		★	★		A6R	★		★	★					1

BODY TYPE	R/L	PART NUMBER	DESCRIPTION	QTY
45422-3	COVER (LUGGAGE COMPARTMENT SIDE)			
G - - w/shelf mounted spare tire	R	D5DZ 6645422-A	Gray	1
	L	D5DZ 6645423-A	Gray	1
45455	COVER (LUGGAGE COMPARTMENT)			
G - - w/shelf mounted spare tire		D5DZ 6645455-C	Gray carpet	1
- - w qtr wheel house mounted tire		★	Gray carpet	1
		D8DZ 6645494-A0P	Gray burloom	1
45494	Refer to group 45455			
45522-3	LINING BOARD (LUGGAGE COMPARTMENT REAR)			
G	R	D7DZ 6645522-A3P	Gray	1
	L	D7DZ 6645523-A3P	Gray	1
46668	PANEL (PACKAGE TRAY TRIM)			
Notes:	‡ Use with or without speakers			
G(54)	‡	D5DZ 5446668-E	Paint to match	1
G(66)	‡	D5DZ 6646668-B	Paint to match	1
52018-9	COVER (ROOF SIDE REAR TRIM)			
G(66)	R	D6DZ 6652018-A2U	Paint to match	1
	L	★	Paint to match	1
60136-7	BACK KIT (FRONT SEAT)			
G(54H)	R/L	D6DZ 6664810-A	Pad-bucket seat	2
	L	D7DZ 5461019-A	Frame-bucket seat	1
G(54K)	L	D7DZ 5461019-A	Frame-bucket seat	1
G(66H)	R/L	D6DZ 6664810-A	Pad-bucket seat	2
	L	D7DZ 6661019-A	Frame-bucket seat	1
G(66K)	R/L	D6DZ 6664810-C	Pad-full width seat- w/center arm rest	2
	R/L	D6DZ 6664810-A	Pad-bucket seat	2
	L	D7DZ 6661019-A	Frame-bucket seat	1
64810	Refer to group 60136-7			

COPYRIGHT © 1986— FORD MOTOR COMPANY —DEARBORN, MICHIGAN

1977 SOFT TRIM SCHEME CODES

AS LISTED ON CERTIFICATION LABEL

FOR MATERIAL IDENTIFICATION
REFER TO SALESMAN'S
COLOR AND UPHOLSTERY SELECTIONS GUIDE

THE SOFT TRIM SECTION INCLUDES ONLY THOSE ITEMS WHICH WERE AVAILABLE FOR SERVICE AT THE TIME OF PRINTING. ITEMS NOT SHOWN OR INDICATED WITH A BLACK STAR (★) IN THE CATALOG MUST BE IMPROVISED OR PROCURED LOCALLY.

● B–Bucket seats

J (Capri)

CODE	BODY TYPE	DESCRIPTION OF TRIM SCHEME	● TYPE OF SEAT
AE	64D,P	Black all vinyl	B
ME	64D,P	Green all vinyl	B
NE	64D,P	Orange all vinyl	B
Q3	64S	Black and gold all vinyl	B
WE	64D,P	Tan all vinyl	B

COPYRIGHT © 1986 — FORD MOTOR COMPANY — DEARBORN, MICHIGAN

1973/79 LINCOLN-MERCURY CARS

BODY TYPE	R/L	PART NUMBER LESS SUFFIX	TRIM CODES, COLORS and APPLICABLE PART NUMBER SUFFIXES												QTY.
		TRIM CODES ▶	FIRST CHARACTER of TRIM CODE								ALL CODES	ALL CODES	OTHER		
			-A,Q, or U		-M		-N		-W						
		COLORS ▶	BLACK		GREEN		ORANGE		TAN						
04105	VISOR ASSY.														
J	L	D8RZ 6404105		★						★					C(black and parchment)	1
13000	CARPET (FRONT FLOOR)														
J(64) - - w/manual trans		D6RY 6413000		C												1
- - w/automatic trans		D6RY 6413000		D				★								1
13046	CARPET (REAR FLOOR) - Serviced only in assy-group 13000-1															
24140	ARM REST-Incl. attaching parts															
J	R	D4RY 6224140		A		★		★		★						1
	L	D4RY 6224141		A		★		★		★						1

1977 SOFT TRIM SCHEME CODES

AS LISTED ON CERTIFICATION LABEL

CODE	BODY TYPE	DESCRIPTION OF TRIM SCHEME	● TYPE OF SEAT

FOR MATERIAL IDENTIFICATION
REFER TO SALESMAN'S
COLOR AND UPHOLSTERY SELECTIONS GUIDE
THE SOFT TRIM SECTION INCLUDES ONLY THOSE ITEMS WHICH WERE AVAILABLE FOR SERVICE AT THE TIME OF PRINTING. ITEMS NOT SHOWN OR INDICATED WITH A BLACK STAR (★) IN THE CATALOG MUST BE IMPROVISED OR PROCURED LOCALLY.

● SB–Split Bench seat

MARK V (K)

Note 1– For replacement of Cushion Covers (62900–1 and 63804) and Back Covers (64416–7 and 66600) contact your Service Representative who will process in accordance with Technical Letter BE7–128 dated December 12, 1977.

AA	65D	Black vinyl and black cloth (See Note 1)	SB
AB	65D	Blue vinyl and blue cloth (See Note 1)	SB
AD	65D	Red vinyl and red cloth (See Note 1)	SB
AF	65D	Cordovan vinyl and cordovan cloth (See Note 1)	SB
AR	65D	Jade vinyl and jade cloth (See Note 1)	SB
AT	65D	Chamois vinyl and chamois cloth (See Note 1)	SB
AY	65D	Gold vinyl and gold cloth (See Note 1)	SB
BA	65D	Black vinyl and black leather	SB
BB	65D	Blue vinyl and blue leather	SB
BD	65D	Red vinyl and red leather	SB
BF	65D	Cordovan vinyl and cordovan leather	SB
BN	65D	White vinyl and white leather with red appointments	SB
BQ	65D	White vinyl and white leather with blue appointments	SB
BR	65D	Jade vinyl and jade leather	SB
BT	65D	Chamois vinyl and chamois leather	SB
BW	65D	White vinyl and white leather with black appointments	SB
BY	65D	Gold vinyl and gold leather	SB
B2	65D	White vinyl and white leather with chamois appointments	SB
B5	65D	White vinyl and white leather with jade appointments	SB
B6	65D	White vinyl and white leather with cordovan appointments	SB
B8	65D	White vinyl and white leather with gold appointments	SB
CF	65D	Cordovan all cloth	SB
CY	65D	Gold all cloth	SB
DF	65D	Cordovan vinyl and white leather with cordovan appointments	SB
DH	65D	Red vinyl and rose leather with red appointments	SB
DR	65D	Dark jade vinyl and light jade leather	SB
DS	65D	Gray vinyl and gray leather	SB
DT,DTA	65D	Chamois vinyl and chamois leather	SB
DV	65D	Gold vinyl and cream leather with gold appointments	SB
EB	65D	Blue leather and cream leather with blue appointments	SB
FS	65D	Gray vinyl and gray cloth	SB
GB	65D	Blue vinyl and blue cloth	SB
GD	65D	Red vinyl and red cloth	SB
GR	65D	Jade vinyl and jade cloth	SB
JS	65D	Gray leather and blue leather	SB

COPYRIGHT © 1986 — FORD MOTOR COMPANY — DEARBORN, MICHIGAN

1977 VINYL ROOF COVER CODES

AS LISTED ON CERTIFICATION LABEL

CODE	BODY TYPE	GRAIN and TYPE of ROOF	COLOR
MARK V (K)			
KU	65	Lugano – 1/2	Chamois
QW	65	Cayman – full	White
UW	65	Cayman – 1/2	White
VA	65	Valino – full	Black
VB	65	Valino – full	Blue (midnight)
VC	65	Valino – full	Ember (rust)
VD	65	Valino – full	Red (dark)
VE	65	Valino – full	Gray (dove)
VF	65	Valino – full	Cordovan
VH	65	Valino – full	Rose
VM	65	Valino – full	Jade (light)
VP	65	Valino – full	Silver
VR	65	Valino – full	Jade (dark)
VS	65	Valino – full	Blue (light/ice)
VU	65	Valino – full	Chamois (cinnamon gold)
VV	65	Valino – full	Cream
VW	65	Valino – full	White
VY	65	Valino – full	Gold
V2	65	Valino – full	Blue (dark/metallic)
WU	65	Lugano – full	Chamois
XU	65	Lugano – 1/2	Chamois
YA	65	Valino – 1/2	Black
YB	65	Valino – 1/2	Blue (midnight)
YC	65	Valino – 1/2	Ember (rust)
YD	65	Valino – 1/2	Red (dark)
YE	65	Valino – 1/2	Gray (dove)
YF	65	Valino – 1/2	Cordovan
YH	65	Valino – 1/2	Rose
YM	65	Valino – 1/2	Jade (light)
YP	65	Valino – 1/2	Silver
YR	65	Valino – 1/2	Jade (dark)
YS	65	Valino – 1/2	Blue (light/ice)
YU	65	Valino – 1/2	Chamois (cinnamon gold)
YV	65	Valino – 1/2	Cream
YW	65	Valino – 1/2	White
YY	65	Valino – 1/2	Gold
Y2	65	Valino – 1/2	Blue (dark/metallic)

1973/79 LINCOLN-MERCURY CARS

BODY TYPE	R/L	PART NUMBER LESS SUFFIX	TRIM CODES, COLORS and APPLICABLE PART NUMBER SUFFIXES													QTY.
		TRIM CODES ▶		SECOND CHARACTER of TRIM CODE									ALL CODES	ALL CODES	OTHER	
				-B or Q	-D or N	F or 6	-H	-M,R or 5	-S	-T or -2	-V	-Y or 8				
		COLORS ▶		BLUE	RED	CORD-OVAN	ROSE	JADE	GRAY	CHAMOIS	CREAM	GOLD	BLACK	WHITE		
02344-5		PANEL (COWL TRIM)														
Notes:		△ Use red, ● Use gold, @ Use with all trim codes except JS - for JS code use blue														
K	R	D7LY 6502344		A9B	A2D		△	★	@★	★	●	★	A9A			1
	L	D5SZ 6502345						H	@★		●				1	
	L	D7SY 6502345				A8F				★						1
04104		VISOR ASSY.														
Notes:		⊕ Use with or without non-illuminated vanity mirror - refer to group 17A679 in Chassis Section for mirror, △ Use red, ● Use gold														
		LESS ARM, BRACKET and MIRROR														
K - - w/non-illuminated vanity mirror	⊕R/L	D5AZ 6004104		D	E		△						★			2
	⊕R/L	D6AZ 6004104						C	A9P		●	B		★		2
04282		PAD (INSTRUMENT PANEL UPPER)														
Notes:		△ Use red, ● Use gold, @ Use with all trim codes except JS - for JS code use blue														
K		D7LY 6504282		★	A3D	A1F	△	★	@★	★	●	★	★			1
13086		MAT (FRONT FLOOR)														
		TWIN (less carpet insert)														
K - - rubber -Ford oval		D60Z 6213086		B	F								A		C(brown)	1
		D70Z 6213086										A				1
13106		MAT (REAR FLOOR)														
		TWIN (less carpet insert)														
K - - rubber		D6FZ 6213106		B	E							★	A		C(brown)	1
-plain		D6FZ 6213106													F(green)	1
24100-1		PAD (ARM REST) - Incl. attaching parts														
Notes:		△ Use red, ● Use gold														
K - - door	R	D5SZ 6524100		★	D		△	K					★			1
	L	D5SZ 6524101		★	D		△	K					★			1
	R	D6SZ 6524100									●	★		A		1
	L	D6SZ 6524101									●	B		A		1
	R	D6SY 6524100							★							1
	L	D6SY 6524101							A8P							1
	R	D7SY 6524100				A4F				★						1
	L	D7SY 6524101				★				★						1
K - - quarter	R	D5SZ 6531718		★	D		△	K					A			1
	L	D5SZ 6531719		★	D		△	K					A			1
	R	D6SZ 6531718									●	★		A		1
	L	D6SZ 6531719									●	★		A		1
	R	D6SY 6531718							A8P							1
	L	D6SY 6531719							★							1
	R	D7SY 6531718				A4F				★						1
	L	D7SY 6531719				A4F				★						1
24144-5		BASE (ARM REST) - Incl. attaching parts														
Notes:		△ Use red, ● Use gold														
K - - door - vinyl	R	D5SZ 6524144		★	E		△	L					C			1
	L	D5SZ 6524145		F	E		△	L					C			1
	R	D6SY 6524144							B4P							1
	L	D6SY 6524145							B4P							1
	R	D6SZ 6524144									●	★		B		1
	L	D6SZ 6524145									●	A		B		1
	R	D7SY 6524144				B8F				B4T						1
	L	D7SY 6524145				B8F				B4T						1

COPYRIGHT © 1986— FORD MOTOR COMPANY —DEARBORN, MICHIGAN

1973/79 LINCOLN-MERCURY CARS

BODY TYPE	R/L	PART NUMBER LESS SUFFIX	TRIM CODES AND APPLICABLE PART NUMBER SUFFIXES														QTY
31012-3	PANEL (QUARTER TRIM)																
		TRIM CODES ▶	AA	AB	AD	AF	AR	AT	AY								
K	R	D7LY 6531012	A6A	★	A7D	A0F	★	★	★								1
	L	D7LY 6531013	A6A	★	A7D	A0F	★	★	★								1
		TRIM CODES ▶	BA	BB	BD	BF	BN	BQ	BR	BT	BW	BY	B2	B5	B6	B8	
K	R	D7LY 6531012	A6A	★	A7D	A0F	A6W	A6W	★	★	A6W	★	A6W	A6W	A6W	A6W	1
	L	D7LY 6531013	A6A	★	A7D	A0F	A6W	A6W	★	★	A6W	★	A6W	A6W	A6W	A6W	1
		TRIM CODES ▶	CF	CY	DF	DH	DR	DS	DT, DTA	DV	EB	FS	GB	GD	GR	JS	
K	R	D7LY 6531012	★	★	★	C7D	★	★	★	★	★	★	★	★	★	★	1
	L	D7LY 6531013	★	★	★	★	★	C6P	★	★	★	★	★	★	★	C6P	1

BODY TYPE	R/L	PART NUMBER LESS SUFFIX	TRIM CODES, COLORS and APPLICABLE PART NUMBER SUFFIXES													QTY
		TRIM CODES ▶	SECOND CHARACTER of TRIM CODE									ALL CODES	ALL CODES	OTHER		
			-B or Q	-D or N	F or 6	-H	-M,R or 5	-S	-T or -2	-V	-Y or 8					
		COLORS ▶	BLUE	RED	CORD-OVAN	ROSE	JADE	GRAY	CHAMOIS	CREAM	GOLD	BLACK	WHITE			
31070-1	PANEL (QUARTER TRIM LOWER)															
Notes:	△ Use red, ● Use gold															
K - - vinyl	L	D6SY 6531071		★	★		△	★	A4P		●	★		★		1
	L	D7SY 6531071				A8F				★						1
31718-9	Refer to group 24100-1															

BODY TYPE	R/L	PART NUMBER	DESCRIPTION	QTY
45400	COVER (JACK COLUMN IN LUGGAGE COMPARTMENT)			
K - - w/collapsible tire		D7LY 6545400-B0P	Gray burloom	1
45422-3	COVER (LUGGAGE COMPARTMENT SIDE)			
K	R	D7LY 6545422-A0P	Gray - burloom - w/o C.B. Radio	1
45455	COVER (LUGGAGE COMPARTMENT FLOOR)			
K "From 10/76"		D7LY 6545455-B0P	Gray - burloom	1
46668	PANEL (PACKAGE TRAY TRIM)			
K		D7LY 6546668-A9T	Paint to match	1

BODY TYPE	R/L	PART NUMBER LESS SUFFIX	TRIM CODES, COLORS and APPLICABLE PART NUMBER SUFFIXES													QTY
		TRIM CODES ▶	SECOND CHARACTER of TRIM CODE									ALL CODES	ALL CODES	OTHER		
			-B or Q	-D or N	F or 6	-H	-M,R or 5	-S	-T or -2	-V	-Y or 8					
		COLORS ▶	BLUE	RED	CORD-OVAN	ROSE	JADE	GRAY	CHAMOIS	CREAM	GOLD	BLACK	WHITE			
519A02	HEADLINING (ROOF SLIDING PANEL)															
Notes:	△ Use red, ● Use gold															
K - - vinyl		D7LY 65519A02		★	B0D	★	△	B5R	B9P	★	●	★	B4A	B9W		1

BODY TYPE	R/L	PART NUMBER	DESCRIPTION	QTY
52018-9	COVER (ROOF SIDE REAR TRIM) - Serviced only in assy. - group 31012-3			
537A00	Refer to group 53738			
537A02	Refer to group 53738			
53738	PAD (ROOF OUTSIDE CENTER)			
K - - w/half vinyl roof		D7LY 65537A00-A	Rear - lower	1
	R/L	D7LY 65537A02-B	Side	2
		D7LY 6553738-A	Center	1

1973/79 LINCOLN-MERCURY CARS

BODY TYPE	R/L	PART NUMBER LESS SUFFIX	TRIM CODES, COLORS and APPLICABLE PART NUMBER SUFFIXES													QTY.
		TRIM CODES ▶		SECOND CHARACTER of TRIM CODE									ALL CODES	ALL CODES	OTHER	
				-B or Q	-D or N	F or 6	-H	-M,R or 5	-S	-T or -2	-V	-Y or 8				
		COLORS ▶	LGTH. (Inches)	BLUE	RED	CORD-OVAN	ROSE	JADE	GRAY	CHAMOIS	CREAM	GOLD	BLACK	WHITE		
63500	BUTTON (FRONT and REAR SEAT CUSHION and BACK)															
Notes:	■ Square head – use with trim codes beginning with C,D or J, □ Square head – use with trim code EB, † Use with trim code DT, ▲ Use red, ● Use gold															
			VINYL													
K – – front and rear seat cushion and back	■	D7LY 6563500	1/2	★	A7D	★	▲	★	A6P	†★	●	★				AR
	□	D7LY 6563500	1/2								A6V					AR

COPYRIGHT © 1986— FORD MOTOR COMPANY —DEARBORN, MICHIGAN

NEW ISSUE

1977 SOFT TRIM SCHEME CODES

AS LISTED ON CERTIFICATION LABEL

CODE	BODY TYPE	DESCRIPTION OF TRIM SCHEME	● TYPE OF SEAT

FOR MATERIAL IDENTIFICATION
REFER TO SALESMAN'S
COLOR AND UPHOLSTERY SELECTIONS GUIDE
THE SOFT TRIM SECTION INCLUDES ONLY THOSE ITEMS WHICH WERE AVAILABLE FOR SERVICE AT THE TIME OF PRINTING. ITEMS NOT SHOWN OR INDICATED WITH A BLACK STAR (★) IN THE CATALOG MUST BE IMPROVISED OR PROCURED LOCALLY.

● B–Bucket seats

BOBCAT (L)

AA	62,64,73	Black all vinyl	B
AB	62,64,73	Blue all vinyl	B
AD	62,64,73	Red all vinyl	B
AG	62,64,73	Green all vinyl	B
AT	62,64,73	Chamois all vinyl	B
DB,DBA	62,64,73	Blue vinyl and blue cloth	B
DD,DDA	62,64,73	Red vinyl and red cloth	B
DG,DGA	62,64,73	Green vinyl and green cloth	B
DT	62,64,73	Chamois vinyl and chamois cloth	B
GA	62,64,73	Black vinyl and black cloth	B
GB	62,64,73	Blue vinyl and blue cloth	B
GD	62,64,73	Red vinyl and red cloth	B
GG,GGA	62,64,73	Green vinyl and green cloth	B
GT	62,64,73	Chamois vinyl and chamois cloth	B
HA,HAA	62,64,73	Black all vinyl	B
HB,HBA	62,64,73	Blue all vinyl	B
HD,HDA	62,64,73	Red all vinyl	B
HG,HGA	62,64,73	Green all vinyl	B
HT	62,64,73	Chamois all vinyl	B

COPYRIGHT © 1986 — FORD MOTOR COMPANY — DEARBORN, MICHIGAN

1977 VINYL ROOF COVER CODES

AS LISTED ON CERTIFICATION LABEL

CODE	BODY TYPE	GRAIN and TYPE of ROOF	COLOR
		BOBCAT (L)	
EA	62,64	Levant – 1/2	Black
ED	62,64	Levant – 1/2	Red
EG	62,64	Levant – 1/2	Green
NA	62,64	Odense – 1/2	Black
NB	62,64	Odense – 1/2	Blue
ND	62,64	Odense – 1/2	Red
NG	62,64	Odense – 1/2	Green
NT	62,64	Odense – 1/2	Brown
NW	62,64	Odense – 1/2	White

1973/79 LINCOLN-MERCURY CARS

BODY TYPE	R/L	PART NUMBER LESS SUFFIX	TRIM CODES, COLORS and APPLICABLE PART NUMBER SUFFIXES													Q T Y.
		TRIM CODES ➧		SECOND CHARACTER of TRIM CODE									ALL CODES	ALL CODES	OTHER	
				-B or Q	-D or N	-G	-K	-Tor 2	-V	-Yor 8	-5					
		COLORS ➧		BLUE	RED	GREEN	AQUA	CHAMOIS	CREAM	GOLD	EMER-ALD		BLACK	WHITE		
02344-5		PANEL (COWL TRIM)														
L	R	D8FZ 6202344		A9B	A9D	★		A9T					A9A			1
	L	D8FZ 6202345		A9B	A9D	★		A9T					A9A			1
04104		VISOR ASSY. - Less arm, bracket and mirror														
Notes:		⊕ Use with or without vanity mirror - refer to group 17A679 in Chassis Section for mirror														
L	⊕R/L	D6FZ 6204104		B	E	★							A			2
	⊕R/L	D7FZ 6204104						B8T								2
13000		CARPET (FRONT FLOOR)														
L - - cut pile		D5FZ 6413000		B		★							C			1
		D6FZ 6413000			A											1
		D7FZ 6413000						B2T								1
13046		CARPET (REAR FLOOR) - Serviced only in assy.- group 13000														
13048		CARPET (AUXILIARY FLOOR)														
L(73)		D5FZ 7313048		C		★							D			1
		D6FZ 7313048			A											1
		D7FZ 7313048						A2T								1
13048		MAT (AUXILIARY FLOOR)														
L(73) - - rubber		D7FZ 7313048											A5A			1
13086		MAT (FRONT FLOOR)														
		TWIN (less carpet insert)														
L - - rubber -Ford oval		D6FZ 6213086		B	E								A			1
		D7FZ 6213086								K						1
13106		MAT (REAR FLOOR)														
		TWIN (less carpet insert)														
L - - rubber -plain		D6FZ 6213106		B	E	F							A			1
		D7FZ 6213106								A						1
24140-1		ARM REST - Incl. attaching parts														
L	R	D5FZ 6224140		G		B							F			1
	L	D5FZ 6224141		E		B							D			1
	R	D6FZ 6224140			★											1
	L	D6FZ 6224141			E											1
	R	D7FZ 6224140						★								1
	L	D7FZ 6224141						A4T								1
31012-3		PANEL (QUARTER TRIM)														
L(62)	R	D6FZ 6231012		★	★	★							A9A			1
	L	D6FZ 6231013		★	★	★							A9A			1
	R	D7FZ 6231012						A4T								1
	L	D7FZ 6231013						A4T								1
L(64)	R	D6FZ 6431012		★	A5D	★							A9A			1
	L	D6FZ 6431013		★	A5D	★							A9A			1
	R	D7FZ 6431012						A4T								1
	L	D7FZ 6431013						A4T								1
L(73)	R	D6FZ 7331012		★	★	★							A9A			1
	L	D6FZ 7331013		★	★	★							A9A			1
	R	D7FZ 7331012						A4T								1
	L	D7FZ 7331013						A4T								1

COPYRIGHT © 1986— FORD MOTOR COMPANY —DEARBORN, MICHIGAN

NEW ISSUE

1973/79 LINCOLN-MERCURY CARS

BODY TYPE	R/L	PART NUMBER LESS SUFFIX	TRIM CODES, COLORS and APPLICABLE PART NUMBER SUFFIXES												QTY.
		TRIM CODES ▶		SECOND CHARACTER of TRIM CODE								ALL CODES	ALL CODES	OTHER	
				-B or Q	-D or N	-G	-K	-Tor 2	-V	-Yor 8	-5				
		COLORS ▶		BLUE	RED	GREEN	AQUA	CHAMOIS	CREAM	GOLD	EMER-ALD		BLACK	WHITE	
31290	WINDLACE (QUARTER PILLAR)														
L(73)	R/L	D2FZ 7331290		★	★	★							D		2
	R/L	D7FZ 7331290						A4T							2

BODY TYPE	R/L	PART NUMBER	DESCRIPTION	QTY
40374-5	PANEL (BACK LOWER TRIM)			
L(64)	R	D7FZ 6440374-B4T	Paint to match	1
	L	D7FZ 6440375-A4T	Paint to match	1
45026	COVER (SPARE TIRE) - Serviced only in assy. -group 45455			
45440	COVER (LUGGAGE)			
L(64)		D7FZ 6445440-A6A	Black vinyl	1
45455	COVER (LUGGAGE COMPARTMENT FLOOR)			
L(62)		D4FZ 6245455-A	Moulded rubber	1
		D5FZ 6245455-A	Burloom	1
L(64)		D7FZ 6445455-C5A	Black - moulded rubber	1
L(64)		D5FZ 6445455-G	Black carpet	1
		D5FZ 6445455-E	Blue carpet	1
		D7FZ 6445455-C2T	Chamois carpet	1
46668	PANEL (PACKAGE TRAY TRIM)			
L(62)		D5FZ 6246668-B	Paint to match	1
50124	CONTAINER (GLASS ROOF PANEL STOWAGE)			
L(62,64)		D9FZ 6250124-A6A	Black vinyl	1
501A80	STRAP (ROOF OPENING GLASS CONTAINER)			
L(62,64)		D9ZZ 61501A80-A	Black	1

BODY TYPE	R/L	PART NUMBER LESS SUFFIX	TRIM CODES, COLORS and APPLICABLE PART NUMBER SUFFIXES												QTY.
		TRIM CODES ▶		SECOND CHARACTER of TRIM CODE								ALL CODES	ALL CODES	OTHER	
				-B or Q	-D or N	-G	-K	-Tor 2	-V	-Yor 8	-5				
		COLORS ▶		BLUE	RED	GREEN	AQUA	CHAMOIS	CREAM	GOLD	EMER-ALD		BLACK	WHITE	
519A02	PANEL (ROOF OPENING TRIM)														
L(62,64) - - w/ removable roof-glass		D7FZ 62519A02		★	★	★		A4T					A8A		1

BODY TYPE	R/L	PART NUMBER	DESCRIPTION	QTY
60032	BACK KIT (REAR SEAT) - Serviced only in assy. - group 672A18			
60050-1	CUSHION KIT (FRONT SEAT)			
L	R	D6FZ 6260050-A	Bucket seat - hi-back	1
	L	D6FZ 6260051-A	Bucket seat - hi-back	1
	R	D5YY 6460050-A	Bucket seat - lo-back	1
	L	D5YY 6460051-A	Bucket seat - lo-back	1
60136-7	BACK KIT (FRONT SEAT)			
L	R/L	E0FZ 6261018-B	Frame - bucket seat - hi-back	2
	R/L	D3FZ 6264810-A	Pad - bucket seat - hi-back	2
	R/L	D8ZZ 6961018-A	Frame - bucket seat - lo-back	2
	R/L	D6YY 6464810-A	Pad - bucket seat - lo-back	2

BODY TYPE	R/L	PART NUMBER LESS SUFFIX	TRIM CODES, COLORS and APPLICABLE PART NUMBER SUFFIXES													QTY.
		TRIM CODES ➧		SECOND CHARACTER of TRIM CODE									ALL CODES	ALL CODES	OTHER	
				-B or Q	-D or N	-G	-K	-Tor 2	-V	-Yor 8	-5					
		COLORS ➧		BLUE	RED	GREEN	AQUA	CHAMOIS	CREAM	GOLD	EMER-ALD		BLACK	WHITE		
60579	CARPET (REAR SEAT BACK FLOOR)															
L(64,73) - - cut pile		D6FZ 6460579		A0B	C5D	★							A5A			1
		D7FZ 6460579						A2T								1
60579	MAT (REAR SEAT BACK FLOOR)															
L(64,73) - - rubber		D7FZ 6460579											A5A			1

BODY TYPE	R/L	PART NUMBER LESS SUFFIX	TRIM CODES AND APPLICABLE PART NUMBER SUFFIXES													QTY
60762-3	PANEL (FRONT SEAT BACK REAR TRIM INSERT)															
		TRIM CODES ➧	AA	AB	AD	AG	AT	DB, DBA	DD, DDA	DG, DGA	DT					
L	R/L	D3FZ 6261632	AA	AA	AA	AA	AA									2
	R	D7YY 6460762						★	★	★	A4T					1
	L	D7YY 6460763						★	★	★	A4T					1
		TRIM CODES ➧	GA	GB	GD	GG, GGA	GT	HA, HAA	HB, HBA	HD, HDA	HG, HGA	HT				
L	R/L	D3FZ 6261632	AA	AA	AA	AA	AA									2
	R	D5YY 6460762						A	★	★	★					1
	L	D5YY 6460763						A	★	★	★					1
	R	D7YY 6460762										A4T				1
	L	D7YY 6460763										A4T				1
61018	Refer to group 60136-7															
61632	Refer to group 60762-3															

BODY TYPE	R/L	PART NUMBER LESS SUFFIX	TRIM CODES, COLORS and APPLICABLE PART NUMBER SUFFIXES													QTY.
		TRIM CODES ➧		SECOND CHARACTER of TRIM CODE									ALL CODES	ALL CODES	OTHER	
				-B or Q	-D or N	-G	-K	-Tor 2	-V	-Yor 8	-5					
		COLORS ➧	LGTH. (Inches)	BLUE	RED	GREEN	AQUA	CHAMOIS	CREAM	GOLD	EMER-ALD		BLACK	WHITE		
63500	BUTTON (FRONT and REAR SEAT CUSHION and BACK)															
						VINYL										
L - - rectangular head		D5YY 6463500	7/16	★		★							C			AR
		D7YY 6463500	7/16					A9T								AR
64810	Refer to group 60136-7															
66600	COVER (REAR SEAT BACK) - Serviced only in assy. - group 672A18															

COPYRIGHT © 1986 — FORD MOTOR COMPANY — DEARBORN, MICHIGAN

1977 SOFT TRIM SCHEME CODES

AS LISTED ON CERTIFICATION LABEL

CODE	BODY TYPE	DESCRIPTION OF TRIM SCHEME	● TYPE OF SEAT

FOR MATERIAL IDENTIFICATION
REFER TO SALESMAN'S
COLOR AND UPHOLSTERY SELECTIONS GUIDE
THE SOFT TRIM SECTION INCLUDES ONLY THOSE ITEMS WHICH WERE AVAILABLE FOR SERVICE AT THE TIME OF PRINTING. ITEMS NOT SHOWN OR INDICATED WITH A BLACK STAR (★) IN THE CATALOG MUST BE IMPROVISED OR PROCURED LOCALLY.

● FW–Full width seat without center armrest, FWA–Full width seat with center armrest, B–Bucket seats

COMET (P)

Note 1 – For replacement of Door and Quarter Trim Panels (23942–3 and 31012–3), refer to this code in the 1977 Soft Trim Section. For replacement of Cushion Covers (62900 and 63804) and Back Covers (64416–7 and 66600), contact your Service Representative who will process in accordance with General ICC Bulletin No. 7526. All other parts are included in the 1977 Soft Trim Section.

BA,BAA	54,62	Black vinyl and black cloth	FW
BA1	54	(Code BA – see Note 1)	
BB,BBA	54,62	Blue vinyl and blue cloth	FW
BB1	54	(Code BB – see Note 1)	
BD,BDA	54,62	Red vinyl and red cloth	FW
BG,BGA	54,62	Green vinyl and green cloth	FW
BU,BUA	54,62	Tan vinyl and tan cloth	FW
HA,HAA	54,62	Black all vinyl	FW
HA1	54	(Code HA – see Note 1)	
HB,HBA	54,62	Blue all vinyl	FW
HB1	54	(Code HB – see Note 1)	
HD,HDA	54,62	Red all vinyl	FW
HG,HGA	54,62	Green all vinyl	FW
HU,HUA	54,62	Tan all vinyl	FW
JA	54,62	Black vinyl and black cloth	FW
JA1	54,62	(Code JA – see Note 1)	
JB	54,62	Blue vinyl and blue cloth	FW
JG	54,62	Green vinyl and green cloth	FW
JG1	54,62	(Code JG – see Note 1)	
JU	54,62	Tan vinyl and tan cloth	FW
JUA	54,62	Tan vinyl and tan cloth	FW
KA	54,62	Black all vinyl	FW
KAA	62	Black all vinyl	FW
KB	54,62	Blue all vinyl	FW
KD	54,62	Red all vinyl	FW
KG	54,62	Green all vinyl	FW
KGA	62	Green all vinyl	FW
KU	54,62	Tan all vinyl	FW
LA	54,62	Black all vinyl	B
LB	54,62	Blue all vinyl	B
LD	54,62	Red all vinyl	B
LU	54,62	Tan all vinyl	B
PB	54,62	Blue all vinyl	B
PU	54,62	Tan all vinyl	B
QB	54,62	Blue vinyl and blue cloth	B
QG	54,62	Green vinyl and green cloth	B
QU	54,62	Tan vinyl and tan cloth	B
RB	54,62	Blue vinyl and blue cloth	B
RG	54,62	Green vinyl and green cloth	B
RU	54,62	Tan vinyl and tan cloth	B

COPYRIGHT © 1986 — FORD MOTOR COMPANY — DEARBORN, MICHIGAN

1977 SOFT TRIM SCHEME CODES

AS LISTED ON CERTIFICATION LABEL

CODE	BODY TYPE	DESCRIPTION OF TRIM SCHEME	● TYPE OF SEAT

FOR MATERIAL IDENTIFICATION
REFER TO SALESMAN'S
COLOR AND UPHOLSTERY SELECTIONS GUIDE
THE SOFT TRIM SECTION INCLUDES ONLY THOSE ITEMS WHICH WERE AVAILABLE FOR SERVICE AT THE TIME OF PRINTING. ITEMS NOT SHOWN OR INDICATED WITH A BLACK STAR (★) IN THE CATALOG MUST BE IMPROVISED OR PROCURED LOCALLY.

● FW–Full width seat without center armrest, FWA–Full width seat with center armrest, B–Bucket seats,

COMET (P)

Note 1 – For replacement of Door and Quarter Trim Panels (23942–3 and 31012–3), refer to this code in the 1977 Soft Trim Section. For replacement of Cushion Covers (62900 and 63804) and Back Covers (64416–7 and 66600), contact your Service Representative who will process in accordance with General ICC Bulletin No. 7526. All other parts are included in the 1977 Soft Trim Section.

SA,SAA	54,62	Black all vinyl	B
SB,SBA	54,62	Blue all vinyl	B
SD,SDA	54,62	Red all vinyl	B
SU,SUA	54,62	Tan all vinyl	B
TB,TBA	54,62	Blue vinyl and blue cloth	B
TG,TGA	54,62	Green vinyl and green cloth	B
TU,TUA	54,62	Tan vinyl and tan cloth	B
YA,YAA	54,62	Black all vinyl	FWA
YB,YBA	54,62	Blue all vinyl	FWA
YD,YDA	54,62	Red all vinyl	FWA
YU,YUA	54,62	Tan all vinyl	FWA

1977 VINYL ROOF COVER CODES

AS LISTED ON CERTIFICATION LABEL

CODE	BODY TYPE	GRAIN and TYPE of ROOF	COLOR
		COMET (P)	
GA	54	Odense–full	Black
GB	54	Odense–full	Blue
GD	54	Odense–full	Red
GG	54	Odense–full	Green
GT	54	Odense–full	Brown
GW	54	Odense–full	White
HA	62	Odense–3/4	Black
HB	62	Odense–3/4	Blue
HD	62	Odense–3/4	Red
HG	62	Odense–3/4	Green
HT	62	Odense–3/4	Brown
HW	62	Odense–3/4	White
VA	54	Valino – full	Black
VB	54	Valino – full	Blue
VD	54	Valino – full	Red
VT	54	Valino – full	Brown
VW	54	Valino – full	White
YA	62	Valino – 3/4	Black
YD	62	Valino – 3/4	Red
YT	62	Valino – 3/4	Brown
YW	62	Valino – 3/4	White

COPYRIGHT © 1986 — FORD MOTOR COMPANY — DEARBORN, MICHIGAN

1973/79 LINCOLN-MERCURY CARS

BODY TYPE	R/L	PART NUMBER LESS SUFFIX	TRIM CODES, COLORS and APPLICABLE PART NUMBER SUFFIXES													QTY
		TRIM CODES ➧		SECOND CHARACTER of TRIM CODE									ALL CODES	ALL CODES	OTHER	
				-Bor-Q	-Dor-N	-G	M,Ror5	-S	-U	-V	-Yor-8	-Z,3or9				
		COLORS ➧		BLUE	RED	GREEN	JADE	GRAY	TAN	CREAM	GOLD	SADDLE	BLACK	WHITE		
04104	VISOR ASSY. - Less arm, bracket and mirror															
Notes:	⊕ Use with or without vanity mirror - refer to group 17A679 in Chassis Section for mirror															
P	⊕ R/L	D4DZ 6204104		B	★								A			2
	⊕ R/L	D5DZ 6204104				C			A							2
04282	PAD (INSTRUMENT PANEL UPPER)															
P		D3DZ 6204282		A	★	★			F				D			1
13086	MAT (FRONT FLOOR)															
			TWIN (less carpet insert)													
P - - rubber-Ford-oval		D60Z 6213086		B	F	★							A		C(brown)	1
		D70Z 6213086									A					1
13106	MAT (REAR FLOOR)															
			TWIN (less carpet insert)													
P - - rubber-plain		D6FZ 6213106		B	E	F					★		A			1
24100	PAD (ARM REST)-Incl. attaching parts															
P - - front door			Refer to group 24140-1													
P(54) - - rear door	R/L	D3DZ 6224100		D	★	★			★				F			2
24140-1	ARM REST-Incl. attaching parts															
P - - front door	R	D5FZ 6224140		G		B			H				F			1
	L	D5FZ 6224141		E		B			F				D			1
	R	D6FZ 6224140			★											1
	L	D6FZ 6224141			E											1
P(54) - - rear door			Base-refer to group 31604													
			Pad-refer to group 24100													

BODY TYPE	R/L	PART NUMBER	DESCRIPTION	QTY
45494	COVER (LUGGAGE COMPARTMENT FLOOR)			
P		D3DZ 6245494-A	Gray burloom	1
46668	PANEL (PACKAGE TRAY TRIM)			
Notes:	@ Use with or without speakers			
P(54)	@	D4DZ 5446668-C	Paint to match	1
60136-7	BACK KIT (FRONT SEAT)			
P(54)	R/L	D6DZ 6664810-A	Pad-bucket seat	2
"From 3/77"	R/L	D6DZ 6664810-C	Pad-full width seat-w/center arm rest	2
	L	D7DZ 5461019-A	Frame-bucket seat	1
P(62)	R/L	D6DZ 6664810-A	Pad-bucket seat	2
"From 3/77"	R/L	D6DZ 6664810-C	Pad-full width seat-w/center arm rest	2
	L	D7DZ 6661019-A	Frame-bucket seat	1
61018-9	Refer to group 60136-7			

1977 SOFT TRIM SCHEME CODES

AS LISTED ON CERTIFICATION LABEL

CODE	BODY TYPE	DESCRIPTION OF TRIM SCHEME	● TYPE OF SEAT

**FOR MATERIAL IDENTIFICATION
REFER TO SALESMAN'S
COLOR AND TRIM SELECTIONS GUIDE
THE SOFT TRIM SECTION INCLUDES ONLY THOSE ITEMS WHICH WERE AVAILABLE FOR SERVICE AT THE TIME OF PRINTING. ITEMS NOT SHOWN OR INDICATED WITH A BLACK STAR (★) IN THE CATALOG MUST BE IMPROVISED OR PROCURED LOCALLY.**

● FWA – Full width seat with center armrest, B–Bucket seats

Versailles (V)

SB	54M	Blue vinyl and blue cloth	FWA
SF	54M	Cordovan vinyl and cordovan cloth	FWA
SS	54M	Gray vinyl and gray cloth	FWA
ST	54M	Chamois vinyl and chamois cloth	FWA
TB	54M	Blue all leather	FWA
TF	54M	Cordovan all leather	FWA
TQ	54M	White all leather with blue appointments	FWA
TS	54M	Gray all leather	FWA
TT	54M	Chamois all leather	FWA
T2	54M	White all leather with chamois appointments	FWA
T6	54M	White all leather with cordovan appointments	FWA
UB	54M	Blue all leather	B
UF	54M	Cordovan all leather	B
UQ	54M	White all leather with blue appointments	B
US	54M	Gray all leather	B
UT	54M	Chamois all leather	B
U2	54M	White all leather with chamois appointments	B
U6	54M	White all leather with cordovan appointments	B

COPYRIGHT © 1986 — FORD MOTOR COMPANY — DEARBORN, MICHIGAN

1977 VINYL ROOF COVER CODES

AS LISTED ON CERTIFICATION LABEL

CODE	BODY TYPE	GRAIN and TYPE of ROOF	COLOR
		Versailles (V)	
VB	54M	Valino – full	Blue (midnight)
VF	54M	Valino – full	Cordovan
VP	54M	Valino – full	Silver
VU	54M	Valino – full	Chamois (Cinnamon gold)
VW	54M	Valino – full	White
V5	54M	Valino – full	Blue (wedgewood)

BODY TYPE	R/L	PART NUMBER LESS SUFFIX	TRIM CODES, COLORS and APPLICABLE PART NUMBER SUFFIXES													QTY.
		TRIM CODES ▶		SECOND CHARACTER of TRIM CODE									ALL CODES	ALL CODES	OTHER	
				-B or Q	-D or N	F or 6	-H	-M,R or 5	-S	-T or -2	-V	-Y or 8				
		COLORS ▶		BLUE	RED	CORD-OVAN	ROSE	JADE	GRAY	CHAMOIS	CREAM	GOLD	BLACK	WHITE		
02344-5	PANEL (COWL TRIM)															
V	R	D74Y 5402344		A9B		★			A2P	★						1
	L	D74Y 5402345		A9B		A8F			A2P	★						1
04282	PAD (INSTRUMENT PANEL UPPER)															
V		D74Y 5404282		★		A3F			★	★						1
13086	MAT (FRONT FLOOR)															
			TWIN (less carpet insert)													
V - - rubber		D60Z 6213086		B	F								A		C(brown)	1
		D70Z 6213086										A				1
13106	MAT (REAR FLOOR)															
V - - rubber -plain		D6FZ 6213106		B	E								A		C(brown)	2
		D6FZ 6213106										★			F(green)	1
24140-1	ARM REST - Incl. attaching parts															
V - - front door	R	D74Y 5424140		ATB		ATF			ATS	★				★		1
	L	D74Y 5424141		ATB		ATF			ATS	★				★		1
- - rear door	R	D74Y 5427540		ATB		ATF			ATS	★				★		1
	L	D74Y 5427541		ATB		ATF			ATS	★				★		1
27540-1	Refer to group 24140-1															

BODY TYPE	R/L	PART NUMBER	DESCRIPTION	QTY
45422-3	COVER (LUGGAGE COMPARTMENT SIDE)			
V	R	D74Y 5445422-A0B	Blue	1
	R	D74Y 5445422-A1F	Cordovan	1
	L	D74Y 5445423-A1F	Cordovan	1
	R	D74Y 5445422-A4P	Gray	1
	L	D74Y 5445423-A4P	Gray	1
45443	COVER (LUGGAGE COMPARTMENT FRONT)			
V		D74Y 5445443-A9B	Blue	1
		D74Y 5445443-A2F	Cordovan	1
		D74Y 5445443-A4P	Gray	1
45455	COVER (LUGGAGE COMPARTMENT FLOOR)			
V		D74Y 5445455-A1F	Cordovan	1
		D74Y 5445455-A	Gray	1

COPYRIGHT © 1986— FORD MOTOR COMPANY —DEARBORN, MICHIGAN

1973/79 LINCOLN-MERCURY CARS

BODY TYPE	R/L	PART NUMBER	DESCRIPTION	QTY
45594	PANEL (LUGGAGE COMPARTMENT DOOR)			
V		D84Y 5445594-A0B	Blue	1
		D84Y 5445594-A1F	Cordovan	1
		D84Y 5445594-A4P	Gray	1
537A00-1	Refer to group 537A02-3			
537A02-3	PAD (ROOF OUTSIDE COVER)			
V	R	D74Y 54537A02-A	Rear side	1
	L	D74Y 54537A03-A	Rear side	1
	R	D84Y 54537A00-A	Rear	1
	L	D84Y 54537A01-A	Rear	1
60032	BACK KIT (REAR SEAT)			
V		D6DZ 5466800-A	Pad	1
60136-7	BACK KIT (FRONT SEAT)			
V	R/L	D74Y 5464810-A	Pad-bucket seat	2
	L	D7DZ 5461019-A	Frame-bucket seat	1
BODY TYPE	R/L	PART NUMBER LESS SUFFIX	TRIM CODES AND APPLICABLE PART NUMBER SUFFIXES	QTY
61018-9	Refer to group 60136-7			

62800	CORD (FRONT SEAT BACK ASSIST)																	
		TRIM CODES ➧	SB	SF	SS	ST	TB	TF	TQ	TS	TT	T2	T6					
V	R/L	D74Y 5462800	B9B	B7F	B8P	★	A8B	A7F	A9W	A6P	★	A9W	A9W					2
		TRIM CODES ➧	UB	UF	UQ	US	UT	U2	U6									
V	R/L	D74Y 5462800	A8B	A7F	A9W	A6P	★	A9W	A9W									2
64810	Refer to group 60136-7																	

1978 SOFT TRIM SCHEME CODES

AS LISTED ON CERTIFICATION LABEL

CODE	BODY TYPE	DESCRIPTION OF TRIM SCHEME	● TYPE OF SEAT

FOR MATERIAL IDENTIFICATION REFER TO SALESMAN'S COLOR AND UPHOLSTERY SELECTIONS GUIDE

● FW—Full width seat without center armrest, SB—Split Bench seat
FWA – Full width seat with center armrest, B—Bucket seats

MERCURY (A)

NOTE 1 For replacement of door and quarter trim panels (23942–3, 27406–7 and 31012–3) refer to this code in the 1978 Soft Trim Section. For replacement of cushion covers (62900 and 63804) and covers (64416 and 66600) **contact your Service Representative who will process in accordance with ICC bulletin No. 7526.** All other parts are included in the 1978 Soft Trim Section.

FB	53L,65L,71K	Blue all leather	SB
FD	53L,65L,71K	Red all leather	SB
FR	53L,65L,71K	Jade all leather	SB
FS	53L,65L	Gray all leather	SB
FY	53L,65L,71K	Camel all leather	SB
FZ	53L,65L,71K	Saddle all leather	SB
GB	53H,65H	Blue vinyl and blue cloth	FW
GD	53H,65H	Red vinyl and red cloth	FW
GR	53H,65H	Jade vinyl and jade cloth	FW
GS	53H,65H	Gray vinyl and gray cloth	FW
GY	53H,65H	Camel vinyl and camel cloth	FW
GZ	53H,65H	Saddle vinyl and saddle cloth	FW
HB	53H,65H,71K	Blue all vinyl	FWA
HD	53H,65H,71K	Red all vinyl	FWA
HR	53H,65H,71K	Jade all vinyl	FWA
HS	53H,65H	Gray all vinyl	FWA
HY	53H,65H,71K	Camel all vinyl	FWA
HZ	53H,65H,71K	Saddle all vinyl	FWA
JB,JBA	53L,65L	Blue all cloth	SB
JD,JDA	53L,65L	Red all cloth	SB
JR,JRA	53L,65L	Jade all cloth	SB
JS,JSA	53L,65L	Gray all cloth	SB
JY,JYA	53L,65L	Camel all cloth	SB
JZ,JZA	53L,65L	Saddle all cloth	SB
KB	53H,65H,71K	Blue all vinyl	FW
KD	53H,65H,71K	Red all vinyl	FW
KR	53H,65H,71K	Jade all vinyl	FW
KS	53H,65H	Gray all vinyl	FW
KY	53H,65H,71K	Camel all vinyl	FW
KZ	53H,65H,71K	Saddle all vinyl	FW
LB	53H,65H	Blue vinyl and blue cloth	FWA
LD	53H,65H	Red vinyl and red cloth	FWA
LR	53H,65H	Jade vinyl and jade cloth	FWA
LS	53H,65H	Gray vinyl and gray cloth	FWA
LY	53H,65H	Camel vinyl and camel cloth	FWA
LZ	53H,65H	Saddle vinyl and saddle cloth	FWA
MB	53K,65K	Blue vinyl and blue cloth	SB
MB1	53K,65K	Code MB – see Note 1	
MD	53K,65K	Red vinyl and red cloth	SB
MD1	53K,65K	Code MD – see Note 1	
MR	53K,65K	Jade vinyl and jade cloth	SB
MR1	53K,65K	Code MR – see Note 1	
MS	53K,65K	Gray vinyl and gray cloth	SB
MS1	53K,65K	Code MS – see Note 1	

COPYRIGHT © 1986 — FORD MOTOR COMPANY — DEARBORN, MICHIGAN

1973/79 LINCOLN-MERCURY CARS

1978 SOFT TRIM SCHEME CODES

AS LISTED ON CERTIFICATION LABEL

CODE	BODY TYPE	DESCRIPTION OF TRIM SCHEME	● TYPE OF SEAT

FOR MATERIAL IDENTIFICATION
REFER TO SALESMAN'S
COLOR AND UPHOLSTERY SELECTIONS GUIDE

● FW–Full width seat without center armrest, SB–Split Bench seat
FWA – Full width seat with center armrest, B–Bucket seats

MERCURY (A)

NOTE 1 For replacement of door and quarter trim panels (23942-3, 27406-7 and 31012-3) refer to this code in the 1978 Soft Trim Section. For replacement of cushion covers (62900 and 63804) and covers (64416 and 66600) contact your Service Representative who will process in accordance with ICC bulletin No. 7526. All other parts are included in the 1978 Soft Trim Section.

MY	53K,65K	Camel vinyl and camel cloth	SB
MY1	53K,65K	Code MY – see Note 1	
MZ	53K,65K	Saddle vinyl and saddle cloth	SB
RB	53K,65K	Blue vinyl and blue cloth	FWA
RB1	53K,65K	Code RB – see Note 1	
RD	53K,65K	Red vinyl and red cloth	FWA
RD1	53K,65K	Code RD – see Note 1	
RR	53K,65K	Jade vinyl and jade cloth	FWA
RR1	53K,65K	Code RR – see Note 1	
RS	53K,65K	Gray vinyl and gray cloth	FWA
RS1	53K,65K	Code RS – see Note 1	
RY	53K,65K	Camel vinyl and camel cloth	FWA
RY1	53K,65K	Code RY – see Note 1	
RZ	53K,65K	Saddle vinyl and saddle cloth	FWA
SB	71K	Blue all vinyl	FWA
SD	71K	Red all vinyl	FWA
SR	71K	Jade all vinyl	FWA
SY	71K	Camel all vinyl	FWA
SZ	71K	Saddle all vinyl	FWA
VB	53K,65K,71K	Blue all vinyl	SB
VD	53K,65K,71K	Red all vinyl	SB
VR	53K,65K,71K	Jade all vinyl	SB
VS	53K,65K	Gray all vinyl	SB
VY	53K,65K,71K	Camel all vinyl	SB
VZ	53K,65K,71K	Saddle all vinyl	SB
WB	53H,65H	Blue vinyl and blue cloth	FWA
WD	53H,65H	Red vinyl and red cloth	FWA
WR	53H,65H	Jade vinyl and jade cloth	FWA
WS	53H,65H	Grey vinyl and grey cloth	FWA
WY	53H,65H	Camel vinyl and camel cloth	FWA
WZ	53H,65H	Saddle vinyl and saddle cloth	FWA

THE SOFT TRIM SECTION INCLUDES ONLY THOSE ITEMS WHICH WERE AVAILABLE FOR SERVICE AT TIME OF PRINTING. ITEMS NOT SHOWN OR INDICATED WITH A BLACK STAR (★) IN THE CATALOG MUST BE IMPROVISED OR PROCURED LOCALLY.

1978 VINYL ROOF COVER CODES

AS LISTED ON CERTIFICATION LABEL

CODE	BODY TYPE	GRAIN and TYPE of ROOF	COLOR
MERCURY (A)			
BA	65	Crosshatch – full	Black
DA	53,65	Milano – full	Black
DB	53,65	Milano – full	M. Blue
DD	53,65	Milano – full	Red
DE	53,65	Milano – full	Gray
DP	53,65	Milano – full	Silver
DR	53,65	Milano – full	Jade
DS	53,65	Milano – full	Midnite Blue
DT	53,65	Milano – full	Brown
DV	53,65	Milano – full	Camel
DW	53,65	Milano – full	White
EA	65	Milano – 1/2	Black
EB	65	Milano – 1/2	M. Blue
ED	65	Milano – 1/2	Red
EE	65	Milano – 1/2	Gray
EP	65	Milano – 1/2	Silver
ER	65	Milano – 1/2	Jade
ES	65	Milano – 1/2	Midnite Blue
ET	65	Milano – 1/2	Brown
EV	65	Milano – 1/2	Camel
EW	65	Milano – 1/2	White
VB	53,65	Valino – full	Med. Blue
VR	53,65	Valino – full	Jade
VS	53,65	Valino – full	Midnite Blue
VT	53,65	Valino – full	Brown
YB	65	Valino – 1/2	Med. Blue
YR	65	Valino – 1/2	Jade
YS	65	Valino – 1/2	Midnite Blue
YT	65	Valino – 1/2	Brown

COPYRIGHT © 1986 — FORD MOTOR COMPANY — DEARBORN, MICHIGAN

1973/79 LINCOLN-MERCURY CARS

BODY TYPE	R/L	PART NUMBER LESS SUFFIX	TRIM CODES, COLORS and APPLICABLE PART NUMBER SUFFIXES											QTY.
		TRIM CODES ▶		SECOND CHARACTER of TRIM CODE							ALL CODES	ALL CODES	OTHER	OTHER	
				-B or Q	-D or N	-R	-S	-U	-Y	-Z					
		COLORS ▶		BLUE	RED	JADE	GRAY	TAN	CAMEL	SADDLE	BLACK	WHITE			
04100-5	VISOR ASSY.														
Notes:	⊕ Use with or w/o non illuminated mirror-refer to basic group 17A679 in Chassis section for mirror,														
	ϕ Matching visors (less vanity mirror) for R.H. visor which includes vanity mirror														
	● Use saddle														
	LESS ARM BRACKET and MIRROR														
A - - w/non illuminated vanity mirror	⊕	D5AZ 6004104		D	E			●		F					2
	⊕	D6AZ 6004104				C	A9P								2
	⊕	D8AZ 6004104							A5Y						2
04282	PAD (INSTRUMENT PANEL UPPER)														
A		D4MY 6504282		A						F					1
		D5MY 6504282			A										1
		D7MY 6504282				A5R	A1P								1
		D8MY 6504282							A4Y						1
13000	CARPET (FLOOR FRONT and REAR ONE PIECE DESIGN)														
A(53H)		D7MY 5313000		A2B	A4D	A9R	A7P			A5Z					1
10 oz.		D8MY 5313000							A3Y						1
A(53K,L)		D7MY 5313000		B2B	B4D	B9R	B7P			B5Z					1
18 oz.		D8MY 5313000							B3Y						1
A(65H)		D7MY 6513000		B2B	B4D	B9R	B7P			B5Z					1
10 oz.		D8MY 6513000							B3Y						1
A(65K,L)		D7MY 6513000		A2B	A4D	A9R	A7P			A5Z					1
18 oz.		D8MY 6513000							A3Y						1
A(71) exc. Colony Park		D7AZ 7113000		A2B	A4D	A9R	A7P			A5Z					1
10 oz.		D8AZ 7113000							A3Y						1
A(71) Colony park		D7AZ 7113000		B2B	B4D	B9R	B7P			B5Z					1
18 oz.		D8AZ 7113000							B3Y						1
13000	MAT ASSY. FRONT (HEAVY DUTY RUBBER)														
A		D3AZ 5313000									A				1
13048	CARPET (AUXILIARY FLOOR)														
A(71)		D5AZ 7113048		★	★	★	★		★	AG					1
24140-1	ARM REST - Includes attaching parts														
Notes:	● Use saddle, ⊕ includes one ash receptacle opening, % includes two ash receptacle openings														
A(53,71) - front door - - w/o power equip.	R	D7AZ 5324140		B5B	B4D	★	★	●	★	B8Z					1
	L	D7AZ 5324141		B5B	B4D	★	★	●	★	B8Z					1
- - w/power equip.	R	D7AZ 5324140		A5B	A4D	★	★	●	★	A8Z					1
	L	D7AZ 5324141		A5B	A4D	★	C4P	●	★	A8Z					1
A(53,71) - rear door		★													
A(65)-door - - w/o power equip.	⊕R	D7AZ 6024140		A5B	A4D	A8R	A4P	●	★	A8Z					1
	⊕L	D7AZ 6024141		A5B	A4D	A8R	A4P	●	★	A8Z					1
- - w/power equip.	%R	D7AZ 6024140		B5B	B4D	B8R	★	●	★	B8Z					1
	⊕L	D7AZ 6024141		B5B	B4D	B8R	B4P	●	★	B8Z					1

BODY TYPE	R/L	PART NUMBER LESS SUFFIX	TRIM CODES, COLORS and APPLICABLE PART NUMBER SUFFIXES												QTY.
		TRIM CODES ▶	SECOND CHARACTER of TRIM CODE							ALL CODES	ALL CODES	OTHER	OTHER		
			-B or Q	-D or N	-R	-S	-U	-Y	-Z						
		COLORS ▶	BLUE	RED	JADE	GRAY	TAN	CAMEL	SADDLE	BLACK	WHITE				
24346-7	PANEL (CENTER BODY PILLAR INSIDE FINISH)														
A(53,71) - - lower		★													
- - upper	R	★													1
	L	D4AZ 5324357												A(paint to match)	1
24356-7	Refer to group 24346														

BODY TYPE	R/L	PART NUMBER LESS SUFFIX	TRIM CODES AND APPLICABLE PART NUMBER SUFFIXES														QTY
27406-7	PANEL (REAR DOOR TRIM)																
		TRIM CODES ▶	MB	MD	MR	MS	MY	MZ	RB	RD	RR	RS	RY	RZ			
A(53K)	R	D8MY 5327406	★	★	★	★	★	AFZ	★	★	★	★	★	AFZ			1
	L	★															1
		TRIM CODES ▶	VB	VD	VR	VS	VY	VZ									
A(53K)	R	D8MY 5327406	★	★	AFR	★	★	AFZ									1
	L	★															1
		TRIM CODES ▶	FB	FD	FR	FS	FY	FZ	JB JBA	JD JDA	JR JRA	JS JSA	JY JYA	JZ JZA			
A(53L)	R	D8MY 5327406	★	★	AFR	★	★	AFZ	★	★	★	★	★	★			1
	L	★															1
		TRIM CODES ▶	FB	FD	FR	FY	FZ	HB	HD	HR	HY	HZ					
A(71K)	R	D8MY 5327406	★	★	AFR	★	AFZ	★	★	★	★	★					1
	L	★															1
		TRIM CODES ▶	SB	SD	SR	SY	SZ	VB	VD	VR	VY	VZ					
A(71K)	R	D8MY 5327406	★	★	AFR	★	AFZ	★	★	AFR	★	AFZ					1
	L	★															1

BODY TYPE	R/L	PART NUMBER	DESCRIPTION	QTY
45522-3	LINING BOARD (LUGGAGE COMPARTMENT REAR)			
A(53,65)	R	D5MY 6545522-A	Gray	1
	L	D5MY 6545523-A	Gray	1

BODY TYPE	R/L	PART NUMBER LESS SUFFIX	TRIM CODES, COLORS and APPLICABLE PART NUMBER SUFFIXES												QTY.
		TRIM CODES ▶	SECOND CHARACTER of TRIM CODE							ALL CODES	ALL CODES	OTHER	OTHER		
			-B or Q	-D or N	-R	-S	-U	-Y	-Z						
		COLORS ▶	BLUE	RED	JADE	GRAY	TAN	CAMEL	SADDLE	BLACK	WHITE				
519A02	HEADLINING ROOF (SLIDNG PANEL)														
A(53) - - with glass sliding roof		D6WZ 65519A02		★	★	A5R	★			★					1
		D8WZ 65519A02							A						1

COPYRIGHT © 1986 — FORD MOTOR COMPANY — DEARBORN, MICHIGAN

1978 SOFT TRIM SCHEME CODES

AS LISTED ON CERTIFICATION LABEL

FOR MATERIAL IDENTIFICATION
REFER TO SALESMAN'S
COLOR AND UPHOLSTERY SELECTIONS GUIDE

THE SOFT TRIM SECTION INCLUDES ONLY THOSE ITEMS WHICH WERE AVAILABLE FOR SERVICE AT THE TIME OF PRINTING. ITEMS NOT SHOWN OR INDICATED WITH A BLACK STAR (★) IN THE CATALOG MUST BE IMPROVISED OR PROCURED LOCALLY.

● SB–Split Bench seat, FWA–Full width seat with center arm rest

LINCOLN (D)

CODE	BODY TYPE	DESCRIPTION OF TRIM SCHEME	● TYPE OF SEAT
BB	53,60	Blue vinyl and blue cloth	FWA
BD	53,60	Red vinyl and red cloth	FWA
BF	53,60	Cordovan vinyl and cordovan cloth	FWA
BR	53,60	Jade vinyl and jade cloth	FWA
BT	53,60	Chamois vinyl and chamois cloth	FWA
BV	53,60	Champagne vinyl and champagne cloth	FWA
BY	53,60	Gold vinyl and gold cloth	FWA
DA	53,60	Black vinyl and black leather	FWA
DB	53,60	Blue vinyl and blue leather	FWA
DD	53,60	Red vinyl and red leather	FWA
DF	53,60	Cordovan vinyl and cordovan leather	FWA
DR	53,60	Jade vinyl and jade leather	FWA
DT	53,60	Chamois vinyl and chamois leather	FWA
DV	53,60	Champagne vinyl and champagne leather	FWA
DY	53,60	Gold vinyl and gold leather	FWA
EA	53,60	Black vinyl and black leather	SB
EB	53,60	Blue vinyl and blue leather	SB
ED	53,60	Red vinyl and red cloth	SB
EF	53,60	Cordovan vinyl and cordovan leather	SB
ER	53,60	Jade vinyl and jade leather	SB
ET	53,60	Chamois vinyl and chamois leather	SB
EV	53,60	Champagne vinyl and champagne leather	SB
EY	53,60	Gold vinyl and gold leather	SB
JA	53	Black all cloth	SB
JB	53,60	Blue all cloth	SB
JD	53,60	Red all cloth	SB
JF	53,60	Cordovan all cloth	SB
JR	53,60	Jade all cloth	SB
JS	53,60	Gray all cloth	SB
JT	53,60	Chamois all cloth	SB
JV	53,60	Champagne all cloth	SB
JY	53,60	Gold all cloth	SB
KA	53,60	Black vinyl and black leather	SB
KB	53,60	Blue vinyl and blue leather	SB
KD	53,60	Red vinyl and red leather	SB
KF	53,60	Cordovan vinyl and cordovan leather	SB
KN	53,60	White vinyl and white leather with red appointments	SB
KQ	53,60	White vinyl and white leather with blue appointments	SB
KR	53,60	Jade vinyl and jade leather	SB
KS	53,60	Gray vinyl and gray leather	SB
KT	53,60	Chamois vinyl and chamois leather	SB
KV	53,60	Champagne vinyl and champagne leather	SB
KW	53,60	White vinyl and white leather with black appointments	SB
KY	53,60	Gold vinyl and gold leather	SB
K2	53,60	White vinyl and white leather with chamois appointments	SB
K4	53,60	White vinyl and white leather with champagne appointments	SB
K5	53,60	White vinyl and white leather with jade appointments	SB
K6	53,60	White vinyl and white leather with cordovan appointments	SB
K8	53,60	White vinyl and white leather with gold appointments	SB

COPYRIGHT © 1986 — FORD MOTOR COMPANY — DEARBORN, MICHIGAN

1978 VINYL ROOF COVER CODES

AS LISTED ON CERTIFICATION LABEL

CODE	BODY TYPE	GRAIN and TYPE of ROOF	COLOR
		LINCOLN (D)	
MU	53,60	Lugano – coach	Chamois
TA	53,60	Valino – coach	Black
TD	53,60	Valino – coach	Red
TE	53,60	Valino – coach	Gray
TF	53,60	Valino – coach	Cordovan (dark)
TJ	53,60	Valino – coach	Champagne (midnight)
TK	53,60	Valino – coach	Cordovan (light)
TM	53,60	Valino – coach	Jade (light)
TP	53,60	Valino – coach	Silver
TS	53,60	Valino – coach	Blue (midnight)
TV	53,60	Valino – coach	Cream
TW	53,60	Valino – coach	White
T4	53,60	Valino – coach	Jade (midnight)
T5	53,60	Valino – coach	Blue (wedgewood)
T6	53,60	Valino – coach	Champagne (light)
VA	53,60	Valino – full	Black
VD	53,60	Valino – full	Red
VE	53,60	Valino – full	Gray
VF	53,60	Valino – full	Cordovan (dark)
VJ	53,60	Valino – full	Champagne (midnight)
VK	53,60	Valino – full	Cordovan (light)
VM	53,60	Valino – full	Jade (light)
VP	53,60	Valino – full	Silver
VS	53,60	Valino – full	Blue (midnight)
VV	53,60	Valino – full	Cream
VW	53,60	Valino – full	White
V4	53,60	Valino – full	Jade (midnight)
V5	53,60	Valino – full	Blue (wedgewood)
V6	53,60	Valino – full	Champagne (light)
WU	53,60	Lugano – full	Chamois

BODY TYPE	R/L	PART NUMBER LESS SUFFIX	TRIM CODES, COLORS and APPLICABLE PART NUMBER SUFFIXES														Q T Y.
		TRIM CODES ➧		SECOND CHARACTER of TRIM CODE									ALL CODES	ALL CODES	OTHER		
		COLORS ➧	Length (Inches)	-B or-Q BLUE	-D or-N RED	-F or-6 CORD-OVAN	-H ROSE	-M-R or-5 JADE	-S GRAY	-T or-2 CHAMOIS	-V or-4 CHAM-PAGNE	-Y or-8 GOLD	BLACK	WHITE			
02344-5	PANEL (COWL TRIM)																
D	R	D5VY 6002344		D	E			★					C				1
	L	D5VY 6002345		D	E			★					C				1
	R	D7VY 6002344				A8F				★							1
	L	D7VY 6002345				★				★							1
	R	D6VY 6002344							A2P								1
	L	D6VY 6002345							A2P								1
	R	D8VY 6002344									★	A8V					1
	L	D8VY 6002345									A6U	A8V					1
04104-5	VISOR ASSY.																
Notes:	△ Use with or without non-illuminated vanity mirror refer to group 17A679 in Chassis Section for mirror, ‡ Garage door opener not offered on R.H. (pass) side																
			LESS ARM and BRACKET														
D - - w/non illuminated vanity mirror	△R/L	D8VY 6004104		A7B							A2U	★					2
	△R/L	D7VY 6004104			★	A8F		★	★	★			★	★			2
			INCLUDES ARM and BRACKET														
D - - w/illuminated vanity mirror-w/o garage door opener	R	D8VY 6004104		B7B							B2U	★					1
	L	D8VY 6004105		B7B							B2U	B3V					1
	R	D6VY 6004104			A0D	★		★	B9P	★			★	A9W			1
	L	D6VY 6004105			A0D	★		★	★	★			A4A	A9W			1
- - w/illuminated vanity mirror-w/ garage door opener	‡R	D8VY 6004104		B7B							B2U	★					1
	L	D8VY 6004105		C7B							C2U	C3V					1
	‡R	D6VY 6004104			A0D			★	B9P					A9W			1
	L	D7VY 6004105			C0D			★	C9P				C4A	C9W			1
	‡R	D7VY 6004104				★				★							1
	L	D7VY 6004105				C8F				★							1
04282	PAD (INSTRUMENT PANEL UPPER)																
D		D8VY 6004282		★	★	★		★	A2P	★	★	A4V	A5A				1

COPYRIGHT © 1986— FORD MOTOR COMPANY —DEARBORN, MICHIGAN

1973/79 LINCOLN-MERCURY CARS

BODY TYPE	R/L	PART NUMBER LESS SUFFIX	Length (Inches)	-B or-Q BLUE	-D or-N RED	-F or-6 CORD-OVAN	-H ROSE	-M-R or-5 JADE	-S GRAY	-T or-2 CHAMOIS	-V or-4 CHAM-PAGNE	-Y or-8 GOLD	ALL CODES BLACK	ALL CODES WHITE	OTHER	QTY.
TRIM CODES ▶				SECOND CHARACTER of TRIM CODE												
COLORS ▶																
24140-1	ARM REST - Incl. attaching parts															
D(53) - - front door	R	D8VY 5324140		★							★	★				1
	L	D8VY 5324141		★							A9U	★				1
	R	D5VY 5324140			F			★					C			1
	L	D8VY 5324141			A0D			★	★				A9A	★		1
	R	D7VY 5324140				A4F				★						1
	R	D6VY 5324140							A8P					★		1
- - rear door	R	D8VY 5327540		A6B							A9U	A1V				1
	L	D8VY 5327541		A6B							A9U	A1V				1
	R	D5VY 5327540			F			A					C			1
	L	D5VY 5327541			F			★					C			1
	R	D7VY 5327540				A4F				★						1
	L	D7VY 5327541				A4F				★						1
	R	D6VY 5327540							A8P					A		1
	L	D6VY 5327541							A8P					A		1
D(60) - - front door	R	D8VY 6024140		A6B							A9U	A1V				1
	L	D8VY 6024141		★							★	A1V				1
	R	D5VY 6024140			F			★					★			1
	L	D8VY 6024141			A0D			★					A9A			1
	R	D7VY 6024140				A4F				★						1
	L	D8VY 6024141				★				★						1
	R	D6VY 6024140							A8P					A		1
	L	D8VY 6024141							A8P					★		1
- - quarter	R	D8VY 6031600		A6B							A9U	A1V				1
	L	D8VY 6031601		A6B							A9U	A1V				1
	R	D5VY 6031600			F			★					C			1
	L	D5VY 6031601			F			★					C			1
	R	D7VY 6031600				A4F				★						1
	L	D7VY 6031601				A4F				★						1
	R	D6VY 6031600							A8P					A		1
	L	D6VY 6031601							A8P					★		1
24346-7	PANEL (CENTER BODY PILLAR INSIDE FINISH)															
D(53) - - upper	R	D5VY 5324356													★(paint to match)	1
	L	D5VY 5324357													A(paint to match)	1
24356-7	Refer to group 24356-7															
27540-1	Refer to group 24140-1															
281A74-5	COVER (QUARTER LATCH PILLAR FLANGE)															
D(60)	R	D8VY 60281A74		A4B							★	A6V				1
	L	D8VY 60281A75		A4B							★	A6V				1
	R	D5VY 60281A74			G			★					E			1
	L	D5VY 60281A75			G			★					E			1
	R	D7VY 60281A74				A8F				★						1
	L	D7VY 60281A75				A8F				★						1
	R	D6VY 60281A74							A4P					A		1
	L	D6VY 60281A75							A4P					A		1
281A84	Refer to group 537A02-3															

BODY TYPE	R/L	PART NUMBER LESS SUFFIX	TRIM CODES, COLORS and APPLICABLE PART NUMBER SUFFIXES														QTY.
		TRIM CODES ➧	Length	SECOND CHARACTER of TRIM CODE									ALL CODES	ALL CODES	OTHER		
				-B or-Q	-D or-N	-F or-6	-H	-M-R or-5	-S	-T or-2	-V or-4	-Y or-8					
		COLORS ➧	(Inches)	BLUE	RED	CORD-OVAN	ROSE	JADE	GRAY	CHAMOIS	CHAM-PAGNE	GOLD	BLACK	WHITE			
31012-3	PANEL ASSY. (QUARTER TRIM)																
D(53)	R	D8VY 5331012		A4B							A4U	A6V					1
	L	D8VY 5331013		A4B							A4U	A6V					1
	R	D5VY 5331012			A			★					H				1
	L	D5VY 5331013			★			★					★				1
	R	D7VY 5331012				A8F				★							1
	L	D7VY 5331013				A8F				★							1
	R	D6VY 5331012							A4P					A			1
	L	D6VY 5331013							A4P					A			1
D(60)	R	D8VY 6031012		A5B							★	★					1
	L	D8VY 6031013		A5B							A2U	A2V					1
	R	D5VY 6031012			★			★					D				1
	L	D5VY 6031013			★			★					D				1
	R	D7VY 6031012				★				★							1
	L	D7VY 6031013				A0F				★							1
	R	D6VY 6031012							A6P					A			1
	L	D6VY 6031013							A6P					A			1

BODY TYPE	R/L	PART NUMBER LESS SUFFIX	TRIM CODES AND APPLICABLE PART NUMBER SUFFIXES														QTY
311A58-9	PANEL (QUARTER TRIM FINISH)																
		TRIM CODES ➧	BB	BD	BF	BR	BT	BV	BY								
D(60)	R	D7VY 60311A58	★	★	A7F	★	★	★	★								1
		TRIM CODES ➧	DA	DB	DD	DF	DR	DT	DB	DY							
D(60)	R	D7VY 60311A58	★	★	★	A7F	★	★	★	★							1
		TRIM CODES ➧	EA	EB	ED	EF	ER	ET	EV	EY							
D(60)	R	D7VY 60311A58	★	★	★	A7F	★	★	★	★							1
31600-1	Refer to group 24140-1																

BODY TYPE	R/L	PART NUMBER	DESCRIPTION	QTY
31750	COVER (QUARTER WHEELHOUSE-IN LUGGAGE COMPARTMENT)			
D		D9VY 6031750-A0P	Gray-burloom	1
45455	COVER (LUGGAGE COMPARTMENT FLOOR)			
D		D7VY 6045455-A	Gray-carpet	1
46668	PANEL (PACKAGE TRAY TRIM)			
D(53)		D5VY 5346668-D	Paint to match	1

BODY TYPE	R/L	PART NUMBER LESS SUFFIX	VINYL ROOF CODES AND APPLICABLE PART NUMBER SUFFIXES														QTY
517C66	WELT (ROOF OUTSIDE MOULDING) - Refer to group 53700 for explanation of vinyl roof codes																
		VINYL ROOF CODES ➧	MU	TA	TD	TE	TF	TJ	TK	TM							
D(53)		D8VY 53517C66	★	★	★	★	★	★	A4C	★							1
		VINYL ROOF CODES ➧	TP	TS	TV	TW	T4	T5	T6								
D(53)		D8VY 53517C66	★	★	★	★	★	★	A2U								1
		VINYL ROOF CODES ➧	MU	TA	TD	TE	TF	TJ	TK	TM							
D(60)		D8VY 60517C66	★	★	★	★	★	★	A4C	★							1
		VINYL ROOF CODES ➧	TP	TS	TV	TW	T4	T5	T6								
D(60)		D8VY 60517C66	★	★	★	★	★	A5B	A2U								1

COPYRIGHT © 1986— FORD MOTOR COMPANY —DEARBORN, MICHIGAN

NEW ISSUE

1973/79 LINCOLN-MERCURY CARS

BODY TYPE	R/L	PART NUMBER LESS SUFFIX	Length (Inches)	-B or-Q BLUE	-D or-N RED	-F or-6 CORD-OVAN	-H ROSE	-M-R or-5 JADE	-S GRAY	-T or-2 CHAMOIS	-V or-4 CHAM-PAGNE	-Y or-8 GOLD	ALL CODES BLACK	ALL CODES WHITE	OTHER	QTY.
		TRIM CODES ▶ / COLORS ▶		SECOND CHARACTER of TRIM CODE												
519A02		**HEADLINING (ROOF SLIDING PANEL)**														
D(53) - - w/sliding glass roof		D8LY 65519A02		B7B							B2U	B3V				1
		D7LY 65519A02			B0D	★		B5R	B9P	★			B4A	B9W		
D(53) - - w/fixed glass roof and coach roof		D8VY 53519A02		B7B							B2U	B3V				1
		D7VY 53519A02			B0D	B8F		★	B9P	★			B4A	B9W		1
D(53) - - w/fixed glass roof and w/o coach roof		D8VY 53519A02		A7B							A2U	A3V				1
		D7VY 53519A02			A0D	A8F		★	A9P	★			A4A	A9W		1
D(60) - - w/sliding glass roof		D8LY 65519A02		B7B							★	B3V				1
		D7LY 65519A02			B0D	★		B5R	B9P	★			B4A	B9W		1
D(60) - - w/fixed glass roof		D8VY 60519A02		C7B							C2U	C3V				1
		D7VY 60519A02			C0D	C8F		★	C9P	★			C4A	C9W		1
52018-9		**COVER (ROOF SIDE REAR TRIM)**														
D(53) - - w/opera window	R	D8VY 5352018		★							A2U	A2V				1
	L	D8VY 5352019		A5B							A2U	A2V				1
	R	D7VY 5352018			B7D	A0F		★	B6P	★			★	B6W		1
	L	D7VY 5352019			B7D	★		B6R	★	★			B6A	★		1

BODY TYPE	R/L	PART NUMBER	DESCRIPTION	QTY
537A02-3		**PAD (ROOF OUTSIDE COVER SIDE)**		
D(53) - - w/full roof	R/L	D7VY 53537A02-B	Rear	2
	R/L	D7VY 60281A84-A	Quarter lock pillar	2
D(53) - - w/coach roof	R/L	D7VY 53537A02-A	Rear	2
		D7VY 60537A00-A	Rear-lower	1
D(60) - - w/full roof	R/L	D7VY 60537A02-B	Rear	2
	R/L	D7VY 60281A84-A	Quarter lock pillar	2
D(60) - - w/coach roof		D7VY 6053738-A	Center	1
	R/L	D7VY 60537A02-B	Rear	2
		D7VY 60537A00-A	Rear-lower	1
53738		**Refer to group 537A02-3**		

TYPE	SIZE (INCHES) STUD LENGTH	SIZE (INCHES) HEAD	C/V W/G @	PART NUMBER LESS SUFFIX	Length (Inches)	-B or-Q BLUE	-D or-N RED	-F or-6 CORD-OVAN	-H ROSE	-M-R or-5 JADE	-S GRAY	-T or-2 CHAMOIS	-V or-4 CHAM-PAGNE	-Y or-8 GOLD	ALL CODES BLACK	ALL CODES WHITE	OTHER	QTY.
60032				**BACK KIT (REAR SEAT)**														
D(Town Car and Town Coupe)				D5VY 5360032-B														1
				TRIM CODES ▶ / COLORS ▶		SECOND CHARACTER of TRIM CODE												
63500				**BUTTON (FRONT and REAR SEAT CUSHION and BACK)**														
Notes:				@ C-Cloth, V-Vinyl														
4	1 x 1 1/2	C	D7VY	6063500	★	★	B0F		★	★	★	★	★	★			AR	

1978 SOFT TRIM SCHEME CODES

AS LISTED ON CERTIFICATION LABEL

CODE	BODY TYPE	DESCRIPTION OF TRIM SCHEME	● TYPE OF SEAT

FOR MATERIAL IDENTIFICATION
REFER TO SALESMAN'S
COLOR AND UPHOLSTERY SELECTIONS GUIDE

THE SOFT TRIM SECTION INCLUDES ONLY THOSE ITEMS WHICH WERE AVAILABLE FOR SERVICE AT THE TIME OF PRINTING. ITEMS NOT SHOWN OR INDICATED WITH A BLACK STAR (★) IN THE CATALOG MUST BE IMPROVISED OR PROCURED LOCALLY.

● FW–Full width seat without center armrest, SB–Split Bench seat, FWA–Full width seat with center armrest, B–Bucket seats

COUGAR (F)

Note 1– For replacement of Door Trim Panels (23942-3 and 27406-7), refer to this code in the 1978 Soft Trim Section. For replacement of Cushion Covers (62900 and 63804) and Back Covers (64416-7 and 66600), contact your Service Representative, who will process in accordance with General ICC Bulletin No. 7526. All other parts are included in the 1978 Soft Trim Section.

AB	65L	Blue vinyl and blue cloth	FWA
AE	65L	Russet vinyl and russet cloth	FWA
AR	65L	Jade vinyl and jade cloth	FWA
AS	65L	Gray vinyl and gray cloth	FWA
AT	65L	Chamois vinyl and chamois cloth	FWA
AZ	65L	Saddle vinyl and saddle cloth	FWA
BB,BBA,BBC	65L	Blue all vinyl	FWA
BE,BEA,BEC	65L	Russet all vinyl	FWA
BQ,BQA,BQC	65L	White all vinyl with blue appointments	FWA
BR,BRA,BRC	65L	Jade all vinyl	FWA
BS,BSA,BSC	65L	Gray all vinyl	FWA
BT,BTA,BTC	65L	Chamois all vinyl	FWA
BZ,BZA,BZC	65L	Saddle all vinyl	FWA
B2,B2A,B2C	65L	White all vinyl with chamois appointments	FWA
B5,B5A,B5C	65L	White all vinyl with jade appointments	FWA
B7,B7A,B7C	65L	White all vinyl with russet appointments	FWA
B9,B9A,B9C	65L	White all vinyl with saddle appointments	FWA
CB,CBB	65L	Blue vinyl and blue cloth	SB
CE,CEB	65L	Russet vinyl and russet cloth	SB
CR,CRB	65L	Jade vinyl and jade cloth	SB
CR1	65L	(Code CR – See Note 1)	
CS,CSB	65L	Gray vinyl and gray cloth	SB
CS1	65L	(Code CS – See Note 1)	
CT,CTB	65L	Chamois vinyl and chamois cloth	SB
CT1	65L	(Code CT – See Note 1)	
CZ,CZB	65L	Saddle vinyl and saddle cloth	SB
DB,DBB	65L	Blue all vinyl	SB
DE,DEB	65L	Russet all vinyl	SB
DL	65L	White all vinyl with red appointments	SB
DQ,DQB	65L	White all vinyl with blue appointments	SB
DR,DRB,DRC	65L	Jade all vinyl	SB
DS,DSB	65L	Gray all vinyl	SB
DT,DTB	65L	Chamois all vinyl	SB
DZ,DZB	65L	Saddle all vinyl	SB
D2,D2B	65L	White all vinyl with chamois appointments	SB
D5,D5B	65L	White all vinyl with jade appointments	SB
D7,D7B	65L	White all vinyl with russet appointments	SB
D9,D9B	65L	White all vinyl with saddle appointments	SB
EB,EBB,EBC,EBF	65L	Blue all leather	SB
EE,EEB,EEC,EEF	65L	Russet all leather	SB
EL,ELB,ELC,ELF	65L	White all leather with red appointments	SB
EQ,EQB,EQC,EQF	65L	White all leather with blue appointments	SB
ER,ERB,ERC,ERF	65L	Jade all leather	SB
ES,ESB,ESC,ESF	65L	Gray all leather	SB

COPYRIGHT © 1986 — FORD MOTOR COMPANY — DEARBORN, MICHIGAN

1978 SOFT TRIM SCHEME CODES

AS LISTED ON CERTIFICATION LABEL

FOR MATERIAL IDENTIFICATION
REFER TO SALESMAN'S
COLOR AND UPHOLSTERY SELECTIONS GUIDE

THE SOFT TRIM SECTION INCLUDES ONLY THOSE ITEMS WHICH WERE AVAILABLE FOR SERVICE AT THE TIME OF PRINTING. ITEMS NOT SHOWN OR INDICATED WITH A BLACK STAR (★) IN THE CATALOG MUST BE IMPROVISED OR PROCURED LOCALLY.

● FW–Full width seat without center armrest, SB–Split Bench seat, FWA–Full width seat with center armrest, B–Bucket seats

COUGAR (F)

CODE	BODY TYPE	DESCRIPTION OF TRIM SCHEME	● TYPE OF SEAT
ET,ETB,ETC,ETF	65L	Chamois all leather	SB
EZ,EZB,EZC,EZF	65L	Saddle all leather	SB
E2,E2B,E2C,E2F	65L	White all leather with chamois appointments	SB
E5,E5B,E5C,E5F	65L	White all leather with jade appointments	SB
E7,E7B,E7C,E7F	65L	White all leather with russet appointments	SB
E9,E9B,E9C,E9F	65L	White all leather with saddle appointments	SB
FB,FBB	65L	Blue all vinyl	B
FE,FEB	65L	Russet all vinyl	B
FL	65L	White all vinyl with red appointments	B
FQ,FQB	65L	White all vinyl with blue appointments	B
FR,FRA,FRB,FRC	65L	Jade all vinyl	B
FS,FSB	65L	Gray all vinyl	B
FT,FTB	65L	Chamois all vinyl	B
FZ,FZB	65L	Saddle all vinyl	B
F2,F2B	65L	White all vinyl with chamois appointments	B
F5,F5B	65L	White all vinyl with jade appointments	B
F7,F7B	65L	White all vinyl with russet appointments	B
F9,F9B	65L	White all vinyl with saddle appointments	B
GB,GBB	65L	Blue vinyl and blue cloth	B
GE,GEB	65L	Russet vinyl and russet cloth	B
GR,GRB,GRC	65L	Jade vinyl and jade cloth	B
GS,GSB	65L	Gray vinyl and gray cloth	B
GT,GTB	65L	Chamois vinyl and chamois cloth	B
GZ,GZB	65L	Saddle vinyl and saddle cloth	B
HB,HBA,HBC	53D,65D	Blue all vinyl	FWA
HE,HEA,HEC	53D,65D	Russet all vinyl	FWA
HR,HRA,HRC	53D,65D	Jade all vinyl	FWA
HS,HSA,HSC	53D,65D	Gray all vinyl	FWA
HT,HTA,HTC	53D,65D	Chamois all vinyl	FWA
HZ,HZA,HZC	53D,65D	Saddle all vinyl	FWA
JB	53D,65D	Blue vinyl and blue cloth	FW
JE	53D,65D	Russet vinyl and russet cloth	FW
JR	53D,65D	Jade vinyl and jade cloth	FW
JT	53D,65D	Chamois vinyl and chamois cloth	FW
KB	53D,65D	Blue all vinyl	FW
KE	53D,65D	Russet all vinyl	FW
KR	53D,65D	Jade all vinyl	FW
KT	53D,65D	Chamois all vinyl	FW
LB	53D,65D	Blue vinyl and blue cloth	FW
LE	53D,65D	Russet vinyl and russet cloth	FW
LR	53D,65D	Jade vinyl and jade cloth	FW
LT	53D,65D	Chamois vinyl and chamois cloth	FW
MB	53D,65D	Blue all vinyl	FW
ME	53D,65D	Russet all vinyl	FW
MR	53D,65D	Jade all vinyl	FW
MT	53D,65D	Chamois all vinyl	FW
QT	65L	Chamois vinyl and chamois cloth	B
RB	53D,65D	Blue vinyl and blue cloth	FW

1978 SOFT TRIM SCHEME CODES

AS LISTED ON CERTIFICATION LABEL

FOR MATERIAL IDENTIFICATION
REFER TO SALESMAN'S
COLOR AND UPHOLSTERY SELECTIONS GUIDE

THE SOFT TRIM SECTION INCLUDES ONLY THOSE ITEMS WHICH WERE AVAILABLE FOR SERVICE AT THE TIME OF PRINTING. ITEMS NOT SHOWN OR INDICATED WITH A BLACK STAR (★) IN THE CATALOG MUST BE IMPROVISED OR PROCURED LOCALLY.

● FW-Full width seat without center armrest, SB-Split Bench seat, FWA-Full width seat with center armrest, B-Bucket seats

COUGAR (F)

CODE	BODY TYPE	DESCRIPTION OF TRIM SCHEME	● TYPE OF SEAT
RE	53D,65D	Russet vinyl and russet cloth	FW
RR	53D,65D	Jade vinyl and jade cloth	FW
RS	53D,65D	Gray vinyl and gray cloth	FW
RT	53D,65D	Chamois vinyl and chamois cloth	FW
RZ	53D,65D	Saddle vinyl and saddle cloth	FW
SB	53D,65D	Blue all vinyl	FW
SE	53D,65D	Russet all vinyl	FW
SR	53D,65D	Jade all vinyl	FW
SS	53D,65D	Gray all vinyl	FW
ST,STA	53D,65D	Chamois all vinyl	FW
SZ	53D,65D	Saddle all vinyl	FW
TB	53D,65D	Blue vinyl and blue cloth	FWA
TE	53D,65D	Russet vinyl and russet cloth	FWA
TR	53D,65D	Jade vinyl and jade cloth	FWA
TS	53D865D	Gray vinyl and gray cloth	FWA
TT	53D,65D	Chamois vinyl and chamois cloth	FWA
TZ	53D,65D	Saddle vinyl and saddle cloth	FWA
UB,UBA,UBC	53D,65D	Blue all vinyl	FWA
UE,UEA,UEC	53D,65D	Russet all vinyl	FWA
UR,URA,URC	53D,65D	Jade all vinyl	FWA
US,USA,USC	53D,65D	Gray all vinyl	FWA
UT,UTA,UTC	53D,65D	Chamois all vinyl	FWA
UZ,UZA,UZC	53D,65D	Saddle all vinyl	FWA
VB,VBA	53D,65D	Blue vinyl and blue cloth	SB
VE,VEA	53D,65D	Russet vinyl and russet cloth	SB
VR,VRA	53D,65D	Jade vinyl and jade cloth	SB
VS,VSA	53D,65D	Gray vinyl and gray cloth	SB
VT,VTA	53D,65D	Chamois vinyl and chamois cloth	SB
VZ,VZA	53D,65D	Saddle vinyl and saddle cloth	SB

COPYRIGHT © 1986 — FORD MOTOR COMPANY — DEARBORN, MICHIGAN

1978 VINYL ROOF COVER CODES

AS LISTED ON CERTIFICATION LABEL

CODE	BODY TYPE	GRAIN and TYPE of ROOF	COLOR
		COUGAR (F)	
EW	65	Milano – 1/2	White
GB	53,65	Odense – full	Blue
NB	65	Odense – 1/2	Blue
VA	53,65	Valino – full	Black
VB	53,65	Valino – full	Blue
VD	53,65	Valino – full	Russet
VE	53,65	Valino – full	Gray
VP	53,65	Valino – full	Silver
VR	53,65	Valino – full	Jade
VS	53,65	Valino – full	Mid. blue
VT	53,65	Valino – full	Brown
VW	53,65	Valino – full	White
WU	53,65	Lugano – full	Chamois
XU	65	Lugano – 1/2	Chamois
YA	65	Valino – 1/2	Black
YB	65	Valino – 1/2	Blue
YD	65	Valino – 1/2	Russet
YE	65	Valino – 1/2	Gray
YP	65	Valino – 1/2	Silver
YR	65	Valino – 1/2	Jade
YS	65	Valino – 1/2	Mid. blue
YT	65	Valino – 1/2	Brown
YW	65	Valino – 1/2	White

1973/79 LINCOLN-MERCURY CARS

BODY TYPE	R/L	PART NUMBER LESS SUFFIX		TRIM CODES, COLORS and APPLICABLE PART NUMBER SUFFIXES												QTY.
		TRIM CODES ➧		SECOND CHARACTER of TRIM CODE									ALL CODES	ALL CODES	OTHER	
				-B or-Q	-D or-N	-E or-7	-F or-6	-R or-5	-S	-T or-2	-Y	-Z or-3				
		COLORS ➧		BLUE	RED	RUSSET	CORDOVAN	JADE	GRAY	CHAMOIS	CAMEL	SADDLE	BLACK	WHITE		
02344-5	PANEL (COWL TRIM)															
F	R	D70Z 6502344		A9B	★	★		A6R	A2P	A9T		A1Z				1
	L	D70Z 6502345		A9B	★	★		A6R	B2P	B9T		A1Z				1
04104	VISOR ASSY.															
Notes:	⊕ Use with or without non-illuminated vanity mirror- refer to group 17A679 in Chassis Section for mirror															
	● Matching sun visor (less vanity mirror) for R.H. sun visor which includes illuminated vanity mirror															
	LESS ARM BRACKET and MIRROR															
F - - w/non illuminated vanity mirror "Before 4/3/78"	R/L⊕	D60Z 6504104		B								C		H		2
	R/L⊕	D70Z 6504104						B5R	B9P	B8T						2
	R/L⊕	D80Z 6504104				A7C										2
"From 4/3/78"	R/L	D80Z 6504104		C4B		C7C		C5R	C9P	C8T		★		C9W		2
	INCLUDES ARM, BRACKET and MIRROR															
F - - w/illuminated vanity mirror	R	D80Z 6504104		D4B		★		D5R	D9P	★		★		★		1
	L	D80Z 6504104		C4B		C7C		C5R	C9P	C8T		★		C9W		1
04282	PAD (INSTRUMENT PANEL UPPER)															
F		D70Z 6504282		A9B	A8D			A5R	A1P	A6T		A0Z				1
		D80Z 6504282				A9C										1
13000	CARPET (FRONT FLOOR)															
F(53D) - - cut pile		D70Z 5313000		A0B				A9R	A4P	A2T		A2Z				1
		D80Z 5313000				A4C										1
- - shag		D70Z 5313000		B0B				B9R	B4P	B2T		B2Z				1
		D80Z 5313000				B4C										1
F(65D) - - cut pile		D70Z 6513000		A0B				A9R	A4P	A2T		A2Z				1
		D80Z 6513000				A4C										1
F(65D,L) - - shag -w/o console		D7SZ 6013000		A0B	A3D			A9R	A4P	A2T		A2Z				1
		D8SZ 6013000				A4C										1
F(65D,L) - - shag -w/console		D70Z 6513000		E0B	E6D			E9R	E4P	E2T		E2Z				1
		D80Z 6513000				E4C										1
13046	CARPET (REAR FLOOR)-Serviced only in assy.-group 13000															
13086	MAT (FRONT FLOOR)															
	TWIN (LESS CARPET INSERT)															
F - - rubber		D60Z 6213086		B									A		C(brown)	1
13106	MAT (REAR FLOOR)															
	TWIN (Less carpet insert)															
F - - rubber		D6FZ 6213106		B									A		C(brown)	1
		D6FZ 6213106													F(green)	1
24100-1	PAD (ARM REST) - Incl. attaching parts															
F(53) - - front door	R/L	D3DZ 6224100	8 3/4	D												2
	R/L	D7DZ 6224100	8 3/4					B6R	B4P	B4T						2
	R/L	D8DZ 6224100	8 3/4			B5C										2
	R/L	D40Z 6524100	8 3/4									B				2

COPYRIGHT © 1986 — FORD MOTOR COMPANY — DEARBORN, MICHIGAN

1973/79 LINCOLN-MERCURY CARS

BODY TYPE	R/L	PART NUMBER LESS SUFFIX	TRIM CODES, COLORS and APPLICABLE PART NUMBER SUFFIXES														QTY.
		TRIM CODES ➧		SECOND CHARACTER of TRIM CODE										ALL CODES	ALL CODES	OTHER	
				-B or-Q	-D or-N	-E or-7	-F or-6	-R or-5	-S	-T or-2	-Y	-Z or-3		BLACK	WHITE		
		COLORS ➧		BLUE	RED	RUSSET	CORDOVAN	JADE	GRAY	CHAMOIS	CAMEL	SADDLE					
24100-1	**PAD (ARM REST) - Incl. attaching parts — Cont'd**																
F(53) - - rear door	R/L	D30Z 5324100	8 3/4	C													2
	R/L	D40Z 5324100	8 3/4			★		★	★	★		B					2
F(65D) - - door	R	D3DZ 6224100	11	J													1
	L	D3DZ 6224101	11	B													1
	R	D7DZ 6224100	11					A6R	★	A4T							1
	L	D7DZ 6224101	11					A6R	A4P	A4T							1
	R	D40Z 6524100	11									★					1
	L	D40Z 6524101	11									A					1
F(65L) - - door	R/L	D7SZ 6024100		A1B	A0D	★		A2R	A8P	A8T		A8Z		A7W			2
F(65D) - - quarter	R/L	D3DZ 6224100	8 3/4	D													2
	R/L	D7DZ 6224100	8 3/4					B6R	B4P	B4T							2
	R/L	D8DZ 6224100	8 3/4			B5C											2
	R/L	D40Z 6524100	8 3/4									B					2
24144-5	**BASE (ARM REST) - Incl. attaching parts**																
F(53) - - front and rear door	R/L	D3DZ 6224144		L		★						★					4
	R/L	D7DZ 6224144						A7R	A9P	A0T							4
F(65D) - - door	R/L	D3DZ 6224144		B													2
	R/L	D7DZ 6224144				★		C7R	★	★							2
	R/L	D1AZ 5724144														H(chrome)	2
F(65L) - - door	R	D7SZ 6024144														A (paint to match)	1
	L	D7SZ 6024145														A (paint to match)	1
24346-7	**PANEL (CENTER BODY PILLAR INSIDE FINISH)**																
F(53) - - lower	R	D40Z 5324346		★		★						★					1
	L	D40Z 5324347		★		★						★					1
	R	D70Z 5324346						★	★	★							1
	L	D70Z 5324347						★	★	★							1
- - upper	R	D40Z 5324356														A(paint to match)	1
	L	D40Z 5324357														★	1
24356-7	**Refer to group 24346-7**																
31012-3	**PANEL ASSY. (QUARTER TRIM)**																
F(53)	R	D70Z 5331012		★		★		A6R	★	A4T		★					1
	L	D70Z 5331013		★		★		A6R	★	A4T		★					1
F(65D)	R	D70Z 6531012		★		★		★	★	★		★					1
	L	D70Z 6531013		★		★		★	★	★							1
F(65L) - - w/o moulding	R	D8WY 6531012		★		★		A7R	★	A4T		★		★			1
	L	D8WY 6531013		A4B		★		A7R	A4P	A4T		★		A6W			1
31290-1	**WINDLACE (QUARTER PILLAR)**																
F(65L)	L	D7SZ 6031291		A9B		★		A6R	A4P	A4T		A1Z		A6W			1
31718	**Refer to group 24100**																

BODY TYPE	R/L	PART NUMBER LESS SUFFIX	VINYL ROOF CODES AND APPLICABLE PART NUMBER SUFFIXES														QTY
425A38	**PANEL ASSY. (LUGGAGE COMPARTMENT DOOR OUTSIDE)**																
		VINYL ROOF CODES ➧	VS	WU	XU	YS											
F(65L)		D8WY 65425A38	★	A9T	A9T	★											1

BODY TYPE	R/L	PART NUMBER	DESCRIPTION	QTY
45026	COVER SPARE TIRE			
F(53,65)		D5LY 6545026-J	Gray-cut pile carpet-w/o collapsible spare tire	1
		D50Z 6545026-A	Gray-cut pile carpet-w/collapsible spare tire	1
45422-3	COVER (LUGGAGE COMPARTMENT SIDE)			
F(65L)	R	D7SZ 6045422-A3P	Gray	1
	L	D7SZ 6045423-A3P	Gray	1
45455	COVER LUGGAGE COMPARTMENT FLOOR			
F(53,65D)		D70Z 6545455-APA	Gray burloom	1
		D7WY 6545455-AEP	Gray cut pile carpet	1
F(65L)		D70Z 6545455-APA	Gray burloom	1
45487	COVER LUGGAGE COMPARTMENT FUEL FILLER HOUSING			
F(53,65)		D80Z 6545487-A2P	Gray	1
45522-3	LINING BOARD (LUGGAGE COMPARTMENT REAR)			
F(53D,65D)	R	D70Z 6545522-A3P	Gray	1
	L	D70Z 6545523-A3P	Gray	1
F(65L)	R	D7WY 6545522-A3P	Gray	1
	L	D7WY 6545523-A3P	Gray	1

BODY TYPE	R/L	PART NUMBER LESS SUFFIX	TRIM CODES, COLORS and APPLICABLE PART NUMBER SUFFIXES													QTY.
		TRIM CODES ➧		SECOND CHARACTER of TRIM CODE									ALL CODES	ALL CODES	OTHER	
				-B or-Q	-D or-N	-E or-7	-F or-6	-R or-5	-S	-T or-2	-Y	-Z or-3				
		COLORS ➧		BLUE	RED	RUSSET	CORDOVAN	JADE	GRAY	CHAMOIS	CAMEL	SADDLE	BLACK	WHITE		
46668	PANEL (PACKAGE TRAY TRIM)															
F		D70Z 6546668													B0Z(paint to match)	1
52018-9	COVER (ROOF SIDE REAR TRIM)															
F(53) - - w/o opera window	R	D70Z 5352018													B9P(paint to match)	1
	L	D70Z 5352019													B9P(paint to match)	1
- - w/opera window	R	D70Z 5352018													A4P(paint to match)	1
	L	D70Z 5352019													A4P(paint to match)	1
F(65D) - - w/o opera window	R	D70Z 6552018													★(paint to match)	1
	L	D70Z 6552019													B9P(paint to match)	1
- - w/opera window	R	D70Z 6552018													A4P(paint to match)	1
	L	D70Z 6552019													A4P(paint to match)	1

BODY TYPE	R/L	PART NUMBER	DESCRIPTION	QTY
537A02	PAD (ROOF OUTSIDE COVER SIDE)			
F(65L)		D8WY 65537A02-A	Rear - lower	1
60050-1	CUSHION KIT (FRONT SEAT)			
F(53,65)		D70Z 6563100-A	Spring-full width seat-heavy duty	1
60080	CUSHION KIT (REAR SEAT)			
F(53D,65D) - - w/split front seats		D70Z 6560080-A		
F(65D,L) - - w/bucket seats F(65L) - - w/split front seats		D70Z 6560080-B		

COPYRIGHT © 1986 — FORD MOTOR COMPANY — DEARBORN, MICHIGAN

1973/79 LINCOLN-MERCURY CARS

BODY TYPE	R/L	PART NUMBER	DESCRIPTION	QTY
60136-7	BACK KIT (FRONT SEAT)			
F(53)	R/L	D7SZ 6064810-A	Pad	2
		D60Z 5364700-A	Spring-full width seat-heavy duty	1
F(65)	R	D8LY 6561018-B	Frame-split seat-reclining	1
	R/L	D7SZ 6064810-A	Pad split seat	2
	R/L	D3GY 6560136-C	Pad-full width seat w/center arm rest	2
61018-9	Refer to group 60136-7			

BODY TYPE	R/L	PART NUMBER LESS SUFFIX	TRIM CODES, COLORS and APPLICABLE PART NUMBER SUFFIXES													QTY.
		TRIM CODES ▶		SECOND CHARACTER of TRIM CODE									ALL CODES	ALL CODES	OTHER	
		COLORS ▶	Length Inches	-B or-Q BLUE	-D or-N RED	-E or-7 RUSSET	-F or-6 CORDOVAN	-R or-5 JADE	-S GRAY	-T or-2 CHAMOIS	-Y CAMEL	-Z or-3 SADDLE	BLACK	WHITE		
611A08	HEADREST ASSY. (FRONT SEAT BACK)															
F	R/L	D9AZ 54611A08	11	★		★		★	★	★				AZ		2
63500	BUTTON (FRONT and REAR SEAT CUSHION and BACK)															
Notes:	■ Rectangular head															
			VINYL													
F(53D,65D,L) - - front and rear seat back	■	D7AZ 6063500	3/8	★		★		★	★	★		★		★		AR

1978 SOFT TRIM SCHEME CODES

AS LISTED ON CERTIFICATION LABEL

CODE	BODY TYPE	DESCRIPTION OF TRIM SCHEME	● TYPE OF SEAT

FOR MATERIAL IDENTIFICATION REFER TO SALESMAN'S COLOR AND UPHOLSTERY SELECTIONS GUIDE

THE SOFT TRIM SECTION INCLUDES ONLY THOSE ITEMS WHICH WERE AVAILABLE FOR SERVICE AT THE TIME OF PRINTING. ITEMS NOT SHOWN OR INDICATED WITH A BLACK STAR (★) IN THE CATALOG MUST BE IMPROVISED OR PROCURED LOCALLY.

Note 1– For replacement of Door Trim Panels (23942–3 and 27406–7), refer to this code in the 1978 Soft Trim Section. For replacement of Cushion Covers (62900 and 63804) and Back Covers (64416–7 and 66600), contact your Service Representative, who will process in accordance with General ICC bulletin No. 7526. All other parts are included in the 1978 Soft Trim Section.

● FWA–Full width seat with center armrest, B–Bucket seats

MONARCH (G)

AB	54,66	Blue all vinyl	B
AD	54,66	Red all vinyl	B
AF	54,66	Cordovan all vinyl	B
AR	54,66	Jade all vinyl	B
AS	54,66	Gray all vinyl	B
AY	54,66	Camel all vinyl	B
BB	54,66	Blue vinyl and blue cloth	FWA
BD	54,66	Red vinyl and red cloth	FWA
BF	54,66	Cordovan vinyl and cordovan cloth	FWA
BR	54,66	Jade vinyl and jade cloth	FWA
BS	54,66	Gray vinyl and gray cloth	FWA
BY	54,66	Camel vinyl and camel cloth	FWA
CB	54,66	Blue all vinyl	B
CD	54,66	Red all vinyl	B
CF	54,66	Cordovan all vinyl	B
CR	54,66	Jade all vinyl	B
CS	54,66	Gray all vinyl	B
CY	54,66	Camel all vinyl	B
DB	54,66	Blue vinyl and blue cloth	B
DD	54,66	Red vinyl and red cloth	B
DF	54,66	Cordovan vinyl and cordovan cloth	B
DR	54,66	Jade vinyl and jade cloth	B
DS	54,66	Gray vinyl and gray cloth	B
DY	54,66	Camel vinyl and camel cloth	B
EB	54,66	Blue all vinyl	FWA
ED	54,66	Red all vinyl	FWA
EF	54,66	Cordovan all vinyl	FWA
ER	54,66	Jade all vinyl	FWA
ES	54,66	Gray all vinyl	FWA
EY	54,66	Camel all vinyl	FWA
FB	54,66	Blue all leather	B
FD	54,66	Red all leather	B
FF	54,66	Cordovan all leather	B
FR	54,66	Jade all leather	B
FS	54,66	Gray all leather	B
FY	54,66	Camel all leather	B
GB	54,66	Blue all vinyl	FWA
GD	54,66	Red all vinyl	FWA
GF	54,66	Cordovan all vinyl	FWA
GR	54,66	Jade all vinyl	FWA
GS	54,66	Gray all vinyl	FWA
GY	54,66	Camel all vinyl	FWA

COPYRIGHT © 1986 — FORD MOTOR COMPANY — DEARBORN, MICHIGAN

1978 SOFT TRIM SCHEME CODES

AS LISTED ON CERTIFICATION LABEL

CODE	BODY TYPE	DESCRIPTION OF TRIM SCHEME	● TYPE OF SEAT

FOR MATERIAL IDENTIFICATION
REFER TO SALESMAN'S
COLOR AND UPHOLSTERY SELECTIONS GUIDE

THE SOFT TRIM SECTION INCLUDES ONLY THOSE ITEMS WHICH WERE AVAILABLE FOR SERVICE AT THE TIME OF PRINTING. ITEMS NOT SHOWN OR INDICATED WITH A BLACK STAR (★) IN THE CATALOG MUST BE IMPROVISED OR PROCURED LOCALLY.

Note 1– For replacement of Door Trim Panels (23942–3 and 27406–7), refer to this code in the 1978 Soft Trim Section. For replacement of Cushion Covers (62900 and 63804) and Back Covers (64416–7 and 66600), contact your Service Representative, who will process in accordance with General ICC bulletin No. 7526. All other parts are included in the 1978 Soft Trim Section.

● FWA–Full width seat with center armrest, B–Bucket seats

MONARCH (G) — Cont'd

HB	54,66	Blue vinyl and blue cloth	FWA
HD,HDA	54,66	Red vinyl and red cloth	FWA
HR	54,66	Jade vinyl and jade cloth	FWA
HS	54,66	Gray vinyl and gray cloth	FWA
JB,JBA	54,66	Blue vinyl and blue cloth	FWA
JD,JDA,JDB	54,66	Red vinyl and red cloth	FWA
JR,JRA	54,66	Jade vinyl and jade cloth	FWA
JY,JYA	54,66	Camel vinyl and camel cloth	FWA
HY	54,66	Camel vinyl and camel cloth	FWA
KB	54,66	Blue all vinyl	FWA
KD	54,66	Red all vinyl	FWA
KR	54,66	Jade all vinyl	FWA
KY	54,66	Camel all vinyl	FWA
LB	54,66	Blue vinyl and blue cloth	FWA
LD	54,66	Red vinyl and red cloth	FWA
LR	54,66	Jade vinyl and jade cloth	FWA
LR1	54,66	(Code LR – see Note 1)	
LY	54,66	Camel vinyl and camel cloth	FWA
ND	54,66	Red and gray vinyl with red appointments	FWA
NF	54,66	Cordovan and white vinyl with cordovan appointments	FWA
NR	54,66	Jade and white vinyl with jade appointments	FWA
NY	54,66	Light camel and pastel camel with light camel appointments	FWA
PB	54,66	Blue all vinyl	B
PD	54,66	Red all vinyl	B
PF	54,66	Cordovan all vinyl	B
PR	54,66	Jade all vinyl	B
PS	54,66	Gray all vinyl	B
PY	54,66	Camel all vinyl	B

1978 VINYL ROOF COVER CODES

AS LISTED ON CERTIFICATION LABEL

CODE	BODY TYPE	GRAIN and TYPE of ROOF	COLOR
MONARCH (G)			
GR	54	Odense – full	Jade
GS	54,66	Odense – full	Blue (midnight)
GY	54	Odense – full	Gold
NP	66	Odense – 1/2	Silver
NS	66	Odense – 1/2	Blue (midnight)
NY	66	Odense – 1/2	Gold
VA	54,66	Valino – full	Black
VB	54,66	Valino – full	Blue
VD	54,66	Valino – full	Red
VE	54,66	Valino – full	Gray
VF	54,66	Valino – full	Cordovan
VP	54,66	Valino – full	Silver
VR	54,66	Valino – full	Jade
VS	54,66	Valino – full	Blue (midnight)
VV	54,66	Valino – full	Camel (cream)
VW	54,66	Valino – full	White
YA	66	Valino – 1/2	Black
YB	66	Valino – 1/2	Blue
YD	66	Valino – 1/2	Red
YE	66	Valino – 1/2	Gray
YF	66	Valino – 1/2	Cordovan
YP	66	Valino – 1/2	Silver
YR	66	Valino – 1/2	Jade
YS	66	Valino – 1/2	Blue (midnight)
YV	66	Valino – 1/2	Camel (cream)
YW	66	Valino – 1/2	White

COPYRIGHT © 1986 — FORD MOTOR COMPANY — DEARBORN, MICHIGAN

1973/79 LINCOLN-MERCURY CARS

BODY TYPE	R/L	PART NUMBER LESS SUFFIX	TRIM CODES, COLORS and APPLICABLE PART NUMBER SUFFIXES													QTY.
		TRIM CODES ▶		SECOND CHARACTER of TRIM CODE									ALL CODES	ALL CODES	OTHER	
				-B or-Q	-D or-N	-E or-7	-F or-6	-R or-5	-S	-T or-2	-Y	-Z or-3				
		COLORS ▶		BLUE	RED	RUSSET	CORDOVAN	JADE	GRAY	CHAMOIS	CAMEL	SADDLE	BLACK	WHITE		
02344-5		PANEL (COWL TRIM)														
G	R	D7DZ 6602344		A9B												1
	L	D7DZ 6602345		A9B												1
	R	D5DZ 6602344			D											1
	L	D5DZ 6602345			D		★	★	★		★					1
	R	D8DZ 6602344					A8F				A8Y					1
	R	D6DZ 6602344						A6R	A2P							1
04104-5		VISOR ASSY.														
Notes:		⊕ Use with or without non-illuminated vanity mirror-refer to group 17A679 in Chassis Section for mirror														
		LESS ARM, BRACKET AND MIRROR														
G - - w/non-illuminated vanity mirror	⊕ R/L	D7DZ 6604104		B4B												2
	⊕ R/L	D5DZ 6604104			R											2
	⊕ R/L	D8DZ 6604104					B8F				B5Y					2
	⊕ R/L	D6DZ 6604104						B5R	B9P							2
		INCLUDES ARM AND BRACKET														
G - - w/illuminated vanity mirror	R	D7DZ 6604104		★												1
	L	D7DZ 6604104		B4B												1
	R	D5DZ 6604104			H											1
	L	D5DZ 6604104			R											1
	R	D8DZ 6604104					★				A5Y					1
	L	D8DZ 6604104					B8F				B5Y					1
	R	D6DZ 6604104						A5R	A9P							1
	L	D6DZ 6604104						B5R	B9P							1
04282		PAD (INSTRUMENT PANEL UPPER)														
G		D7DZ 6604282		A9B												1
		D6DZ 6604282			A3D			A5R	★							1
		D8DZ 6604282					★				A4Y					1
13086		MAT (FRONT FLOOR)														
		TWIN (Less carpet insert)														
G - - rubber		D60Z 6213086		B	F								A		C(brown)	1
		D70Z 6213086													A(gold)	1
13106		MAT (REAR FLOOR)														
		TWIN (less carpet insert)														
G - - rubber -plain		D6FZ 6213106		B	E								A			1
		D6FZ 6213106													F(green)	1

BODY TYPE	R/L	PART NUMBER LESS SUFFIX	Length (Inches)	-B or-Q BLUE	-D or-N RED	-E or-7 RUSSET	-F or-6 CORDOVAN	-R or-5 JADE	-S GRAY	-T or-2 CHAMOIS	-Y CAMEL	-Z or-3 SADDLE	ALL CODES BLACK	ALL CODES WHITE	OTHER	QTY.
		TRIM CODES ▶		SECOND CHARACTER of TRIM CODE												
		COLORS ▶														
24140	**ARM REST-Incl. attaching parts**															
G(54) - - front door	R	D8FZ 6224140		A9B	A2D		A8F	A6R	A4P		A8Y					1
	L	D8FZ 6224141		A9B	A2D		A8F	A6R	A4P		A8Y					1
G(54) - - rear door	R/L	D7DZ 5427540		A9B												2
	R/L	D5DZ 5427540			D											2
	R/L	D8DZ 5427540					★				A8Y					2
	R/L	D6DZ 5427540						B6R	★							2
G(66)	R	D8FZ 6224140	16 1/2	A9B	A2D		A8F	A6R	A4P		A8Y					1
	L	D8FZ 6224141	16 1/2	A9B	A2D		A8F	A6R	A4P		A8Y					1
	R	D6ZZ 6024140	25 3/4	★	★			B6R	B4P							1
	L	D6ZZ 6024141	25 3/4	★	★			★	★							1
	R	D8ZZ 6024140	25 3/4				B8F				B8Y					1
	L	D8ZZ 6024141	25 3/4				★				B8Y					1
27540-1	**Refer to group 24140-1**															
31012-3	**PANEL (QUARTER TRIM)**															
G(54)	R	D7DZ 5431012		A9B	★											1
	L	D7DZ 5431013		★	★											1
	R	D8DZ 5431012					★				A8Y					1
	L	D8DZ 5431013					★				★					1
	R	D6DZ 5431012						★	A4P							1
	L	D6DZ 5431013						★	A4P							1
G(66)	R	D7DZ 6631012		★	A2D			★	★							1
	L	D7DZ 6631013		★	★			A6R	★							1
	R	D8DZ 6631012					A8F				A8Y					1
	L	D8DZ 6631013					★				★					1

BODY TYPE	R/L	PART NUMBER	DESCRIPTION	QTY
45422	**COVER (LUGGAGE COMPARTMENT SIDE)**			
G - - w/shelf mounted spare tire	R	D5DZ 6645422-A	Gray	1
- - w/qtr. wheel-house mounted tire	R	★	Gray	1
	L	D5DZ 6645423-A	Gray	1
45455	**COVER (LUGGAGE COMPARTMENT FLOOR)**			
G - - w/shelf mounted spare tire		D5DZ 6645455-C	Gray carpet	1
- - w/gtr. wheel house mounted tire		★	Gray carpet	1
- - exc. Calif.		★	Gray burloom	1
- - Calif. only		D8DZ 6645494-A0P	Gray burloom	1
45494	**Refer to group 45455**			
45522-3	**LINING BOARD (LUGGAGE COMPARTMENT REAR)**			
G	R	D7DZ 6645522-A3P	Gray	1
	L	D7DZ 6645523-A3P	Gray	1
46668	**PANEL (PACKAGE TRAY TRIM)**			
Notes:	‡ Use with or without speakers			
G(54)	‡	D5DZ 5446668-E	Paint to match	1
G(66)	‡	D5DZ 6646668-B	Paint to match	1

COPYRIGHT © 1986— FORD MOTOR COMPANY —DEARBORN, MICHIGAN

1973/79 LINCOLN-MERCURY CARS

BODY TYPE	R/L	PART NUMBER LESS SUFFIX	TRIM CODES, COLORS and APPLICABLE PART NUMBER SUFFIXES													QTY.
		TRIM CODES ▶	Length (Inches)	SECOND CHARACTER of TRIM CODE									ALL CODES	ALL CODES	OTHER	
				-B or-Q	-D or-N	-E or-7	-F or-6	-R or-5	-S	-T or-2	-Y	-Z or-3				
		COLORS ▶		BLUE	RED	RUSSET	CORDOVAN	JADE	GRAY	CHAMOIS	CAMEL	SADDLE	BLACK	WHITE		
519A02	HEADLINING (ROOF SLIDING PANEL)															
G - - w/sliding roof-glass		D8WZ 65519A02		★	★		B8F	★	★		A					1

BODY TYPE	R/L	PART NUMBER	DESCRIPTION	QTY
52018-9	COVER (ROOF SIDE TRIM)			
G(66)	R	D6DZ 6652018-A2U	Paint to match	1
	L	★	Paint to match	1
60136-7	BACK KIT (FRONT SEAT)			
G(54)	R/L	D6DZ 6664810-A	Pad-bucket seat	2
	R	★	Frame-bucket seat	1
	L	D7DZ 5461019-A	Frame-bucket seat	1
	R/L	D8BZ 5464810-B	Pad-full width seat-w/center arm rest-Use w/all trim codes beginning with J,K or L	2
	R	D8BZ 5461018-A	Frame-full width seat-w/center arm rest-Use w/all trim codes beginning with J,K or L	1
	L	D8BZ 5461019-A	Frame-full width seat-w/center arm rest-Use w/all trim codes beginning with J,K or L	1
	R/L	D6DZ 6664810-C	Pad-full width seat-w/center arm rest-Use w/all trim codes beginning with B,E,G ,H or N	2
	R	★	Frame-full width seat-w/center arm rest-Use w/all trim codes beginning with B,E,G ,H or N	1
	L	★	Frame-full width seat-w/center arm rest-Use w/all trim codes beginning with B,E,G ,H or N	1
G(66)	R/L	D6DZ 6664810-A	Pad-bucket seat	2
	R	★	Frame-bucket seat	1
	L	D7DZ 6661019-A	Frame-bucket seat	1
	R/L	D8BZ 5464810-B	Pad-full width seat-w/center arm rest-Use w/all trim codes beginning with J,K or L	2
	R	D8BZ 5461018-A	Frame-full width seat-w/center arm rest-Use w/all trim codes beginning with J,K or L	1
	L	D8BZ 5461019-A	Frame-full width seat-w/center arm rest-Use w/all trim codes beginning with J,K or L	1
	R/L	D6DZ 6664810-C	Pad-full width seat-w/center arm rest-Use w/all trim codes beginning with B,E,G ,H or N	2
	R	★	Frame-full width seat-w/center arm rest-Use w/all trim codes beginning with B,E,G ,H or N	1
	L	★	Frame-full width seat-w/center arm rest-Use w/all trim codes beginning with B,E,G ,H or N	1

BODY TYPE	R/L	PART NUMBER LESS SUFFIX	TRIM CODES, COLORS and APPLICABLE PART NUMBER SUFFIXES													QTY.
		TRIM CODES ▶	Length (Inches)	SECOND CHARACTER of TRIM CODE									ALL CODES	ALL CODES	OTHER	
				-B or-Q	-D or-N	-E or-7	-F or-6	-R or-5	-S	-T or-2	-Y	-Z or-3				
		COLORS ▶		BLUE	RED	RUSSET	CORDOVAN	JADE	GRAY	CHAMOIS	CAMEL	SADDLE	BLACK	WHITE		
61018-9	Refer to group 60136-7															
611A08	HEAD REST ASSY. (FRONT SEAT BACK)-Incl. guide rods															
G-non contoured	R/L	D9AZ 54611A08	13	★	C		★	★	★		★					
64810	Refer to group 60136-7															

For Capri units registered as 1978 vehicles, use service parts shown in 1977 Soft Trim Section J.

COPYRIGHT © 1986 — FORD MOTOR COMPANY — DEARBORN, MICHIGAN

1978 SOFT TRIM SCHEME CODES

AS LISTED ON CERTIFICATION LABEL

CODE	BODY TYPE	DESCRIPTION OF TRIM SCHEME	● TYPE OF SEAT

FOR MATERIAL IDENTIFICATION
REFER TO SALESMAN'S
COLOR AND UPHOLSTERY SELECTIONS GUIDE

THE SOFT TRIM SECTION INCLUDES ONLY THOSE ITEMS WHICH WERE AVAILABLE FOR SERVICE AT THE TIME OF PRINTING. ITEMS NOT SHOWN OR INDICATED WITH A BLACK STAR (★) IN THE CATALOG MUST BE IMPROVISED OR PROCURED LOCALLY.

● SB–Split Bench seat, B–Bucket seats

MARK V (K)

Note 1– For replacement of Cushion Covers (62900–1 and 63804) and Back Cover (64416–7 and 66600) contact your Service Representative who will process in accordance with Technical Letter BE7–128 dated December 12, 1977.

AA	65	Black vinyl and black cloth (See Note 1)	S/B
AAA	65	Black vinyl and black cloth	S/B
AB,ABA	65	Blue vinyl and blue cloth	S/B
AD	65	Red vinyl and red cloth (See Note 1)	S/B
ADA,ADB	65	Red vinyl and red cloth	S/B
AF	65	Cordovan vinyl and cordovan cloth (See Note 1)	S/B
AFA	65	Cordovan vinyl and cordovan cloth	S/B
AP	65	Gold vinyl and cream cloth (See Note 1)	S/B
APA	65	Gold vinyl and cream cloth	S/B
AR	65	Jade vinyl and jade cloth (See Note 1)	S/B
ARA	65	Jade vinyl and jade cloth	S/B
AT	65	Chamois vinyl and chamois cloth (See Note 1)	S/B
ATA	65	Chamois vinyl and chamois cloth	S/B
AV,AVA	65	Champagne vinyl and champagne cloth	S/B
BA,BAA	65	Black vinyl and black leather	S/B
BB,BBA	65	Blue vinyl and blue leather	S/B
BD,BDA	65	Red vinyl and red leather	S/B
BF,BFA	65	Cordovan vinyl and cordovan leather	S/B
BN,BNA	65	White vinyl and white leather with red appointments	S/B
BP,BPA	65	Cream vinyl and cream leather	S/B
BQ,BQA	65	White vinyl and white leather with blue appointments	S/B
BR,BRA	65	Jade vinyl and jade leather	S/B
BT,BTA	65	Chamois vinyl and chamois leather	S/B
BV,BVA	65	Champagne vinyl and champagne leather	S/B
BW,BWA	65	White vinyl and white leather with black appointments	S/B
B2,B2A	65	White vinyl and white leather with chamois appointments	S/B
B4,B4A	65	White vinyl and white leather with champagne appointments	S/B
B5,B5A	65	White vinyl and white leather with jade appointments	S/B
B6,B6A	65	White vinyl and white leather with cordovan appointments	S/B
B8,B8A	65	White vinyl and white leather with gold appointments	S/B
CB,CBA	65	Blue vinyl and blue cloth	S/B
CD,CDA	65	Red vinyl and red cloth	S/B
CF,CFA	65	Cordovan vinyl and cordovan cloth	S/B
CR,CRA	65	Jade vinyl and jade cloth	S/B
CS,CSA	65	Gray vinyl and gray cloth	S/B
CV,CVA	65	Champagne vinyl and champagne cloth	S/B
DB	65	Blue vinyl and blue leather	S/B
DF	65	Cordovan vinyl and cordovan leather	S/B
DH	65	Red vinyl and rose leather with red appointments	S/B
DM	65	Dark jade vinyl and light jade leather	S/B
DP	65	Cream vinyl and cream leather	S/B
DS	65	Gray vinyl and gray leather	S/B

COPYRIGHT © 1986 — FORD MOTOR COMPANY — DEARBORN, MICHIGAN

1978 SOFT TRIM SCHEME CODES

AS LISTED ON CERTIFICATION LABEL

CODE	BODY TYPE	DESCRIPTION OF TRIM SCHEME	● TYPE OF SEAT

FOR MATERIAL IDENTIFICATION
REFER TO SALESMAN'S
COLOR AND UPHOLSTERY SELECTIONS GUIDE

THE SOFT TRIM SECTION INCLUDES ONLY THOSE ITEMS WHICH WERE AVAILABLE FOR SERVICE AT THE TIME OF PRINTING. ITEMS NOT SHOWN OR INDICATED WITH A BLACK STAR (★) IN THE CATALOG MUST BE IMPROVISED OR PROCURED LOCALLY.

● SB-Split Bench seat, B-Bucket seats

MARK V (K) — Cont'd

Note 1- For replacement of Cushion Covers (62900-1 and 63804) and Back Cover (64416-7 and 66600) contact your Service Representative who will process in accordance with Technical Letter BE7-128 dated December 12, 1977.

DT	65	Chamois vinyl and chamois leather	S/B
DV	65	Champagne vinyl and champagne leather	S/B
D3	65	Cordovan vinyl and white leather with cordovan appointments	S/B
ER,ERA	65	Jade vinyl and jade leather	S/B
HD	65	Gray vinyl and gray leather with red appointments	S/B
HV	65	Champagne vinyl and champagne leather	S/B
JV,JVA	65	Champagne vinyl and champagne cloth	S/B
KB	65	Blue cloth	B
KY	65	Gold cloth	B

1978 VINYL ROOF COVER CODES

AS LISTED ON CERTIFICATION LABEL

CODE	BODY TYPE	GRAIN and TYPE of ROOF	COLOR
		MARK V (K)	
KU	65	Lugano – front 1/2	Chamois
QA	65	Cayman – full	Black
UA	65	Cayman – 1/2	Black
VA	65	Valino – full	Black
VB	65	Valino – full	Blue (medium/ice)
VD	65	Valino – full	Red (dark)
VE	65	Valino – full	Gray (dove)
VF	65	Valino – full	Cordovan (dark)
VJ	65	Valino – full	Champagne (midnight)
VK	65	Valino – full	Cordovan (light)
VM	65	Valino – full	Jade (light)
VP	65	Valino – full	Silver
VS	65	Valino – full	Blue (midnight)
VV	65	Valino – full	Cream
VW	65	Valino – full	White
V4	65	Valino – full	Jade (medium/ midnight)
V5	65	Valino – full	Blue (wedgewood)
V6	65	Valino – full	Champagne (light)
V7	65	Valino – full	Gold (galveston)
WU	65	Lugano – full	Chamois
XU	65	Lugano – 1/2	Chamois
YA	65	Valino – 1/2	Black
YB	65	Valino – 1/2	Blue (medium/ice)
YD	65	Valino – 1/2	Red (dark)
YE	65	Valino – 1/2	Gray (dove)
YF	65	Valino – 1/2	Cordovan (dark)
YJ	65	Valino – 1/2	Champagne (midnight)
YK	65	Valino – 1/2	Cordovan (light)
YM	65	Valino – 1/2	Jade (light)
YP	65	Valino – 1/2	Silver
YS	65	Valino – 1/2	Blue (midnight)
YV	65	Valino – 1/2	Cream
YW	65	Valino – 1/2	White
Y4	65	Valino – 1/2	Jade (medium/ midnight)
Y5	65	Valino – 1/2	Blue (wedgewood)
Y6	65	Valino – 1/2	Champagne (light)
Y7	65	Valino – 1/2	Gold (galveston)

COPYRIGHT © 1986 — FORD MOTOR COMPANY — DEARBORN, MICHIGAN

1973/79 LINCOLN-MERCURY CARS

BODY TYPE	R/L	PART NUMBER LESS SUFFIX	TRIM CODES, COLORS and APPLICABLE PART NUMBER SUFFIXES													Q T Y.
		TRIM CODES ▶		SECOND CHARACTER of TRIM CODE									ALL CODES	ALL CODES	OTHER	
				-B or-Q	-D or-N	-F-3 or-6	-H	-M-R or-5	-P or-8	-T or-2	-V or-4	-Y				
		COLORS ▶		BLUE	RED	CORD-OVAN	ROSE	JADE	CREAM /GOLD	CHAMOIS	CHAM-PAGNE	GOLD	BLACK	WHITE		
02344-5	**PANEL (COWL TRIM)**															
Notes:	△ Use red															
K - - vinyl	R	D7LY 6502344		A9B	A2D	★	△	★		★			A9A		★(gray)	1
	L	D5SZ 6502345		★	★		△	H					★			1
	L	D6LY 6502345													A2P(gray)	1
	L	D7SY 6502345				A8F			★	★	★					1
	R	D8LY 6502344							★		A6U					1
04104-5	**VISOR ASSY.**															
Notes:	⊕ Use with or without non-illuminated vanity mirror - refer to group 17A679 in Chassis Section for mirror, △ Use red, ● Without cloth insert, @ With cloth insert, ‡ Garage door opener not offered on pass. side															
			LESS ARM, BRACKET and MIRROR													
K - - w/non-illuminated vanity mirror- "Before 4/78"	⊕R/L	D5AZ 6004104		★	E	★	△		★	★	★		★			2
	⊕R/L	D6AZ 6004104						C							A9P(gray)	2
"From 4/78"	⊕R/L	D8LY 6504104		★	★	F8F	△		F5V		★		★	★	F9B(gray)	2
			INCLUDES ARM, BRACKET and MIRROR													
K - - vinyl-w/ illuminated vanity mirror - w/o garage door opener	R	D8LY 6504104		★	●E0D	★		★	E5V	★	★		E4A	E9W	★(gray)	1
	L	D8LY 6504105		★	●★	★		★	★	★	★		★	★	★(gray)	1
	R	D8LY 6504104			@★											1
	L	D8LY 6504105			@★											1
K - - vinyl-w/ illuminated vanity mirror-w/garage door opener	‡R	D8LY 6504104		★	●E0D	★		★	E5V	★	★		E4A	E9W	★(gray)	1
	L	D8LY 6504105		J7B	●J0D	J8F		★	J5V	★	J2U		J4A	J9W	J9P(gray)	1
	‡R	D8LY 6504104			@★											1
	L	D8LY 6504105			@★											1
04282	**PAD (INSTRUMENT PANEL UPPER)**															
Notes:	△ Use red															
K		D7LY 6504282		★	A3D	A1F	△	★		★			★		★(gray)	1
		D8LY 6504282							★		A3U	★				1
13086	**MAT (FRONT FLOOR)**															
			TWIN (less carpet insert)													
K - - rubber -Ford oval		D60Z 6213086		B	F								A		C(brown)	1
		D70Z 6213086										A				1

BODY TYPE	R/L	PART NUMBER LESS SUFFIX	TRIM CODES, COLORS and APPLICABLE PART NUMBER SUFFIXES														QTY.
		TRIM CODES ▶		SECOND CHARACTER of TRIM CODE									ALL CODES	ALL CODES	OTHER		
				-B or-Q	-D or-N	-F-3 or-6	-H	-M-R or-5	-P or-8	-T or-2	-V or-4	-Y					
		COLORS ▶		BLUE	RED	CORD-OVAN	ROSE	JADE	CREAM /GOLD	CHAMOIS	CHAM-PAGNE	GOLD	BLACK	WHITE			
13106		MAT (REAR FLOOR)															
		TWIN (less carpet insert)															
K - - rubber -plain		D6FZ 6213106		B	E							★	A		C(brown)		2
		D6FZ 6213106													F(green)		1
24100-1		PAD (ARM REST) - Incl. attaching parts															
Notes:		△ Use red, ● Use with trim codes AB,BB,CB and DB, ⊕ Use with trim code KB															
K - - door	R	D5SZ 6524100			D		△	K					★				1
	L	D5SZ 6524101			D		△	K					★				1
	R	D6SZ 6524100												A			1
	L	D6SZ 6524101												A			1
	R	D6SY 6524100													★(gray)		1
	L	D6SY 6524101													A8P(gray)		1
	R	D7SY 6524100		⊕★		A4F				★		★					1
	L	D7SY 6524101		⊕★		★				★		★					1
	R	D8LY 6524100		●B6B					★		B9U						1
	L	D8LY 6524101		●B6B					★		★						1
K - - quarter	R	D5SZ 6531718			D		△	K					A				1
	L	D5SZ 6531719			D		△	K					A				1
	R	D6SZ 6531718												A			1
	L	D6SZ 6531719												A			1
	R	D6SY 6531718													A8P(gray)		1
	L	D6SY 6531719													★(gray)		1
	R	D7SY 6531718		⊕★		A4F				★		★					1
	L	D7SY 6531719		⊕★		A4F				★		★					1
	R	D8LY 6531718		●A6B					A9V		A9U						1
	L	D8LY 6531719		●A6B					A9V		A9U						1
24144-5		BASE (ARM REST) - Incl. attaching parts															
Notes:		△ Use red															
K - - door -vinyl	R	D5SZ 6524144			E		△	L					C				1
	L	D5SZ 6524145			E		△	L					C				1
	R	D6SZ 6524144												B			1
	L	D6SZ 6524145												B			1
	R	D6SY 6524144													B4P(gray)		1
	L	D6SY 6524145													B4P(gray)		1
	R	D7SY 6524144				B8F				B4T							1
	L	D7SY 6524145				B8F				B4T							1
	R	D8LY 6524144		B4B					★		B4U						1
	L	D8LY 6524145		B4B					★		B4U						1

BODY TYPE	R/L	PART NUMBER LESS SUFFIX	TRIM CODES AND APPLICABLE PART NUMBER SUFFIXES														QTY
31012-3		PANEL ASSY. (QUARTER TRIM)															
		TRIM CODES ▶	AA, AAA	AB, ABA	AD, ADA, ADB	AF, AFA	AP, APA	AR, ARA	AT, ATA	AV, AVA							
K	R	D7LY 6531012	A6A		A7D	A0F		★	★								1
	L	D7LY 6531013	A6A		A7D	A0F		★	★								1
	R	D8LY 6531012		A5B			A6V			A2U							1
	L	D8LY 6531013		★			A6V			A2U							1

COPYRIGHT © 1986— FORD MOTOR COMPANY —DEARBORN, MICHIGAN

1973/79 LINCOLN-MERCURY CARS

BODY TYPE	R/L	PART NUMBER LESS SUFFIX	TRIM CODES AND APPLICABLE PART NUMBER SUFFIXES													QTY
		TRIM CODES ▶	BA, BAA	BB, BBA	BD, BDA	BF, BFA	BN, BNA	BP, BPA	BQ, BQA	BR, BRA						
K	R	D7LY 6531012	A6A		A7D	A0F	A6W		A6W	★						1
	L	D7LY 6531013	A6A		A7D	A0F	A6W		A6W	★						1
	R	D8LY 6531012		A5B				A6V								1
	L	D8LY 6531013		★				A6V								1
		TRIM CODES ▶	BT, BTA	BV, BVA	BW, BWA	B2, B2A	B4, B4A	B5, B5A	B6, B6A	B8, B8A						
K	R	D7LY 6531012	★		A6W	A6W	A6W	A6W	A6W	A6W						1
	L	D7LY 6531013	★		A6W	A6W	A6W	A6W	A6W	A6W						1
	R	D8LY 6531012		A2U												1
	L	D8LY 6531013		A2U												1
		TRIM CODES ▶	CB	CBA	CD	CDA	CF	CFA	CR	CRA	CS	CSA	CV	CVA		
K	R	D8LY 6531012	★	E9B	★	E7D	★	E0F	★	★	★	E5P	★	D2U		1
	L	D8LY 6531013	★	E9B	★	E7D	★	E0F	★	★	★	E5P	★	D2U		1
		TRIM CODES ▶	DB	DF	DH	DM	DP	DS	DT	DV	D3					
K	R	D8LY 6531012	C5B	C7F			D3V			C3U						1
	L	D8LY 6531013	C5B	C7F			D3V			C3U						1
	R	D7LY 6531012			C7D	★		★	★		★					1
	L	D7LY 6531013			★	★		C6P	★		★					1
		TRIM CODES ▶	ER, ERA	HD	HV	JV	JVA	KB	KY							
K	R	D8LY 6531012	★	★	C3U	★	D2U	★	★							1
	L	D8LY 6531013	★	★	C3U	★	D2U	★	★							1

BODY TYPE	R/L	PART NUMBER LESS SUFFIX	TRIM CODES, COLORS and APPLICABLE PART NUMBER SUFFIXES													QTY.
		TRIM CODES ▶		SECOND CHARACTER of TRIM CODE									ALL CODES	ALL CODES	OTHER	
				-B or-Q	-D or-N	-F-3 or-6	-H	-M-R or-5	-P or-8	-T or-2	-V or-4	-Y				
		COLORS ▶		BLUE	RED	CORD-OVAN	ROSE	JADE	CREAM /GOLD	CHAMOIS	CHAM-PAGNE	GOLD	BLACK	WHITE		
31070-1		PANEL (QUARTER TRIM LOWER)														
K - - vinyl	L	D6SY 6531071		★	★	★		★	★	★	★		★	★	A4P(gray)	1
31718-9		Refer to group 24100-1														

BODY TYPE	R/L	PART NUMBER	DESCRIPTION	QTY
45400		COVER (JACK COLUMN IN LUGGAGE COMPARTMENT)		
K		D7LY 6545400-B0P	Gray burloom	1
45422-3		COVER (LUGGAGE COMPARTMENT SIDE)		
K	R	D7LY 6545422-A0P	Gray - burloom - w/o C.B. radio	1
46668		PANEL (PACKAGE TRAY TRIM)		
K		D7LY 6546668-A9T	Vinyl covered hardboard - paint to match	1

BODY TYPE	R/L	PART NUMBER LESS SUFFIX	TRIM CODES, COLORS and APPLICABLE PART NUMBER SUFFIXES														QTY.
		TRIM CODES ▶		SECOND CHARACTER of TRIM CODE									ALL CODES	ALL CODES	OTHER		
				-B or-Q	-D or-N	-F-3 or-6	-H	-M-R or-5	-P or-8	-T or-2	-V or-4	-Y					
		COLORS ▶		BLUE	RED	CORD-OVAN	ROSE	JADE	CREAM /GOLD	CHAMOIS	CHAM-PAGNE	GOLD	BLACK	WHITE			
519A02	**HEADLINING (ROOF SLIDING PANEL)**																
Notes:	△ Use red																
K - - vinyl		D7LY 65519A02			B0D	★	△	B5R	B5V	★			B4A	B9W	B9P(gray)		1
		D8LY 65519A02		B7B							★						1
51916	**HEADLINING (ROOF)**																
Notes:	△ Use red																
K - - w/sliding roof - vinyl		D7LY 6551916		★	★	★	△	★	★	★	★		★	★	B9P(gray)		1
52018-9	**COVER (ROOF SIDE REAR TRIM) - Serviced only in assy. - group 31012-3**																

BODY TYPE	R/L	PART NUMBER	DESCRIPTION	QTY
537A00	**Refer to group 53738**			
537A02	**Refer to group 53738**			
53738	**PAD (ROOF OUTSIDE CENTER)**			
K - - w/half vinyl roof	R/L	D7LY 65537A02-B	Side - exc. "Diamond Jubilee Edition"	2
		D7LY 6553738-A	Center - exc. "Diamond Jubilee Edition"	1
		D7LY 65537A00-A	Rear - lower - exc. "Diamond Jubilee Edition"	1
	R/L	D8LY 65537A02-A	Side - "Diamond Jubilee Edition"	2
		★	Center - "Diamond Jubilee Edition"	1
		D7LY 65537A00-A	Rear - lower - "Diamond Jubilee Edition"	1
60136-7	**BACK KIT (FRONT SEAT)**			
K	R/L	D8LY 6564810-A	Pad - bucket seat	2

BODY TYPE	R/L	PART NUMBER LESS SUFFIX	TRIM CODES, COLORS and APPLICABLE PART NUMBER SUFFIXES														QTY.
		TRIM CODES ▶	Length (Inches)	SECOND CHARACTER of TRIM CODE									ALL CODES	ALL CODES	OTHER		
				-B or-Q	-D or-N	-F-3 or-6	-H	-M-R or-5	-P or-8	-T or-2	-V or-4	-Y					
		COLORS ▶		BLUE	RED	CORD-OVAN	ROSE	JADE	CREAM /GOLD	CHAMOIS	CHAM PAGNE	GOLD	BLACK	WHITE			
63500	**BUTTON (FRONT and REAR SEAT CUSHION and BACK)**																
Notes:	■ Square head, ⊕ Use with all trim codes except HV and JV - for codes HV and JV use red, △ Use red, ● Round head																
			VINYL														
K - - front and rear seat cushion and back	■	D7LY 6563500	1/2	★	A7D	★	△	★	A6V	★	⊕★				A6P(gray)		AR

COPYRIGHT © 1986— FORD MOTOR COMPANY —DEARBORN, MICHIGAN

NEW ISSUE

1978 SOFT TRIM SCHEME CODES

AS LISTED ON CERTIFICATION LABEL

CODE	BODY TYPE	DESCRIPTION OF TRIM SCHEME	● TYPE OF SEAT

FOR MATERIAL IDENTIFICATION
REFER TO SALESMAN'S
COLOR AND UPHOLSTERY SELECTIONS GUIDE
THE SOFT TRIM SECTION INCLUDES ONLY THOSE ITEMS WHICH WERE AVAILABLE FOR SERVICE AT THE TIME OF PRINTING. ITEMS NOT SHOWN OR INDICATED WITH A BLACK STAR (★) IN THE CATALOG MUST BE IMPROVISED OR PROCURED LOCALLY.

● B – Bucket seats

BOBCAT (L)

AA	62,64,73	Black all vinyl	B
AB	62,64,73	Blue all vinyl	B
AD	62,64,73	Red all vinyl	B
AR	62,64,73	Jade all vinyl	B
AT	62,64,73	Chamois all vinyl	B
DB	62,64,73	Blue vinyl and blue cloth	B
DD	62,64,73	Red vinyl and red cloth	B
DJ	62,64,73	Tangerine vinyl and tangerine cloth with black appointments	B
DR	62,64,73	Jade vinyl and jade cloth	B
DT	62,64,73	Chamois vinyl and chamois cloth	B
GA	62,64,73	Black vinyl and black cloth	B
GB	62,64,73	Blue vinyl and blue cloth	B
GD	62,64,73	Red vinyl and red cloth	B
GR	62,64,73	Jade vinyl and jade cloth	B
GT	62,64,73	Chamois vinyl and chamois cloth	B
HA	62,64,73	Black all vinyl	B
HB	62,64,73	Blue all vinyl	B
HD	62,64,73	Red all vinyl	B
HJ	62,64,73	Tangerine all vinyl with black appointments	B
HR	62,64,73	Jade all vinyl	B
HT	62,64,73	Chamois all vinyl	B
JA	62	Black vinyl and black cloth	B
JB	62	Blue vinyl and blue cloth	B
JD	62	Red vinyl and red cloth	B
JR	62	Jade vinyl and jade cloth	B
JT	62	Chamois vinyl and chamois cloth	B

COPYRIGHT © 1986 — FORD MOTOR COMPANY — DEARBORN, MICHIGAN

1978 VINYL ROOF COVER CODES

AS LISTED ON CERTIFICATION LABEL

CODE	BODY TYPE	GRAIN and TYPE of ROOF	COLOR
		BOBCAT (L)	
KU	62,64	Lugano – front 1/2	Chamois
NB	62,64	Odense – 1/2	Blue
ND	62,64	Odense – 1/2	Red
XU	62,64	Lugano – 1/2	Chamois
YB	62,64	Valino – 1/2	Blue
YD	62,64	Valino – 1/2	Red
YR	62,64	Valino – 1/2	Jade
YW	62,64	Valino – 1/2	White
ZB	62,64	Valino – front 1/2	Blue
ZD	62,64	Valino – front 1/2	Red
ZR	62,64	Valino – front 1/2	Jade
ZW	62,64	Valino – front 1/2	White

1973/79 LINCOLN-MERCURY CARS

BODY TYPE	R/L	PART NUMBER LESS SUFFIX	TRIM CODES, COLORS and APPLICABLE PART NUMBER SUFFIXES												QTY.
		TRIM CODES ▶	SECOND CHARACTER of TRIM CODE							ALL CODES	ALL CODES	OTHER	OTHER		
			-B	-D or -N	-J	-K or -7	-R	-T or -2	-8						
		COLORS ▶	BLUE	RED	TANG-ERINE	AQUA	JADE	CHAM-OIS	GOLD	BLACK	WHITE				
02344-5		PANEL (COWL TRIM)													
Notes:		▲ Use black													
L	R	D8FZ 6202344		A9B	A9D	▲		B3R	A9T		A9A				1
	L	D8FZ 6202345		A9B	A9D	▲		B3R	A9T		A9A				1
04104		VISOR ASSY. - Less arm, bracket and mirror													
Notes:		⊕ Use with or without vanity mirror - refer to group 17A679 in Chassis Section for mirror													
L	⊕R/L	D6FZ 6204104			E					A					2
	⊕R/L	D7FZ 6204104						B8T							2
	⊕R/L	D8FZ 6204104		A7B		A4E		A1R							2
13000		CARPET (FRONT and REAR FLOOR)													
Notes:		▲ Use black													
L		D5FZ 6413000		B		▲				C					1
		D6FZ 6413000			A										1
		D7FZ 6413000						B2T							1
		D8FZ 6213000					C1R								1
13036		CARPET (REAR FLOOR REAR)													
Notes:		▲ Use black													
L		D8FZ 6213036		A0B	A5D	▲		★	A2T		A5A				1
13046		CARPET (REAR FLOOR) - Serviced only in assy. - group 13000													
13048		CARPET (AUXILIARY FLOOR)													
Notes:		▲ Use black													
L(73)		D5FZ 7313048		C		▲		★			D				1
		D6FZ 7313048			A										1
		D7FZ 7313048							A2T						1
13048		MAT (AUXILIARY FLOOR)													
L(73) - - rubber		D7FZ 7313048									A5A				1
13086		MAT (FRONT FLOOR)													
		TWIN (less carpet insert)													
L - - rubber - Ford oval		D6FZ 6213086		B	E					A					1
		D7FZ 6213086							K						1
13106		MAT (REAR FLOOR)													
		TWIN (less carpet insert)													
L - - rubber - plain		D6FZ 6213106		B	E					A			F(green)		1
		D7FZ 6213106							A						1

COPYRIGHT © 1986— FORD MOTOR COMPANY —DEARBORN, MICHIGAN

NEW ISSUE

1973/79 LINCOLN-MERCURY CARS

BODY TYPE	R/L	PART NUMBER LESS SUFFIX	TRIM CODES, COLORS and APPLICABLE PART NUMBER SUFFIXES											QTY.
		TRIM CODES ▶	SECOND CHARACTER of TRIM CODE							ALL CODES	ALL CODES	OTHER	OTHER	
			-B	-D or -N	-J	-K or -7	-R	-T or -2	-8					
		COLORS ▶	BLUE	RED	TANG-ERINE	AQUA	JADE	CHAM-OIS	GOLD	BLACK	WHITE			
24140-1		ARM REST - Incl. attaching parts												
L	R	D8FZ 6224140	A4B	★	A8E		★	A4T		A6A				1
	L	D8FZ 6224141	A4B	★	A8E		★	A4T		A6A				1
31012-3		PANEL (QUARTER TRIM)												
L(62)	R	D8FZ 6231012	A4B		A8E		★							1
	L	D8FZ 6231013	★		A8E		★							1
	R	D6FZ 6231012		★						A9A				1
	L	D6FZ 6231013		★						A9A				1
	R	D7FZ 6231012						A4T						1
	L	D7FZ 6231013						A4T						1
L(64)	R	D8FZ 6431012	A4B		A8E		★							1
	L	D8FZ 6431013	A4B		★		★							1
	R	D6FZ 6431012		A5D						A9A				1
	L	D6FZ 6431013		A5D						A9A				1
	R	D7FZ 6431012						A4T						1
	L	D7FZ 6431013						A4T						1
L(73)	R	D8FZ 7331012	★		A8E		★							1
	L	D8FZ 7331013	A4B		A8E		★							1
	R	D6FZ 7331012		★						A9A				1
	L	D6FZ 7331013		★						A9A				1
	R	D7FZ 7331012						A4T						1
	L	D7FZ 7331013						A4T						1
31290		WINDLACE (QUARTER PILLAR)												
L(73)	R/L	D8FZ 7331290	A4B		A8E		★							2
	R/L	D2FZ 7331290		★						D				2
	R/L	D7FZ 7331290						A4T						2

BODY TYPE	R/L	PART NUMBER	DESCRIPTION	QTY
40374-5		PANEL (BACK LOWER TRIM)		
L(64)	R	D7FZ 6440374-B4T	Paint to match	1
	L	D7FZ 6440375-A4T	Paint to match	1
45026		COVER (SPARE TIRE) - Serviced only in assy. - group 45455		
45440		COVER (LUGGAGE)		
L(64)		D7FZ 6445400-A6A	Black vinyl	1
45455		COVER (LUGGAGE COMPARTMENT FLOOR)		
L(62)		D5FZ 6245455-A	Burloom	1
L(64)		D7FZ 6445455-C5A	Black rubber	1
		D5FZ 6445455-G	Black carpet	1
		D5FZ 6445455-E	Blue carpet	1
		D7FZ 6445455-C2T	Chamois carpet	1
		★	Jade carpet	1
		D6FZ 6445455-L	Red carpet	1
46668		PANEL (PACKAGE TRAY TRIM)		
L(62)		D5FZ 6246668-B	Paint to match	1
50124		CONTAINER (GLASS ROOF PANEL STOWAGE)		
L(62,64)		D9FZ 6250124-A6A	Black vinyl	1
501A80		STRAP (ROOF OPENING GLASS CONTAINER)		
L(62,64)		D9ZZ 61501A80-A	Black	1

BODY TYPE	R/L	PART NUMBER LESS SUFFIX	TRIM CODES, COLORS and APPLICABLE PART NUMBER SUFFIXES													QTY.
		TRIM CODES ▶		SECOND CHARACTER of TRIM CODE							ALL CODES	ALL CODES	OTHER	OTHER		
				-B	-D or -N	-J	-K or -7	-R	-T or -2	-8						
		COLORS ▶		BLUE	RED	TANG-ERINE	AQUA	JADE	CHAM-OIS	GOLD	BLACK	WHITE				
519A02		PANEL (ROOF OPENING TRIM)														
L(62,64) - - w/ removable roof - glass		D8FZ 62519A02		A4B		A8E		★								1
		D7FZ 62519A02			★				A4T		A8A					1

BODY TYPE	R/L	PART NUMBER	DESCRIPTION	QTY
60032		BACK KIT (REAR SEAT) - Serviced only in assy. - group 672A18		
60050-1		CUSHION KIT (FRONT SEAT)		
L	R	D6FZ 6260050-A	Bucket seat - use with trim codes beginning with A,G or J	1
	L	D6FZ 6260051-A	Bucket seat - use with trim codes beginning with A,G or J	1
	R	D5YY 6460050-A	Bucket seat - use with trim codes beginning with D or H	1
	L	D5YY 6460051-A	Bucket seat - use with trim codes beginning with D or H	1
60136-7		BACK KIT (FRONT SEAT)		
L	R/L	E0FZ 6261018-B	Frame - bucket seat - hi-back	2
	R/L	D3FZ 6264810-A	Pad - bucket seat - hi-back	2
	R/L	D6ZZ 6961018-B	Frame - bucket seat - lo-back	2
	R/L	D6YY 6464810-A	Pad - bucket seat - lo-back	2

BODY TYPE	R/L	PART NUMBER LESS SUFFIX	TRIM CODES, COLORS and APPLICABLE PART NUMBER SUFFIXES													QTY.
		TRIM CODES ▶		SECOND CHARACTER of TRIM CODE							ALL CODES	ALL CODES	OTHER	OTHER		
				-B	-D or -N	-J	-K or -7	-R	-T or -2	-8						
		COLORS ▶		BLUE	RED	TANG-ERINE	AQUA	JADE	CHAM-OIS	GOLD	BLACK	WHITE				
60579		CARPET (REAR SEAT BACK FLOOR)														
Notes:		▲ Use black														
L(64,73)		D6FZ 6460579		A0B	C5D	▲		★			A5A					1
		D7FZ 6460579							A2T							1
60579		MAT (REAR SEAT BACK FLOOR)														
L(64,73) - - rubber		D7FZ 6460579									A5A					1

BODY TYPE	R/L	PART NUMBER LESS SUFFIX	TRIM CODES AND APPLICABLE PART NUMBER SUFFIXES														QTY
60762-3		PANEL (FRONT SEAT BACK REAR TRIM INSERT)															
		TRIM CODES ▶	AA	AB	AD	AR	AT	DB	DD	DJ	DR	DT					
L	R/L	D3FZ 6261632	AA	AA	AA	AA	AA										2
	R	D8YY 6460762						A4B	★	A8E	★						1
	L	D8YY 6460763						A4B	★	A8E	★						1
	R	D7YY 6460762										A4T					1
	L	D7YY 6460763										A4T					1
		TRIM CODES ▶	GA	GB	GD	GR	GT	HA	HB	HD	HJ	HR	HT				
L	R/L	D3FZ 6261632	AA	AA	AA	AA	AA										2
	R	D5YY 6460762						A									1
	L	D5YY 6460763						A									1
	R	D8YY 6460762							A4B	★	A8E	★					1
	L	D8YY 6460763							A4B	★	A8E	★					1
	R	D7YY 6460762											A4T				1
	L	D7YY 6460763											A4T				1
		TRIM CODES ▶	JA	JB	JD	JR	JT										
L	R/L	D3FZ 6261632	AA	AA	AA	AA	AA										2
61018		Refer to group 60136-7															

COPYRIGHT © 1986 — FORD MOTOR COMPANY — DEARBORN, MICHIGAN

1973/79 LINCOLN-MERCURY CARS

BODY TYPE	R/L	PART NUMBER LESS SUFFIX	TRIM CODES, COLORS and APPLICABLE PART NUMBER SUFFIXES												QTY.
		TRIM CODES ▶		SECOND CHARACTER of TRIM CODE							ALL CODES	ALL CODES	OTHER	OTHER	
				-B	-D or -N	-J	-D or -7	-R	-T or -2	-8					
		COLORS ▶	Length Inches	BLUE	RED	TANGERINE	AQUA	JADE	CHAMOIS	GOLD	BLACK	WHITE			
611A08		HEAD REST ASSY. (FRONT SEAT BACK) - Incl. guide rods													
L	R/L	D9AZ 54611A08	11	BA	★	★		★	AY		AU				2
61632		Refer to group 60762-3													
63500		BUTTON (FRONT and REAR SEAT CUSHION and BACK)													
			VINYL												
L - - rectangular head		D8YY 6463500	7/16	A5B	★	A5E									AR
		D7YY 6463500	7/16						A9T						AR
		D5YY 6463500	7/16								C				AR

BODY TYPE	R/L	PART NUMBER LESS SUFFIX	TRIM CODES AND APPLICABLE PART NUMBER SUFFIXES														QTY
63804		COVER (REAR SEAT CUSHION)															
		TRIM CODES ▶	AA	AB	AD	AR	AT	DB	DD	DJ	DR	DT					
L	R/L	D8FZ 6263804	AAA	★	★	★	★	★	★	★	★	★					2

BODY TYPE	R/L	PART NUMBER	DESCRIPTION	QTY
63840		PAD (REAR SEAT CUSHION)		
L	R/L	D8FZ 6263840-A		2
64810-1		Refer to group 60136-7		
66600		COVER (REAR SEAT BACK) - Serviced only in assy. - group 672A18		

1978 SOFT TRIM SCHEME CODES

AS LISTED ON CERTIFICATION LABEL

CODE	BODY TYPE	DESCRIPTION OF TRIM SCHEME	● TYPE OF SEAT

FOR MATERIAL IDENTIFICATION
REFER TO SALESMAN'S
COLOR AND UPHOLSTERY SELECTIONS GUIDE

THE SOFT TRIM SECTION INCLUDES ONLY THOSE ITEMS WHICH WERE AVAILABLE FOR SERVICE AT THE TIME OF PRINTING. ITEMS NOT SHOWN OR INDICATED WITH A BLACK STAR (★) IN THE CATALOG MUST BE IMPROVISED OR PROCURED LOCALLY.

Note 1– For replacement of Door Trim Panels (23942-3 and 27406-7), refer to this code in the 1978 Soft Trim Section. For replacement of Cushion Covers (62900 and 63804) and Back Covers (64416-7 and 66600), contact your Service Representative, who will process in accordance with General ICC bulletin No. 7526. All other parts are included in the 1978 Soft Trim Section.

● FW–Full width seat without center armrest, FWA–Full width seat with center armrest, B–Bucket seats

ZEPHYR (P)

AA,AAA	54,66,74	Black all vinyl	B
AB,ABA	54,66,74	Blue all vinyl	B
AE,AEA	54,66,74	Russet all vinyl	B
AQ,AQA	54,66	White all vinyl with blue appointments	B
AT,ATA	54,66,74	Chamois all vinyl	B
AU,AUA	54,66	Chamois and black all vinyl	B
AW,AWA	54,66,74	White all vinyl with black appointments	B
A2,A2A	54,66	White all vinyl with chamois appointments	B
A7,A7A	54,66	White all vinyl with russet appointments	B
BA	54,66,74	Blue all vinyl	FW
BB	54,66,74	Blue all vinyl	FW
BE	54,66,74	Russet all vinyl	FW
BQ	54,66	White all vinyl and blue appointments	FW
BT	54,66,74	Chamois all vinyl	FW
BU	54,66	Chamois and black all vinyl	FW
BW	54,66	White all vinyl with black appointments	FW
B2	54,66	White all vinyl with chamois appointments	FW
B7	54,66	White all vinyl with russet appointments	FW
CB	54,66	Blue vinyl and blue cloth	FW
CE	54,66	Russet vinyl and russet cloth	FW
CT	54,66	Chamois vinyl and chamois cloth	FW
EA	36,54,66,74	Black all vinyl	B
EB	36,54,66,74	Blue all vinyl	B
EE	36,54,66,74	Russet all vinyl	B
EQ	36,54,66	White all vinyl with blue appointments	B
ET	36,54,66,74	Chamois all vinyl	B
EU	54,66	Chamois and black all vinyl	B
EV	36	Cream all vinyl	B
EW	36,54,66	White all vinyl with black appointments	B
E2	36,54,66	White all vinyl with chamois appointments	B
E7	36,54,66	White all vinyl with russet appointments	B
FA	36,54,66,74	Black vinyl with black cloth	FW
FB	36,54,66,74	Blue vinyl and blue cloth	FW
FE	36,54,66,74	Russet vinyl and russet cloth	FW
FT	36,54,66,74	Chamois vinyl and chamois cloth	FW
FV	36	Cream vinyl and cream cloth	FW
GA	36,54,66,74	Black all vinyl	FW
GB	36,54,66,74	Blue all vinyl	FW
GE	36,54,66,74	Russet all vinyl	FW
GE1	36,54,66,74	(Code GE1–see Note 1)	
GQ	36,54,66	White all vinyl with blue appointments	FW
GT	36,54,66,74	Chamois all vinyl	FW
GU	54,66	Chamois and black all vinyl	FW
GV	36	Cream all vinyl	FW

COPYRIGHT © 1986 — FORD MOTOR COMPANY — DEARBORN, MICHIGAN

1978 SOFT TRIM SCHEME CODES

AS LISTED ON CERTIFICATION LABEL

CODE	BODY TYPE	DESCRIPTION OF TRIM SCHEME	● TYPE OF SEAT

FOR MATERIAL IDENTIFICATION
REFER TO SALESMAN'S
COLOR AND UPHOLSTERY SELECTIONS GUIDE

THE SOFT TRIM SECTION INCLUDES ONLY THOSE ITEMS WHICH WERE AVAILABLE FOR SERVICE AT THE TIME OF PRINTING. ITEMS NOT SHOWN OR INDICATED WITH A BLACK STAR (★) IN THE CATALOG MUST BE IMPROVISED OR PROCURED LOCALLY.

Note 1– For replacement of Door Trim Panels (23942-3 and 27406-7), refer to this code in the 1978 Soft Trim Section. For replacement of Cushion Covers (62900 and 63804) and Back Covers (64416-7 and 66600), contact your Service Representative, who will process in accordance with General ICC bulletin No. 7526. All other parts are included in the 1978 Soft Trim Section.

● FW–Full width seat without center armrest, FWA–Full width seat with center armrest, B–Bucket seats

ZEPHYR (P)

GW	36,54,66	White all vinyl with black appointments	FW
G2	36,54,66	White all vinyl with chamois appointments	FW
G7	36,54,66	White all vinyl with russet appointments	FW
HA,HAA	36,54,66,74	Black vinyl and black cloth	FWA
HB,HBA	36,54,66,74	Blue vinyl and blue cloth	FWA
HE,HEA	36,54,66,74	Russet vinyl and russet cloth	FWA
HT,HTA	36,54,66,74	Chamois vinyl and chamois cloth	FWA
HV,HVA	36	Cream vinyl and cream cloth	FWA
KA	36,54,66,74	Black all vinyl	FWA
KB	36,54,66,74	Blue all vinyl	FWA
KE	36,54,66,74	Russet all vinyl	FWA
KQ	36,54,66	White all vinyl with blue appointments	FWA
KT	36,54,66,74	Chamois all vinyl	FWA
KV	36	Cream all vinyl	FWA
KW	36,54,66	White all vinyl with black appointments	FWA
K2	36,54,66	White all vinyl with chamois appointments	FWA
K7	36,54,66	White all vinyl with russet appointments	FWA
LB	36,54,66,74	Blue vinyl and blue cloth	B
LE	36,54,66,74	Russet vinyl and russet cloth	B
LT	36,54,66,74	Chamois vinyl and chamois cloth	B
PA	54	Black all vinyl	FW
PB	54	Blue all vinyl	FW
PE	54	Russet all vinyl	FW
PT	54	Chamois all vinyl	FW
QT	54	Chamois vinyl and chamois cloth	FW
RA	36	Black all vinyl	B
RB	36	Blue all vinyl	B
RE	36	Russet all vinyl	B
RQ	36	White all vinyl with blue appointments	B
RT	36	Chamois all vinyl	B
RV	36	Cream all vinyl	B
RW	36	White all vinyl with black appointments	B
R2	36	White all vinyl with chamois appointments	B
R7	36	White all vinyl wiht russet appointments	B
SA	36	Black vinyl and black cloth	FW
SB	36	Blue vinyl and blue cloth	FW
SE	36	Russet vinyl and russet cloth	FW
ST	36	Chamois vinyl and chamois cloth	FW
SV	36	Cream vinyl and cream cloth	FW
TA	36	Black all vinyl	FW
TB	36	Blue all vinyl	FW
TE	36	Russet all vinyl	FW

1978 SOFT TRIM SCHEME CODES

AS LISTED ON CERTIFICATION LABEL

CODE	BODY TYPE	DESCRIPTION OF TRIM SCHEME	● TYPE OF SEAT

FOR MATERIAL IDENTIFICATION
REFER TO SALESMAN'S
COLOR AND UPHOLSTERY SELECTIONS GUIDE

THE SOFT TRIM SECTION INCLUDES ONLY THOSE ITEMS WHICH WERE AVAILABLE FOR SERVICE AT THE TIME OF PRINTING. ITEMS NOT SHOWN OR INDICATED WITH A BLACK STAR (★) IN THE CATALOG MUST BE IMPROVISED OR PROCURED LOCALLY.

Note 1– For replacement of Door Trim Panels(23942-3 and 27406-7), refer to this code in the 1978 Soft Trim Section. For replacement of Cushion Covers(62900 and 63804) and Back Covers (64416-7 and 66600), contact your Service Representative, who will process in accordance with General ICC bulletin No. 7526. All other parts are included in the 1978 Soft Trim Section.

● FW–Full width seat without center armrest, FWA–Full width seat with center armrest, B–Bucket seats

ZEPHYR (P)

TE1	36	(Code TE–see Note 1)	
TQ	36	White all vinyl with blue appointments	FW
TT	36	Chamois all vinyl	FW
TV	36	Cream all vinyl	FW
TW	36	White all vinyl with black appointments	FW
T2	36	White all vinyl with chamois appointments	FW
T7	36	White all vinyl with russet appointments	FW
UB	36	Blue vinyl and blue cloth	B
UE	36	Russet vinyl and russet cloth	B
UT	36	Chamois vinyl and chamois cloth	B
VA	54,66	Black all vinyl	B
VT	54,66	Chamois all vinyl	B
VU	54,66	Chamois and black all vinyl	B
WA	54,66	Black all vinyl	FW
WT	54,66	Chamois all vinyl	FW
WU	54,66	Chamois and black all vinyl	FW

COPYRIGHT © 1986 — FORD MOTOR COMPANY — DEARBORN, MICHIGAN

1978 VINYL ROOF COVER CODES

AS LISTED ON CERTIFICATION LABEL

ZEPHYR (P)

CODE	BODY TYPE	GRAIN and TYPE of ROOF	COLOR
VD	36,54,66	Valino – full	Russet
VP	36,54,66	Valino – full	Silver
VR	36,54,66	Valino – full	Jade
VU	36	Lugano–1/2	Chamois
VW	36,54,66	Valino – full	White
V5	36,54,66	Valino – full	Blue (wedgewood)
WU	36,54,66	Lugano – full	Chamois
XU	36	Lugano – 1/2	Chamois
YD	36	Valino – 1/2	Russet
YP	36	Valino – 1/2	Silver
YR	36	Valino – 1/2	Jade
YW	36	Valino – 1/2	White
YY	36	Valino – 1/2	Gold
Y5	36	Valino – 1/2	Blue (wedgewood)

1973/79 LINCOLN-MERCURY CARS

BODY TYPE	R/L	PART NUMBER LESS SUFFIX	TRIM CODES, COLORS and APPLICABLE PART NUMBER SUFFIXES												QTY.
		TRIM CODES ▶		SECOND CHARACTER						ALL CODES	ALL CODES	OTHER	OTHER	OTHER	
				-B or -Q	-E or -7	-R or -5	-T,-U or 2	-V							
		COLORS ▶		BLUE	RUSSET	JADE	CHAMOIS	CREAM		BLACK	WHITE				
02344-5		PANEL (COWL TRIM)													
P	R	D8BZ 5402344		A9B	★		★	A8Y		★					1
	L	D8BZ 5402345		A9B	★		A9T	A8Y		★					1
04104		VISOR ASSY.-Less arm, bracket and mirror													
Notes:		⊕ Use with or without vanity mirror-refer to group 17A679 in Chassis Section for mirror													
P ⊕	R/L	D8BZ 5404104		A7B	A9C		A8T	A5V		B4A	A9W				2
04282		PAD (INSTRUMENT PANEL UPPER)													
P		D8BZ 5404282		A9B	A9C		A6T	A3Y		★					1
13000		CARPET (FRONT FLOOR)													
P - - cut pile		D8BZ 5413000			★		A2T	★							1
		E0BZ 5413000		A5B						A5A					1
- - shag		E0BZ 5413000		B5B	★		★	★		★					1
13000		MAT (FRONT FLOOR)													
P(54) - - P/C & Taxi		D8BZ 5413000								C7A					1
13046		CARPET (REAR FLOOR)-Serviced only in assy.-group 13000													
13054		MAT (REAR FLOOR)													
P(54) - - P/C & Taxi		D8BZ 5413054								A7A					1
13086		MAT (FRONT FLOOR)													
		TWIN (less carpet insert)													
P - - rubber		D6FZ 6213086		B						A		C(brown)	E(red)		1
13106		MAT (REAR FLOOR)													
		TWIN (less carpet insert)													
P - - rubber -plain		D6FZ 6213106		B						A		C(brown)	E(red)	F(green)	1
24140-1		ARM REST-Incl. attaching parts													
P - - front door	R	D8FZ 6224140		A4B	★		A4T	A7V		A6A	★				1
	L	D8FZ 6224141		A4B	★		A4T	A7V		★	A6W				1
- - rear door	R/L	D8DZ 5427540		★	★		A4T			★	★				2
27540		Refer to group 24140-1													
31012-3		PANEL ASSY. (QUARTER TRIM)													
P(36) "Before 5/1/78"	R	D8BZ 3631012		★	★		★	★		★	★				1
	L	D8BZ 3631013		★	★		★	★		★	★				1
"From 5/1/78"	R	D8BZ 3631012		★	★		★	★		★	★				1
	L	D8BZ 3631013		★	★		★	★		B9A	B6W				1
P(54)	R	D8BZ 5431012		★	★		★			★	★				1
	L	D8BZ 5431013		A4B	★		★			B9A	A6W				1
P(66) - - w/o louver quarter window	R	D8BZ 6631012		★	★		★			★	★				1
	L	D8BZ 6631013		A4B	★		A4T			★	★				1
- - w/louver quarter window	R	D8BZ 6631012		B4B	★		B4T			B9A	★				1
	L	D8BZ 6631013		B4B	★		B4T			B9A	B6W				1

COPYRIGHT © 1986— FORD MOTOR COMPANY —DEARBORN, MICHIGAN

1973/79 LINCOLN-MERCURY CARS

BODY TYPE	R/L	PART NUMBER LESS SUFFIX	TRIM CODES, COLORS and APPLICABLE PART NUMBER SUFFIXES											QTY.
		TRIM CODES ▶		SECOND CHARACTER					ALL CODES	ALL CODES	OTHER	OTHER	OTHER	
				-B or -Q	-E or -7	-R or -5	-T,-U or 2	-V						
		COLORS ▶		BLUE	RUSSET	JADE	CHAMOIS	CREAM	BLACK	WHITE				
31012-3	PANEL ASSY. (QUARTER TRIM) — Cont'd													
P(74)	R	D8BZ 7431012		A4B	★		A4T		★					1
- - w/o stowage compartment	L	D8BZ 7431013		★	★		A4T		★					1
- - w/stowage compartment	L	D8BZ 7431013		★	★		★		D9A					1

BODY TYPE	R/L	PART NUMBER	DESCRIPTION	QTY
31406	STRAP (REAR DOOR ASSIST)			
P(54) - - Taxi	R/L	D40Z 5331406-A	Black	2
45494	COVER (LUGGAGE COMPARTMENT FLOOR)			
P(36)		D8BZ 3645494-A0P	Gray burloom	1
P(54,66)		D8BZ 5445494-C0P	Gray burloom	1
46668	PANEL (PACKAGE TRAY TRIM)			
Notes:	@ Use with or without speakers			
P(36,54,66)	@	D8BZ 5446668-B6T	Paint to match	1
46918-9	PANEL (PACKAGE TRAY TRIM END)			
P(36)	R	D8BZ 3646918-A0T	Paint to match	1
	L	D8BZ 3646919-A0T	Paint to match	1
P(54,66)	R	D8BZ 5446918-A0T	Paint to match	1
	L	D8BZ 5446919-A0T	Paint to match	1

BODY TYPE	R/L	PART NUMBER LESS SUFFIX	TRIM CODES, COLORS and APPLICABLE PART NUMBER SUFFIXES											QTY.
		TRIM CODES ▶		SECOND CHARACTER					ALL CODES	ALL CODES	OTHER	OTHER	OTHER	
				-B or -Q	-E or -7	-R or -5	-T,-U or 2	-V						
		COLORS ▶		BLUE	RUSSET	JADE	CHAMOIS	CREAM	BLACK	WHITE				
519A02	HEADLINING (ROOF SLIDING PANEL)													
P - - w/removable roof-glass		D8ZZ 66519A02		A4B	★			A7V						1
		D9ZZ 66519A02					A4T		A9A	A6W				1
51916	HEADLINING (ROOF)													
P(74) - - rear		D8BZ 7451916		C7B	★		C8T		D4A					1

BODY TYPE	R/L	PART NUMBER	DESCRIPTION	QTY
52018-9	COVER (ROOF SIDE REAR TRIM)			
P(54) - - w/o louver quarter window	R	D8BZ 5452018-A4T	Paint to match	1
	L	D8BZ 5452019-A4T	Paint to match	1
- - w/louver quarter window	R	D8BZ 5452018-B4T	Paint to match	1
	L	D8BZ 5452019-B4T	Paint to match	1

BODY TYPE	R/L	PART NUMBER	DESCRIPTION	QTY
52018-9	COVER (ROOF SIDE REAR TRIM) — Cont'd			
P(66) - - w/o louver quarter window	R	D8BZ 6652018-A4T	Paint to match	1
	L	D8BZ 6652019-A4T	Paint to match	1
- - w/louver quarter window	R	D8BZ 6652018-B4T	Paint to match	1
	L	D8BZ 6652019-B4T	Paint to match	1
53700	COVER (ROOF OUTSIDE)			

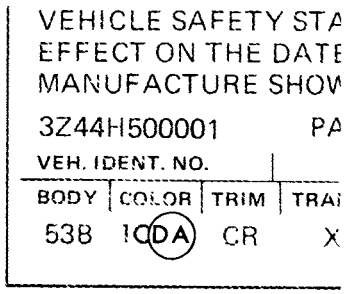

P-12213

The third and fourth positions of the color code indicate the type of grain (thrid position) and the color (fourth position).

For example:

1CDA means Black exterior color (1C) with Levant grain full black vinyl roof (DA).

In the listing which follows the vinyl roof covers are arranged by body type and the vinyl roof cover Code as listed on the Certification Label.

BODY TYPE	R/L	PART NUMBER LESS SUFFIX	VINYL ROOF CODES AND APPLICABLE PART NUMBER SUFFIXES														QTY
53700	COVER (ROOF OUTSIDE) — Cont'd																
		VINYL ROOF CODES ♦	VD	VP	VR	VU	VW	VY	V5								
P(36) - - half roof front		D8BZ 3653700	★	★	★	★	A4W	★	★								1
- - half roof rear		D8BZ 3653700	★	★	★	★	★	★	★								1
		VINYL ROOF CODES ♦	YD	YP	YR	YW	YY	Y5	WU	XU							
P(36) - - half roof front		D8BZ 3653700	★	★	★	A4W	★	★	★	★							1
- - half roof rear		D8BZ 3653700	★	★	★	★	★	★	★	★							
		VINYL ROOF CODES ♦	VD	VP	VR	VW	V5	WU									
P(54,66)		D8BZ 5453700	★	A5P	★	A4W	★	★									1

BODY TYPE	R/L	PART NUMBER	DESCRIPTION	QTY
60032	BACK KIT (REAR SEAT)			
P(36,54,66)		E1DZ 5466700-A	Frame	1
		D8BZ 5466800-A	Pad	1

COPYRIGHT © 1986 — FORD MOTOR COMPANY — DEARBORN, MICHIGAN

1973/79 LINCOLN-MERCURY CARS

BODY TYPE	R/L	PART NUMBER	DESCRIPTION	QTY
60032	BACK KIT (REAR SEAT) — Cont'd			
P(74) "Before 8/78"		★	Frame	1
		★	Pad	1
"From 8/78"		D8BZ 7466700-B	Frame	1
		D8BZ 7466800-B	Pad	1
60050-1	CUSHION KIT (FRONT SEAT)			
P	R/L	D8BZ 6660050-C	Bucket seat-Use with trim codes beginning with A, or U	2
	R/L	D8BZ 6660050-D	Bucket seat-Use with trim codes beginning with E,L or V	2
		★	Full width seat-w/o center arm rest	1
		★	Spring-full width seat-w/o center rest-Heavy Duty	1
		D8BZ 54632A22-B	Pad-full width seat-w/o center arm rest-Heavy Duty	1
		★	Full width seat-w/center arm rest	1
60080	CUSHION KIT (REAR SEAT)			
P		D8BZ 5463840-D	Pad and frame	1
60136-7	BACK KIT (FRONT SEAT)			
P(36)	R/L	D8BZ 6661018-B	Frame-bucket seat	2
	R/L	D8BZ 5464810-C	Pad-bucket seat-Use with trim codes beginning with A,R or U	1
	R/L	D8BZ 5464810-D	Pad-bucket seat-Use with trim codes beginning with E,L or V	2
	R	D8BZ 5461018-A	Frame-full width seat-w/center arm rest	1
	L	D8BZ 5461019-A	Frame-full width seat-w/center arm rest	1
	R/L	D8BZ 5464810-B	Pad-full width seat-w/center arm rest	2
	R	D8BZ 6661018-A	Frame-full width seat-w/o center arm rest	1
	L	D8BZ 6661019-A	Frame-full width seat-w/o center arm rest	1
	R	D8BZ 6664810-A	Pad-full width seat-w/o center arm rest	1
	L	D8BZ 6664811-A	Pad-full width seat-w/o center arm rest	1
P(54)	R/L	D8ZZ 6961018-A	Frame-bucket seat	2
	R/L	D8BZ 5464810-C	Pad-bucket seat-Use with trim codes beginning with A	2
	R/L	D8BZ 5464810-D	Pad-bucket seat-Use with trim codes beginning with E,L, or V	2
	R	D8BZ 5461018-A	Frame-full width seat-w/center arm rest	1
	L	D8BZ 5461019-A	Frame-full width seat-w/center arm rest	1
	R/L	D8BZ 5464810-B	Pad-full width seat-w/center arm rest	2
		D8BZ 5461018-B	Frame-full width seat-w/o center arm rest	1
		D8BZ 5461018-C	Frame-full width seat-w/o center arm rest-heavy duty	1
		D8BZ 5464810-A	Pad-full width seat-w/o center arm rest	1
P(66)	R/L	D8BZ 6661018-B	Frame-bucket seat	2
	R/L	D8BZ 5464810-C	Pad-bucket seat-Use with trim codes beginning with A	2
	R/L	D8BZ 5464810-D	Pad-bucket seat-Use with trim codes beginning with E,L, or V	2
	R	D8BZ 5461018-A	Frame-full width seat-w/center arm rest	1
	L	D8BZ 5461019-A	Frame-full width seat-w/center arm rest	1
	R/L	D8BZ 5464810-B	Pad-full width seat-w/center arm rest	2
	R	D8BZ 6661018-A	Frame-full width seat-w/o center arm rest	1
	L	D8BZ 6661019-A	Frame-full width seat-w/o center arm rest	1
	R	D8BZ 6664810-A	Pad-full width seat-w/o center arm rest	1
	L	D8BZ 6664811-A	Pad-full width seat-w/o center arm rest	1
P(74)	R/L	D8ZZ 6961018-A	Frame-bucket seat	2
	R/L	D8BZ 5464810-C	Pad-bucket seat-Use with trim codes beginning with A	2
	R/L	D8BZ 5464810-D	Pad-bucket seat-Use with trim codes beginning with E or L	2
	R	D8BZ 5461018-A	Frame-full width seat-w/center arm rest	1
	L	D8BZ 5461019-A	Frame-full width seat-w/center arm rest	1
	R/L	D8BZ 5464810-B	Pad-full width seat-w/center arm rest	2
		D8BZ 5461018-B	Frame-full width seat-w/o center arm rest	1
		D8BZ 5464810-A	Pad-full width seat-w/o center arm rest	1

BODY TYPE	R/L	PART NUMBER LESS SUFFIX	TRIM CODES, COLORS and APPLICABLE PART NUMBER SUFFIXES											QTY.
		TRIM CODES ▶	LGTH	SECOND CHARACTER					ALL CODES	ALL CODES	OTHER	OTHER	OTHER	
				-B or -Q	-E or -7	-R or -5	-T,-U or 2	-V						
		COLORS ▶	(Inches)	BLUE	RUSSET	JADE	CHAMOIS	CREAM	BLACK	WHITE				
60762	PANEL (FRONT SEAT BACK REAR TRIM INSERT)													
P - - w/bucket seat	R/L	D8BZ 6660762		A4B	★		A4T	A7V	A9A	A6W				2
61018-9	Refer to group 60136-7													
63100	Refer to group 60050													
632A22	Refer to group 60050													
63840	Refer to group 60080													
64810-1	Refer to group 60136-7													
66700	Refer to group 60032													
66800	Refer to group 60032													

COPYRIGHT © 1986— FORD MOTOR COMPANY —DEARBORN, MICHIGAN

1978 SOFT TRIM SCHEME CODES

AS LISTED ON CERTIFICATION LABEL

CODE	BODY TYPE	DESCRIPTION OF TRIM SCHEME	● TYPE OF SEAT

FOR MATERIAL IDENTIFICATION
REFER TO SALESMAN'S
COLOR AND UPHOLSTERY SELECTIONS GUIDE

THE SOFT TRIM SECTION INCLUDES ONLY THOSE ITEMS WHICH WERE AVAILABLE FOR SERVICE AT THE TIME OF PRINTING. ITEMS NOT SHOWN OR INDICATED WITH A BLACK STAR (★) IN THE CATALOG MUST BE IMPROVISED OR PROCURED LOCALLY.

● FWA–Full width seat with center arm rest, B–Bucket seats

VERSAILLES (V)

SB	54	Blue vinyl and blue cloth	FWA
SD	54	Red vinyl and red cloth	FWA
SF	54	Cordovan vinyl and cordovan cloth	FWA
SS	54	Gray vinyl and gray cloth	FWA
ST	54	Chamois vinyl and chamois cloth	FWA
TB	54	Blue all leather	FWA
TD	54	Red all leather	FWA
TF	54	Cordovan all leather	FWA
TN	54	White all leather with red appointments	FWA
TQ	54	White all leather with blue appointments	FWA
TS	54	Gray all leather	FWA
TT	54	Chamois all leather	FWA
T2	54	White all leather with chamois appointments	FWA
T6	54	White all leather with cordovan appointments	FWA
UB	54	Blue all leather	B
UD	54	Red all leather	B
UF	54	Cordovan all leather	B
UN	54	White all leather with red appointments	B
UQ	54	White all leather with blue appointments	B
US	54	Gray all leather	B
UT	54	Chamois all leather	B
U2	54	White all leather with chamois appointments	B
U6	54	White all leather with cordovan appointments	B

COPYRIGHT © 1986 — FORD MOTOR COMPANY — DEARBORN, MICHIGAN

1978 VINYL ROOF COVER CODES

AS LISTED ON CERTIFICATION LABEL

CODE	BODY TYPE	GRAIN and TYPE of ROOF	COLOR
VERSAILLES (V)			
VA	54	Valino – full	Black
VD	54	Valino – full	Red
VE	54	Valino – full	Gray
VF	54	Valino – full	Cordovan
VP	54	Valino – full	Silver
VS	54	Valino – full	Blue (midnight)
VU	54	Valino – full	Chamois (cinnamon gold)
VW	54	Valino – full	White
V2	54	Valino – full	Blue (diamond)
V5	54	Valino – full	Blue (wedgewood)

1973/79 LINCOLN-MERCURY CARS

BODY TYPE	R/L	PART NUMBER LESS SUFFIX	TRIM CODES, COLORS and APPLICABLE PART NUMBER SUFFIXES													QTY.
		TRIM CODES ▶		SECOND CHARACTER of TRIM CODE									ALL CODES	ALL CODES	OTHER	
				-B or-Q	-D or-N	-E or-7	-F or-6	-R or-5	-S	-T or-2	-Y	-Z or-3				
		COLORS ▶		BLUE	RED	RUSSET	CORDOVAN	JADE	GRAY	CHAMOIS	CAMEL	SADDLE	BLACK	WHITE		
02344-5	PANEL (COWL TRIM)															
V	R	D74Y 5402344		A9B			★		A2P	★						1
	L	D74Y 5402345		A9B			A8F		A2P	★						1
	R	D84Y 5402344			A3D											1
	L	D84Y 5402345			A3D											1
04282	PAD (INSTRUMENT PANEL UPPER)															
V		D74Y 5404282		★			A3F		★	★						1
		D84Y 5404282			A4D											1
13086	MAT (FRONT FLOOR)															
			TWIN (less carpet insert)													
V - - rubber		D60Z 6213086		B	F								A		C(brown)	1
		D70Z 6213086													A(gold)	1
13106	MAT (REAR FLOOR)															
			TWIN (less carpet insert)													
V - - rubber -plain		D6FZ 6213106		B	E								A		C(brown)	2
		D6FZ 6213106													F(green)	1
24140-1	ARM REST - Incl. attaching parts															
V - - front door	R	D74Y 5424140		ATB			ATF		ATS	★				★		1
	L	D74Y 5424141		ATB			ATF		ATS	★				★		1
	R	D84Y 5424140			A4D											1
	L	D84Y 5424141			A4D											1
- - rear door	R	D74Y 5427540		ATB			ATF		ATS	★				★		1
	L	D74Y 5427541		ATB			ATF		ATS	★				★		1
	R	D84Y 5427540			A4D											1
	L	D84Y 5427541			A4D											1
27540-1	Refer to group 24140-1															

COPYRIGHT © 1986— FORD MOTOR COMPANY —DEARBORN, MICHIGAN

1973/79 LINCOLN-MERCURY CARS

BODY TYPE	R/L	PART NUMBER	DESCRIPTION	QTY
45422-3	COVER (LUGGAGE COMPARTMENT SIDE)			
V	R	D74Y 5445422-A0B	Blue	1
	L	★	Blue	1
	R	D74Y 5445422-A1F	Cordovan	1
	L	D74Y 5445423-A1F	Cordovan	1
	R	D74Y 5445422-A4P	Gray	1
	L	D74Y 5445423-A4P	Gray	1
	R	D84Y 5445422-A3D	Red	1
	L	D84Y 5445423-A3D	Red	1
45443	COVER (LUGGAGE COMPARTMENT FRONT)			
V		D74Y 5445443-A9B	Blue	1
		D74Y 5445443-A2F	Cordovan	1
		D74Y 5445443-A4P	Gray	1
		D84Y 5445443-A5D	Red	1
45455	COVER (LUGGAGE COMPARTMENT FLOOR)			
V		★	Blue	1
		D74Y 5445455-A1F	Cordovan	1
		D74Y 5445455-A	Gray	1
		D84Y 5445455-A3D	Red	1
45594	PANEL (LUGGAGE COMPARTMENT DOOR)			
V		D84Y 5445594-A0B	Blue	1
		★	Chamois	1
		D84Y 5445594-A1F	Cordovan	1
		D84Y 5445594-A4P	Gray	1
		D84Y 5445594-A3D	Red	1
537A00-1	Refer to group 537A02-3			
537A02-3	PAD (ROOF OUTSIDE COVER)			
V	R	D74Y 54537A02-A	Rear side	1
	L	D74Y 54537A03-A	Rear side	1
	R	D84Y 54537A00-A	Rear	1
	L	D84Y 54537A01-A	Rear	1
60032	BACK KIT (REAR SEAT)			
V		★	Frame	1
		D6DZ 5466800-A	Pad	1
60136-7	BACK KIT (FRONT SEAT)			
V	R/L	D74Y 5464810-A	Pad – bucket seat	2
	R	★	Frame – bucket seat	1
	L	D7DZ 5461019-A	Frame – bucket seat	1
BODY TYPE	R/L	PART NUMBER LESS SUFFIX	TRIM CODES AND APPLICABLE PART NUMBER SUFFIXES	QTY
61018-9	Refer to group 60136-7			

62800	CORD (FRONT SEAT BACK ASSIST)																	
		TRIM CODES ▶	SB	SD	SF	SS	ST	TB	TD	TF	TN	TQ	TS	TT	T2	T6	
V	R/L	D74Y 5462800	B9B		B7F	B8P	★	A8B		A7F	A9W	A9W	A6P	★	A9W	A9W	2
	R/L	D84Y 5462800		A7D					B1D								2
		TRIM CODES ▶	UB	UD	UF	UN	UQ	US	UT	U2	U6						
V	R/L	D74Y 5462800	A8B		A7F	A9W	A9W	A6P	★	A9W	A9W						2
	R/L	D84Y 5462800		B1D													2
64810	Refer to group 60136-7																
66800	Refer to group 60032																

1979 SOFT TRIM SCHEME CODES

AS LISTED ON CERTIFICATION LABEL

FOR MATERIAL IDENTIFICATION
REFER TO SALESMAN'S
COLOR AND UPHOLSTERY SELECTIONS GUIDE

● FW – Full width seat without center arm rest, SB – Split Bench seat
FWA – Full width seat with center arm rest, B – Bucket seats

MERCURY (A)

NOTE 1 For replacement of door and quarter trim panels (23942–3, 27406–7 and 31012–3) refer to this code in the 1979 Soft Trim Section. For replacement of cushion covers (62900 and 63804) and covers (64416 and 66600) contact your Service Representative who will process in accordance with ICC bulletin No. 7526 All other parts are included in the 1979 Soft Trim Section.

CODE	BODY TYPE	DESCRIPTION OF TRIM SCHEME	● TYPE OF SEAT
AB,ABA,ABB	54H,66H	Blue vinyl and blue cloth	FW
AD,ADA,ADB	54H,66H	Red vinyl and red cloth	FW
AF,AFA,AFB	54H,66H	Cordovan vinyl and cordovan cloth	FW
AR,ARA,ARB	54H,66H	Green vinyl and green cloth	FW
AY,AYA,AYB	54H,66H	Camel vinyl and camel cloth	FW
BB,BBA	54H,66H,74H	Blue all vinyl	FWA
BD,BDA	54H,66H,74H	Red all vinyl	FWA
BF,BFA	54H,66H,74H	Cordovan all vinyl	FWA
BR,BRA	54H,66H,74H	Green all vinyl	FWA
BS,BSA	54H,66H,74H	Gray all vinyl	FWA
BY,BYA	54H,66H,74H	Camel all vinyl	FWA
CB,CBA	74H	Blue vinyl and blue cloth	FWA
CD,CDA	74H	Red vinyl and red cloth	FWA
CF,CFA	74H	Cordovan vinyl and cordovan cloth	FWA
CR,CRA	74H	Green vinyl and green cloth	FWA
CY,CYA	74H	Camel vinyl and camel cloth	FWA
GB	54K,66K	Blue vinyl and blue cloth	FWA
GD	54K,66K	Red vinyl and red cloth	FWA
GF	54K,66K	Cordovan vinyl and cordovan cloth	FWA
GR	54K,66K	Green vinyl and green cloth	FWA
GS	54K,66K	Gray vinyl and gray cloth	FWA
GY	54K,66K	Camel vinyl and camel cloth	FWA
HB	54K,66K,74K	Blue all vinyl	FWA
HD	54K,66K,74K	Red all vinyl	FWA
HF	54K,66K,74K	Cordovan all vinyl	FWA
HR	54K,66K,74K	Green all vinyl	FWA
HS	54K,66K,74K	Gray all vinyl	FWA
HY	54K,66K,74K	Camel all vinyl	FWA
JB	54K,66K,74K	Blue vinyl and blue cloth	SB
JD	54K,66K,74K	Red vinyl and red cloth	SB
JF	54K,66K,74K	Cordovan vinyl and cordovan cloth	SB
JR	54K,66K,74K	Green vinyl and green cloth	SB
JS	54K,66K,74K	Gray vinyl and gray cloth	SB
JY	54K,66K,74K	Camel vinyl and camel cloth	SB
KB	54K,66K,74K	Blue all vinyl	SB
KD	54K,66K,74K	Red all vinyl	SB
KD1	54K,66K,74K	Code KD – see note 1	
KF	54K,66K,74K	Cordovan all vinyl	SB
KR	54K,66K,74K	Green all vinyl	SB
KS	54K,66K,74K	Gray all vinyl	SB
KY	54K,66K,74K	Camel all vinyl	SB
MB	74K	Blue vinyl and blue cloth	FWA
MD	74K	Red vinyl and red cloth	FWA
MF	74K	Cordovan vinyl and cordovan cloth	FWA
MR	74K	Green vinyl and green cloth	FWA
MY	74K	Camel vinyl and camel cloth	FWA

COPYRIGHT © 1986 — FORD MOTOR COMPANY — DEARBORN, MICHIGAN

1979 SOFT TRIM SCHEME CODES

AS LISTED ON CERTIFICATION LABEL

FOR MATERIAL IDENTIFICATION
REFER TO SALESMAN'S
COLOR AND UPHOLSTERY SELECTIONS GUIDE

● FW – Full width seat without center arm rest, SB – Split Bench seat
FWA – Full width seat with center arm rest, B – Bucket seats

MERCURY (A)

NOTE 1 For replacement of door and quarter trim panels (23942-3, 27406-7 and 31012-3) refer to this code in the 1979 Soft Trim Section. For replacement of cushion covers (62900 and 63804) and covers (64416 and 66600) contact your Service Representative who will process in accordance with ICC bulletin No. 7526
All other parts are included in the 1979 Soft Trim Section.

CODE	BODY TYPE	DESCRIPTION OF TRIM SCHEME	● TYPE OF SEAT
NB,NBA	54L,66L,74K	Blue vinyl and blue cloth	SB
ND,NDA	54L,66L,74K	Red vinyl and red cloth	SB
NF,NFA	54L,66L,74K	Cordovan vinyl and cordovan cloth	SB
NR,NRA	54L,66L,74K	Green vinyl and green cloth	SB
NS,NSA	54L,66L,74K	Gray vinyl and gray cloth	SB
NY,NYA	54L,66L,74K	Camel vinyl and camel cloth	SB
NY1	54L,66L,74K	Code NY – see note 1	
RB,RBA	54L,66L,74K	Blue leather	SB
RD,RDA	54L,66L,74K	Red leather	SB
RF,RFA	54L,66L,74K	Cordovan leather	SB
RR,RRA	54L,66L,74K	Green leather	SB
RS,RSA	54L,66L,74K	Gray leather	SB
RY,RYA	54L,66L,74K	Camel leather	SB
SB	54H,66H	Blue vinyl and blue cloth	FW
SY	54H,66H	Camel vinyl and camel cloth	FW
TB	54H,66H,74H	Blue all vinyl	FW
TY	54H,66H,74H	Camel all vinyl	FW

THE SOFT TRIM SECTION INCLUDES ONLY THOSE ITEMS WHICH WERE AVAILABLE FOR SERVICE AT THE TIME OF PRINTING. ITEMS NOT SHOWN OR INDICATED WITH A BLACK STAR (★) IN THE CATALOG MUST BE IMPROVISED OR PROCURED LOCALLY.

1979 VINYL ROOF COVER CODES

AS LISTED ON CERTIFICATION LABEL

CODE	BODY TYPE	GRAIN and TYPE of ROOF	COLOR
MERCURY (A)			
HA	54,66	Grande – full	Black
HB	54,66	Grande – full	Blue(Lt.)
HD	54,66	Grande – full	Red(Med.)
HF	54,66	Grande – full	Cordovan
HM	54,66	Grande – full	Green(Dk.)
HP	54,66	Grande – full	Silver
HQ	54,66	Grande – full	Midnite Blue
HS	54,66	Grande – full	Dove Gray
HV	54,66	Grande – full	Camel
HW	54,66	Grande – full	White
PA	66	Grande – 1/2	Black
PB	66	Grande – 1/2	Blue (Lt.)
PD	66	Grande – 1/2	Red (Med.)
PF	66	Grande – 1/2	Cordovan
PM	66	Grande – 1/2	Green (Dk.)
PP	66	Grande – 1/2	Silver
PQ	66	Grande – 1/2	Midnite Blue
PS	66	Grande – 1/2	Dove Gray
PV	66	Grande – 1/2	Camel
PW	66	Grande – 1/2	White

COPYRIGHT © 1986 — FORD MOTOR COMPANY — DEARBORN, MICHIGAN

1973/79 LINCOLN-MERCURY CARS

BODY TYPE	R/L	PART NUMBER LESS SUFFIX	TRIM CODES, COLORS and APPLICABLE PART NUMBER SUFFIXES													QTY
		TRIM CODES ▶		SECOND CHARACTER of TRIM CODE									ALL CODES	ALL CODES	OTHER	
				-B-Q	-D-N	-F-6	-G-K	-R-5	-S	-T-2	-Y					
		COLORS ▶		BLUE	RED	CORD-OVAN	BERYL	JADE-GREEN	GRAY	CHAM-OIS	CAMEL		BLACK	WHITE		
02344-5		PANEL (COWL TRIM)														
A(54,66,74)	R	D9AZ 5402344		★	A2D	A8F		A2M	★		A8Y					1
	L	D9AZ 5402345		★	A2D	A8F		A2M	A2P		A8Y					1
04100-5		VISOR ASSY.														
Notes:		ϕ Matching visors (less vanity mirror) for R.H. visor which includes vanity mirror														
		⊕ Use with or w/o non-illuminated mirror - refer to group 17A679 in Chassis Section for mirror														
		LESS ARM, BRACKET and MIRROR														
A - - cloth ⊕	R/L	D9AZ 5404104		A2B	A1D	A0F		A3M	A2P		A4Y					2
- - Vinyl ⊕	R/L	D9AZ 5404104		C7B	★	★		★	★		C5Y					2
		INCLUDES ARM and BRACKET														
A - - w/illuminated vanity mirror cloth	R	D9AZ 5404100		★	B1D	★		B3M	B2P		B4Y					1
ϕ	L	D9AZ 5404104		A2B	A1D	A0F		A3M	A2P		A4Y					1
- - vinyl	R	D9AZ 5404100		D7B	D0D	D8F		D1M	D9P		D5Y					1
ϕ	L	D9AZ 5404104		C7B	★	★		★	★		C5Y					1
04282		PAD (INSTRUMENT PANEL UPPER)														
A		D9MY 6504282		A2B	A3D	A1F		A2M	A1P		A4Y					1
13000		CARPET (FLOOR ONE PIECE FRONT AND REAR)														
A - - cut pile		D9AZ 5413000		B	F	D		E	★		C					1
- - shag		D9AZ 5413000		★	M	★		★	★		★					1
13000		MAT (FRONT FLOOR)														
A		E1AZ 5413000											A			1

BODY TYPE	R/L	PART NUMBER LESS SUFFIX	TRIM CODES, COLORS and APPLICABLE PART NUMBER SUFFIXES														QTY
		TRIM CODES ▶		SECOND CHARACTER of TRIM CODE									ALL CODES	ALL CODES	OTHER		
				-B-Q	-D-N	-F-6	-G-K	-R-5	-S	-T-2	-Y						
		COLORS ▶		BLUE	RED	CORD-OVAN	BERYL	JADE-GREEN	GRAY	CHAM-OIS	CAMEL		BLACK	WHITE			
13046	MAT (REAR FLOOR)																
A(54,66)		D9AZ 5413046											A				1
13048	CARPET (AUXILIARY FLOOR)																
A(74)		D9AZ 7413048		A5B	A3D	A1F		A4M			A3Y						1
13086	MAT (FRONT FLOOR)																
			FULL WIDTH														
A - - simulated leather		D9AZ 6613086		★	★								★	★	D(ivy gold)		1
		D9AZ 6613086													★		1
			TWIN (carpet covered)														
A - - rubber		D9AZ 5413086		★	E	★		★	★		★						1
			TWIN (less carpet insert)														
A - - simulated leather		D9AZ 6613086		H	J								G	L	K(ivy gold)		1
		D9AZ 6613086													M(saddle)		1
13106	MAT (REAR FLOOR)																
			TWIN (carpet covered)														
A - - rubber		D9AZ 5413106		A	E	C		D	F		B						1
			TWIN (less carpet insert)														
A - - simulated leather		D9AZ 6613106		B	C								A	★	D(ivy gold)		1
		D9AZ 6613106													F(saddle)		1
13182	CARPET (REAR FLOOR WELL)																
A(74) - - 12 oz. cut pile		D9AZ 7413182											A5A				1
- - burloom		D9AZ 7413182							A0P								1
24100-1	PAD (ARM REST) - Includes attaching parts																
A - - front door	R	D9AZ 5424100	14	A1B	A2D	A8F		A2M	A4P		A8Y						1
	L	D9AZ 5424101	14	A1B	A2D	A8F		A2M	A4P		A8Y						1
A(54,74) - - rear door	R	D9AZ 5427618	8	A1B	A2D	A8F		A2M	A4P		★						1
	L	D9AZ 5427619	8	A1B	A2D	A8F		A2M	A4P		★						1
24140-1	ARM REST (DOOR) - Includes attaching parts																
A(54,74) - - front door	R	D9MY 5424140	26 7/8	A1B	A2D	A8F		A2M	A4P		A8Y						1
	L	D9MY 5424141	26 7/8	A1B	A2D	A8F		A2M	A4P		A8Y						1
A(66) - - door	R	D9MY 6624140	41	A1B	A2D	A8F		A2M	A4P		A8Y						1
	L	D9MY 6624141	41	A1B	A2D	A8F		A2M	A4P		A8Y						1
A(54,74) - - rear door	R	D9MY 5427540	24	A1B	A2D	A8F		A2M	A4P		A8Y						1
	L	D9MY 5427541	24	A1B	A2D	A8F		A2M	A4P		A8Y						1
24144-5	BASE (ARM REST) - Includes attaching parts																
A - - front door	R	D9AZ 5424144	19	A1B	A2D	A8F		A2M	A4P		A8Y						1
	L	D9AZ 5424145	19	A1B	A2D	A8F		A2M	A4P		A8Y						1
A(54,74) - - rear door	R	D9AZ 5427578	15	A1B	A2D	A8F		A2M	A4P		★						1
	L	D9AZ 5427579	15	A1B	A2D	A8F		A2M	A4P		★						1
24346-7	PANEL (CENTER BODY PILLAR INSIDE FINISH)																
A(54,74)	R	D9AZ 5424346		A1B	A2D	A8F		A2M	★		★						1
	L	D9AZ 5424347		A1B	A2D	A8F		A2M	★		★						1

BODY TYPE	R/L	PART NUMBER LESS SUFFIX	TRIM CODES AND APPLICABLE PART NUMBER SUFFIXES														QTY
27406-7	PANEL (REAR DOOR TRIM)																
		TRIM CODES ▶	SB	SY	TB	TY											
A(54H)	R	★															
	L	D9AZ 5427407	BRB	★	★	★											1

COPYRIGHT © 1986— FORD MOTOR COMPANY —DEARBORN, MICHIGAN

NEW ISSUE

1973/79 LINCOLN-MERCURY CARS

BODY TYPE	R/L	PART NUMBER LESS SUFFIX	TRIM CODES, COLORS and APPLICABLE PART NUMBER SUFFIXES													QTY
		TRIM CODES ▶		SECOND CHARACTER of TRIM CODE								ALL CODES	ALL CODES	OTHER		
				-B-Q	-D-N	-F-6	-G-K	-R-5	-S	-T-2	-Y					
		COLORS ▶		BLUE	RED	CORD-OVAN	BERYL	JADE-GREEN	GRAY	CHAM-OIS	CAMEL		BLACK	WHITE		
27540-1	Refer to group 24140-1															
27578-9	Refer to group 24144-5															
27618-9	Refer to group 24100-1															
281A74-5	COVER (QUARTER LATCH PILLAR FLANGE)															
A(66)	R	D9AZ 66281A74		B	A	D		C	E		F					1
"Before 4/6/79"	L	D9AZ 66281A75		B	A	D		C	E		F					1
"From 4/6/79"	R	D9AZ 66281A74		H	G	★		J	L		M					1
	L	D9AZ 66281A75		H	G	K		J	L		M					1
31012-3	PANEL (QUARTER TRIM)															
Notes:	† Drill speaker holes as required															
A(54)	R	D9AZ 5431012		★		A8F		A2M	★		A8Y					1
	L	D9AZ 5431013		A1B		★		A2M	★		★					1
	R	E2AZ 5431012			B2D											1
	L	E2AZ 5431013			B2D											1
A(74) - - w/o dual rear seat speakers	R	D9AZ 7431012		A1B		A8F		A2M	★		A8Y					1
	L	D9AZ 7431013		A1B		A8F		A2M	★		A8Y					1
	R	E2AZ 7431012			C2D											1
	L	E2AZ 7431013			C2D											1
A(74) - - w/dual rear seat speakers	R	D9AZ 7431012		B1B		B8F		B2M	★		★					1
†	L	D9AZ 7431013		†A1B		†A8F		†A2M	★		†A8Y					1
	R	E2AZ 7431012			D2D											1
	L	E2AZ 7431013			D2D											1

BODY TYPE	R/L	PART NUMBER LESS SUFFIX	TRIM CODES AND APPLICABLE PART NUMBER SUFFIXES													QTY
31012-3	PANEL (QUARTER TRIM) — Cont'd															
		TRIM CODES ▶	NB, NBA	ND, NDA	NF, NFA	NR, NRA	NS, NSA	NY, NYA	RB, RBA	RD, RDA	RF, RFA	RR, RRA	RS, RSA	RY, RYA		
A(66L)	R	D9AZ 6631012	★	★	★	★	★	★	★	ARD	★	★	★	★		1
	L	D9AZ 6631013	★	★	★	★	★	★	★	ARD	★	★	★	★		1
31058	BUTTON (QTR. TRIM PANEL)															
		TRIM CODES ▶	NB, NBA	ND, NDA	NF, NFA	NR, NRA	NS, NSA	NY, NYA	RB, RBA	RD, RDA	RF, RFA	RR, RRA	RS, RSA	RY, RYA		
A(66L)	R/L	D9AZ 6631058	★	A3D	★	A5M	★	★	A7B	A7D	A0F	A3M	A6P	A9Y		2

BODY TYPE	R/L	PART NUMBER	DESCRIPTION	QTY
31290	WINDLACE ASSY. (QUARTER PILLAR)			
A		D2FZ 7331290-D	Used on brake rebound bracket	A/R
45026	COVER (SPARE TIRE)			
A(54,66)		D9AZ 5445026-A	Gray - w/o collapsible tire	1
		D9AZ 5445026-B	Gray - w/ collapsible tire	1

BODY TYPE	R/L	PART NUMBER LESS SUFFIX	TRIM CODES, COLORS and APPLICABLE PART NUMBER SUFFIXES												QTY
		TRIM CODES ➧		SECOND CHARACTER of TRIM CODE								ALL CODES	ALL CODES	OTHER	
				-B-Q	-D-N	-F-6	-G-K	-R-5	-S	-T-2	-Y				
		COLORS ➧		BLUE	RED	CORD-OVAN	BERYL	JADE GREEN	GRAY	CHAM-OIS	CAMEL	BLACK	WHITE		
45422-3	COVER (LUGGAGE COMPARTMENT SIDE)														
A(54,66)-carpet	R	D9AZ 5445422							A						1
w/o C.B. radio	L	D9AZ 5445423							A						1
- - w/C.B. radio	R	D9AZ 5445422							B						1
	L	D9AZ 5445423							A						1
painted board std. prod.	R	D9AZ 5445422							C						1
	L	D9AZ 5445423							B						1
45455	COVER (LUGGAGE COMPARTMENT FLOOR FRONT)														
A(54,66) - - cut pile		D9AZ 5445455							A						1
- - burloom		D9AZ 5445494							A						1
45476	COVER (LUGGAGE COMPARTMENT FLOOR REAR)														
A(54,66) - - burloom		D9AZ 5445476							E						1
- - cut pile		D9MY 5445476							A						1
45494	Refer to group 45455														
45522-3	LINING BOARD (LUGGAGE COMPARTMENT REAR)														
A(54,66) - - carpet		D9MY 5445522							A						1
A(54,66) - - board		D9MY 5445522							B						1
46668	PANEL (PACKAGE TRAY TRIM)														
A(54,66)		D9AZ 5446668		A	C	D		B			E				1
46918-9	PANEL (PACKAGE TRAY END) - Paint to match														
A(54,66)	R	E0AZ 5446918							A5P						1
	L	E0AZ 5446919							A5P						1
47014	COVER (SPARE WHEEL WELL PANEL)														
A(74)		D9AZ 7447014		B1B	B2D	B8F		B2M			B8Y				1
51916	HEADLINING (ROOF)														
A(54,66) - - cloth		D9AZ 5451916		A2B	A1D	A0F		A3M	★		★		★		1
- - vinyl		★													
A(74) - - front - - cloth		D9AZ 7451916		★	A1D	★		★			★				1
- - front - - vinyl		★													
- - rear - - cloth		D9AZ 7451916		★	B1D	★		★			★				1
- - rear - - vinyl		★													
52018-9	COVER (ROOF SIDE REAR TRIM)														
Notes:	$ Paint to match														
A(54) - - cloth	R	D9AZ 5452018		A2B	A1D	A0F		A3M	A2P		A4Y				1
	L	D9AZ 5452019		A2B	A1D	A0F		A3M	A2P		A4Y				1
- - vinyl	R	D9AZ 5452018		B7B	B0D	B8F		B1M	B9P		B5Y				1
	L	D9AZ 5452019		B7B	B0D	B8F		B1M	B9P		B5Y				1
A(66)	R	D9AZ 6652018												$A4P	1
	L	D9AZ 6652019												$A4P	1

BODY TYPE	R/L	PART NUMBER	DESCRIPTION	QTY
537A02	PAD (ROOF OUTSIDE COVER SIDE)			
A(66) - - half roof	R/L	D9MY 66537A02-A		2
60050-1	CUSHION KIT (FRONT SEAT)			
A(54H,66H,74H)		E0AZ 6660050-A	Bench seat - w/and w/o center arm rest	1
A(54K,66K,74H)		★	Bench seat - w/center arm rest	1
A(54,66,74)	R	E2MY 5460050-B	Split seats - all except trim codes beginning with N or R	1
	L	E2MY 5460051-B	Split seats - all except trim codes beginning with N or R	1
	R	E2MY 5460050-A	Split seats - with trim codes beginning with N or R	1
	L	E2MY 5460051-A	Split seats - with trim codes beginning with N or R	1
		E1AZ 5463226-A	Support - front seat cushion pad	2

COPYRIGHT © 1986 — FORD MOTOR COMPANY — DEARBORN, MICHIGAN

1973/79 LINCOLN-MERCURY CARS

BODY TYPE	R/L	PART NUMBER	DESCRIPTION	QTY
600A88	PAD AND FRAME ASSY. (REAR SEAT CUSHION)			
A(54,66,74)		D9AZ 54600A88-B	All trim codes except those beginning with N or R	1
A(54,66,74)		D9MY 54600A88-A	All trim codes beginning with N or R	1
60090-1	CUSHION KIT (AUXILIARY SEAT)			
A(74) - - w/dual facing rear seats	R	D9AZ 7460090-A		1
	L	D9AZ 7460091-A		1
60096-7	BACK KIT (AUXILIARY SEAT)			
A(74) - - w/dual facing rear seats	R	D9AZ 7460096-A		1
	L	D9AZ 7460097-A		1
60136-7	BACK KIT (FRONT SEAT)			
A(54,74)		D9AZ 5461018-AD	Frame-full width seat-w/o center arm rest	1
		D9AZ 5464810-AB	Pad-full width seat-w/o center arm rest	1
	R	E2AZ 5461018-DA	Frame-full width seat-w/center arm rest	1
	L	E2AZ 5461019-CA	Frame-full width seat-w/center arm rest	1
	R/L	E0MY 5464810-AA	Pad-full width seat-w/ctr. arm rest-use with trim codes A&B	2
	R/L	E3AZ 5464810-A	Pad-full width seat-w/ctr. arm rest-use w/trim codes C,G,H,J,K,M	2
	R	E2AZ 5461018-CA	Frame-split seat	1
	L	E2AZ 5461019-CA	Frame-split seat	1
	R/L	E3AZ 5464810-A	Pad-split seat-use with all trim codes except N or R	2
	R/L	E0MY 5464810-AA	Pad-spilt seat-use with trim codes N or R	2
A(66)	R	D9AZ 6661018-AC	Frame-full width seat-w/o center arm rest	1
	L	D9AZ 6661019-AC	Frame-full width seat-w/o center arm rest	1
	R	D9AZ 6664810-AC	Pad-full width seat-w/o center arm rest	1
	L	D9AZ 6664811-AC	Pad-full width seat-w/o center arm rest	1
	R	E2AZ 5461018-DA	Frame-full width seat-w/center arm rest	1
	L	E2AZ 5461019-CA	Frame-full width seat-w/center arm rest	1
	R/L	E0MY 5464810-AA	Pad-full width seat-w/center arm rest-use w/trim codes A&B	2
	R/L	E3AZ 5464810-A	Pad-full width seat-w/center arm rest-use w/trim codes G,H,J,K,M	2
	R	E2AZ 5461018-DA	Frame-split seat-non/reclining	1
	R	E2AZ 5461018-CA	Frame-split seat-reclining	1
	L	E2AZ 5461019-CA	Frame-split seat	1
	R/L	E3AZ 5464810-A	Pad-split seat-use with all trim codes except N or R	2
	R/L	E0MY 5464810-AA	Pad-split seat-use with trim codes N or R	2

BODY TYPE	R/L	PART NUMBER LESS SUFFIX	TRIM CODES, COLORS and APPLICABLE PART NUMBER SUFFIXES												QTY
		TRIM CODES ▶		SECOND CHARACTER of TRIM CODE								ALL CODES	ALL CODES	OTHER	
				-B-Q	-D-N	-F-6	-G-K	-R-5	-S	-T-2	-Y				
		COLORS ▶		BLUE	RED	CORD-OVAN	BERYL	JADE-GREEN	GRAY	CHAM-OIS	CAMEL	BLACK	WHITE		
60762	PANEL (FRONT SEAT BACK TRIM)														
A(54,66,74) - - w/o padding and map pocket		D9MY 5460762		A1B	A2D	A8F		A2M	A4P		A8Y				2
61018-9	Refer to group 60136-7														
611A08	HEAD REST ASSY. (FRONT SEAT BACK)														
A - - vinyl	R/L	D9AZ 54611A08		★	C	★		★	★		★				2
- - cloth	R/L	★													
62800-1	CORD (FRONT SEAT BACK ASSIST)														
A "Before 10/28/78"	R	D9AZ 5462800		A	B	D		E	F		C				1
	L	D9AZ 5462801		A	B	D		E	F		C				1
"From 10/28/78"	R	D9AZ 5462800		H	G	K		L	M		J				1
	L	D9AZ 5462801		H	G	K		L	M		J				1

BODY TYPE	R/L	PART NUMBER LESS SUFFIX	TRIM CODES AND APPLICABLE PART NUMBER SUFFIXES														QTY
62900-1	COVER (FRONT SEAT CUSHION)																
		TRIM CODES ➧	BB, BBA	BD, BDA	BF, BFA	BR, BRA	BS, BSA	BY, BYA									
A(54H,66H,74H)		D9MY 5462900	★	★	★	★	★	ABY									1
63226	Refer to group 60050-1																
63804	COVER (REAR SEAT CUSHION)																
		TRIM CODES ➧	GB	GD	GF	GR	GS	GY	HB	HD	HF	HR	HS	HY			
A(54K,66K,74K)		D9MY 5463804	★	★	★	★	★	★	★	AHD	★	★	★	★			1
		TRIM CODES ➧	JB	JD	JF	JR	JS	JY	KB	KD	KF	KR	KS	KY			
A(54K,66K,74K)		D9MY 5463804	★	★	★	★	★	★	★	AHD	★	★	★	★			1
		TRIM CODES ➧	NB, NBA	ND, NDA	NF, NFA	NR, NRA	NS, NSA	NY, NYA	RB, RBA	RD, RDA	RF, RFA	RR, RRA	RS, RSA	RY, RYA			
A(54L,66L,74K)		D9MY 5463804	★	★	★	★	★	★	★	ARD	★	★	★	★			1

BODY TYPE	R/L	PART NUMBER LESS SUFFIX	TRIM CODES, COLORS and APPLICABLE PART NUMBER SUFFIXES													QTY
		TRIM CODES ➧		SECOND CHARACTER of TRIM CODE								ALL CODES	ALL CODES	OTHER		
				-B-Q	-D-N	-F-6	-G-K	-R-5	-S	-T-2	-Y					
		COLORS ➧		BLUE	RED	CORD-OVAN	BERYL	JADE-GREEN	GRAY	CHAM-OIS	CAMEL		BLACK	WHITE		
63822	COVER (AUXILIARY SEAT CUSHION)															
A(74)	R/L	D9AZ 7463822		★	AED	★		★			★					2

BODY TYPE	R/L	PART NUMBER LESS SUFFIX	TRIM CODES AND APPLICABLE PART NUMBER SUFFIXES														QTY
64416-7	COVER (FRONT SEAT BACK)																
		TRIM CODES ➧	NB, NBA	ND, NDA	NF, NFA	NR, NRA	NS, NSA	NY, NYA	RB, RBA	RD, RDA	RF, RFA	RR, RRA	RS, RSA	RY, RYA			
A(54L,66L,74K)	R	D9MY 5464416	★	★	★	★	★	★	★	ARD	★	★	★	★			1
	L	D9MY 5464417	★	★	★	★	★	★	★	ARD	★	★	★	★			1
644A18-9	COVER (FRONT SEAT BACK CENTER ARM REST)																
		TRIM CODES ➧	BB, BBA	BD, BDA	BF, BFA	BR, BRA	BY, BYA	CB, CBA	CD, CDA	CF, CFA	CR, CRA	CY, CYA					
A(74H)		D9AZ 54644A18	★	★	★	★	★	★	ALD	★	★					1	
		TRIM CODES ➧	KB	KD	KF	KR	KY	MB	MD	MF	MR	MY					
A(74K)		D9AZ 54644A18	★	★	★	★	★	★	ALD	★	★	★					1
64810-1	Refer to group 60136-7																
66600	COVER (REAR SEAT BACK)																
		TRIM CODES ➧	GB	GD	GF	GR	GS	GY	HB	HD	HF	HR	HS	HY			
A(54K,66K)		D9MY 5466600	★	★	★	★	★	★	★	AHD	★	★	★			1	
		TRIM CODES ➧	JB	JD	JF	JR	JS	JY	KB	KD	KF	KR	KS	KY			
A(54K,66K)		D9MY 5466600	★	★	★	★	★	★	★	AHD	★	★	★	★			1
		TRIM CODES ➧	NB, NBA	ND, NDA	NF, NFA	NR, NRA	NY, NYA	RB, RBA	RD, RDA	RF, RFA	RR, RRA	RY, RYA					
A(74K)		D9MY 7466600	★	★	★	★	ANY	★	★	ARF	★	★					1

COPYRIGHT © 1986— FORD MOTOR COMPANY —DEARBORN, MICHIGAN

1973/79 LINCOLN-MERCURY CARS

BODY TYPE	R/L	PART NUMBER LESS SUFFIX	TRIM CODES, COLORS and APPLICABLE PART NUMBER SUFFIXES													QTY
		TRIM CODES ▶	SECOND CHARACTER of TRIM CODE									ALL CODES	ALL CODES	OTHER		
			-B-Q	-D-N	-F-6	-G-K	-R-5	-S	-T-2	-Y						
		COLORS ▶	BLUE	RED	CORD-OVAN	BERYL	JADE-GREEN	GRAY	CHAM-OIS	CAMEL		BLACK	WHITE			
66640	COVER (AUXILIARY SEAT BACK)															
A(74)	R	D9AZ 7466640		★	AED	★		★			★					1
	L	D9AZ 7466641		★	AED	★		★			★					1

BODY TYPE	R/L	PART NUMBER	DESCRIPTION	QTY
672A18	PAD and FRAME ASSY. (REAR SEAT BACK)			
A(54H,66H)	★	D9MY 54672A18-A	Used with all trim codes except SB,SY,TB or TY	1
		D9AZ 54672A18-A	Used with trim codes SB,SY,TB or TY	1
A(54K,66K)		D9AZ 54672A18-A		1
A(54L,66L)	★	D9MY 54672A18-B		1
A(74)		★		

1979 SOFT TRIM SCHEME CODES

AS LISTED ON CERTIFICATION LABEL

CODE	BODY TYPE	DESCRIPTION OF TRIM SCHEME	● TYPE OF SEAT

FOR MATERIAL IDENTIFICATION
REFER TO SALESMAN'S
COLOR AND UPHOLSTERY SELECTIONS GUIDE

THE SOFT TRIM SECTION INCLUDES ONLY THOSE ITEMS WHICH WERE AVAILABLE FOR SERVICE AT THE TIME OF PRINTING. ITEMS NOT SHOWN OR INDICATED WITH A BLACK STAR (★) IN THE CATALOG MUST BE IMPROVISED OR PROCURED LOCALLY.

NOTE 1– For replacement of Door Trim Panels(23942-3 and 27406-7), Cushion Cover(63804) and Back Covers(64417 and 66600), refer to this code in the 1979 Soft Trim Section. For replacement of Cushion Cover(62900-1), contact your Service Representative who will process in accordance with General ICC bulletin No. 7526. All other parts are included in the 1979 Soft Trim Section.

● SB – Split Bench seat, FWA – Full width with center arm rest

LINCOLN (D)

BB	53,60	Blue vinyl and blue cloth	FWA
BD	53,60	Red vinyl and red cloth	FWA
BF	53,60	Cordovan vinyl and cordovan cloth	FWA
BU	53,60	Champagne vinyl and champagne cloth	FWA
BY	53,60	Gold vinyl and gold cloth	FWA
DA	53,60	Black vinyl and black leather	FWA
DB	53,60	Blue vinyl and blue leather	FWA
DD	53,60	Red vinyl and red leather	FWA
DF	53,60	Cordovan vinyl and cordovan leather	FWA
DU	53,60	Champagne vinyl and champagne leather	FWA
DY	53,60	Gold vinyl and gold leather	FWA
EA	53,60	Black vinyl and black leather	SB
EB	53,60	Blue vinyl and blue leather	SB
ED	53,60	Red vinyl and red leather	SB
EF	53,60	Cordovan vinyl and cordovan leather	SB
EU	53,60	Champagne vinyl and champagne leather	SB
EY	53,60	Gold vinyl and gold leather	SB
JA	53	Black all cloth	SB
JB	53,60	Blue all cloth	SB
JD	53,60	Red all cloth	SB
JF	53,60	Cordovan all cloth	SB
JK	53,60	Beryl (turquoise) all cloth	SB
JS	53,60	Gray all cloth	SB
JU	53,60	Champagne all cloth	SB
JY	53,60	Gold all cloth	SB
KA	53,60	Black vinyl and black leather	SB
KB	53,60	Blue vinyl and blue leather	SB
KD	53,60	Red vinyl and red leather	SB
KF	53,60	Cordovan vinyl and cordovan leather	SB
KG	53,60	White vinyl and white leather with beryl (turquoise) appointments	SB
KG1	53,60	(Code KG – see Note 1)	
KK	53,60	Beryl (turquoise) vinyl and beryl (turquoise) leather	SB
KN	53,60	White vinyl and white leather with red appointments	SB
KN1	53,60	(Code KN – see Note 1)	
KQ	53,60	White vinyl and white leather with blue appointments	SB
KQ1	53,60	(Code KQ – see Note 1)	
KS	53,60	Gray vinyl and gray leather	SB
KU	53,60	Champagne vinyl and champagne leather	SB
KW	53,60	White vinyl and white leather with black appointments	SB
KW1	53,60	(Code KW – see Note 1)	

COPYRIGHT © 1986 — FORD MOTOR COMPANY — DEARBORN, MICHIGAN

1979 SOFT TRIM SCHEME CODES

AS LISTED ON CERTIFICATION LABEL

FOR MATERIAL IDENTIFICATION
REFER TO SALESMAN'S
COLOR AND UPHOLSTERY SELECTIONS GUIDE

THE SOFT TRIM SECTION INCLUDES ONLY THOSE ITEMS WHICH WERE AVAILABLE FOR SERVICE AT THE TIME OF PRINTING. ITEMS NOT SHOWN OR INDICATED WITH A BLACK STAR (★) IN THE CATALOG MUST BE IMPROVISED OR PROCURED LOCALLY.

NOTE 1– For replacement of Door Trim Panels(23942-3 and 27406-7), Cushion Cover(63804) and Back Covers(64417 and 66600), refer to this code in the 1979 Soft Trim Section. For replacement of Cushion Cover(62900-1), contact your Service Representative who will process in accordance with General ICC bulletin No. 7526. All other parts are included in the 1979 Soft Trim Section.

● SB – Split Bench seat, FWA – Full width with center arm rest

CODE	BODY TYPE	DESCRIPTION OF TRIM SCHEME	● TYPE OF SEAT
KY	53,60	Gold vinyl and gold leather	SB
K4	53,60	White vinyl and white leather with champagne appointments	SB
K41	53,60	(Code K4 – see Note 1)	
K6	53,60	White vinyl and white leather with cordovan appointments	SB
K61	53,60	(Code K6 – see Note 1)	
K8	53,60	White vinyl and white leather with gold appointments	SB
K81	53,60	(Code K8 – see Note 1)	
LB	53	Blue all cloth	SB
MB	53	Blue all leather	SB

1979 VINYL ROOF COVER CODES

AS LISTED ON CERTIFICATION LABEL

CODE	BODY TYPE	GRAIN and TYPE of ROOF	COLOR
		LINCOLN (D)	
TA	53,60	Valino – coach	Black
TB	53,60	Valino – coach	Blue(diamond)
TD	53,60	Valino – coach	Red
TF	53,60	Valino – coach	Cordovan(dark)
TK	53,60	Valino – coach	Beryl(turquoise)
TN	53,60	Valino – coach	Cordovan(light)
TP	53,60	Valino – coach	Silver
TQ	53,60	Valino – coach	Blue(midnight)
TS	53,60	Valino – coach	Gray
TU	53,60	Valino – coach	Champagne
TV	53,60	Valino – coach	Cream
TW	53,60	Valino – coach	White
TY	53,60	Valino – coach	Gold
T5	53,60	Valino – coach	Blue(wedgewood)
VA	53,60	Valino – full	Black
VB	53,60	Valino – full	Blue(diamond)
VD	53,60	Valino – full	Red
VF	53,60	Valino – full	Cordovan(dark)
VK	53,60	Valino – full	Beryl(turquoise)
VN	53,60	Valino – full	Cordovan(light)
VP	53,60	Valino – full	Silver
VQ	53,60	Valino – full	Blue(midnight)
VS	53,60	Valino – full	Gray
VU	53,60	Valino – full	Champagne
VV	53,60	Valino – full	Cream
VW	53,60	Valino – full	White
VY	53,60	Valino – full	Gold
V5	53,60	Valino – full	Blue(wedgewood)

COPYRIGHT © 1986 — FORD MOTOR COMPANY — DEARBORN, MICHIGAN

1973/79 LINCOLN-MERCURY CARS

BODY TYPE	R/L	PART NUMBER LESS SUFFIX		TRIM CODES, COLORS and APPLICABLE PART NUMBER SUFFIXES												QTY
		TRIM CODES ➧		SECOND CHARACTER of TRIM CODE									ALL CODES	ALL CODES	OTHER	
				-B-Q	-D-N	-F-6	-G-K	-R-5	-S	-U-4	-Y-8					
		COLORS ➧	Length (inches)	BLUE	RED	CORD-OVAN	BERYL	JADE	GRAY	CHAM-PAGNE	GOLD		BLACK	WHITE		
02344-5		PANEL (COWL TRIM)														
Notes:		♦ Use with trim code BB,DB,EB,JB or KB, ⊕ Use with trim code LB or MB														
D	R	D5VY 6002344		♦D	E								C			1
	L	D5VY 6002345		♦D	E								C			1
	R	D9VY 6002344		⊕★			A5K									1
	L	D9VY 6002345		⊕A2B			A5K									1
	R	D7VY 6002344				A8F										1
	L	D7VY 6002345				★										1
	R	D6VY 6002344							A2P							1
	L	D6VY 6002345							A2P							1
	R	D8VY 6002344								★	A8V					1
	L	D8VY 6002345								A6U	A8V					1
04104-5		VISOR ASSY.														
Notes:		△ Use with or without non-illuminated vanity mirror refer to group 17A679 in Chassis Section for mirror, ‡ Garage door opener not offered on R.H. (pass) side, ♦ Use with trim code BB,DB,EB,JB or KB, ⊕ Use with trim code LB or MB														
		LESS ARM and BRACKET														
D - - w/non illuminated vanity mirror	△R/L	D8VY 6004104		A7B	★		★		★	A2U	★		★	★		2
	△R/L	D7VY 6004104				A8F										2
		INCLUDES ARM and BRACKET														
D - - w/illuminated vanity mirror - - w/o garage door opener	R	D8VY 6004104		♦B7B						B2U	★					1
	L	D8VY 6004105		♦B7B						B2U	B3V					1
	R	D9VY 5304104		⊕★												1
	L	D9VY 5304105		⊕★												1
	R	D6VY 6004104			A0D				B9P				★	A9W		1
	L	D6VY 6004105			A0D				★				A4A	A9W		1
	R	D7VY 6004104				★										1
	L	D7VY 6004105				★										1
	R	D9VY 6004104					B7K									1
	L	D9VY 6004105					B7K									1
- - w/illuminated vanity mirror - w/ garage door opener	‡ R	D8VY 6004104		♦B7B						B2U	★					1
	L	D8VY 6004105		♦C7B						C2U	C3V					1
	‡ R	D9VY 5304104		⊕★												1
	L	D9VY 5304105		⊕A5B												1
	‡ R	D6VY 6004104			A0D				B9P				★	A9W		1
	L	D7VY 6004105			C0D				C9P				C4A	C9W		1
	‡ R	D7VY 6004104				★										1
	L	D7VY 6004105				C8F										1
	‡ R	D9VY 6004104					B7K									1
	L	D9VY 6004105					C7K									1
04282		PAD (INSTRUMENT PANEL UPPER)														
D		D8VY 6004282		★	★	★	★		A2P	★	A4V		A5A			1

BODY TYPE	R/L	PART NUMBER LESS SUFFIX	Length (inches)	-B-Q BLUE	-D-N RED	-F-6 CORD-OVAN	-G-K BERYL	-R-5 JADE	-S GRAY	-U-4 CHAM-PAGNE	-Y-8 GOLD		ALL CODES BLACK	ALL CODES WHITE	OTHER	QTY
		TRIM CODES ➧		SECOND CHARACTER of TRIM CODE												
		COLORS ➧														
13086	MAT (FRONT FLOOR)															
				FULL WIDTH												
D - - simulated leather		D9AZ 6613086		★	★								A	★	D(green)	1
				TWIN (w/carpet)												
D - - carpet		D9VY 6013086		★	★	C	★		★	★	★		★			1
				TWIN (w/o carpet)												
D - - simulated leather		D9AZ 6613086		H	J								G	L	M(saddle)	1
13106	MAT (REAR FLOOR)															
Notes:	♦ Use with trim code BB,DB,EB,JB ,KB or KQ, ⊕ Use with trim code LB or MB															
				TWIN (w/carpet)												
D - - carpet		D9AZ 5413106		⊕G	★	C	★		F	★	★		L		♦★	1
				TWIN (w/o carpet)												
D - - simulated leather		D9AZ 6613106		B	C								★	★	D(green)	1
		D9AZ 6613106													F(saddle)	1
24140-1	ARM REST - Incl. attaching parts															
Notes:	♦ Use with trim code BB,DB,EB,JB or KB, ⊕ Use with trim code LB or MB															
D(53) - - front door	R	D8VY 5324140		♦★						★	★					1
	L	D8VY 5324141		♦★						A9U	★					1
	R	D9VY 5324140		⊕★			★									1
	L	D9VY 5324141		⊕A9B			A2K									1
	R	D5VY 5324140			F								C			1
	L	D8VY 5324141			A0D								A9A			1
	R	D7VY 5324140				A4F										1
	L	D8VY 5324141				★										1
	R	D6VY 5324140							A8P					★		1
	L	D8VY 5324141							★					★		1
- - rear door	R	D8VY 5327540		♦A6B						A9U	A1V					1
	L	D8VY 5327541		♦A6B						A9U	★					1
	R	D9VY 5327540		⊕★			★									1
	L	D9VY 5327541		⊕A9B			A2K									1
	R	D5VY 5327540			F								C			1
	L	D5VY 5327541			F								C			1
	R	D7VY 5327540				A4F										1
	L	D7VY 5327541				A4F										1
	R	D6VY 5327540							A8P					A		1
	L	D6VY 5327541							A8P					A		1

COPYRIGHT © 1986— FORD MOTOR COMPANY —DEARBORN, MICHIGAN

NEW ISSUE

1973/79 LINCOLN-MERCURY CARS

BODY TYPE	R/L	PART NUMBER LESS SUFFIX	TRIM CODES, COLORS and APPLICABLE PART NUMBER SUFFIXES													QTY
		TRIM CODES ▶		SECOND CHARACTER of TRIM CODE									ALL CODES	ALL CODES	OTHER	
				-B-Q	-D-N	-F-6	-G-K	-R-5	-S	-U-4	-Y-8					
		COLORS ▶	Length (inches)	BLUE	RED	CORD-OVAN	BERYL	JADE	GRAY	CHAM-PAGNE	GOLD		BLACK	WHITE		
24140-1	**ARM REST - Incl. attaching parts — Cont'd**															
Notes:	**♦ Use with trim code BB,DB,EB,JB or KB, ⊕ Use with trim code LB or MB**															
D(60) - - front door	R	D8VY 6024140		A6B						A9U	A1V					1
	L	D8VY 6024141		★						★	A1V					1
	R	D5VY 6024140			F								★			1
	L	D8VY 6024141			A0D								A9A			1
	R	D7VY 6024140				A4F	★									1
	L	D8VY 6024141				★	★									1
	R	D6VY 6024140							A8P					A		1
	L	D8VY 6024141							A8P					★		1
- - quarter	R	D8VY 6031600		A6B						A9U	A1V					1
	L	D8VY 6031601		A6B						A9U	A1V					1
	R	D5VY 6031600			F								C			1
	L	D5VY 6031601			F								C			1
	R	D7VY 6031600				A4F										1
	L	D7VY 6031601				A4F										1
	R	D9VY 6031600					A2K									1
	L	D9VY 6031601					A2K									1
	R	D6VY 6031600							A8P					A		1
	L	D6VY 6031601							A8P					★		1
24356-7	**PANEL (CENTER PILLAR INSIDE FINISH)**															
D(58) - - upper	L	D5VY 5324357													A(paint to match)	1

BODY TYPE	R/L	PART NUMBER LESS SUFFIX	TRIM CODES AND APPLICABLE PART NUMBER SUFFIXES														QTY
27406-7	**PANEL ASSY. (REAR DOOR)**																
		TRIM CODES ▶	JA	JB	JD	JF	JK	JS	JU	JY							
D(53)	L	D9VY 5327407	BJA	★	★	★	★	★	★	★							1
27540-1	**Refer to group 24140-1**																

BODY TYPE	R/L	PART NUMBER LESS SUFFIX	TRIM CODES, COLORS and APPLICABLE PART NUMBER SUFFIXES														QTY
		TRIM CODES ▶		SECOND CHARACTER of TRIM CODE									ALL CODES	ALL CODES	OTHER		
				-B-Q	-D-N	-F-6	-G-K	-R-5	-S	-U-4	-Y-8						
		COLORS ▶	Length (inches)	BLUE	RED	CORD-OVAN	BERYL	JADE	GRAY	CHAM-PAGNE	GOLD		BLACK	WHITE			
281A74-5	COVER (QUARTER LATCH PILLAR FLANGE)																
D(60)	R	D8VY 60281A74		A4B						★	A6V						1
	L	D8VY 60281A75		A4B						★	A6V						1
	R	D5VY 60281A74			G								E				1
	L	D5VY 60281A75			G								E				1
	R	D7VY 60281A74				A8F											1
	L	D7VY 60281A75				A8F											1
	R	D9VY 60281A74					A9K										1
	L	D9VY 60281A75					A9K										1
	R	D6VY 60281A74							A4P					A			1
	L	D6VY 60281A75							A4P					A			1
281A84	Refer to group 537A02-3																
31012-3	PANEL ASSY. (QUARTER TRIM)																
Notes:	♦ Use with trim code BB,DB,EB,JB or KB, ⊕ Use with trim code LB or MB																
D(53)	R	D8VY 5331012		♦A4B						A4U	A6V						1
	L	D8VY 5331013		♦A4B						A4U	A6V						1
	R	D9VY 5331012		⊕A2B			A9K										1
	L	D9VY 5331013		⊕A2B			A9K										1
	R	D5VY 5331012			A								H				1
	L	D5VY 5331013			A								H				1
	R	D7VY 5331012				A8F											1
	L	D7VY 5331013				A8F											1
	R	D6VY 5331012							A4P					A			1
	L	D6VY 5331013							A4P					A			1
D(60)	R	D8VY 6031012		A5B						★	★						1
	L	D8VY 6031013		A5B						A2U	A2V						1
	R	D5VY 6031012			★								D				1
	L	D5VY 6031013			★								D				1
	R	D7VY 6031012				★											1
	L	D7VY 6031013				A0F											1
	R	D9VY 6031012					A9K										1
	L	D9VY 6031013					A9K										1
	R	D6VY 6031012							A6P					A			1
	L	D6VY 6031013							A6P					A			1

BODY TYPE	R/L	PART NUMBER LESS SUFFIX	TRIM CODES AND APPLICABLE PART NUMBER SUFFIXES														QTY
311A58-9	PANEL (QUARTER TRIM FINISH)																
		TRIM CODES ▶	BB	BD	BF	BU	BY	DA	DB	DD	DF	DU	DY				
D(60)	R	D7VY 60311A58	★	★	A7F	★	★	★	★	★	A7F	★	★				1
		TRIM CODES ▶	EA	EB	ED	EF	EU	EY									
D(60)	R	D7VY 60311A58	★	★	★	A7F	★	★									1
31600-1	Refer to group 24140-1																

COPYRIGHT © 1986— FORD MOTOR COMPANY —DEARBORN, MICHIGAN

1973/79 LINCOLN-MERCURY CARS

BODY TYPE	R/L	PART NUMBER	DESCRIPTION	QTY
31750		COVER (QUARTER WHEELHOUSE - IN LUGGAGE COMPARTMENT)		
D		D9VY 6031750-A0P	Gray - burloom	1
45455		COVER (LUGGAGE COMPARTMENT FLOOR)		
D		D7VY 6045455-A	Gray - carpet	1
45522		LINING BOARD (LUGGAGE COMPARTMENT REAR)		
D		D9VY 6045522-A2B	Blue	1
46668		PANEL (PACKAGE TRAY TRIM)		
D(53)		D5VY 5346668-D	Paint to match - Use w/all trim codes except beginning with L or M	1
		D9VY 5346668-A4B	Blue - Use with trim codes beginning with L or M	1

BODY TYPE	R/L	PART NUMBER LESS SUFFIX	VINYL ROOF CODES AND APPLICABLE PART NUMBER SUFFIXES														QTY
517C66		WELT (ROOF OUTSIDE MOULDING) - Refer to group 53700 for explanation of vinyl roof codes															
		VINYL ROOF CODES ➧	TA	TB	TD	TF	TK	TN	TP	TQ	TS	TU	TV	TW	TY	T5	
D(53)		D9VY 53517C66	★	★	★		A9K		★	★	★		★	★	★		1
		D8VY 53517C66						A4C				A2U				★	1
		VINYL ROOF CODES ➧	TA	TB	TD	TF	TK	TN	TP	TQ	TS	TU	TV	TW	TY	T5	
D(60)		D9VY 60517C66	★	★	★		A9K		★	A2B	★		★	★	A1Y		1
		D8VY 60517C66						A4C				A2U				A5B	1

BODY TYPE	R/L	PART NUMBER LESS SUFFIX	TRIM CODES, COLORS and APPLICABLE PART NUMBER SUFFIXES													QTY
		TRIM CODES ➧		SECOND CHARACTER of TRIM CODE								ALL CODES	ALL CODES	OTHER	
				-B-Q	-D-N	-F-6	-G-K	-R-5	-S	-U-4	-Y-8				
		COLORS ➧	Length (inches)	BLUE	RED	CORD-OVAN	BERYL	JADE	GRAY	CHAM-PAGNE	GOLD	BLACK	WHITE		
519A02		HEADLINING (ROOF SLIDING PANEL)													
Notes:		♦ Use with trim code BB,DB,EB,JB or KB, ⊕ Use with trim code LB or MB													
D(53) - - w/sliding glass roof		D8LY 65519A02		♦B7B						★	B3V				1
		D9LY 65519A02		⊕B5B			B7K								1
		D7LY 65519A02			B0D	★			B9P				B4A	B9W	1
D(53) - - w/fixed glass roof and coach roof		D8VY 53519A02		♦B7B						B2U	B3V				1
		D9VY 53519A02		⊕B5B			B7K								1
		D7VY 53519A02			B0D	B8F			B9P				B4A	B9W	1
D(53) - - w/fixed glass roof and w/o coach roof		D8VY 53519A02		♦A7B						A2U	A3V				1
		D9VY 53519A02		⊕A5B			A7K								1
		D7VY 53519A02			A0D	A8F			A9P				A4A	A9W	1
D(60) - - w/sliding glass roof		D8LY 65519A02		♦B7B						★	B3V				1
		D9LY 65519A02		⊕B5B			B7K								1
		D7LY 65519A02			B0D	B8F			B9P				B4A	B9W	1
D(60) - - w/fixed glass roof		D8VY 60519A02		♦C7B						C2U	C3V				1
		D9VY 60519A02		⊕C5B			C7K								1
		D7VY 60519A02			C0D	C8F			C9P				C4A	C9W	1
52018-9		COVER (ROOF SIDE REAR TRIM)													
D(53) - - w/opera window	R	D8VY 5352018		★						A2U	A2V				1
	L	D8VY 5352019		A5B						A2U	A2V				1
	R	D7VY 5352018			B7D	A0F			B6P					B6W	1
	L	D7VY 5352019			B7D	★			★				B6A	★	1
	R	D9VY 5352018					A9K								1
	L	D9VY 5352019					A9K								1
- - w/o opera window	R	D9VY 5352018		★	★	★	B9K		★	★	★		★	★	1
	L	D9VY 5352019		★	★	★	B2K		★	★	★		★	★	1

BODY TYPE	R/L	PART NUMBER	DESCRIPTION	QTY
537A02-3	PAD (ROOF OUTSIDE COVER SIDE)			
D(53) - - w/coach roof	R/L	D7VY 53537A02-A	Rear	2
		D7VY 53537A00-A	Rear - lower	1
D(53) - - w/full roof	R/L	D7VY 53537A02-B	Rear	2
	R/L	D7VY 60281A84-A	Quarter lock pillar	2
D(60) - - w/coach roof		D7VY 6053738-A	Center	1
	R/L	D7VY 60537A02-B	Rear	2
		D7VY 60537A00-A	Rear - lower	1
D(60) - - w/full roof	R/L	D7VY 60537A02-B	Rear	2
	R/L	D7VY 60281A84-A	Quarter lock pillar	2
53738	Refer to group 537A02-3			

60032	BACK KIT (REAR SEAT)			
D(exc. Town Car and Town Coupe)		★		1
D(Town Car and Town Coupe)		D5VY 5360032-B		1

COPYRIGHT © 1986— FORD MOTOR COMPANY —DEARBORN, MICHIGAN

1979 SOFT TRIM SCHEME CODES

AS LISTED ON CERTIFICATION LABEL

CODE	BODY TYPE	DESCRIPTION OF TRIM SCHEME	● TYPE OF SEAT

FOR MATERIAL IDENTIFICATION
REFER TO SALESMAN'S
COLOR AND UPHOLSTERY SELECTIONS GUIDE

THE SOFT TRIM SECTION INCLUDES ONLY THOSE ITEMS WHICH WERE AVAILABLE FOR SERVICE AT THE TIME OF PRINTING. ITEMS NOT SHOWN OR INDICATED WITH A BLACK STAR (★) IN THE CATALOG MUST BE IMPROVISED OR PROCURED LOCALLY.

● FW – Full width seat without center arm rest, SB – Split Bench seat, FWA – Full width seat with center arm rest, B – Bucket seats

COUGAR (F)

Note 1– For replacement of Door Trim Panels (23942-3 and 27406-7), refer to this code in the 1979 Soft Trim Section. For replacement of Cushion Covers (62900 and 63804) and Back Covers (64416-7 and 66600), contact your Service Representative, who will process in accordance with General ICC bulletin No. 7526. All other parts are included in the 1979 Soft Trim Section.

AB	65L	Blue vinyl and blue cloth	FWA
AB1	65L	(Code AB – See note 1)	FWA
AD	65L	Red vinyl and red cloth	FWA
AD1	65L	(Code AD – See note 1)	FWA
AF	65L	Cordovan vinyl and cordovan cloth	FWA
AF1	65L	(Code AF – See note 1)	FWA
AR	65L	Jade vinyl and jade cloth	FWA
AR1	65L	(Code AR – See note 1)	FWA
AS	65L	Gray vinyl and gray cloth	FWA
AS1	65L	(Code AS – See note 1)	FWA
AT	65L	Chamois vinyl and chamois cloth	FWA
AT1	65L	(Code AT – See note 1)	FWA
BB	65L	Blue all vinyl	FWA
BD	65L	Red all vinyl	FWA
BF	65L	Cordovan all vinyl	FWA
BN	65L	White all vinyl with red appointments	FWA
BQ	65L	White all vinyl with blue appointments	FWA
BR	65L	Jade all vinyl	FWA
BS	65L	Gray all vinyl	FWA
BT,BTA	65L	Chamois all vinyl	FWA
B2	65L	White all vinyl with chamois appointments	FWA
B5	65L	White all vinyl with jade appointments	FWA
B6	65L	White all vinyl with cordovan appointments	FWA
CB	65L	Blue vinyl and blue cloth	SB
CD	65L	Red vinyl and red cloth	SB
CF	65L	Cordovan vinyl and cordovan cloth	SB
CF1	65L	(Code CF – See Note 1)	SB
CR	65L	Jade vinyl and jade cloth	SB
CR1	65L	(Code CR – See Note 1)	SB
CS,CSA	65L	Gray vinyl and gray cloth	SB
CT	65L	Chamois vinyl and chamois cloth	SB
CT1	65L	(Code CT – See Note 1)	SB
DB	65L	Blue all vinyl	SB
DD	65L	Red all vinyl	SB
DF	65L	Cordovan all vinyl	SB
DN	65L	White all vinyl with red appointments	SB
DQ	65L	White all vinyl with blue appointments	SB
DR	65L	Jade all vinyl	SB
DS	65L	Gray all vinyl	SB
DT	65L	Chamois all vinyl	SB
D2	65L	White all vinyl with chamois appointments	SB

COPYRIGHT © 1986 — FORD MOTOR COMPANY — DEARBORN, MICHIGAN

1979 SOFT TRIM SCHEME CODES

AS LISTED ON CERTIFICATION LABEL

CODE	BODY TYPE	DESCRIPTION OF TRIM SCHEME	● TYPE OF SEAT

FOR MATERIAL IDENTIFICATION
REFER TO SALESMAN'S
COLOR AND UPHOLSTERY SELECTIONS GUIDE

THE SOFT TRIM SECTION INCLUDES ONLY THOSE ITEMS WHICH WERE AVAILABLE FOR SERVICE AT THE TIME OF PRINTING. ITEMS NOT SHOWN OR INDICATED WITH A BLACK STAR (★) IN THE CATALOG MUST BE IMPROVISED OR PROCURED LOCALLY.

● FW – Full width seat without center arm rest, SB – Split Bench seat, FWA – Full width seat with center arm rest, B – Bucket seats

COUGAR (F) — Cont'd

Note 1– For replacement of Door Trim Panels (23942-3 and 27406-7), refer to this code in the 1979 Soft Trim Section. For replacement of Cushion Covers (62900 and 63804) and Back Covers (64416-7 and 66600), contact your Service Representative, who will process in accordance with General ICC bulletin No. 7526. All other parts are included in the 1979 Soft Trim Section.

D5	65L	White all vinyl with jade appointments	SB
D6	65L	White all vinyl with cordovan appointments	SB
EB	65L	Blue all leather	B
ED	65L	Red all leather	B
EF	65L	Cordovan all leather	B
EN	65L	White all leather with red appointments	B
EQ	65L	White all leather with blue appointments	B
ER	65L	Jade all leather	B
ES	65L	Gray all leather	B
ET	65L	Chamois all leather	B
E2	65L	White all leather with chamois appointments	B
E5	65L	White all leather with jade appointments	B
E6	65L	White all leather with cordovan appointments	B
FB	65L	Blue all vinyl	B
FD	65L	Red all vinyl	B
FF	65L	Cordovan all vinyl	B
FN	65L	White all vinyl with red appointments	B
FQ	65L	White all vinyl with blue appointments	B
FR	65L	Jade all vinyl	B
FS	65L	Gray all vinyl	B
FT	65L	Chamois all vinyl	B
F2	65L	White all vinyl with chamois appointments	B
F5	65L	White all vinyl with jade appointments	B
F6	65L	White all vinyl with cordovan appointments	B
GB	65L	Blue vinyl and blue cloth	B
GD	65L	Red vinyl and red cloth	B
GF	65L	Cordovan vinyl and cordovan cloth	B
GR	65L	Jade vinyl and jade cloth	B
GS	65L	Gray vinyl and gray cloth	B
GT	65L	Chamois vinyl and chamois cloth	B
HB	53D,65D	Blue all vinyl	FWA
HD	53D,65D	Red all vinyl	FWA
HF	53D,65D	Cordovan all vinyl	FWA
HR	53D,65D	Jade all vinyl	FWA
HS	53D,65D	Gray all vinyl	FWA
HT,HTA	53D,65D	Chamois all vinyl	FWA
JB	53D,65D	Blue vinyl and blue cloth	FW
JD	53D,65D	Red vinyl and red cloth	FW
JT	53D,65D	Chamois vinyl and chamois cloth	FW
KB	53D,65D	Blue all vinyl	FW
KD	53D,65D	Red all vinyl	FW
KT	53D,65D	Chamois all vinyl	FW
LB	53D,65D	Blue vinyl and blue cloth	FWA
LD	53D,65D	Red vinyl and red cloth	FWA

1979 SOFT TRIM SCHEME CODES

AS LISTED ON CERTIFICATION LABEL

FOR MATERIAL IDENTIFICATION
REFER TO SALESMAN'S
COLOR AND UPHOLSTERY SELECTIONS GUIDE

THE SOFT TRIM SECTION INCLUDES ONLY THOSE ITEMS WHICH WERE AVAILABLE FOR SERVICE AT THE TIME OF PRINTING. ITEMS NOT SHOWN OR INDICATED WITH A BLACK STAR (★) IN THE CATALOG MUST BE IMPROVISED OR PROCURED LOCALLY.

● FW – Full width seat without center arm rest, SB – Split Bench seat, FWA – Full width seat with center arm rest, B – Bucket seats

COUGAR (F) — Cont'd

Note 1– For replacement of Door Trim Panels (23942-3 and 27406-7), refer to this code in the 1979 Soft Trim Section. For replacement of Cushion Covers (62900 and 63804) and Back Covers (64416-7 and 66600), contact your Service Representative, who will process in accordance with General ICC bulletin No. 7526. All other parts are included in the 1979 Soft Trim Section.

CODE	BODY TYPE	DESCRIPTION OF TRIM SCHEME	● TYPE OF SEAT
LF	53D,65D	Cordovan vinyl and cordovan cloth	FWA
LR	53D,65D	Jade vinyl and jade cloth	FWA
LS	53D,65D	Gray vinyl and gray cloth	FWA
LT	53D,65D	Chamois vinyl and chamois cloth	FWA
NT	65L	Chamois vinyl and chamois cloth	B
PB	65L	Blue all cloth	SB
PD	65L	Red all cloth	SB
PF	65L	Cordovan all cloth	SB
PR	65L	Jade all cloth	SB
PS	65L	Gray all cloth	SB
PT	65L	Chamois all cloth	SB
QT	65L	Chamois vinyl and chamois cloth	B
RB	53D,65D	Blue vinyl and blue cloth	FW
RD	53D,65D	Red vinyl and red cloth	FW
RF	53D,65D	Cordovan vinyl and cordovan cloth	FW
RR	53D,65D	Jade vinyl and jade cloth	FW
RS	53D,65D	Gray vinyl and gray cloth	FW
RT	53D,65D	Chamois vinyl and chamois cloth	FW
SB	53D,65D	Blue all vinyl	FW
SD	53D,65D	Red all vinyl	FW
SF	53D,65D	Cordovan all vinyl	FW
SR	53D,65D	Jade all vinyl	FW
SS	53D,65D	Gray all vinyl	FW
ST	53D,65D	Chamois all vinyl	FW
TB	53D,65D	Blue vinyl and blue cloth	FWA
TB1	53D,65D	(Code TB – See note 1)	FWA
TD	53D,65D	Red vinyl and red cloth	FWA
TD1	53D,65D	(Code TD – See note 1)	FWA
TF	53D,65D	Cordovan vinyl and cordovan cloth	FWA
TF1	53D,65D	(Code TF – See note 1)	FWA
TR	53D,65D	Jade vinyl and jade cloth	FWA
TR1	53D,65D	(Code TR – See note 1)	FWA
TS	53D,65D	Gray vinyl and gray cloth	FWA
TS1	53D,65D	(Code TS – See note 1)	FWA
TT	53D,65D	Chamois vinyl and chamois cloth	FWA
TT1	53D,65D	(Code TT – See note 1)	FWA
UB	53D,65D	Blue all vinyl	FWA
UD	53D,65D	Red all vinyl	FWA
UF	53D,65D	Cordovan all vinyl	FWA
UR	53D,65D	Jade all vinyl	FWA
US	53D,65D	Gray all vinyl	FWA
UT,UTA	53D,65D	Chamois all vinyl	FWA

COPYRIGHT © 1986 — FORD MOTOR COMPANY — DEARBORN, MICHIGAN

1979 SOFT TRIM SCHEME CODES

AS LISTED ON CERTIFICATION LABEL

CODE	BODY TYPE	DESCRIPTION OF TRIM SCHEME	● TYPE OF SEAT

FOR MATERIAL IDENTIFICATION
REFER TO SALESMAN'S
COLOR AND UPHOLSTERY SELECTIONS GUIDE

● FW – Full width seat without center arm rest, SB – Split Bench seat, FWA – Full width seat with center arm rest, B – Bucket seats

COUGAR (F) — Cont'd

THE SOFT TRIM SECTION INCLUDES ONLY THOSE ITEMS WHICH WERE AVAILABLE FOR SERVICE AT THE TIME OF PRINTING. ITEMS NOT SHOWN OR INDICATED WITH A BLACK STAR (★) IN THE CATALOG MUST BE IMPROVISED OR PROCURED LOCALLY.

Note 1– For replacement of Door Trim Panels (23942-3 and 27406-7), refer to this code in the 1979 Soft Trim Section. For replacement of Cushion Covers (62900 and 63804) and Back Covers (64416-7 and 66600), contact your Service Representative, who will process in accordance with General ICC bulletin No. 7526. All other parts are included in the 1979 Soft Trim Section.

VB	53D,65D	Blue vinyl and blue cloth	SB
VD	53D,65D	Red vinyl and red cloth	SB
VF	53D,65D	Cordovan vinyl and cordovan cloth	SB
VF1	53D,65D	(Code VF – See Note 1)	SB
VR	53D,65D	Jade vinyl and jade cloth	SB
VR1	53D,65D	(Code VR – See Note 1)	SB
VS,VSA	53D,65D	Gray vinyl and gray cloth	SB
VT	53D,65D	Chamois vinyl and chamois cloth	SB
VT1	53D,65D	(Code VT – See Note 1)	SB
WB	53D,65D	Blue all vinyl	SB
WD	53D,65D	Red all vinyl	SB
WF	53D,65D	Cordovan all vinyl	SB
WR	53D,65D	Jade all vinyl	SB
WS	53D,65D	Gray all vinyl	SB
WT	53D,65D	Chamois all vinyl	SB
YB	65D	Blue all vinyl	B
YD	65D	Red all vinyl	B
YF	65D	Cordovan all vinyl	B
YR	65D	Jade all vinyl	B
YS	65D	Gray all vinyl	B
YT	65D	Chamois all vinyl	B
ZB	65D	Blue all vinyl	B
ZD	65D	Red all vinyl	B
ZF	65D	Cordovan all vinyl	B
ZR	65D	Jade all vinyl	B
ZS	65D	Gray all vinyl	B
ZT	65D	Chamois all vinyl	B

1979 VINYL ROOF COVER CODES

AS LISTED ON CERTIFICATION LABEL

CODE	BODY TYPE	GRAIN and TYPE of ROOF	COLOR
COUGAR (F)			
PQ	65	Grande – 1/2	Blue
VA	53	Valino – full	Black
VD	53	Valino – full	Red
VF	53	Valino – full	Cordovan
VP	53	Valino – full	Silver
VQ	53	Valino – full	Blue
VR	53	Valino – full	Jade
VS	53	Valino – full	Gray
VW	53	Valino – full	White
WT	53	Lugano – full	Chamois
XT	65	Lugano – 1/2	Chamois
YA	65	Valino – 1/2	Black
YD	65	Valino – 1/2	Red
YF	65	Valino – 1/2	Cordovan
YP	65	Valino – 1/2	Silver
YQ	65	Valino – 1/2	Blue
YR	65	Valino – 1/2	Jade
YS	65	Valino – 1/2	Gray
YW	65	Valino – 1/2	White

COPYRIGHT © 1986 — FORD MOTOR COMPANY — DEARBORN, MICHIGAN

1973/79 LINCOLN-MERCURY CARS

BODY TYPE	R/L	PART NUMBER LESS SUFFIX	TRIM CODES, COLORS and APPLICABLE PART NUMBER SUFFIXES													QTY
		TRIM CODES ➧		SECOND CHARACTER of TRIM CODE								ALL CODES	ALL CODES	OTHER		
				-B-Q	-D-N	-F-6	-G-K	-R-5	-S	-T-2	-Y					
		COLORS ➧		BLUE	RED	CORD-OVAN	BERYL	JADE-GREEN	GRAY	CHAM-OIS	CAMEL		BLACK	WHITE		
02344-5	PANEL (COWL TRIM)															
F	R	D70Z 6502344		A9B	A2D			A6R	A2P	A9T						1
	L	D70Z 6502345		A9B	A2D			A6R	B2P	B9T						1
	R	D90Z 6502344				A8F										1
	L	D90Z 6502345				A8F										1
04104-5	VISOR ASSY.															
Notes:	$ Use with or without non-illuminated vanity mirror – refer to group 17A679 in Chassis Section for mirror.															
	● Matching sun visor (less vanity mirror) for R.H. Sun visor which includes illuminated vanity mirror															
	LESS ARM BRACKET and MIRROR															
F – – w/non – illuminated vanity mirror	R/L$	D80Z 6504104		C4B				C5R	C9P	C8T				C9W		2
	R/L$	D90Z 6504104			A0D	A8F										2
	INCLUDES ARM BRACKET and MIRROR															
F – – w/illuminated vanity mirror	R	D80Z 6504104		D4B				D5R	D9P	★				★		1
	L●	D80Z 6504104		C4B				C5R	C9P	C8T				C9W		1
	R	D90Z 6504104			C0D	C8F										1
	L●	D90Z 6504104			A0D	A8F										1
04282	PAD (INSTRUMENT PANEL UPPER)															
F		D70Z 6504282		★	A3D			A5R	★	A6T						1
		D90Z 6504282				A1F										1

BODY TYPE	R/L	PART NUMBER LESS SUFFIX	TRIM CODES AND APPLICABLE PART NUMBER SUFFIXES													QTY
13000	CARPET (FRONT FLOOR)															
		TRIM CODES ➧	HB	HD	HF	HR	HS	HT, HTA	JB	JD	JT	KB	KD	KT		
F(53)		D70Z 5313000	A0B			A9R	A4P	A2T	A0B		A2T	A0B		A2T		1
		D90Z 5313000		A3D	A1F					A3D			A3D			1
		TRIM CODES ➧	LB	LD	LF	LR	LS	LT	RB	RD	RF	RR	RS	RT		
F(53)		D70Z 5313000	A0B			A9R	A4P	A2T	A0B			A9R	A4P	A2T		1
		D90Z 5313000		A3D	A1F					A3D	A1F					1
		TRIM CODES ➧	SB	SD	SF	SR	SS	ST	TB	TD	TF	TR	TS	TT		
F(53)		D70Z 5313000	A0B			A9R	A4R	A2T	A0B			A9R	A4P	A2T		1
		D90Z 5313000		A3D	A1F					A3D	A1F					1
		TRIM CODES ➧	UB	UD	UF	UR	US	UT, UTA	VB	VD	VF	VR	VS, VSA	VT		
F(53)		D70Z 5313000	A0B			A9R	A4P	A2T	B0B			B9R	B4P	B2T		1
		D90Z 5313000		A3D	A1F					B3D	B1F					1
		TRIM CODES ➧	WB	WD	WF	WR	WS	WT								
F(53)		D70Z 5313000	B0B			B9R	B4P	B2T								1
		D90Z 5313000		B3D	B1F											1
		TRIM CODES ➧	HB	HD	HF	HR	HS	HT	JB	JD	JT	KB	KD	KT		
F(65D)		D70Z 6513000	A0B	A3D		A9R	A4P	A2T	A0B	A3D	A2T	A0B	A3D	A2T		1
		D90Z 6513000			A1F											1
		TRIM CODES ➧	LB	LD	LF	LR	LS	LT	RB	RD	RF	RR	RS	RT		
F(65D)		D70Z 6513000	A0B	A3D		A9R	A4P	A2T	A0B	A3D		A9R	A4P	A2T		1
		D90Z 6513000			A1F						A1F					1
		TRIM CODES ➧	SB	SD	SF	SR	SS	ST	TB	TD	TF	TR	TS	TT		
F(65D)		D70Z 6513000	A0B	A3D		A9R	A4P	A2T	A0B	A3D		A9R	A4P	A2T		1
		D90Z 6513000			A1F						A1F					1

BODY TYPE	R/L	PART NUMBER LESS SUFFIX	TRIM CODES AND APPLICABLE PART NUMBER SUFFIXES													QTY
13000	CARPET (FRONT FLOOR) — Cont'd															
		TRIM CODES ▶	UB	UD	UF	UR	US	UT, UTA	VB	VD	VF	VR	VS, VSA	VT		
F(65D)		D70Z 6513000	A0B	A3D		A9R	A4P	A2T								1
		D90Z 6513000			A1F											1
		D7SZ 6013000							A0B	A3D		A9R	A4P	A2T		1
		D9SZ 6013000									A1F					1
		TRIM CODES ▶	WB	WD	WF	WR	WS	WT	YB	YD	YF	YR	YS	YT		
F(65D)		D7SZ 6013000	A0B	A3D		A9R	A4P	A2T								1
		D9SZ 6013000			A1F											1
		D70Z 6513000							D0B	D3D		D9R	D4P	D2T		1
		D90Z 6513000									C1F					1
		TRIM CODES ▶	ZB	ZD	ZF	ZR	ZS	ZT								
F(65D)		D70Z 6513000	D0B	D3D		D9R	D4P	D2T								1
		D90Z 6513000			C1F											1
		TRIM CODES ▶	AB	AD	AF	AR	AS	AT								
F(65L)		D70Z 6513000	A0B	A3D		A9R	A4P	A2T								1
		D90Z 6513000			A1F											1
		TRIM CODES ▶	BB	BD	BF	BN	BQ	BR	BS	BT	B2	B5	B6			
F(65L)		D70Z 6513000	A0B	A3D		A3D	A0B	A9R	A4P	A2T	A2T	A9R				1
		D90Z 6513000			A1F											1
		TRIM CODES ▶	CB	CD	CF	CR	CS, CSA	CT								
F(65L)		D7SZ 6013000	A0B	A3D		A9R	A4P	A2T								1
		D9SZ 6013000			A1F											1
		TRIM CODES ▶	DB	DD	DF	DN	DQ	DR	DS	DT	D2	D5	D6			
F(65L)		D7SZ 6013000	A0B	A3D		A3D	A0B	A9R	A4P	A2T	A2T	A9R				1
		D9SZ 6013000			A1F								A1F			1
		TRIM CODES ▶	EB	ED	EF	EN	EQ	ER	ES	ET	EZ	E5	E6			
F(65L)		D7SZ 6013000	A0B	A3D		A3D	A0B	A9R	A4P	A2T	A2T	A9R				1
		D9SZ 6013000			A1F								A1F			1
		TRIM CODES ▶	FB	FD	FF	FN	FQ	FR	FS	FT	F2	F5	F6			
F(65L)		D70Z 6513000	E0B	E3D		E3D	E0B	E9R	E4P	E2T	E2T	E9R				1
		D90Z 6513000			E1F								E1F			1
		TRIM CODES ▶	GB	GD	GF	GR	GS	GT	NT	PT						
F(65L)		D70Z 6513000	E0B	E3D		E9R	E4P	E2T	E2T	E2T						1
		D90Z 6513000			E1F											1
13046	CARPET (REAR FLOOR) - Serviced only in assy.-group 13000															

BODY TYPE	R/L	PART NUMBER LESS SUFFIX	TRIM CODES, COLORS and APPLICABLE PART NUMBER SUFFIXES													QTY
		TRIM CODES ▶		SECOND CHARACTER of TRIM CODE									ALL CODES	ALL CODES	OTHER	
				-B-Q	-D-N	-F-6	-G-K	-R-5	-S	-T-2	-Y					
		COLORS ▶		BLUE	RED	CORD-OVAN	BERYL	JADE-GREEN	GRAY	CHAM-OIS	CAMEL		BLACK	WHITE		
13086	MAT (FRONT FLOOR)															
Notes:	† Cut to form twin mats if so desired															
			FULL WIDTH													
F - - simulated leather	†	D9AZ 6613086		B	C			D					A	★	F(saddle)	1

COPYRIGHT © 1986 — FORD MOTOR COMPANY — DEARBORN, MICHIGAN

1973/79 LINCOLN-MERCURY CARS

BODY TYPE	R/L	PART NUMBER LESS SUFFIX	TRIM CODES, COLORS and APPLICABLE PART NUMBER SUFFIXES													QTY
		TRIM CODES ▶		SECOND CHARACTER of TRIM CODE								ALL CODES	ALL CODES	OTHER		
				-B-Q	-D-N	-F-6	-G-K	-R-5	-S	-T-2	-Y					
		COLORS ▶		BLUE	RED	CORD-OVAN	BERYL	JADE-GREEN	GRAY	CHAM-OIS	CAMEL		BLACK	WHITE		
13086	MAT (FRONT FLOOR)															
Notes:	† Cut to form twin mats if so desired															
			TWIN (w/carpet)													
F - - carpet		D9AZ 5413086		★	E	C		M	F	★						1
			TWIN (w/o carpet)													
F - - rubber		D60Z 6213086		B	F							A		C(brown)		1
F - - simulated leather		D9AZ 6613086		H	J			K				G	L	M(saddle)		1
13106	MAT (REAR FLOOR)															
			TWIN (w/carpet)													
F - - carpet		D9AZ 5413106		★	E	C		★	F	P						1
			TWIN (w/o carpet)													
F - - simulated leather		D9AZ 6613106		B	C			D				A	★	F(saddle)		1
F - - rubber-plain		D6FZ 6213106		B	E							A		C(brown)		1
		D6FZ 6213106												F(green)		1
23894	COVER (DOOR MOULDING JOINT TRIM)															
F		D70Z 6523894		A9B	A2D			A6R	A4P	A4T						AR
		D90Z 6523894				A8F										AR
		D80Z 6523894											A6W			AR
24100-1	PAD (ARM REST) - Incl. attaching parts															
F(53) - - front door	R/L	D3DZ 6224100		D												2
	R/L	D7DZ 6224100				★		B6R	B4P	B4T						2
	R/L	D4WY 6531718			K											2
- - rear door	R/L	D30Z 5324100		C				★	★	★						2
	R/L	D60Z 5324100			A2D											2
	R/L	D90Z 5324100				A8F										2
F(65D) - - door	R	D3DZ 6224100		J												1
	L	D3DZ 6224101		B												1
	R	D7DZ 6224100						A6R	★	A4T						1
	L	D7DZ 6224101						A6R	A4P	A4T						1
	R	D9DZ 6224100				A8F										1
	L	D9DZ 6224101				A8F										1
	R	D4WZ 6524100			A											1
	L	D4WZ 6524101			★											1
F(65L) - - door	R/L	D7SZ 6024100		A1B	A0D			A2R	A8P	A8T			A7W			2
	R/L	D9SZ 6024100				A4F										2
F(65D) - - quarter	R/L	D3DZ 6224100		D												2
	R/L	D7DZ 6224100				★		B6R	B4P	B4T						2
	R/L	D4WY 6531718			K											2
F(65L) - - quarter	R	D90Z 6531718		★	★	A4F		★	★	★				★		1
	L	D90Z 6531719		★	★	A4F		★	★	★				★		1
24144-5	BASE (ARM REST) - Incl. attaching parts															
F(53) - - front and rear door	R/L	D3DZ 6224144		L												4
	R/L	D7DZ 6224144						A7R	A9P	A0T						4
	R/L	D6DZ 6224144			A6D											4
	R/L	D9DZ 6224144				A3F										4
F(65D) - - door	R/L	D3DZ 6224144		B												2
	R/L	D7DZ 6224144						C7R	★	C0T						2
	R/L	D6DZ 6224144			C6D											2
	R/L	D9DZ 6224144				C3F										2

BODY TYPE	R/L	PART NUMBER LESS SUFFIX	TRIM CODES, COLORS and APPLICABLE PART NUMBER SUFFIXES													QTY
		TRIM CODES ➧		SECOND CHARACTER of TRIM CODE									ALL CODES	ALL CODES	OTHER	
				-B-Q	-D-N	-F-6	-G-K	-R-5	-S	-T-2	-Y					
		COLORS ➧		BLUE	RED	CORD-OVAN	BERYL	JADE-GREEN	GRAY	CHAM-OIS	CAMEL		BLACK	WHITE		
24144-5	BASE (ARM REST) - Incl. attaching parts — Cont'd															
F(65L) - - door	R	D7SZ 6024144													A(paint to match)	1
	L	D7SZ 6024145													A(paint to match)	1
24346-7	PANEL (CENTER BODY PILLAR INSIDE FINISH)															
F(53) - - lower	R	D40Z 5324346		★												1
	L	D40Z 5324347		★												1
	R	D70Z 5324346						★	★	★						1
	L	D70Z 5324347						★	★	★						1
	R	D90Z 5324346				A8F										1
	L	D90Z 5324347				A8F										1
	R	D60Z 5324346			A2D											1
	L	D60Z 5324347			A2D											
- - upper	R	D40Z 5324356													A(paint to match)	1
	L	D40Z 5324357													★	1
24356-7	Refer to group 24346-7															
31012-3	PANEL ASSY. (QUARTER TRIM)															
F(53)	R	D70Z 5331012		★	★			A6R	★	A4T						1
	L	D70Z 5331013		★	★			★	★	★						1
	R	D90Z 5331012				A8F										1
	L	D90Z 5331013				A8F										1
F(65D)	R	D70Z 6531012		★	★			★	★	★						1
	L	D70Z 6531013		★	A2D			★	★	★						1
	R	D90Z 6531012				A8F										1
	L	D90Z 6531013				★										1
F(65L)	R	D8WY 6531012		★				A7R	★	A4T				★		1
	L	D8WY 6531013		A4B				A7R	A4P	A4T				A6W		1
	R	D9WY 6531012			A2D	A8F										1
	L	D9WY 6531013			A2D	A8F										1
31290-1	WINDLACE (QUARTER PILLAR)															
F(65L)	L	D7SZ 6031291		A9B	A2D			A6R	A4P	A4T				A6W		1
31718	Refer to group 24100															

BODY TYPE	R/L	PART NUMBER LESS SUFFIX	VINYL ROOF CODES AND APPLICABLE PART NUMBER SUFFIXES													QTY
425A38	PANEL ASSY. (LUGGAGE COMPARTMENT DOOR OUTSIDE)															
		VINYL ROOF CODES ➧	XT	YB												
F(65L)		D8WY 65425A38	A9T	★												1

BODY TYPE	R/L	PART NUMBER	DESCRIPTION	QTY
45422-3	COVER (LUGGAGE COMPARTMENT SIDE)			
F(65L)	R	D7SZ 6045422-A3P	Gray	1
	L	D7SZ 6045423-A3P	Gray	1
45455	COVER (LUGGAGE COMPARTMENT FLOOR)			
F(53D,65D)		D70Z 6545455-APA	Gray burloom	1
		D7WY 6545455-AEP	Gray cut pile carpet	1
F(65L)		D70Z 6545455-APA	Gray burloom	1
45487	COVER (LUGGAGE COMPARTMENT FUEL FILLER HOUSING)			
F		D80Z 6545487-A2P	Gray	1

COPYRIGHT © 1986 — FORD MOTOR COMPANY — DEARBORN, MICHIGAN

1973/79 LINCOLN-MERCURY CARS

BODY TYPE	R/L	PART NUMBER	DESCRIPTION	QTY
45522-3	LINING BOARD (LUGGAGE COMPARTMENT REAR)			
F(53D,65D)	R	D70Z 6545522-A3P	Gray	1
	L	D70Z 6545523-A3P	Gray	1
F(65L)	R	D7WY 6545522-A3P	Gray	1
	L	D7WY 6545523-A3P	Gray	1

BODY TYPE	R/L	PART NUMBER LESS SUFFIX	TRIM CODES, COLORS and APPLICABLE PART NUMBER SUFFIXES													QTY
		TRIM CODES ▶		SECOND CHARACTER of TRIM CODE									ALL CODES	ALL CODES	OTHER	
				-B-Q	-D-N	-F-6	-G-K	-R-5	-S	-T-2	-Y					
		COLORS ▶		BLUE	RED	CORD-OVAN	BERYL	JADE-GREEN	GRAY	CHAM-OIS	CAMEL		BLACK	WHITE		
46668	PANEL (PACKAGE TRAY TRIM)															
F		D70Z 6546668													B0Z (paint to match)	1

BODY TYPE	R/L	PART NUMBER	DESCRIPTION	QTY
52018-9	COVER (ROOF SIDE REAR TRIM)			
F(53) - - w/o opera window	R	D70Z 5352018-B9P	Paint to match	1
	L	D70Z 5352019-B9P	Paint to match	1
- - w/opera window	R	D70Z 5352018-A4P	Paint to match	1
	L	D70Z 5352019-A4P	Paint to match	1
F(65D) - - w/o opera window	R	★	Paint to match	1
	L	D70Z 6552019-B9P	Paint to match	1
- - w/opera window	R	D70Z 6552018-A4P	Paint to match	1
	L	D70Z 6552019-A4P	Paint to match	1
537A02	PAD (ROOF OUTSIDE COVER SIDE)			
F(65L)		D8WY 65537A02-A	Rear	1
60050-1	CUSHION KIT (FRONT SEAT)			
F(53,65)		D70Z 6563100-A	Spring-full width seat-heavy duty	1
60080	CUSHION KIT (REAR SEAT)			
F(53D,65D,L) - - w/split front seats		D70Z 6560080-A		1
F(65D,L) - - w/bucket front seats		D70Z 6560080-B		1
60136-7	BACK KIT (FRONT SEAT)			
F(53)	R/L	D7SZ 6064810-A	Pad	2
		D60Z 5364700-A	Spring-full width seat heavy duty	1
F(65)	R	D8LY 6561018-B	Frame-split seat-reclining	1
	R/L	D7SZ 6064810-A	Pad split seat	2
	R/L	D3GY 6560136-C	Pad-full width seat w/center arm rest	2
61018-9	Refer to group 60136-7			

BODY TYPE	R/L	PART NUMBER LESS SUFFIX	TRIM CODES, COLORS and APPLICABLE PART NUMBER SUFFIXES													QTY
		TRIM CODES ▶		SECOND CHARACTER of TRIM CODE									ALL CODES	ALL CODES	OTHER	
				-B-Q	-D-N	-F-6	-G-K	-R-5	-S	-T-2	-Y					
		COLORS ▶		BLUE	RED	CORD-OVAN	BERYL	JADE-GREEN	GRAY	CHAM-OIS	CAMEL		BLACK	WHITE		
611A08	HEAD REST ASSY. (FRONT SEAT BACK)															
F - - vinyl	R/L	D9AZ 54611A08		★	C	D		★	★	★				★		2

1979 SOFT TRIM SCHEME CODES

AS LISTED ON CERTIFICATION LABEL

CODE	BODY TYPE	DESCRIPTION OF TRIM SCHEME	● TYPE OF SEAT

FOR MATERIAL IDENTIFICATION
REFER TO SALESMAN'S
COLOR AND UPHOLSTERY SELECTIONS GUIDE

THE SOFT TRIM SECTION INCLUDES ONLY THOSE ITEMS WHICH WERE AVAILABLE FOR SERVICE AT THE TIME OF PRINTING. ITEMS NOT SHOWN OR INDICATED WITH A BLACK STAR (★) IN THE CATALOG MUST BE IMPROVISED OR PROCURED LOCALLY.

Note 1– For replacement of Door Trim Panels (23942–3 and 27406–7), refer to this code in the 1979 Soft Trim Section. For replacement of Cushion Covers (62900 and 63804) and Back Covers (64416–7 and 66600), contact your Service Representative, who will process in accordance with General ICC bulletin No. 7526. All other parts are included in the 1979 Soft Trim Section.

● FWA – Full width seat with center arm rest, B – Bucket seat

MONARCH (G)

BB	54,66	Blue vinyl and blue cloth	FWA
BD	54,66	Red vinyl and red cloth	FWA
BF	54,66	Cordovan vinyl and cordovan cloth	FWA
BR	54,66	Jade vinyl and jade cloth	FWA
BS	54,66	Gray vinyl and gray cloth	FWA
BY	54,66	Camel vinyl and camel cloth	FWA
CB	54,66	Blue all vinyl	B
CD	54,66	Red all vinyl	B
CF	54,66	Cordovan all vinyl	B
CR	54,66	Jade all vinyl	B
CS	54,66	Gray all vinyl	B
CY	54,66	Camel all vinyl	B
DB	54,66	Blue vinyl and blue cloth	B
DD	54,66	Red vinyl and red cloth	B
DF	54,66	Cordovan vinyl and cordovan cloth	B
DR	54,66	Jade vinyl and jade cloth	B
DS	54,66	Gray vinyl and gray cloth	B
DY	54,66	Camel vinyl and gray cloth	B
GB	54,66	Blue all vinyl	FWA
GD	54,66	Red all vinyl	FWA
GF	54,66	Cordovan all vinyl	FWA
GR	54,66	Jade all vinyl	FWA
GS	54,66	Gray all vinyl	FWA
GY	54,66	Camel all vinyl	FWA
JB	54,66	Blue vinyl and blue cloth	FWA
JD,JDA	54,66	Red vinyl and red cloth	FWA
JR	54,66	Jade vinyl and jade cloth	FWA
JY,JYA	54,66	Camel vinyl and camel cloth	FWA
JYB	54,66	(Code JY–see Note 1)	
KB	54,66	Blue all vinyl	FWA
KD	54,66	Red all vinyl	FWA
KR	54,66	Jade all vinyl	FWA
KY	54,66	Camel all vinyl	FWA
MB	54,66	Blue all leather	B
MD	54,66	Red all leather	B
MF	54,66	Cordovan all leather	B
MR	54,66	Jade all leather	B
MS	54,66	Gray all leather	B
MY	54,66	Camel all leather	B

COPYRIGHT © 1986 — FORD MOTOR COMPANY — DEARBORN, MICHIGAN

1979 SOFT TRIM SCHEME CODES

AS LISTED ON CERTIFICATION LABEL

CODE	BODY TYPE	DESCRIPTION OF TRIM SCHEME	● TYPE OF SEAT

FOR MATERIAL IDENTIFICATION
REFER TO SALESMAN'S
COLOR AND UPHOLSTERY SELECTIONS GUIDE

THE SOFT TRIM SECTION INCLUDES ONLY THOSE ITEMS WHICH WERE AVAILABLE FOR SERVICE AT THE TIME OF PRINTING. ITEMS NOT SHOWN OR INDICATED WITH A BLACK STAR (★) IN THE CATALOG MUST BE IMPROVISED OR PROCURED LOCALLY.

Note 1– For replacement of Door Trim Panels (23942-3 and 27406-7), refer to this code in the 1979 Soft Trim Section. For replacement of Cushion Covers (62900 and 63804) and Back Covers (64416-7 and 66600), contact your Service Representative, who will process in accordance with General ICC bulletin No. 7526. All other parts are included in the 1979 Soft Trim Section.

● FWA–Full width seat with center arm rest, B–Bucket seat

MONARCH (G)

PB	54,66	Blue all vinyl	B
PB1	54,66	(Code PB–see Note 1)	
PD	54,66	Red all vinyl	B
PD1	54,66	(Code PD–see Note 1)	
PF	54,66	Cordovan all vinyl	B
PF1	54,66	(Code PF–see Note 1)	
PR	54,66	Jade all vinyl	B
PR1	54,66	(Code PR–see Note 1)	
PS	54,66	Gray all vinyl	B
PS1	54,66	(Code PS–see Note 1)	
PY	54,66	Camel all vinyl	B

1979 VINYL ROOF COVER CODES

AS LISTED ON CERTIFICATION LABEL

CODE	BODY TYPE	GRAIN and TYPE of ROOF	COLOR
MONARCH (G)			
GY	54	Odense – full	Gold
NY	66	Odense – 1/2	Gold
VA	54,66	Valino – full	Black
VD	54,66	Valino – full	Red
VF	54,66	Valino – full	Cordovan
VP	54,66	Valino – full	Silver
VQ	54,66	Valino – full	Blue (midnight)
VR	54,66	Valino – full	Jade
VS	54,66	Valino – full	Gray
VV	54,66	Valino – full	Camel
VW	54,66	Valino – full	White
YA	66	Valino – 1/2	Black
YD	66	Valino – 1/2	Red
YF	66	Valino – 1/2	Cordovan
YP	66	Valino – 1/2	Silver
YQ	66	Valino – 1/2	Blue (midnight)
YR	66	Valino – 1/2	Jade
YS	66	Valino – 1/2	Gray
YV	66	Valino – 1/2	Camel
YW	66	Valino – 1/2	White

COPYRIGHT © 1986 — FORD MOTOR COMPANY — DEARBORN, MICHIGAN

1973/79 LINCOLN-MERCURY CARS

BODY TYPE	R/L	PART NUMBER LESS SUFFIX	TRIM CODES, COLORS and APPLICABLE PART NUMBER SUFFIXES													Q T Y
		TRIM CODES ▶		SECOND CHARACTER of TRIM CODE									ALL CODES	ALL CODES	OTHER	
				-B-Q	-D-N	-F-6	-G-K	-R-5	-S	-T-2	-Y					
		COLORS ▶	Length (inches)	BLUE	RED	CORD-OVAN	BERYL	JADE-GREEN	GRAY	CHAM-OIS	CAMEL		BLACK	WHITE		
02344-5	PANEL (COWL TRIM)															
G	R	D7DZ 6602344		A9B												1
	L	D7DZ 6602345		A9B												1
	R	D5DZ 6602344			D											1
	L	D5DZ 6602345			D											1
	R	D8DZ 6602344				A8F					A8Y					1
	L	D8DZ 6602345				★					★					1
	R	D6DZ 6602344						A6R	A2P							1
	L	D6DZ 6602345						★	★							1
04104	VISOR ASSY.															
Notes:	⊕ Use with or without non-illuminated vanity mirror-refer to group 17A679 in Chassis section for mirror															
	LESS ARM, BRACKET AND MIRROR															
G - - w/non-illuminated vanity mirror	⊕ R/L	D7DZ 6604104		B4B												2
	⊕ R/L	D5DZ 6604104			R											2
	⊕ R/L	D8DZ 6604104				B8F					B5Y					2
	⊕ R/L	D6DZ 6604104						B5R	B9P							2
	INCLUDES ARM AND BRACKET															
G - - w/illuminated vanity mirror	R	D7DZ 6604104		★												1
	L	D7DZ 6604104		B4B												1
	R	D5DZ 6604104			H											1
	L	D5DZ 6604104			R											1
	R	D8DZ 6604104				★					A5Y					1
	L	D8DZ 6604104				B8F					B5Y					1
	R	D6DZ 6604104						A5R	A9P							1
	L	D6DZ 6604104						B5R	B9P							1
04282	PAD (INSTRUMENT PANEL UPPER)															
G		D7DZ 6604282		A9B												1
		D6DZ 6604282			A3D			A5R	★							1
		D8DZ 6604282				★					A4Y					1
13086	MAT (FRONT FLOOR)															
	FULL WIDTH															
G - - simulated leather		D9AZ 6613086		★	★			D					★	★		1
	TWIN (w/o carpet)															
G - - rubber		D60Z 6213086		B	F			★					A		C(brown)	1
		D70Z 6213086													A(gold)	1
G - - simulated leather		D9AZ 6613086		H	J			K					G	L	M(saddle)	1

BODY TYPE	R/L	PART NUMBER LESS SUFFIX	TRIM CODES, COLORS and APPLICABLE PART NUMBER SUFFIXES														QTY
		TRIM CODES ▶		SECOND CHARACTER of TRIM CODE									ALL CODES	ALL CODES	OTHER		
				-B-Q	-D-N	-F-6	-G-K	-R-5	-S	-T-2	-Y						
		COLORS ▶	Length (inches)	BLUE	RED	CORD-OVAN	BERYL	JADE-GREEN	GRAY	CHAM-OIS	CAMEL		BLACK	WHITE			
13106	MAT (REAR FLOOR)																
			TWIN (w/carpet)														
G - - carpet		D9AZ 5413106		★	★	C		★	F		★						1
			TWIN (w/o carpet)														
G - - rubber - plain		D6FZ 6213106		B	E			F					A		C(brown)		1
G - - simulated leather		D9AZ 6613106		B	C			D					A	★	F(saddle)		1
24140-1	ARM REST - Incl. attaching parts																
G(54) - - front door	R	D8FZ 6224140		A9B	A2D	A8F		A6R	A4P		A8Y						1
	L	D8FZ 6224141		A9B	A2D	A8F		A6R	A4P		A8Y						1
- - rear door	R/L	D7DZ 5427540		A9B													2
	R/L	D5DZ 5427540			D												2
	R/L	D8DZ 5427540				★					A8Y						2
	R/L	D6DZ 5427540						B6R	★								2
G(66)	R	D8FZ 6224140	16 1/2	A9B	A2D	A8F		A6R	A4P		A8Y						1
	L	D8FZ 6224141	16 1/2	A9B	A2D	A8F		A6R	A4P		A8Y						1
	R	D8ZZ 6024140	25 3/4	★	★	B8F					B8Y						1
	L	D8ZZ 6024141	25 3/4	★	★	★					★						1
	R	D6ZZ 6024140	25 3/4					B6R	B4P								1
	L	D6ZZ 6024141	25 3/4					★	★								1
27540-1	Refer to group 24140-1																
31012-3	PANEL (QUARTER TRIM)																
G(54)	R	D7DZ 5431012		A9B													1
	L	D7DZ 5431013		★													1
	R	D8DZ 5431012				★					A8Y						1
	L	D8DZ 5431013				★					★						1
	R	D6DZ 5431012						★	A4P								1
	L	D6DZ 5431013						★	A4P								1
G(66)	R	D7DZ 6631012		★	A2D			★	★								1
	L	D7DZ 6631013		★	★			A6R	★								1
	R	D8DZ 6631012				A8F					A8Y						1
	L	D8DZ 6631013				A8F					★						1

BODY TYPE	R/L	PART NUMBER	DESCRIPTION	QTY
45422-3	COVER (LUGGAGE COMPARTMENT SIDE)			
G - - w/shelf mounted spare tire	R	D5DZ 6645422-A	Gray	1
	L	D5DZ 6645423-A	Gray	1

COPYRIGHT © 1986— FORD MOTOR COMPANY —DEARBORN, MICHIGAN

1973/79 LINCOLN-MERCURY CARS

BODY TYPE	R/L	PART NUMBER	DESCRIPTION	QTY
45455	COVER (LUGGAGE COMPARTMENT FLOOR)			
G - - w/shelf mounted spare tire		D5DZ 6645455-C	Gray carpet	1
- - w/qtr. wheelhouse mounted tire		★	Gray carpet	1
		D8DZ 6645494-A0P	Gray burloom	1
45494	Refer to group 45455			
45522-3	LINING BOARD (LUGGAGE COMPARTMENT REAR)			
G	R	D7DZ 6645522-A3P	Gray	1
	L	D7DZ 6645523-A3P	Gray	1
46668	PANEL (PACKAGE TRAY TRIM)			
Notes:	‡ Use with or without speakers			
G(54)	‡	D5DZ 5446668-E	Paint to match	1
G(66)	‡	D5DZ 6646668-B	Paint to match	1
52018-9	COVER (ROOF SIDE REAR TRIM)			
G(66)	R	D6DZ 6652018-A2U	Paint to match	1
	L	★	Paint to match	1
60136-7	BACK KIT (FRONT SEAT)			
G(54)	R/L	D6DZ 6664810-A	Pad - bucket seat	2
	R	★	Frame - bucket seat	1
	L	D7DZ 5461019-A	Frame - bucket seat	1
	R/L	D8BZ 5464810-B	Pad - full width seat - w/center arm rest - Use w/all trim codes beginning with J or K	2
	R	D8BZ 5461018-A	Frame - full width seat - w/center arm rest - Use w/all trim codes beginning with J or K	1
	L	D8BZ 5461019-A	Frame - full width seat - w/center arm rest - Use w/all trim codes beginning with J or K	1
	R/L	D6DZ 6664810-C	Pad - full width seat - w/center arm rest - Use w/all trim codes beginning with B or G	2
	R	★	Frame - full width seat - w/center arm rest - Use w/all trim codes beginning with B or G	1
	L	★	Frame - full width seat - w/center arm rest - Use w/all trim codes beginning with B or G	1
G(66)	R/L	D6DZ 6664810-A	Pad - bucket seat	2
	R	D7DZ 6661018-A	Frame - bucket seat	1
	L	D7DZ 6661019-A	Frame - bucket seat	1
	R/L	D8BZ 5464810-B	Pad - full width seat - w/center arm rest - Use w/all trim codes beginning with J or K	2
	R	D8BZ 5461018-A	Frame - full width seat - w/center arm rest - Use w/all trim codes beginning with J or K	1
	L	D8BZ 5461019-A	Frame - full width seat - w/center arm rest - Use w/all trim codes beginning with J or K	1
	R/L	D6DZ 6664810-C	Pad - full width seat - w/center arm rest - Use w/all trim codes beginning with B or G	2
	R	★	Frame - full width seat - w/center arm rest - Use w/all trim codes beginning with B or G	1
	L	★	Frame - full width seat - w/center arm rest - Use w/all trim codes beginning with B or G	1
61018-9	Refer to group 60136-7			

BODY TYPE	R/L	PART NUMBER LESS SUFFIX	TRIM CODES, COLORS and APPLICABLE PART NUMBER SUFFIXES													QTY
		TRIM CODES ▶		SECOND CHARACTER of TRIM CODE									ALL CODES	ALL CODES	OTHER	
				-B-Q	-D-N	-F-6	-G-K	-R-5	-S	-T-2	-Y					
		COLORS ▶	Length (inches)	BLUE	RED	CORD-OVAN	BERYL	JADE-GREEN	GRAY	CHAM-OIS	CAMEL		BLACK	WHITE		
611A08	HEAD REST ASSY. (FRONT SEAT BACK) - Incl. guide rods															
G - - non-contoured	R/L	D9AZ 54611A08		★	C	★		★	★		★					2
64810	Refer to group 60136-7															

1979 SOFT TRIM SCHEME CODES

AS LISTED ON CERTIFICATION LABEL

FOR MATERIAL IDENTIFICATION
REFER TO SALESMAN'S
COLOR AND UPHOLSTERY SELECTIONS GUIDE

THE SOFT TRIM SECTION INCLUDES ONLY THOSE ITEMS WHICH WERE AVAILABLE FOR SERVICE AT THE TIME OF PRINTING. ITEMS NOT SHOWN OR INDICATED WITH A BLACK STAR (★) IN THE CATELOG MUST BE IMPROVISED OR PROCURED LOCALLY.

● B – Bucket seats

CAPRI (J)

CODE	BODY TYPE	DESCRIPTION OF TRIM SCHEME	● TYPE OF SEAT
AA,AAA	61D	Black all vinyl	B
AB,ABA	61D	Blue all vinyl	B
AD,ADA	61D	Red all vinyl	B
AN,ANA	61D	White all vinyl with red appointments	B
AQ,AQA	61D	White all vinyl with blue appointments	B
AT,ATA	61D	Chamois all vinyl	B
AW,AWA	61D	White all vinyl with black appointments	B
AZ,AZA	61D	Vaquero all vinyl	B
A2,A2A	61D	White all vinyl with chamois appointments	B
A9,A9A	61D	White all vinyl with vaquero appointments	B
BA,BAA	61D	Black vinyl and black cloth	B
BB,BBA	61D	Blue vinyl and blue cloth	B
BD,BDA	61D	Red vinyl and red cloth	B
BT,BTA	61D	Chamois vinyl and chamois cloth	B
BZ,BZA	61D	Vaquero vinyl and vaquero cloth	B
CA,CAA	61D	Black all vinyl	B
CB,CBA	61D	Blue all vinyl	B
CD,CDA	61D	Red all vinyl	B
CN,CNA	61D	White all vinyl with red appointments	B
CQ,CQA	61D	White all vinyl with blue appointments	B
CT,CTA	61D	Chamois all vinyl	B
CW,CWA	61D	White all vinyl with black appointments	B
CZ,CZA	61D	Vaquero all vinyl	B
C2,C2A	61D	White all vinyl with chamois appointments	B
C9,C9A	61D	White all vinyl with vaquero appointments	B
DA,DAA	61D	Black vinyl and black cloth	B
DB,DBA	61D	Blue vinyl and blue cloth	B
DD,DDA	61D	Red vinyl and red cloth	B
DT,DTA	61D	Chamois vinyl and chamois cloth	B
DZ,DZA	61D	Vaquero vinyl and vaquero cloth	B
EA,EAA	61H	Black all leather	B
EB,EBA	61H	Blue all leather	B
ED,EDA	61H	Red all leather	B
EN,ENA	61H	White all leather with red appointments	B
EQ,EQA	61H	White all leather with blue appointments	B
ET,ETA	61H	Chamois all leather	B
EW,EWA	61H	White all leather with black appointments	B
EZ,EZA	61H	Vaquero all leather	B
E2,E2A	61H	White all leather with chamois appointments	B
E9,E9A	61H	White all leather with vaquero appointments	B
FA,FAA	61H	Black vinyl and black cloth	B
FB,FBA	61H	Blue vinyl and blue cloth	B
FD,FDA	61H	Red vinyl and red cloth	B
FT,FTA	61H	Chamois vinyl and chamois cloth	B
FZ,FZA	61H	Vaquero vinyl and vaquero cloth	B
LA,LAA	61D	Black all vinyl	B
LB,LBA	61D	Blue all vinyl	B
LD,LDA	61D	Red all vinyl	B

COPYRIGHT © 1986 — FORD MOTOR COMPANY — DEARBORN, MICHIGAN

1979 SOFT TRIM SCHEME CODES

AS LISTED ON CERTIFICATION LABEL

FOR MATERIAL IDENTIFICATION
REFER TO SALESMAN'S
COLOR AND UPHOLSTERY SELECTIONS GUIDE

THE SOFT TRIM SECTION INCLUDES ONLY THOSE ITEMS WHICH WERE AVAILABLE FOR SERVICE AT THE TIME OF PRINTING. ITEMS NOT SHOWN OR INDICATED WITH A BLACK STAR (★) IN THE CATALOG MUST BE IMPROVISED OR PROCURED LOCALLY.

● B – Bucket seats

CAPRI (J) — Cont'd

CODE	BODY TYPE	DESCRIPTION OF TRIM SCHEME	● TYPE OF SEAT
LN,LNA	61D	White all vinyl with red appointments	B
LQ,LQA	61D	White all vinyl with blue appointments	B
LT,LTA	61D	Chamois all vinyl	B
LW,LWA	61D	White all vinyl with black appointments	B
LZ,LZA	61D	Vaquero all vinyl	B
L2,L2A	61D	White all vinyl with chamois appointments	B
L9,L9A	61D	White all vinyl with vaquero appointments	B
MA,MAA	61D	Black vinyl and black cloth	B
MB,MBA	61D	Blue vinyl and blue cloth	B
MD,MDA	61D	Red vinyl and red cloth	B
MT,MTA	61D	Chamois vinyl and chamois cloth	B
MZ,MZA	61D	Vaquero vinyl and vaquero cloth	B
NA,NAA	61D	Black all vinyl	B
NB,NBA	61D	Blue all vinyl	B
ND,NDA	61D	Red all vinyl	B
NN,NNA	61D	White all vinyl with red appointments	B
NQ,NQA	61D	White all vinyl with blue appointments	B
NT,NTA	61D	Chamois all vinyl	B
NW,NWA	61D	White all vinyl with black appointments	B
NZ,NZA	61D	Vaquero all vinyl	B
N2,N2A	61D	White all vinyl with chamois appointments	B
N9,N9A	61D	White all vinyl with vaquero appointments	B
PA,PAA	61D	Black vinyl and black cloth	B
PB,PBA	61D	Blue vinyl and blue cloth	B
PD,PDA	61D	Red vinyl and red cloth	B
PT,PTA	61D	Chamois vinyl and chamois cloth	B
PZ,PZA	61D	Vaquero vinyl and vaquero cloth	B
QA,QAA	61D	Black all leather	B
QB,QBA	61D	Blue all leather	B
QD,QDA	61D	Red all leather	B
QN,QNA	61D	White all leather with red appointments	B
QQ,QQA	61D	White all leather with blue appointments	B
QT,QTA	61D	Chamois all leather	B
QW,QWA	61D	White all leather with black appointments	B
QZ,QZA	61D	Vaquero all leather	B
Q2,Q2A	61D	White all leather with chamois appointments	B
Q9,Q9A	61D	White all leather with vaquero appointments	B
RA,RAA	61D	Black all leather	B
RB,RBA	61D	Blue all leather	B
RD,RDA	61D	Red all leather	B
RN,RNA	61D	White all leather with red appointments	B
RQ,RQA	61D	White all leather with blue appointments	B
RT,RTA	61D	Chamois all leather	B
RW,RWA	61D	White all leather with black appointments	B
RZ,RZA	61D	Vaquero all leather	B
R2,R2A	61D	White all leather with chamois appointments	B
R9,R9A	61D	White all leather with vaquero appointments	B

BODY TYPE	R/L	PART NUMBER LESS SUFFIX	TRIM CODES, COLORS and APPLICABLE PART NUMBER SUFFIXES														QTY
		TRIM CODES ▶		SECOND CHARACTER of TRIM CODE									ALL CODES	ALL CODES	OTHER		
				-B-Q	-D-N	-J	-T-2-U	-V	-Z-9								
		COLORS ▶	Length (inches)	BLUE	RED	TANG-ERINE	CHAM-OIS	CREAM /GOLD	VAQ-UERO				BLACK	WHITE			
02344-5	PANEL (COWL TRIM)																
J	R	D9ZZ 6602344		A1B	A9D		A9T		A4F				A9A				1
	L	D9ZZ 6602345		A1B	★		A9T		A4F				A9A				1
04104	VISOR ASSY.																
J		D9ZZ 6604104		A7B	A4D		A8T		A5F				A4A	A9W			2
04282	PAD (INSTRUMENT PANEL UPPER)																
J		D9ZZ 6604282		★	A8D		A6T		★				★				1

BODY TYPE	R/L	PART NUMBER LESS SUFFIX	TRIM CODES AND APPLICABLE PART NUMBER SUFFIXES														QTY
13000	CARPET (FRONT and REAR FLOOR)																
		TRIM CODES ▶	AA, AAA	AB, ABA	AD, ADA	AN, ANA	AQ, AQA	AT, ATA	AW, AWA	AZ, AZA	A2, A2A	A9, A9A					
J		D9ZZ 6613000	A5A	A5B	A5D	A5D	A5B	A2T	A5A	A0F	A2T	A0F					1
		TRIM CODES ▶	BA, BAA	BB, BBA	BD, BDA	BT, BTA	BZ, BZA										
J		D9ZZ 6613000	A5A	A5B	A5D	A2T	A0F										1
		TRIM CODES ▶	CA, CAA	CB, CBA	CD, CDA	CN, CNA	CQ, CQA	CT, CTA	CW, CWA	CZ, CZA	C2, C2A	C9, C9A					
J		D9ZZ 6613000	A5A	A5B	A5D	A5D	A5B	A2T	A5A	A0F	A2T	A0F					1
		TRIM CODES ▶	DA, DAA	DB, DBA	DD, DDA	DT, DTA	DZ, DZA										
J		D9ZZ 6613000	A5A	A5B	A5D	A2T	A0F										1
		TRIM CODES ▶	EA, EAA	EB, EBA	ED, EDA	EN, ENA	EQ, EQA	ET, ETA	EW, EWA	EZ, EZA	E2, E2A	E9, E9A					
J		D9ZZ 6613000	B5A	B5B	B5D	B5D	B5B	B2T	B5A	B0F	B2T	B0F					1
		TRIM CODES ▶	FA, FAA	FB, FBA	FD, FDA	FT, FTA	FZ, FZA										
J		D9ZZ 6613000	B5A	B5B	B5D	B2T	B0F										1
		TRIM CODES ▶	LA, LAA	LB, LBA	LD, LDA	LN, LNA	LQ, LQA	LT, LTA	LW, LWA	LZ, LZA	L2, L2A	L9, L9A					
J		D9ZZ 6613000	A5A	A5B	A5D	A5D	A5B	A2T	A5A	A0F	A2T	A0F					1
		TRIM CODES ▶	MA, MAA	MB, MBA	MD, MDA	MT, MTA	MZ, MZA										
J		D9ZZ 6613000	A5A	A5B	A5D	A2T	A0F										1
		TRIM CODES ▶	NA, NAA	NB, NBA	ND, NDA	NN, NNA	NQ, NQA	NT, NTA	NW, NWA	NZ, NZA	N2, N2A	N9, N9A					
J		D9ZZ 6613000	A5A	A5B	A5D	A5D	A5B	A2T	A5A	A0F	A2T	A0F					1
		TRIM CODES ▶	PA, PAA	PB, PBA	PD, PDA	PT, PTA	PZ, PZA										
J		D9ZZ 6613000	A5A	A5B	A5D	A2T	A0F										1
		TRIM CODES ▶	QA, QAA	QB, QBA	QD, QDA	QN, QNA	QQ, QQA	QT, QTA	QW, QWA	QZ, QZA	Q2, Q2A	Q9, Q9A					
J		D9ZZ 6613000	A5A	A5B	A5D	A5D	A5B	A2T	A5A	A0F	A2T	A0F					1
		TRIM CODES ▶	RA, RAA	RB, RBA	RD, RDA	RN, RNA	RQ, RQA	RT, RTA	RW, RWA	RZ, RZA	R2, R2A	R9, R9A					
J		D9ZZ 6613000	A5A	A5B	A5D	A5D	A5B	A2T	A5A	A0F	A2T	A0F					1

COPYRIGHT © 1986 — FORD MOTOR COMPANY — DEARBORN, MICHIGAN

1973/79 LINCOLN-MERCURY CARS

BODY TYPE	R/L	PART NUMBER LESS SUFFIX	TRIM CODES, COLORS and APPLICABLE PART NUMBER SUFFIXES													QTY.
		TRIM CODES ▶		SECOND CHARACTER of TRIM CODE									ALL CODES	ALL CODES	OTHER	
				-B or Q	-D or N	J	T-2	V	Z-9							
		COLORS ▶		BLUE	RED	TANG-ERINE	CHAM-OIS	CREAM /GOLD	VAQ-UERO				BLACK	WHITE		
13086	MAT (FRONT FLOOR)															
			TWIN (incl. carpet insert)													
J - - rubber		D9AZ 5413086		S	★		★		U				J			1
			TWIN (less carpet insert)													
J - - rubber ford oval		D6FZ 6213086		B	E								A		C(brown)	1
		D7FZ 6213086													K(gold)	1
23718	POCKET (DOOR)															
J	R/L	D9ZZ 6623718		A7B	A4D		A9T		A2F				A6A	★		2

BODY TYPE	R/L	PART NUMBER LESS SUFFIX	TRIM CODES AND APPLICABLE PART NUMBER SUFFIXES														QTY
23942-3	PANEL ASSY. (FRONT DOOR TRIM)																
		TRIM CODES ▶	AA, AAA	AB, ABA	AD, ADA	AN, ANA	AQ, AQA	AT, ATA	AW, AWA	AZ, AZA	A2, A2A	A9, A9A					
J(61D)	R	D9ZZ 6623942	C9A	C1B	C9D	C5D	C5B	C4T	★	C4F	C2T	C0F					1
	L	D9ZZ 6623943	C9A	C1B	C9D	C5D	C5B	C4T	C6W	C4F	C2T	C0F					1
		TRIM CODES ▶	BA, BAA	BB, BBA	BD, BDA	BT, BTA	BZ, BZA										
J(61D)	R	D9ZZ 6623942	C9A	C1B	C9D	C4T	C4F										1
	L	D9ZZ 6623943	C9A	C1B	C9D	C4T	C4F										1
		TRIM CODES ▶	CA, CAA	CB, CBA	CD, CDA	CN, CNA	CQ, CQA	CT, CTA	CW, CWA	CZ, CZA	C2, C2A	C9, C9A					
J(61D)	R	D9ZZ 6623942	C9A	C1B	C9D	C5D	C5B	C4T	★	C4F	C2T	C0F					1
	L	D9ZZ 6623943	C9A	C1B	C9D	C5D	C5B	C4T	C6W	C4F	C2T	C0F					1
		TRIM CODES ▶	DA, DAA	DB, DBA	DD, DDA	DT, DTA	DZ, DZA										
J(61D)	R	D9ZZ 6623942	C9A	C1B	C9D	C4T	C4F										1
	L	D9ZZ 6623943	C9A	C1B	C9D	C4T	C4F										1
		TRIM CODES ▶	LA, LAA	LB, LBA	LD, LDA	LN, LNA	LQ, LQA	LT, LTA	LW, LWA	LZ, LZA	L2, L2A	L9, L9A					
J(61D)	R	D9ZZ 6623942	C9A	C1B	C9D	C5D	C5B	C4T	★	C4F	C2T	C0F					1
	L	D9ZZ 6623943	C9A	C1B	C9D	C5D	C5B	C4T	C6W	C4F	C2T	C0F					1
		TRIM CODES ▶	MA, MAA	MB, MBA	MD, MDA	MT, MTA	MZ, MZA										
J(61D)	R	D9ZZ 6623942	C9A	C1B	C9D	C4T	C4F										1
	L	D9ZZ 6623943	C9A	C1B	C9D	C4T	C4F										1
		TRIM CODES ▶	NA, NAA	NB, NBA	ND, NDA	NN, NNA	NQ, NQA	NT, NTA	NW, NWA	NZ, NZA	N2, N2A	N9, N9A					
J(61D)	R	D9ZZ 6623942	C9A	C1B	C9D	C5D	C5B	C4T	★	C4F	C2T	C0F					1
	L	D9ZZ 6623943	C9A	C1B	C9D	C5D	C5B	C4T	C6W	C4F	C2T	C0F					1
		TRIM CODES ▶	PA, PAA	PB, PBA	PD, PDA	PT, PTA	PZ, PZA										
J(61D)	R	D9ZZ 6623942	C9A	C1B	C9D	C4T	C4F										1
	L	D9ZZ 6623943	C9A	C1B	C9D	C4T	C4F										1
		TRIM CODES ▶	QA, QAA	QB, QBA	QD, QDA	QN, QNA	QQ, QQA	QT, QTA	QW, QWA	QZ, QZA	Q2, Q2A	Q9, Q9A					
J(61D)	R	D9ZZ 6623942	C9A	C1B	C9D	C5D	C5B	C4T	★	C4F	C2T	C0F					1
	L	D9ZZ 6623943	C9A	C1B	C9D	C5D	C5B	C4T	C6W	C4F	C2T	C0F					1
		TRIM CODES ▶	RA, RAA	RB, RBA	RD, RDA	RN, RNA	RQ, RQA	RT, RTA	RW, RWA	RZ, RZA	R2, R2A	R9, R9A					
J(61D)	R	D9ZZ 6623942	C9A	C1B	C9D	C5D	C5B	C4T	★	C4F	C2T	C0F					1
	L	D9ZZ 6623943	C9A	C1B	C9D	C5D	C5B	C4T	C6W	C4F	C2T	C0F					1
		TRIM CODES ▶	EA, EAA	EB, EBA	ED, EDA	EN, ENA	EQ, EQA	ET, ETA	EW, EWA	EZ, EZA	E2, E2A	E9, E9A					
J(61H)	R	D9ZZ 6623942	C9A	C1B	C9D	C5D	C5B	C4T	★	C4F	C2T	C0F					1
	L	D9ZZ 6623943	C9A	C1B	C9D	C5D	C5B	C4T	C6W	C4F	C2T	C0F					1
		TRIM CODES ▶	FA, FAA	FB, FBA	FD, FDA	FT, FTA	FZ, FZA										
J(61H)	R	D9ZZ 6623942	C9A	C1B	C9D	C4T	C4F										1
	L	D9ZZ 6623943	C9A	C1B	C9D	C4T	C4F										1

BODY TYPE	R/L	PART NUMBER LESS SUFFIX	Length (inches)	-B-Q BLUE	-D-N RED	-J TANGERINE	-T-2-U CHAMOIS	-V CREAM/GOLD	-Z-9 VAQUERO				ALL CODES BLACK	ALL CODES WHITE	OTHER	QTY
		TRIM CODES ▶ / COLORS ▶		SECOND CHARACTER of TRIM CODE												
24140-1	**ARM REST-Incl. attaching parts**															
J	R	D9ZZ 6624140		A1B	A9D		A4T		A4F				A6A	A6W		1
	L	D9ZZ 6624141		A1B	A9D		A4T		A4F				A6A	A6W		1
31012-3	**PANEL ASSY. (QUARTER TRIM)-61 Body style may require 311A78 or 79 bracket**															
J(61D)	R	D9ZZ 6131012		A1B	A9D		A4T		A4F				A9A	A6W		1
	L	D9ZZ 6131013		A1B	A9D		A4T		A4F				A9A	A6W		1
J(61H)	L	D9ZZ 6131013		B1B	B9D		★		B4F				B9A	B6W		1
312A28-9	**PLATE (QUARTER TRIM PANEL ACCESS HOLE OPENING)**															
J(61)	R	D9ZZ 61312A28		A1B	★		★		A4F				A9A	★		1
	L	D9ZZ 61312A29		A1B	A9D		A4T		A4F				A9A	★		1
31406	**STRAP (ASSIST)**															
J		D9ZZ 6531406		A1B	A9D		A4T		A4F				A6A	★		1
40374-5	**PANEL (BACK LOWER TRIM)**															
J	R	D9ZZ 6140374		★	A9D		A4T		★				★	A6W		1
	L	D9ZZ 6140375		A1B	A9D		A4T		A4F				★	A6W		1

BODY TYPE	R/L	PART NUMBER	DESCRIPTION	QTY
45026	**COVER (SPARE TIRE)**			
J		D9ZZ 6145026-A	Gray	1

BODY TYPE	R/L	PART NUMBER LESS SUFFIX	Length (inches)	-B-Q BLUE	-D-N RED	-J TANGERINE	-T-2-U CHAMOIS	-V CREAM/GOLD	-Z-9 VAQUERO				ALL CODES BLACK	ALL CODES WHITE	OTHER	QTY
		TRIM CODES ▶ / COLORS ▶		SECOND CHARACTER of TRIM CODE												
45455	**COVER (LUGGAGE COMPARTMENT FLOOR)**															
J		D9ZZ 6145455		A5B	A5D		A2T		A0F				A5A			1
46404	**PANEL (LIFT GATE TRIM)**															
J - - w/o back window wiper		D9ZZ 6146404		A1B	A9D		A4T		A4F				A9A	A6W		1
- - w/back window wiper		D9ZZ 6146404		B1B	B9D		B4T		B4F				B9A	B6W		1

BODY TYPE	R/L	PART NUMBER	DESCRIPTION	QTY
50124	**CONTAINER (GLASS ROOF PANEL STOWAGE)**			
J - - w/removeable roof-glass		D9ZZ 6650124-A6A	Black vinyl	1
501A80	**STRAP (ROOF OPENING GLASS CONTAINER)**			
J - - w/removeable roof-glass		D9ZZ 61501A80-A	Black	1

BODY TYPE	R/L	PART NUMBER LESS SUFFIX	Length (inches)	-B-Q BLUE	-D-N RED	-J TANGERINE	-T-2-U CHAMOIS	-V CREAM/GOLD	-Z-9 VAQUERO				ALL CODES BLACK	ALL CODES WHITE	OTHER	QTY
		TRIM CODES ▶ / COLORS ▶		SECOND CHARACTER of TRIM CODE												
519A02	**HEADLINING (ROOF SLIDING PANEL)**															
J		D9ZZ 66519A02		A1B	A9D		A4T		A4F				A9A	A6W		1
51916	**HEADLINING ROOF**															
J - - w/o removeable roof-glass		D9ZZ 6151916		A7B	★		★		A5F				A4A	★		1
- - w/removeable roof-glass		D9ZZ 6151916		B7B	★		★		B5F				B4A	★		1

COPYRIGHT © 1986 — FORD MOTOR COMPANY — DEARBORN, MICHIGAN

1973/79 LINCOLN-MERCURY CARS

BODY TYPE	R/L	PART NUMBER	DESCRIPTION	QTY
60032	BACK KIT (REAR SEAT)-Serviced only in assy.-group 672A18			
60050	CUSHION KIT (FRONT SEAT)			
J	R/L	D8BZ 6660050-C	Use with trim codes beginning with A,B,L,M	2
600A88	PAD (REAR SEAT CUSHION)			
J(61D)		D9ZZ 66600A88-A		1
60136	BACK KIT (FRONT SEAT)			
J	R/L	D9ZZ 6661018-C	Frame-bucket seat hi-back	2
	R/L	D9ZZ 6664810-B	Pad-bucket seat hi-back	2
	R/L	D8BZ 6661018-B	Frame-bucket seat lo-back	2
	R/L	D9ZZ 6664810-A	Pad-bucket seat lo-back	2

BODY TYPE	R/L	PART NUMBER LESS SUFFIX	TRIM CODES, COLORS and APPLICABLE PART NUMBER SUFFIXES													QTY
		TRIM CODES ▶		SECOND CHARACTER of TRIM CODE									ALL CODES	ALL CODES	OTHER	
				-B-Q	-D-N	-J	-T-2-U	-V	-Z-9							
		COLORS ▶	Length (inches)	BLUE	RED	TANG-ERINE	CHAM-OIS	CREAM /GOLD	VAQ-UERO				BLACK	WHITE		
60579	CARPET (REAR SEAT BACK FLOOR)															
J		D9ZZ 6160579		A5B	A5D		A2T		A0F				A5A			1
60762	PANEL (FRONT SEAT BACK REAR TRIM PANEL INSERT)															
J	R/L	D8BZ 6660762					A4T						A9A	A6W		2
	R/L	D9BZ 6660762		A1B	A9D				A4F							2
61018	Refer to group 60136															
611A08	HEAD REST ASSY. (FRONT SEAT BACK)															
J(61D)	R/L	D9AZ 54611A08		★	★		★		AX				★	AZ		2
64810	Refer to group 60136															
66600	COVER (REAR SEAT BACK)-Serviced only in assy.-group 672A18															

1979 SOFT TRIM SCHEME CODES

AS LISTED ON CERTIFICATION LABEL

CODE	BODY TYPE	DESCRIPTION OF TRIM SCHEME	● TYPE OF SEAT

FOR MATERIAL IDENTIFICATION
REFER TO SALESMAN'S
COLOR AND UPHOLSTERY SELECTIONS GUIDE

THE SOFT TRIM SECTION INCLUDES ONLY THOSE ITEMS WHICH WERE AVAILABLE FOR SERVICE AT THE TIME OF PRINTING. ITEMS NOT SHOWN OR INDICATED WITH A BLACK STAR (★) IN THE CATALOG MUST BE IMPROVISED OR PROCURED LOCALLY.

● SB – Split Bench seat, B – Bucket seats

MARK V (K)

AA	65	Black vinyl and black cloth	S/B
AB	65	Blue vinyl and blue cloth	S/B
AD	65	Red vinyl and red cloth	S/B
AF	65	Cordovan vinyl and cordovan cloth	S/B
AP	65	Gold vinyl and cream cloth	S/B
AU	65	Champagne vinyl and champagne cloth	S/B
BA	65	Black vinyl and black leather	S/B
BB	65	Blue vinyl and blue leather	S/B
BD	65	Red vinyl and red leather	S/B
BF	65	Cordovan vinyl and cordovan leather	S/B
BG	65	White vinyl and white leather with beryl (turquoise) appointments	S/B
BL	65	Amethyst (crystal blue) vinyl and amethyst (crystal blue) leather	S/B
BN	65	White vinyl and white leather with red appointments	S/B
BP	65	Cream vinyl and cream leather	S/B
BQ	65	White vinyl and white leather with blue appointments	S/B
BU	65	Champagne vinyl and champagne leather	S/B
BW	65	White vinyl and white leather with black appointments	S/B
B3	65	White vinyl and white leather with amethyst (crystal blue) appointments	S/B
B4	65	White vinyl and white leather with champagne appointments	S/B
B6	65	White vinyl and white leather with cordovan appointments	S/B
B8	65	White vinyl and white leather with gold appointments	S/B
CB	65	Blue cloth	S/B
CD	65	Red cloth	S/B
CF	65	Cordovan cloth	S/B
CK	65	Beryl (turquoise) cloth	S/B
CL	65	Amethyst (crystal blue) cloth	S/B
CS	65	Gray cloth	S/B
CU	65	Champagne cloth	S/B
DB	65	Blue vinyl and blue leather	S/B
DF	65	Cordovan vinyl and cordovan leather	S/B
DG	65	White vinyl and white leather with beryl (turquoise) appointments	S/B
DH	65	Red vinyl and rose leather with red appointments	S/B
DK	65	Beryl (turquoise) vinyl and beryl (turquoise) leather	S/B
DL	65	Amethyst (crystal blue) vinyl and amethyst (crystal blue) leather	S/B
DN	65	White vinyl and white leather with red appointments	S/B
DP	65	Cream vinyl and cream leather	S/B
DQ	65	White vinyl and white leather with blue appointments	S/B
DS	65	Gray vinyl and gray leather	S/B
DU	65	Champagne vinyl and champagne leather	S/B
DW	65	White vinyl and white leather with black appointments	S/B

COPYRIGHT © 1986 — FORD MOTOR COMPANY — DEARBORN, MICHIGAN

1979 SOFT TRIM SCHEME CODES

AS LISTED ON CERTIFICATION LABEL

CODE	BODY TYPE	DESCRIPTION OF TRIM SCHEME	● TYPE OF SEAT

FOR MATERIAL IDENTIFICATION
REFER TO SALESMAN'S
COLOR AND UPHOLSTERY SELECTIONS GUIDE

THE SOFT TRIM SECTION INCLUDES ONLY THOSE ITEMS WHICH WERE AVAILABLE FOR SERVICE AT THE TIME OF PRINTING. ITEMS NOT SHOWN OR INDICATED WITH A BLACK STAR (★) IN THE CATALOG MUST BE IMPROVISED OR PROCURED LOCALLY.

● SB-Split Bench seat, B-Bucket seats

MARK V (K) — Cont'd.

D3	65	White vinyl and white leather with amethyst (crystal blue) appointments	S/B
D4	65	White vinyl and white leather with champagne appointments	S/B
D6	65	White vinyl and white leather with cordovan appointments	S/B
D8	65	White vinyl and white leather with gold appointments	S/B
EB	65	Blue vinyl and blue leather	S/B
EQ	65	White vinyl and white leather with blue appointments	S/B
EU	65	Champagne vinyl and champagne leather	S/B
FU	65	Champagne cloth	S/B
GQ	65	White vinyl and white leather with blue appointments	S/B
LB	65	Blue cloth	B
MB	65	Blue leather	S/B
MQ	65	White leather with blue appointments	S/B

1979 VINYL ROOF COVER CODES

AS LISTED ON CERTIFICATION LABEL

CODE	BODY TYPE	GRAIN and TYPE of ROOF	COLOR
MARK V (K)			
CW	65	Diamond – carriage	White
VA	65	Valino – full	Black
VB	65	Valino – full	Blue(diamond)
VD	65	Valino – full	Red
VF	65	Valino – full	Cordovan(dark)
VK	65	Valino – full	Beryl(turquoise)
VN	65	Valino – full	Cordovan(light)
VP	65	Valino – full	Silver
VQ	65	Valino – full	Blue(midnight)
VS	65	Valino – full	Gray
VU	65	Valino – full	Champagne
VV	65	Valino – full	Cream
VW	65	Valino – full	White
VY	65	Valino – full	Gold
V5	65	Valino – full	Blue(wedgewood)
V7	65	Valino – full	Amethyst(crystal blue)
YA	65	Valino – 1/2	Black
YB	65	Valino – 1/2	Blue(diamond)
YD	65	Valino – 1/2	Red
YF	65	Valino – 1/2	Cordovan(dark)
YK	65	Valino – 1/2	Beryl(turquoise)
YN	65	Valino – 1/2	Cordovan(light)
YP	65	Valino – 1/2	Silver
YQ	65	Valino – 1/2	Blue(midnight)
YS	65	Valino – 1/2	Gray
YU	65	Valino – 1/2	Champagne
YV	65	Valino – 1/2	Cream
YW	65	Valino – 1/2	White
YY	65	Valino – 1/2	Gold
Y5	65	Valino – 1/2	Blue(wedgewood)
Z7	65	Valino – front 1/2	Amethyst(crystal blue)

COPYRIGHT © 1986 — FORD MOTOR COMPANY — DEARBORN, MICHIGAN

1973/79 LINCOLN-MERCURY CARS

BODY TYPE	R/L	PART NUMBER LESS SUFFIX		TRIM CODES, COLORS and APPLICABLE PART NUMBER SUFFIXES												QTY
			TRIM CODES ▶	SECOND CHARACTER of TRIM CODE									ALL CODES	ALL CODES	OTHER	
				-B-Q	-D-N-H	-F-6	-G-K	-L-3	-P-8	-R-5-M	-S	-U-4				
			COLORS ▶	BLUE	RED/ ROSE	CORD-OVAN	BERYL	AME-THYST	CREAM/GOLD	JADE	GRAY	CHAM-PAGNE	BLACK	WHITE		
02344-5	PANEL (COWL TRIM)															
Notes:	● Use with trim codes EB,EQ, and GQ, @ Use with all trim codes except EB,EQ and GQ															
K - - vinyl	R	D7LY	6502344	@A9B	A2D	★					★		A9A			1
	L	D6LY	6502345	@★	★						A2P		★			1
	L	D7SY	6502345			A8F										1
	R	D8LY	6502344						★			A6U				1
	R	D9LY	6502344	●A2B			A5K	A3J								1
	L	D9LY	6502345	●★			★	A3J								1
- - carpet	R	D9LY	6502344	A6B												1
	L	D9LY	6502345	A6B												1
04104-5	VISOR ASSY.															
Notes:	⊕ Use with or without non-illuminated vanity mirror-refer to group 17A679 in Chassis Section for mirror, ● Use with trim code EB, @ Use with all trim codes except EB, † Without cloth insert, ⇦With cloth insert, ‡ Garage door opener not offered on pass. side															
			LESS ARM, BRACKET and MIRROR													
K - - w/non-illuminated vanity mirror	⊕ R/L	D8LY	6504104	@★	★	F8F			F5V		F9B	★	★	★		2
	⊕ R/L	D9LY	6504104	●A4B			★	A8J								2
			INCLUDES ARM, BRACKET and MIRROR													
K - - vinyl-w/ illuminated vanity mirror-w/o garage door opener	R	D8LY	6504104	@★	E0D	★			E5V		★	★	E4A	†E9W		1
	L	D8LY	6504105	@E7B	★	★			★		★	★	★	†★		1
	R	D9LY	6504104	●E4B			E7K	E8J						⇦★		1
	L	D9LY	6504105	●M4B			M7K	M8J						⇦H9W		1
K - - vinyl-w/ illuminated vanity mirror-w/garage door opener	‡ R	D8LY	6504104	@★	E0D	★			E5V		★	★	E4A	†E9W		1
	L	D8LY	6504105	@J7B	J0D	J8F			J5V		J9P	J2U	J4A	†J9W		1
	‡ R	D9LY	6504104	●E4B			E7K	E8J						⇦H9W		1
	L	D9LY	6504105	●J4B			J7K	J8J						⇦L9W		1
K - - cloth-w/ illuminated vanity mirror-w/garage door opener	‡ R	D9LY	6504104	★												1
	L	D9LY	6504105	B5B												1

1973/79 LINCOLN-MERCURY CARS

BODY TYPE	R/L	PART NUMBER LESS SUFFIX	TRIM CODES, COLORS and APPLICABLE PART NUMBER SUFFIXES													Q T Y
		TRIM CODES ▶		SECOND CHARACTER of TRIM CODE									ALL CODES	ALL CODES	OTHER	
				-B-Q	-D-N-H	-F-6	-G-K	-L-3	-P-8	-R-5-M	-S	-U-4				
		COLORS ▶		BLUE	RED/ ROSE	CORD-OVAN	BERYL	AME-THYST	CREAM /GOLD	JADE	GRAY	CHAM-PAGNE	BLACK	WHITE		
04282	PAD (INSTRUMENT PANEL UPPER)															
Notes:	● Use with trim codes AB,BB,BQ,CB,DB and DQ, ⊕ Use with trim codes EB,EQ and GQ, $ Use with trim codes LB,MB and MQ															
K		D7LY 6504282		●★	A3D	A1F					★		★			1
		D8LY 6504282		⊕★					★			A3U				1
		D9LY 6504282		$B9B			C1K	★								1
13086	MAT (FRONT FLOOR)															
			FULL WIDTH													
K - - simulated leather		D9AZ 6613086		★	★								★	★	D(ivy gold)	
			TWIN (w/o carpet)													
K - - rubber -Ford Oval		D60Z 6213086		B	F								A		C(brown)	1
		D70Z 6213086							A							1
K - - simulated leather		D9AZ 6613086		H	J								G	L	M(saddle)	1
13106	MAT (REAR FLOOR)															
Notes:	⊕ Light, ● Dark															
			TWIN (w/carpet)													
K - - carpet		D9AZ 5413106		⊕★	★	C	★				F					1
		D9AZ 5413106		●G				★	★			★	L			1
			TWIN (w/o carpet)													
K - - rubber -plain		D6FZ 6213106		B	E								A		C(brown)	2
		D6FZ 6213106													F(green)	2
K - - simulated leather		D9AZ 6613106		B	C								A	★	D(ivy gold)	1
		D9AZ 6613106													F(saddle)	1
24100-1	PAD (ARM REST) - Incl. attaching parts															
Notes:	● Use with trim codes AB,BB,CB and DB, @ Use with trim code EB, ⊕ Use with trim codes LB and MB															
K - - door	R	D5SZ 6524100			D								★			1
	L	D5SZ 6524101			D								★			1
	R	D6SY 6524100									★					1
	L	D6SY 6524101									A8P					1
	R	D6SZ 6524100												A		1
	L	D6SZ 6524101												A		1
	R	D7SY 6524100				A4F										1
	L	D7SY 6524101				★										1
	R	D8LY 6524100		●B6B					★			B9U				1
	L	D8LY 6524101		●B6B					★			★				1
	R	D9LY 6524100		@★			★	B9J								1
	L	D9LY 6524101		@★			B2K	★								1
	R	D9LY 6524100		⊕A9B												1
	L	D9LY 6524101		⊕A9B												1

COPYRIGHT © 1986— FORD MOTOR COMPANY —DEARBORN, MICHIGAN

NEW ISSUE

1973/79 LINCOLN-MERCURY CARS

BODY TYPE	R/L	PART NUMBER LESS SUFFIX	TRIM CODES, COLORS and APPLICABLE PART NUMBER SUFFIXES													QTY
		TRIM CODES ▶		SECOND CHARACTER of TRIM CODE									ALL CODES	ALL CODES	OTHER	
				-B-Q	-D-N-H	-F-6	-G-K	-L-3	-P-8	-R-5-M	-S	-U-4				
		COLORS ▶		BLUE	RED/ ROSE	CORD-OVAN	BERYL	AME-THYST	CREAM /GOLD	JADE	GRAY	CHAM-PAGNE	BLACK	WHITE		
24100-1	PAD (ARM REST) - Incl. attaching parts — Cont'd															
Notes:	● Use with trim codes AB,BB,CB and DB, @ Use with trim code EB, ⊕ Use with trim codes LB and MB															
K - - quarter-vinyl	R	D5SZ 6531718			D								A			1
	L	D5SZ 6531719			D								A			1
	R	D6SY 6531718									A8P					1
	L	D6SY 6531719									★					1
	R	D6SZ 6531718												A		1
	L	D6SZ 6531719												A		1
	R	D7SY 6531718				A4F										1
	L	D7SY 6531719				A4F										1
	R	D8LY 6531718		●A6B					A9V			A9U				1
	L	D8LY 6531719		●A6B					A9V			A9U				1
	R	D9LY 6531718		@B9B			A2K	A9J								1
	L	D9LY 6531719		@B9B			A2K	A9J								1
	R	D9LY 6531718		⊕A9B												1
	L	D9LY 6531719		⊕A9B												1
24144-5	BASE (ARM REST) - Incl. attaching parts															
Notes:	● Use with trim codes AB,BB,CB, and DB, @ Use with trim code EB, ⊕ Use with trim codes LB and MB															
K - - door -vinyl	R	D5SZ 6524144			E								C			1
	L	D5SZ 6524145			E								C			1
	R	D6SZ 6524144												B		1
	L	D6SZ 6524145												B		1
	R	D6SY 6524144									B4P					1
	L	D6SY 6524145									B4P					1
	R	D7SY 6524144				B8F										1
	L	D7SY 6524145				B8F										1
	R	D8LY 6524144		●B4B					★			B4U				1
	L	D8LY 6524145		●B4B					★			B4U				1
	R	D9LY 6524144		@★			★	★								1
	L	D9LY 6524145		@★			★	★								1
	R	D9LY 6524144		⊕A4B												1
	L	D9LY 6524145		⊕★												1

BODY TYPE	R/L	PART NUMBER LESS SUFFIX	TRIM CODES AND APPLICABLE PART NUMBER SUFFIXES														QTY
31012-3	PANEL ASSY. (QUARTER TRIM)																
K - - w/carriage roof			Also refer to group 52018-9														
		TRIM CODES ▶	AA	AB	AD	AF	AP	AU									
K	R	D7LY 6531012	A6A		A7D	A0F											1
	L	D7LY 6531013	A6A		A7D	A0F											1
	R	D8LY 6531012		A5B			A6V	A2U									1
	L	D8LY 6531013		★			A6V	A2U									1
		TRIM CODES ▶	BA	BB	BD	BF	BG	BL	BN	BP	BQ						
K	R	D7LY 6531012	A6A		A7D	A0F	A6W		A6W		A6W						1
	L	D7LY 6531013	A6A		A7D	A0F	A6W		A6W		A6W						1
	R	D8LY 6531012		A5B						A6V							1
	L	D8LY 6531013		★						A6V							1
	R	D9LY 6531012						B3J									1
	L	D9LY 6531013						B3J									1

BODY TYPE	R/L	PART NUMBER LESS SUFFIX	TRIM CODES AND APPLICABLE PART NUMBER SUFFIXES														QTY
31012-3	PANEL ASSY. (QUARTER TRIM) — Cont'd																
		TRIM CODES ➧	BU	BW	B3	B4	B6	B8									
K	R	D8LY 6531012	A2U														1
	L	D8LY 6531013	A2U														1
	R	D7LY 6531012		A6W	A6W	A6W	A6W	A6W									1
	L	D7LY 6531013		A6W	A6W	A6W	A6W	A6W									1
		TRIM CODES ➧	CB	CD	CF	CK	CL	CS	CU								
K	R	D8LY 6531012	E9B	E7D	E0F			E5P	D2U								1
	L	D8LY 6531013	E9B	E7D	E0F			E5P	D2U								1
	R	D9LY 6531012				D3K	D6J										1
	L	D9LY 6531013				D3K	D6J										1
		TRIM CODES ➧	DB	DF	DG	DH	DK	DL	DN	DP							
K	R	D8LY 6531012	C5B	C7F						D3V							1
	L	D8LY 6531013	C5B	C7F						D3V							1
	R	D9LY 6531012			D6W		D4K	D7J	D6W								1
	L	D9LY 6531013			D6W		D4K	D7J	D6W								1
	R	D7LY 6531012				C7D											1
	L	D7LY 6531013				★											1
		TRIM CODES ➧	DQ	DS	DU	DW	D3	D4	D6	D8							
K	R	D9LY 6531012	D6W			D6W	D6W	D6W	D6W	D6W							1
	L	D9LY 6531013	D6W			D6W	D6W	D6W	D6W	D6W							1
	R	D8LY 6531012			C3U												1
	L	D8LY 6531013			C3U												1
	R	D7LY 6531012		★													1
	L	D7LY 6531013		C6P													1
		TRIM CODES ➧	EB	EQ	EU	FU	GQ	LB	MB	MQ							
K	R	D9LY 6531012	★	DEQ			D6W	★	★	D6W							1
	L	D9LY 6531013	D2B	DEQ			D6W	A4B	A4B	D6W							1
	R	D8LY 6531012			C3U	D2U											1
	L	D8LY 6531013			C3U	D2U											1

BODY TYPE	R/L	PART NUMBER LESS SUFFIX	TRIM CODES, COLORS and APPLICABLE PART NUMBER SUFFIXES													QTY
		TRIM CODES ➧		SECOND CHARACTER of TRIM CODE								ALL CODES	ALL CODES	OTHER		
				-B-Q	-D-N-H	-F-6	-G-K	-L-3	-P-8	-R-5-M	-S	-U-4				
		COLORS ➧		BLUE	RED/ ROSE	CORD-OVAN	BERYL	AME-THYST	CREAM/GOLD	JADE	GRAY	CHAM-PAGNE	BLACK	WHITE		
31070-1	PANEL (QUARTER TRIM LOWER)															
Notes:	● Use with trim codes AB,BB,CB and DB, @ Use with trim code EB															
K - - vinyl	R	D6SY 6531070		●★	★				★		★	★	★	★		1
	L	D6SY 6531071		●★	★				★		A4P	★	★	★		1
	R	D7SY 6531070				★										1
	L	D7SY 6531071				A8F										1
	R	D9LY 6531070		@★			★	★								1
	L	D9LY 6531071		@★			B8K	★								1
- - cloth	R	D9LY 6531070		A4B												1
	L	D9LY 6531071		A4B												1

COPYRIGHT © 1986— FORD MOTOR COMPANY —DEARBORN, MICHIGAN

NEW ISSUE

1973/79 LINCOLN-MERCURY CARS

BODY TYPE	R/L	PART NUMBER LESS SUFFIX	TRIM CODES AND APPLICABLE PART NUMBER SUFFIXES														QTY
311A58-9	PANEL (QUARTER TRIM FINISH)																
		TRIM CODES ▶	EB	EQ	EU	FU	GQ	LB	MB	MQ							
K	L	D9LY 65311A59	★	★	★	★	★	A4B	A4B	★							1
31718-9	Refer to group 24100-1																

BODY TYPE	R/L	PART NUMBER	DESCRIPTION	QTY
45400	COVER (JACK COLUMN IN LUGGAGE COMPARTMENT)			
K		D7LY 6545400-B0P	Gray burloom	1
45422-3	COVER (LUGGAGE COMPARTMENT SIDE)			
K	R	D7LY 6545422-A0P	Gray-burloom	1
45455	COVER (LUGGAGE COMPARTMENT FLOOR)			
K		D7LY 6545455-B0P	Gray burloom	1
46668	PANEL (PACKAGE TRAY TRIM)			
K		D7LY 6546668-A9T	Vinyl covered hard board-paint to match	1

BODY TYPE	R/L	PART NUMBER LESS SUFFIX	TRIM CODES, COLORS and APPLICABLE PART NUMBER SUFFIXES														QTY
		TRIM CODES ▶		SECOND CHARACTER of TRIM CODE									ALL CODES	ALL CODES	OTHER		
				-B-Q	-D-N-H	-F-6	-G-K	-L-3	-P-8	-R-5-M	-S	-U-4					
		COLORS ▶		BLUE	RED/ ROSE	CORD-OVAN	BERYL	AME-THYST	CREAM/GOLD	JADE	GRAY	CHAM-PAGNE	BLACK	WHITE			
519A02	HEADLINING (ROOF SLIDING PANEL)																
Notes:	@ Use with trim code EB, $ Use with trim codes AB,BB,CB and DB																
K - - w/glass sliding roof-vinyl		D7LY 65519A02			B0D	★			B5V		B9P		B4A	B9W		1	
		D8LY 65519A02		$B7B								★				1	
		D9LY 65519A02		@B4B			B7K	B8J								1	
-cloth		D9LY 65519A02		B5B												1	
51916	HEADLINING (ROOF)																
K - - w/sliding roof-vinyl		D7LY 6551916		★	★	★	★	★	★		B9P	★	★	★		1	
52018-9	COVER (ROOF SIDE REAR TRIM)																
Notes:	● Use with trim codes AB,BB,CB and DB, @ Use with trim codes EB and MB																
K - - vinyl -w/o carriage roof -w/carriage roof			Serviced only assy.-group 31012-3														
	R	D9LY 6552018		●B5B	B7D	C0F	B9K	B3J	B6V		B6P	★	B6A	B6W		1	
	L	D9LY 6552019		●B5B	B7D	C0F	B9K	B3J	B6V		B6P	B2U	B6A	B6W		1	
	R	D9LY 6552018		@B2B												1	
	L	D9LY 6552019		@B2B												1	
K - - cloth	R	D9LY 6552018		A4B												1	
	L	D9LY 6552019		A4B												1	

BODY TYPE	R/L	PART NUMBER	DESCRIPTION	QTY
537A00	Refer to group 53738			
537A02	Refer to group 53738			
53738	PAD (ROOF OUTSIDE CENTER)			
K - - w/half vinyl roof	R/L	D7LY 65537A02-B	Side-exc."Collectors Edition"	2
		D7LY 6553738-A	Center-exc."Collectors Edition"	1
		D7LY 65537A00-A	Rear-lower-exc."Collectors Edition"	1
	R/L	D8LY 65537A02-A	Side-"Collectors Edition"	2
		★	Center-"Collectors Edition"	1
		D7LY 65537A00-A	Rear-lower-"Collectors Edition"	1
60136-7	BACK KIT (FRONT SEAT)			
K	R/L	★	Pad-split seat-use with trim codes beginning with A or B	2
	R/L	D8LY 6564810-A	Pad-bucket seat	2

BODY TYPE	R/L	PART NUMBER LESS SUFFIX	TRIM CODES, COLORS and APPLICABLE PART NUMBER SUFFIXES														QTY
		TRIM CODES ▶		SECOND CHARACTER of TRIM CODE									ALL CODES	ALL CODES	OTHER		
				-B-Q	-D-N-H	-F-6	-G-K	-L-3	-P-8	-R-5-M	-S	-U-4					
		COLORS ▶		BLUE	RED/ ROSE	CORD-OVAN	BERYL	AME-THYST	CREAM/GOLD	JADE	GRAY	CHAM-PAGNE	BLACK	WHITE			
61018-9	Refer to group 60136-7																
62800	CORD (FRONT SEAT BACK ASSIST)																
K	R/L	D9LY 6562800		★										A7W			2
BODY TYPE	R/L	PART NUMBER LESS SUFFIX	TRIM CODES AND APPLICABLE PART NUMBER SUFFIXES														QTY
62900-1	COVER (FRONT SEAT CUSHION)																
		TRIM CODES ▶	DF	DG	DH	DK	DL	DN	DP								
K	L	D9LY 6562901	★	★	ADG	★	★	★	ADG								1
		TRIM CODES ▶	DQ	DS	DU	DW	D3	D4	D6	D8							
K	L	D9LY 6562901	ADG	★	★	ADG	ADG	ADG	ADG	ADG							1
BODY TYPE	R/L	PART NUMBER LESS SUFFIX	TRIM CODES, COLORS and APPLICABLE PART NUMBER SUFFIXES														QTY
		TRIM CODES ▶		SECOND CHARACTER of TRIM CODE									ALL CODES	ALL CODES	OTHER		
				-B-Q	-D-N-H	-F-6	-G-K	-L-3	-P-8	-R-5-M	-S	-U-4					
		COLORS ▶	Length (inches)	BLUE	RED/ ROSE	CORD-OVAN	BERYL	AME-THYST	CREAM/GOLD	JADE	GRAY	CHAM-PAGNE	BLACK	WHITE			
63500	BUTTON (FRONT and REAR SEAT CUSHION and BACK)																
Notes:	■ Square head, $ Use with all trim codes except EW and FU-for codes EU and FU use red																
			VINYL														
K - - front and rear seat cushion and back	■	D7LY 6563500	1/2	★	A7D	★			A6V		A6P	$★					AR

COPYRIGHT © 1986— FORD MOTOR COMPANY —DEARBORN, MICHIGAN

1979 SOFT TRIM SCHEME CODES

AS LISTED ON CERTIFICATION LABEL

FOR MATERIAL IDENTIFICATION
REFER TO SALESMAN'S
COLOR AND UPHOLSTERY SELECTIONS GUIDE
THE SOFT TRIM SECTION INCLUDES ONLY THOSE ITEMS WHICH WERE AVAILABLE FOR SERVICE AT THE TIME OF PRINTING. ITEMS NOT SHOWN OR INDICATED WITH A BLACK STAR (★) IN THE CATALOG MUST BE IMPROVISED OR PROCURED LOCALLY.

● B – Bucket seats

BOBCAT (L)

CODE	BODY TYPE	DESCRIPTION OF TRIM SCHEME	● TYPE OF SEAT
AA	62,64,73	Black all vinyl	B
AB	62,64,73	Blue all vinyl	B
AD	62,64,73	Red all vinyl	B
AT	62,64,73	Chamois all vinyl	B
DB	62,64,73	Blue vinyl and blue cloth	B
DD	62,64,73	Red vinyl and red cloth	B
DJ	62,64,73	Tangerine vinyl and tangerine cloth	B
DT	62,64,73	Chamois vinyl and chamois cloth	B
GA	62,64,73	Black vinyl and black cloth	B
GB	62,64,73	Blue vinyl and blue cloth	B
GD	62,64,73	Red vinyl and red cloth	B
GT	62,64,73	Chamois vinyl and chamois cloth	B
HA	62,64,73	Black all vinyl	B
HB	62,64,73	Blue all vinyl	B
HD	62,64,73	Red all vinyl	B
HJ	62,64,73	Tangerine all vinyl	B
HT	62,64,73	Chamois all vinyl	B

COPYRIGHT © 1986 — FORD MOTOR COMPANY — DEARBORN, MICHIGAN

1973/79 LINCOLN-MERCURY CARS

BODY TYPE	R/L	PART NUMBER LESS SUFFIX	TRIM CODES, COLORS and APPLICABLE PART NUMBER SUFFIXES													QTY
		TRIM CODES ▶		SECOND CHARACTER of TRIM CODE									ALL CODES	ALL CODES	OTHER	
				-B-Q	-D-N	-J	-T-2-U	-V	-Z-9							
		COLORS ▶		BLUE	RED	TANG-ERINE	CHAM-OIS	CREAM/GOLD	VAQ-UERO				BLACK	WHITE		
02344-5		PANEL (COWL TRIM)														
Notes:		▲ Use black														
L	R	D8FZ 6202344		A9B	A9D	▲	A9T						A9A			1
	L	D8FZ 6202345		A9B	A9D	▲	A9T						A9A			1
04104		VISOR ASSY. - Less arm, bracket and mirror														
Notes:		⊕ Use with or without vanity mirror - refer to group 17A679 in Chassis Section for mirror														
L	⊕R/L	D8FZ 6204104		A7B		A4E										2
	⊕R/L	D7FZ 6204104					B8T									2
	⊕R/L	D6FZ 6204104											A			2
	⊕R/L	D9FZ 6204104			A4D											2
04282		PAD (INSTRUMENT PANEL UPPER)														
Notes:		▲ Use black														
L - - w/o tact. instrumentation gp.		D9FZ 6204282		A9B	A8D	▲	A6T						A5A			1
- - w/tact. instrumentation gp.		D9FZ 6204282		B9B	B8D	▲	B6T						B5A			1
13000		CARPET (FRONT and REAR FLOOR)														
Notes:		▲ Use black														
L		D5FZ 6413000		B		▲							C			1
		D6FZ 6413000			A											1
		D7FZ 6413000					B2T									1
13036		CARPET (REAR FLOOR REAR)														
Notes:		▲ Use black														
L		D8FZ 6213036		A0B	A5D	▲	A2T						A5A			1
13046		CARPET (REAR FLOOR) - Serviced only in assy. - group 13000														
13048		CARPET (AUXILIARY FLOOR)														
Notes:		▲ Use black														
L(73)		D5FZ 7313048		C		▲							D			1
		D6FZ 7313048			A											1
		D7FZ 7313048					A2T									1
13048		MAT (AUXILIARY FLOOR)														
L(73) - - rubber		D7FZ 7313048											A5A			1
13086		MAT (FRONT FLOOR)														
		FULL WIDTH														
L - - simulated leather		D9AZ 6613086		B	C								A	E	F(saddle)	1
		D9AZ 6613086													D(ivy gold)	1
		TWIN (w/o carpet)														
L - - rubber - Ford oval		D6FZ 6213086		B	E								A			1
		D7FZ 6213086						K								1
L - - simulated leather		D9AZ 6613086		H	J								G	L	M(saddle)	1
		D9AZ 6613086													K(ivy gold)	1
13106		MAT (REAR FLOOR)														
		TWIN (w/o carpet)														
L - - rubber - plain		D6FZ 6213106		B	E								A			1
		D6FZ 6213106													F(green)	1
		D7FZ 6213106						A								1
L - - simulated leather		D9AZ 6613106		B	C								A	E	F(saddle)	1
		D9AZ 6613106													D(ivy gold)	1

1973/79 LINCOLN-MERCURY CARS

BODY TYPE	R/L	PART NUMBER LESS SUFFIX	TRIM CODES AND APPLICABLE PART NUMBER SUFFIXES														QTY
23942-3	PANEL (FRONT DOOR TRIM)																
		TRIM CODES ➧	AA	AB	AD	AT	DB	DD	DJ	DT							
L	R	D8FZ 6223942	AAA	★	★	★	★	★	★	★							1
	L	D8FZ 6223943	AAA	AAB	★	★	★	★	★	★							1
		TRIM CODES ➧	GA	GB	GD	GT	HA	HB	HD	HJ	HT						
L	R	D8FZ 6223942	AAA	★	★	★											1
	L	D8FZ 6223943	AAA	AAB	★	★											1
	R	D8YY 6423942					AHA	★	★	★	★						1
	L	D8YY 6423943					AHA	★	★	★	★						1

BODY TYPE	R/L	PART NUMBER LESS SUFFIX	TRIM CODES, COLORS and APPLICABLE PART NUMBER SUFFIXES													QTY
		TRIM CODES ➧		SECOND CHARACTER of TRIM CODE									ALL CODES	ALL CODES	OTHER	
				-B-Q	-D-N	-J	-T-2-U	-V	-Z-9							
		COLORS ➧		BLUE	RED	TANG-ERINE	CHAM-OIS	CREAM /GOLD	VAQ-UERO				BLACK	WHITE		
24140-1	ARM REST - Incl. attaching parts															
L	R	D8FZ 6224140		A4B		A8E	A4T						A6A			1
	L	D8FZ 6224141		A4B		A8E	A4T						A6A			1
	R	D9FZ 6224140			A9D											1
	L	D9FZ 6224141			A9D											1
31012-3	PANEL (QUARTER TRIM)															
Notes:	▲ Use black															
L(62)	R	D8FZ 6231012		A4B		A8E										1
	L	D8FZ 6231013		★		A8E										1
	R	D7FZ 6231012					A4T									1
	L	D7FZ 6231013					A4T									1
	R	D6FZ 6231012											A9A			1
	L	D6FZ 6231013											A9A			1
	R	D9FZ 6231012			A9D											1
	L	D9FZ 6231013			A9D											1
L(64)	R	D8FZ 6431012		A4B		A8E										1
	L	D8FZ 6431013		A4B		★										1
	R	D9FZ 6431012			A9D											1
	L	D9FZ 6431013			A9D											1
	R	D7FZ 6431012					A4T									1
	L	D7FZ 6431013					A4T									1
	R	D6FZ 6431012											A9A			1
	L	D6FZ 6431013											A9A			1
L(73)	R	D8FZ 7331012		★		A8E										1
	L	D8FZ 7331013		A4B		A8E										1
	R	D9FZ 7331012			A9D											1
	L	D9FZ 7331013			A9D											1
	R	D7FZ 7331012					A4T									1
	L	D7FZ 7331013					A4T									1
	R	D6FZ 7331012											A9A			1
	L	D6FZ 7331013											A9A			1

COPYRIGHT © 1986 — FORD MOTOR COMPANY — DEARBORN, MICHIGAN

1973/79 LINCOLN-MERCURY CARS

BODY TYPE	R/L	PART NUMBER LESS SUFFIX	TRIM CODES, COLORS and APPLICABLE PART NUMBER SUFFIXES													QTY
		TRIM CODES ▶		SECOND CHARACTER of TRIM CODE									ALL CODES	ALL CODES	OTHER	
				-B-Q	-D-N	-J	-T-2-U	-V	-Z-9							
		COLORS ▶	Lenth (inches)	BLUE	RED	TANG-ERINE	CHAM-OIS	CREAM /GOLD	VAQ-UERO				BLACK	WHITE		
31290	WINDLACE (QUARTER PILLAR)															
L(73)	R/L	D8FZ 7331290		A4B		A8E										2
	R/L	D9FZ 7331290			A9D											2
	R/L	D7FZ 7331290					A4T									2
	R/L	D2FZ 7331290											D			2

BODY TYPE	R/L	PART NUMBER	DESCRIPTION	QTY
40374-5	PANEL (BACK LOWER TRIM)			
L(64)	R	D7FZ 6440374-B4T	Paint to match	1
	L	D7FZ 6440375-A4T	Paint to match	1
45026	COVER (SPARE TIRE) - Serviced only in assy. - group 45455			
45440	COVER (LUGGAGE)			
L(64)		D7FZ 6445440-A6A	Black vinyl	1
45455	COVER (LUGGAGE COMPARTMENT FLOOR)			
L(62)		D5FZ 6245455-A	Burloom	1
L(64)		D7FZ 6445455-C5A	Black rubber	1
		D5FZ 6445455-G	Black carpet	1
		D5FZ 6445455-E	Blue carpet	1
		D7FZ 6445455-C2T	Chamois carpet	1
		D6FZ 6445455-L	Red carpet	1
46668	PANEL (PACKAGE TRAY TRIM)			
L(62)		D5FZ 6246668-B	Paint to match	1
50124	CONTAINER (GLASS ROOF PANEL STOWAGE)			
L(62,64)		D9FZ 6250124-A6A	Black vinyl	1
501A80	STRAP (ROOF OPENING GLASS CONTAINER)			
L(62,64)		D9ZZ 61501A80-A		1

BODY TYPE	R/L	PART NUMBER LESS SUFFIX	TRIM CODES, COLORS and APPLICABLE PART NUMBER SUFFIXES													QTY
		TRIM CODES ▶		SECOND CHARACTER of TRIM CODE									ALL CODES	ALL CODES	OTHER	
				-B-Q	-D-N	-J	-T-2-U	-V	-Z-9							
		COLORS ▶		BLUE	RED	TANG-ERINE	CHAM-OIS	CREAM /GOLD	VAQ-UERO				BLACK	WHITE		
519A02	PANEL (ROOF OPENING TRIM)															
L(62,64) - - w/ removeable roof-glass		D8FZ 62519A02		A4B		A8E										1
		D9FZ 62519A02			A9D											1
		D7FZ 62519A02					A4T						A8A			1

BODY TYPE	R/L	PART NUMBER	DESCRIPTION	QTY
60032	BACK KIT (REAR SEAT) - Serviced only in assy. - group 672A18			
60050-1	CUSHION KIT (FRONT SEAT)			
L	R	D6FZ 6260050-A	Bucket seat - hi-back	1
	L	D6FZ 6260051-A	Bucket seat - hi-back	1
	R	D5YY 6460050-A	Bucket seat - lo-back	1
	L	D5YY 6460051-A	Bucket seat - lo-back	1
60136-7	BACK KIT (FRONT SEAT)			
L	R/L	E0FZ 6261018-B	Frame - bucket seat - hi-back	2
	R/L	D3FZ 6264810-A	Pad - bucket seat - hi-back	2
	R/L	D9FZ 6261018-A	Frame - bucket seat - lo-back	2
	R/L	D6YY 6464810-A	Pad - bucket seat - lo-back	2

BODY TYPE	R/L	PART NUMBER LESS SUFFIX	TRIM CODES, COLORS and APPLICABLE PART NUMBER SUFFIXES														Q T Y
		TRIM CODES ➧		SECOND CHARACTER of TRIM CODE										ALL CODES	ALL CODES	OTHER	
				-B-Q	-D-N	-J	-T-2-U	-V	-Z-9								
		COLORS ➧		BLUE	RED	TANG-ERINE	CHAM-OIS	CREAM /GOLD	VAQ-UERO					BLACK	WHITE		
60579	CARPET (REAR SEAT BACK FLOOR)																
Notes:	▲ Use black																
L(64,73)		D6FZ 6460579		A0B	C5D	▲								A5A			1
		D7FZ 6460579					A2T										1
60579	MAT (REAR SEAT BACK FLOOR)																
L(64,73) - - rubber		D7FZ 6460579												A5A			1

BODY TYPE	R/L	PART NUMBER LESS SUFFIX	TRIM CODES AND APPLICABLE PART NUMBER SUFFIXES														QTY
60762-3	PANEL (FRONT SEAT BACK REAR TRIM INSERT)																
		TRIM CODES ➧	AA	AB	AD	AT	DB	DD	DJ	DT							
L	R/L	D3FZ 6261632	AA	AA	AA	AA											2
	R	D8YY 6460762					A4B		A8E								1
	L	D8YY 6460763					A4B		A8E								1
	R	D9YY 6460762						A9D									1
	L	D9YY 6460763						A9D									1
	R	D7YY 6460762								A4T							1
	L	D7YY 6460763								A4T							1
		TRIM CODES ➧	GA	GB	GD	GT	HA	HB	HD	HJ	HT						
L	R/L	D3FZ 6261632	AA	AA	AA	AA											2
	R	D5YY 6460762					A										1
	L	D5YY 6460763					A										1
	R	D8YY 6460762						A4B		A8E							1
	L	D8YY 6460763						A4B		A8E							1
	R	D9YY 6460762							A9D								1
	L	D9YY 6460763							A9D								1
	R	D7YY 6460762									A4T						1
	L	D7YY 6460763									A4T						1
61018	Refer to group 60136-7																

BODY TYPE	R/L	PART NUMBER LESS SUFFIX	TRIM CODES, COLORS and APPLICABLE PART NUMBER SUFFIXES														Q T Y
		TRIM CODES ➧		SECOND CHARACTER of TRIM CODE										ALL CODES	ALL CODES	OTHER	
				-B-Q	-D-N	-J	-T-2-U	-V	-Z-9								
		COLORS ➧	Length inches	BLUE	RED	TANG-ERINE	CHAM-OIS	CREAM /GOLD	VAQ-UERO					BLACK	WHITE		
611A08	HEAD REST ASSY. (FRONT SEAT BACK) - Incl. guide rods																
L	R/L	D9AZ 54611A08		BA	AW	★	AY							AU			2
61632	Refer to group 60762-3																
63500	BUTTON (FRONT and REAR SEAT CUSHION and BACK)																
L - - rectangular head		D8YY 6463500	7/16	A5B		A5E											AR
		D9YY 6463500	7/16		A4D												AR
		D7YY 6463500	7/16				A9T							★			AR

BODY TYPE	R/L	PART NUMBER	DESCRIPTION	QTY
63840	PAD (REAR SEAT CUSHION)			
L	R/L	D8FZ 6263840-A		2
64810	Refer to group 60136-7			
66600	COVER (REAR SEAT BACK) - Serviced only in assy. - group 672A18			

COPYRIGHT © 1986 — FORD MOTOR COMPANY — DEARBORN, MICHIGAN

1979 SOFT TRIM SCHEME CODES

AS LISTED ON CERTIFICATION LABEL

FOR MATERIAL IDENTIFICATION
REFER TO SALESMAN'S
COLOR AND UPHOLSTERY SELECTIONS GUIDE

THE SOFT TRIM SECTION INCLUDES ONLY THOSE ITEMS WHICH WERE AVAILABLE FOR SERVICE AT THE TIME OF PRINTING. ITEMS NOT SHOWN OR INDICATED WITH A BLACK STAR (★) IN THE CATALOG MUST BE IMPROVISED OR PROCURED LOCALLY.

● FW – Full width seat without center armrest, FWA – Full width seat with center armrest, B – Bucket seats

ZEPHYR (P)

CODE	BODY TYPE	DESCRIPTION OF TRIM SCHEME	● TYPE OF SEAT
AA	54,66,74	Black all vinyl	B
AB	54,66,74	Blue all vinyl	B
AD	54,66,74	Red all vinyl	B
AT	54,66,74	Chamois all vinyl	B
AU	54,66	Chamois and black all vinyl	B
BA	54,66,74	Black all vinyl	FW
BB	54,66,74	Blue all vinyl	FW
BD	54,66,74	Red all vinyl	FW
BT	54,66,74	Chamois all vinyl	FW
BU	54,66	Chamois and black all vinyl	FW
CB	54,66	Blue vinyl and blue cloth	FW
CD	54,66	Red vinyl and red cloth	FW
CT	54,66	Chamois vinyl and chamois cloth	FW
DA	54,66	Black all vinyl	FW
DB	54,66	Blue all vinyl	FW
DD	54,66	Red all vinyl	FW
DN	66	White all vinyl with red appointments	FW
DQ	66	White all vinyl with blue appointments	FW
DT	54,66	Chamois all vinyl	FW
DW	66	White all vinyl with black appointments	FW
D2	66	White all vinyl with chamois appointments	FW
EA	54,66,74	Black all vinyl	B
EB	54,66,74	Blue all vinyl	B
ED	54,66,74	Red all vinyl	B
EN	66	White all vinyl with red appointments	B
EQ	66	White all vinyl with blue appointments	B
ET	54,66,74	Chamois all vinyl	B
EW	66	White all vinyl with black appointments	B
E2	66	White all vinyl with chamois appointments	B
FA,FAA	54,66,74	Black vinyl and black cloth	FW
FB,FBA	54,66,74	Blue vinyl and blue cloth	FW
FD	54,66,74	Red vinyl and red cloth	FW
FT,FTA	54,66,74	Chamois vinyl and chamois cloth	FW
GA	54,66,74	Black all vinyl	FW
GB	54,66,74	Blue all vinyl	FW
GD	54,66,74	Red all vinyl	FW
GN	66	White all vinyl with red appointments	FW
GQ	66	White all vinyl with blue appointments	FW
GT	54,66,74	Chamois all vinyl	FW
GW	66	White all vinyl with black appointments	FW
G2	66	White all vinyl with chamois appointments	FW
HA	36,54,66,74	Black all cloth	FWA
HB	36,54,66,74	Blue all cloth	FWA
HD	36,54,66,74	Red all cloth	FWA
HT	36,54,66,74	Chamois all cloth	FWA
HV	36	Cream and gold all cloth	FWA

COPYRIGHT © 1986 — FORD MOTOR COMPANY — DEARBORN, MICHIGAN

1979 SOFT TRIM SCHEME CODES

AS LISTED ON CERTIFICATION LABEL

FOR MATERIAL IDENTIFICATION
REFER TO SALESMAN'S
COLOR AND UPHOLSTERY SELECTIONS GUIDE

THE SOFT TRIM SECTION INCLUDES ONLY THOSE ITEMS WHICH WERE AVAILABLE FOR SERVICE AT THE TIME OF PRINTING. ITEMS NOT SHOWN OR INDICATED WITH A BLACK STAR (★) IN THE CATALOG MUST BE IMPROVISED OR PROCURED LOCALLY.

● FW – Full width seat without center armrest, FWA – Full width seat with center armrest, B – Bucket seats

ZEPHYR (P)

CODE	BODY TYPE	DESCRIPTION OF TRIM SCHEME	● TYPE OF SEAT
JA	54,66	Black vinyl and black cloth	FW
JB	54,66	Blue vinyl and blue cloth	FW
JD	54,66	Red vinyl and red cloth	FW
JT	54,66	Chamois vinyl and chamois cloth	FW
KA	36,54,66,74	Black all vinyl	FWA
KB	36,54,66,74	Blue all vinyl	FWA
KD	36,54,66,74	Red all vinyl	FWA
KN	36,66	White all vinyl with red appointments	FWA
KQ	36,66	White all vinyl with blue appointments	FWA
KT	36,54,66,74	Chamois all vinyl	FWA
KV	36	Cream and gold vinyl	FWA
KW	36,66	White all vinyl with black appointments	FWA
K2	36,66	White all vinyl with chamois appointments	FWA
LB	54,66,74	Blue vinyl and blue cloth	B
LD	54,66,74	Red vinyl and red cloth	B
LT	54,66,74	Chamois vinyl and chamois cloth	B
MA	54,66	Black all vinyl	B
MB	54,66	Blue all vinyl	B
MD	54,66	Red all vinyl	B
MN	66	White all vinyl with red appointments	B
MQ	66	White all vinyl with blue appointments	B
MT	54,66	Chamois all vinyl	B
MW	66	White all vinyl with black appointments	B
M2	66	White all vinyl with chamois appointments	B
PA	54	Black all vinyl	FW
PB	54	Blue all vinyl	FW
PD	54	Red all vinyl	FW
PT	54	Chamois all vinyl	FW
QT	54	Chamois vinyl and chamois cloth	FW
RA	36	Black all vinyl	B
RB	36	Blue all vinyl	B
RD	36	Red all vinyl	B
RN	36	White all vinyl with red appointments	B
RQ	36	White all vinyl with blue appointments	B
RT	36	Chamois all vinyl	B
RV	36	Cream and gold all vinyl	B
RW	36	White all vinyl with black appointments	B
R2	36	White all vinyl with chamois appointments	B
SA,SAA	36	Black vinyl and black cloth	FW
SB,SBA	36	Blue vinyl and blue cloth	FW
SD	36	Red vinyl and red cloth	FW
ST,STA	36	Chamois vinyl and chamois cloth	FW
SV	36	Cream and gold vinyl and cream and gold cloth	FW
TA	36	Black all vinyl	FW
TB	36	Blue all vinyl	FW
TD	36	Red all vinyl	FW

1979 SOFT TRIM SCHEME CODES

AS LISTED ON CERTIFICATION LABEL

CODE	BODY TYPE	DESCRIPTION OF TRIM SCHEME	● TYPE OF SEAT

FOR MATERIAL IDENTIFICATION
REFER TO SALESMAN'S
COLOR AND UPHOLSTERY SELECTIONS GUIDE

THE SOFT TRIM SECTION INCLUDES ONLY THOSE ITEMS WHICH WERE AVAILABLE FOR SERVICE AT THE TIME OF PRINTING. ITEMS NOT SHOWN OR INDICATED WITH A BLACK STAR (★) IN THE CATALOG MUST BE IMPROVISED OR PROCURED LOCALLY.

●FW – Full width seat without center armrest, FWA–Full width seat with center armrest, B–Bucket seats

ZEPHYR (P)

TN	36	White all vinyl with red appointments	FW
TQ	36	White all vinyl with blue appointments	FW
TT	36	Chamois all vinyl	FW
TV	36	Cream and gold all vinyl	FW
TW	36	White all vinyl with black appointments	FW
T2	36	White all vinyl with chamois appointments	FW
UB	36	Blue vinyl and blue cloth	B
UD	36	Red vinyl and red cloth	B
UT	36	Chamois vinyl and chamois cloth	B
VA	54,66	Black all vinyl	B
VD	54,66	Red all vinyl	B
VT	54,66	Chamois all vinyl	B
VU	54,66	Chamois and black all vinyl	B
WA	54,66	Black all vinyl	FW
WD	54,66	Red all vinyl	FW
WT	54,66	Chamois all vinyl	FW
WU	54,66	Chamois and black all vinyl	FW
YB	36	Blue and chamois all cloth	FWA
YD	36	Red all cloth	FWA
YP	36	Cream vinyl and gold cloth	FWA
ZA	54,66	Black vinyl and black cloth	FW
ZD	54,66	Red vinyl and red cloth	FW
ZT	54,66	Chamois vinyl and chamois cloth	FW
ZU	54,66	Chamois and black vinyl and chamois and black cloth	FW

COPYRIGHT © 1986 — FORD MOTOR COMPANY — DEARBORN, MICHIGAN

1979 VINYL ROOF COVER CODES

AS LISTED ON CERTIFICATION LABEL

CODE	BODY TYPE	GRAIN and TYPE of ROOF	COLOR
		ZEPHYR (P)	
PB	36	Grande – 1/2	Blue
VA	36,54,66	Valino – full	Black
VB	54,66	Valino – full	Blue (dark)
VD	36,54,66	Valino – full	Red
VP	36,54,66	Valino – full	Silver
VQ	36,54,66	Valino – full	Blue (midnight)
VV	36,54,66	Valino – full	Cream
VW	36,54,66	Valino – full	White
WT	36,54,66	Lugano – full	Chamois
XT	36	Lugano – 1/2	Chamois
YA	36	Valino – 1/2	Black
YD	36	Valino – 1/2	Red
YP	36	Valino – 1/2	Silver
YQ	36	Valino – 1/2	Blue (midnight)
YV	36	Valino – 1/2	Cream
YW	36	Valino – 1/2	White

1973/79 LINCOLN-MERCURY CARS

BODY TYPE	R/L	PART NUMBER LESS SUFFIX	Length (inches)	SECOND CHARACTER of TRIM CODE -B-Q	-D-N	-J	-T-2-U	-P-V	-Z-9				ALL CODES	ALL CODES	OTHER	Q TY
TRIM CODES ▶																
COLORS ▶				BLUE	RED	TANGERINE	CHAMOIS	CREAM/GOLD	VAQUERO				BLACK	WHITE		
02344-5	PANEL (COWL TRIM)															
P	R	D8BZ 5402344		A9B	★		★	A8Y					★			1
	L	D8BZ 5402345		A9B	★		A9T	A8Y					★			1
04104	VISOR ASSY. - Less arm, bracket and mirror															
Notes:	⊕ Use with or without vanity mirror - refer to group 17A679 in Chassis Section for mirror															
P - - cloth ⊕	R/L	D9ZZ 6604104		★	C5D		★						C6A			2
- - vinyl ⊕ "Before 1/79"	R/L	D9BZ 5404104	17 1/8	★	A4D		★	A5V					A4A	A9W		2
"From 1/79" ⊕	R/L	D9ZZ 6604104	15 1/2	★	A4D		A8T	A5V					A4A	A9W		2
04282	PAD (INSTRUMENT PANEL UPPER)															
P - - w/o tachometer instrumentation		D8BZ 5404282		A9B			A6T	A3Y					★			1
		D9BZ 5404282			A8D											1
- - w/tachometer instrumentation		D9ZZ 6604282		★	A8D		A6T	★								1
		E1ZZ 6604282											A5A			1
13000	CARPET (FLOOR)															
P - - cut pile		D8BZ 5413000					A2T	★								1
		E0BZ 5413000		A5B	A1D								A5A			1
- - shag		E0BZ 5413000		B5B	B1D		★	★					★			1
13000	MAT (FRONT FLOOR)															
P(54) - - P/C & Taxi		D8BZ 5413000											C7A			1
13046	CARPET (REAR FLOOR) - Serviced only in assy. - group 13000															
13054	MAT (FRONT FLOOR)															
P(54) - - P/C & Taxi		D8BZ 5413054											A7A			1
13086	MAT (FRONT FLOOR)															
				FULL WIDTH												
P - - simulated leather		D9AZ 6613086		★	★								★	★	F(saddle)	1
				TWIN (w/o carpet)												
P - - rubber		D6FZ 6213086		B	E								A		C(brown)	1
P - - simulated leather		D9AZ 6613086		H	J								G	L	K(green)	1
		D9AZ 6613086													M(saddle)	1
13106	MAT (REAR FLOOR)															
				TWIN (w/carpet)												
P - - carpet		D9AZ 5413106		★			★						L			1
				TWIN (w/o carpet)												
P - - rubber -plain		D6FZ 6213106		B	E								A		C(brown)	1
P - - simulated leather		D9AZ 6613106		B	C								A	★	D(green)	1
		D9AZ 6613106													F(saddle)	1

COPYRIGHT © 1986— FORD MOTOR COMPANY —DEARBORN, MICHIGAN

1973/79 LINCOLN-MERCURY CARS

BODY TYPE	R/L	PART NUMBER LESS SUFFIX	TRIM CODES, COLORS and APPLICABLE PART NUMBER SUFFIXES													QTY
		TRIM CODES ▶		SECOND CHARACTER of TRIM CODE									ALL CODES	ALL CODES	OTHER	
				-B-Q	-D-N	-J	-T-2-U	-P-V	-Z-9							
		COLORS ▶	Length (inches)	BLUE	RED	TANG-ERINE	CHAM-OIS	CREAM /GOLD	VAQ-UERO				BLACK	WHITE		
24140-1	ARM REST - Incl. attaching parts															
P - - front door	R	D8FZ 6224140		A4B			A4T	A7V					A6A	★		1
	L	D8FZ 6224141		A4B			A4T	A7V					★	★		1
	R	D9FZ 6224140			A9D											1
	L	D9FZ 6224141			A9D											1
- - rear door	R/L	D8DZ 5427540		★			A4T						★	★		2
	R/L	D9DZ 5427540			A9D											2
27540	Refer to goup 24140															
31012-3	PANEL ASSY. (QUARTER TRIM)															
P(36)	R	D8BZ 3631012		★	★		★	★					★	★		1
	L	D8BZ 3631013		★	★		★	★					B9A	B6W		1
P(54)	R	D8BZ 5431012		★			★						★	★		1
	L	D8BZ 5431013		A4B			★						B9A	A6W		1
	R	D9BZ 5431012			★											1
	L	D9BZ 5431013			A9D											1
P(66) - - w/o louver quarter window	R	D8BZ 6631012		★			★						★	★		1
	L	D8BZ 6631013		A4B			A4T						★	★		1
	R	D9BZ 6631012			★											1
	L	D9BZ 6631013			A9D											1
- - w/louver quarter window	R	D8BZ 6631012		B4B	★		B4T						B9A	★		1
	L	D8BZ 6631013		B4B	★		B4T						B9A	B6W		1
P(74)	R	D8BZ 7431012		A4B			A4T						★			1
	R	D9BZ 7431012			A9D											1
- - w/o stowage compartment	L	D8BZ 7431013		★	★		A4T						★			1
- - w/stowage compartment	L	D8BZ 7431013		★			★						D9A			1
	L	D9BZ 7431013			B9D											1

BODY TYPE	R/L	PART NUMBER	DESCRIPTION	QTY
31406	STRAP (REAR DOOR ASSIST)			
P(54) - - Taxi	R/L	D40Z 5331406-A	Black	2

1973/79 LINCOLN-MERCURY CARS

BODY TYPE	R/L	PART NUMBER	DESCRIPTION	QTY
45494	COVER (LUGGAGE COMPARTMENT FLOOR)			
P(36)		D8BZ 3645494-A0P	Gray burloom	1
P(54,66)		D8BZ 5445494-C0P	Gray burloom	1
46668	PANEL (PACKAGE TRAY TRIM)			
Notes:	@ Use with or without speakers			
P(36,54,66)	@	D8BZ 5446668-B6T	Paint to match	1
46918-9	PANEL (PACKAGE TRAY TRIM END)			
P(36)	R	D8BZ 3646918-A0T	Paint to match	1
	L	D8BZ 3646919-A0T	Paint to match	1
P(54,66)	R	D8BZ 5446918-A0T	Paint to match	1
	L	D8BZ 5446919-A0T	Paint to match	1

BODY TYPE	R/L	PART NUMBER LESS SUFFIX	TRIM CODES, COLORS and APPLICABLE PART NUMBER SUFFIXES													QTY
		TRIM CODES ▶		SECOND CHARACTER of TRIM CODE									ALL CODES	ALL CODES	OTHER	
				-B-Q	-D-N	-J	-T-2-U	-P-V	-Z-9							
		COLORS ▶	Length (inches)	BLUE	RED	TANG-ERINE	CHAM-OIS	CREAM /GOLD	VAQ-UERO				BLACK	WHITE		
519A02	HEADLINING (ROOF SLIDING PANEL)															
P - - w/removable roof-glass		D8ZZ 66519A02		A4B				A7V								1
		D9ZZ 66519A02			A9D		A4T						A9A	A6W		1
51916	HEADLINING (ROOF)															
P(74) - - front		D9BZ 7451916		★	★		★						★			1
- - rear		D8BZ 7451916		C7B	★		C8T						D4A			1

BODY TYPE	R/L	PART NUMBER	DESCRIPTION	QTY
52018-9	COVER (ROOF SIDE REAR TRIM)			
P(54) - - w/o louver quarter window	R	D8BZ 5452018-A4T	Paint to match	1
	L	D8BZ 5452019-A4T	Paint to match	1
- - w/louver quarter window	R	D8BZ 5452018-B4T	Paint to match	1
	L	D8BZ 5452019-B4T	Paint to match	1
P(66) - - w/o louver quarter window	R	D8BZ 6652018-A4T	Paint to match	1
	L	D8BZ 6652019-A4T	Paint to match	1
- - w/louver quarter window	R	D8BZ 6652018-B4T	Paint to match	1
	L	D8BZ 6652019-B4T	Paint to match	1

COPYRIGHT © 1986— FORD MOTOR COMPANY —DEARBORN, MICHIGAN

53700 COVER (ROOF OUTSIDE)

VEHICLE SAFETY STA
EFFECT ON THE DATE
MANUFACTURE SHOW
3Z44H500001 PA
VEH. IDENT. NO.

BODY	COLOR	TRIM	TRAI
53B	1CDA	CR	X

P-12213

THIS VEHICLE CONFORMS ALI
BUMPER STANDARDS IN EFF
VEH. IDENT. NO. 0G63G
TYPE PASSENGER
1C
EXTERIOR PAINT COLORS

BODY	VR	MLDG.
54H	HD	G6D

P-16180

"BEFORE 10/6/78"

The third and fourth position of the color code indicate the type of grain (third position) and the color (fourth position).

For example.

1CDA means Black exterior (1C) with Levant grain full Black vinyl roof (DA).

"FROM 10/6/78"

The first and second position of the vinyl roof code indicate the type of grain (first position) and the color (second position).

For example.

HD under vinyl roof code (H) means with Grande grain full Maroon/Red bright vinyl roof (D).

In listing which follows the vinyl roof covers are arranged by body type and the vinyl roof cover Code as listed on the Certification Label.

BODY TYPE	R/L	PART NUMBER LESS SUFFIX	VINYL ROOF CODES AND APPLICABLE PART NUMBER SUFFIXES														QTY
53700		COVER (ROOF OUTSIDE) — Cont'd															
		VINYL ROOF CODES	PB	VA	VD	VP	VQ	VV	VW								
P(36) - - half roof front		D9BZ 3653700	★	A3A	★		★	★									1
		D8BZ 3653700				★			A4W								1
		VINYL ROOF CODES	YA	YD	YP	YQ	YV	YW	WT	XT							
P(36) - - half roof front		D9BZ 3653700	A3A	★		★	★										1
		D8BZ 3653700			★			A4W	★	★							1
		VINYL ROOF CODES	VA	VB	VD	VP	VQ	VV	VW	WT							
P(54,66)		D8BZ 5453700	A3A	★	★	A5P	★	★	A4W	★							1

BODY TYPE	R/L	PART NUMBER	DESCRIPTION	QTY
60032	BACK KIT (REAR SEAT)			
P(36,54,66)		E1DZ 5466700-A	Frame	1
		D8BZ 5466800-A	Pad	1
P(74)		D8BZ 7466700-B	Frame	1
		D8BZ 7466800-B	Pad	1
60050	CUSHION KIT (FRONT SEAT)			
Notes:	● For four door application remove welded-on front seat cushion center hinge bracket and front seat back center pivot pin from spring			
P	R/L	D8BZ 6660050-C	Bucket seat - Use with trim codes beginning with A,R, or U	2
	R/L	D8BZ 6660050-D	Bucket seat - Use with trim codes beginning with E,L ,M or V	2
	●	★	Full width seat - w/o center arm rest	1
		★	Spring - full width seat - w/o center arm rest-Heavy Duty	1
		D8BZ 54632A22-B	Pad - full width seat - w/o center arm rest-Heavy Duty	1
		★	Full width seat - w/center arm rest	1
60080	CUSHION KIT (REAR SEAT)			
P		D8BZ 5463840-D	Pad and frame	1
60136-7	BACK KIT (FRONT SEAT)			
P(36)	R/L	D8BZ 6661018-B	Frame - bucket seat	2
	R/L	D8BZ 5464810-C	Pad - bucket seat	2
	R	D8BZ 5461018-A	Frame - full width seat - w/center arm rest	1
	L	D8BZ 5461019-A	Frame - full width seat - w/center arm rest	1
	R/L	D8BZ 5464810-B	Pad - full width seat - w/center arm rest	2
	R	D8BZ 6661018-A	Frame - full width seat - w/o center arm rest	1
	L	D8BZ 6661019-A	Frame - full width seat - w/o center arm rest	1
	R	D8BZ 6664810-A	Pad - full width seat - w/o center arm rest	1
	L	D8BZ 6664811-A	Pad - full width seat - w/o center arm rest	1
P(54)	R/L	D9FZ 6261018-A	Frame - bucket seat	2
	R/L	D8BZ 5464810-C	Pad - bucket seat - Use with trim codes beginning with A	2
	R/L	D8BZ 5464810-D	Pad - bucket seat - Use with trim codes beginning with E,L ,M or V	2
	R	D8BZ 5461018-A	Frame - full width seat - w/center arm rest	1
	L	D8BZ 5461019-A	Frame - full width seat - w/center arm rest	1
	R/L	D8BZ 5464810-B	Pad - full width seat - w/center arm rest	1
		D8BZ 5461018-B	Frame - full width seat - w/o center arm rest	1
		D8BZ 5461018-C	Frame - full width seat - w/o center arm rest-Heavy Duty	1
		D8BZ 5464810-A	Pad - full width seat - w/o center arm rest	1
P(66)	R/L	D8BZ 6661018-B	Frame - bucket seat	2
	R/L	D8BZ 5464810-C	Pad - bucket seat - Use with trim codes beginning with A	2
	R/L	D8BZ 5464810-D	Pad - bucket seat - Use with trim codes beginning with E,L ,M or V	2
	R	D8BZ 5461018-A	Frame - full width seat - w/center arm rest	1
	L	D8BZ 5461019-A	Frame - full width seat - w/center arm rest	1
	R/L	D8BZ 5464810-B	Pad - full width seat - w/center arm rest	1
	R	D8BZ 6661018-A	Frame - full width seat - w/o center arm rest	1
	L	D8BZ 6661019-A	Frame - full width seat - w/o center arm rest	1
	R	D8BZ 6664810-A	Pad - full width seat - w/o center arm rest	1
	L	D8BZ 6664811-A	Pad - full width seat - w/o center arm rest	1
P(74)	R/L	D9FZ 6261018-A	Frame - bucket seat	2
	R/L	D8BZ 5464810-C	Pad - bucket seat - Use with trim codes beginning with A	2
	R/L	D8BZ 5464810-D	Pad - bucket seat - Use with trim codes beginning with E or L	2
	R	D8BZ 5461018-A	Frame - full width seat - w/center arm rest	1
	L	D8BZ 5461019-A	Frame - full width seat - w/center arm rest	1
	R/L	D8BZ 5464810-B	Pad - full width seat - w/center arm rest	2
		D8BZ 5461018-B	Frame - full width seat - w/o center arm rest	1
		D8BZ 5464810-A	Pad - full width seat - w/o center arm rest	1

COPYRIGHT © 1986— FORD MOTOR COMPANY —DEARBORN, MICHIGAN

1973/79 LINCOLN-MERCURY CARS

BODY TYPE	R/L	PART NUMBER LESS SUFFIX	TRIM CODES, COLORS and APPLICABLE PART NUMBER SUFFIXES													QTY
		TRIM CODES ▶		SECOND CHARACTER of TRIM CODE									ALL CODES	ALL CODES	OTHER	
				-B-Q	-D-N	-J	-T-2-U	-P-V	-Z-9							
		COLORS ▶	Length (inches)	BLUE	RED	TANG-ERINE	CHAM-OIS	CREAM /GOLD	VAQ-UERO				BLACK	WHITE		
60762	PANEL (FRONT SEAT BACK REAR TRIM INSERT)															
P - - w/bucket seat	R/L	D8BZ 6660762		A4B			A4T	A7V					A9A	A6W		2
	R/L	D9BZ 6660762			A9D											2
61018-9	Refer to goup 60136-7															
63100	Refer to group 60050															
632A22	Refer to group 60050															
63840	Refer to group 60080															
64810	Refer to group 60136-7															
66700	Refer to group 60032															
66800	Refer to group 60032															

1979 SOFT TRIM SCHEME CODES

AS LISTED ON CERTIFICATION LABEL

CODE	BODY TYPE	DESCRIPTION OF TRIM SCHEME	● TYPE OF SEAT

FOR MATERIAL IDENTIFICATION
REFER TO SALESMAN'S
COLOR AND UPHOLSTERY SELECTIONS GUIDE

THE SOFT TRIM SECTION INCLUDES ONLY THOSE ITEMS WHICH WERE AVAILABLE FOR SERVICE AT THE TIME OF PRINTING. ITEMS NOT SHOWN OR INDICATED WITH A BLACK STAR (★) IN THE CATALOG MUST BE IMPROVISED OR PROCURED LOCALLY.

● FWA – Full width seat with center armrest, B – Bucket seats

VERSAILLES (V)

SB	54	Blue vinyl and blue cloth	FWA
SD	54	Red vinyl and red cloth	FWA
SF	54	Cordovan vinyl and cordovan cloth	FWA
SK	54	Beryl (turquoise) vinyl and beryl (turquoise) cloth	FWA
SS	54	Gray vinyl and gray cloth	FWA
SU	54	Champagne vinyl and champagne cloth	FWA
TB	54	Blue all leather	FWA
TD	54	Red all leather	FWA
TF	54	Cordovan all leather	FWA
TK	54	Beryl (turquoise) all leather	FWA
TS	54	Gray all leather	FWA
TU	54	Champagne all leather	FWA
UB	54	Blue all leather	B
UD	54	Red all leather	B
UF	54	Cordovan all leather	B
UK	54	Beryl (turquoise) all leather	B
US	54	Gray all leather	B
UU	54	Champagne all leather	B

COPYRIGHT © 1986 — FORD MOTOR COMPANY — DEARBORN, MICHIGAN

1979 VINYL ROOF COVER CODES

AS LISTED ON CERTIFICATION LABEL

CODE	BODY TYPE	GRAIN and TYPE of ROOF	COLOR
		VERSAILLES (V)	
JA	54	Cavalry twill – coach	Black
JB	54	Cavalry twill – coach	Blue
JD	54	Cavalry twill – coach	Red
JF	54	Cavalry twill – coach	Cordovan
JJ	54	Cavalry twill – coach	Champagne (dark)
JK	54	Cavalry twill – coach	Beryl (turquoise)
JP	54	Cavalry twill – coach	Silver
JS	54	Cavalry twill – coach	Gray
JU	54	Cavalry twill – coach	Champagne (light)
JW	54	Cavalry twill – coach	White
J8	54	Cavalry twill – coach	Red
LA	54	Cavalry twill – (full) – simulated convertible roof	Black
LB	54	Cavalry twill – (full) – simulated convertible roof	Blue
LD	54	Cavalry twill – (full) – simulated convertible roof	Red
LF	54	Cavalry twill – (full) – simulated convertible roof	Cordovan
LJ	54	Cavalry twill – (full) – simulated convertible roof	Champagne (dark)
LK	54	Cavalry twill – (full) – simulated convertible roof	Beryl (turquoise)
LP	54	Cavalry twill – (full) – simulated convertible roof	Silver
LS	54	Cavalry twill – (full) – simulated convertible roof	Gray
LU	54	Cavalry twill – (full) – simulated convertible roof	Champagne (light)
LW	54	Cavalry twill – (full) – simulated convertible roof	White
L8	54	Cavalry twill – (full) – simulated convertible roof	Red
TA	54	Valino – coach	Black
TB	54	Valino – coach	Blue
TD	54	Valino – coach	Red
TF	54	Valino – coach	Cordovan
TJ	54	Valino – coach	Champagne (dark)
TK	54	Valino – coach	Beryl (turquoise)
TP	54	Valino – coach	Silver
TS	54	Valino – coach	Gray
TU	54	Valino – coach	Champagne (light)
TW	54	Valino – coach	White
T8	54	Valino – coach	Red
VA	54	Valino – (full) – simulated convertible roof	Black
VB	54	Valino – (full) – simulated convertible roof	Blue
VD	54	Valino – (full) – simulated convertible roof	Red
VF	54	Valino – (full) – simulated convertible roof	Cordovan
VJ	54	Valino – (full) – simulated convertible roof	Champagne (dark)
VK	54	Valino – (full) – simulated convertible roof	Beryl (turquoise)
VP	54	Valino – (full) – simulated convertible roof	Silver
VS	54	Valino – (full) – simulated convertible roof	Gray
VU	54	Valino – (full) – simulated convertible roof	Champagne (light)
VW	54	Valino – (full) – simulated convertible roof	White
V8	54	Valino – (full) – simulated convertible roof	Red

1973/79 LINCOLN-MERCURY CARS

BODY TYPE	R/L	PART NUMBER LESS SUFFIX		TRIM CODES, COLORS and APPLICABLE PART NUMBER SUFFIXES												Q T Y
			TRIM CODES ▶		SECOND CHARACTER of TRIM CODE								ALL CODES	ALL CODES	OTHER	
					-B-Q	-D-N	-F-6	-G-K	-R-5	-S	-U-4	-Y-8				
			COLORS ▶	Length (inches)	BLUE	RED	CORD-OVAN	BERYL	JADE	GRAY	CHAM-PAGNE	GOLD	BLACK	WHITE		
02344-5	PANEL (COWL TRIM)															
V	R	D74Y	5402344		A9B		★			A2P						1
	L	D74Y	5402345		A9B		A8F			A2P						1
	R	D84Y	5402344			A3D										1
	L	D84Y	5402345			A3D										1
	R	D94Y	5402344					A6K			A8U					1
	L	D94Y	5402345					A6K			A8U					1
04104-5	VISOR ASSY.															
Notes:	‡ Garage door opener not offered on R.H. (pass.) side															
V - - w/illuminated vanity mirror - - w/o garage door opener	R	D94Y	5404104		A4B	★	A0F	★		A2P	★					1
	L	D94Y	5404105		B4B	B1D	B0F	★		★	★					1
- - w/illuminated vanity mirror - - w/ garage door opener	‡ R	D94Y	5404104		A4B	★	A0F	★		A2P	★					1
	L	D94Y	5404105		D4B	D1D	D0F	D4K		D2P	D3U					1
04282	PAD (INSTRUMENT PANEL UPPER)															
V		D74Y	5404282		★		A3F			★						1
		D84Y	5404282			A4D										1
		D94Y	5404282					★			A2U					1
13086	MAT (FRONT FLOOR)															
				FULL WIDTH												
V - - simulated leather		D9AZ	6613086		★	★							★	★	D(green)	1
				TWIN (w/o carpet)												
V - - rubber		D60Z	6213086		B	F							A		C(brown)	1
		D70Z	6213086									A				1
V - - simulated leather		D9AZ	6613086		H	J							G	L	K(green)	1
		D9AZ	6613086												F(saddle)	1
13106	MAT (REAR FLOOR)															
				TWIN (w/carpet)												
V		D9AZ	5413106		★	★	C	★		F	★					1
				TWIN (w/o carpet)												
V - - rubber - plain		D6FZ	6213106		B	E							A		C(brown)	1
		D6FZ	6213106												F(green)	1
		D7FZ	6213106												A(gold)	1
V - - simulated leather		D9AZ	6613106		B	C							A	E	D(green)	1
		D9AZ	6613106												F(saddle)	1

COPYRIGHT © 1986— FORD MOTOR COMPANY —DEARBORN, MICHIGAN

NEW ISSUE

1973/79 LINCOLN-MERCURY CARS

BODY TYPE	R/L	PART NUMBER LESS SUFFIX	TRIM CODES, COLORS and APPLICABLE PART NUMBER SUFFIXES													QTY
		TRIM CODES ▶		SECOND CHARACTER of TRIM CODE									ALL CODES	ALL CODES	OTHER	
				-B-Q	-D-N	-F-6	-G-K	-R-5	-S	-U-4	-Y-8					
		COLORS ▶	Length (inches)	BLUE	RED	CORD-OVAN	BERYL	JADE	GRAY	CHAM-PAGNE	GOLD		BLACK	WHITE		
24140-1		ARM REST - Incl. attaching parts														
V - - front door	R	D74Y 5424140		ATB		ATF			ATS							1
	L	D74Y 5424141		ATB		ATF			ATS							1
	R	D84Y 5424140			A4D											1
	L	D84Y 5424141			A4D											1
	R	D94Y 5424140					A2K			A8U						1
	L	D94Y 5424141					A2K			A8U						1
- - rear door	R	D74Y 5427540		ATB		ATF			ATS							1
	L	D74Y 5427541		ATB		ATF			ATS							1
	R	D84Y 5427540			A4D											1
	L	D84Y 5427541			A4D											1
	R	D94Y 5427540					A2K			A8U						1
	L	D94Y 5427541					A2K			★						1
27540-1		Refer to group 24140-1														
31012-3		PANEL (QUARTER TRIM)														
V	R	D94Y 5431012		A5B	A2D	A5F	B4K		A6P	A9U						1
	L	D94Y 5431013		A5B	A2D	A5F	B4K		A6P	A9U						1

BODY TYPE	R/L	PART NUMBER	DESCRIPTION	QTY
45422-3		COVER (LUGGAGE COMPARTMENT SIDE)		
V	R	D94Y 5445422-A6K	Beryl (turquoise)	1
	L	D94Y 5445423-A6K	Beryl (turquoise)	1
	R	D74Y 5445422-A0B	Blue	1
	L	★	Blue	1
	R	D94Y 5445422-A8U	Champagne	1
	L	D94Y 5445423-A8U	Champagne	1
	R	D74Y 5445422-A1F	Cordovan	1
	L	D74Y 5445423-A1F	Cordovan	1
	R	D74Y 5445422-A4P	Gray	1
	L	D74Y 5445423-A4P	Gray	1
	R	D84Y 5445422-A3D	Red	1
	L	D84Y 5445423-A3D	Red	1
45443		COVER (LUGGAGE COMPARTMENT FRONT)		
V		D94Y 5445443-A0K	Beryl (turquoise)	1
		D74Y 5445443-A9B	Blue	1
		D94Y 5445443-A3U	Champagne	1
		D74Y 5445443-A2F	Cordovan	1
		D74Y 5445443-A4P	Gray	1
		D84Y 5445443-A5D	Red	1

BODY TYPE	R/L	PART NUMBER	DESCRIPTION	QTY
45455		COVER (LUGGAGE COMPARTMENT FLOOR)		
V		D94Y 5445455-A6K	Beryl (turquoise)	1
		★	Blue	1
		D94Y 5445455-A8U	Champagne	1
		D74Y 5445455-A1F	Cordovan	1
		D74Y 5445455-A	Gray	1
		D84Y 5445455-A3D	Red	1
45594		PANEL (LUGGAGE COMPARTMENT DOOR)		
V		D94Y 5445594-A6K	Beryl (turquoise)	1
		D84Y 5445594-A0B	Blue	1
		D94Y 5445594-A8U	Champagne	1
		D84Y 5445594-A1F	Cordovan	1
		D84Y 5445594-A4P	Gray	1
		D84Y 5445594-A3D	Red	1

BODY TYPE	R/L	PART NUMBER LESS SUFFIX	TRIM CODES, COLORS and APPLICABLE PART NUMBER SUFFIXES														QTY
		TRIM CODES ▶		SECOND CHARACTER of TRIM CODE									ALL CODES	ALL CODES	OTHER		
				-B-Q	-D-N	-F-6	-G-K	-R-5	-S	-U-4	-Y-8						
		COLORS ▶	Lenth (inches)	BLUE	RED	CORD-OVAN	BERYL	JADE	GRAY	CHAM-PAGNE	GOLD		BLACK	WHITE			
46668		PANEL (PACKAGE TRAY TRIM)															
V		D94Y 5446668		A5B	A2D	A5F	B4K		★	A9U							1

BODY TYPE	R/L	PART NUMBER LESS SUFFIX	VINYL ROOF CODES AND APPLICABLE PART NUMBER SUFFIXES														QTY
517C66		WELT (ROOF OUTSIDE MOULDING) - Refer to group 53700 for explanation of vinyl roof codes															
		VINYL ROOF CODES ▶	JA	JB	JD	JF	JJ	JK	JP	JS	JU	JW	J8				
V		D94Y 54517C66	★	A5B	A9D	★	A4U	★	★	★	A7U	★	A9D				1
		VINYL ROOF CODES ▶	LA	LB	LD	LF	LJ	LK	LP	LS	LU	LW	L8				
V		D94Y 54517C66	★	A5B	A9D	★	A4U	★	★	★	A7U	★	A9D				1
		VINYL ROOF CODES ▶	TA	TB	TD	TF	TJ	TK	TP	TS	TU	TW	T8				
V		D94Y 54517C66	★	★	★	★	A9U	★	★	B4P	B4U	★	★				1
		VINYL ROOF CODES ▶	VA	VB	VD	VF	VJ	VK	VP	VS	VU	VW	V8				
V		D94Y 54517C66	★	★	★	★	A9U	★	★	B4P	B4U	★	★				1
518B06-7		EXTENSION (ROOF SIDE REAR TRIM PANEL)															
V	R	D94Y 54518B06		A4B	A1D	A0F	A9K		A2P	A3U						1	
	L	D94Y 54518B07		A4B	A1D	A0F	A9K		A2P	A3U						1	
519A02		HEADLINING (ROOF SLIDING PANEL)															
V		D94Y 54519A02		A4B	★	★	★		★	★						1	
51916		HEADLINING (ROOF)															
V - - w/o sliding glass roof		D94Y 5451916		★	★	★	A9K		A2P	★						1	
- - w/sliding glass roof		D94Y 5451916		B4B	B1D	B0F	B9K		B2P	B3U						1	
52018-9		COVER (ROOF SIDE REAR TRIM)															
V	R	D94Y 5452018		A4B	A1D	A0F	A9K		A2P	A3U						1	
	L	D94Y 5452019		A4B	A1D	A0F	A9K		A2P	A3U						1	

COPYRIGHT © 1986— FORD MOTOR COMPANY —DEARBORN, MICHIGAN

53700 COVER (ROOF OUTSIDE)

VEHICLE SAFETY STA
EFFECT ON THE DATE
MANUFACTURE SHOW
3Z44H500001 PA
VEH. IDENT. NO.

BODY	COLOR	TRIM	TRAI
53B	1CDA	CR	X

P-12213

THIS VEHICLE CONFORMS ALI
BUMPER STANDARDS IN EFF

VEH. IDENT. NO. 0G63G
TYPE PASSENGER
1C
EXTERIOR PAINT COLORS

BODY	VR	MLDG.
54H	HD	G6D

P-16180

"BEFORE 10/6/78"

The third and fourth position of the color code indicate the type of grain (third position) and the color (fourth position).

For example.

1CDA means Black exterior (1C) with Levant grain full Black vinyl roof (DA).

"FROM 10/6/78"

The first and second position of the vinyl roof code indicate the type of grain (first position) and the color (second position).

For example.

HD under vinyl roof code (H) means with Grande grain full Maroon/Red bright vinyl roof (D).

In listing which follows the vinyl roof covers are arranged by body type and the vinyl roof cover Code as listed on the Certification Label.

BODY TYPE	R/L	PART NUMBER LESS SUFFIX	VINYL ROOF CODES AND APPLICABLE PART NUMBER SUFFIXES														QTY
53700	COVER (ROOF OUTSIDE) — Cont'd																
		VINYL ROOF CODES ▶	JA	JB	JD	JF	JJ	JK	JP	JS	JU	JW	J8				
V - - front half		D94Y 5453700	F8A	F5B	★	★	F4U	F4K	F4P	F3P	F7U	★	★				1
- - rear half		D94Y 5453700	★	★	★	★	A4U	★	★	A3P	★	★	★				1
		VINYL ROOF CODES ▶	LA	LB	LD	LF	LJ	LK	LP	LS	LU	LW	L8				
V		D94Y 5453700	D8A	D5B	D9D	D7F	D4U	★	D4P	★	D7U	D7W	D9D				1
		VINYL ROOF CODES ▶	TA	TB	TD	TF	TJ	TK	TP	TS	TU	TW	T8				
V - - front half w/glass roof opening		D94Y 5453700	G3A	G5B	G4D	G9F	G9U	G1K	G5P	G4P	G4U	G4W	G4D				1
- - front half w/o glass roof opening		D94Y 5453700	E3A	E5B	★	★	E9U	E1K	E5P	E4P	★	E4W	★				
- - rear half		D94Y 5453700	★	★	★	★	C9U	★	★	C4P	C4U	★	★				1

BODY TYPE	R/L	PART NUMBER LESS SUFFIX	VINYL ROOF CODES AND APPLICABLE PART NUMBER SUFFIXES														QTY
53700	COVER (ROOF OUTSIDE) — Cont'd																
		VINYL ROOF CODES ▶	VA	VB	VD	VF	VJ	VK	VP	VS	VU	VW	V8				
V-front half w/glass roof opening		D94Y 5453700	G3A	G5B	G4D	G9F	G9U	G1K	G5P	G4P	G4U	G4W	G4D				1
- - front half w/o glass roof opening		D94Y 5453700	E3A	E5B	★	★	E9U	E1K	E5P	E4P	★	E4W	★				1
- - rear half		D94Y 5453700	★	★	★	★	C9U	★	★	C4P	C4U	★	★				1

BODY TYPE	R/L	PART NUMBER	DESCRIPTION	QTY
537B00	PAD KIT (ROOF OUTSIDE COVER)			
V		★	Simulated convertible roof-complete-consists 1-pad-roof top center 2-pad-roof cover side 1-pad-back window lower 2-pad-back window side 1-pad-back window upper	1
		D94Y 54537B00-B	Simulated convertible roof-back window-consists of -1-pad-back window lower 2-pad-back window side 1-pad-back window upper	1
		D94Y 54537B00-C	Coach (1/2) roof-complete-consists of 2-pad-roof top 1-pad-back window lower 2-pad-back window side 1-pad-back window upper	1
		D94Y 54537B00-D	Coach (1/2) roof-back window-consists of 1-pad-back window lower 2-pad-back window side 1-pad-back window upper	1
60032	BACK KIT (REAR SEAT)			
V		★	Frame	1
		D6DZ 5466800-A	Pad	1
60136-7	BACK KIT (FRONT SEAT)			
V	R/L	D74Y 5464810-A	Pad - bucket seat	2
	R	★	Frame - bucket seat	1
	L	D7DZ 5461019-A	Frame - bucket seat	1
61018-9	Refer to group 60136-7			

BODY TYPE	R/L	PART NUMBER LESS SUFFIX	TRIM CODES AND APPLICABLE PART NUMBER SUFFIXES														QTY
62800	CORD (FRONT SEAT BACK ASSIST)																
		TRIM CODES ▶	SB	SD	SF	SK	SS	SU	TB	TD	TF	TK	TS	TU			
V	R/L	D74Y 5462800	B9B		B7F		B8P		A8B		A7F		A6P				2
	R/L	D84Y 5462800		A7D						B1D							2
	R/L	D94Y 5462800				A9K		A7U				B4K		B3U			2
		TRIM CODES ▶	UB	UD	UF	UK	US	UU									
V	R/L	D74Y 5462800	A8B		A7F		A6P										2
	R/L	D84Y 5462800		B1D													2
	R/L	D94Y 5462800				B4K		B3U									2
64810	Refer to group 60136-7																
66800	Refer to group 60032																

COPYRIGHT © 1986— FORD MOTOR COMPANY —DEARBORN, MICHIGAN

NEW ISSUE

EXTERIOR MOULDING SECTION

THE EXTERIOR MOULDING SECTION INCLUDES ONLY THOSE ITEMS WHICH WERE AVAILABLE FOR SERVICE AT THE TIME OF PRINTING. ITEMS NOT SHOWN OR INDICATED WITH A BLACK STAR(★) IN THE CATALOG MUST BE IMPROVISED OR PROCURED LOCALLY.

For your convenience the exterior moulding illustrations have been merged with the related text information to form a combined Exterior Moulding (text and illustrations) Section.

This section includes moulding illustrations and part number information for Back End (luggage compartment, lower back panel, liftgate and tailgate), Body Side (standard, optional and protection), Door Edge Guard, Tape Stripes and Roof and Back Belt areas of the vehicle.

To simplify locating the appropriate illustration this section is arranged by years, i.e., 1973, 1974, 1975, 1976, etc. and each year is sequenced according to catalog model code i.e., A (Mercury), C (Montego), etc.

All retainer information (illustrations and part numbers) is shown in Exterior Moulding Section "R".

Refer to indexes which precede each model year to determine the correct section and page number (or row and column number in your microform transparency).

A new Certification Label has been incorporated into production for 1979 vehicles built from October 6, 1978. This label includes a three (3) digit code to identify the color of the body side mouldings.

For example: 36A black odense vinyl body side moulding.

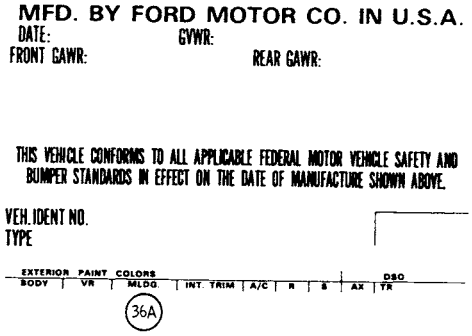

For 1979 vehicles built before October 6, 1978 it will be necessary to refer to the vinyl roof swatches in the 1979 Salesman's Color and Upholstery Selections Guide for assistance in determining the correct moulding color.

COPYRIGHT © 1986 — FORD MOTOR COMPANY — DEARBORN, MICHIGAN

INDEX

TITLE	SECTION	PAGE	ILLUS. NO.
1973			
A (MERCURY)			
BACK END			
-body types 53B,F,57B,F and 65B,F	73A	13	P-10113
-body types 53H,K,X,57H,K,X and 65H,K,X	73A	14	P-10118
-body type 71	73A	15	P-10114
BACK WINDOW			
-body types 53 and 57	73A	16	P-12460
-body type 65	73A	17	P-12510
BELT			
Back-refer to ROOF and BACK BELT			
Front door, Rear door and Quarter-refer to Body Side			
BODY SIDE			
-body types 53 and 57	73A	2,3	P-10109
-body type 65	73A	4,5	P-10110
-body types 71B,H	73A	6	P-10111
-body type 71K	73A	7,8	P-10112
BODY SIDE PROTECTION			
-body types 53 and 57	73A	9	P-11821
-body type 65	73A	10	P-11820
-body type 71	73A	11	P-11822
DOOR EDGE GUARDS	73A	24	P-10061
LUGGAGE COMPARTMENT - refer to BACK END			
ROOF and BACK BELT			
-body types 53B,F	73A	18	P-10115
-body types 53H,K,X and 57H,K,X	73A	20	P-10119
-body types 65B,F	73A	19	P-10116
-body types 65H,K,X	73A	21	P-10120
-body type 71	73A	22	P-11886
ROOF DRIP - refer to ROOF and BACK BELT			
TAILGATE - refer to BACK END			
WHEEL OPENING COVER PARTS			
-body types 53,57 and 65	73A	23	P-8181
WINDOW FRAME			
-body type 71	73A	12	P-12501
WINDSHIELD	73A	1	P-12521
C (MONTEGO)			
BACK END			
-body types 53,63 and 65	73C	15	P-8711
-body type 71	73C	15	P-8710
BACK WINDOW			
-body types 53 and 65	73C	16	P-12457
-body type 63	73C	16	P-12456
BELT			
Back-refer to ROOF and BACK BELT			
Front door, Rear door and Quarter-refer to Body Side			
BODY SIDE			
-body types 53B,D	73C	3	P-8715
-body type 53K	73C	4,5	P-11823
-body type 63	73C	6	P-8716
-body types 65B,D	73C	7	P-8714
-body type 65K	73C	8,9	P-11826
-body type 71D	73C	3	P-8713
-body type 71K	73C	10,11	P-8712

COPYRIGHT © 1986 — FORD MOTOR COMPANY — DEARBORN, MICHIGAN

INDEX

TITLE	SECTION	PAGE	ILLUS. NO.
1973			
C (MONTEGO) - cont'd.			
BODY SIDE PROTECTION			
-body type 53	73C	12	P-11824
-body type 65	73C	12	P-11825
-body type 71	73C	13	P-11827
DOOR EDGE GUARDS	73C	2	P-10061
LUGGAGE COMPARTMENT - refer to BACK END			
ROOF and BACK BELT			
-body type 53	73C	17	P-9241
-body types 63 and 65B, D-w/full vinyl roof	73C	18	P-12019
-body type 65K	73C	19	P-10746
ROOF DRIP - refer to ROOF and BACK BELT			
TAILGATE - refer to BACK END			
WINDOW FRAME			
-body type 71	73C	14	P-12502
WINDSHIELD	73C	1	P-12521
D (LINCOLN)			
BACK END			
-body types 53 and 65	73D	6	P-7024
BACK WINDOW			
-body type 53	73D	7	P-12470
-body type 65	73D	7,8	P-12471
BELT			
Back-refer to ROOF and BACK BELT			
Front door, Rear door and Quarter-refer to Body Side			
BODY SIDE			
-body type 53	73D	2,3	P-13614
-body type 65	73D	4,5	P-8694
BODY SIDE PROTECTION			
-body type 53	73D	2,3	P-13614
-body type 65	73D	4,5	P-8694
DOOR EDGE GUARDS	73D	8	P-10061
LUGGAGE COMPARTMENT - refer to BACK END			
ROOF and BACK BELT			
-body types 53 and 65	73D	9	P-12010
ROOF DRIP - refer to ROOF and BACK BELT			
WHEEL OPENING COVER PARTS	73D	10	P-11123
WINDSHIELD	73D	1	P-12521
F (COUGAR)			
BACK END			
-body types 65 and 76	73F	3	P-7970
BACK WINDOW	73F	3,4	P-12472
BELT			
Back-refer to ROOF and BACK BELT			
Front door, and Quarter-refer to Body Side			
BODY SIDE			
-body types 65 and 76	73F	2	P-7969
BODY SIDE PROTECTION			
-body types 65 and 76	73F	2	P-7969
DOOR EDGE GUARDS	73F	4	P-10061

INDEX

TITLE	SECTION	PAGE	ILLUS. NO.
1973			
F (COUGAR) - cont'd.			
LUGGAGE COMPARTMENT - refer to BACK END			
ROOF and BACK BELT			
-body type 65	73F	5	P-8572
-body type 76	73F	6	P-8277
ROOF DRIP - refer to ROOF and BACK BELT			
WINDSHIELD			
-body type 65	73F	1	P-12523
-body type 75	73F	1	P-12524
J (CAPRI)			
BACK END	73J	4	P-10533
BACK WINDOW	73J	5	P-12473
BELT			
Back-refer to ROOF and BACK BELT			
Front door and Quarter-refer to Body Side			
BODY SIDE	73J	2,3	P-10534
BODY SIDE PROTECTION	73J	2,3	P-10534
DOOR EDGE GUARDS	73J	6	P-10061
LUGGAGE COMPARTMENT - refer to BACK END			
ROOF and BACK BELT	73J	2,3	P-10534
ROOF DRIP	73J	2,3	P-10534
WINDOW FRAME - refer to Body Illustration Index 230			
WINDSHIELD	73J	1	P-12582
K (MARK IV)			
BACK END			
-body type 65	73K	4	P-8724
BACK WINDOW	73K	1	P-12459
BELT			
Back-refer to ROOF and BACK BELT			
Front door and Quarter-refer to Body Side			
BODY SIDE			
-body type 65	73K	2,3	P-10148
BODY SIDE PROTECTION			
-body type 65	73K	2,3	P-10148
DOOR EDGE GUARDS	73K	5	P-10061
LUGGAGE COMPARTMENT - refer to BACK END			
ROOF and BACK BELT			
-body type 65	73K	6	P-12011
ROOF DRIP - refer to ROOF and BACK BELT			
WINDSHIELD	73K	1	P-12521
P (COMET)			
BACK END			
-body types 54 and 62	73P	9	P-7875
BACK WINDOW			
-body type 54	73P	10	P-12468
-body type 62	73P	10	P-12467
BELT			
Back-refer to ROOF and BACK BELT			
Front door, Rear door and Quarter-refer to Body Side			

COPYRIGHT © 1986 — FORD MOTOR COMPANY — DEARBORN, MICHIGAN

INDEX

TITLE	SECTION	PAGE	ILLUS. NO.
1973			
P (COMET) - cont'd.			
BODY SIDE			
-body type 54-w/o luxury decor	73P	1	P-11854
-body type 54-w/luxury decor	73P	3	P-10011
-body type 62-w/o luxury decor	73P	2	P-8226
-body type 62-w/luxury decor	73P	4	P-10012
BODY SIDE PROTECTION			
-body type 54	73P	5	P-11855
-body type 62	73P	6	P-8186
DOOR EDGE GUARDS	73P	12	P-10061
LUGGAGE COMPARTMENT- refer to BACK END			
ROOF and BACK BELT			
-body type 54	73P	11	P-12012
-body type 62	73P	11	P-10374
ROOF DRIP - refer to ROOF and BACK BELT			
STRIPES			
-body types 62	73P	2	P-8226
WINDOW FRAME			
-body type 54	73P	7	P-12500
-body type 62	73P	8	P-12499
WINDSHIELD	73P	1	P-12520
Y (METEOR)			
BACK END			
-body types 53 and 65	73Y	8	P-11861
-body type 71	73Y	9	P-11862
BACK WINDOW			
-body type 53	73Y	10	P-12460
-body type 65	73Y	11	P-12510
BELT			
Back-refer to ROOF and BACK BELT			
Front door, Rear door and Quarter-refer to Body Side			
BODY SIDE			
-body type 53	73Y	2	P-11856
-body type 65	73Y	3	P-11857
-body type 71	73Y	4	P-11860
BODY SIDE PROTECTION			
-body type 53	73Y	5	P-11821
-body type 65	73Y	5	P-11820
-body type 71	73Y	6	P-11822
DOOR EDGE GUARDS	73Y	16	P-10061
LUGGAGE COMPARTMENT - refer to BACK END			
ROOF and BACK BELT			
-body type 53 (full vinyl roof)	73Y	12	P-10115
-body type 53 (halo vinyl roof)	73Y	13	P-10119
-body type 65 (full vinyl roof)	73Y	12	P-10116
-body type 65 (halo vinyl roof)	73Y	14	P-10120
-body type 71	73Y	15	P-11886
ROOF DRIP - refer to ROOF and BACK BELT			
TAILGATE - refer to BACK END			
WHEEL OPENING COVER PARTS			
-body types 53 and 65	73Y	1	P-8181
WINDOW FRAME			
-body type 71	73Y	7	P-12501
WINDSHIELD	73Y	1	P-12521

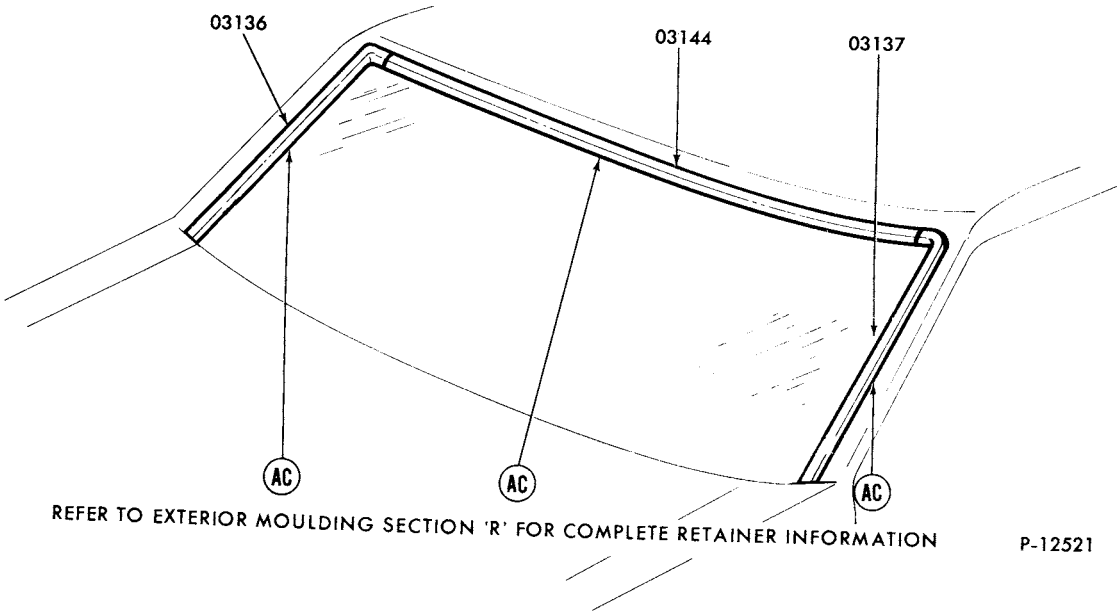

1973 MERCURY - WINDSHIELD

GROUP NUMBER	PART NAME	DESCRIPTION	PART NUMBER		QTY.
03136-7	Moulding (windshield outside side)	Body type 53, 57, 71	(RH)♦ D7AZ 5303136-A	(LH)♦ D7AZ 5303137-A	1
		Body type 65	(RH)♦ D7AZ 6003136-A	(LH)♦ D7AZ 6003137-A	1
03144	Moulding (windshield outside top)	Body type 53, 57, 71	♦D3AZ 5303144-A		1
		Body type 65	♦D7AZ 6003144-A		1

COPYRIGHT © 1986 — FORD MOTOR COMPANY — DEARBORN, MICHIGAN

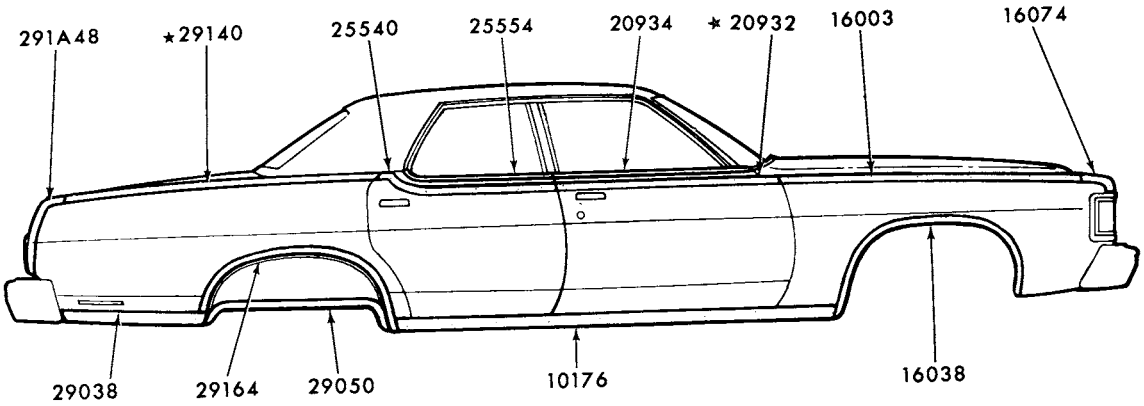

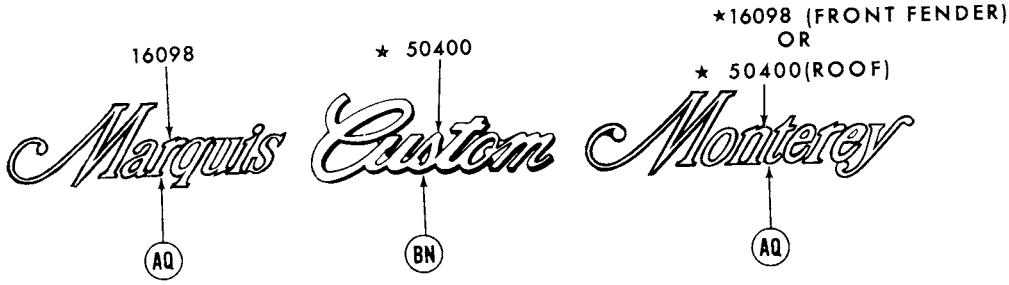

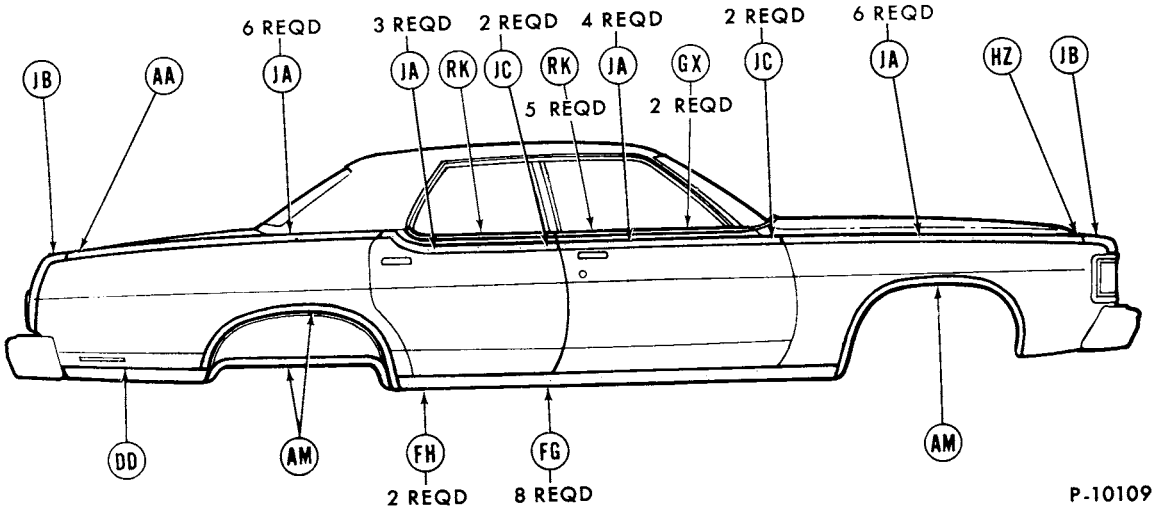

REFER TO EXTERIOR MOULDING SECTION "R" FOR COMPLETE RETAINER INFORMATION

1973 MERCURY - BODY TYPES 53 and 57 - SIDE

1973 MERCURY - BODY TYPES 53 and 57 - SIDE - cont'd.

GROUP NUMBER	PART NAME	DESCRIPTION	PART NUMBER		QTY.
10176-7	Moulding (body rocker panel)	90 7/32" long	(RH)♦D3MY 6510176-A	(LH)♦D3MY 6510177-A	1
16003-4	Moulding (front fender upper)	Body types 53K,57K	(RH)★D3MY 16003-A Not replaced (3/85)	(LH)♦D3MY 16004-A	1
16038-9	Moulding (front fender wheel opening)		(RH)♦D3MY 16038-A	(LH)♦D3MY 16039-A	1
16074-5	Moulding (front fender front extension)	Body types 53K,57K	(RH)♦D3MY 16074-A	(LH)♦D3MY 16075-A	1
16098	Plate (front fender name)	"Marquis"- Body types 53H,K, X,57H,K,X	♦D3MY 16098-B	R.H. and L.H.	2
20934-5	Moulding (front door outside belt)	Incl. weatherstrip- body type 53	(RH)♦D5AZ 5320934-B	(LH)♦D5AZ 5320935-B	1
		Incl. weatherstrip- body type 57	(RH)♦D5AZ 5320934-B	(LH)♦D3AZ 5720935-B	1
25540-1	Moulding (rear door outside upper)	Body types 53K,57K	(RH)★D3MY 5325540-A Not replaced (6/82)	(LH)★D3MY 5325541-A Not replaced (6/82)	1
25554-5	Moulding (rear door outside belt)	Incl. weatherstrip- body type 53	(RH)♦D5AZ 5325554-A	(LH)♦D5AZ 5325555-A	1
29038-9	Moulding (quarter outside)	Body types 53H,K, X,57H,K,X	(RH)♦D3MY 6529038-B	(LH)♦D3MY 6529039-B	1
29050-1	Moulding (quarter panel wheel opening cover)	Body types 53B,F	(RH)♦D3MY 6529050-B	(LH)♦D3MY 6529051-B	1
		Body types 53H, K,X,57H,K,X	(RH)♦ D3MY 6529050-A	(LH)♦ D3MY 6529051-A	1
291A48-9	Moulding (quarter outside	Body types 53K,57K	(RH)♦D3MY 65291A48-A	(LH)♦D3MY 65291A49-A	1
29164-5	Moulding (quarter wheel opening)	Body types 53B,F	(RH)♦D3MY 6529164-A	(LH)♦D3MY 6529165-A	1
517A20	Ornament (roof side outside)	Body types 53H,K, 57H,K	♦D0MY 65517A20-A	R.H. and L.H.	2

COPYRIGHT © 1986 — FORD MOTOR COMPANY — DEARBORN, MICHIGAN

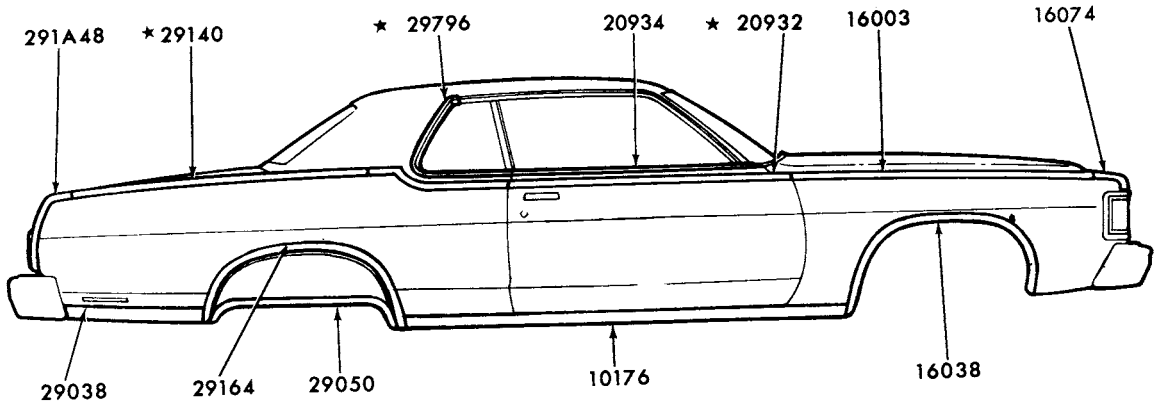

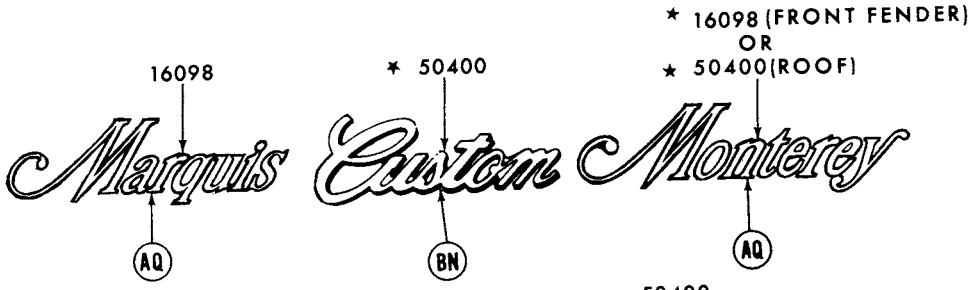

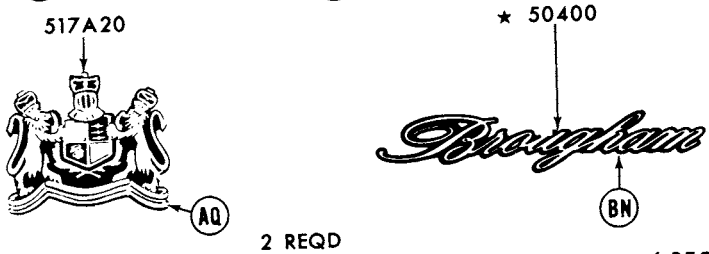

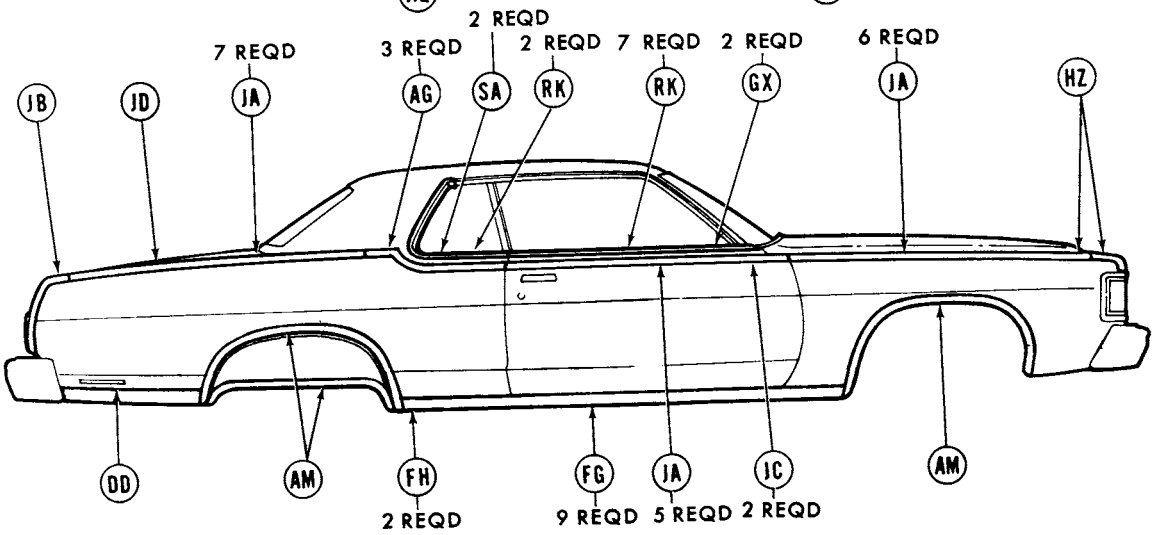

REFER TO EXTERIOR MOULDING SECTION "R" FOR COMPLETE RETAINER INFORMATION P-10110

1973 MERCURY - BODY TYPE 65 - SIDE

1973 MERCURY - BODY TYPE 65 - SIDE - cont'd.

GROUP NUMBER	PART NAME	DESCRIPTION	PART NUMBER		QTY.
10176-7	Moulding (body rocker panel)	90 7/32" long	(RH)♦D3MY 6510176-A	(LH)♦D3MY 6510177-A	1
16003-4	Moulding (front fender upper)	Body type 65K	(RH)★D3MY 16003-A	(LH)♦D3MY 16004-A	1
16038-9	Moulding (front fender wheel opening)		(RH)♦D3MY 16038-A	(LH)♦D3MY 16039-A	1
16074-5	Moulding (front fender front extension)	Body type 65K	(RH)♦D3MY 16074-A	(LH)♦D3MY 16075-A	1
16098	Plate (front fender name)	"Monterey"- Body types 65B,F	★D3MY 16098-A Not replaced (6/82)	R.H. and L.H.	2
		"Marquis"- Body types 65H,K,X	♦D3MY 16098-B	R.H. and L.H.	2
20934-5	Moulding (door outside belt)	Incl. weatherstrip	(RH)♦ D5AZ 6020934-A	(LH)♦D5AZ 6020935-A	1
29038-9	Moulding (quarter outside)	Body types 65H, K,X	(RH)♦D3MY 6529038-B	(LH)★D3MY 6529039-B Not replaced (7/81)	1
29050-1	Moulding (quarter panel wheel opening cover)	Body types 65H, K,X	(RH)♦D3MY 6529050-A	(LH)♦D3MY 6529051-A	1
		Body types 65B,F	(RH)♦D3MY 6529050-B	(LH)♦D3MY 6529051-B	1
29140-1	Moulding (quarter panel outside upper)	Body type 65K	(RH)★D3MY 6529140-A Not replaced (6/82)	(LH)★D3MY 6529141-A Not replaced (6/82)	1
291A48-9	Moulding (quarter outside upper rear)	Body type 65K	(RH)♦D3MY 65291A48-A	(LH)♦D3MY 65291A49-A	1
29164-5	Moulding (quarter wheel opening)	Body types 65B,F	(RH)♦D3MY 6529164-A	(LH)♦D3MY 6529165-A	1
517A20	Ornament (roof side outside)	Body types 65H,K	♦D0MY 65517A20-A	R.H. and L.H.	2

COPYRIGHT © 1986 — FORD MOTOR COMPANY — DEARBORN, MICHIGAN

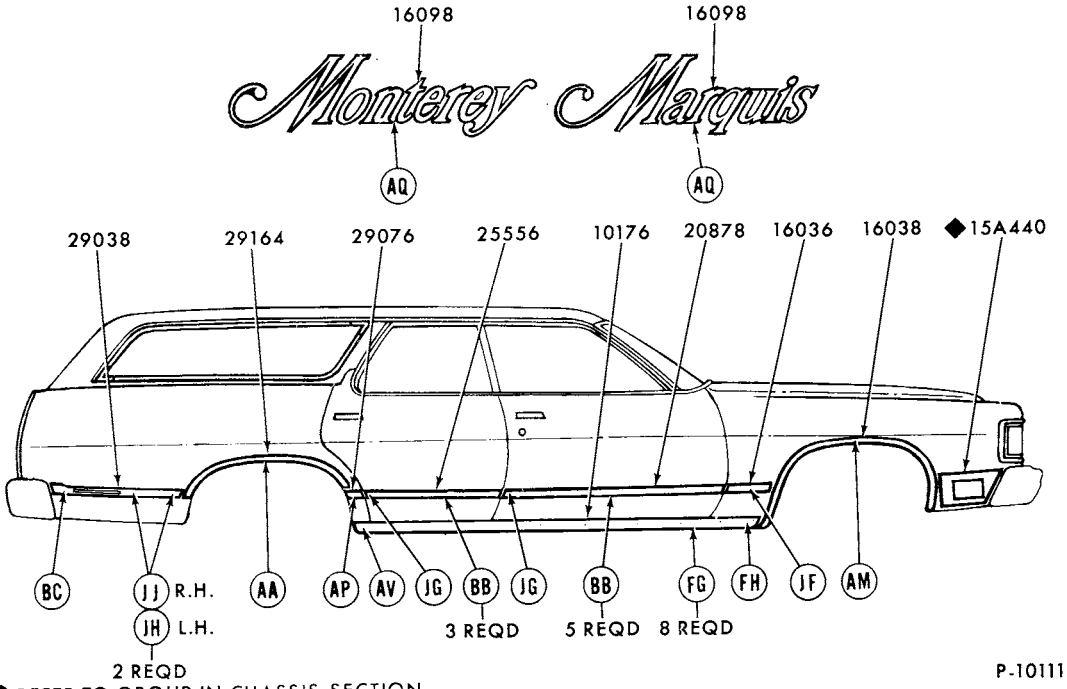

◆ REFER TO GROUP IN CHASSIS SECTION
REFER TO EXTERIOR MOULDING SECTION "R" FOR COMPLETE RETAINER INFORMATION

1973 MERCURY - BODY TYPES 71B,H - SIDE

GROUP NUMBER	PART NAME	DESCRIPTION	PART NUMBER		QTY.
10176-7	Moulding (body rocker panel)	87 3/4" long	(RH)♦D3MY 7110176-A	(LH)♦D3MY 7110177-A	1
16036-7	Moulding (front fender side)	Body type 71H	(RH)♦D3MY 16036-A	(LH)♦D3MY 16037-A	1
16038-9	Moulding (front fender wheel opening)	Body type 71H	(RH)★D3MY 16038-B Not replaced (6/82)	(LH)★D3MY 16039-B Not replaced (6/82)	1
16098	Plate (front fender name)	"Monterey"- Body type 71B	♦D3MY 16098-A	R.H. and L.H.	2
		"Marquis"- Body type 71H	♦D3MY 16098-B	R.H. and L.H.	2
20878-9	Moulding (front door outside lower)	Body type 71H	(RH)♦D3MY 7120878-A	(LH)♦D3MY 7120879-A	1
25556-7	Moulding (rear door outside lower)	Body type 71H	(RH)♦D3MY 7125556-A	(LH)♦D3MY 7125557-A	1
29038-9	Moulding (quarter outside)	Body type 71H	(RH)♦D3MY 7129038-C	(LH)♦D3MY 7129039-C	1
29076-7	Moulding (quarter outside lower front)	Body type 71H	(RH)♦D3MY 7129076-A	(LH)♦D3MY 7129077-A	1
29164-5	Moulding (quarter wheel opening)	Body type 71H	(RH)♦D3MY 7129164-A	(LH)♦D3MY 7129165-A	1

♦ Includes attaching parts

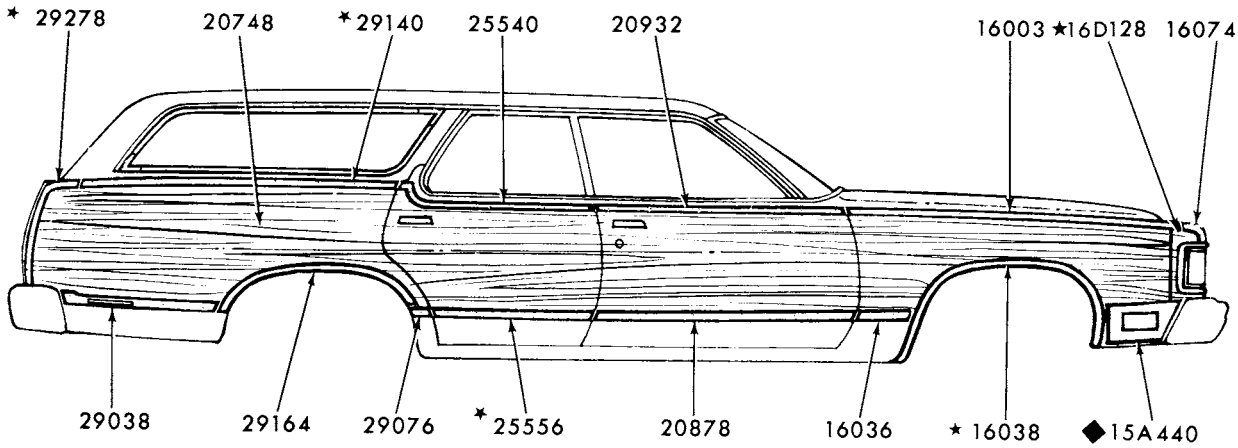

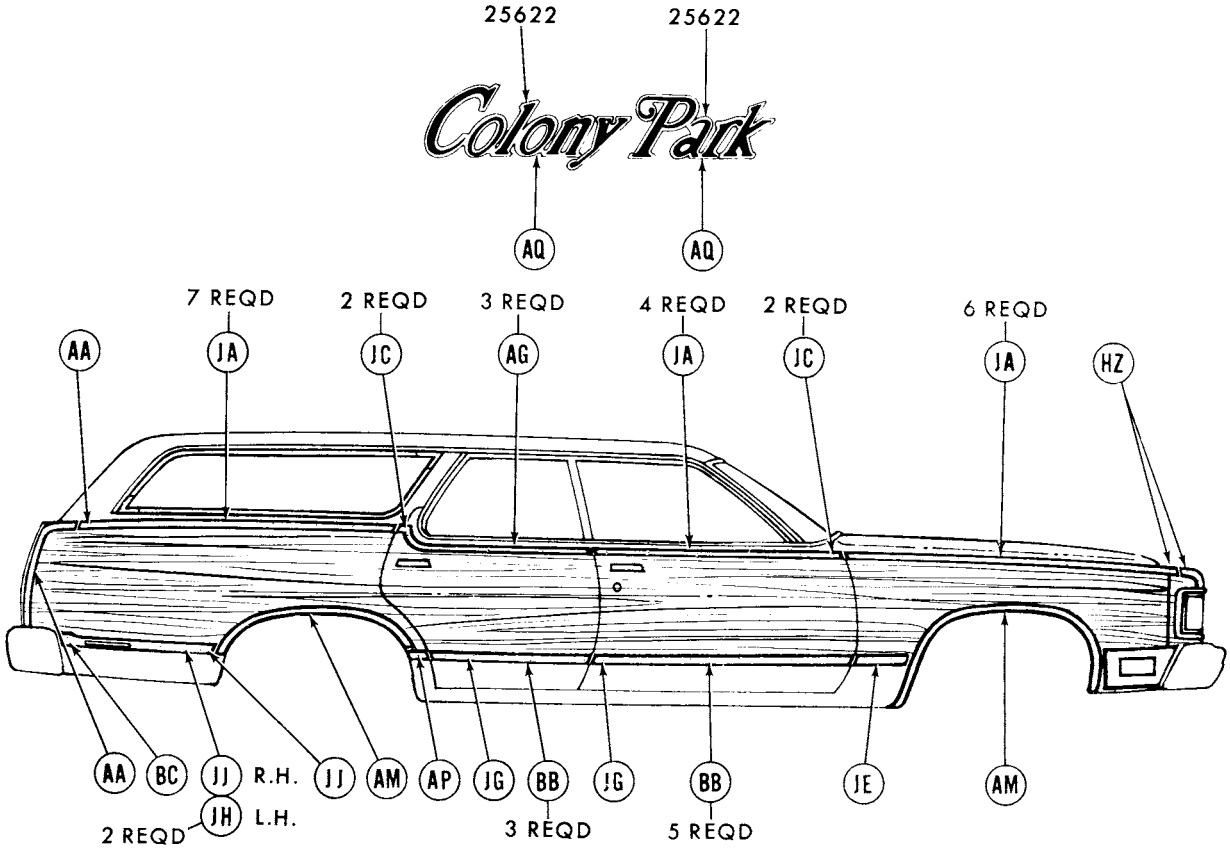

◆ REFER TO GROUP IN TEXT SECTION
REFER TO EXTERIOR MOULDING SECTION "R" FOR COMPLETE RETAINER INFORMATION

P-10112

1973 MERCURY - BODY TYPE 71K - SIDE

COPYRIGHT © 1986 — FORD MOTOR COMPANY — DEARBORN, MICHIGAN

1973 MERCURY - BODY TYPE 71K - SIDE - cont'd.

GROUP NUMBER	PART NAME	DESCRIPTION	PART NUMBER		QTY.
16003-4	Moulding (front fender upper)		(RH)★D3MY 16003-A	(LH)♦D3MY 16004-A	1
16036-7	Moulding (front fender side)		(RH)♦D3MY 16036-A	(LH)♦D3MY 16037-A	1
16038-9	Moulding (front fender wheel opening)		(RH)★D3MY 16038-B Not replaced (6/82)	(LH)★D3MY 16039-B Not replaced (6/82)	1
16074-5	Moulding (front fender front extension)		(RH)♦D3MY 16074-A	(LH)♦D3MY 16075-A	1
20748	Transfer (wood grain)	23 1/4" x 69"-Teak wood-w/planking lines-cut to fit	D3MY 7120748-A		AR
20878-9	Moulding (front door outside lower)		(RH)♦D3MY 7120878-A	(LH)♦D3MY 7120879-A	1
20932-3	Moulding (front door outside upper)		(RH)♦D3MY 5320932-A	(LH)♦D3MY 5320933-A	1
25540-1	Moulding (rear door outside upper)		(RH)♦D3MY 5325540-A	(LH)♦D3MY 5325541-A	1
25556-7	Moulding (rear door outside lower)		(RH)★D3MY 7125556-A Not replaced (6/82)	(LH)★D3MY 7125557-A Not replaced (6/82)	1
25622	Plate (name)	"Colony"	♦D3MY 7125622-A	R.H. and L.H.	2
		"Park"	♦D3MY 7125622-B	R.H. and L.H.	2
29038-9	Moulding (quarter outside lower rear)		(RH)♦D3MY 7129038-C	(LH)♦D3MY 7129039-C	1
29076-7	Moulding (quarter outside lower front)		(RH)♦D3MY 7129076-A	(LH)♦D3MY 7129077-A	1
29140-1	Moulding (quarter panel outside upper)		(RH)★D3MY 7129140-A Not replaced (6/82)	(LH)★D3MY 7129141-A Not replaced (6/82)	1
29164-5	Moulding (quarter wheel opening)		(RH)♦D3MY 7129164-A	(LH)♦D3MY 7129165-A	1
29278-9	Moulding (quarter outside rear end)		(RH)★D3MY 7129278-A Not replaced (6/82)	(LH)★D3MY 7129279-A Not replaced (6/82)	1

♦ Includes attaching parts

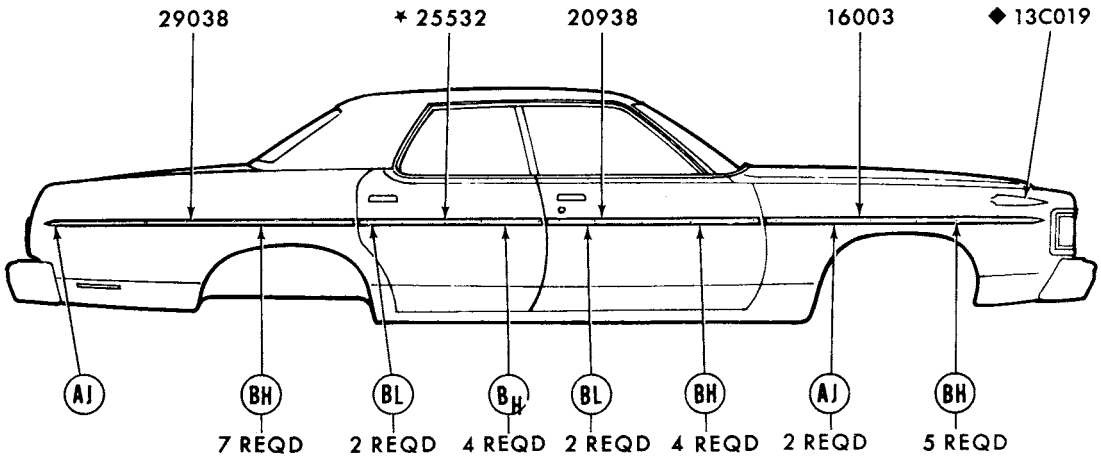

REFER TO EXTERIOR MOULDING SECTION "R" FOR COMPLETE RETAINER INFORMATION

◆ REFER TO GROUP IN CHASSIS SECTION

P-11821

1973 MERCURY - BODY TYPES 53 and 57 - SIDE PROTECTION MOULDINGS

GROUP NUMBER	PART NAME	DESCRIPTION	PART NUMBER		QTY.
16003-4	Moulding (front fender side)	Black vinyl insert	(RH)♠D3MY 16003-B	(LH)♠D3MY 16004-B	1
		Bright finish	(RH)★D3MY 16003-D	(LH)★D3MY 16004-D	1
20938-9	Moulding (front door outside)	Black vinyl insert	(RH)♠D3MY 5320938-A	(LH)♠D3MY 5320939-A	1
		Bright finish	(RH)♠D3MY 5320938-B	(LH)♠D3MY 5320939-B	1
25532-3	Moulding (rear door outside)	Black vinyl insert	(RH)♠D3AZ 5325532-A	(LH)♠D3AZ 5325533-A	1
		Bright finish	(RH)*D3MY 5325532-B Not replaced (6/82)	(LH)*D3MY 5325533-B Not replaced (6/82)	1
29038-9	Moulding (quarter outside)	Black vinyl insert	(RH)♠D3MY 5329038-A	(LH)♠D3MY 5329039-A	1
		Bright finish	(RH)♠D3MY 5329038-B	(LH)♠D3MY 5329039-B	1

COPYRIGHT © 1986 — FORD MOTOR COMPANY — DEARBORN, MICHIGAN

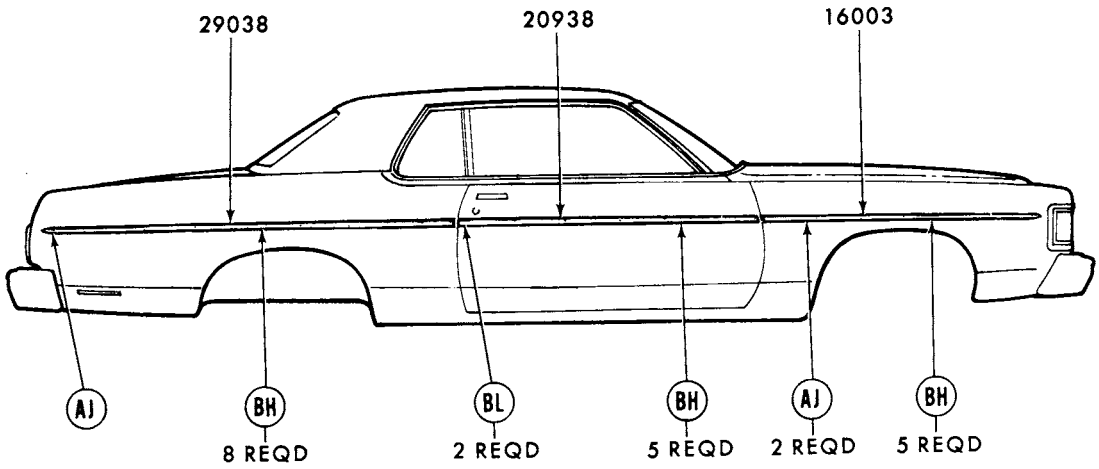

REFER TO EXTERIOR MOULDING SECTION "R" FOR COMPLETE RETAINER INFORMATION

P-11820

1973 MERCURY - BODY TYPE 65 - SIDE PROTECTION MOULDINGS

GROUP NUMBER	PART NAME	DESCRIPTION	PART NUMBER		QTY.
16003-4	Moulding (front fender side)	Black vinyl insert	(RH)♦D3MY 16003-B	(LH)♦D3MY 16004-B	1
		Bright finish	(RH)★D3MY 16003-D	(LH)★D3MY 16004-D	1
20938-9	Moulding (front door outside)	Black vinyl insert	(RH)♦D3AZ 6520938-A	R.H. and L.H.	2
		Bright finish	(RH)♦D3MY 6520938-B	(LH)♦D3MY 6520939-B	1
29038-9	Moulding (quarter outside)	Black vinyl insert	(RH)♦D3MY 6529038-A	(LH)♦D3MY 6529039-A	1
		Bright finish	(RH)♦D3MY 6529038-C	(LH)♦D3MY 6529039-C	1

♦ Includes attaching parts

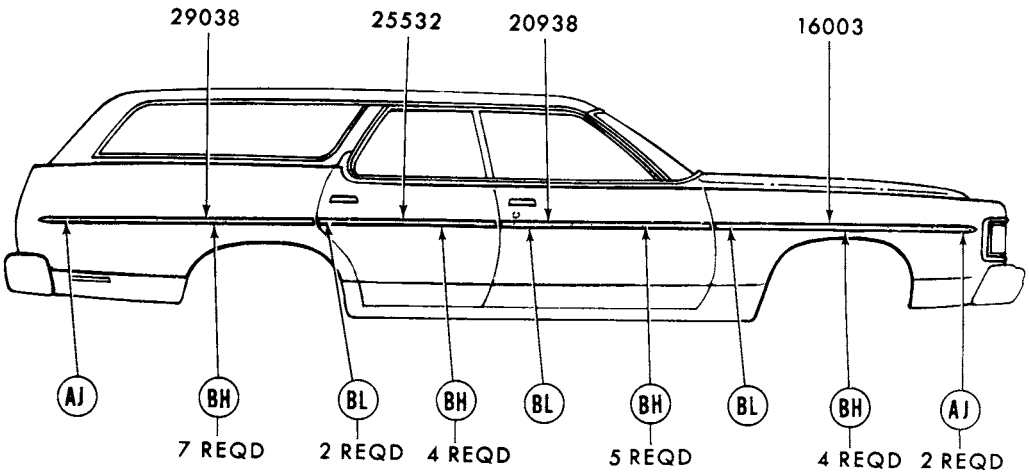

REFER TO EXTERIOR MOULDING SECTION "R" FOR COMPLETE RETAINER INFORMATION P-11822

1973 MERCURY - BODY TYPE 71 - SIDE PROTECTION MOULDINGS

GROUP NUMBER	PART NAME	DESCRIPTION	PART NUMBER		QTY.
16003-4	Moulding (front fender side)	Black vinyl insert	(RH)♦D3MY 16003-B	(LH)♦D3MY 16004-B	1
		Bright finish	(RH)★D3MY 16003-D	(LH)★D3MY 16004-D	1
		Bright-w/brown vinyl insert	(RH)♦D3MY 16003-C	(LH)♦D3MY 16004-C	1
20938-9	Moulding (front door outside)	Black vinyl insert	(RH)♦D3MY 5320938-A	(LH)♦D3MY 5320939-A	1
		Bright finish	(RH)♦D3MY 5320938-B	(LH)♦D3MY 5320939-B	1
		Bright-w/brown vinyl insert	(RH)♦D3MY 7120938-A	(LH)♦D3MY 7120939-A	1
25532-3	Moulding (rear door outside)	Black vinyl insert	(RH)★D3AZ 5325532-A Not replaced (7/81)	(LH)♦D3AZ 5325533-A	1
		Bright finish	(RH)★D3MY 5325532-B Not replaced (6/82)	(LH)★D3MY 5325533-B Not replaced (6/82)	1
		Bright-w/brown vinyl insert	(RH)♦D3MY 7125532-A	(LH)♦D3MY 7125533-A	1
29038-9	Moulding (quarter outside)	Black vinyl insert	(RH)♦D3MY 7129038-A	(LH)♦D3MY 7129039-A	1
		Bright finish	(RH)★D3MY 7129038-D Not replaced (6/82)	(LH)★D3MY 7129039-D Not replaced (6/82)	1
		Bright-w/brown vinyl insert	(RH)♦D3MY 7129038-B	(LH)♦D3MY 7129039-B	1

COPYRIGHT © 1986 — FORD MOTOR COMPANY — DEARBORN, MICHIGAN

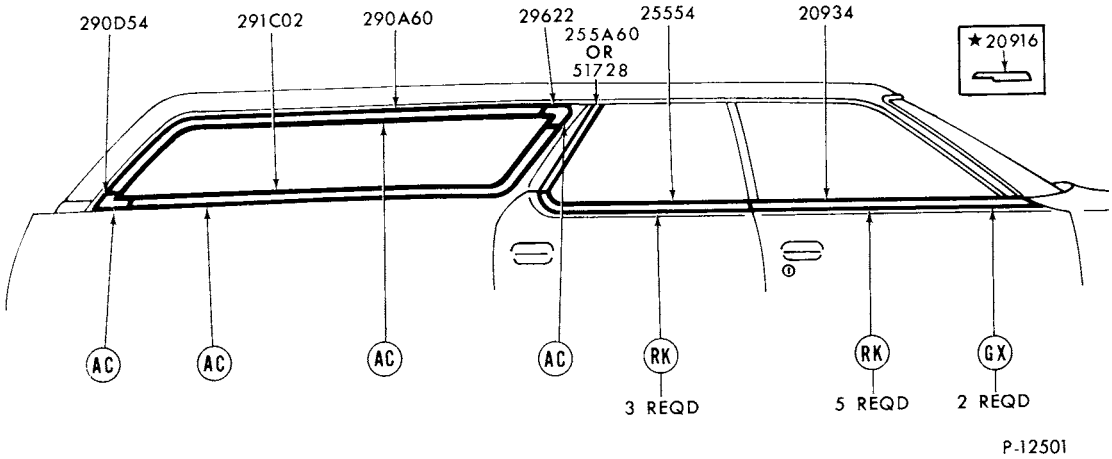

1973 MERCURY - BODY TYPE 71 - DOOR and QUARTER WINDOW FRAME

GROUP NUMBER	PART NAME	DESCRIPTION	PART NUMBER		QTY.
20934-5	Moulding (front door outside belt)	Incl. weatherstrip	(RH)♦ D5AZ 5320934-B	(LH)♦ D5AZ 5320935-B	1
25554-5	Moulding (rear door outside belt)	Incl. weatherstrip	(RH)♦ D5AZ 5325554-A	(LH)♦ D5AZ 5325555-A	1
290D54-5	Moulding (quarter window outside lower rear corner)		(RH)♦ D5AZ 71290D54-A	(LH)♦ D5AZ 71290D55-A	1
290A60-1	Moulding (quarter window outside upper)		(RH)♦ D5AZ 71290A60-A	(LH)♦ D5AZ 71290A61-A	1
291C02-3	Moulding (quarter window outside lower rear)		(RH)♦ D5AZ 71291C02-A	(LH)♦ D5AZ 71291C03-A	1
29622-3	Moulding (quarter window outside front)		(RH)♦ D5AZ 7129622-A	(LH)♦ D5AZ 7129623-A	1
51728-9	Moulding (rear door window opening outside)		(RH)♦ D4AZ 7151728-A	(LH)♦ D4AZ 7151729-A	1

♦ Includes attaching parts

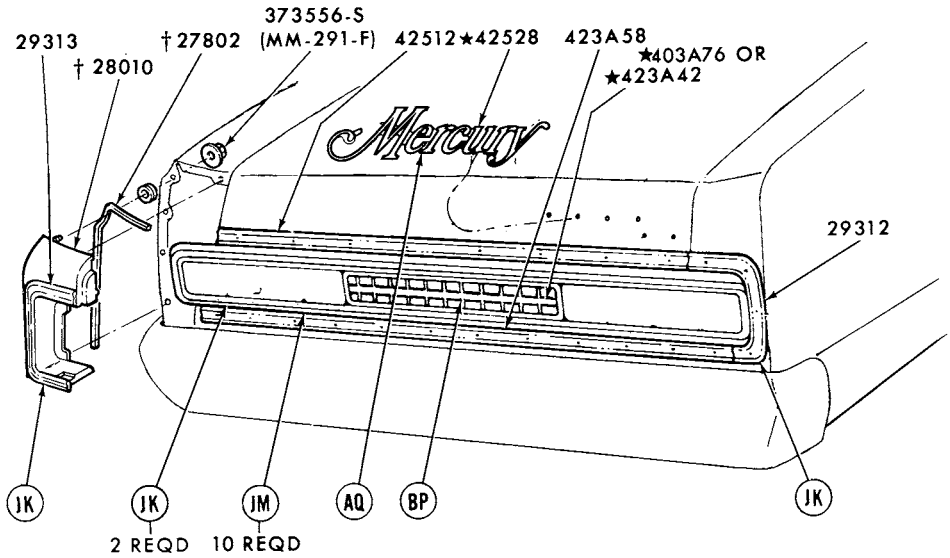

REFER TO EXTERIOR MOULDING SECTION "R" FOR COMPLETE RETAINER INFORMATION
†REFER TO GROUP IN TEXT SECTION

P-10113

1973 MERCURY - BODY TYPES 53, 57 and 65 - BACK END

GROUP NUMBER	PART NAME	DESCRIPTION	PART NUMBER	QTY.
29312-3	Moulding (quarter panel rear extension)		(RH)♦D3MY 6529312-A (LH)♦D3MY 6529313-A	1
403A76	Plate (lower back panel)	Body types 53B, F and 65B, F	♦D3MY 65403A76-C	1
423A58	Moulding (lower back panel)	Body types 53, 57 and 65H, K, X	♦D3MY 65423A58-A	1
42512	Moulding (luggage compartment door)		♦D5MY 6542512-A	1

COPYRIGHT © 1986 — FORD MOTOR COMPANY — DEARBORN, MICHIGAN

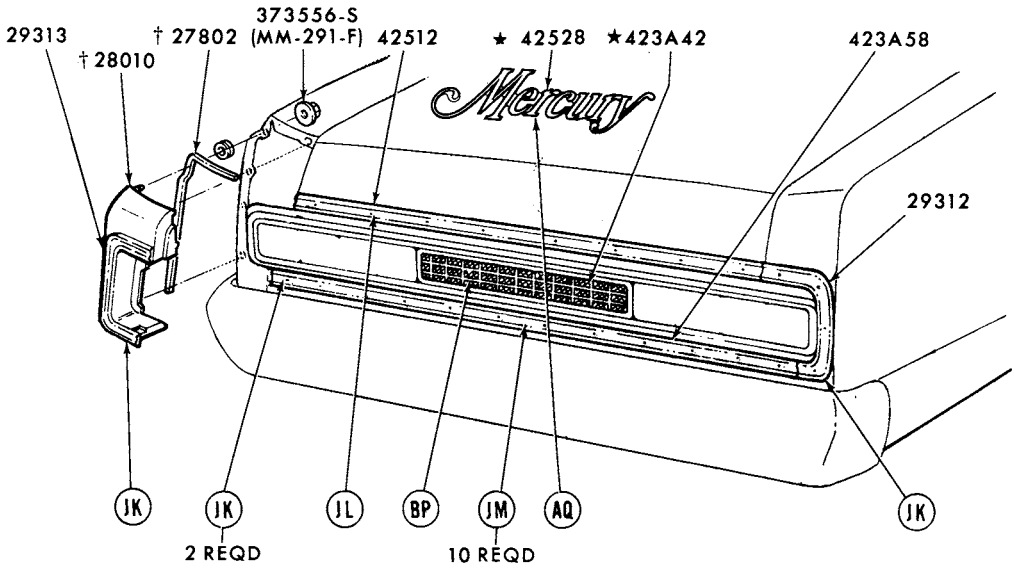

REFER TO EXTERIOR MOULDING SECTION "R" FOR COMPLETE RETAINER INFORMATION P-10118
†REFER TO GROUP IN TEXT SECTION

1973 MERCURY - BODY TYPES 53H,K,X,57H,K,X,and 65H,K,X - BACK END

GROUP NUMBER	PART NAME	DESCRIPTION	PART NUMBER	QTY.
29312-3	Moulding (quarter panel rear extension)		(RH)♦D3MY 6529312-A (LH)♦D3MY 6529313-A	1
423A58	Moulding (lower back panel)		♦D3MY 65423A58-A	1
42512	Moulding (luggage compartment door)		♦D5MY 6542512-A	1

♦ Includes attaching parts

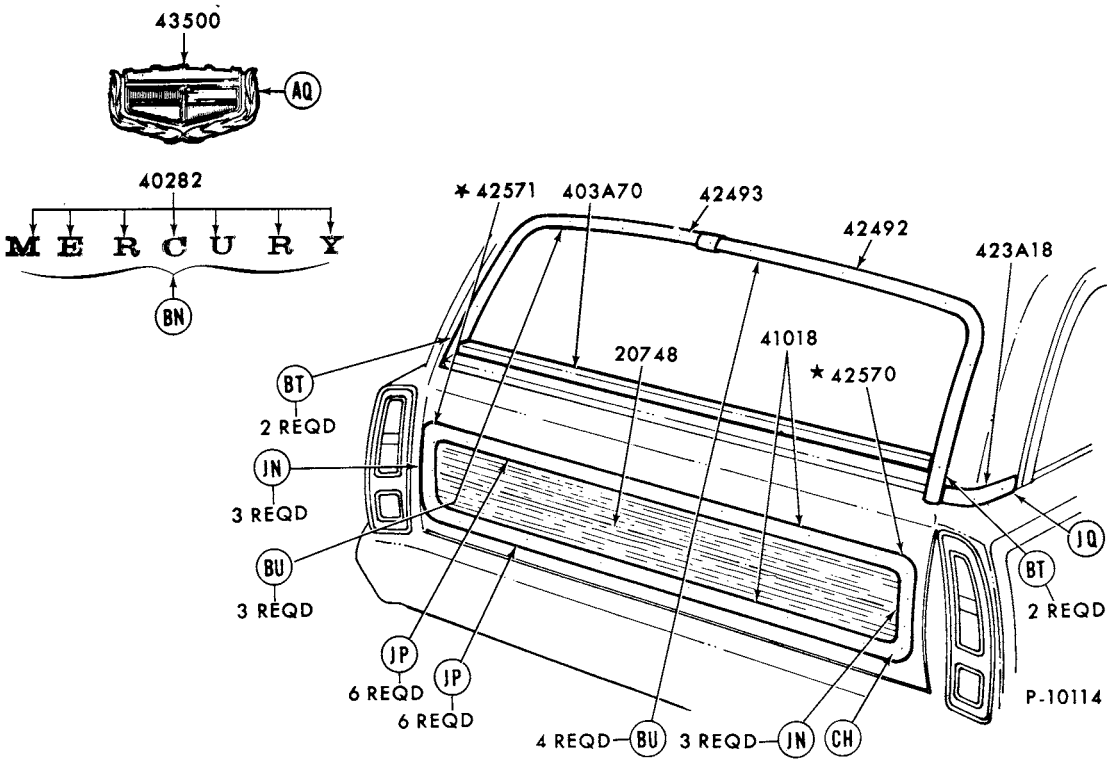

REFER TO EXTERIOR MOULDING SECTION "R" FOR COMPLETE RETAINER INFORMATION

1973 MERCURY - BODY TYPE 71 - BACK END

GROUP NUMBER	PART NAME	DESCRIPTION	PART NUMBER		QTY.
20748	Transfer (wood grain)	23 1/4" x 69"- cut to fit- body type 71K	D3MY 7120748-A		1
40282	Letter (tailgate)	"M"	♦D3MY 7140282-A		1
		"E"	♦D3MY 7140282-B		1
		"R"	♦D3MY 7140282-C		2
		"C"	♦D3MY 7140282-D		1
		"U"	♦D3MY 7140282-E		1
		"Y"	♦D3MY 7140282-F		1
403A70	Moulding (tailgate outside belt)	Wash and wipe	★D4AZ 71403A70-D	Not replaced (7/81)	1
		W/o wash and wipe	♦ D4AZ 71403A70-E		1
41018	Moulding (tailgate outside)	Body type 71K	♦C9MY 7141018-A		2
423A18-9	Moulding (back belt outside side)	W/vinyl roof	(RH)♦D3AZ 71423A18-A	(LH)♦D3AZ 71423A19-A Not replaced (7/81)	1
42492-3	Moulding (back window outside side)		(RH)♦D3AZ 7142492-A	(LH)♦D3AZ 7142493-A	1
42570-1	Moulding (tailgate outside side)	Body type 71K	(RH)★C9MY 7142570-A Not replaced (6/82)	(LH)★C9MY 7142571-A Not replaced (6/82)	1
43500	Ornament (tailgate)		♦C9MY 7143500-A		1

COPYRIGHT © 1986 — FORD MOTOR COMPANY — DEARBORN, MICHIGAN

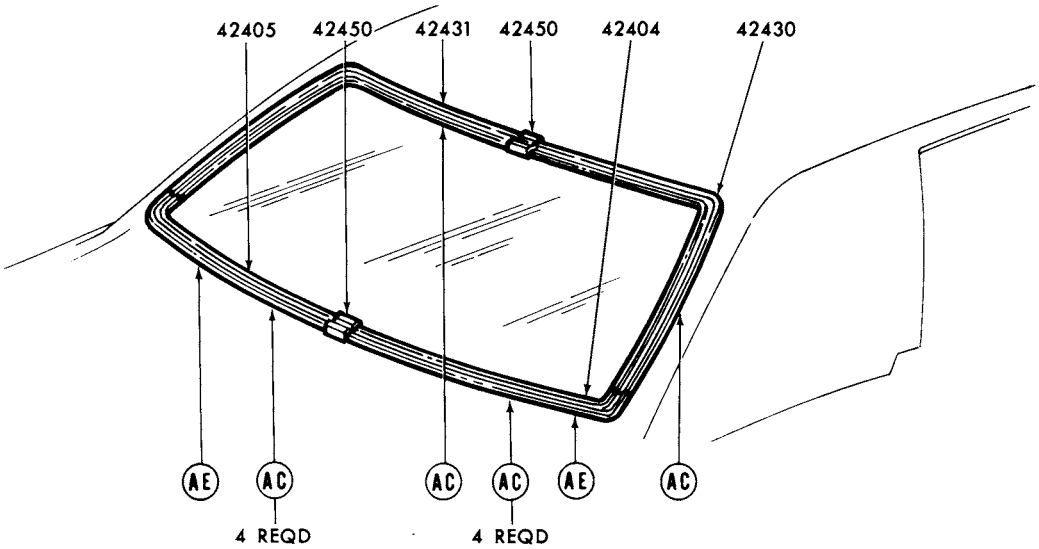

REFER TO EXTERIOR MOULDING SECTION "R" FOR COMPLETE RETAINER INFORMATION P-12460

1973 MERCURY - BODY TYPES 53 and 57 - BACK WINDOW

GROUP NUMBER	PART NAME	DESCRIPTION	PART NUMBER	QTY.
42404-5	Moulding (back window outside lower)		(RH)♦ D3AZ 5342404-A (LH)♦ D3AZ 5342405-A	1
42430-1	Moulding (back window outside upper)		(RH)♦ D7AZ 5342430-A (LH)♦ D7AZ 5342431-A	1
42450	Cover (back window outside moulding joint)	Lower	D5AZ 5342450-A	1
		Upper	D5AZ 5342450-B	1

♦ Includes attaching parts

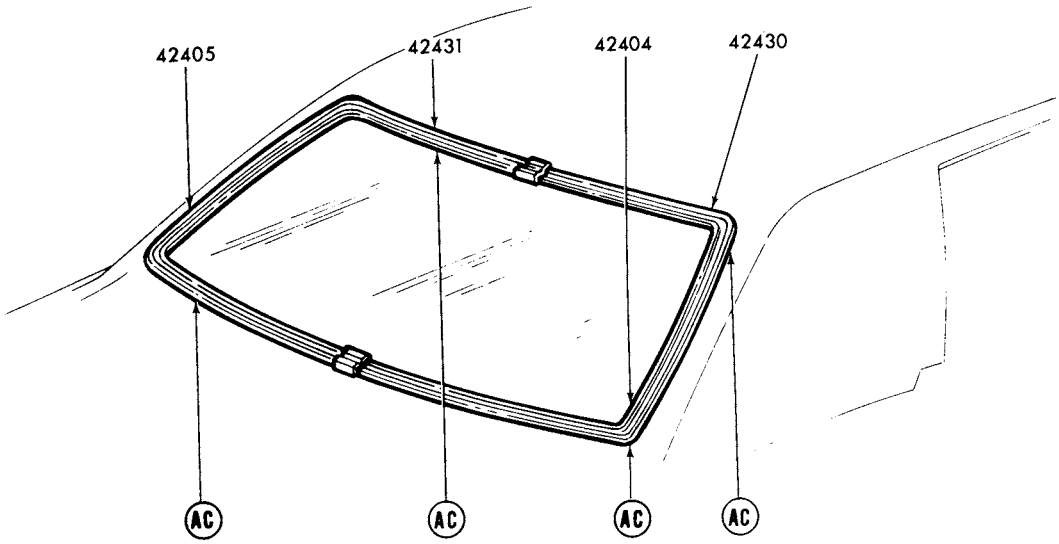

REFER TO EXTERIOR MOULDING SECTION "R" FOR COMPLETE RETAINER INFORMATION

P-12510

1973 MERCURY - BODY TYPE 65 - BACK WINDOW

GROUP NUMBER	PART NAME	DESCRIPTION	PART NUMBER		QTY.
42404-5	Moulding (back window outside lower)		(RH)♦ D5MY 6042404-A	(LH)♦ D5MY 6042405-A	1
42430-1	Moulding (back window outside upper)		(RH)♦ D7AZ 6042430-A	(LH)♦ D7AZ 6042431-A	1

♦ Includes attaching parts

COPYRIGHT © 1986 — FORD MOTOR COMPANY — DEARBORN, MICHIGAN

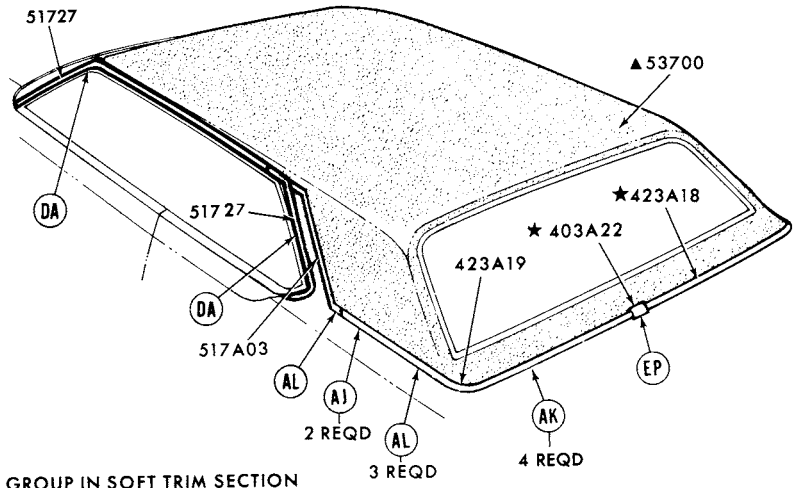

▲ REFER TO GROUP IN SOFT TRIM SECTION
REFER TO EXTERIOR MOULDING SECTION "R" FOR COMPLETE RETAINER INFORMATION

P-10115

1973 MERCURY - BODY TYPES 53B,F - ROOF and BACK BELT

GROUP NUMBER	PART NAME	DESCRIPTION	PART NUMBER		QTY.
51726-7	Moulding (roof drip side finish)	Front	(RH)♦ D4AZ 5351726-A	(LH)♦ D4AZ 5351727-A	1
		Rear	(RH)♦ D4AZ 5351726-C	(LH)♦ D4AZ 5351727-C	1

♦ Includes attaching parts

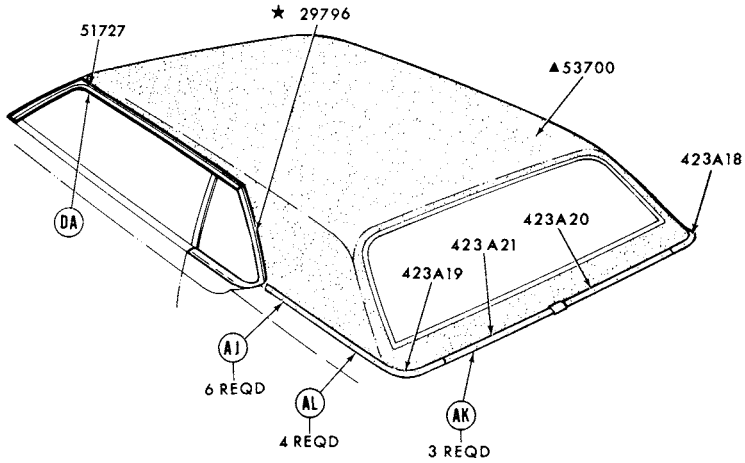

▲REFER TO GROUP IN SOFT TRIM SECTION
REFER TO EXTERIOR MOULDING SECTION "R" FOR COMPLETE RETAINER INFORMATION P-10116

1973 MERCURY - BODY TYPES 65B,F - ROOF and BACK BELT

GROUP NUMBER	PART NAME	DESCRIPTION	PART NUMBER		QTY.
423A18-9	Moulding (back belt outside side)	Bright finish	(RH)♦D4MY 65423A18-A	(LH)♦D4MY 65423A19-A	1
423A20-1	Moulding (back belt outside)	Full vinyl roof-paint to match	★(RH)♦D3MY 65423A20-A Not replaced (4/79)	(LH)★D3MY 65423A21-A Not replaced (7/81)	1
		Bright finish	(RH)♦D3MY 65423A20-C	(LH)♦D3MY 65423A21-C	1
51726-7	Moulding (roof drip side finish)	Front	(RH)♦D5MY 6551726-A	(LH)♦D5MY 6551727-A	1

♦ Includes attaching parts

COPYRIGHT © 1986 — FORD MOTOR COMPANY — DEARBORN, MICHIGAN

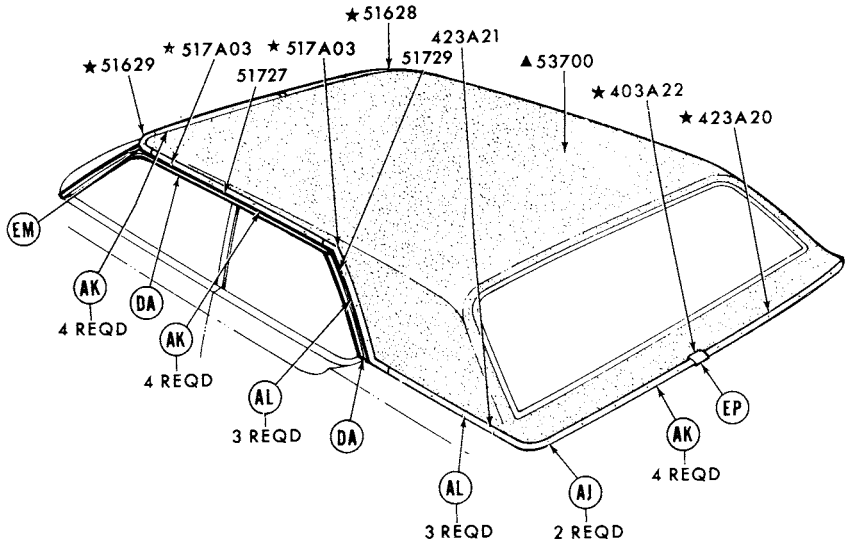

▲REFER TO GROUP IN SOFT TRIM SECTION
REFER TO EXTERIOR MOULDING SECTION "R" FOR COMPLETE RETAINER INFORMATION

P-10119

1973 MERCURY - BODY TYPES 53H,K,X,57H,K,X - ROOF and BACK BELT

GROUP NUMBER	PART NAME	DESCRIPTION	PART NUMBER		QTY.
51726-7	Moulding (roof drip side finish)	Front	(RH) D4AZ 5351726-A	(LH) D4AZ 5351727-A	1
		Rear	(RH) D4AZ 5351726-C	(LH) D4AZ 5351727-C	1

♦ Includes attaching parts

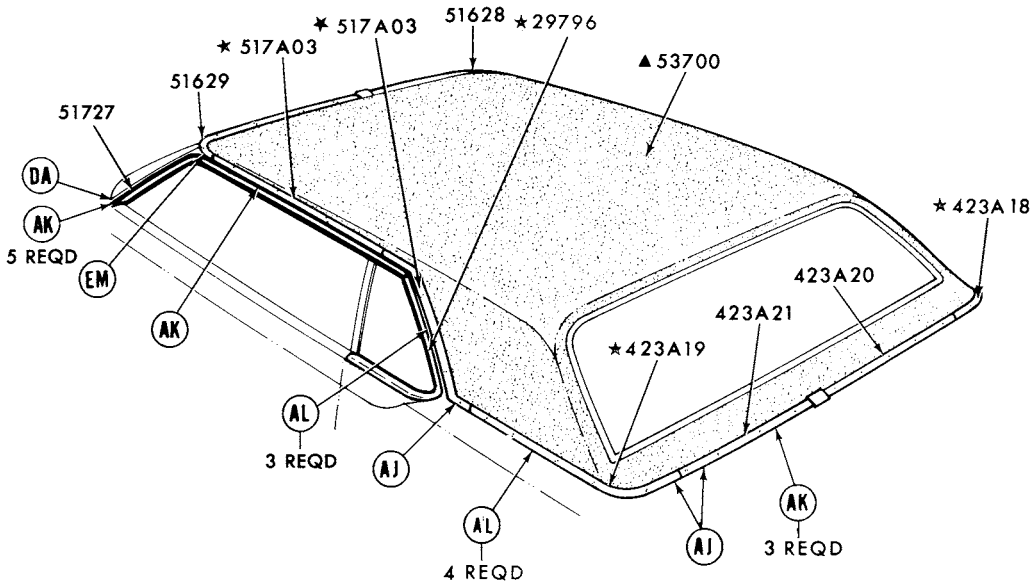

▲REFER TO GROUP IN SOFT TRIM SECTION
REFER TO EXTERIOR MOULDING SECTION "R" FOR COMPLETE RETAINER INFORMATION P-10120

1973 MERCURY - BODY TYPES 65H,K,X - ROOF and BACK BELT

GROUP NUMBER	PART NAME	DESCRIPTION	PART NUMBER		QTY.
423A20-1	Moulding (back belt outside)	Halo vinyl roof-bright finish	(RH)♦D3MY 65423A20-C	(LH)♦D3MY 65423A21-C	1
51628-9	Moulding (roof finish front)	Halo vinyl roof-paint to match-"From 2/5/73"	(RH)♦D4MY 6551628-A	(LH)♦D4MY 6551629-A	1
51726-7	Moulding (roof drip side finish)		(RH)♦D5MY 6551726-A	(LH)♦D5MY 6551727-A	1

♦ Includes attaching parts

COPYRIGHT © 1986 — FORD MOTOR COMPANY — DEARBORN, MICHIGAN

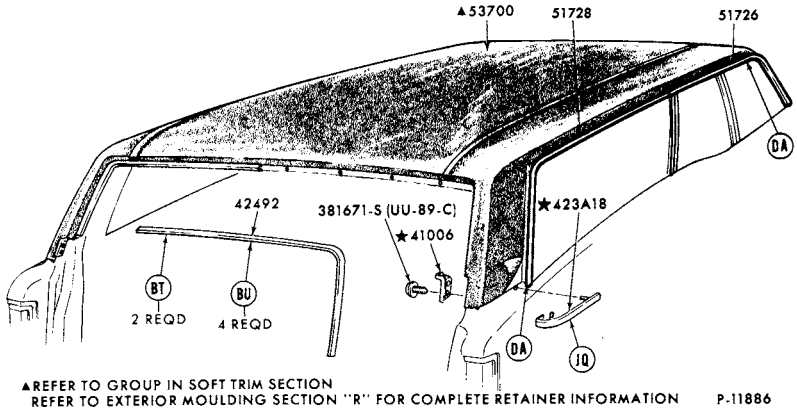

▲REFER TO GROUP IN SOFT TRIM SECTION
REFER TO EXTERIOR MOULDING SECTION "R" FOR COMPLETE RETAINER INFORMATION P-11886

1973 MERCURY - BODY TYPE 71 - ROOF and BACK BELT

GROUP NUMBER	PART NAME	DESCRIPTION	PART NUMBER		QTY.
42492-3	Moulding (back window outside side)		(RH)♦D3AZ 7142492-A	(LH)♦D3AZ 7142493-A	1
51726-9	Moulding (roof drip side finish)	Front	(RH)♦D5AZ 7151726-A	(LH)♦D5AZ 7151727-A	1
		Rear	(RH)♦D3AZ 7151728-B	(LH)♦D3AZ 7151729-B	1

♦ Includes attaching parts

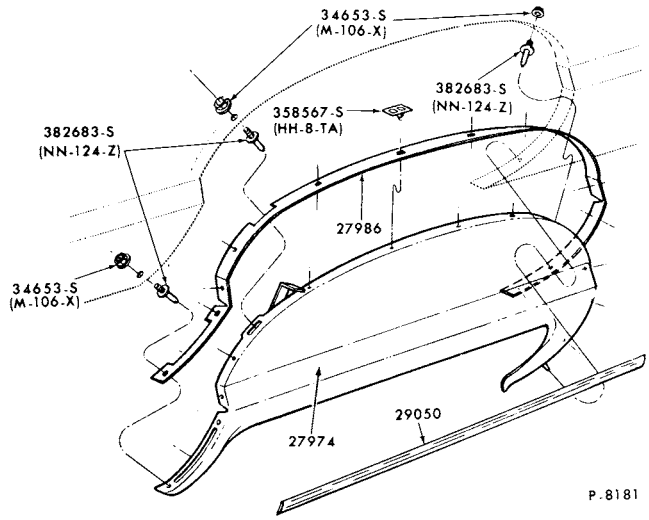

1973 MERCURY - BODY TYPES 53, 57 AND 65 - WHEEL OPENING COVER PARTS

GROUP NUMBER	PART NAME	DESCRIPTION	PART NUMBER		QTY.
27974-5	Panel (quarter wheel opening cover)		(RH)♦D3MY 6527974-A	(LH)♦D3MY 6527975-A	1
27986-7	Seal (quarter wheel opening cover)		(RH)♦D3MY 6527986-A	(LH)♦D3MY 6527987-A	1
29050-1	Moulding (quarter wheel opening cover)	Body types 53B, F, 65B, F	(RH)♦D3MY 6529050-B	(LH)♦D3MY 6529051-B	1
		Body types 53H, K, X, 57H, K, X, 65H, K, X	(RH)♦D3MY 6529050-A	(LH)♦D3MY 6529051-A	1

♦ Includes attaching parts

COPYRIGHT © 1986 — FORD MOTOR COMPANY — DEARBORN, MICHIGAN

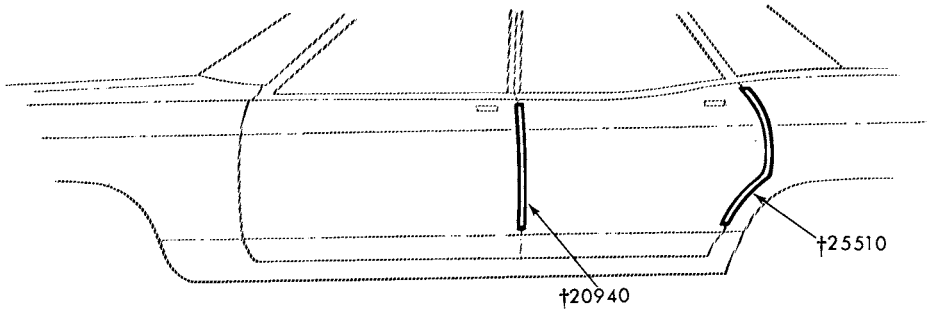

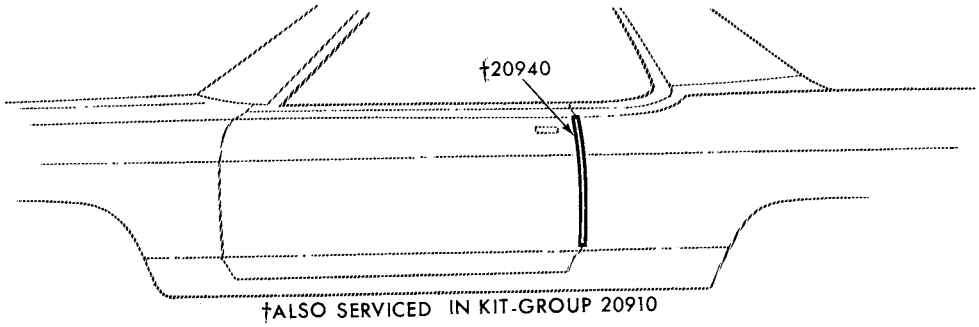

†ALSO SERVICED IN KIT-GROUP 20910

P-10061

1973 MERCURY - DOOR EDGE GUARDS

GROUP NUMBER	PART NAME	DESCRIPTION	PART NUMBER		QTY.
20940-1	Moulding (front door edge guard)	Bright-body types 53,57 and 71	(RH) D3MY 5320940-A	(LH) D3MY 5320941-A	1
		Body type 65	(RH) D3MY 6520940-A	(LH) D3MY 6520941-A	1
		Wood grain-Colony Park	(RH)★D3MY 7120940-A Not replaced (7/81)	(LH)★D3MY 7120941-A Not replaced (7/81)	1
25510-1	Moulding (rear door edge guard)	Bright-body types 53,57 and 71	(RH) D3MY 5325510-A	(LH) D3MY 5325511-A	1
		Wood grain-Colony Park	(RH) D3MY 7125510-A	(LH)★D3MY 7125511-A Not replaced (7/81)	1

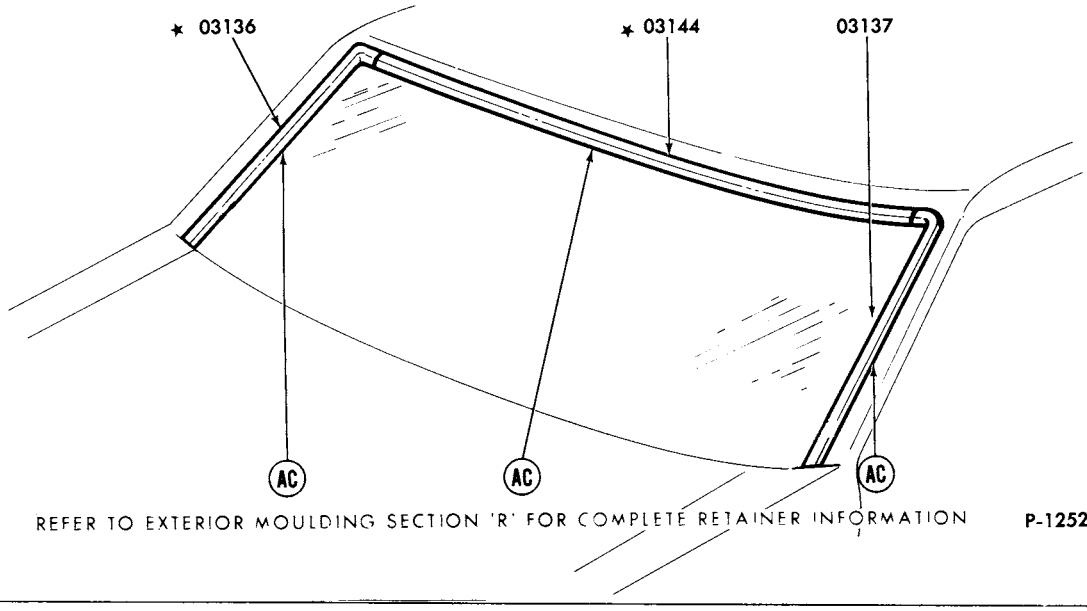

1973 MONTEGO - WINDSHIELD

GROUP NUMBER	PART NAME	DESCRIPTION	PART NUMBER	QTY.
03136-7	Moulding (windshield outside side)		(RH)★D2OZ 6503136-A (LH)♦D7OZ 6503137-A	1
03144	Moulding (windshield outside top)		★D2OZ 6503144-A	1

COPYRIGHT © 1986 — FORD MOTOR COMPANY — DEARBORN, MICHIGAN

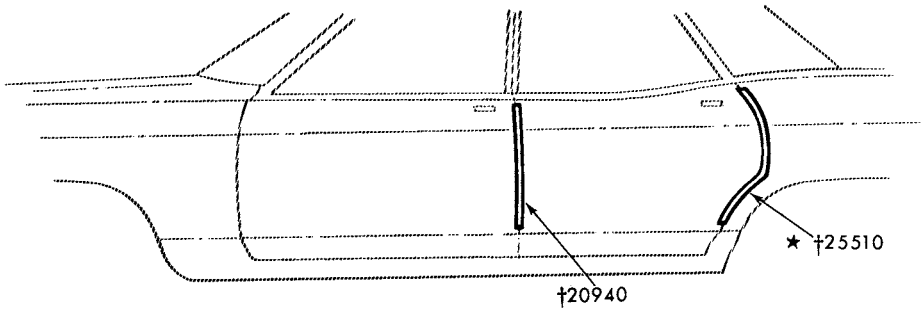

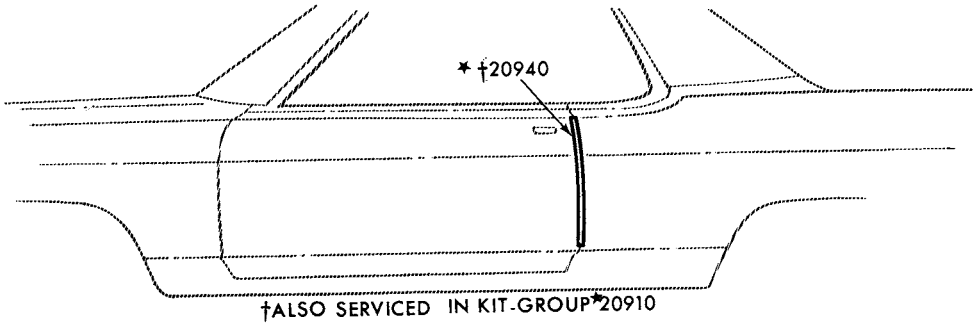

†ALSO SERVICED IN KIT-GROUP★20910

P-10061

1973 MONTEGO - DOOR EDGE GUARDS

GROUP NUMBER	PART NAME	DESCRIPTION	PART NUMBER		QTY.
20910	Moulding kit (door edge guard)	Body types 53 and 71	★ D2GY 5320910-A		1
20940-1	Moulding (front door edge guard)	Body types 53 and 71	(RH) D2GY 5320940-A	(LH) D2GY 5320941-A	1
		Body types 63 and 65	(RH)★D2GY 6520940-A	(L)★D2GY 6520941-A	1
25510	Moulding (rear door edge guard)		(RH)★D2GY 5325510-A Not replaced (6/82)	(LH)★D2GY 5325511-A Not replaced (6/82)	1

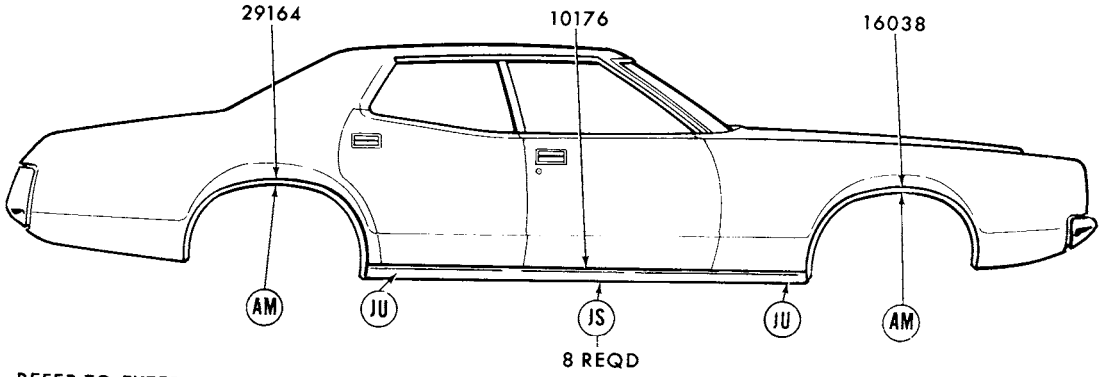

REFER TO EXTERIOR MOULDING SECTION "R" FOR COMPLETE RETAINER INFORMATION P-8715

1973 MONTEGO - BODY TYPES 53B,D - SIDE

GROUP NUMBER	PART NAME	DESCRIPTION	PART NUMBER		QTY.
10176-7	Moulding (body rocker panel)		(RH)♦D2GY 5310176-A	(LH)♦D2GY 5310177-A	1
16038-9	Moulding (front fender wheel opening)		(RH)♦D2GY 16038-A	(LH)♦D2GY 16039-A	1
29164-5	Moulding (quarter wheel opening)		(RH)★D2GY 6529164-A Not replaced (4/82)	(LH)♦D2GY 6529165-A	1

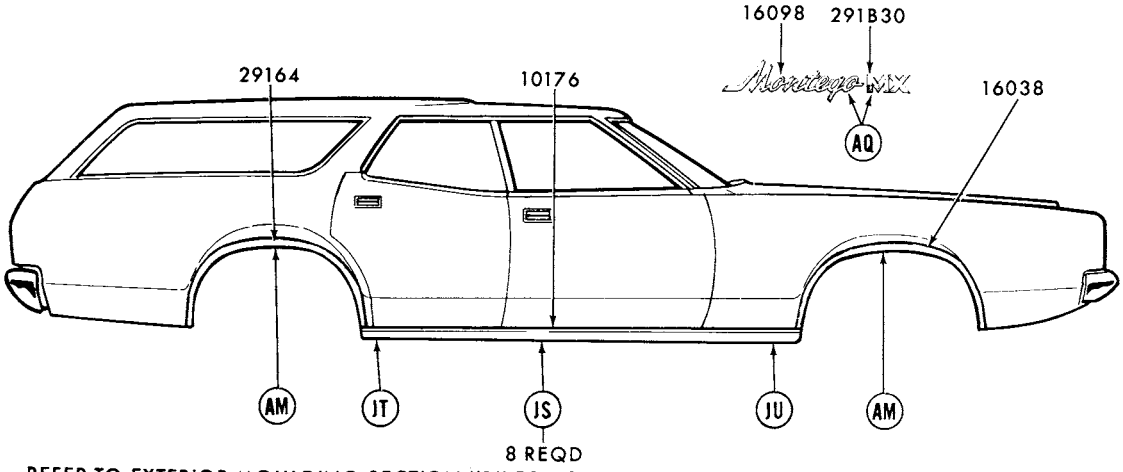

REFER TO EXTERIOR MOULDING SECTION "R" FOR COMPLETE RETAINER INFORMATION P-8713

1973 MONTEGO - BODY TYPE 71D - SIDE

GROUP NUMBER	PART NAME	DESCRIPTION	PART NUMBER		QTY.
10176-7	Moulding (body rocker panel)		(RH)♦D2GY 5310176-A	(LH)♦D2GY 5310177-A	1
16038-9	Moulding (front fender wheel opening)		(RH)♦D2GY 16038-A	(LH)♦D2GY 16039-A	1
16098	Plate (front fender name)	"Montego"	♦D2GY 16098-C	R.H. and L.H.	2
291B30	Plate (name)	"MX"	♦C8GY 54291B30-A	R.H. and L.H.	2
29164-5	Moulding (quarter wheel opening)		(RH)♦D2GY 7129164-A	(LH)★D2GY 7129165-A Not replaced (3/82)	1

COPYRIGHT © 1986 — FORD MOTOR COMPANY — DEARBORN, MICHIGAN

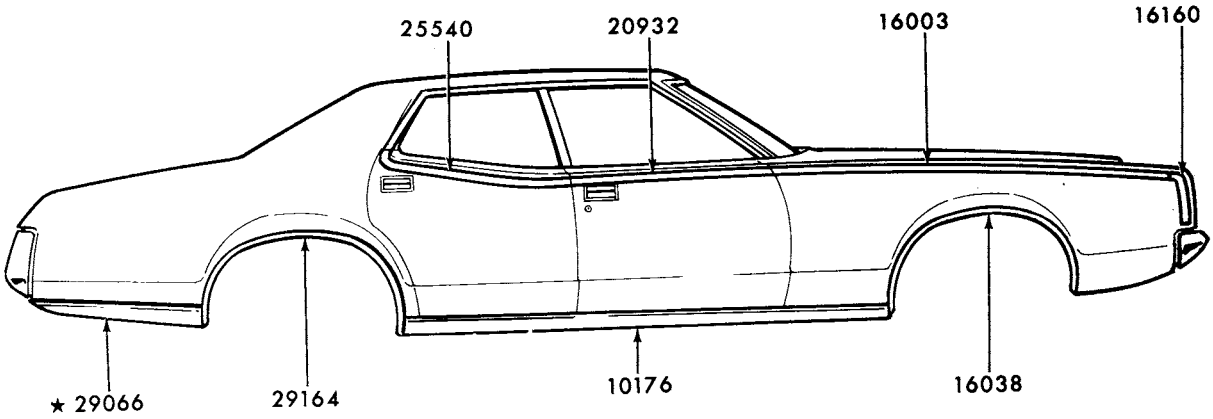

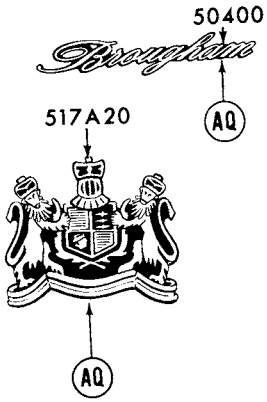

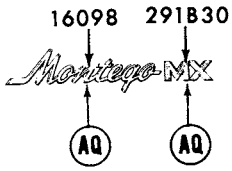

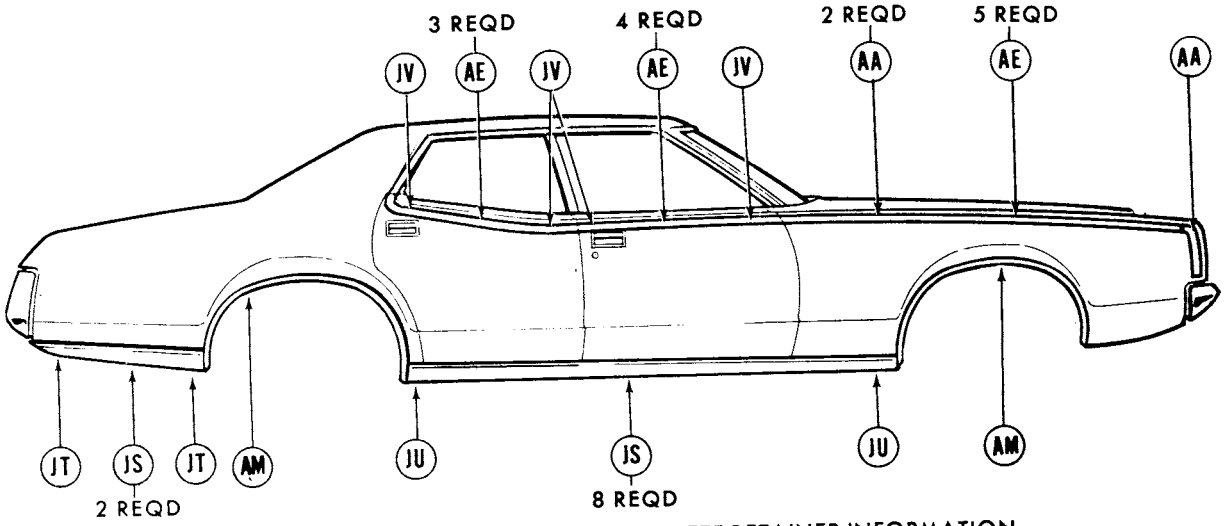

REFER TO EXTERIOR MOULDING SECTION "R" FOR COMPLETE RETAINER INFORMATION

P-11823

1973 MONTEGO - BODY TYPE 53K - SIDE

1973 MONTEGO - BODY TYPE 53K - SIDE - cont'd.

GROUP NUMBER	PART NAME	DESCRIPTION	PART NUMBER		QTY.
10176-7	Moulding (body rocker panel)		(RH)♦ D2GY 5310176-A	(LH)♦ D2GY 5310177-A	1
16003-4	Moulding (front fender upper)		(RH)♦D2GY 16003-B	(LH)♦D2GY 16004-B	1
16038-9	Moulding (front fender wheel opening)		(RH)♦D2GY 16038-A	(LH)♦D2GY 16039-A	1
16098	Plate (front fender name)	"Montego"	♦D2GY 16098-C	R.H. and L.H.	2
16160-1	Moulding (front fender front)		(RH)♦D3GY 16160-A	(LH)♦D3GY 16161-A	1
20932-3	Moulding (front door outside upper)		(RH)♦D4GY 5320932-A	(LH)♦D4GY 5320933-A	1
25540-1	Moulding (rear door outside upper)		(RH)♦D4GY 5325540-A	(LH)♦D4GY 5325541-A	1
29066-7	Moulding (quarter panel outside lower rear)		(RH)★D2GY 6529066-A Not replaced (3/82)	(LH)★D2GY 6529067-A Not replaced (3/82)	1
291B30	Plate (name)	"MX"	♦C8GY 54291B30-A	R.H. and L.H.	2
29164-5	Moulding (quarter wheel opening)		(RH)★D2GY 6529164-A Not replaced (4/82)	(LH)♦D2GY 6529165-A	1
50400	Plate (roof name)	"Brougham"	♦C7MY 5450400-A	R.H. and L.H.	2
517A20	Ornament (roof side outside)		♦C9MY 65517A20-A	R.H. and L.H.	2

♦ Includes attaching parts

COPYRIGHT © 1986 — FORD MOTOR COMPANY — DEARBORN, MICHIGAN

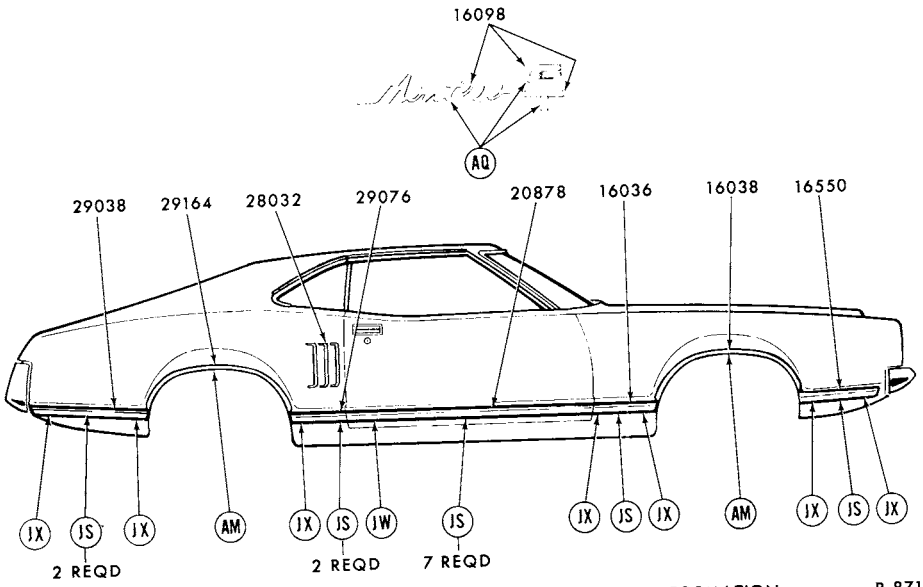

REFER TO EXTERIOR MOULDING SECTION "R" FOR COMPLETE RETAINER INFORMATION

P-8716

1973 MONTEGO - BODY TYPE 63 - SIDE

GROUP NUMBER	PART NAME	DESCRIPTION	PART NUMBER		QTY.
16036-7	Moulding (front fender side) opening)	Lower rear	(RH)♦D2GY 16036-A	(LH)★D2GY 16037-A Not replaced (4/84)	1
16038-9	Moulding (front fender wheel		(RH)♦D2GY 16038-B	(LH)♦D2GY 16039-B	1
16098	Plate (front fender name)	"Montego"	♦D2GY 16098-C	R.H. and L.H.	2
		"G"	♦C7ZZ 16098-A	R.H. and L.H.	2
		"T"	♦C7ZZ 16098-B	R.H. and L.H.	2
16550-1	Moulding assy. (front fender side lower front)	"Before 11/1/72"	(RH)♦D2GY 16550-A	(LH)♦D2GY 16551-A	1
		"From 11/1/72"	(RH)♦D3GY 16550-A	(LH)♦D3GY 16551-A	1
20878-9	Moulding (front door outside lower)		(RH)★D2GY 6320878-A	(LH)♦D2GY 6320879-A	1
28032	Ornament (quarter panel outside)		♦D2GY 6328032-A	R.H. and L.H.	6
29038-9	Moulding (quarter outside)		(RH)♦D2GY 6329038-A	(LH)♦D2GY 6329039-A	1
29076-7	Moulding (quarter outside lower front)		(RH)♦D2GY 6329076-A	(LH)♦D2GY 6329077-A	1
29164-5	Moulding (quarter wheel opening)		(RH)♦D2GY 6329164-A	(LH)★D2GY 6329165-A Not replaced (3/82)	1

♦ Includes attaching parts

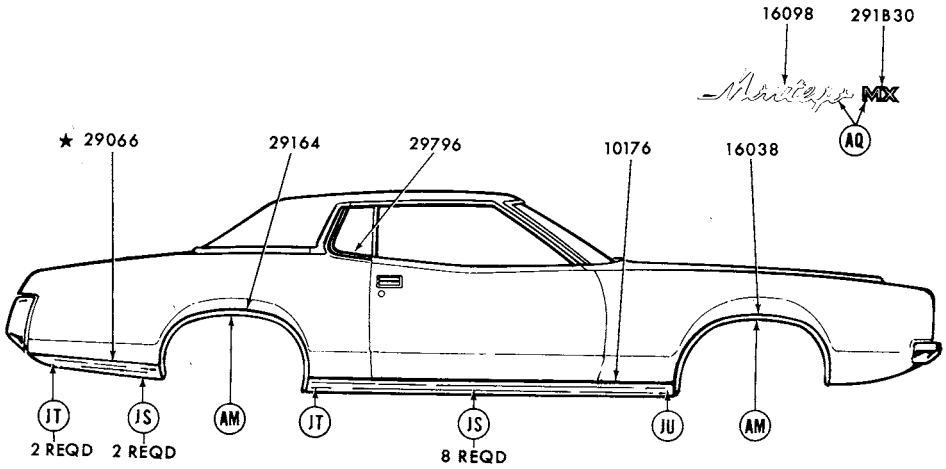

REFER TO EXTERIOR MOULDING SECTION "R" FOR COMPLETE RETAINER INFORMATION P-8714

1973 MONTEGO - BODY TYPES 65B,D - SIDE

GROUP NUMBER	PART NAME	DESCRIPTION	PART NUMBER		QTY.
10176-7	Moulding (body rocker panel)	Body type 65D	(RH)♦D2GY 6510176-A	(LH)♦D2GY 6510177-A	1
16038-9	Moulding (front fender wheel opening)		(RH)♦D2GY 16038-A	(LH)♦D2GY 16039-A	1
16098	Plate (front fender name)	"Montego"	♦D2GY 16098-C	R.H. and L.H.	2
29066-7	Moulding (quarter panel outside lower rear)	Body type 65D	(RH)★D2GY 6529066-A Not replaced (3/82)	(LH)★D2GY 6529067-A Not replaced (3/82)	1
291B30	Plate (name)	"MX"-body type 65D	♦C8GY 54291B30-A	R.H. and L.H.	2
29164-5	Moulding (quarter wheel opening)		(RH)★D2GY 6529164-A Not replaced (4/82)	(LH)♦D2GY 6529165-A	1
29796-7	Moulding (quarter window outside upper)		(RH)♦D2OZ 6529796-A	(LH)♦D2OZ 6529797-A	1

♦ Includes attaching parts

COPYRIGHT © 1986 — FORD MOTOR COMPANY — DEARBORN, MICHIGAN

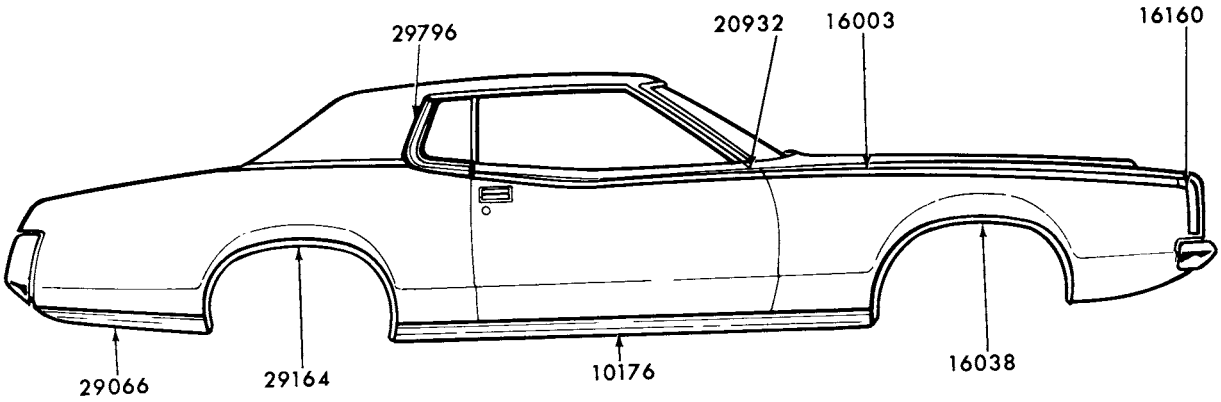

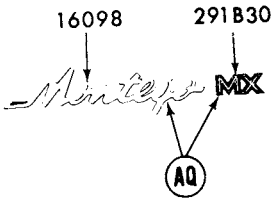

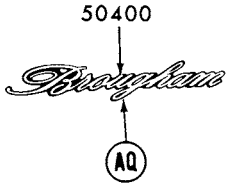

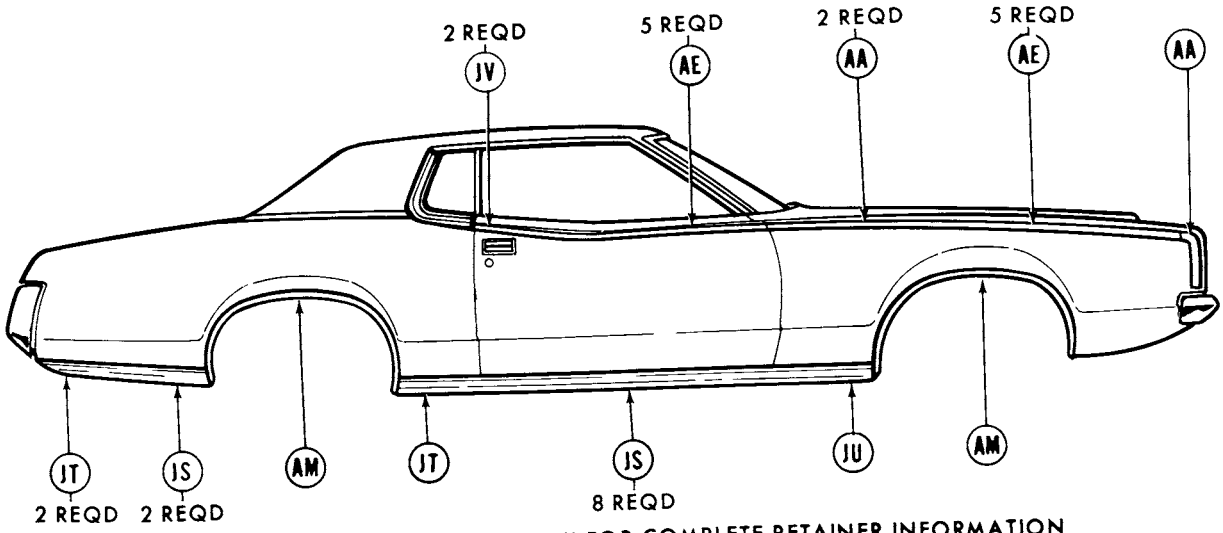

REFER TO EXTERIOR MOULDING SECTION "R" FOR COMPLETE RETAINER INFORMATION

P-11826

1973 MONTEGO - BODY TYPE 65K - SIDE

1973 MONTEGO - BODY TYPE 65K - SIDE - cont'd.

GROUP NUMBER	PART NAME	DESCRIPTION	PART NUMBER		QTY.
10176-7	Moulding (body rocker panel)		(RH)♦D2GY 6510176-A	(LH)♦D2GY 6510177-A	1
16003-4	Moulding (front fender upper)		(RH)♦D2GY 16003-B	(LH)♦D2GY 16004-B	1
16038-9	Moulding (front fender wheel opening)		(RH)♦D2GY 16038-A	(LH)♦D2GY 16039-A	1
16098	Plate (front fender name)	"Montego"	♦D2GY 16098-C	R.H. and L.H.	2
16160-1	Moulding (front fender front)		(RH)♦D3GY 16160-A	(LH)♦D3GY 16161-A	1
20932-3	Moulding (front door outside upper)		(RH)♦D4GY 6520932-A	(LH)♦D4GY 6520933-A	1
29066-7	Moulding (quarter panel outside lower rear)		(RH)♦D2GY 6529066-A	(LH)♦D2GY 6529067-A	1
291B30	Plate (name)	"MX"	♦C8GY 54291B30-A	R.H. and L.H.	2
29164-5	Moulding (quarter wheel opening)		(RH)✱D2GY 6529164-A Not replaced (4/82)	(LH)♦D2GY 6529165-A	1
29796-7	Moulding (quarter window outside upper)		(RH)♦D2OZ 6529796-A	(LH)♦D2OZ 6529797-A	1
50400	Plate (roof name)	"Brougham"	♦C7MY 5450400-A	R.H. and L.H.	2
517A20	Ornament (roof side outside)		♦C9MY 65517A20-A	R.H. and L.H.	2

COPYRIGHT © 1986 — FORD MOTOR COMPANY — DEARBORN, MICHIGAN

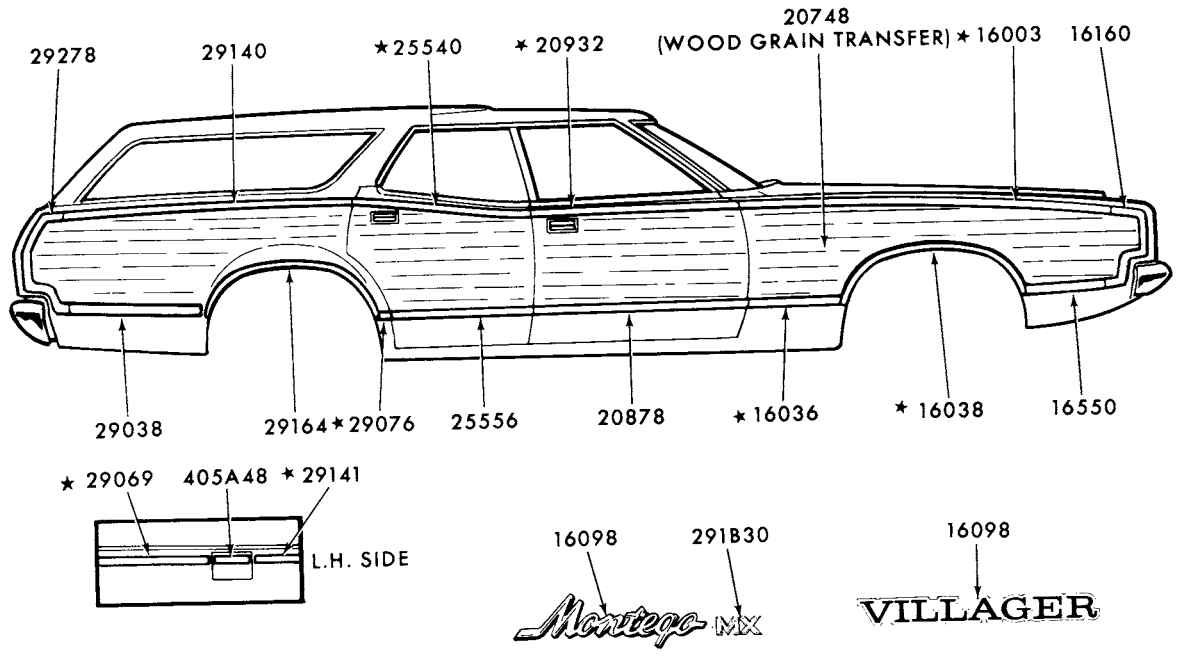

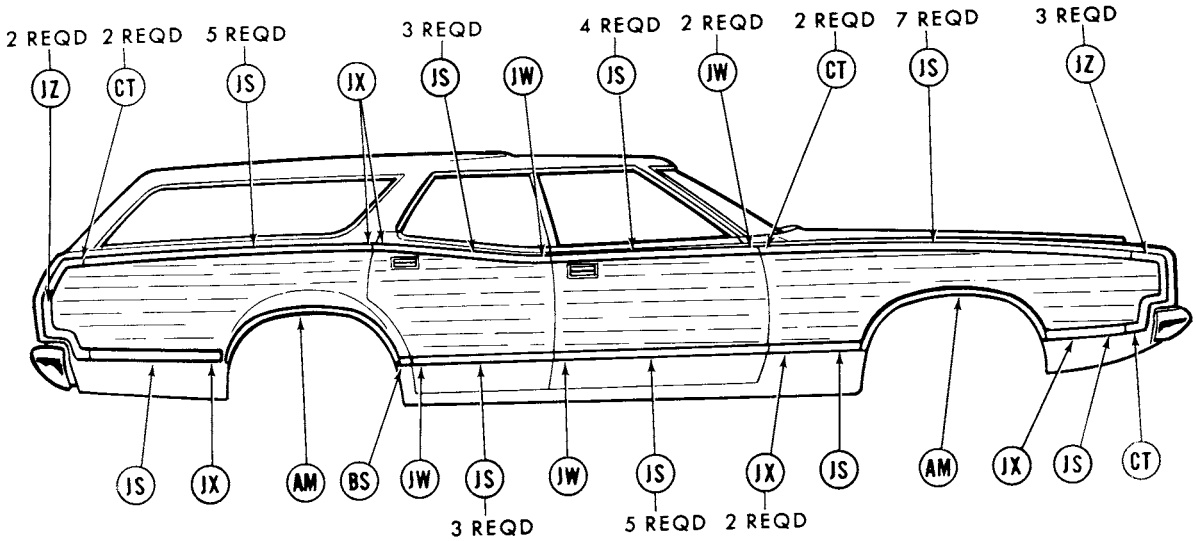

REFER TO EXTERIOR MOULDING SECTION "R" FOR COMPLETE RETAINER INFORMATION

P-8712

1973 MONTEGO - BODY TYPE 71K - SIDE

1973 MONTEGO - BODY TYPE 71K - SIDE - cont'd.

GROUP NUMBER	PART NAME	DESCRIPTION	PART NUMBER		QTY.
16003-4	Moulding (front fender side upper)	Bright finish	(RH)★D2GY 16003-C Not replaced (4/84)	(LH)★D2GY 16004-C Not replaced (4/84)	1
16036-7	Moulding (front fender side)	Lower rear	(RH)★D2GY 16036-A Not replaced (3/82)	(LH)★D2GY 16037-A Not replaced (4/84)	1
16038-9	Moulding (front fender wheel opening)		(RH)♦D2GY 16038-B	(LH)♦D2GY 16039-B	1
16098	Plate (front fender name)	"Montego"	♦D2GY 16098-C	R.H. and L.H.	2
		"VILLAGER"	♦D2GY 16098-B	R.H. and L.H.	2
16160-1	Moulding (front fender front)		(RH)♦D2GY 16160-A	(LH)♦D2GY 16161-A	1
16550-1	Moulding (front fender) side lower front)		(RH)★D2GY 16550-B Not replaced (4/84)	(LH)★D2GY 16551-B	1
20748	Transfer (wood grain)	Cherry wood grain-20 3/4" x 70 5/8"-cut to fit	D4GY 7120748-A		1
20878-9	Moulding (front door outside lower)		(RH)♦D2GY 7120878-A	(LH)♦D2GY 7120879-A	1
20932-3	Moulding (front door outside upper)		(RH)★D2GY 7120932-A	(LH)★D2GY 7120933-A Not replaced (3/82)	1
25540-1	Moulding (rear door outside upper)		(RH)★D2GY 7125540-A Not replaced (2/81)	(LH)★D2GY 7125541-A Not replaced (2/81)	1
25556-7	Moulding (rear door outside lower)		(RH)♦D2GY 7125556-A	(LH)♦D2GY 7125557-A	1
29038-9	Moulding (quarter outside)		(RH)♦D2GY 7129038-A	(LH)♦D2GY 7129039-A	1
29069	Moulding (quarter panel outside upper front)		★ D2GY 7129069-A Not replaced 3/82)	L.H.	1
29076-7	Moulding (quarter outside lower front)		(RH)★D2GY 7129076-A	(LH)★D2GY 7129077-A Not replaced (2/81)	1
291B30	Plate (name)	"MX"	♦C8GY 54291B30-A	R.H. and L.H.	2
29140-1	Moulding (quarter panel outside upper)		(RH)★D2GY 7129140-A	(LH)★D2GY 7129141-A Not replaced (3/82)	1
29164-5	Moulding (quarter wheel opening)		(RH)♦D2GY 7129164-B	(LH)♦D2GY 7129165-B	1
29278-9	Moulding (quarter outside rear end)		(RH)♦D2GY 7129278-A	(LH)♦D2GY 7129279-A	1
405A48	Moulding (fuel filler door)		♦D2GY 71405A48-A		1

COPYRIGHT © 1986 — FORD MOTOR COMPANY — DEARBORN, MICHIGAN

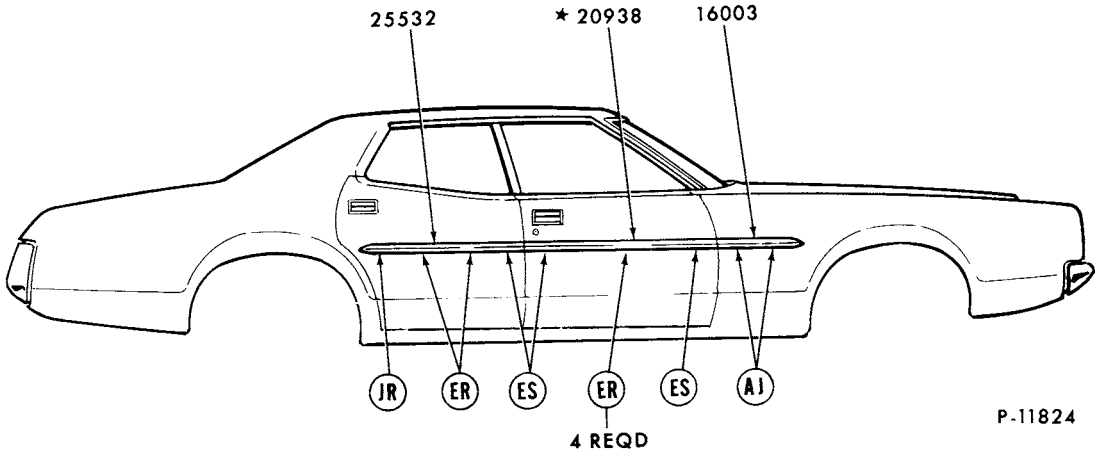

REFER TO EXTERIOR MOULDING SECTION "R" FOR COMPLETE RETAINER INFORMATION

1973 MONTEGO - BODY TYPE 53 - SIDE PROTECTION

GROUP NUMBER	PART NAME	DESCRIPTION	PART NUMBER		QTY.
16003-4	Moulding (front fender side)	Black vinyl insert	(RH)★D2GY 16003-A	(LH)♦D2GY 16004-A	1
20938-9	Moulding (front door outside)	Black vinyl insert	(RH)★D2GY 5320938-A	(LH)★D2GY 5320939-A Not replaced (3/82)	1
25532-3	Moulding (rear door outside)	Black vinyl insert	(RH)♦D2GY 5325532-A	(LH)♦D2GY 5325533-A	1

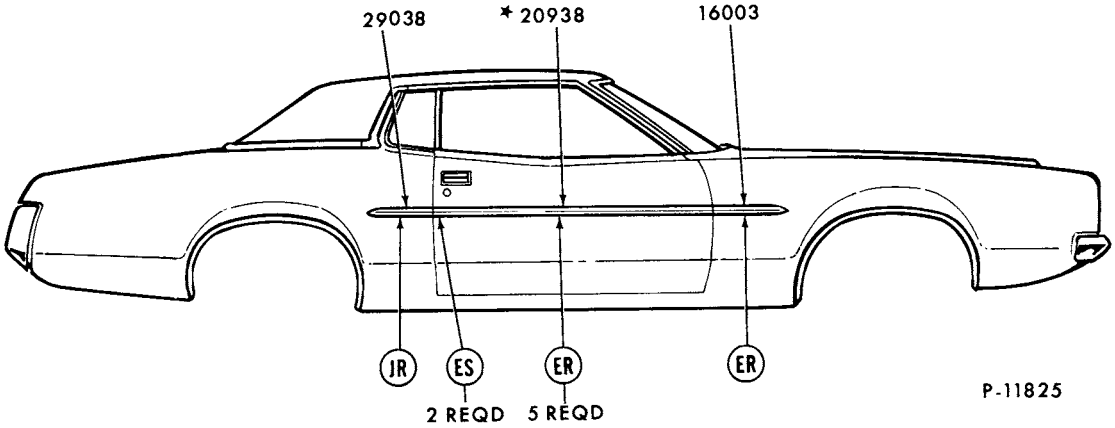

REFER TO EXTERIOR MOULDING SECTION "R" FOR COMPLETE RETAINER INFORMATION

1973 MONTEGO - BODY TYPE 65 - SIDE PROTECTION

GROUP NUMBER	PART NAME	DESCRIPTION	PART NUMBER		QTY.
16003-4	Moulding (front fender side)	Black vinyl insert	(RH)★D2GY 16003-A	(LH)♦D2GY 16004-A	1
20938-9	Moulding (front door outside)	Black vinyl insert	(RH)★D2GY 6520938-A	(LH)♦D2GY 6520939-A	1
29038-9	Moulding (quarter panel)	Black vinyl insert	(RH)♦D2GY 16004-A	(LH)★D2GY 16003-A	1

♦ Includes attaching parts

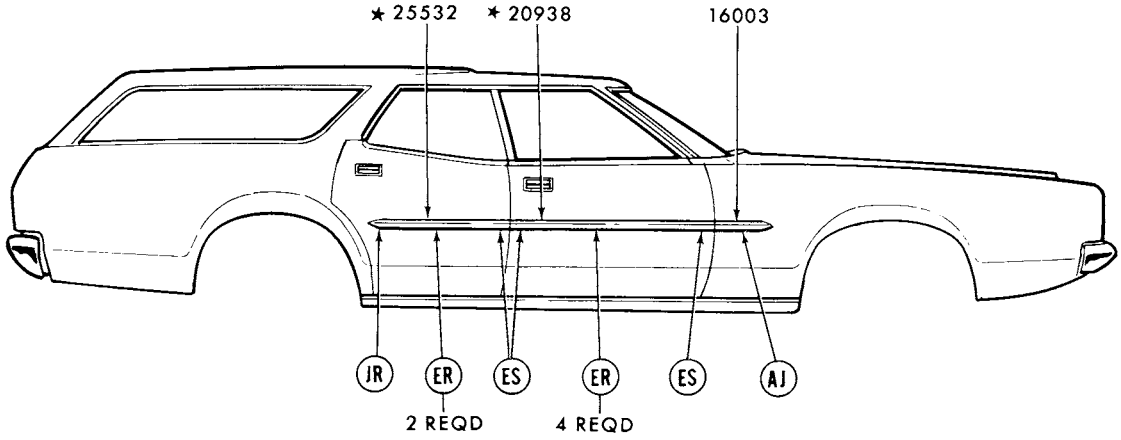

REFER TO EXTERIOR MOULDING SECTION "R" FOR COMPLETE RETAINER INFORMATION

P-11827

1973 MONTEGO - BODY TYPE 71 - SIDE PROTECTION

GROUP NUMBER	PART NAME	DESCRIPTION	PART NUMBER		QTY.
16003-4	Moulding (front fender side)	Black vinyl insert	(RH)★D2GY 16003-A	(LH)♦D2GY 16004-A	1
		Brown vinyl insert- "Before 4/12/73"	(RH)★D3GY 16003-A	(LH)♦D3GY 16004-A	1
		Wood grain vinyl insert- "From 4/12/73"	★D3GY 16003-B Not replaced (4/84)	R.H. and L.H.	2
20938-9	Moulding (front door outside)	Black vinyl insert	(RH)★D2GY 5320938-A	(LH)★D2GY 5320939-A Not replaced (3/82)	1
		Wood grain insert- "From 5/21/73"	★D3GY 7120938-B	R.H. and L.H.	2

♦ Includes attaching parts

COPYRIGHT © 1986 — FORD MOTOR COMPANY — DEARBORN, MICHIGAN

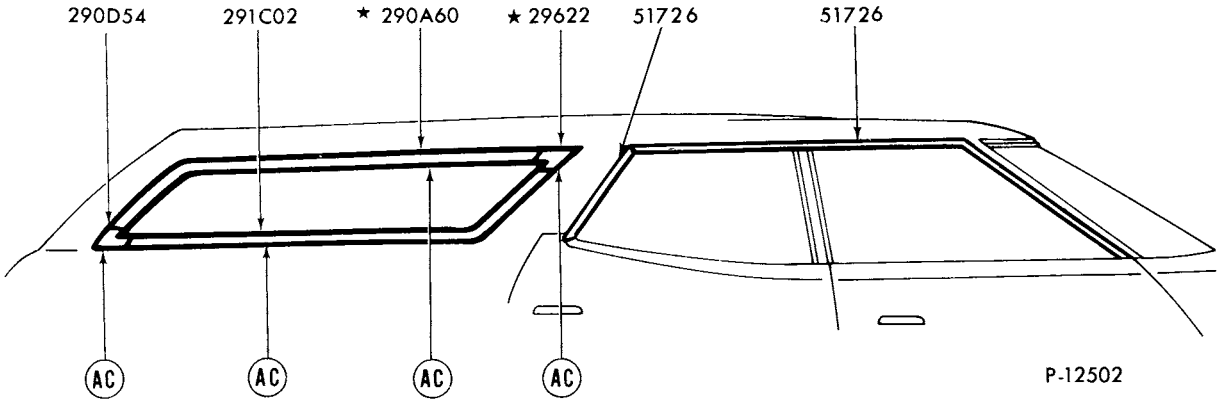

REFER TO EXTERIOR MOULDING SECTION 'R' FOR COMPLETE RETAINER INFORMATION

1973 MONTEGO - BODY TYPE 71 - DOOR and QUARTER WINDOW FRAME

GROUP NUMBER	PART NAME	DESCRIPTION	PART NUMBER		QTY.
290D54	Moulding (quarter window outside lower rear corner)		D2OZ 71290D54-A		2
290A60-1	Moulding (quarter window outside upper)		(RH)★D2OZ 71290A60-A	(LH)★D2OZ 71290A61-A Not replaced (3/82)	1
291C02-3	Moulding (quarter window outside lower rear)		(RH)♦D2OZ 71291C02-A	(LH)♦D2OZ 71291C03-A	1
51726-7	Moulding (roof drip side finish)		(RH) D2GY 7151726-A	(LH) D2GY 7151727-A	1

♦ Includes attaching parts

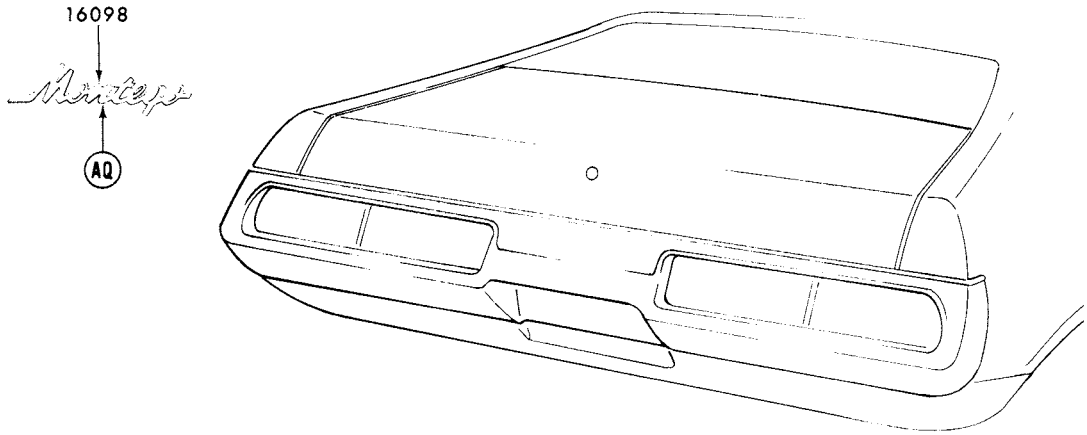

REFER TO EXTERIOR MOULDING SECTION "R" FOR COMPLETE RETAINER INFORMATION P-8711

1973 MONTEGO - BODY TYPES 53, 63 AND 65 - BACK END

GROUP NUMBER	PART NAME	DESCRIPTION	PART NUMBER		QTY.
16098	Plate (name)	"Montego"	♦ D2GY 16098-C	R.H. and L.H.	2

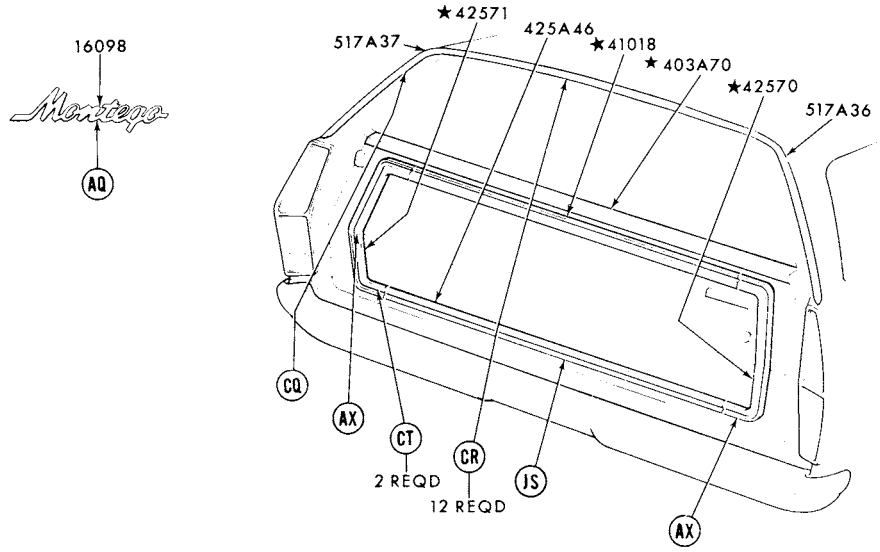

REFER TO EXTERIOR MOULDING SECTION "R" FOR COMPLETE RETAINER INFORMATION P-8710

1973 MONTEGO - BODY TYPE 71 - BACK END

GROUP NUMBER	PART NAME	DESCRIPTION	PART NUMBER		QTY.
16098	Plate (name)	"Montego"	♦ D2GY 16098-C	R.H. and L.H.	2
403A70	Moulding (tailgate outside belt)		★D2OZ 71403A70-A	Not replaced (4/84)	1
41018	Moulding (tailgate outside upper)	Body type 71K	★D2GY 7141018-A Not replaced (4/83)		1
425A46	Moulding (tailgate outside lower)	Body type 71K	♦D2GY 71425A46-A		1
42570-1	Moulding (tailgate outside side)	Body type 71K	(RH)★D2GY 7142570-A Not replaced (4/83)	(LH)★D2GY 7142571-A Not replaced (4/83)	1
517A36-7	Moulding (roof outside rear)		(RH)♦D2GY 71517A36-A	(LH)♦D2GY 71517A37-A	1

♦ Includes attaching parts

COPYRIGHT © 1986 — FORD MOTOR COMPANY — DEARBORN, MICHIGAN

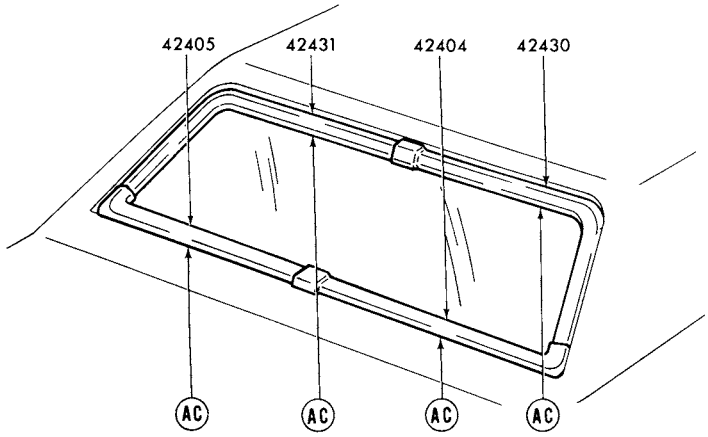

REFER TO EXTERIOR MOULDING SECTION "R" FOR COMPLETE RETAINER INFORMATION

P-12457

1973 MONTEGO - BODY TYPES 53 and 65 - BACK WINDOW

GROUP NUMBER	PART NAME	DESCRIPTION	PART NUMBER	QTY.
42404-5	Moulding (back window outside lower)		(RH)♦D4OZ 6542404-A (LH)♦D4OZ 6542405-A	1
42430-1	Moulding (back window outside upper)		(RH)♦D4OZ 6542430-A (LH)♦D4OZ 6542431-A	1

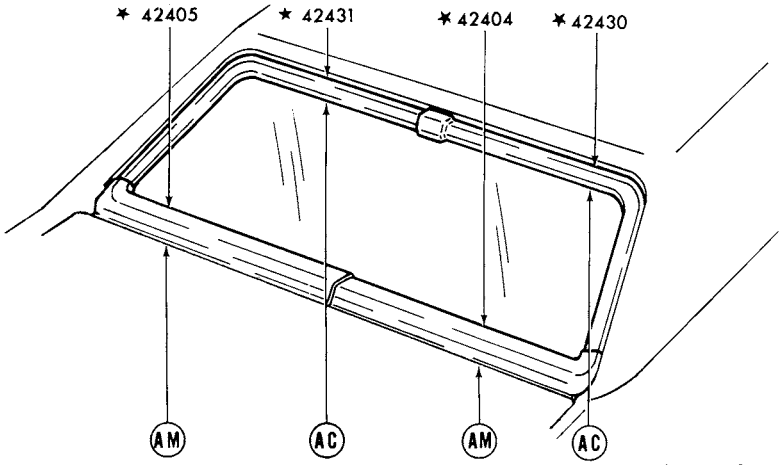

REFER TO EXTERIOR MOULDING SECTION "R" FOR COMPLETE RETAINER INFORMATION P-12456

1973 MONTEGO - BODY TYPE 63 - BACK WINDOW

GROUP NUMBER	PART NAME	DESCRIPTION	PART NUMBER	QTY.
42404-5	Moulding (back window outside lower)		(RH)✶D2OZ 6342404-A (LH)✶D2OZ 6342405-A Not replaced (4/83)	1
42430-1	Moulding (back window outside upper)		(RH)✶D2OZ 6342430-A (LH)★D2OZ 6342431-A Not replaced (4/83)	1

♦ Includes attaching parts

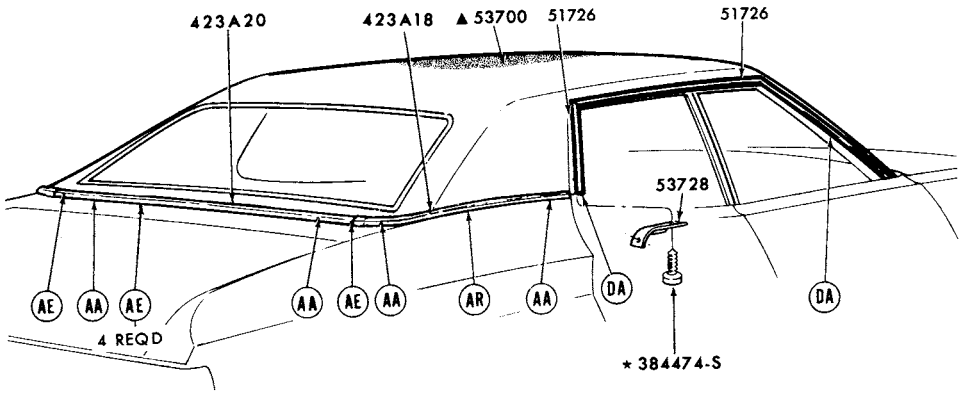

REFER TO EXTERIOR MOULDING ILLUSTRATION SECTION "R"
FOR COMPLETE RETAINER INFORMATION
▲REFER TO GROUP IN SOFT TRIM SECTION

P-9241

1973 MONTEGO - BODY TYPE 53 - ROOF and BACK BELT

GROUP NUMBER	PART NAME	DESCRIPTION	PART NUMBER		QTY.
423A18-9	Moulding (back belt outside side)		(RH)♦D4GY 53423A18-A	(LH)♦D4GY 53423A19-A	1
423A20	Moulding (back belt outside)		♦D4OZ 65423A20-H		1
51726-7	Moulding (roof drip side finish)	Front-w/o vinyl roof	(RH) D2GY 5351726-B	(LH) D2GY 5351727-B	1
		Front-w/vinyl roof	(RH) D2GY 5351726-A	(LH) D2GY 5351727-A	1

♦ Includes attaching parts

COPYRIGHT © 1986 — FORD MOTOR COMPANY — DEARBORN, MICHIGAN

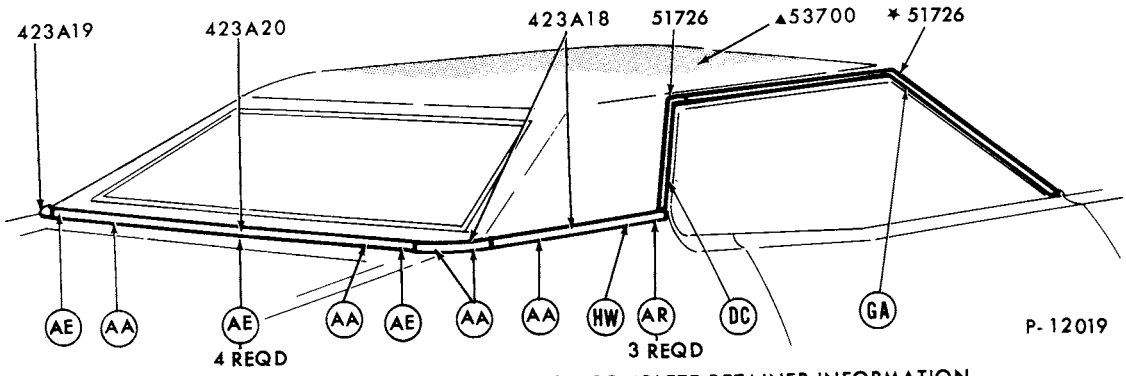

REFER TO EXTERIOR MOULDING SECTION 'R' FOR COMPLETE RETAINER INFORMATION
▲ REFER TO SOFT TRIM SECTION

1973 MONTEGO - BODY TYPES 63 and 65B, D, K - ROOF and BACK BELT - w/FULL VINYL ROOF

GROUP NUMBER	PART NAME	DESCRIPTION	PART NUMBER		QTY.
423A18-9	Moulding (back belt outside side)	Body type 63	(RH)★D2GY 63423A18-A Not replaced (4/83)	(LH)★D2GY 63423A19-A Not replaced (4/83)	1
		Front-body types 65B,D	(RH)♦D4GY 65423A18-B	(LH)♦D4GY 65423A19-B	1
		Rear-body types 65B,D	(RH)♦D4GY 65423A18-C	(LH)♦D4GY 65423A19-C	1
		Body type 65K	(RH)♦D4GY 65423A18-A	(LH)♦D4GY 65423A19-A	1
423A20	Moulding (back belt outside)	Body type 65	♦D4OZ 65423A20-H		1
51726-7	Moulding (roof drip side finish)	Front-w/o vinyl roof body type 65	★(RH) D2OZ 6551726-B Not replaced (4/79)	(LH)★D2OZ 6551727-B	1
		Front-w/full vinyl roof-body type 65	(RH)★D2GY 6551726-C Not replaced (4/83)	(LH)★D2GY 6551727-C	1
		Rear-w/full vinyl-body type 65	(RH) D2GY 6551726-B	(LH) D2GY 6551727-B	1
		Front-body type 63	(RH) D2OZ 6351726-A	(LH) D2OZ 6351727-A	1

♦ Includes attaching parts

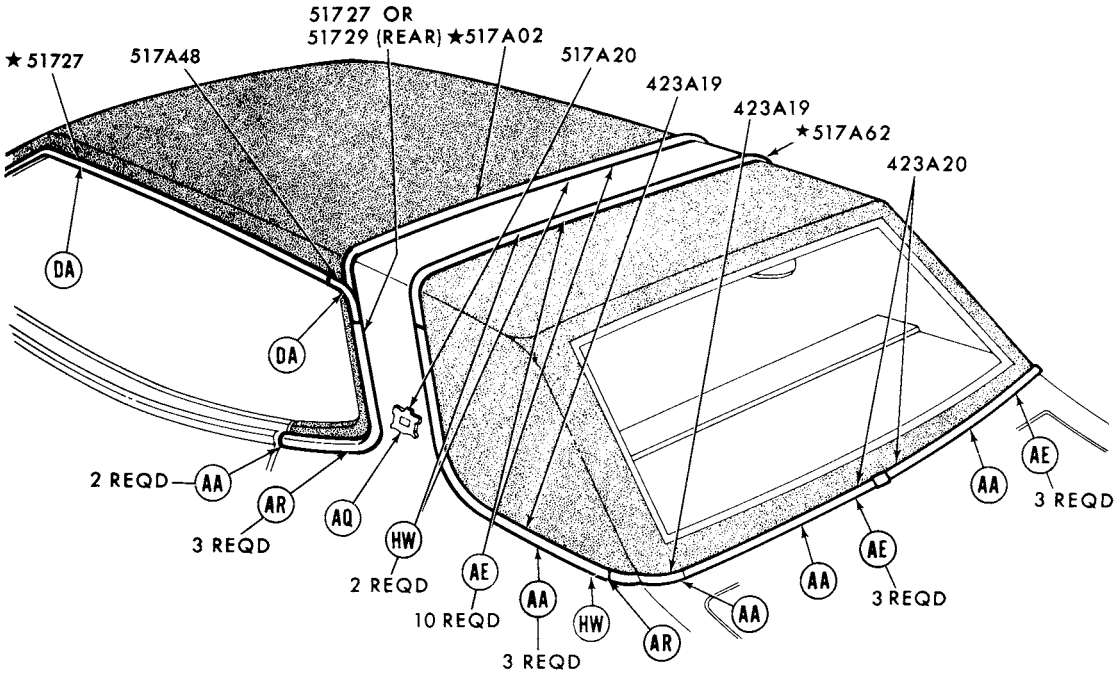

REFER TO EXTERIOR MOULDING SECTION "R" FOR COMPLETE RETAINER INFORMATION P-10746

1973 MONTEGO - BODY TYPE 65K - ROOF and BACK BELT

GROUP NUMBER	PART NAME	DESCRIPTION	PART NUMBER		QTY.
423A18-9	Moulding (back belt outside side)	Split vinyl roof-front	(RH)♦D4GY 65423A18-D	(LH)♦D4GY 65423A19-D	1
		Split vinyl roof-rear	(RH)♦D4GY 65423A18-C	(LH)♦D4GY 65423A19-C	1
		Full vinyl roof or opera window-front	(RH)♦D4GY 65423A18-A	(LH)♦D4GY 65423A19-A	1
423A20	Moulding (back belt outside)	Vinyl roof-center	♦D4OZ 65423A20-H		1
517A20	Ornament (roof side outside)		♦C9MY 65517A20-A	R.H. and L.H.	2
51726-9	Moulding (roof drip side finish)	Rear	(RH) D3GY 6551728-A	(LH) D3GY 6551729-A	1
517A48-9	Moulding (roof drip side rear corner finish)		(RH) D2GY 65517A48-A	(LH) D2GY 65517A49-A	1
517A62-3	Moulding (roof outside side rear)		(RH)★D3GY 65517A62-A	★(LH)★D3GY 65517A63-A Not replaced (4/79)	1

♦ Includes attaching part

COPYRIGHT © 1986 — FORD MOTOR COMPANY — DEARBORN, MICHIGAN

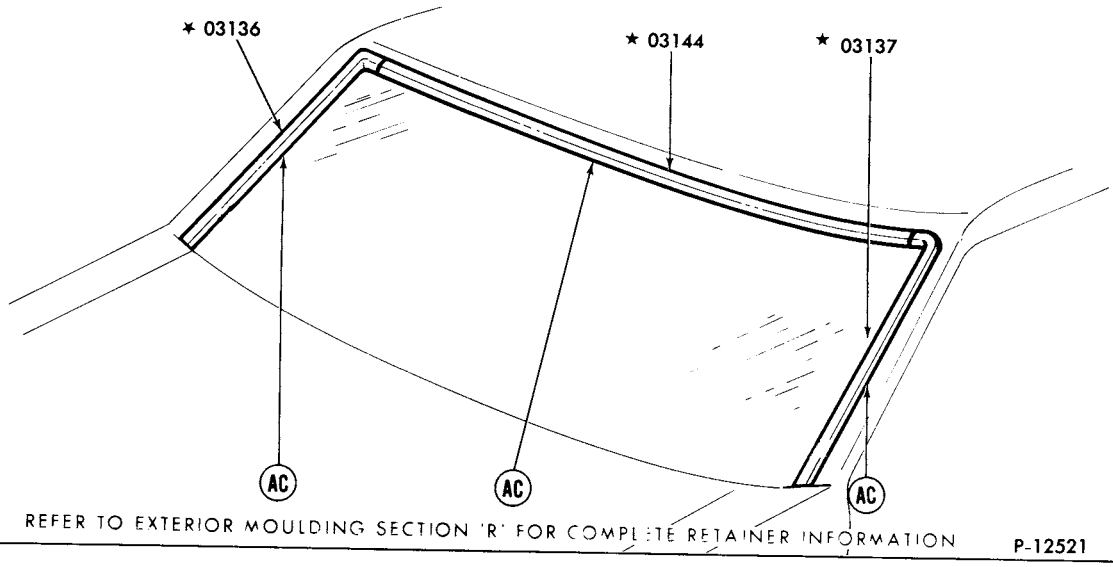

1973 LINCOLN - WINDSHIELD

GROUP NUMBER	PART NAME	DESCRIPTION	PART NUMBER	QTY.
03136-7	Moulding (windshield outside side)		(RH)★D0VY 6503136-A (LH)★D0VY 6503137-A	1
03144	Moulding (windshield outside top)		★D0VY 6503144-A	1

♦ Includes attaching parts

COPYRIGHT © 1986 — FORD MOTOR COMPANY — DEARBORN, MICHIGAN

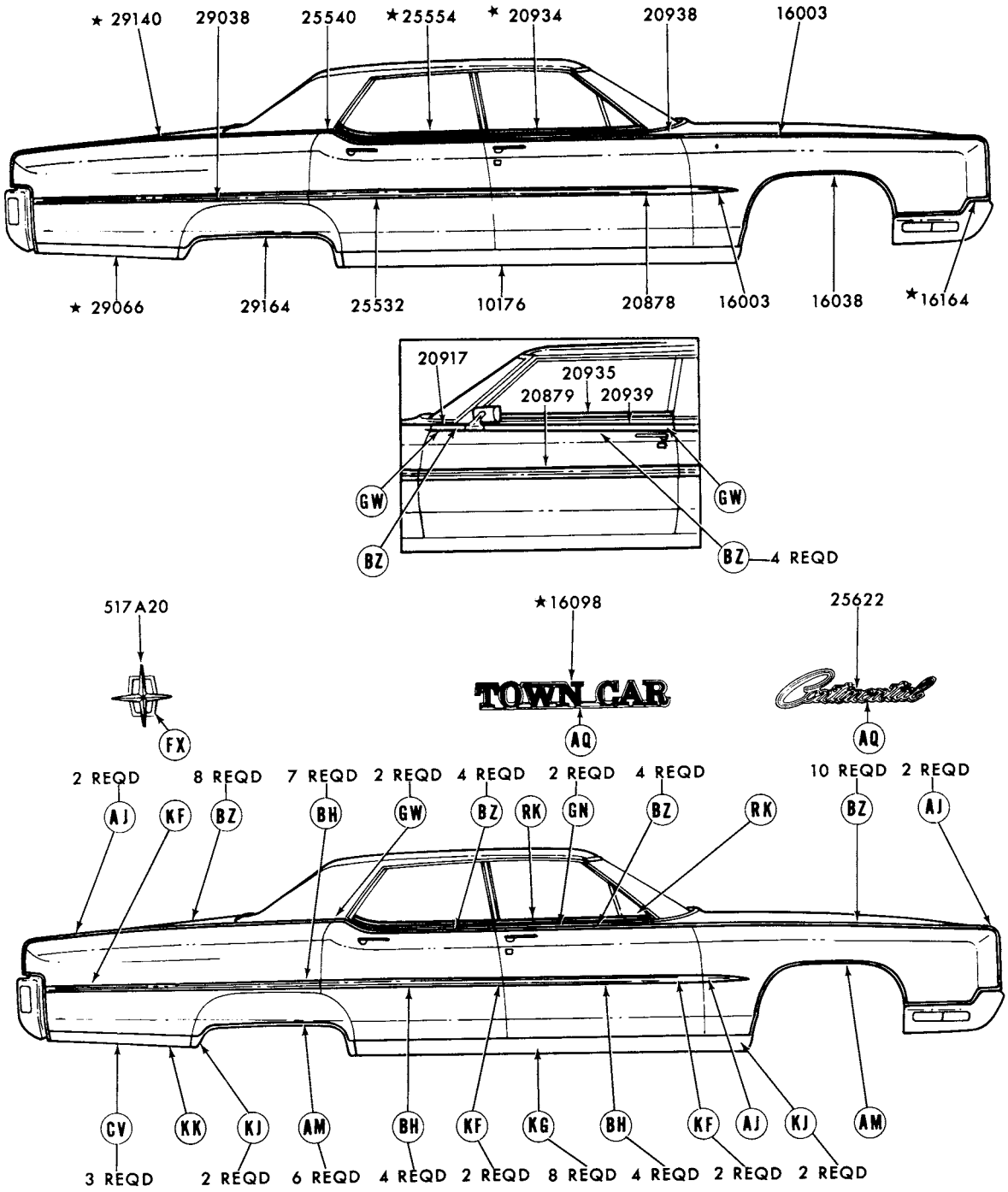

■ REFER TO GROUP IN TEXT SECTION
REFER TO EXTERIOR MOULDING SECTION "R" FOR COMPLETE RETAINER INFORMATION P-13614

1973 LINCOLN - BODY TYPE 53 - SIDE

1973 LINCOLN - BODY TYPE 53 - SIDE - cont'd.

GROUP NUMBER	PART NAME	DESCRIPTION	PART NUMBER		QTY.
10176-7	Moulding (body rocker panel)		(RH)♦D2VY 6510176-A	(LH)♦D2VY 6510177-A	1
16003	Moulding (front fender side)	Black vinyl insert	♦D2LY 16003-B	R.H. and L.H.	2
16003-4	Moulding (front fender upper)		(RH)♦D2VY 16003-C	(LH)♦D2VY 16004-B	1
16038-9	Moulding (front fender wheel opening)		(RH)♦D2VY 16038-A	(LH)♦D2VY 16039-A	1
16098	Plate (front fender name)	"TOWN CAR"	★D1VY 16098-A Not replaced (3/82)	R.H. and L.H.	2
16164-5	Moulding (front fender front)		(RH)★D3VY 16164-A Not replaced 3/82	(LH)★D3VY 16165-A Not replaced 3/82	1
20878-9	Moulding (front door outside lower)	Black vinyl insert	♦D2VY 5320878-B	R.H. and L.H.	2
20916-7	Moulding (front door outside front)		(RH)♦D3VY 6520916-A	(LH)♦D2VY 6520917-B	1
20934-5	Moulding and weatherstrip (front door outside belt)	W/mini vent "From 12/1/72"	★(RH)♦D3VY 5320934-A Not replaced (4/79)	★(LH)♦D3VY 5320935-A	1
		W/o mini vent "Before 12/1/72"	(RH)★D2VY 5320934-B	★(LH)★D2VY 5320935-A Not replaced (4/79)	1
		"From 12/1/72"	(RH)★D3VY 5320934-B	★(LH)★D3VY 5320935-B Not replaced (4/79)	1
20938-9	Moulding (front door outside)	Without R.H. mirror	(RH)♦D2VY 5320938-B	(LH)♦D2VY 5320939-B	1
		With R.H. mirror	(RH)♦D3VY 5320938-A	(LH)♦D2VY 5320939-B	1
25532-3	Moulding (rear door outside)	Black vinyl insert	♦D2VY 5325532-B	R.H. and L.H.	2
25540-1	Moulding (rear door outside upper)		(RH)♦D2VY 5325540-B	(LH)♦D2VY 5325541-B	1
25554-5	Moulding (rear door outside belt)		(RH)★D2VY 5325554-A Not replaced (2/81)	(LH)★D2VY 5325555-A Not replaced (2/81)	1
25622	Plate (name)	"Continental"	♦C4VY 5325622-A	R.H. and L.H.	2
29038	Moulding (quarter outside)	Black vinyl insert	♦D2VY 5329038-B	R.H. and L.H.	2
29066-7	Moulding (quarter panel outside lower)		(RH)★D2VY 6529066-A Not replaced 3/82	(LH)★D2VY 6529067-A Not replaced (3/82)	1
29140-1	Moulding (quarter panel outside upper)		(RH)★D2VY 5329140-B Not replaced (2/81)	(LH)★D2VY 5329141-B Not replaced (2/81)	1
29164-5	Moulding (quarter wheel opening)		(RH)♦D2VY 6529164-A	(LH)♦D2VY 6529165-A	1
50398	Plate (roof name)	"Town Car"	♦D3VY 5350398-A	R.H. and L.H.	2
517A20	Ornament (roof side outside)		♦C9VY 53517A20-A	R.H. and L.H.	2

♦ Includes attaching parts

COPYRIGHT © 1986 — FORD MOTOR COMPANY — DEARBORN, MICHIGAN

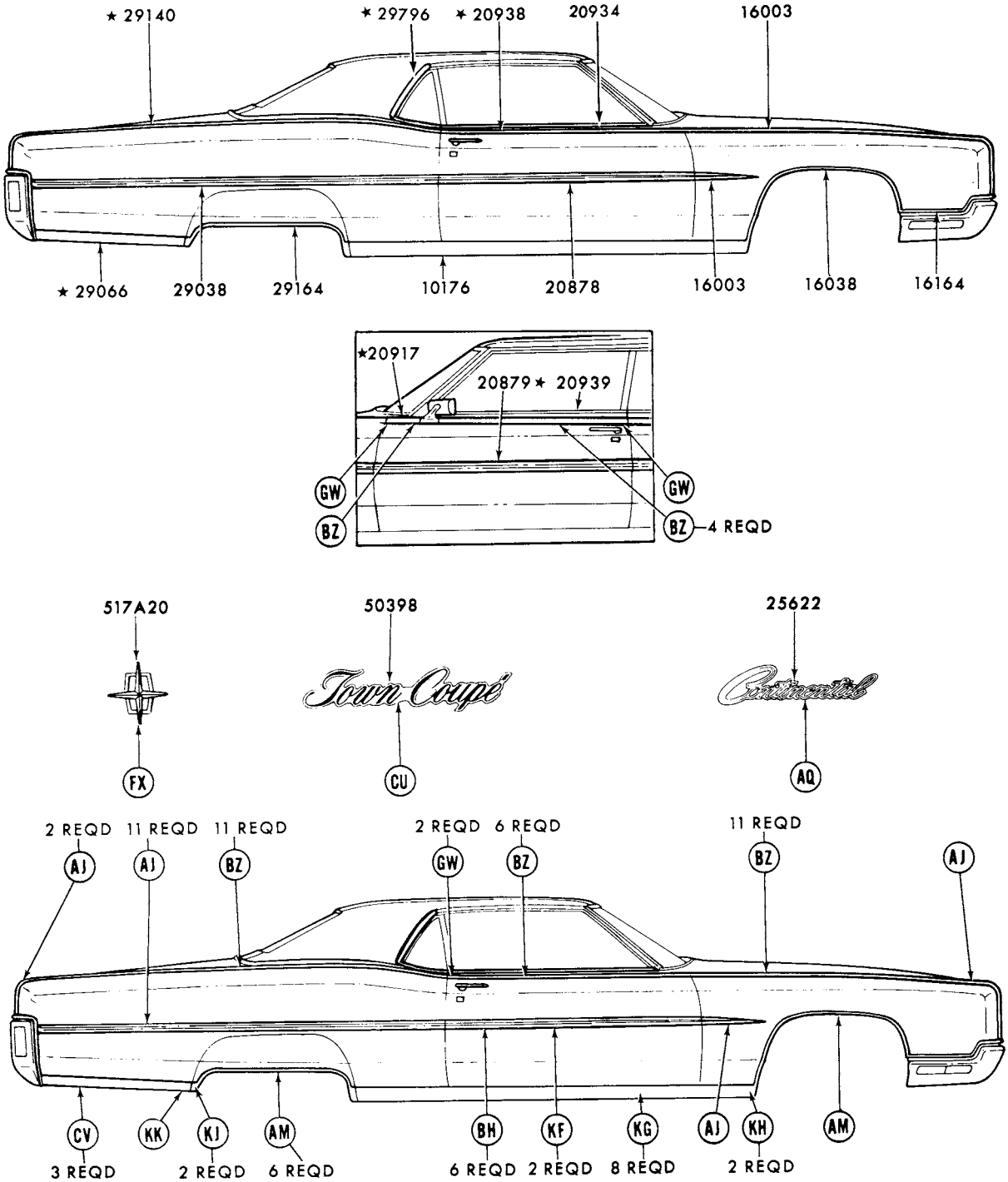

REFER TO EXTERIOR MOULDING SECTION "R" FOR COMPLETE RETAINER INFORMATION P-8694

1973 LINCOLN - BODY TYPE 65 - SIDE

1973 LINCOLN - BODY TYPE 65 - SIDE - cont'd.

GROUP NUMBER	PART NAME	DESCRIPTION	PART NUMBER		QTY.
10176-7	Moulding (body rocker panel)		(RH)♦D2VY 6510176-A	(LH)♦D2VY 6510177-A	1
16003	Moulding (front fender side)	Black vinyl insert	♦D2LY 16003-B	R.H. and L.H.	2
16003-4	Moulding (front fender upper)		(RH)♦D2VY 16003-C	(LH)♦D2VY 16004-B	1
16038-9	Moulding (front fender wheel opening)		(RH)♦D2VY 16038-A	(LH)♦D2VY 16039-A	1
16164-5	Moulding (front fender front)	Lower	(RH)♦D3VY 16164-A	(LH)♦D3VY 16165-A	1
20878-9	Moulding (front door outside lower)	Black vinyl insert	♦D2VY 6520878-B	R.H. and L.H.	2
20916-7	Moulding (front door outside front)		(RH)★D3VY 6520916-A	(LH)★D2VY 6520917-B Not replaced (3/82)	1
20934-5	Moulding and weatherstrip (front door outside at belt)	"Before 12/1/72"	(RH)♦D0VY 6520934-A	(LH)♦D0VY 6520935-A	1
20938-9	Moulding (front door outside)	Without R.H. mirror	(RH)★D2VY 6520938-B	(LH)★D2VY 6520939-B	1
		With R.H. mirror	★(RH)★D3VY 6520938-A Not replaced (4/79)	(LH)★D2VY 6520939-B	1
25622	Plate (name)	"Continental"	♦C4VY 5325622-A	R.H. and L.H.	2
29038-9	Moulding (quarter outside)	Black vinyl insert	♦D2VY 6529038-B	R.H. and L.H.	2
29066-7	Moulding (quarter panel outside lower rear)		(RH)★D2VY 6529066-A	(LH)★D2VY 6529067-A Not replaced (3/82)	1
29140-1	Moulding (quarter panel outside upper)		(RH)★D2VY 6529140-B	(LH)★D2VY 6529141-B Not replaced (3/82)	1
29164-5	Moulding (quarter wheel opening)		(RH)♦D2VY 6529164-A	(LH)♦D2VY 6529165-A	1
29796-7	Moulding (quarter window outside upper)	"Before 3/14/73"	★(RH)★D0VY 6529796-A Not replaced (4/79)	(LH)★D0VY 6529797-A	1
		"From 3/14/73"	★(RH)★D3VY 6529796-A Not replaced (4/79)	(LH)★D3VY 6529797-A	1
50398	Plate (roof name)	"Town Coupe"	♦D3VY 6550398-A	R.H. and L.H.	2
517A20	Ornament (roof side outside)		♦C9VY 53517A20-A	R.H. and L.H.	2

♦ Includes attaching parts

COPYRIGHT © 1986 — FORD MOTOR COMPANY — DEARBORN, MICHIGAN

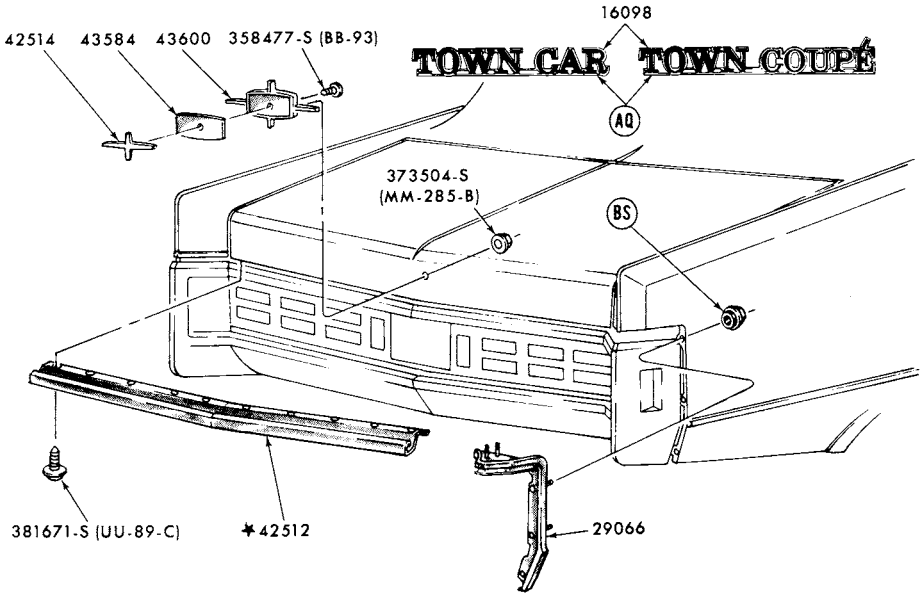

REFER TO EXTERIOR MOULDING SECTION "R" FOR COMPLETE RETAINER INFORMATION P-7024

1973 LINCOLN - BACK END

GROUP NUMBER	PART NAME	DESCRIPTION	PART NUMBER	QTY.
16098	Plate (luggage compartment door)	"TOWN CAR"	♦D1VY 16098-A	1
		"TOWN COUPE"	♦D3VY 16098-A	1
29066-7	Moulding (quarter panel outside lower rear)		(RH)♦D3VY 6529066-A (LH)♦D3VY 6529067-A	1
42512	Moulding (luggage compartment door)		✱D2VY 6542512-A Not replaced (4/83)	1
42514	Ornament (luggage compartment door)		♦D0VY 6542514-A	1
43584	Insert (luggage compartment door lock keyhole cover)		♦C6VY 5343584-A	1
43600	Sleeve (luggage compartment door lock cylinder)		♦D0VY 6543600-A	1

♦ Includes attacning parts

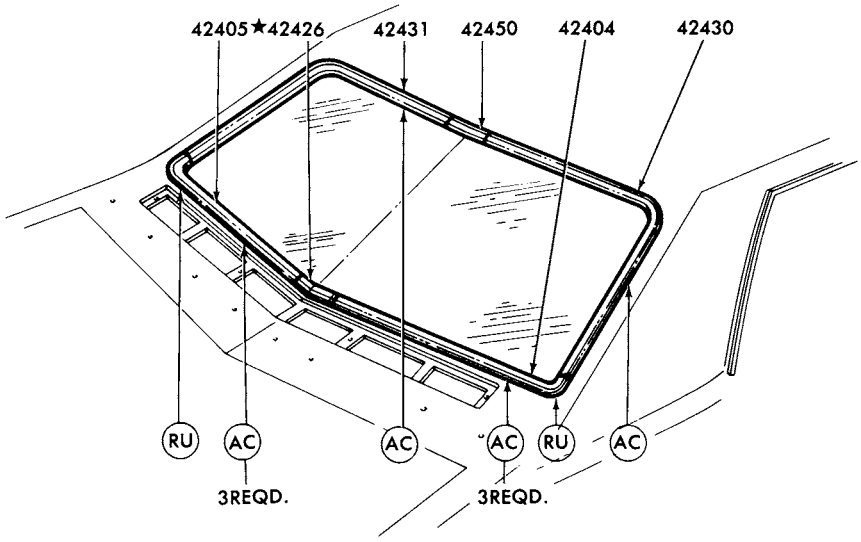

REFER TO EXTERIOR MOULDING SECTION "R" FOR COMPLETE RETAINER INFORMATION

P-12470

1973 LINCOLN - BODY TYPE 53 - BACK WINDOW

GROUP NUMBER	PART NAME	DESCRIPTION	PART NUMBER	QTY.
42404-5	Moulding (back window outside lower)		(RH)♦ D0VY 5342404-A (LH)♦ D0VY 5342405-A	1
42430-1	Moulding (back window outside upper)		(RH)♦ D0VY 5342430-A (LH)♦ D0VY 5342431-A	1
42450	Cover (back window outside moulding joint)		D0VY 5342450-A	1

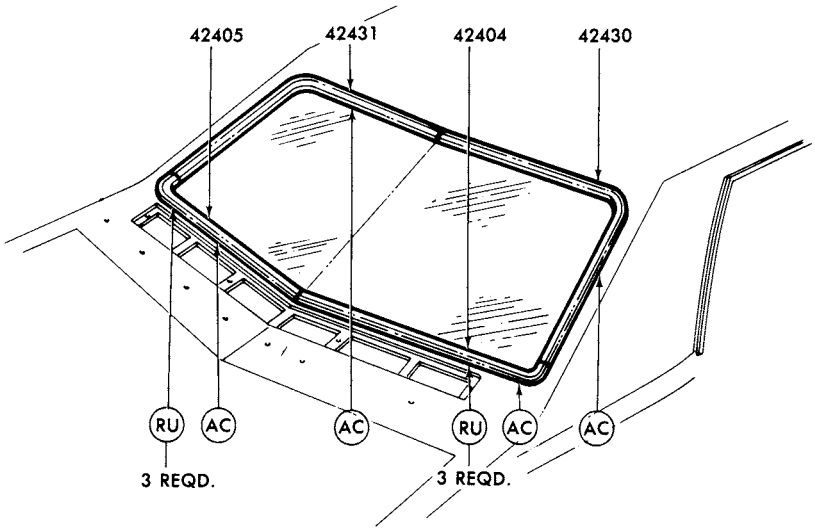

REFER TO EXTERIOR MOULDING SECTION "R" FOR COMPLETE RETAINER INFORMATION

P-12471

1973 LINCOLN - BODY TYPE 65 - BACK WINDOW

♦ Includes attaching parts

COPYRIGHT © 1986 — FORD MOTOR COMPANY — DEARBORN, MICHIGAN

1973 LINCOLN - BODY TYPE 65 - BACK WINDOW - cont'd.

GROUP NUMBER	PART NAME	DESCRIPTION	PART NUMBER		QTY.
42404-5	Moulding (back window outside lower)		(RH)♠D0VY 6542404-A	(LH)♠D0VY 6542405-A	1
42430-1	Moulding (back window outside upper)		(RH)♠ D0VY 6542430-A	(LH)♠D0VY 6542431-A	1

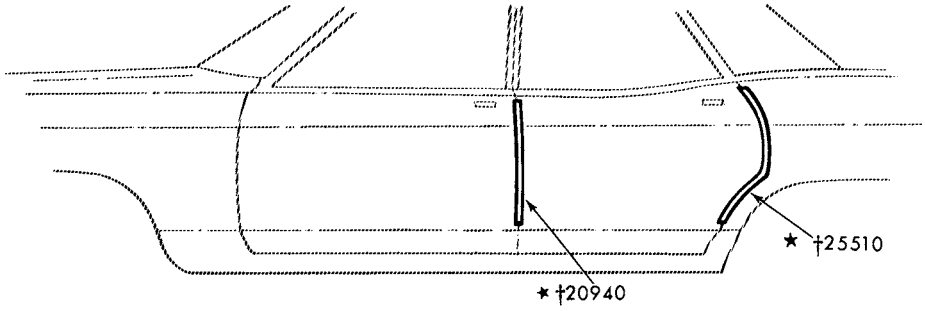

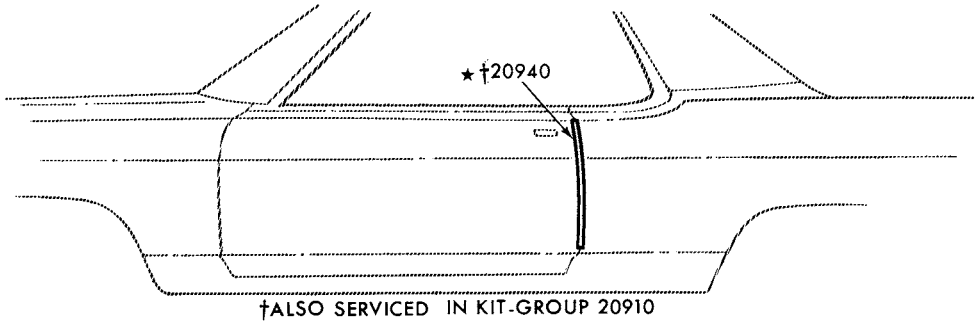

†ALSO SERVICED IN KIT-GROUP 20910

P-10061

1973 LINCOLN - DOOR EDGE GUARDS

GROUP NUMBER	PART NAME	DESCRIPTION	PART NUMBER		QTY.
20940-1	Moulding (front door edge guard)	Body type 53	★ D0VY 5320940-A	R.H. and L.H.	2
		Body type 65	★ D0VY 6520940-A Not replaced (3/82)	R.H. and L.H.	2
25510-1	Moulding (rear door edge guard)	Body type 53	(RH)★D0VY 5325510-A Not replaced (3/82)	(LH)★D0VY 5325511-A Not replaced (3/82)	1

♠ Includes attaching parts

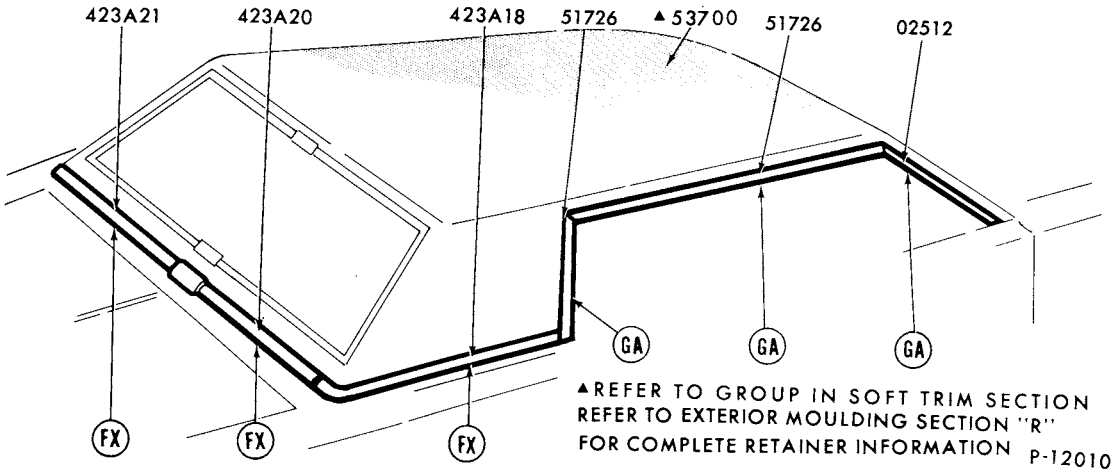

1973 LINCOLN - ROOF and BACK BELT

GROUP NUMBER	PART NAME	DESCRIPTION	PART NUMBER		QTY.
02512-3	Moulding (front body pillar drip finish)		(RH)♦D0VY 6502512-A	(LH)♦D0VY 6502513-A	1
423A18-9	Moulding (back belt outside side)	Body type 53-paint to match	(RH)♦D2VY 53423A18-A	(LH)♦D2VY 53423A19-A	1
		Body type 65-paint to match	(RH)★D2VY 65423A18-A	★(LH)♦D2VY 65423A19-A Not replaced (4/79)	1
423A20-1	Moulding (back belt outside)	Body type 53-paint to match	(RH)♦D2VY 53423A20-A	(LH)♦D2VY 53423A21-A	1
		Body type 65-paint to match	(RH)♦D2VY 65423A20-A	(LH)♦D2VY 65423A21-A	1
51726-7	Moulding (roof drip side finish)	Body type 53-front	(RH) D0VY 5351726-A	(LH) D0VY 5351727-A	1
		Body type 53-rear	(RH) D0VY 5351726-B	(LH) D0VY 5351727-B	1
		Body type 65	★(RH) D0VY 6551726-A Not replaced (4/79)	(LH)★D0VY 6551727-A	1

♦ Includes attaching parts

COPYRIGHT © 1986 — FORD MOTOR COMPANY — DEARBORN, MICHIGAN

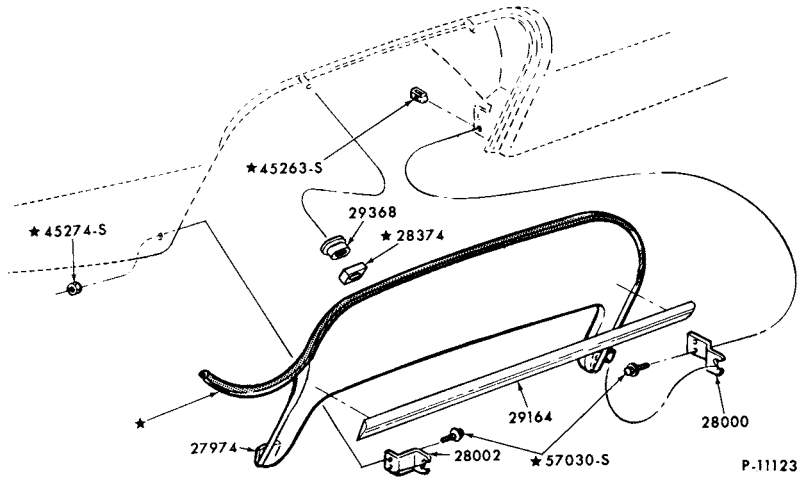

1973 LINCOLN WHEEL OPENING COVER PARTS

GROUP NUMBER	PART NAME	DESCRIPTION	PART NUMBER		QTY.
27974-5	Panel (quarter wheel opening cover)		(RH)♦D2VY 6527974-A	(LH)♦D2VY 6527975-A	1
28000-2	Bracket (quarter wheel opening cover)	Front	♦D0VY 6528000-A	R.H. and L.H.	2
		Rear	♦D0VY 6528002-A	R.H. and L.H.	2
29164-5	Moulding (quarter wheel opening)		(RH)♦D2VY 6529164-A	(LH)♦D2VY 6529165-A	1
29368	Insert (quarter wheel opening cover)		♦D1VY 6529368-A	R.H. and L.H.	4

♦ Includes attaching parts

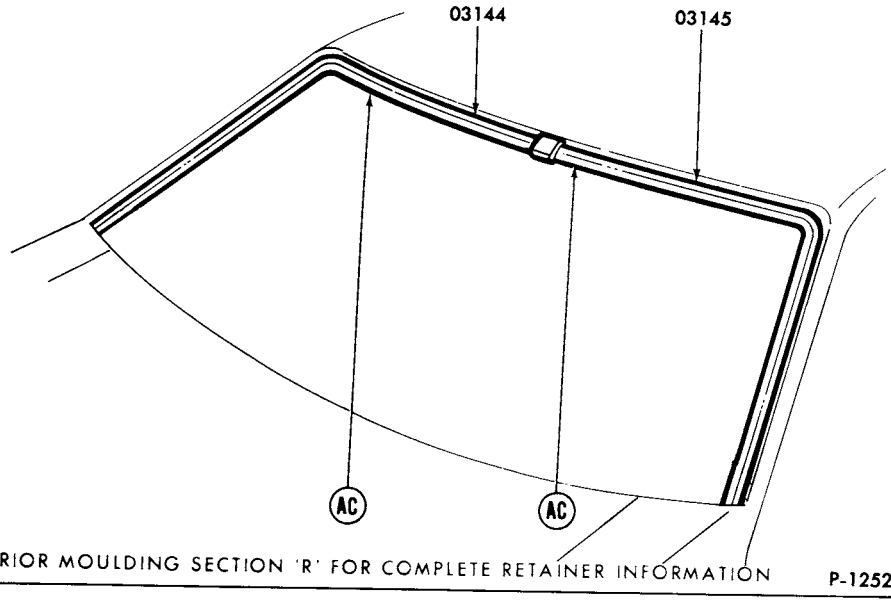

REFER TO EXTERIOR MOULDING SECTION 'R' FOR COMPLETE RETAINER INFORMATION

1973 COUGAR - BODY TYPE 65 - WINDSHIELD

GROUP NUMBER	PART NAME	DESCRIPTION	PART NUMBER		QTY.
03144-5	Moulding (windshield outside top)		(RH)♦ D1ZZ 6503144-A	(LH)♦ D1ZZ 6503145-A	1

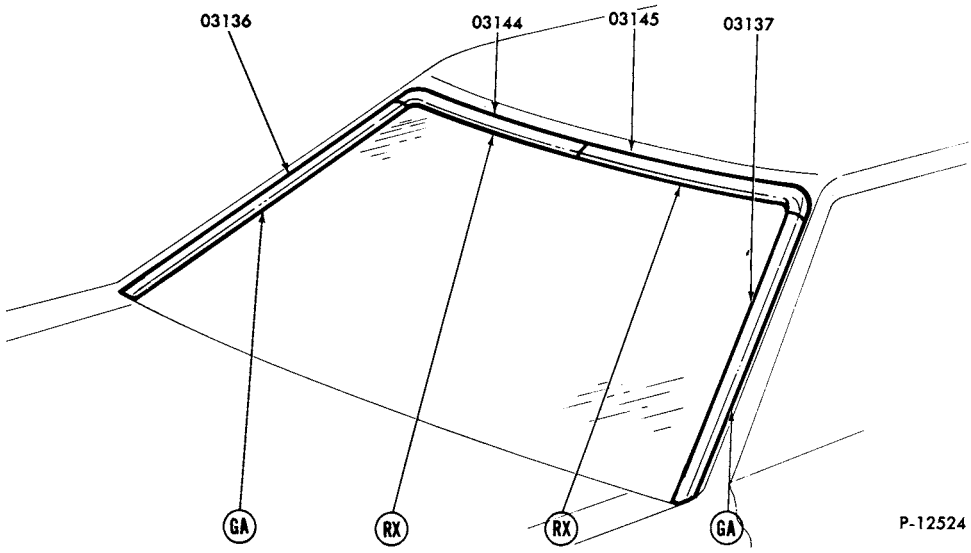

REFER TO EXTERIOR MOULDING SECTION 'R' FOR COMPLETE RETAINER INFORMATION

1973 COUGAR - BODY TYPE 76 - WINDSHIELD

GROUP NUMBER	PART NAME	DESCRIPTION	PART NUMBER		QTY.
03136-7	Moulding (windshield outside side)		(RH)♦ D1ZZ 7603136-A	(LH)♦ D1ZZ 7603137-A	1
03144-5	Moulding (windshield outside top)		(RH)♦ D1ZZ 7603144-A	(LH)♦ D1ZZ 7603145-A	1

♦ Includes attaching parts

COPYRIGHT © 1986 — FORD MOTOR COMPANY — DEARBORN, MICHIGAN

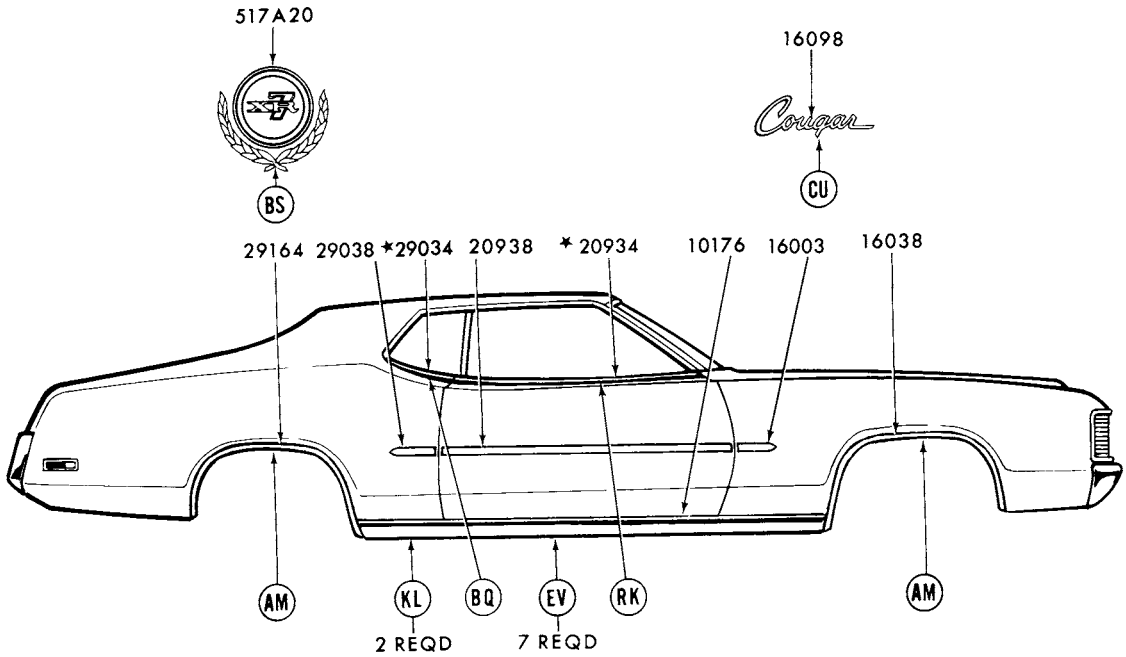

REFER TO EXTERIOR MOULDING SECTION "R" FOR COMPLETE RETAINER INFORMATION P-7969

1973 COUGAR - SIDE

GROUP NUMBER	PART NAME	DESCRIPTION	PART NUMBER		QTY.
10176-7	Moulding (body rocker panel)		(RH)♦D1WY 6510176-A	R.H. and L.H.	2
16003-4	Moulding (front fender side)	Black vinyl insert-adhesive backed-15 1/2" long-cut to fit	D5DZ 5425532-D	R.H. and L.H.	2
16038-9	Moulding (front fender wheel opening)		(RH)♦D1WY 16038-A	(LH)♦D1WY 16039-A	1
16098	Plate (front fender name)	"Cougar"	♦D1WY 16098-A	R.H. and L.H.	2
20934-5	Moulding and weatherstrip (front door outside at belt)		(RH)*D1WY 6520934-A	(LH)*D1WY 6520935-A Not replaced (3/82)	1
20938-9	Moulding (front door outside)	Black vinyl insert-adhesive backed-cut to fit	D1OZ 6529038-B	R.H. and L.H.	2
29034-5	Moulding (quarter panel outside)	Body type 76	(RH)*D1WY 7629034-A	(LH)*D1WY 7629035-A Not replaced (12/80)	1
		Body type 65	Refer to Roof and Back Belt		
29038-9	Moulding (quarter outside)	Black vinyl insert-adhesive backed-15 1/2" long-cut to fit	D5DZ 5425532-D	R.H. and L.H.	2
29164-5	Moulding (quarter wheel opening)		(RH)♦D1WY 6529164-A	(LH)♦D1WY 6529165-A	1
517A20	Ornament (roof side outside)	"XR7"	♦D1WY 65517A20-A	R.H. and L.H.	2

♦ Includes attaching parts

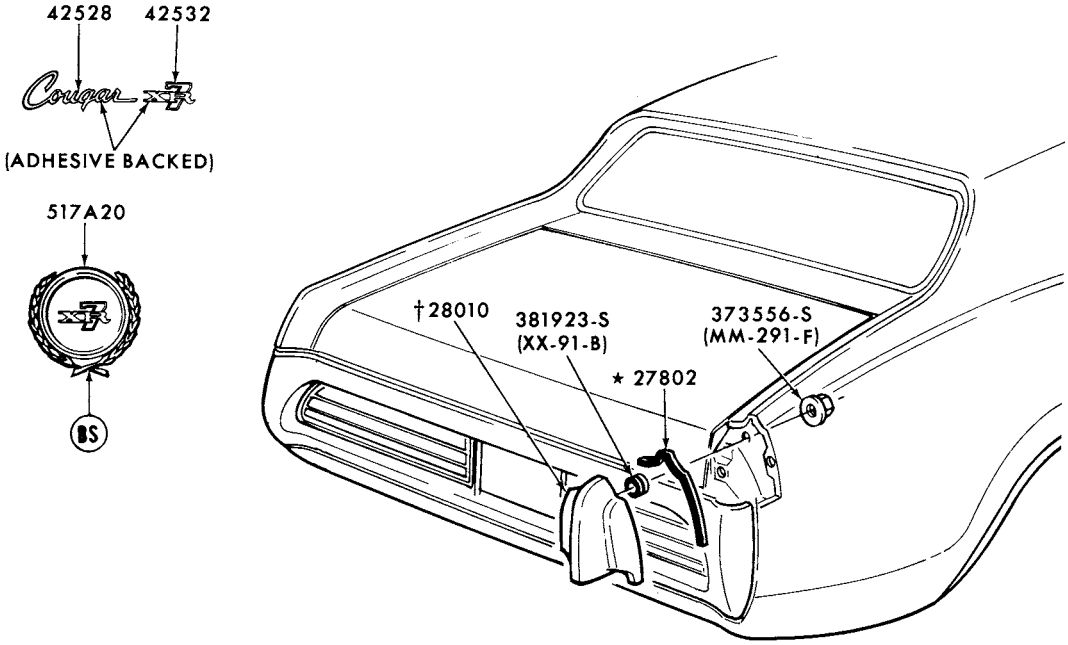

REFER TO EXTERIOR MOULDING SECTION "R" FOR COMPLETE RETAINER INFORMATION P-7970
† REFER TO GROUP IN TEXT SECTION

1973 COUGAR - BACK END

GROUP NUMBER	PART NAME	DESCRIPTION	PART NUMBER	QTY.
42528	Plate (luggage compartment door name)	"Cougar"-adhesive backed	D1WY 6542528-A	1
42532	Emblem (luggage compartment door)	"XR7"-Body types 65F,76F	♦ D4WY 16098-B	1
517A20	Ornament (roof side outside)	"XR7"-Body type 65F	♦D1WY 65517A20-A R.H. and L.H.	2

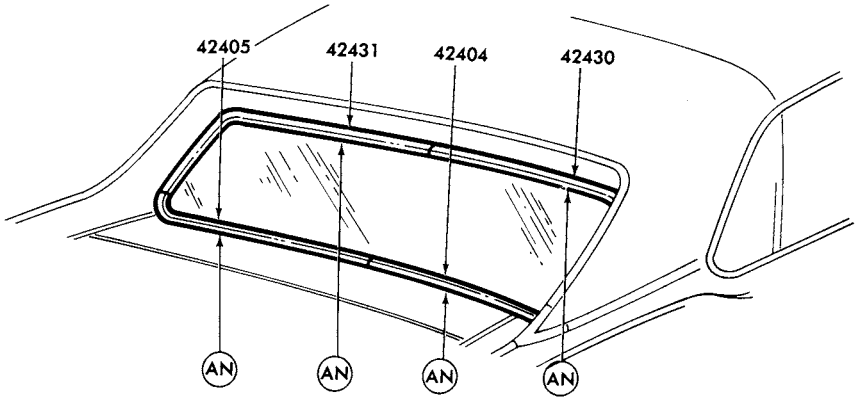

REFER TO EXTERIOR MOULDING SECTION "R" FOR COMPLETE RETAINER INFORMATION P-12472

1973 COUGAR - BODY TYPE 65 - BACK WINDOW

COPYRIGHT © 1986 — FORD MOTOR COMPANY — DEARBORN, MICHIGAN

1973 COUGAR - BODY TYPE 65 - BACK WINDOW - cont'd.

GROUP NUMBER	PART NAME	DESCRIPTION	PART NUMBER		QTY.
42404-5	Moulding (back window outside lower)		(RH)♦D1ZZ 6542404-A	(LH)♦D1ZZ 6542405-A	1
42430-1	Moulding (back window outside upper)		(RH)♦D1ZZ 6542430-A	(LH)♦D1ZZ 6542431-A	1

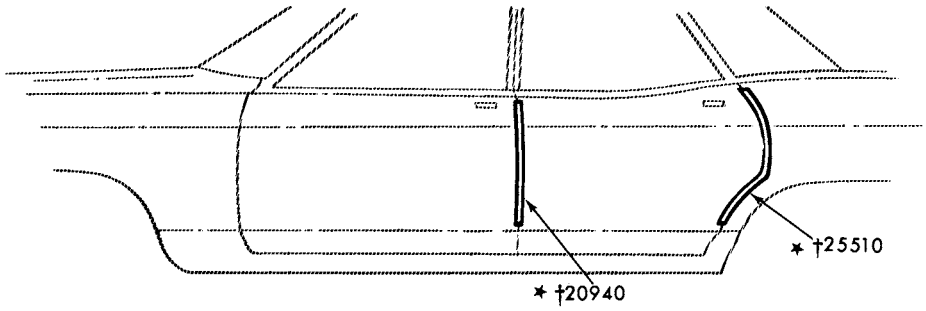

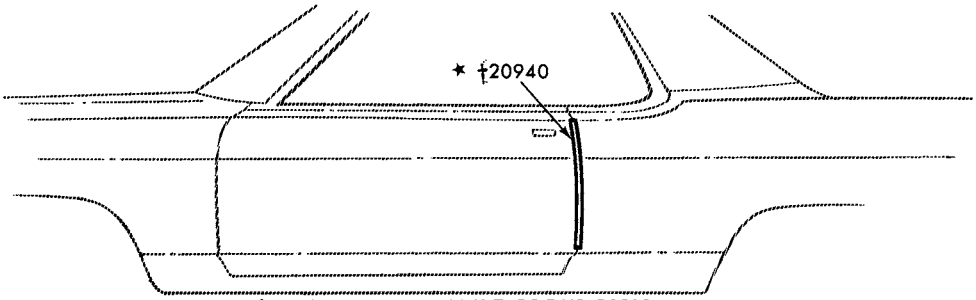

†ALSO SERVICED IN KIT-GROUP 20910

P-10061

1973 COUGAR - DOOR EDGE GUARDS

GROUP NUMBER	PART NAME	DESCRIPTION	PART NUMBER		QTY.
20940-1	Moulding (front door edge guard)		(RH)★D1WY 6520940-A	(LH)★D1WY 6520941-A Not replaced (4/84)	1

♦ Includes attaching parts

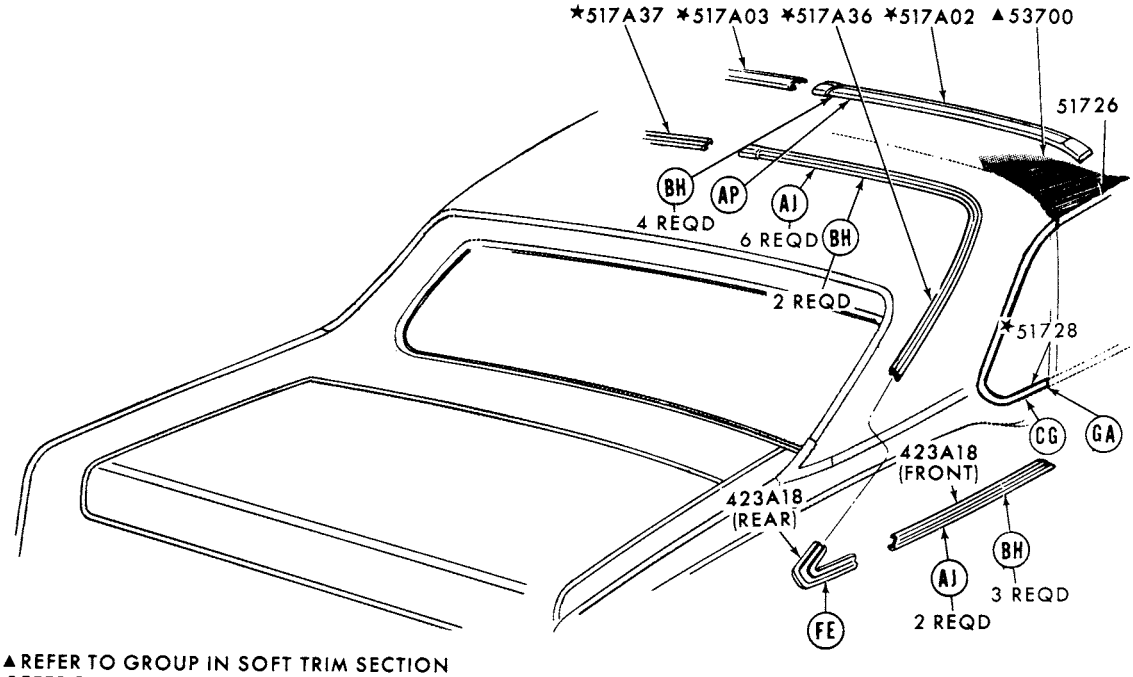

▲REFER TO GROUP IN SOFT TRIM SECTION
REFER TO EXTERIOR MOULDING SECTION "R" FOR COMPLETE RETAINER INFORMATION

P-8572

1973 COUGAR - BODY TYPE 65 - ROOF and BACK BELT

GROUP NUMBER	PART NAME	DESCRIPTION	PART NUMBER		QTY.
423A18-9	Moulding (back belt outside side)	Front	(RH)♦D1WY 65423A18-A	(LH)♦D1WY 65423A19-A	1
		Rear	(RH)♦D1WY 65423A18-C	(LH)♦D1WY 65423A19-C	1
517A02-3	Moulding (roof outside side)	Vinyl roof-rear	(RH)★D2WY 65517A02-A Not replaced (4/83)	(LH)★D2WY 65517A03-A Not replaced (4/83)	1
51726-9	Moulding (roof drip side finish)	Front upper-cut lower inboard end	(RH)♦D1WY 6551726-C	(LH)♦D1WY 6551727-C	1
		Rear upper	(RH)♦D1WY 6551726-B	(LH)♦D1WY 6551727-B	1
		Body type 65F-rear lower	(RH)★D1WY 6551728-B Not replaced (4/79)	(LH)♦D1WY 6551729-B	1
517A36-7	Moulding (roof outside rear)		(RH)★D1WY 65517A36-A Not replaced (4/83)	(LH)★D1WY 65517A37-A Not replaced (4/83)	1

♦ Includes attaching parts

COPYRIGHT © 1986 — FORD MOTOR COMPANY — DEARBORN, MICHIGAN

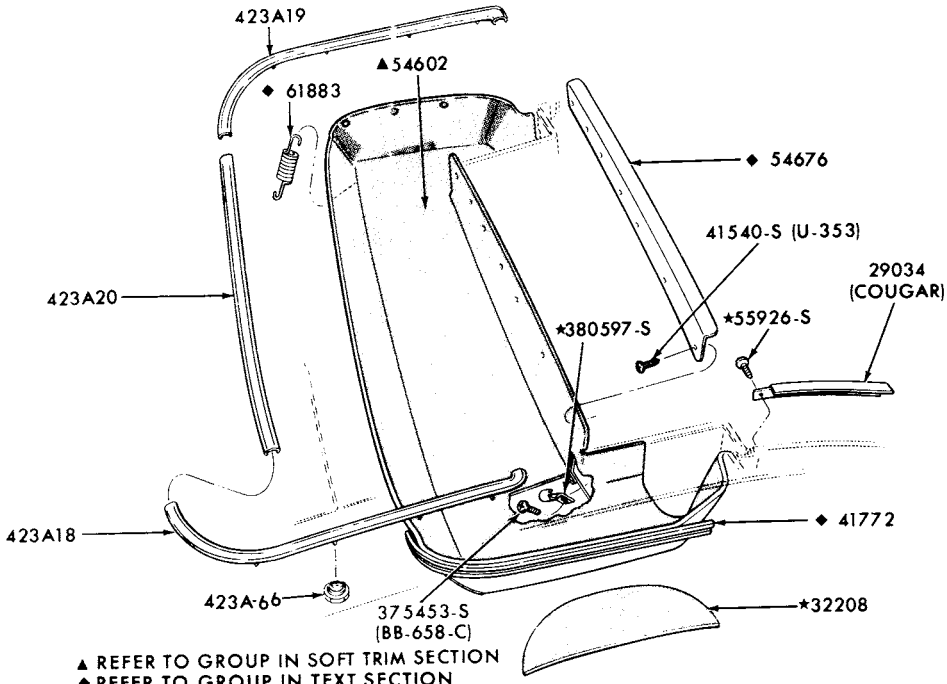

▲ REFER TO GROUP IN SOFT TRIM SECTION
◆ REFER TO GROUP IN TEXT SECTION
REFER TO EXTERIOR MOULDING SECTION "R" FOR COMPLETE RETAINER INFORMATION

1973 COUGAR - BODY TYPE 76 - BACK BELT

GROUP NUMBER	PART NAME	DESCRIPTION	PART NUMBER	QTY.
29034-5	Moulding (quarter panel outside)		(RH)♦D1WY 7629034-A (LH)♦D1WY 7629035-A	1
423A18-9	Moulding (back belt outside side)		(RH)♦D1WY 76423A18-A (LH)♦D1WY 76423A19-A	1
423A20	Moulding (back belt outside)		♦D1WY 76423A20-A	1
423A66	Nut (back belt moulding retaining)		♦C8AZ 76423A66-A	AR

♦ Includes attaching parts

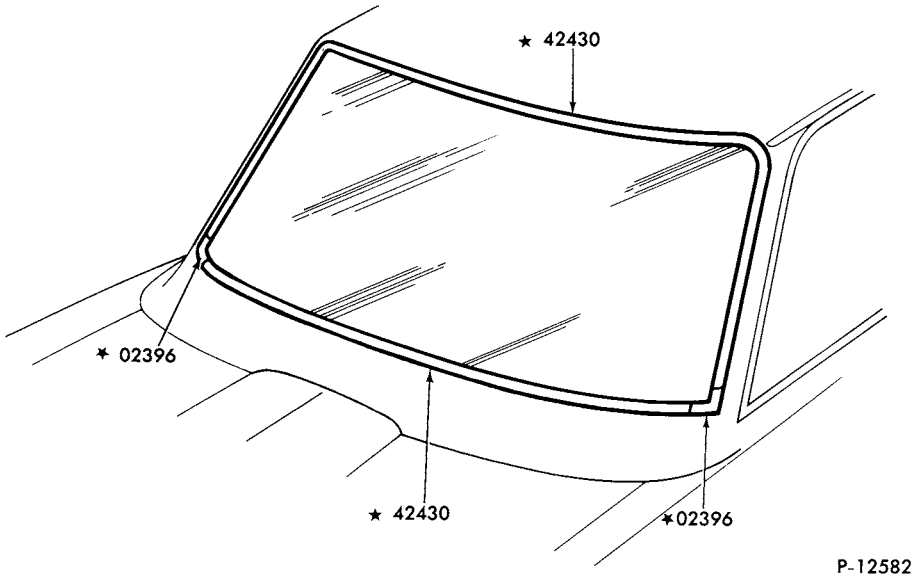

1973 CAPRI - WINDSHIELD

GROUP NUMBER	PART NAME	DESCRIPTION	PART NUMBER	QTY.
02396	Cover (windshield moulding joint)		✶ D0RY 6202396-A R.H. and L.H.	2
42430	Moulding (windshield upper and lower)	Nylon-144" long-cut to fit	★ D0RY 6242430-A	AR

COPYRIGHT © 1986 — FORD MOTOR COMPANY — DEARBORN, MICHIGAN

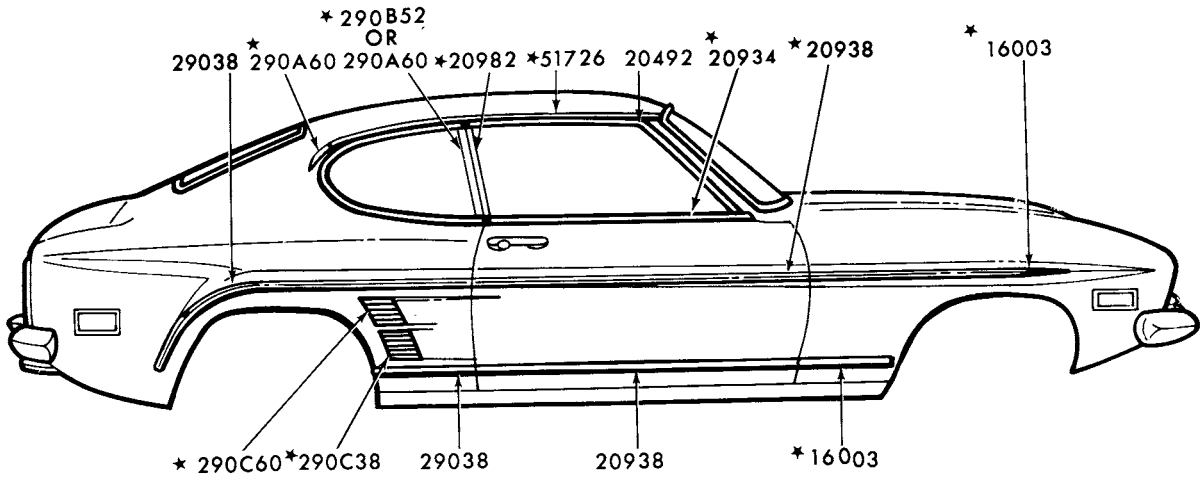

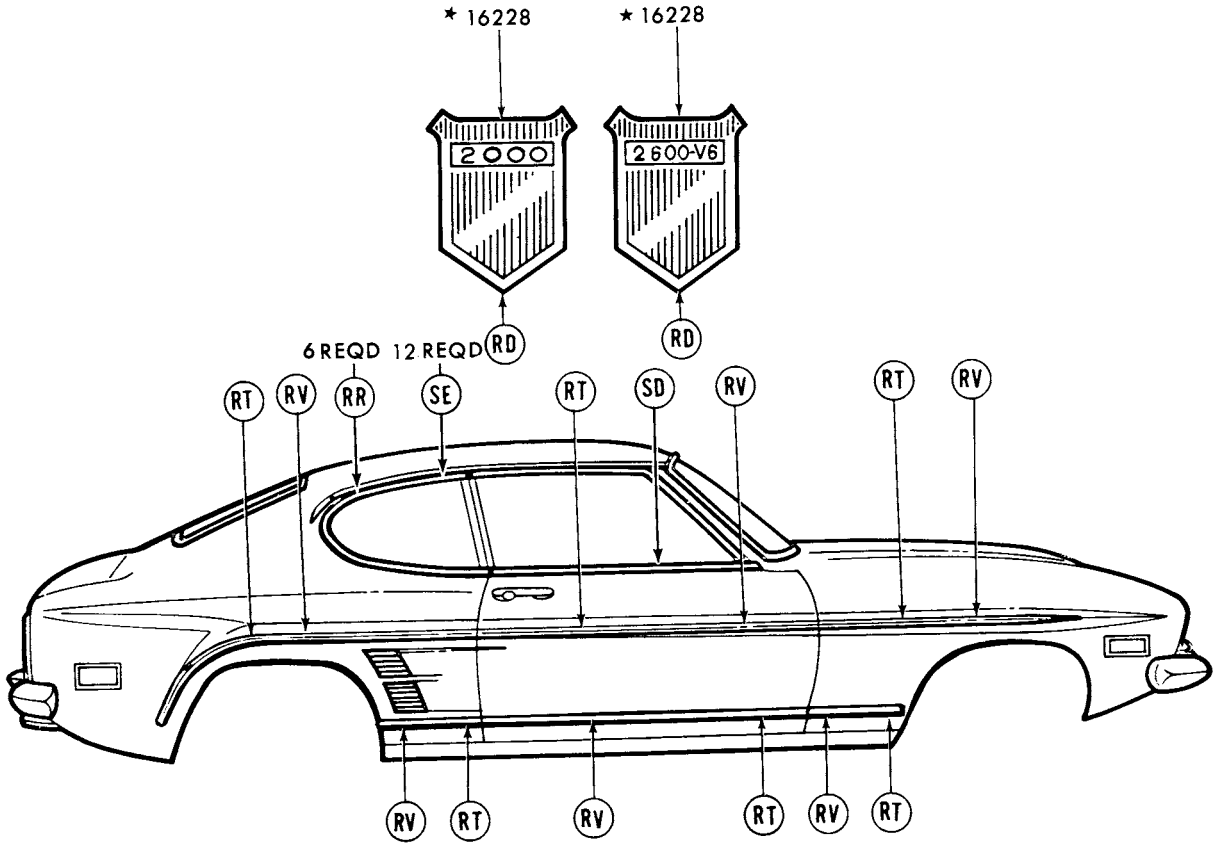

REFER TO EXTERIOR MOULDING SECTION 'R' FOR COMPLETE RETAINER INFORMATION

P-10534

1973 CAPRI - SIDE

1973 CAPRI - SIDE - cont'd.

GROUP NUMBER	PART NAME	DESCRIPTION	PART NUMBER		QTY.
16003	Moulding (front fender side)	Upper-adhesive backed-53" long-cut to fit	★ D2RY 16003-B	R.H. and L.H.	AR
		Lower	★ D0RY 16003-B	R.H. and L.H.	2
16228	Ornament (front fender)	"2000"	★ D3RY 16228-D	R.H. and L.H.	2
		"2600"- "Before 4/1/73"	★ D3RY 16228-A	R.H. and L.H.	2
		"2600"- "From 4/1/73"	★ D3RY 16228-C	R.H. and L.H.	2
20492-3	Moulding (front door window frame top)		(RH)★D0RY 6220492-A	(LH)★D0RY 6220493-A	1
20934-5	Moulding and weatherstrip (front door outside belt)		(RH)★D4RY 6220934-A	(LH)★D4RY 6220935-A	1
20938	Moulding (front door outside)	Upper-adhesive backed-53" long-cut to fit	★ D2RY 16003-B	R.H. and L.H.	AR
		Lower	★ D0RY 6220938-B	R.H. and L.H.	2
20982-3	Moulding (front door window frame rear)		(RH)★D0RY 6220982-A	(LH)★D0RY 6220983-A	1
29038	Moulding (quarter outside)	Lower	D0RY 6229038-B	R.H. and L.H.	2
		Upper-adhesive backed-53" long-cut to fit	★ D2RY 16003-B	R.H. and L.H.	AR
290C38-9	Grille (quarter panel lower)		(RH)★D3RY 62290C38-A	(LH)★D3RY 62290C39-A	1
290A60-1	Moulding (quarter window outside upper)	Quarter window	(RH) D0RY 62290A60-A	(LH) D0RY 62290A61-A	1
		Roof drip side finish moulding-w/vinyl roof-rear	(RH)★D0RY 62290A60-B	(LH)★D0RY 62290A61-B	1
290C60-1	Grille (quarter panel upper)		(RH)★D3RY 62290C60-A	(LH)★D3RY 62290C61-A	1
51726-7	Moulding (roof drip side finish)	W/o vinyl roof	(RH)★D0RY 6251726-A Not replaced (5/82)	(LH)★D0RY 6251727-A Not replaced (5/82)	1
		W/vinyl roof-front	(RH)★D0RY 6251726-B Not replaced (5/82)	(LH)★D0RY 6251727-B Not replaced (5/82)	1
		W/vinyl roof-rear	Refer to group 290A60-1		

COPYRIGHT © 1986 — FORD MOTOR COMPANY — DEARBORN, MICHIGAN

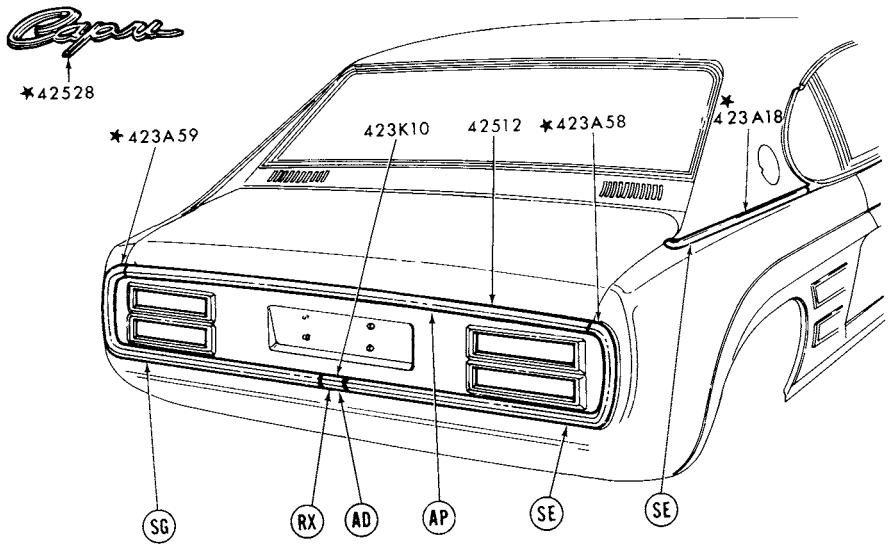

1973 CAPRI - BACK END

GROUP NUMBER	PART NAME	DESCRIPTION	PART NUMBER	QTY.
423K10	Cover (back panel moulding joint)		D0RY 62423K10-A	1
423A66	Nut (lower back panel moulding retainer)		D0RY 62423A66-A	12
42512	Moulding (luggage compartment door)		D0RY 6242512-A	1
42528	Plate (name)	"Capri"	★D3RY 6242528-A Not replaced (4/83)	1

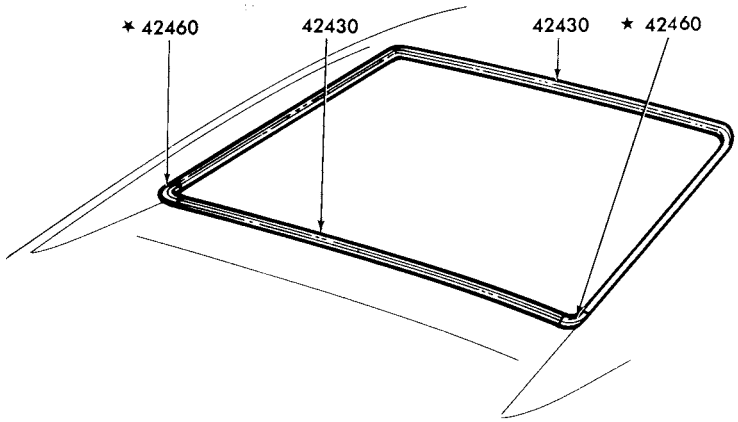

P-12473

1973 CAPRI - BACK WINDOW

GROUP NUMBER	PART NAME	DESCRIPTION	PART NUMBER	QTY.
42430	Moulding (back window outside)	Upper and lower-144" long-cut to fit	D0RY 6242430-A	AR
42460	Cover (back window outside side moulding joint)		* D0RY 6242460-A R.H. and L.H.	2

COPYRIGHT © 1986 — FORD MOTOR COMPANY — DEARBORN, MICHIGAN

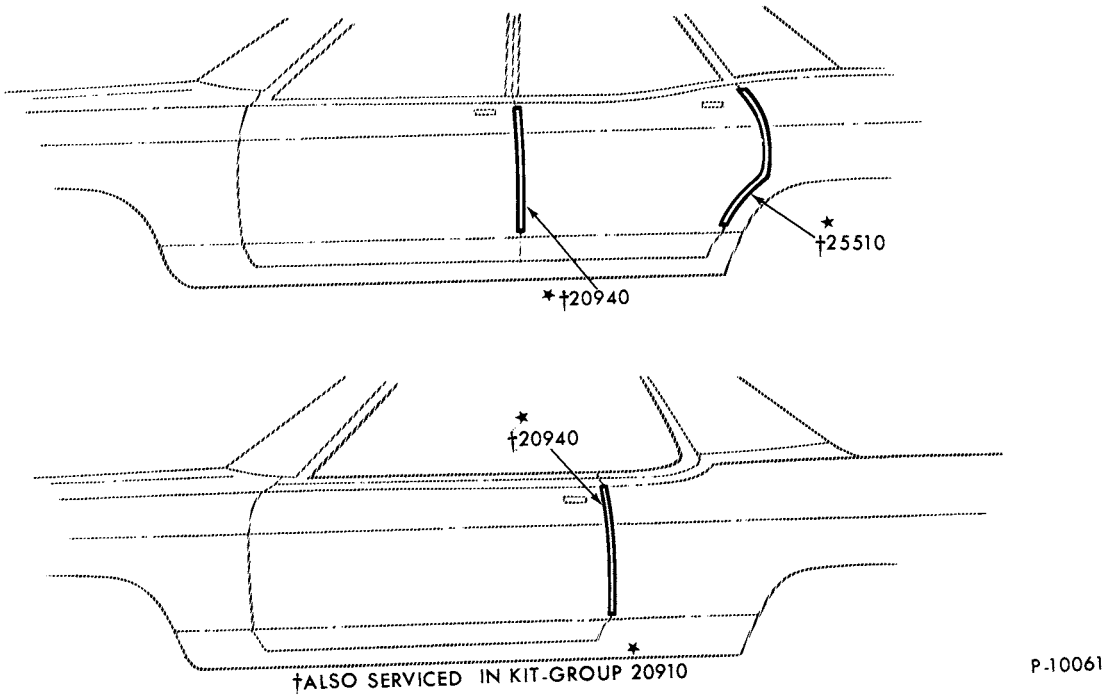

1973 CAPRI - DOOR EDGE GUARDS

GROUP NUMBER	PART NAME	DESCRIPTION	PART NUMBER	QTY.
20910	Moulding kit (door edge guard)		★ D2RY 6220910-A	1

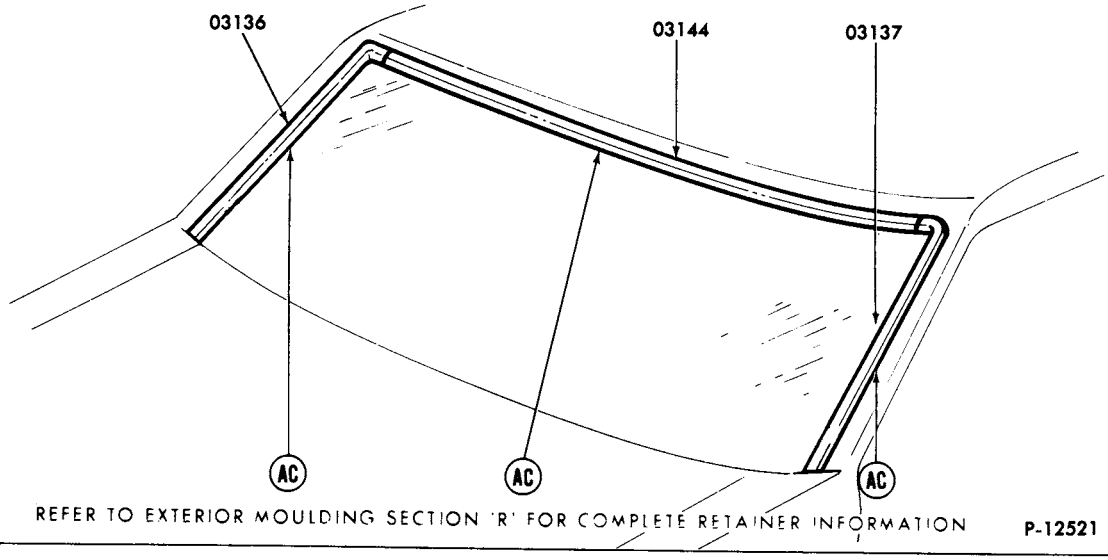

REFER TO EXTERIOR MOULDING SECTION 'R' FOR COMPLETE RETAINER INFORMATION

P-12521

1973 MARK IV - WINDSHIELD

GROUP NUMBER	PART NAME	DESCRIPTION	PART NUMBER		QTY.
03136-7	Moulding (windshield outside side)		(RH)♦D2SZ 6503136-A	(LH)♦D2SZ 6503137-A	1
03144	Moulding (windshield outside top)		♦D2SZ 6503144-A		1

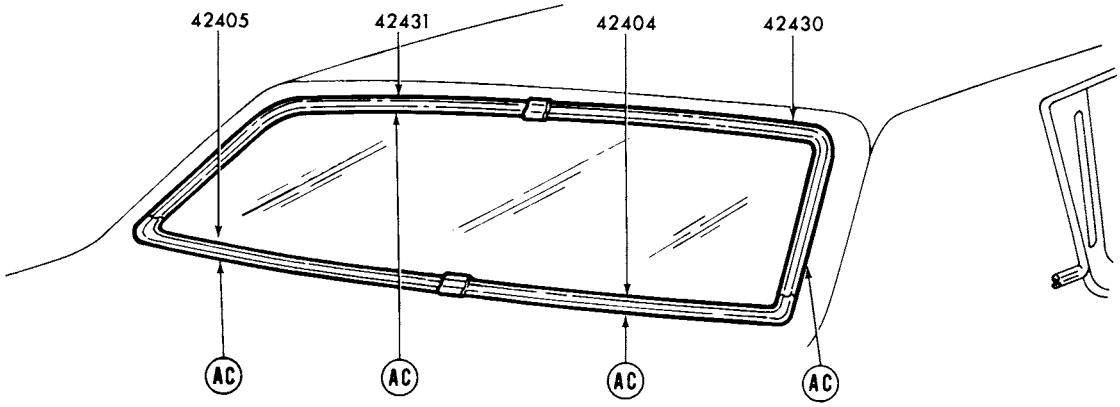

REFER TO EXTERIOR MOULDING SECTION "R" FOR COMPLETE RETAINER INFORMATION

P-12459

1973 MARK IV - BACK WINDOW

GROUP NUMBER	PART NAME	DESCRIPTION	PART NUMBER		QTY.
42404-5	Moulding (back window outside lower)		(RH)♦D2SZ 6542404-A	(LH)♦D2SZ 6542405-A	1
42430-1	Moulding (back window outside upper)		(RH)♦D2SZ 6542430-A	(LH)♦D2SZ 6542431-A	1

♦ Includes attaching parts

COPYRIGHT © 1986 — FORD MOTOR COMPANY — DEARBORN, MICHIGAN

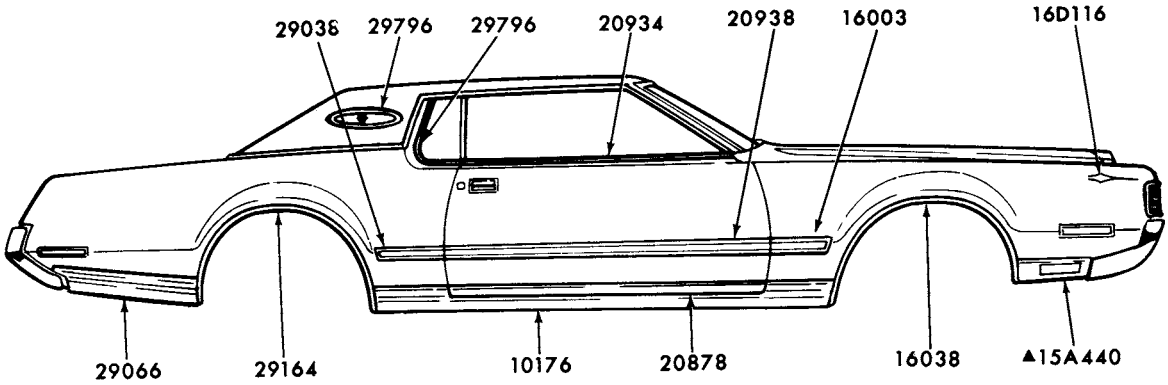

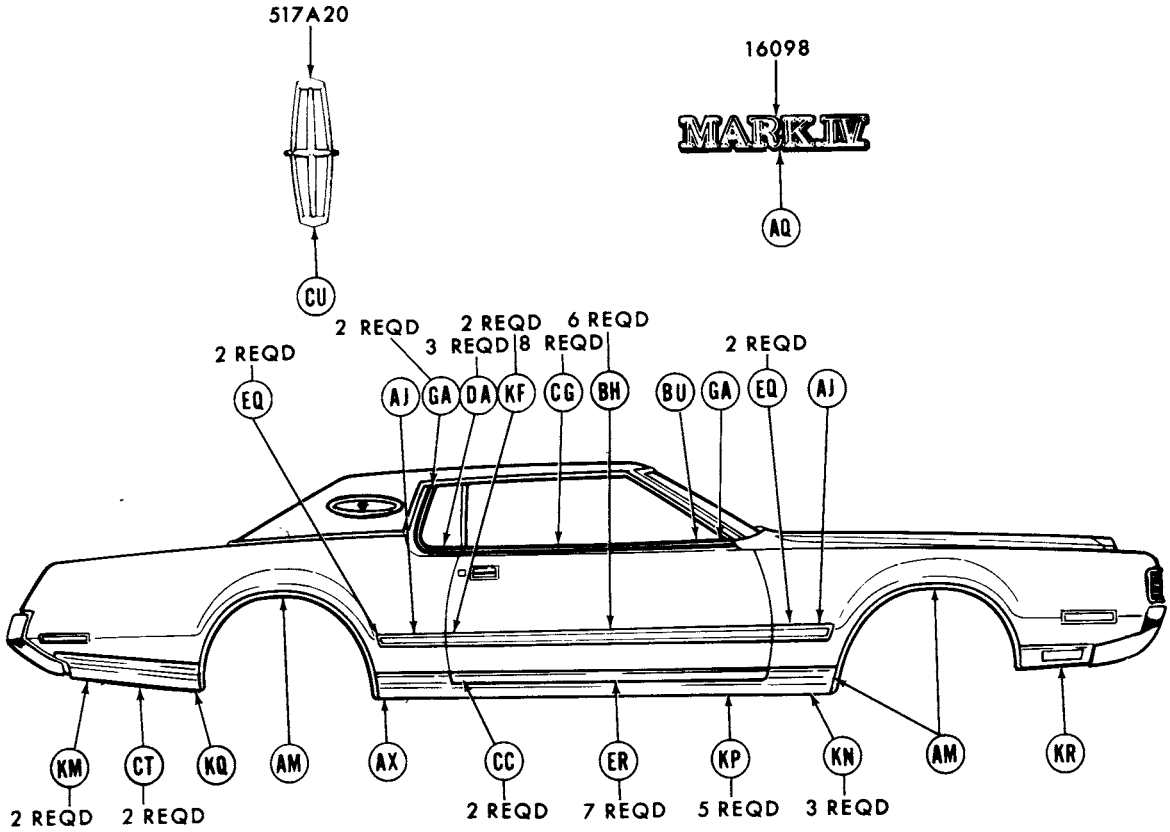

▲REFER TO GROUP IN TEXT SECTION
REFER TO EXTERIOR MOULDING SECTION "R" FOR COMPLETE RETAINER INFORMATION P-10148

1973 MARK IV - SIDE

1973 MARK IV - SIDE - cont'd.

GROUP NUMBER	PART NAME	DESCRIPTION	PART NUMBER		QTY.
10176-7	Moulding (body rocker panel)		(RH)♦D3LY 6510176-A	(LH)♦D3LY 6510177-A	1
16003	Moulding (front fender side)	Black vinyl insert	♦D2LY 16003-B	R.H. and L.H.	2
16038-9	Moulding (front fender wheel opening)		(RH)♦D3LY 16038-A	(LH)♦D3LY 16039-A	1
16098	Plate (front fender name)	"MARK IV"	♦D2LY 16098-A	R.H. and L.H.	2
16D116	Transfer (front fender stripe)	Black-Arrow Head	D3LY 16D116-A		2
		Blue	★ D3LY 16D116-G	Not replaced (3/82)	2
		Brown	★ D3LY 16D116-F	Not replaced (2/81)	2
		Gold	★ D3LY 16D116-B		2
		Green	★ D4LY 16D116-B		2
		Lime	★ D3LY 16D116-D	Not replaced (2/81)	2
		Red	D4LY 16D116-A		2
		Silver	★ D3LY 16D116-C	Not replaced (3/82)	2
		Tan	★ D4LY 16D116-C	Not replaced (2/81)	2
		White	★ D3LY 16D116-E		2
20878-9	Moulding (front door outside lower)		(RH)★D3LY 6520878-A Not replaced (4/83)	(LH)★D3LY 6520879-A	1
20934-5	Moulding and weatherstrip (front door outside belt)		(RH)♦D4LY 6520934-A	(LH)♦D4LY 6520935-A	1
20938-9	Moulding (front door outside)	Black vinyl insert	♦D2LY 6520938-B	R.H. and L.H.	2
29038	Moulding (quarter panel)	Black vinyl insert	♦D2LY 16003-B	R.H. and L.H.	2
29066-7	Moulding (quarter panel outside lower rear)		(RH)♦D3LY 6529066-A	(LH)♦D3LY 6529067-A	1
29164-5	Moulding (quarter wheel opening)		(RH)♦D3LY 6529164-A	(LH)♦D3LY 6529165-A	1
29796-7	Moulding (quarter window outside)	Quarter window	(RH) D2LY 6529796-C	(LH) D2LY 6529797-C	1
		Opera window	D2LY 6529796-B	R.H. and L.H.	2

♦ Includes attaching parts

COPYRIGHT © 1986 — FORD MOTOR COMPANY — DEARBORN, MICHIGAN

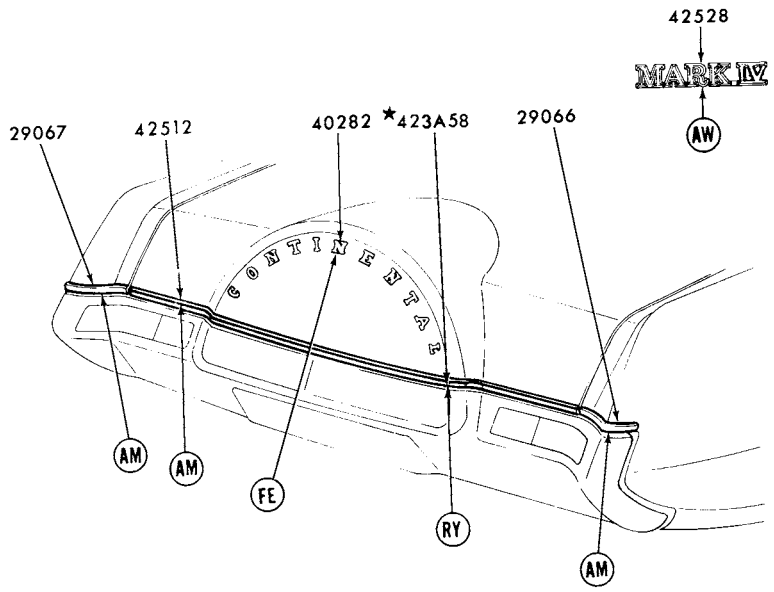

REFER TO EXTERIOR MOULDING SECTION "R" FOR COMPLETE RETAINER INFORMATION

P-8724

1973 MARK IV - BACK END

GROUP NUMBER	PART NAME	DESCRIPTION	PART NUMBER	QTY.
29066-7	Moulding (quarter panel outside lower rear)		(RH)♦D3LY 6529066-B (LH)♦D3LY 6529067-B	1
40282	Letter (luggage compartment door)	"C"	★ D3VY 16606-K	1
		"O"	★ D0LY 6540282-B	1
		"N"	★ D0LY 6540282-C	3
		"T"	★ D0LY 6540282-D	2
		"I"	★ D0LY 6540282-E	1
		"E"	★ D0LY 6540282-F	1
		"A"	★ D0LY 6540282-G	1
		"L"	★ D7LY 6540282-J	1
42512	Moulding (luggage compartment door)		♦D2LY 6542512-A	1
42528	Plate (name)	"MARK IV"	♦D2LY 6542528-A	1

♦ Includes attaching parts

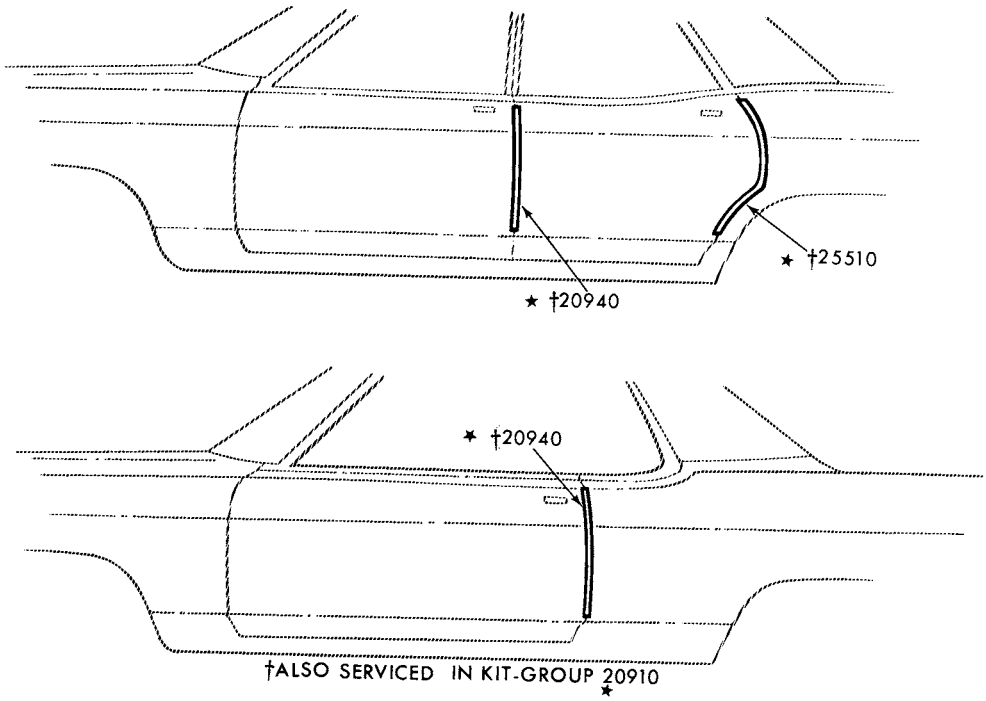

1973 MARK IV - DOOR EDGE GUARD

GROUP NUMBER	PART NAME	DESCRIPTION	PART NUMBER	QTY.
20940-1	Moulding (front door edge guard)		(RH)★ D2LY 6520940-A (LH) D2LY 6520941-A	1

COPYRIGHT © 1986 — FORD MOTOR COMPANY — DEARBORN, MICHIGAN

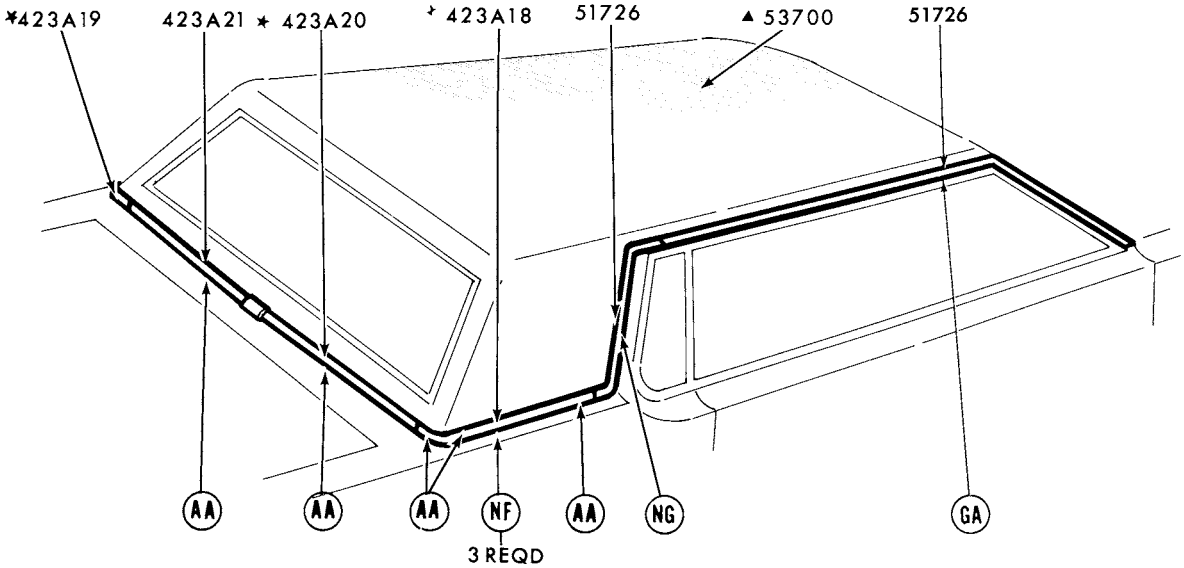

▲REFER TO GROUP IN SOFT TRIM SECTION
REFER TO EXTERIOR MOULDING SECTION"R" FOR COMPLETE RETAINER INFORMATION P-12011

1973 MARK IV - ROOF and BACK BELT

GROUP NUMBER	PART NAME	DESCRIPTION	PART NUMBER		QTY.
20934-5	Moulding and weatherstrip (front door outside belt)		(RH)♦D4LY 6520934-A	(LH)♦D4LY 6520935-A	1
29796-7	Moulding (quarter window outside)	Quarter window	(RH)♦D2LY 6529796-C	(LH)♦D2LY 6529797-C	1
		Opera window	* D2LY 6529796-B	R.H. and L.H.	2
423A18-9	Moulding (back belt outside side)		(RH)*D2LY 65423A18-A Not replaced (4/83)	(LH)*D2LY 65423A19-A Not replaced (4/83)	1
423A20-1	Moulding (back belt outside)		(RH)*D2SZ 65423A20-A	(LH)♦D2SZ 65423A21-A	1
51726-7	Moulding (roof drip side finish)	Front	(RH) D2SZ 6551726-B	(LH) D2SZ 6551727-B	1
		Rear	(RH) D2LY 6551726-B	(LH) D2LY 6551727-B	1

♦ Includes attaching parts

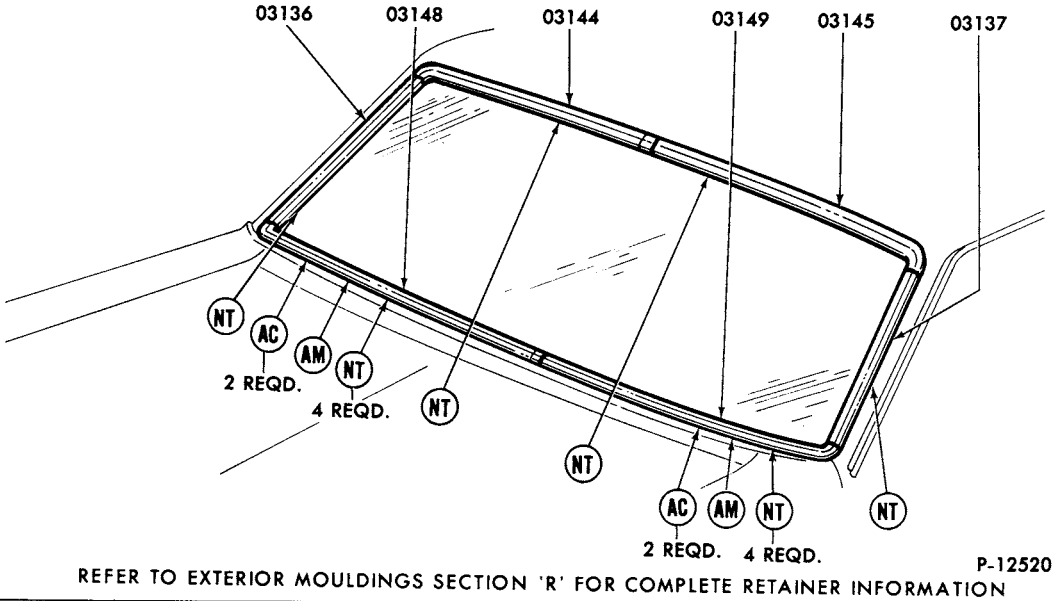

REFER TO EXTERIOR MOULDINGS SECTION 'R' FOR COMPLETE RETAINER INFORMATION

1973 COMET - WINDSHIELD

GROUP NUMBER	PART NAME	DESCRIPTION	PART NUMBER		QTY.
03136-7	Moulding (windshield outside side)		(RH)♦D0DZ 6203136-A	(LH)♦D0DZ 6203137-A	1
03144-5	Moulding (windshield outside top)		(RH)♦D0DZ 6203144-A	(LH)♦D0DZ 6203145-A	1
03148-9	Moulding (windshield outside belt)		(RH)♦D0DZ 6203148-A	(LH)♦D0DZ 6203149-A	1

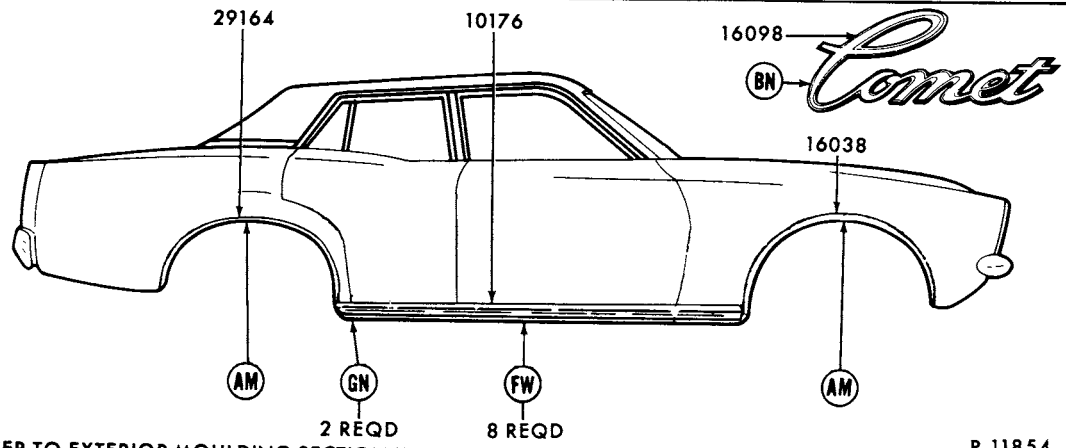

REFER TO EXTERIOR MOULDING SECTION "R" FOR COMPLETE RETAINER INFORMATION

1973 COMET - BODY TYPE 54 - SIDE - W/O LUXURY DECOR

GROUP NUMBER	PART NAME	DESCRIPTION	PART NUMBER		QTY.
10176	Moulding (body rocker panel)	78 3/4" long- "Before 6/13/73"	★D1DZ 5410176-A	R.H. and L.H.	2
		78 3/4" long- "From 6/13/73"	♦D44Y 5410176-A	R.H. and L.H.	2
16038-9	Moulding (front fender wheel opening)		(RH)♦D0DZ 16038-B	(LH)♦D0DZ 16039-B	1
16098	Plate (front fender name)	"Comet"	♦D14Y 16098-A	R.H. and L.H.	2
29164-5	Moulding (quarter wheel opening)		(RH)♦D0DZ 6229164-A	(LH)♦D0DZ 6229165-A	1

♦ Includes attaching parts

COPYRIGHT © 1986 — FORD MOTOR COMPANY — DEARBORN, MICHIGAN

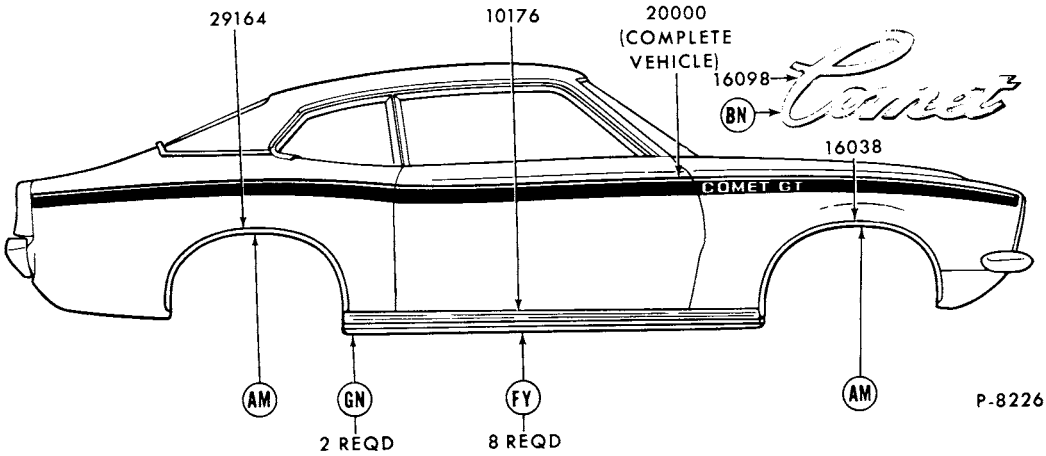

REFER TO EXTERIOR MOULDING SECTION "R" FOR COMPLETE RETAINER INFORMATION

1973 COMET - BODY TYPE 62 - SIDE - W/O LUXURY DECOR

GROUP NUMBER	PART NAME	DESCRIPTION	PART NUMBER		QTY.
10176	Moulding (body rocker panel)	71 55/64" long- "Before 6/13/73"	♦D0DZ 6210176-A	R.H. and L.H.	2
		71 55/64" long- "From 6/13/73"	♦D44Y 6210176-A	R.H. and L.H.	2
16038-9	Moulding (front fender wheel opening)		(RH)♦D0DZ 16038-B	(LH)♦D0DZ 16039-B	1
16098	Plate (front fender name)	"Comet"	♦D14Y 16098-A	R.H. and L.H.	2
20000	Stripe kit (body side)	Black	★ D34Y 6220000-A		1
		Gold	★D34Y 6220000-C	Not replaced (7/81)	1
		White	★D34Y 6220000-B	Not replaced (6/82)	1
29164-5	Moulding (quarter wheel opening)		(RH)♦D0DZ 6229164-A	(LH)♦D0DZ 6229165-A	1

♦ Includes attaching parts

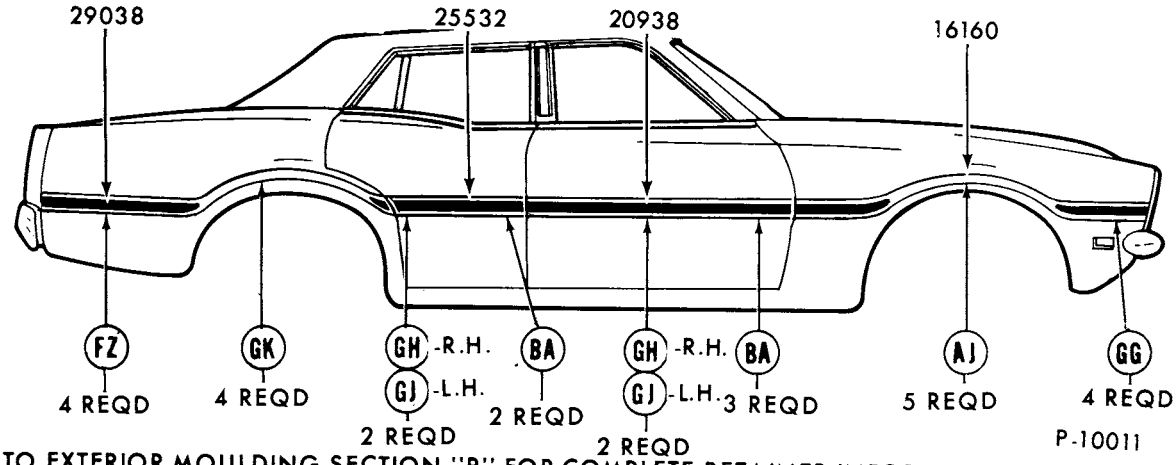

REFER TO EXTERIOR MOULDING SECTION "R" FOR COMPLETE RETAINER INFORMATION.

1973 COMET - BODY TYPE 54 - SIDE - W/LUXURY DECOR

GROUP NUMBER	PART NAME	DESCRIPTION	PART NUMBER		QTY.
16160-1	Moulding (front fender side)	◊Blue vinyl insert	(RH)♦D2DZ 16160-AB	(LH)★D2DZ 16161-AB Not replaced (4/84)	1
		◊Brown vinyl insert- "Before 3/5/73"	(RH)★D2DZ 16160-AT	(LH)★D2DZ 16161-AT Not replaced (4/84)	1
		◊Brown vinyl insert- "From 3/5/73"	(RH)♦D3DZ 16160-AT	(LH)♦D3DZ 16161-AT	1
		◊Copper vinyl insert	(RH)★D2DZ 16160-AC	(LH)★D2DZ 16161-AC	1
		◊Green vinyl insert	(RH)♦D2DZ 16160-AR	(LH)★D2DZ 16161-AR	1
		◊White vinyl insert	(RH)★D2DZ 16160-AJ Not replaced (6/83)	(LH)★D2DZ 16161-AJ	1
20938-9	Moulding (front door outside)	◊Brown vinyl insert- "From 3/5/73"	(RH)♦D3DZ 5420938-BT	(LH)★D3DZ 5420939-BT Not replaced (4/84)	1
25532-3	Moulding (rear door outside)	◊Brown vinyl insert- "From 3/5/73"	(RH)★D3DZ 5425532-BT Not replaced (4/84)	(LH)♦D3DZ 5425533-BT	1
29038-9	Moulding (quarter outside)	◊Brown vinyl insert- "From 3/5/73"	(RH)♦D4DZ 5429038-AT	(LH)♦D4DZ 5429039-AT	1 §

◊ For color verification, refer to the vinyl roof swatches in the 1973 salesman's color and upholstery selections guide.
♦ Includes attaching parts

COPYRIGHT © 1986 — FORD MOTOR COMPANY — DEARBORN, MICHIGAN

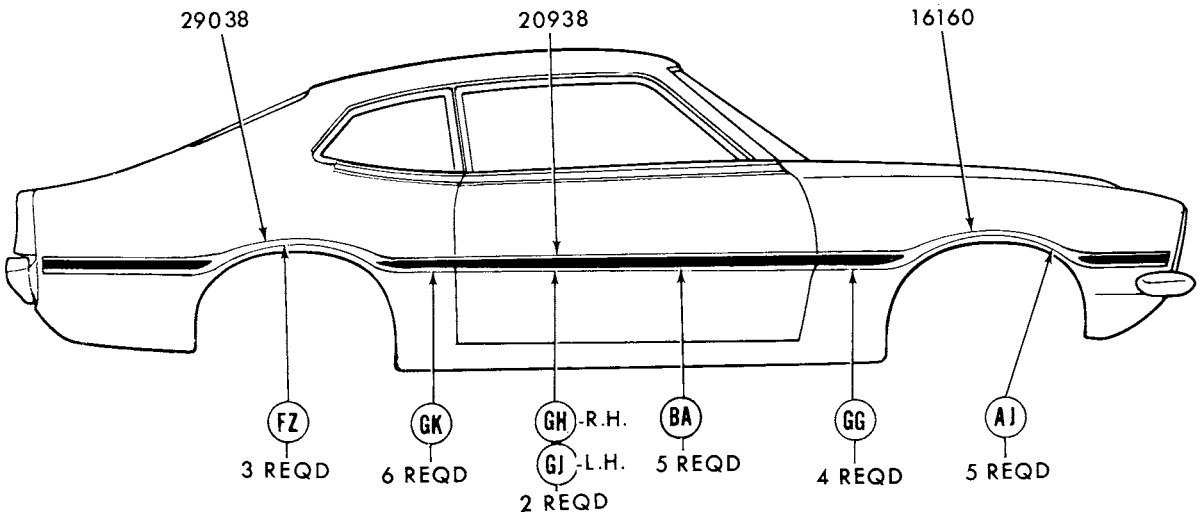

REFER TO EXTERIOR MOULDING SECTION "R" FOR COMPLETE RETAINER INFORMATION P-10012

1973 COMET - BODY TYPE 62 - SIDE - W/LUXURY DECOR

GROUP NUMBER	PART NAME	DESCRIPTION	PART NUMBER		QTY.
16160-I	Moulding (front fender side)	◊Blue vinyl insert	(RH)♦D2DZ 16160-AB	(LH)★D2DZ 16161-AB Not replaced (4/84)	1
		◊Brown vinyl insert- "Before 3/5/73"	(RH)★D2DZ 16160-AT	(LH)★D2DZ 16161-AT Not replaced (4/84)	1
		◊Brown vinyl insert- "From 3/5/73"	(RH)♦D3DZ 16160-AT	(LH)♦D3DZ 16161-AT	1
		◊Copper vinyl insert	(RH)★D2DZ 16160-AC	(LH)★D2DZ 16161-AC	1
		◊Green vinyl insert	(RH)♦D2DZ 16160-AR	(LH)★D2DZ 16161-AR	1
		◊White vinyl insert	(RH)★D2DZ 16160-AJ Not replaced (6/83)	(LH)★D2DZ 16161-AJ	1
20938-9	Moulding (front door outside)	◊Brown vinyl insert- "From 3/5/73"	(RH)♦D3DZ 6220938-BT	(LH)♦D3DZ 6220939-BT	1
29038-9	Moulding (quarter outside)	◊Brown vinyl insert- "From 3/5/73"	(RH)♦D4DZ 6229038-AT	(LH)♦D4DZ 6229039-AT	1

◊ For color verification, refer to the vinyl roof swatches in the 1973 salesman's color and upholstery selections guide.
♦ Includes attaching parts

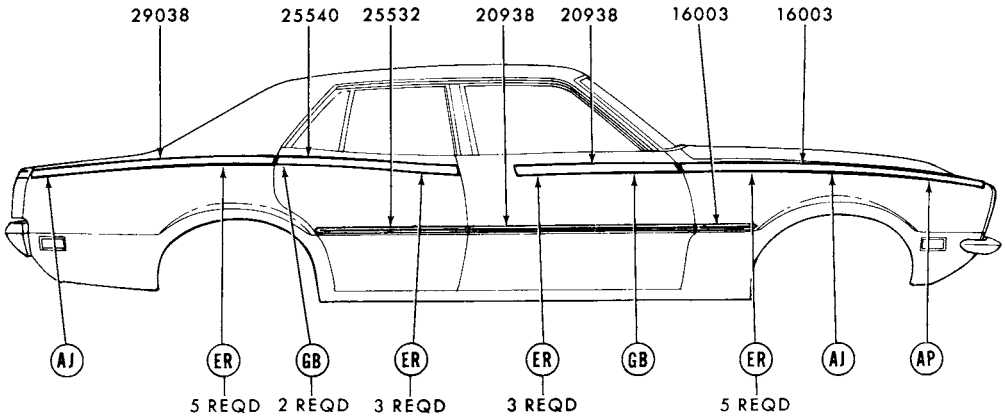

REFER TO EXTERIOR MOULDING SECTION "R" FOR COMPLETE RETAINER INFORMATION P-11855

1973 COMET - BODY TYPE 54 - SIDE PROTECTION

GROUP NUMBER	PART NAME	DESCRIPTION	PART NUMBER		QTY.
16003-4	Moulding (front fender side)	Black vinyl insert-cut to fit-lower	D5DZ 5425532-D	R.H. and L.H.	2
		Bright finish-upper-"Before 6/1/73"	(RH)★D14Y 16003-A	(LH)★D14Y 16004-A	1
		Bright finish-upper-"From 6/1/73"	(RH)♦D44Y 16003-A	(LH)♦D44Y 16004-A	1
20938-9	Moulding (front door outside)	Black vinyl insert-cut to fit-lower	D1OZ 6529038-B	R.H. and L.H.	AR
		Bright finish-upper-"Before 6/13/73"	(RH)♦D14Y 5420938-A	(LH)★D14Y 5420939-A Not replaced (7/81)	1
		Bright finish-upper-"From 6/13/73"	(RH)♦D44Y 5420938-A	(LH)♦D44Y 5420939-A	1
25532-3	Moulding (rear door outside)	Black vinyl insert-cut to fit-lower	D4GZ 16003-A	R.H. and L.H.	AR
25540-1	Moulding (rear door outside upper)	Bright finish-w/ paint stripe	(RH)★D14Z 5425540-A Not replaced (7/81)	(LH)★D14Z 5425541-A Not replaced (7/81)	1
		Bright finish-w/o paint stripe	(RH)♦D44Y 5425540-A	(LH)♦D44Y 5425541-A	1
29038-9	Moulding (quarter outside)	Bright finish-upper-"Before 6/1/73"	(RH)★D14Y 5429038-A Not replaced (7/81)	(LH)★D14Y 5429039-A Not replaced (7/81)	1
		Bright finish-upper-"From 6/1/73"	(RH)♦D44Y 5429038-A	(LH)♦D44Y 5429039-A	1

♦ Includes attaching parts

COPYRIGHT © 1986 — FORD MOTOR COMPANY — DEARBORN, MICHIGAN

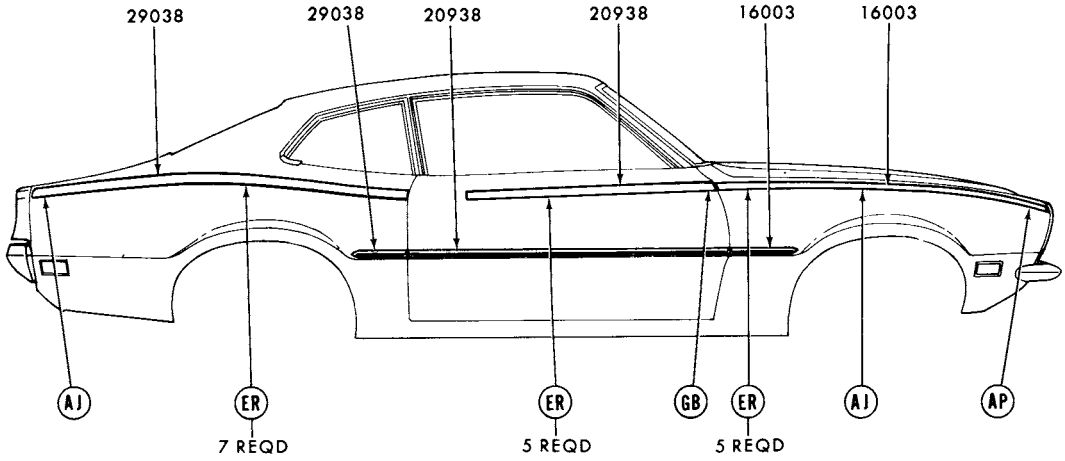

REFER TO EXTERIOR MOULDING SECTION "R" FOR COMPLETE RETAINER INFORMATION P-8186

1973 COMET - BODY TYPE 62 - SIDE PROTECTION

GROUP NUMBER	PART NAME	DESCRIPTION	PART NUMBER		QTY.
16003-4	Moulding (front fender side)	Black vinyl insert-cut to fit-lower	D5DZ 5425532-D	R.H. and L.H.	2
		Bright finish-upper-"Before 6/1/73"	(RH)★D14Y 16003-A	(LH)★D14Y 16004-A	1
		Bright finish-upper "From 6/1/73"	(RH)♦D44Y 16003-A	(LH)♦D44Y 16004-A	1
20938-9	Moulding (front door outside)	Black vinyl insert-cut to fit-lower	D1OZ 6529038-B	R.H. and L.H.	AR
		Bright finish-upper-"Before 6/13/73"	(RH)★D14Y 6220938-A Not replaced (7/81)	(LH)★D14Y 6220939-A Not replaced (7/81)	1
		Bright finish-upper-"From 6/13/73"	(RH)♦D44Y 6220938-A	(LH)♦D44Y 6220939-A	1
29038-9	Moulding (quarter outside)	Black vinyl insert-cut to fit-lower	D5DZ 5425532-D	R.H. and L.H.	2
		Bright finish-upper-"Before 6/1/73"	(RH)♦D14Y 6229038-A	(LH)♦D14Y 6229039-A	1
		Bright finish-upper "From 6/1/73"	(RH)♦D44Y 6229038-A	(LH)♦D44Y 6229039-A	1

♦ Includes attaching parts

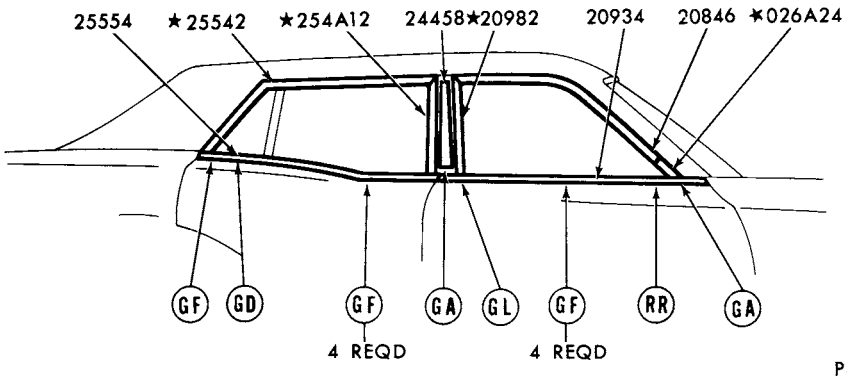

P-12500

REFER TO EXTERIOR MOULDINGS SECTION 'R' FOR COMPLETE RETAINER INFORMATION

1973 COMET - BODY TYPE 54 - DOOR WINDOW FRAME

GROUP NUMBER	PART NAME	DESCRIPTION	PART NUMBER		QTY.
026A24-5	Moulding (front body pillar outside belt)	W/vinyl roof	(RH)★D0DZ 62026A24-A Not replaced (6/82)	(LH)★D0DZ 62026A25-A Not replaced (6/82)	1
20846-7	Moulding (front door window frame top)		(RH)★D1DZ 5420846-A Not replaced (6/82)	(LH) D1DZ 5420847-A	1
20934-5	Moulding (front door outside belt)		(RH)♦D3DZ 5420934-A	(LH)♦D3DZ 5420935-A	1
24458-9	Moulding (center body pillar outside upper)	Brown	(RH)♦D2DZ 5424458-AT	(LH)♦D2DZ 5424459-AT	1
25554-5	Moulding (rear door outside belt)		(RH)♦D3DZ 5425554-A	(LH)♦D3DZ 5425555-A	1

♦ Includes attaching parts

COPYRIGHT © 1986 — FORD MOTOR COMPANY — DEARBORN, MICHIGAN

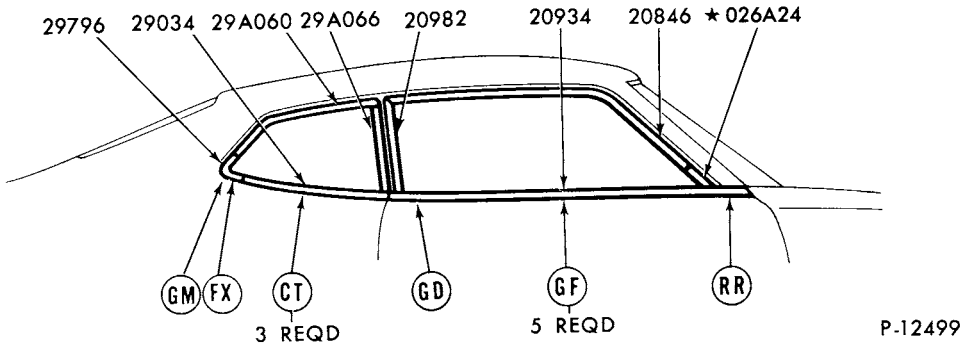

REFER TO EXTERIOR MOULDING SECTION 'R' FOR COMPLETE RETAINER INFORMATION

1973 COMET - BODY TYPE 62 - DOOR and QUARTER WINDOW FRAME

GROUP NUMBER	PART NAME	DESCRIPTION	PART NUMBER		QTY.
026A24-5	Moulding (front body pillar outside belt)	W/vinyl roof	(RH)★D0DZ 62026A24-A Not replaced (6/82)	(LH)★D0DZ 62026A25-A Not replaced (6/82)	1
20846-7	Moulding (front door window frame top)		(RH) D2DZ 6220846-A	(LH) D2DZ 6220847-A	1
20934-5	Moulding (front door outside belt)		(RH)♦D3DZ 6220934-A	(LH)♦D3DZ 6220935-A	1
20982-3	Moulding (front door window frame rear)		(RH) D2DZ 6220982-A	(LH) D2DZ 6220983-A	1
29034-5	Moulding (quarter outside belt)		(RH)♦D3DZ 6229034-A	(LH)♦D3DZ 6229035-A	1
290A60-1	Moulding (quarter window outside upper)		(RH)♦D0DZ 62290A60-A	(LH)♦D0DZ 62290A61-A	1
290A66-7	Moulding (quarter window outside front)		(RH)♦D0DZ 62290A66-A	(LH)♦D0DZ 62290A67-A	1
29796-7	Moulding (quarter window outside)		(RH) D1DZ 6229796-A	(LH) D1DZ 6229797-A	1

♦ Includes attaching parts

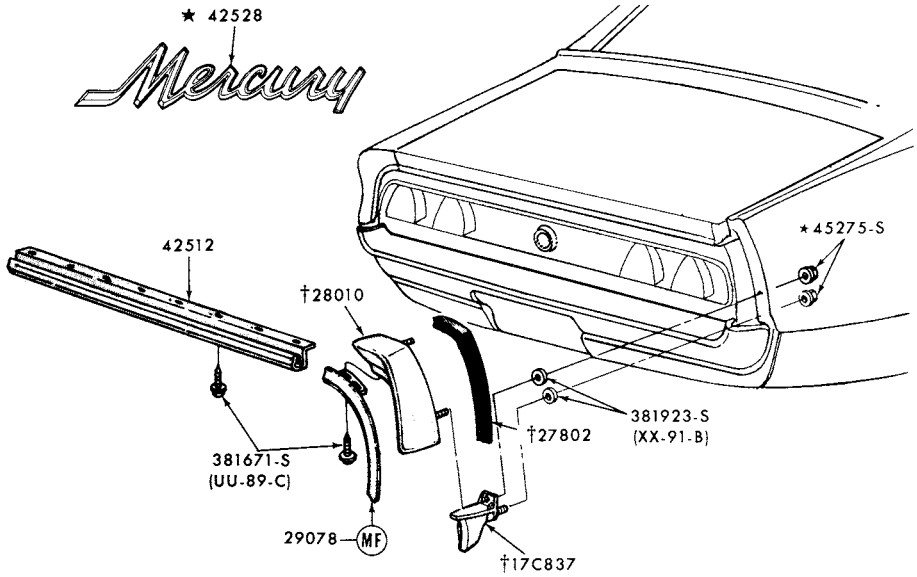

REFER TO EXTERIOR MOULDING SECTION "R" FOR COMPLETE RETAINER INFORMATION P-7875
†REFER TO GROUP IN TEXT SECTION

1973 COMET - BACK END

GROUP NUMBER	PART NAME	DESCRIPTION	PART NUMBER	QTY.
29078-9	Moulding (quarter panel extension)	Body type 54	(RH) ♦D1DZ 5429078-A (LH) ♦D1DZ 5429079-A	1
		Body type 62	(RH) ♦D0DZ 6229078-A (LH) ♦D0DZ 6229079-A	1
42512	Moulding (luggage compartment door)	Body type 54	♦D1DZ 5442512-A	1
		Body type 62	♦D14Z 6242512-A	1

COPYRIGHT © 1986 — FORD MOTOR COMPANY — DEARBORN, MICHIGAN

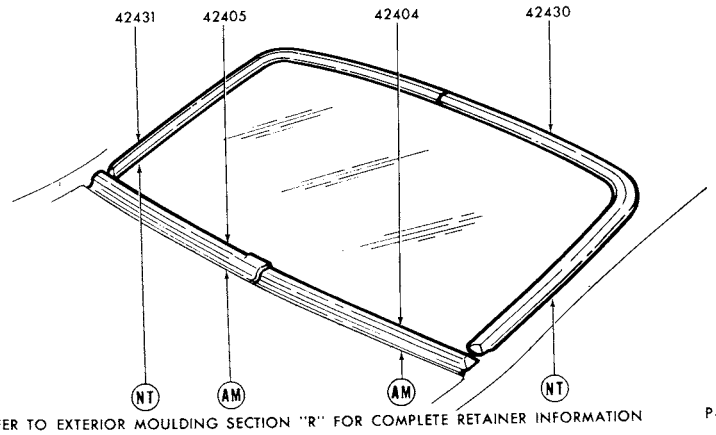

REFER TO EXTERIOR MOULDING SECTION "R" FOR COMPLETE RETAINER INFORMATION P-12468

1973 COMET - BODY TYPE 54 - BACK WINDOW

GROUP NUMBER	PART NAME	DESCRIPTION	PART NUMBER		QTY.
42404-5	Moulding (back window outside lower)		(RH)♦D1DZ 5442404-A	(LH)♦D1DZ 5442405-A	1
42430-1	Moulding (back window outside upper)		(RH)♦D1DZ 5442430-A	(LH)♦D1DZ 5442431-A	1

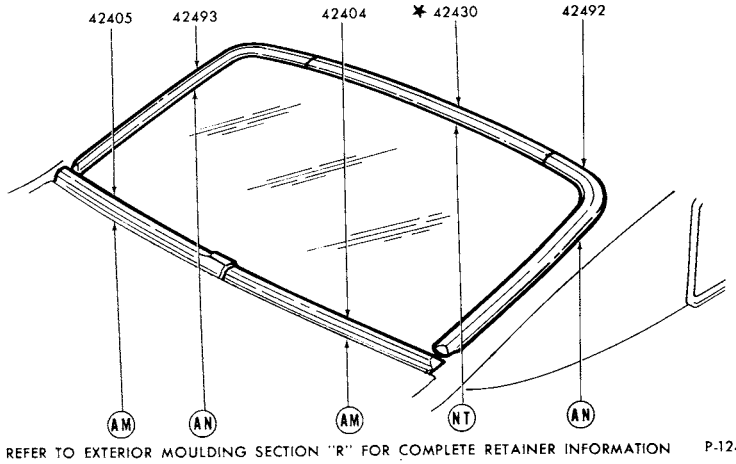

REFER TO EXTERIOR MOULDING SECTION "R" FOR COMPLETE RETAINER INFORMATION P-12467

1973 COMET - BODY TYPE 62 - BACK WINDOW

GROUP NUMBER	PART NAME	DESCRIPTION	PART NUMBER		QTY.
42404-5	Moulding (back window outside lower)		(RH)♦D1DZ 6242404-A	(LH)♦D1DZ 6242405-A	1
42430	Moulding (back window outside upper)		★D2DZ 6242430-A	Not replaced (6/82)	1
42492-3	Moulding (back window outside side)		(RH)♦D0DZ 6242492-A	(LH)♦D0DZ 6242493-A	1

♦ Includes attaching parts

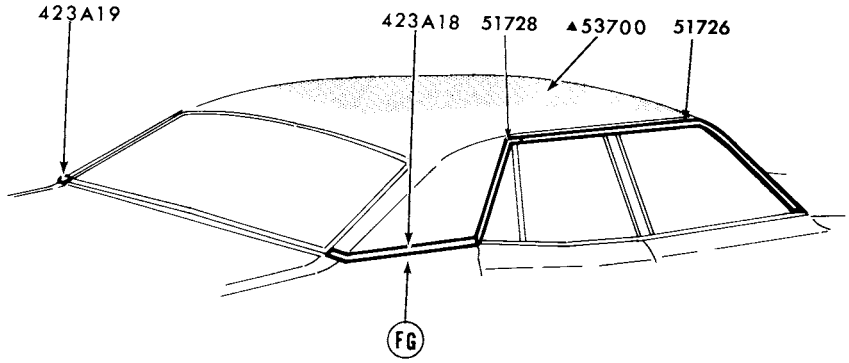

P-12012

▲ REFER TO GROUP IN SOFT TRIM SECTION

REFER TO EXTERIOR MOULDING SECTION'R' FOR COMPLETE RETAINER INFORMATION

1973 COMET - BODY TYPE 54 - ROOF and BACK BELT

GROUP NUMBER	PART NAME	DESCRIPTION	PART NUMBER		QTY.
423A18-9	Moulding (back belt outside side)		(RH)♦D1DZ 54423A18-A	(LH)♦D1DZ 54423A19-A	1
51726-7	Moulding (roof drip side finish)	Front-w/o vinyl	(RH) D3DZ 5451726-A	(LH)★D3DZ 5451727-A Not replaced (6/83)	1
			(RH) D1DZ 5451726-C	(LH) D1DZ 5451727-C	1
		Front-w/vinyl roof	(RH) D1DZ 5451726-B	(LH) D1DZ 5451727-B	1

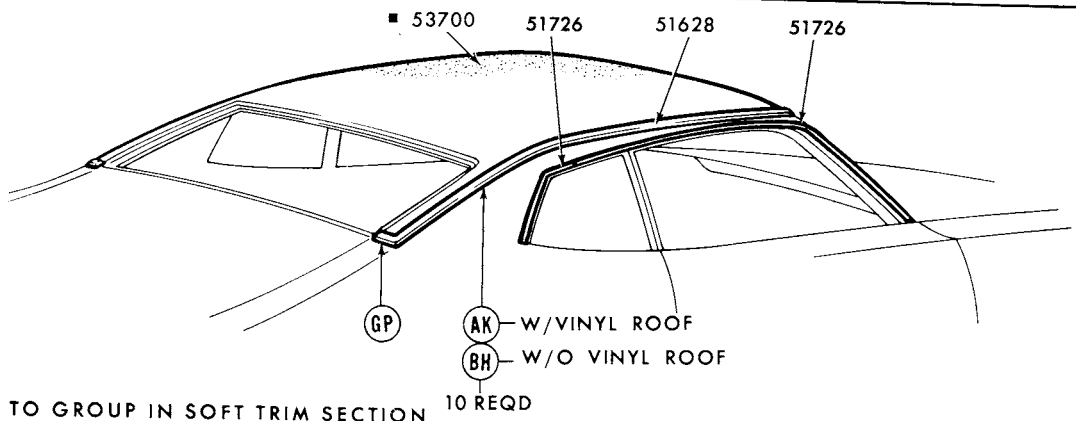

■REFER TO GROUP IN SOFT TRIM SECTION
REFER TO EXTERIOR MOULDING SECTION "R" FOR COMPLETE RETAINER INFORMATION

P-10374

1973 COMET - BODY TYPE 62 - ROOF and BACK BELT

GROUP NUMBER	PART NAME	DESCRIPTION	PART NUMBER		QTY.
51628-9	Moulding (roof finish front)		(RH)♦D3DZ 6251628-A	(LH)♦D3DZ 6251629-A	1
51726-7	Moulding (roof drip side finish)	Front-w/o vinyl roof	(RH) D0DZ 6251726-A	(LH) D0DZ 6251727-A	1
		Rear-w/o vinyl roof roof	(RH) D0DZ 6251726-C	(LH)★D0DZ 6251727-C Not replaced (6/82)	1
		Front-w/vinyl roof	(RH) D0DZ 6251726-B	(LH)★D0DZ 6251727-B Not replaced (4/84)	1

♦ Includes attaching parts

COPYRIGHT © 1986 — FORD MOTOR COMPANY — DEARBORN, MICHIGAN

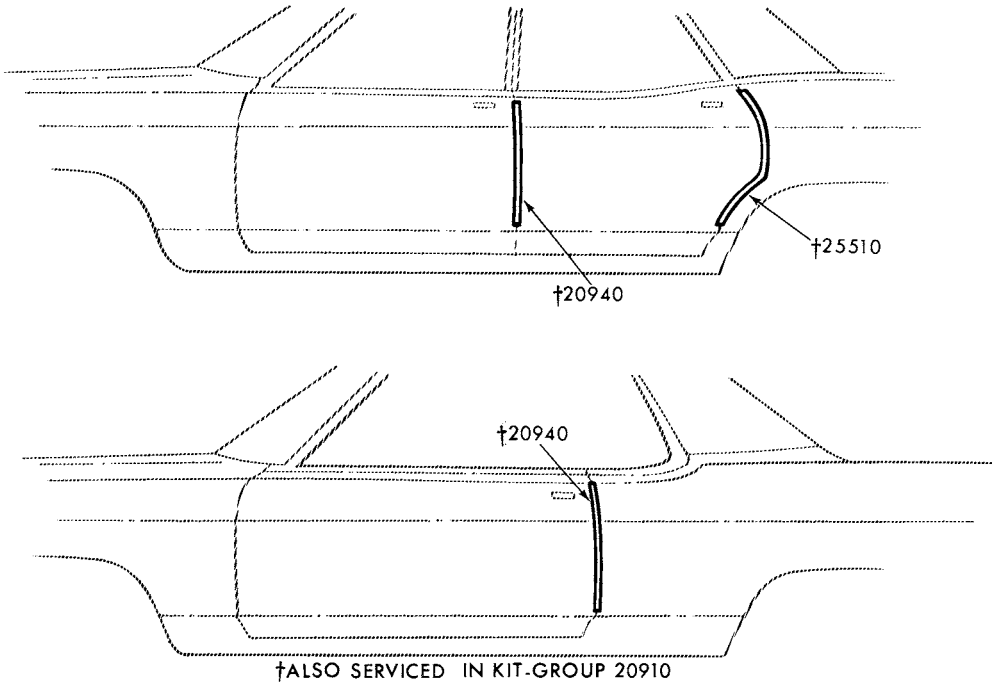

†ALSO SERVICED IN KIT-GROUP 20910

P-10061

1973 COMET - DOOR EDGE GUARDS

GROUP NUMBER	PART NAME	DESCRIPTION	PART NUMBER		QTY.
20910	Moulding kit (door edge guard)	Body type 62	DODZ 6220910-A		1
20940-1	Moulding (front door edge guard)	Body type 54	(RH) D2DZ 5420940-A	(LH) D2DZ 5420941-A	1
		Body type 62	(RH) D2DZ 6220940-A	(LH) D2DZ 6220941-A	1
25510-1	Moulding (rear door edge guard)	Body type 54	(RH) D2DZ 5425510-A	(LH) D2DZ 5425511-A	1

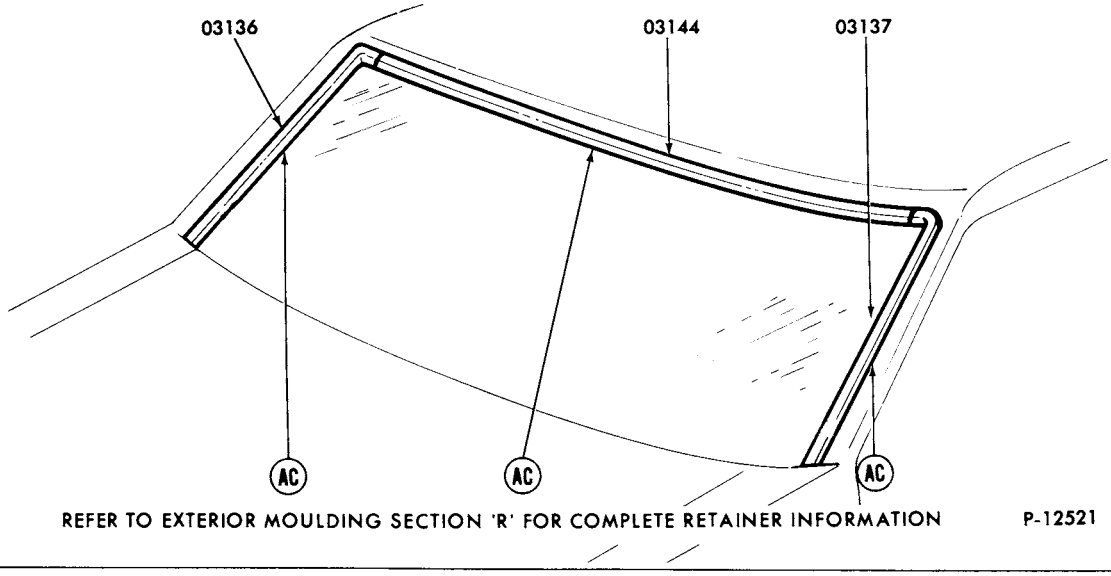

1973 METEOR - WINDSHIELD

GROUP NUMBER	PART NAME	DESCRIPTION	PART NUMBER		QTY.
03136-7	Moulding (windshield outside side)	Body types 53, 71	(RH)♦ D7AZ 5303136-A	(LH)♦ D7AZ 5303137-A	1
		Body type 65	(RH)♦ D7AZ 6003136-A	(LH)♦ D7AZ 6003137-A	1
03144	Moulding (windshield outside top)	Body types 53, 71	♦ D3AZ 5303144-A		1

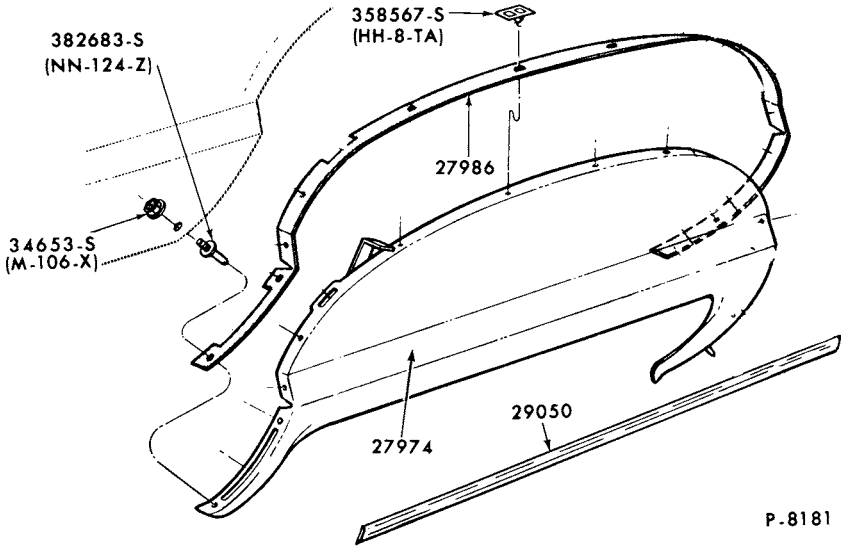

1973 METEOR - BODY TYPES 53 AND 65 - WHEEL OPENING COVER PARTS

GROUP NUMBER	PART NAME	DESCRIPTION	PART NUMBER		QTY.
27974-5	Panel (quarter wheel opening cover)		(RH)♦ D3MY 6527974-A	(LH)♦ D3MY 6527975-A	1
27986-7	Seal (quarter wheel opening cover)		(RH)♦ D3MY 6527986-A	(LH) D3MY 6527987-A	1
29050-1	Moulding (quarter wheel opening cover)		(RH)♦ D3MY 6529050-B	(LH)♦ D3MY 6529051-B	1

♦ Includes attaching parts

COPYRIGHT © 1986 — FORD MOTOR COMPANY — DEARBORN, MICHIGAN

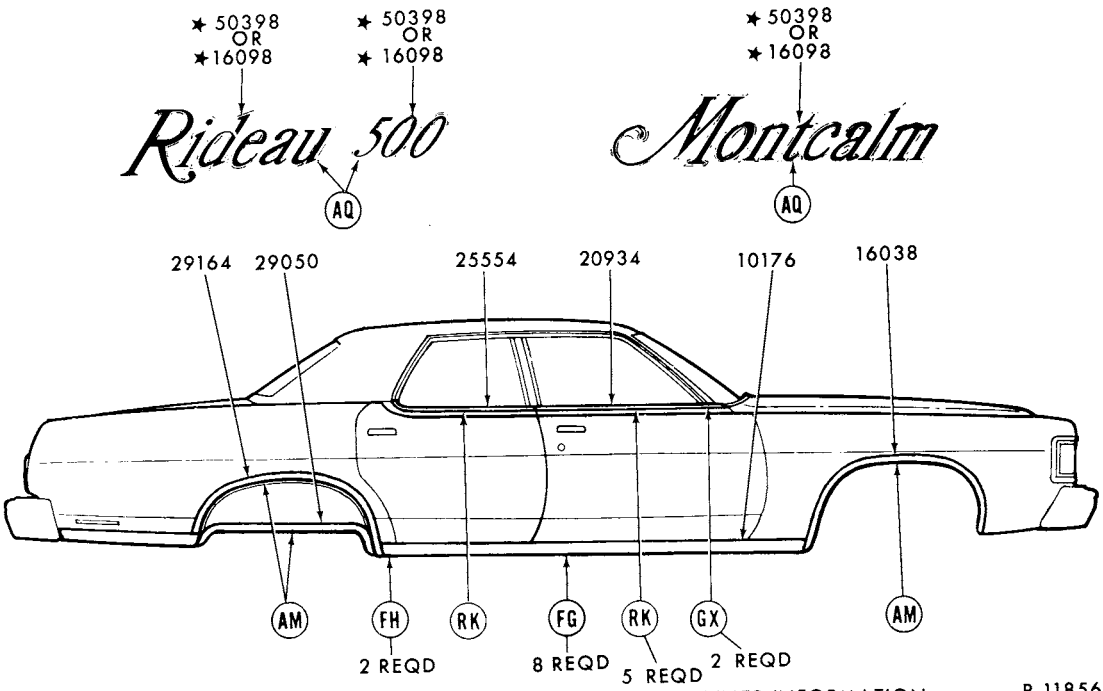

REFER TO EXTERIOR MOULDING SECTION "R" FOR COMPLETE RETAINER INFORMATION

P-11856

1973 METEOR - BODY TYPE 53 - SIDE

GROUP NUMBER	PART NAME	DESCRIPTION	PART NUMBER		QTY.
10176-7	Moulding (body rocker panel)	90 7/32" long	(RH)♦D3MY 6510176-A	(LH)♦D3MY 6510177-A	1
16038-9	Moulding (front fender wheel opening)		(RH)♦D3MY 16038-A	(LH)♦D3MY 16039-A	1
20934-5	Moulding (front door outside belt)	Incl.weatherstrip	(RH)♦D5AZ 5320934-B	(LH)♦D5AZ 5320935-B	1
25554-5	Moulding (rear door outside belt)	Incl.weatherstrip	(RH)♦D5AZ 5325554-A	(LH)♦D5AZ 5325555-A	1
29050-1	Moulding (quarter wheel opening cover)		(RH)♦D3MY 6529050-B	(LH)♦D3MY 6529051-B	1
29164-5	Moulding (quarter wheel opening)		(RH)♦D3MY 6529164-A	(LH)♦D3MY 6529165-A	1

♦ Includes attaching parts

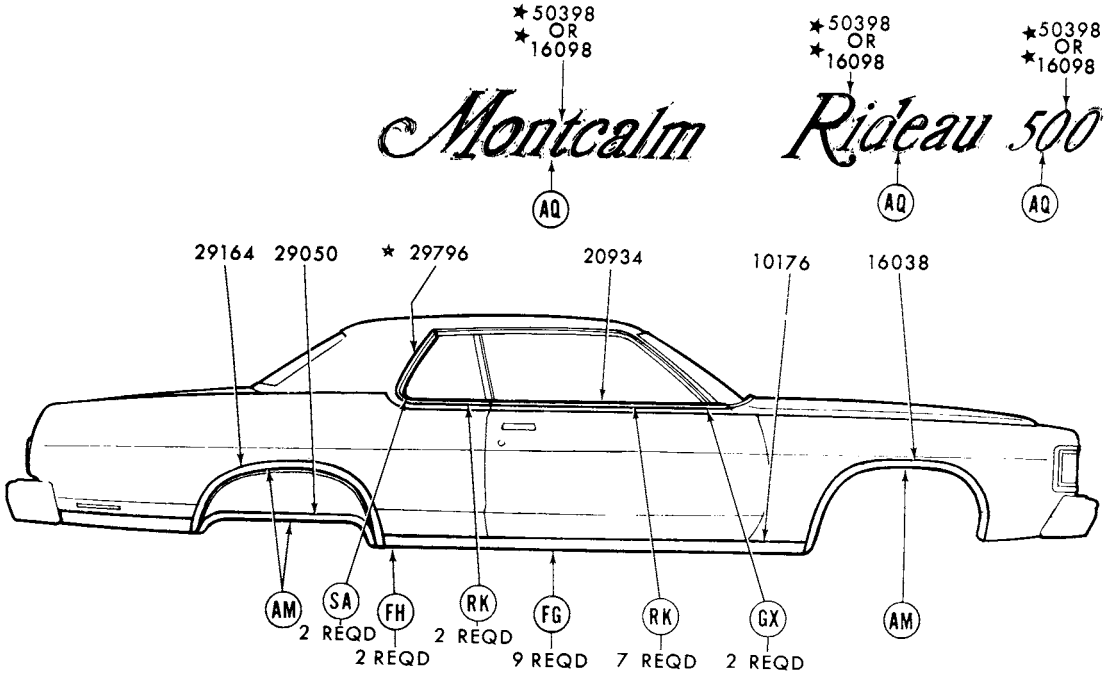

REFER TO EXTERIOR MOULDING SECTION "R" FOR COMPLETE RETAINER INFORMATION P-11857

1973 METEOR - BODY TYPE 65 - SIDE

GROUP NUMBER	PART NAME	DESCRIPTION	PART NUMBER		QTY.
10176-7	Moulding (body rocker panel)	90 7/32" long	(RH)♦D3MY 6510176-A	(LH)♦D3MY 6510177-A	1
16038-9	Moulding (front fender wheel opening)		(RH)♦D3MY 16038-A	(LH)♦D3MY 16039-A	1
20934-5	Moulding (door outside belt)	Incl.weatherstrip	(RH)♦ D5AZ 6020934-A	(LH)♦D5AZ 6020935-A	1
29050-1	Moulding (quarter wheel opening cover)		(RH)♦D3MY 6529050-B	(LH)♦D3MY 6529051-B	1
29164-5	Moulding (quarter wheel opening)		(RH)♦D3MY 6529164-A	(LH)♦D3MY 6529165-A	1

♦ Includes attaching parts

COPYRIGHT © 1986 — FORD MOTOR COMPANY — DEARBORN, MICHIGAN

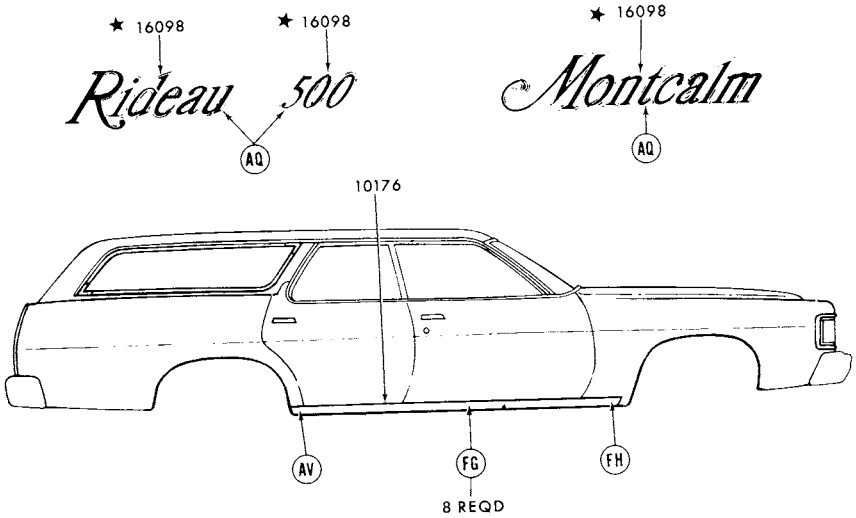

REFER TO EXTERIOR MOULDING SECTION "R" FOR COMPLETE RETAINER INFORMATION P-11860

1973 METEOR - BODY TYPE 71 - SIDE

GROUP NUMBER	PART NAME	DESCRIPTION	PART NUMBER		QTY.
10176-7	Moulding (body rocker panel)	87 3/4" long	(RH)♦D3MY 7110176-A	(LH)♦D3MY 7110177-A	1

♦ Includes attaching parts

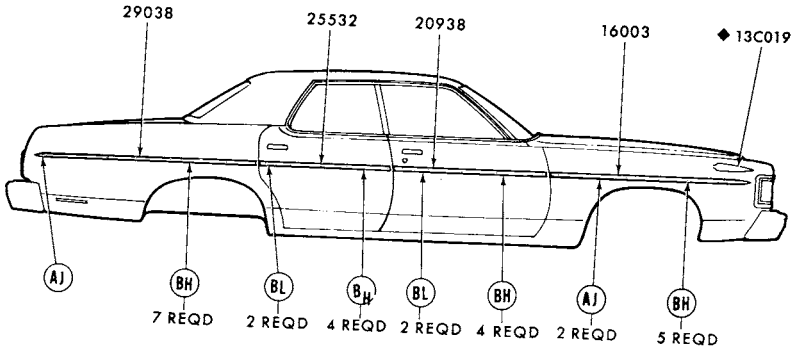

REFER TO EXTERIOR MOULDING SECTION "R" FOR COMPLETE RETAINER INFORMATION

◆ REFER TO GROUP IN CHASSIS SECTION

P-11821

1973 METEOR - BODY TYPE 53 - SIDE PROTECTION MOULDINGS

GROUP NUMBER	PART NAME	DESCRIPTION	PART NUMBER		QTY.
16003-4	Moulding (front fender side)	Black vinyl insert	(RH)♦D3MY 16003-B	(LH)♦D3MY 16004-B	1
		Bright finish	(RH)♦D3MY 16003-D	(LH)♦D3MY 16004-D	1
20938-9	Moulding (front door outside)	Black vinyl insert	(RH)♦D3MY 5320938-A	(LH)♦D3MY 5320939-A	1
		Bright finish	(RH)♦D3MY 5320938-B	(LH)♦D3MY 5320939-B	1
25532-3	Moulding (rear door outside)	Black vinyl insert	(RH)♦D3AZ 5325532-A	(LH)♦D3AZ 5325533-A	1
		Bright finish	(RH)★D3MY 5325532-B Not replaced (6/82)	(LH)★D3MY 5325533-B Not replaced (6/82)	1
29038-9	Moulding (quarter outside)	Black vinyl insert	(RH)♦D3MY 5329038-A	(LH)♦D3MY 5329039-A	1
		Bright finish	(RH)♦D3MY 5329038-B	(LH)♦D3MY 5329039-B	1

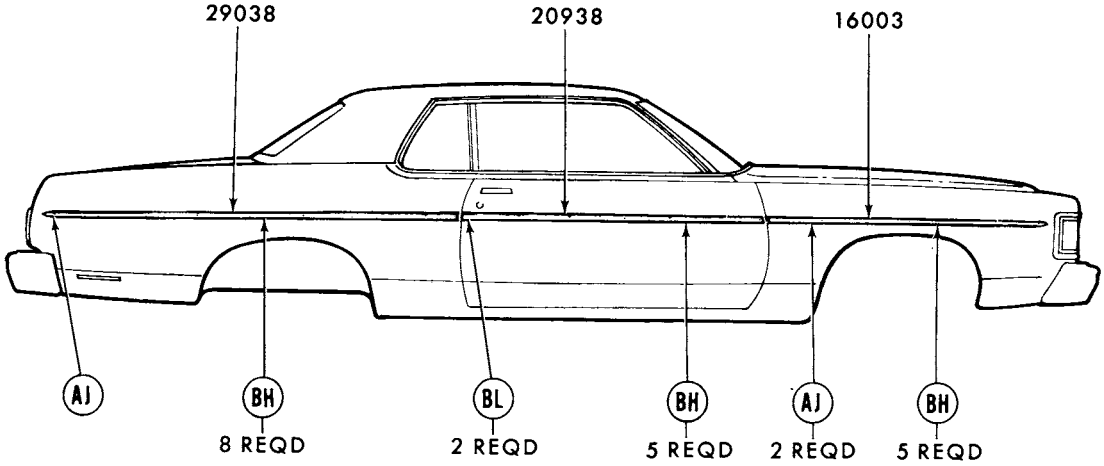

REFER TO EXTERIOR MOULDING SECTION "R" FOR COMPLETE RETAINER INFORMATION

P-11820

1973 METEOR - BODY TYPE 65 - SIDE PROTECTION MOULDINGS

GROUP NUMBER	PART NAME	DESCRIPTION	PART NUMBER		QTY.
16003-4	Moulding (front fender side)	Black vinyl insert	(RH)♦D3MY 16003-B	(LH)♦D3MY 16004-B	1
		Bright finish	(RH)♦D3MY 16003-D	(LH)♦D3MY 16004-D	1
20938-9	Moulding (front door outside)	Black vinyl insert	♦D3AZ 6520938-A	R.H. and L.H.	2
		Bright finish	(RH)♦D3MY 6520938-B	(LH)♦D3MY 6520939-B	1
29038-9	Moulding (quarter outside)	Black vinyl insert	(RH)♦D3AZ 6529038-A	(LH)♦D3MY 6529039-A	1
		Bright finish	(RH)♦D3MY 6529038-C	(LH)♦D3MY 6529039-C	1

COPYRIGHT © 1986 — FORD MOTOR COMPANY — DEARBORN, MICHIGAN

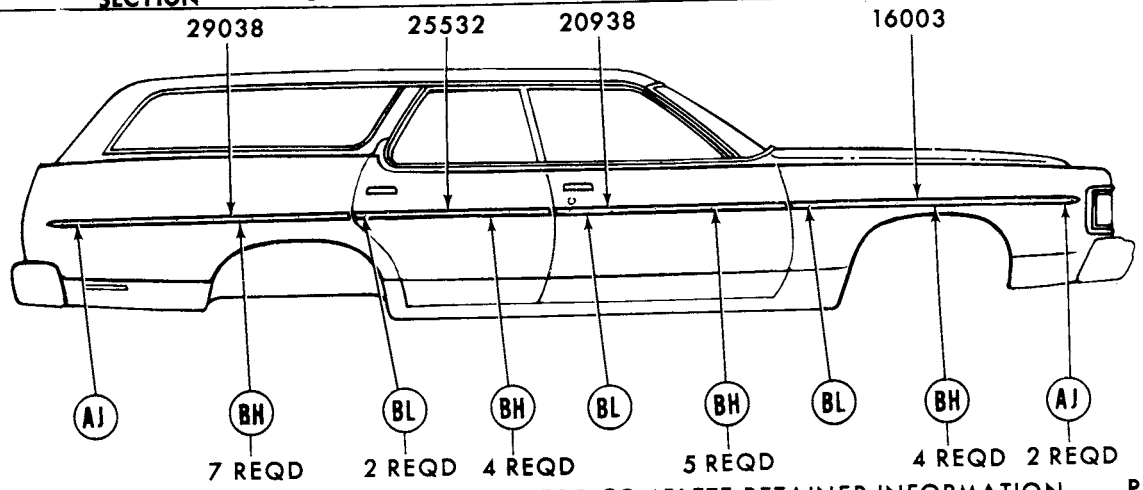

REFER TO EXTERIOR MOULDING SECTION "R" FOR COMPLETE RETAINER INFORMATION P-11822

1973 METEOR - BODY TYPE 71 - SIDE PROTECTION MOULDINGS

GROUP NUMBER	PART NAME	DESCRIPTION	PART NUMBER		QTY.
16003-4	Moulding (front fender side)	Black vinyl insert	(RH)♦D3MY 16003-B	(LH)♦D3MY 16004-B	1
		Bright finish	(RH)♦D3MY 16003-D	(LH)♦D3MY 16004-D	1
20938-9	Moulding (front door outside)	Black vinyl insert	(RH)♦D3MY 5320938-A	(LH)♦D3MY 5320939-A	1
		Bright finish	(RH)♦D3MY 5320938-B	(LH)♦D3MY 5320939-B	1
25532-3	Moulding (rear door outside)	Black vinyl insert	(RH)★D3AZ 5325532-A Not replaced (6/80)	(LH)♦D3AZ 5325533-A	1
		Bright finish	(RH)★D3MY 5325532-B Not replaced (6/82)	(LH)★D3MY 5325533-B Not replaced (6/82)	1
29038-9	Moulding (quarter outside)	Black vinyl insert	(RH)♦D3MY 7129038-A	(LH)♦D3MY 7129039-A	1
		Bright finish	(RH)★D3MY 7129038-D Not replaced (6/82)	(LH)★D3MY 7129039-D Not replaced (6/82)	1

♦ Includes attaching parts

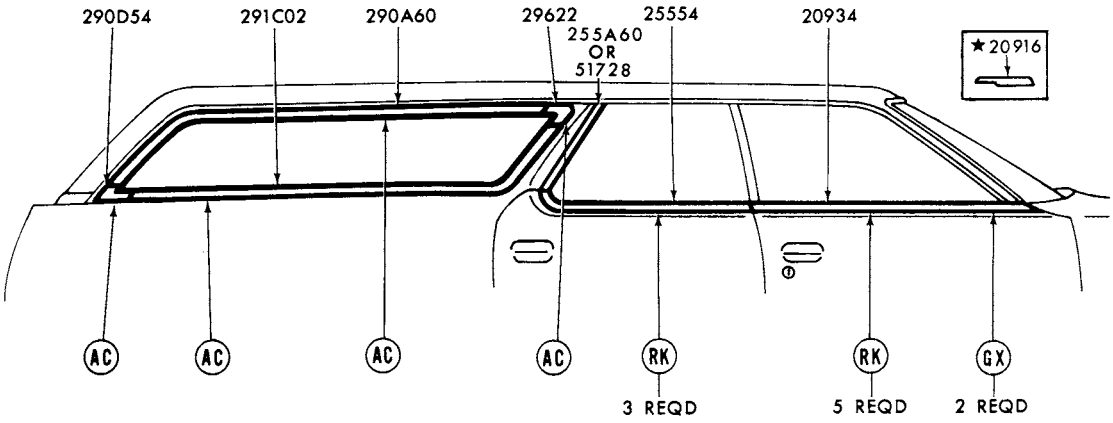

P-12501

1973 METEOR - BODY TYPE 71 - DOOR and QUARTER WINDOW FRAME

GROUP NUMBER	PART NAME	DESCRIPTION	PART NUMBER		QTY.
20934-5	Moulding (front door outside belt)	Incl. weatherstrip	(RH)♦ D5AZ 5320934-B	(LH)♦ D5AZ 5320935-B	1
25554-5	Moulding (rear door outside belt)	Incl. weatherstrip	(RH)♦ D5AZ 5325554-A	(LH)♦ D5AZ 5325555-A	1
290D54-5	Moulding (quarter window outside lower rear corner)		(RH) D5AZ 71290D54-A	(LH) D5AZ 71290D55-A	1
290A60-1	Moulding (quarter window outside upper)		(RH)♦ D5AZ 71290A60-A	(LH)♦ D5AZ 71290A61-A	1
291C02-3	Moulding (quarter window outside lower rear)		(RH)♦ D5AZ 71291C02-A	(LH)♦ D5AZ 71291C03-A	1
29622-3	Moulding (quarter window outside front)		(RH) D5AZ 7129622-A	(LH) D5AZ 7129623-A	1
51728-9	Moulding (rear door window opening outside)		(RH)♦ D4AZ 7151728-A	(LH)♦ D4AZ 7151729-A	1

♦ Incl. attaching parts

COPYRIGHT © 1986 — FORD MOTOR COMPANY — DEARBORN, MICHIGAN

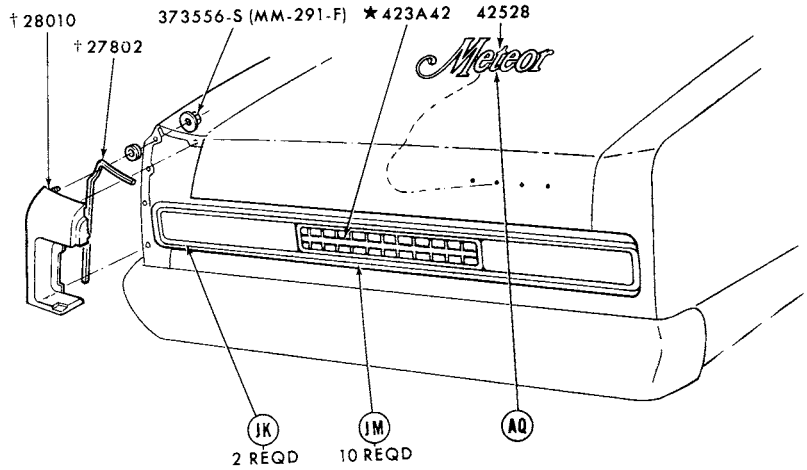

REFER TO EXTERIOR MOULDING SECTION "R" FOR COMPLETE RETAINER INFORMATION P-11861
†REFER TO GROUP IN TEXT SECTION

1973 METEOR - BODY TYPES 53 AND 65 - BACK END

GROUP NUMBER	PART NAME	DESCRIPTION	PART NUMBER	QTY.
42528	Plate (name)	"Meteor"	♦D3MY 6542528-B	1

♦ Includes attaching parts

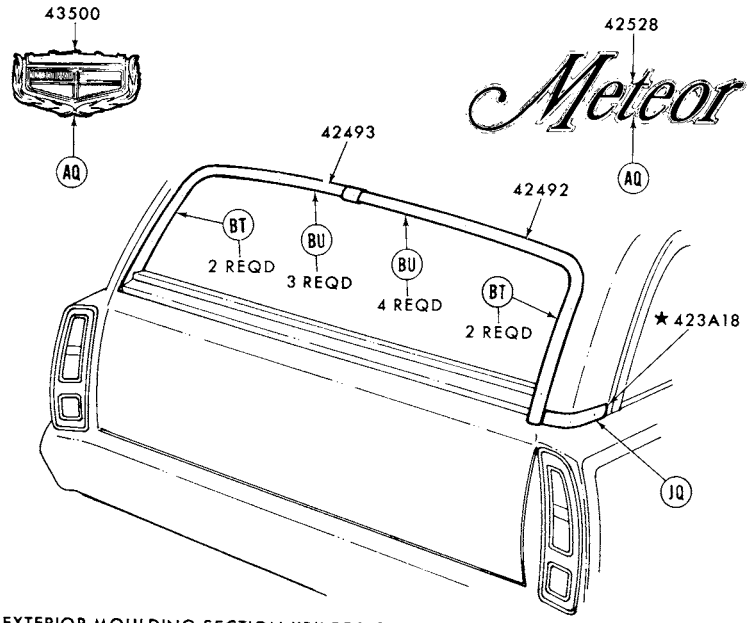

REFER TO EXTERIOR MOULDING SECTION "R" FOR COMPLETE RETAINER INFORMATION P-11862

1973 METEOR - BODY TYPE 71 - BACK END

GROUP NUMBER	PART NAME	DESCRIPTION	PART NUMBER	QTY.
42492-3	Moulding (back window outside side)		(RH)♦D3AZ 7142492-A (LH)♦D3AZ 7142493-A	1
42528	Plate (name)	"Meteor"	♦D3MY 6542528-B	1
43500	Ornament (tailgate)		♦C9MY 7143500-A	1

COPYRIGHT © 1986 — FORD MOTOR COMPANY — DEARBORN, MICHIGAN

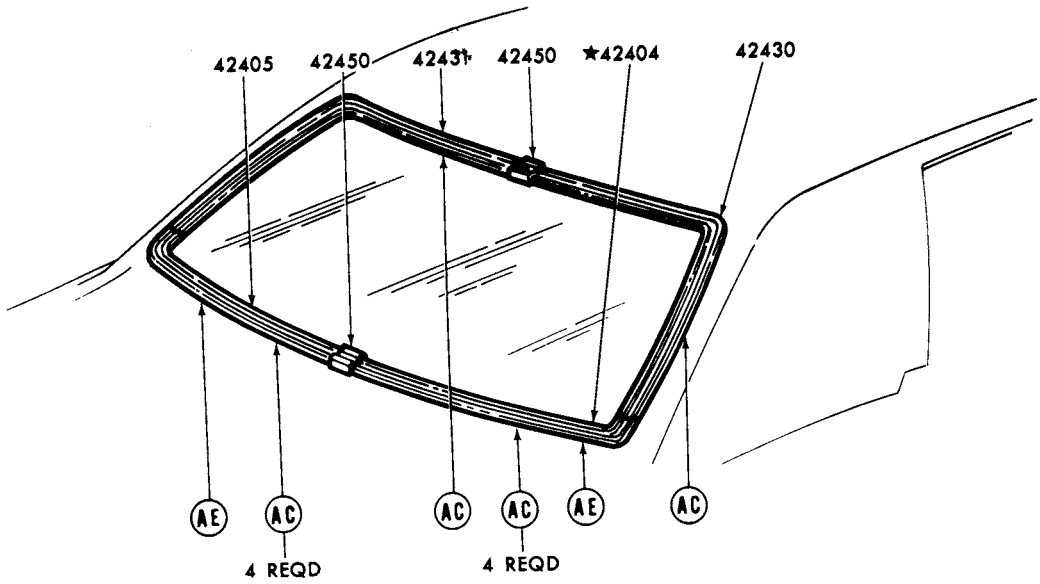

REFER TO EXTERIOR MOULDING SECTION "R" FOR COMPLETE RETAINER INFORMATION P-12460

1973 METEOR - BODY TYPE 53 - BACK WINDOW

GROUP NUMBER	PART NAME	DESCRIPTION	PART NUMBER	QTY.
42404-5	Moulding (back window outside lower)		(RH)♦ D3AZ 5342404-A (LH)♦ D3AZ 5342405-A	1
42430-1	Moulding (back window outside upper)		(RH)♦ D7AZ 5342430-A (LH)♦ D7AZ 5342431-A	1
42450	Cover (back window outside moulding joint)	Lower	D5AZ 5342450-A	1
		Upper	D5AZ 5342450-B	1

♦ Includes attaching parts

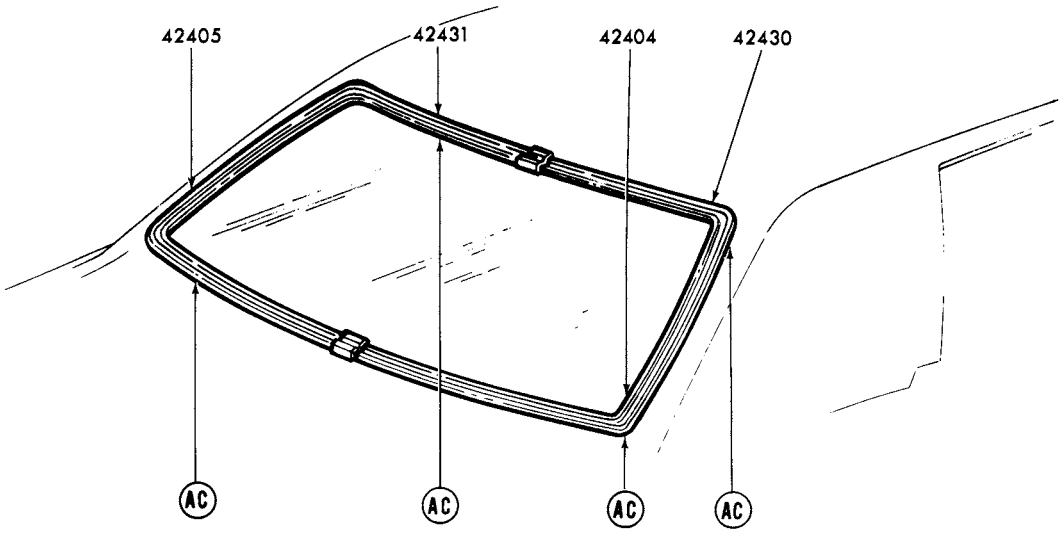

REFER TO EXTERIOR MOULDING SECTION "R" FOR COMPLETE RETAINER INFORMATION

P-12510

1973 METEOR - BODY TYPE 65 - BACK WINDOW

GROUP NUMBER	PART NAME	DESCRIPTION	PART NUMBER		QTY.
42404-5	Moulding (back window outside lower)		(RH)♠ D5MY 6042404-A	(LH)♠ D5MY 6042405-A	1
42430-1	Moulding (back window outside upper)		(RH)♠ D7AZ 6042430-A	(LH)♠ D7AZ 6042431-A	1

♠ Includes attaching parts

COPYRIGHT © 1986 — FORD MOTOR COMPANY — DEARBORN, MICHIGAN

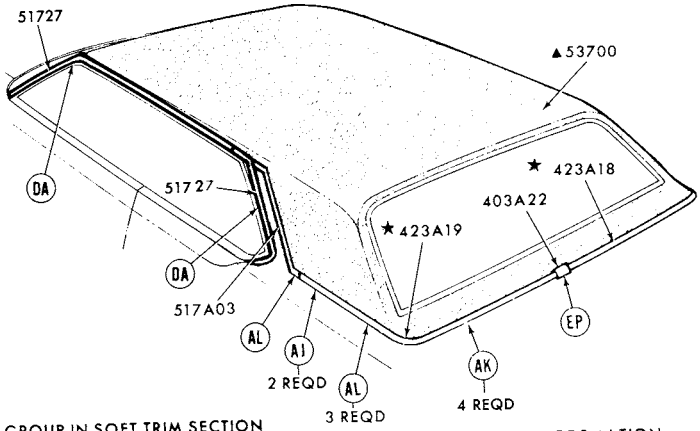

▲ REFER TO GROUP IN SOFT TRIM SECTION
REFER TO EXTERIOR MOULDING SECTION "R" FOR COMPLETE RETAINER INFORMATION

P-10115

1973 METEOR - BODY TYPE 53 - ROOF and BACK BELT - w/FULL VINYL ROOF

GROUP NUMBER	PART NAME	DESCRIPTION	PART NUMBER		QTY.
403A22	Cover (back belt moulding)	Paint to match	♦ D1MY 57403A22-A		1
517A02-3	Moulding (roof outside side)	Rear	(RH) ♦D3MY 53517A02-A	(LH) ♦D3MY 53517A03-A	1
51726-7	Moulding (roof drip side finish)	Front	(RH) D4AZ 5351726-A	(LH) D4AZ 5351727-A	1
		Rear	(RH) D4AZ 5351726-C	(LH) D4AZ 5351727-C	1

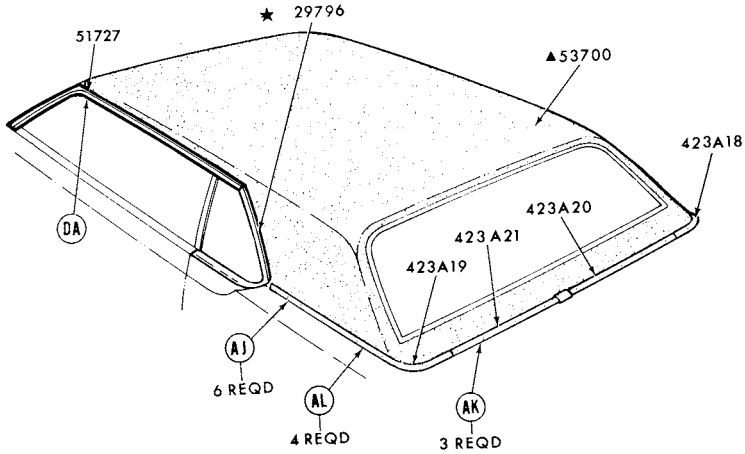

▲ REFER TO GROUP IN SOFT TRIM SECTION
REFER TO EXTERIOR MOULDING SECTION "R" FOR COMPLETE RETAINER INFORMATION

P-10116

1973 METEOR - BODY TYPE 65 - ROOF and BACK BELT - w/ FULL VINYL ROOF

GROUP NUMBER	PART NAME	DESCRIPTION	PART NUMBER		QTY.
423A18-9	Moulding (back belt outside side)	Bright	(RH) ♦D4MY 65423A18-A	(LH) ♦D4MY 65423A19-A	1
423A20-1	Moulding (back belt outside)	Bright	(RH) ♦D3MY 65423A20-C	(LH) ♦D3MY 65423A21-C	1
51726-7	Moulding (roof drip side finish)	Front	(RH) D3MY 6551726-A	(LH) D5MY 6551727-A	1

♦ Includes attaching parts

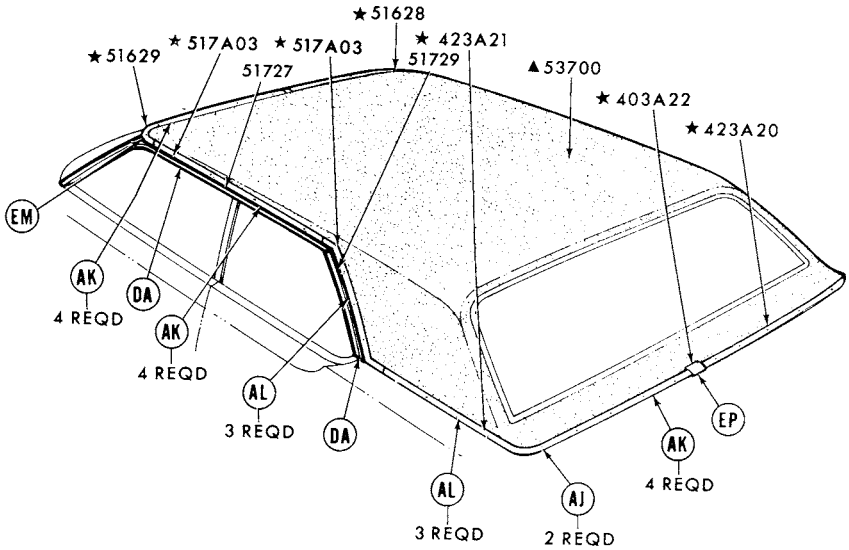

▲REFER TO GROUP IN SOFT TRIM SECTION
REFER TO EXTERIOR MOULDING SECTION "R" FOR COMPLETE RETAINER INFORMATION

P-10119

1973 METEOR - BODY TYPE 53 - ROOF and BACK BELT - w/HALO VINYL ROOF

GROUP NUMBER	PART NAME	DESCRIPTION	PART NUMBER		QTY.
51726-9	Moulding (roof drip side finish)	Front	(RH) D4AZ 5351726-A	(LH) D4AZ 5351727-A	1
		Rear	(RH) D4AZ 5351728-C	(LH) D4AZ 5351729-C	1

COPYRIGHT © 1986 — FORD MOTOR COMPANY — DEARBORN, MICHIGAN

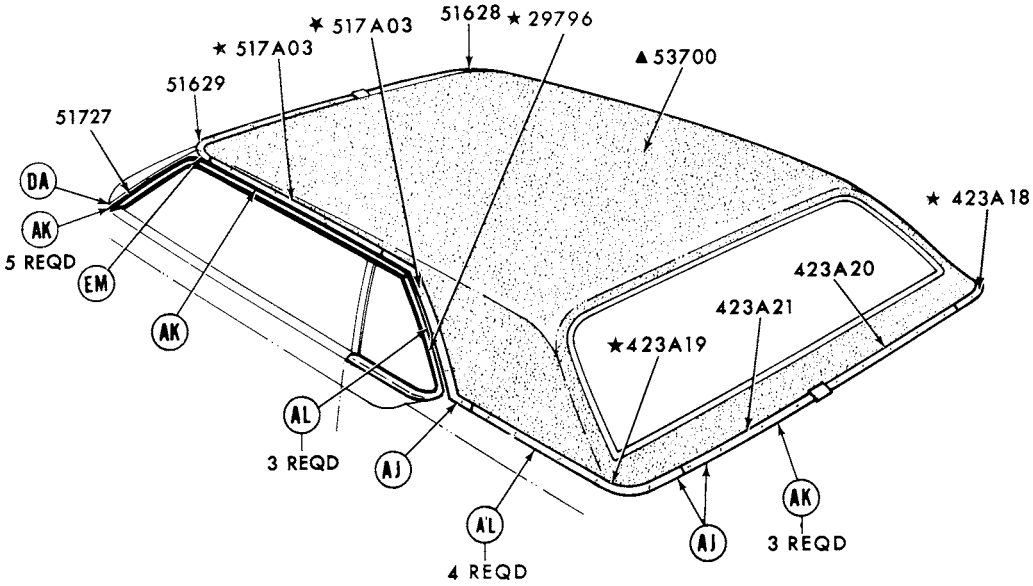

▲REFER TO GROUP IN SOFT TRIM SECTION
REFER TO EXTERIOR MOULDING SECTION "R" FOR COMPLETE RETAINER INFORMATION

P-10120

1973 METEOR - BODY TYPE 65 - ROOF and BACK BELT - w/HALO VINYL ROOF

GROUP NUMBER	PART NAME	DESCRIPTION	PART NUMBER		QTY.
423A20-1	Moulding (back belt outside)	Bright finish	(RH)♦D3MY 65423A20-C	(LH)♦D3MY 65423A21-C	1
51628-9	Moulding (roof finish front)	Paint to match-	(RH)♦D4MY 6551628-A	(LH)♦D4MY 6551629-A	1
51726-7	Moulding (roof drip side finish)		(RH)♦D5MY 6551726-A	(LH)♦D5MY 6551727-A	1

♦ Includes attaching parts

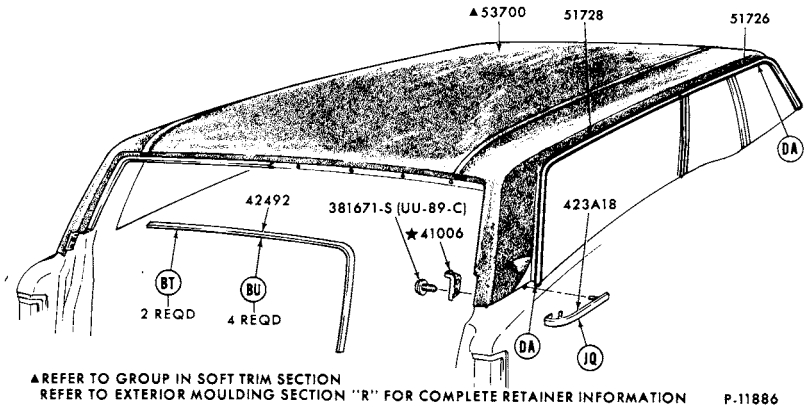

▲REFER TO GROUP IN SOFT TRIM SECTION
REFER TO EXTERIOR MOULDING SECTION "R" FOR COMPLETE RETAINER INFORMATION P-11886

1973 METEOR - BODY TYPE 71 - ROOF and BACK BELT

GROUP NUMBER	PART NAME	DESCRIPTION	PART NUMBER		QTY.
423A18-9	Moulding (back belt outside side)		(RH)♦ D3AZ 71423A18-A	(LH)♦ D3AZ 71423A19-A	1
42492-3	Moulding (back window outside side)		(RH)♦ D3AZ 7142492-A	(LH)♦ D3AZ 7142493-A	1
51726-9	Moulding (roof drip side finish)	Front- "Before 6/1/73"	(RH)♦D5AZ 7151726-A	(LH)♦D5AZ 7151727-A	1
		Front- "From 6/1/73"	(RH)♦D5AZ 7151726-A	(LH)♦D5AZ 7151727-A	1
		Rear	(RH)♦D3AZ 7151728-B	(LH)♦D3AZ 7151729-B	1
		Rear top end	(RH)♦D0AZ 7151728-A	(LH)♦D0AZ 7151729-A	1

♦ Includes attaching parts

COPYRIGHT © 1986 — FORD MOTOR COMPANY — DEARBORN, MICHIGAN

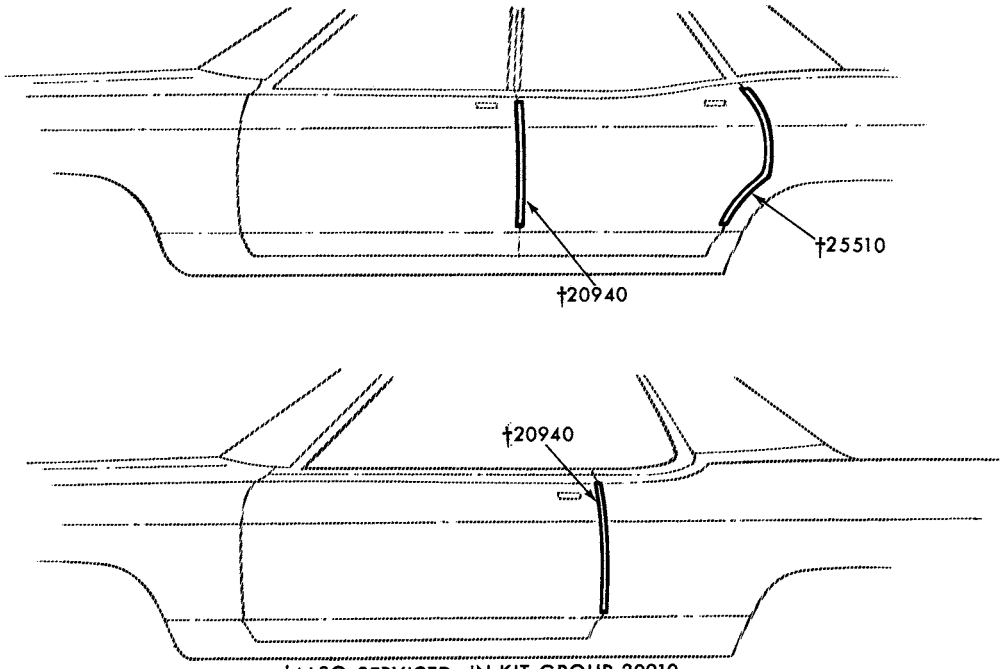

†ALSO SERVICED IN KIT-GROUP 20910

P-10061

1973 METEOR - DOOR EDGE GUARDS

GROUP NUMBER	PART NAME	DESCRIPTION	PART NUMBER	QTY.
20910	Moulding kit (door edge guard)			1
20940-1	Moulding (front door edge guard)	Bright-body types 53,57 and 71	(RH) D3MY 5320940-A (LH) D3MY 5320941-A	1
		Body type 65	(RH) D3MY 6520940-A (LH) D3MY 6520941-A	1
25510-1	Moulding (rear door edge guard)	Bright-body types 53,57 and 71	(RH) D3MY 5325510-A (LH) D3MY 5325511-A	1

♦ Includes attaching parts

INDEX

TITLE	SECTION	PAGE	ILLUS. NO.
1974			
A (MERCURY)			
BACK END			
-body types 53B,F,57B,F and 65B,F	74A	13	P-10113
-body types 53H,K,X,57H,K,X and 65H,K,X	74A	14	P-10118
-body type 71	74A	15	P-10114
BACK WINDOW			
-body types 53 and 57	74A	16	P-12460
-body type 65	74A	17	P-12487
BELT			
Back-refer to ROOF and BACK BELT			
Front door, Rear door and Quarter-refer to Body Side			
BODY SIDE			
-body types 53 and 57	74A	2,3	P-11818
-body type 65	74A	4,5	P-11819
-body types 71B,H	74A	6	P-10111
-body type 71K	74A	7,8	P-10112
BODY SIDE PROTECTION			
-body types 53 and 57	74A	9	P-11821
-body type 65	74A	10	P-11820
-body type 71	74A	11	P-11822
DOOR EDGE GUARDS	74A	24	P-10061
LUGGAGE COMPARTMENT - refer to BACK END			
ROOF and BACK BELT			
-body types 53B,F	74A	18	P-10115
-body types 53H,K,X and 57H,K,X	74A	20	P-10119
-body types 65B,F	74A	19	P-10116
-body types 65H,K,X - w/halo vinyl roof	74A	21	P-10120
-body type 71	74A	22	P-11886
ROOF DRIP - refer to ROOF and BACK BELT			
TAILGATE - refer to BACK END			
WHEEL OPENING COVER PARTS			
-body types 53,57 and 65	74A	23	P-8181
WINDOW FRAME			
-body type 71	74A	12	P-12501
WINDSHIELD	74A	1	P-12521
C (MONTEGO)			
BACK END			
-body types 53B,D and 65B,D	74C	12	P-11190
-body types 53K and 65K	74C	12	P-11189
-body type 71	74C	13	P-11191
BACK WINDOW			
-body types 53 and 65	74C	14	P-12457
BELT			
Back-refer to ROOF and BACK BELT			
Front door, Rear door and Quarter-refer to Body Side			
BODY SIDE			
-body types 53B,D	74C	2	P-12804
-body type 53K	74C	3,4	P-12805
-body type 65B,D	74C	5	P-12806
-body type 65K	74C	6,7	P-12807
-body types 71B,D	74C	8	P-12808
-body type 71K	74C	9,10	P-12809
DOOR EDGE GUARDS	74C	20	P-10061
LUGGAGE COMPARTMENT - refer to BACK END			
ROOF and BACK BELT			
-body types 53 and 71	74C	15	P-12810
-body type 65K-w/full vinyl roof	74C	17	P-12816
-body type 65K-w/half vinyl roof	74C	18	P-12817
-body type 65K-w/split vinyl roof	74C	19	P-10746
-body types 65B,D	74C	16	P-12815

COPYRIGHT © 1986 — FORD MOTOR COMPANY — DEARBORN, MICHIGAN

INDEX

TITLE	SECTION	PAGE	ILLUS. NO.
1974			
C (MONTEGO) - cont'd.			
ROOF DRIP - refer to ROOF and BACK BELT			
STRIPES			
-body types 65B,D	74C	11	P-12009
TAILGATE - refer to BACK END			
WINDOW FRAME			
-body type 71	74C	11	P-12502
WINDSHIELD	74C	1	P-12521
D (LINCOLN)			
BACK END			
-body types 53 and 65	74D	6	P-11077
BACK WINDOW			
-body type 53	74D	7	P-12470
-body type 65	74D	8	P-12471
BELT			
Back-refer to ROOF and BACK BELT			
Front door, Rear door and Quarter-refer to Body Side			
BODY SIDE			
-body type 53	74D	2,3	P-13614
-body type 65	74D	4,5	P-11832
BODY SIDE PROTECTION			
-body type 53	74D	2,3	P-13614
-body type 65	74D	4,5	P-11832
DOOR EDGE GUARDS	74D	10	P-10061
LUGGAGE COMPARTMENT - refer to BACK END			
ROOF and BACK BELT			
-body types 53 and 65	74D	9	P-12010
ROOF DRIP - refer to ROOF and BACK BELT			
WHEEL OPENING COVER PARTS	74D	8	P-11123
WINDSHIELD	74D	1	P-12521
F (COUGAR)			
BACK END			
-body type 65	74F	4	P-11196
BACK WINDOW	74F	5	P-12457
BELT			
Back-refer to ROOF and BACK BELT			
Front door and Quarter-refer to Body Side			
BODY SIDE			
-body type 65	74F	2,3,4	P-11195
BODY SIDE PROTECTION			
-body type 65	74F	2,3,4	P-11195
DOOR EDGE GUARDS	74F	6	P-10061
LUGGAGE COMPARTMENT - refer to BACK END			
ROOF and BACK BELT			
-w/full vinyl roof	74F	1	P-12019
-body type 65-w/half vinyl roof	74F	5,6	P-12817
ROOF DRIP - refer to ROOF and BACK BELT			
WINDSHIELD	74F	1	P-12521
J (CAPRI)			
BACK END	74J	4	P-10533
BACK WINDOW	74J	5	P-12473
BELT			
Back-refer to ROOF and BACK BELT			
Front door and Quarter-refer to Body Side			
BODY SIDE	74J	2,3	P-10534
BODY SIDE PROTECTION	74J	2,3	P-10534

INDEX

TITLE	SECTION	PAGE	ILLUS. NO.
1974			
J (CAPRI) - cont'd.			
DOOR EDGE GUARDS	74J	6	P-10061
LUGGAGE COMPARTMENT-refer to BACK END			
ROOF and BACK BELT	74J	2,3	P-10534
ROOF DRIP	74J	2,3	P-10534
WINDOW FRAME - refer to Body Illustration Index 230			
WINDSHIELD	74J	1	P-12582
K (MARK IV)			
BACK END			
-body type 65	74K	3	P-11078
BACK WINDOW	74K	4	P-12459
BELT			
Back-refer to ROOF and BACK BELT			
Front door and Quarter-refer to Body Side			
BODY SIDE			
-body type 65	74K	2	P-11079
BODY SIDE PROTECTION			
-body type 65	74K	2	P-11079
DOOR EDGE GUARDS	74K	6	P-10061
LUGGAGE COMPARTMENT-refer to BACK END			
ROOF and BACK BELT	74K	5	P-12011
ROOF DRIP - refer to ROOF and BACK BELT			
WINDSHIELD	74K	1	P-12521
L (BOBCAT)			
BACK END			
-body types 62 and 64	74L	8	P-11415
-body type 73	74L	9	P-11416
BACK WINDOW			
-body type 62	74L	10	P-12464
-body type 64	74L	10	P-12465
-body type 73	74L	9	P-11416
BELT			
Back-refer to ROOF and BACK BELT			
Front door and Quarter-refer to Body Side			
BODY SIDE			
-body types 62 and 64	74L	2	P-11414
-body type 73-exc. Villager	74L	2	P-12069
-body type 73-Villager	74L	3,4	P-12070
BODY SIDE PROTECTION	74L	5	P-12316
DOOR EDGE GUARDS	74L	12	P-10061
LIFTGATE - refer to BACK END			
LUGGAGE COMPARTMENT - refer to BACK END			
ROOF and BACK BELT			
-body types 62 and 64	74L	11	P-12186
ROOF DRIP - refer to ROOF and BACK BELT			
WINDOW FRAME			
-body types 62 and 64	74L	6	P-12497
-body type 73	74L	7	P-12498
WINDSHIELD	74L	1	P-12522
P (COMET)			
BACK END			
-body types 54 and 62	74P	9	P-11076
BACK WINDOW			
-body type 54	74P	10	P-12468
-body type 62	74P	10	P-12467

COPYRIGHT © 1986 — FORD MOTOR COMPANY — DEARBORN, MICHIGAN

INDEX

1974

P (COMET) - cont'd.

TITLE	SECTION	PAGE	ILLUS. NO.
BELT			
Back-refer to ROOF and BACK BELT			
Front door, Rear door and Quarter-refer to Body Side			
BODY SIDE			
-body type 54-w/o luxury decor	74P	2	P-11854
-body type 54-w/luxury decor	74P	3	P-10011
-body type 62-w/o luxury decor	74P	2	P-8226
-body type 62-w/luxury decor	74P	4	P-10012
BODY SIDE PROTECTION			
-body type 54	74P	5	P-11855
-body type 62	74P	6	P-8186
DOOR EDGE GUARDS	74P	12	P-10061
LUGGAGE COMPARTMENT - refer to BACK END			
ROOF and BACK BELT			
-body type 54	74P	11	P-12012
-body type 62	74P	11	P-10374
ROOF DRIP - refer to ROOF and BACK BELT			
STRIPES			
-body type 62	74P	2	P-8226
WINDOW FRAME			
-body type 54	74P	7	P-12500
-body type 62	74P	8	P-12499
WINDSHIELD	74P	1	P-12520

Y (METEOR)

BACK END			
-body types 53 and 65	74Y	9	P-11861
-body type 71	74Y	10	P-11862
BACK WINDOW			
-body type 53	74Y	11	P-12460
-body type 65	74Y	12	P-12487
BELT			
Back-refer to ROOF and BACK BELT			
Front door, Rear door and Quarter-refer to Body Side			
BODY SIDE			
-body type 53	74Y	2	P-11856
-body type 65	74Y	3	P-11857
-body type 71	74Y	4	P-11860
BODY SIDE PROTECTION			
-body type 53	74Y	5	P-11821
-body type 65	74Y	6	P-11820
-body type 71	74Y	7	P-11822
DOOR EDGE GUARDS	74Y	18	P-10061
LUGGAGE COMPARTMENT - refer to BACK END			
ROOF and BACK BELT			
-body type 53 (full vinyl roof)	74Y	13	P-10115
-body type 53 (halo vinyl roof)	74Y	15	P-10119
-body type 65 (full vinyl roof)	74Y	14	P-10116
-body type 65 (halo vinyl roof)	74Y	16	P-10120
-body type 71	74Y	17	P-11886
ROOF DRIP - refer to ROOF and BACK BELT			
TAILGATE - refer to BACK END			
WHEEL OPENING COVER PARTS			
-body types 53 and 65	74Y	1	P-8181
WINDOW FRAME			
-body type 71	74Y	8	P-12501
WINDSHIELD	74Y	1	P-12521

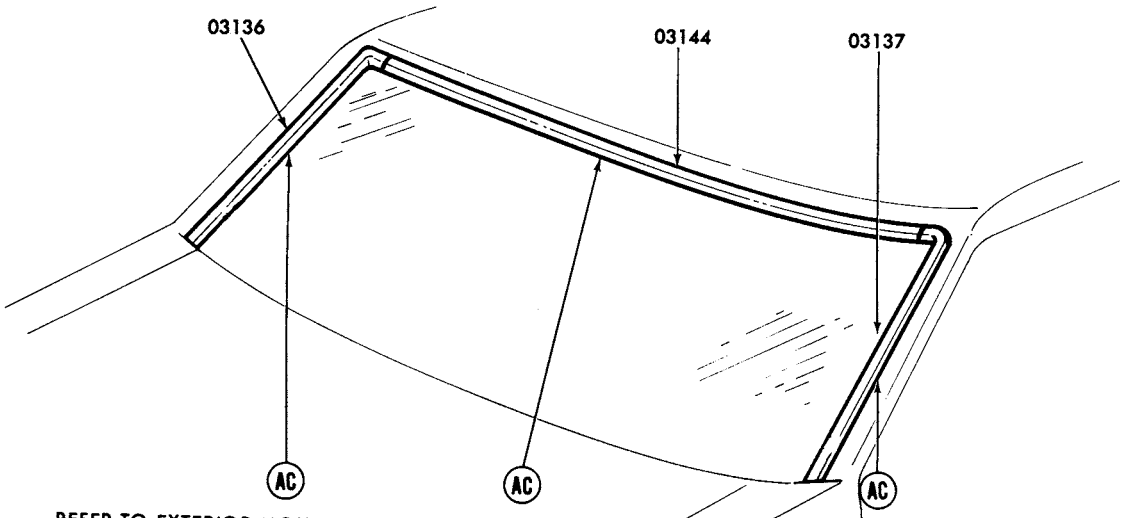

REFER TO EXTERIOR MOULDING SECTION 'R' FOR COMPLETE RETAINER INFORMATION

P-12521

1974 MERCURY - WINDSHIELD

GROUP NUMBER	PART NAME	DESCRIPTION	PART NUMBER		QTY.
03136-7	Moulding (windshield outside side)	Body types 53, 57, 71	(RH)♦ D7AZ 5303136-A	(LH)♦ D7AZ 5303137-A	1
		Body type 65	(RH)♦ D7AZ 6003136-A	(LH)♦ D7AZ 6003137-A	1
03144	Moulding (windshield outside top)	Body types 53, 57, 71	♦D3AZ 5303144-A		1
		Body type 65	♦D7AZ 6003144-A		1

COPYRIGHT © 1986 — FORD MOTOR COMPANY — DEARBORN, MICHIGAN

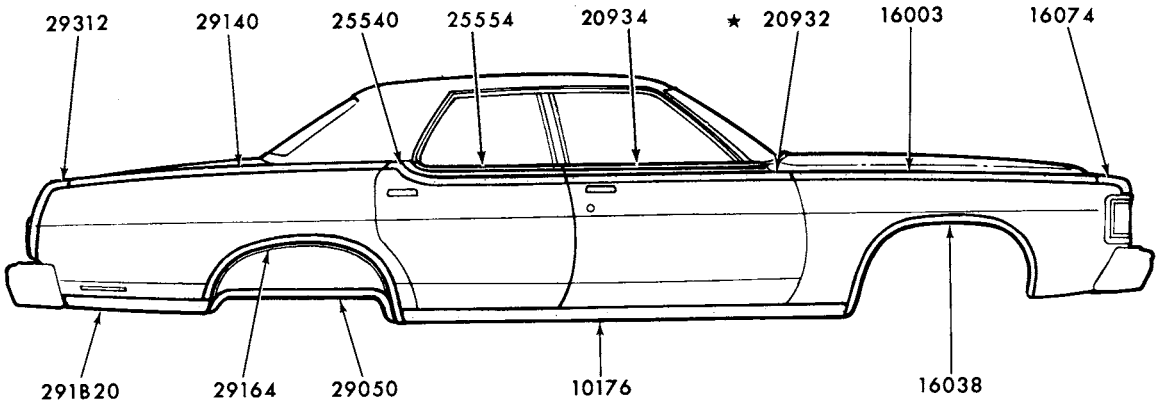

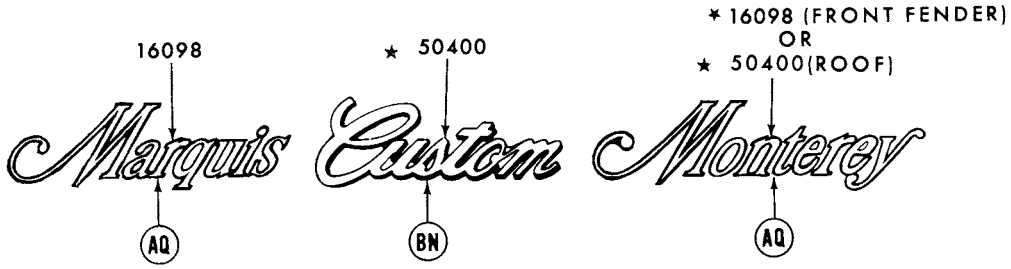

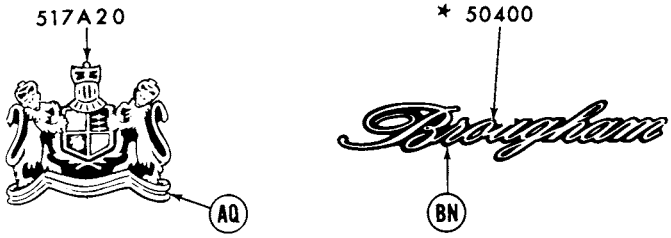

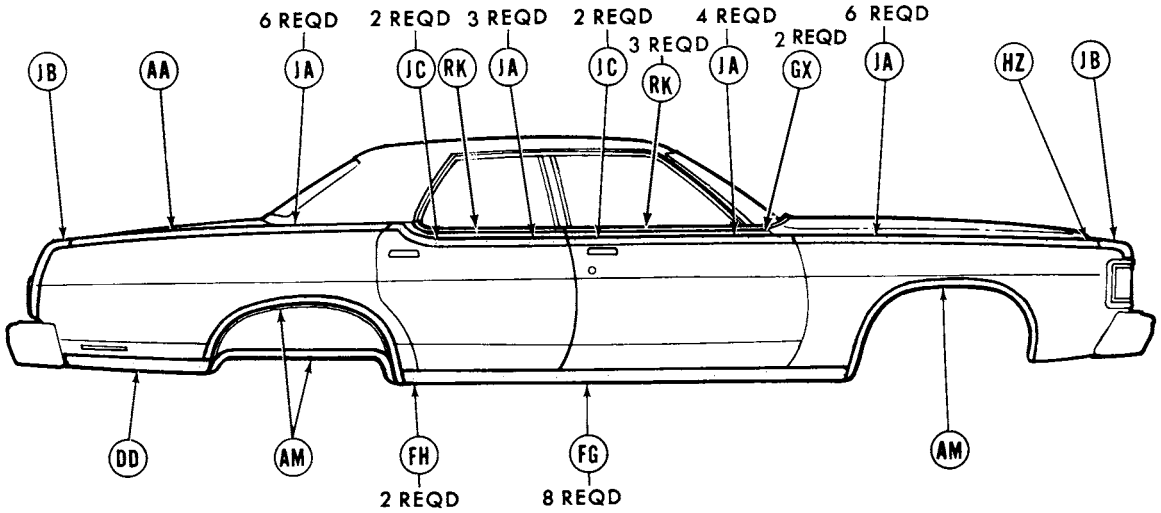

REFER TO EXTERIOR MOULDING SECTION "R" FOR COMPLETE RETAINER INFORMATION

P-11818

1974 MERCURY - BODY TYPES 53 and 57 - SIDE

1974 MERCURY - BODY TYPES 53 and 57 - SIDE - cont'd.

GROUP NUMBER	PART NAME	DESCRIPTION	PART NUMBER		QTY.
10176-7	Moulding (body rocker panel)	90 7/32" long	(RH)♦D3MY 6510176-A	(LH)♦D3MY 6510177-A	1
16003-4	Moulding (front fender upper)	Body types 53K,57K	(RH)★D3MY 16003-A	(LH)♦D3MY 16004-A	1
16038-9	Moulding (front fender wheel opening)	W/rocker panel	(RH)♦D3MY 16038-A	(LH)♦D3MY 16039-A	1
		W/o rocker panel	(RH)★D4MY 16038-A Not replaced (6/82)	(LH)★D4MY 16039-A Not replaced (6/82)	1
16074-5	Moulding (front fender front extension)	Body types 53K,57K	(RH)♦D3MY 16074-A	(LH)♦D3MY 16075-A	1
16098	Plate (front fender name)	"Marquis"- body types 53H,K, X,57H,K,X	♦D3MY 16098-B	R.H. and L.H.	2
		"Monterey"- body types 53B,F	★D3MY 16098-A Not replaced (6/82)	R.H. and L.H.	2
20934-5	Moulding (front door outside belt)	Incl. weatherstrip- body type 53	(RH)♦D5AZ 5320934-B	(LH)♦D5AZ 5320935-B	1
		Incl. weatherstrip- body type 57	(RH)♦D5AZ 5320934-B	(LH)♦D3AZ 5720935-B	
25540-1	Moulding (rear door outside upper)	Body types 53K, 57K	(RH)★D3MY 5325540-A Not replaced (6/82)	(LH)★D3MY 5325541-A Not replaced 6/82	1
25554-5	Moulding (rear door outside belt)	Incl. weatherstrip- body type 53	(RH)♦D5AZ 5325554-A	(LH)♦D5AZ 5325555-A	1
		Incl. weatherstrip- body type 57	★(RH)♦D3AZ 5725554-A Not replaced (11/79)	(LH)♦D5AZ 5325555-A	1
29050-1	Moulding (quarter panel wheel opening cover)	Body types 53B,F	(RH)♦D3MY 6529050-B	(LH)♦D3MY 6529051-B	1
		Body types 53H, K,X,57H,K,X	(RH)♦D3MY 6529050-A	(LH)♦D3MY 6529051-A	1
291B20-1	Moulding (quarter panel outside lower rear)	Body types 53H,K, X,57H,K,X	(RH)♦D4MY 65291B20-A	(LH)♦D4MY 65291B21-A	1
29140-1	Moulding (quarter panel outside upper)	Body types 53K,57K	(RH)★D3MY 5329140-A Not replaced 6/82	(LH)★D3MY 5329141-A Not replaced (6/82)	1
29164-5	Moulding (quarter wheel opening)	W/rocker panel mouldings	(RH)♦D3MY 6529164-A	(LH)♦D3MY 6529165-A	1
		W/o rocker panel mouldings	(RH)♦D4MY 6529164-A	(LH)♦D4MY 6529165-A	1
29312-3	Moulding (quarter panel rear extension)	Body types 53K,57K	(RH)♦D4MY 6529312-A	(LH)♦D4MY 6529313-A	1
517A20	Ornament (roof side outside)	Body types 53H, K,57H,K	♦D0MY 65517A20-A	R.H. and L.H.	2

♦ Includes attaching parts

COPYRIGHT © 1986 — FORD MOTOR COMPANY — DEARBORN, MICHIGAN

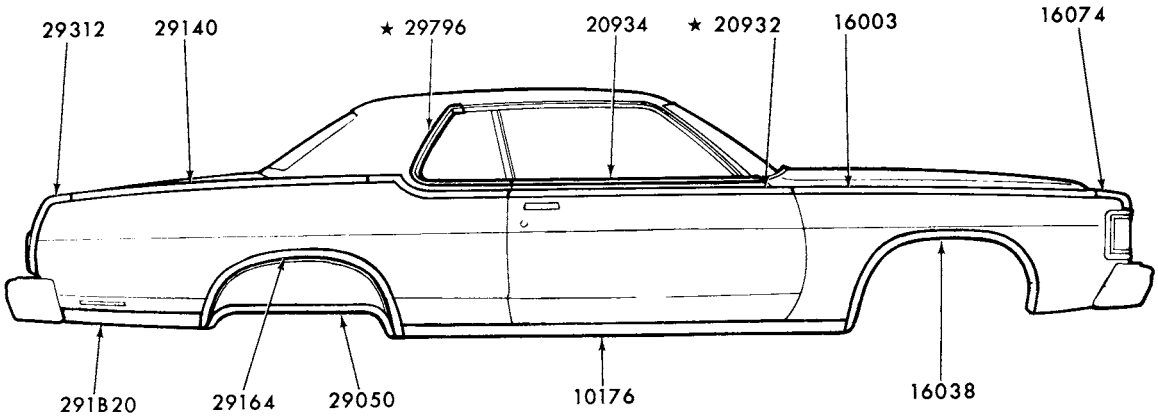

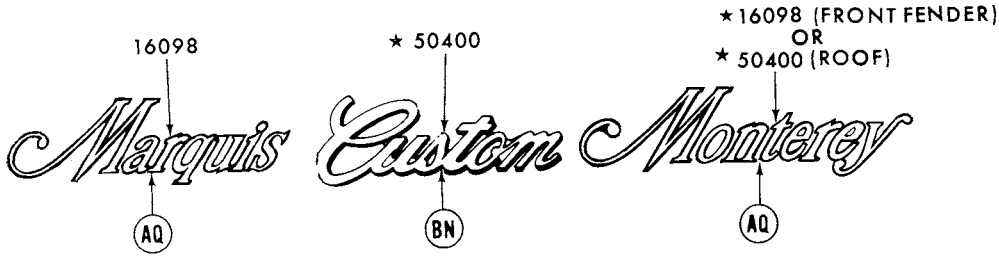

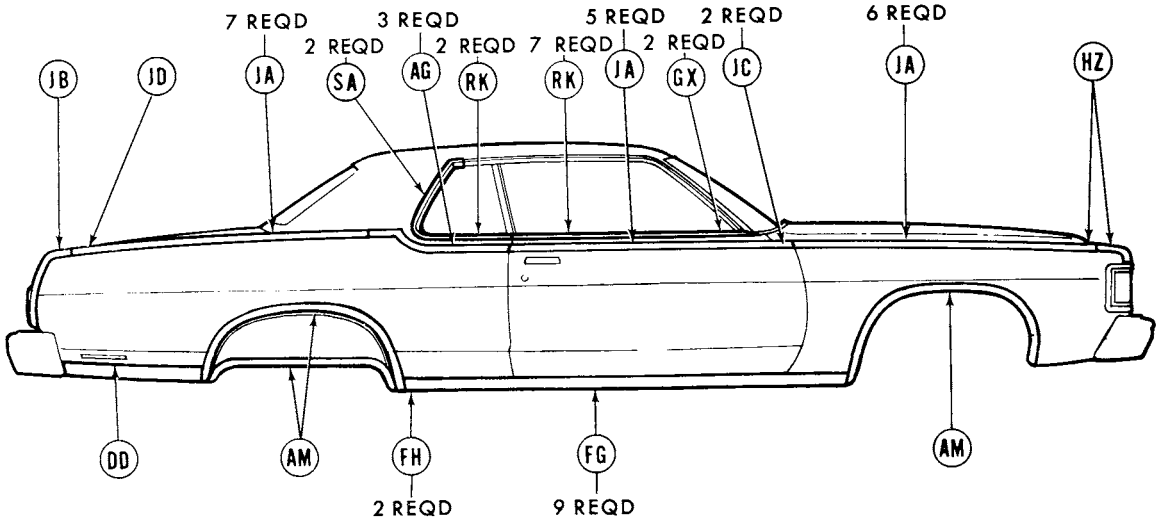

REFER TO EXTERIOR MOULDING SECTION "R" FOR COMPLETE RETAINER INFORMATION

P-11819

1974 MERCURY - BODY TYPE 65 - SIDE

1974 MERCURY - BODY TYPE 65 - SIDE - cont'd.

GROUP NUMBER	PART NAME	DESCRIPTION	PART NUMBER		QTY.
10176-7	Moulding (body rocker panel)	90 7/32" long	(RH)♦D3MY 6510176-A	(LH)♦D3MY 6510177-A	1
16003-4	Moulding (front fender upper)	Body type 65K	(RH)★D3MY 16003-A	(LH)♦D3MY 16004-A	1
16038-9	Moulding (front fender wheel opening)	W/rocker panel moulding-54" long	(RH)♦D3MY 16038-A	(LH)♦D3MY 16039-A	1
		W/o rocker panel moulding-57" long	(RH)★D4MY 16038-A Not replaced (6/82)	(LH)★D4MY 16039-A Not replaced (6/82)	1
16074-5	Moulding (front fender front)	Upper-body type 65K	(RH)♦D3MY 16074-A	(LH)♦D3MY 16075-A	1
16098	Plate (front fender name)	"Monterey"-body types 65B,F	★D3MY 16098-A Not replaced (6/82)	R.H. and L.H.	2
		"Marquis"-body types 65H,K,X	♦D3MY 16098-B	R.H. and L.H.	2
20934-5	Moulding (door outside belt)	Incl. weatherstrip	(RH)♦D5AZ 6520934-A	(LH)♦ D5AZ 6020935-A	1
29050-1	Moulding (quarter panel wheel opening cover)	Body types 65B,F	(RH)♦D3MY 6529050-B	(LH)♦D3MY 6529051-B	1
		Body types 65H,K,X	(RH)♦ D3MY 6529050-A	(LH)♦D3MY 6529051-A	1
291B20-1	Moulding (quarter panel outside lower rear)	Body types 65H,K,X	(RH)♦D4MY 65291B20-A	(LH)♦D4MY 65291B21-A	1
29140-1	Moulding (quarter panel outside upper)	Body type 65K	(RH)♦D3MY 6529140-A	(LH)★D3MY 6529141-A Not replaced (6/82)	1
29164-5	Moulding (quarter wheel opening)	W/rocker panel mouldings	(RH)♦D3MY 6529164-A	(LH)♦D3MY 6529165-A	1
		W/o rocker panel mouldings)	(RH)♦ D4MY 6529164-A	(LH)♦D4MY 6529165-A	1
29312-3	Moulding (quarter panel rear extension)	Body type 65K	(RH)♦D4MY 6529312-A	(LH)♦D4MY 6529313-A	1
517A20	Ornament (roof side outside)	Body types 65H,K	♦D0MY 65517A20-A	R.H. and L.H.	2

♦ Includes attaching parts

COPYRIGHT © 1986 — FORD MOTOR COMPANY — DEARBORN, MICHIGAN

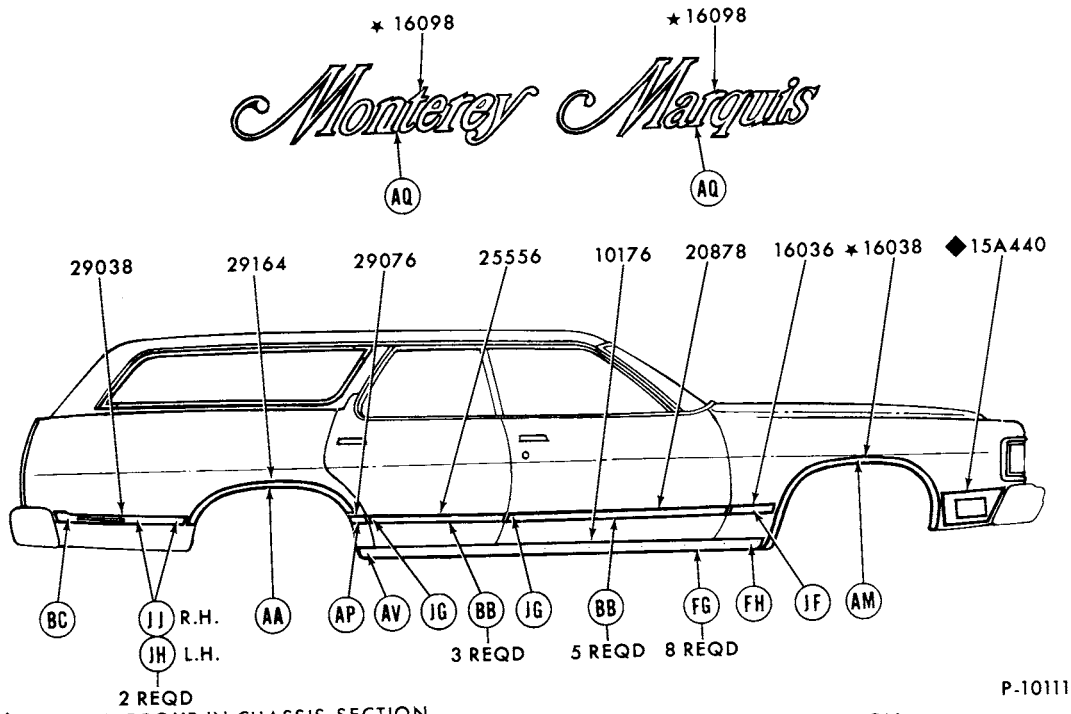

◆ REFER TO GROUP IN CHASSIS SECTION
REFER TO EXTERIOR MOULDING SECTION "R" FOR COMPLETE RETAINER INFORMATION

1974 MERCURY - BODY TYPES 71B,H - SIDE

GROUP NUMBER	PART NAME	DESCRIPTION	PART NUMBER		QTY.
10176-7	Moulding (rocker panel)	87 3/4" long	(RH)♠D3MY 7110176-A	(LH)♠D3MY 7110177-A	1
16036-7	Moulding (front fender side)	Body type 71H	(RH)♠D3MY 16036-A	(LH)♠D3MY 16037-A	1
16038-9	Moulding (front fender wheel opening)	Body type 71H	(RH)★D3MY 16038-B Not replaced (6/82)	(LH)★D3MY 16039-B Not replaced (6/82)	1
16098	Plate (front fender name)	"Monterey"- Body type 71B	★D3MY 16098-A Not replaced (6/82)	R.H. and L.H.	2
		"Marquis"- Body type 71H	★D3MY 16098-B Not replaced (6/82)	R.H. and L.H.	2
20878-9	Moulding (front door outside lower)	Body type 71H	(RH)♠D3MY 7120878-A	(LH)♠D3MY 7120879-A	1
25556-7	Moulding (rear door outside lower)	Body type 71H	(RH)♠D3MY 7125556-A	(LH)♠D3MY 7125557-A	1
29038-9	Moulding (quarter outside)	Body type 71H	(RH)♠D3MY 7129038-C	(LH)♠D3MY 7129039-C	1
29076-7	Moulding (quarter outside lower front)	Body type 71H	(RH)♠D3MY 7129076-A	(LH)♠D3MY 7129077-A	1
29164-5	Moulding (quarter wheel opening)	Body type 71H	(RH)♠D3MY 7129164-A	(LH)♠D3MY 7129165-A	1

♠ Includes attaching parts

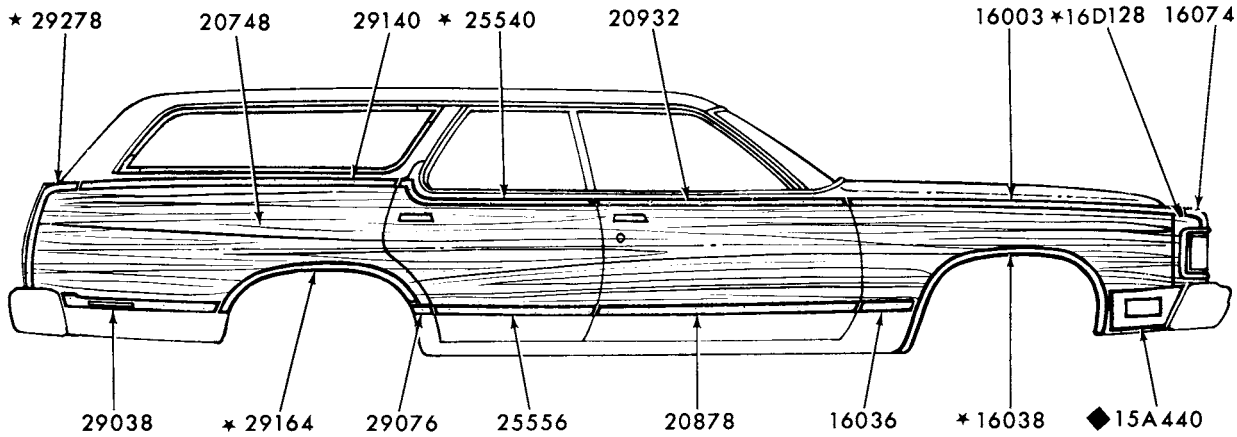

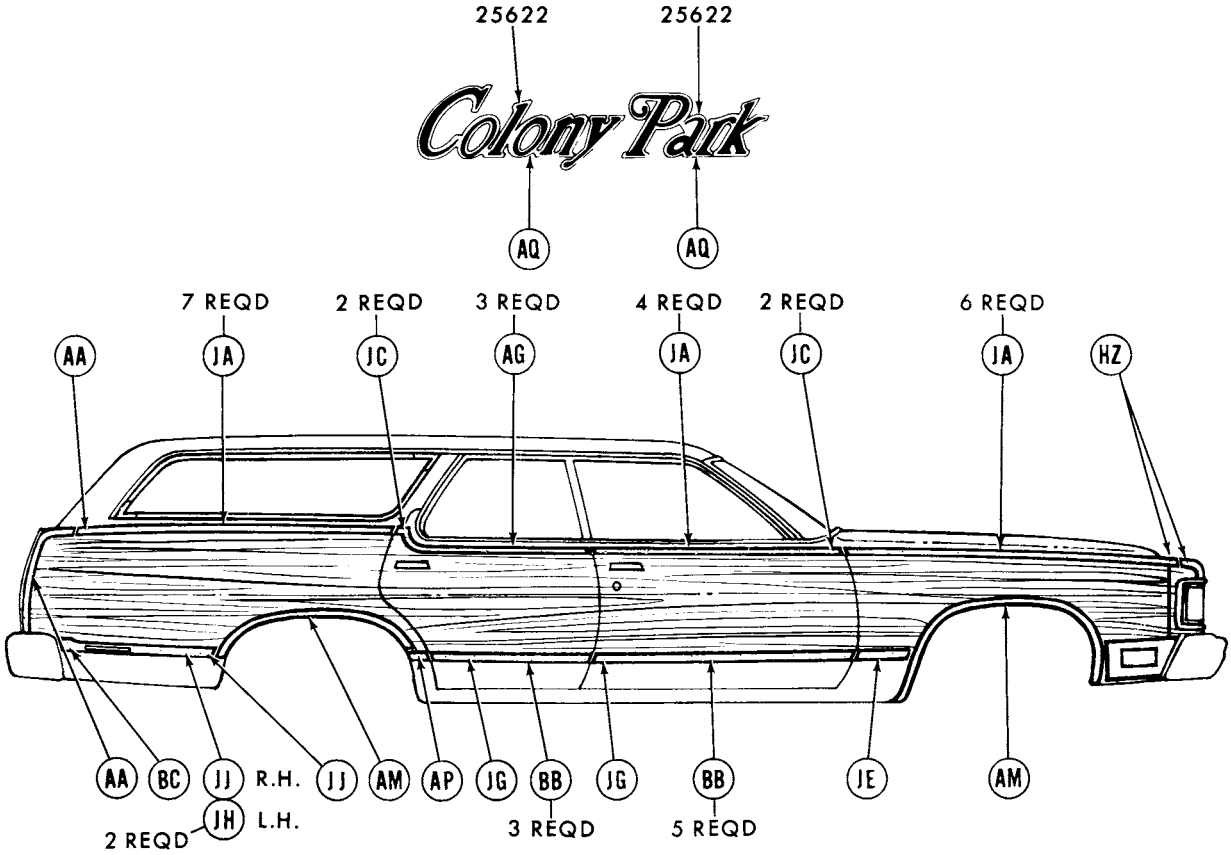

◆ REFER TO GROUP IN TEXT SECTION
REFER TO EXTERIOR MOULDING SECTION "R" FOR COMPLETE RETAINER INFORMATION

P-10112

1974 MERCURY - BODY TYPE 71K - SIDE

COPYRIGHT © 1986 — FORD MOTOR COMPANY — DEARBORN, MICHIGAN

1974 MERCURY - BODY TYPE 71K - SIDE - cont'd.

GROUP NUMBER	PART NAME	DESCRIPTION	PART NUMBER		QTY.
16003-4	Moulding (front fender upper)		(RH)★D3MY 16003-A	(LH)♦D3MY 16004-A	1
16036-7	Moulding (front fender side)		(RH)♦D3MY 16036-A	(LH)♦D3MY 16037-A	1
16038-9	Moulding (front fender wheel opening)		(RH)★D3MY 16038-B Not replaced (6/82)	(LH)★D3MY 16039-B Not replaced (6/82)	1
16074-5	Moulding (front fender front extension)		(RH)♦D3MY 16074-A	(LH)♦D3MY 16075-A	1
20748	Transfer (wood grain)	23 1/4" x 69-Teak wood-w/planking lines-cut to fit	D3MY 7120748-A		AR
20878-9	Moulding (front door outside lower)		(RH)♦D3MY 7120878-A	(LH)♦D3MY 7120879-A	1
20932-3	Moulding (front door outside upper)		(RH)♦D3MY 5320932-A	(LH)♦D3MY 5320933-A	1
25540-1	Moulding (rear door outside upper)		(RH)★D3MY 5325540-A Not replaced (6/82)	(LH)★D3MY 5325541-A Not replaced (6/82)	1
25556-7	Moulding (rear door outside lower)		(RH)♦D3MY 7125556-A	(LH)♦D3MY 7125557-A	1
25622	Plate (name)	"Colony"	♦D3MY 7125622-A	R.H. and L.H.	2
		"Park"	♦D3MY 7125622-B	R.H. and L.H.	2
29038-9	Moulding (quarter outside lower rear)		(RH)♦D3MY 7129038-C	(LH)♦D3MY 7129039-C	1
29076-7	Moulding (quarter outside lower front)		(RH)♦D3MY 7129076-A	(LH)♦D3MY 7129077-A	1
29140-1	Moulding (quarter panel outside upper)		(RH)♦D3MY 7129140-A	(LH)♦D3MY 7129141-A	1
29164-5	Moulding (quarter wheel opening)		(RH)★D3MY 7129164-A Not replaced (6/82)	(LH)★D3MY 7129165-A Not replaced (6/82)	1
29278-9	Moulding (quarter outside rear end)		(RH)★D3MY 7129278-A Not replaced (6/82)	(LH)★D3MY 7129279-A Not replaced (6/82)	1

♦ Includes attaching parts

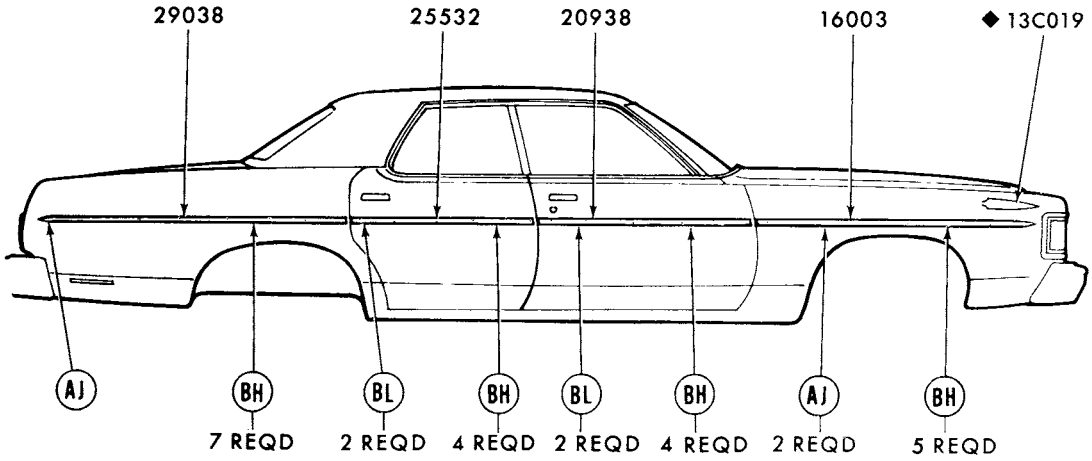

REFER TO EXTERIOR MOULDING SECTION "R" FOR COMPLETE RETAINER INFORMATION

◆ REFER TO GROUP IN TEXT SECTION

P-11821

1974 MERCURY - BODY TYPES 53 and 57 - SIDE PROTECTION MOULDINGS

GROUP NUMBER	PART NAME	DESCRIPTION	PART NUMBER		QTY.
16003-4	Moulding (front fender side)	Black vinyl insert	(RH)♦D3MY 16003-B	(LH)♦D3MY 16004-B	1
		Bright finish	(RH)★D3MY 16003-D	(LH)★D3MY 16004-D	1
		White vinyl insert	(RH)♦D4MY 16003-AW	★(LH)♦D4MY 16004-AW Not replaced (11/79)	1
20938-9	Moulding (front door outside)	Black vinyl insert	(RH)♦D3MY 5320938-A	(LH)♦D3MY 5320939-A	1
		Bright finish	(RH)♦D3MY 5320938-B	(LH)♦D3MY 5320939-B	1
25532-3	Moulding (rear door outside)	Black vinyl insert	(RH)♦D3AZ 5325532-A	(LH)♦D3AZ 5325533-A	1
		Bright finish	(RH)★D3MY 5325532-B Not replaced (6/82)	(LH)★D3MY 5325533-B Not replaced (6/82)	1
29038-9	Moulding (quarter outside)	Black vinyl insert	(RH)♦D3MY 5329038-A	(LH)♦D3MY 5329039-A	1
		Bright finish	(RH)♦D3MY 5329038-B	(LH)♦D3MY 5329039-B	1

♦ Includes attaching parts

COPYRIGHT © 1986 — FORD MOTOR COMPANY — DEARBORN, MICHIGAN

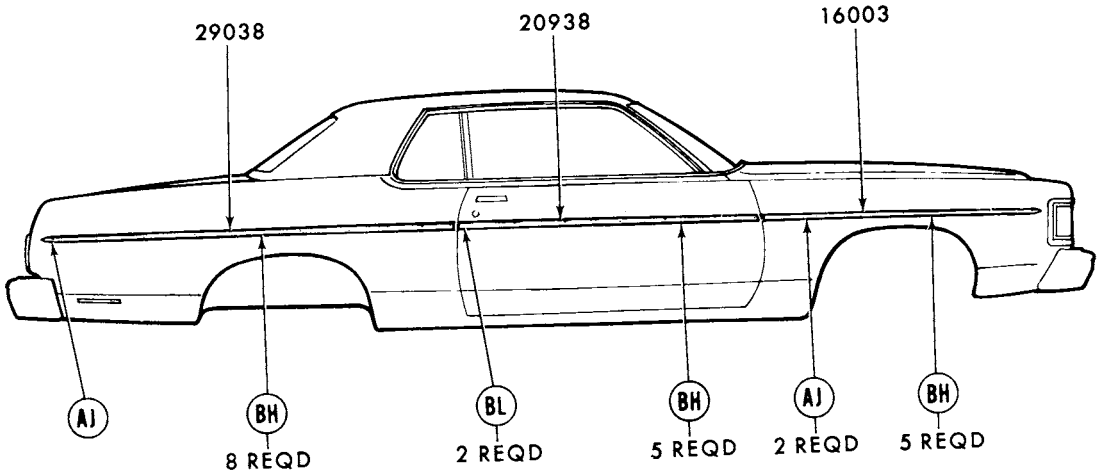

REFER TO EXTERIOR MOULDING SECTION "R" FOR COMPLETE RETAINER INFORMATION

P-11820

1974 MERCURY - BODY TYPE 65 - SIDE PROTECTION MOULDINGS

GROUP NUMBER	PART NAME	DESCRIPTION	PART NUMBER		QTY.
16003-4	Moulding (front fender side)	Black vinyl insert	(RH)♦D3MY 16003-B	(LH)♦D3MY 16004-B	1
		Bright finish	(RH)★D3MY 16003-D	(LH)★D3MY 16004-D	1
		White vinyl insert	(RH)♦D4MY 16003-AW	★(LH)♦D4MY 16004-AW Not replaced (11/79)	1
20938-9	Moulding (front door outside)	Black vinyl insert	(RH)♦D3AZ 6520938-A	(LH)♦D3MY 6520939-A	1
		Bright finish	(RH)♦D3MY 6520938-B	(LH)♦D3MY 6520939-B	1
29038-9	Moulding (quarter outside)	Black vinyl insert	(RH)♦D3MY 6529038-A	(LH)♦D3MY 6529039-A	1
		Bright finish	(RH)♦D3MY 6529038-C	(LH)♦ D3MY 6529039-C	1

♦ Includes attaching parts

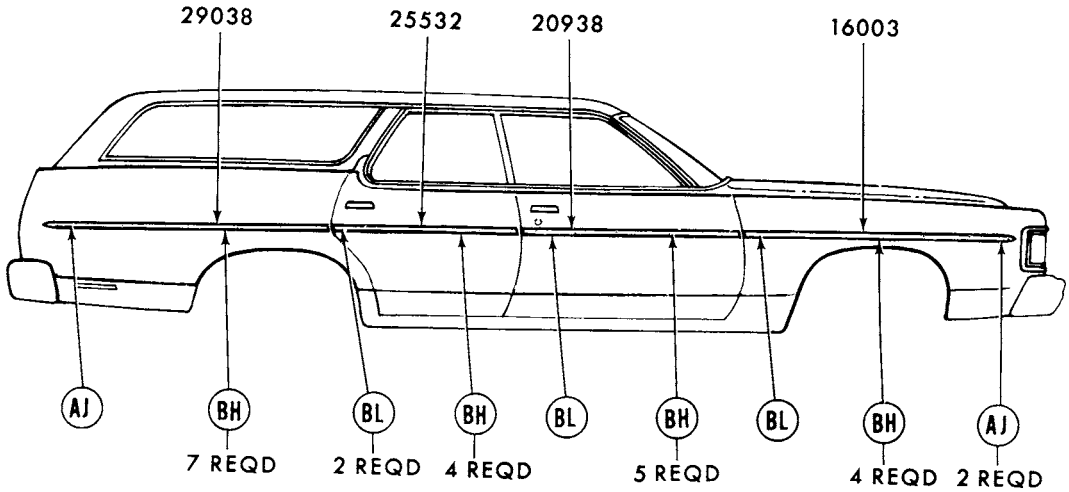

REFER TO EXTERIOR MOULDING SECTION "R" FOR COMPLETE RETAINER INFORMATION P-11822

1974 MERCURY - BODY TYPE 71 - SIDE PROTECTION MOULDINGS

GROUP NUMBER	PART NAME	DESCRIPTION	PART NUMBER		QTY.
16003-4	Moulding (front fender side)	Bright finish	(RH)★D3MY 16003-D	(LH)★D3MY 16004-D	1
		Bright-w/brown vinyl insert	(RH)♠D3MY 16003-C	(LH)♠D3MY 16004-C	1
		Black vinyl insert	(RH)♠D3MY 16003-B	(LH)♠D3MY 16004-B	1
20938-9	Moulding (front door outside)	Bright finish	(RH)♠D3MY 5320938-B	(LH)♠D3MY 5320939-B	1
		Bright-w/brown vinyl insert	(RH)♠D3MY 7120938-A	(LH)♠D3MY 7120939-A	1
		Black vinyl insert	(RH)♠D3MY 5320938-A	(LH)♠D3MY 5320939-A	1
25532-3	Moulding (rear door outside)	Bright finish	(RH)★D3MY 5325532-B Not replaced (6/82)	(LH)★D3MY 5325533-B Not replaced (6/82)	1
		Bright-w/brown vinyl insert	(RH)♠D3MY 7125532-A	(LH)♠D3MY 7125533-A	1
		Black vinyl insert	(RH)♠D3AZ 5325532-A	(LH)♠D3AZ 5325533-A	1
29038-9	Moulding (quarter outside)	Bright finish	(RH)★D3MY 7129038-D Not replaced (6/82)	(LH)★D3MY 7129039-D Not replaced (6/82)	1
		Bright-w/brown vinyl insert	(RH)♠D3MY 7129038-B	(LH)♠D3MY 7129039-B	1
		Black vinyl insert	(RH)♠D3MY 7129038-A	(LH)♠D3MY 7129039-A	1

♠ Includes attaching parts

COPYRIGHT © 1986 — FORD MOTOR COMPANY — DEARBORN, MICHIGAN

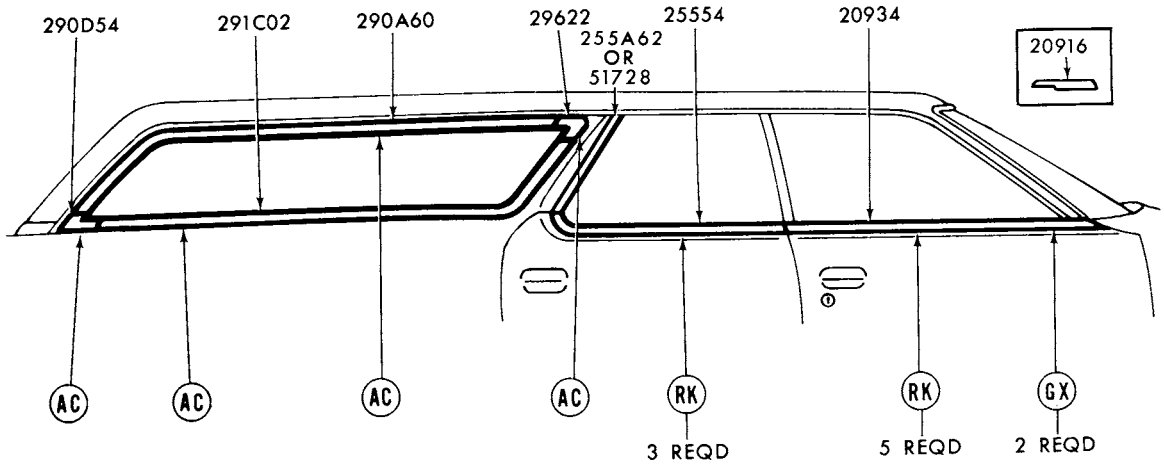

P-12501

1974 MERCURY - BODY TYPE 71 - DOOR and QUARTER WINDOW FRAME

GROUP NUMBER	PART NAME	DESCRIPTION	PART NUMBER		QTY.
20934-5	Moulding (front door outside belt)	Incl. weatherstrip	(RH)♦ D5AZ 5320934-B	(LH)♦ D5AZ 5320935-B	1
25554-5	Moulding (rear door outside belt)	Incl. weatherstrip	(RH)♦ D5AZ 5325554-A	(LH)♦ D5AZ 5325555-A	1
290D54-5	Moulding (quarter window outside lower rear corner)		(RH)♦ D5AZ 71290D54-A	(LH)♦ D5AZ 71290D55-A	1
290A60-1	Moulding (quarter window outside upper)		(RH)♦ D5AZ 71290A60-A	(LH)♦ D5AZ 71290A61-A	1
291C02-3	Moulding (quarter window outside lower rear)		(RH)♦ D5AZ 71291C02-A	(LH)♦ D5AZ 71291C03-A	1
29622-3	Moulding (quarter window outside front)		(RH) D5AZ 7129622-A	(LH) D5AZ 7129623-A	1
51728-9	Moulding (rear door window outside)		(RH)♦ D4AZ 7151728-A	(LH)♦ D4AZ 7151729-A	1

♦ Includes attaching parts

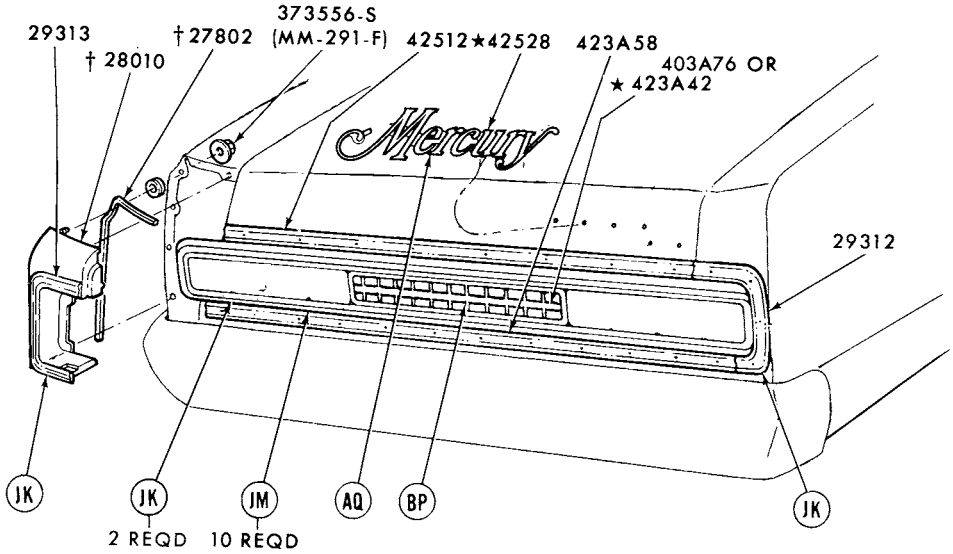

REFER TO EXTERIOR MOULDING SECTION "R" FOR COMPLETE RETAINER INFORMATION
†REFER TO GROUP IN TEXT SECTION

P-10113

1974 MERCURY - BODY TYPES 53B,F,57B,F and 65B,F - BACK END

GROUP NUMBER	PART NAME	DESCRIPTION	PART NUMBER	QTY.
29312-3	Moulding (quarter rear extension)	Body types 53F, 65F	(RH)♦D3MY 6529312-A (LH)♦D3MY 6529313-A	1
423A58	Moulding (lower back panel)	Body types 53F,65F	♦D3MY 65423A58-A	1
42512	Moulding (luggage compartment door)	Body types 53F,65F	♦D5MY 6542512-A	1

♦ Includes attaching parts

COPYRIGHT © 1986 — FORD MOTOR COMPANY — DEARBORN, MICHIGAN

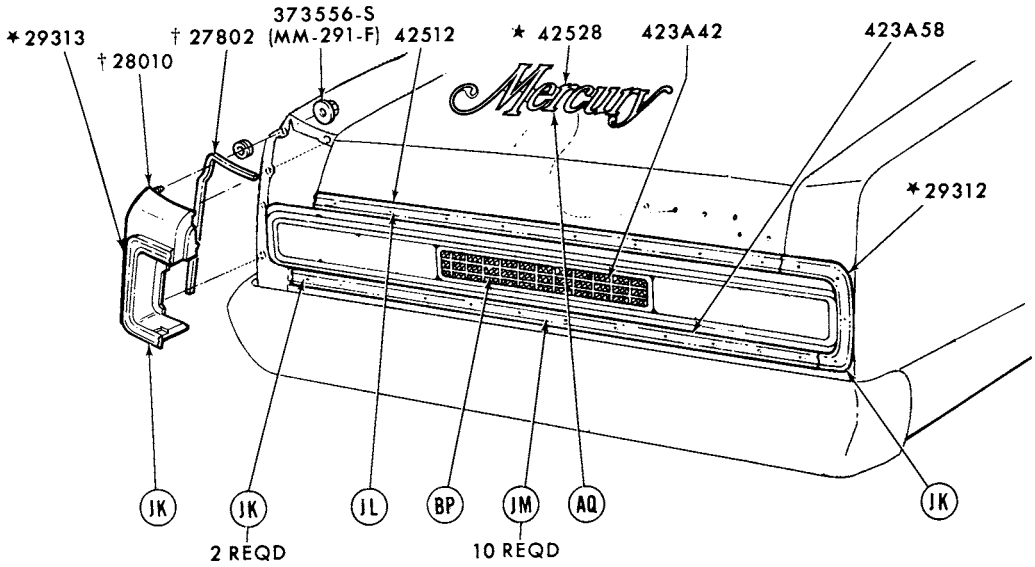

REFER TO EXTERIOR MOULDING SECTION "R" FOR COMPLETE RETAINER INFORMATION
†REFER TO GROUP IN TEXT SECTION

P-10118

1974 MERCURY - BODY TYPES 53H,K,X,57H,K,X, and 65H,K,X - BACK END

GROUP NUMBER	PART NAME	DESCRIPTION	PART NUMBER	QTY.
29312-3	Moulding (lower back panel)		(RH)★D4MY 6529312-B Not replaced (6/82) (LH)★D4MY 6529313-B Not replaced (6/82)	1
423A42	Panel (lower back finish)	Black	★♦D4MY 65423A42-T Not replaced (7/81)	1
		Blue	♦D4MY 65423A42-M	1
		Brown	♦D4MY 65423A42-L	1
423A58	Moulding (lower back panel)		♦D3MY 65423A58-A	1
42512	Moulding (luggage compartment door)		♦D5MY 6542512-A	1

♦ Includes attaching parts

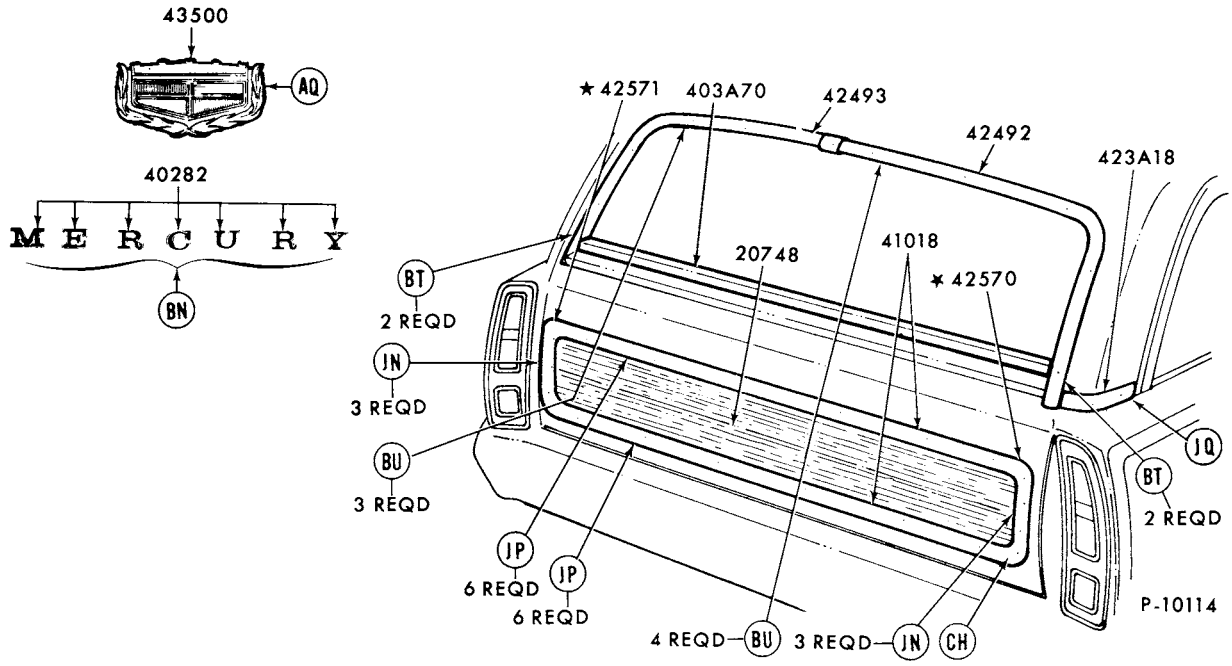

REFER TO EXTERIOR MOULDING SECTION "R" FOR COMPLETE RETAINER INFORMATION

1974 MERCURY - BODY TYPE 71 - BACK END

GROUP NUMBER	PART NAME	DESCRIPTION	PART NUMBER		QTY.
20748	Transfer (wood grain)	Body type 71K-23 1/4" x 69"-teak wood-w/planking lines	D3MY 7120748-A		1
40282	Letter (tailgate)	"M"	♦D3MY 7140282-A		1
		"E"	♦D3MY 7140282-B		1
		"R"	♦D3MY 7140282-C		2
		"C"	♦D3MY 7140282-D		1
		"U"	♦D3MY 7140282-E		1
		"Y"	♦D3MY 7140282-F		1
403A70	Moulding (tailgate outside belt)	Wash and wipe	★D4AZ 71403A70-D	Not replaced (7/81)	1
		W/o wash and wipe	♦D4AZ 71403A70-E		1
41018	Moulding (tailgate outside)	Body type 71K	♦C9MY 7141018-A		2
423A18-9	Moulding (back belt outside side)		(RH)♦D3AZ 71423A18-A	(LH)★D3AZ 71423A19-A Not replaced (7/81)	1
42492-3	Moulding (back window outside side)		(RH)♦D3AZ 7142492-A	(LH)♦D3AZ 7142493-A	1
42570-1	Moulding (tailgate outside side)	Body type 71K	(RH)★C9MY 7142570-A Not replaced (6/82)	(LH)★C9MY 7142571-A Not replaced (6/82)	1
43500	Ornament (tailgate)		♦C9MY 7143500-A		1

COPYRIGHT © 1986 — FORD MOTOR COMPANY — DEARBORN, MICHIGAN

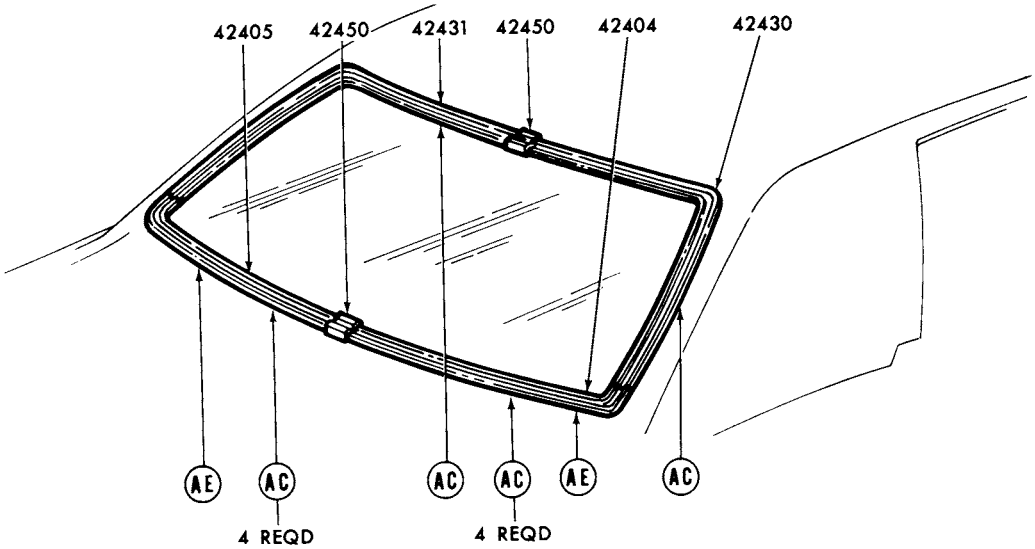

REFER TO EXTERIOR MOULDING SECTION "R" FOR COMPLETE RETAINER INFORMATION P-12460

1974 MERCURY - BODY TYPES 53 and 57 - BACK WINDOW

GROUP NUMBER	PART NAME	DESCRIPTION	PART NUMBER	QTY
42404-5	Moulding (back window outside lower)		(RH)♦D3AZ 5342404-A (LH)♦D3AZ 5342405-A	1
42430-1	Moulding (back window outside upper)		(RH)♦ D7AZ 5342430-A (LH)♦ D7AZ 5342431-A	1
42450	Cover (back window outside moulding joint)	Lower	D5AZ 5342450-A	1
		Upper	D5AZ 5342450-B	1

♦ Includes attaching parts

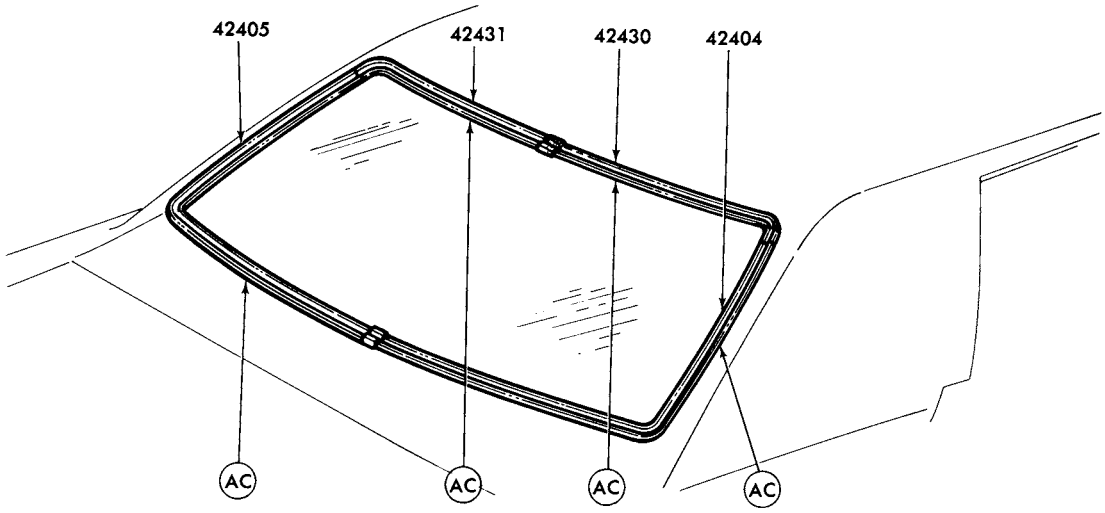

REFER TO EXTERIOR MOULDING SECTION "R" FOR COMPLETE RETAINER INFORMATION

P-12487

1974 MERCURY - BODY TYPE 65 - BACK WINDOW

GROUP NUMBER	PART NAME	DESCRIPTION	PART NUMBER	QTY.
42404-5	Moulding (back window outside lower)		(RH)♠ D5MY 6042404-A (LH)♠ D5MY 6042405-A	1
42430-1	Moulding (back window outside upper)		(RH)♠ D7AZ 6042430-A (LH)♠ D7AZ 6042431-A	1

♠ Includes attaching parts

COPYRIGHT © 1986 — FORD MOTOR COMPANY — DEARBORN, MICHIGAN

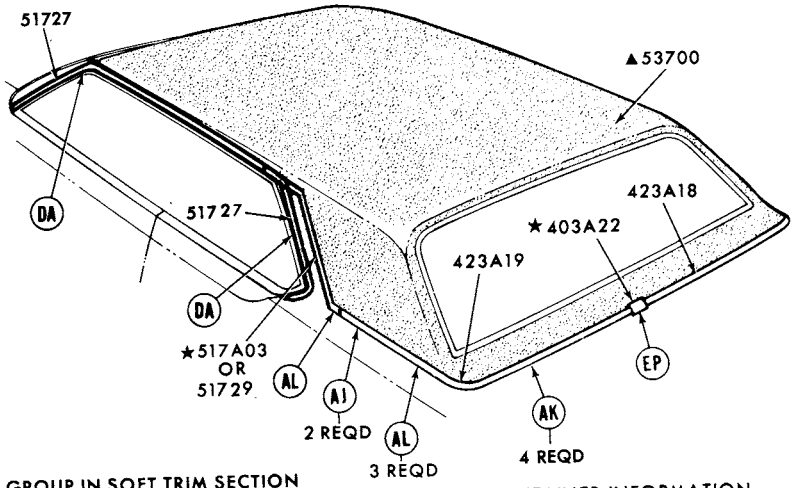

▲ REFER TO GROUP IN SOFT TRIM SECTION
REFER TO EXTERIOR MOULDING SECTION "R" FOR COMPLETE RETAINER INFORMATION

P-10115

1974 MERCURY - BODY TYPES 53B,F - ROOF and BACK BELT

GROUP NUMBER	PART NAME	DESCRIPTION	PART NUMBER		QTY.
423A18-9	Moulding (back belt outside side)	Bright finish	(RH)♦D4MY 53423A18-A	(LH)♦D4MY 53423A19-A	1
51726-7	Moulding (roof drip side finish)	Front-bright finish	(RH) D4AZ 5351726-A	(LH) D4AZ 5351727-A	1
		Rear-bright finish	(RH) D4AZ 5351726-C	(LH) D4AZ 5351727-C	1
		Front-paint to match	(RH) D4AZ 5351726-B	(LH) D4AZ 5351727-B	1
		Rear-paint to match	(RH) D4AZ 5351726-D	(LH) D4AZ 5351727-D	1

♦ Includes attaching parts

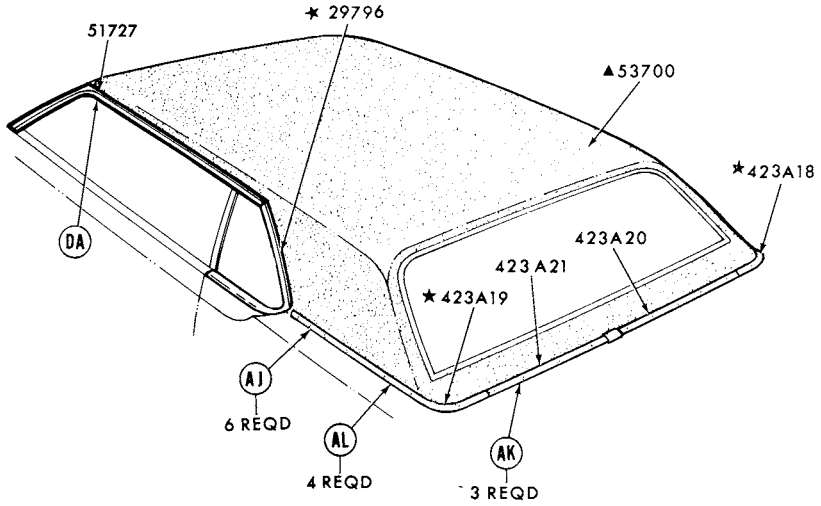

▲REFER TO GROUP IN SOFT TRIM SECTION
REFER TO EXTERIOR MOULDING SECTION "R" FOR COMPLETE RETAINER INFORMATION P-10116

1974 MERCURY - BODY TYPES 65B,F - ROOF and BACK BELT

GROUP NUMBER	PART NAME	DESCRIPTION	PART NUMBER	QTY.
423A20-1	Moulding (back belt outside)	Bright finish	(RH)♦D3MY 65423A20-C (LH)♦D3MY 65423A21-C	1
51726-7	Moulding (roof drip side finish)		(RH)♦D3MY 6551726-A (LH)♦D3MY 6551727-A	1

♦ Includes attaching parts

COPYRIGHT © 1986 — FORD MOTOR COMPANY — DEARBORN, MICHIGAN

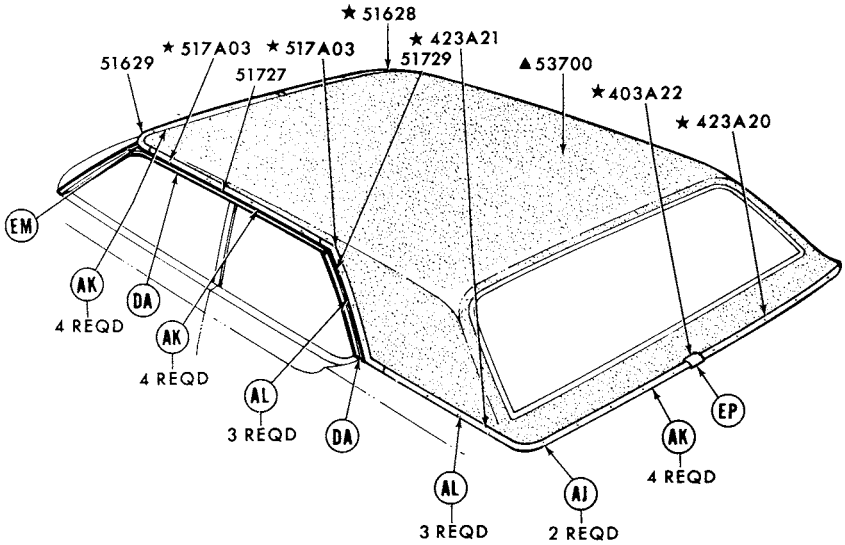

▲ REFER TO GROUP IN SOFT TRIM SECTION
REFER TO EXTERIOR MOULDING SECTION "R" FOR COMPLETE RETAINER INFORMATION P-10119

1974 MERCURY - BODY TYPES 53, 57 - ROOF and BACK BELT - W/HALO ROOF

GROUP NUMBER	PART NAME	DESCRIPTION	PART NUMBER	QTY.
51726-9	Moulding (roof drip side finish)	Front-bright finish	(RH) D4AZ 5351726-A (LH) D4AZ 5351727-A	1
		Rear-bright finish	(RH) D4AZ 5351726-C (LH) D4AZ 5351727-C	1
		Front-paint to match	(RH) D4AZ 5351726-B (LH) D4AZ 5351727-B	1
		Rear-paint to match	(RH) D4AZ 5351726-D (LH) D4AZ 5351727-D	1

♦ Includes attaching parts

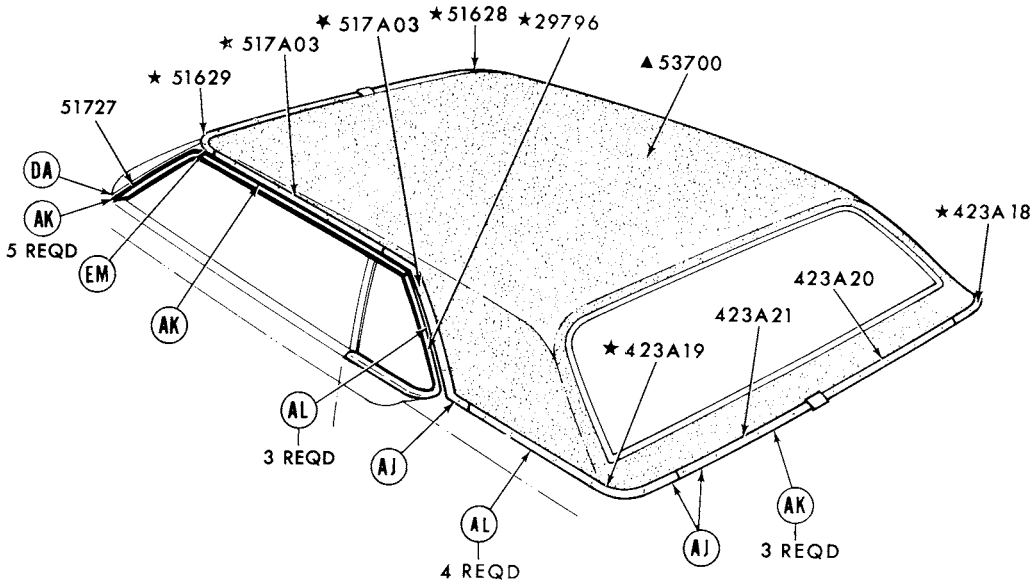

▲REFER TO GROUP IN SOFT TRIM SECTION
REFER TO EXTERIOR MOULDING SECTION "R" FOR COMPLETE RETAINER INFORMATION

P-10120

1974 MERCURY - BODY TYPES 65H,K,X - ROOF and BACK BELT - W/HALO VINYL ROOF

GROUP NUMBER	PART NAME	DESCRIPTION	PART NUMBER	QTY.
423A20-1	Moulding (back belt outside)	Bright finish	(RH)♦D3MY 65423A20-C (LH)♦D3MY 65423A21-C	1
51726-7	Moulding (roof drip side finish)		(RH)♦D5MY 6551726-A (LH) D3MY 6551727-A	1

♦ Includes attaching parts

COPYRIGHT © 1986 — FORD MOTOR COMPANY — DEARBORN, MICHIGAN

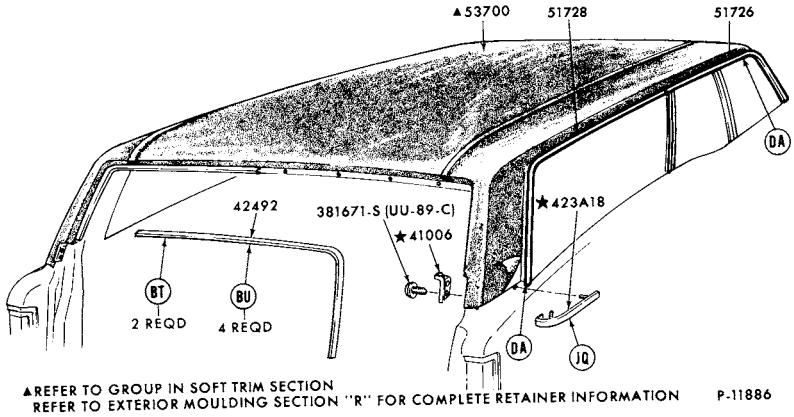

1974 MERCURY - BODY TYPE 71 - ROOF and BACK BELT

GROUP NUMBER	PART NAME	DESCRIPTION	PART NUMBER		QTY.
42492-3	Moulding (back window outside side)		(RH)♦D3AZ 7142492-A	(LH)♦D3AZ 7142493-A	1
51726-9	Moulding (roof drip side finish)	Front	(RH)♦D5AZ 7151726-A	(LH)♦D5AZ 7151727-A	1
		Rear - upper	(RH)♦D3AZ 7151728-B	(LH)♦D3AZ 7151729-B	1

♦ Includes attaching parts

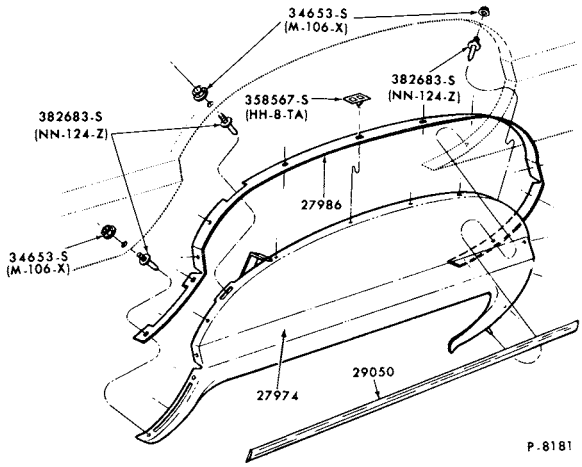

1974 MERCURY - BODY TYPES 53, 57 AND 65 - WHEEL OPENING COVER PARTS

GROUP NUMBER	PART NAME	DESCRIPTION	PART NUMBER		QTY.
27974-5	Panel (quarter wheel opening cover)		(RH)♦D3MY 6527974-A	(LH)♦D3MY 6527975-A	1
27986-7	Seal (quarter wheel opening cover)		(RH)♦D3MY 6527986-A	(LH)♦D3MY 6527987-A	1
29050-1	Moulding (quarter wheel opening cover)	Body types 53B, F, 65B, F	(RH)♦D3MY 6529050-B	(LH)♦D3MY 6529051-B	1
		Body types 53H,K,X, 57H,K,X, 65H,K,X	(RH)♦D3MY 6529050-A	(LH)♦D3MY 6529051-A	1

♦ Includes attaching parts

COPYRIGHT © 1986 — FORD MOTOR COMPANY — DEARBORN, MICHIGAN

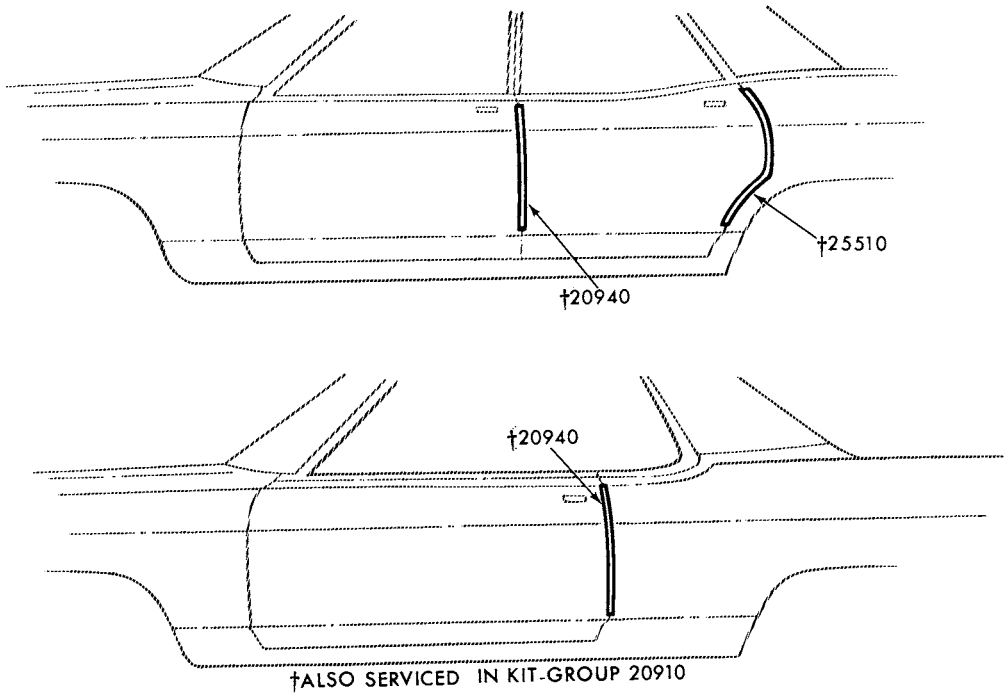

1974 MERCURY - DOOR EDGE GUARDS

GROUP NUMBER	PART NAME	DESCRIPTION	PART NUMBER		QTY.
20940-1	Moulding (front door edge guard)	Bright-body types 53,57 and 71	(RH) D3MY 5320940-A	(LH) D3MY 5320941-A	1
		Body type 65	(RH) D3MY 6520940-A	(LH) D3MY 6520941-A	1
		Wood grain-Colony Park	(RH)★D3MY 7120940-A Not replaced (7/81)	(LH)★D3MY 7120941-A Not replaced (7/81)	1
25510-1	Moulding (rear door edge guard)	Bright-body types 53,57 and 71	(RH) D3MY 5325510-A	(LH) D3MY 5325511-A	1
		Wood grain-Colony Park	(RH) D3MY 7125510-A	(LH)★D3MY 7125511-A Not replaced (7/81)	1

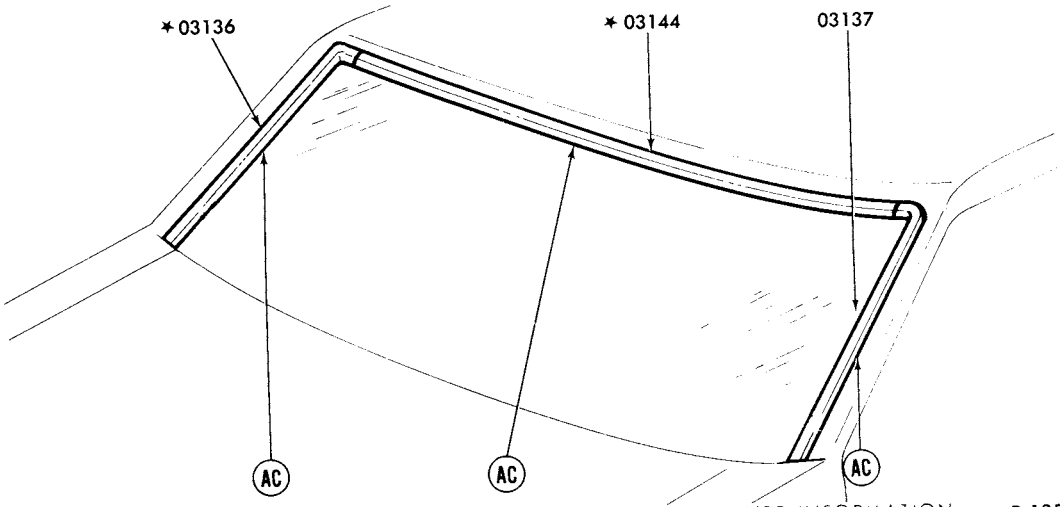

REFER TO EXTERIOR MOULDING SECTION 'R' FOR COMPLETE RETAINER INFORMATION

P-12521

1974 MONTEGO - WINDSHIELD

GROUP NUMBER	PART NAME	DESCRIPTION	PART NUMBER	QTY.
03136-7	Moulding (windshield outside side)		(RH)* D2OZ 6503136-A (LH)♦D7OZ 6503137-A	1
03144	Moulding (windshield outside top)		* D2OZ 6503144-A	1

♦ Includes attaching parts

COPYRIGHT © 1986 — FORD MOTOR COMPANY — DEARBORN, MICHIGAN

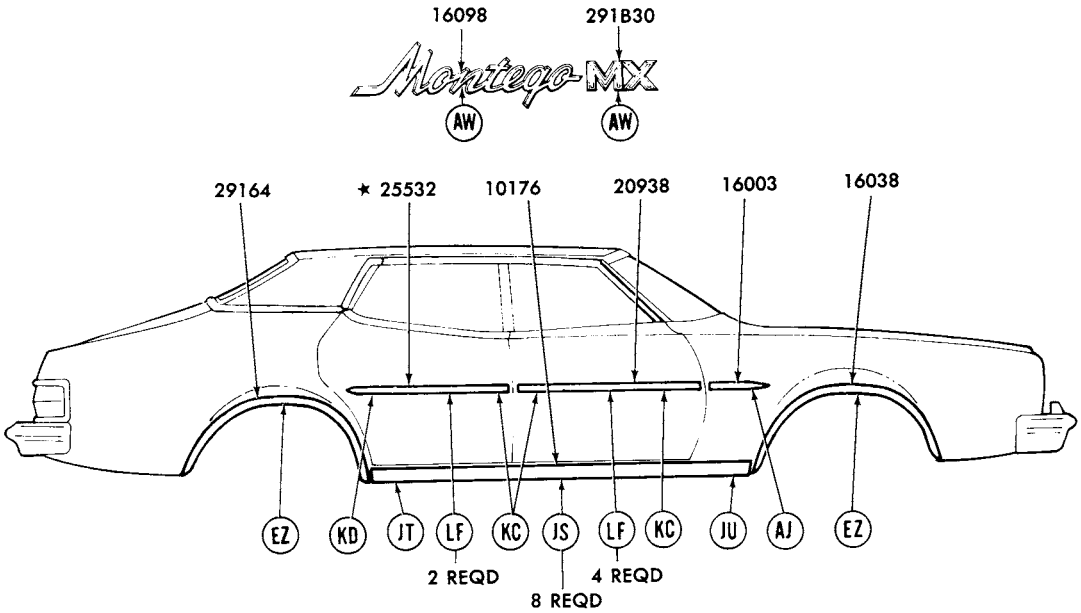

REFER TO EXTERIOR MOULDING SECTION "R" FOR COMPLETE RETAINER INFORMATION

P-12804

1974 MONTEGO - BODY TYPES 53B,D - SIDE

GROUP NUMBER	PART NAME	DESCRIPTION	PART NUMBER		QTY.
10176-7	Moulding (body rocker panel)	Body type 53D	(RH)♦D2GY 5310176-A	(LH)♦D2GY 5310177-A	1
16003-4	Moulding (front fender side)	Black vinyl insert-with retainers	(RH)★ D2GY 16003-A	(LH)♦ D2GY 16004-A	1
		Black vinyl insert-adhesive backed-57" long-cut to fit	D4GZ 16003-A	R.H. and L.H.	AR
16038-9	Moulding (front fender wheel opening)		(RH)♦D2GY 16038-A	(LH)♦D2GY 16039-A	1
16098	Plate (front fender name)	"Montego"	♦D2GY 16098-C	R.H. and L.H.	2
20938-9	Moulding (front door outside)	Black vinyl insert-with retainers	(RH)★ D2GY 5320938-A	(LH)★D2GY 5320939-A Not replaced (4/83)	1
		Black vinyl insert-adhesive backed-57" long-cut to fit	D4GZ 16003-A	R.H. and L.H.	AR
25532-3	Moulding (rear door outside)	Black vinyl insert-with retainers	(RH)★ D2GY 5325532-A	(LH)★D2GY 5325533-A	1
		Black vinyl insert-adhesive backed-57" long-cut to fit	D4GZ 16003-A	R.H. and L.H.	AR
291B30	Plate (name)	"MX"-body type 53D	♦C8GY 54291B30-A	R.H. and L.H.	2
29164-5	Moulding (quarter wheel opening)		(RH)★D2GY 6529164-A	(LH)♦D2GY 6529165-A	1

♦ Includes attaching parts

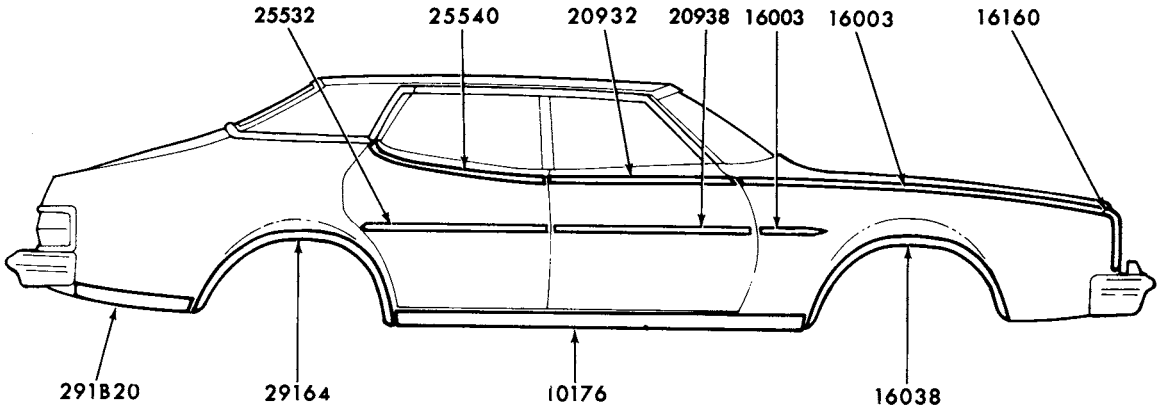

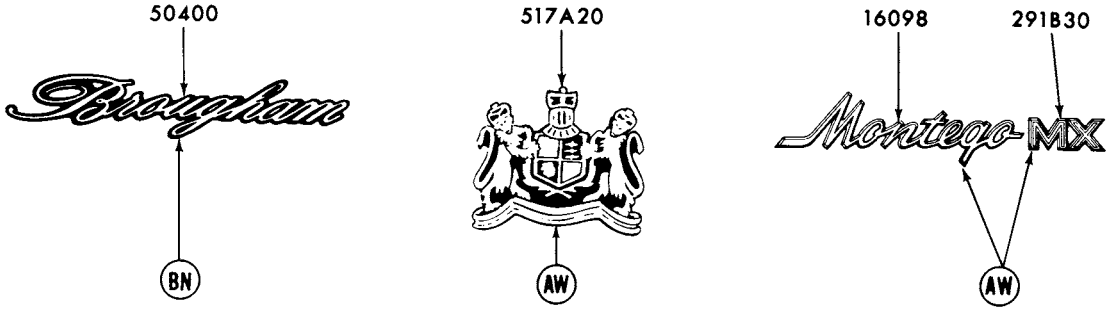

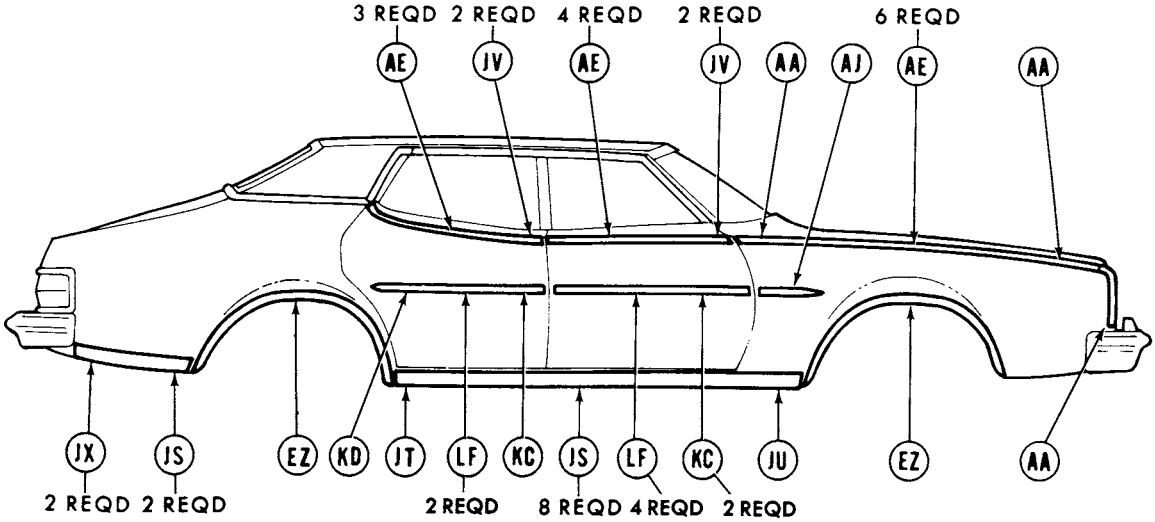

REFER TO EXTERIOR MOULDING SECTION "R" FOR COMPLETE RETAINER INFORMATION P-12805

1974 MONTEGO - BODY TYPE 53K - SIDE

COPYRIGHT © 1986 — FORD MOTOR COMPANY — DEARBORN, MICHIGAN

1974 MONTEGO - BODY TYPE 53K - SIDE - cont'd.

GROUP NUMBER	PART NAME	DESCRIPTION	PART NUMBER		QTY.
10176-7	Moulding (body rocker panel)		(RH)♦D2GY 5310176-A	(LH)♦D2GY 5310177-A	1
16003-4	Moulding (front fender upper)		(RH)♦D2GY 16003-B	(LH)♦D2GY 16004-B	1
16003-4	Moulding (front fender side)	Black vinyl insert-with retainers	(RH)♦D2GY 16003-A	(LH)♦D2GY 16004-A	1
		Black vinyl insert-adhesive backed-57" long-cut to fit	D4GZ 16003-A	R.H. and L.H.	AR
		Bright finish	♦D4GY 16003-A	R.H. and L.H.	
16038-9	Moulding (front fender wheel opening)		(RH)♦D2GY 16038-A	(LH)♦D2GY 16039-A	1
16098	Plate (front fender name)	"Montego"	♦D2GY 16098-C	R.H. and L.H.	2
16160-1	Moulding (front fender front)		(RH)♦D3GY 16160-A	(LH)♦D3GY 16161-A	1
20932-3	Moulding (front door outside upper)		(RH)♦D4GY 5320932-A	(LH)♦D4GY 5320933-A	1
20938-9	Moulding (front door outside)	Black vinyl insert-with retainers	(RH)♦D2GY 5320938-A	(LH)♦D2GY 5320939-A	1
		Black vinyl insert-adhesive backed-57" long-cut to fit	D4GZ 16003-A	R.H. and L.H.	AR
		Bright finish	♦D4GY 5320938-A	R.H. and L.H.	2
25532-3	Moulding (rear door outside)	Black vinyl insert-with retainers	(RH)♦D2GY 5325532-A	(LH)♦D2GY 5325533-A	1
		Black vinyl insert-adhesive backed-57" long-cut to fit	D4GZ 16003-A	R.H. and L.H.	AR
		Bright finish	♦D4GY 5325532-A	R.H. and L.H.	2
25540-1	Moulding (rear door outside upper)		(RH)♦D4GY 5325540-A	(LH)♦D4GY 5325541-A	1
291B20-1	Moulding (quarter panel outside lower rear)	Bright finish-incl. paint stripe	(RH)♦D4GY 65291B20-A	(LH)♦D4GY 65291B21-A	1
291B30	Plate (name)	"MX"	♦C8GY 54291B30-A	R.H. and L.H.	2
29164-5	Moulding (quarter wheel opening)		(RH)★D2GY 6529164-A Not replaced (4/82)	(LH)♦D2GY 6529165-A	1
50400	Plate (roof name)	"Brougham"	♦C7MY 5450400-A	R.H. and L.H.	2
517A20	Ornament (roof side outside)		♦C9MY 65517A20-A	R.H. and L.H.	2

♦ Includes attaching parts

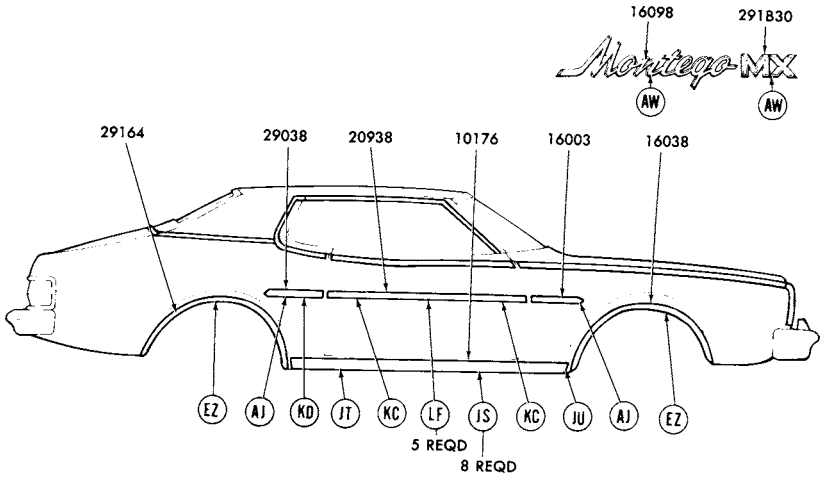

REFER TO EXTERIOR MOULDING SECTION "R" FOR COMPLETE RETAINER INFORMATION

P-12806

1974 MONTEGO - BODY TYPES 65B,D - SIDE

GROUP NUMBER	PART NAME	DESCRIPTION	PART NUMBER		QTY.
10176-7	Moulding (body rocker panel)	Body type 65D	(RH)♦D2GY 6510176-A	(LH)♦D2GY 6510177-A	1
16003-4	Moulding (front fender upper)		(RH)♦D2GY 16003-B	(LH)♦D2GY 16004-B	1
16003-4	Moulding (front fender side)	Black vinyl insert-with retainers	(RH)♦D2GY 16003-A	(LH)♦D2GY 16004-A	1
		Black vinyl insert-adhesive backed-57" long-cut to fit	D4GZ 16003-A	R.H. and L.H.	AR
16038-9	Moulding (front fender wheel opening)		(RH)♦D2GY 16038-A	(LH)♦D2GY 16039-A	1
16098	Plate (front fender name)	"Montego"	♦D2GY 16098-C	R.H. and L.H.	2
16160-1	Moulding (front fender front)		(RH)♦D3GY 16160-A	(LH)♦D3GY 16161-A	1
20932-3	Moulding (front door outside upper)		(RH)♦D4GY 6520932-A	(LH)♦D4GY 6520933-A	1
20938-9	Moulding (front door outside)	Black vinyl insert-with retainers	(RH)♦D2GY 6520938-A	(LH)♦D2GY 6520939-A	1
		Black vinyl insert-adhesive backed-57" long-cut to fit	D4GZ 16003-A	R.H. and L.H.	AR
29038-9	Moulding (quarter outside)	Black vinyl insert-with retainers	(RH)♦D2GY 16004-A	(LH)♦D2GY 16003-A	1
		Black vinyl insert-adhesive backed-57" long-cut to fit	D4GZ 16003-A	R.H. and L.H.	AR
291B30	Plate (name)	"MX"-body type 65D	♦C8GY 54291B30-A	R.H. and L.H.	2
29164-5	Moulding (quarter wheel opening)		(RH)♦D2GY 6529164-A	(LH)♦D2GY 6529165-A	1

♦ Includes attaching parts

COPYRIGHT © 1986 — FORD MOTOR COMPANY — DEARBORN, MICHIGAN

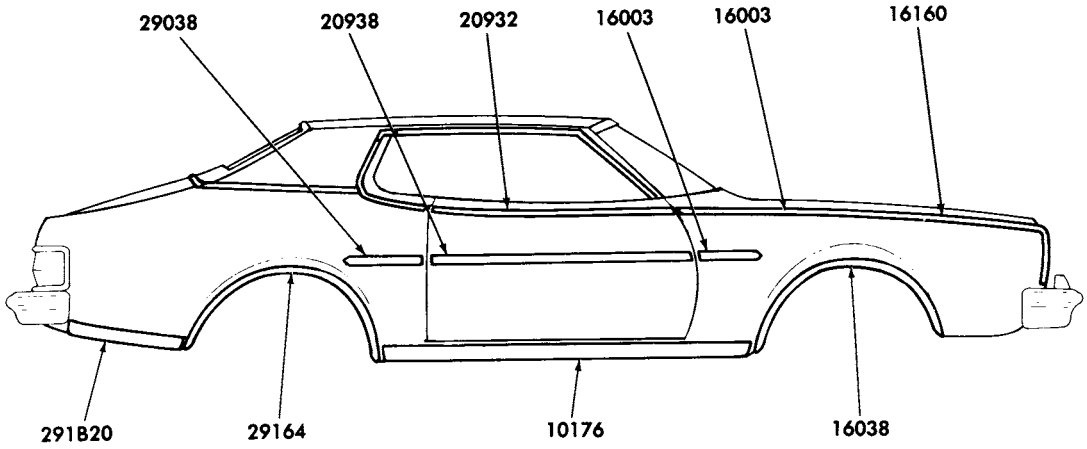

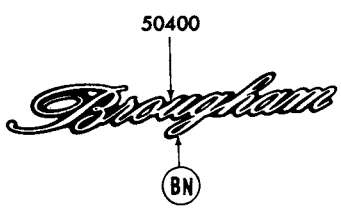

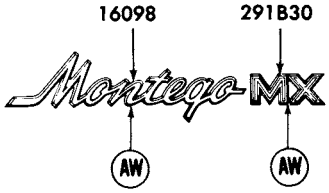

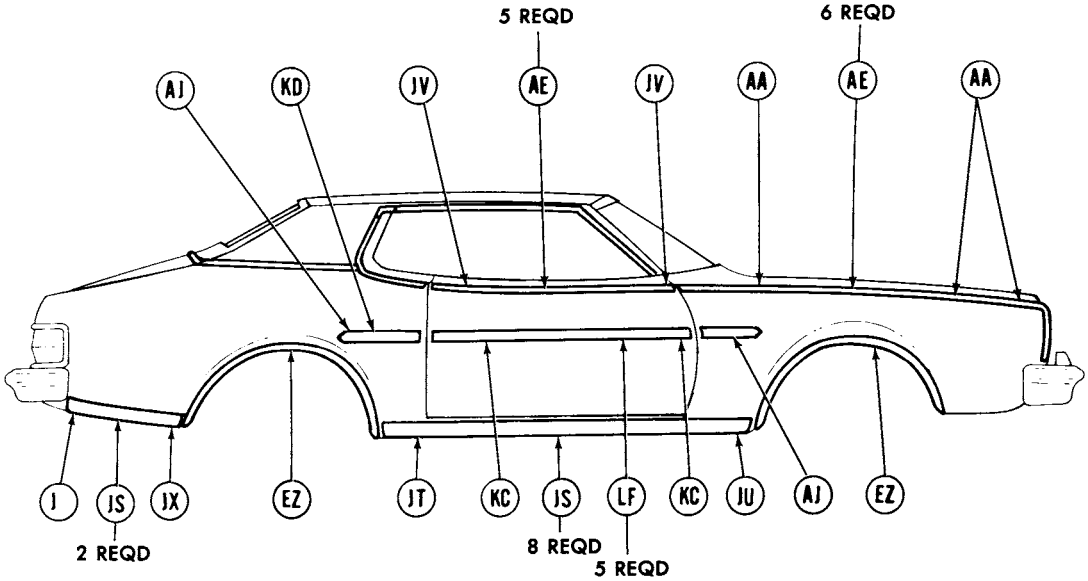

REFER TO EXTERIOR MOULDING SECTION "R" FOR COMPLETE RETAINER INFORMATION

P-12807

1974 MONTEGO - BODY TYPE 65K - SIDE

1974 MONTEGO - BODY TYPE 65K - SIDE - cont'd.

GROUP NUMBER	PART NAME	DESCRIPTION	PART NUMBER		QTY.
10176-7	Moulding (body rocker panel)		(RH)♦D2GY 6510176-A	(LH)D2GY 6510177-A	1
16003-4	Moulding (front fender upper)		(RH)♦D2GY 16003-B	(LH)♦D2GY 16004-B	1
16003-4	Moulding (front fender side)	Black vinyl insert-with retainers	(RH)★D2GY 16003-A	(LH)♦D2GY 16004-A	1
		Black-vinyl insert-adhesive backed-57" long-cut to fit	D4GZ 16003-A	R.H. and L.H.	AR
		Bright finish	♦D4GY 16003-A	R.H. and L.H.	2
16038-9	Moulding (front fender wheel opening)		(RH)♦D2GY 16038-A	(LH)♦D2GY 16039-A	1
16098	Plate (front fender name)	"Montego"	♦D2GY 16098-C	R.H. and L.H.	2
16160-1	Moulding (front fender front)		(RH)♦D3GY 16160-A	(LH)♦D3GY 16161-A	1
20932-3	Moulding (front door outside upper)		(RH)♦D4GY 6520932-A	(LH)♦D4GY 6520933-A	1
20938-9	Moulding (front door outside)	Black vinyl insert-with retainers	(RH)★D2GY 6520938-A	(LH)★D2GY 6520938-A	1
		Black vinyl insert-adhesive backed-57" long-cut to fit	D4GZ 16003-A	R.H. and L.H.	AR
		Bright finish	♦D4GY 6520938-A	R.H. and L.H.	2
29038-9	Moulding (quarter outside)	Black vinyl insert-with retainers	(RH)♦D2GY 16004-A	(LH)★D2GY 16003-A	1
		Black vinyl insert-adhesive backed-57" long-cut to fit	D4GZ 16003-A	R.H. and L.H.	AR
		Bright finish	♦D4GY 16003-A	R.H. and L.H.	2
291B20-1	Moulding (quarter panel outside lower rear)		(RH)♦D4GY 65291B20-A	(LH)♦D4GY 65291B21-A	1
291B30	Plate (name)	"MX"	♦C8GY 54291B30-A	R.H. and L.H.	2
29164-5	Moulding (quarter wheel opening)		(RH)★D2GY 6529164-A Not replaced (4/82)	(LH)♦D2GY 6529165-A	1
50400	Plate (roof name)	"Brougham"	♦C7MY 5450400-A	R.H. and L.H.	2
517A20	Ornament (roof side outside)		♦C9MY 65517A20-A	R.H. and L.H.	2

♦ Includes attaching parts

COPYRIGHT © 1986 — FORD MOTOR COMPANY — DEARBORN, MICHIGAN

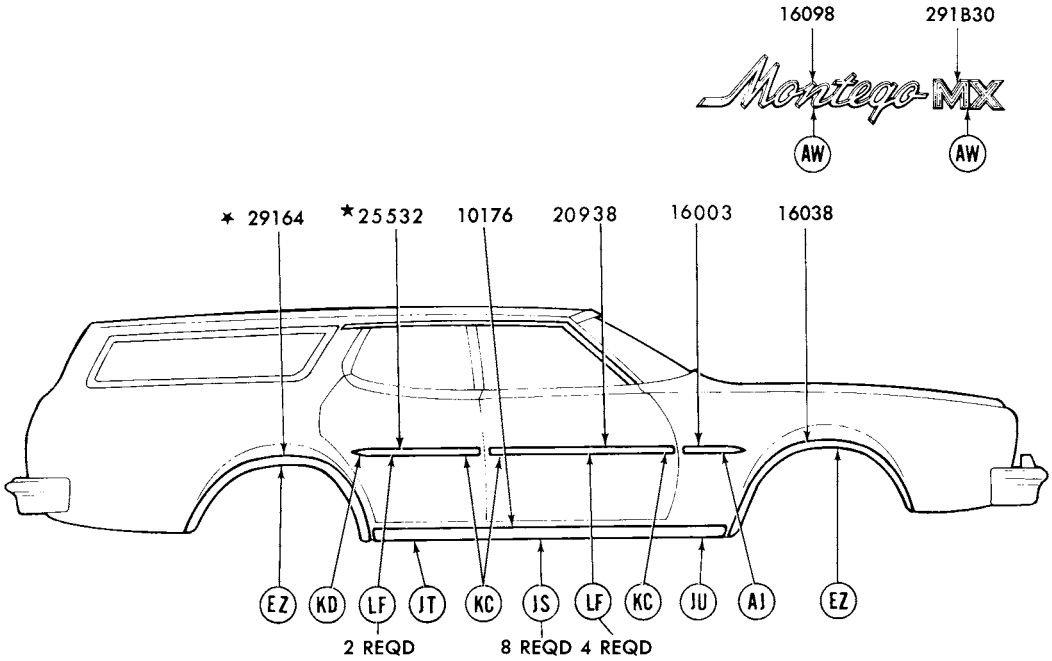

REFER TO EXTERIOR MOULDING SECTION "R" FOR COMPLETE RETAINER INFORMATION

P-12808

1974 MONTEGO - BODY TYPES 71B,D - SIDE

GROUP NUMBER	PART NAME	DESCRIPTION	PART NUMBER		QTY.
10176-7	Moulding (body rocker panel)	Body type 71D	(RH)♦D2GY 5310176-A	(LH)♦D2GY 5310177-A	1
16003-4	Moulding (front fender side)	Black vinyl insert-with retainers	(RH)★D2GY 16003-A	(LH)♦D2GY 16004-A	1
		Black vinyl-adhesive backed-57" long-cut to fit	D4GZ 16003-A	R.H. and L.H.	AR
16038-9	Moulding (front fender wheel opening)		(RH)♦D2GY 16038-A	(LH)♦D2GY 16039-A	1
16098	Plate (front fender name)	"Montego"	♦D2GY 16098-C	R.H. and L.H.	2
20938-9	Moulding (front door outside)	Black vinyl insert-with retainers	(RH)★D2GY 5320938-A	(LH)★D2GY 5320939-A Not replaced (3/26)	1
		Black vinyl-adhesive backed-57" long-cut to fit	D4GZ 16003-A	R.H. and L.H.	AR
25532-3	Moulding (rear door outside)	Black vinyl insert-with retainers	(RH)★D2GY 5325532-A Not replaced (3/26)	(LH)★D2GY 5325533-A Not replaced (3/26)	1
		Black vinyl-adhesive backed-57" long-cut to fit	D4GZ 16003-A	R.H. and L.H.	AR
291B30	Plate (name)	"MX"	♦C8GY 54291B30-A	R.H. and L.H.	2
29164-5	Moulding (quarter wheel opening)		(RH)★D2GY 7129164-A	(LH)★D2GY 7129165-A Not replaced (5/82)	1

♦ Includes attaching parts

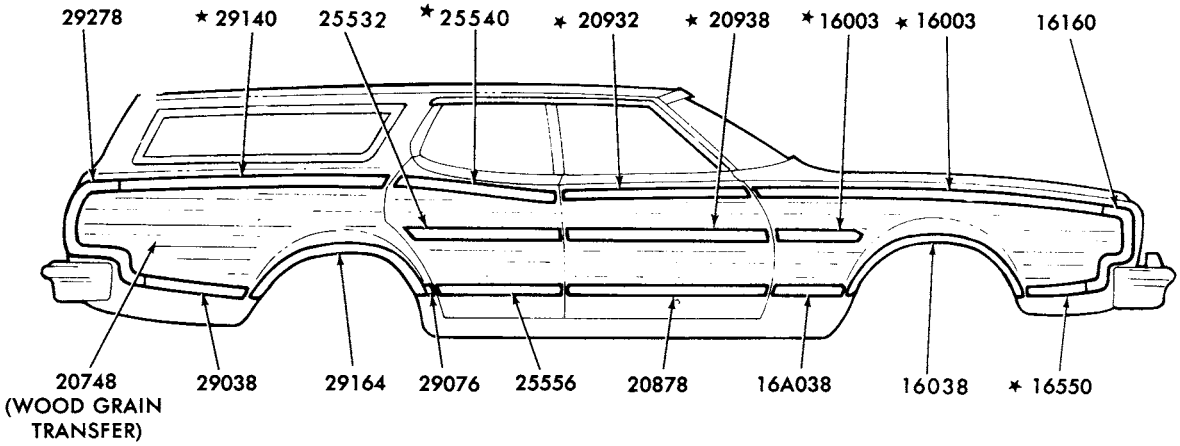

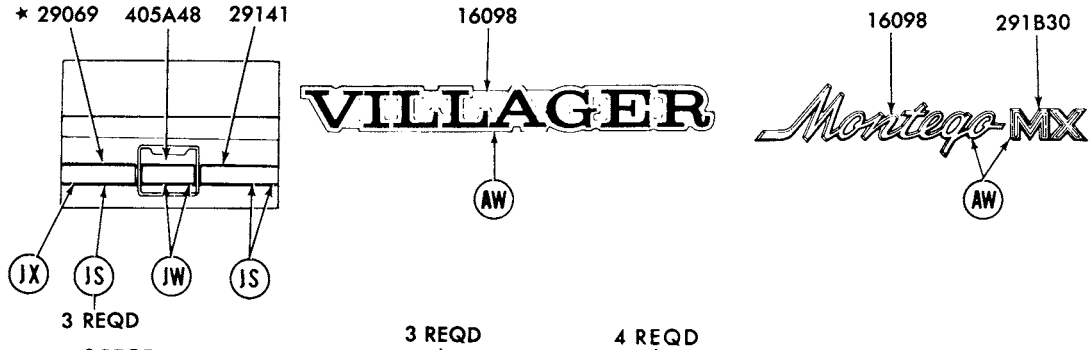

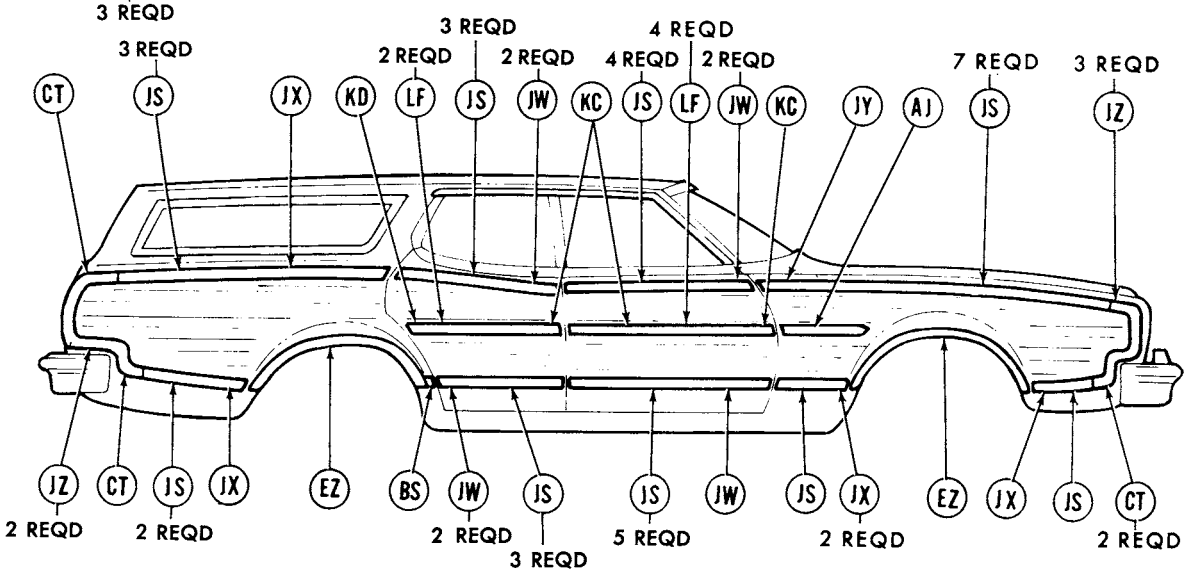

REFER TO EXTERIOR MOULDING SECTION "R" FOR COMPLETE RETAINER INFORMATION

P-12809

1974 MONTEGO - BODY TYPE 71K - SIDE

COPYRIGHT © 1986 — FORD MOTOR COMPANY — DEARBORN, MICHIGAN

1974 MONTEGO - BODY TYPE 71K - SIDE - cont'd.

GROUP NUMBER	PART NAME	DESCRIPTION	PART NUMBER		QTY.
16003-4	Moulding (front fender upper)		(RH)★D2GY 16003-C Not replaced (4/84)	(LH)★D2GY 16004-C Not replaced (4/84)	1
16003	Moulding (front fender side)	Wood grain vinyl insert	★ D3GY 16003-B	R.H. and L.H.	2
16038-9	Moulding (front fender wheel opening)		(RH)♦D4GY 16038-B	(LH)♦D4GY 16039-B Not replaced (4/84)	1
16A038-9	Moulding (front fender side lower rear)		(RH)♦D4GY 16A038-A	(LH)♦D4GY 16A039-A	1
16098	Plate (front fender name)	"Montego"	♦D2GY 16098-C	R.H. and L.H.	2
		"VILLAGER"	♦D2GY 16098-B	R.H. and L.H.	2
16160-1	Moulding (front fender front)		(RH)♦D2GY 16160-A	(LH)♦D2GY 16161-A	1
16550-1	Moulding (front fender side lower front)		(RH)★D2GY 16550-B Not replaced (4/84)	(LH)★D2GY 16551-B	1
20748	Transfer (wood grain)	Cherry (wood grain)- 20 3/4" x 70 5/8"- cut to fit	D4GY 7120748-A		1
20878-9	Moulding (front door outside lower)		(RH)♦D2GY 7120878-A	(LH)♦D2GY 7120879-A	1
20932-3	Moulding (front door outside		(RH)★D2GY 7120932-A	(LH)★D2GY 7120933-A Not replaced (3/82)	1
20938	Moulding (front door outside)	Wood grain vinyl insert	★ D3GY 7120938-B	R.H. and L.H.	2
25532	Moulding (rear door outside)	Wood grain vinyl insert	★D3GY 7125532-B Not replaced (3/82)	R.H. and L.H.	2
25540-1	Moulding (rear door outside upper)		(RH)★D2GY 7125540-A Not replaced (2/81)	(LH)★D2GY 7125541-A Not replaced (2/81)	1
25556-7	Moulding (rear door outside lower)		(RH)♦D2GY 7125556-A	(LH)♦D2GY 7125557-A	1
29038-9	Moulding (quarter outside)		(RH)♦D2GY 7129038-A	(LH)♦D2GY 7129039-A	1
29069	Moulding (quarter panel outside upper front)			(LH)★D2GY 7129069-A Not replaced (3/82)	1
29076-7	Moulding (quarter outside lower front)		(RH)♦D2GY 7129076-A	(LH)♦D2GY 7129077-A	1
291B30	Plate (name)	"MX"	♦C8GY 54291B30-A	R.H. and L.H.	2
29140-1	Moulding (quarter panel outside upper)		(RH)★D2GY 7129140-A	(LH)★D2GY 7129141-A Not replaced (3/82)	1
29164-5	Moulding (quarter wheel opening)		(RH)♦D2GY 7129164-B	(LH)♦D2GY 7129165-B	1
29278-9	Moulding (quarter outside rear end)		(RH)♦D2GY 7129278-A	(LH)♦D2GY 7129279-A	1
405A48	Moulding (fuel filler door)		♦D2GY 71405A48-A		1

♦ Includes attaching parts

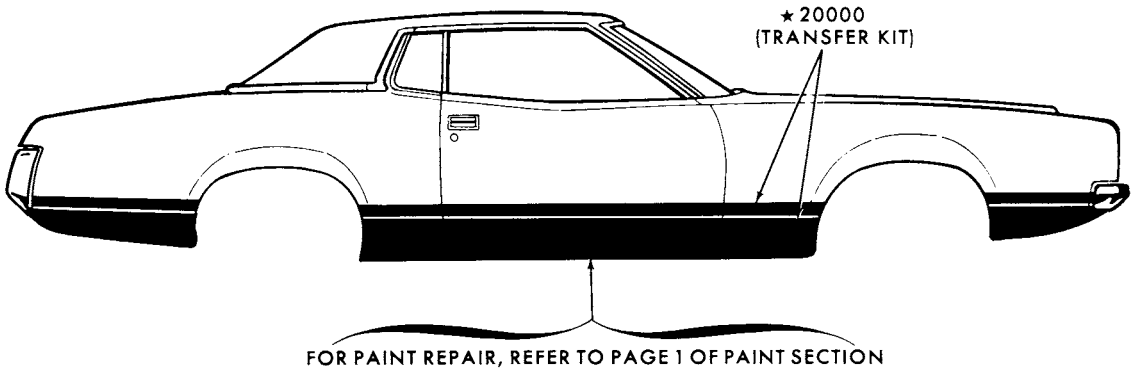

P-12009

1974 MONTEGO - BODY TYPES 65B,D - STRIPES

GROUP NUMBER	PART NAME	DESCRIPTION	PART NUMBER	QTY.
20000	Stripe kit (body side)	Argent	★D4GY 6520000-A Not replaced (4/79)	1
		Black	★ D4GY 6520000-B	1

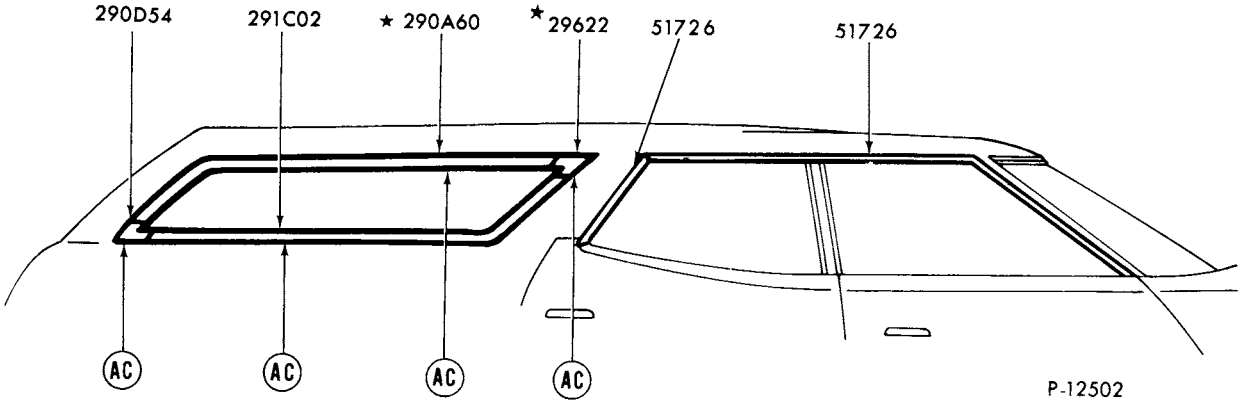

REFER TO EXTERIOR MOULDING SECTION 'R' FOR COMPLETE RETAINER INFORMATION

1974 MONTEGO - BODY TYPE 71 - DOOR and QUARTER WINDOW FRAME

GROUP NUMBER	PART NAME	DESCRIPTION	PART NUMBER		QTY.
290D54	Moulding (quarter window outside lower rear corner)		D2OZ 71290D54-A		2
290A60-1	Moulding (quarter window upper)		(RH)★D2OZ 71290A60-A	(LH)★D2OZ 71290A61-A Not replaced (3/82)	1
291C02-3	Moulding (quarter window outside lower rear)		(RH)♦D2OZ 71291C02-A	(LH)♦D2OZ 71291C03-A	1
51726-7	Moulding (roof drip rail finish)		(RH)♦D2GY 7151726-A	(LH)♦D2GY 7151727-A	1

♦ Includes attaching parts

COPYRIGHT © 1986 — FORD MOTOR COMPANY — DEARBORN, MICHIGAN

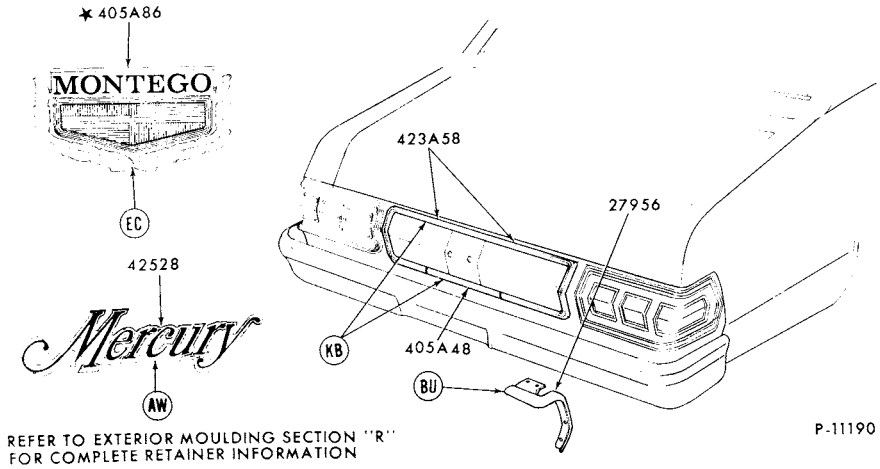

REFER TO EXTERIOR MOULDING SECTION "R" FOR COMPLETE RETAINER INFORMATION

1974 MONTEGO - BODY TYPES 53B,D and 65B,D - BACK END

GROUP NUMBER	PART NAME	DESCRIPTION	PART NUMBER	QTY.
27956-7	Filler (quarter panel rear lamp opening)	Paint to match	(RH)♦D4GY 6527956-A (LH)♦D4GY 6527957-A	1
405A48	Moulding (fuel filler door)	Body types 53D and 65B,D	♦D4GY 65405A48-A	1
405A86	Plate (fuel filler door name)	"MONTEGO"	★D4GY 65405A86-A Not replaced (4/83)	1
423A58	Moulding (lower back panel)	Body types 53D, 65B,D	♦D4GY 65423A58-A	1
42528	Plate (name)	"Mercury"	♦D4GY 6542528-A	1

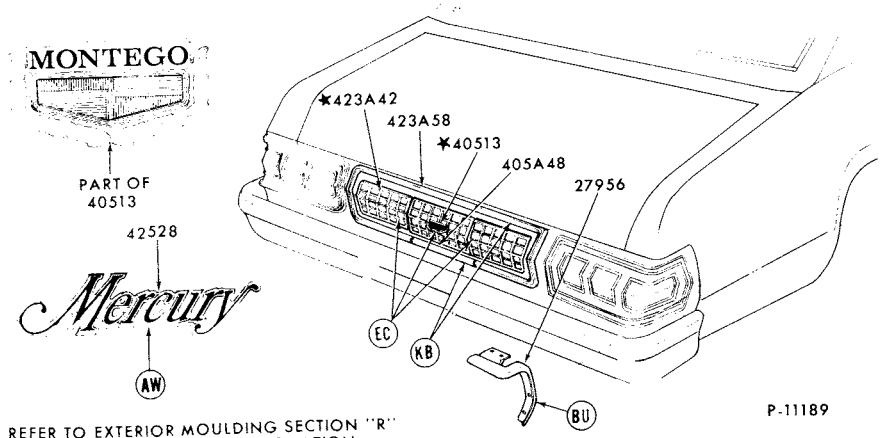

REFER TO EXTERIOR MOULDING SECTION "R" FOR COMPLETE RETAINER INFORMATION

1974 MONTEGO - BODY TYPES 53K and 65K - BACK END

GROUP NUMBER	PART NAME	DESCRIPTION	PART NUMBER	QTY.
27956-7	Filler (quarter panel rear lamp opening)	Paint to match	(RH)♦D4GY 6527956-A (LH)♦D4GY 6527957-A	1
40513	Panel (fuel filler door finish)		✶D4GY 6540513-A Not replaced (4/83)	1
405A48	Moulding (fuel filler door)		♦D4GY 65405A48-A	1
423A42	Panel (lower back finish)		(RH)✶D4GY 65423A42-A Not replaced (4/83) (LH)✶D4GY 65423A42-B Not replaced (4/83)	1
423A58	Moulding (lower back panel)		♦D4GY 65423A58-A	1
42528	Plate (name)	"Mercury"	♦D4GY 6542528-A	1

♦ Includes attaching parts

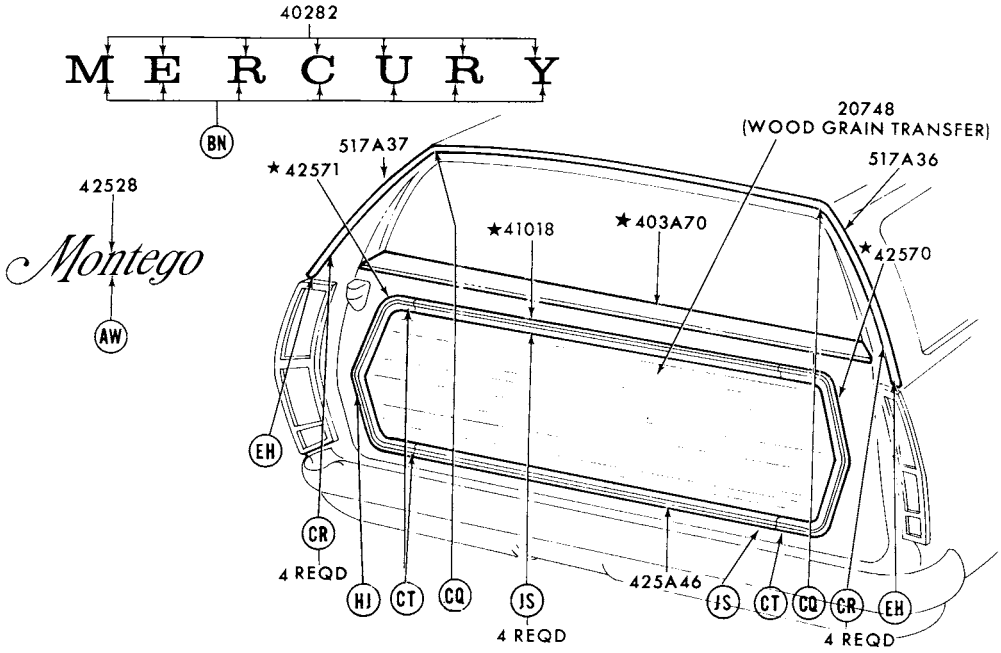

REFER TO EXTERIOR MOULDING SECTION "R" FOR COMPLETE RETAINER INFORMATION P-11191

1974 MONTEGO - BODY TYPE 71 - BACK END

GROUP NUMBER	PART NAME	DESCRIPTION	PART NUMBER		QTY.
20748	Transfer (wood grain)	Cherry wood grain-20 3/4" x 70 5/8"-cut to fit-body type 71K	D4GY 7120748-A		1
40282	Letter (tailgate)	"M"	♦D3MY 7140282-A		1
		"E"	♦D3MY 7140282-B		1
		"R"	♦D3MY 7140282-C		2
		"C"	♦D3MY 7140282-D		1
		"U"	♦D3MY 7140282-E		1
		"Y"	♦D3MY 7140282-F		1
403A70	Moulding (tailgate outside belt)		★D2OZ 71403A70-A	Not replaced (4/84)	1
41018	Moulding (tailgate outside upper)	Body type 71K	★D2GY 7141018-A	Not replaced (4/84)	1
42528	Plate (name)	"Montego"	♦D4GY 7142528-A		1
425A46	Moulding (tailgate outside lower)	Body type 71K	♦D2GY 71425A46-A		1
42570-1	Moulding (tailgate outside side)	Body type 71K	(RH)★D2GY 7142570-A Not replaced (4/83)	(LH)★D2GY 7142571-A Not replaced (4/83)	1
517A36-7	Moulding (roof outside rear)		(RH)♦D2GY 71517A36-A	(LH)♦D2GY 71517A37-A	1

♦ Includes attaching parts

COPYRIGHT © 1986 — FORD MOTOR COMPANY — DEARBORN, MICHIGAN

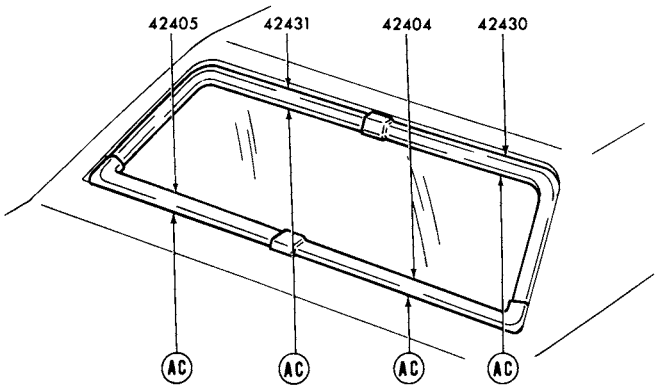

REFER TO EXTERIOR MOULDING SECTION "R" FOR COMPLETE RETAINER INFORMATION

P-12457

1974 MONTEGO - BODY TYPES 53 and 65 - BACK WINDOW

GROUP NUMBER	PART NAME	DESCRIPTION	PART NUMBER		QTY.
42404-5	Moulding (back window outside lower)		(RH)♦ D4OZ 6542404-A	(LH)♦ D4OZ 6542405-A	1
42430-1	Moulding (back window outside upper)		(RH)♦ D4OZ 6542430-A	(LH)♦ D4OZ 6542431-A	1

♦ Includes attaching parts

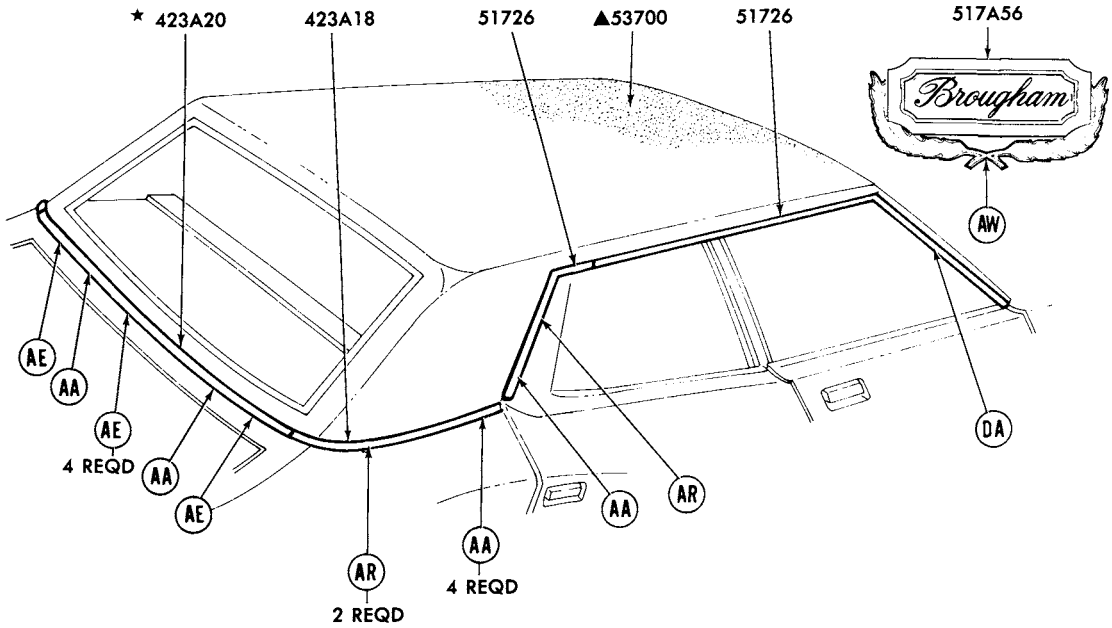

P-12810

1974 MONTEGO - BODY TYPES 53 and 71 - ROOF and BACK BELT

GROUP NUMBER	PART NAME	DESCRIPTION	PART NUMBER		QTY.
423A18-9	Moulding (back belt outside side)		(RH)♦D4GY 53423A18-A	(LH)♦D4GY 53423A19-A	1
423A20	Moulding (back belt outside)		★D4OZ 65423A20-H		1
51726-9	Moulding (roof drip side finish)	Body type 53- w/o vinyl roof	(RH)♦D2GY 5351726-B	(LH)♦D2GY 5351727-B	1
		Body type 53- w/vinyl roof- front	(RH)♦D2GY 5351726-A	(LH)♦D2GY 5351727-A	1
		Rear	(RH)♦D4GY 5351728-A	(LH)♦D4GY 5351729-A	1
		Body type 71	(RH)♦D2GY 7151726-A	(LH)♦D2GY 7151727-A	1
517A56	Ornament (roof side outside)	"Brougham"	♦D3OZ 65517A56-B	R.H. and L.H.	2

♦ Includes attaching parts

COPYRIGHT © 1986 — FORD MOTOR COMPANY — DEARBORN, MICHIGAN

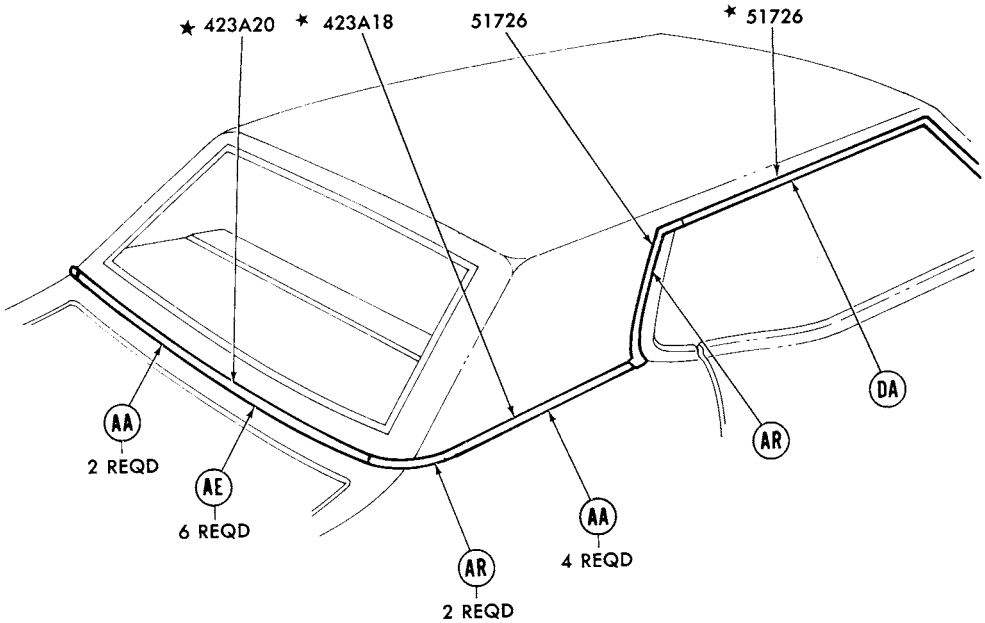

REFER TO EXTERIOR MOULDING SECTION "R" FOR COMPLETE RETAINER INFORMATION

P-12815

1974 MONTEGO - BODY TYPES 65B,D - ROOF and BACK BELT

GROUP NUMBER	PART NAME	DESCRIPTION	PART NUMBER		QTY.
423A18-9	Moulding (back belt outside side) door name)	Front	(RH)✶D4GY 65423A18-B	(LH)✶D4GY 65423A19-B Not replaced (4/83)	1
		Rear	(RH)★D4GY 65423A18-C	(LH)★D4GY 65423A19-C	1
423A20	Moulding (back belt outside)		★D4OZ 65423A20-H Not replaced (4/84)	Not replaced (4/84)	1
51726-7	Moulding (roof drip side finish)	Front-w/vinyl roof	(RH)✶D2GY 6551726-C Not replaced (4/84)	(LH)✶D2GY 6551727-C	1
		Rear-w/vinyl roof	(RH)♦D2GY 6551726-B	(LH)♦D2GY 6551727-B	1
		W/o vinyl roof	(RH)♦D4WY 6551726-A	(LH)♦D4WY 6551727-A	1

♦ Includes attaching parts

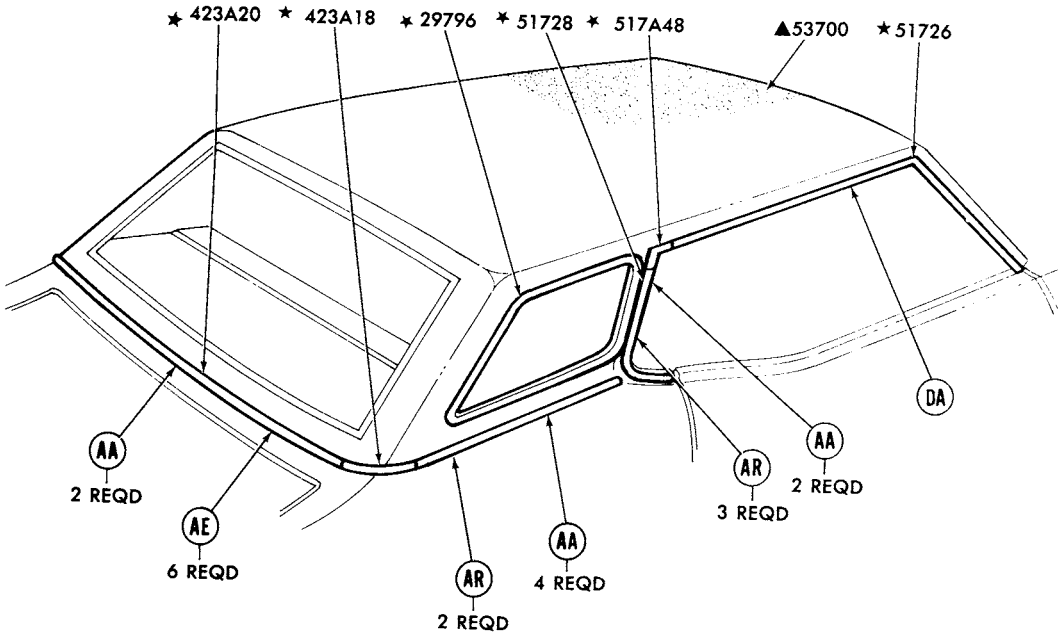

REFER TO EXTERIOR MOULDING SECTION "R" FOR COMPLETE RETAINER INFORMATION
▲REFER TO SOFT TRIM SECTION

P-12816

1974 MONTEGO - BODY TYPE 65K - ROOF and BACK BELT - w/FULL VINYL ROOF

GROUP NUMBER	PART NAME	DESCRIPTION	PART NUMBER		QTY.
29796-7	Moulding (opera window outside)		(RH)★D4GY 6529796-C	(LH)★D4GY 6529797-C	1
423A18-9	Moulding (back belt outside side)		(RH)★ D4GY 65423A18-A	(LH)★ D4GY 65423A19-A	1
423A20	Moulding (back belt outside)		★ D4OZ 65423A20-H	Not replaced (4/84)	1
51726-9	Moulding (roof drip side finish)	Front	(RH)★D2GY 6551726-C Not replaced (4/83)	(LH)★ D2GY 6551727-C	1
		Rear	(RH)★D3GY 6551728-A	(LH) ★D3GY 6551729-A	1
517A48-9	Moulding (roof drip side rear)		(RH) ★D2GY 65517A48-A	(LH)★D2GY 65517A49-A	1

♦ Includes attaching parts

COPYRIGHT © 1986 — FORD MOTOR COMPANY — DEARBORN, MICHIGAN

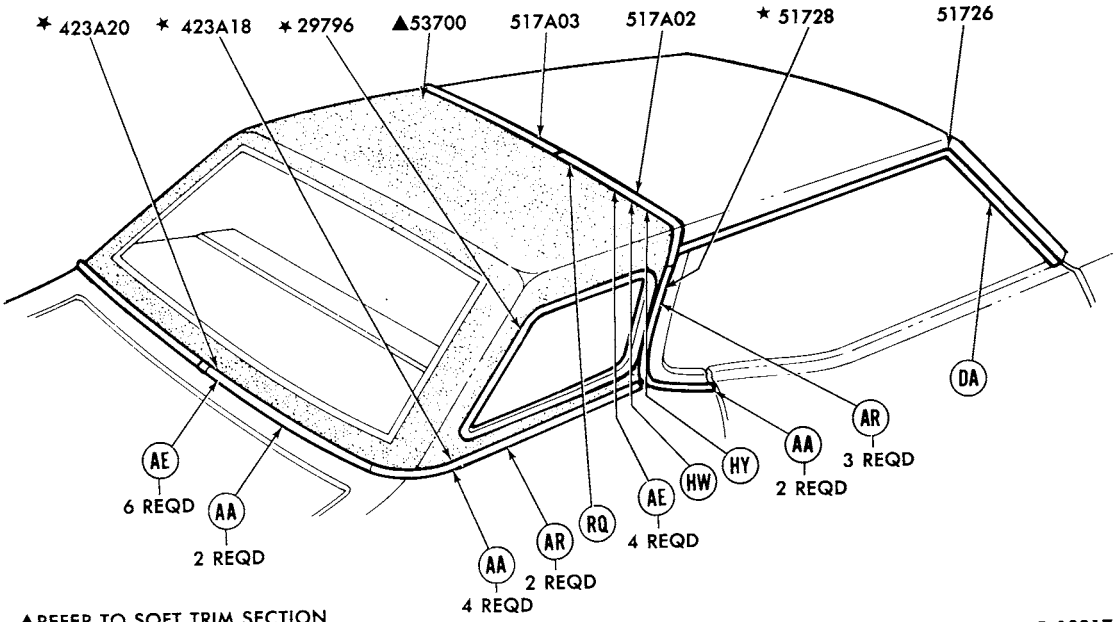

▲REFER TO SOFT TRIM SECTION
REFER TO EXTERIOR MOULDING SECTION "R" FOR COMPLETE RETAINER INFORMATION

P-12817

1974 MONTEGO - BODY TYPE 65K - ROOF and BACK BELT - w/HALF VINYL ROOF

GROUP NUMBER	PART NAME	DESCRIPTION	PART NUMBER		QTY.
29796-7	Moulding (opera window outside)		(RH)✶D4GY 6529796-C	(LH)✶D4GY 6529797-C	1
423A18-9	Moulding (back belt outside side)		(RH)★D4GY 65423A18-A	(LH)★D4GY 65423A19-A	1
423A20	Moulding (back belt outside)		✶D4OZ 65423A20-H	Not replaced (4/84)	1
517A02-3	Moulding (roof outside side)		(RH)♦D4WY 65517A02-A	(LH)♦D4WY 65517A03-A	1
51726-9	Moulding (roof drip side finish)	Front	(RH)♦D4WY 6551726-A	(LH)✶D4WY 6551727-A	1
		Rear	(RH)✶D3GY 6551728-A	(LH)★D3GY 6551729-A	1

♦ Includes attaching parts

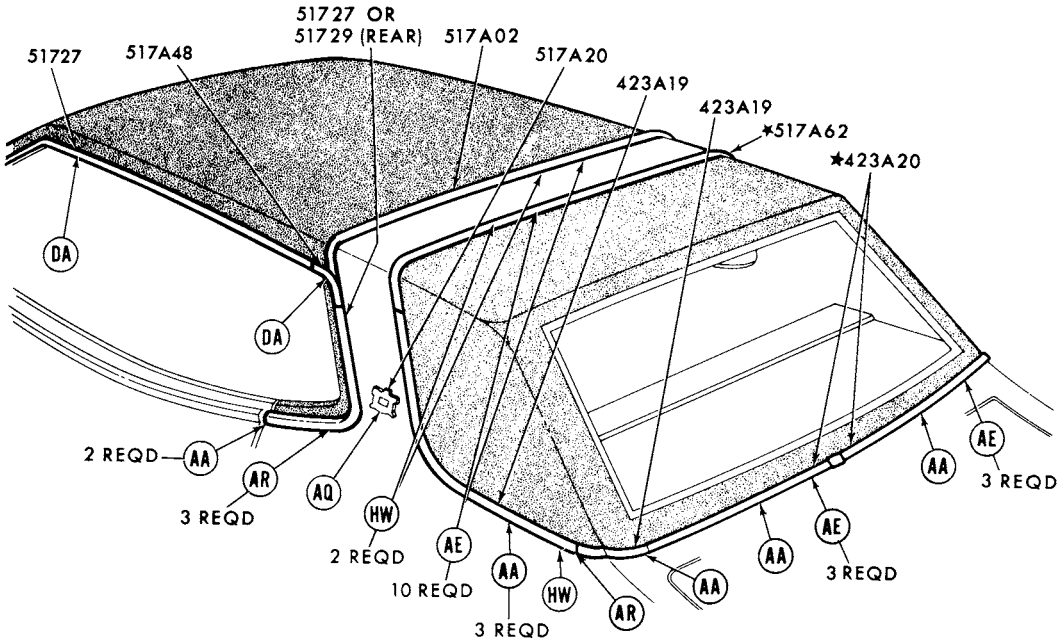

REFER TO EXTERIOR MOULDING SECTION "R" FOR COMPLETE RETAINER INFORMATION P-10746

1974 MONTEGO - BODY TYPE 65K - ROOF and BACK BELT - W/SPLIT VINYL ROOF

GROUP NUMBER	PART NAME	DESCRIPTION	PART NUMBER		QTY.
423A18-9	Moulding (back belt outside side)	Front	(RH)♦D4GY 65423A18-D	(LH)♦D4GY 65423A19-D	1
		Rear	(RH)♦D4GY 65423A18-C	(LH)♦D4GY 65423A19-C	1
423A20	Moulding (back belt outside)		★D4OZ 65423A20-H	Not replaced (4/84)	1
517A02-3	Moulding (roof outside side)		(RH)♦D3GY 65517A02-A	(LH)♦D3GY 65517A03-A	1
517A20	Ornament (roof side outside)		♦C9MY 65517A20-A	R.H. and L.H.	2
51726-9	Moulding (roof drip side finish)	Front-"From 6/3/74"	(RH) D4WY 6551726-A	(LH) D4WY 6551727-A	1
		Rear	(RH) D3GY 6551728-A	(LH) D3GY 6551729-A	1
517A48-9	Moulding (roof drip side rear corner finish)		(RH) D2GY 65517A48-A	(LH) D2GY 65517A49-A	1
517A62-3	Moulding (roof outside side rear)		(RH)★D3GY 65517A62-A	★(LH)♦D3GY 65517A63-A Not replaced (4/79)	1

♦ Includes attaching parts

COPYRIGHT © 1986 — FORD MOTOR COMPANY — DEARBORN, MICHIGAN

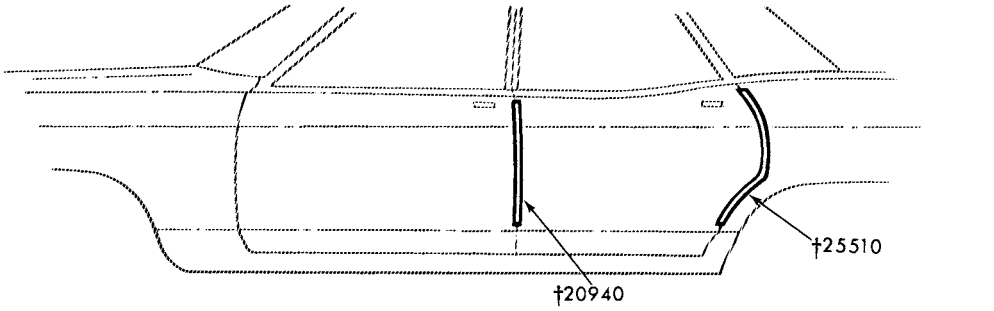

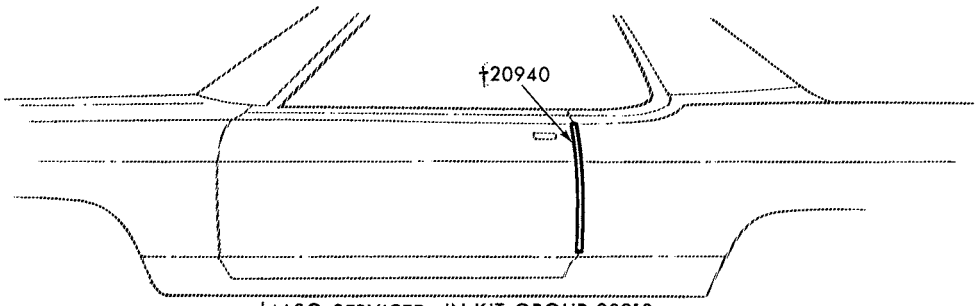

†ALSO SERVICED IN KIT-GROUP 20910

P-10061

1974 MONTEGO - DOOR EDGE GUARDS

GROUP NUMBER	PART NAME	DESCRIPTION	PART NUMBER		QTY.
20910	Moulding kit (door edge guard)	Body type 65	D4GY 6520910-A		1
20940-1	Moulding (front door edge guard)	Body types 53, 71B and D	(RH)★D4GY 5320940-A	(LH)★D4GY 5320941-A Not replaced (3/82)	1
		Body type 65	(RH) D4GY 6520940-A	(LH) D4GY 6520941-A	1
		Body type 71K	(RH) D4GY 7120940-A	(LH) D4GY 7120941-A	1
25510-1	Moulding (rear door edge guard)	Body types 53, 71B and D	(RH) D4GY 5325510-A	(LH) D4GY 5325511-A	1
		Body type 71K	(RH)★D4GY 7125510-A Not replaced (3/82)	(LH)★D4GY 7125511-A Not replaced (3/82)	1

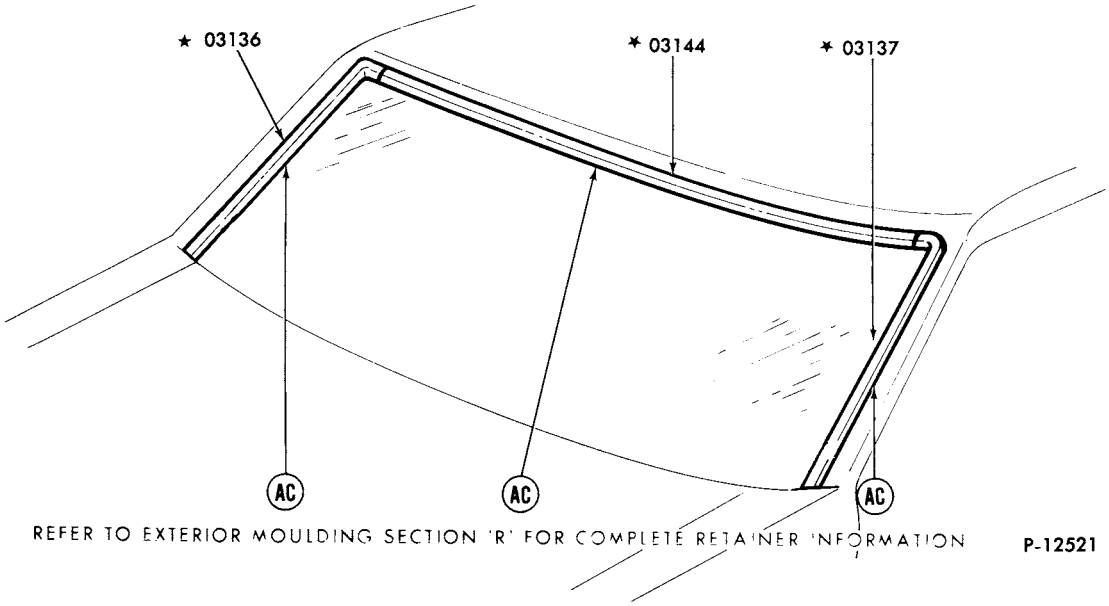

1974 LINCOLN - WINDSHIELD

GROUP NUMBER	PART NAME	DESCRIPTION	PART NUMBER	QTY.
03136-7	Moulding (windshield outside side)		(RH)★D0VY 6503136-A (LH)★D0VY 6503137-A	1
03144	Moulding (windshield outside top)		★ D0VY 6503144-A	1

★ Includes attaching parts

COPYRIGHT © 1986 — FORD MOTOR COMPANY — DEARBORN, MICHIGAN

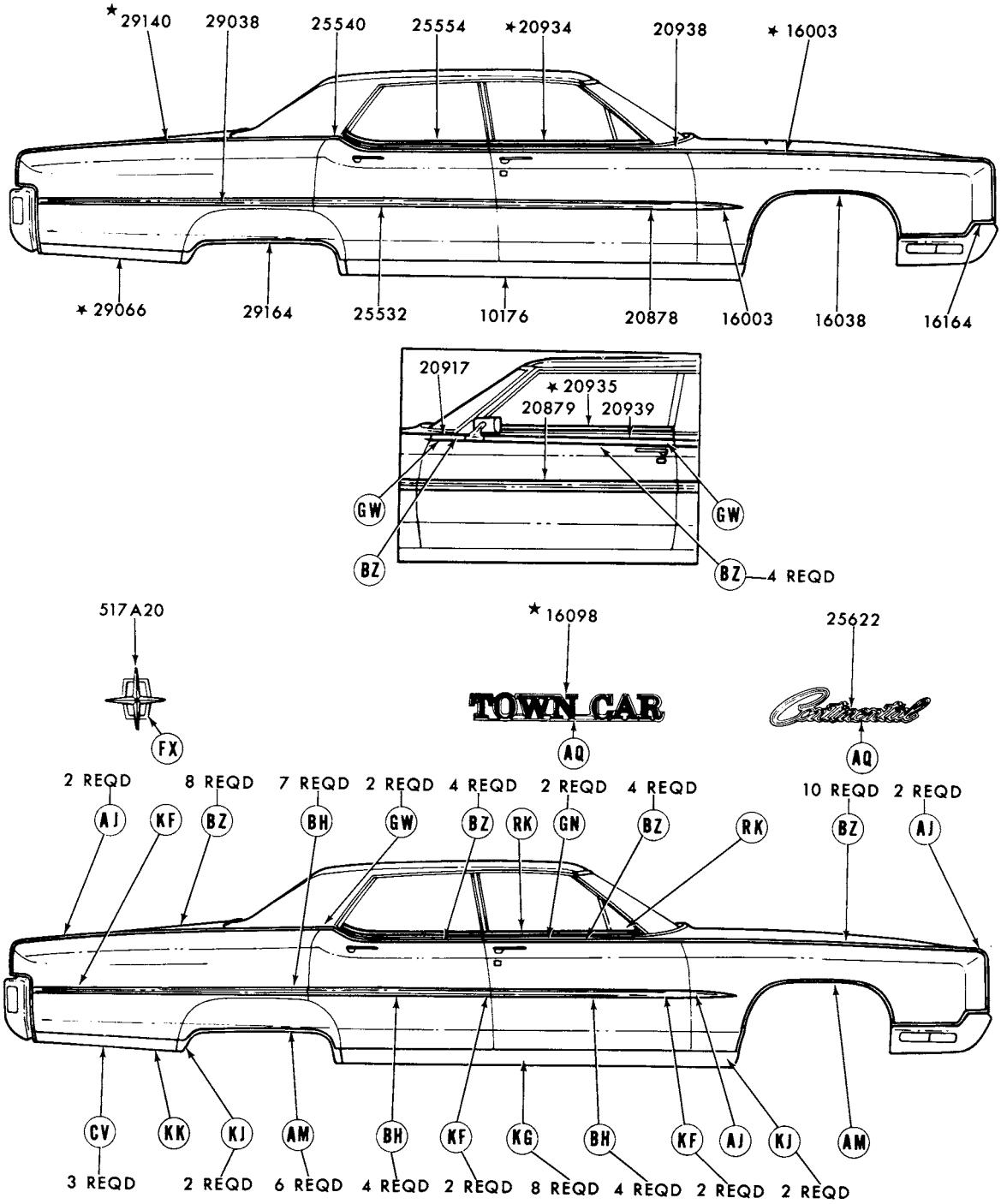

■ REFER TO GROUP IN TEXT SECTION
REFER TO EXTERIOR MOULDING SECTION "R" FOR COMPLETE RETAINER INFORMATION

P-13614

1974 LINCOLN - BODY TYPE 53 - SIDE

1974 LINCOLN - BODY TYPE 53 - SIDE - cont'd.

GROUP NUMBER	PART NAME	DESCRIPTION	PART NUMBER		QTY.
10176-7	Moulding (body rocker panel)		(RH)♦D2VY 6510176-A	(LH)♦D2VY 6510177-A	1
16003-4	Moulding (front fender upper)		(RH)★D4VY 16003-A	(LH)★D4VY 16004-A	1
16003	Moulding (front fender side)	Black vinyl insert	♦D2LY 16003-B	R.H. and L.H.	2
16038-9	Moulding (front fender wheel opening)		(RH)♦D2VY 16038-A	(LH)♦D2VY 16039-A	1
16098	Plate (front fender name)	"TOWN CAR"	★D1VY 16098-A Not replaced (3/82)	R.H. and L.H.	2
20878-9	Moulding (front door outside lower)	Black vinyl insert	♦D2VY 5320878-B	R.H. and L.H.	2
20916-7	Moulding (front door outside front)		(RH)♦D3VY 6520916-A	(LH)♦D2VY 6520917-B	1
20934-5	Moulding and weatherstrip (front door outside at belt)	W/mini vent	★(RH)★D3VY 5320934-A Not replaced (4/79)	(LH)★D3VY 5320935-A	1
		W/o mini vent	(RH)★D3VY 5320934-B	★(LH)★D3VY 5320935-B Not replaced (4/79)	1
20938-9	Moulding (front door outside)	Without R.H. mirror	(RH)♦D2VY 5320938-B	(LH)♦D2VY 5320939-B	1
		With R.H. mirror	(RH)♦D3VY 5320938-A	(LH)♦D2VY 5320939-B	1
25532-3	Moulding (rear door outside)	Black vinyl insert	♦D2VY 5325532-B	R.H. and L.H.	2
25540-1	Moulding (rear door outside upper)		(RH)♦D2VY 5325540-B	(LH)♦D2VY 5325541-B	1
25554-5	Moulding (rear door outside belt)		(RH) D2VY 5325554-A	(LH) D2VY 5325555-A	1
25622	Plate (name)	"Continental"	♦D4VY 6525622-A	R.H. and L.H.	2
29038-9	Moulding (quarter outside)	Black vinyl insert	♦D4VY 5329038-A	R.H. and L.H.	2
291B20-1	Moulding (quarter panel outside lower rear)		(RH)★D4VY 65291B20-A Not replaced (3/82)	(LH)★D4VY 65291B21-A Not replaced (3/82)	1
29140-1	Moulding (quarter panel outside upper)		(RH)★D4VY 5329140-A Not replaced (3/82)	(LH)★D4VY 5329141-A Not replaced (3/82)	1
29164-5	Moulding (quarter wheel opening)		(RH)♦D2VY 6529164-A	(LH)♦D2VY 6529165-A	1
50398	Plate (roof name)	"Town Car"	★D3VY 5350398-A	R.H. and L.H.	2
517A20	Ornament (roof side outside)		♦C9VY 53517A20-A	R.H. and L.H.	2

♦ Includes attaching parts

COPYRIGHT © 1986 — FORD MOTOR COMPANY — DEARBORN, MICHIGAN

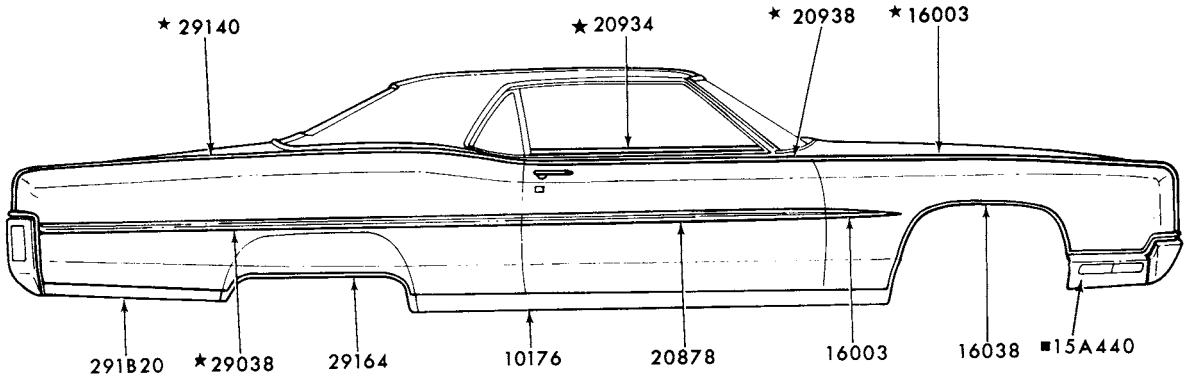

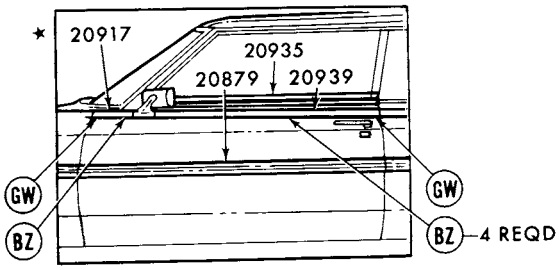

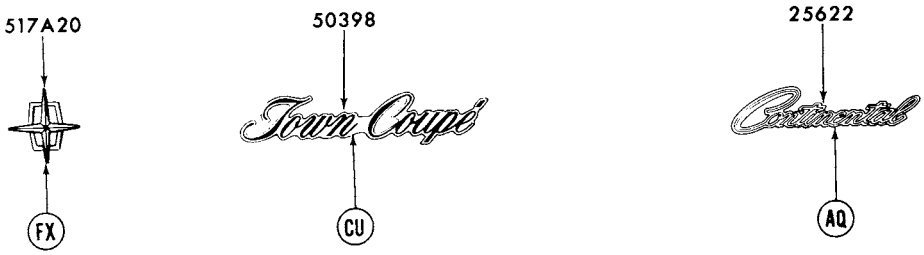

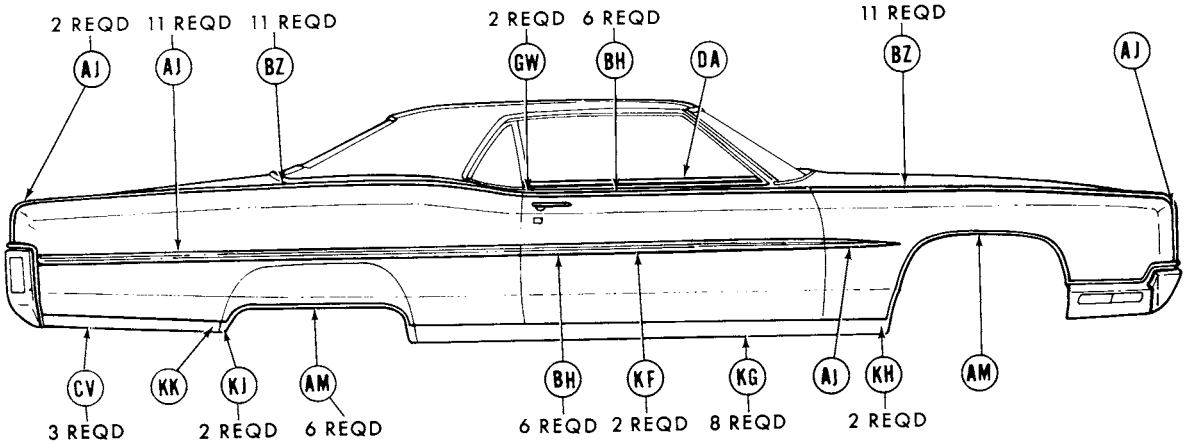

■ REFER TO GROUP IN CHASSIS SECTION
REFER TO EXTERIOR MOULDING SECTION "R" FOR COMPLETE RETAINER INFORMATION

P-11832

1974 LINCOLN - BODY TYPE 65 - SIDE

1974 LINCOLN - BODY TYPE 65 - SIDE - cont'd.

GROUP NUMBER	PART NAME	DESCRIPTION	PART NUMBER		QTY.
10176-7	Moulding (body rocker panel)		(RH)♦D2VY 6510176-A	(LH)♦D2VY 6510177-A	1
16003-4	Moulding (front fender)		(RH)★D4VY 16003-A	(LH)★D4VY 16004-A	1
		Black vinyl insert - lower	★D2LY 16003-B	R.H. and L.H.	2
16038-9	Moulding (front fender wheel opening)		(RH)♦D2VY 16038-A	(LH)♦D2VY 16039-A	1
16164-5	Moulding (front fender front)		(RH)♦D4VY 16164-A	(LH)♦D4VY 16165-A	1
20878	Moulding (front door outside lower)	Black vinyl insert	♦D2VY 6520878-B	R.H. and L.H.	2
20916-7	Moulding (front door outside front)		(RH)★D3VY 6520916-A	(LH)★D2VY 6520917-B Not replaced (3/82)	1
20938-9	Moulding (front door outside)	Without R.H. mirror	(RH)★D2VY 6520938-B Not replaced (3/82)	(LH)★D2VY 6520939-B	1
		With R.H. mirror	(RH)★D3VY 6520938-A Not replaced (4/79)	(LH)★D2VY 6520939-B	1
25622	Plate (name)	"Continental"	♦D4VY 6525622-A	R.H. and L.H.	2
29038	Moulding (quarter outside)	Black vinyl insert	★D4VY 6529038-A Not replaced (3/82)	R.H. and L.H.	2
291B20-1	Moulding (quarter panel outside lower rear)		(RH)♦D4VY 65291B20-A	(LH)♦D4VY 65291B21-A	1
29140-1	Moulding (quarter panel outside upper)		(RH)★D4VY 6529140-A Not replaced (4/83)	(LH)★D4VY 6529141-A Not replaced (4/83)	1
29164-5	Moulding (quarter wheel opening)		(RH)♦D2VY 6529164-A	(LH)♦D2VY 6529165-A	1
29796-7	Moulding (quarter window outside upper)		(RH)★D3VY 6529796-A Not replaced (4/79)	(LH)★D3VY 6529797-A	1
50398	Plate (roof name)	"Town Coupe"	♦D3VY 6550398-A	R.H. and L.H.	2
517A20	Ornament (roof side outside)		♦C9VY 53517A20-A	R.H. and L.H.	2

♦ Includes attaching parts

COPYRIGHT © 1986 — FORD MOTOR COMPANY — DEARBORN, MICHIGAN

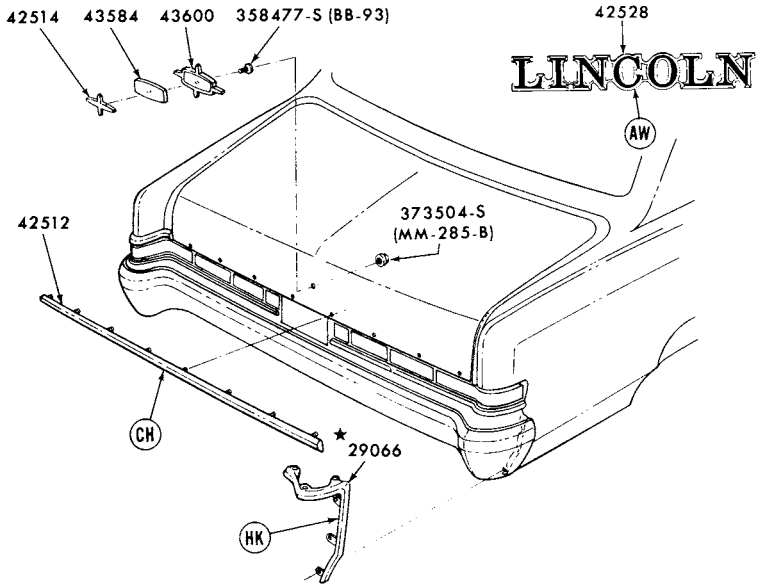

REFER TO EXTERIOR MOULDING SECTION "R" FOR COMPLETE RETAINER INFORMATION P-11077

1974 LINCOLN - BACK END

GROUP NUMBER	PART NAME	DESCRIPTION	PART NUMBER	QTY.
29066-7	Moulding (quarter panel outside lower rear)		(RH)★D4VY 6529066-A (LH)★D4VY 6529067-A Not replaced (4/84)	1
42512	Moulding (luggage compartment door)		♦D4VY 6542512-A	1
42514	Ornament (luggage compartment door)		♦D0VY 6542514-A	1
42528	Plate (luggage compartment door name)	"LINCOLN"	♦E1VY 5442528-A	1
43584	Insert (luggage compartment door lock keyhole cover)		♦C6VY 5343584-A	1
43600	Sleeve (luggage compartment door lock cylinder)		♦D0VY 6543600-A	1

♦ Includes attaching parts

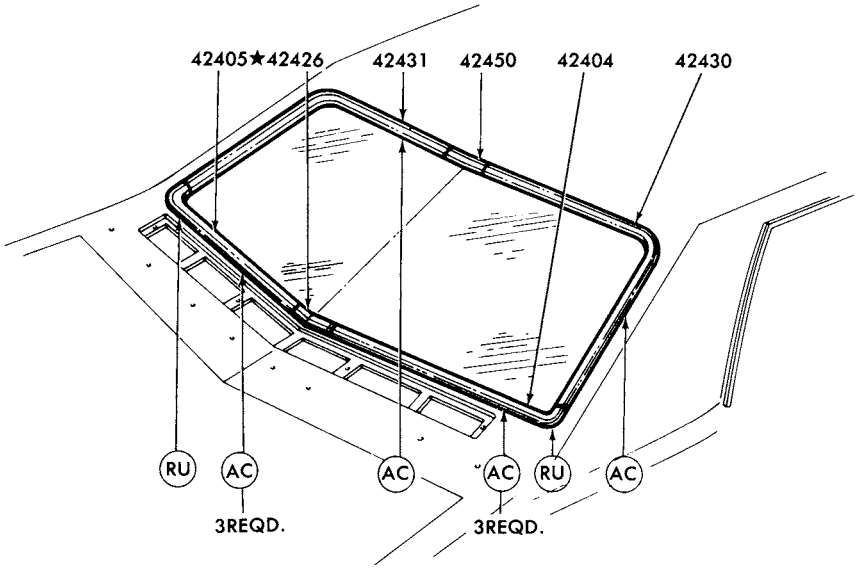

REFER TO EXTERIOR MOULDING SECTION "R" FOR COMPLETE RETAINER INFORMATION

P-12470

1974 LINCOLN - BODY TYPE 53 - BACK WINDOW

GROUP NUMBER	PART NAME	DESCRIPTION	PART NUMBER	QTY
42404-5	Moulding (back window outside lower)		(RH)♦D0VY 5342404-A (LH)♦D0VY 5342405-A	1
42430-1	Moulding (back window outside upper)		(RH)♦D0VY 5342430-A (LH)♦D0VY 5342431-A	1
42450	Cover (back window outside lower moulding joint)		D0VY 5342450-A	1

COPYRIGHT © 1986 — FORD MOTOR COMPANY — DEARBORN, MICHIGAN

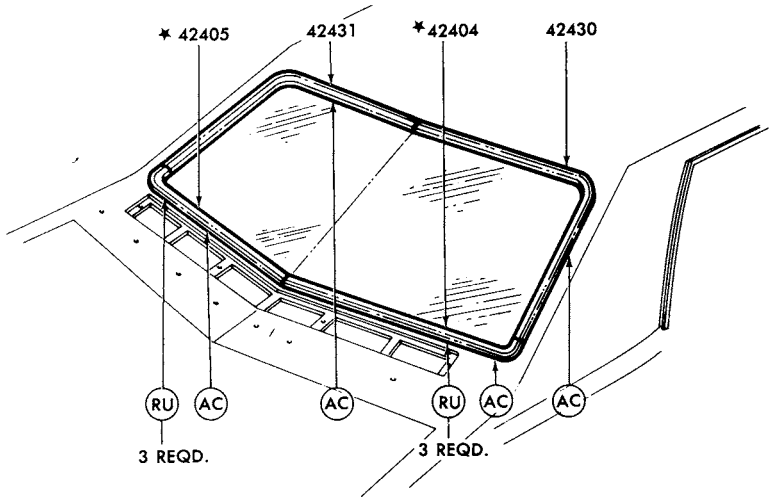

REFER TO EXTERIOR MOULDING SECTION "R" FOR COMPLETE RETAINER INFORMATION

P-12471

1974 LINCOLN - BODY TYPE 65 - BACK WINDOW

GROUP NUMBER	PART NAME	DESCRIPTION	PART NUMBER		QTY.
42404-5	Moulding (back window outside lower)		(RH)★D0VY 6542404-A	★(LH)★D0VY 6542405-A Not replaced (4/79)	1
42430-1	Moulding (back window outside upper)		(RH)♦D0VY 6542430-A	(LH)♦D0VY 6542431-A	1

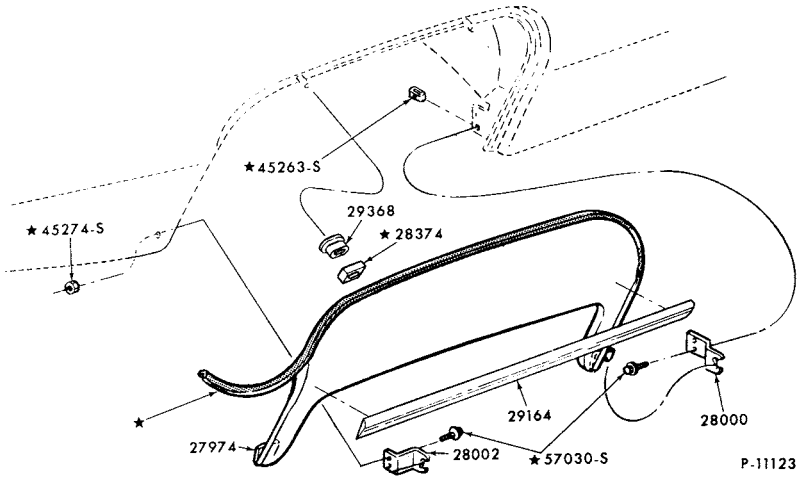

1974 LINCOLN WHEEL OPENING COVER PARTS

GROUP NUMBER	PART NAME	DESCRIPTION	PART NUMBER		QTY.
27974-5	Panel (quarter wheel opening cover)		(RH)♦D2VY 6527974-A	(LH)♦D2VY 6527975-A	1
28000-2	Bracket (quarter wheel opening cover)	Front	♦D0VY 6528000-A	R.H. and L.H.	2
		Rear	♦D0VY 6528002-A	R.H. and L.H.	2
29164-5	Moulding (quarter wheel opening)		(RH)♦D2VY 6529164-A	(LH)♦D2VY 6529165-A	1
29368	Insert (quarter wheel opening cover)		♦D1VY 6529368-A	R.H. and L.H.	4

♦ Includes attaching parts

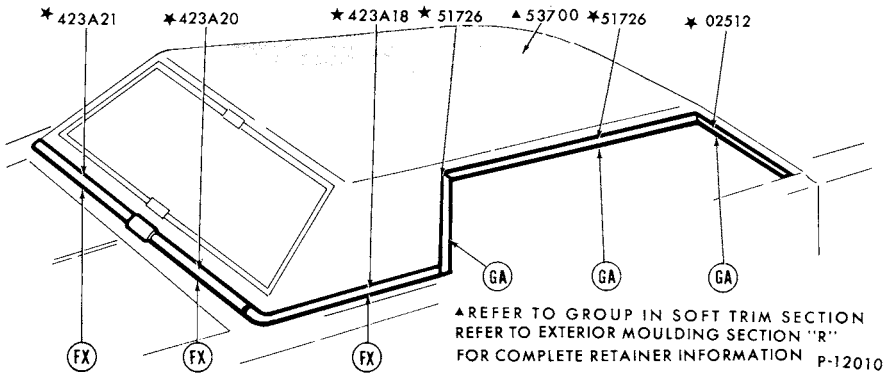

1974 LINCOLN - ROOF and BACK BELT

GROUP NUMBER	PART NAME	DESCRIPTION	PART NUMBER		QTY.
02512-3	Moulding (front body pillar drip finish)		(RH)✶D0VY 6502512-A	(LH)✶D0VY 6502513-A	1
423A18-9	Moulding (back belt outside side)	Body type 53-paint to match	(RH)✶D2VY 53423A18-A	(LH)★D2VY 53423A19-A	1
		Body type 65-paint to match	(RH)✶D2VY 65423A18-A	★(LH)✶D2VY 65423A19-A Not replaced (4/79)	1
423A20-1	Moulding (back belt outside)	Body type 53-paint to match	(RH)✶D2VY 53423A20-A	(LH)✶D2VY 53423A21-A	1
		Body type 65-paint to match	(RH)✶D2VY 65423A20-A	★(LH)✶D2VY 65423A21-A Not replaced (4/79)	1
51726-7	Moulding (roof drip side finish)	Body type 53-front	(RH)★D0VY 5351726-A	(LH)★D0VY 5351727-A	
		Body type 53-rear	(RH)★D0VY 5351726-B	(LH)★D0VY 5351727-B	1
		Body type 65	★(RH)✶D0VY 6551726-A Not replaced (4/79)	(LH)✶D0VY 6551727-A	1

♦ Includes attaching parts

COPYRIGHT © 1986 — FORD MOTOR COMPANY — DEARBORN, MICHIGAN

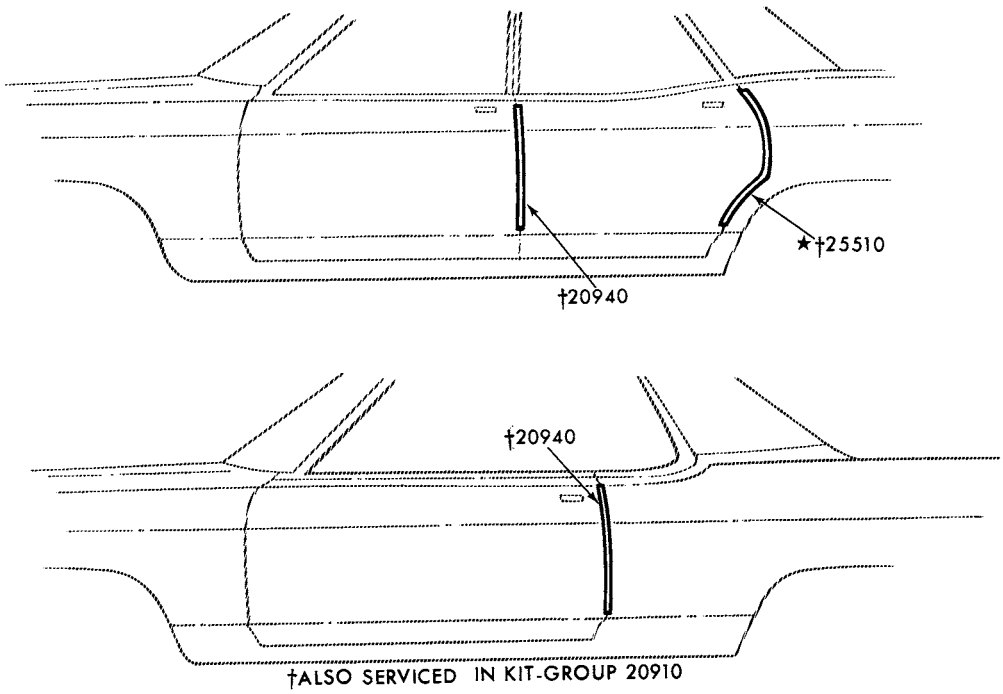

1974 LINCOLN - DOOR EDGE GUARDS

GROUP NUMBER	PART NAME	DESCRIPTION	PART NUMBER		QTY.
20940	Moulding (front door edge guard	Body type 53	★ D0VY 5320940-A	R.H. and L.H.	2
		Body type 65	★D0VY 6520940-A Not replaced (3/82)	R.H. and L.H.	2
25510-1	Moulding (rear door edge guard)	Body type 53	(RH)★D0VY 5325510-A Not replaced (3/82)	(LH)★D0VY 5325511-A Not replaced (3/82)	1

† Includes attaching parts

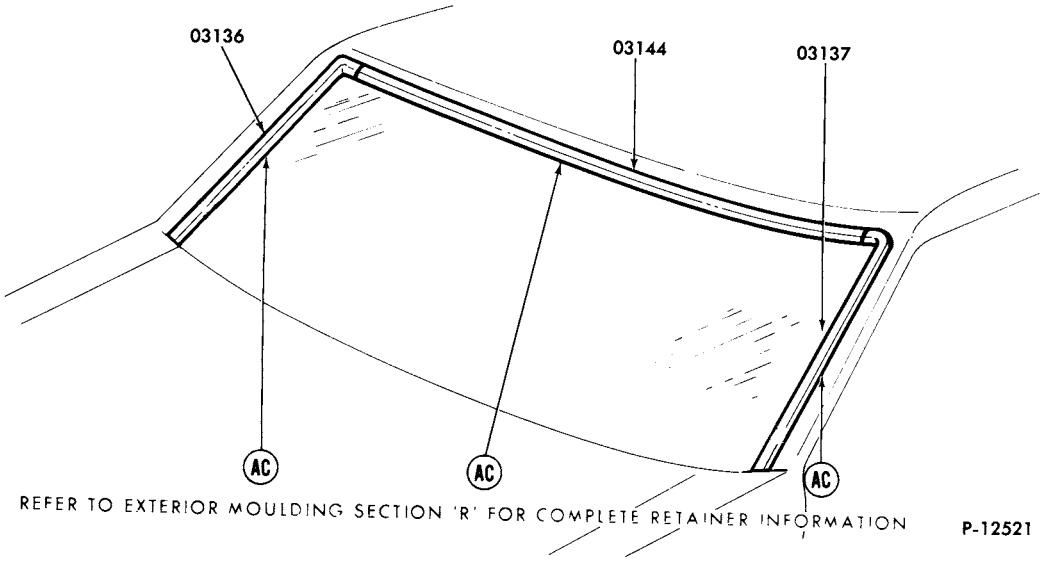

1974 COUGAR - WINDSHIELD

GROUP NUMBER	PART NAME	DESCRIPTION	PART NUMBER		QTY.
03136-7	Moulding (windshield outside side)		(RH)♦D7OZ 6503136-A	(LH)♦D7OZ 6503137-A	1
03144	Moulding (windshield outside top)		♦D7OZ 6503144-A		1

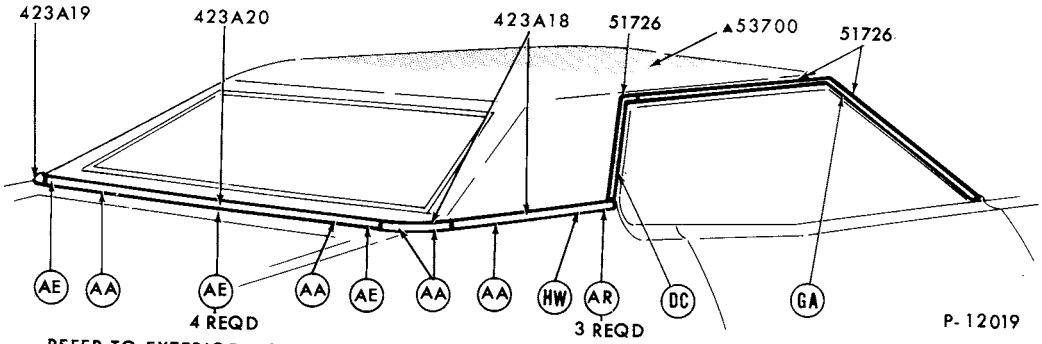

REFER TO EXTERIOR MOULDING SECTION 'R' FOR COMPLETE RETAINER INFORMATION
▲ REFER TO SOFT TRIM SECTION

1974 COUGAR - ROOF and BACK BELT - W/FULL VINYL ROOF

GROUP NUMBER	PART NAME	DESCRIPTION	PART NUMBER		QTY.
423A18-9	Moulding (back belt outside side)		(RH)♦D4GY 65423A18-A	(LH)♦D4GY 65423A19-A	1
423A20	Moulding (back belt outside)		♦D4OZ 65423A20-H		1
51726	Moulding (roof drip side finish)	Front	(RH)♦D2GY 6551726-C	(LH)♦D2GY 6551727-C	1
		Rear	(RH)♦D2GY 6551726-C	(LH)♦D2GY 6551727-C	1

♦ Includes attaching parts

COPYRIGHT © 1986 — FORD MOTOR COMPANY — DEARBORN, MICHIGAN

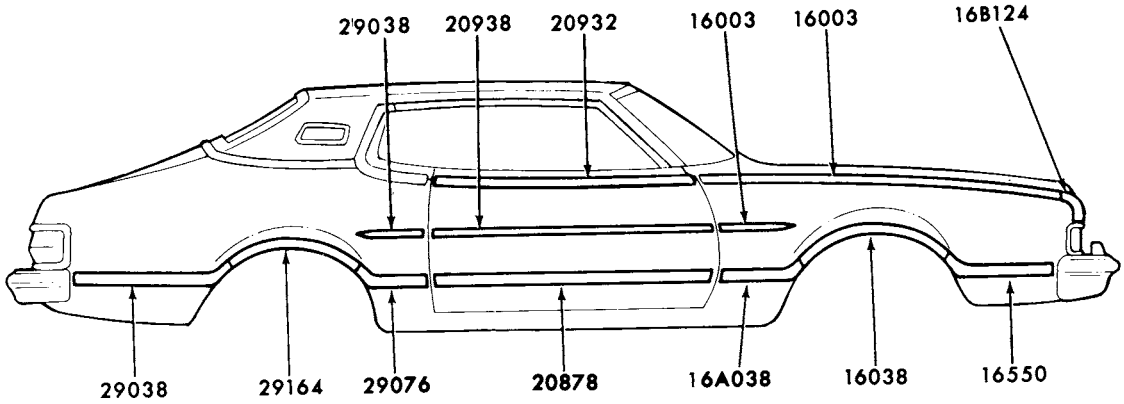

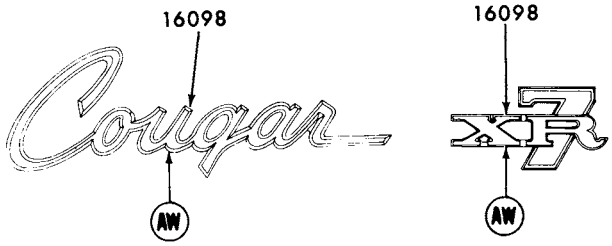

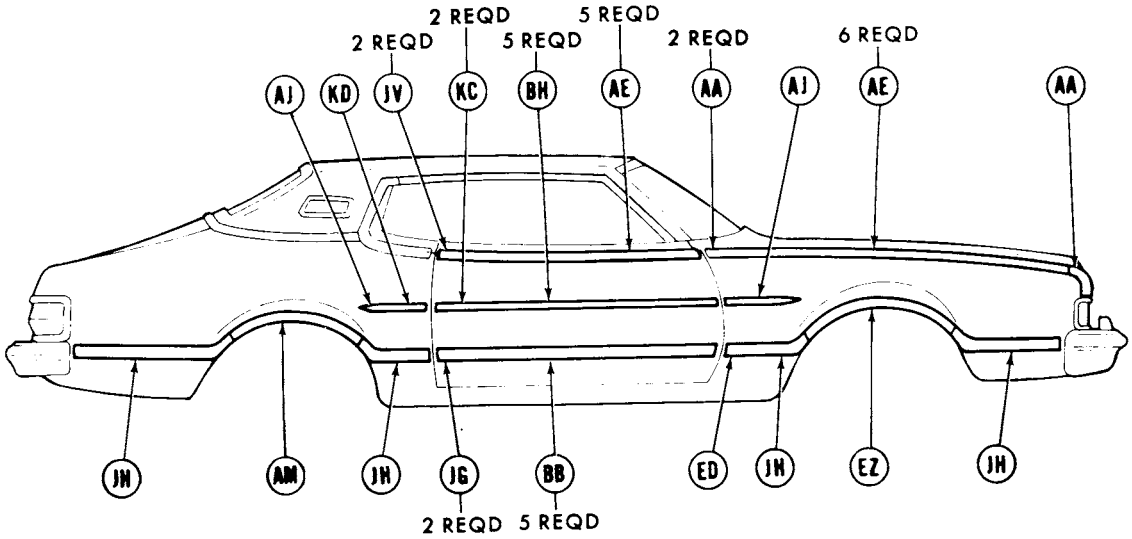

REFER TO EXTERIOR MOULDING SECTION "R" FOR COMPLETE RETAINER INFORMATION

P-11195

1974 COUGAR - SIDE

1974 COUGAR - SIDE - cont'd.

GROUP NUMBER	PART NAME	DESCRIPTION	PART NUMBER		QTY.
16003-4	Moulding (front fender side)	Black vinyl insert-adhesive backed-57" long-cut to fit	D4GZ 16003-A	R.H. and L.H.	AR
		Bright finish	♦D4GY 16003-A	R.H. and L.H.	2
		Upper	(RH)♦D2GY 16003-B	(LH)♦D2GY 16004-B	1
16038-9	Moulding (front fender wheel opening)		(RH)♦D4GY 16038-A	(LH)♦D4GY 16039-A	1
16A038-9	Moulding (front fender side)	◊Black vinyl insert	(RH)♦D4WY 16A038-AA	(LH)♦D4WY 16A039-AA	1
		◊Brown vinyl insert	(RH)✶D4WY 16A038-AT Not replaced (4/84)	(LH)✶D4WY 16A039-AT Not replaced (4/84)	1
		◊Copper vinyl insert	(RH)♦D4WY 16A038-AC	(LH)♦D4WY 16A039-AC	1
		◊Gold vinyl insert	(RH)★D4WY 16A038-AY Not replaced (2/81)	(LH)★D4WY 16A039-AY	1
		◊Silver blue vinyl insert	(RH)✶D4WY 16A038-AB Not replaced (4/84)	(LH)✶D4WY 16A039-AB Not replaced (4/83)	1
		◊Silver gray vinyl insert	(RH)★D4WY 16A038-AP	(LH)★D4WY 16A039-AP	1
		◊White vinyl insert	(RH)♦D4WY 16A038-AW	(LH)♦D4WY 16A039-AW	1
16098	Plate (front fender name)	"Cougar"	♦D4WY 16098-A	R.H. and L.H.	2
		"XR7"	♦D4WY 16098-B	R.H. and L.H.	2
16B124-5	Moulding (front fender extension)		(RH)♦D4WY 16B124-A	(LH)♦D4WY 16B125-A	1
16550-1	Moulding assy. (front fender side lower front)	◊Black vinyl insert	(RH)♦D4GY 16550-AA	(LH)♦D4GY 16551-AA	1
		◊Brown vinyl insert	(RH)✶D4GY 16550-AT Not replaced (4/84)	(LH)✶D4GY 16551-AT Not replaced (4/84)	1
		◊Green vinyl insert	(RH)✶D4GY 16550-AR Not replaced (2/81)	(LH)✶D4GY 16551-AR Not replaced (2/81)	1
		◊Silver blue vinyl insert	(RH)✶D4WY 16550-AB Not replaced (4/84)	(LH)✶D4WY 16551-AB Not replaced (4/84)	1
		◊Silver gray vinyl insert	(RH)★D4WY 16550-AP	(LH)★D4WY 16551-AP	1
		◊White vinyl insert	(RH)♦D4GY 16550-AW	(LH)♦D4GY 16551-AW	1
20878-9	Moulding (front door outside lower)	◊Black vinyl insert	(RH)♦D4GY 6520878-E	(LH)♦D4GY 6520879-E	1
		◊Brown vinyl insert	(RH)♦D4GY 6520878-D	(LH)♦D4GY 6520879-D	1
		◊Copper vinyl insert	(RH)♦D4WY 6520878-B	(LH)♦D4WY 6520879-B	1
		◊Gold vinyl insert	(RH)✶D4GY 6520878-C Not replaced (2/81)	(LH)✶D4GY 6520879-C	1
		◊Silver blue vinyl insert	(RH)✶D4WY 6520878-A Not replaced (4/84)	(LH)✶D4WY 6520879-A	1
		◊Silver gray vinyl insert	(RH)★D4WY 6520878-CP	(LH)★D4WY 6520879-CP	1
		◊White vinyl insert	(RH)♦D4GY 6520878-A	(LH)♦D4GY 6520879-A	1
20932-3	Moulding (front door outside upper)		(RH)♦D4GY 6520932-A	(LH)♦D4GY 6520933-A	1
20938-9	Moulding (front door outside)	Black vinyl insert-adhesive backed-57" long-cut to fit	D4GZ 16003-A	R.H. and L.H.	AR
		Bright finish	♦D4GY 6520938-A	R.H. and L.H.	2

◊ For color verification, refer to the vinyl roof swatches in the 1974 salesman's color and upholstery selections guide.
♦ Includes attaching parts

COPYRIGHT © 1986 — FORD MOTOR COMPANY — DEARBORN, MICHIGAN

1974 COUGAR - SIDE - cont'd.

GROUP NUMBER	PART NAME	DESCRIPTION	PART NUMBER		QTY.
29038	Moulding (quarter outside)	Black vinyl insert-adhesive backed-57" long-cut to fit	D4GZ 16003-A	R.H. and L.H.	2
		Bright finish	♦D4GY 16003-A	R.H. and L.H.	2
29038-9	Moulding (outside lower rear)	◊Black vinyl insert	(RH)♦D4GY 6529038-AA	(LH)♦D4GY 6529039-AA	1
		◊Brown vinyl insert	(RH)♦D4GY 6529038-AT	(LH)♦D4GY 6529039-AT	1
		◊Copper vinyl insert	(RH)★D4WY 6529038-BC	★(LH)♦D4WY 6529039-BC Not replaced (4/79)	1
		◊Gold vinyl insert	(RH)★D4GY 6529038-AY Not replaced (4/84)	(LH)★D4GY 6529039-AY	1
		◊Green vinyl insert	(RH)♦D4GY 6529038-AR	(LH)♦D4GY 6529039-AR	1
		◊Silver blue vinyl insert	(RH)★D4WY 6529038-BB Not replaced (4/84)	(LH)★D4WY 6529039-BB	1
		◊Silver gray vinyl insert	(RH)♦D4WY 6529038-BP	(LH)♦D4WY 6529039-BP	1
		◊White vinyl insert	(RH)♦D4GY 6529038-AW	(LH)♦D4GY 6529039-AW	1
29076-7	Moulding (quarter outside lower front)	◊Black vinyl insert	(RH)♦D4GY 6529076-AA	(LH)♦D4GY 6529077-AA	1
		◊Brown vinyl insert	(RH)★D4GY 6529076-AT	(LH)★D4GY 6529077-AT	1
		◊Copper vinyl insert	(RH)★D4WY 6529076-AC	(LH)★D4WY 6529077-AC Not replaced (4/83)	1
		◊Silver blue vinyl insert	(RH)★D4WY 6529076-AB	(LH)★D4WY 6529077-AB	1
		◊Silver gray vinyl insert	(RH)♦D4WY 6529076-BP	(LH)♦D4WY 6529077-BP	1
		◊White vinyl insert	(RH)♦D4GY 6529076-AW	(LH)♦D4GY 6529077-AW	1
29164-5	Moulding (quarter wheel opening)		(RH)♦D4GY 6529164-A	(LH)♦D4GY 6529165-A	1

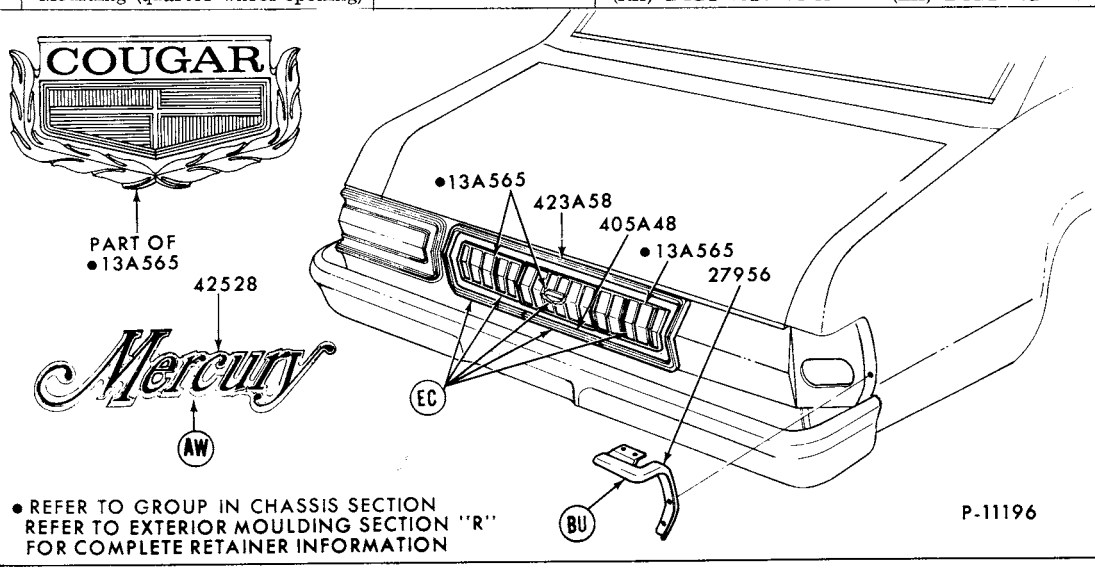

• REFER TO GROUP IN CHASSIS SECTION
REFER TO EXTERIOR MOULDING SECTION "R"
FOR COMPLETE RETAINER INFORMATION

1974 COUGAR - BACK END

GROUP NUMBER	PART NAME	DESCRIPTION	PART NUMBER		QTY.
27956-7	Filler (quarter panel rear lamp opening)	Paint to match	(RH)♦D4GY 6527956-A	(LH)♦D4GY 6527957-A	1
405A48	Moulding (fuel filler door)		♦D4WY 65405A48-A		1
423A58	Moulding (lower back panel)		♦D4WY 65423A58-A		1
42528	Plate (name)	"Mercury"	♦D4GY 6542528-A		1

◊ For color verification, refer to the vinyl roof swatches in the 1974 salesman's color and upholstery selections guide.
♦ Includes attaching parts

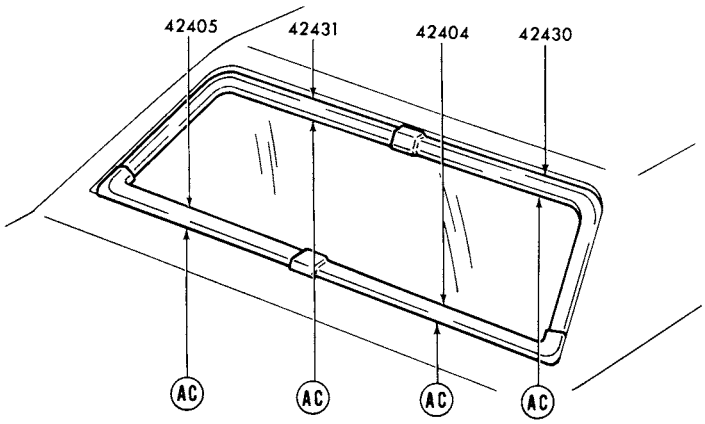

REFER TO EXTERIOR MOULDING SECTION "R" FOR COMPLETE RETAINER INFORMATION

P-12457

1974 COUGAR - BACK WINDOW

GROUP NUMBER	PART NAME	DESCRIPTION	PART NUMBER	QTY.
42404-5	Moulding (back window outside lower)		(RH)♦D4OZ 6542404-A (LH)♦D4OZ 6542405-A	1
42430-1	Moulding (back window outside upper)		(RH)♦D4OZ 6542430-A (LH)♦D4OZ 6542431-A	1

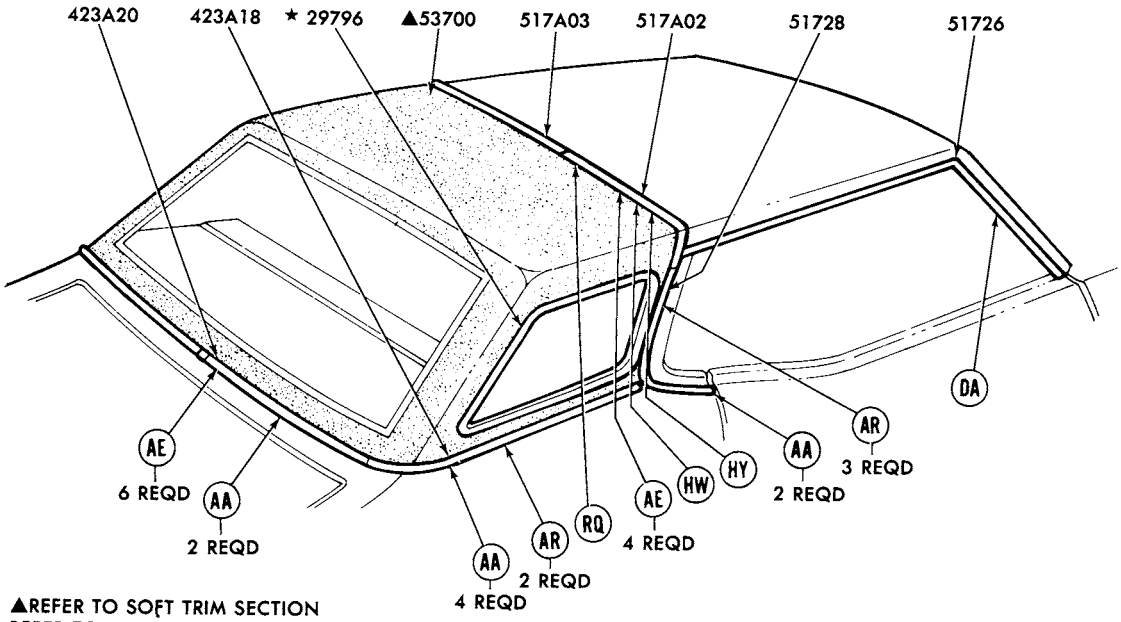

▲REFER TO SOFT TRIM SECTION
REFER TO EXTERIOR MOULDING SECTION "R" FOR COMPLETE RETAINER INFORMATION

P-12817

1974 COUGAR - ROOF and BACK BELT - w/HALF VINYL ROOF

♦ Includes attaching parts

COPYRIGHT © 1986 — FORD MOTOR COMPANY — DEARBORN, MICHIGAN

1974 COUGAR - ROOF and BACK BELT -w/HALF VINYL ROOF - cont'd.

GROUP NUMBER	PART NAME	DESCRIPTION	PART NUMBER		QTY.
29796-7	Moulding (opera window outside)		(RH)★D4WY 6529796-B Not replaced (3/82)	(LH)★D4WY 6529797-B Not replaced (4/83)	1
423A18-9	Moulding (back belt outside side)		(RH)♦D4GY 65423A18-A	(LH)♦D4GY 65423A19-A	1
423A20	Moulding (back belt outside)		♦D4OZ 65423A20-H		1
517A02-3	Moulding (roof outside side)		(RH)♦D4WY 65517A02-A	(LH)♦D4WY 65517A03-A	1
51726-9	Moulding (roof drip side finish)	Front	(RH)♦D4WY 6551726-A	(LH)♦D4WY 6551727-A	1
		Rear	(RH)♦D3GY 6551728-A	(LH)♦D3GY 6551729-A	1

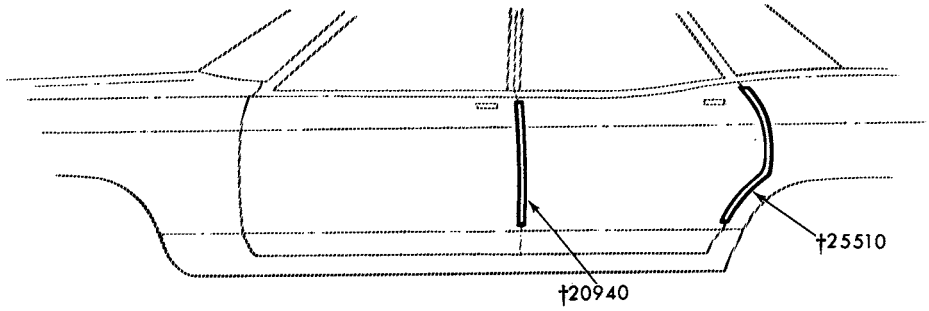

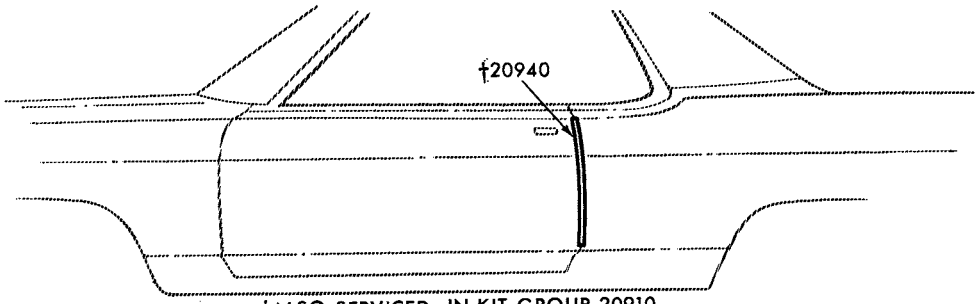

†ALSO SERVICED IN KIT-GROUP 20910

P-10061

1974 COUGAR - DOOR EDGE GUARDS

GROUP NUMBER	PART NAME	DESCRIPTION	PART NUMBER		QTY.
20910	Moulding kit (door edge guard)		D4GY 6520910-A		1
20940-1	Moulding (front door edge guard)		(RH) D4GY 6520940-A	(LH) D4GY 6520941-A	1

♦ Includes attaching parts

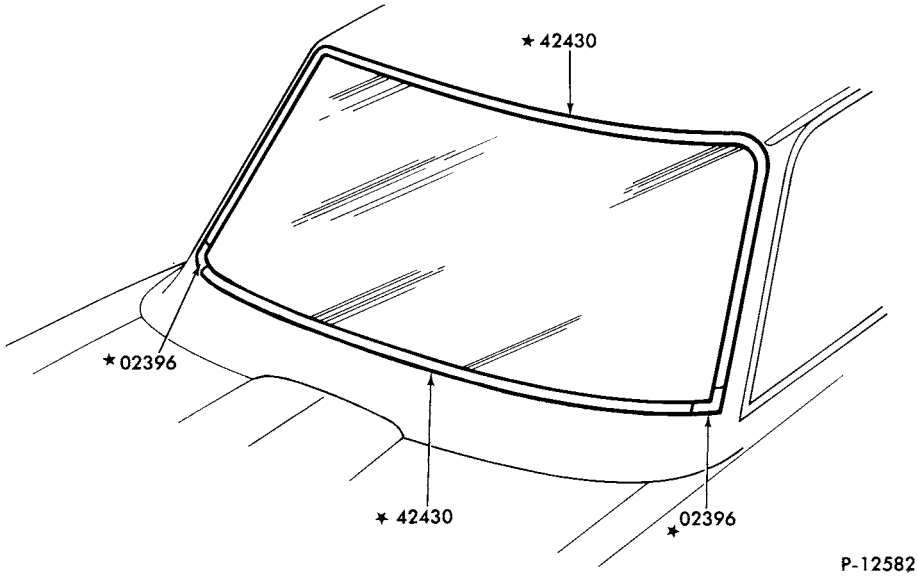

1974 CAPRI - WINDSHIELD

GROUP NUMBER	PART NAME	DESCRIPTION	PART NUMBER	QTY.
02396	Cover (windshield moulding joint)		★ D0RY 6202396-A	2
42430	Moulding (windshield upper and lower)	Nylon-144" long-cut to fit	★ D0RY 6242430-A	AR

★ Includes attaching parts

COPYRIGHT © 1986 — FORD MOTOR COMPANY — DEARBORN, MICHIGAN

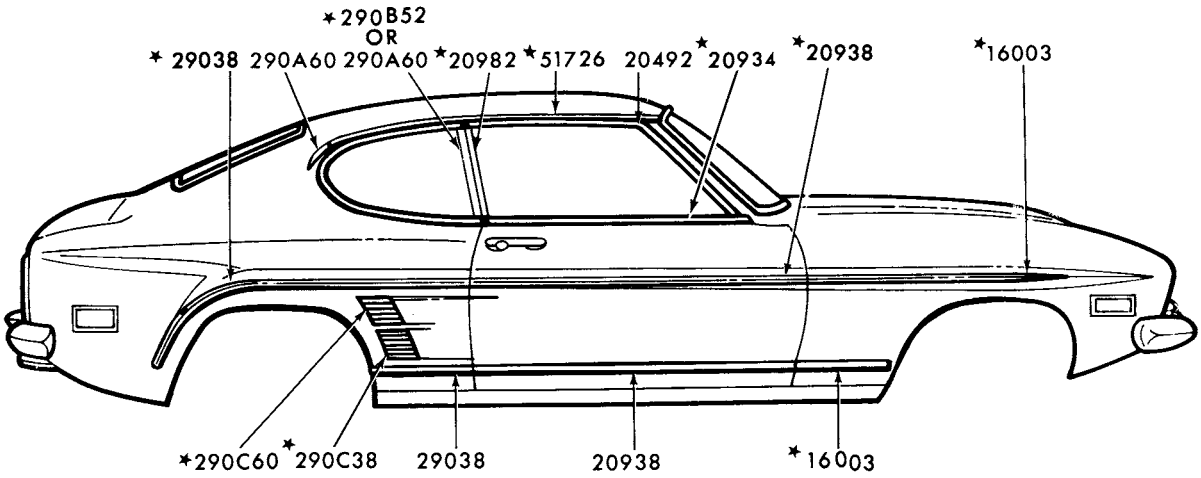

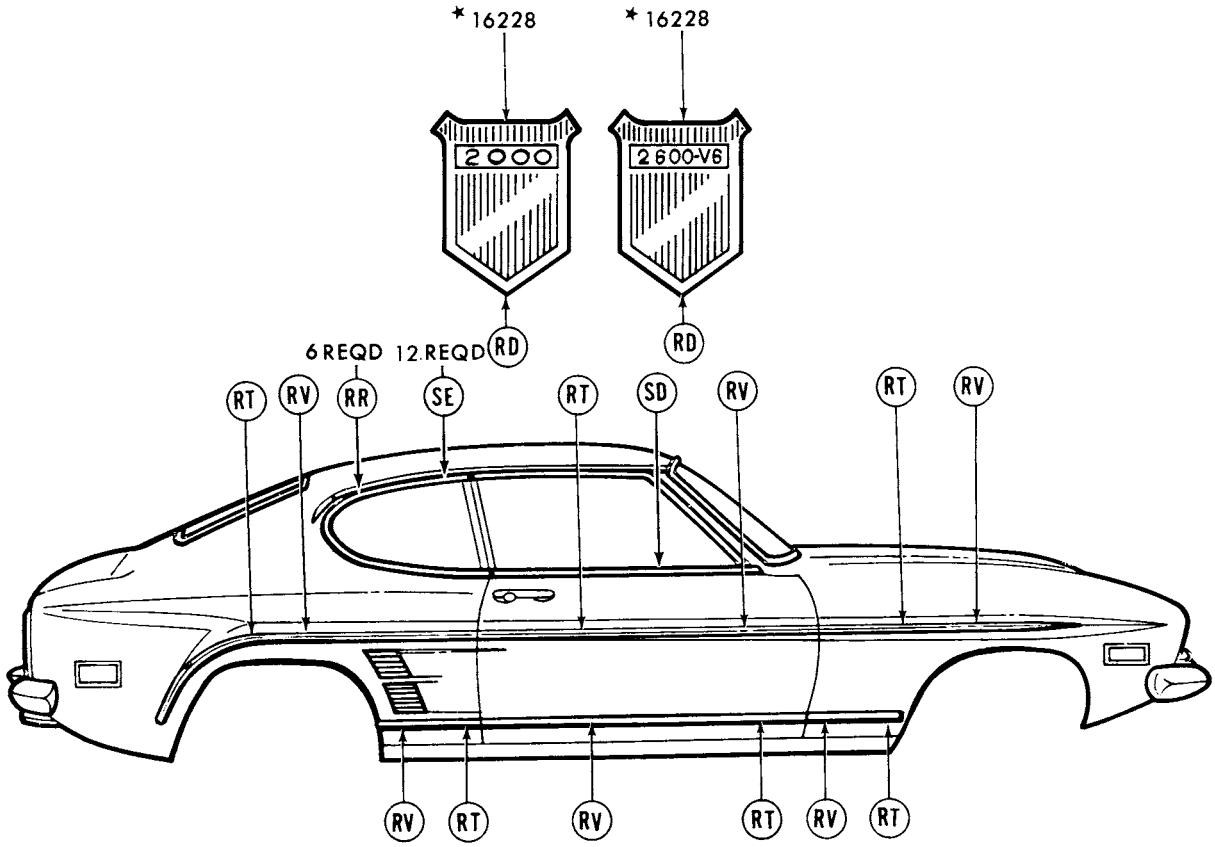

REFER TO EXTERIOR MOULDING SECTION 'R' FOR COMPLETE RETAINER INFORMATION

P-10534

1974 CAPRI - SIDE

1974 CAPRI - SIDE - cont'd.

GROUP NUMBER	PART NAME	DESCRIPTION	PART NUMBER		QTY.
16003	Moulding (front fender side)	Upper-adhesive backed-53" long-cut to fit	★ D2RY 16003-B	R.H. and L.H.	AR
		Lower	★ D0RY 16003-B	R.H. and L.H.	2
16228	Ornament (front fender)	"2000"	★ D3RY 16228-D	R.H. and L.H.	2
		"2800"	★ D4RY 16228-A	R.H. and L.H.	2
20492-3	Moulding (front door window frame top)		(RH)★D0RY 6220492-A	(LH)★D0RY 6220493-A	1
20934-5	Moulding and weatherstrip (front door outside belt)		(RH)★D4RY 6220934-A Not replaced (4/84)	(LH)★D4RY 6220935-A	1
20938	Moulding (front door outside)	Upper-adhesive backed-53" long-cut to fit	★ D2RY 16003-B	R.H. and L.H.	2
		Lower	D0RY 6220938-B	R.H. and L.H.	2
20982-3	Moulding (front door window frame rear)		(RH)★D0RY 6220982-A	(LH)★D0RY 6220983-A	1
29038	Moulding (quarter outside)	Lower	D0RY 6229038-B	R.H. and L.H.	2
		Upper-adhesive backed-53" long-cut to fit	★ D2RY 16003-B	R.H. and L.H.	AR
290C38-9	Grille (quarter panel lower)		(RH)★D3RY 62290C38-A	(LH)★D3RY 62290C39-A	1
290B52-3	Moulding (quarter window outside rear)	W/fixed quarter window	(RH)★D4RY 62290B52-A	(LH)★D4RY 62290B53-A	1
290A60-1	Moulding (quarter window outside upper)	W/movable quarter window	(RH) D0RY 62290A60-A	(LH) D0RY 62290A61-A	1
		Roof drip side finish moulding-w/vinyl roof-rear	(RH)★D0RY 62290A60-B	(LH)★D0RY 62290A61-B	1
290C60-1	Grille (quarter panel upper)		(RH)★D3RY 62290C60-A	(LH)★D3RY 62290C61-A	1
51726-7	Moulding (roof drip side finish)	W/o vinyl roof	(RH)★D0RY 6251726-A Not replaced (5/82)	(LH)★D0RY 6251727-A Not replaced (5/82)	1
		W/vinyl roof-front	(RH)★D0RY 6251726-B Not replaced (5/82)	(LH)★D0RY 6251727-B Not replaced (5/82)	1
		W/vinyl roof-rear	Refer to group 290A60-1		

COPYRIGHT © 1986 — FORD MOTOR COMPANY — DEARBORN, MICHIGAN

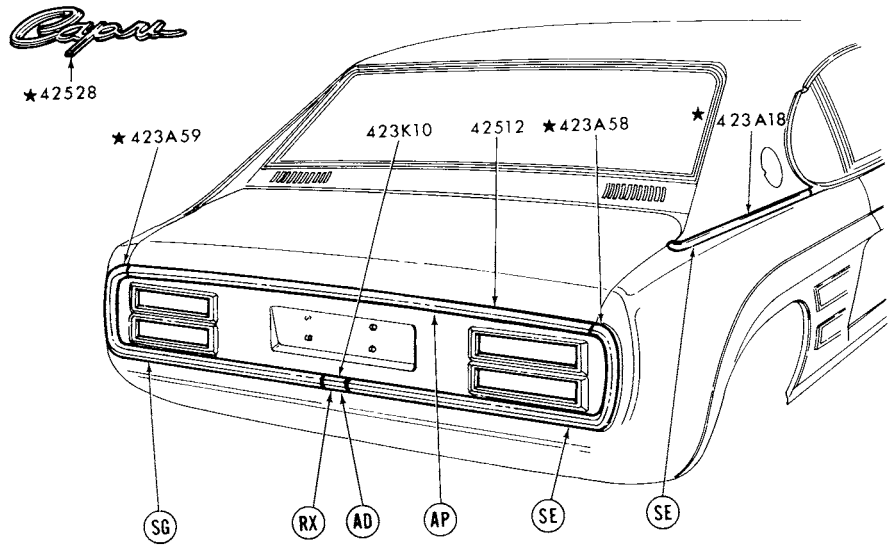

P-10533

1974 CAPRI - BACK END

GROUP NUMBER	PART NAME	DESCRIPTION	PART NUMBER	QTY.
423K10	Cover (back panel moulding joint)		D0RY 62423K10-A	1
423A66	Nut (lower back panel moulding retainer)		D0RY 62423A66-A	12
42512	Moulding (luggage compartment door)		D0RY 6242512-A	1
42528	Plate (name)	"Capri"	★D3RY 6242528-A Not replaced (4/83)	1

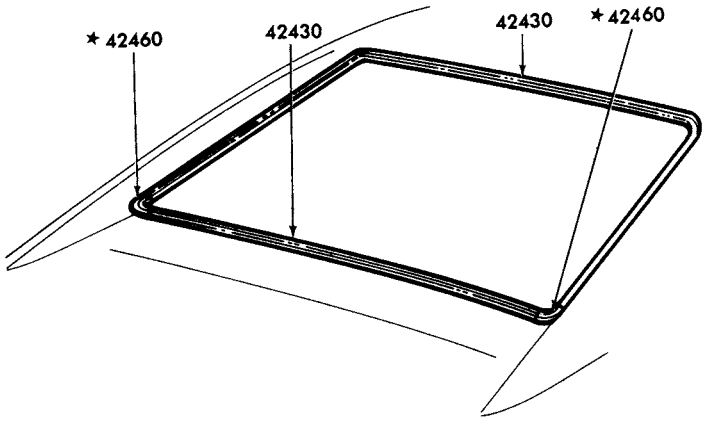

P-12473

1974 CAPRI - BACK WINDOW

GROUP NUMBER	PART NAME	DESCRIPTION	PART NUMBER	QTY.
42430	Moulding (back window outside)	Upper and lower-144" long-cut to fit	D0RY 6242430-A	AR
42460	Cover (back window outside side moulding joint)		* D0RY 6242460-A	2

COPYRIGHT © 1986 — FORD MOTOR COMPANY — DEARBORN, MICHIGAN

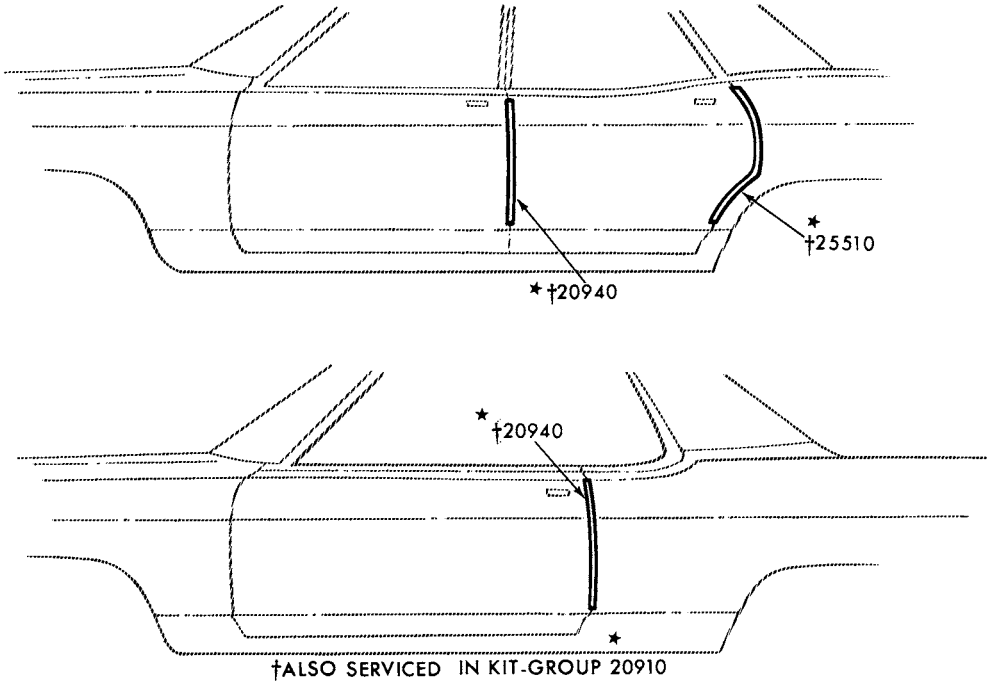

†ALSO SERVICED IN KIT-GROUP 20910

P-10061

1974 CAPRI - DOOR EDGE GUARDS

GROUP NUMBER	PART NAME	DESCRIPTION	PART NUMBER	QTY.
20910	Moulding kit (door edge guard)		★ D2RY 6220910-A	1

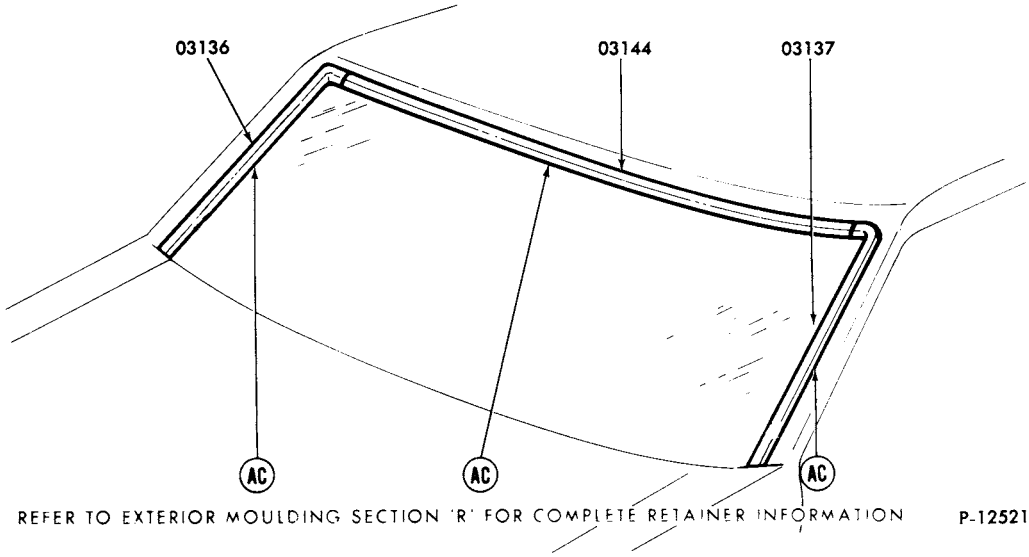

REFER TO EXTERIOR MOULDING SECTION 'R' FOR COMPLETE RETAINER INFORMATION

P-12521

1974 MARK IV - WINDSHIELD

GROUP NUMBER	PART NAME	DESCRIPTION	PART NUMBER	QTY.
03136-7	Moulding (windshield outside side)		(RH)♦ D2SZ 6503136-A (LH)♦ D2SZ 6503137-A	1
03144	Moulding (windshield outside top)		♦ D2SZ 6503144-A	1

♦ Includes attaching parts

COPYRIGHT © 1986 — FORD MOTOR COMPANY — DEARBORN, MICHIGAN

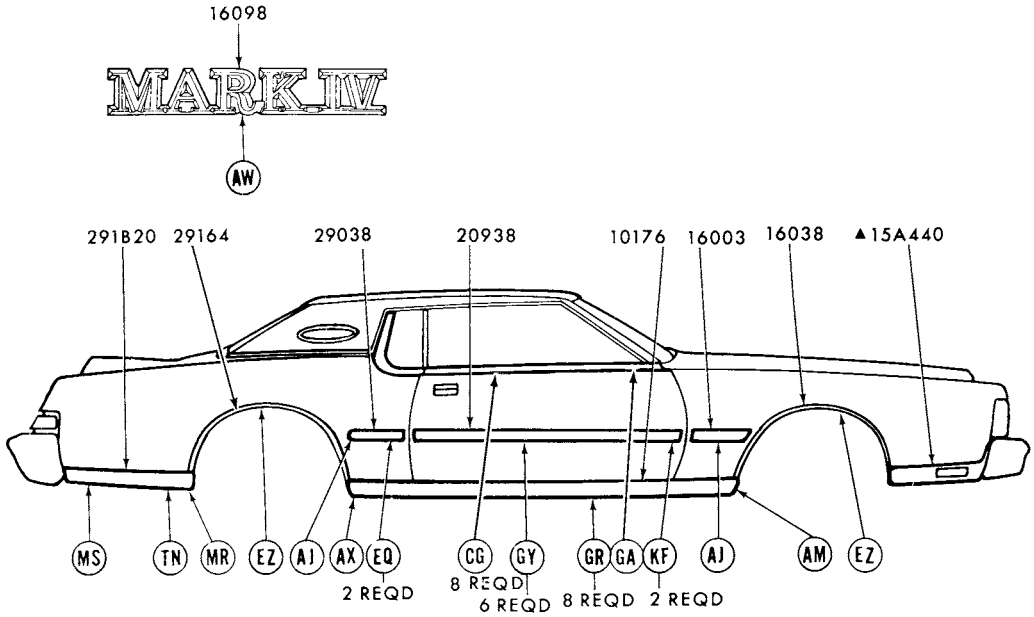

▲REFER TO GROUP IN TEXT SECTION
REFER TO EXTERIOR MOULDING SECTION "R" FOR COMPLETE RETAINER INFORMATION P-11079

1974 MARK IV - SIDE

GROUP NUMBER	PART NAME	DESCRIPTION	PART NUMBER		QTY.
10176-7	Moulding (body rocker panel)		(RH)♦D2SZ 6510176-A	(LH)♦D2SZ 6510177-A	1
16003	Moulding (front fender side)	Black vinyl insert	♦D2LY 16003-B	R.H. and L.H.	2
16038-9	Moulding (front fender wheel opening)		(RH)♦D4LY 16038-A	(LH)♦D4LY 16039-A	1
16098	Plate (front fender name)	"MARK IV"	♦D2LY 16098-A	R.H. and L.H.	2
16D116	Transfer (front fender stripe)	Black-arrow head design	D3LY 16D116-A		2
		Blue	★ D3LY 16D116-G	Not replaced (3/82)	2
		Brown	★ D3LY 16D116-F	Not replaced (2/81)	2
		Gold	★ D3LY 16D116-B		2
		Green	★ D4LY 16D116-B		2
		Lime	★ D3LY 16D116-D	Not replaced (2/81)	2
		Red	D4LY 16D116-A		2
		Silver	★ D3LY 16D116-C	Not replaced (3/82)	2
		Tan	★ D4LY 16D116-C	Not replaced (2/81)	2
		White	★ D3LY 16D116-E		2
20934-5	Moulding and weatherstrip (front door outside belt)		(RH)♦D4LY 6520934-A	(LH)♦D4LY 6520935-A	1
20938-9	Moulding (front door outside)	Black vinyl insert	♦D2LY 6520938-B	R.H. and L.H.	2
29038	Moulding (quarter panel)	Black vinyl insert	♦D2LY 16003-B	R.H. and L.H.	2
291B20-1	Moulding (quarter panel outside lower rear)		(RH)♦D4LY 65291B20-A	(LH)♦D4LY 65291B21-A	1
29164-5	Moulding (quarter wheel opening)		(RH)♦D2LY 6529164-A	(LH)♦D2LY 6529165-A	1
29796-7	Moulding (quarter window outside)	Quarter window	(RH)♦D2LY 6529796-C	(LH)♦D2LY 6529797-C	1
		Opera window	D2LY 6529796-B	R.H. and L.H.	2

♦ Includes attaching parts

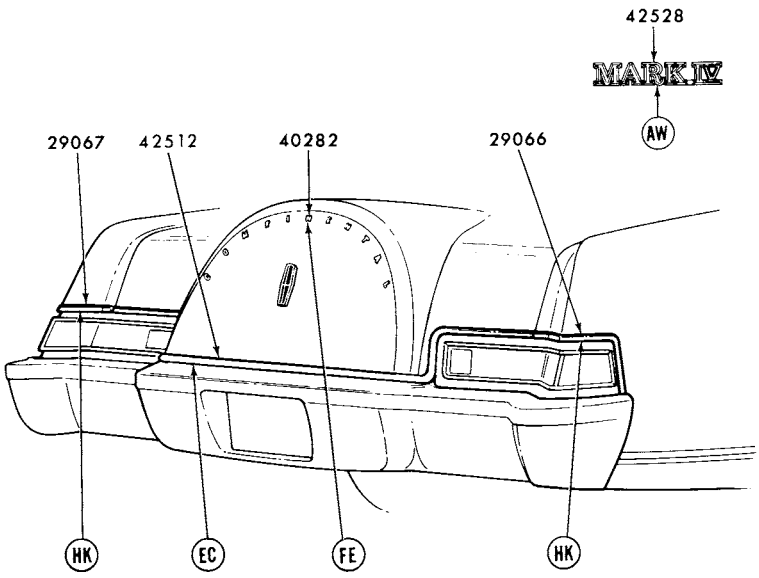

REFER TO EXTERIOR MOULDING SECTION "R" FOR COMPLETE RETAINER INFORMATION P-11078

1974 MARK IV - BACK END

GROUP NUMBER	PART NAME	DESCRIPTION	PART NUMBER	QTY.
29066-7	Moulding (quarter panel outside lower rear)		(RH)♦D4LY 6529066-A (LH)♦D4LY 6529067-A	1
40282	Letter (luggage compartment door)	"C"	★D3VY 16606-K	1
		"O"	★D0LY 6540282-B	1
		"N"	★D0LY 6540282-C	3
		"T"	★D0LY 6540282-D	2
		"I"	★D0LY 6540282-E	1
		"E"	★D0LY 6540282-F	1
		"A"	★D0LY 6540282-G	1
		"L"	♦D7LY 6540282-J	1
42512	Moulding (luggage compartment door)		♦D4LY 6542512-A	1
42528	Plate (name)	"MARK IV"	♦D2LY 6542528-A	1

♦ Includes attaching parts

COPYRIGHT © 1986 — FORD MOTOR COMPANY — DEARBORN, MICHIGAN

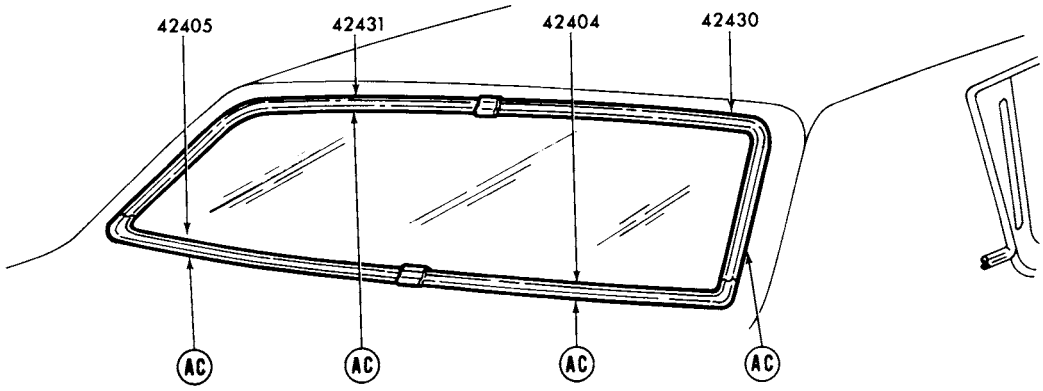

REFER TO EXTERIOR MOULDING SECTION "R" FOR COMPLETE RETAINER INFORMATION

P-12459

1974 MARK IV - BACK WINDOW

GROUP NUMBER	PART NAME	DESCRIPTION	PART NUMBER		QTY.
42404-5	Moulding (back window outside lower)		(RH)♦D2SZ 6542404-A	(LH)♦D2SZ 6542405-A	1
42430-1	Moulding (back window outside upper)		(RH)♦D2SZ 6542430-A	(LH)♦D2SZ 6542431-A	1

♦ Includes attaching parts

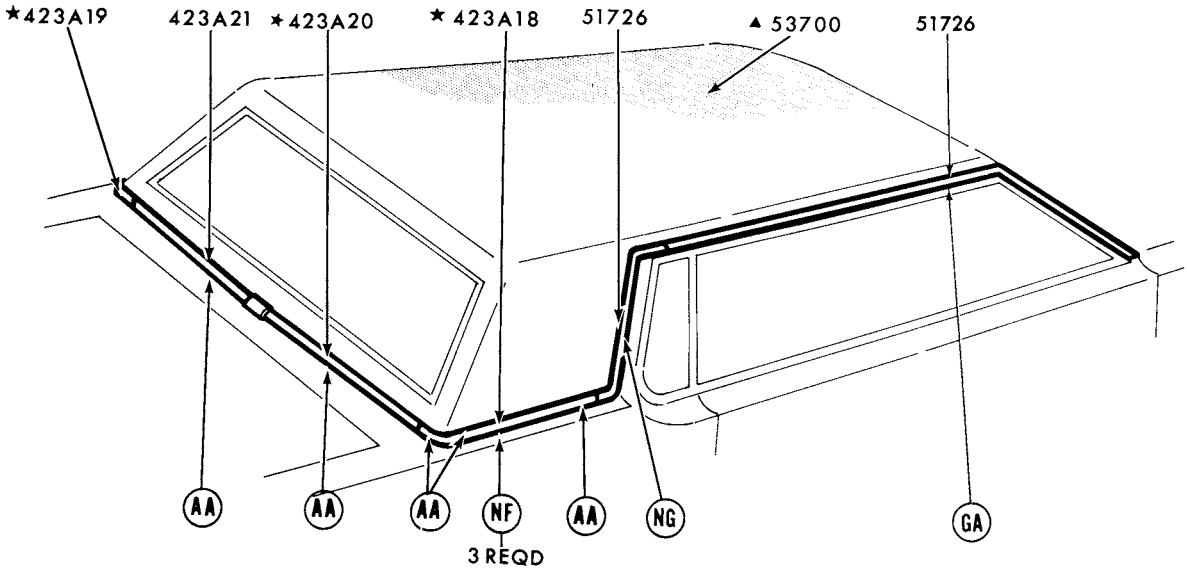

▲REFER TO GROUP IN SOFT TRIM SECTION
REFER TO EXTERIOR MOULDING SECTION'R' FOR COMPLETE RETAINER INFORMATION P-12011

1974 MARK IV - ROOF and BACK BELT

GROUP NUMBER	PART NAME	DESCRIPTION	PART NUMBER		QTY
20934-5	Moulding and weatherstrip (front door outside belt)		(RH)♦D4LY 6520934-A	(LH)♦D4LY 6520935-A	1
29796-7	Moulding (quarter window outside)	Quarter window	(RH)♦D2LY 6529796-C	(LH)♦D2LY 6529797-C	1
		Opera window	★D2LY 6529796-B	R.H. and L.H.	2
423A18-9	Moulding (back belt outside side)		(RH)★D2LY 65423A18-A Not replaced (4/83)	(LH)★D2LY 65423A19-A Not replaced (4/83)	1
423A20-1	Moulding (back belt outside)		(RH)★D2SZ 65423A20-A	(LH)♦D2SZ 65423A21-A	1
51726-7	Moulding (roof drip side finish)	Front	(RH) D2SZ 6551726-B	(LH) D2SZ 6551727-B	1
		Rear	(RH) D2LY 6551726-B	(LH) D2LY 6551727-B	1

♦ Includes attaching parts

COPYRIGHT © 1986 — FORD MOTOR COMPANY — DEARBORN, MICHIGAN

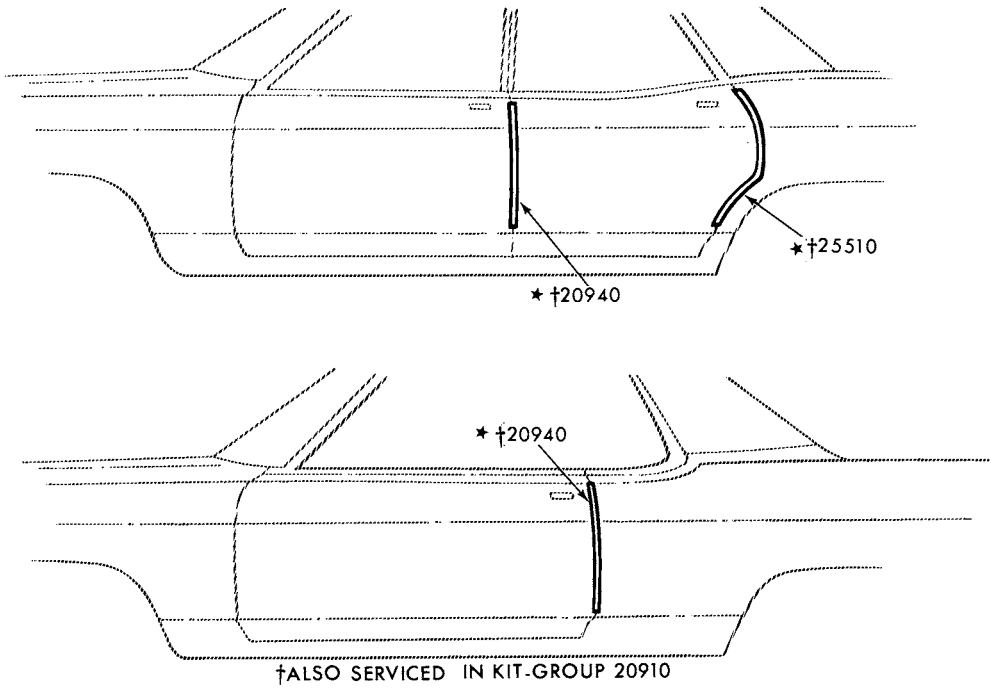

†ALSO SERVICED IN KIT-GROUP 20910

P-10061

1974 MARK IV - DOOR EDGE GUARDS

GROUP NUMBER	PART NAME	DESCRIPTION	PART NUMBER	QTY.
20940-1	Moulding (front door edge guard)		(RH)★D2LY 6520940-A (LH)★D2LY 6520941-A	1

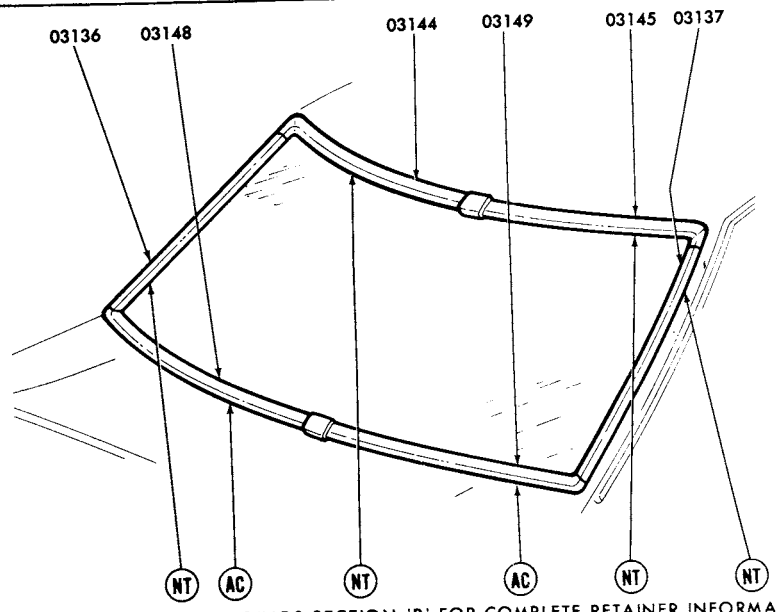

P-12522

REFER TO EXTERIOR MOULDINGS SECTION 'R' FOR COMPLETE RETAINER INFORMATION

1974 BOBCAT - WINDSHIELD

GROUP NUMBER	PART NAME	DESCRIPTION	PART NUMBER		QTY.
03136-7	Moulding (windshield outside side)		(RH)♦D1FZ 6203136-A	(LH)♦D1FZ 6203137-A	1
03144-5	Moulding (windshield outside top)		(RH)♦D1FZ 6203144-A	(LH)♦D1FZ 6203145-A	1
03148-9	Moulding (windshield outside belt)		(RH)♦D4FZ 6203148-A	(LH)♦D4FZ 6203149-A	1

♦ Includes attaching parts

COPYRIGHT © 1986 — FORD MOTOR COMPANY — DEARBORN, MICHIGAN

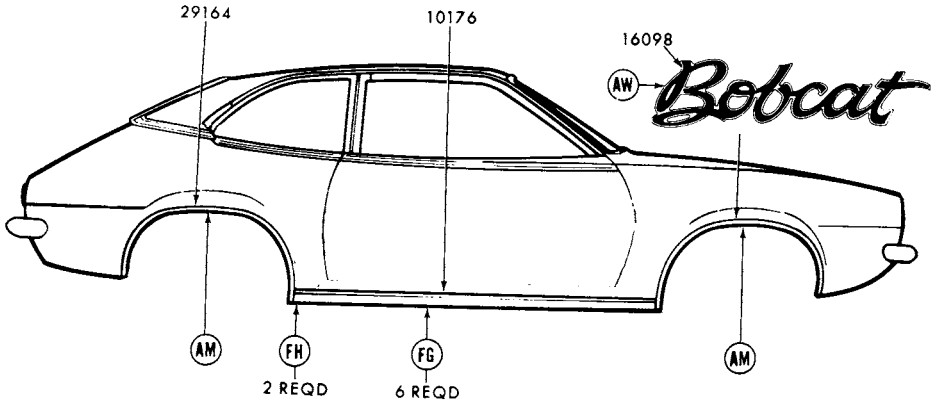

REFER TO EXTERIOR MOULDING SECTION "R" FOR COMPLETE RETAINER INFORMATION P-11414

1974 BOBCAT - BODY TYPES 62 AND 64 - SIDE

GROUP NUMBER	PART NAME	DESCRIPTION	PART NUMBER		QTY.
10176	Moulding (body rocker panel)	64 7/32" long	♦D1FZ 6210176-A	R.H. and L.H.	2
16038-9	Moulding (front fender wheel opening)		(RH)♦D1FZ 16038-A	(LH)♦D1FZ 16039-A	1
16098	Plate (front fender name)	"Bobcat"	♦D5YY 16098-A	R.H. and L.H.	2
29164-5	Moulding (quarter wheel opening)		(RH)♦D1FZ 6229164-A	(LH)♦D1FZ 6229165-A	1

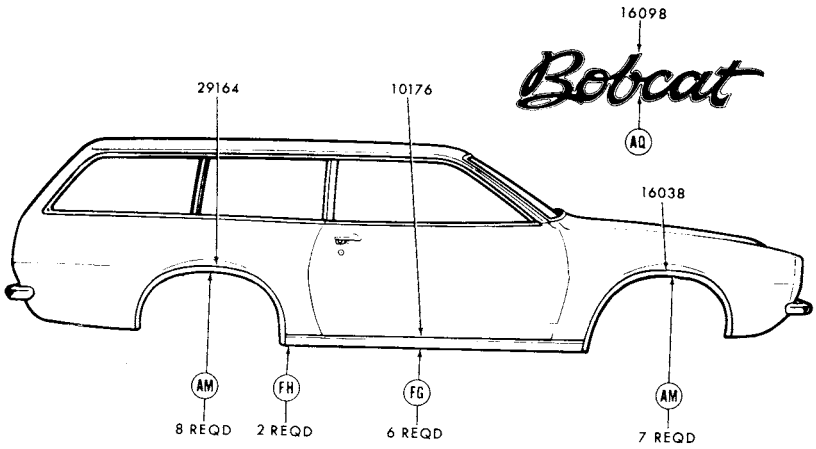

REFER TO EXTERIOR MOULDING SECTION "R" FOR COMPLETE RETAINER INFORMATION P-12069

1974 BOBCAT - BODY TYPE 73 - EXC. VILLAGER - SIDE

GROUP NUMBER	PART NAME	DESCRIPTION	PART NUMBER		QTY.
10176	Moulding (body rocker panel)		♦D1FZ 6210176-A	R.H. and L.H.	2
16038-9	Moulding (front fender wheel opening)	64 7/32" long	(RH)♦D1FZ 16038-A	(LH)♦D1FZ 16039-A	1
16098	Plate (front fender name)	"Bobcat"	♦D5YY 16098-A	R.H. and L.H.	2
29164-5	Moulding (quarter wheel opening)		(RH)♦D2FZ 7329164-A	(LH)♦D2FZ 7329165-A	1

♦ Includes attaching parts

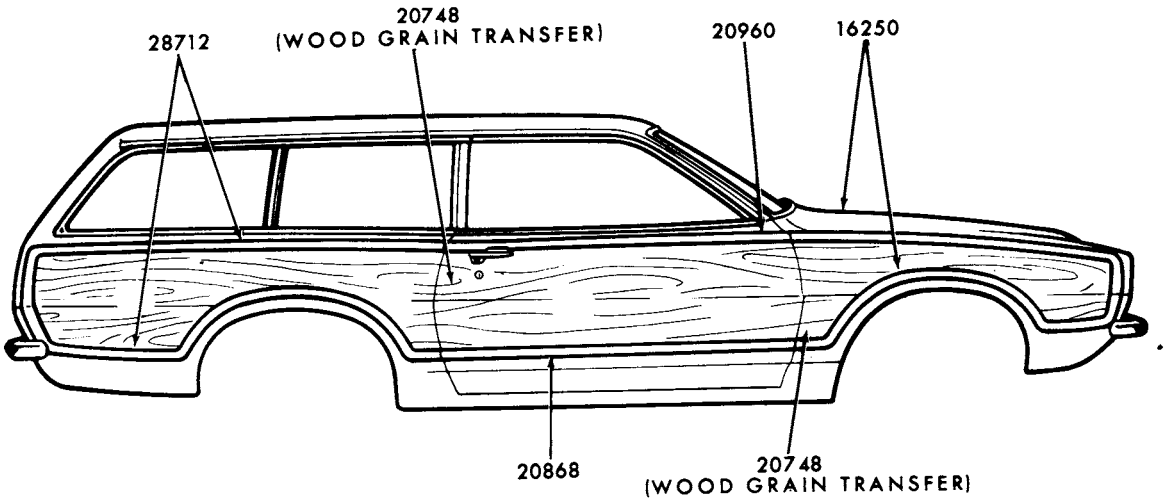

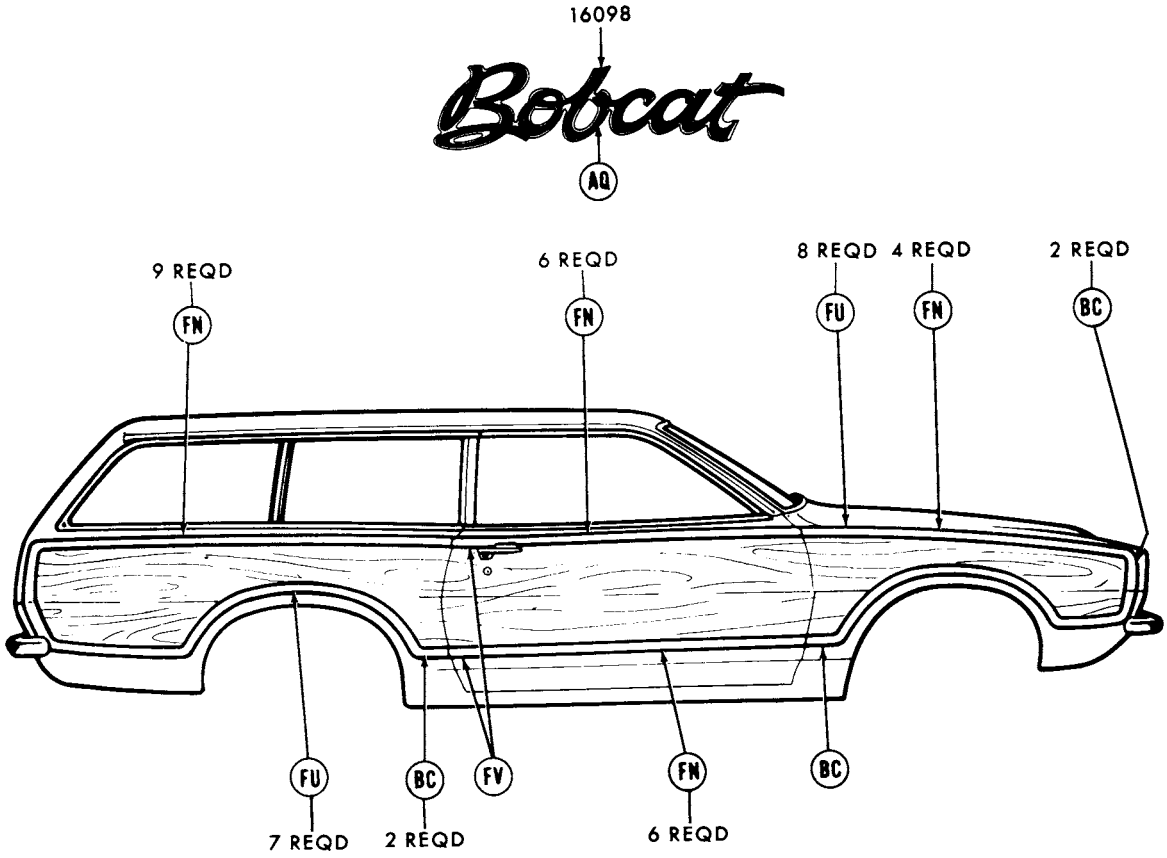

REFER TO EXTERIOR MOULDING SECTION "R" FOR COMPLETE RETAINER INFORMATION

P-12070

1974 BOBCAT - BODY TYPE 73 - VILLAGER - SIDE

COPYRIGHT © 1986 — FORD MOTOR COMPANY — DEARBORN, MICHIGAN

1974 BOBCAT - BODY TYPE 73 - SQUIRE - SIDE - cont'd.

GROUP NUMBER	PART NAME	DESCRIPTION	PART NUMBER		QTY.
16098	Plate (front fender name)	"Bobcat"	♦D5YY 16098-A	R.H. and L.H.	2
16250-1	Rail (front fender outside finish)		(RH)♦D2FZ 16250-A	(LH)♦D2FZ 16251-A	1
20748	Transfer (wood grain)	Cherry wood grain-adhesive type-17" x 60"-cut to fit	D4FZ 7320748-A		AR
20868-9	Rail (front door outside finish lower)		(RH)♦D2FZ 7320868-A	(LH)♦D2FZ 7320869-A	1
20960-1	Rail (front door outside finish upper)		(RH)♦D2FZ 7320960-A	(LH)♦D2FZ 7320961-A	1
28712-3	Rail (quarter outside finish)		(RH)♦D2FZ 7328712-A	(LH)♦D2FZ 7328713-A	1

♦ Includes attaching parts

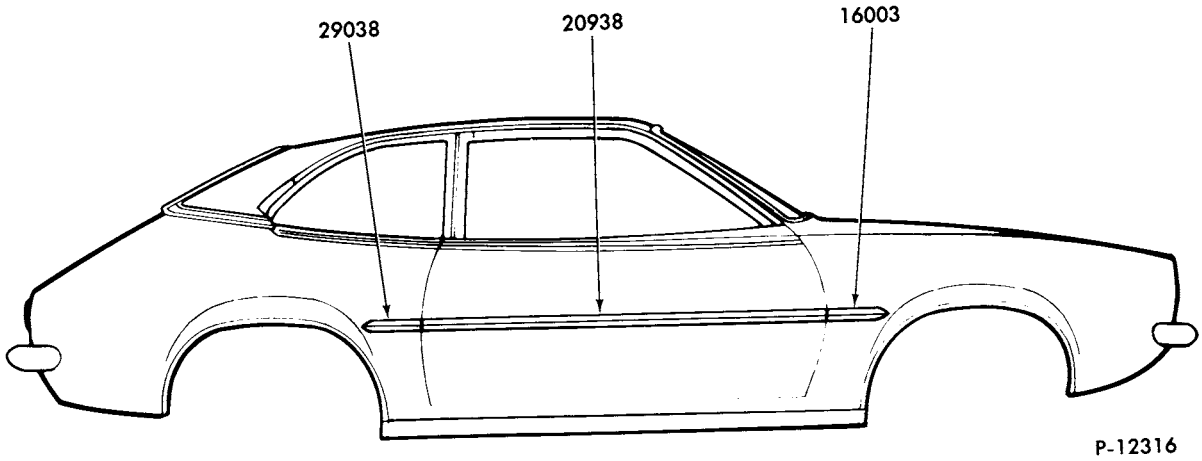

1974 BOBCAT - SIDE PROTECTION

GROUP NUMBER	PART NAME	DESCRIPTION	PART NUMBER		QTY.
16003	Moulding (front fender side)	Black vinyl insert	♦D2FZ 16003-C	R.H. and L.H.	2
		Black vinyl insert-adhesive backed-cut to fit	D5DZ 5425532-D	R.H. and L.H.	2
		Brown vinyl insert	♦D4FZ 16003-B	R.H. and L.H.	2
20938	Moulding (front door outside)	Black vinyl insert	♦D2FZ 6220938-B	R.H. and L.H.	2
		Black vinyl insert-adhesive backed-cut to fit	D1OZ 6529038-B	R.H. and L.H.	2
		Brown vinyl insert-"Before 3/15/73"	♦D3FZ 7320938-A	R.H. and L.H.	2
		Brown vinyl insert-"From 3/15/73"	♦D4FZ 7320938-A	R.H. and L.H.	2
29038	Moulding (quarter panel)	Black vinyl insert	♦D2FZ 16003-C	R.H. and L.H.	2
		Black vinyl insert-adhesive backed-cut to fit	D5DZ 5425532-D	R.H. and L.H.	2
		Brown vinyl insert	♦D4FZ 16003-B	R.H. and L.H.	2

♦ Includes attaching parts

COPYRIGHT © 1986 — FORD MOTOR COMPANY — DEARBORN, MICHIGAN

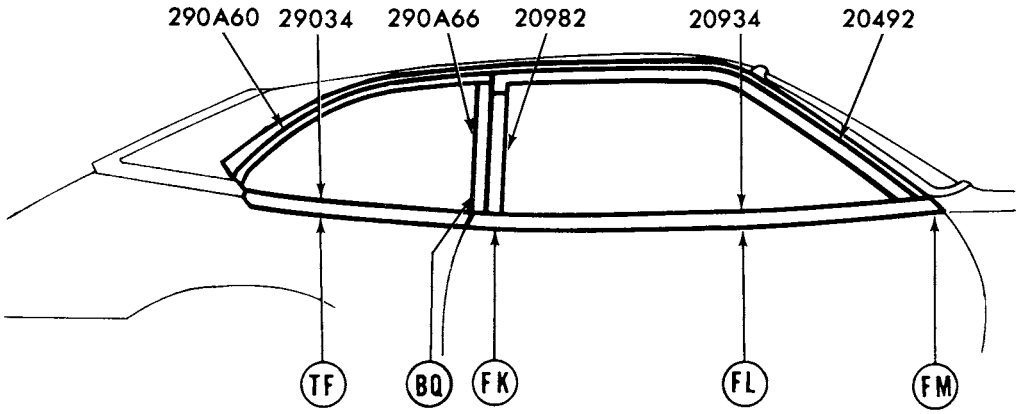

P-12497

REFER TO EXTERIOR MOULDING SECTION 'R' FOR COMPLETE RETAINER INFORMATION

1974 BOBCAT - BODY TYPES 62 and 64 - DOOR and QUARTER WINDOW FRAME

GROUP NUMBER	PART NAME	DESCRIPTION	PART NUMBER		QTY.
20492-3	Moulding (front door window frame top)		(RH) D1FZ 6220492-A	(LH) D1FZ 6220493-A	1
20934-5	Moulding (front door outside belt)	R.H.-w/mirror	♦D4FZ 6220934-B		1
		R.H.-w/o mirror	♦D4FZ 6220934-A		1
		L.H.	♦D4FZ 6220935-A		1
20982-3	Moulding (front door window frame rear)		(RH) D2FZ 6220982-A	(LH) D2FZ 6220983-A	1
29034-5	Moulding (quarter outside belt)		(RH)♦D2FZ 6229034-A	(LH)♦D2FZ 6229035-A	1
290A60-1	Moulding (quarter window outside upper)	Two piece design-w/stationary window	(RH)♦D2FZ 62290A60-C	(LH)♦D2FZ 62290A61-C	1
		One piece design-w/stationary window	(RH)♦D2FZ 62290A60-B	(LH)♦D2FZ 62290A61-B	1
290A66-7	Moulding (quarter window outside front)	Two piece design-w/stationary window	(RH)♦D2FZ 62290A66-B	(LH)♦D2FZ 62290A67-B	1

♦ Includes attaching parts

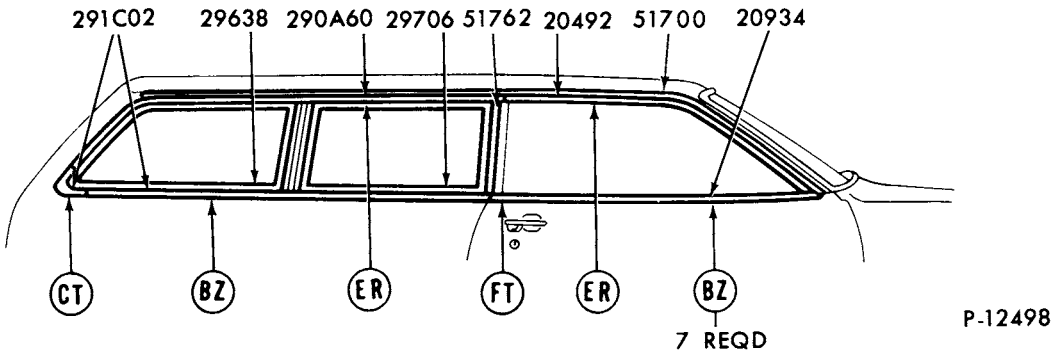

REFER TO EXTERIOR MOULDING SECTION 'R' FOR COMPLETE RETAINER INFORMATION

1974 BOBCAT - BODY TYPE 73 - DOOR and QUARTER WINDOW FRAME

GROUP NUMBER	PART NAME	DESCRIPTION	PART NUMBER	QTY.
20492-3	Moulding (front door window frame top)		(RH) D2FZ 7320492-B (LH) D2FZ 7320493-B	1
20934-5	Moulding (front door outside belt)	R.H.-w/mirror	♦D2FZ 7320934-D	1
		R.H.-w/o mirror	♦D2FZ 7320934-C	1
		L.H.	♦D2FZ 7320935-B	1
290A60-1	Moulding (quarter window outside upper)		(RH)♦D2FZ 73290A60-A (LH)♦D2FZ 73290A61-A	1
291C02-3	Moulding (quarter window outside lower rear)		(RH)♦D2FZ 73291C02-A (LH)♦D2FZ 73291C03-A	1
29638-9	Moulding (rear quarter window outside front)		(RH) D4FZ 7329638-A (LH) D4FZ 7329639-A	1
29706-7	Moulding (front quarter window)	Serviced only in assy.-refer to group 29706-11 in text section		

♦ Includes attaching parts

COPYRIGHT © 1986 — FORD MOTOR COMPANY — DEARBORN, MICHIGAN

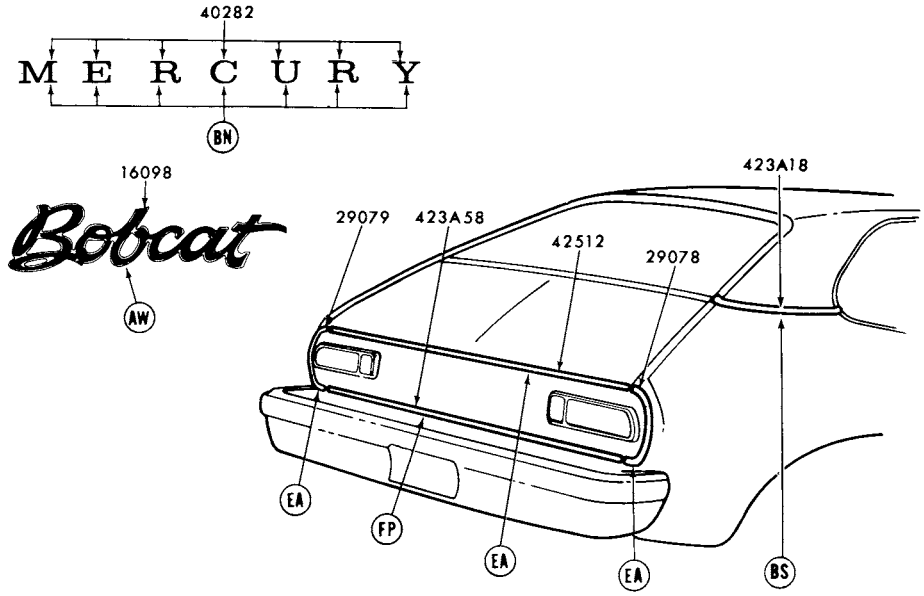

REFER TO EXTERIOR MOULDING SECTION "R" FOR COMPLETE RETAINER INFORMATION P-11415

1974 BOBCAT - BODY TYPES 62 and 64 - BACK END

GROUP NUMBER	PART NAME	DESCRIPTION	PART NUMBER	QTY.
16098	Plate (name)	"Bobcat"	♦D5YY 16098-A	1
29078-9	Moulding (quarter panel extension)		(RH)♦D4FZ 6229078-A (LH)♦D4FZ 6229079-A	1
40282	Letter (luggage compartment door or tailgate)	"M"	♦D3MY 7140282-A	1
		"E"	♦D3MY 7140282-B	1
		"R"	♦D3MY 7140282-C	2
		"C"-Body type 62B	♦D4FZ 6240282-A	1
		"C"-Body type 64B	♦D3MY 7140282-D	1
		"U"	♦D3MY 7140282-E	1
		"Y"	♦D3MY 7140282-F	1
423A18-9	Moulding (back belt outside side)	Body type 62-w/vinyl roof	(RH)♦D1FZ 62423A18-B (LH)♦D1FZ 62423A19-B	1
		Body type 64-w/vinyl roof	(RH)♦D2FZ 64423A18-A (LH)♦D2FZ 64423A19-A	1
423A58	Moulding (lower back panel)	Lower	♦D4FZ 62423A58-A	1
42512	Moulding (luggage compartment door)		♦D4FZ 6242512-A	1

♦ Includes attaching parts

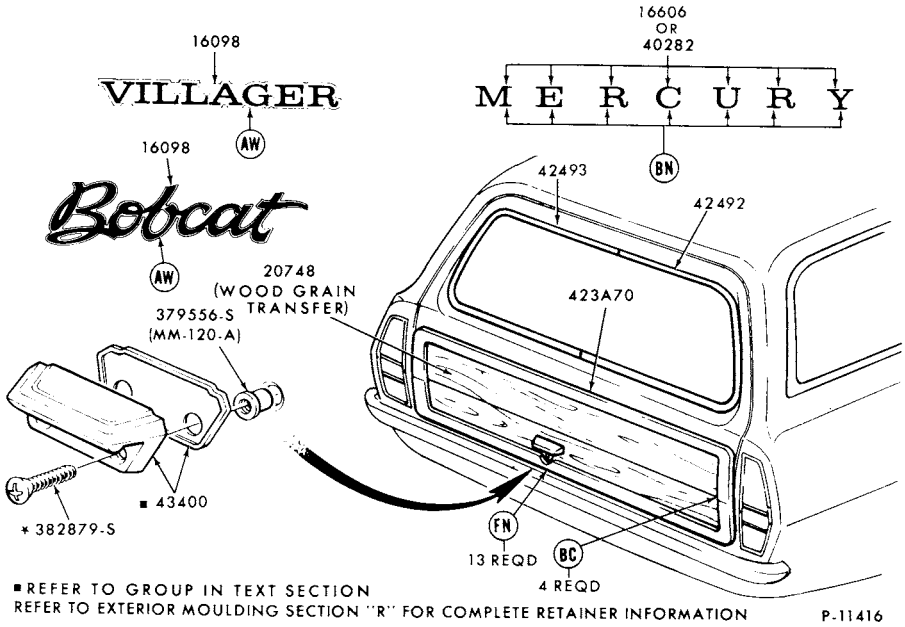

1974 BOBCAT - BODY TYPE 73 - BACK END

GROUP NUMBER	PART NAME	DESCRIPTION	PART NUMBER	QTY.
16098	Plate (liftgate door)	"Bobcat"	♦D5YY 16098-A	1
		"Villager"	♦D2GY 16098-B	1
20748	Transfer (wood grain)	Cherry wood grain-adhesive type-17" x 60"-cut to fit	D4FZ 7320748-A	AR
40282	Letter (luggage compartment door or tailgate)	"M"	♦D3MY 7140282-A	1
		"E"	♦D3MY 7140282-B	1
		"R"	♦D3MY 7140282-C	2
		"C"	♦D3MY 7140282-D	1
		"U"	♦D3MY 7140282-E	1
		"Y"	♦D3MY 7140282-F	1
423A70	Rail (tailgate outside finish upper)		♦D2FZ 73423A70-A	1
42492-3	Moulding (back window side)		(RH) D2FZ 7342492-A (LH) D2FZ 7342493-A	1

♦ Includes attaching parts

COPYRIGHT © 1986 — FORD MOTOR COMPANY — DEARBORN, MICHIGAN

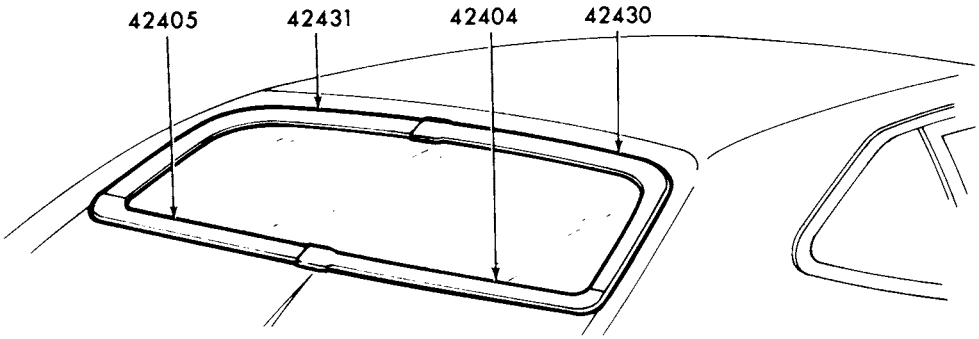

P-12464

1974 BOBCAT - BODY TYPE 62 - BACK WINDOW

GROUP NUMBER	PART NAME	DESCRIPTION	PART NUMBER	QTY.
42404-5	Moulding (back window outside lower)		(RH) D1FZ 6242404-A (LH) D1FZ 6242405-A	1
42430-1	Moulding (back window outside upper)		(RH) D1FZ 6242430-A (LH) D1FZ 6242431-A	1

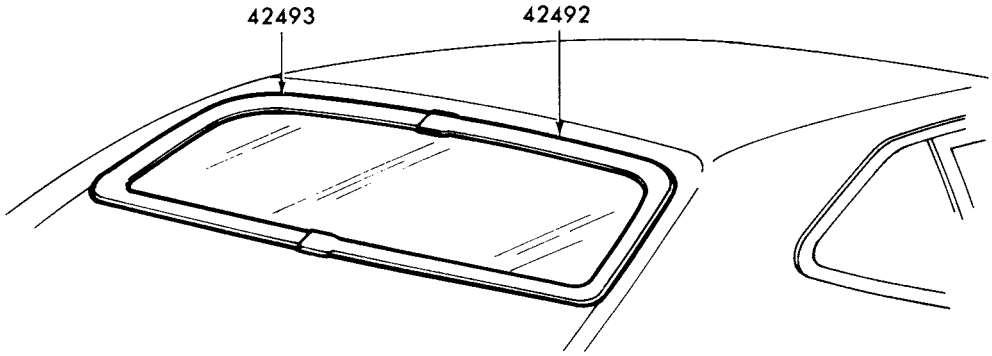

P-12465

1974 BOBCAT - BODY TYPE 64 - BACK WINDOW

GROUP NUMBER	PART NAME	DESCRIPTION	PART NUMBER	QTY.
42492-3	Moulding (back window outside side)		(RH) D2FZ 6442492-A (LH) D2FZ 6442493-A	1

♦ Includes attaching parts

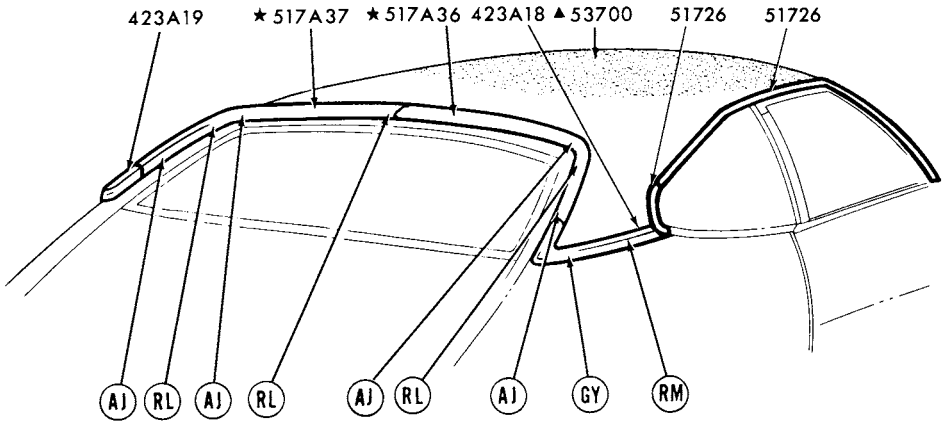

▲REFER TO GROUP IN SOFT TRIM SECTION
REFER TO EXTERIOR MOULDING SECTION "R" FOR COMPLETE RETAINER INFORMATION P-12186

1974 BOBCAT - BODY TYPES 62 and 64 - ROOF and BACK BELT

GROUP NUMBER	PART NAME	DESCRIPTION	PART NUMBER		QTY.
423A18-9	Moulding (back belt outside side)	Body type 62	(RH)♠D1FZ 62423A18-B	(LH)♠D1FZ 62423A19-B	1
		Body type 64	(RH)♠D2FZ 64423A18-A	(LH)♠D2FZ 64423A19-A	1
51726-7	Moulding (roof drip side finish)	Front-w/o vinyl roof	(RH) D4FZ 6251726-C	(LH) D4FZ 6251727-C Not replaced (4/83)	1
		Rear-w/o vinyl roof	(RH) D4FZ 6251726-A	(LH) D4FZ 6251727-A	1
		Front-w/ vinyl roof	(RH) D4FZ 6251726-D	(LH) D4FZ 6251727-D	1
		Rear-w/vinyl roof	(RH) D4FZ 6251726-B	(LH) D4FZ 6251727-B	1

COPYRIGHT © 1986 — FORD MOTOR COMPANY — DEARBORN, MICHIGAN

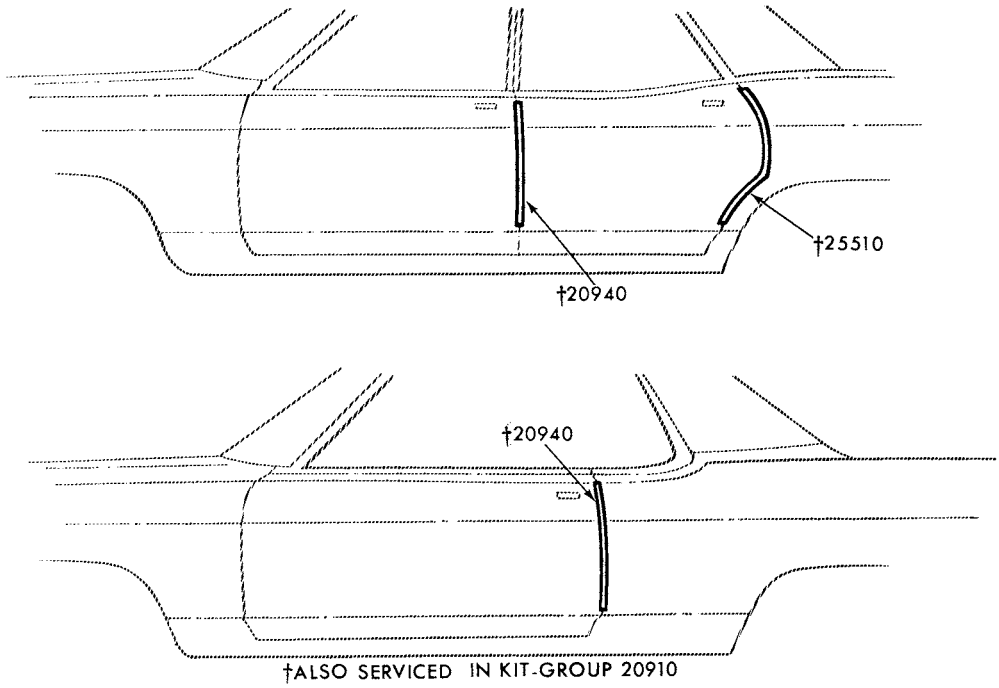

1974 BOBCAT - DOOR EDGE GUARDS

GROUP NUMBER	PART NAME	DESCRIPTION	PART NUMBER		QTY.
20910	Moulding kit (door edge guard)	Bright	★D1FZ 6220910-A	Not replaced (6/83)	1
		Wood grain	D2FZ 7320910-A		1
20940-1	Moulding (door edge guard)	Bright	(RH) D2FZ 6220940-A	(LH) D2FZ 6220941-A	1
		Wood grain	(RH) D3FZ 7320940-A	(LH) D3FZ 7320941-A	1

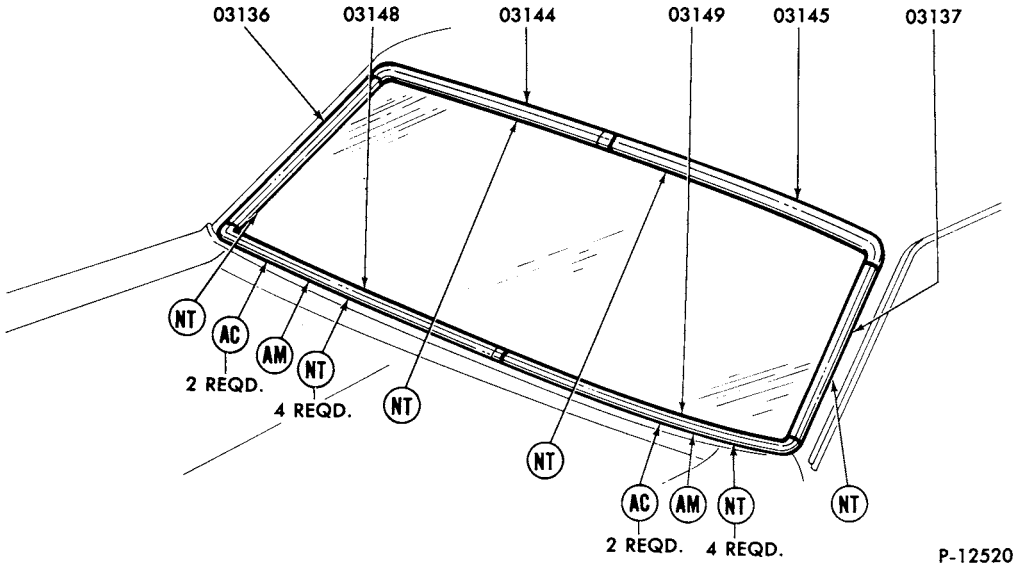

REFER TO EXTERIOR MOULDINGS SECTION 'R' FOR COMPLETE RETAINER INFORMATION

1974 COMET - WINDSHIELD

GROUP NUMBER	PART NAME	DESCRIPTION	PART NUMBER		QTY.
03136-7	Moulding (windshield outside side)		(RH)♦D0DZ 6203136-A	(LH)♦D0DZ 6203137-A	1
03144-5	Moulding (windshield outside top)		(RH)♦ D0DZ 6203144-A	(LH)♦D0DZ 6203145-A	1
03148-9	Moulding (windshield outside belt)		(RH)♦D0DZ 6203148-A	(LH)♦ D0DZ 6203149-A	1

♦ Includes attaching parts

COPYRIGHT © 1986 — FORD MOTOR COMPANY — DEARBORN, MICHIGAN

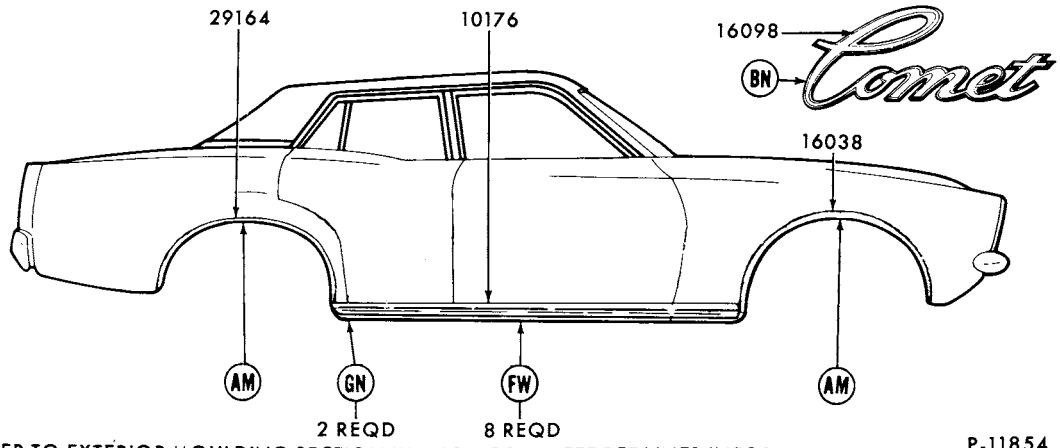

REFER TO EXTERIOR MOULDING SECTION "R" FOR COMPLETE RETAINER INFORMATION

1974 COMET - BODY TYPE 54 - SIDE - W/O LUXURY DECOR

GROUP NUMBER	PART NAME	DESCRIPTION	PART NUMBER		QTY.
10176	Moulding (body rocker panel)	78 3/4" long	♦D44Y 5410176-A	R.H. and L.H.	2
16038-9	Moulding (front fender wheel opening)		(RH)♦D4DZ 16038-A	(LH)♦D4DZ 16039-A	1
16098	Plate (front fender name)	"Comet"	♦D14Y 16098-A	R.H. and L.H.	2
29164-5	Moulding (quarter wheel opening)		(RH)♦D0DZ 6229164-A	(LH)♦D0DZ 6229165-A	1

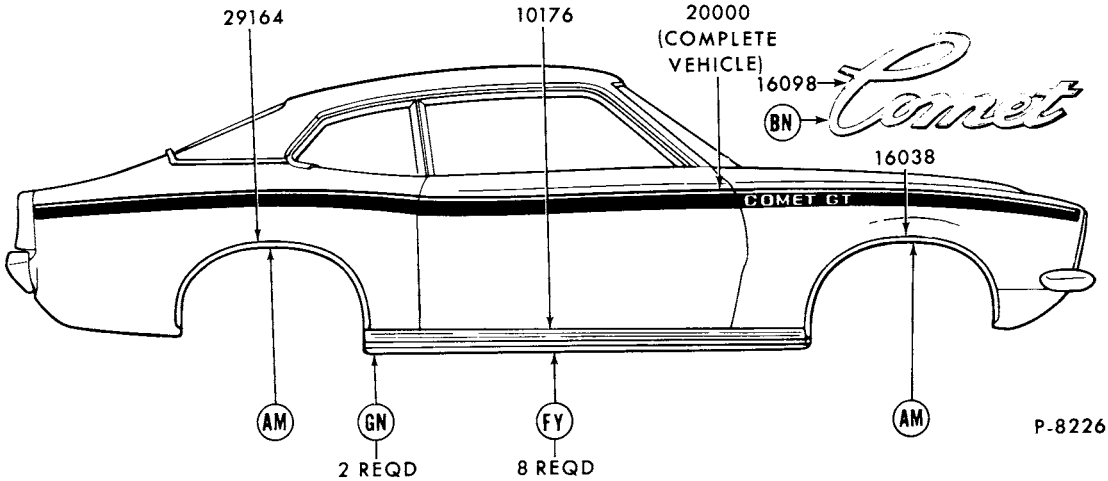

REFER TO EXTERIOR MOULDING SECTION "R" FOR COMPLETE RETAINER INFORMATION

1974 COMET - BODY TYPE 62 - SIDE - W/O LUXURY DECOR

GROUP NUMBER	PART NAME	DESCRIPTION	PART NUMBER		QTY.
10176	Moulding (body rocker panel)	71 54/64" long	♦D44Y 6210176-A	R.H. and L.H.	2
16038-9	Moulding (front fender wheel opening)		(RH)♦D4DZ 16038-A	(LH)♦D4DZ 16039-A	1
16098	Plate (front fender name)	"Comet"	♦D14Y 16098-A	R.H. and L.H.	2
20000	Stripe kit (body side)	Black	★ D34Y 6220000-A		1
		Gold	D34Y 6220000-C		1
		Orange	★ D44Y 6220000-A	Not replaced (7/81)	1
		White	★ D34Y 6220000-B	Not replaced (7/82)	1
29164-5	Moulding (quarter wheel opening)		(RH)♦D0DZ 6229164-A	(LH)♦D0DZ 6229165-A	1

♦ Includes attaching parts

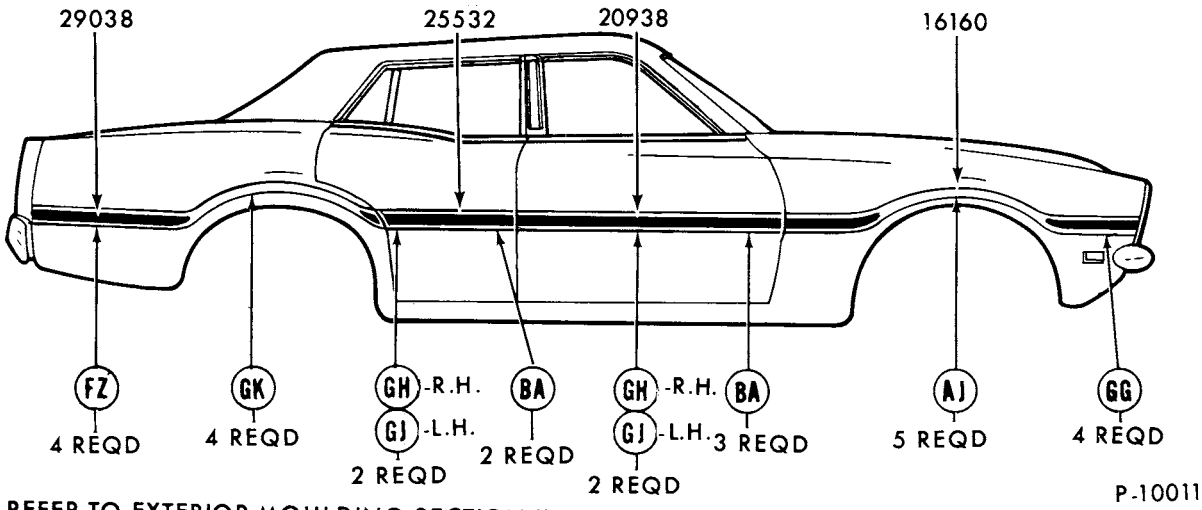

REFER TO EXTERIOR MOULDING SECTION "R" FOR COMPLETE RETAINER INFORMATION

1974 COMET - BODY TYPE 54 - SIDE - W/LUXURY DECOR

GROUP NUMBER	PART NAME	DESCRIPTION	PART NUMBER		QTY.
16160-1	Moulding (front fender side)	◊Blue (medium) vinyl insert	(RH)★D4DZ 16160-BB	(LH)★D4DZ 16161-BB	1
		◊Blue (light) vinyl insert	(RH)♦D4DZ 16160-AB	(LH)★D4DZ 16161-AB Not replaced (7/81)	1
		◊Brown vinyl insert	(RH)♦D3DZ 16160-AT	(LH)♦D3DZ 16161-AT	1
		◊Copper vinyl insert	(RH)♦D2DZ 16160-AC	(LH)♦D2DZ 16161-AC	1
		◊White vinyl insert	(RH)★D4DZ 16160-AW	(LH)♦D4DZ 16161-AW	1
20938-9	Moulding (front door outside)				
		◊Brown vinyl insert	(RH)♦D3DZ 5420938-BT	(LH)♦D3DZ 5420939-BT	1
		◊White vinyl insert	(RH)♦D4DZ 5420938-CW	(LH)♦D4DZ 5420939-CW	1
25532-3	Moulding (rear door outside)				
		◊Brown vinyl insert	(RH)♦D3DZ 5425532-BT	(LH)♦D3DZ 5425533-BT	1
		◊White vinyl insert	(RH)♦D4DZ 5425532-BW	(LH)♦D4DZ 5425533-BW	1
29038-9	Moulding (quarter outside)	◊Blue (medium) vinyl insert	(RH)♦D4DZ 5429038-BB	(LH)♦D4DZ 5429039-BB	1
		◊Brown vinyl insert	(RH)♦D4DZ 5429038-AT	(LH)♦D4DZ 5429039-AT	1
		◊White vinyl insert	(RH)♦D4DZ 5429038-AW	(LH)♦D4DZ 5429039-AW	1

◊ For color verification, refer to the vinyl roof swatches in the 1974 salesman's color and upholstery selections guide.
♦ Includes attaching parts

COPYRIGHT © 1986 — FORD MOTOR COMPANY — DEARBORN, MICHIGAN

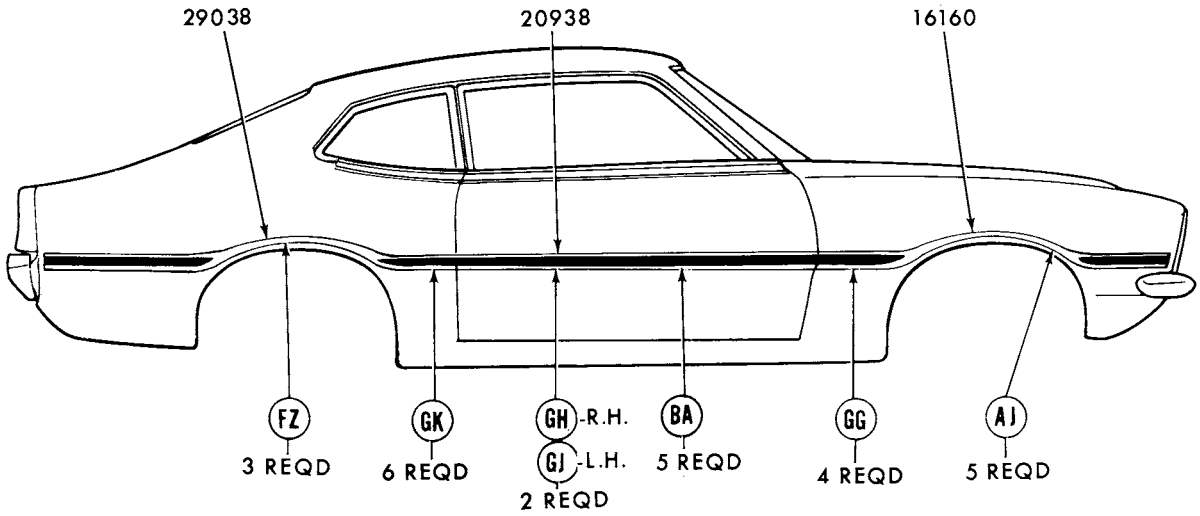

REFER TO EXTERIOR MOULDING SECTION "R" FOR COMPLETE RETAINER INFORMATION P-10012

1974 COMET - BODY TYPE 62 - SIDE - W/LUXURY DECOR

GROUP NUMBER	PART NAME	DESCRIPTION	PART NUMBER		QTY.
16160-1	Moulding (front fender side)	◊Blue (medium) vinyl insert	(RH)★D4DZ 16160-BB	(LH)★D4DZ 16161-BB	1
		◊Blue (light) vinyl insert	(RH)♦D4DZ 16160-AB	(LH)★D4DZ 16161-AB Not replaced (7/81)	1
		◊Brown vinyl insert	(RH)♦D3DZ 16160-AT	(LH)♦D3DZ 16161-AT	1
		◊Copper vinyl insert	(RH)♦D2DZ 16160-AC	(LH)♦D2DZ 16161-AC	1
		◊Tan vinyl insert	(RH)★D4DZ 16160-AU Not replaced (7/81)	(LH)♦D4DZ 16161-AU	1
		◊White vinyl insert	(RH)★D4DZ 16160-AW	(LH)♦D4DZ 16161-AW	1
20938-9	Moulding (front door outside)	◊Brown vinyl insert	(RH)♦D3DZ 6220938-BT	(LH)♦D3DZ 6220939-BT	1
		◊White vinyl insert	(RH)♦D4DZ 6220938-CW	(LH)♦D4DZ 6220939-CW	1
29038-9	Moulding (quarter outside)	◊Blue (light) vinyl insert	(RH)♦D4DZ 6229038-AB	(LH)★D4DZ 6229039-AB Not replaced (4/84)	1
		◊Brown vinyl insert	(RH)♦D4DZ 6229038-AT	(LH)♦D4DZ 6229039-AT	1
		◊White vinyl insert	(RH)♦D4DZ 6229038-AW	(LH)♦D4DZ 6229039-AW	1

◊ For color verification, refer to the vinyl roof swatches in the 1974 salesman's color and upholstery selections guide.
♦ Includes attaching parts

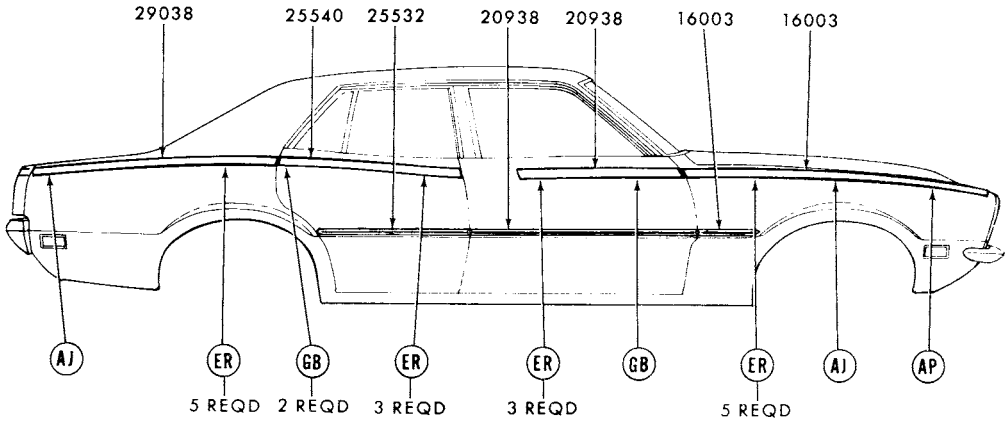

REFER TO EXTERIOR MOULDING SECTION "R" FOR COMPLETE RETAINER INFORMATION P-11855

1974 COMET - BODY TYPE 54 - SIDE PROTECTION

GROUP NUMBER	PART NAME	DESCRIPTION	PART NUMBER		QTY.
16003-4	Moulding (front fender)	Black vinyl insert-cut to fit-lower	D5DZ 5425532-D	R.H. and L.H.	2
		Bright finish-upper	(RH)♦D44Y 16003-A	(LH)♦D44Y 16004-A	1
20938-9	Moulding (front door outside)	Black vinyl insert-cut to fit-lower	D1OZ 6529038-B	R.H. and L.H.	AR
		Bright finish-upper	(RH)♦D44Y 5420938-A	(LH)♦D44Y 5420939-A	1
25532-3	Moulding (rear door outside)	Black vinyl insert-cut to fit-lower	D1OZ 6529038-B	R.H. and L.H.	AR
25540-1	Moulding (rear door outside)	Bright finish	(RH)♦ D44Y 5425540-A	(LH)★D44Y 5425541-A Not replaced (6/82)	1
29038-9	Moulding (quarter outside)	Bright finish	(RH)♦D44Y 5429038-A	(LH)♦D44Y 5429039-A	1

COPYRIGHT © 1986 — FORD MOTOR COMPANY — DEARBORN, MICHIGAN

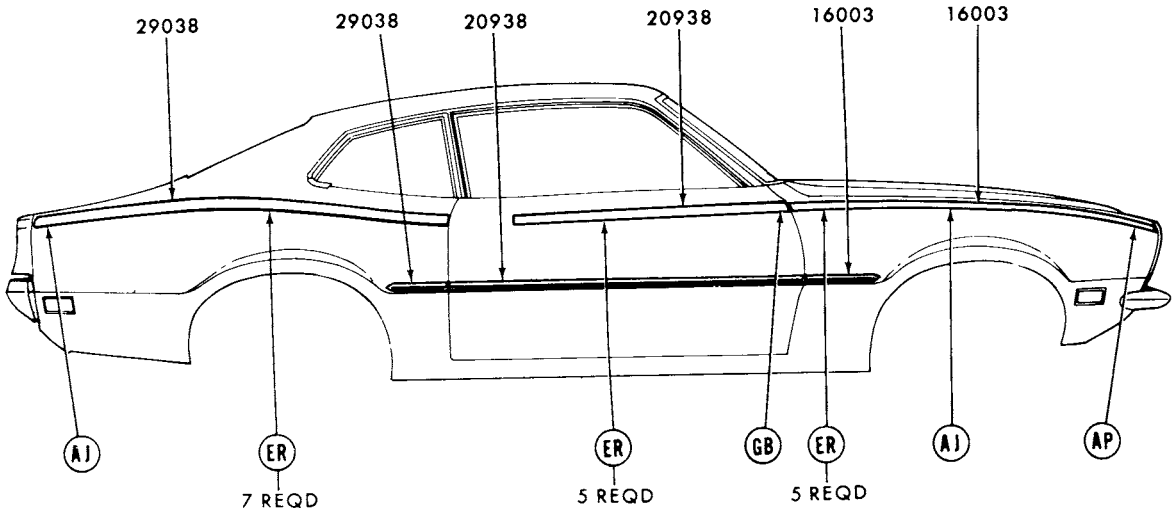

REFER TO EXTERIOR MOULDING SECTION "R" FOR COMPLETE RETAINER INFORMATION P-8186

1974 COMET - BODY TYPE 62 - SIDE PROTECTION

GROUP NUMBER	PART NAME	DESCRIPTION	PART NUMBER		QTY.
16003-4	Moulding (front fender)	Black vinyl insert-cut to fit-lower	D5DZ 5425532-D	R.H. and L.H.	2
		Bright finish-upper	(RH)♦D44Y 16003-A	(LH)♦D44Y 16004-A	1
20938-9	Moulding (front door outside)	Black vinyl insert-cut to fit-lower	D1OZ 6529038-B	R.H. and L.H.	AR
		Bright finish-upper	(RH)♦D44Y 6220938-A	(LH)♦D44Y 6220939-A	1
29038-9	Moulding (quarter outside)	Black vinyl insert-cut to fit-lower	D5DZ 5425532-D	R.H. and L.H.	2
		Bright finish-upper	(RH)♦D44Y 6229038-A	(LH)♦D44Y 6229039-A	1

♦ Includes attaching parts

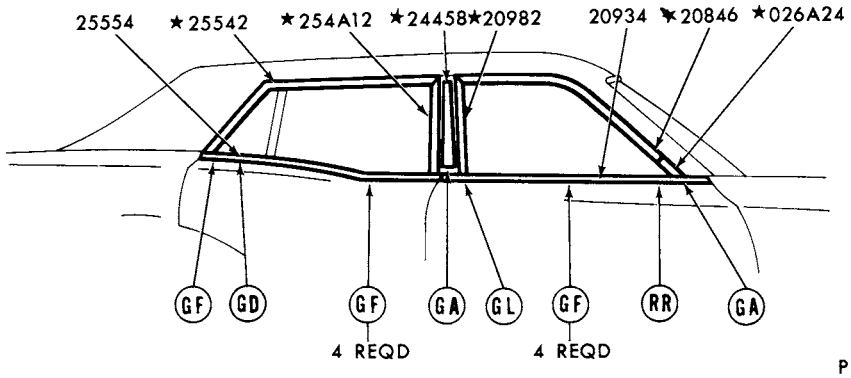

P-12500

REFER TO EXTERIOR MOULDINGS SECTION 'R' FOR COMPLETE RETAINER INFORMATION

1974 COMET - BODY TYPE 54 - DOOR WINDOW FRAME

GROUP NUMBER	PART NAME	DESCRIPTION	PART NUMBER		QTY.
026A24-5	Moulding (front body pillar outside belt)	W/vinyl roof	(RH)★D0DZ 62026A24-A Not replaced (6/83)	(LH)★D0DZ 62026A25-A Not replaced (6/83)	1
20846-7	Moulding (front door window frame top)		(RH)★D1DZ 5420846-A Not replaced (6/82)	(LH) D1DZ 5420847-A	1
20934-5	Moulding (front door outside belt)		(RH)♦D3DZ 5420934-A	(LH)♦D3DZ 5420935-A	1
25554-5	Moulding (rear door outside belt)		(RH)♦D3DZ 5425554-A	(LH)♦D3DZ 5425555-A	1

♦ Includes attaching parts

COPYRIGHT © 1986 — FORD MOTOR COMPANY — DEARBORN, MICHIGAN

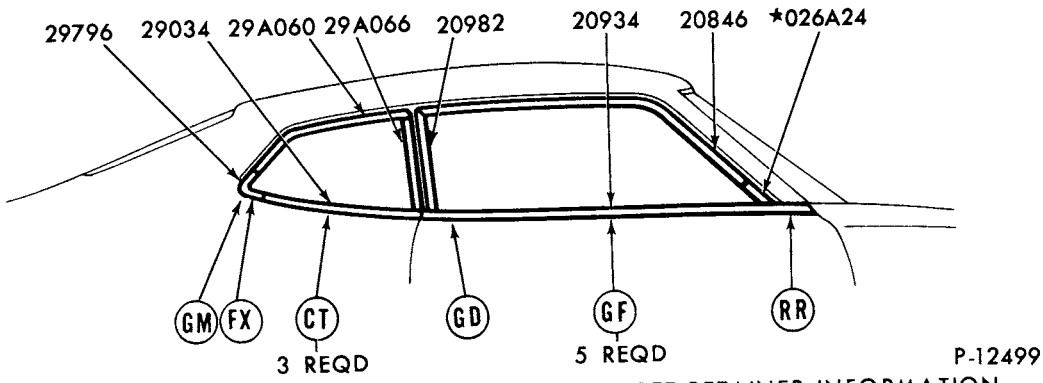

REFER TO EXTERIOR MOULDING SECTION 'R' FOR COMPLETE RETAINER INFORMATION

1974 COMET - BODY TYPE 62 - DOOR and QUARTER WINDOW FRAME

GROUP NUMBER	PART NAME	DESCRIPTION	PART NUMBER		QTY.
026A24-5	Moulding (front body pillar outside belt)	W/vinyl roof	(RH)* D0DZ 62026A24-A Not replaced (6/83)	(LH)* D0DZ 62026A25-A Not replaced (6/83)	1
20846-7	Moulding (front door window frame top)		(RH) D2DZ 6220846-A	(LH) D2DZ 6220847-A	1
20934-5	Moulding (front door outside belt)		(RH)♦ D3DZ 6220934-A	(LH)♦ D3DZ 6220935-A	1
20982-3	Moulding (front door window frame rear)		(RH) D2DZ 6220982-A	(LH) D2DZ 6220983-A	1
29034-5	Moulding (quarter outside belt)		(RH)♦ D3DZ 6229034-A	(LH)♦ D3DZ 6229035-A	1
290A60-1	Moulding (quarter window outside upper)		(RH)♦ D0DZ 62290A60-A	(LH)♦ D0DZ 62290A61-A	1
290A66-7	Moulding (quarter window outside front)		(RH)♦ D0DZ 62290A66-A	(LH)♦ D0DZ 62290A67-A	1
29796-7	Moulding (quarter window outside)		(RH) D1DZ 6229796-A	(LH) D1DZ 6229797-A	1

♦ Includes attaching parts

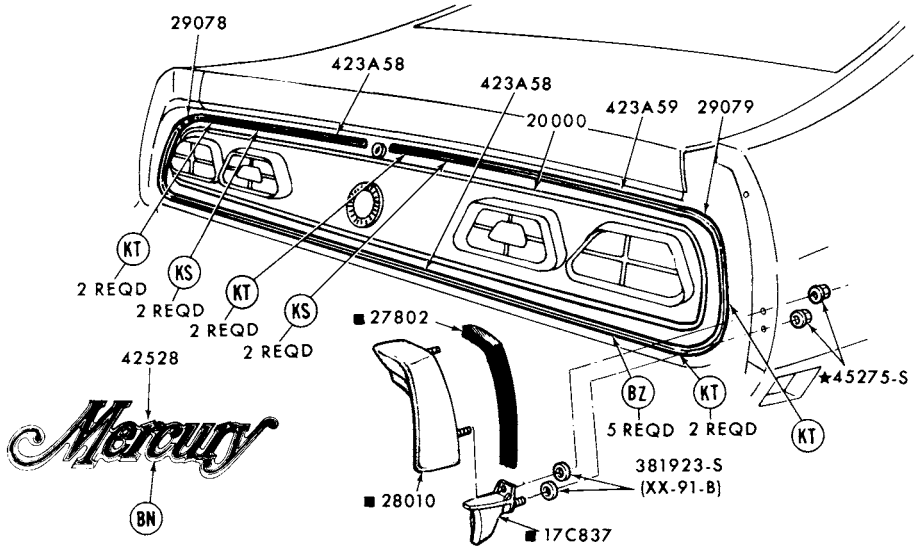

REFER TO EXTERIOR MOULDING SECTION "R" FOR COMPLETE RETAINER INFORMATION P-11076
■ REFER TO GROUP IN TEXT SECTION

1974 COMET - BACK END

GROUP NUMBER	PART NAME	DESCRIPTION	PART NUMBER		QTY.
29078-9	Moulding (lower back panel)		(RH) ♦D44Y 6229078-A	(LH) ♦D44Y 6229079-A	1
423A58-9	Moulding (lower back panel)	Upper	(RH) ♦D44Y 62423A58-A	(LH) ♦D44Y 62423A59-A	1
		Lower	♦D44Y 62423A58-B		1
42528	Plate (name)	"Mercury"	♦D44Y 6242528-A		1

♦ Includes attaching parts

COPYRIGHT © 1986 — FORD MOTOR COMPANY — DEARBORN, MICHIGAN

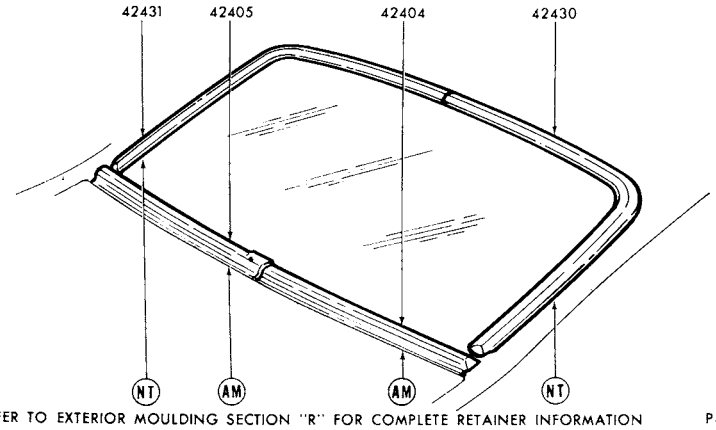

REFER TO EXTERIOR MOULDING SECTION "R" FOR COMPLETE RETAINER INFORMATION P-12468

1974 COMET - BODY TYPE 54 - BACK WINDOW

GROUP NUMBER	PART NAME	DESCRIPTION	PART NUMBER		QTY.
42404-5	Moulding (back window outside		(RH)♦D1DZ 5442404-A	(LH)♦D1DZ 5442405-A	1
42430-1	Moulding (back window outside upper)		(RH)♦D1DZ 5442430-A	(LH)♦D1DZ 5442431-A	1

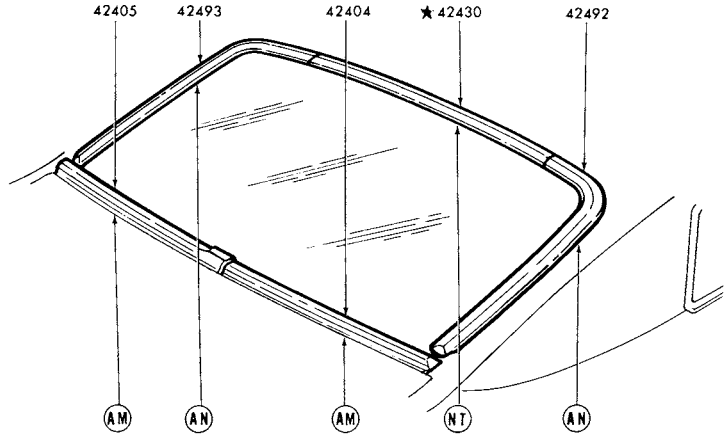

REFER TO EXTERIOR MOULDING SECTION "R" FOR COMPLETE RETAINER INFORMATION P-12467

1974 COMET - BODY TYPE 62 - BACK WINDOW

GROUP NUMBER	PART NAME	DESCRIPTION	PART NUMBER		QTY.
42404-5	Moulding (back window outside lower)		(RH)♦D1DZ 6242404-A	(LH)♦D1DZ 6242405-A	1
42430	Moulding (back window outside upper)		★D2DZ 6242430-A Not replaced (6/83)		1
42492-3	Moulding (back window outside side)		(RH)♦D0DZ 6242492-A	(LH)♦D0DZ 6242493-A	1

♦ Includes attaching parts

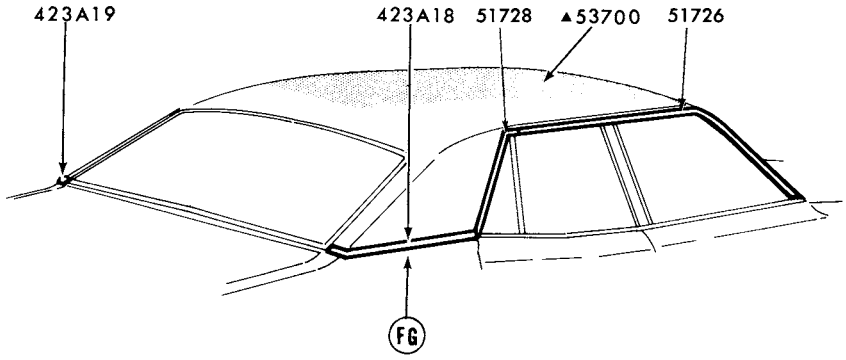

P-12012

▲ REFER TO GROUP IN SOFT TRIM SECTION

REFER TO EXTERIOR MOULDING SECTION 'R' FOR COMPLETE RETAINER INFORMATION

1974 COMET - BODY TYPE 54 - ROOF and BACK BELT

GROUP NUMBER	PART NAME	DESCRIPTION	PART NUMBER		QTY.
423A18-9	Moulding (back belt outside side)		(RH)♦D1DZ 54423A18-A	(LH)♦D1DZ 54423A19-A	1
51726-7	Moulding (roof drip side finish)	Front-w/o vinyl roof	(RH) D3DZ 5451726-A	(LH)★D3DZ 5451727-A Not replaced (6/83)	1
			(RH) D1DZ 5451726-C	(LH) D1DZ 5451727-C	1

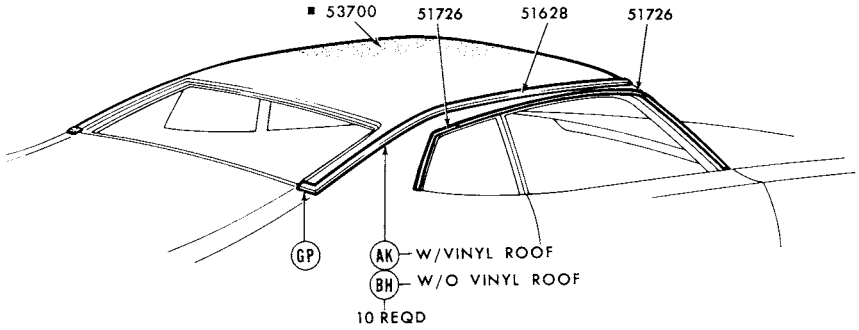

■REFER TO GROUP IN SOFT TRIM SECTION
REFER TO EXTERIOR MOULDING SECTION "R" FOR COMPLETE RETAINER INFORMATION

P-10374

1974 COMET - BODY TYPE 62 - ROOF and BACK BELT

GROUP NUMBER	PART NAME	DESCRIPTION	PART NUMBER		QTY.
51628-9	Moulding (roof finish front)		(RH)♦D3DZ 6251628-A	(LH)♦D3DZ 6251629-A	1
51726-7	Moulding (roof drip side finish)	Front-w/o vinyl roof	(RH) D0DZ 6251726-A	(LH) D0DZ 6251727-A	1
		Rear-w/o vinyl roof	(RH) D0DZ 6251726-C	(LH)★D0DZ 6251727-C Not replaced (6/83)	1
		Front-w/vinyl roof	(RH) D0DZ 6251726-B	(LH)★D0DZ 6251727-B Not replaced (4/84)	1

♦ Includes attaching parts

COPYRIGHT © 1986 — FORD MOTOR COMPANY — DEARBORN, MICHIGAN

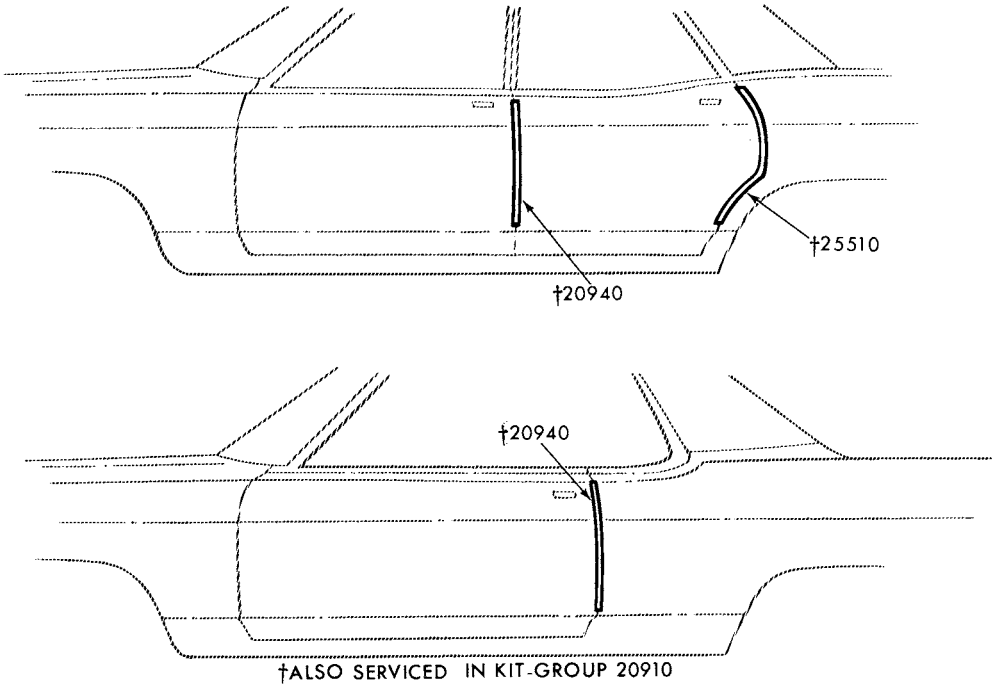

†ALSO SERVICED IN KIT-GROUP 20910

P-10061

1974 COMET - DOOR EDGE GUARDS

GROUP NUMBER	PART NAME	DESCRIPTION	PART NUMBER		QTY.
20910	Moulding kit (door edge guard)	Body type 54	★D1DZ 5420910-A	Not replaced (11/79)	1
		Body type 62	D0DZ 6220910-A		1
20940-1	Moulding (front door edge guard)	Body type 54	(RH) D2DZ 5420940-A	(LH) D2DZ 5420941-A	1
		Body type 62	(RH) D2DZ 6220940-A	(LH) D2DZ 6220941-A	1
25510-1	Moulding (rear door edge guard)	Body type 54	(RH) D2DZ 5425510-A	(LH) D2DZ 5425511-A	1

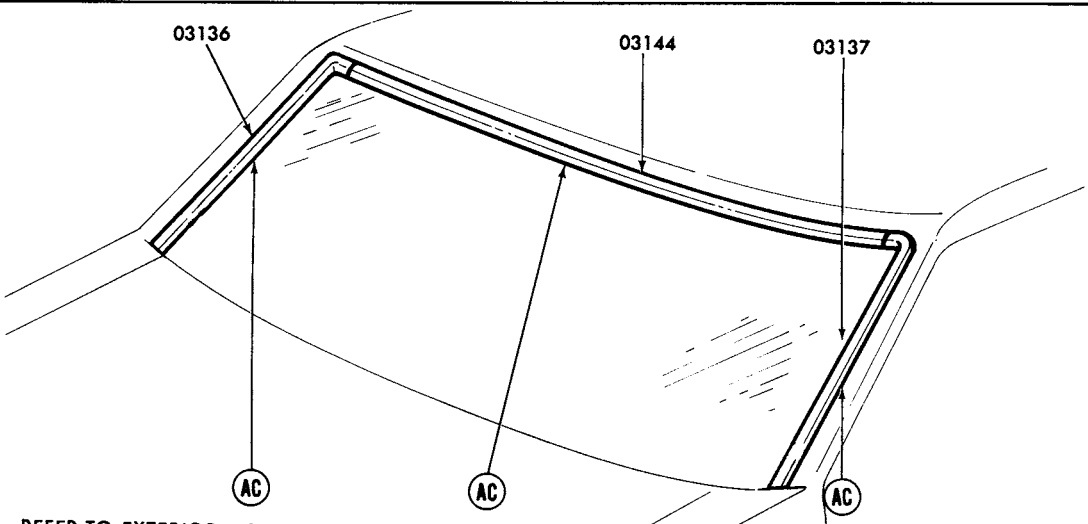

REFER TO EXTERIOR MOULDING SECTION 'R' FOR COMPLETE RETAINER INFORMATION

P-12521

1974 METEOR - WINDSHIELD

GROUP NUMBER	PART NAME	DESCRIPTION	PART NUMBER		QTY.
03136-7	Moulding (windshield outside side)	Body types 53, 71	(RH)♦ D7AZ5303136-A	(LH)♦ D7AZ 5303137-A	1
		Body type 65	(RH)♦ D7AZ 6003136-A	(LH)♦ D7AZ 6003137-A	1
03144	Moulding (windshield outside top)	Body types 53, 71	♦D3AZ 5303144-A		1
		Body type 65	♦ D7AZ 6003144-A		1

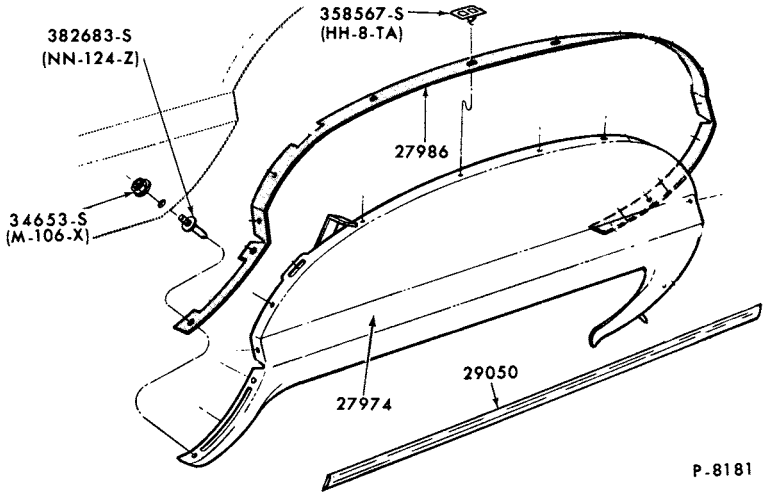

1974 METEOR - BODY TYPES 53 AND 65 - WHEEL OPENING COVER PARTS

GROUP NUMBER	PART NAME	DESCRIPTION	PART NUMBER		QTY.
27974-5	Panel (quarter wheel opening cover)		(RH)♦D3MY 6527974-A	(LH)♦D3MY 6527975-A	1
27986-7	Seal (quarter wheel opening cover)		(RH)♦D3MY 6527986-A	(LH)♦D3MY 6527987-A	1
29050-1	Moulding (quarter wheel opening cover)		(RH)♦D3MY 6529050-B	(LH)♦D3MY 6529051-B	1

COPYRIGHT © 1986 — FORD MOTOR COMPANY — DEARBORN, MICHIGAN

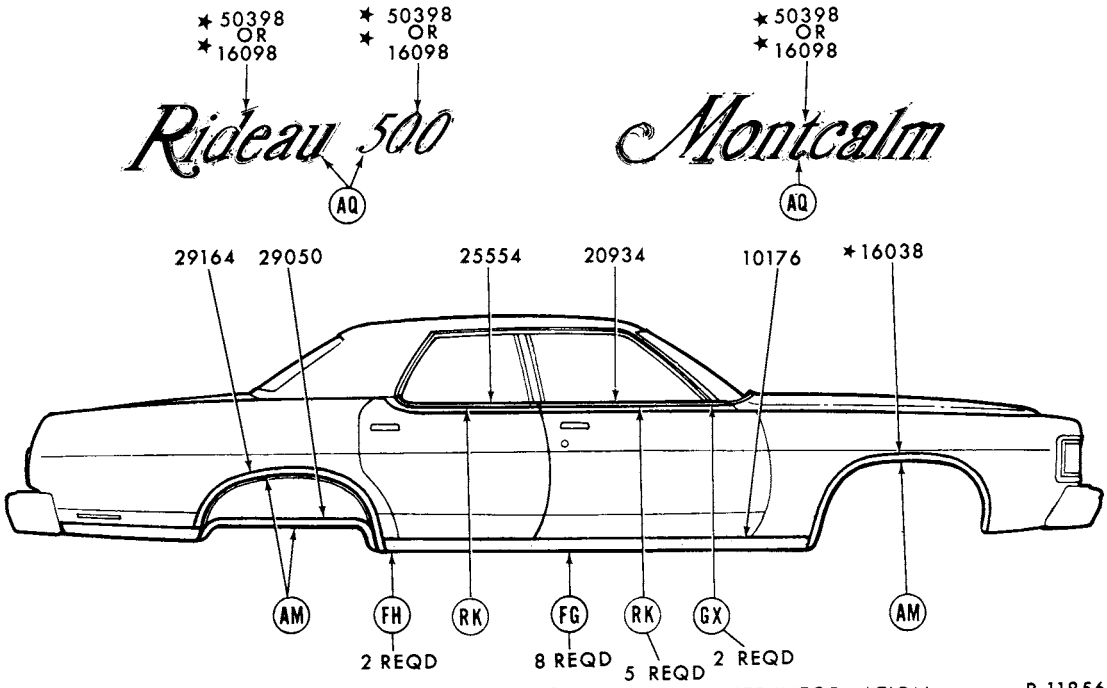

REFER TO EXTERIOR MOULDING SECTION "R" FOR COMPLETE RETAINER INFORMATION

P-11856

1974 METEOR - BODY TYPE 53 - SIDE

GROUP NUMBER	PART NAME	DESCRIPTION	PART NUMBER		QTY.
10176-7	Moulding (body rocker panel)	90 7/32" long	(RH)♦D3MY 6510176-A	(LH)♦D3MY 6510177-A	1
16038-9	Moulding (front fender wheel opening)		(RH)★D4MY 16038-A Not replaced (6/82)	(LH)★D4MY 16039-A Not replaced (6/82)	1
16098	Plate (front fender name)	"Montcalm"	★D3MY 16098-C Not replaced (4/84)	R.H. and L.H.	2
		"Rideau"	★D3MY 16098-D Not replaced (4/84)	R.H. and L.H.	2
		"500"	★D3MY 16098-E Not replaced (4/84)	R.H. and L.H.	2
20934-5	Moulding (front door outside belt)	Incl. weatherstrip	(RH)♦ D5AZ 5320934-B	(LH)♦ D5AZ 5320935-B	
25554-5	Moulding (rear door outside belt)	Incl. weatherstrip	(RH)♦ D5AZ 5325554-A	(LH)♦ D5AZ 5325555-A	1
29050-1	Moulding (quarter panel wheel opening cover)		(RH)♦D3MY 6529050-B	(LH)♦D3MY 6529051-B	1
29164-5	Moulding (quarter wheel opening)	W/rocker panel mouldings	(RH)♦D3MY 6529164-A	(LH)♦D3MY 6529165-A	1
		W/o rocker panel mouldings	(RH)♦D4MY 6529164-A	(LH)♦D4MY 6529165-A	1
50398	Plate (roof name)	"Montcalm"	♦D4MY 6550398-C	R.H. and L.H.	2
		"Rideau"	♦D4MY 6550398-A	R.H. and L.H.	2
		"500"	♦D3MY 16098-E	R.H. and L.H.	2

♦ Includes attaching parts

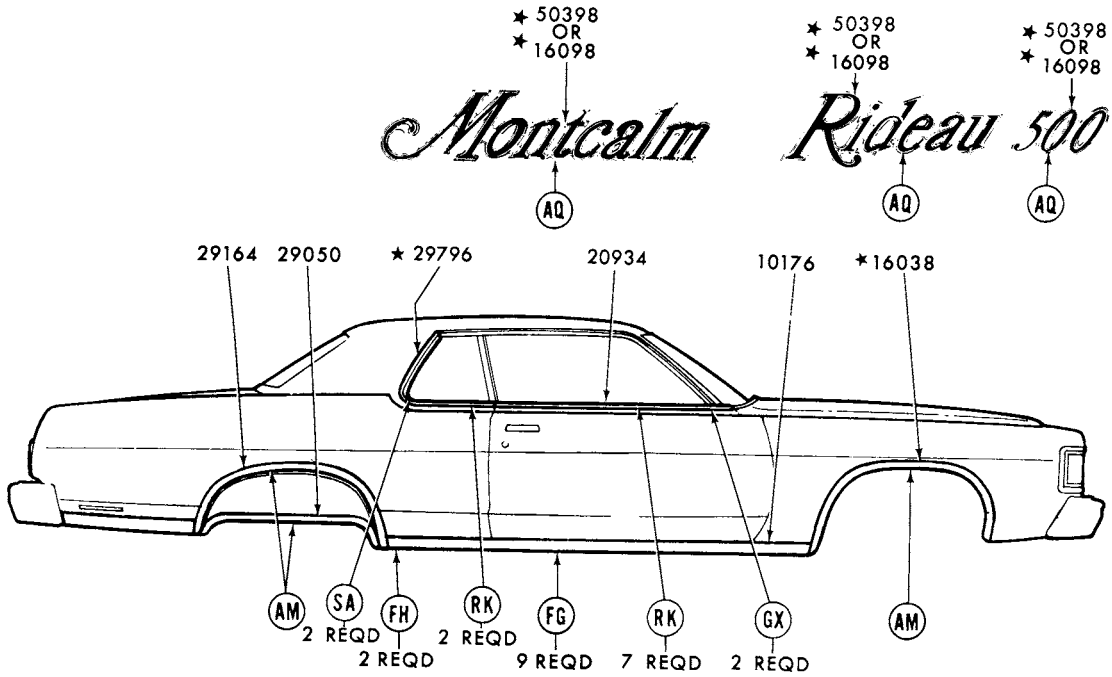

REFER TO EXTERIOR MOULDING SECTION "R" FOR COMPLETE RETAINER INFORMATION

P-11857

1974 METEOR - BODY TYPE 65 - SIDE

GROUP NUMBER	PART NAME	DESCRIPTION	PART NUMBER		QTY.
10176-7	Moulding (body rocker panel)	90 7/32" long	(RH)♦D3MY 6510176-A	(LH)♦D3MY 6510177-A	1
16038-9	Moulding (front fender wheel opening)		(RH)★D4MY 16038-A Not replaced (6/82)	(LH)★D4MY 16039-A Not replaced (6/82)	1
20934-5	Moulding (door outside belt)	Incl. weatherstrip	(RH)♦ D5AZ 6020934-A	(LH)♦ D5AZ 6020935-A	1
29050-1	Moulding (quarter panel wheel opening cover)		(RH)♦D3MY 6529050-B	(LH)♦D3MY 6529051-B	1
29164-5	Moulding (quarter wheel opening)	W/rocker panel mouldings	(RH)♦D3MY 6529164-A	(LH)♦D3MY 6529165-A	1
		W/o rocker panel mouldings	(RH)♦D4MY 6529164-A	(LH)♦D4MY 6529165-A	1
50398	Plate (roof name)	"Montcalm"	♦D4MY 6550398-C	R.H. and L.H.	2
		"Rideau"	♦D4MY 6550398-A	R.H. and L.H.	2
		"500"	★D3MY 16098-E Not replaced (4/84)	R.H. and L.H.	2

♦ Includes attaching parts

COPYRIGHT © 1986 — FORD MOTOR COMPANY — DEARBORN, MICHIGAN

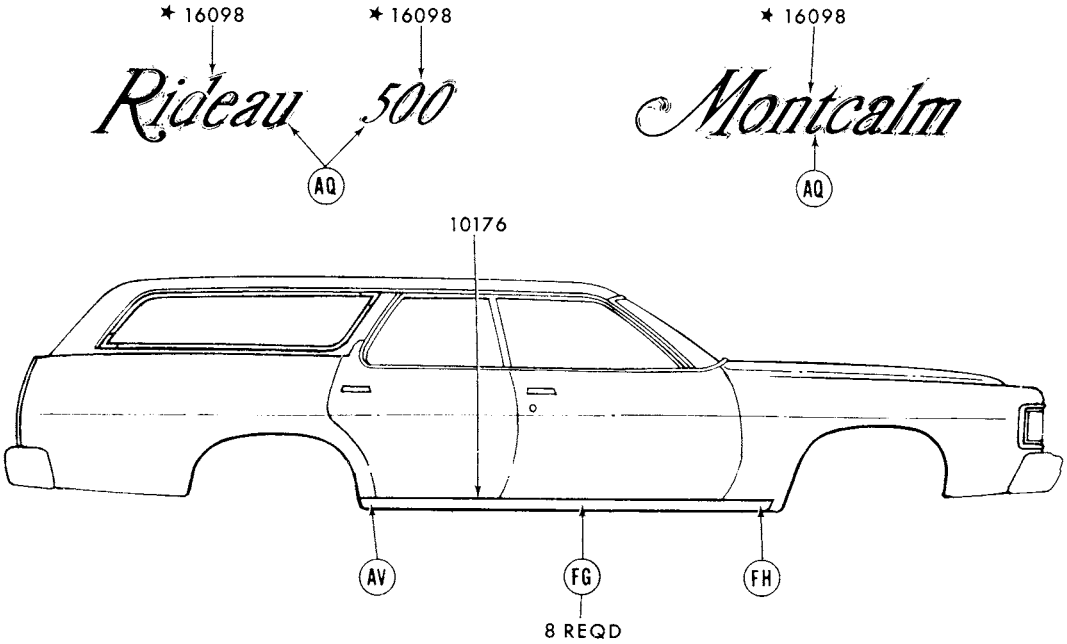

REFER TO EXTERIOR MOULDING SECTION "R" FOR COMPLETE RETAINER INFORMATION P-11860

1974 METEOR - BODY TYPE 71 - SIDE

GROUP NUMBER	PART NAME	DESCRIPTION	PART NUMBER		QTY.
10176-7	Moulding (body rocker panel)	87 3/4" long	(RH)♦D3MY 7110176-A	(LH)♦D3MY 7110177-A	1
16098	Plate (front fender name)	"Montcalm"	✶D3MY 16098-C Not replaced (4/84)	R.H. and L.H.	2
		"Rideau"	✶D3MY 16098-D Not replaced (4/84)	R.H. and L.H.	2
		"500"	✶D3MY 16098-E Not replaced (4/84)	R.H. and L.H.	2

♦ Includes attaching parts

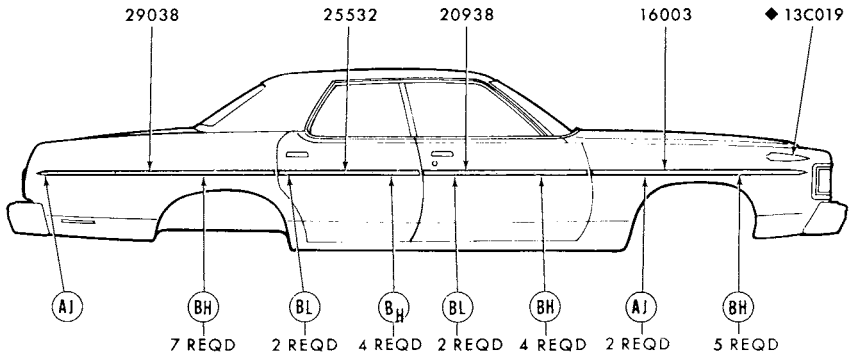

REFER TO EXTERIOR MOULDING SECTION "R" FOR COMPLETE RETAINER INFORMATION

◆ REFER TO GROUP IN CHASSIS SECTION

P-11821

1974 METEOR - BODY TYPE 53 - SIDE PROTECTION MOULDINGS

GROUP NUMBER	PART NAME	DESCRIPTION	PART NUMBER		QTY.
16003-4	Moulding (front fender side)	Black vinyl insert	(RH)♦D3MY 16003-B	(LH)♦D3MY 16004-B	1
		Bright finish	(RH)♦D3MY 16003-D	(LH)♦D3MY 16004-D	1
		Brown vinyl insert	★(RH)♦D4MY 16003-AT Not replaced (6/81)	★(LH)♦D4MY 16004-AT Not replaced (6/81)	1
		White vinyl insert	(RH)♦D4MY 16003-AW	★(LH)♦D4MY 16004-AW Not replaced (11/79)	1
20938-9	Moulding (front door outside)	Black vinyl insert	(RH)♦D3MY 5320938-A	(LH)♦D3MY 5320939-A	1
		Bright finish	(RH)♦D3MY 5320938-B	(LH)♦D3MY 5320939-B	1
		Brown vinyl insert	★(RH)♦D4MY 5320938-AT Not replaced (7/81)	(LH)♦D4MY 5320939-AT	1
		White vinyl insert	★(RH)♦D4MY 5320938-AW Not replaced (11/79)	(LH)♦D4MY 5320939-AW	1
25532-3	Moulding (rear door outside)	Black vinyl insert	(RH)♦D3AZ 5325532-A	(LH)♦D3AZ 5325533-A	1
		Bright finish	(RH)♦D3MY 5325532-B	(LH)♦D3MY 5325533-B	1
29038-9	Moulding (quarter outside)	Black vinyl insert	(RH)♦D3MY 5329038-A	(LH)♦D3MY 5329039-A	1
		Bright finish	(RH)♦D3MY 5329038-B	(LH)♦D3MY 5329039-B	1

COPYRIGHT © 1986 — FORD MOTOR COMPANY — DEARBORN, MICHIGAN

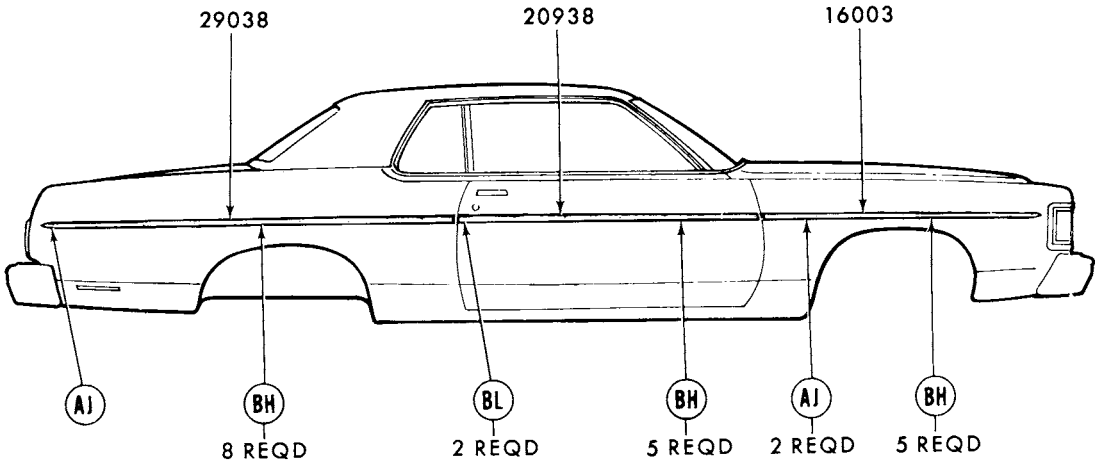

REFER TO EXTERIOR MOULDING SECTION "R" FOR COMPLETE RETAINER INFORMATION

P-11820

1974 METEOR - BODY TYPE 65 - SIDE PROTECTION MOULDINGS

GROUP NUMBER	PART NAME	DESCRIPTION	PART NUMBER		QTY.
16003-4	Moulding (front fender side)	Black vinyl insert	(RH)♦D3MY 16003-B	(LH)♦D3MY 16004-B	1
		Bright finish	(RH)♦D3MY 16003-D	(LH)♦D3MY 16004-D	1
		Brown vinyl insert	★(RH)♦D4MY 16003-AT Not replaced (6/81)	★(LH)♦D4MY 16004-AT Not replaced (6/81)	1
		White vinyl insert	(RH)♦D4MY 16003-AW	★(LH)♦D4MY 16004-AW Not replaced (11/79)	1
20938-9	Moulding (front door outside)	Black vinyl insert	(RH)♦D3AZ 6520938-A	(LH)♦D3MY 6520939-A	1
		Bright finish	(RH)♦D3MY 6520938-B	(LH)♦D3MY 6520939-B	1
29038-9	Moulding (quarter outside)	Black vinyl insert	(RH)♦D3MY 6529038-A	(LH)♦D3MY 6529039-A	1
		Bright finish	(RH)♦D3MY 6529038-C	(LH)♦D3MY 6529039-C	1

♦ Includes attaching parts

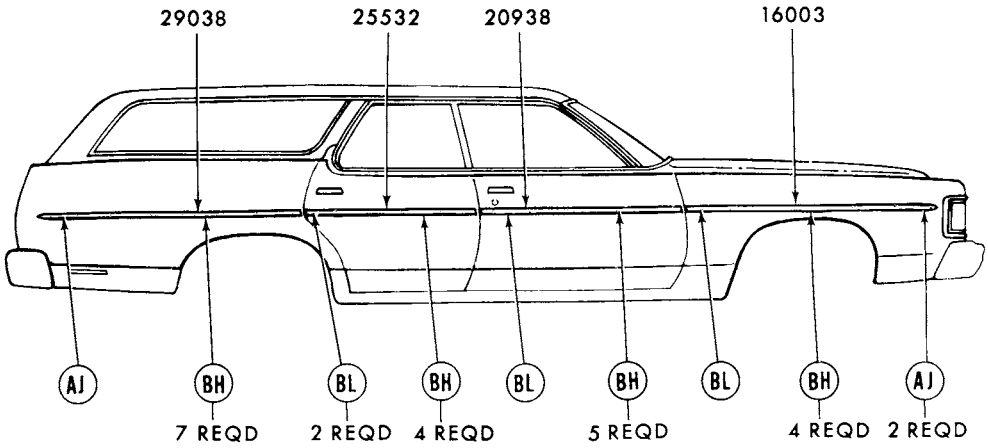

REFER TO EXTERIOR MOULDING SECTION "R" FOR COMPLETE RETAINER INFORMATION

P-11822

1974 METEOR - BODY TYPE 71 - SIDE PROTECTION MOULDINGS

GROUP NUMBER	PART NAME	DESCRIPTION	PART NUMBER		QTY.
16003-4	Moulding (front fender side)	Black vinyl insert	(RH)♦D3MY 16003-B	(LH)♦D3MY 16004-B	1
		Bright finish	(RH)♦D3MY 16003-D	(LH)♦D3MY 16004-D	1
20938-9	Moulding (front door outside)	Black vinyl insert	(RH)♦D3MY 5320938-A	(LH)♦D3MY 5320939-A	1
		Bright finish	(RH)♦D3MY 5320938-B	(LH)♦D3MY 5320939-B	1
25532-3	Moulding (rear door outside)	Black vinyl insert	(RH)♦D3AZ 5325532-A	(LH)♦D3AZ 5325533-A	1
		Bright finish	(RH)♦D3MY 5325532-B	(LH)♦D3MY 5325533-B	1
29038-9	Moulding (quarter outside)	Black vinyl insert	(RH)♦D3MY 7129038-A	(LH)♦D3MY 7129039-A	1
		Bright finish	(RH)★D3MY 7129038-D Not replaced (6/82)	(LH)★D3MY 7129039-D Not replaced (6/82)	1

COPYRIGHT © 1986 — FORD MOTOR COMPANY — DEARBORN, MICHIGAN

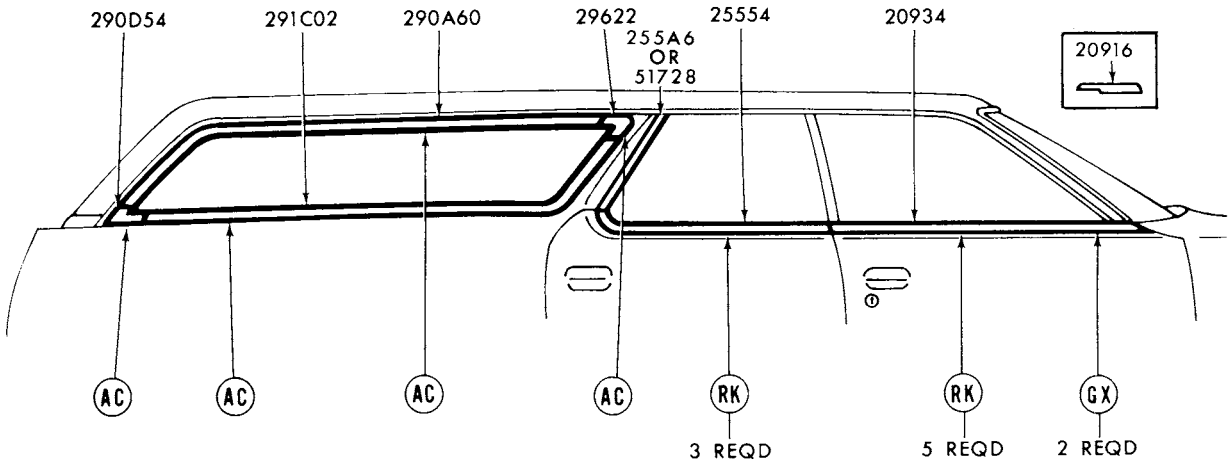

P-12501

1974 METEOR - BODY TYPE 71 - DOOR and QUARTER WINDOW FRAME

GROUP NUMBER	PART NAME	DESCRIPTION	PART NUMBER		QTY.
20934-5	Moulding (front door outside belt)	Incl. weatherstrip	(RH)♦D3AZ 5320934-A	(LH)♦D3AZ 5320935-A	1
25554-5	Moulding (rear door outside belt)	Incl. weatherstrip	(RH)♦D5AZ 5325554-B	(LH)♦D5AZ 5325555-B	1
290D54-5	Moulding (quarter window outside lower rear corner)		(RH) D5AZ 71290D54-A	(LH) D5AZ 71290D55-A	1
290A60-1	Moulding (quarter window outside upper)		(RH)♦D5AZ 71290A60-A	(LH)♦D5AZ 71290A61-A	1
291C02-3	Moulding (quarter window outside lower rear)		(RH)♦D5AZ 71291C02-A	(LH)♦D5AZ 71291C03-A	1
29622-3	Moulding (quarter window outside front)		(RH) D5AZ 7129622-A	(LH) D5AZ 7129623-A	1
51728-9	Moulding (rear door window outside)		(RH)♦D4AZ 7151728-A	(LH)♦D4AZ 7151729-A	1

♦ Includes attaching parts

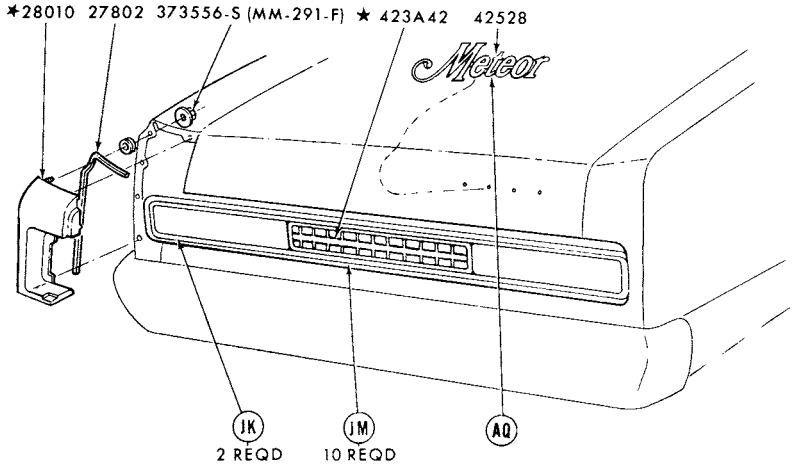

REFER TO EXTERIOR MOULDING SECTION "R" FOR COMPLETE RETAINER INFORMATION

P-11861

1974 METEOR - BODY TYPES 53 AND 65 - BACK END

GROUP NUMBER	PART NAME	DESCRIPTION	PART NUMBER		QTY.
27802	Seal (quarter panel outer rear extension)	Cut from D0MY 16D130-A	★		AR
28010-1	Extension (quarter panel rear)		(RH)★D4MY 6528010-A Not replaced (6/82)	(LH)★D4MY 6528011-A Not replaced (6/82)	1
42528	Plate (name)	"Meteor"	♦D3MY 6542528-B		1

♦ Includes attaching parts

COPYRIGHT © 1986 — FORD MOTOR COMPANY — DEARBORN, MICHIGAN

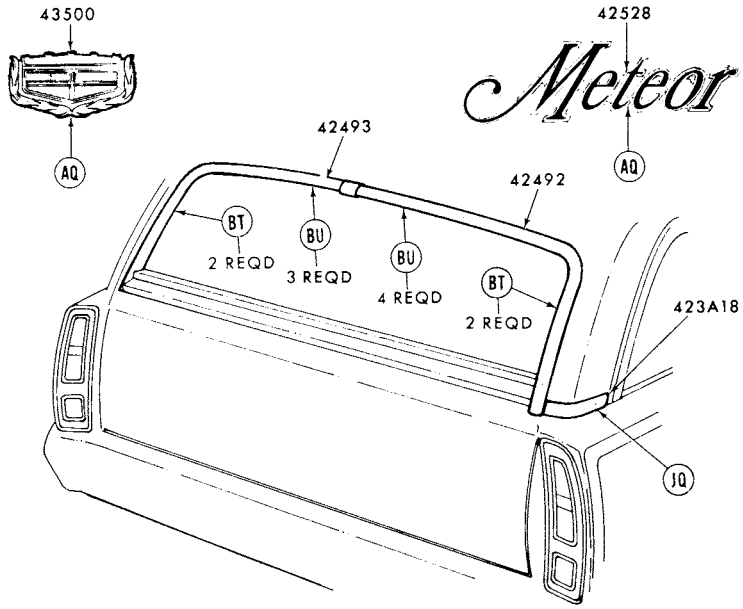

REFER TO EXTERIOR MOULDING SECTION "R" FOR COMPLETE RETAINER INFORMATION P-11862

1974 METEOR - BODY TYPE 71 - BACK END

GROUP NUMBER	PART NAME	DESCRIPTION	PART NUMBER	QTY.
423A18-9	Moulding (back belt outside side)	Vinyl roof	(RH)♦D3AZ 71423A18-A (LH)★D3AZ 71423A19-A Not replaced (6/81)	1
42492-3	Moulding (back window outside side)		(RH)♦D3AZ 7142492-A (LH)♦ D3AZ 7142493-A	1
42528	Plate (name)	"Meteor"	♦D3MY 6542528-B	1
43500	Ornament (tailgate)		♦C9MY 7143500-A	1

♦ Includes attaching parts

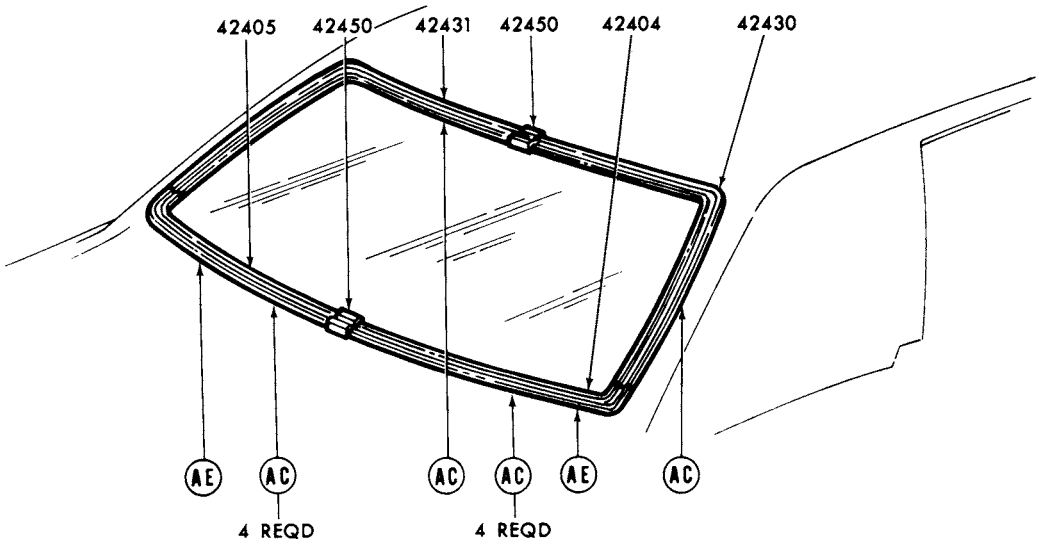

REFER TO EXTERIOR MOULDING SECTION "R" FOR COMPLETE RETAINER INFORMATION

P-12460

1974 METEOR - BODY TYPE 53 - BACK WINDOW

GROUP NUMBER	PART NAME	DESCRIPTION	PART NUMBER	QTY.
42404-5	Moulding (back window outside lower)		(RH)♦ D3AZ 5342404-A (LH)♦ D3AZ 5342405-A	1
42430-1	Moulding (back window outside upper)		(RH)♦ D7AZ 5342430-A (LH)♦ D7AZ 5342431-A	1
42450	Cover (back window outside moulding joint)	Lower	D5AZ 5342450-A	1
		Upper	D5AZ 5342450-B	1

♦ Includes attaching parts

COPYRIGHT © 1986 — FORD MOTOR COMPANY — DEARBORN, MICHIGAN

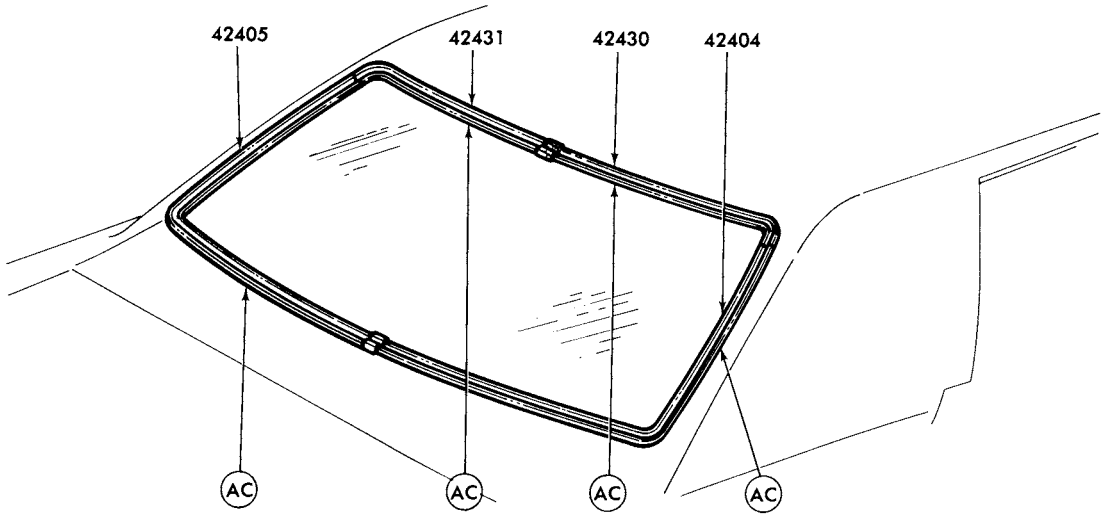

REFER TO EXTERIOR MOULDING SECTION "R" FOR COMPLETE RETAINER INFORMATION

P-12487

1974 METEOR - BODY TYPE 65 - BACK WINDOW

GROUP NUMBER	PART NAME	DESCRIPTION	PART NUMBER	QTY.
42404-5	Moulding (back window outside lower)		(RH)♦ D5MY 6042404-A (LH)♦ D5MY 6042405-A	1
42430-1	Moulding (back window outside upper)		(RH)♦ D7AZ 6042430-A (LH)♦ D7AZ 6042431-A	1

♦ Includes attaching parts

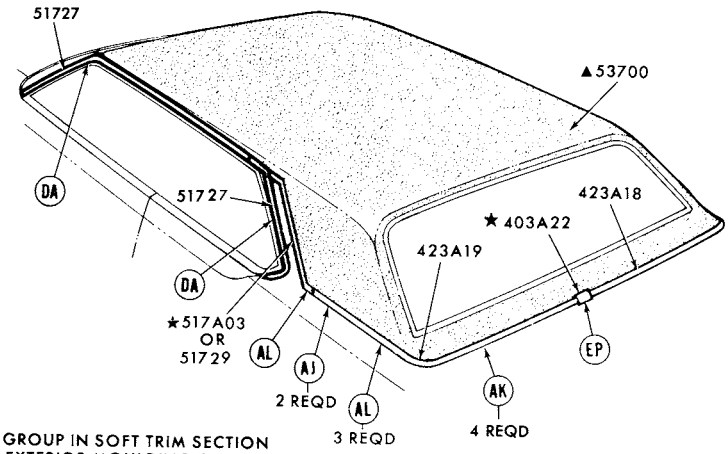

▲ REFER TO GROUP IN SOFT TRIM SECTION
REFER TO EXTERIOR MOULDING SECTION "R" FOR COMPLETE RETAINER INFORMATION

P-10115

1974 METEOR - BODY TYPE 53 - ROOF and BACK BELT - w/FULL VINYL ROOF

GROUP NUMBER	PART NAME	DESCRIPTION	PART NUMBER		QTY.
423A18-9	Moulding (back belt outside side)	Bright	(RH)♦ D4MY 53423A18-A	(LH)♦ D4MY 53423A19-A	1
51726-7	Moulding (roof drip side finish)	Front-bright finish	(RH) D4AZ 5351726-A	(LH) D4AZ 5351727-A	1
		Rear-bright finish	(RH) D4AZ 5351726-C	(LH) D4AZ 5351727-C	1
		Front-painted	(RH) D4AZ 5351726-B	(LH) D4AZ 5351727-B	1
		Rear-painted	(RH) D4AZ 5351726-D	(LH) D4AZ 5351727-D	1

COPYRIGHT © 1986 — FORD MOTOR COMPANY — DEARBORN, MICHIGAN

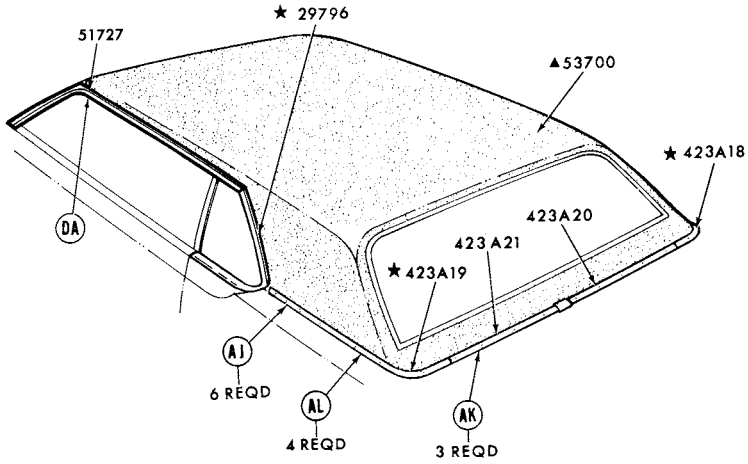

▲REFER TO GROUP IN SOFT TRIM SECTION
REFER TO EXTERIOR MOULDING SECTION "R" FOR COMPLETE RETAINER INFORMATION

P-10116

1974 METEOR - BODY TYPE 65 - ROOF and BACK BELT - w/FULL VINYL ROOF

GROUP NUMBER	PART NAME	DESCRIPTION	PART NUMBER	QTY.
423A20-1	Moulding (back belt outside)	Bright	(RH)♠D3MY 65423A20-C (LH)♠D3MY 65423A21-C	1
51726-7	Moulding (roof drip side finish)		(RH)♠D5MY 6551726-A (LH)♠D3MY 6551727-A	1

♠ Includes attaching parts

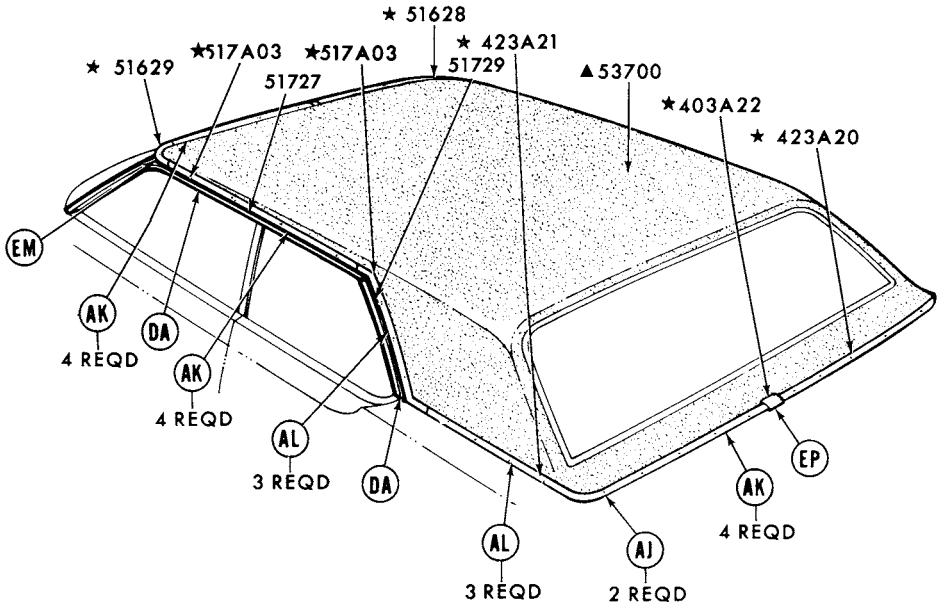

▲REFER TO GROUP IN SOFT TRIM SECTION
REFER TO EXTERIOR MOULDING SECTION "R" FOR COMPLETE RETAINER INFORMATION

P-10119

1974 METEOR - BODY TYPE 53 - ROOF and BACK BELT - w/HALO VINYL ROOF

GROUP NUMBER	PART NAME	DESCRIPTION	PART NUMBER		QTY.
51726-7	Moulding (roof drip side finish)	Front-bright finish	(RH) D4AZ 5351726-A	(LH) D4AZ 5351727-A	1
		Rear-bright finish	(RH) D4AZ 5351726-C	(LH) D4AZ 5351727-C	1
		Front-painted	(RH) D4AZ 5351726-B	(LH) D4AZ 5351727-B	1
		Rear-painted	(RH) D4AZ 5351726-D	(LH) D4AZ 5351727-D	1

COPYRIGHT © 1986 — FORD MOTOR COMPANY — DEARBORN, MICHIGAN

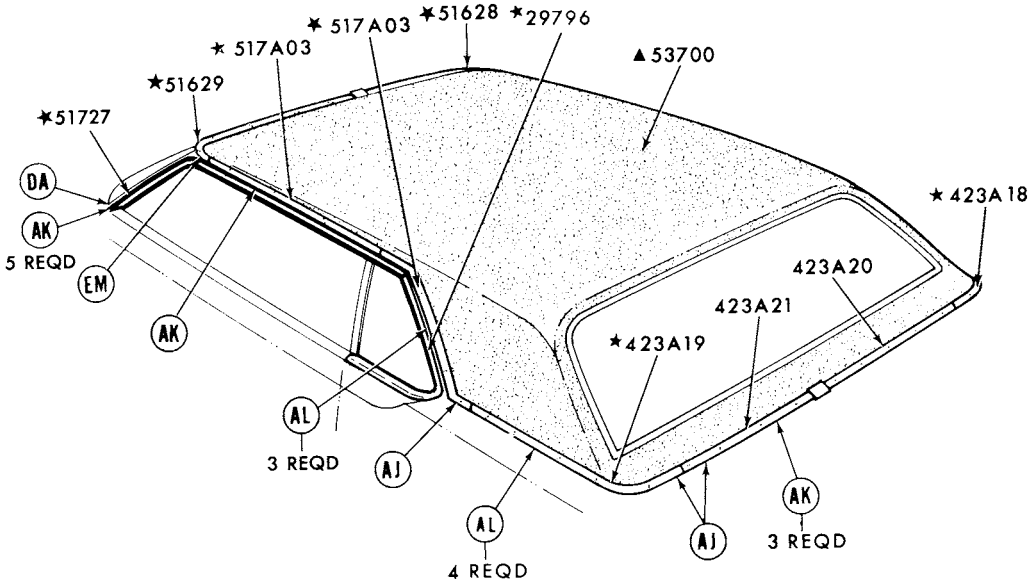

▲REFER TO GROUP IN SOFT TRIM SECTION
REFER TO EXTERIOR MOULDING SECTION "R" FOR COMPLETE RETAINER INFORMATION

P-10120

1974 METEOR - BODY TYPE 65 - ROOF and BACK BELT - w/HALO VINYL ROOF

GROUP NUMBER	PART NAME	DESCRIPTION	PART NUMBER		QTY.
423A20-1	Moulding (back belt outside)	Bright finish	(RH)♦D3MY 65423A20-C	(LH)♦D3MY 65423A21-C	1
		Paint to match	(RH)♦D3MY 65423A20-B	(LH)♦D3MY 65423A21-B	1

♦ Includes attaching parts

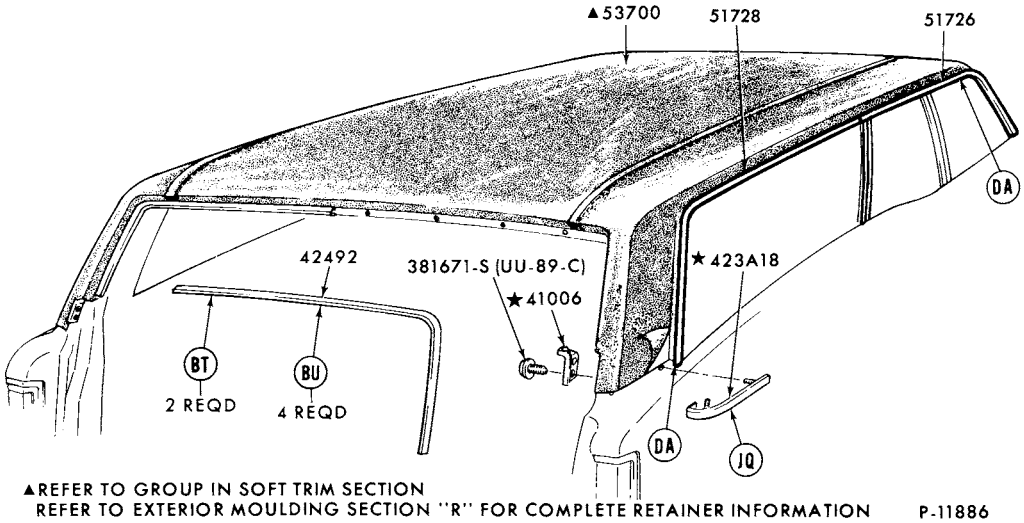

▲REFER TO GROUP IN SOFT TRIM SECTION
REFER TO EXTERIOR MOULDING SECTION "R" FOR COMPLETE RETAINER INFORMATION P-11886

1974 METEOR - BODY TYPE 71 - ROOF and BACK BELT

GROUP NUMBER	PART NAME	DESCRIPTION	PART NUMBER		QTY.
42492-3	Moulding (back window outside side)		(RH)♠ D3AZ 7142492-A	(LH)♠ D3AZ 7142493-A	1
51726-9	Moulding (roof drip side finish)	Front	(RH)♠ D5AZ 7151726-A	(LH)♠ D5AZ 7151727-A	1
		Rear	(RH)♠ D3AZ 7151728-B	(LH)♠ D3AZ 7151729-B	1

COPYRIGHT © 1986 — FORD MOTOR COMPANY — DEARBORN, MICHIGAN

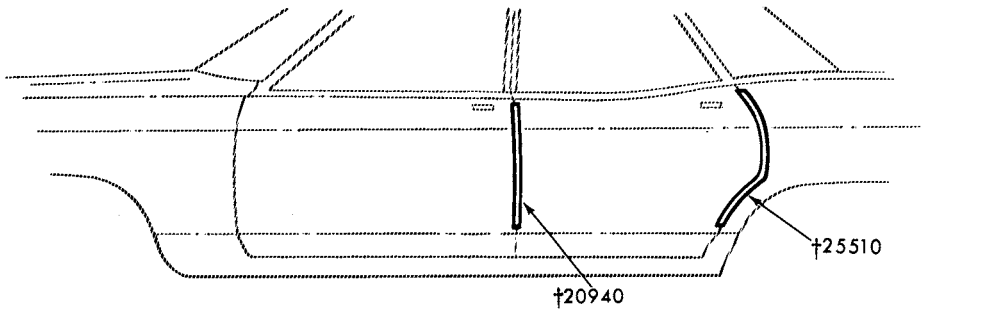

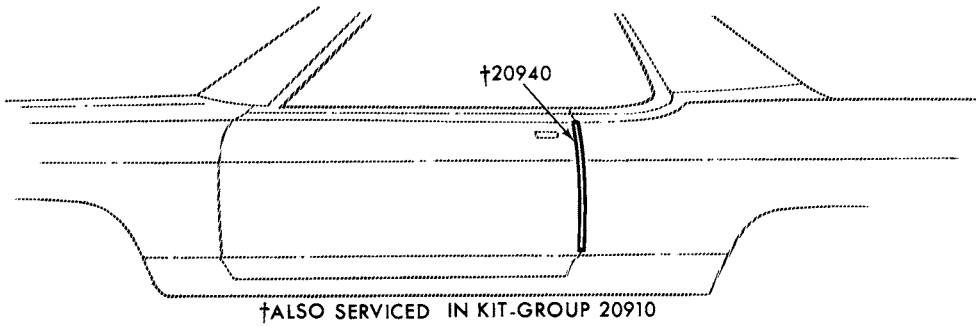

†ALSO SERVICED IN KIT-GROUP 20910

P-10061

1974 METEOR - DOOR EDGE GUARDS

GROUP NUMBER	PART NAME	DESCRIPTION	PART NUMBER		QTY.
20940-1	Moulding (front door edge guard)	Bright-body types 53,57 and 71	(RH) D3MY 5320940-A	(LH) D3MY 5320941-A	1
		Body type 65	(RH) D3MY 6520940-A	(LH) D3MY 6520941-A	1
25510-1	Moulding (rear door edge guard)	Bright-body types 53,57 and 71	(RH) D3MY 5325510-A	(LH) D3MY 5325511-A	1

♦ Includes attaching parts

INDEX

TITLE	SECTION	PAGE	ILLUS. NO.
1975			
A (MERCURY)			
BACK END			
-body types 53 and 65	75A	21	P-11984
-body type 71	75A	22	P-11985
BACK WINDOW			
-body type 53	75A	23	P-12460
-body type 65	75A	23	P-12487
-body type 71	75A	22	P-11985
BELT and ROOF DRIP			
-body type 53	75A	27	P-13240
-body type 65	75A	28	P-13241
-body type 71	75A	20	P-13209
BODY SIDE			
-body type 53H-w/o wheel opening cover	75A	2	P-11967
-body type 53H-w/wheel opening cover	75A	3	P-11970
-body types 53K,L-w/o vinyl insert mouldings	75A	4,5	P-11971
-body types 53K,L-w/vinyl insert mouldings	75A	6,7,8	P-11966
-body type 65H-w/o wheel opening covers	75A	9	P-11968
-body type 65H-w/wheel opening covers	75A	10	P-11969
-body types 65K,L-w/o vinyl insert mouldings	75A	11,12	P-11972
-body types 65K,L-w/vinyl insert mouldings	75A	13,14	P-11965
-body type 71H	75A	15	P-11973
-body type 71K	75A	16,17	P-11974
BODY SIDE PROTECTION			
-body type 53	75A	18	P-11962
-body type 65	75A	18	P-11963
-body type 71	75A	19	P-11964
DOOR EDGE GUARDS	75A	24	P-10061
LUGGAGE COMPARTMENT - refer to BACK END			
ROOF and BACK BELT			
-body type 53	75A	25	P-13420
-body type 65	75A	26	P-10120
ROOF DRIP BELT			
-body type 53	75A	27	P-13240
-body type 65 - w/ halo vinyl roof	75A	28	P-13241
-body type 71	75A	20	P-13209
TAILGATE - refer to BACK END			
WHEEL OPENING COVER PARTS			
-body types 53 and 65	75A	1	P-8181
WINDOW FRAME			
-body type 71	75A	20	P-13209
WINDSHIELD	75A	1	P-12521
C (MONTEGO)			
BACK END			
-body types 53B,D and 65B,D	75C	11	P-11190
-body types 53K and 65K	75C	11	P-11189
-body type 71	75C	12	P-11191

COPYRIGHT © 1986 — FORD MOTOR COMPANY — DEARBORN, MICHIGAN

INDEX

1975

C (MONTEGO) - cont'd.

TITLE	SECTION	PAGE	ILLUS. NO.
BACK WINDOW			
-body types 53 and 65	75C	1	P-12457
BELT			
Back-refer to ROOF and BACK BELT			
Front door, Rear door and Quarter-refer to Body Side			
BODY SIDE			
-body types 53B,D	75C	2	P-12804
-body type 53K	75C	3,4	P-12805
-body types 65B,D	75C	5	P-12806
-body type 65K	75C	6,7	P-12807
-body types 71B,D	75C	8	P-12808
-body type 71K	75C	9,10	P-12809
DOOR EDGE GUARDS	75C	15	P-10061
LUGGAGE COMPARTMENT - refer to BACK END			
ROOF and BACK BELT			
-body types 53 and 71	75C	14	P-12810
-body types 65B,D	75C	14,15	P-12815
-body type 65K-w/full vinyl roof	75C	16	P-12816
-body type 65K-w/half vinyl roof	75C	17	P-12817
-body type 65K-w/split vinyl roof	75C	18	P-10746
ROOF DRIP - refer to ROOF and BACK BELT			
WINDOW FRAME			
-body type 71	75C	13	P-12502
WINDSHIELD	75C	1	P-12521

D (LINCOLN)

TITLE	SECTION	PAGE	ILLUS. NO.
BACK END			
-body types 53 and 60	75D	9	P-11896
BACK WINDOW	75D	9	P-12488
BELT			
Back-refer to ROOF and BACK BELT			
Front door, Rear door and Quarter-refer to Body Side			
BODY SIDE			
-body type 53-w/body side mouldings	75D	2,3,4	P-12138
-body type 60-w/body side mouldings	75D	5,6,7	P-12139
-body type 60-w/o body side mouldings	75D	8	P-12711
DOOR EDGE GUARDS	75D	10	P-10061
LUGGAGE COMPARTMENT - refer to BACK END			
ROOF and BACK BELT			
-body type 53	75D	11	P-11921
-body type 60-w/full vinyl roof	75D	12	P-11922
-body type 60-w/half vinyl roof	75D	13	P-12493
ROOF DRIP - refer to ROOF and BACK BELT			
WHEEL OPENING COVER PARTS	75D	14	P-11793
WINDOW FRAME - refer to Body Illustration Index 230			
WINDSHIELD	75D	1	P-12994

INDEX

TITLE	SECTION	PAGE	ILLUS. NO.
1975			
F (COUGAR)			
BACK END	75F	5	P-11196
BACK WINDOW	75F	5	P-12457
BELT			
Back-refer to ROOF and BACK BELT			
Front door and Quarter-refer to Body Side			
BODY SIDE	75F	2,3,4	P-11195
DOOR EDGE GUARDS	75F	7	P-10061
LUGGAGE COMPARTMENT - refer to BACK END			
ROOF and BACK BELT	75F	6	P-12817
ROOF DRIP - refer to ROOF and BACK BELT			
WINDSHIELD	75F	1	P-12521
G (MONARCH)			
BACK END			
-body types 54 and 66	75G	12	P-11949
BACK WINDOW			
-body type 54	75G	13	P-12485
-body type 66	75G	14	P-12486
BELT			
Back-refer to ROOF and BACK BELT			
Front door, Rear door and Quarter-refer to Body Side			
BODY SIDE			
-body type 54H	75G	2	P-11946
-body type 54K-w/luxury decor	75G	3,4	P-11945
-body type 66H	75G	4	P-11947
-body type 66K-w/luxury decor	75G	5	P-11944
BODY SIDE PROTECTION			
-body type 54 (black vinyl insert)	75G	7	P-11943
-body type 54 (bright finish)	75G	6	P-11948
-body type 66 (black vinyl insert)	75G	7	P-11942
-body type 66 (bright finish)	75G	6	P-11941
DOOR EDGE GUARDS	75G	8	P-10061
LUGGAGE COMPARTMENT - refer to BACK END			
ROOF and BACK BELT			
-body type 54H	75G	15	P-11935
-body type 54K	75G	16	P-11935
-body type 66	75G	17	P-11934
-body type 54-w/French back lite	75G	18	P-12680
ROOF DRIP - refer to ROOF and BACK BELT			
STRIPES			
-body types 54 and 66	75G	9	P-12021
WINDOW FRAME			
-body type 54	75G	10	P-12494
-body type 66	75G	11	P-12496
WINDSHIELD	75G	1	P-12526

COPYRIGHT © 1986 — FORD MOTOR COMPANY — DEARBORN, MICHIGAN

INDEX

TITLE	SECTION	PAGE	ILLUS. NO.
1975			
J (CAPRI)			
- For 1975 model year - use 1976 index			
K (MARK IV)			
BACK END			
-body type 65	75K	5	P-11078
BACK WINDOW			
-bright	75K	1	P-12459
-color keyed	75K	6,7	P-12490
BELT			
Back-refer to ROOF and BACK BELT			
Front door and Quarter-refer to Body Side			
BODY SIDE			
-Partial length body protection	75K	2	P-11079
-Full length body protection	75K	3,4	P-11913
DOOR EDGE GUARDS	75K	6	P-10061
LUGGAGE COMPARTMENT - refer to BACK END			
ROOF and BACK BELT			
-body type 65-w/full vinyl roof	75K	8,9	P-11932
-body type 65-w/half vinyl roof	75K	9,10	P-12208
ROOF DRIP - refer to ROOF and BACK BELT			
STRIPES	75K	3,4	P-11913
WINDSHIELD	75K	1	P-12521
L (BOBCAT)			
BACK END			
-body types 62 and 64	75L	10	P-11415
-body type 73	75L	11	P-11416
BACK WINDOW			
-body type 62	75L	12	P-12464
-body type 64	75L	12	P-12465
-body type 73	75L	11	P-11416
BELT			
Back - refer to ROOF and BACK BELT			
Front Door and Quarter - refer to Body Side			
BODY SIDE			
-body types 62 and 64	75L	2,3	P-12314
-body type 73B	75L	4	P-12313
-body type 73H	75L	5,6	P-12315
BODY SIDE PROTECTION	75L	7	P-12316
DOOR EDGE GUARDS	75L	13	P-10061
LIFTGATE - refer to BACK END			
LUGGAGE COMPARTMENT - refer to BACK END			

INDEX

TITLE	SECTION	PAGE	ILLUS. NO.
1975			
L (BOBCAT) - cont'd.			
ROOF and BACK BELT			
-body types 62 and 64	75L	14	P-12186
ROOF DRIP - refer to ROOF and BACK BELT			
STRIPES			
-body type 73	75L	7	P-12690
WINDOW FRAME			
-body types 62 and 64	75L	8	P-12497
-body type 73	75L	9	P-12498
WINDSHIELD	75L	1	P-12522
P (COMET)			
BACK END			
-body types 54 and 62	75P	9	P-11076
BACK WINDOW			
-body type 54	75P	10	P-12468
-body type 62	75P	10	P-12467
BELT			
Back-refer to ROOF and BACK BELT			
Front door, Rear door and Quarter-refer to Body Side			
BODY SIDE			
-body type 54-w/o luxury decor	75P	2	P-11854
-body type 54-w/luxury decor	75P	3	P-10011
-body type 62-w/o luxury decor	75P	2	P-8226
-body type 62-w/luxury decor	75P	4	P-10012
BODY SIDE PROTECTION			
-body type 54	75P	5	P-11855
-body type 62	75P	6	P-8186
DOOR EDGE GUARDS	75P	12	P-10061
LUGGAGE COMPARTMENT - refer to BACK END			
ROOF and BACK BELT			
-body type 54	75P	11	P-12012
-body type 62	75P	11	P-10374
ROOF DRIP - refer to ROOF and BACK BELT			
WINDOW FRAME			
-body type 54	75P	7	P-12500
-body type 62	75P	8	P-12499
WINDSHIELD	75P	1	P-12520

COPYRIGHT © 1986 — FORD MOTOR COMPANY — DEARBORN, MICHIGAN

INDEX

TITLE	SECTION	PAGE	ILLUS. NO.
1975			
Y (METEOR)			
BACK END			
-body types 53 and 65	75Y	11	P-11984
-body type 71	75Y	12	P-12278
BACK WINDOW			
-body type 53	75Y	13	P-12460
-body type 65	75Y	14	P-12487
BELT			
Back-refer to ROOF and BACK BELT			
Front door, Rear Door and Quarter-refer to Body Side			
BODY SIDE			
-body type 53-w/o wheel opening cover	75Y	2	P-12029
-body type 53-w/wheel opening cover	75Y	3	P-12026
-body type 65-w/o wheel opening cover	75Y	4	P-12030
-body type 65-w/wheel opening cover	75Y	5	P-12027
-body type 71	75Y	6	P-12028
BODY SIDE PROTECTION			
-body type 53	75Y	7	P-11962
-body type 65	75Y	8	P-11963
-body type 71	75Y	9	P-11964
DOOR EDGE GUARDS	75Y	18	P-10061
LUGGAGE COMPARTMENT - refer to BACK END			
ROOF and BACK BELT			
-body type 53	75Y	15	P-13420
-body type 65-w/halo vinyl roof	75Y	16	P-10120
-body type 71	75Y	17	P-11886
ROOF DRIP - refer to ROOF and BACK BELT			
TAILGATE - refer to BACK END			
WHEEL OPENING COVER PARTS			
-body types 53 and 65	75Y	1	P-8181
WINDOW FRAME			
-Body type 71	75Y	10	P-12501
WINDSHIELD	75Y	1	P-12521

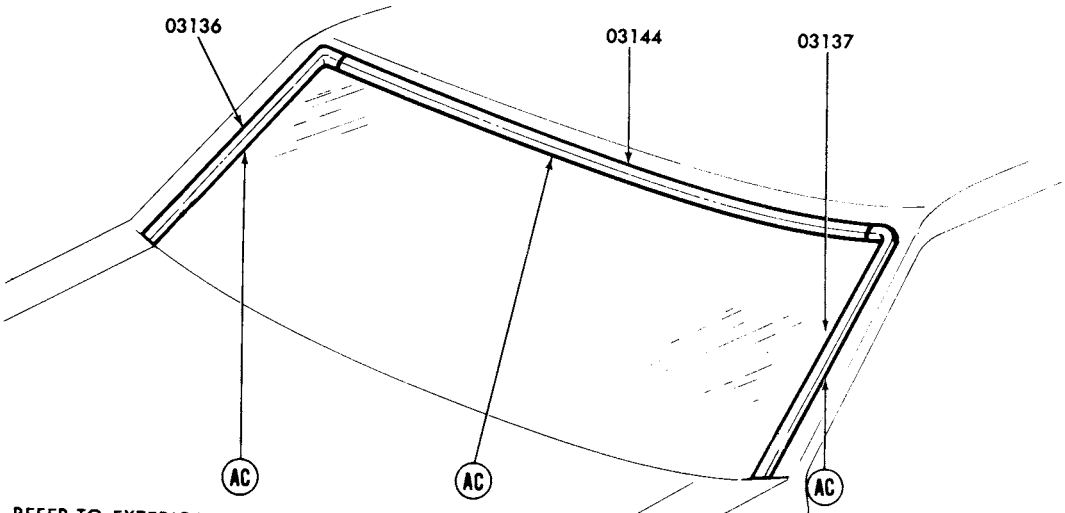

REFER TO EXTERIOR MOULDING SECTION 'R' FOR COMPLETE RETAINER INFORMATION

P-12521

1975 MERCURY - WINDSHIELD

GROUP NUMBER	PART NAME	DESCRIPTION	PART NUMBER		QTY.
03136-7	Moulding (windshield outside side)	Body types 53, 71	(RH)♦D7AZ 5303136-A	(LH)♦D7AZ 5303137-A	1
		Body type 65	(RH)♦D7AZ 6003136-A	(LH)♦D7AZ 6003137-A	1
03144	Moulding (windshield outside top)	Body types 53, 71	♦D7AZ 5303144-A		1
		Body type 65	♦D7AZ 6003144-A		1

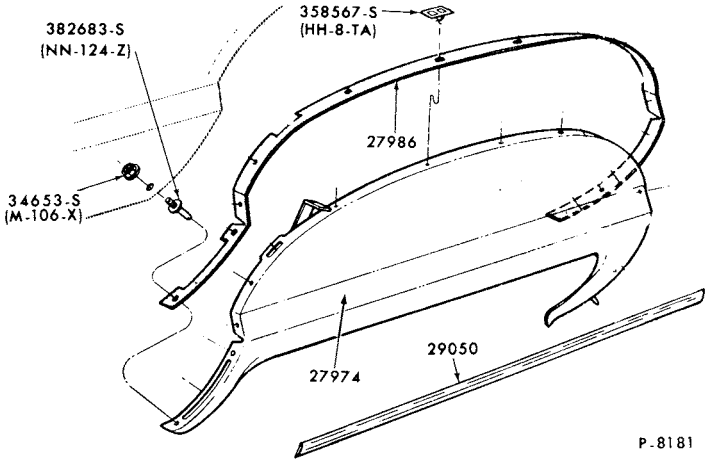

P-8181

1975 MERCURY - BODY TYPES 53 and 65 - WHEEL OPENING COVER PARTS

GROUP NUMBER	PART NAME	DESCRIPTION	PART NUMBER		QTY.
27974-5	Panel (quarter wheel opening cover)		(RH)♦D3MY 6527974-A	(LH)♦D3MY 6527975-A	1
27986-7	Seal (quarter wheel opening cover)		(RH)♦D3MY 6527986-A	(LH)♦D3MY 6527987-A	1
29050-1	Moulding (quarter wheel opening cover)	Body types 53H, K, 65H, K	(RH)♦D3MY 6529050-B	(LH)♦D3MY 6529051-B	1

♦ Includes attaching parts

COPYRIGHT © 1986 — FORD MOTOR COMPANY — DEARBORN, MICHIGAN

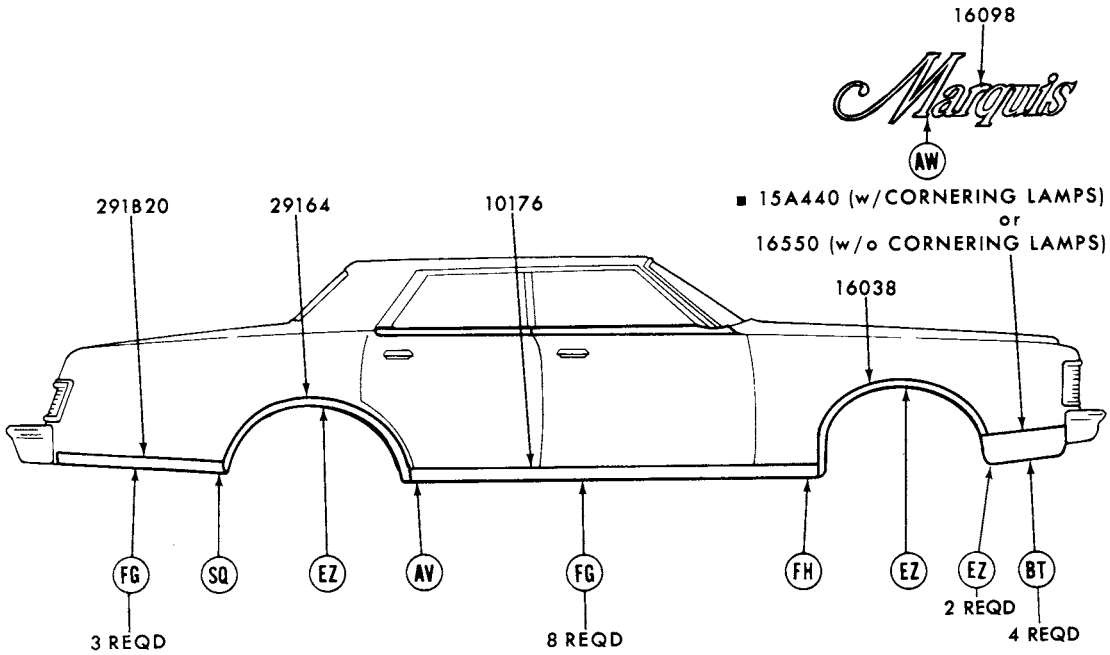

■ REFER TO GROUP IN CHASSIS SECTION
REFER TO EXTERIOR MOULDING SECTION "R" FOR COMPLETE RETAINER INFORMATION P-11967

1975 MERCURY - BODY TYPE 53H - SIDE - w/o WHEEL OPENING COVERS

GROUP NUMBER	PART NAME	DESCRIPTION	PART NUMBER		QTY.
10176-7	Moulding (body rocker panel)	90 7/32" long	(RH)♦D3MY 6510176-A	(LH)♦D3MY 6510177-A	1
16038-9	Moulding (front fender wheel opening)		(RH)♦D5MY 16038-A	(LH)♦D5MY 16039-A	1
16098	Plate (name)	"Marquis"	♦D3MY 16098-B	R.H. and L.H.	2
16550-1	Moulding (front fender lower front)		(RH)♦D5MY 16550-A	(LH)♦D5MY 16551-A	1
291B20-1	Moulding (quarter lower)		(RH)♦D4MY 65291B20-A	(LH)♦D4MY 65291B21-A	1
29164-5	Moulding (quarter wheel opening)		(RH)♦D5MY 6529164-A	(LH)♦D5MY 6529165-A	1

♦ Includes attaching parts

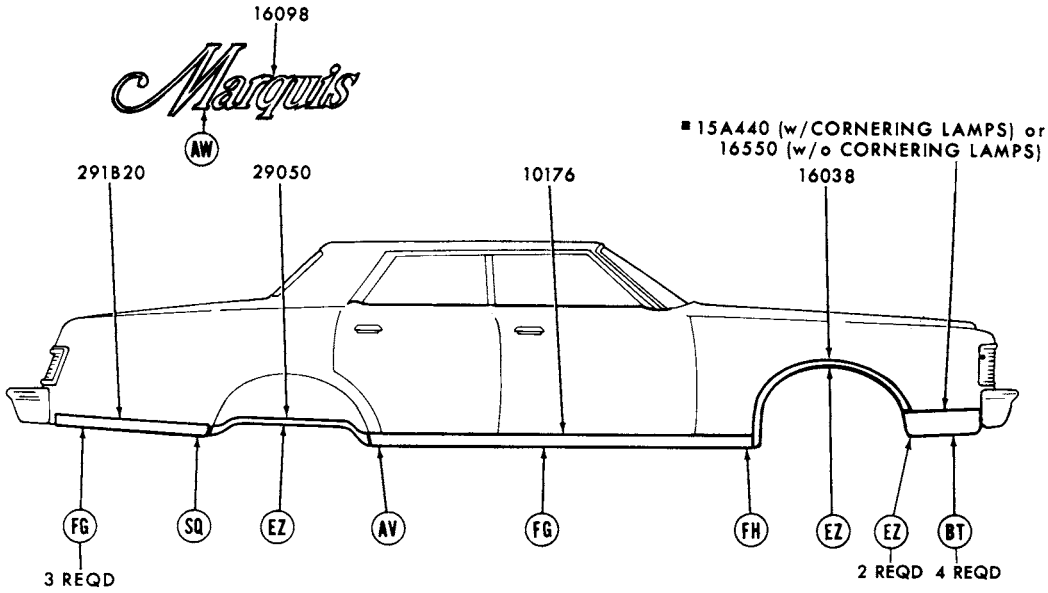

■ REFER TO GROUP IN CHASSIS SECTION
REFER TO EXTERIOR MOULDING SECTION "R" FOR COMPLETE RETAINER INFORMATION

P-11970

1975 MERCURY - BODY TYPE 53H - SIDE - w/WHEEL OPENING COVERS

GROUP NUMBER	PART NAME	DESCRIPTION	PART NUMBER		QTY.
10176-7	Moulding (body rocker panel)	90 7/32" long	(RH)♦D3MY 6510176-A	(LH)♦D3MY 6510177-A	1
16038-9	Moulding (front fender wheel opening)		(RH)♦D5MY 16038-A	(LH)♦D5MY 16039-A	1
16098	Plate (name)	"Marquis"	♦D3MY 16098-B	R.H. and L.H.	2
16550-1	Moulding (front fender lower front)		(RH)♦D5MY 16550-A	(LH)♦D5MY 16551-A	1
29050-1	Moulding (quarter wheel opening cover)		(RH)D3MY 6529050-A	(LH)♦D3MY 6529051-A	1
291B20-1	Moulding (quarter lower)		(RH)♦D4MY 65291B20-A	(LH)♦D4MY 65291B21-A	1

♦ Includes attaching parts

COPYRIGHT © 1986 — FORD MOTOR COMPANY — DEARBORN, MICHIGAN

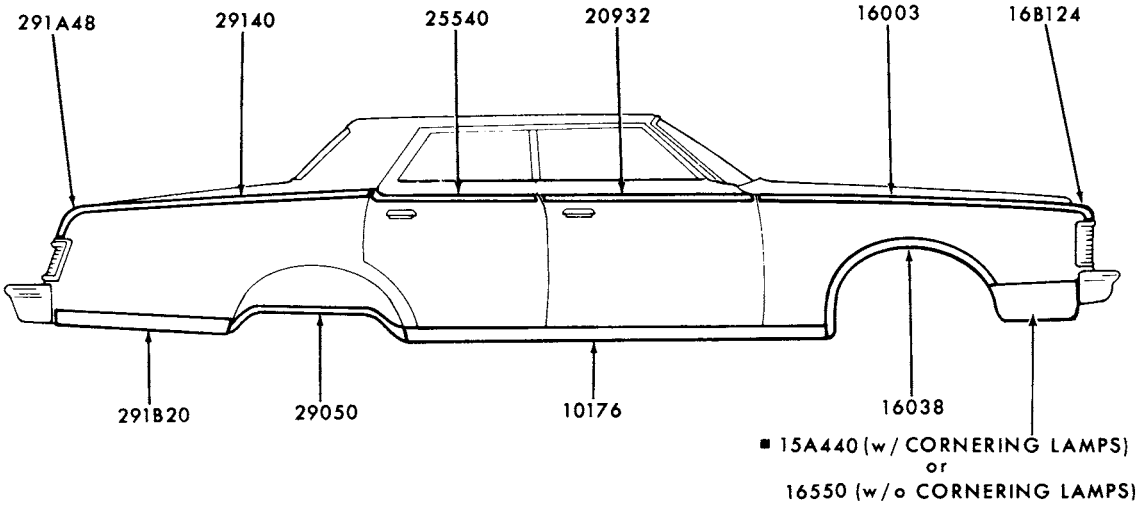

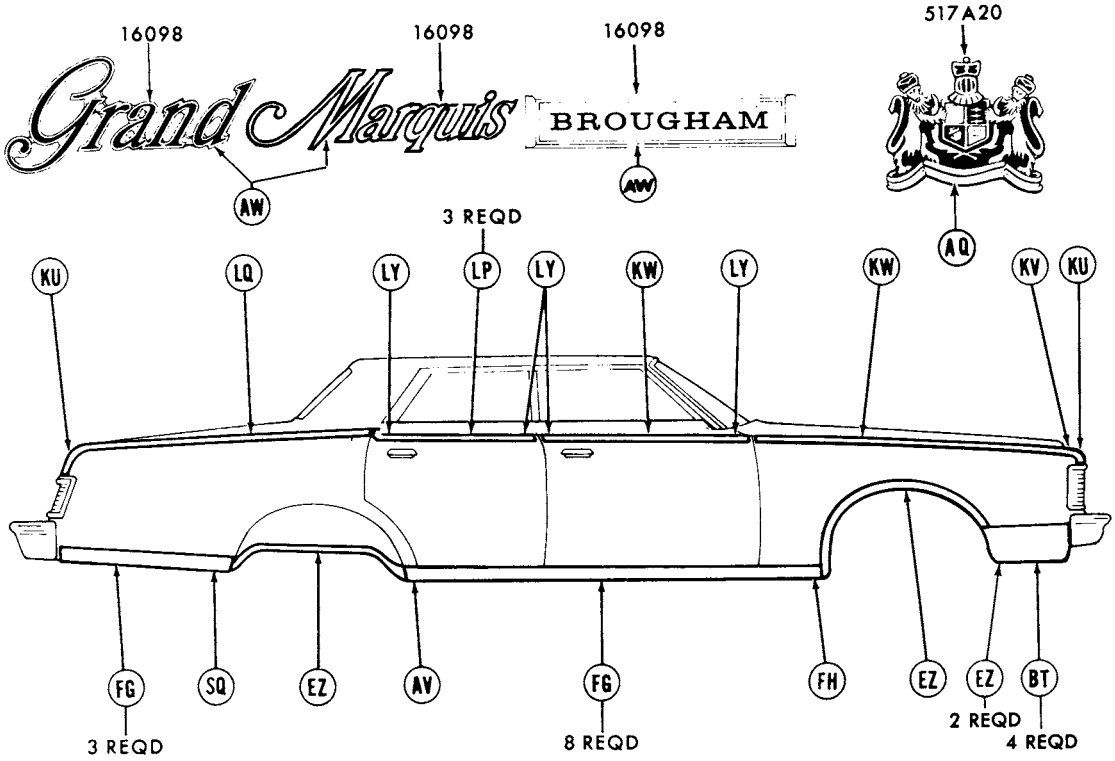

■ REFER TO GROUP IN CHASSIS SECTION
REFER TO EXTERIOR MOULDING SECTION "R" FOR COMPLETE RETAINER INFORMATION

P-11971

1975 MERCURY - BODY TYPES 53K,L - SIDE - w/o VINYL INSERT MOULDINGS

1975 MERCURY - BODY TYPES 53K,L - SIDE - w/o VINYL INSERT MOULDINGS - cont'd.

GROUP NUMBER	PART NAME	DESCRIPTION	PART NUMBER		QTY.
10176-7	Moulding (body rocker panel)	90 7/32" long	(RH)♦D3MY 6510176-A	(LH)♦D3MY 6510177-A	1
16003-4	Moulding (front fender side)		(RH)♦D5MY 16003-A	(LH)♦D5MY 16004-A	1
16038-9	Moulding (front fender wheel opening)		(RH)♦D5MY 16038-A	(LH)♦D5MY 16039-A	1
16098	Plate (name)	"BROUGHAM"	♦D5MY 16098-A	R.H. and L.H.	2
		"Grand"	♦D5MY 16098-C	R.H. and L.H.	2
		"Marquis"	♦D3MY 16098-B	R.H. and L.H.	2
16124-5	Moulding (front fender front extension)		(RH)♦D5MY 16B124-A	(LH)♦D5MY 16B125-A	1
16550-1	Moulding (front fender lower front)		(RH)♦D5MY 16550-A	(LH)♦D5MY 16551-A	1
20932-3	Moulding (front door outside upper)		(RH)♦D5MY 5320932-A	(LH)♦D5MY 5320933-A	1
25540-1	Moulding (rear door outside upper)		(RH)♦D5MY 5325540-A	(LH)♦D5MY 5325541-A	1
29050-1	Moulding (quarter wheel opening cover)		(RH)♦D3MY 6529050-A	(LH)♦D3MY 6529051-A	1
291B20-1	Moulding (quarter outside lower)		(RH)♦D4MY 65291B20-A	(LH)♦D4MY 65291B21-A	1
29140-1	Moulding (quarter outside upper)		(RH)♦D5MY 5329140-A	(LH)♦D5MY 5329141-A	1
291A48-9	Moulding (quarter outside upper rear)		(RH)♦D5MY 65291A48-A	(LH)♦D5MY 65291A49-A	1
517A20	Ornament (roof side outside)	Gold	♦C9MY 65517A20-A	R.H. and L.H.	2
		Silver	♦D0MY 65517A20-A	R.H. and L.H.	2

♦ Includes attaching parts

COPYRIGHT © 1986 — FORD MOTOR COMPANY — DEARBORN, MICHIGAN

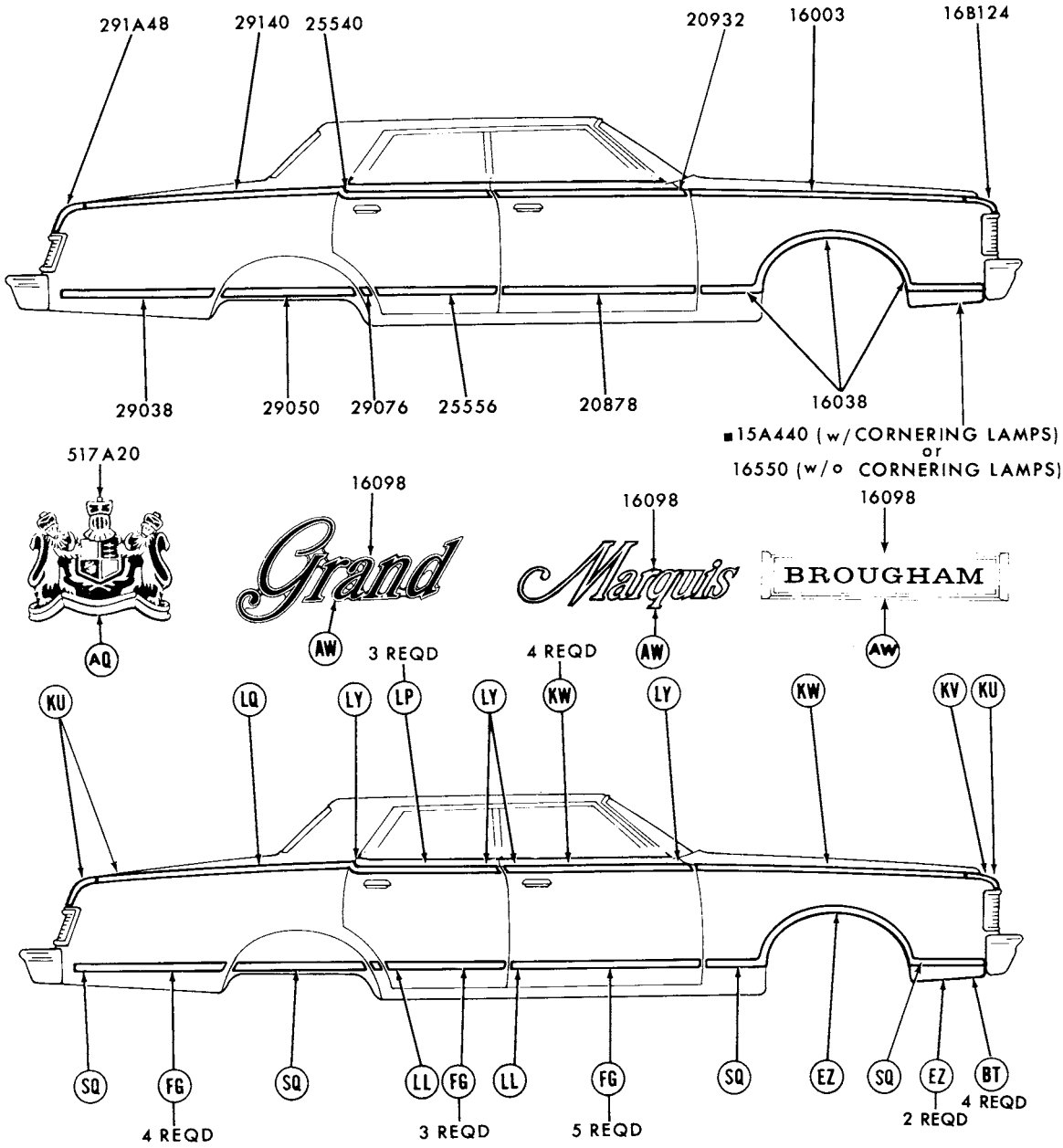

■ REFER TO GROUP IN CHASSIS SECTION
REFER TO EXTERIOR MOULDING SECTION "R" FOR COMPLETE RETAINER INFORMATION

P-11966

1975 MERCURY - BODY TYPES 53K,L - SIDE - w/VINYL INSERT MOULDINGS

1975 MERCURY - BODY TYPES 53K,L - SIDE - w/VINYL INSERT MOULDINGS - cont'd.

GROUP NUMBER	PART NAME	DESCRIPTION	PART NUMBER		QTY.
16003-4	Moulding (front fender side)		(RH)♦D5MY 16003-A	(LH)♦D5MY 16004-A	1
16038-9	Moulding (frt. fender whl. opng.)	◊Black vinyl insert	(RH)♦D5MY 16038-CA	(LH)♦D5MY 16039-CA	1
		◊Blue vinyl insert	(RH)★D5MY 16038-CB	(LH)★D5MY 16039-CB	1
		◊Brown vinyl insert	(RH)★D5MY 16038-CT	(LH)★D5MY 16039-CT Not replaced (4/84)	1
		◊Green vinyl insert	(RH)★D5MY 16038-CG	(LH)★D5MY 16039-CG Not replaced (4/84)	1
		◊Tan vinyl insert	(RH)★D5MY 16038-CU Not replaced (7/81)	(LH)♦D5MY 16039-CU	1
		◊White vinyl insert	(RH)♦D5MY 16038-CW	(LH)♦D5MY 16039-CW	1
16098	Plate (name)	"BROUGHAM"	♦D5MY 16098-A	R.H. and L.H.	2
		"Grand"	D5MY 16098-C	R.H. and L.H.	2
		"Marquis"	♦D3MY 16098-B	R.H. and L.H.	2
16B124-5	Moulding (frt. fender frt. extention)		(RH)♦D5MY 16B124-A	(LH)♦ D5MY 16B125-A	1
16550-1	Moulding (front fender lower front)		(RH)♦D5MY 16550-A	(LH)♦D5MY 16551-A	1
20878-9	Moulding (front door outside)	◊Black vinyl insert	(RH)♦D5MY 5320878-CA	(LH)♦D5MY 5320879-CA	1
		◊Blue vinyl insert	(RH)★D5MY 5320878-CB Not replaced (7/81)	(LH)♦D5MY 5320879-CB	1
		◊Brown vinyl insert	(RH)★D5MY 5320878-CT Not replaced (4/84)	(LH)★D5MY 5320879-CT Not replaced (7/81)	1
		◊White vinyl insert	(RH)♦D5MY 5320878-CW	(LH)♦D5MY 5320879-CW	1
20932-3	Moulding (front door outside upper)		(RH)♦D5MY 5320932-A	(LH)♦D5MY 5320933-A	1
25540-1	Moulding (rear door outside upper)		(RH★D5MY 5325540-A Not replaced (6/82)	(LH)★D5MY 5325541-A Not replaced (6/82)	1
25556-7	Moulding (rear door outside)	◊Black vinyl insert	(RH)♦D5MY 5325556-BA	(LH)♦D5MY 5325557-BA	1
		◊Blue vinyl insert	(RH)★D5MY 5325556-BB Not replaced (4/84)	(LH)♦D5MY 5325557-BB	1
		◊Brown vinyl insert	(RH)♦D5MY 5325556-BT	(LH)★D5MY 5325557-BT Not replaced (7/81)	1
		◊White vinyl insert	(RH)♦D5MY 5325556-BW	(LH)♦D5MY 5325557-BW Not replaced (4/84)	1
29038-9	Moulding (quarter outside)	◊Black vinyl insert	(RH)♦D5MY 6529038-AA	(LH)♦D5MY 6529039-AA	1
		◊Blue vinyl insert	(RH)♦D5MY 6529038-AB	(LH)♦D5MY 6529039-AB	1
		◊Brown vinyl insert	(RH)♦D5MY 6529038-AT	(LH)♦D5MY 6529039-AT	1
		◊Green vinyl insert	(RH)♦D5MY 6529038-AG	(LH)♦D5MY 6529039-AG	1
		◊Red vinyl insert	(RH)★D5MY 6529038-AD Not replaced (6/83)	(LH)♦D5MY 6529039-AD	1
		◊Tan vinyl insert	(RH)♦D5MY 6529038-AU	(LH)♦D5MY 6529039-AU	1
		◊White vinyl insert	(RH)♦D5MY 6529038-AW	(LH)♦D5MY 6529039-AW	1

◊ For color verification, refer to the vinyl roof swatches in the 1975 salesman's color and upholstery selections guide.
♦ Includes attaching parts

COPYRIGHT © 1986 — FORD MOTOR COMPANY — DEARBORN, MICHIGAN

1975 MERCURY - BODY TYPES 53K, L - SIDE - w/VINYL INSERT MOULDINGS - cont'd.

GROUP NUMBER	PART NAME	DESCRIPTION	PART NUMBER		QTY.
29050-1	Moulding (quarter wheel opening cover)	◊Black vinyl insert	(RH)♦D5MY 6529050-AA	(LH)♦D5MY 6529051-AA	1
		◊Blue vinyl insert	(RH)♦D5MY 6529050-AB	(LH)★D5MY 6529051-AB Not replaced (6/82)	1
		◊Brown vinyl insert	(RH)★D5MY 6529050-AT Not replaced (6/82)	(LH)★D5MY 6529051-AT Not replaced (6/82)	1
		◊Red vinyl insert	(RH)♦D5MY 6529050-AD	(LH)★D5MY 6529051-AD Not replaced (6/82)	1
		◊White vinyl insert	(RH)★D5MY 6529050-AW Not replaced (6/83)	(LH)♦D5MY 6529051-AW	1
29076-7	Moulding (quarter outside lower front)	◊Black vinyl insert	(RH)♦D5MY 5329076-BA	(LH)♦D5MY 5329077-BA	1
		◊Blue vinyl insert	(RH)★D5MY 5329076-BB Not replaced (4/84)	(LH) D5MY 5329077-BB	1
		◊Green vinyl insert	(RH)★D5MY 5329076-BG Not replaced (7/81)	(LH)♦D5MY 5329077-BG	1
		◊Red vinyl insert	(RH)★D5MY 5329076-BD Not replaced (6/82)	(LH)♦D5MY 5329077-BD	1
		◊White vinyl insert	(RH)♦D5MY 5329076-BW	(LH)♦D5MY 5329077-BW	1
29140-1	Moulding (quarter outside upper)		(RH)♦D5MY 5329140-A	(LH)♦D5MY 5329141-A	1
291A48-9	Moulding (quarter outside upper rear)		(RH)♦D5MY 65291A48-A	(LH)♦D5MY 65291A49-A	1
517A20	Ornament (roof side outside)	Gold	♦C9MY 65517A20-A	R.H. and L.H.	2
		Silver	♦D0MY 65517A20-A	R.H. and L.H.	2

◊ For color verification, refer to the vinyl roof swatches in the 1975 salesman's color and upholstery selections guide.
♦ Includes attaching parts

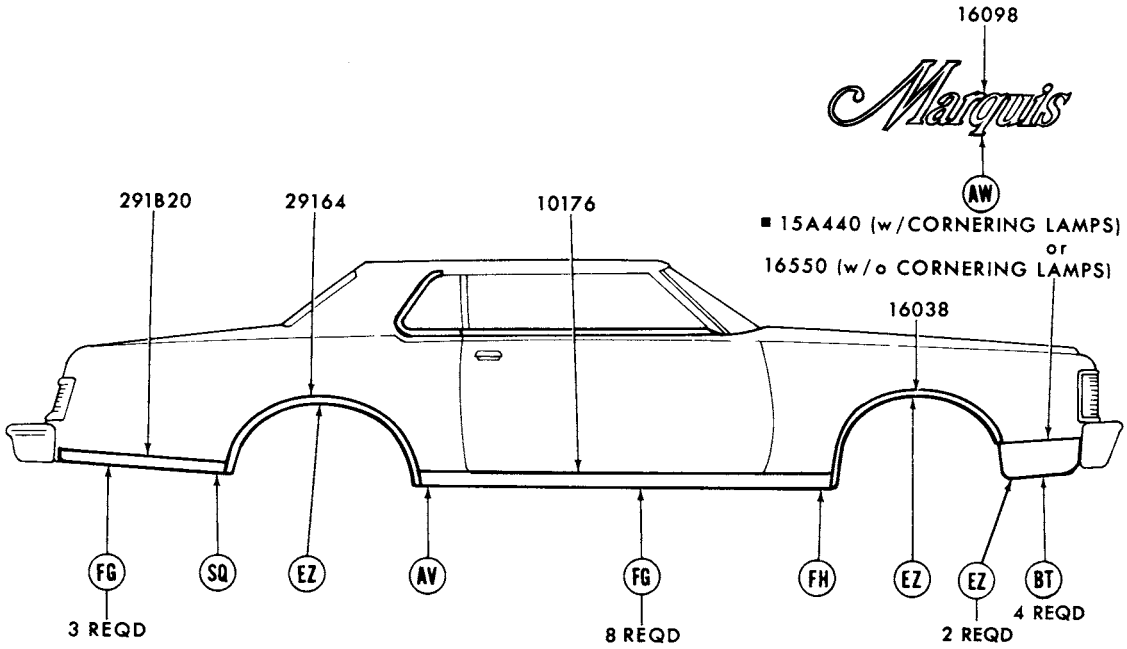

■ REFER TO GROUP IN CHASSIS SECTION
REFER TO EXTERIOR MOULDING SECTION "R" FOR COMPLETE RETAINER INFORMATION

P-11968

1975 MERCURY - BODY TYPE 65H - SIDE - w/o WHEEL OPENING COVER

GROUP NUMBER	PART NAME	DESCRIPTION	PART NUMBER		QTY.
10176-7	Moulding (body rocker panel)	90 7/32" long	(RH)♦D3MY 6510176-A	(LH)♦D3MY 6510177-A	1
16038-9	Moulding (front fender wheel opening)		(RH)♦D5MY 16038-A	(LH)♦D5MY 16039-A	1
16098	Plate (name)	"Marquis"	♦D3MY 16098-B	R.H. and L.H.	2
16550-1	Moulding (front fender lower front)		(RH)♦D5MY 16550-A	(LH)♦D5MY 16551-A	1
291B20-1	Moulding (quarter lower)		(RH)♦D4MY 65291B20-A	(LH)♦D4MY 65291B21-A	1
29164-5	Moulding (quarter wheel opening)		(RH)♦D5MY 6529164-A	(LH)♦D5MY 6529165-A	1

♦ Includes attaching parts

COPYRIGHT © 1986 — FORD MOTOR COMPANY — DEARBORN, MICHIGAN

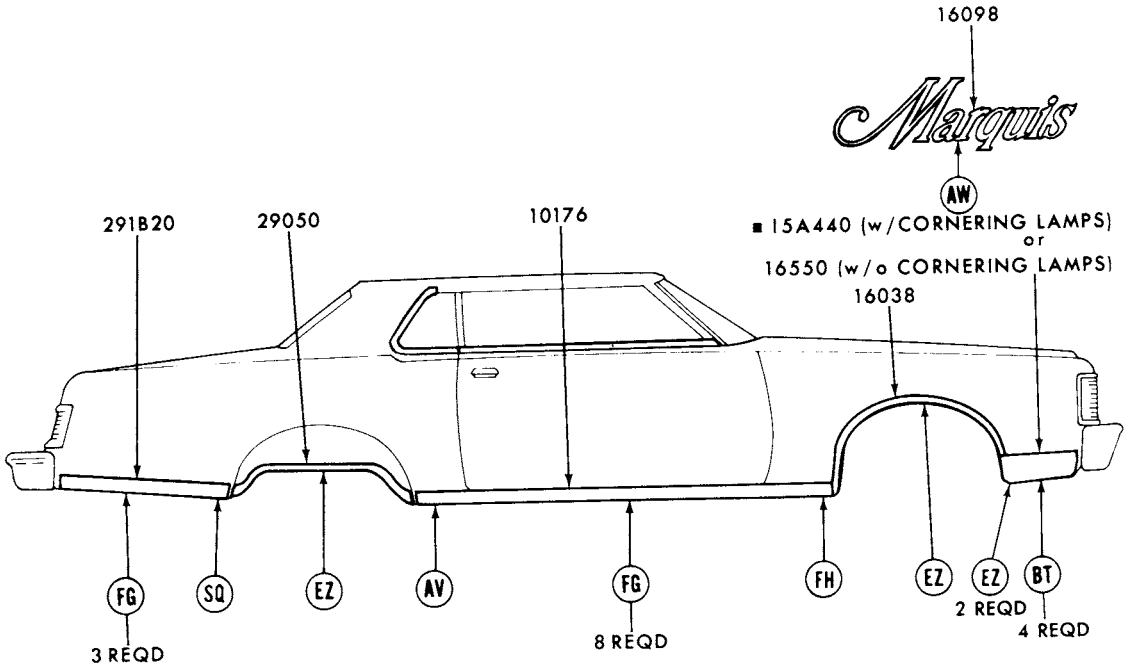

■ REFER TO GROUP IN CHASSIS SECTION
REFER TO EXTERIOR MOULDING SECTION "R" FOR COMPLETE RETAINER INFORMATION

P-11969

1975 MERCURY - BODY TYPE 65H - SIDE - w/WHEEL OPENING COVER

GROUP NUMBER	PART NAME	DESCRIPTION	PART NUMBER		QTY.
10176-7	Moulding (body rocker panel)	90 7/32" long	(RH)♦D3MY 6510176-A	(LH)♦D3MY 6510177-A	1
16038-9	Moulding (front fender wheel opening)		(RH)♦D5MY 16038-A	(LH)♦D5MY 16039-A	1
16098	Plate (name)	"Marquis"	♦D3MY 16098-B	R.H. and L.H.	2
16550-1	Moulding (front fender lower front)		(RH)♦D5MY 16550-A	(LH)♦D5MY 16551-A	1
29050-1	Moulding (quarter wheel opening cover)		(RH)♦D3MY 6529050-A	(LH)♦D3MY 6529051-A	1
291B20-1	Moulding (quarter outside lower)		(RH)♦D4MY 65291B20-A	(LH)♦D4MY 65291B21-A	1

♦ Includes attaching parts

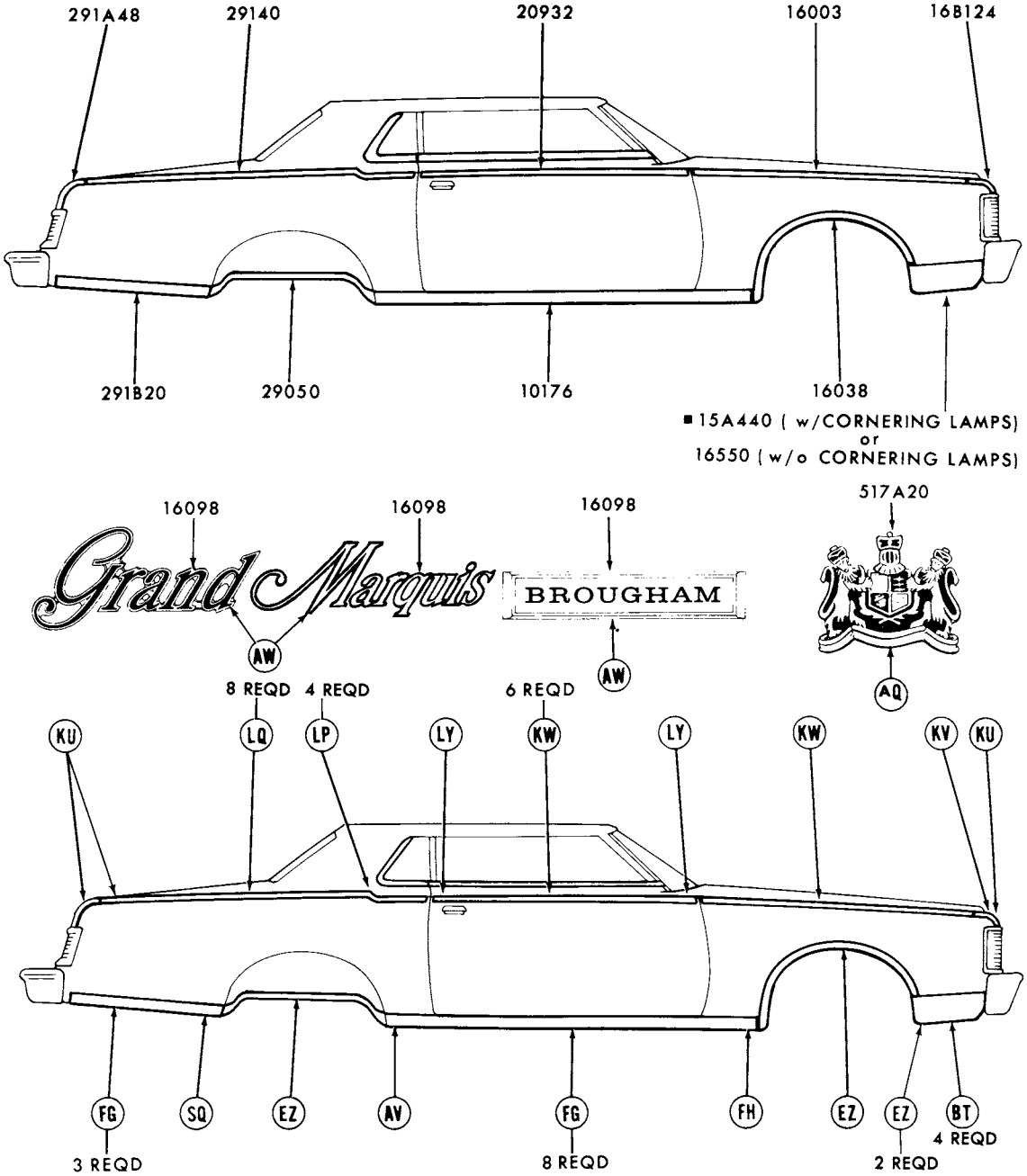

■REFER TO GROUP IN CHASSIS SECTION
REFER TO EXTERIOR MOULDING SECTION "R" FOR COMPLETE RETAINER INFORMATION P-11972

1975 MERCURY - BODY TYPES 65K, L - SIDE - w/o VINYL INSERT MOULDINGS

COPYRIGHT © 1986 — FORD MOTOR COMPANY — DEARBORN, MICHIGAN

1975 MERCURY - BODY TYPES 65K,L - SIDE - w/o VINYL INSERT MOULDINGS - cont'd.

GROUP NUMBER	PART NAME	DESCRIPTION	PART NUMBER		QTY.
10176-7	Moulding (body rocker panel)	90 7/32" long	(RH)♦D3MY 6510176-A	(LH)♦D3MY 6510177-A	1
16003-4	Moulding (front fender side)		(RH)♦D5MY 16003-A	(LH)♦D5MY 16004-A	1
16038-9	Moulding (front fender wheel opening)		(RH)♦D5MY 16038-A	(LH)♦D5MY 16039-A	1
16098	Plate (name)	"BROUGHAM"	♦D5MY 16098-A	R.H. and L.H.	2
		"Grand"	♦D5MY 16098-C	R.H. and L.H.	2
		"Marquis"	♦D3MY 16098-B	R.H. and L.H.	2
16B124-5	Moulding (front fender front extension)		(RH)♦D5MY 16B124-A	(LH)♦D5MY 16B125-A	1
16550-1	Moulding (front fender lower front)		(RH)♦D5MY 16550-A	(LH)♦D5MY 16551-A	1
20932-3	Moulding (front door outside upper)		(RH)♦D5MY 6520932-A	(LH)♦D5MY 6520933-A	1
29050-1	Moulding (quarter wheel opening cover)		(RH)♦D3MY 6529050-A	(LH)♦D3MY 6529051-A	1
291B20-1	Moulding (quarter outside lower)		(RH)♦D4MY 65291B20-A	(LH)♦D4MY 65291B21-A	1
29140-1	Moulding (quarter outside upper)		(RH)♦D5MY 6529140-A	(LH)♦D5MY 6529141-A	1
291A48-9	Moulding (quarter outside upper rear)		(RH)♦D5MY 65291A48-A	(LH)♦D5MY 65291A49-A	1
517A20	Ornament (roof side outside)	Gold	♦C9MY 65517A20-A	R.H. and L.H.	2
		Silver	♦D0MY 65517A20-A	R.H. and L.H.	2

♦ Includes attaching parts

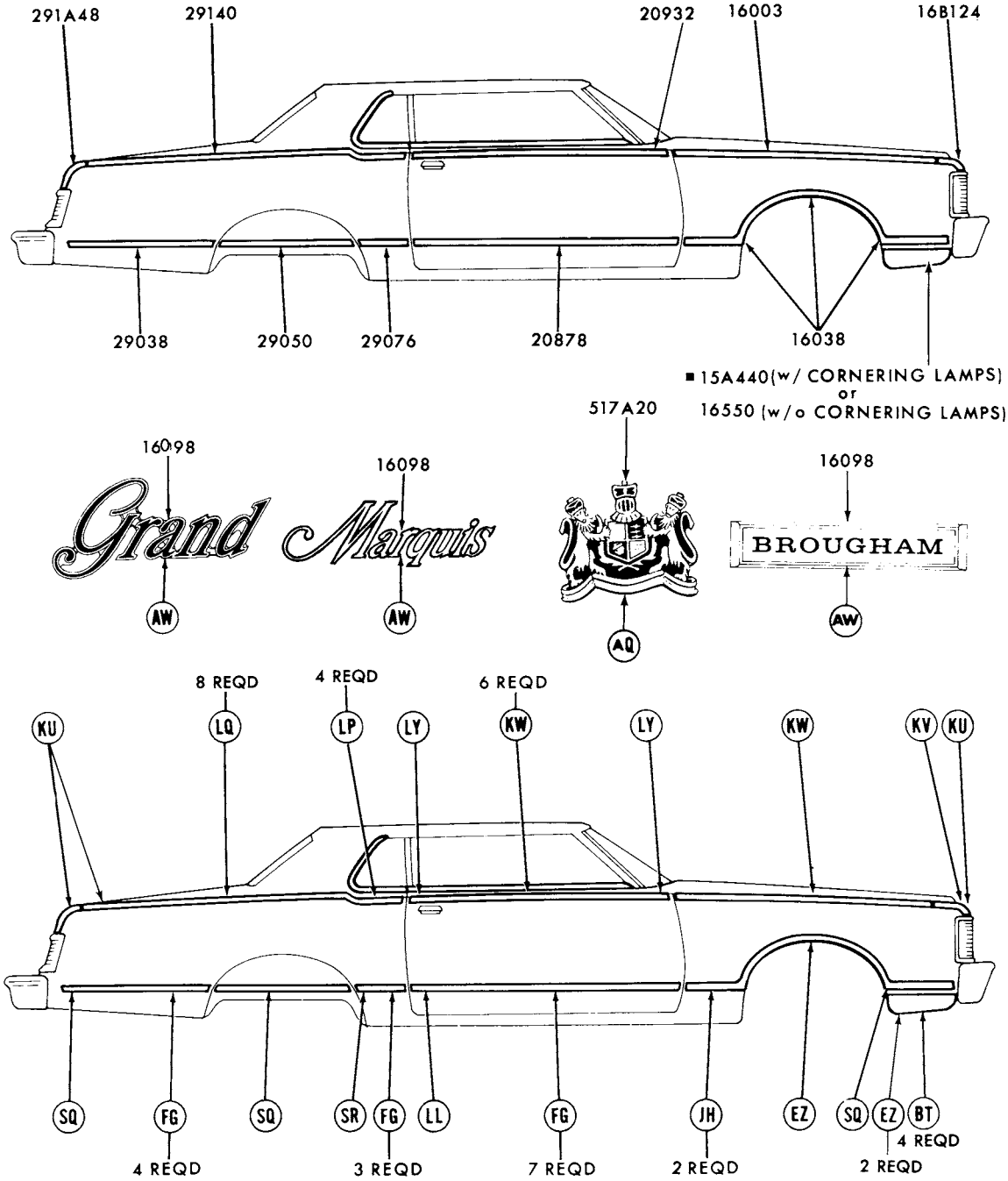

■ REFER TO GROUP IN CHASSIS SECTION
REFER TO EXTERIOR MOULDING SECTION "R" FOR COMPLETE RETAINER INFORMATION

P-11965

1975 MERCURY - BODY TYPES 65K, L - SIDE - w/VINYL INSERT MOULDINGS

COPYRIGHT © 1986 — FORD MOTOR COMPANY — DEARBORN, MICHIGAN

1975 MERCURY - BODY TYPES 65K,L - SIDE - w/VINYL INSERT MOULDINGS - cont'd.

GROUP NUMBER	PART NAME	DESCRIPTION	PART NUMBER		QTY.
16003-4	Moulding (front fender side)		(RH)♦D5MY 16003-A	(LH)♦D5MY 16004-A	1
16038-9	Moulding (front fenderwheel opng)	◊Black vinyl insert	(RH)♦D5MY 16038-CA	(LH)♦D5MY 16039-CA	1
		◊Blue vinyl insert	(RH)♦D5MY 16038-CB	(LH)♦D5MY 16039-CB	1
		◊Brown vinyl insert	(RH)★D5MY 16038-CT	(LH)★D5MY 16039-CT Not replaced (4/84)	1
		◊Green vinyl insert	(RH)★D5MY 16038-CG	(LH)★D5MY 16039-CG Not replaced (4/84)	1
		◊Red vinyl insert	(RH)♦D5MY 16038-CD	(LH)★D5MY 16039-CD Not replaced (7/81)	1
		◊Tan vinyl insert	(RH)★D5MY 16038-CU Not replaced (7/81)	(LH)♦D5MY 16039-CU	1
		◊White vinyl insert	(RH)♦D5MY 16038-CW	(LH)♦D5MY 16039-CW	1
16098	Plate (name)	"BROUGHAM"	♦D5MY 16098-A	R.H. and L.H.	2
		"Grand"	♦D5MY 16098-C	R.H. and L.H.	2
		"Marquis"	♦D3MY 16098-B	R.H. and L.H.	2
16B124-5	Moulding (front fender front ext.)		(RH)♦D5MY 16B124-A	(LH)♦D5MY 16B125-A	1
16550-1	Moulding (front fender lwr. frt.)		(RH)♦D5MY 16550-A	(LH)♦D5MY 16551-A	1
20878-9	Moulding (front door outside)	◊Black vinyl insert	(RH)♦D5MY 6520878-AA	(LH)♦D5MY 6520879-AA	1
		◊Green vinyl insert	(RH)★D5MY 6520878-AG Not replaced (4/79)	(LH)♦D5MY 6520879-AG	1
		◊Red vinyl insert	(RH)♦D5MY 6520878-AD	(LH)★D5MY 6520879-AD Not replaced (7/81)	1
		◊White vinyl insert	(RH)♦D5MY 6520878-AW	(LH)♦D5MY 6520879-AW	1
20932-3	Moulding (front door outside upper)		(RH)♦D5MY 6520932-A	(LH)♦D5MY 6520933-A	1
29038-9	Moulding (quarter outside)	◊Black vinyl insert	(RH)♦D5MY 6529038-AA	(LH)♦D5MY 6529039-AA	1
		◊Blue vinyl insert	(RH)♦D5MY 6529038-AB	(LH)♦D5MY 6529039-AB	1
		◊Brown vinyl insert	(RH)♦D5MY 6529038-AT	(LH)♦D5MY 6529039-AT	1
		◊Green vinyl insert	(RH)★D5MY 6529038-AG Not replaced (7/81)	(LH)♦D5MY 6529039-AG	1
		◊Red vinyl insert	(RH)★D5MY 6529038-AD Not replaced (6/83)	(LH)♦D5MY 6529039-AD	1
		◊Tan vinyl insert	(RH)★D5MY 6529038-AU Not replaced (6/82)	(LH)♦D5MY 6529039-AU	1
		◊White vinyl insert	(RH)♦D5MY 6529038-AW	(LH)♦D5MY 6529039-AW	1
29050-1	Moulding (quarter wheelopen. cvr.)	◊Black vinyl insert	(RH)♦D5MY 6529050-AA	(LH)♦D5MY 6529051-AA	1
		◊Blue vinyl insert	(RH)♦D5MY 6529050-AB	(LH)★D5MY 6529051-AB Not replaced (6/82)	1
		◊Red vinyl insert	(RH)♦D5MY 6529050-AD	(LH)★D5MY 6529051-AD Not replaced (6/82)	1
		◊White vinyl insert	(RH)★D5MY 6529050-AW Not replaced (6/83)	(LH)♦D5MY 6529051-AW	1
29076-7	Moulding (quarter outside low. frt)	◊Black vinyl insert	(RH)♦D5MY 6529076-AA	(LH)♦D5MY 6529077-AA	1
		◊Brown vinyl insert	(RH)♦D5MY 6529076-AT	(LH)★D5MY 6529077-AT Not replaced (7/81)	1
		◊Green vinyl insert	(RH)♦D5MY 6529076-AG	(LH)★D5MY 6529077-AG Not replaced (7/81)	1
		◊White vinyl insert	(RH)♦D5MY 6529076-AW	(LH)★D5MY 6529077-AW Not replaced (4/84)	1
29140-1	Moulding (quarter outside upper)		(RH)♦D5MY 6529140-A	(LH)♦D5MY 6529141-A	1
291A48-9	Moulding (qtr. outside upper rr.)		(RH)♦D5MY 65291A48-A	(LH)♦D5MY 65291A49-A	1
517A20	Ornament (roof side outside)	Gold	♦C9MY 65517A20-A	R.H. and L.H.	2
		Silver	♦D0MY 65517A20-A	R.H. and L.H.	2

◊ For color verification, refer to the vinyl roof swatches in the 1975 salesman's color and upholstery selections guide.
♦ Includes attaching parts

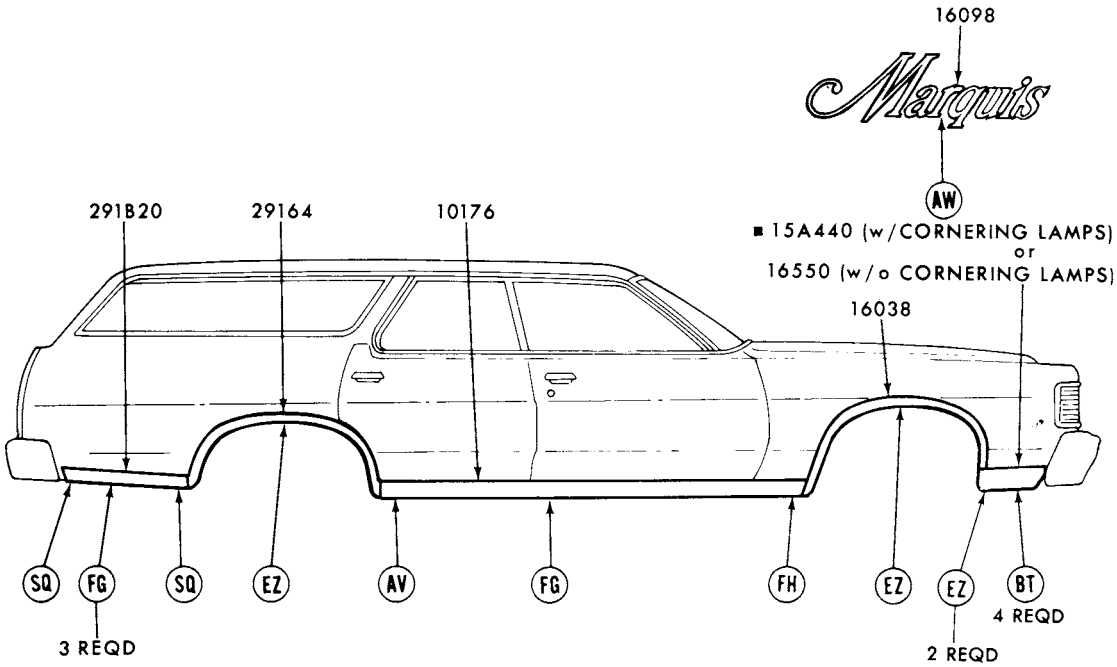

■ REFER TO GROUP IN TEXT SECTION
REFER TO EXTERIOR MOULDING SECTION "R" FOR COMPLETE RETAINER INFORMATION

P-11973

1975 MERCURY - BODY TYPE 71H - SIDE

GROUP NUMBER	PART NAME	DESCRIPTION	PART NUMBER		QTY.
10176-7	Moulding (body rocker panel)	87 3/4" long	(RH)♦D3MY 7110176-A	(LH)♦D3MY 7110177-A	1
16038-9	Moulding (front fender wheel opening)		(RH)♦D5MY 16038-A	(LH)♦D5MY 16039-A	1
16098	Plate (name)	"Marquis"	♦D3MY 16098-B	R.H. and L.H.	2
16550-1	Moulding (front fender lower front)		(RH)♦D5MY 16550-A	(LH)♦D5MY 16551-A	1
291B20-1	Moulding (quarter outside lower)		(RH)♦D5MY 71291B20-A	(LH)♦D5MY 71291B21-A	1
29164-5	Moulding (quarter wheel opening)		(RH)♦D5MY 7129164-A	(LH)♦ D5MY 7129165-A	1

♦ Includes attaching parts

COPYRIGHT © 1986 — FORD MOTOR COMPANY — DEARBORN, MICHIGAN

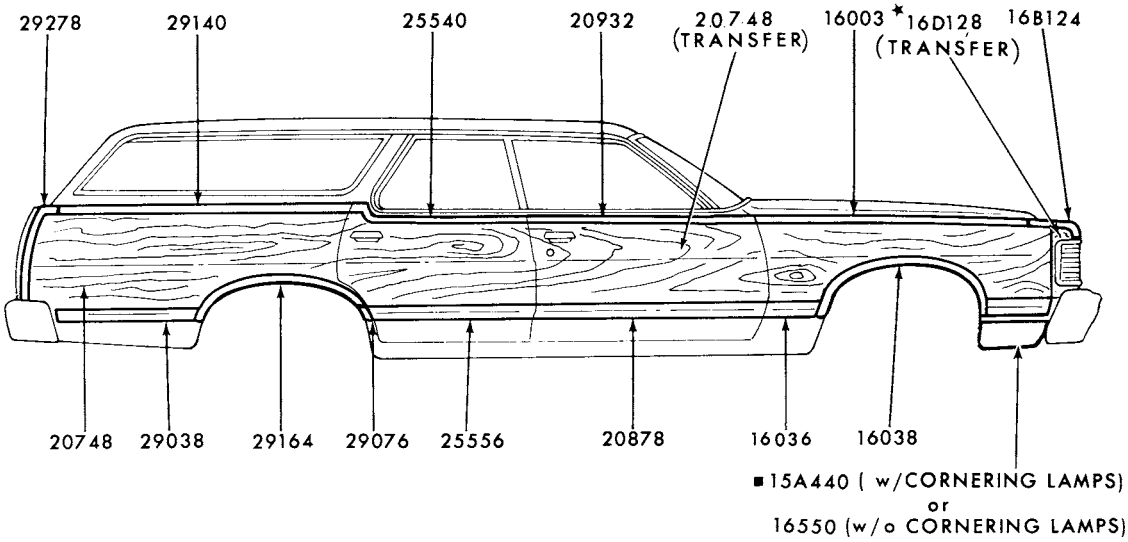

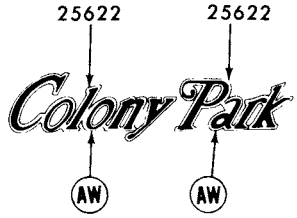

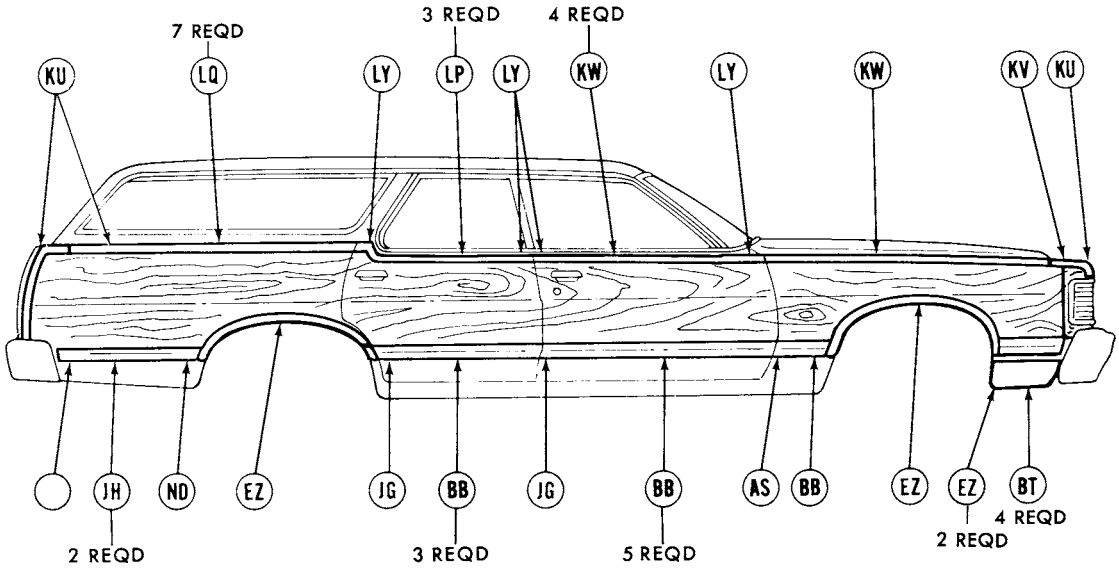

■REFER TO GROUP IN CHASSIS SECTION
REFER TO EXTERIOR MOULDING SECTION "R" FOR COMPLETE RETAINER INFORMATION

P-11974

1975 MERCURY -BODY TYPE 71K - SIDE

1975 MERCURY - BODY TYPE 71K - SIDE - cont'd.

GROUP NUMBER	PART NAME	DESCRIPTION	PART NUMBER		QTY.
16003-4	Moulding (front fender side)		(RH)♦D5MY 16003-A	(LH)♦D5MY 16004-A	1
16036-7	Moulding (front fender lower rear)		(RH)♦D3MY 16036-A	(LH)♦D3MY 16037-A	1
16038-9	Moulding (front fender wheel opening)		(RH)♦D5MY 16038-B	(LH)♦D5MY 16039-B	1
16B124-5	Moulding (front fender front extension)		(RH)♦D5MY 16B124-A	(LH)♦D5MY 16B125-A	1
16D128-9	Transfer (front fender front)	Gold-adhesive backed	(RH)★D5MY 16D128-A Not replaced (6/82)	(LH)*D5MY 16D129-A Not replaced (6/82)	1
16550-1	Moulding (front fender lower front)		(RH)♦D5MY 16550-A	(LH)♦D5MY 16551-A	1
20748	Transfer (wood grain)	Gold-cut to fit-adhesive backed	D5MY 7120748-A		1
20878-9	Moulding (front door outside)		(RH)♦D3MY 7120878-A	(LH)♦D3MY 7120879-A	1
20932-3	Moulding (front door outside upper)		(RH)♦D5MY 5320932-A	(LH)♦D5MY 5320933-A	1
25540-1	Moulding (rear door outside upper)		(RH)♦D5MY 5325540-A	(LH)♦D5MY 5325541-A	1
25556-7	Moulding (rear door outside lower)		(RH)♦D3MY 7125556-A	(LH)♦D3MY 7125557-A	1
25622	Plate (name)	"Colony"	♦D3MY 7125622-A	R.H. and L.H.	2
		"Park"	♦D3MY 7125622-B	R.H. and L.H.	2
29038-9	Moulding (quarter outside)		(RH)♦D3MY 7129038-C	(LH)♦D3MY 7129039-C	1
29076-7	Moulding (quarter outside lower front)		(RH)♦D3MY 7129076-A	(LH)♦D3MY 7129077-A	1
29140-1	Moulding (quarter outside upper)		(RH)♦D5MY 7129140-A	(LH)♦D5MY 7129141-A	1
29164-5	Moulding (quarter wheel opening)		(RH)♦D3MY 7129164-A	(LH)♦D3MY 7129165-A	1
29278-9	Moulding (quarter outside upper rear)		(RH)♦D5MY 7129278-A	(LH)♦D5MY 7129279-A	1

COPYRIGHT © 1986 — FORD MOTOR COMPANY — DEARBORN, MICHIGAN

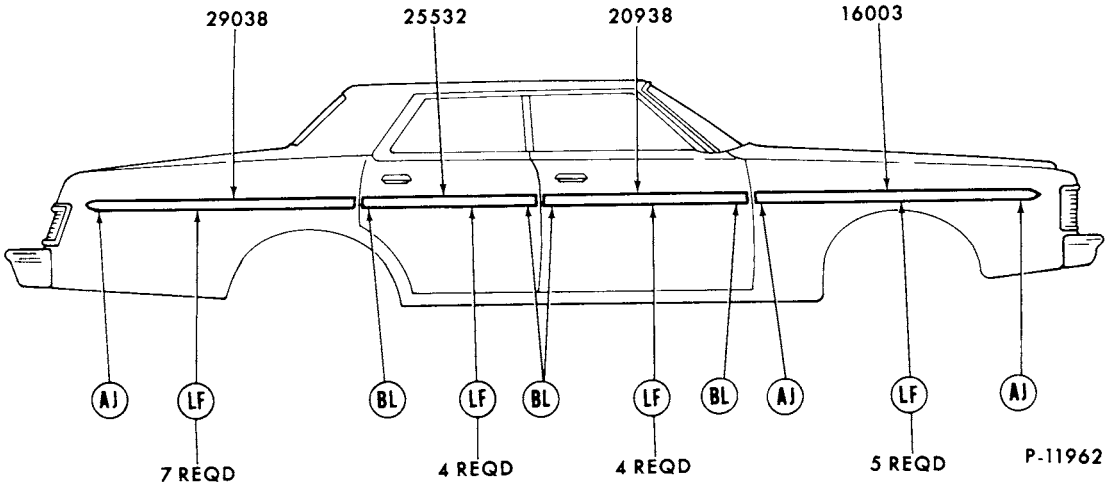

REFER TO EXTERIOR MOULDING SECTION "R" FOR COMPLETE RETAINER INFORMATION

1975 MERCURY - BODY TYPE 53 - SIDE PROTECTION

GROUP NUMBER	PART NAME	DESCRIPTION	PART NUMBER		QTY.
16003-4	Moulding (front fender side)	Black vinyl insert	(RH)♦D3MY 16003-B	(LH)♦D3MY 16004-B	1
20938-9	Moulding (front door outside)	Black vinyl insert	(RH)♦D3MY 5320938-A	(LH)♦D3MY 5320939-A	1
25532-3	Moulding (rear door outside)	Black vinyl insert	(RH)♦D3AZ 5325532-A	(LH)♦D3AZ 5325533-A	1
29038-9	Moulding (quarter outside)	Black vinyl insert	(RH)♦D3MY 5329038-A	(LH)♦D3MY 5329039-A	1

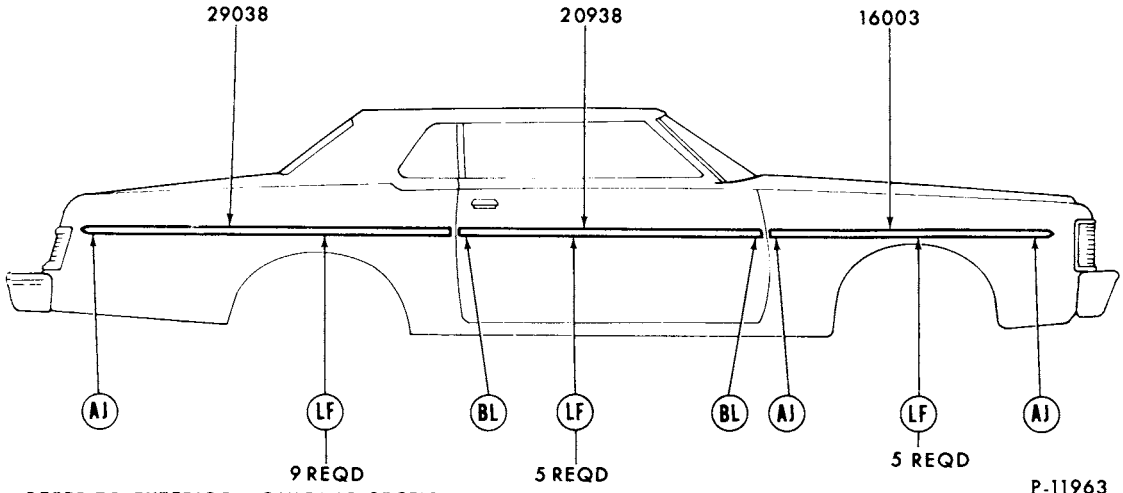

REFER TO EXTERIOR MOULDING SECTION "R" FOR COMPLETE RETAINER INFORMATION

1975 MERCURY - BODY TYPE 65 - SIDE PROTECTION

GROUP NUMBER	PART NAME	DESCRIPTION	PART NUMBER		QTY.
16003-4	Moulding (front fender side)	Black vinyl insert	(RH)♦D3MY 16003-B	(LH)♦D3MY 16004-B	1
20938-9	Moulding (front door outside)	Black vinyl insert	(RH)♦D3AZ 6520938-A	(LH)♦D3MY 6520939-A	1
29038-9	Moulding (quarter outside)	Black vinyl insert	(RH)♦D3MY 6529038-A	(LH)♦D3MY 6529039-A	1

♦ Includes attaching parts

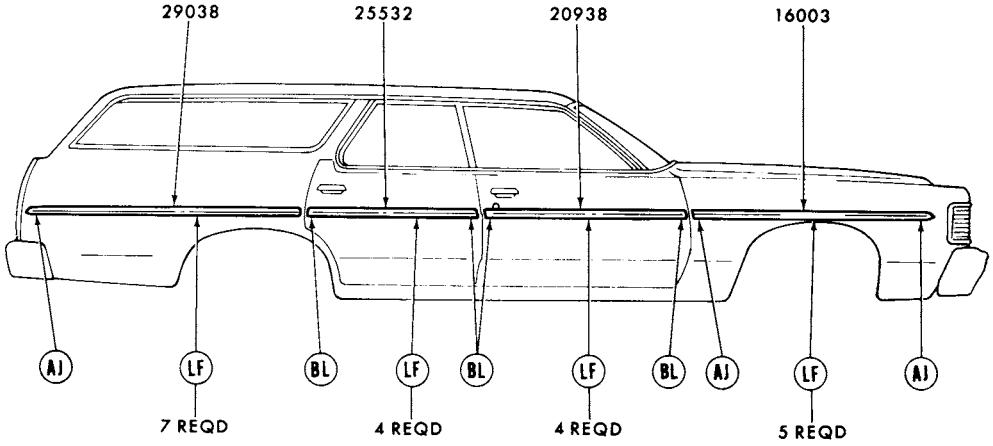

REFER TO EXTERIOR MOULDING SECTION "R" FOR COMPLETE RETAINER INFORMATION

P-11964

1975 MERCURY - BODY TYPE 71 - SIDE PROTECTION

GROUP NUMBER	PART NAME	DESCRIPTION	PART NUMBER		QTY.
16003-4	Moulding (front fender side)	Black vinyl insert	(RH)♦D3MY 16003-B	(LH)♦D3MY 16004-B	1
		Bright-w/brown vinyl insert	(RH)♦D3MY 16003-C	(LH)♦D3MY 16004-C	1
20938-9	Moulding (front door outside)	Black vinyl insert	(RH)♦D3MY 5320938-A	(LH)♦D3MY 5320939-A	1
		Bright-w/brown vinyl insert	(RH)♦D3MY 7120938-A	(LH)♦D3MY 7120939-A	1
25532-3	Moulding (rear door outside)	Black vinyl insert	(RH)♦D3AZ 5325532-A	(LH)♦D3AZ 5325533-A	1
		Bright-w/brown vinyl insert	(RH)♦D3MY 7125532-A	(LH)♦D3MY 7125533-A	1
29038-9	Moulding (quarter outside)	Black vinyl insert	(RH)♦D3MY 7129038-A	(LH)♦D3MY 7129039-A	1
		Bright-w/brown vinyl insert	(RH)♦D3MY 7129038-B	(LH)♦D3MY 7129039-B	1

♦ Includes attaching parts

COPYRIGHT © 1986 — FORD MOTOR COMPANY — DEARBORN, MICHIGAN

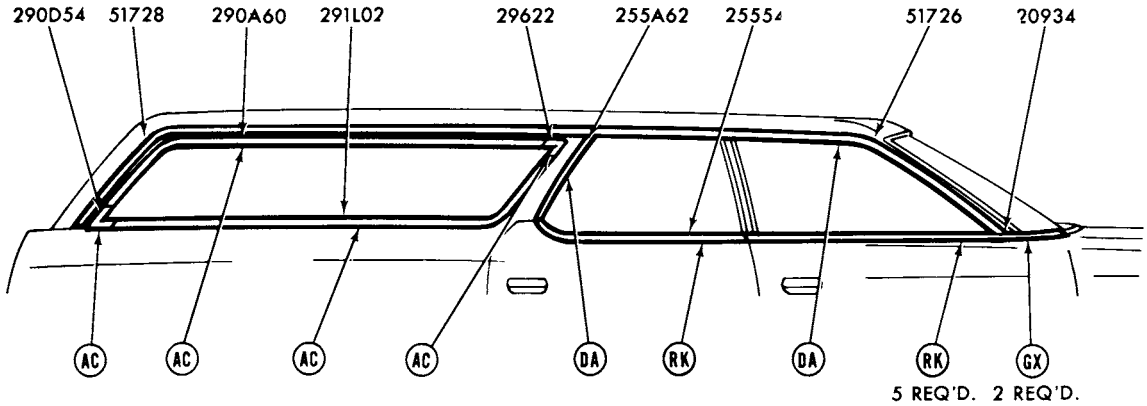

REFER TO EXTERIOR MOULDING SECTION 'R' FOR COMPLETE RETAINER INFORMATION

P-13209

1975 MERCURY - BODY TYPE 71 - DOOR, QUARTER WINDOW FRAME, ROOF and BELT

GROUP NUMBER	PART NAME	DESCRIPTION	PART NUMBER		QTY.
20916-7	Moulding (front door outside belt front)		(RH)♦D5AZ 5320916-A	(LH)♦D5AZ 5320917-A	1
20934-5	Moulding (front door outside belt)	Incl. weatherstrip	(RH)♦D5AZ 5320934-B	(LH)♦D5AZ 5320935-B	1
25554-5	Moulding (rear door outside belt)	Incl. weatherstrip	(RH)♦D3AZ 5325554-A	(LH)♦D3AZ 5325555-A	1
255A62-3	Moulding (rear door window outside)		(RH)♦D5AZ 71255A62-A	(LH)♦D5AZ 71255A63-A	1
290D54-5	Moulding (quarter window outside lower rear corner)		(RH)♦D5AZ 71290D54-A	(LH)♦D5AZ 71290D55-A	1
290A60-1	Moulding (quarter window outside upper)		(RH)♦D5AZ 71290A60-A	(LH)♦D5AZ 71290A61-A	1
291C02-3	Moulding (quarter window outside lower rear)		(RH)♦D5AZ 71291C02-A	(LH)♦D5AZ 71291C03-A	1
29622-3	Moulding (quarter window outside front)		(RH)♦D5AZ 7129622-A	(LH)♦D5AZ 7129623-A	1
423A18-9	Moulding (back belt outside side)		(RH)♦D3AZ 71423A18-A	(LH)♦D3AZ 71423A19-A	1
51726-7	Moulding (roof drip finish)	Front	(RH)♦D5AZ 7151726-A	(LH)♦D5AZ 7151727-A	1
51728-9	Moulding (roof drip side finish)	Rear-w/bright flange	(RH)♦D3AZ 7151728-B	(LH)♦D3AZ 7151729-B	1

♦ Includes attaching parts

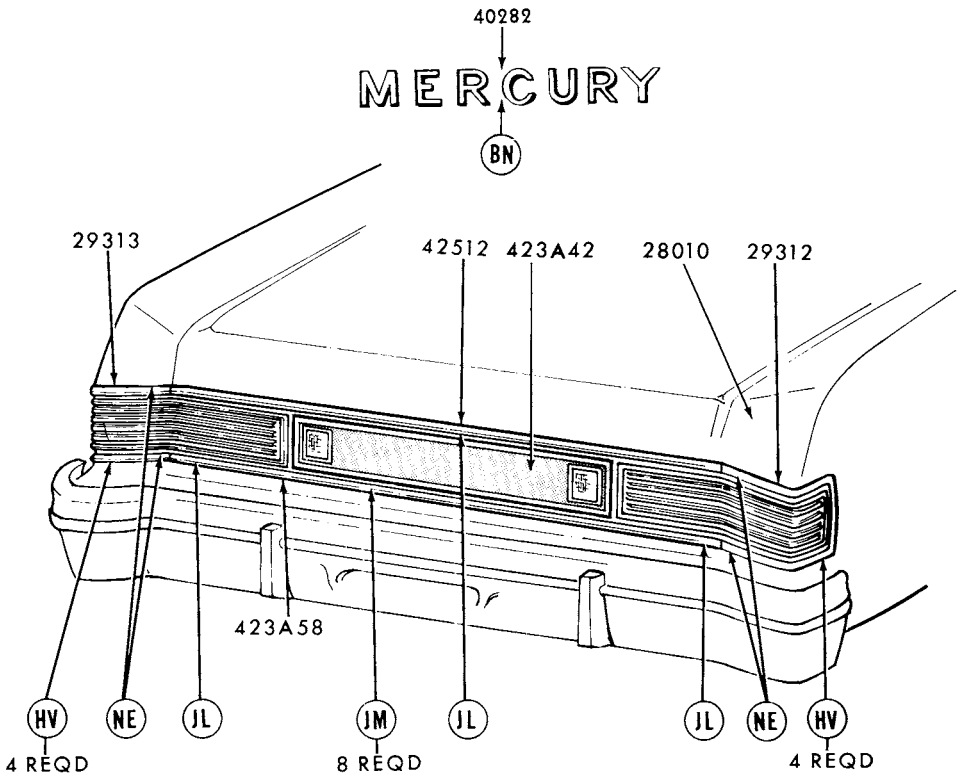

REFER TO EXTERIOR MOULDING SECTION "R" FOR COMPLETE RETAINER INFORMATION

P-11984

1975 MERCURY - BODY TYPES 53 and 65 - BACK END

GROUP NUMBER	PART NAME	DESCRIPTION	PART NUMBER		QTY.
28010-1	Extension (quarter rear)		(RH)♦D5MY 6528010-A	(LH)♦D5MY 6528011-A	1
29312-3	Moulding (quarter rear extension)		(RH)♦D5MY 6529312-A	(LH)♦D5MY 6529313-A	1
40282	Letter (name)	"M"	♦D3MY 7140282-A		1
		"E"	♦D3MY 7140282-B		1
		"R"	♦D3MY 7140282-C		2
		"C"	♦D3MY 7140282-D		1
		"U"	♦D3MY 7140282-E		1
		"Y"	♦D3MY 7140282-F		1
423A42	Panel (lower back finish)	Black	D5MY 65423A42-M		1
		Blue	D5MY 65423A42-J		1
		Brown	★D5MY 65423A42-G	Not replaced (6/82)	1
		Green	★D5MY 65423A42-K	Not replaced (6/82)	1
		Red	★D5MY 65423A42-H	Not replaced (7/81)	1
		Tan	★D5MY 65423A42-L	Not replaced (7/81)	1
423A58	Moulding (lower back panel)		♦D5MY 65423A58-B		1
42512	Moulding (luggage compartment door)		♦D5MY 6542512-A		1

COPYRIGHT © 1986 — FORD MOTOR COMPANY — DEARBORN, MICHIGAN

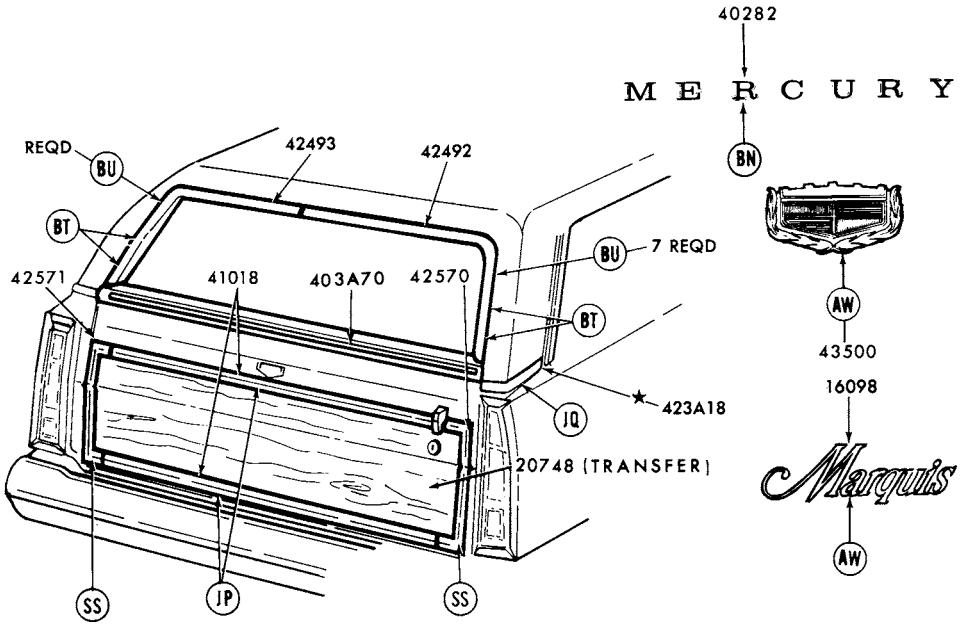

REFER TO EXTERIOR MOULDING SECTION "R" FOR COMPLETE RETAINER INFORMATION P-11985

1975 MERCURY - BODY TYPE 71 - BACK END

GROUP NUMBER	PART NAME	DESCRIPTION	PART NUMBER	QTY.
20748	Transfer (wood grain)	Gold-cut to fit-adhesive backed	D5MY 7120748-A	1
40282	Letter (name)	"M"	♦D3MY 7140282-A	1
		"E"	♦D3MY 7140282-B	1
		"R"	♦D3MY 7140282-C	2
		"C"	♦D3MY 7140282-D	1
		"U"	♦D3MY 7140282-E	1
		"Y"	♦D3MY 7140282-F	1
403A70	Moulding (tailgate outside belt)	W/o wash and wipe	♦D4AZ 71403A70-E	1
		W/wash and wipe	★D4AZ 71403A70-D Not replaced (7/81)	1
41018	Moulding (tailgate outside)	Upper and lower	♦D5MY 7141018-A	2
42492-3	Moulding (back window outside side)		(RH)♦D3AZ 7142492-A (LH)♦D3AZ 7142493-A	1
42570-1	Moulding (tailgate outside side)		(RH)♦D5MY 7142570-A (LH)♦D5MY 7142571-A	1
43500	Ornament (tailgate)		♦C9MY 7143500-A	1

♦ Includes attaching parts

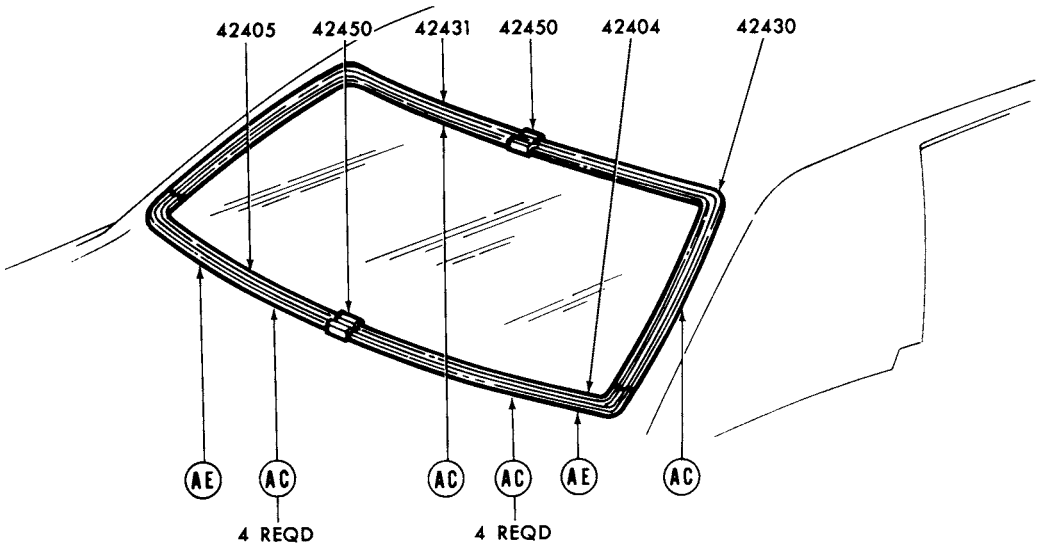

REFER TO EXTERIOR MOULDING SECTION "R" FOR COMPLETE RETAINER INFORMATION P-12460

1975 MERCURY - BODY TYPE 53 - BACK WINDOW

GROUP NUMBER	PART NAME	DESCRIPTION	PART NUMBER		QTY.
42404-5	Moulding (back window outside lower)		(RH)♦ D3AZ 5342404-A	(LH)♦ D3AZ 5342405-A	1
42430-1	Moulding (back window outside upper)		(RH)♦ D7AZ 5342430-A	(LH)♦ D7AZ 5342431-A	1
42450	Cover (back window outside moulding joint)	Lower	D5AZ 5342450-A		1
		Upper	D5AZ 5342450-B		1

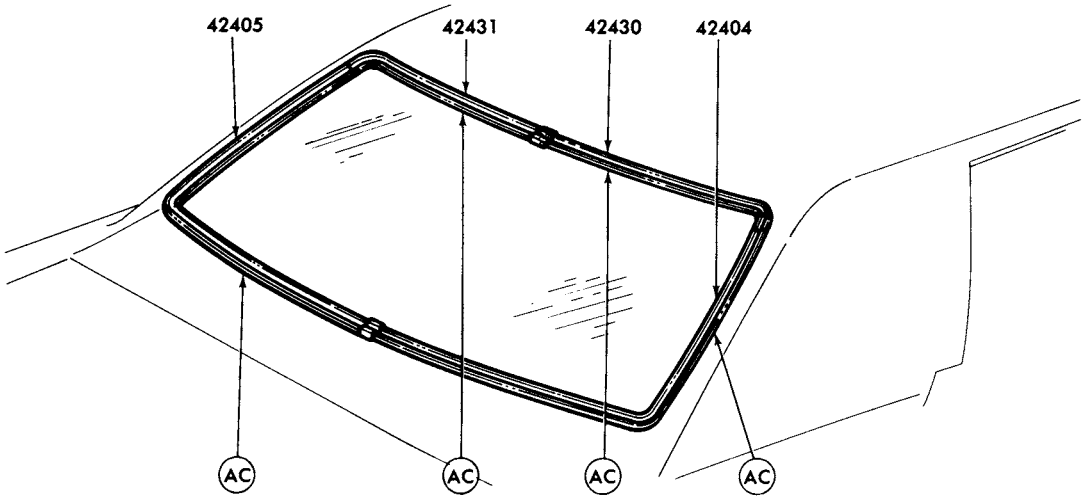

REFER TO EXTERIOR MOULDING SECTION "R" FOR COMPLETE RETAINER INFORMATION P-12487

1975 MERCURY - BODY TYPE 65 - BACK WINDOW

GROUP NUMBER	PART NAME	DESCRIPTION	PART NUMBER		QTY.
42404-5	Moulding (back window outside lower)		(RH)♦D5MY 6042404-A	(LH)♦ D5MY 6042405-A	1
42430-1	Moulding (back window outside upper)		(RH)♦ D7AZ 6042430-A	(LH)♦ D7AZ 6042431-A	1

♦ Includes attaching parts

COPYRIGHT © 1986 — FORD MOTOR COMPANY — DEARBORN, MICHIGAN

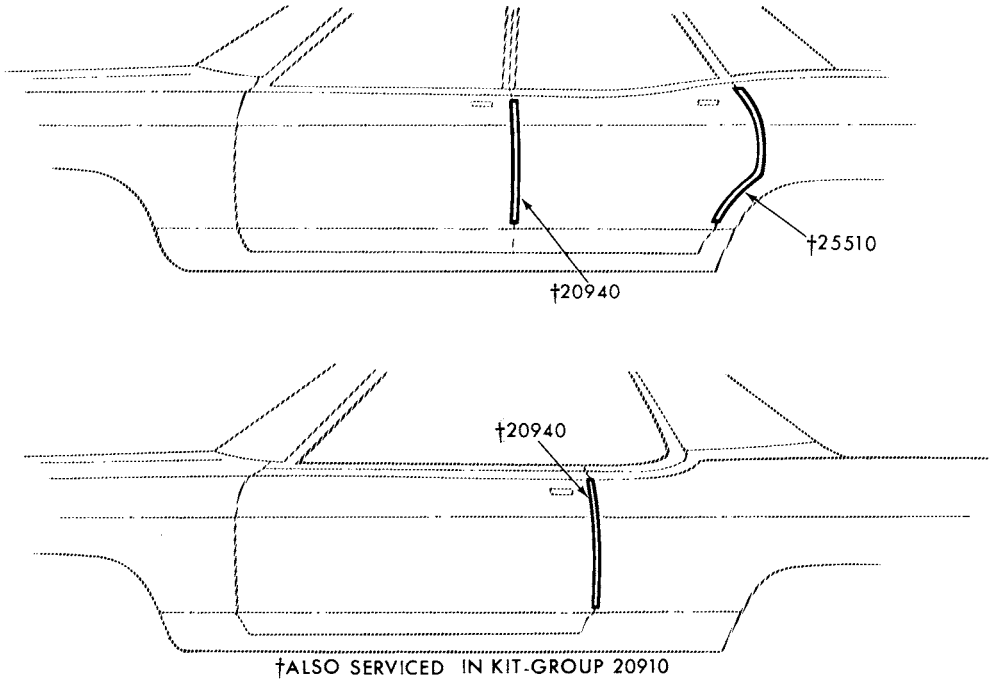

1975 MERCURY - DOOR EDGE GUARDS

GROUP NUMBER	PART NAME	DESCRIPTION	PART NUMBER	QTY.
20910	Moulding kit (door edge guard)	Bright-body types 53 and 71	D3MY 5320910-A	1
		Body type 65	D3MY 6520910-A	1
		Wood grain-Colony Park	D5MY 7120910-A	1
20940-1	Moulding (front door edge guard)	Bright-body types 53 and 71	(RH) D3MY 5320940-A (LH) D3MY 5320941-A	1
		Body type 65	(RH) D3MY 6520940-A (LH) D3MY 6520941-A	1
		Wood grain-Colony Park	(RH) D5MY 7120940-A (LH) D5MY 7120941-A	1
25510-1	Moulding (rear door edge guard)	Bright-body types 53 and 71	(RH) D3MY 5325510-A (LH) D3MY 5325511-A	1
		Wood grain-Colony Park	(RH) D5MY 7125510-A (LH) D5MY 7125511-A	1

† Includes attaching parts

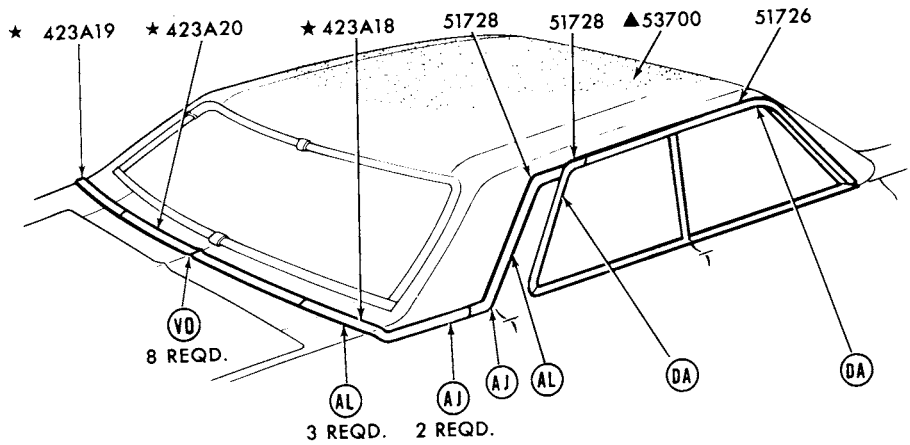

▲ REFER TO GROUP IN SOFT TRIM SECTION
REFER TO EXTERIOR MOULDING SECTION 'R' FOR COMPLETE RETAINER INFORMATION

P-13420

1975 MERCURY - BODY TYPE 53 - ROOF and BACK BELT

GROUP NUMBER	PART NAME	DESCRIPTION	PART NUMBER		QTY.
51726-9	Moulding (roof drip side finish)	Front	(RH)♦D5AZ 5351726-A	(LH)♦D5AZ 5351727-A	1
		Rear	(RH)♦D5AZ 5351728-A	(LH)♦D5AZ 5351729-A	1
51728-9	Moulding (roof drip side finish)	Rear-w/vinyl roof			
		Blue	(RH) D5MY 5351728-D	(LH) D5MY 5351729-D	1
		Brown	(RH)★D5MY 5351728-A Not replaced (6/81)	(LH) D5MY 5351729-A	1
		Green	(RH) D5MY 5351728-E	(LH) D5MY 5351729-E	1
		White	(RH) D5MY 5351728-B	(LH) D5MY 5351729-B	1

COPYRIGHT © 1986 — FORD MOTOR COMPANY — DEARBORN, MICHIGAN

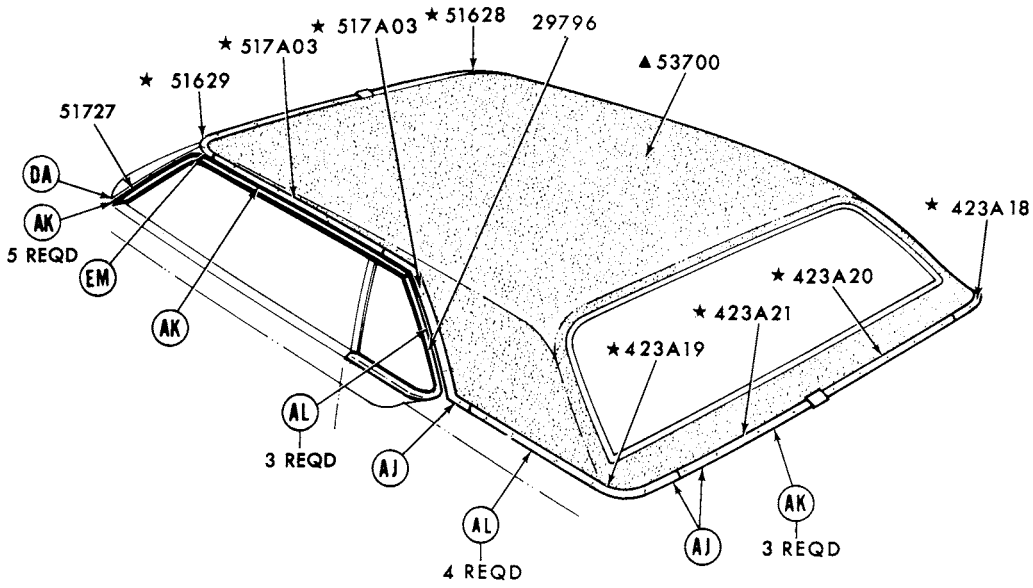

▲REFER TO GROUP IN SOFT TRIM SECTION
REFER TO EXTERIOR MOULDING SECTION "R" FOR COMPLETE RETAINER INFORMATION P-10120

1975 MERCURY - BODY TYPE 65 - ROOF and BACK BELT - w/HALO VINYL ROOF

GROUP NUMBER	PART NAME	DESCRIPTION	PART NUMBER	QTY.
29796-7	Moulding (quarter window outside)		(RH) D5MY 6529796-A (LH) D5MY 6529797-A	1
51726-7	Moulding (roof drip side finish)	Front	(RH) D5MY 6551726-A (LH) D5MY 6551727-A	1

♦ Includes attaching parts

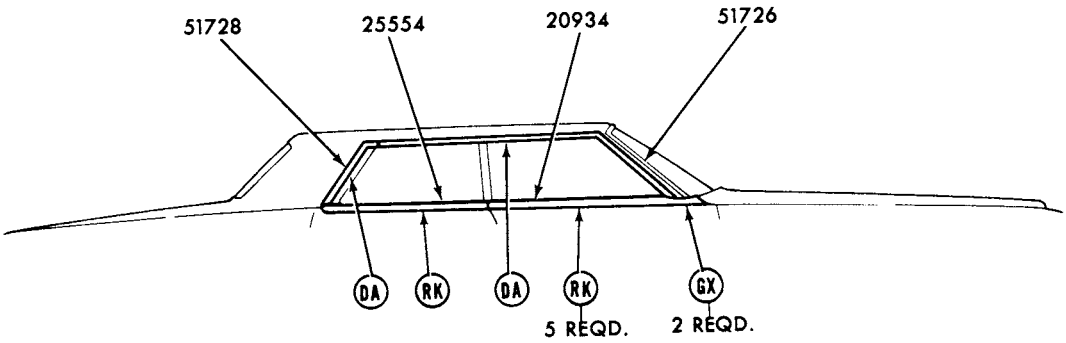

REFER TO EXTERIOR MOULDING SECTION "R" FOR COMPLETE RETAINER INFORMATION

P-13240

1975 MERCURY - BODY TYPE 53 - ROOF DRIP SIDE, FRONT and REAR DOOR BELT MOULDINGS

GROUP NUMBER	PART NAME	DESCRIPTION	PART NUMBER		QTY.
20934-5	Moulding (front door outside belt)	Incl. weatherstrip	(RH)♦D5AZ 5320934-B	(LH)♦D5AZ 5320935-B	1
25554-5	Moulding (rear door outside belt)	Incl. weatherstrip	(RH)♦D5AZ 5325554-A	(LH)♦D5AZ 5325555-A	1
51726-7	Moulding (roof drip side finish front)		(RH)♦D5AZ 5351726-A	(LH)♦D5AZ 5351727-A	1
51728-9	Moulding (roof outside finish rear)		(RH)♦D5AZ 5351728-A	(LH)♦D5AZ 5351729-A	1

♦ Includes attaching parts

COPYRIGHT © 1986 — FORD MOTOR COMPANY — DEARBORN, MICHIGAN

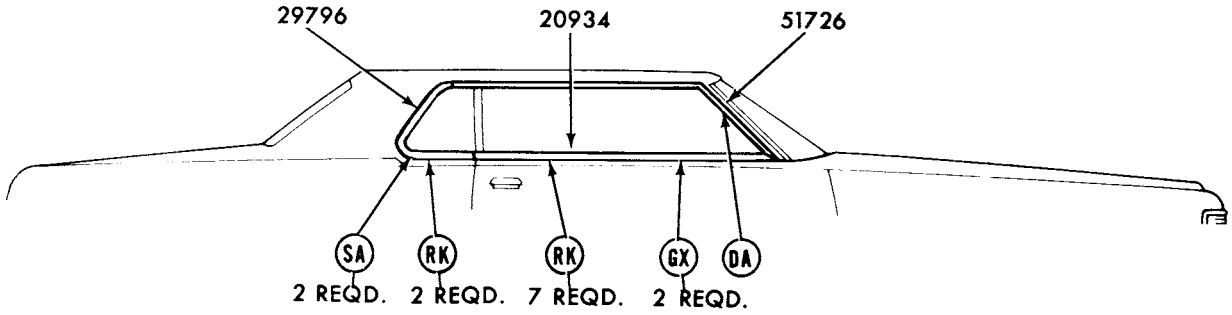

REFER TO EXTERIOR MOULDING SECTION "R" FOR COMPLETE RETAINER INFORMATION

P-13241

1975 MERCURY - BODY TYPE 65 - ROOF DRIP SIDE, DOOR and QUARTER BELT MOULDINGS

GROUP NUMBER	PART NAME	DESCRIPTION	PART NUMBER		QTY.
20934-5	Moulding (door outside belt)	Incl. weatherstrip	(RH)♦D5AZ 6020934-A	(LH)♦D5AZ 6020935-A	1
29796-7	Moulding (quarter window)		(RH) D5MY 6529796-A	(LH) D5MY 6529797-A	1
51726-7	Moulding(roof drip side)		(RH) D5MY 6551726-A	(LH) D5MY 6551727-A	1

♦ Includes attaching parts

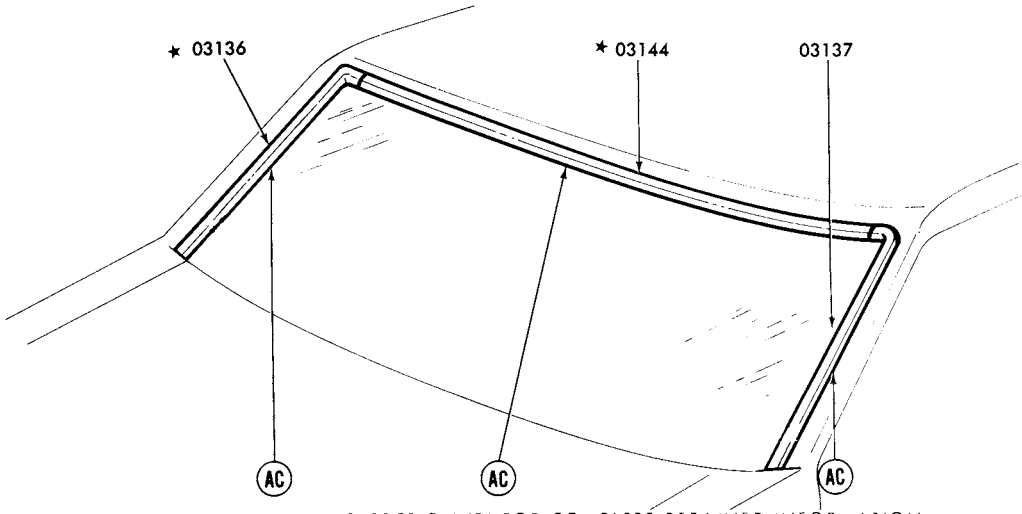

REFER TO EXTERIOR MOULDING SECTION 'R' FOR COMPLETE RETAINER INFORMATION P-12521

1975 MONTEGO - WINDSHIELD

GROUP NUMBER	PART NAME	DESCRIPTION	PART NUMBER	QTY.
03136-7	Moulding (windshield outside side)		(RH)★D2OZ 6503136-A (LH)♦D2OZ 6503137-A	1
03144	Moulding (windshield outside top)		★ D2OZ 6503144-A	1

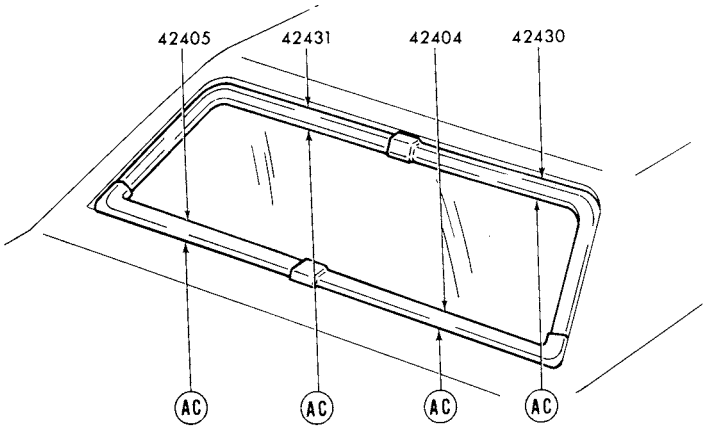

REFER TO EXTERIOR MOULDING SECTION "R" FOR COMPLETE RETAINER INFORMATION P-12457

1975 MONTEGO - BODY TYPES 53 and 65 - BACK WINDOW

GROUP NUMBER	PART NAME	DESCRIPTION	PART NUMBER	QTY.
42404-5	Moulding (back window outside lower)		(RH)♦D4OZ 6542404-A (LH)♦D4OZ 6542405-A	1
42430-1	Moulding (back window outside upper)		(RH)♦D4OZ 6542430-A (LH)♦D4OZ 6542431-A	1

♦ Includes attaching parts

COPYRIGHT © 1986 — FORD MOTOR COMPANY — DEARBORN, MICHIGAN

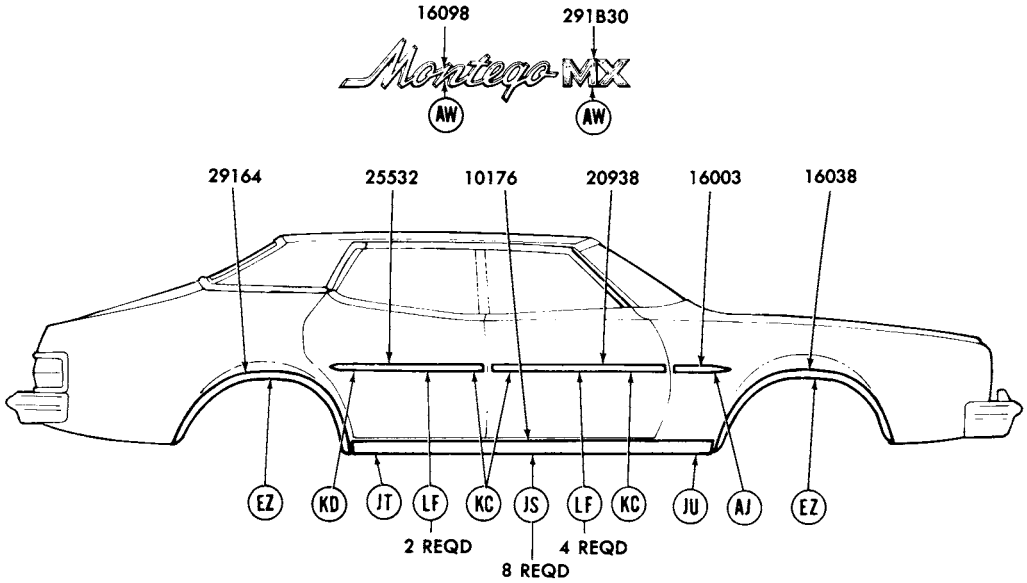

REFER TO EXTERIOR MOULDING SECTION "R" FOR COMPLETE RETAINER INFORMATION

P-12804

1975 MONTEGO - BODY TYPES 53B,D - SIDE

GROUP NUMBER	PART NAME	DESCRIPTION	PART NUMBER		QTY.
10176-7	Moulding (body rocker panel)	Body type 53D	(RH)♦ D2GY 5310176-A	(LH)♦ D2GY 5310177-A	1
16003-4	Moulding (front fender side)	Bright finish	♦ D4GY 16003-A	R.H. and L.H.	2
		Black vinyl insert-adhesive backed-57" long-cut to fit	D4GZ 16003-A	R.H. and L.H.	AR
16038-9	Moulding (front fender wheel opening)		(RH)♦ D2GY 16038-A	(LH)♦ D2GY 16039-A	1
16098	Plate (name)	"Montego"	♦ D2GY 16098-C	R.H. and L.H.	2
20938-9	Moulding (front door outside)	Bright finish	♦ D4GY 5320938-A	R.H. and L.H.	2
		Black vinyl insert-adhesive backed-57" long-cut to fit	D4GZ 16003-A	R.H. and L.H.	AR
25532-3	Moulding (rear door outside)	Bright finish	♦ D4GY 5325532-A	R.H. and L.H.	2
		Black vinyl insert-adhesive backed-57" long-cut to fit	D4GZ 16003-A	R.H. and L.H.	AR
291B30	Plate (name)	"MX"-body type 53D	♦ C8GY 54291B30-A	R.H. and L.H.	2
29164-5	Moulding (quarter wheel opening)		(RH)♦ D2GY 6529164-A	(LH)♦ D2GY 6529165-A	1

♦ Includes attaching parts

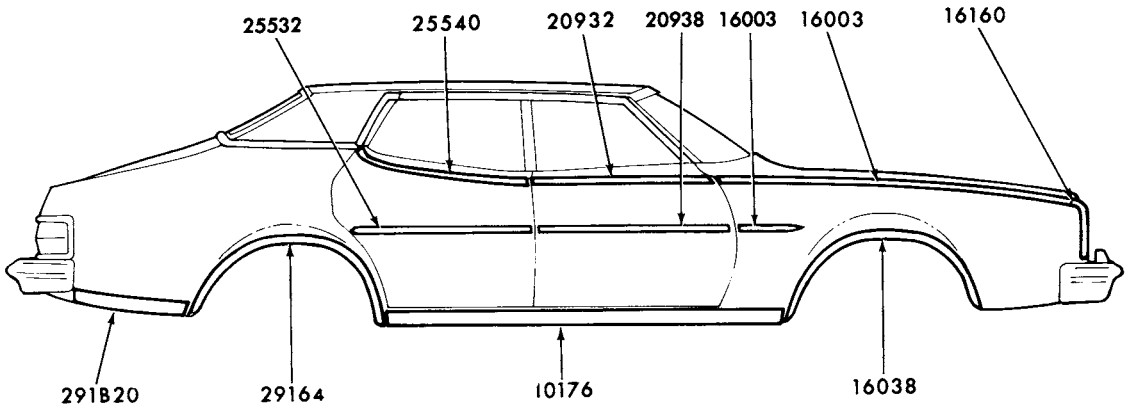

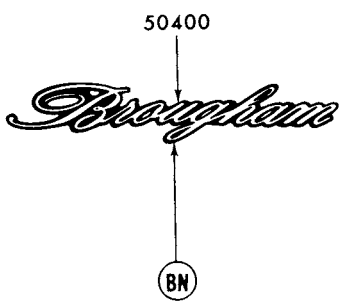

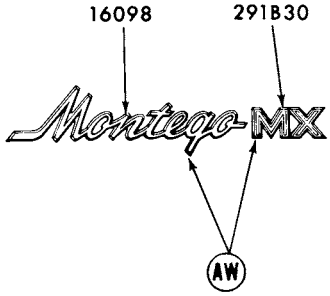

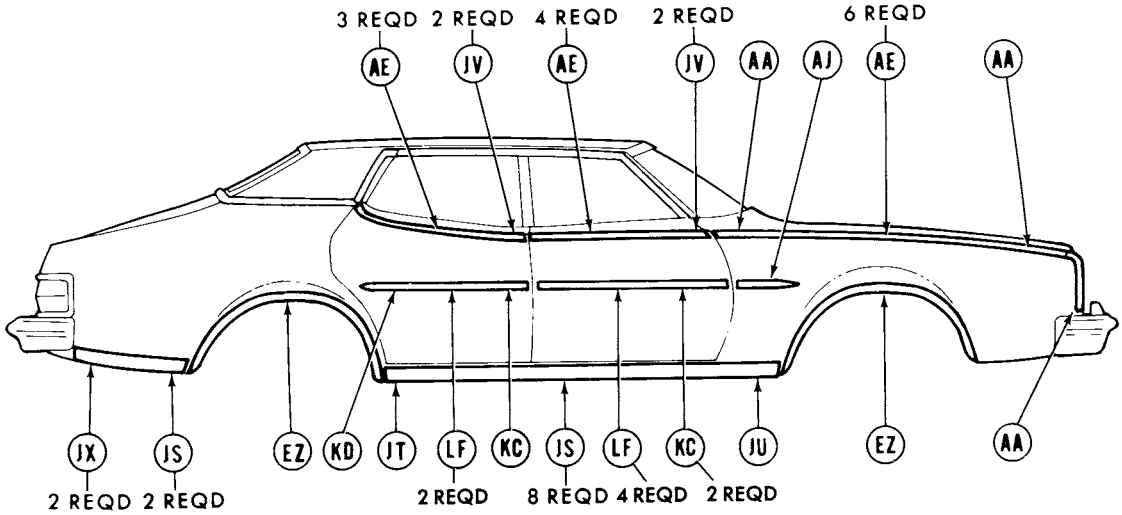

REFER TO EXTERIOR MOULDING SECTION "R" FOR COMPLETE RETAINER INFORMATION

P-12805

1975 MONTEGO - BODY TYPE 53K - SIDE

COPYRIGHT © 1986 — FORD MOTOR COMPANY — DEARBORN, MICHIGAN

1975 MONTEGO - BODY TYPE 53K - SIDE - cont'd.

GROUP NUMBER	PART NAME	DESCRIPTION	PART NUMBER		QTY.
10176-7	Moulding (body rocker panel)		(RH)♦D2GY 5310176-A	(LH)♦D2GY 5310177-A	1
16003-4	Moulding (front fender upper)		(RH)♦D2GY 16003-B	(LH)♦D2GY 16004-B	1
16003-4	Moulding (front fender side)	Black vinyl insert-adhesive backed-57" long-cut to fit	D4GZ 16003-A	R.H. and L.H.	2
		Bright finish	♦D4GY 16003-A	R.H. and L.H.	2
16038-9	Moulding (front fender wheel opening)		(RH)♦D2GY 16038-A	(LH)♦D2GY 16039-A	1
16098	Plate (front fender name)	"Montego"	♦D2GY 16098-C	R.H. and L.H.	2
16160-1	Moulding (front fender front)		(RH)♦D3GY 16160-A	(LH)♦D3GY 16161-A	1
20932-3	Moulding (front door outside upper)		(RH)♦D4GY 5320932-A	(LH)♦D4GY 5320933-A	1
20938-9	Moulding (front door outside)	Black vinyl insert-adhesive backed-57" long-cut to fit	D4GZ 16003-A	R.H. and L.H.	1
		Bright finish	♦D4GY 5320938-A	R.H. and L.H.	2
25532-3	Moulding (rear door outside)	Black vinyl insert-adhesive backed-57" long-cut to fit	D4GZ 16003-A	R.H. and L.H.	1
		Bright finish	♦D4GY 5325532-A	R.H. and L.H.	2
25540-1	Moulding (rear door outside upper)		(RH)♦D4GY 5325540-A	(LH)♦D4GY 5325541-A	1
291B20-1	Moulding (quarter outside lower)		(RH)♦D4GY 65291B20-A	(LH)♦D4GY 65291B21-A	1
291B30	Plate (name)	"MX"	♦C8GY 54291B30-A	R.H. and L.H.	2
29164-5	Moulding (quarter wheel opening)		(RH)♦D2GY 6529164-A	(LH)♦D2GY 6529165-A	1
50400	Plate (name)	"Brougham"	♦C7MY 5450400-A	R.H. and L.H.	2
517A20	Ornament (roof side outside)		♦C9MY 65517A20-A	R.H. and L.H.	2

♦ Includes attaching parts

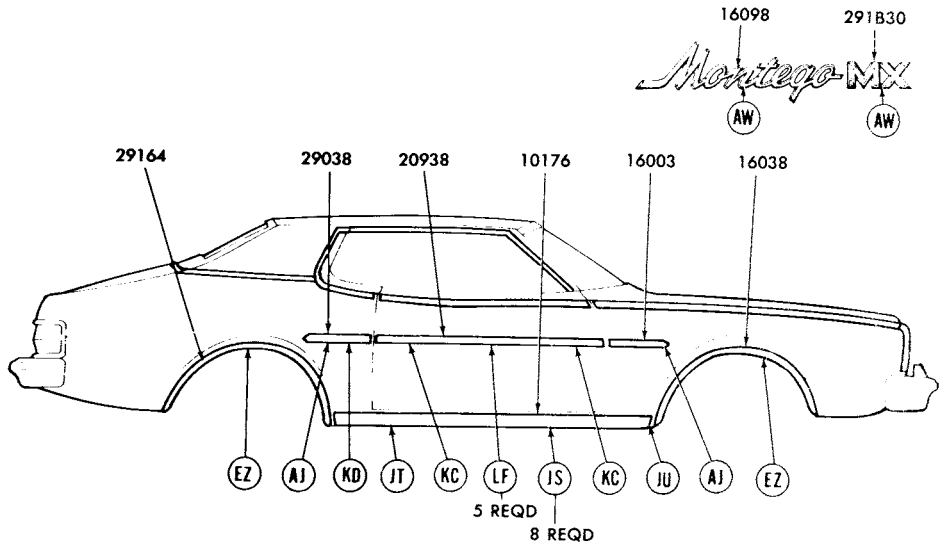

REFER TO EXTERIOR MOULDING SECTION "R" FOR COMPLETE RETAINER INFORMATION

P-12806

1975 MONTEGO - BODY TYPES 65B,D - SIDE

GROUP NUMBER	PART NAME	DESCRIPTION	PART NUMBER		QTY.
10176-7	Moulding (body rocker panel)	Body type 65D	(RH)♦D2GY 6510176-A	(LH)♦D2GY 6510177-A	1
16003-4	Moulding (front fender side)	Bright finish	♦D4GY 16003-A	R.H. and L.H.	2
		Black vinyl insert-adhesive backed-57" long-cut to fit	D4GZ 16003-A	R.H. and L.H.	AR
16038-9	Moulding (front fender wheel opening)		(RH)♦D2GY 16038-A	(LH)♦D2GY 16039-A	1
16098	Plate (name)	"Montego"	♦D2GY 16098-C	R.H. and L.H.	2
20938-9	Moulding (front door outside)	Bright finish	♦D4GY 6520938-A	R.H. and L.H.	2
		Black vinyl insert-adhesive backed-57" long-cut to fit	D4GZ 16003-A	R.H. and L.H.	AR
29038-9	Moulding (quarter outside)	Bright finish	♦D4GY 16003-A	R.H. and L.H.	2
		Black vinyl insert-adhesive backed-57" long-cut to fit	D4GZ 16003-A	R.H. and L.H.	2
291B30	Plate (name)	"MX"-body type 65D	♦C8GY 54291B30-A	R.H. and L.H.	2
29164-5	Moulding (quarter wheel opening)		(RH)♦D2GY 6529164-A	(LH)♦D2GY 6529165-A	1

♦ Includes attaching parts

COPYRIGHT © 1986 — FORD MOTOR COMPANY — DEARBORN MICHIGAN

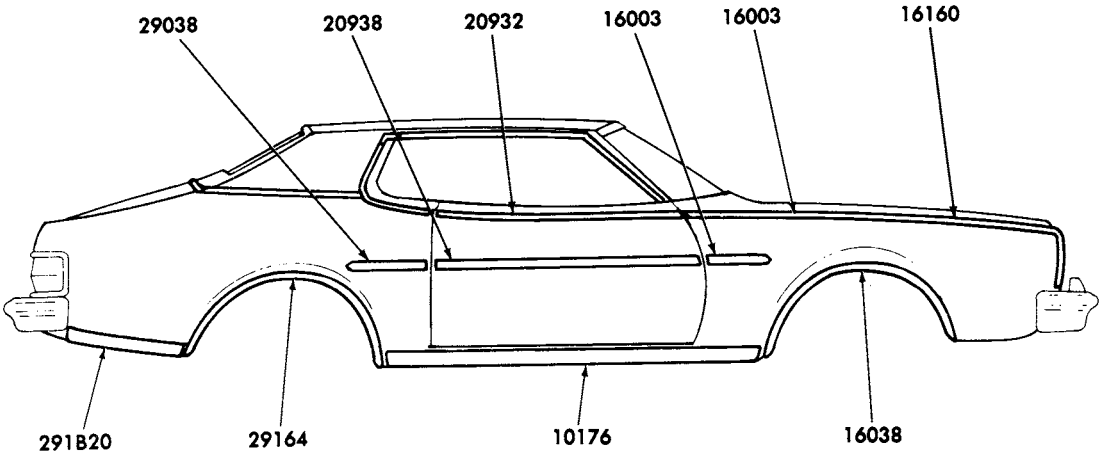

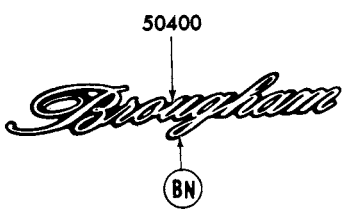

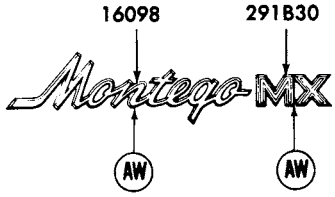

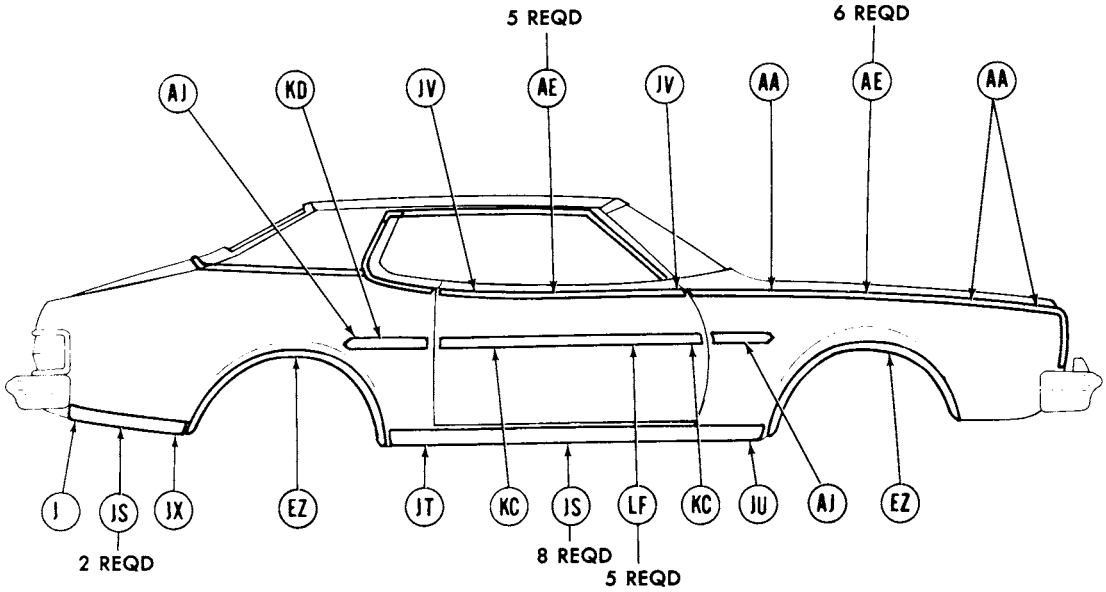

REFER TO EXTERIOR MOULDING SECTION "R" FOR COMPLETE RETAINER INFORMATION

P-12807

1975 MONTEGO - BODY TYPE 65K - SIDE

1975 MONTEGO - BODY TYPE 65K - SIDE - cont'd.

GROUP NUMBER	PART NAME	DESCRIPTION	PART NUMBER		QTY.
10176-7	Moulding (body rocker panel)		(RH)♦D2GY 6510176-A	(LH)♦D2GY 6510177-A	1
16003-4	Moulding (front fender upper)		(RH)♦D2GY 16003-B	(LH)♦D2GY 16004-B	1
16003-4	Moulding (front fender side)	Bright finish	♦D4GY 16003-A	R.H. and L.H.	2
		Black vinyl insert-adhesive backed-57" long-cut to fit	D4GZ 16003-A	R.H. and L.H.	AR
16038-9	Moulding (front fender wheel opening)		(RH)♦D2GY 16038-A	(LH)♦D2GY 16039-A	1
16098	Plate (front fender name)	"Montego"	♦D2GY 16098-C	R.H. and L.H.	2
16160-1	Moulding (front fender front)		(RH)♦D3GY 16160-A	(LH)♦D3GY 16161-A	1
20932-3	Moulding (front door outside upper)		(RH)♦D4GY 6520932-A	(LH)♦D4GY 6520933-A	1
20938-9	Moulding (front door outside)	Bright finish	♦D4GY 6520938-A	R.H. and L.H.	2
		Black vinyl insert-adhesive backed-57" long-cut to fit	D4GZ 16003-A	R.H. and L.H.	AR
29038-9	Moulding (quarter outside)	Bright finish	♦D4GY 16003-A	R.H. and L.H.	2
		Black vinyl insert-adhesive backed-57" long-cut to fit	D4GZ 16003-A	R.H. and L.H.	AR
291B20-1	Moulding (quarter panel outside lower rear)		(RH)♦D4GY 65291B20-A	(LH)♦D4GY 65291B21-A	1
291B30	Plate (name)	"MX"	♦C8GY 54291B30-A	R.H. and L.H.	2
29164-5	Moulding (quarter wheel opening)		(RH)♦D2GY 6529164-A	(LH)♦D2GY 6529165-A	1
50400	Plate (roof name)	"Brougham"	♦C7MY 5450400-A	R.H. and L.H.	2
517A20	Ornament (roof side outside)		♦C9MY 65517A20-A	R.H. and L.H.	2

♦ Includes attaching parts

COPYRIGHT © 1986 — FORD MOTOR COMPANY — DEARBORN, MICHIGAN

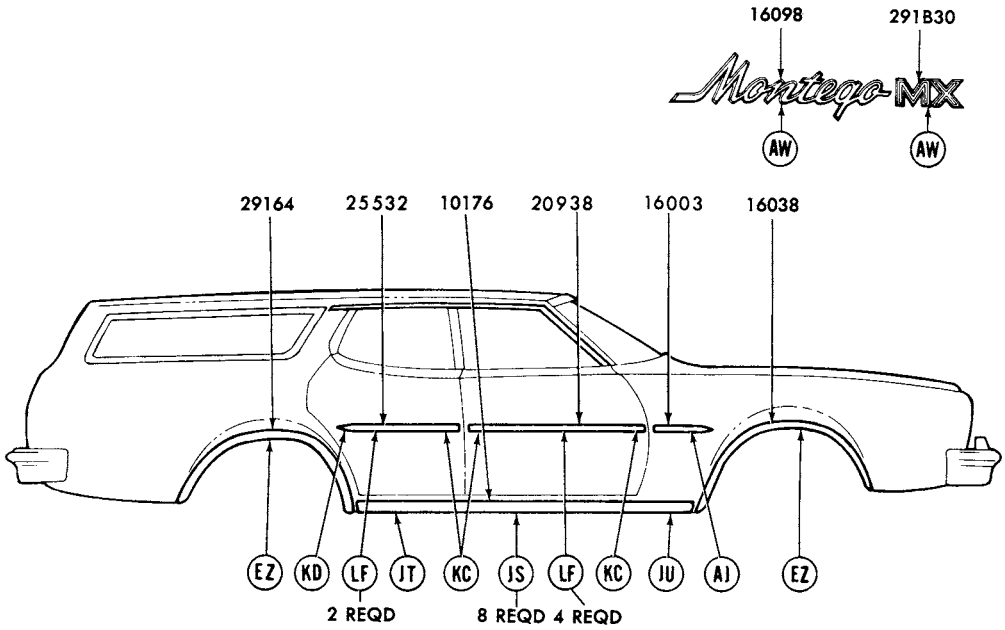

REFER TO EXTERIOR MOULDING SECTION "R" FOR COMPLETE RETAINER INFORMATION

P-12808

1975 MONTEGO - BODY TYPES 71B,D - SIDE

GROUP NUMBER	PART NAME	DESCRIPTION	PART NUMBER		QTY.
10176-7	Moulding (body rocker panel)	Body type 71D	(RH)♦D2GY 5310176-A	(LH)♦D2GY 5310177-A	1
16003-4	Moulding (front fender side)	Bright finish	♦D4GY 16003-A	R.H. and L.H.	2
		Black vinyl-adhesive backed-57" long-cut to fit	D4GZ 16003-A	R.H. and L.H.	AR
16038-9	Moulding (front fender wheel opening)		(RH)♦D2GY 16038-A	(LH)♦D2GY 16039-A	1
16098	Plate (front fender name)	"Montego"	♦D2GY 16098-C	R.H. and L.H.	2
20938-9	Moulding (front door outside)	Bright finish	♦D4GY 5320938-A	R.H. and L.H.	2
		Black vinyl-adhesive backed-57" long-cut to fit	D4GZ 16003-A	R.H. and L.H.	AR
25532-3	Moulding (rear door outside)	Bright finish	♦D4GY 5325532-A	R.H. and L.H.	2
		Black vinyl-adhesive backed-57" long-cut to fit	D4GZ 16003-A	R.H. and L.H.	AR
291B30	Plate (name)	"MX"	♦C8GY 54291B30-A	R.H. and L.H.	2
29164-5	Moulding (quarter wheel opening)		(RH)♦D2GY 7129164-A	(LH)★D2GY 7129165-A Not replaced (5/82)	1

♦ Incl. attaching parts

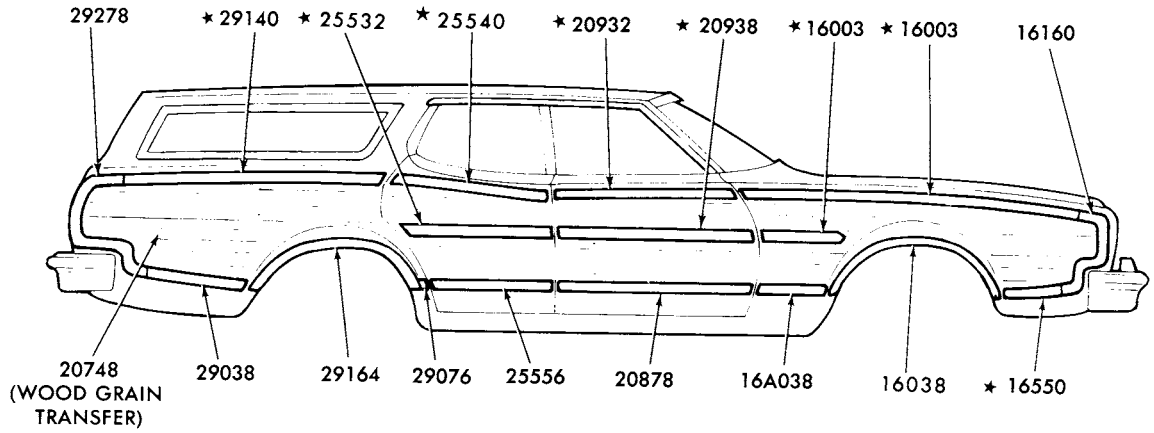

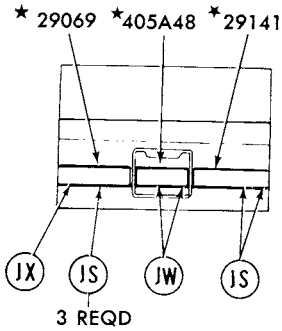

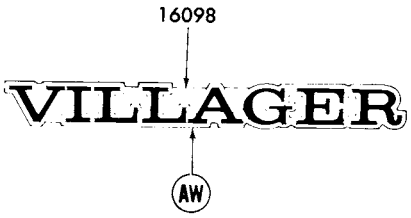

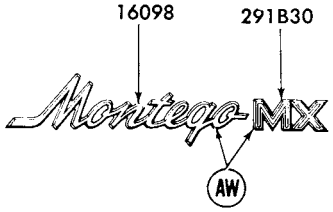

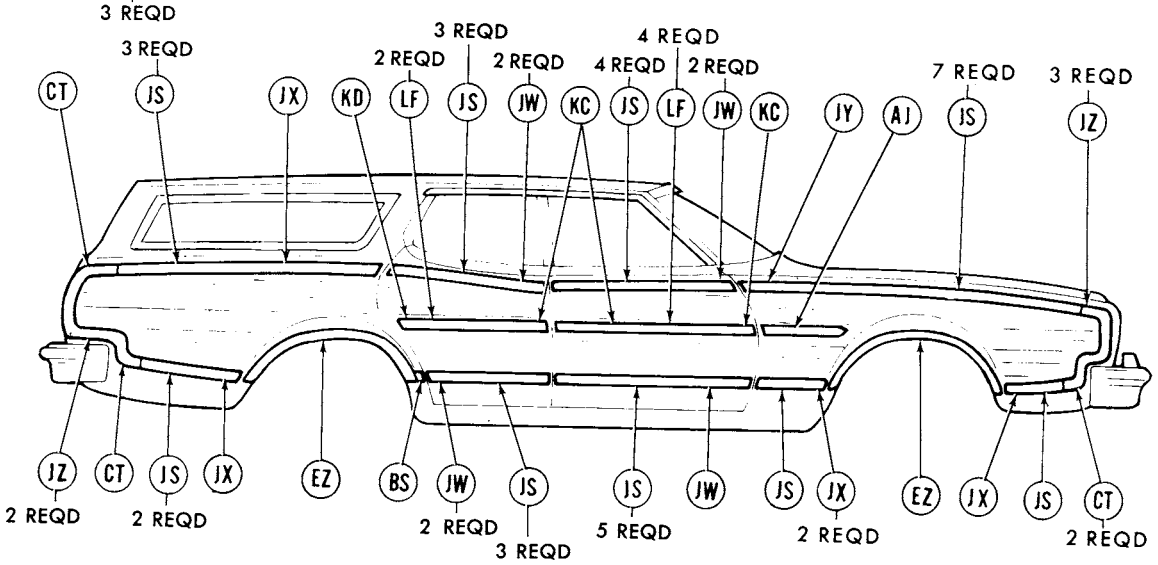

REFER TO EXTERIOR MOULDING SECTION "R" FOR COMPLETE RETAINER INFORMATION

P-12809

1975 MONTEGO - BODY TYPE 71K - SIDE

COPYRIGHT © 1986 — FORD MOTOR COMPANY — DEARBORN, MICHIGAN

New Issue

1975 MONTEGO - BODY TYPE 71K - SIDE - cont'd.

GROUP NUMBER	PART NAME	DESCRIPTION	PART NUMBER		QTY.
16003	Moulding (front fender side)	Wood grain vinyl insert	★D3GY 16003-B Not replaced (4/84)	R.H. and L.H.	2
16003-4	Moulding (front fender upper)		(RH)★D2GY 16003-C Not replaced (4/84)	(LH)★D2GY 16004-C Not replaced (4/84)	1
16038-9	Moulding (front fender wheel opening)		(RH)♦D4GY 16038-B	(LH)★D4GY 16039-B Not replaced (4/84)	1
16A038-9	Moulding (front fender side lower rear)		(RH)♦D4GY 16A038-A	(LH)♦D4GY 16A039-A	1
16098	Plate (front fender name)	"Montego"	♦D2GY 16098-C	R.H. and L.H.	2
		"VILLAGER"	♦D2GY 16098-B	R.H. and L.H.	2
16160-1	Moulding (front fender front)		(RH)♦D2GY 16160-A	(LH)♦D2GY 16161-A	1
16550-1	Moulding (front fender lower front)		(RH)★D2GY 16550-B Not replaced (4/84)	(LH)★D2GY 16551-B	1
20748	Transfer (wood grain)	Cherry (wood grain)- 20 3/4" x 70 5/8"- cut to fit	D4GY 7120748-A		1
20878-9	Moulding (front door outside lower)		(RH)♦D2GY 7120878-A	(LH)♦D2GY 7120879-A	1
20932-3	Moulding (front door outside upper)		(RH)★D2GY 7120932-A	(LH)★D2GY 7120933-A Not replaced (3/82)	1
20938	Moulding (front door outside)	Wood grain vinyl insert	★D3GY 7120938-B	R.H. and L.H.	2
25532	Moulding (rear door outside)	Wood grain vinyl insert	★D3GY 7125532-B Not replaced (3/82)	R.H. and L.H.	2
25540-1	Moulding (rear door outside upper)		(RH)★D2GY 7125540-A Not replaced (2/81)	(LH)★D2GY 7125541-A Not replaced (2/81)	1
25556-7	Moulding (rear door outside lower)		(RH)♦D2GY 7125556-A	(LH)♦D2GY 7125557-A	1
29038-9	Moulding (quarter outside)		(RH)♦D2GY 7129038-A	(LH)♦D2GY 7129039-A	1
29069	Moulding (quarter panel outside upper front)			(LH)★D2GY 7129069-A Not replaced (3/82)	1
29076-7	Moulding (quarter outside lower front)		(RH)♦D2GY 7129076-A	(LH)♦D2GY 7129077-A	1
291B30	Plate (name)	"MX"	♦C8GY 54291B30-A	R.H. and L.H.	2
29140-1	Moulding (quarter outside upper)		(RH)★D2GY 7129140-A	(LH)★D2GY 7129141-A Not replaced (3/82)	1
29164-5	Moulding (quarter wheel opening)		(RH)♦D2GY 7129164-B	(LH)♦D2GY 7129165-B	1
29278-9	Moulding (quarter outside rear end)		(RH)♦D2GY 7129278-A	(LH)♦D2GY 7129279-A	1
405A48	Moulding (fuel filler door)		★D2GY 71405A48-A		1

♦ Incl. attaching parts

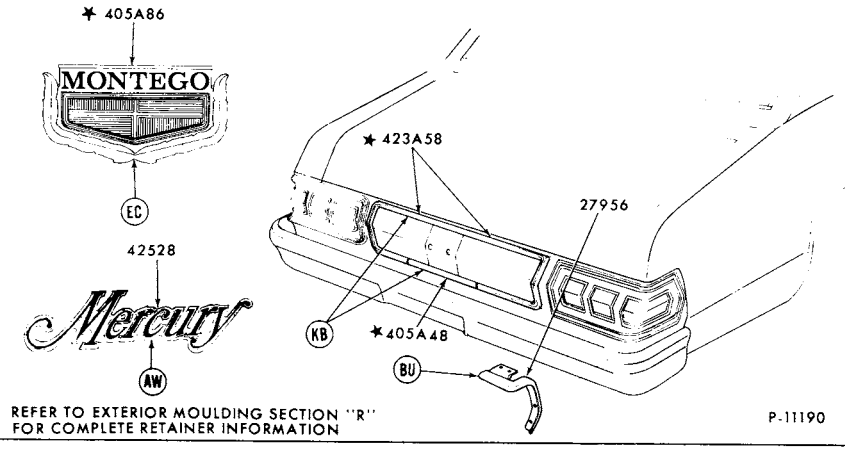

1975 MONTEGO - BODY TYPES 53B,D and 65B,D - BACK END

GROUP NUMBER	PART NAME	DESCRIPTION	PART NUMBER	QTY.
27956-7	Filler (quarter panel rear lamp opening)		Not used in 1975	
405A48	Moulding (fuel filler door)		✶ D4GY 65405A48-A	1
405A86	Plate (fuel filler door name)	"MONTEGO"	★ D4GY 65405A86-A Not replaced (4/83)	1
423A58	Moulding (lower back panel)		✶ D4GY 65423A58-A	1
42528	Plate (name)	"Mercury"	♦ D4GY 6542528-A	1

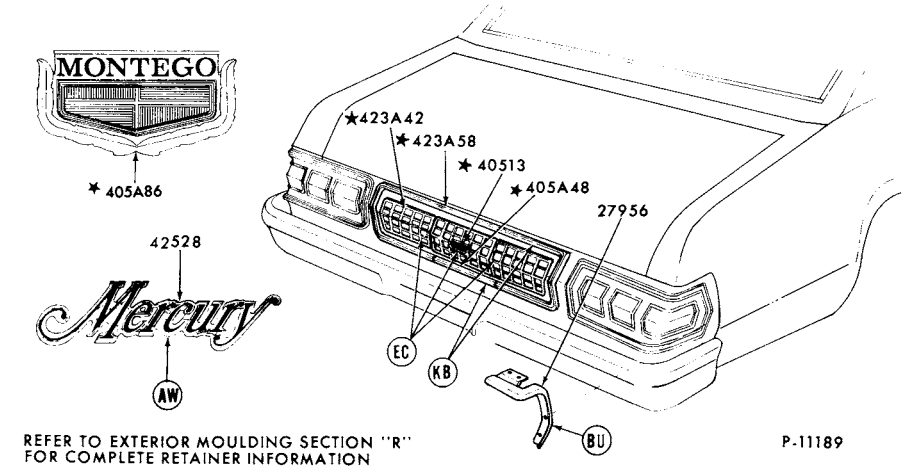

1975 MONTEGO - BODY TYPES 53K and 65K - BACK END

GROUP NUMBER	PART NAME	DESCRIPTION	PART NUMBER	QTY.
27956-7	Filler (quarter panel rear lamp opening)		Not used in 1975	
40513	Panel (fuel filler door finish)		✶D4GY 6540513-A Not replaced (4/83)	1
405A48	Moulding (fuel filler door)		✶ D4GY 65405A48-A	1
405A86	Plate (fuel filler door name)	"MONTEGO"	✶ D4GY 65405A86-A	1
423A42	Panel (lower back finish)		(RH)✶D4GY 65423A42-A Not replaced (4/83) (LH)★D4GY 65423A42-B Not replaced (4/83)	1
423A58	Moulding (lower back panel)		✶D4GY 65423A58-A	1
42528	Plate (name)	"Mercury"	♦ D4GY 6542528-A	1

♦ Includes attaching parts

COPYRIGHT © 1986 — FORD MOTOR COMPANY — DEARBORN, MICHIGAN

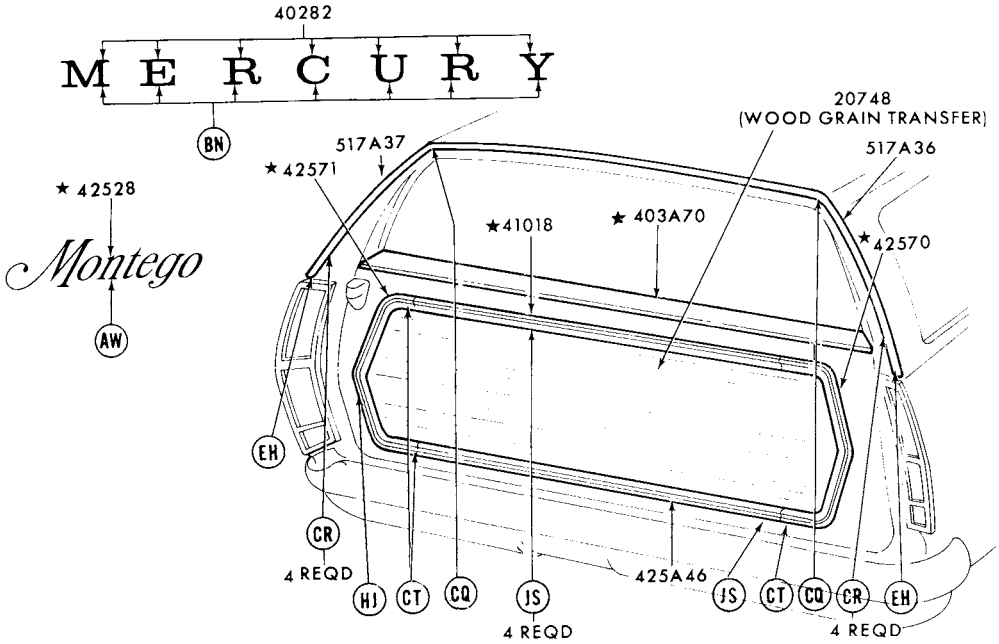

1975 MONTEGO - BODY TYPE 71 - BACK END

GROUP NUMBER	PART NAME	DESCRIPTION	PART NUMBER		QTY.
20748	Transfer (wood grain)	Cherry wood grain-20 3/4" x 70 5/8"-cut to fit-body type 71K	D4GY 7120748-A		1
40282	Letter (name)	"M"	♦D3MY 7140282-A		1
		"E"	♦D3MY 7140282-B		1
		"R"	♦D3MY 7140282-C		2
		"C"	♦D3MY 7140282-D		1
		"U"	♦D3MY 7140282-E		1
		"Y"	♦D3MY 7140282-F		1
403A70	Moulding (tailgate outside belt)		★D2OZ 71403A70-A	Not replaced (4/84)	1
41018	Moulding (tailgate outside upper)	Body type 71K	★D2GY 7141018-A	Not replaced (4/83)	1
42528	Plate (tailgate name)	"Montego"	★ D4GY 7142528-A		1
425A46	Moulding (tailgate outside lower)		♦D2GY 71425A46-A		1
42570-1	Moulding (tailgate outside side)		(RH)★D2GY 7142570-A Not replaced (4/83)	(LH)★D2GY 7142571-A Not replaced (4/83)	1
517A36-7	Moulding (roof outside rear)		(RH)♦D2GY 71517A36-A	(LH)♦D2GY 71517A37-A	1

♦ Includes attaching parts

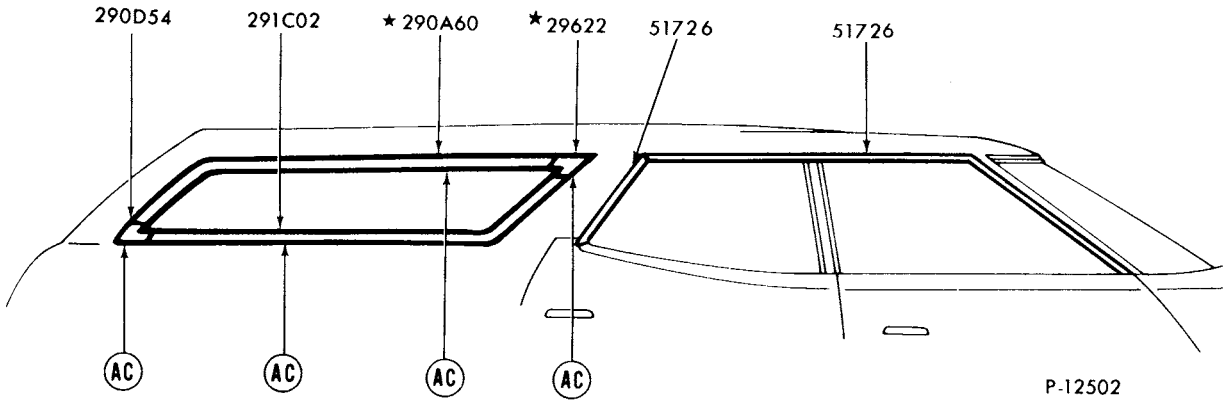

REFER TO EXTERIOR MOULDING SECTION 'R' FOR COMPLETE RETAINER INFORMATION

1975 MONTEGO - BODY TYPE 71 - DOOR and QUARTER WINDOW FRAME

GROUP NUMBER	PART NAME	DESCRIPTION	PART NUMBER		QTY.
290D54	Moulding (quarter window outside lower rear corner)		D2OZ 71290D54-A	R.H. and L.H.	2
290A60-1	Moulding (quarter window outside upper)		(RH)★D2OZ 71290A60-A	(LH)★D2OZ 71290A61-A Not replaced (3/82)	1
291C02-3	Moulding (quarter window outside lower rear)		(RH)♦D2OZ 71291C02-A	(LH)♦D2OZ 71291C03-A	1
29622	Moulding (quarter window outside front)		★D2OZ 7129622-A Not replaced (3/82)	R.H. and L.H.	2
51726-7	Moulding (roof drip side finish)		(RH)♦D2GY 7151726-A	(LH)♦D2GY 7151727-A	1

♦ Includes attaching parts

COPYRIGHT © 1986 — FORD MOTOR COMPANY — DEARBORN, MICHIGAN

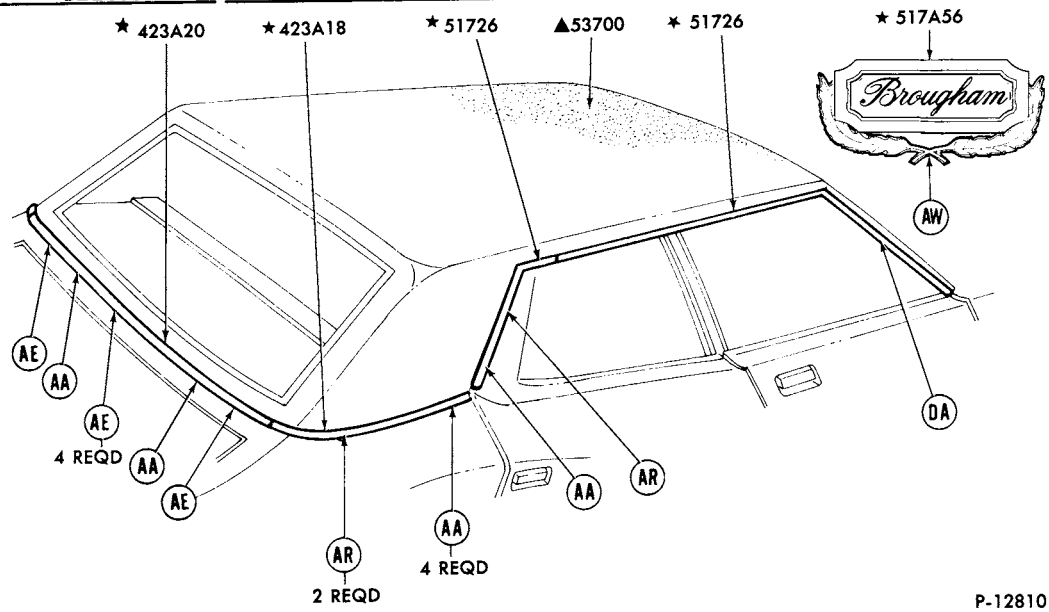

1975 MONTEGO - BODY TYPES 53 and 71 - ROOF and BACK BELT

GROUP NUMBER	PART NAME	DESCRIPTION	PART NUMBER		QTY.
423A18-9	Moulding (back belt outside side)		(RH)✶D4GY 53423A18-A	(LH)✶D4GY 53423A19-A	1
423A20	Moulding (back belt outside)		★D4OZ 65423A20-H	Not replaced (4/84)	1
51726-9	Moulding (roof drip side finish)	Body type 53- w/o vinyl roof	(RH)✶D2GY 5351726-B	(LH)✶D2GY 5351727-B	1
		Body type 53- w/vinyl roof- front	(RH)★D2GY 5351726-A	(LH)✶D2GY 5351727-A	1
		rear	(RH)★D4GY 5351728-A	(LH)★D4GY 5351729-A	1
		Body type 71	(RH)✶D2GY 7151726-A	(LH)★D2GY 7151727-A	1

REFER TO EXTERIOR MOULDING SECTION "R" FOR COMPLETE RETAINER INFORMATION

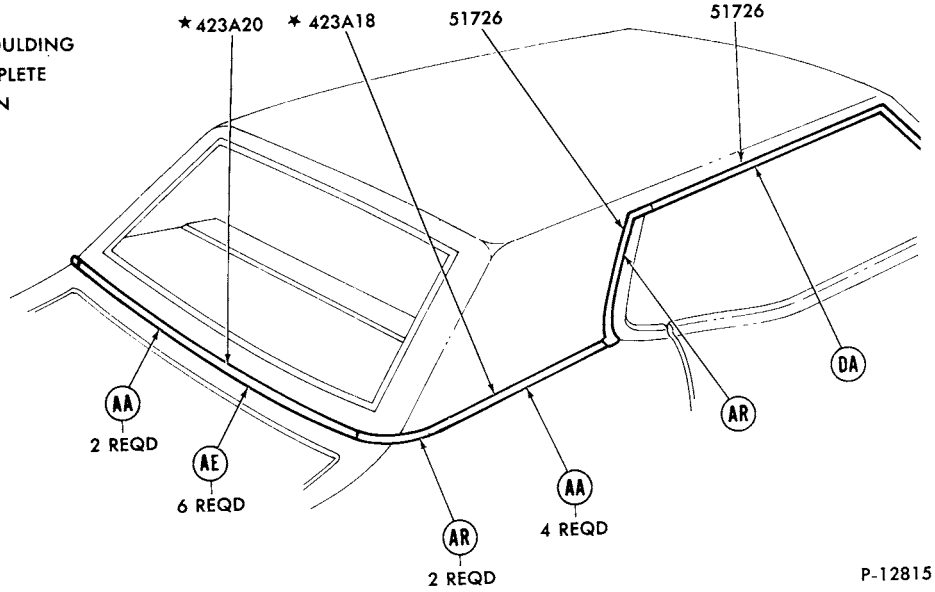

1975 MONTEGO - BODY TYPES 65B,D - ROOF and BACK BELT

♦ Incl. attaching parts

1975 MONTEGO - BODY TYPES 65B,D - ROOF and BACK BELT - cont'd.

GROUP NUMBER	PART NAME	DESCRIPTION	PART NUMBER		QTY.
423A18-9	Moulding (back belt outside side)	Front	(RH)✶D4GY 65423A18-B	(LH)✶D4GY 65423A19-B Not replaced (4/83)	1
		Rear	(RH)✶D4GY 65423A18-C	(LH)✶D4GY 65423A19-C	1
423A20	Moulding (back belt outside)		★D4OZ 65423A20-H	Not replaced (4/84)	1
51726-7	Moulding (roof drip side finish)	Front-w/vinyl roof	(RH)♦D4WY 6551726-A	(LH)♦D4WY 6551727-A	1
		Rear-w/vinyl roof	(RH)♦D2GY 6551726-B	(LH)♦D2GY 6551727-B	1
		W/o vinyl roof	(RH)♦D4WY 6551726-A	(LH)♦D4WY 6551727-A	1

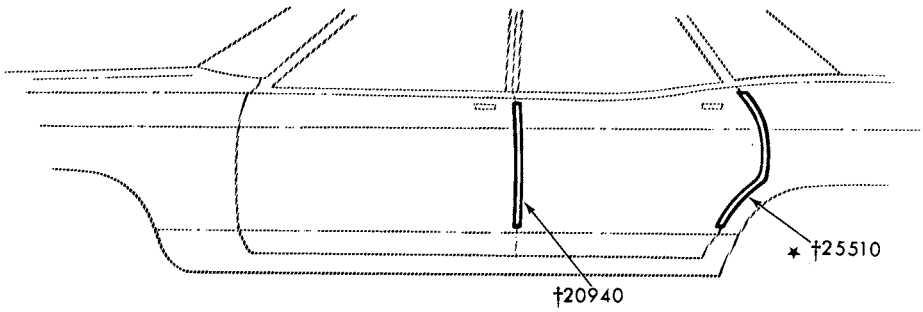

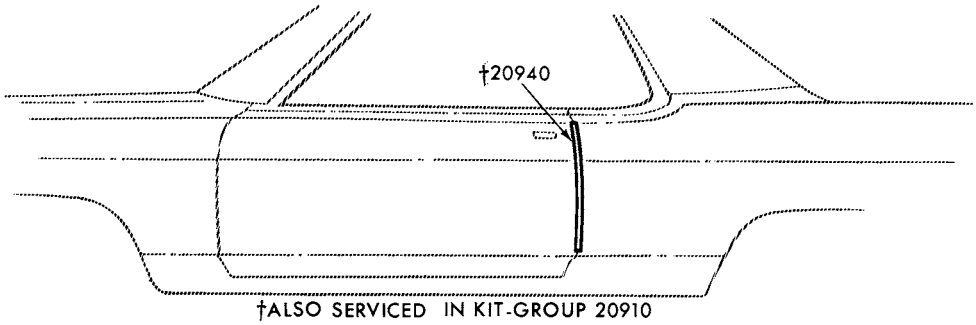

†ALSO SERVICED IN KIT-GROUP 20910

P-10061

1975 MONTEGO - DOOR EDGE GUARDS

GROUP NUMBER	PART NAME	DESCRIPTION	PART NUMBER		QTY.
20910	Moulding kit (door edge guard)	Body type 65	✶ D4GY 6520910-A		1
20940-1	Moulding (front door edge guard)	Body types 53,71B,D	(RH)✶D4GY 5320940-A	(LH)★D4GY 5320941-A Not replaced (3/82)	1
		Body type 65	(RH) D4GY 6520940-A	(LH) D4GY 6520941-A	1
		Body type 71K	(RH)✶D4GY 7120940-A	(LH)✶D4GY 7120941-A	1
25510-1	Moulding (rear door edge guard)	Body types 53,71B,D	(RH)✶D4GY 5325510-A	(LH)★D4GY 5325511-A Not replaced (3/82)	1
		Body type 71K	(RH)★D4GY 7125510-A Not replaced (2/81)	(LH)★D4GY 7125511-A Not replaced (2/81)	1

♦ Includes attaching parts

COPYRIGHT © 1986 — FORD MOTOR COMPANY — DEARBORN, MICHIGAN

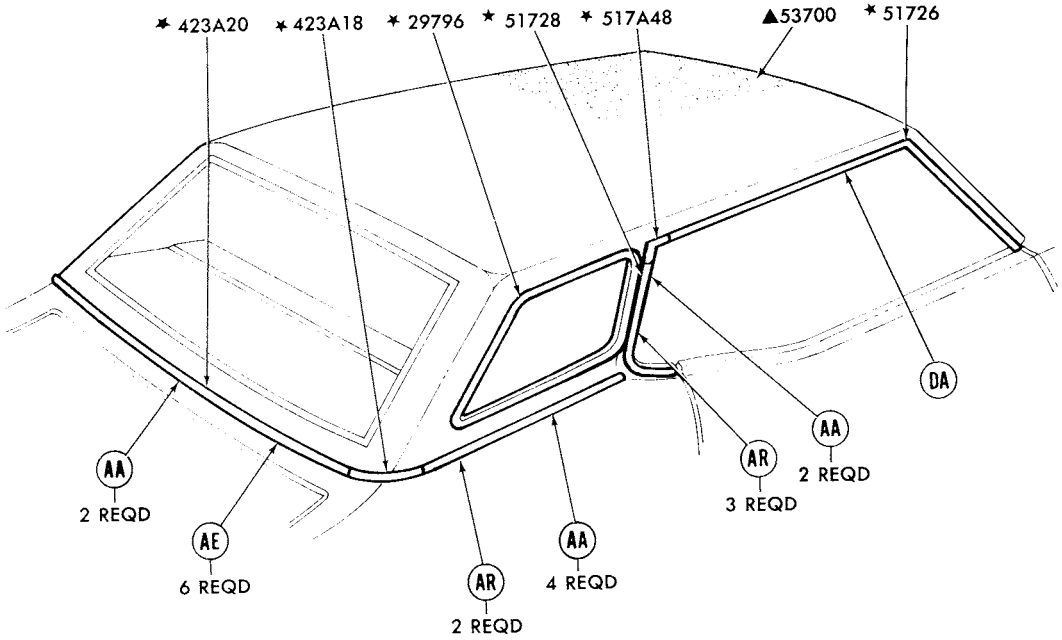

REFER TO EXTERIOR MOULDING SECTION "R" FOR COMPLETE RETAINER INFORMATION
▲REFER TO SOFT TRIM SECTION

P-12816

1975 MONTEGO - BODY TYPE 65K - ROOF and BACK BELT - w/FULL VINYL ROOF

GROUP NUMBER	PART NAME	DESCRIPTION	PART NUMBER		QTY.
29796-7	Moulding (opera window outside)		(RH)✶D4GY 6529796-C	(LH)✶D4GY 6529797-C	1
423A18-9	Moulding (back belt outside side)		(RH)★D4GY 65423A18-A	(LH)★D4GY 65423A19-A	1
423A20	Moulding (back belt outside)		★D4OZ 65423A20-H Not replaced (4/84)		1
51726-9	Moulding (roof drip side finish)	Front	(RH)★D2GY 6551726-C Not replaced (3/82)	(LH)✶D2GY 6551727-C	1
		Rear	(RH)★D3GY 6551728-A	(LH)✶D3GY 6551729-A	1
517A48-9	Moulding (roof drip side rear corner finish)		(RH)✶D2GY 65517A48-A	(LH)✶D2GY 65517A49-A	1

♦ Incl. attaching parts

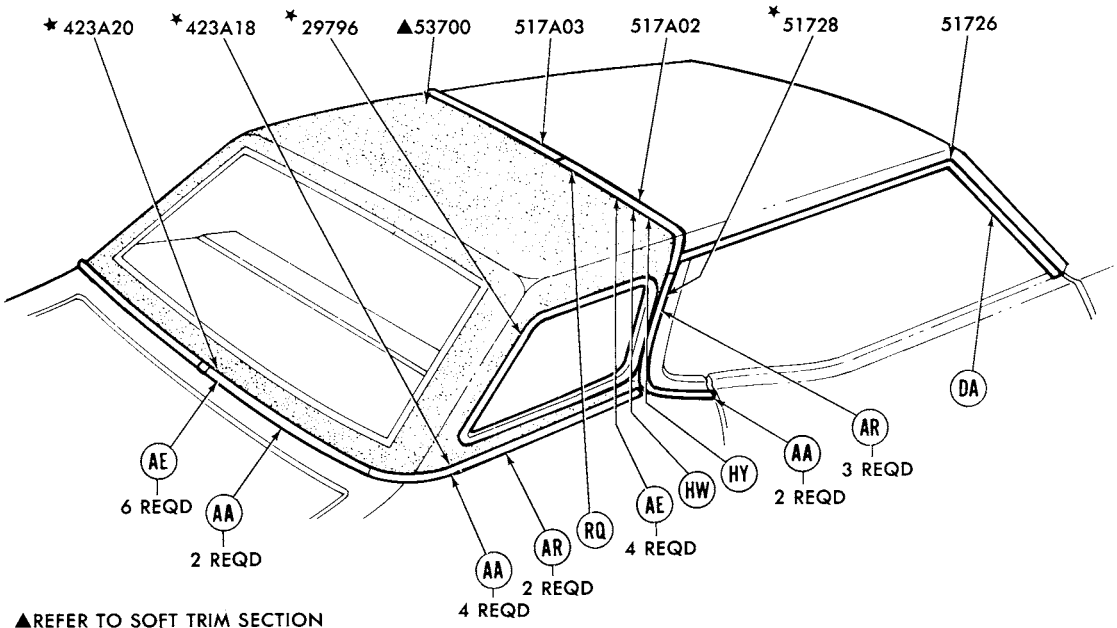

▲REFER TO SOFT TRIM SECTION
REFER TO EXTERIOR MOULDING SECTION "R" FOR COMPLETE RETAINER INFORMATION

P-12817

1975 MONTEGO - BODY TYPE 65K - ROOF and BACK BELT - w/HALF VINYL ROOF

GROUP NUMBER	PART NAME	DESCRIPTION	PART NUMBER		QTY
29796-7	Moulding (opera window outside)		(RH)★D4GY 6529796-C	(LH)★D4GY 6529797-C	1
423A18-9	Moulding (back belt outside side)		(RH)★D4GY 65423A18-A	(LH)★D4GY 65423A19-A	1
423A20	Moulding (back belt outside)		★D4OZ 65423A20-H	Not replaced (4/84)	1
517A02-3	Moulding (roof outside side)		(RH)♦D4WY 65517A02-A	(LH)♦D4WY 65517A03-A	1
51726-9	Moulding (roof drip side finish)	Front	(RH)♦D4WY 6551726-A	(LH)★D4WY 6551727-A	1
		Rear	(RH)★D3GY 6551728-A	(LH)★D3GY 6551729-A	1

♦ Includes attaching parts

COPYRIGHT © 1986 — FORD MOTOR COMPANY — DEARBORN, MICHIGAN

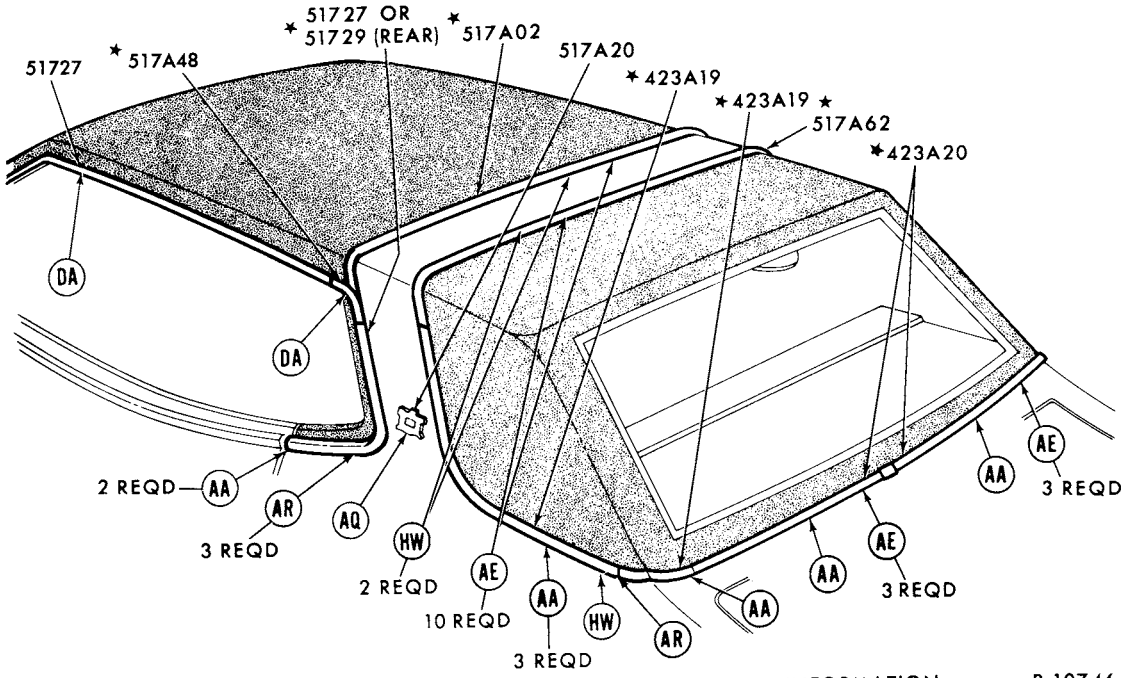

REFER TO EXTERIOR MOULDING SECTION "R" FOR COMPLETE RETAINER INFORMATION P-10746

1975 MONTEGO - BODY TYPE 65K - ROOF and BACK BELT - W/SPLIT VINYL ROOF

GROUP NUMBER	PART NAME	DESCRIPTION	PART NUMBER		QTY.
423A18-9	Moulding (back belt outside side)	Front	(RH)★D4GY 65423A18-D	(LH)✶D4GY 65423A19-D	1
		Rear	(RH)★D4GY 65423A18-C	(LH)★D4GY 65423A19-C	1
423A20	Moulding (back belt outside)		✶D4OZ 65423A20-H	Not replaced (4/84)	1
517A02	Moulding (roof outside side)		(RH)★D3GY 65517A02-A	(LH)✶D3GY 65517A03-A	1
517A20	Ornament (roof side outside)		♦C9MY 65517A20-A	R.H. and L.H.	2
51726-9	Moulding (roof drip side finish)	Front	(RH)♦D4WY 6551726-A	(LH)✶D4WY 6551727-A	1
		Rear	(RH)★D3GY 6551728-A	(LH)✶D3GY 6551729-A	1
517A48-9	Moulding (roof drip side rear corner finish)		(RH)✶D2GY 65517A48-A	(LH)✶D2GY 65517A49-A	1
517A62-3	Moulding (roof outside side rear)		(RH)✶D3GY 65517A62-A	★(LH)✶D3GY 65517A63-A Not replaced (4/79)	1

♦ Includes attaching parts

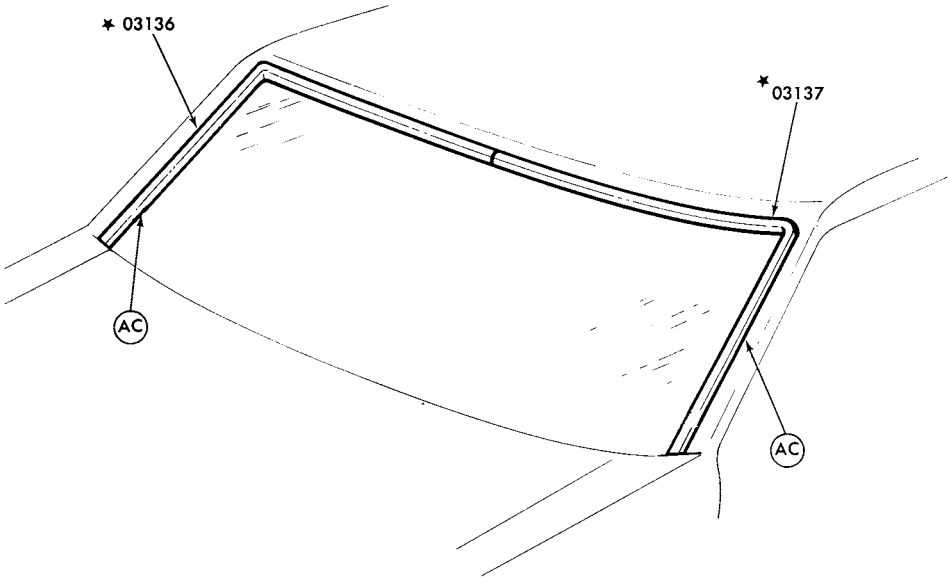

REFER TO EXTERIOR MOULDING SECTION 'R' FOR COMPLETE RETAINER INFORMATION

P-12994

1975 LINCOLN - WINDSHIELD

GROUP NUMBER	PART NAME	DESCRIPTION	PART NUMBER		QTY.
03136-7	Moulding (windshield outside side)		(RH)*D5VY 6003136-A	(LH)*D5VY 6003137-A	1

* Includes attaching parts

COPYRIGHT © 1986 — FORD MOTOR COMPANY — DEARBORN, MICHIGAN

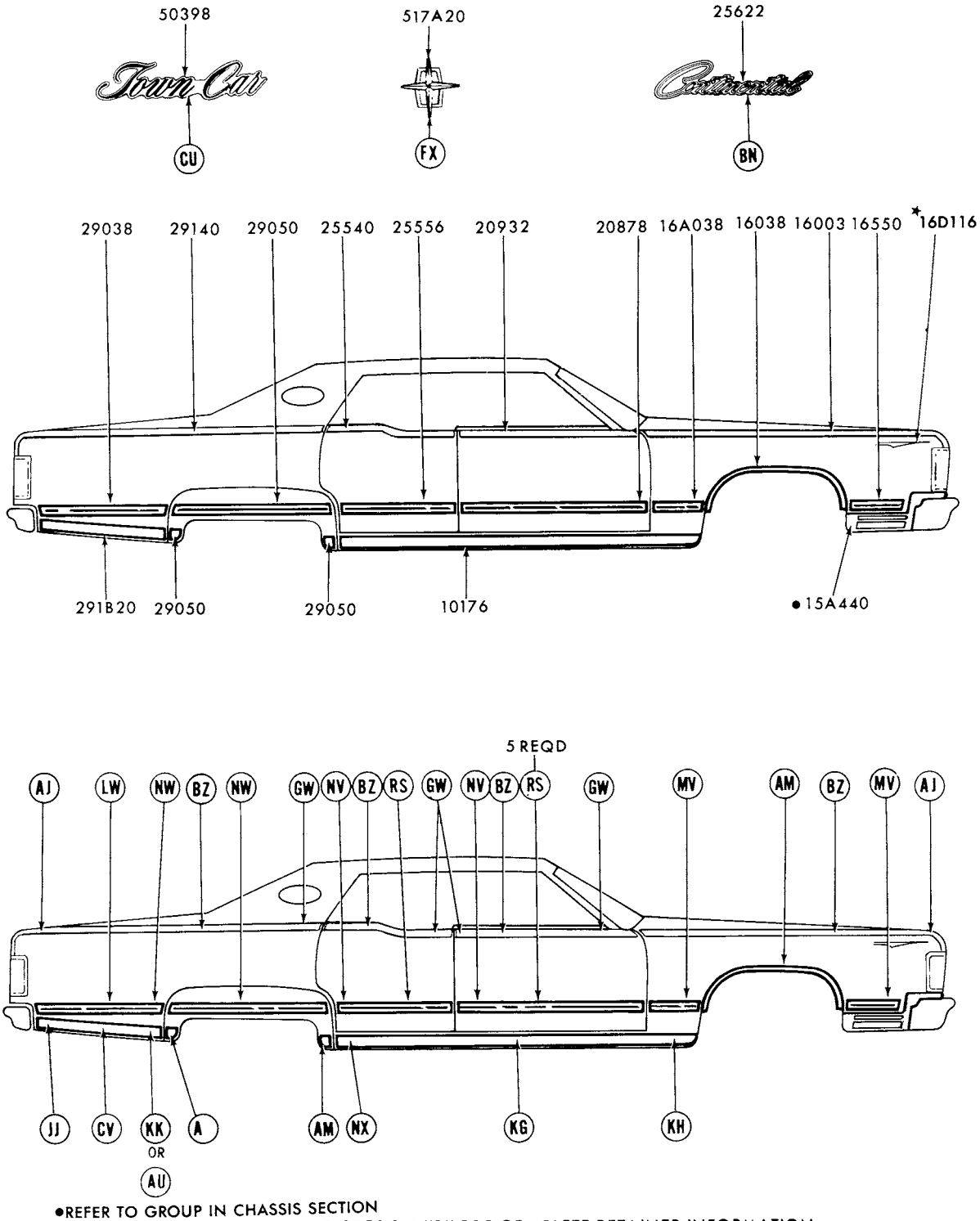

●REFER TO GROUP IN CHASSIS SECTION
REFER TO EXTERIOR MOULDING SECTION "R" FOR COMPLETE RETAINER INFORMATION

P-12138

1975 LINCOLN - BODY TYPE 53 - w/BODY SIDE MOULDINGS

1975 LINCOLN - BODY TYPE 53 - w/BODY SIDE MOULDINGS - cont'd.

GROUP NUMBER	PART NAME	DESCRIPTION	PART NUMBER		QTY.
10176-7	Moulding (body rocker panel)		(RH)♦D5VY 6010176-A	(LH)♦D5VY 6010177-A	1
16003-4	Moulding (front fender top)		(RH)♦D5VY 16003-A	(LH)♦D5VY 16004-A	1
16038-9	Moulding (front fender wheel opng.)		(RH)♦D5VY 16038-A	(LH)♦D5VY 16039-A	1
16A038-9	Moulding (front fender rear)	◊Black vinyl insert	(RH)♦D5VY 16A038-AA	(LH)✶D5VY 16A039-AA	1
		◊Blue vinyl insert	(RH)♦D5VY 16A038-AB	(LH)♦D5VY 16A039-AB	1
		◊Gold vinyl insert	(RH)♦D5VY 16A038-AY	(LH)♦D5VY 16A039-AY	1
		◊Green vinyl insert	(RH)✶D5VY 16A038-AG Not replaced (2/81)	(LH)✶D5VY 16A039-AG	1
		◊Jade vinyl insert	(RH)✶D5VY 16A038-AR	(LH)✶D5VY 16A039-AR	1
		◊Red vinyl insert	(RH)✶D5VY 16A038-AD	(LH)✶D5VY 16A039-AD	1
		◊Saddle vinyl insert	(RH)♦D5VY 16A038-AZ	(LH)✶D5VY 16A039-AZ	1
		◊Silver vinyl insert	(RH)✶D5VY 16A038-AP	(LH)✶D5VY 16A039-AP	1
		◊ Taupe vinyl insert	(RH) Δ	(LH) Δ	1
		◊White vinyl insert	(RH)♦D5VY 16A038-AW	(LH)♦D5VY 16A039-AW	1
16D116-7	Transfer (front fender stripe)	Arrow head design-Black	(RH)✶D5VY 16D116-B	(LH)✶D5VY 16D117-B	1
		Blue	(RH)✶D5VY 16D116-K Not replaced (2/81)	(LH)✶D5VY 16D117-K Not replaced (2/81)	1
		Brown	(RH)✶D5VY 16D116-H	(LH)✶D5VY 16D117-H	1
		Gold	(RH)✶D5VY 16D116-D	(LH)✶D5VY 16D117-D	1
		Green	(RH)✶D5VY 16D116-A	(LH)✶D5VY 16D117-A	1
		Red	(RH)✶D5VY 16D116-F	(LH)✶D5VY 16D117-F Not replaced (2/81)	1
		Silver	(RH)✶D5VY 16D116-G	(LH)✶D5VY 16D117-G	1
		Tan	(RH)✶D5VY 16D116-J	(LH)✶D5VY 16D117-J	1
		White	(RH)✶D5VY 16D116-C	(LH)✶D5VY 16D117-C	1
		Yellow	(RH)✶D5VY 16D116-E	(LH)✶D5VY 16D117-E	1
16550-1	Moulding (front fender front)	◊Black vinyl insert	(RH)♦D5VY 16550-AA	(LH)♦D5VY 16551-AA	1
		◊Blue vinyl insert	(RH)✶D5VY 16550-AB	(LH)♦D5VY 16551-AB	1
		◊Gold vinyl insert	(RH)♦D5VY 16550-AY	(LH)♦D5VY 16551-AY	1
		◊Green vinyl insert	(RH)✶D5VY 16550-AG Not replaced(4/84)	(LH)✶D5VY 16551-AG	1
		◊Jade vinyl insert	(RH)✶D5VY 16550-AR	(LH)✶D5VY 16551-AR	1
		◊Red vinyl insert	(RH)✶D5VY 16550-AD Not replaced (4/84)	(LH)✶D5VY 16551-AD	1
		◊Saddle vinyl insert	(RH)♦D5VY 16550-AZ	(LH)✶D5VY 16551-AZ	1
		◊Silver vinyl insert	(RH)♦D5VY 16550-AP	(LH)✶D5VY 16551-AP Not replaced (4/84)	1
		◊ Taupe vinyl insert	(RH) Δ	(LH) Δ	1
		◊White vinyl insert	(RH)♦D5VY 16550-AW	(LH)♦D5VY 16551-AW	1
20878-9	Moulding (front door outside lower)	◊Black vinyl insert	(RH)♦D5VY 5320878-AA	(LH)♦D5VY 5320879-AA	1
		◊Blue vinyl insert	(RH)♦D5VY 5320878-AB	(LH)♦D5VY 5320879-AB	1
		◊Gold vinyl insert	(RH)♦D5VY 5320878-AY	(LH)♦D5VY 5320879-AY	1
		◊Green vinyl insert	(RH)✶D5VY 5320878-AG	(LH)✶D5VY 5320879-AG	1
		◊Jade vinyl insert	(RH)✶D5VY 5320878-AR	(LH)♦D5VY 5320879-AR	1
		◊Red vinyl insert	(RH)♦D5VY 5320878-AD	(LH)✶D5VY 5320879-AD	1
		◊Saddle vinyl insert	(RH)♦D5VY 5320878-AZ	(LH)♦D5VY 5320879-AZ	1
		◊Silver vinyl insert	(RH)✶D5VY 5320878-AP	(LH)✶D5VY 5320879-AP Not replaced (4/84)	1
		◊ Taupe vinyl insert	(RH) Δ	(LH) Δ	1
		◊White vinyl insert	(RH)♦D5VY 5320878-AW	(LH)♦D5VY 5320879-AW	1
20932-3	Moulding (front door outside upr.)	R.H.-w/o mirror	♦D5VY 5320932-A		1
		R.H.-w/mirror-front	♦D5VY 6020916-A		1
		R.H.-w/mirror-rear	♦D5VY 5320932-B		1
		L.H.-front	♦D5VY 6020917-A		1
		L.H.-rear	♦D5VY 5320933-A		1
20934-5	Moulding and weatherstrip-(front door outside belt)		(RH)♦D5VY 5320934-A	(LH)♦D5VY 5320935-A	1

◊ For color verification, refer to the vinyl roof swatches in the 1975 salesman's color and upholstery selections guide.
♦ Includes attaching parts Δ Use saddle

COPYRIGHT © 1986 — FORD MOTOR COMPANY — DEARBORN, MICHIGAN

1975 LINCOLN - BODY TYPE 53 - w/BODY SIDE MOULDINGS - cont'd.

GROUP NUMBER	PART NAME	DESCRIPTION	PART NUMBER		QTY.
25540-1	Moulding (rear door outside upper)		(RH)♦D5VY 5325540-A	(LH)♦D5VY 5325541-A	1
25554-5	Moulding (rear door outside belt)		(RH)♦D5VY 5325554-A	(LH)♦D5VY 5325555-A	1
25556-7	Moulding (rear door outside lower)	◊Black vinyl insert	(RH)♦D5VY 5325556-AA	(LH)♦D5VY 5325557-AA	1
		◊Blue vinyl insert	(RH)♦D5VY 5325556-AB	(LH)♦D5VY 5325557-AB	1
		◊Gold vinyl insert	(RH)♦D5VY 5325556-AY	(LH)♦D5VY 5325557-AY	1
		◊Green vinyl insert	(RH)★D5VY 5325556-AG Not replaced (2/81)	(LH)★D5VY 5325557-AG Not replaced (2/81)	1
		◊Jade vinyl insert	(RH)♦D5VY 5325556-AR	(LH)★D5VY 5325557-AR	1
		◊Red vinyl insert	(RH)★D5VY 5325556-AD	(LH)★D5VY 5325557-AD	1
		◊Saddle vinyl insert	(RH)♦D5VY 5325556-AZ	(LH)♦D5VY 5325557-AZ	1
		◊Silver vinyl insert	(RH)♦D5VY 5325556-AP	(LH)♦D5VY 5325557-AP	1
		◊Taupe vinyl insert	(RH) Δ	(LH) Δ	1
		◊White vinyl insert	(RH)♦D5VY 5325556-AW	(LH)♦D5VY 5325557-AW	1
25622	Plate (name)	"Continental" - "Before 10/21/74"	♦D4VY 6525622-A	R.H. and L.H.	2
		"Continental"- "From 10/21/74"	♦D5VY 6525622-A	R.H. and L.H.	2
29038-9	Moulding (quarter outside)	◊Black vinyl insert	(RH)★D5VY 6029038-AA	(LH)★D5VY 6029039-AA	1
		◊Blue vinyl insert	(RH)★D5VY 6029038-AB	(LH)★D5VY 6029039-AB	1
		◊Gold vinyl insert	(RH)★D5VY 6029038-AY	(LH)★D5VY 6029039-AY	1
		◊Green vinyl insert	(RH)★D5VY 6029038-AG	(LH)★D5VY 6029039-AG	1
		◊Jade vinyl insert	(RH)★D5VY 6029038-AR	(LH)★D5VY 6029039-AR	1
		◊Red vinyl insert	(RH)♦D5VY 6029038-AD	(LH)♦D5VY 6029039-AD	1
		◊Saddle vinyl insert	(RH)♦D5VY 6029038-AZ	(LH)♦D5VY 6029039-AZ	1
		◊Silver vinyl insert	(RH)♦D5VY 6029038-AP	(LH)♦D5VY 6029039-AP	1
		◊Taupe vinyl insert	(RH) Δ	(LH) Δ	1 §
		◊White vinyl insert	(RH)♦D5VY 6029038-AW	(LH)♦D5VY 6029039-AW	1
29050-1	Moulding (quarter wheel opening cover lower)	Front	(RH)♦D5VY 6029050-B	(LH)♦D5VY 6029051-B	1
		Rear	(RH)♦D5VY 6029050-C	(LH)♦D5VY 6029051-C	1
29050-1	Moulding (quarter wheel opening cover upper)	◊Black vinyl insert	(RH)♦D5VY 6029050-AA	(LH)♦D5VY 6029051-AA	1
		◊Blue vinyl insert	(RH)♦D5VY 6029050-AB	(LH)♦D5VY 6029051-AB	1
		◊Gold vinyl insert	(RH)♦D5VY 6029050-AY	(LH)♦D5VY 6029051-AY	1
		◊Green vinyl insert	(RH)★D5VY 6029050-AG Not replaced (4/84)	(LH)★D5VY 6029051-AG Not replaced (4/84)	1
		◊Jade vinyl insert	(RH)♦D5VY 6029050-AR	(LH)♦D5VY 6029051-AR	1
		◊Red vinyl insert	(RH)♦D5VY 6029050-AD	(LH)♦D5VY 6029051-AD	1
		◊Saddle vinyl insert	(RH)♦D5VY 6029050-AZ	(LH)♦D5VY 6029051-AZ	1
		◊Silver vinyl insert	(RH)♦D5VY 6029050-AP	(LH)♦D5VY 6029051-AP	1
		◊Taupe vinyl insert	(RH) Δ	(LH) Δ	1 §
		◊White vinyl insert	(RH)♦D5VY 6029050-AW	(LH)♦D5VY 6029051-AW	1
291B20-1	Moulding (quarter outside lower)		(RH)♦D5VY 60291B20-A	(LH)♦D5VY 60291B21-A	1
29140-1	Moulding (quarter outside upper)		(RH)♦D5VY 5329140-A	(LH)♦D5VY 5329141-A	1
50398	Plate (front fender name)	"Town Car"	♦D3VY 5350398-A	R.H. and L.H.	2
517A20	Ornament (roof side)		♦C9VY 53517A20-A	R.H. and L.H.	2

◊ For color verification, refer to the vinyl roof swatches in the 1975 salesman's color and upholstery selections guide.
Δ Use saddle

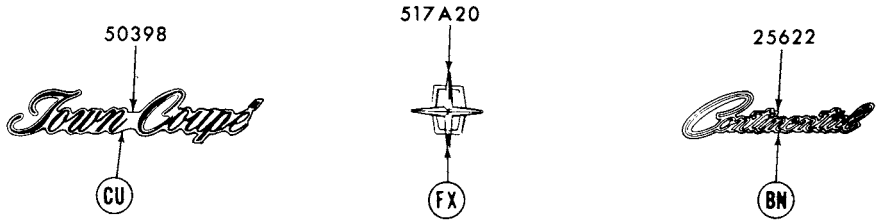

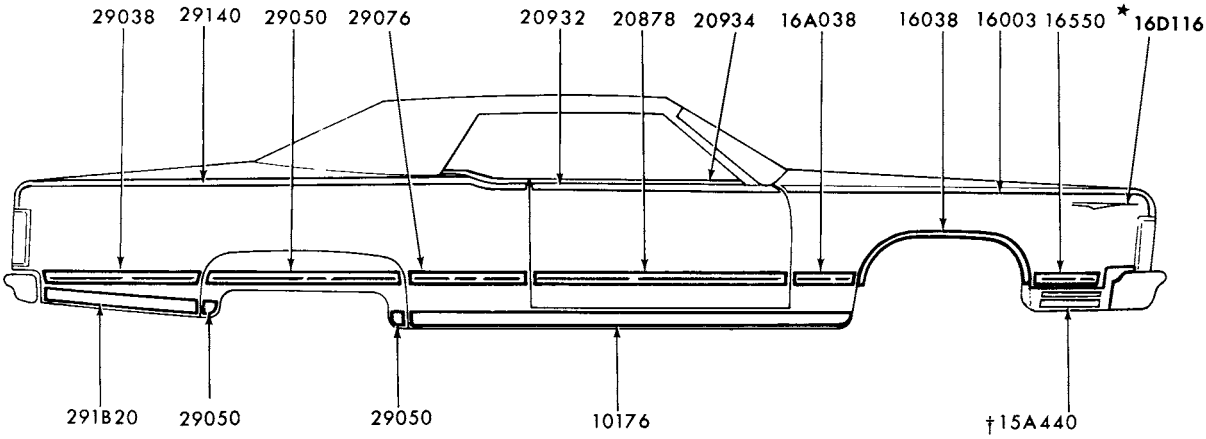

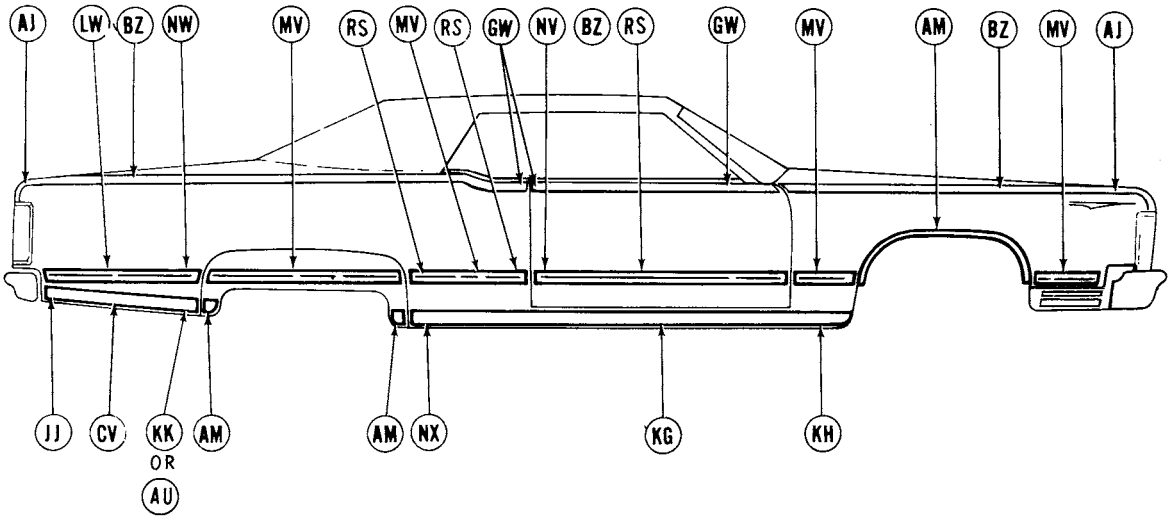

REFER TO EXTERIOR MOULDING SECTION "R" FOR COMPLETE RETAINER INFORMATION
† REFER TO GROUP IN TEXT SECTION

P-12139

1975 LINCOLN - BODY TYPE 60 - w/BODY SIDE MOULDINGS

COPYRIGHT © 1986 — FORD MOTOR COMPANY — DEARBORN, MICHIGAN

1975 LINCOLN - BODY TYPE 60 - w/BODY SIDE MOULDINGS - cont'd.

GROUP NUMBER	PART NAME	DESCRIPTION	PART NUMBER		QTY.
10176-7	Moulding (body rocker panel)		(RH)♦D5VY 6010176-A	(LH)♦D5VY 6010177-A	1
16003-4	Moulding (front fender top)		(RH)♦D5VY 16003-A	(LH)♦D5VY 16004-A	1
16038-9	Moulding (front fender wheel opening)		(RH)♦D5VY 16038-A	(LH)♦D5VY 16039-A	1
16A038-9	Moulding (front fender rear)	◊Black vinyl insert	(RH)♦D5VY 16A038-AA	(LH)✶D5VY 16A039-AA	1
		◊Blue vinyl insert	(RH)♦D5VY 16A038-AB	(LH)✶D5VY 16A039-AB	1
		◊Gold vinyl insert	(RH)♦D5VY 16A038-AY	(LH)♦D5VY 16A039-AY	1
		◊Green vinyl insert	(RH)★D5VY 16A038-AG Not replaced (4/84)	(LH)✶D5VY 16A039-AG	1
		◊Jade vinyl insert	(RH)✶D5VY 16A038-AR	(LH)✶D5VY 16A039-AR	1
		◊Red vinyl insert	(RH)✶D5VY 16A038-AD	(LH)✶D5VY 16A039-AD	1
		◊Saddle vinyl insert	(RH)♦D5VY 16A038-AZ	(LH)♦D5VY 16A039-AZ	1
		◊Silver vinyl insert	(RH)✶D5VY 16A038-AP	(LH)✶D5VY 16A039-AP	1
		◊Taupe vinyl insert	(RH) Δ	(LH) Δ	1
		◊White vinyl insert	(RH)♦D5VY 16A038-AW	(LH)♦D5VY 16A039-AW	1
16D116-7	Transfer (front fender stripe)	Arrow head design-Black	(RH)★D5VY 16D116-B	(LH)✶D5VY 16D117-B	1
		Blue	(RH)★D5VY 16D116-K Not replaced (4/84)	(LH)★D5VY 16D117-K Not replaced (4/84)	1
		Brown	(RH)✶D5VY 16D116-H	(LH)✶D5VY 16D117-H	1
		Gold	(RH)★D5VY 16D116-D	(LH)✶D5VY 16D117-D	1
		Green	(RH)✶D5VY 16D116-A	(LH)✶D5VY 16D117-A	1
		Red	(RH)✶D5VY 16D116-F	(LH)✶D5VY 16D117-F Not replaced (4/84)	1
		Silver	(RH)★D5VY 16D116-G	(LH)✶D5VY 16D117-G	1
		Tan	(RH)✶D5VY 16D116-J	(LH)✶D5VY 16D117-J	1
		White	(RH)★D5VY 16D116-C	(LH)★D5VY 16D117-C	1
		Yellow	(RH)★D5VY 16D116-E	(LH)★D5VY 16D117-E	1
16550-1	Moulding (front fender front)	◊Black vinyl insert	(RH)♦D5VY 16550-AA	(LH)♦D5VY 16551-AA	1
		◊Blue vinyl insert	(RH)✶D5VY 16550-AB	(LH)♦D5VY 16551-AB	1
		◊Gold vinyl insert	(RH)♦D5VY 16550-AY	(LH)♦D5VY 16551-AY	1
		◊Green vinyl insert	(RH)★D5VY 16550-AG Not replaced (4/84)	(LH)★D5VY 16551-AG	1
		◊Jade vinyl insert	(RH)★D5VY 16550-AR Not replaced (4/84)	(LH)✶D5VY 16551-AR	1
		◊Red vinyl insert	(RH)★D5VY 16550-AD Not replaced (4/84)	(LH)★D5VY 16551-AD	1
		◊Saddle vinyl insert	(RH)♦D5VY 16550-AZ	(LH)✶D5VY 16551-AZ	1
		◊Silver vinyl insert	(RH)♦D5VY 16550-AP	(LH)★D5VY 16551-AP Not replaced(4/84)	1
		◊Taupe vinyl insert	(RH) Δ	(LH) Δ	1
		◊White vinyl insert	(RH)♦D5VY 16550-AW	(LH)♦D5VY 16551-AW	1
20878-9	Moulding (front door outside lower)	◊Black vinyl insert	(RH)★D5VY 6020878-AA	(LH)✶D5VY 6020879-AA	1
		◊Blue vinyl insert	(RH)♦D5VY 6020878-AB	(LH)♦D5VY 6020879-AB	1
		◊Gold vinyl insert	(RH)♦D5VY 6020878-AY	(LH)★D5VY 6020879-AY	1
		◊Green vinyl insert	(RH)♦D5VY 6020878-AG	(LH)♦D5VY 6020879-AG	1
		◊Jade vinyl insert	(RH)♦D5VY 6020878-AR	(LH)♦D5VY 6020879-AR	1
		◊Red vinyl insert	(RH)★D5VY 6020878-AD	(LH)★D5VY 6020879-AD	1
		◊Saddle vinyl insert	(RH)✶D5VY 6020878-AZ	(LH)♦D5VY 6020879-AZ	1
		◊Silver vinyl insert	(RH)✶D5VY 6020878-AP	(LH)✶D5VY 6020879-AP Not replaced (2/81)	1
		◊Taupe vinyl insert	(RH) Δ	(LH) Δ Not replaced (2/81)	1
		◊White vinyl insert	(RH)♦D5VY 6020878-AW	(LH)♦D5VY 6020879-AW	1

◊ For color verification, refer to the vinyl roof swatches in the 1975 salesman's color and upholstery selections guide.
♦ Includes attaching parts Δ Use saddle

1975 LINCOLN - BODY TYPE 60 - w/BODY SIDE MOULDINGS - cont'd.

GROUP NUMBER	PART NAME	DESCRIPTION	PART NUMBER		QTY.
20932-3	Moulding (front door outside upper)	R.H.-w/o mirror	♦D5VY 6020932-A		1
		R.H.-w/mirror-front	♦D5VY 6020916-A		1
		R.H.-w/mirror-rear	♦D5VY 6020933-B		1
		L.H.-front	♦D5VY 6020917-A		1
		L.H.-rear	♦D5VY 6020933-B		1
20934-5	Moulding and weatherstrip-(front door outside belt)		(RH)♦D5VY 6020934-A	(LH)♦D5VY 6020935-A	1
25622	Plate (name)	"Continental" - "Before 10/21/74"	♦D4VY 6525622-A	R.H. and L.H.	2
		"Continental"- "From 10/21/74"	D5VY 6525622-A	R.H. and L.H.	2
29038-9	Moulding (quarter outside lower rear)	◊Black vinyl insert	(RH)♦D5VY 6029038-AA	(LH)♦D5VY 6029039-AA	1
		◊Blue vinyl insert	(RH)♦D5VY 6029038-AB	(LH)♦D5VY 6029039-AB	1
		◊Gold vinyl insert	(RH)♦D5VY 6029038-AY	(LH)♦D5VY 6029039-AY	1
		◊Green vinyl insert	(RH)★D5VY 6029038-AG	(LH)★D5VY 6029039-AG Not replaced (4/84)	1
		◊Jade vinyl insert	(RH)♦D5VY 6029038-AR	(LH)♦D5VY 6029039-AR	1
		◊Red vinyl insert	(RH)♦D5VY 6029038-AD	(LH)♦D5VY 6029039-AD	1
		◊Saddle vinyl insert	(RH)♦D5VY 6029038-AZ	(LH)♦D5VY 6029039-AZ	1
		◊Silver vinyl insert	(RH)♦D5VY 6029038-AP	(LH)♦D5VY 6029039-AP	1
		◊ Taupe vinyl insert	(RH) Δ	(LH) Δ	1
		◊White vinyl insert	(RH)♦D5VY 6029038-AW	(LH)♦D5VY 6029039-AW	1
29050-1	Moulding (quarter wheel opening cover lower)	Front	(RH)♦D5VY 6029050-B	(LH)♦D5VY 6029051-B	1
		Rear	(RH)♦D5VY 6029050-C	(LH)♦D5VY 6029051-C	1
29050-1	Moulding (quarter wheel opening cover upper)	◊Black vinyl insert	(RH)♦D5VY 6029050-AA	(LH)♦D5VY 6029051-AA	1
		◊Blue vinyl insert	(RH)♦D5VY 6029050-AB	(LH)♦D5VY 6029051-AB	1
		◊Gold vinyl insert	(RH)♦D5VY 6029050-AY	(LH)♦D5VY 6029051-AY	1
		◊Green vinyl insert	(RH)★D5VY 6029050-AG	(LH)★D5VY 6029051-AG Not replaced (4/84)	1
		◊Jade vinyl insert	(RH)♦D5VY 6029050-AR	(LH)♦D5VY 6029051-AR	1
		◊Red vinyl insert	(RH)♦D5VY 6029050-AD	(LH)♦D5VY 6029051-AD	1
		◊Saddle vinyl insert	(RH)♦D5VY 6029050-AZ	(LH)♦D5VY 6029051-AZ	1
		◊Silver vinyl insert	(RH)♦D5VY 6029050-AP	(LH)♦D5VY 6029051-AP	1
		◊ Taupe vinyl insert	(RH) Δ	(LH) Δ	1
		◊White vinyl insert	(RH)♦D5VY 6029050-AW	(LH)♦D5VY 6029051-AW	1
29076-7	Moulding (quarter outside lower front)	◊Black vinyl insert	(RH)♦D5VY 6029076-AA	(LH)★D5VY 6029077-AA	1
		◊Blue vinyl insert	(RH)♦D5VY 6029076-AB	(LH)★D5VY 6029077-AB	1
		◊Gold vinyl insert	(RH)♦D5VY 6029076-AY	(LH)♦D5VY 6029077-AY	1
		◊Green vinyl insert	(RH)★D5VY 6029076-AG	★(LH)★D5VY 6029077-AG Not replaced (4/79)	1
		◊Jade vinyl insert	(RH)♦D5VY 6029076-AR	(LH)♦D5VY 6029077-AR	1
		◊Red vinyl insert	(RH)♦D5VY 6029076-AD	(LH)♦D5VY 6029077-AD	1
		◊Saddle vinyl insert	(RH)♦D5VY 6029076-AZ	(LH)♦D5VY 6029077-AZ	1
		◊Silver vinyl insert	(RH)♦D5VY 6029076-AP	(LH)♦D5VY 6029077-AP	1
		◊ Taupe vinyl insert	(RH) Δ	(LH) Δ	1
		◊White vinyl insert	(RH)♦D5VY 6029076-AW	(LH)♦D5VY 6029077-AW	1
291B20-1	Moulding (quarter outside lower)		(RH)♦D5VY 60291B20-A	(LH)♦D5VY 60291B21-A	1
29140-1	Moulding (quarter outside upper)		(RH)♦D5VY 6029140-A	(LH)♦D5VY 6029141-A	1
50398	Plate (front fender name)	"Town Coupe"	♦D3VY 6550398-A	R.H. and L.H.	2
517A20	Ornament (roof side)		♦C9VY 53517A20-A	R.H. and L.H.	2

◊ For color verification, refer to the vinyl roof swatches in the 1975 salesman's color and upholstery selections guide.
♦ Includes attaching parts
Δ Use saddle

COPYRIGHT © 1986 — FORD MOTOR COMPANY — DEARBORN, MICHIGAN

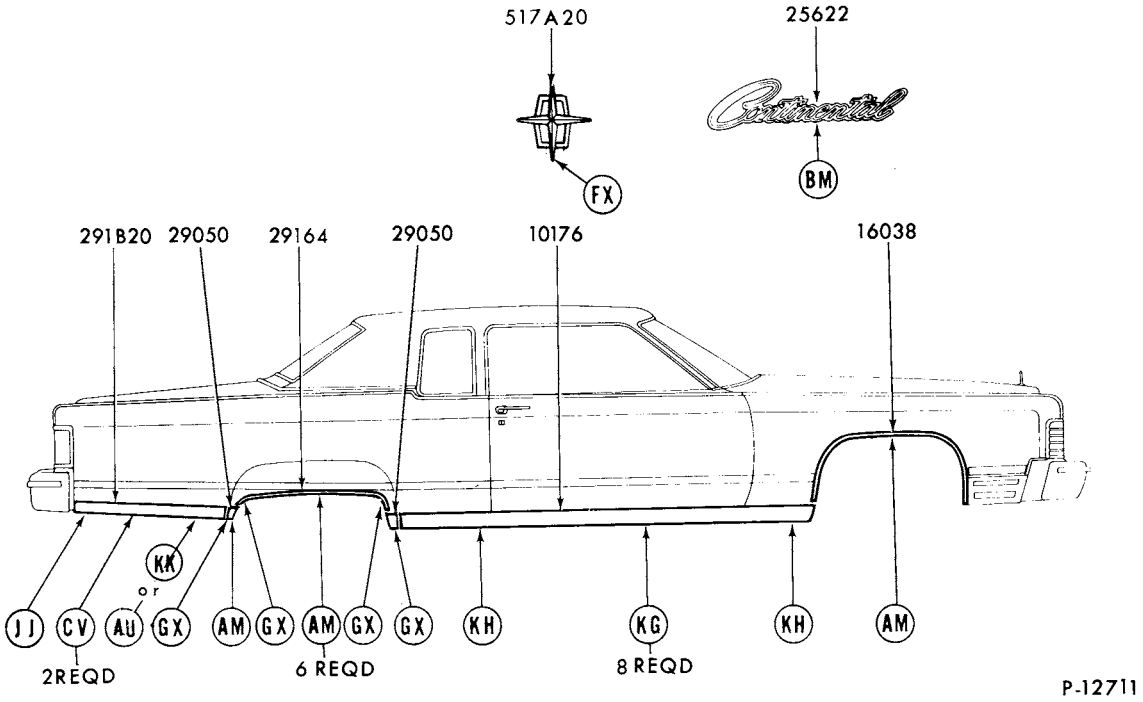

1975 LINCOLN - w/o BODY SIDE MOULDINGS

GROUP NUMBER	PART NAME	DESCRIPTION	PART NUMBER		QTY.
10176-7	Moulding (body rocker panel)		(RH)♦D5VY 6010176-A	(LH)♦D5VY 6010177-A	1
16038-9	Moulding (front fender wheel opening)		(RH)♦D5VY 16038-B	(LH)♦D5VY 16039-B	1
25622	Plate (name)	"Continental"	♦D5VY 6525622-A	R.H. and L.H.	2
29050-1	Moulding (quarter wheel opening cover)	Front	(RH)♦D5VY 6029050-B	(LH)♦D5VY 6029051-B	1
		Rear	(RH)♦D5VY 6029050-C	(LH)♦D5VY 6029051-C	
291B20-1	Moulding (quarter outside lower)		(RH)♦D5VY 60291B20-A	(LH)♦D5VY 60291B21-A	1
29164-5	Moulding (quarter wheel opening cover)		(RH)♦D5VY 6029164-A	(LH)♦D5VY 6029165-A	1
517A20	Ornament (roof side)		♦C9VY 53517A20-A	R.H. and L.H.	2

♦ Includes attaching parts

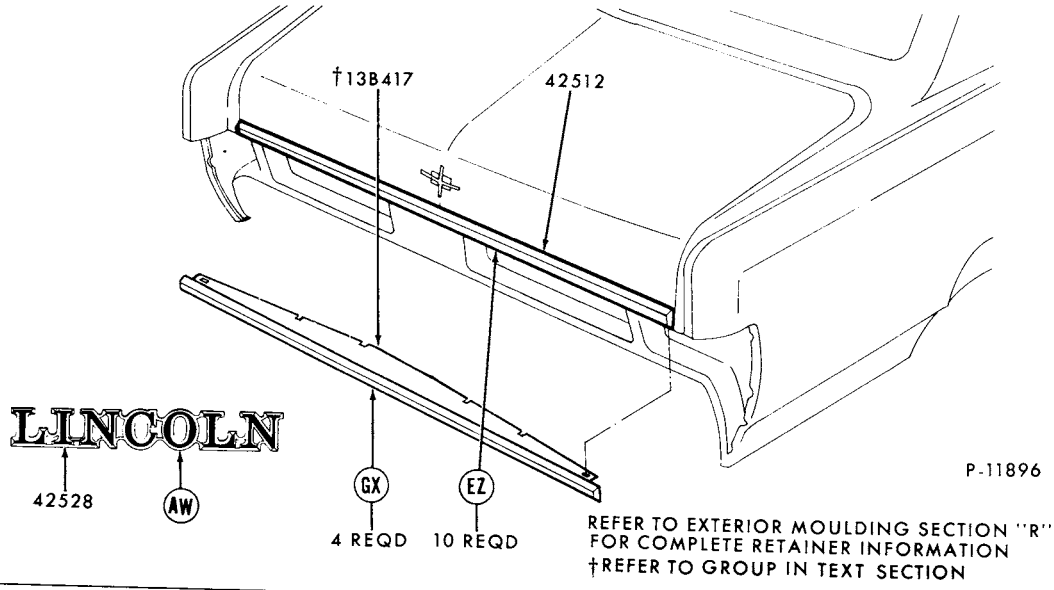

1975 LINCOLN - BACK END

GROUP NUMBER	PART NAME	DESCRIPTION	PART NUMBER	QTY.
42512	Moulding (luggage compt. dr.)		♦D5VY 6042512-A	1
42528	Plate (name)	"LINCOLN"	♦E1VY 5442528-A	1

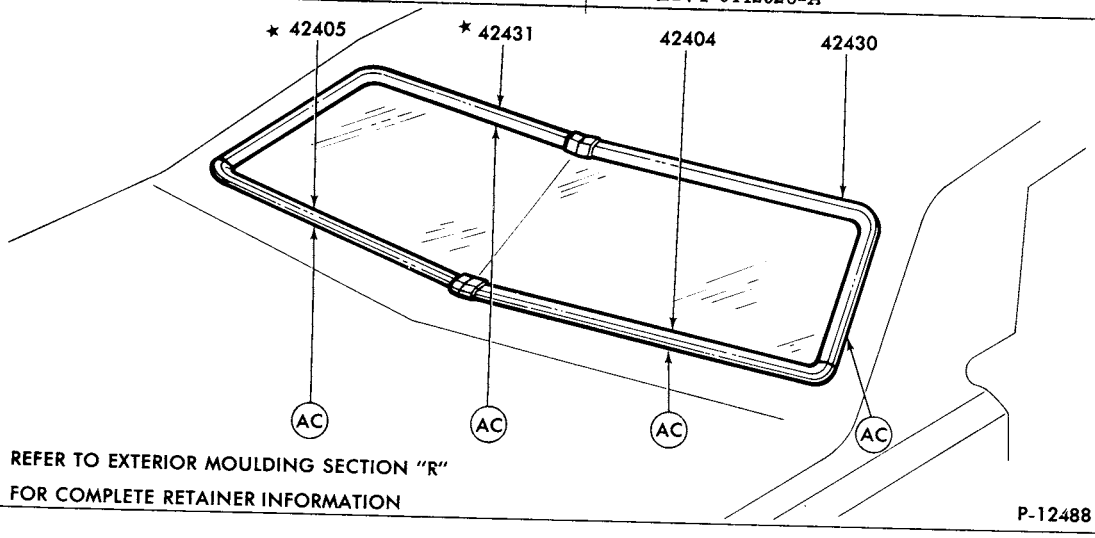

1975 LINCOLN - BACK WINDOW

GROUP NUMBER	PART NAME	DESCRIPTION	PART NUMBER		QTY.
42404-5	Moulding (back window outside lower)	Body type 53	(RH)♦D5VY 5342404-A	(LH)♦D5VY 5342405-A Not replaced (4/84)	1
		Body type 60	(RH)★D5VY 6042404-A	(LH)★D5VY 6042405-A Not replaced (4/84)	1
42430-1	Moulding (back window outside upper)	Body type 53	(RH)♦D5VY 5342430-A	(LH)★D5VY 5342431-A Not replaced(4/84)	1
		Body type 60	(RH)★D5VY 6042430-A	(LH)★D5VY 6042431-A Not replaced (4/84)	1

♦ Includes attaching parts

COPYRIGHT © 1986 — FORD MOTOR COMPANY — DEARBORN, MICHIGAN

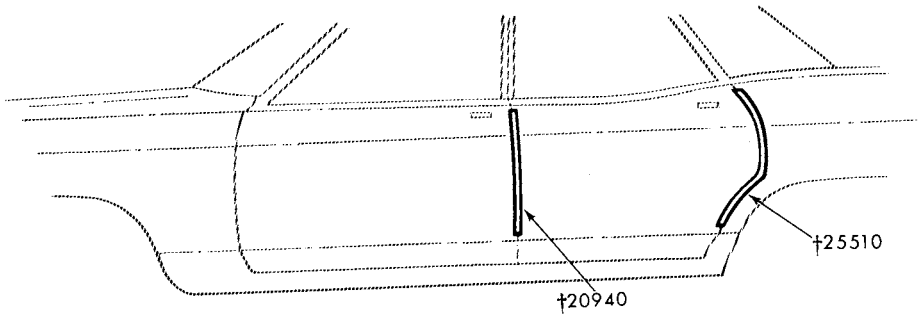

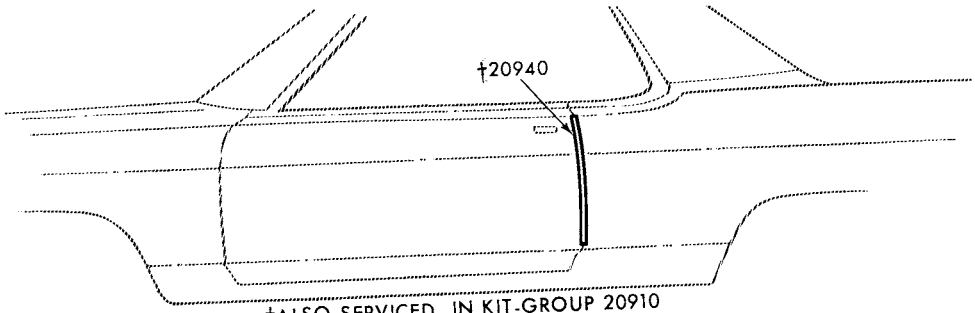

†ALSO SERVICED IN KIT-GROUP 20910

P-10061

1975 LINCOLN - DOOR EDGE GUARDS

GROUP NUMBER	PART NAME	DESCRIPTION	PART NUMBER		QTY.
20910	Moulding kit (door edge guard)	Body type 53	D5VY 5320910-A		1
		Body type 60	D5VY 6020910-A		1
20940-1	Moulding (front door edge guard)	Body type 53	(RH) D5VY 5320940-A	(LH)★D5VY 5320941-A R/B★D5VY 5320940-A (11-81)	1
		Body type 60	(RH) D5VY 6020940-A	(LH) ★D5VY 6020941-A R/B★D5VY 6020940-A (11/81)	1
25510-1	Moulding (rear door edge guard)	Body type 53	(RH) D5VY 5325510-A	(LH) D5VY 5325511-A	1

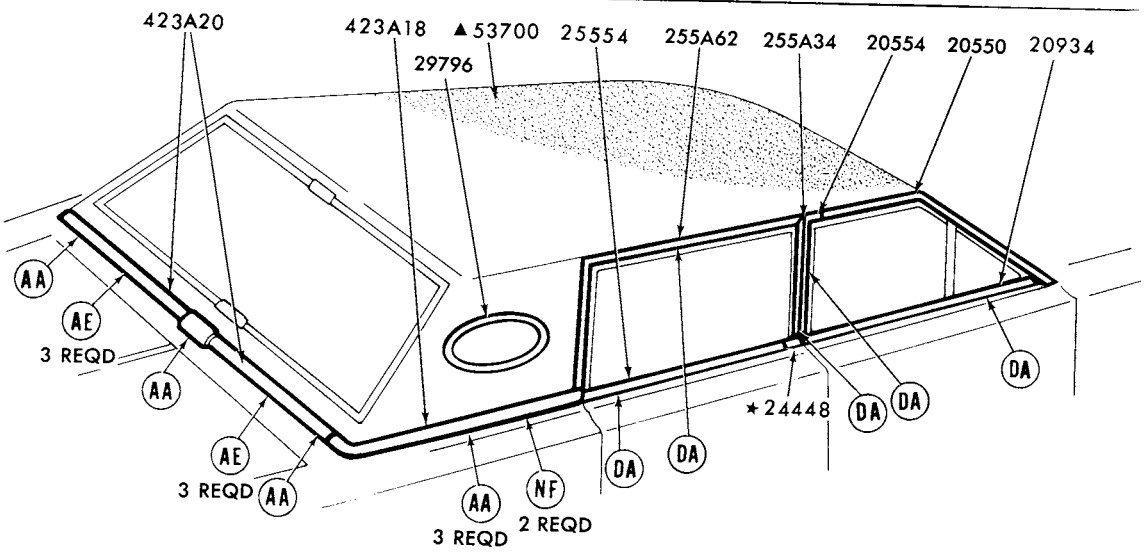

▲REFER TO GROUP IN SOFT TRIM SECTION
REFER TO EXTERIOR MOULDING SECTION "R" FOR COMPLETE RETAINER INFORMATION

P-11921

1975 LINCOLN - BODY TYPE 53 - ROOF and BACK BELT

GROUP NUMBER	PART NAME	DESCRIPTION	PART NUMBER		QTY.
20550-1	Moulding (front door window opening outside front)		(RH) D5VY 5320550-A	(LH) D5VY 5320551-A	1
20554-5	Moulding (front door window opening outside rear)		(RH) D5VY 5320554-A	(LH) D5VY 5320555-A	1
24448-9	Moulding (center body pillar belt)		(RH)★D5VY 5324448-A	(LH)★D5VY 5324449-A	1
255A34-5	Moulding (rear door window opening outside front)		(RH) D5VY 53255A34-A	(LH) D5VY 53255A35-A	1
255A62-3	Moulding (rear door window opening outside rear)		(RH) D5VY 53255A62-A	(LH) D5VY 53255A63-A	1
29796	Moulding (opera window outside)	Bright finish	★ D2LY 6529796-B	R.H. and L.H.	2
		◊ Black vinyl insert	★ D6LY 6529796-A	R.H. and L.H.	2
		◊ Blue vinyl insert	★ D5LY 6529796-D	R.H. and L.H.	2
		◊ Gold vinyl insert	★ D5LY 6529796-K	R.H. and L.H.	2
		◊ Jade vinyl insert	★ D5LY 6529796-P	R.H. and L.H.	2
		◊ Red vinyl insert	★ D5LY 6529796-B	R.H. and L.H.	2
		◊ Saddle vinyl insert	★ D5LY 6529796-J	R.H. and L.H.	2
		◊ Silver blue vinyl insert	★ D5LY 6529796-C	R.H. and L.H.	2
		◊ Silver gray vinyl insert	★ D5LY 6529796-M	R.H. and L.H.	2
		◊ Taupe vinyl insert	★ D5LY 6529796-N	R.H. and L.H.	2
		◊ White vinyl insert	★ D5LY 6529796-A	R.H. and L.H.	2
423A18-9	Moulding (back belt outside side)	Paint to match	(RH)★D5VY 53423A18-G R/B★D7VY 53423A18-A (7/81)	(LH)★D5VY 53423A19-G	1
423A20	Moulding (back belt outside)	Paint to match	★D5VY 53423A20-G R/B★D7VY 53423A20-A (4/83)		1

◊ For color verification, refer to the vinyl roof swatches in the 1975 salesman's color and upholstery selections guide.
♦ Includes attaching parts

COPYRIGHT © 1986 — FORD MOTOR COMPANY — DEARBORN, MICHIGAN

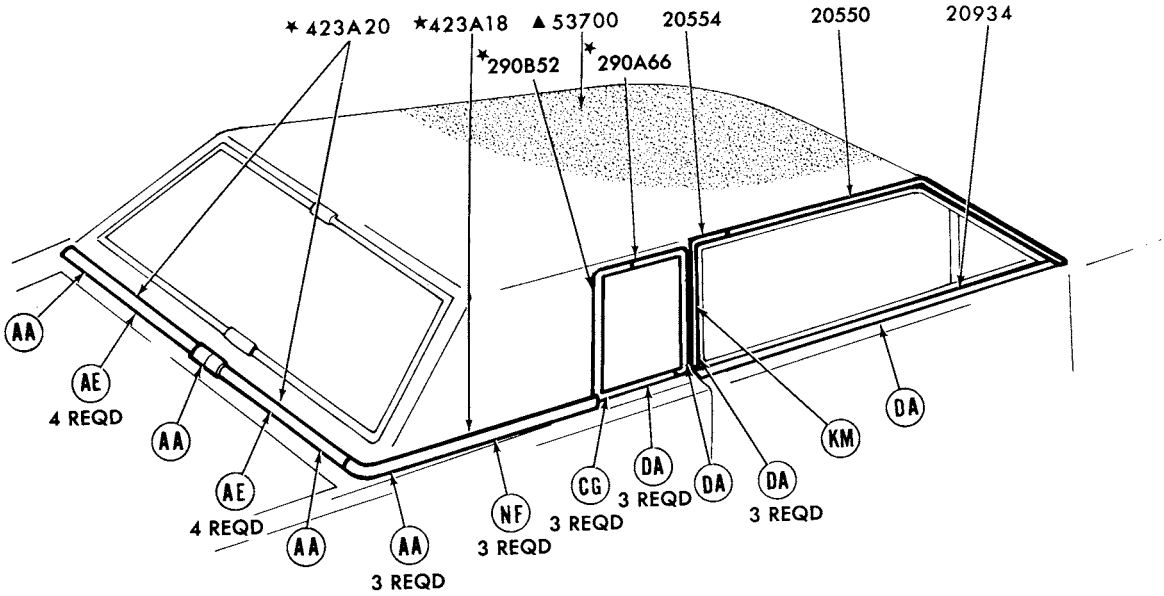

▲REFER TO GROUP IN SOFT TRIM SECTION
REFER TO EXTERIOR MOULDING SECTION "R" FOR COMPLETE RETAINER INFORMATION

P-11922

1975 LINCOLN - BODY TYPE 60 - ROOF and BACK BELT - w/FULL VINYL ROOF

GROUP NUMBER	PART NAME	DESCRIPTION	PART NUMBER		QTY.
20550-1	Moulding (front door window opening outside front)		(RH) D5VY 6020550-A	(LH) D5VY 6020551-A	1
20554-5	Moulding (front door window opening outside rear)		(RH) D5VY 6020554-A	(LH) D5VY 6020555-A	1
20934-5	Moulding and weatherstrip-(front door outside belt)		(RH)♦D5VY 6020934-A	(LH)♦D5VY 6020935-A	1
290B52-3	Moulding (quarter window outside rear)		(RH)★D5VY 60290B52-A Not replaced (5/82)	(LH)✶D5VY 60290B53-A	1
290A66-7	Moulding (quarter window outside front)		(RH)✶D5VY 60290A66-A	(LH)★D5VY 60290A67-A	1
423A18-9	Moulding (back belt outside side)	Paint to match	(RH)★D5VY 60423A18-G R/B D7VY 60423A18-3 (7/83)	(LH)★D5VY 60423A19-G R/B D7VY 60423A19-3 (4/83)	1
423A20	Moulding (back belt outside)	Paint to match	✶D5VY 53423A20-G R/B D7VY 53423A20-A (4/83)		1

♦ Includes attaching parts

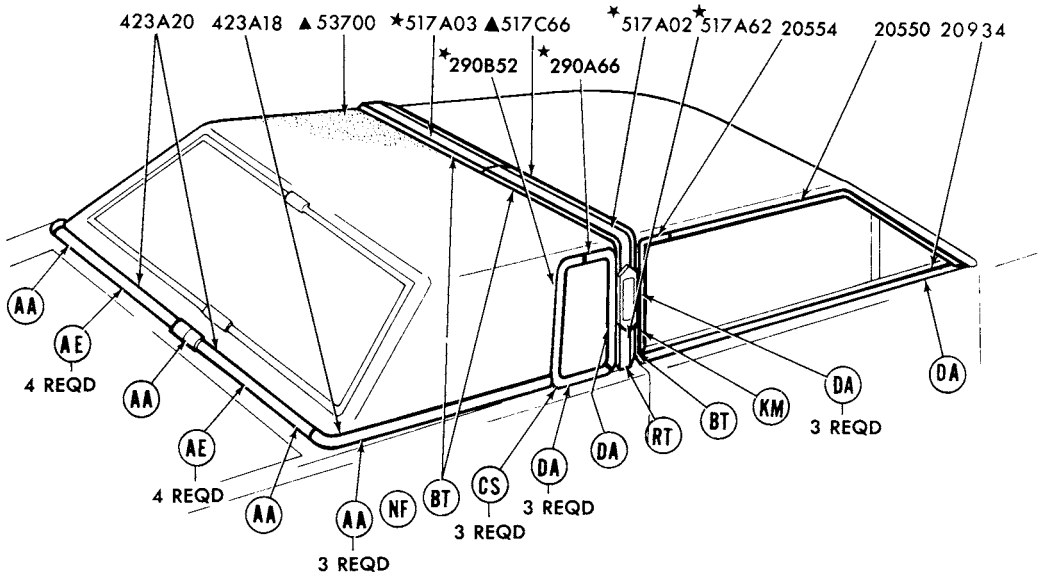

REFER TO EXTERIOR MOULDING SECTION 'R' FOR COMPLETE RETAINER INFORMATION
▲ REFER TO GROUP IN SOFT TRIM SECTION

P-12493

1975 LINCOLN - BODY TYPE 60 - ROOF and BACK BELT - w/HALF VINYL ROOF

GROUP NUMBER	PART NAME	DESCRIPTION	PART NUMBER		QTY.
20550-1	Moulding (front door window opening outside front)		(RH) D5VY 6020550-B	(LH) D5VY 6020551-B	1
20554-5	Moulding (front door window opening outside rear)		(RH) D5VY 6020554-A	(LH) D5VY 6020555-A	1
20934-5	Moulding and weatherstrip-(front door outside belt)		(RH)♦D5VY 6020934-A	(LH)♦D5VY 6020935-A	1
290B52-3	Moulding (quarter window outside rear)		(RH)★D5VY 60290B52-A Not replaced (5/82)	(LH)★D5VY 60290B53-A	1
290A66-7	Moulding (quarter window outside front)		(RH)★D5VY 60290A66-A	★(LH)★D5VY 60290A67-A Not replaced (4/79)	1
423A18-9	Moulding (back belt outside side)	Paint to match	(RH)★D5VY 60423A18-G R/B D7VY 60423A18-B (7/81)	(LH)★D5VY 60423A19-G R/B D7VY 60423A19-B (4/83)	1
423A20	Moulding (back belt outside)	Paint to match	★D5VY 53423A20-G R/B★D7VY 53423A20-A (4/83)		1
517A02	Moulding (roof outside rear side)		(RH)★D5VY 60517A02-A	★(LH)★D5VY 60517A03-A Not replaced (4/79)	1
517A62	Moulding (roof outside side rear)		★D5VY 60517A62-A Not replaced (4/83)		2

♦ Includes attaching parts

COPYRIGHT © 1986 — FORD MOTOR COMPANY — DEARBORN, MICHIGAN

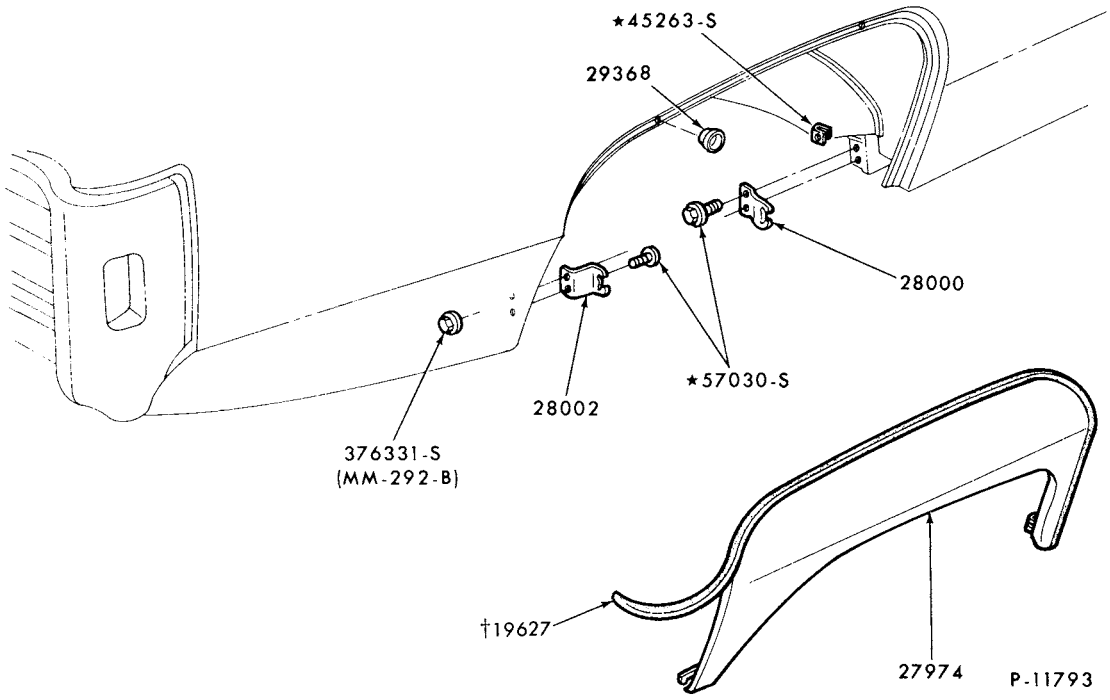

† REFER TO PAGE 1 IN PAINT SECTION

1975 LINCOLN - WHEEL OPENING COVER PARTS

GROUP NUMBER	PART NAME	DESCRIPTION	PART NUMBER		QTY.
27974-5	Panel (quarter wheel opening cover)		(RH)▲D5VY 6027974-B	(LH)▲D5VY 6027975-B	1
28000-2	Bracket (quarter wheel opening cover)	Front	D5VY 6028000-A	R.H. and L.H.	2
		Rear	D5VY 6028002-C	R.H. and L.H.	2
29368	Insert (wheel opening cover)	Nylon	D5VY 6029368-A	R.H. and L.H.	4

▲ Relocate front tab holes in quarter panel

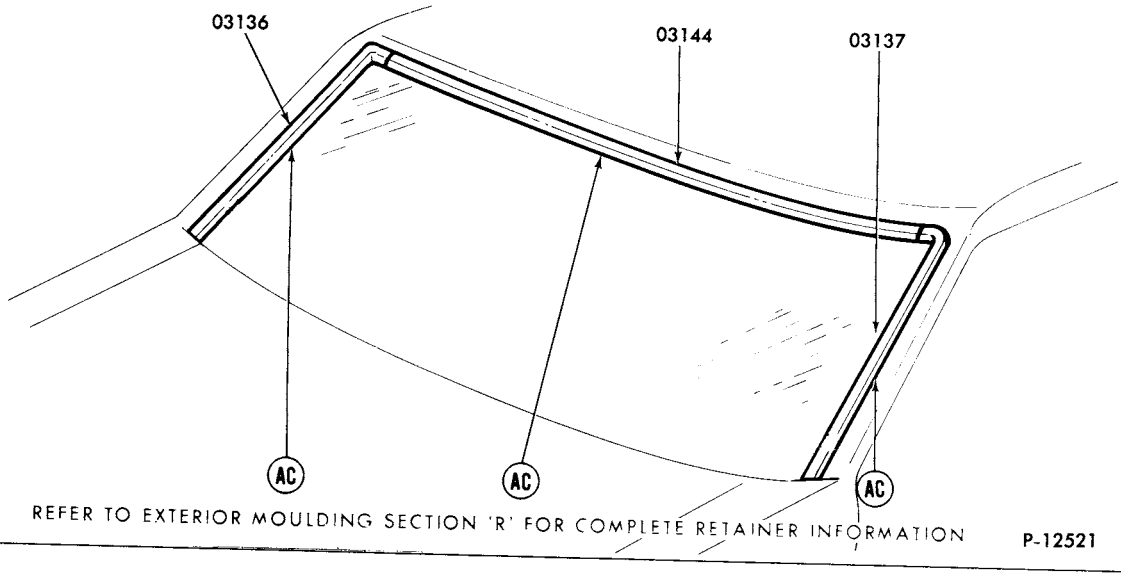

1975 COUGAR - WINDSHIELD

GROUP NUMBER	PART NAME	DESCRIPTION	PART NUMBER	QTY.
03136-7	Moulding (windshield outside side)		(RH)♦D7OZ 6503136-A (LH)♦D7OZ 6503137-A	1
03144	Moulding (windshield outside top)		♦D7OZ 6503144-A	1

♦ Includes attaching parts

COPYRIGHT © 1986 — FORD MOTOR COMPANY — DEARBORN, MICHIGAN

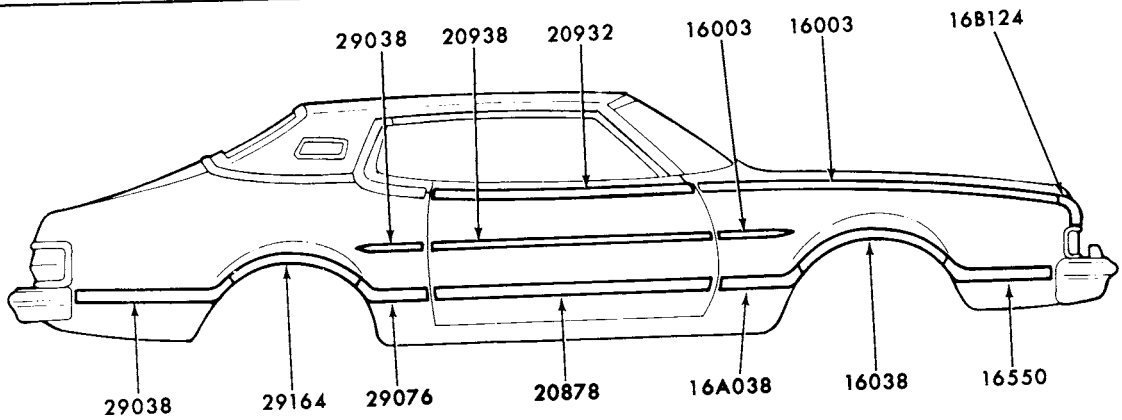

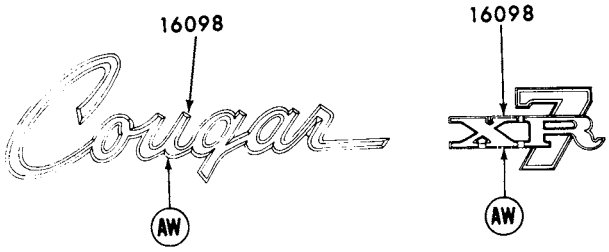

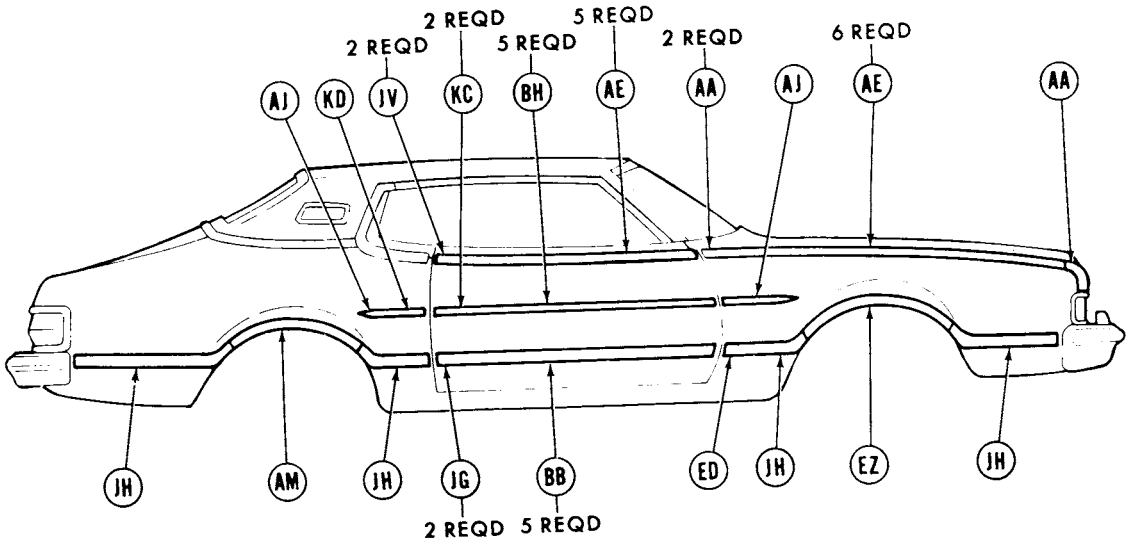

REFER TO EXTERIOR MOULDING SECTION "R" FOR COMPLETE RETAINER INFORMATION

P-11195

1975 COUGAR - SIDE

1975 COUGAR - SIDE - cont'd.

GROUP NUMBER	PART NAME	DESCRIPTION	PART NUMBER		QTY.
16003-4	Moulding (front fender side)	Adhesive backed-cut to fit	D4GZ 16003-A	R.H. and L.H.	2
		Lower	♦D4GY 16003-A	R.H. and L.H.	2
		Upper	(RH)♦D2GY 16003-B	(LH)♦D2GY 16004-B	1
16038-9	Moulding (front fender wheel opening)		(RH)♦D4GY 16038-A	(LH)♦D4GY 16039-A	1
16A038-9	Moulding (front fender side rear)	◊Black vinyl insert	(RH)♦D4WY 16A038-AA	(LH)♦D4WY 16A039-AA	1
		◊Brown vinyl insert	(RH)★D4WY 16A038-AT Not replaced (4/84)	(LH)★D4WY 16A039-AT Not replaced (4/84)	1
		◊Gold vinyl insert	(RH)♦D5WY 16A038-AF	(LH)♦D5WY 16A039-AF	1 §
		◊Green vinyl insert	(RH)♦D5WY 16A038-AG	(LH)★D5WY 16A039-AG Not replaced (2/81)	1
		◊Red vinyl insert	(RH)♦D5WY 16A038-AD	(LH)★D5WY 16A039-AD	1
		◊ Silver blue vinyl insert	(RH)★D4WY 16A038-AB Not replaced (4/84)	(LH)★D4WY 16A039-AB Not replaced (4/84)	1
		◊Silver gray vinyl insert	(RH)♦D4WY 16A038-AP	(LH)♦D4WY 16A039-AP	1
		◊White vinyl insert	(RH)♦D4WY 16A038-AW	(LH)♦D4WY 16A039-AW	1
16098	Plate (name)	"Cougar"	♦D4WY 16098-A	R.H. and L.H.	2
		"XR-7"	♦D4WY 16098-B	R.H. and L.H.	2
16B124-5	Moulding (front fender front extension)		(RH)♦D4WY 16B124-A	(LH)★D4WY 16B125-A	1
16550-1	Moulding (front fender lower front)	◊Black vinyl insert	(RH)♦D4GY 16550-AA	(LH)♦D4GY 16551-AA	1
		◊Brown vinyl insert	(RH)★D4GY 16550-AT Not replaced (4/84)	(LH)★D4GY 16551-AT Not replaced (4/84)	1
		◊Gold vinyl insert	(RH)★D5WY 16550-AF Not replaced (4/84)	(LH)★D5WY 16551-AF. Not replaced (2/81)	1 §
		◊Green vinyl insert	(RH)♦D5GY 16550-AG	(LH)♦D5GY 16551-AG	1
		◊Red vinyl insert	(RH)★D5WY 16550-AD Not replaced (4/84)	(LH)★D5WY 16551-AD Not replaced (4/84)	1
		◊ Silver blue vinyl insert	(RH)★D4WY 16550-AB Not replaced (4/84)	(LH)★D4WY 16551-AB Not replaced (4/84)	1
		◊Silver gray vinyl insert	(RH)♦D4WY 16550-AP	(LH)♦D4WY 16551-AP	1
		◊White vinyl insert	(RH)♦D4GY 16550-AW	(LH)♦D4GY 16551-AW	1

◊ For color verification, refer to the vinyl roof swatches in the 1975 salesman's color and upholstery selections guide.
♦ Includes attaching parts

COPYRIGHT © 1986 — FORD MOTOR COMPANY — DEARBORN, MICHIGAN

1975 COUGAR - SIDE - cont'd.

GROUP NUMBER	PART NAME	DESCRIPTION	PART NUMBER		QTY.
20878-9	Moulding (front door outside)	◊Black vinyl insert	(RH)♦D4GY 6520878-E	(LH)♦D4GY 6520879-E	1
		◊Brown vinyl insert	(RH)♦D4GY 6520878-D	(LH)♦D4GY 6520879-D	1
		◊Gold vinyl insert	(RH)★D5WY 6520878-B Not replaced (2/81)	(LH)♦D5WY 6520879-B	1
		◊Green vinyl insert	(RH)★D5GY 6520878-A Not replaced (2/81)	(LH)♦D5GY 6520879-A	1
		◊Red vinyl insert	(RH)★D5WY 6520878-A Not replaced (3/82)	(LH)★D5WY 6520879-A Not replaced (3/82)	1
		◊ Silver blue vinyl insert	(RH)★D4WY 6520878-A Not replaced (4/84)	(LH)♦D4WY 6520879-A	1
		◊Silver gray vinyl insert	(RH)♦D4WY 6520878-CP	(LH)♦D4WY 6520879-CP	1
		◊White vinyl insert	(RH)♦D4GY 6520878-A	(LH)♦D4GY 6520879-A	1
20932-3	Moulding (front door outside upper)		(RH)♦D4GY 6520932-A	(LH)♦D4GY 6520933-A	1
20938	Moulding (front door outside)	Bright finish	♦D4GY 6520938-A	R.H. and L.H.	2
		Black vinyl insert-adhesive backed-57" long-cut to fit	D4GZ 16003-A	R.H. and L.H.	AR
29038	Moulding (quarter outside lower front)	Bright finish	♦D4GY 16003-A	R.H. and L.H.	2
		Black vinyl insert-adhesive backed-57" long-cut to fit	D4GZ 16003-A	R.H. and L.H.	AR
29038-9	Moulding (quarter outside lower rear)	◊Black vinyl insert	(RH)♦D4GY 6529038-AA	(LH)♦D4GY 6529039-AA	1
		◊Brown vinyl insert	(RH)♦D4GY 6529038-AT	(LH)♦D4GY 6529039-AT	1
		◊Gold vinyl insert	(RH)★D5WY 6529038-AF Not replaced (3/82)	(LH)♦D5WY 6529039-AF	1
		◊Green vinyl insert	(RH)★D5GY 6529038-AG Not replaced (4/83)	(LH)♦D5GY 6529039-AG	1
		◊Red vinyl insert	(RH)★D5WY 6529038-AD Not replaced (4/83)	(LH)♦D5WY 6529039-AD	1
		◊Silver blue vinyl	(RH)★D4WY 6529038-BB Not replaced (4/84)	(LH)♦D4WY 6529039-BB	1
		◊Silver gray vinyl insert	(RH)♦D4WY 6529038-BP	(LH)♦D4WY 6529039-BP	1
		◊White vinyl insert	(RH)♦D4GY 6529038-AW	(LH)♦D4GY 6529039-AW	1
29076-7	Moulding (quarter outside lower front)	◊Black vinyl insert	(RH)♦D4GY 6529076-AA	(LH)♦D4GY 6529077-AA	1
		◊Brown vinyl insert	(RH)♦D4GY 6529076-AT	(LH)★D4GY 6529077-AT Not replaced (4/84)	1
		◊Gold vinyl insert	(RH)♦D5WY 6529076-AF	(LH)♦D5WY 6529077-AF	1
		◊Green vinyl insert	(RH)♦D5GY 6529076-AG Not replaced (4/83)	(LH)♦D5GY 6529077-AG	1
		◊Red vinyl insert	(RH)★D5WY 6529076-AD Not replaced (4/84)	(LH)★D5WY 6529077-AD Not replaced (4/83)	1
		◊Silver blue vinyl insert	(RH)♦D4WY 6529076-AB	(LH)★D4WY 6529077-AB Not replaced (4/84)	1
		◊ Silver gray vinyl insert	(RH)♦D4WY 6529076-BP	(LH)♦D4WY 6529077-BP	1
		◊White vinyl insert	(RH)♦D4GY 6529076-AW	(LH)♦D4GY 6529077-AW	1
29164-5	Moulding (quarter wheel opng.)		(RH)♦D4GY 6529164-A	(LH)♦D4GY 6529165-A	1

◊ For color verification, refer to the vinyl roof swatches in the 1975 salesman's color and upholstery selections guide.
♦ Includes attaching parts

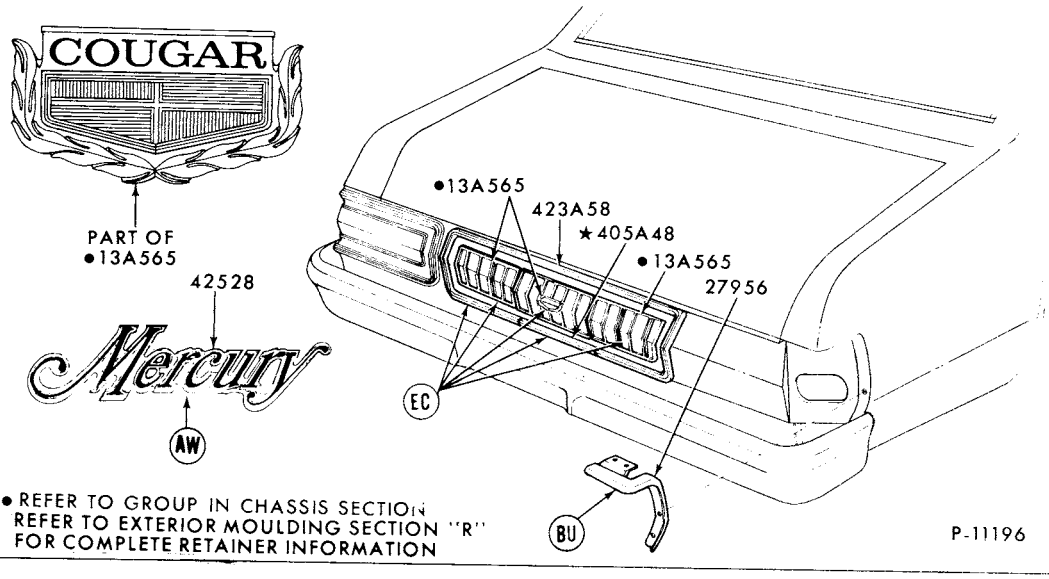

• REFER TO GROUP IN CHASSIS SECTION
REFER TO EXTERIOR MOULDING SECTION "R"
FOR COMPLETE RETAINER INFORMATION

1975 COUGAR - BACK END

GROUP NUMBER	PART NAME	DESCRIPTION	PART NUMBER	QTY.
27956-7	Filler (quarter panel rear lamp opening)		Not used in 1975	
405A48	Moulding (fuel filler door)		★D4WY 65405A48-A Not replaced (4/83)	1
423A58	Moulding (lower back panel)		♦D4WY 65423A58-A	1
42528	Plate (name)	"Mercury"	♦D4GY 6542528-A	1

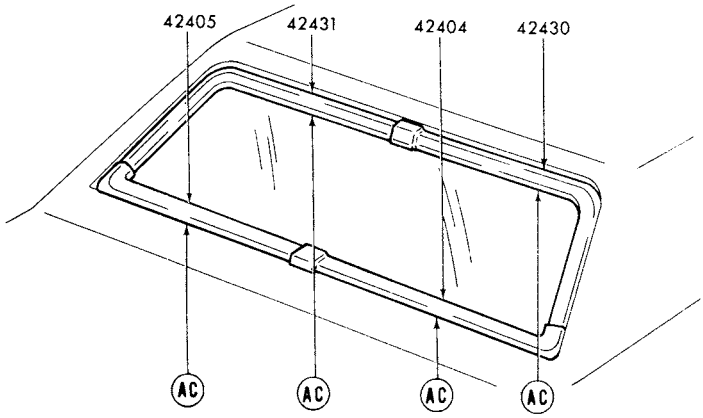

REFER TO EXTERIOR MOULDING SECTION "R" FOR COMPLETE RETAINER INFORMATION

P-12457

1975 COUGAR - BACK WINDOW

GROUP NUMBER	PART NAME	DESCRIPTION	PART NUMBER	QTY.
42404-5	Moulding (back window outside lower)		(RH)♦D4OZ 6542404-A (LH)♦D4OZ 6542405-A	1
42430-1	Moulding (back window outside upper)		(RH)♦D4OZ 6542430-A (LH)♦D4OZ 6542431-A	1

COPYRIGHT © 1986 — FORD MOTOR COMPANY — DEARBORN, MICHIGAN

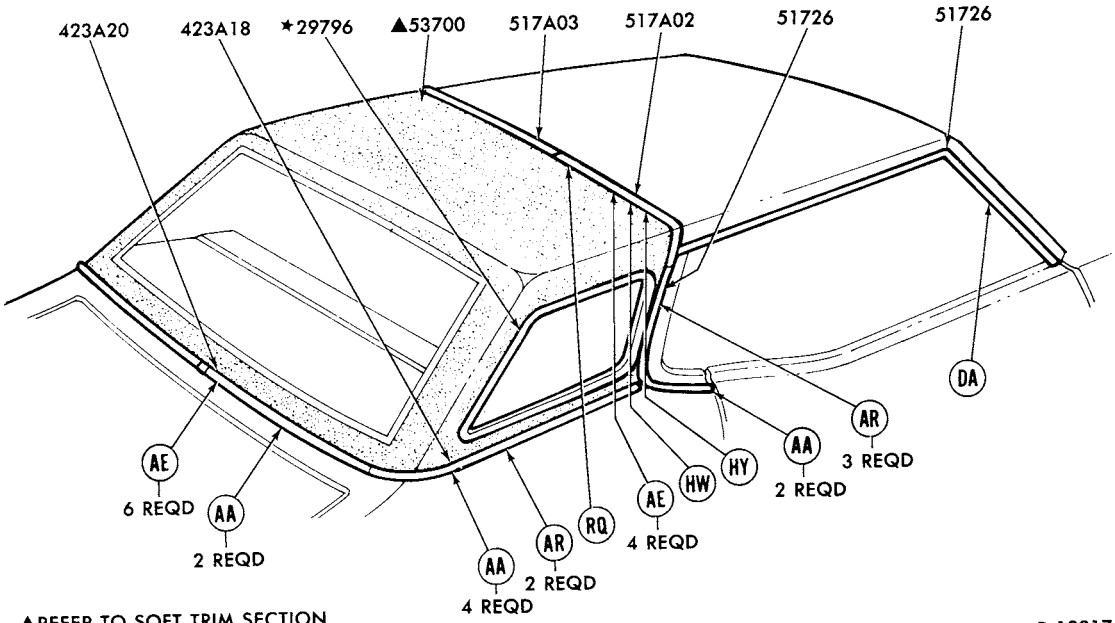

▲REFER TO SOFT TRIM SECTION
REFER TO EXTERIOR MOULDING SECTION "R" FOR COMPLETE RETAINER INFORMATION

P-12817

1975 COUGAR - ROOF and BACK BELT

GROUP NUMBER	PART NAME	DESCRIPTION	PART NUMBER		QTY.
29796-7	Moulding (opera window outside)		(RH)★D4WY 6529796-B Not replaced (3/82)	(LH)★D4WY 6529797-B Not replaced (3/82)	1
423A18-9	Moulding (back belt outside side)		(RH)♦D4GY 65423A18-A	(LH)♦D4GY 65423A19-A	1
423A20	Moulding (back belt outside)		♦D4OZ 65423A20-H		1
517A02-3	Moulding (roof outside side)		(RH)♦D4WY 65517A02-A	(LH)♦D4WY 65517A03-A	1
51726-9	Moulding (roof drip side finish)	Front	(RH)♦D4WY 6551726-A	(LH) D4WY 6551727-A	1
		Rear	(RH)♦D3GY 6551728-A	(LH)♦D3GY 6551729-A	1

♦ Includes attaching parts

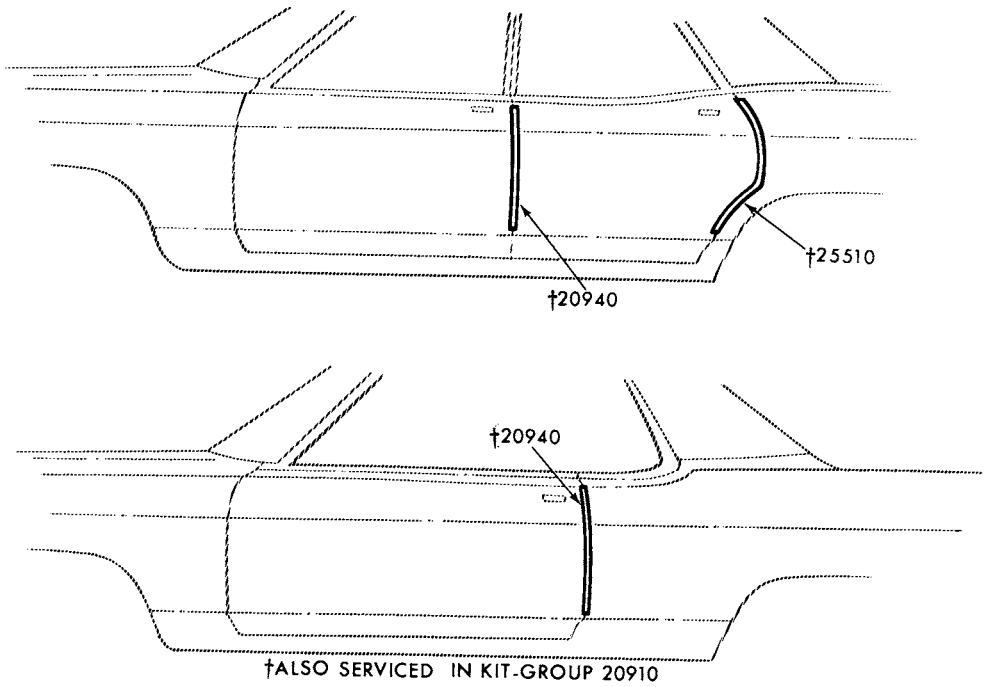

†ALSO SERVICED IN KIT-GROUP 20910

P-10061

1975 COUGAR - DOOR EDGE GUARDS

GROUP NUMBER	PART NAME	DESCRIPTION	PART NUMBER	QTY.
20910	Moulding kit (door edge guard)		D4GY 6520910-A	1
20940-1	Moulding (front door edge guard)		(RH) D4GY 6520940-A (LH) D4GY 6520941-A	1

COPYRIGHT © 1986 — FORD MOTOR COMPANY — DEARBORN, MICHIGAN

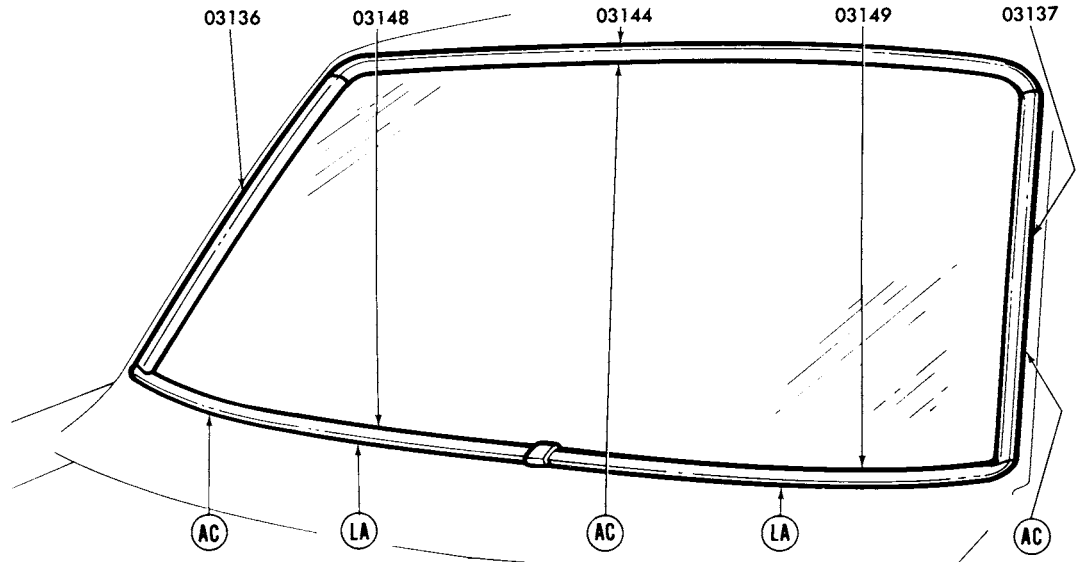

REFER TO EXTERIOR MOULDING SECTION 'R' FOR COMPLETE RETAINER INFORMATION

P-12526

1975 MONARCH - WINDSHIELD

GROUP NUMBER	PART NAME	DESCRIPTION	PART NUMBER	QTY
03136-7	Moulding (windshield outside side)		(RH)♦D5DZ 6603136-A (LH)♦D5DZ 6603137-A	1
03144	Moulding (windshield outside top)		♦D5DZ 6603144-A	1
03148-9	Moulding (windshield outside belt)		(RH)♦D5DZ 6603148-A (LH)♦D5DZ 6603149-A	1

♦ Includes attaching parts

COPYRIGHT © 1986 — FORD MOTOR COMPANY — DEARBORN, MICHIGAN

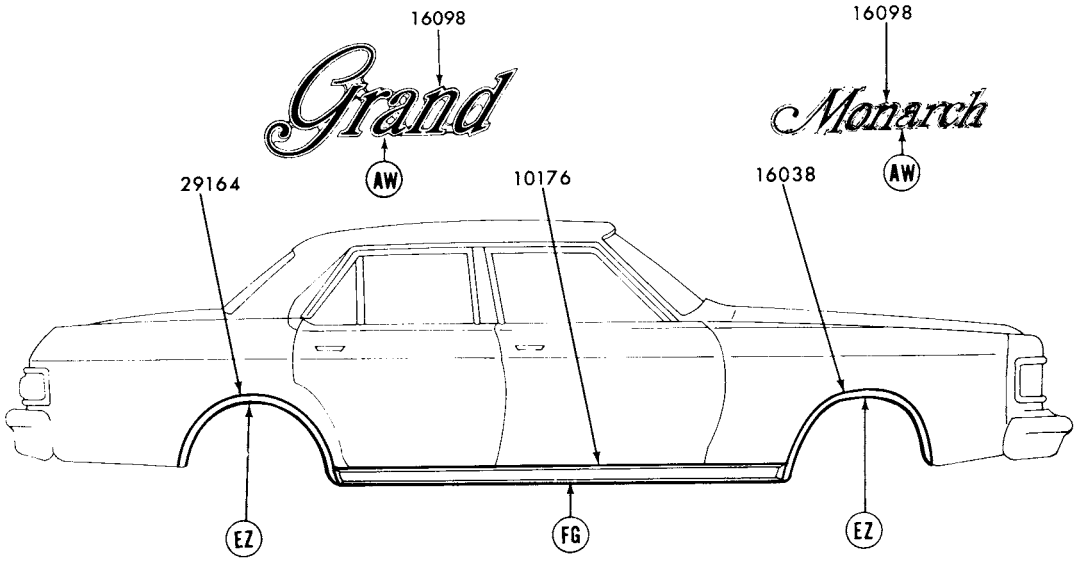

REFER TO EXTERIOR MOULDING SECTION "R" FOR COMPLETE RETAINER INFORMATION P-11946

1975 MONARCH - BODY TYPE 54H - SIDE

GROUP NUMBER	PART NAME	DESCRIPTION	PART NUMBER		QTY.
10176	Moulding (body rocker panel)	78 3/4" long	♦D54Y 6610176-A	R.H. and L.H.	2
16038-9	Moulding (front fender wheel opening)		(RH)♦D5DZ 16038-A	(LH)♦D5DZ 16039-A	1
16098	Plate (name)	"Grand"	♦D5MY 16098-C	R.H.and L.H.	2
		"Monarch"	♦D54Y 16098-B	R.H. and L.H.	2
29164-5	Moulding (quarter wheel opening)		(RH)♦D5DZ 6629164-A	(LH)♦D5DZ 6629165-A	1

♦ Includes attaching parts

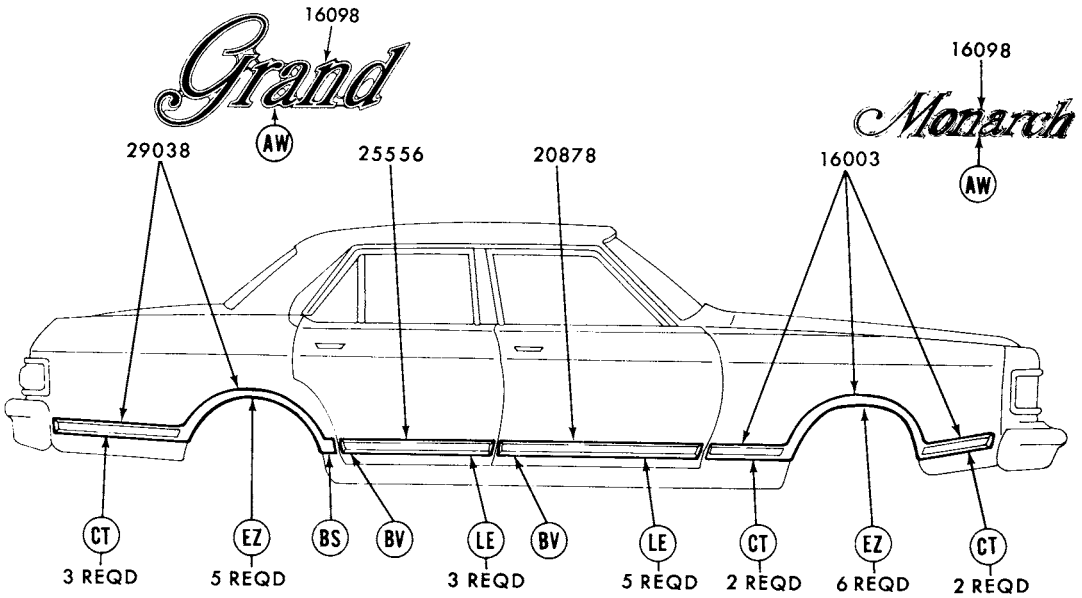

REFER TO EXTERIOR MOULDING SECTION "R" FOR COMPLETE RETAINER INFORMATION P-11945

1975 MONARCH - BODY TYPE 54K - SIDE - w/LUXURY DECOR

GROUP NUMBER	PART NAME	DESCRIPTION	PART NUMBER		QTY.
16003-4	Moulding (front fender side)	◊Black vinyl insert	(RH)♦D5DZ 16003-CA	(LH)♦ D5DZ 16004-CA	1
		◊Blue vinyl insert	(RH)♦D5DZ 16003-CB	(LH)♦D5DZ 16004-CB	1
		◊Brown vinyl insert	(RH)★D5DZ 16003-CT	(LH)♦D5DZ 16004-CT	1
		◊Green vinyl insert	(RH)♦D5DZ 16003-CG	(LH)♦D5DZ 16004-CG Not replaced (6/82)	1
		◊Red vinyl insert	(RH) ♦D5DZ 16003-CD	(LH)♦D5DZ 16004-CD	1
		◊Silver vinyl insert	(RH)♦ D5DZ 16003-CP	(LH)♦ D5DZ 16004-CP	1
		◊Tan vinyl insert	(RH)♦D5DZ 16003-CU	(LH)♦D5DZ 16004-CU	1
		◊White vinyl insert	(RH)♦D5DZ 16003-CW	(LH)♦D5DZ 16004-CW	1
16098	Plate (name)	"Grand"	♦D5MY 16098-C	R.H. and L.H.	2
		"Monarch"	♦D54Y 16098-B	R.H. and L.H.	2
20878-9	Moulding (front door outside)	◊Black vinyl insert	(RH)♦D5DZ 5420878-CA	(LH)♦D5DZ 5420879-CA	1
		◊Blue vinyl insert	(RH)♦D5DZ 5420878-CB	(LH)♦D5DZ 5420879-CB	1
		◊ Brown vinyl insert	(RH)♦D5DZ 5420878-CT	(LH)★D5DZ 5420879-CT Not replaced (6/82)	1
		◊Green vinyl insert	(RH)★D5DZ 5420878-CG Not replaced (6/82)	(LH)★D5DZ 5420879-CG Not replaced (6/82)	1
		◊Red vinyl insert	(RH)♦D5DZ 5420878-CD	(LH)♦D5DZ 5420879-CD	1
		◊Silver vinyl insert	(RH) D5DZ 5420878-DP	(LH) D5DZ 5420879-DP	1
		◊Tan vinyl insert	(RH)♦D5DZ 5420878-DU	(LH)♦D5DZ 5420879-DU	1
		◊White vinyl insert	(RH)♦D5DZ 5420878-CW	(LH)♦D5DZ 5420879-CW	1
25556-7	Moulding (rear door outside)	◊ Black vinyl insert	(RH)♦D5DZ 5425556-CA	(LH)♦D5DZ 5425557-CA	1
		◊ Blue vinyl insert	(RH)♦D5DZ 5425556-CB	(LH)♦D5DZ 5425557-CB	1
		◊ Brown vinyl insert	(RH)★D5DZ 5425556-CT Not replaced (4/84)	(LH)★D5DZ 5425557-CT Not replaced (6/82)	1
		◊Green vinyl insert	(RH)★D5DZ 5425556-CG Not replaced (6/82)	(LH)★D5DZ 5425557-CG Not replaced (6/82)	1
		◊ Red vinyl insert	(RH)♦D5DZ 5425556-CD	(LH)♦D5DZ 5425557-CD	1
		◊Silver vinyl insert	(RH) D5DZ 5425556-CP	(LH)♦D5DZ 5425557-CP	1
		◊ Tan vinyl insert	(RH)♦D5DZ 5425556-CU	(LH)♦D5DZ 5425557-CU	1
		◊ White vinyl insert	(RH)♦D5DZ 5425556-CW	(LH)♦D5DZ 5425557-CW	1

◊ For color verification, refer to the vinyl roof swatches in the 1975 salesman's color and upholstery selections guide.
♦ Includes attaching parts

COPYRIGHT © 1986 — FORD MOTOR COMPANY — DEARBORN, MICHIGAN

1975 MONARCH - BODY TYPE 54K - SIDE - w/LUXURY DECOR - cont'd.

GROUP NUMBER	PART NAME	DESCRIPTION	PART NUMBER		QTY.
29038-9	Moulding (quarter outside)	◊Black vinyl insert	(RH)♦D5DZ 5429038-CA	(LH)♦D5DZ 5429039-CA	1
		◊Blue vinyl insert	(RH)♦D5DZ 5429038-CB	(LH)♦D5DZ 5429039-CB	1
		◊Brown vinyl insert	(RH)♦D5DZ 5429038-CT	(LH)♦D5DZ 5429039-CT	1
		◊Green vinyl insert	(RH)♦D5DZ 5429038-CG	(LH)♦D5DZ 5429039-CG	1
		◊Red vinyl insert	(RH)♦D5DZ 5429038-CD	(LH)♦D5DZ 5429039-CD	1
		◊Silver vinyl insert	(RH)♦D5DZ 5429038-CP	(LH)♦D5DZ 5429039-CP	1
		◊Tan vinyl insert	(RH)♦D5DZ 5429038-CU	(LH)♦D5DZ 5429039-CU	1
		◊White vinyl insert	(RH)♦D5DZ 5429038-CW	(LH)♦D5DZ 5429039-CW	1

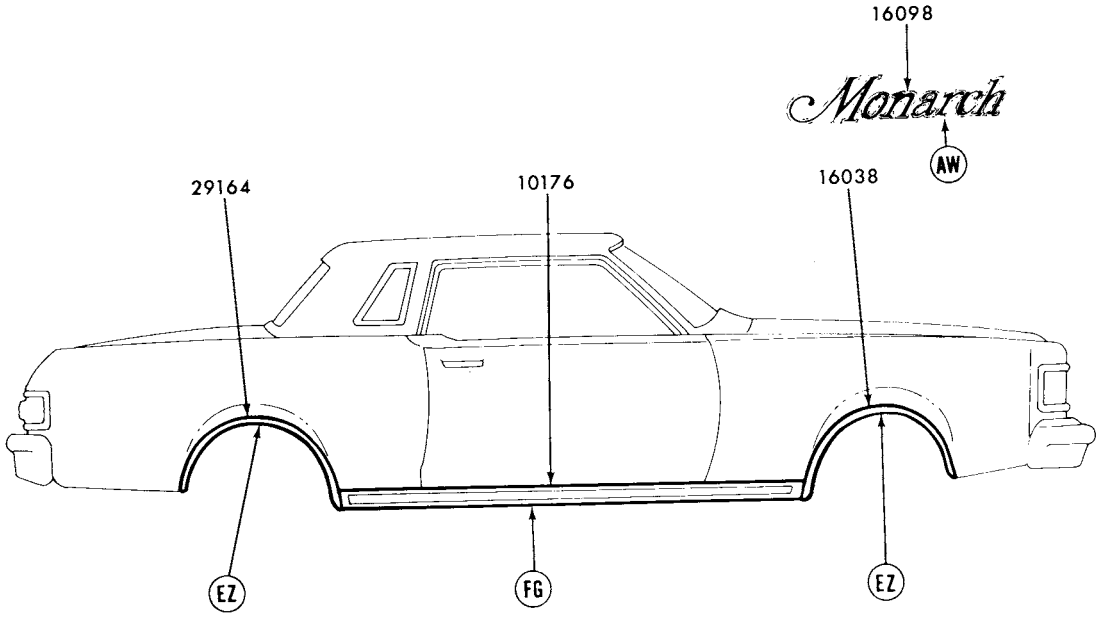

REFER TO EXTERIOR MOULDING SECTION "R" FOR COMPLETE RETAINER INFORMATION P-11947

1975 MONARCH - BODY TYPE 66H - SIDE

GROUP NUMBER	PART NAME	DESCRIPTION	PART NUMBER		QTY
10176	Moulding (body rocker panel)	78 3/4" long	♦D54Y 6610176-A	R.H. and L.H.	2
16038-9	Moulding (front fender wheel opening)		(RH)♦D5DZ 16038-A	(LH)♦D5DZ 16039-A	1
16098	Plate (name)	"Monarch"	D54Y 16098-B	R.H. and L.H.	2
		"Grand"	D5MY 16098-C	R.H. and L.H.	2
29164-5	Moulding (quarter wheel opening)		(RH)♦D5DZ 6629164-A	(LH)♦D5DZ 6629165-A	1

♦ Includes attaching parts

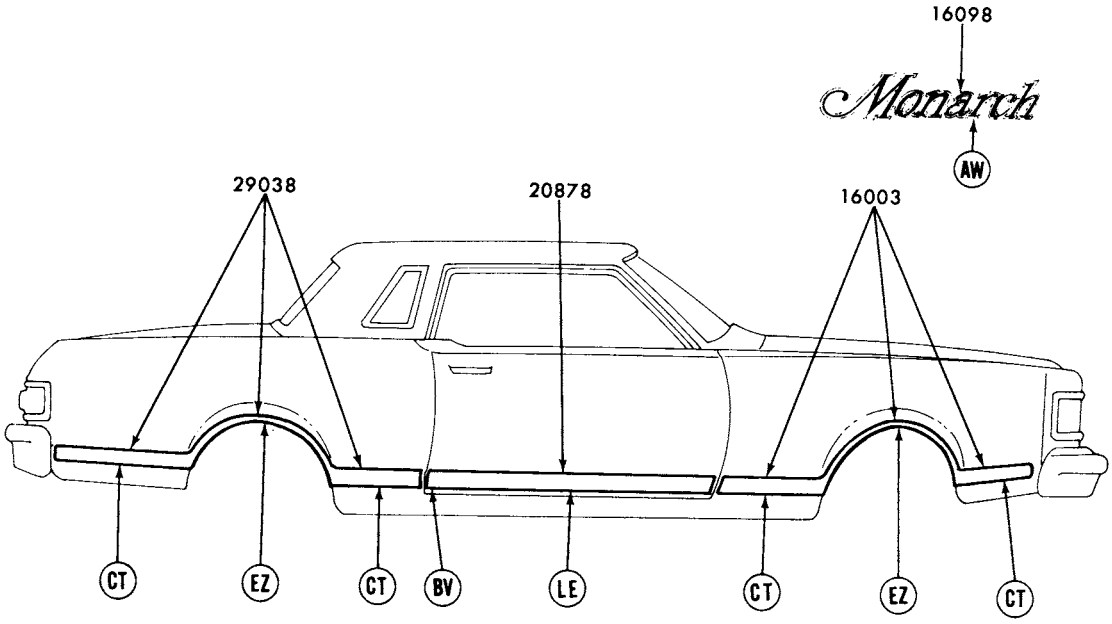

REFER TO EXTERIOR MOULDING SECTION "R" FOR COMPLETE RETAINER INFORMATION P-11944

1975 MONARCH - BODY TYPE 66K - SIDE - W/LUXURY DECOR

GROUP NUMBER	PART NAME	DESCRIPTION	PART NUMBER		QTY.
16003-4	Moulding (front fender side)	◊Black vinyl insert	(RH)♦D5DZ 16003-CA	(LH)♦D5DZ 16004-CA	1
		◊Blue vinyl insert	(RH)♦D5DZ 16003-CB	(LH)♦D5DZ 16004-CB	1
		◊Brown vinyl insert	(RH)*D5DZ 16003-CT	(LH)♦D5DZ 16004-CT	1
		◊Green vinyl insert	(RH)*D5DZ 16003-CG	(LH)♦D5DZ 16004-CG	1
		◊Red vinyl insert	(RH)♦D5DZ 16003-CD	(LH)♦D5DZ 16004-CD	1
		◊Silver vinyl insert	(RH)♦D5DZ 16003-CP	(LH)♦D5DZ 16004-CP	1
		◊Tan vinyl insert	(RH)♦D5DZ 16003-CU	(LH)♦D5DZ 16004-CU	1
		◊White vinyl insert	(RH)♦D5DZ 16003-CW	(LH)♦D5DZ 16004-CW	1
16098	Plate (name)	"Monarch"	♦D54Y 16098-B	R.H. and L.H.	2
20878-9	Moulding (front door outside)	◊Black vinyl insert	(RH)♦D5DZ 6620878-AA	(LH)♦D5DZ 6620879-AA	1
		◊Blue vinyl insert	(RH)♦D5DZ 6620878-AB	(LH)♦D5DZ 6620879-AB	1
		◊Brown vinyl insert	(RH)*D5DZ 6620878-AT Not replaced (6/83)	(LH)*D5DZ 6620879-AT Not replaced (6/83)	1
		◊Red vinyl insert	(RH)♦D5DZ 6620878-AD	(LH)♦D5DZ 6620879-AD	1
		◊Silver vinyl insert	(RH)♦D5DZ 6620878-AP	(LH)♦D5DZ 6620879-AP	1
		◊Tan vinyl insert	(RH)♦D5DZ 6620878-AU	(LH)♦D5DZ 6620879-AU	1
		◊White vinyl insert	(RH)♦D5DZ 6620878-AW	(LH)♦D5DZ 6620879-AW	1
29038-9	Moulding (quarter outside)	◊Black vinyl insert	(RH)♦D5DZ 6629038-CA	(LH)♦D5DZ 6629039-CA	1
		◊Blue vinyl insert	(RH)♦D5DZ 6629038-CB	(LH)♦D5DZ 6629039-CB	1
		◊Brown vinyl insert	(RH)♦D5DZ 6629038-CT	(LH)♦D5DZ 6629039-CT	1
		◊Green vinyl insert	(RH)♦D5DZ 6629038-CG	(LH)♦D5DZ 6629039-CG	1
		◊Red vinyl insert	(RH)♦D5DZ 6629038-CD	(LH)♦D5DZ 6629039-CD	1
		◊Silver vinyl insert	(RH)♦D5DZ 6629038-CP	(LH)♦D5DZ 6629039-CP	1
		◊Tan vinyl insert	(RH)♦D5DZ 6629038-CU	(LH)♦D5DZ 6629039-CU	1
		◊White vinyl insert	(RH)♦D5DZ 6629038-CW	(LH)♦D5DZ 6629039-CW	1

◊ For color verification, refer to the vinyl roof swatches in the 1975 salesman's color and upholstery selections guide.
♦ Includes attaching parts

COPYRIGHT © 1986 — FORD MOTOR COMPANY — DEARBORN, MICHIGAN

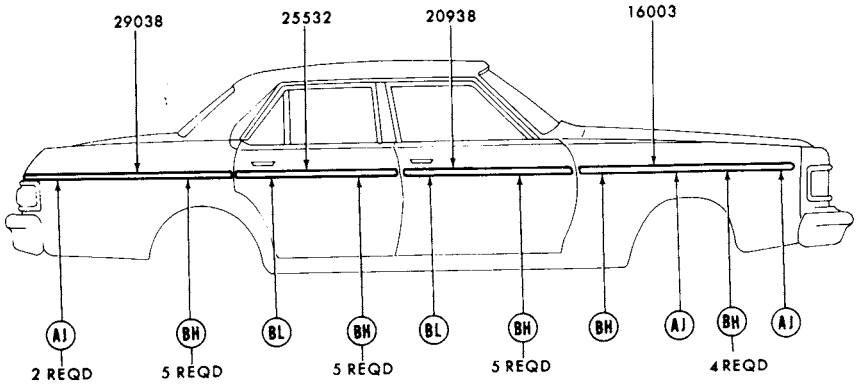

REFER TO EXTERIOR MOULDING SECTION "R" FOR COMPLETE RETAINER INFORMATION P-11948

1975 MONARCH - BODY TYPE 54 - SIDE PROTECTION

GROUP NUMBER	PART NAME	DESCRIPTION	PART NUMBER		QTY.
16003	Moulding (front fender side)	Bright finish	(RH)♦D5DZ 16003-A	(LH)♦D5DZ 16004-A	1
20938-9	Moulding (front door outside)	Bright finish	(RH)♦D5DZ 5420938-A	(LH)♦D5DZ 5420939-A	1
25532-3	Moulding (rear door outside)	Bright finish	(RH)♦D5DZ 5425532-A	(LH)♦D5DZ 5425533-A	1
29038-9	Moulding (quarter outside)	Bright finish	(RH)♦D5DZ 5429038-A	(LH)♦D5DZ 5429039-A	1

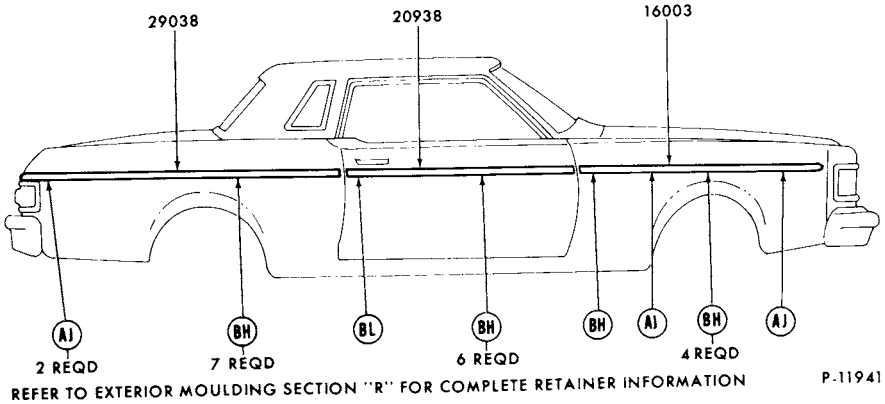

REFER TO EXTERIOR MOULDING SECTION "R" FOR COMPLETE RETAINER INFORMATION P-11941

1975 MONARCH - BODY TYPE 66 - SIDE PROTECTION

GROUP NUMBER	PART NAME	DESCRIPTION	PART NUMBER		QTY.
16003	Moulding (front fender side)	Bright finish	(RH)♦D5DZ 16003-A	(LH)♦D5DZ 16004-A	1
20938-9	Moulding (front door outside)	Bright finish	(RH)♦D5DZ 6620938-A	(LH)♦D5DZ 6620939-A	1
29038-9	Moulding (quarter outside)	Bright finish	(RH)♦D5DZ 6629038-A	(LH)♦D5DZ 6629039-A	1

♦ Includes attaching parts

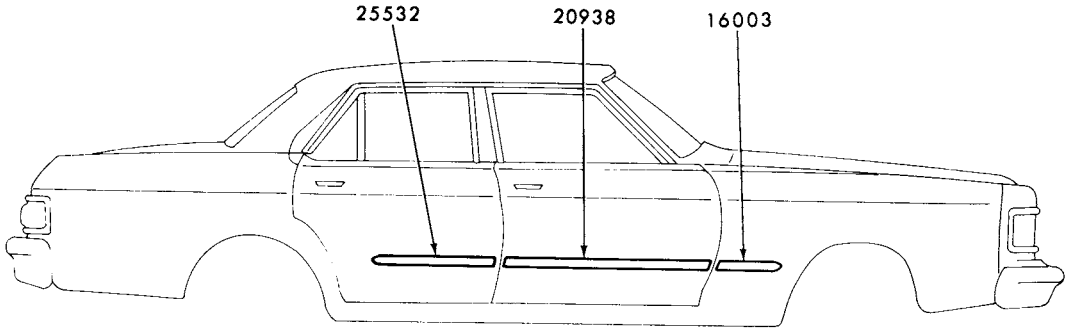

P-11943

1975 MONARCH - BODY TYPE 54 - SIDE PROTECTION

GROUP NUMBER	PART NAME	DESCRIPTION	PART NUMBER		QTY.
16003-4	Moulding (front fender side)	Black vinyl insert-adhesive backed-cut to fit	D5DZ 5425532-D	R.H. and L.H.	2
20938-9	Moulding (front door outside)	Black vinyl insert-adhesive backed-cut to fit	D1OZ 6529038-B	R.H. and L.H.	2
25532-3	Moulding (rear door outside)	Black vinyl insert-adhesive backed	D5DZ 5425532-D	R.H. and L.H.	2

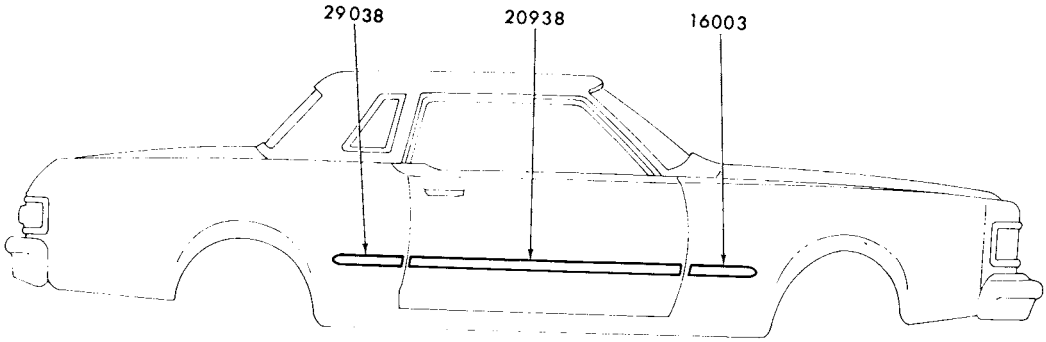

P-11942

1975 MONARCH - BODY TYPE 66 - SIDE PROTECTION

GROUP NUMBER	PART NAME	DESCRIPTION	PART NUMBER		QTY.
16003-4	Moulding (front fender side)	Black vinyl insert-adhesive backed-cut to fit	D5DZ 5425532-D	R.H. and L.H.	2
20938	Moulding (front door outside)	Black vinyl insert-adhesive backed	D1OZ 6529038-B	R.H. and L.H.	2
29038	Moulding (quarter outside)	Black vinyl insert-adhesive backed-cut to fit	D5DZ 5425532-D	R.H. and L.H.	2

COPYRIGHT © 1986 — FORD MOTOR COMPANY — DEARBORN, MICHIGAN

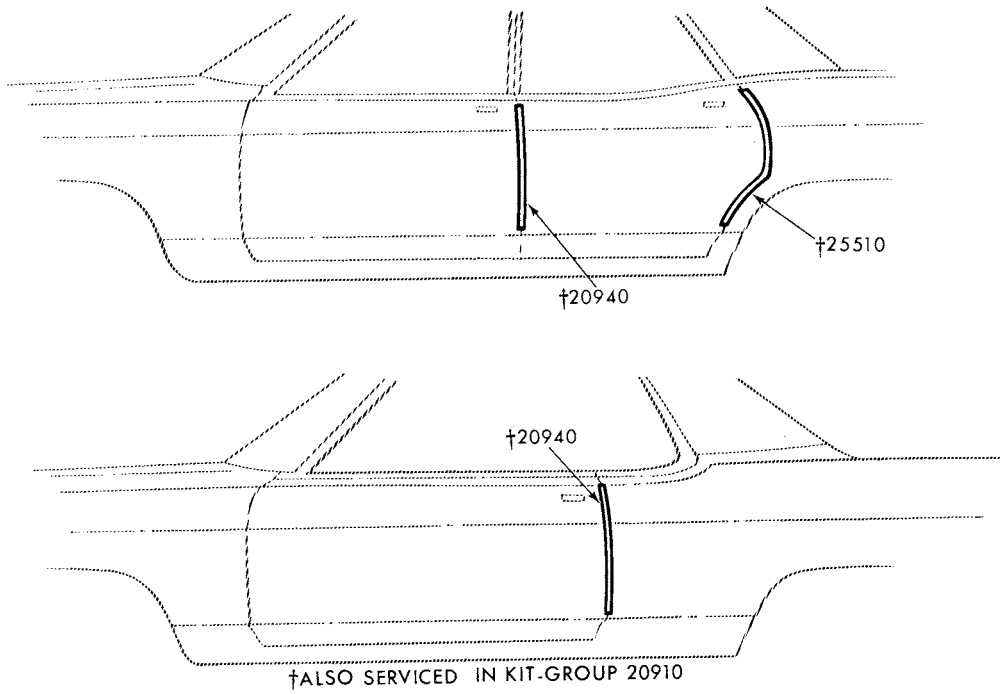

1975 MONARCH - DOOR EDGE GUARDS

GROUP NUMBER	PART NAME	DESCRIPTION	PART NUMBER		QTY.
20910	Moulding kit (door edge guard)	Body type 54	★D5DZ 5420910-A	Not replaced (6/83)	1
		Body type 66	★D5DZ 6620910-A	Not replaced (6/83)	1
20940-1	Moulding (front door edge guard)	Body type 54	(RH) D5DZ 5420940-A	(LH) D5DZ 5420941-A	1
		Body type 66	(RH) D5DZ 6620940-A	(LH) D5DZ 6620941-A	1
25510-1	Moulding (rear door edge guard)	Body type 54	(RH) D5DZ 5425510-A	(LH) D5DZ 5425510-A	1

♦ Includes attaching parts

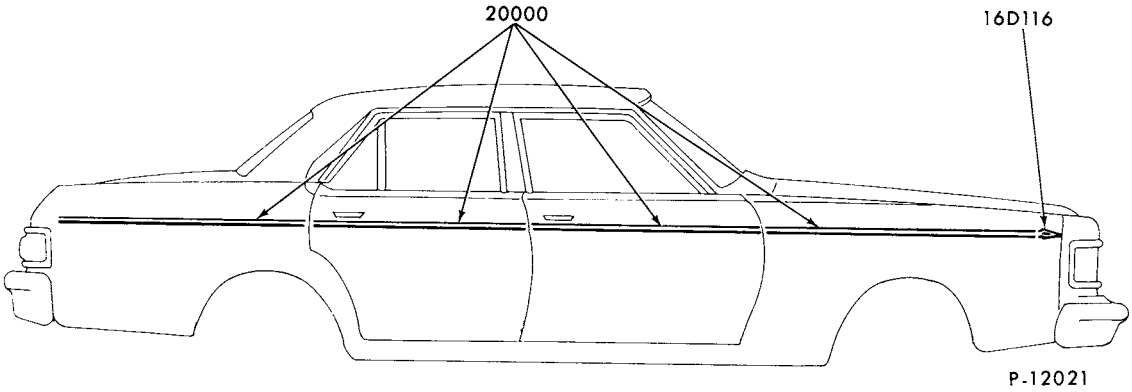

1975 MONARCH - STRIPES

GROUP NUMBER	PART NAME	DESCRIPTION	PART NUMBER		QTY.
16D116-7	Transfer (front fender)	Black arrowhead	(RH) D5DZ 16D116-A	(LH) D5DZ 16D117-A	1
		Blue arrowhead	(RH)★D5DZ 16D116-B	(LH)★D5DZ 16D117-B	1
		Brown arrowhead	(RH) D5DZ 16D116-C	(LH)★D5DZ 16D117-C Not replaced (6/82)	1
		Gold arrowhead	(RH)★D5DZ 16D116-D	(LH) D5DZ 16D117-D	1
		Green arrowhead	(RH)★D5DZ 16D116-E Not replaced (7/81)	(LH)★D5DZ 16D117-E Not replaced (7/81)	1
		Red arrowhead	(RH) D5DZ 16D116-F	(LH) D5DZ 16D117-F	1
		Silver arrowhead	(RH★ D5DZ 16D116-G	(LH)★D5DZ 16D117-G	1
		Tan arrowhead	(RH)★ D5DZ 16D116-H	(LH)★ D5DZ 16D117-H	1
		White arrowhead	(RH)★D5DZ 16D116-J	(LH)★D5DZ 16D117-J	1
20000	Stripe kit (body side)	Black -dual stripe 25 foot roll-complete kit	D5DZ 6620000-F		1
		Blue-dual stripe-25 foot roll-complete kit	D5DZ 6620000-G		1
		Brown-dual stripe 25 foot roll-complete kit	★D5DZ 6620000-C	Not replaced (6/82)	1
		Gold-dual stripe 25 foot roll-complete kit	D5DZ 6620000-H		1
		Green-dual stripe-25 foot roll-complete kit	★D5DZ 6620000-A	Not replaced (6/82)	1
		Red-dual stripe-25 foot roll-complete kit	D5DZ 6620000-J		1
		Silver-dual stripe-25 foot roll-complete kit	D5DZ 6620000-D		1
		Tan-dual stripe-25 foot roll-complete kit	D5DZ 6620000-E		1
		White-dual stripe-25 foot roll-complete kit	D5DZ 6620000-B		1

COPYRIGHT © 1986 — FORD MOTOR COMPANY — DEARBORN, MICHIGAN

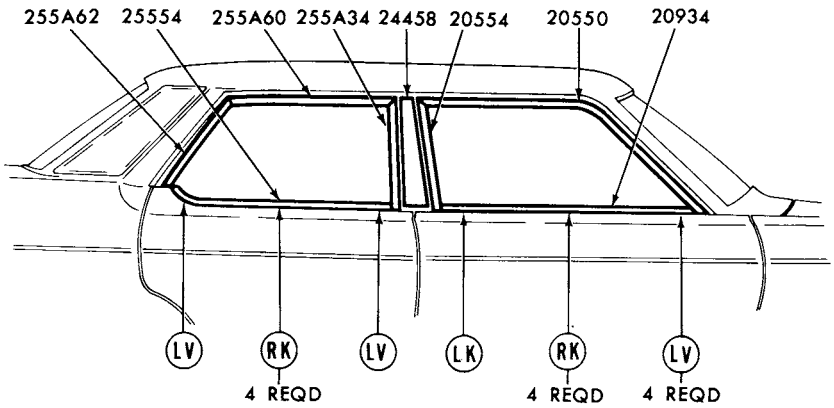

P-12494

REFER TO EXTERIOR MOULDING SECTION 'R' FOR COMPLETE RETAINER INFORMATION

1975 MONARCH - BODY TYPE 54 - DOOR WINDOW FRAME

GROUP NUMBER	PART NAME	DESCRIPTION	PART NUMBER	QTY.
20550-1	Moulding (front door window frame front)		(RH) D5DZ 5420550-A (LH) D5DZ 5420551-A	1
20554-5	Moulding (front door window frame rear)		(RH) D5DZ 5420554-A (LH) D5DZ 5420555-A	1
20934-5	Moulding (front door outside belt)		(RH)♦D5DZ 5420934-A (LH)♦D5DZ 5420935-A	1
24458-9	Moulding (center body pillar outside upper)		(RH)♦D5DZ 5424458-A (LH)♦D5DZ 5424459-A	1
255A34-5	Moulding (rear door window frame front)		(RH) D5DZ 54255A34-A (LH) D5DZ 54255A35-A	1
25554-5	Moulding (rear door outside belt)		(RH)♦D5DZ 5425554-A (LH)♦D5DZ 5425555-A	1
255A60-1	Moulding (rear door window frame upper)		(RH) D5DZ 54255A60-A (LH) D5DZ 54255A61-A	1
255A62-3	Moulding (rear door window frame rear)		(RH) D5DZ 54255A62-A (LH) D5DZ 54255A63-A	1

♦ Includes attaching parts

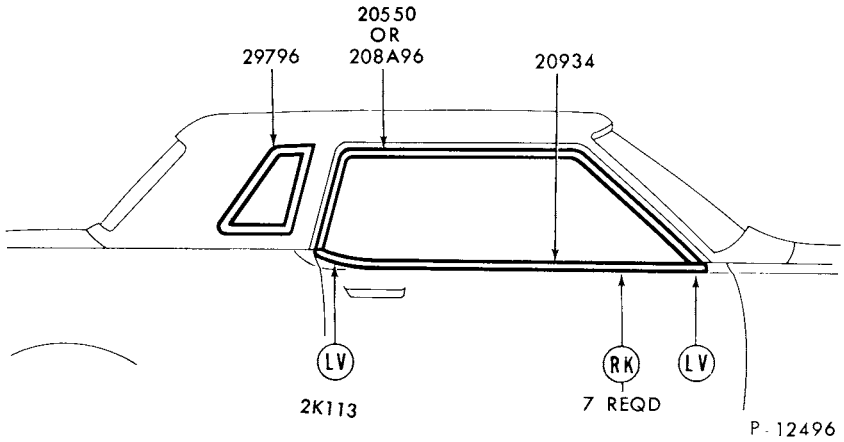

REFER TO EXTERIOR MOULDING SECTION 'R' FOR COMPLETE RETAINER INFORMATION

1975 MONARCH - BODY TYPE 66 - DOOR and QUARTER WINDOW FRAME

GROUP NUMBER	PART NAME	DESCRIPTION	PART NUMBER		QTY.
208A96-7	Moulding (front door window frame)	"Before 12/2/74"-wide type	(RH)★D5DZ 66208A96-A Not replaced (7/81)	(LH)★D5DZ 66208A97-A Not replaced (7/81)	1
		"From 12/2/74-narrow type	(RH) D5DZ 6620550-A	(LH) D5DZ 6620551-A	1
20934-5	Moulding (front door outside belt)	"Before 12/2/74"-use w/wide window frame	(RH)★D5DZ 6620934-A Not replaced (7/81)	(LH)★D5DZ 6620935-A Not replaced (7/81)	1
		"From 12/2/74"-use w/narrow window frame	(RH) D5DZ 6620934-C	(LH) D5DZ 6620935-C	1
29796-7	Moulding (quarter window outside)		(RH)★D5DZ 6629796-A Not replaced (4/84)	(LH) D5DZ 6629797-A	1

COPYRIGHT © 1986 — FORD MOTOR COMPANY — DEARBORN, MICHIGAN

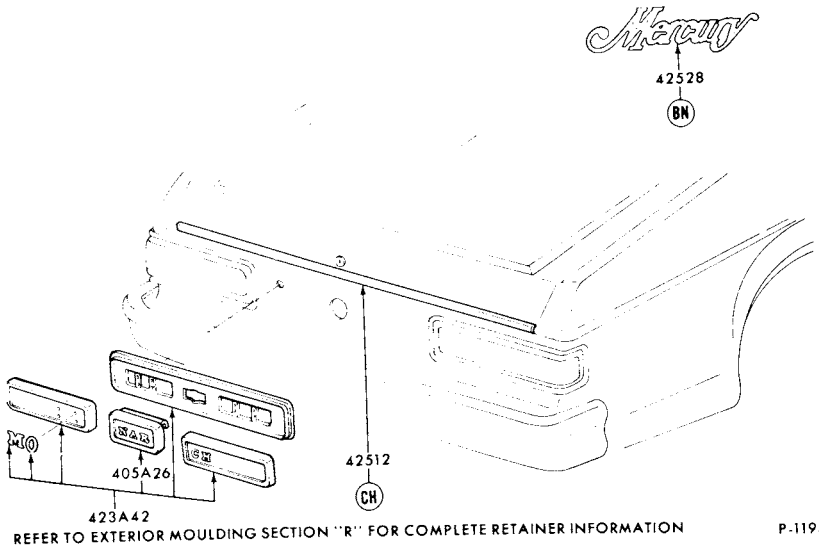

REFER TO EXTERIOR MOULDING SECTION "R" FOR COMPLETE RETAINER INFORMATION P-11949

1975 MONARCH - BACK END

GROUP NUMBER	PART NAME	DESCRIPTION	PART NUMBER	QTY.
405A26	Door (fuel filler opening)	◊Black	♦D64Y 66405A26-AA	1
		◊Brown	♦D64Y 66405A26-AT	1
		◊Green	♦D64Y 66405A26-AG	1
		◊Red	♦D64Y 66405A26-AD	1
		◊Silver	♦D64Y 66405A26-AP	1
		◊Silver blue	♦D64Y 66405A26-AB	1
		◊Tan	♦D64Y 66405A26-AU	1
		◊White	♦D64Y 66405A26-AW	1
423A42	Panel (lower back finish)	◊Black	♦D64Y 66423A42-AA	1
		◊Brown	♦D64Y 66423A42-AT	1
		◊Green	♦D64Y 66423A42-AG	1
		◊Red	♦D64Y 66423A42-AD	1
		◊Silver	♦D64Y 66423A42-AP	1
		◊Silver blue	♦D64Y 66423A42-AB	1
		◊Tan	♦D64Y 66423A42-AU	1
		◊White	♦D64Y 66423A42-AW	1
42512	Moulding (luggage compartment door)		♦D5DZ 6642512-A	1
42528	Plate (name)	"Mercury"	♦ D54Y 6642528-A	1

◊ For color verification, refer to the vinyl roof swatches in the 1975 salesman's color and upholstery selections guide.

♦ Includes attaching parts

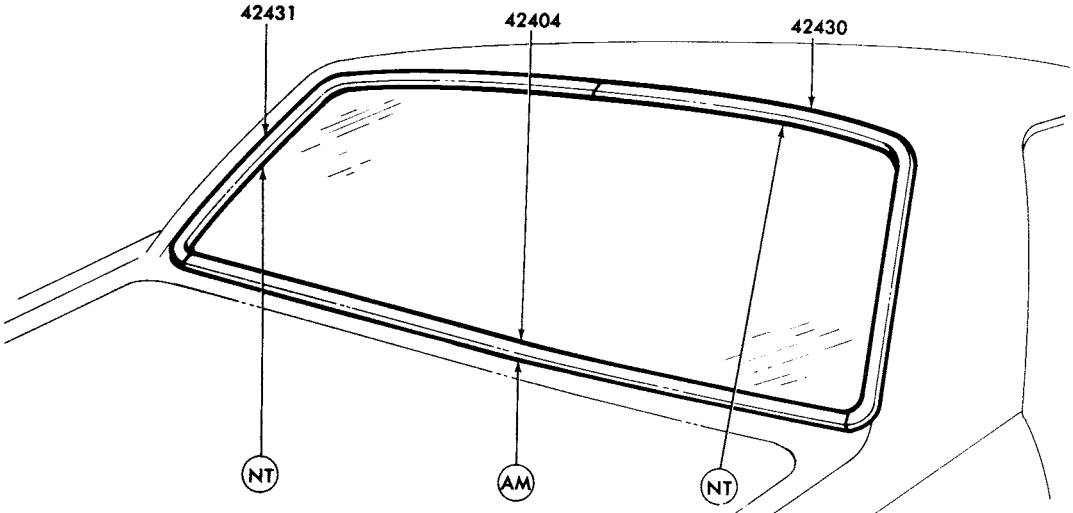

REFER TO EXTERIOR MOULDING SECTION "R" FOR COMPLETE RETAINER INFORMATION

P-12485

1975 MONARCH - BODY TYPE 54 - BACK WINDOW

GROUP NUMBER	PART NAME	DESCRIPTION	PART NUMBER	QTY.
42404-5	Moulding (back window outside lower)	W/o frenched back window	♦D5DZ 5442404-A	1
		W/frenched back window	♦D54Y 5442404-A	1
42430-1	Moulding (back window outside upper)		(RH)♦D5DZ 5442430-A (LH)♦D5DZ 5442431-A	1

♦ Includes attaching parts

COPYRIGHT © 1986 — FORD MOTOR COMPANY — DEARBORN, MICHIGAN

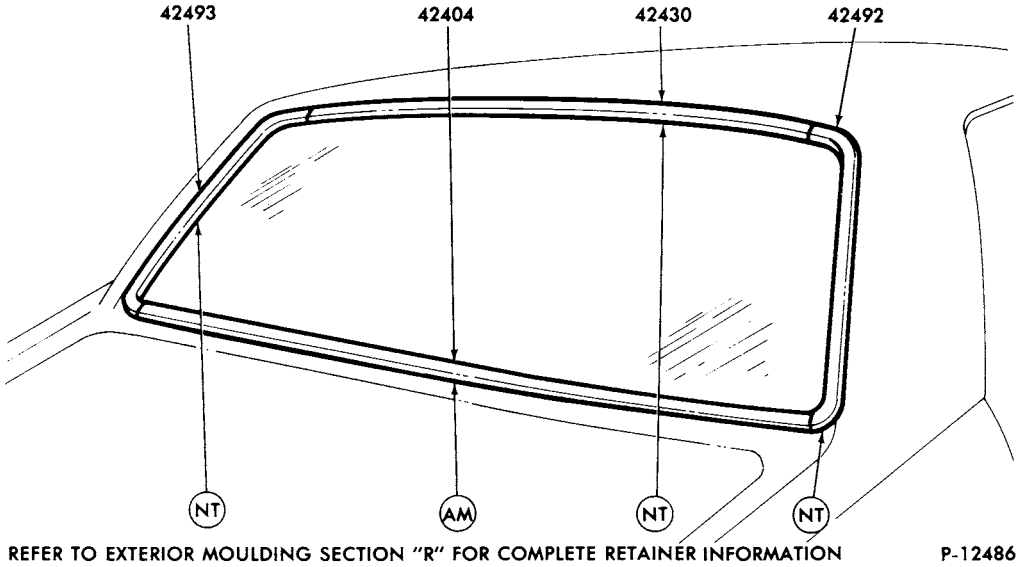

REFER TO EXTERIOR MOULDING SECTION "R" FOR COMPLETE RETAINER INFORMATION P-12486

1975 MONARCH - BODY TYPE 66 - BACK WINDOW

GROUP NUMBER	PART NAME	DESCRIPTION	PART NUMBER	QTY.
42404-5	Moulding (back window outside lower)		♦D5DZ 6642404-A	1
42430-1	Moulding (back window outside upper)		♦D5DZ 6642430-A	1
42492-3	Moulding (back window outside side)		(RH)♦D5DZ 6642492-A (LH)♦D5DZ 6642493-A	1

♦ Includes attaching parts

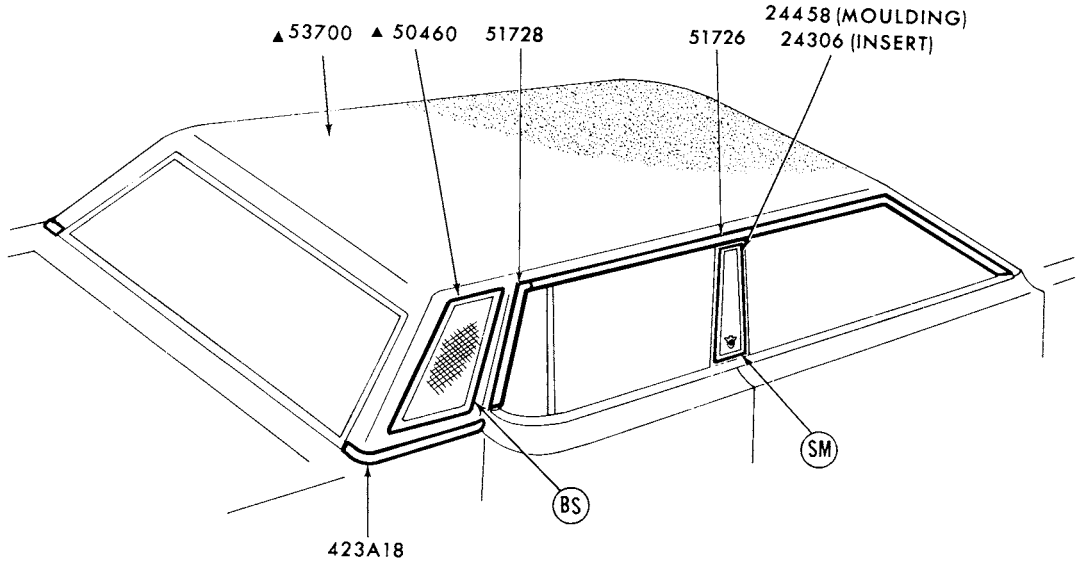

▲REFER TO GROUP IN SOFT TRIM SECTION
REFER TO EXTERIOR MOULDING SECTION "R" FOR COMPLETE RETAINER INFORMATION

P-11935

1975 MONARCH - BODY TYPE 54H - ROOF and BACK BELT

GROUP NUMBER	PART NAME	DESCRIPTION	PART NUMBER		QTY.
24306-7	Insert (center body pillar outside moulding)	◊Red-w/vinyl roof	◊(RH)♦D5DZ 5424306-BD	(LH)♦D5DZ 5424307-BD	
		◊Silver-w/vinyl roof	(RH)♦D5DZ 5424306-BP	(LH)♦D5DZ 5424307-BP	1
		◊Silver blue-w/vinyl roof	(RH)♦D5DZ 5424306-BB	(LH)♦D5DZ 5424307-BB Not replaced (6/83)	1
		◊Steel-paint to match-w/o vinyl roof	(RH)*D5DZ 5424306-A Not replaced (6/82)	(LH)*D5DZ 5424307-A Not replaced (6/82)	1
24458-9	Moulding (center body pillar outside upper)		(RH)♦D5DZ 5424458-A	(LH)♦D5DZ 5424459-A	1
423A18-9	Moulding (back belt outside side)	◊ Black vinyl insert	(RH)♦D5DZ 54423A18-F	†(LH)♦D7DZ 54423A19-A	1
		◊ Brown vinyl insert	(RH)♦D5DZ 54423A18-E	†(LH)♦D7DZ 54423A19-A	1
		◊ Green vinyl insert	(RH)♦D5DZ 54423A18-D	(LH)♦D5DZ 54423A19-D	1
		◊ Red vinyl insert	(RH)♦D5DZ 54423A18-C	†(LH)♦D7DZ 54423A19-A	1
		◊Silver vinyl insert	†(RH)♦D7DZ 54423A18-A	†(LH)♦D7DZ 54423A19-A	1
		◊Silver blue vinyl insert	(RH)♦D5DZ 54423A18-B	(LH)♦D5DZ 54423A19-B	1
		◊Tan vinyl insert	(RH)♦D5DZ 54423A18-G	(LH)♦D5DZ 54423A19-G	1
		◊Tobacco vinyl insert	†(RH)♦D7DZ 54423A18-A	†(LH)♦D7DZ 54423A19-A	1
		◊White vinyl insert	(RH)♦D5DZ 54423A18-A	(LH)♦D5DZ 54423A19-A	1
51726-9	Moulding (roof drip side finish)	Front	(RH) D5DZ 5451726-A	(LH) D5DZ 5451727-A	1
		Rear	(RH) D5DZ 5451728-A	(LH) D5DZ 5451729-A	1

◊ For color verification, refer to the vinyl roof swatches in the 1975 salesman's color and upholstery selections guide.
♦ Includes attaching parts
† Paint to match

COPYRIGHT © 1986 — FORD MOTOR COMPANY — DEARBORN, MICHIGAN

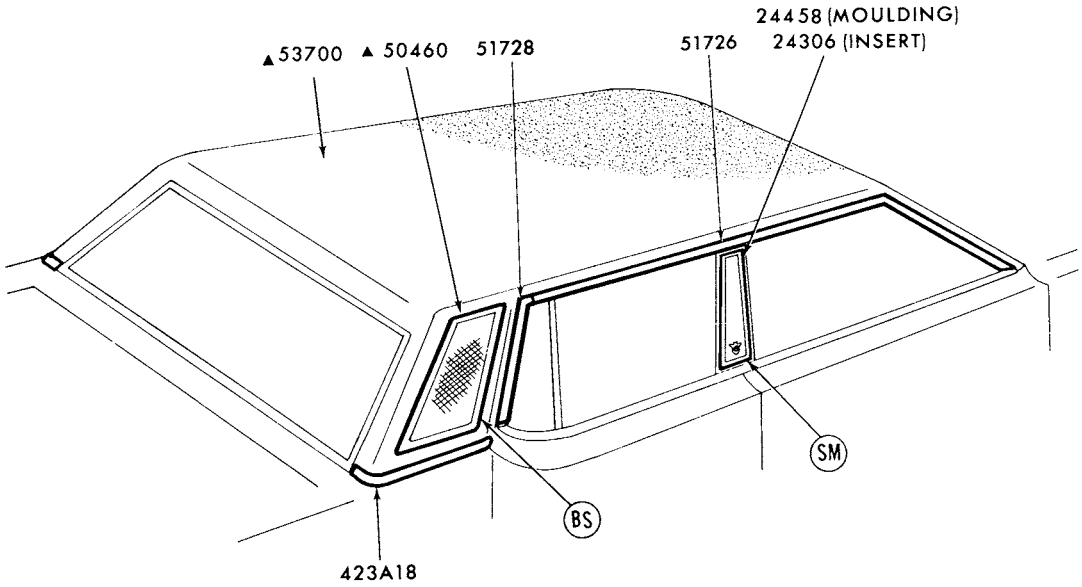

▲REFER TO GROUP IN SOFT TRIM SECTION
REFER TO EXTERIOR MOULDING SECTION "R" FOR COMPLETE RETAINER INFORMATION

P-11935

1975 MONARCH - BODY TYPE 54K - ROOF and BACK BELT

GROUP NUMBER	PART NAME	DESCRIPTION	PART NUMBER		QTY.
24306-7	Insert (center body pillar outside moulding)	◊Black-incl. "Ghia"	(RH)♠D5DZ 5424306-CA	(LH)★D5DZ 5424307-CA Not replaced (6/82)	1
		◊Brown-incl. "Ghia"	(RH)♠D5DZ 5424306-CT	(LH)♠D5DZ 5424307-CT	1
		◊Green-incl. "Ghia"	(RH)♠D5DZ 5424306-CG	(LH)♠D5DZ 5424307-CG	1
		◊Red-incl. "Ghia"	(RH)★D5DZ 5424306-CD Not replaced (6/82)	(LH)♠D5DZ 5424307-CD	1
		◊Silver-incl. "Ghia"	(RH)♠D5DZ 5424306-CP	(LH)♠D5DZ 5424307-CP	1
		◊Silver blue-incl. "Ghia"	(RH)♠D5DZ 5424306-CB	(LH)♠D5DZ 5424307-CB	1
		◊Tan-incl. "Ghia"	(RH)♠D5DZ 5424306-CU	(LH)♠D5DZ 5424307-CU	1
		◊White-incl. "Ghia"	(RH)♠D5DZ 5424306-CW	(LH)♠D5DZ 5424307-CW	1
24458-9	Moulding (center body pillar outside upper)		(RH)♠D5DZ 5424458-A	(LH)♠D5DZ 5424459-A	1
423A18-9	Moulding (back belt outside side)	◊ Black vinyl insert	† (RH)♠D7DZ 54423A18-A	† (LH)♠D7DZ 54423A19-A	1
		◊ Brown vinyl insert	† (RH)♠D7DZ 54423A18-A	(LH)♠D5DZ 54423A19-E	1
		◊ Green vinyl insert	† (RH)♠D7DZ 54423A18-A	(LH)♠D5DZ 54423A19-D	1
		◊ Red vinyl insert	† (RH)♠D7DZ 54423A18-A	(LH)♠D5DZ 54423A19-C	1
		◊ Silver vinyl insert	† (RH)♠D7DZ 54423A18-A	† (LH)♠D7DZ 54423A19-A	1
		◊ Silver blue vinyl insert	† (RH)♠D7DZ 54423A18-A	(LH)♠D5DZ 54423A19-B	1
		◊ Tan vinyl insert	(RH)♠D5DZ 54423A18-G	(LH)♠D5DZ 54423A19-G	1
		◊ Tobacco vinyl insert	† (RH)♠D7DZ 54423A18-A	† (LH)♠D7DZ 54423A19-A	1
		◊ White vinyl insert	(RH)♠D5DZ 54423A18-A	(LH)♠D5DZ 54423A19-A	1
51726-9	Moulding (roof drip side finish)	Front	(RH) D5DZ 5451726-A	(LH) D5DZ 5451727-A	1
		Rear	(RH) D5DZ 5451728-A	(LH) D5DZ 5451729-A	1

◊ For color verification, refer to the vinyl roof swatches in the 1975 salesman's color and upholstery selections guide.
♠ Includes attaching parts
† Paint to match

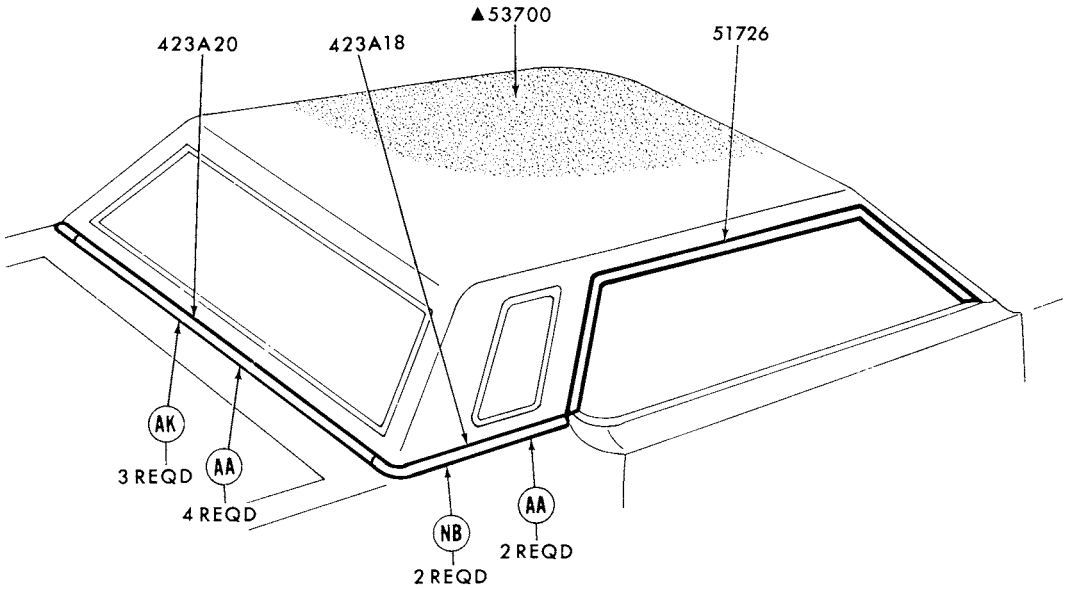

▲REFER TO GROUP IN SOFT TRIM SECTION
REFER TO EXTERIOR MOULDING SECTION "R" FOR COMPLETE RETAINER INFORMATION

P-11934

1975 MONARCH - BODY TYPE 66 - ROOF and BACK BELT

GROUP NUMBER	PART NAME	DESCRIPTION	PART NUMBER	QTY.
423A18-9	Moulding (back belt outside side)	◊ Prime paint to match	† (RH)♦D7DZ 66423A18-A † (LH)♦D7DZ 66423A19-A	1
423A20	Moulding (back belt outside)	◊ Prime-paint to match	†♦D7DZ 66423A20-A	1
51726-7	Moulding (roof drip side finish)		(RH) D7DZ 6651726-C (LH) D7DZ 6651727-C	1

◊ For color verification, refer to the vinyl roof swatches in the 1975 slaesman's color and upholstery selections guide.
♦ Includes attaching parts † Paint to match

COPYRIGHT © 1986 — FORD MOTOR COMPANY — DEARBORN, MICHIGAN

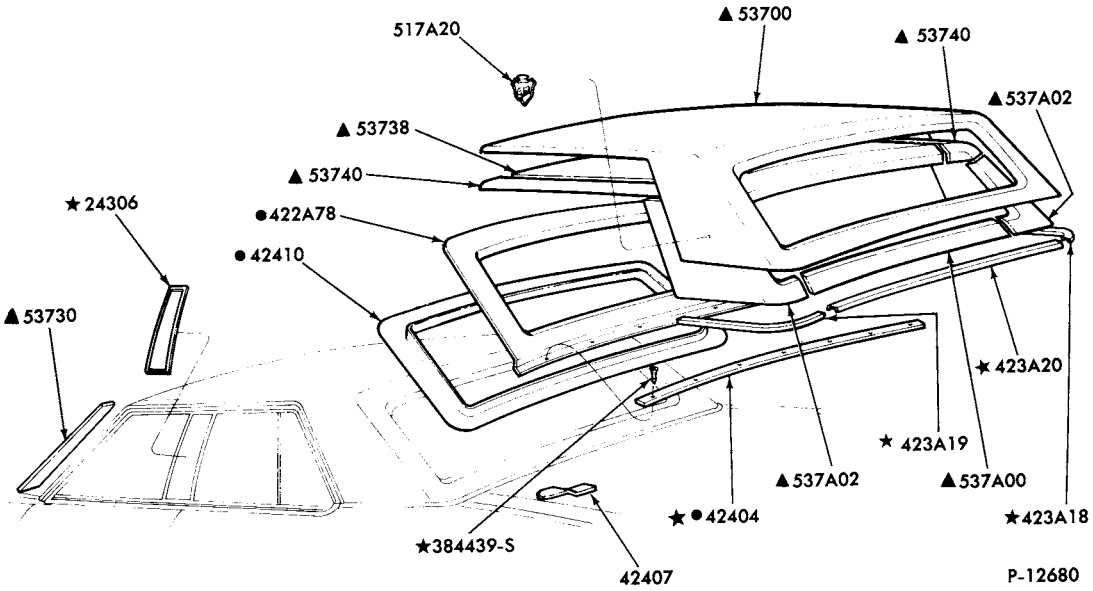

▲ REFER TO GROUP IN SOFT TRIM SECTION
● REFER TO GROUP IN TEXT SECTION

1975 MONARCH - BODY TYPE 54 - ROOF w/FRENCHED BACK WINDOW

GROUP NUMBER	PART NAME	DESCRIPTION	PART NUMBER	QTY.
42406-7	Moulding (back window outside lower corner)		(RH) D5DY 5442406-A (LH) D5DY 5442407-A	1
517A20	Ornament (roof side)	"GHIA"	♦D5ZZ 60517A20-A	2

♦ Includes attaching parts

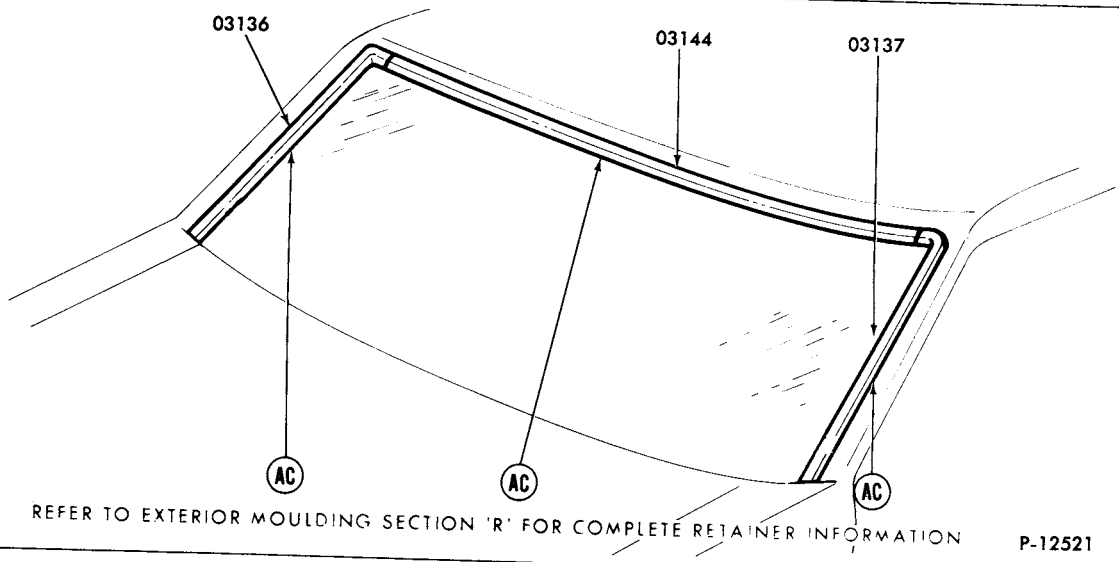

1975 MARK IV - WINDSHIELD

GROUP NUMBER	PART NAME	DESCRIPTION	PART NUMBER	QTY.
03136-7	Moulding (windshield outside side)		(RH)♦D2SZ 6503136-A (LH)♦D2SZ 6503137-A	1
03144	Moulding (windshield outside top)		♦D2SZ 6503144-A	1

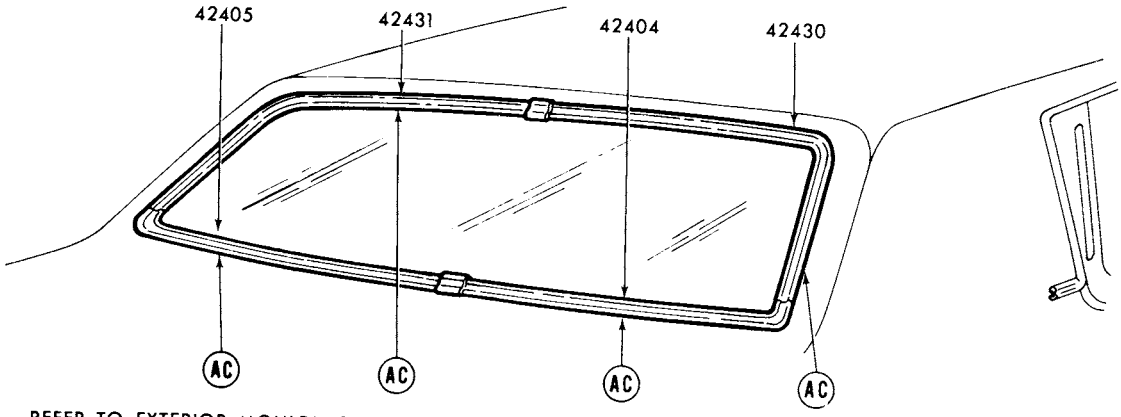

1975 MARK IV - BACK WINDOW - BRIGHT

GROUP NUMBER	PART NAME	DESCRIPTION	PART NUMBER	QTY.
42404-5	Moulding (back window outside lower)		(RH)♦D2SZ 6542404-A (LH)♦D2SZ 6542405-A	1
42430-1	Moulding (back window outside upper)		(RH)♦D2SZ 6542430-A (LH)♦D2SZ 6542431-A	1

♦ Includes attaching parts

COPYRIGHT © 1986 — FORD MOTOR COMPANY — DEARBORN, MICHIGAN

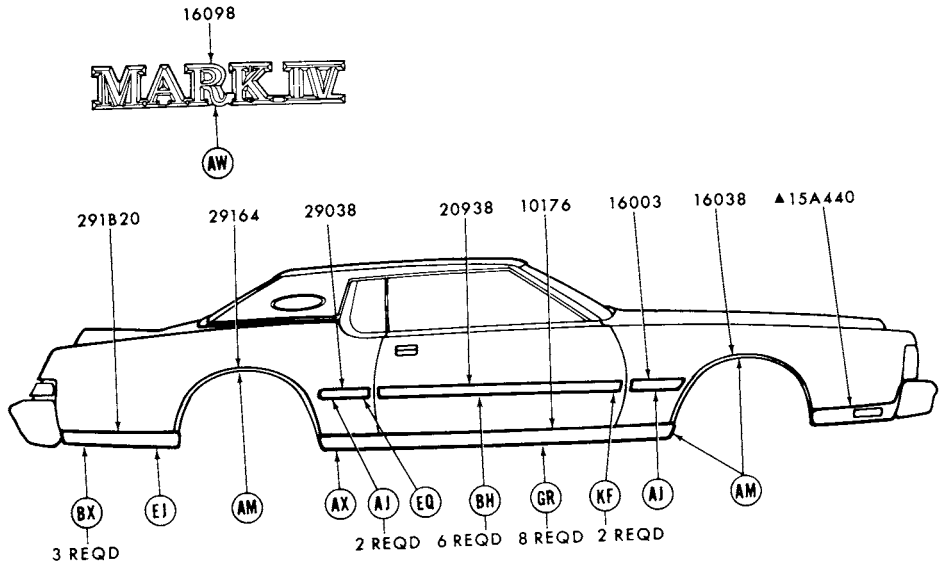

▲REFER TO GROUP IN TEXT SECTION
REFER TO EXTERIOR MOULDING SECTION "R" FOR COMPLETE RETAINER INFORMATION

P-11079

1975 MARK IV - SIDE - PARTIAL LENGTH BODY PROTECTION

GROUP NUMBER	PART NAME	DESCRIPTION	PART NUMBER		QTY.
10176-7	Moulding (body rocker panel)		(RH)♦D2SZ 6510176-A	(LH)♦D2SZ 6510177-A	1
16003	Moulding (front fender side)	Black vinyl insert	♦D2LY 16003-B	R.H. and L.H.	2
16038-9	Moulding (front fender wheel opening)		(RH)♦D4LY 16038-A	(LH)♦D4LY 16039-A	1
16098	Plate (front fender name)	"MARK IV"	♦D2LY 16098-A	R.H. and L.H.	2
20938-9	Moulding (front door outside)	Black vinyl insert	♦D2LY 6520938-B	R.H. and L.H.	2
29038	Moulding (quarter)	Black vinyl insert	♦D2LY 16003-B	R.H. and L.H.	2
291B20-1	Moulding (quarter outside lower)		(RH)♦D4LY 65291B20-A	(LH)♦D4LY 65291B21-A	1
29164-5	Moulding (quarter wheel opening)		(RH)♦D2LY 6529164-A	(LH)♦D2LY 6529165-A	1

♦ Includes attaching parts

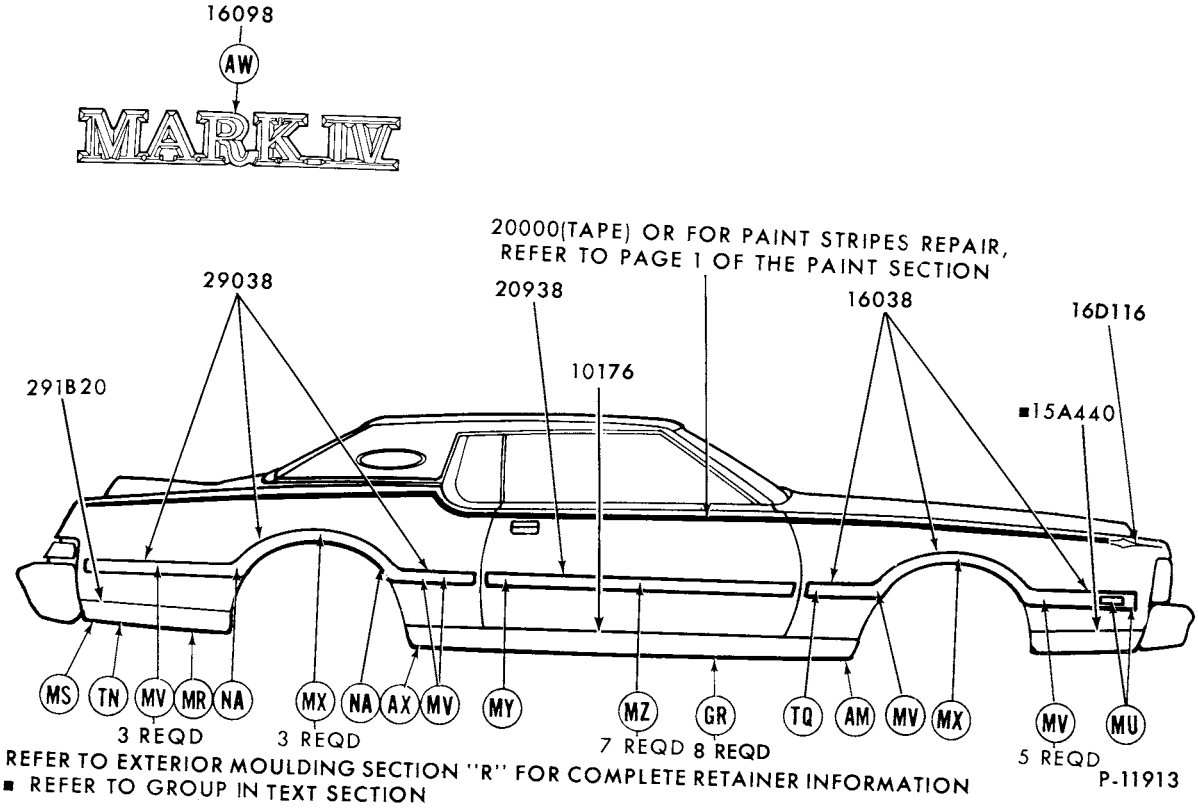

REFER TO EXTERIOR MOULDING SECTION "R" FOR COMPLETE RETAINER INFORMATION

■ REFER TO GROUP IN TEXT SECTION

1975 MARK IV - SIDE - FULL LENGTH BODY PROTECTION

GROUP NUMBER	PART NAME	DESCRIPTION	PART NUMBER		QTY.
16038-9	Moulding (front fender wheel opening)	Incl. vinyl insert			
		◊ Aqua	(RH)★D5LY 16038-AK	(LH)★D5LY 16039-AK	1
		◊ Black	(RH)♦D5LY 16038-AA	(LH)♦D5LY 16039-AA	1
		◊ Blue	(RH)★D5LY 16038-AB	(LH)♦D5LY 16039-AB	1
		◊ Gold	(RH)♦D5LY 16038-AY	(LH)♦D5LY 16039-AY	1
		◊ Green	(RH)★D5LY 16038-AG Not replaced (2/81)	(LH)★D5LY 16039-AG	
		◊ Lipstick red (bright) "Before 4/1/75"	(RH)♦D5LY 16038-BD	(LH)♦D5LY 16039-BD	1
		"From 4/1/75"	(RH)★D5LY 16038-CD	(LH)♦D5LY 16039-CD	1
		◊ Red (dark)	(RH)♦D5LY 16038-AD	(LH)♦D5LY 16039-AD	1
		◊ Saddle	(RH)♦D5LY 16038-AZ	(LH)♦D5LY 16039-AZ	1
		◊ Silver	(RH)♦D5LY 16038-AP	(LH)♦D5LY 16039-AP	1
		◊ White	(RH)♦D5LY 16038-AW	(LH)♦D5LY 16039-AW	1
16098	Plate (name)	"MARK IV"	♦D2LY 16098-A	R.H. and L.H.	2

◊ For color verification, refer to the vinyl roof swatches in the 1975 salesman's color and upholstery selections guide.

♦ Includes attaching parts

COPYRIGHT © 1986 — FORD MOTOR COMPANY — DEARBORN, MICHIGAN

1975 MARK IV - SIDE - FULL LENGTH BODY PROTECTION - cont'd.

GROUP NUMBER	PART NAME	DESCRIPTION	PART NUMBER		QTY.
16D116	Transfer (front fender side)	Arrow head design-Aqua	✶ D5LY 16D116-A		2
		Black	D3LY 16D116-A		2
		Blue	★D3LY 16D116-G	Not replaced (3/82)	2
		Brown	★D3LY 16D116-F	Not replaced (2/81)	2
		Gold	✶ D3LY 16D116-B		2
		Green	D4LY 16D116-B		2
		Red	D4LY 16D116-A		2
		Silver	★D3LY 16D116-C	Not replaced (3/82)	2
		Tan	★D4LY 16D116-C	Not replaced (2/81)	2
		White	✶D3LY 16D116-E		2
		Yellow	D5LY 16D116-B		2
20000	Stripe kit (body side)	Blue	★D5LY 6520000-A	Not replaced (7/81)	1
		Brown	▲D5LY 6520000-B		1
		Gold	▲D5LY 6520000-C		1
		Green	▲D5LY 6520000-D		1
		Red	▲D5LY 6520000-E		1
20938-9	Moulding (front door outside)	Incl. vinyl insert			
		◊Aqua	(RH)★D5LY 6520938-AK	(LH)♠D5LY 6520939-AK	1
		◊Black	(RH)♠D5LY 6520938-AA	(LH)♠D5LY 6520939-AA	1
		◊Blue	(RH)♠D5LY 6520938-AB	(LH)♠D5LY 6520939-AB	1
		◊Gold	(RH)♠D5LY 6520938-AY	(LH)♠D5LY 6520939-AY	1
		◊Green	(RH)♠D5LY 6520938-AG	(LH)♠D5LY 6520939-AG	1
		◊Lipstick red (bright) "Before 4/1/75"	(RH)★D5LY 6520938-BD Not replaced (4/79)	(LH)★D5LY 6520939-BD Not replaced (4/79)	1
		"From 4/1/75"	(RH)✶D5LY 6520938-CD Not replaced (4/83)	(LH)✶D5LY 6520939-CD Not replaced (4/84)	1
		◊Red (dark)	(RH)✶D5LY 6520938-AD	(LH)♠D5LY 6520939-AD	1
		◊Saddle	(RH)♠D5LY 6520938-AZ	(LH)♠D5LY 6520939-AZ	1
		◊Silver	(RH)♠D5LY 6520938-AP	(LH)♠D5LY 6520939-AP	1
		◊White	(RH)♠D5LY 6520938-AW	(LH)♠D5LY 6520939-AW	1
29038-9	Moulding (quarter outside)	Incl. vinyl insert			
		◊Aqua	(RH)✶D5LY 6529038-AK Not replaced (4/84)	(LH)♠D5LY 6529039-AK	1
		◊Black	(RH)♠D5LY 6529038-AA	(LH)♠D5LY 6529039-AA	1
		◊Blue	(RH)♠D5LY 6529038-AB	(LH)♠D5LY 6529039-AB	1
		◊Gold	(RH)♠D5LY 6529038-AY	(LH)♠D5LY 6529039-AY	1
		◊Green	(RH)♠D5LY 6529038-AG	(LH)♠D5LY 6529039-AG	1
		◊Lipstick red (bright) "Before 4/1/75"	★(RH)♠D5LY 6529038-BD Not replaced (4/79)	★(LH)♠D5LY 6529039-BD Not replaced (4/79)	1
		"From 4/1/75"	(RH)♠D5LY 6529038-CD	(LH)♠D5LY 6529039-CD	1
		◊Red (dark)	(RH)♠D5LY 6529038-AD	(LH)♠D5LY 6529039-AD	1
		◊Saddle	(RH)♠D5LY 6529038-AZ	(LH)♠D5LY 6529039-AZ	1
		◊Silver	(RH)♠D5LY 6529038-AP	(LH)♠D5LY 6529039-AP	1
		◊White	(RH)♠D5LY 6529038-AW	(LH)♠D5LY 6529039-AW	1
291B20-1	Moulding (quarter outside lower)		(RH)♠D4LY 65291B20-A	(LH)♠D4LY 65291B21-A	1

◊ For color verification, refer to the vinyl roof swatches in the 1975 salesman's color and upholstery selections guide.
♠ Includes attaching parts
▲ Consists of fender, door, quarter, and luggage compartment stripes

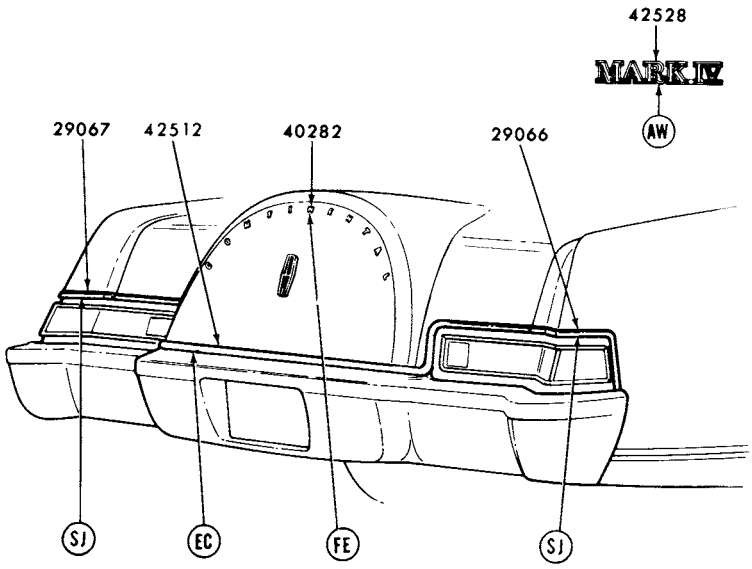

REFER TO EXTERIOR MOULDING SECTION "R" FOR COMPLETE RETAINER INFORMATION

P-11078

1975 MARK IV - BACK END

GROUP NUMBER	PART NAME	DESCRIPTION	PART NUMBER	QTY.
29066-7	Moulding (quarter outside lower rear)		(RH)♦D4LY 6529066-A (LH)♦D4LY 6529067-A	1
40282	Letter (name)	"C"	♦D3VY 16606-K	1
		"O"	♦D0LY 6540282-B	1
		"N"	♦D0LY 6540282-C	3
		"T"	♦D0LY 6540282-D	2
		"I"	♦D0LY 6540282-E	1
		"E"	♦D0LY 6540282-F	1
		"A"	♦D0LY 6540282-G	1
		"L"	♦D7LY 6540282-J	1
42512	Moulding (luggage compartment door)		♦D4LY 6542512-A	1
42528	Plate (name)		♦D2LY 6542528-A	1

♦ Includes attaching parts

COPYRIGHT © 1986 — FORD MOTOR COMPANY — DEARBORN, MICHIGAN

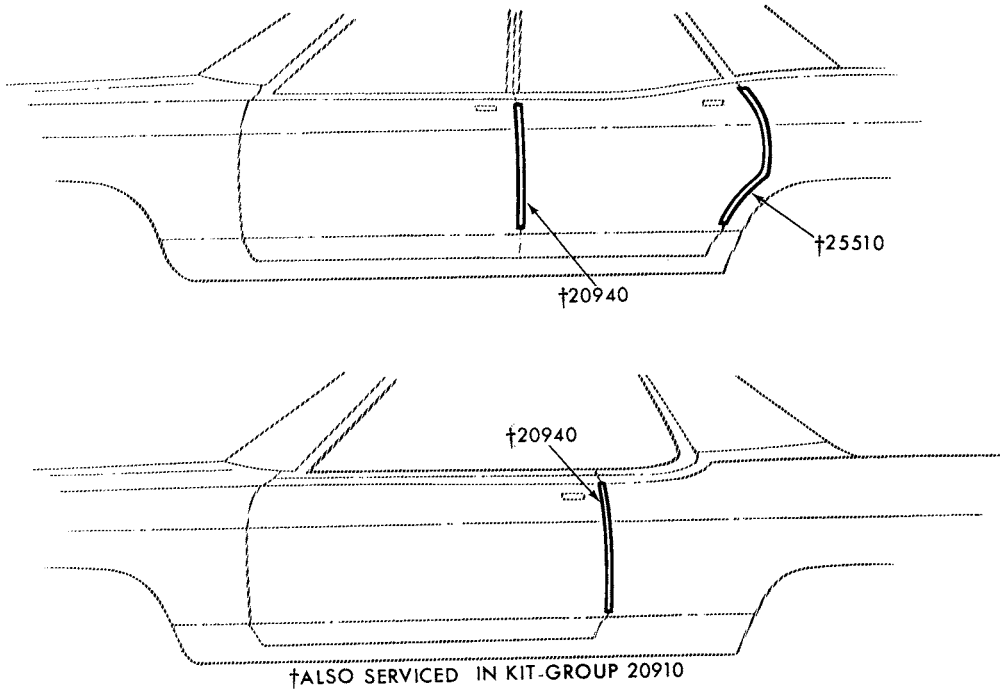

†ALSO SERVICED IN KIT-GROUP 20910

P-10061

1975 MARK IV - DOOR EDGE GUARDS

GROUP NUMBER	PART NAME	DESCRIPTION	PART NUMBER	QTY.
20940-1	Moulding (front door edge guard)		(RH) D2LY 6520940-A (LH) D2LY 6520941-A	1

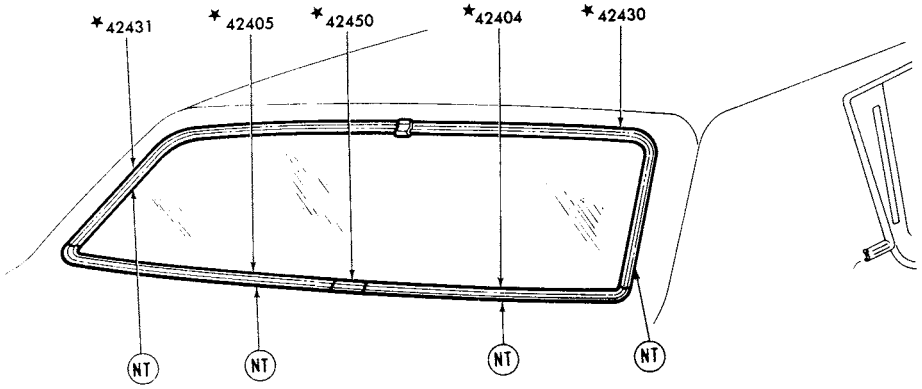

REFER TO EXTERIOR MOULDING SECTION "R" FOR COMPLETE RETAINER INFORMATION

P-12490

1975 MARK IV - BACK WINDOW - COLOR KEYED

1975 MARK IV - BACK WINDOW - COLOR KEYED - cont'd.

GROUP NUMBER	PART NAME	DESCRIPTION	PART NUMBER		QTY.
42404-5	Moulding (back window lower)	Aqua-◊L	(RH)★D5LY 6542404-D	(LH)★D5LY 6542405-D	1
		Black-◊A	(RH)★D5LY 6542404-F	(LH)★D5LY 6542405-F	1
		Jade-◊R	(RH)★D6LY 6542404-D	(LH)★D6LY 6542405-D	1
		Red-◊D	(RH)★D5LY 6542404-G	(LH)★D5LY 6542405-G	1
		Silver-◊P	(RH)★D5LY 6542404-C	(LH)★D5LY 6542405-C	1
42430-1	Moulding (back window upper)	Aqua-◊L	(RH) ★D5LY 6542430-D	(LH)★D5LY 6542431-D	1
		Black-◊A	(RH)★D5LY 6542430-F	(LH)★D5LY 6542431-F	1
		Jade-◊R	(RH)★D6LY 6542430-D	(LH)★D6LY 6542431-D	1
		Red-◊D	(RH)★D5LY 6542430-G	(LH)★D5LY 6542431-G	1
		Silver-◊P	(RH)★D5LY 6542430-C	(LH)★D5LY 6542431-C	1
		White-◊W	(RH)★D5LY 6542430-E	★(LH)★D5LY 6542431-E	1
				Not replaced (4/79)	
42450	Cover (back window moulding joint)	Aqua-◊L	★D5LY 6542450-D		1
		Black-◊A	★D5LY 6542450-F		1
		Red-◊D	★D5LY 6542450-G		1
		Silver-◊P	★D5LY 6542450-C		1

◊ For color verification, refer to the vinyl roof swatches in the 1975 salesman's color and upholstery selections guide.
• Includes attaching parts

COPYRIGHT © 1986 — FORD MOTOR COMPANY — DEARBORN, MICHIGAN

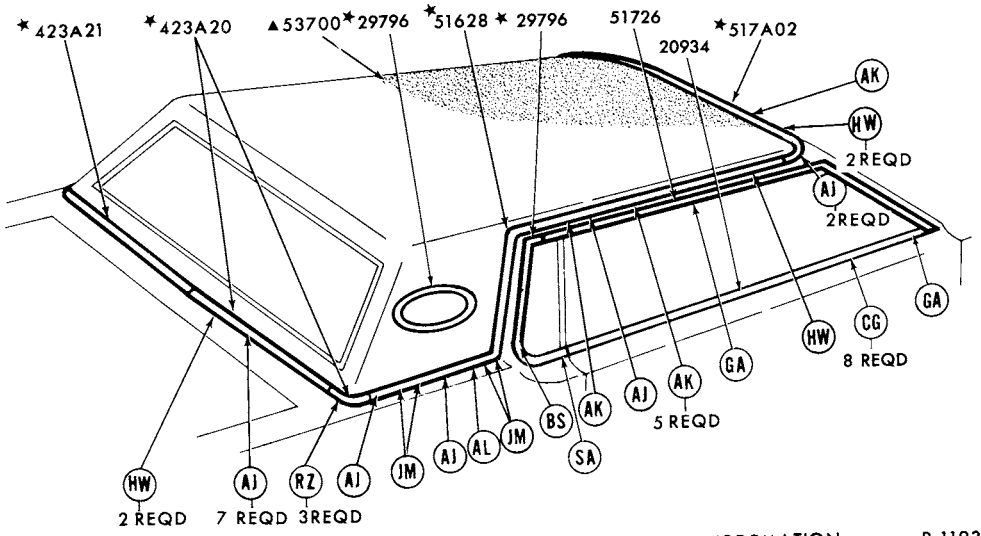

REFER TO EXTERIOR MOULDING SECTION "R" FOR COMPLETE RETAINER INFORMATION P-11932
▲ REFER TO GROUP IN SOFT TRIM SECTION

1975 MARK IV - ROOF and BACK BELT - w/FULL VINYL ROOF

GROUP NUMBER	PART NAME	DESCRIPTION	PART NUMBER		QTY.
20934	Moulding and weatherstrip-(front door outside belt)		(RH)♦D4LY 6520934-A	(LH)♦D4LY 6520935-A	1
29796-7	Moulding (quarter window outside)		(RH) D2LY 6529796-C	(LH) D2LY 6529797-C	1
29796	Moulding (opera window outside)	Bright finish	✶ D2LY 6529796-B	R.H. and L.H.	2
		Bright finish w/vinyl tape			
		Aqua	✶ D5LY 6529796-F	R.H. and L.H.	2
		Black	★ D5LY 6529796-H	R.H. and L.H.	2
		Blue	★ D5LY 6529796-D	R.H. and L.H.	2
		Ginger	★D5LY 6529796-L	R.H. and L.H.	2
		Gold	★D5LY 6529796-K	R.H. and L.H.	2
		Red	★D5LY 6529796-B	R.H. and L.H.	2
		Saddle	★D5LY 6529796-J	R.H. and L.H.	2
		Silver	★D5LY 6529796-C	R.H. and L.H.	2
		Silver gray	★D5LY 6529796-M	R.H. and L.H.	2
		White	★ D5LY 6529796-A	R.H. and L.H.	2

◊ For color verification, refer to the vinyl roof swatches in the 1975 salesman's color and upholstery selections guide.
♦ Includes attaching parts

1975 MARK IV - ROOF and BACK BELT - W/FULL VINYL ROOF - cont'd.

GROUP NUMBER	PART NAME	DESCRIPTION	PART NUMBER		QTY.
423A20-1	Moulding (back belt outside)	Incl. vinyl tape			
		◊ Aqua	★(RH)★D5LY 65423A20-H Not replaced (4/79)	(LH)✶D5LY 65423A21-H	1
		◊ Blue	(RH)✶D5LY 65423A20-F	(LH)★D5LY 65423A21-F	1
		◊ Gold	(RH)✶D5LY 65423A20-K	(LH)✶D5LY 65423A21-K	1
		◊ Red	(RH)✶D5LY 65423A20-D	(LH)✶D5LY 65423A21-D	1
		◊ Saddle	(RH)✶D5LY 65423A20-G	(LH)✶D5LY 65423A21-G	1
		◊ Tan	(RH)✶D5LY 65423A20-J	(LH)✶D5LY 65423A21-J	1
51628-9	Moulding (roof outside side)	Incl. vinyl tape			
		◊ Aqua	(RH)✶D5LY 6551628-G	(LH)✶D5LY 6551629-G	1
		◊ Blue	(RH)✶D5LY 6551628-F	(LH)✶D5LY 6551629-F	1
		◊ Gold	(RH)✶D5LY 6551628-K	(LH)✶D5LY 6551629-K	1
		◊ Red	(RH)✶D5LY 6551628-D	(LH)✶D5LY 6551629-D	1
		◊ Saddle	(RH)✶D5LY 6551628-J	(LH)✶D5LY 6551629-J	1
		◊ Silver	(RH)✶D5LY 6551628-M	(LH)✶D5LY 6551629-M	1
		◊ Tan	(RH)✶D5LY 6551628-H	(LH)✶D5LY 6551629-H	1
		◊ White	(RH)✶D5LY 6551628-C	(LH)✶D5LY 6551629-C Not replaced (4/83)	1
517A02	Moulding (roof outside side)	Incl. vinyl tape			
		◊ Aqua	✶ ♦D5LY 65517A02-G	Not replaced (4/83)	1
		◊ Blue	✶ ♦D5LY 65517A02-F	Not replaced (4/83)	1
		◊ Gold	✶♦D5LY 65517A02-K		1
		◊ Green	✶ ♦D5LY 65517A02-A		1
		◊ Red	✶ ♦D5LY 65517A02-D		1
		◊ Saddle	✶ ♦D5LY 65517A02-J	Not replaced (4/83)	1
		◊ Tan	✶ ♦D5LY 65517A02-H		1
51726-7	Moulding (roof drip side finish)		(RH) D6LY 6551726-AA	(LH) D6LY 6551727-AA	1

◊ For color verification, refer to the vinyl roof swatches in the 1975 salesman's color and upholstery selections guide.
♦ Includes attaching parts

COPYRIGHT © 1986 — FORD MOTOR COMPANY — DEARBORN, MICHIGAN

1975 MARK IV - ROOF and BACK BELT - W/HALF VINYL ROOF

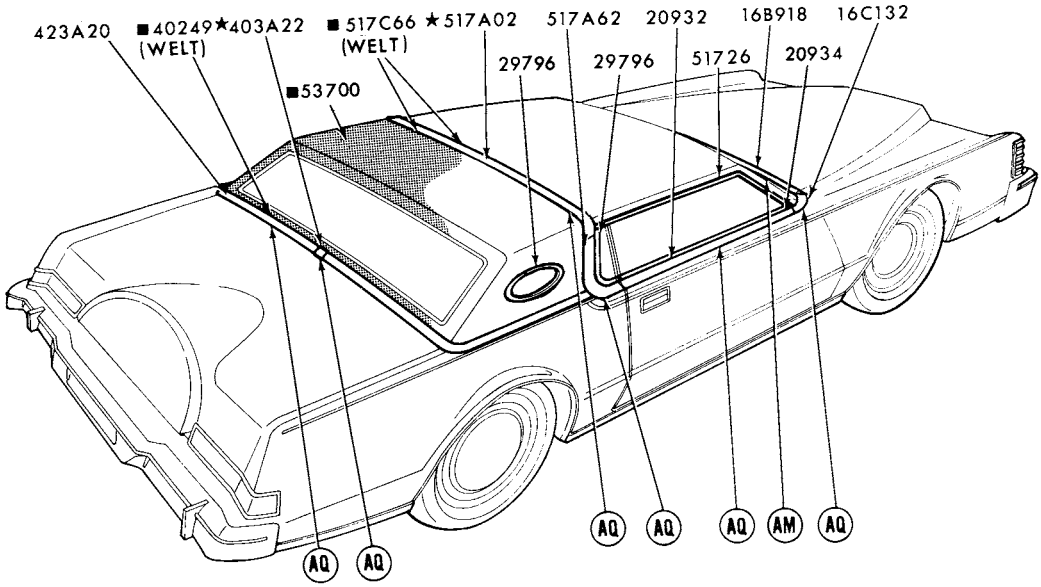

■ REFER TO GROUP IN SOFT TRIM SECTION
REFER TO EXTERIOR MOULDING SECTION "R" FOR COMPLETE RETAINER INFORMATION

P-12208

GROUP NUMBER	PART NAME	DESCRIPTION	PART NUMBER		QTY.
16C132-3	Moulding (front fender front upper rear)		(RH) D5LY 16C132-A	(LH)♦D5LY 16C133-A	1
16B918	Moulding (hood rear)		D5LY 16B918-A		1
20932-3	Moulding (door outside upper)	With mirror	(RH)★D5LY 6520932-A	(LH)★D5LY 6520933-A	1
		Without mirror	(RH)★D5LY 6520932-B	(LH)★D5LY 6520933-A	1
20934-5	Moulding and weatherstrip-(front door outside belt)		(RH)♦D4LY 6520934-A	(LH)♦D4LY 6520935-A	1
29796-7	Moulding (quarter window outside)		(RH) D2LY 6529796-C	(LH) D2LY 6529797-C	1
29796	Moulding (opera window outside)	Bright finish	★D2LY 6529796-B	R.H. and L.H.	2
		Aqua	★D5LY 6529796-F	R.H. and L.H.	2
		Black	★D5LY 6529796-H	R.H. and L.H.	2
		Blue	★D5LY 6529796-D	R.H. and L.H.	2
		Ginger	★D5LY 6529796-L	R.H. and L.H.	2
		Gold	★D5LY 6529796-K	R.H. and L.H.	2
		Red	★D5LY 6529796-B	R.H. and L.H.	2
		Saddle	★D5LY 6529796-J	R.H. and L.H.	2
		Silver	★D5LY 6529796-C	R.H. and L.H.	2
		Silver gray	★D5LY 6529796-M	R.H. and L.H.	2
		White	★D5LY 6529796-A	R.H. and L.H.	2
403A22	Cover (back belt moulding joint)		★D5LY 65403A22-A	Not replaced (4/83)	1
423A20-1	Moulding (back belt outside)	"Before 3/10/75"	(RH)★D5LY 65423A20-N	(LH)★D5LY 65423A21-N	1
		"From 3/10/75"	(RH)★D5LY 65423A20-R Not replaced (4/83)	(LH)★D5LY 65423A21-R Not replaced (4/83)	1
517A02	Moulding (roof outside rear side)		★D5LY 65517A02-N	Not replaced (4/83)	1
51726-7	Moulding (roof drip side finish)	"Before 8/26/74"	(RH)★D5LY 6551726-A	(LH)★D5LY 6551727-A	1
		"From 8/26/74"	(RH)★D5LY 6551726-B	(LH) D6LY 6551727-AA	1
517A62-3	Moulding (roof outside side rear)		(RH)★D5LY 65517A62-A	(LH)★D5LY 65517A63-A	1

♦ Includes attaching parts

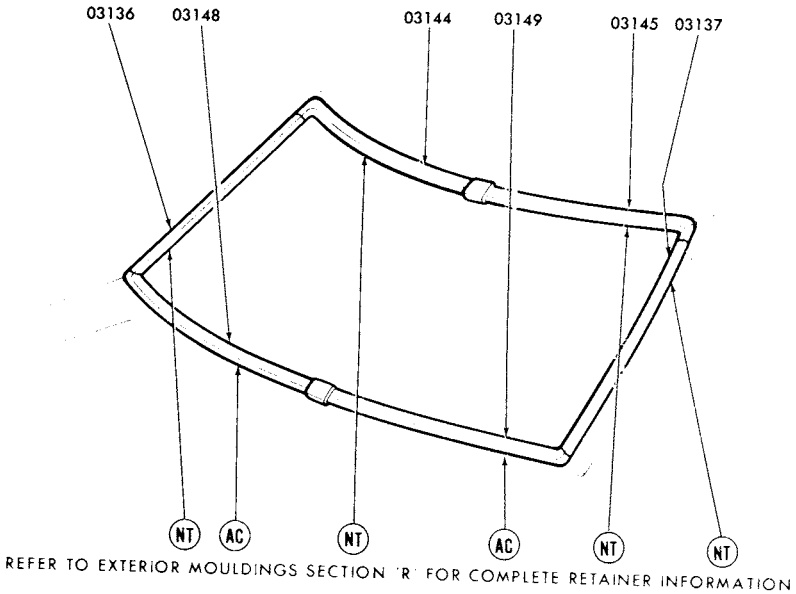

P-12522

1975 BOBCAT - WINDSHIELD

GROUP NUMBER	PART NAME	DESCRIPTION	PART NUMBER		QTY.
03136-7	Moulding (windshield outside side)		(RH)♦ D1FZ 6203136-A	(LH)♦ D1FZ 6203137-A	1
03144-5	Moulding (windshield outside top)		(RH)♦ D1FZ 6203144-A	(LH)♦ D1FZ 6203145-A	1
03148-9	Moulding (windshield outside belt)		(RH)♦ D4FZ 6203148-A	(LH)♦ D4FZ 6203149-A	1

♦ Includes attaching parts

COPYRIGHT © 1986 — FORD MOTOR COMPANY — DEARBORN, MICHIGAN

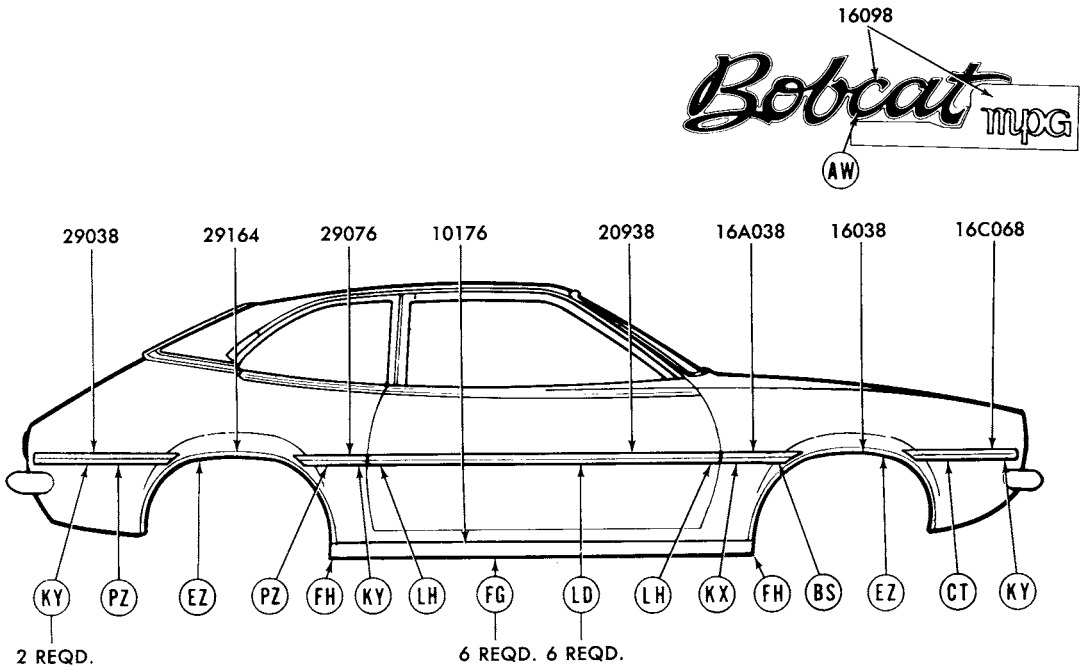

REFER TO EXTERIOR MOULDING SECTION "R" FOR COMPLETE RETAINER INFORMATION.

P-12314

1975 BOBCAT - BODY TYPES 62 and 64 - SIDE

GROUP NUMBER	PART NAME	DESCRIPTION	PART NUMBER		QTY.
10176-7	Moulding (body rocker panel)	63 1/2" long	(RH)♦D5FZ 6210176-B	(LH)♦D5FZ 6210177-B	1
16038-9	Moulding (front fender wheel opening)		(RH)♦D5FZ 16038-A	(LH)♦D5FZ 16039-A	1
16A038-9	Moulding (front fender lower rear)	◊Black vinyl insert	(RH)♦D5FZ 16A038-AA	(LH)♦D5FZ 16A039-AA	1
		◊Blue vinyl insert	(RH)♦D5FZ 16A038-AB	(LH)♦D5FZ 16A039-AB	1
	front)	◊Brown vinyl insert	(RH)★D5FZ 16A038-AT Not replaced (7/81)	(LH)★D5FZ 16A039-AT Not replaced (7/81)	1
		◊Green vinyl insert	(RH)♦D5FZ 16A038-AG	(LH)♦D5FZ 16A039-AG	1
		◊Orange vinyl insert	(RH)♦D5FZ 16A038-AC	★(LH)♦D5FZ 16A039-AC Not replaced (11/79)	1
		◊White vinyl insert	(RH)★D5FZ 16A038-AW	(LH)★D5FZ 16A039-AW	1
16C068-9	Moulding (front fender lower	◊Black vinyl insert	(RH)★D5FZ 16C068-AA	(LH)♦D5FZ 16C069-AA	1
		◊Blue vinyl insert	(RH)★D5FZ 16C068-AB	(LH)★D5FZ 16C069-AB	1
		◊Brown vinyl insert	(RH)♦D5FZ 16C068-AT	(LH)♦D5FZ 16C069-AT	1
		◊Green vinyl insert	(RH)★D5FZ 16C068-AG	(LH)♦D5FZ 16C069-AG	1
		◊Orange vinyl insert	★(RH)♦D5FZ 16C068-AC Not replaced (11/79)	(LH)♦D5FZ 16C069-AC	1
		◊White vinyl insert	(RH)♦D5FZ 16C068-AW	(LH)★D5FZ 16C069-AW	1
16098	Plate (name)	"Bobcat"	♦D5YY 16098-A	R.H. and L.H.	2
16098	Transfer (front fender)	"MPG"	D5YY 16098-B	R.H. and L.H.	2

◊ For color verification, refer to the vinyl roof swatches in the 1975 salesman's color and upholstery selections guide.

♦ Includes attaching parts

1975 BOBCAT - BODY TYPES 62 and 64 - SIDE - cont'd.

GROUP NUMBER	PART NAME	DESCRIPTION	PART NUMBER		QTY.
20938-9	Moulding (front door outside)	◊Black vinyl insert	(RH)♦D5FZ 6220938-AA	(LH)♦D5FZ 6220939-AA	1
		◊Blue vinyl insert	(RH)♦D5FZ 6220938-AB	(LH)♦D5FZ 6220939-AB	1
		◊Brown vinyl insert	(RH)♦D5FZ 6220938-AT	(LH)♦D5FZ 6220939-AT	1
		◊Green vinyl insert	(RH)♦D5FZ 6220938-AG	(LH)♦D5FZ 6220939-AG	1
		◊White vinyl insert	(RH)♦D5FZ 6220938-AW	(LH)♦D5FZ 6220939-AW	1
29038-9	Moulding (quarter outside lower rear)	◊Black vinyl insert	(RH) ♦D5FZ 6229038-AA	(LH) ♦D5FZ 6229039-AA	1
		◊Blue vinyl insert	(RH) ♦D5FZ 6229038-AB	(LH) ♦D5FZ 6229039-AB	1
		◊Green vinyl insert	(RH) ♦D5FZ 6229038-AG	(LH) ♦D5FZ 6229039-AG	1
		◊White vinyl insert	(RH) ♦D5FZ 6229038-AW	(LH) ♦D5FZ 6229039-AW	1
29076-7	Moulding (quarter outside lower front)	◊Black vinyl insert	(RH) ♦D5FZ 6229076-AA	(LH) ♦D5FZ 6229077-AA	1
		◊Blue vinyl insert	(RH) ♦D5FZ 6229076-AB	(LH) ♦D5FZ 6229077-AB	1
		◊Green vinyl insert	(RH) ♦D5FZ 6229076-AG	(LH) ♦D5FZ 6229077-AG	1
		◊White vinyl insert	(RH) ♦D5FZ 6229076-AW	(LH)*D5FZ 6229077-AW Not replaced (6/83)	1
29164-5	Moulding (quarter wheel opening)		(RH) ♦D5FZ 6229164-A	(LH) ♦D5FZ 6229165-A	1

COPYRIGHT © 1986 — FORD MOTOR COMPANY — DEARBORN, MICHIGAN

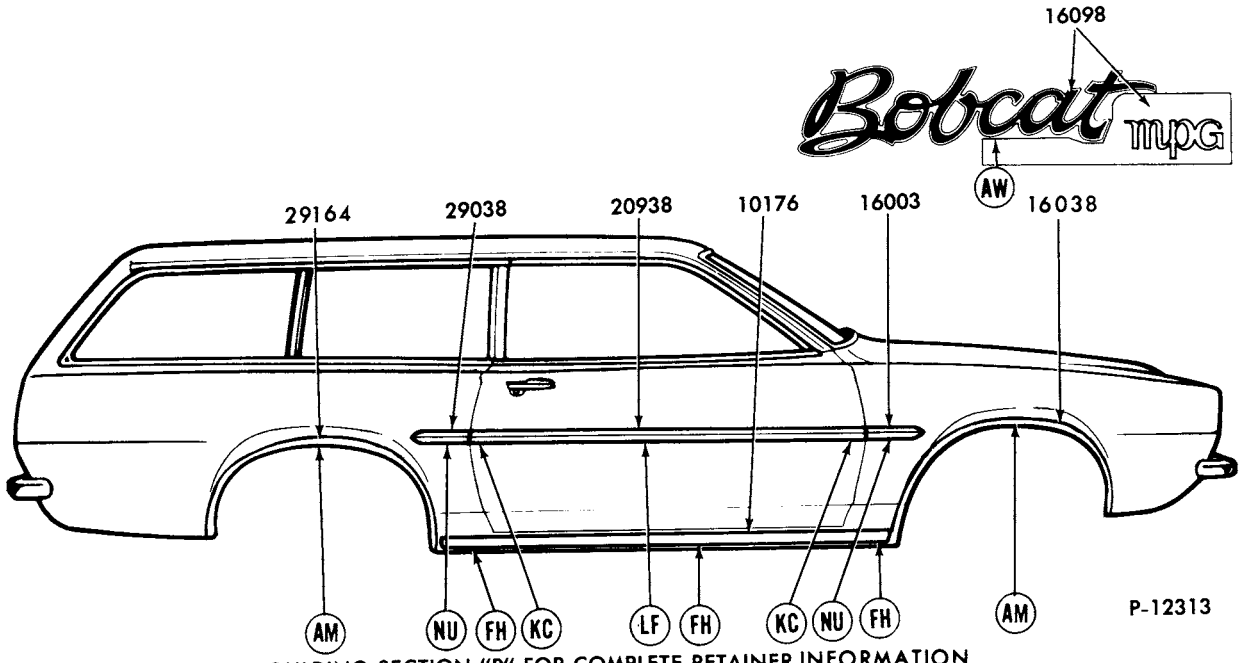

REFER TO EXTERIOR MOULDING SECTION "R" FOR COMPLETE RETAINER INFORMATION

1975 BOBCAT - BODY TYPE 73B - SIDE

GROUP NUMBER	PART NAME	DESCRIPTION	PART NUMBER		QTY.
10176-7	Moulding (body rocker panel)	64 1/2" long	(RH)♦D5FZ 6210176-B	(LH)♦D5FZ 6210177-B	1
16003-4	Moulding (front fender side)	Black vinyl insert-adhesive backed-cut to fit	D5DZ 5425532-D	R.H. and L.H.	2
16038-9	Moulding (front fender wheel opening)		(RH)♦D5FZ 16038-A	(LH)♦D5FZ 16039-A	1
16098	Plate (front fender name)	"Bobcat"	♦D5YY 16098-A	R.H. and L.H.	2
16098	Transfer (front fender)	"MPG" "Before 3/15/76"	D5YY 16098-B	R.H. and L.H.	2
		"From 3/15/76"	D6YY 16098-B	Incl. R.H. and L.H.	1
20938	Moulding (front door outside)	Black vinyl insert-adhesive backed-cut to fit	D1OZ 6529038-B	R.H. and L.H.	2
29038	Moulding (quarter panel outside)	Black vinyl insert-adhesive backed-cut to fit	D5DZ 5425532-D	R.H. and L.H.	2
29164-5	Moulding (quarter wheel opening)		(RH)♦D5FZ 7329164-A	(LH)♦D5FZ 7329165-A	1

♦ Includes attaching parts

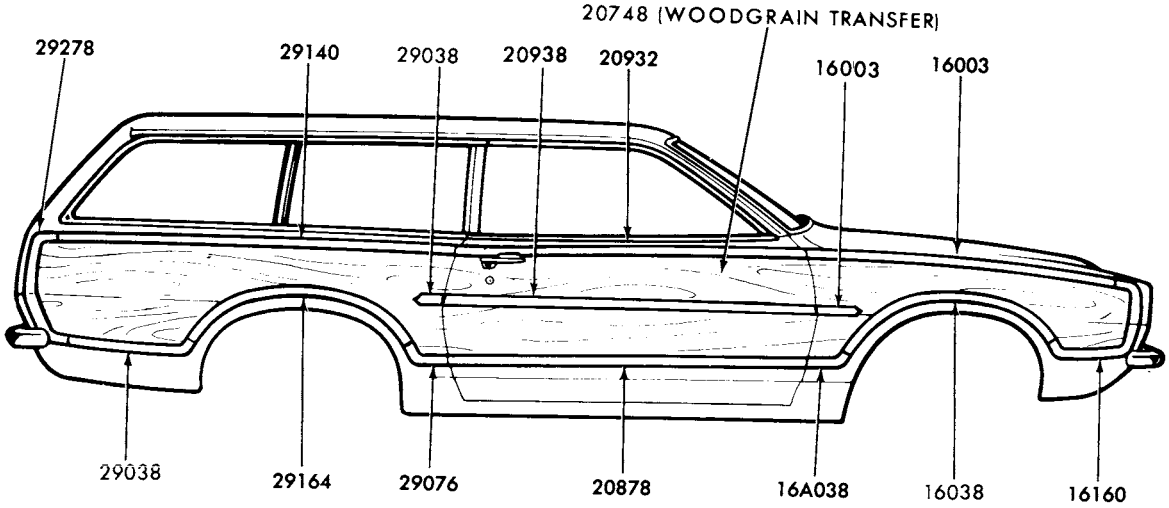

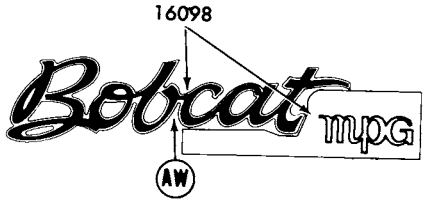

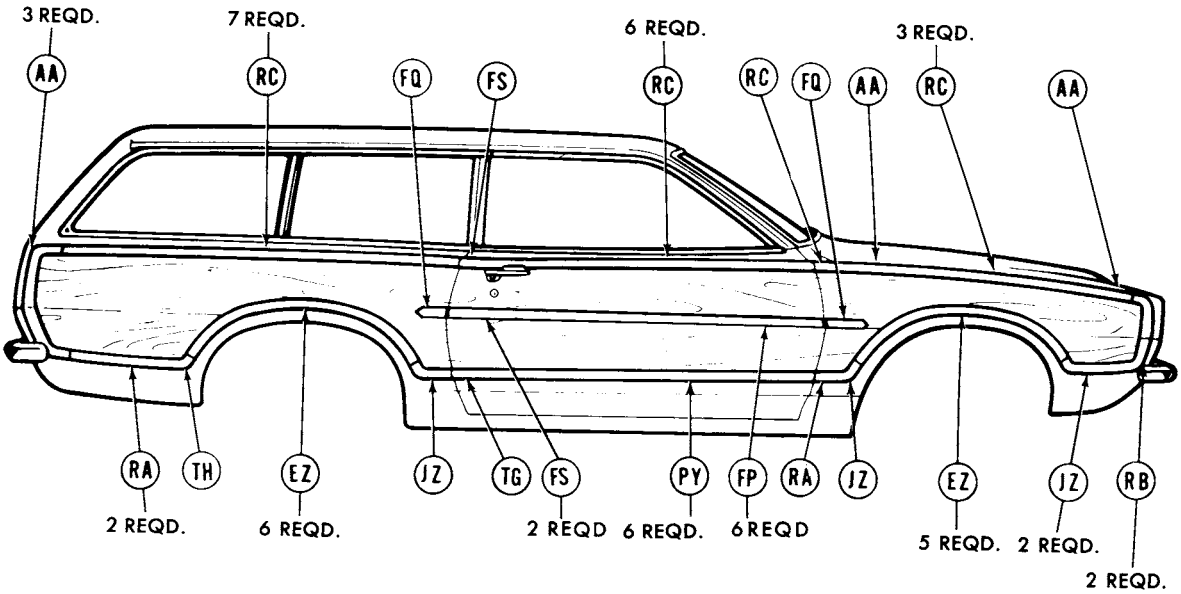

REFER TO EXTERIOR MOULDING SECTION "R" FOR COMPLETE RETAINER INFORMATION.

P-12315

1975 BOBCAT - BODY TYPE 73H - SIDE

COPYRIGHT © 1986 — FORD MOTOR COMPANY — DEARBORN, MICHIGAN

New Issue

1975 BOBCAT - BODY TYPE 73H - SIDE - cont'd.

GROUP NUMBER	PART NAME	DESCRIPTION	PART NUMBER		QTY.
16003-4	Moulding (front fender upper)	Bright finish	(RH) ♦D5YY 16003-A	(LH) ♦D5YY 16004-A	1
16003-4	Moulding (front fender side)	Brown vinyl insert	♦D4FZ 16003-B	R.H. and L.H.	2
16038-9	Moulding (front fender wheel opening)		(RH) ♦D5YY 16038-A	(LH) ♦D5YY 16039-A	1
16A038-9	Moulding (front fender wheel opening)		(RH) D5YY 16A038-A	(LH) D5YY 16A039-A	1
16098	Plate (front fender name)	"BOBCAT"	♦D5YY 16098-A	R.H. and L.H.	2
		"VILLAGER"	♦D2GY 16098-B	R.H. and L.H.	2
16098	Transfer (front fender)	"MPG"	D5YY 16098-B	R.H. and L.H.	2
16160-1	Moulding (front fender front)		(RH) ♦D5YY 16160-A	(LH) ♦D5YY 16161-A	1
20748	Transfer (wood grain)	Rose wood grain-adhesive type-17" x 60"-cut to fit	D5YY 7320748-A		AR
20878-9	Moulding (front door outside lower)	Bright finish	(RH) ♦D5YY 7320878-A	(LH) ♦D5YY 7320879-A	1
20932-3	Moulding (front door outside upper)	Bright finish	(RH) ♦D5YY 7320932-A	(LH) ♦D5YY 7320933-A	1
20938	Moulding (front door outside)	Brown vinyl insert	♦D4FZ 7320938-A	R.H. and L.H.	2
29038-9	Moulding (quarter panel)	Bright finish-lower rear	(RH) ♦D5YY 7329038-A	(LH) ♦D5YY 7329039-A	1
		Brown vinyl insert	♦D4FZ 16003-B	R.H. and L.H.	2
29076-7	Moulding (quarter outside lower front)	Bright finish	(RH) ♦D5YY 7329076-A	(LH) ♦D5YY 7329077-A	1
29140-1	Moulding (quarter outside upper)	Bright finish	(RH) ♦D5YY 7329140-A	(LH) ♦D5YY 7329141-A	1
29164-5	Moulding (quarter wheel opening)	Bright finish	(RH) ♦D5YY 7329164-A	(LH) ♦D5YY 7329165-A	1
29278-9	Moulding (quarter outside rear)	Bright finish	(RH) ♦D5YY 7329278-A	(LH) ♦D5YY 7329279-A	1

♦ Includes attaching parts

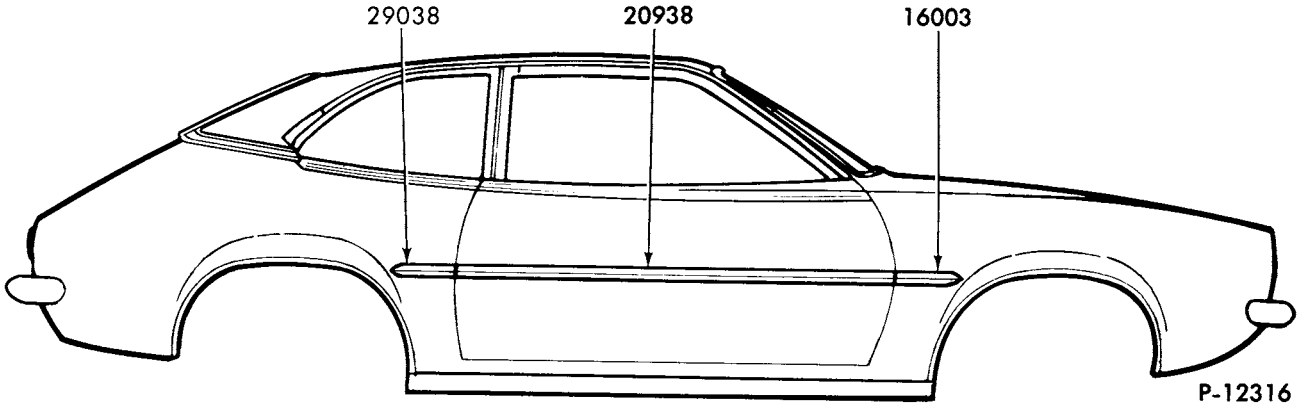

1975 BOBCAT - SIDE PROTECTION

GROUP NUMBER	PART NAME	DESCRIPTION	PART NUMBER	QTY.
16003	Moulding (front fender side)	Black vinyl insert-adhesive backed-cut to fit	D5DZ 5425532-D R.H. and L.H.	2
20938	Moulding (front door outside)	Black vinyl insert-adhesive backed-cut to fit	D1OZ 6529038-B R.H. and L.H.	2
29038	Moulding (quarter panel outside)	Black vinyl insert-adhesive backed-cut to fit	D5DZ 5425582-D R.H. and L.H.	2

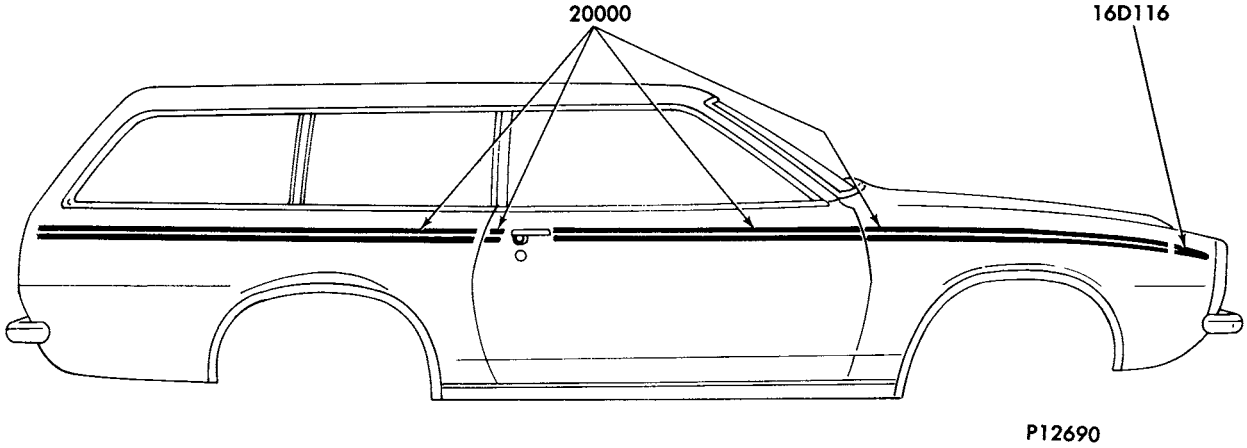

1975 BOBCAT - BODY TYPE 73 - STRIPES

GROUP NUMBER	PART NAME	DESCRIPTION	PART NUMBER	QTY.
16D116-7	Transfer (front fender front)	Gold	(RH)★D5YY 16D116-A (LH)★D5YY 16D117-A	1
20000	Stripe kit (body side)	Gold-1 1/2" wide x 25 ft. roll	D5YY 7320000-A	1

COPYRIGHT © 1986 — FORD MOTOR COMPANY — DEARBORN, MICHIGAN

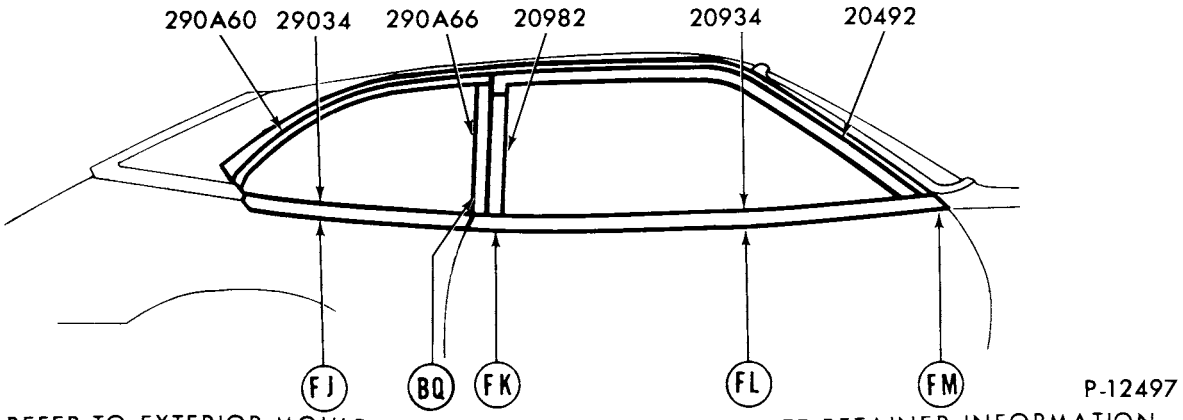

REFER TO EXTERIOR MOULDING SECTION 'R' FOR COMPLETE RETAINER INFORMATION

1975 BOBCAT - BODY TYPES 62 and 64 - DOOR and QUARTER WINDOW FRAME

GROUP NUMBER	PART NAME	DESCRIPTION	PART NUMBER		QTY.
20492-3	Moulding (front door window frame top)		(RH) D1FZ 6220492-A	(LH) D1FZ 6220493-A	1
20934-5	Moulding (front door outside belt)	R.H.-w/mirror	♦D4FZ 6220934-B		1
		R.H.-w/o mirror	♦D4FZ 6220934-A		1
		L.H.	♦D4FZ 6220935-A		1
20982-3	Moulding (front door window frame rear)		(RH) D2FZ 6220982-A	(LH) D2FZ 6220983-A	1
29034-5	Moulding (quarter outside belt)		(RH)♦D2FZ 6229034-A	(LH)♦D2FZ 6229035-A	1
290A60-1	Moulding (quarter window outside upper)	Two piece design-w/stationary window	(RH)♦D2FZ 62290A60-C	(LH)♦D2FZ 62290A61-C	1
		One piece design-w/stationary window	(RH)♦D2FZ 62290A60-B	(LH)♦D2FZ 62290A61-B	1
290A66-7	Moulding (quarter window outside front)	Two piece design-w/stationary window	(RH)♦D2FZ 62290A66-B	(LH)♦D2FZ 62290A67-B	1

♦ Includes attaching parts

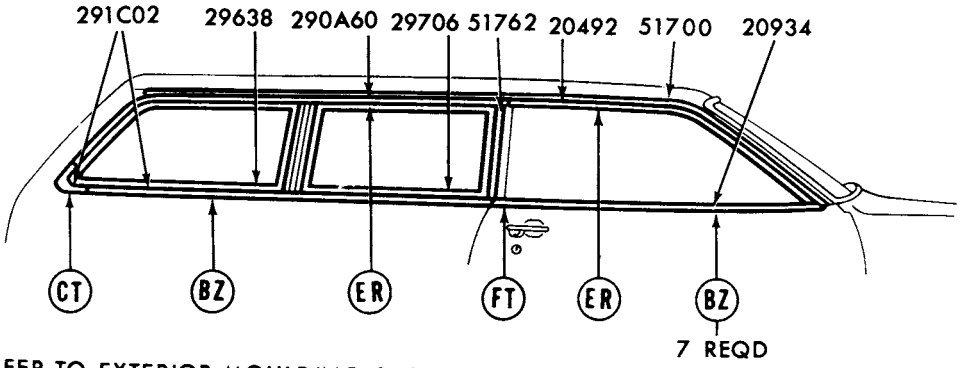

REFER TO EXTERIOR MOULDING SECTION 'R' FOR COMPLETE RETAINER INFORMATION

1975 BOBCAT - BODY TYPE 73 - DOOR and QUARTER WINDOW FRAME

GROUP NUMBER	PART NAME	DESCRIPTION	PART NUMBER	QTY.
20492-3	Moulding (front door window frame top)		(RH) D2FZ 7320492-B (LH) D2FZ 7320493-B	1
20934-5	Moulding (front door outside belt)	R.H.-w/mirror	♦D2FZ 7320934-D	1
		R.H.-w/o mirror	♦D2FZ 7320934-C	1
		L.H.	♦D2FZ 7320935-B	1
290A60-1	Moulding (quarter window outside upper)		(RH)♦D2FZ 73290A60-A (LH)♦D2FZ 73290A61-A	1
291C02-3	Moulding (quarter window outside lower rear)		(RH)♦D2FZ 73291C02-A (LH)♦D2FZ 73291C03-A	1
29638-9	Moulding (rear quarter window outside front)		(RH) D4FZ 7329638-A (LH) D4FZ 7329639-A	1
29706-7	Moulding (front quarter window)	Serviced only in assy.-refer to group 29706-11 in text section		

♦ Includes attaching parts

COPYRIGHT © 1986 — FORD MOTOR COMPANY — DEARBORN, MICHIGAN

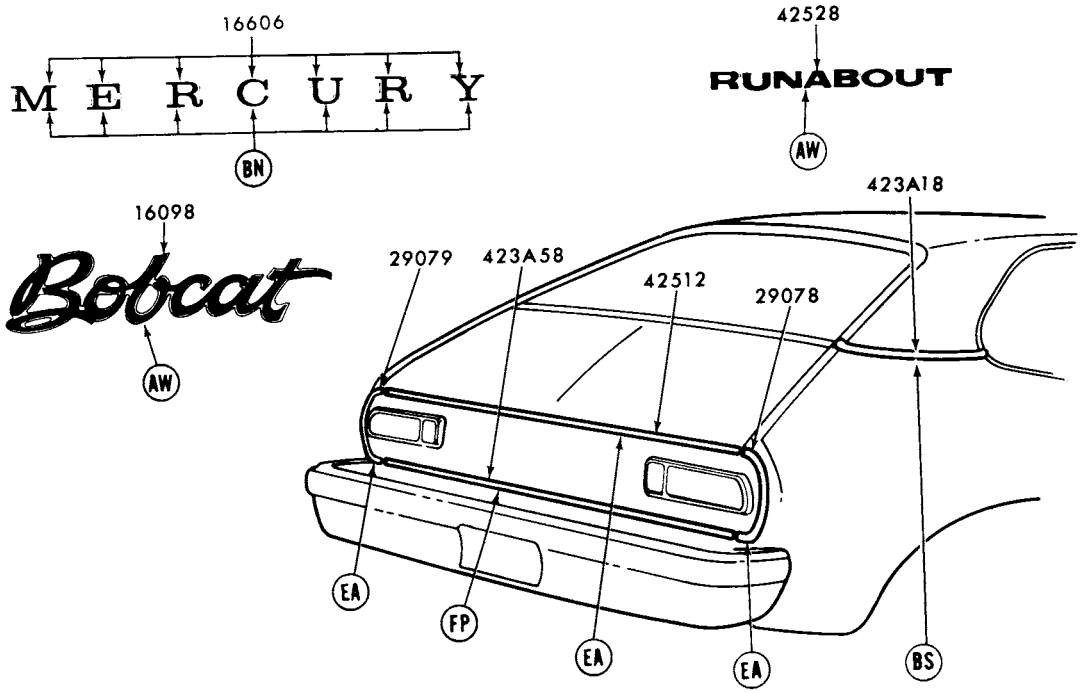

REFER TO EXTERIOR MOULDING SECTION "R" FOR COMPLETE RETAINER INFORMATION

P-11415

1975 BOBCAT - BODY TYPES 62 and 64 - BACK END

GROUP NUMBER	PART NAME	DESCRIPTION	PART NUMBER	QTY.
16098	Plate (luggage compartment name)	"Bobcat"	♦D5YY 16098-A	1
16606	Letter (luggage compartment door)	"M"	♦D54Y 16606-A	1
		"E"	♦D54Y 16606-B	1
		"R"	♦D54Y 16606-C	1
		"C"-body type 62	♦D5YY 6240282-A	1
		"C"-body type 64	♦D5YY 6440282-A	1
		"U"	♦D54Y 16606-E	1
		"R"	♦D54Y 16606-C	1
		"Y"	♦D54Y 16606-F	1
29078-9	Moulding (quarter panel extension)		(RH)♦D4FZ 6229078-A (LH)♦D4FZ 6229079-A	1
423A18-9	Moulding (back belt outside side)	Body type 62	(RH)♦D1FZ 62423A18-B (LH)♦D1FZ 62423A19-B	1
		Body type 64	(RH)♦D2FZ 64423A18-A (LH)♦D2FZ 64423A19-A	1
423A58	Moulding (lower back panel)		♦D4FZ 62423A58-A	1
42512	Moulding (luggage compartment door)		♦D4FZ 6242512-A	1
42528	Plate (luggage compartment door name)	"RUNABOUT"	♦D1FZ 6442528-A	2

♦ Includes attaching parts

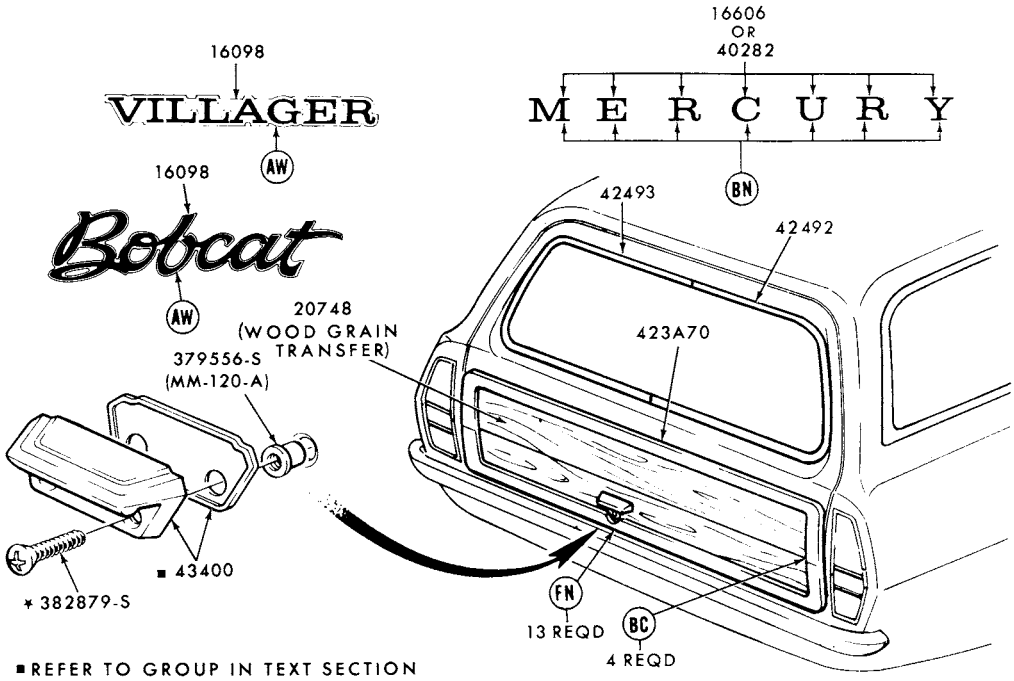

■ REFER TO GROUP IN TEXT SECTION
REFER TO EXTERIOR MOULDING SECTION "R" FOR COMPLETE RETAINER INFORMATION

P-11416

1975 BOBCAT - BODY TYPE 73 - BACK END

GROUP NUMBER	PART NAME	DESCRIPTION	PART NUMBER	QTY.
16098	Plate (liftgate name)	"Bobcat"	♦D4FZ 16098-A	1
		"Villager"	* ♦D2GY 16098-B	1
16606	Letter (liftgate door)	"M"	♦D54Y 16606-A	1
		"E"	♦D54Y 16606-B	1
		"R"	♦D54Y 16606-C	1
		"C"	♦D5YY 6440282-A	1
		"U"	♦D54Y 16606-E	1
		"R"	♦D54Y 16606-C	1
		"Y"	♦D54Y 16606-F	1
20748	Transfer (wood grain)		D5YY 7320748-A	AR
423A70	Rail (liftgate outside)		♦D5YY 73423A70-A	1
42492-3	Moulding (back window side)		(RH) D2FZ 7342492-A (LH) D2FZ 7342493-A	1

♦ Includes attaching parts

COPYRIGHT © 1986 — FORD MOTOR COMPANY — DEARBORN, MICHIGAN

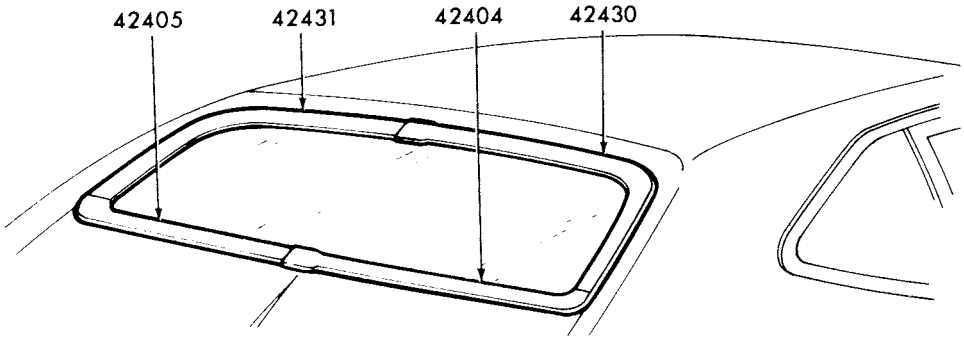

P-12464

1975 BOBCAT - BODY TYPE 62 - BACK WINDOW

GROUP NUMBER	PART NAME	DESCRIPTION	PART NUMBER	QTY.
42404-5	Moulding (back window outside lower)		(RH) D1FZ 6242404-A (LH) D1FZ 6242405-A	1
42430-1	Moulding (back window outside upper)		(RH) D1FZ 6242430-A (LH) D1FZ 6242431-A	1

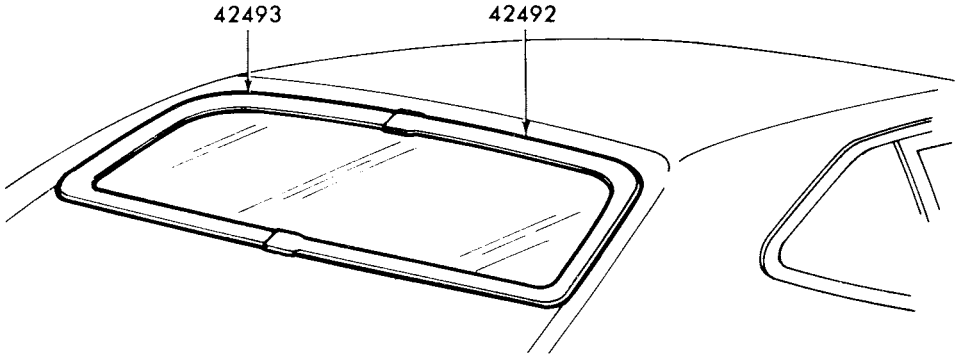

P-12465

1975 BOBCAT - BODY TYPE 64 - BACK WINDOW

GROUP NUMBER	PART NAME	DESCRIPTION	PART NUMBER	QTY.
42492-3	Moulding (back window outside side)		(RH) D2FZ 6442492-A (LH) D2FZ 6442493-A	1

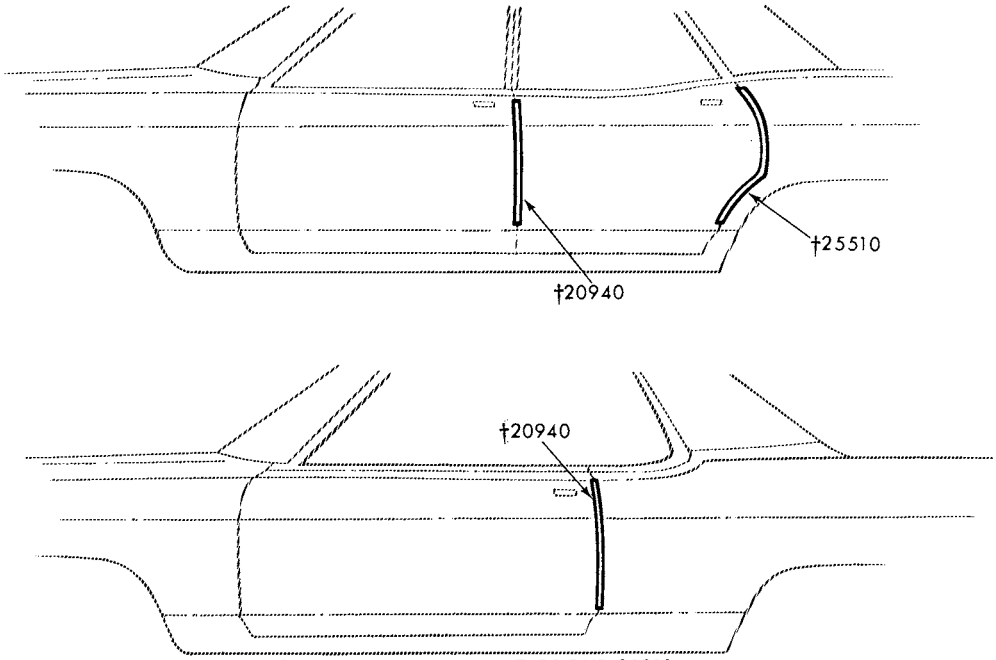

†ALSO SERVICED IN KIT-GROUP 20910

P-10061

1975 BOBCAT - DOOR EDGE GUARDS

GROUP NUMBER	PART NAME	DESCRIPTION	PART NUMBER		QTY.
20910	Moulding kit (door edge guard)	Bright	★D1FZ 6220910-A	Not replaced (6/83)	1
		Wood grain	D2FZ 7320910-A		1
20940-1	Moulding (door edge guard)	Bright	(RH) D2FZ 6220940-A	(LH) D2FZ 6220941-A	1
		Wood grain	(RH) D3FZ 7320940-A	(LH) D3FZ 7320941-A	1

COPYRIGHT © 1986 — FORD MOTOR COMPANY — DEARBORN, MICHIGAN

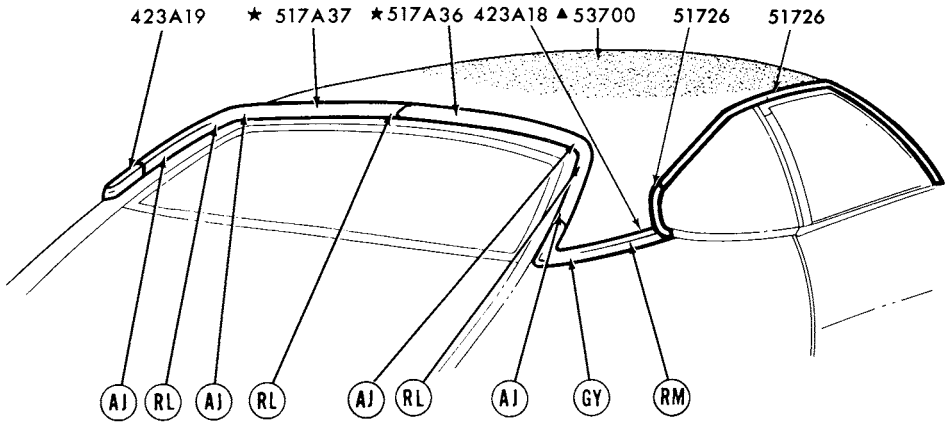

▲REFER TO GROUP IN SOFT TRIM SECTION
REFER TO EXTERIOR MOULDING SECTION "R" FOR COMPLETE RETAINER INFORMATION

P-12186

1975 BOBCAT - BODY TYPES 62 and 64 - ROOF and BACK BELT

GROUP NUMBER	PART NAME	DESCRIPTION	PART NUMBER		QTY.
423A18-9	Moulding (back belt outside side)	Body type 62	(RH)♦D1FZ 62423A18-B	(LH)♦D1FZ 62423A19-B	1
		Body type 64	(RH)♦D2FZ 64423A18-A	(LH)♦D2FZ 64423A19-A	1
51726-7	Moulding (roof drip side finish)	Front-w/o vinyl roof	(RH) D4FZ 6251726-C	(LH)★D4FZ 6251727-C Not replaced (6/83)	1
		Rear-w/o vinyl	(RH) D4FZ 6251726-A	(LH) D4FZ 6251727-A	1
		Front-w/vinyl roof	(RH) D4FZ 6251726-D	(LH) D4FZ 6251727-D	1
		Rear-w/vinyl roof	(RH) D4FZ 6251726-B	(LH) D4FZ 6251727-B	1

♦ Includes attaching parts

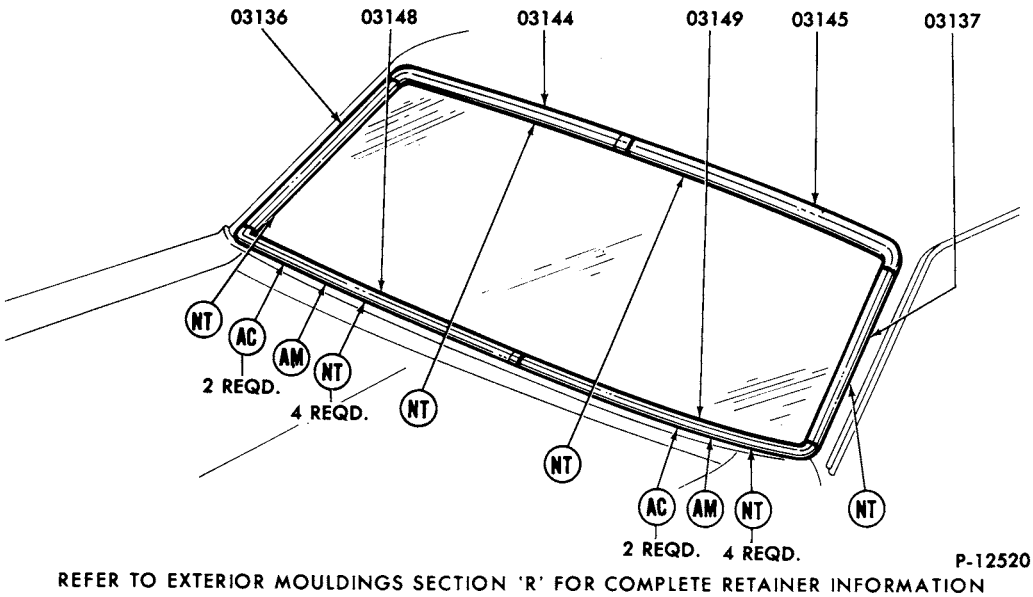

REFER TO EXTERIOR MOULDINGS SECTION 'R' FOR COMPLETE RETAINER INFORMATION

1975 COMET - WINDSHIELD

GROUP NUMBER	PART NAME	DESCRIPTION	PART NUMBER		QTY.
03136-7	Moulding (windshield outside side)		(RH)♦ D0DZ 6203136-A	(LH)♦ D0DZ 6203137-A	1
03144-5	Moulding (windshield outside top)		(RH)♦ D0DZ 6203144-A	(LH)♦ D0DZ 6203145-A	1
03148-9	Moulding (windshield outside belt)		(RH)♦ D0DZ 6203148-A	(LH)♦ D0DZ 6203149-A	1

♦ Includes attaching parts

COPYRIGHT © 1986 — FORD MOTOR COMPANY — DEARBORN, MICHIGAN

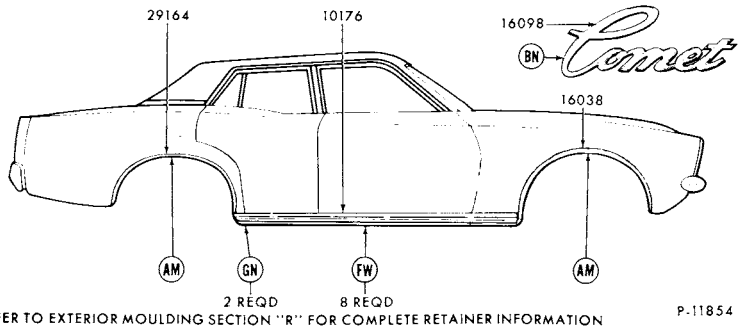

REFER TO EXTERIOR MOULDING SECTION "R" FOR COMPLETE RETAINER INFORMATION

1975 COMET - BODY TYPE 54 - SIDE - w/o LUXURY DECOR

GROUP NUMBER	PART NAME	DESCRIPTION	PART NUMBER		QTY.
10176	Moulding (body rocker panel)	78 3/4" long	♦D44Y 5410176-A	R.H. and L.H.	2
16038-9	Moulding (front fender wheel opening)		(RH)♦D4DZ 16038-A	(LH)♦D4DZ 16039-A	1
16098	Plate (name)	"Comet"	♦D14Y 16098-A	R.H. and L.H.	2
29164-5	Moulding (quarter wheel opening)		(RH)♦D0DZ 6229164-A	(LH)♦D0DZ 6229165-A	1

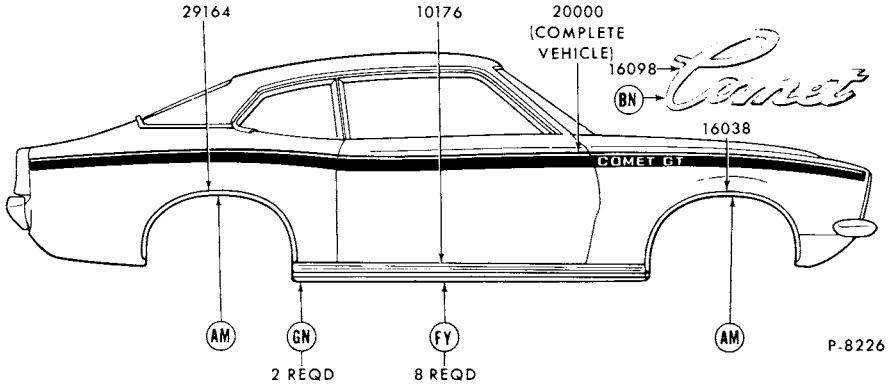

REFER TO EXTERIOR MOULDING SECTION "R" FOR COMPLETE RETAINER INFORMATION

1975 COMET - BODY TYPE 62 - SIDE - w/o LUXURY DECOR

GROUP NUMBER	PART NAME	DESCRIPTION	PART NUMBER		QTY.
10176	Moulding (body rocker panel)	71 55/64" long	♦D44Y 6210176-A	R.H. and L.H.	2
16038-9	Moulding (front fender wheel opening)		(RH)♦D4DZ 16038-A	(LH)♦D4DZ 16039-A	1
16098	Plate (name)	"Comet"	♦D14Y 16098-A	R.H. and L.H.	2
20000	Stripe kit (body side)	Black	★D34Y 6220000-A		1
		Gold	★D54Y 6220000-D	Not replaced (7/81)	1
					1
29164-5	Moulding (quarter wheel opening)		(RH)♦D0DZ 6229164-A	(LH)♦D0DZ 6229165-A	1

♦ Includes attaching parts

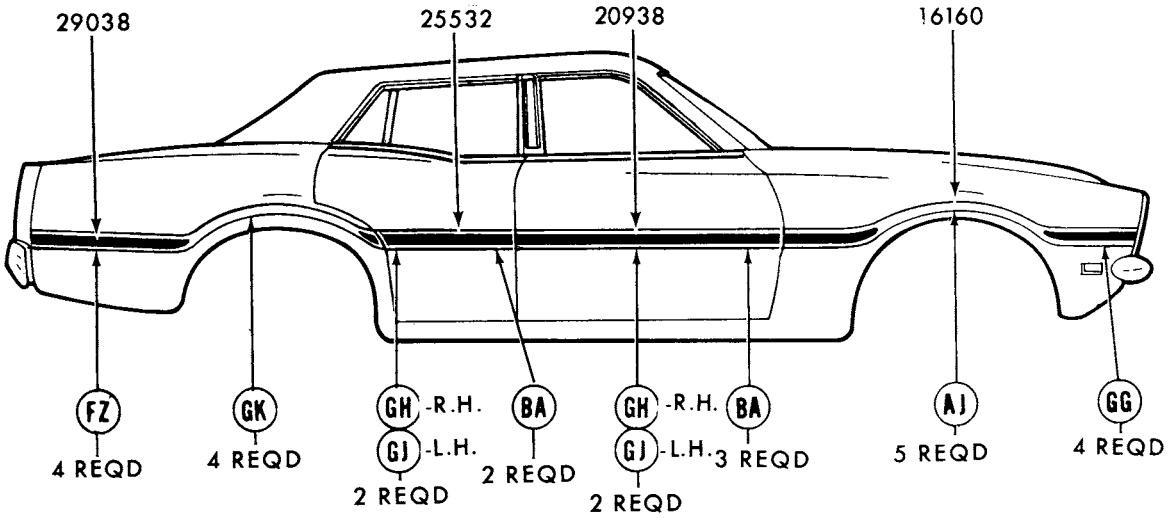

REFER TO EXTERIOR MOULDING SECTION "R" FOR COMPLETE RETAINER INFORMATION P-10011

1975 COMET - BODY TYPE 54 - SIDE - W/LUXURY DECOR

GROUP NUMBER	PART NAME	DESCRIPTION	PART NUMBER		QTY.
16160-1	Moulding (front fender front)	◊Blue vinyl insert	(RH)★D4DZ 16160-BB	(LH)★D4DZ 16161-BB	1
		◊Brown vinyl insert	(RH)♦D3DZ 16160-AT	(LH)♦D3DZ 16161-AT	1
		◊Green vinyl insert	(RH)♦D5DZ 16160-AG	(LH)★D5DZ 16161-AG Not replaced (7/81)	1
		◊White vinyl insert	(RH)★D4DZ 16160-AW	(LH)♦D4DZ 16161-AW	1
20938-9	Moulding (front door outside)	◊Blue vinyl insert	(RH)★D4DZ 5420938-CB Not replaced (6/83)	(LH)★D4DZ 5420939-CB Not replaced (6/83)	1
		◊Brown vinyl insert	(RH)♦D3DZ 5420938-BT	(LH)♦D3DZ 5420939-BT	1
		◊White vinyl insert	(RH)♦D4DZ 5420938-CW	(LH)♦D4DZ 5420939-CW	1
25532-3	Moulding (rear door outside)	◊Blue vinyl insert	(RH)★D4DZ 5425532-CB Not replaced (6/83)	(LH)♦D4DZ 5425533-CB	1
		◊Brown vinyl insert	(RH)♦D3DZ 5425532-BT	(LH)♦D3DZ 5425533-BT	1
		◊White vinyl insert	(RH)♦D4DZ 5425532-BW	(LH)♦D4DZ 5425533-BW	1
29038-9	Moulding (quarter outside)	◊Blue vinyl insert	(RH)♦D4DZ 5429038-BB	(LH)♦D4DZ 5429039-BB	1
		◊Brown vinyl insert	(RH)♦D4DZ 5429038-AT	(LH)♦D4DZ 5429039-AT	1
		◊White vinyl insert	(RH)♦D4DZ 5429038-AW	(LH)♦D4DZ 5429039-AW	1

◊ For color verification, refer to the vinyl roof swatches in the 1975 salesman's color and upholstery selections guide.
♦ Includes attaching parts

COPYRIGHT © 1986 — FORD MOTOR COMPANY — DEARBORN, MICHIGAN

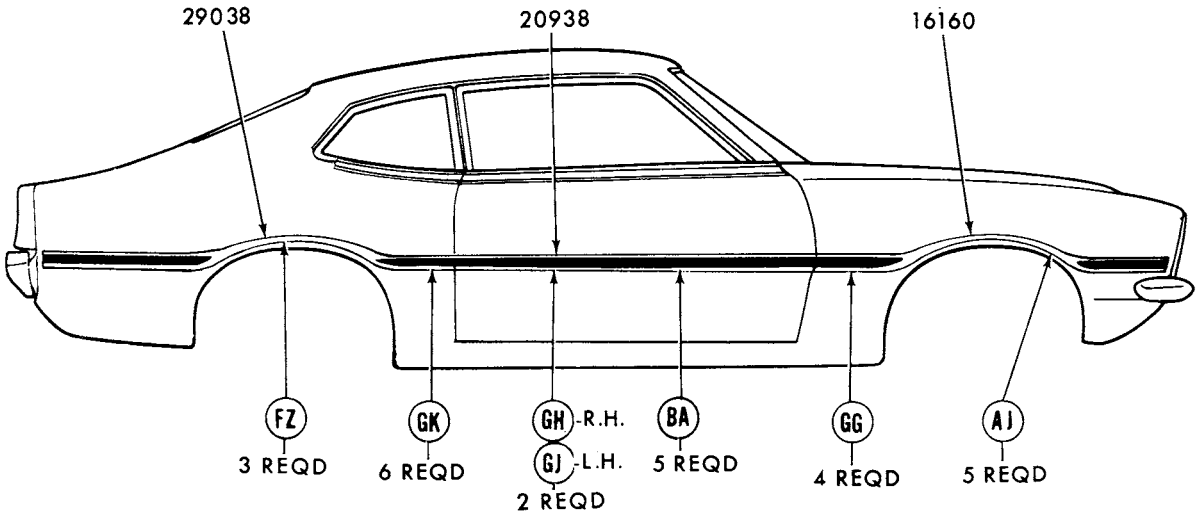

REFER TO EXTERIOR MOULDING SECTION "R" FOR COMPLETE RETAINER INFORMATION P-10012

1975 COMET - BODY TYPE 62 - SIDE - W/LUXURY DECOR

GROUP NUMBER	PART NAME	DESCRIPTION	PART NUMBER		QTY.
16160-1	Moulding (front fender front)	◊ Blue vinyl insert	(RH)★D4DZ 16160-BB	(LH)★D4DZ 16161-BB	1
		◊ Brown vinyl insert	(RH)♦D3DZ 16160-AT	(LH)♦D3DZ 16161-AT	1
		◊ Green vinyl insert	(RH)♦D5DZ 16160-AG	(LH)★D5DZ 16161-AG Not replaced (7/81)	1
		◊ White vinyl insert	(RH)★D4DZ 16160-AW	(LH)♦D4DZ 16161-AW	1
20938-9	Moulding (front door outside)	◊ Blue vinyl insert	(RH)★D4DZ 6220938-CB Not replaced (6/83)	(LH)♦D4DZ 6220939-CB	1
		◊ Brown vinyl insert	(RH)♦D3DZ 6220938-BT	(LH)♦D3DZ 6220939-BT	1
		◊ White vinyl insert	(RH)♦D4DZ 6220938-CW	(LH)♦D4DZ 6220939-CW	1
29038-9	Moulding (quarter outside)	◊ Blue vinyl insert	(RH)♦D4DZ 6229038-BB	(LH)♦D4DZ 6229039-BB	1
		◊ Brown vinyl insert	(RH)♦D4DZ 6229038-AT	(LH)♦D4DZ 6229039-AT	1
		◊ Green vinyl insert	(RH)★D5DZ 6229038-BG Not replaced (7/81)	(LH)♦D5DZ 6229039-BG	1
		◊ White vinyl insert	(RH)♦D4DZ 6229038-AW	(LH)♦D4DZ 6229039-AW	1

◊ For color verification, refer to the vinyl roof swatches in the 1975 salesman's color and upholstery guide.
♦ Includes attaching parts

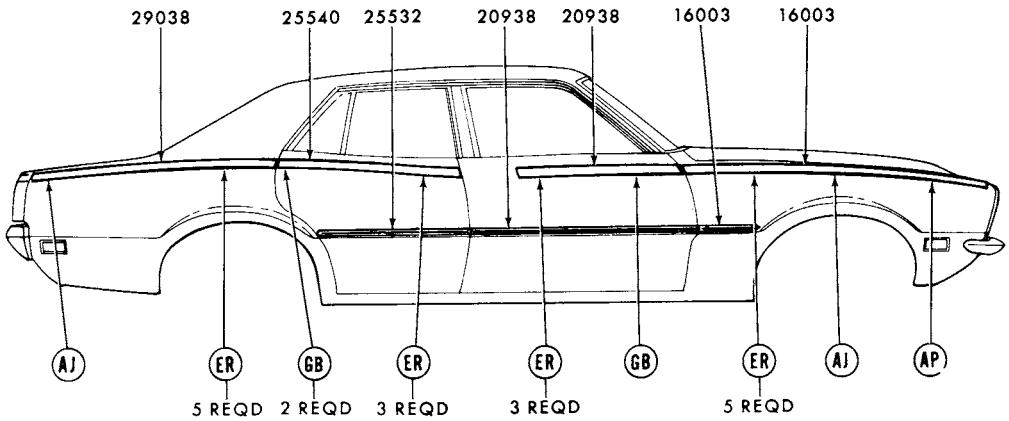

REFER TO EXTERIOR MOULDING SECTION "R" FOR COMPLETE RETAINER INFORMATION P-11855

1975 COMET - BODY TYPE 54 - SIDE PROTECTION

GROUP NUMBER	PART NAME	DESCRIPTION	PART NUMBER		QTY.
16003-4	Moulding (front fender)	Black vinyl insert-cut to fit-lower	♠D5DZ 5425532-D	R.H. and L.H.	2
		Bright finish-upper	(RH)♠D44Y 16003-A	(LH)♠D44Y 16004-A	1
20938-9	Moulding (front door outside)	Black vinyl insert-cut to fit-lower	D1OZ 6529038-B	R.H. and L.H.	AR
		Bright finish-upper	(RH)♠D44Y 5420938-A	(LH)♠D44Y 5420939-A	1
25532-3	Moulding (rear door outside)	Black vinyl insert-cut to fit-lower	♠D1OZ 6529038-B	R.H. and L.H.	AR
25540-1	Moulding (rear door outside)	Bright finish	(RH)♠D44Y 5425540-A	(LH)★D44Y 5425541-A Not replaced (6/82)	1
29038-9	Moulding (quarter outside)	Bright finish	(RH)♠D44Y 5429038-A	(LH)♠D44Y 5429039-A	1

COPYRIGHT © 1986 — FORD MOTOR COMPANY — DEARBORN, MICHIGAN

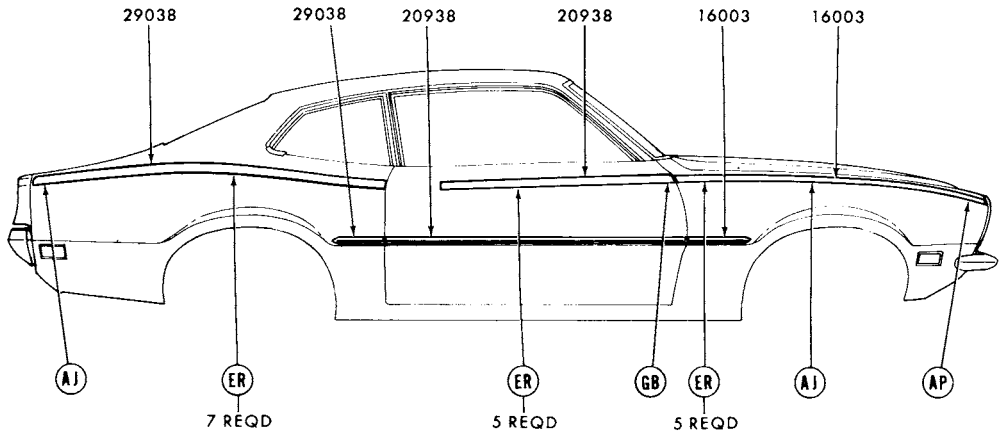

REFER TO EXTERIOR MOULDING SECTION "R" FOR COMPLETE RETAINER INFORMATION P-8186

1975 COMET - BODY TYPE 62 - SIDE PROTECTION

GROUP NUMBER	PART NAME	DESCRIPTION	PART NUMBER		QTY.
16003-4	Moulding (front fender)	Black vinyl insert-cut to fit-lower	♦D5DZ 5425532-D	R.H. and L.H.	2
		Bright finish-upper	(RH)♦D44Y 16003-A	(LH)♦D44Y 16004-A	1
20938-9	Moulding (front door outside)	Black vinyl insert-cut to fit-lower	♦D1OZ 6529038-B	R.H. and L.H.	AR
		Bright finish-upper	(RH)♦D44Y 6220938-A	(LH)♦D44Y 6220939-A	1
29038-9	Moulding (quarter outside)	Black vinyl insert-cut to fit-lower	♦D5DZ 5425532-D	R.H. and L.H.	2
		Bright finish-upper	(RH)♦D44Y 6229038-A	(LH)♦D44Y 6229039-A	1

♦ Includes attaching parts

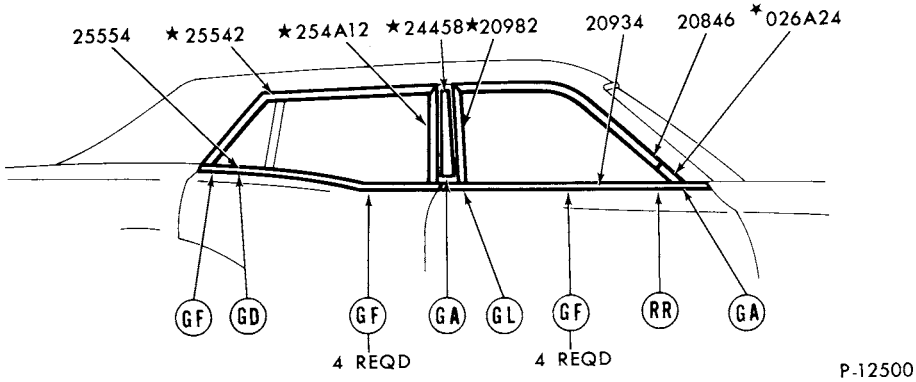

REFER TO EXTERIOR MOULDINGS SECTION 'R' FOR COMPLETE RETAINER INFORMATION

1975 COMET - BODY TYPE 54 - DOOR WINDOW FRAME

GROUP NUMBER	PART NAME	DESCRIPTION	PART NUMBER		QTY.
026A24-5	Moulding (front body pillar outside belt)	W/vinyl roof	(RH)★D0DZ 62026A24-A Not replaced (6/82)	(LH)★D0DZ 62026A25-A Not replaced (6/82)	1
20846-7	Moulding (front door window frame top)		(RH)★D1DZ 5420846-A Not replaced (6/82)	(LH) D1DZ 5420847-A	1
20934-5	Moulding (front door outside belt)		(RH)♦D3DZ 5420934-A	(LH)♦D3DZ 5420935-A	1
25554-5	Moulding (rear door outside belt)		(RH)♦D3DZ 5425554-A	(LH)♦D3DZ 5425555-A	1

COPYRIGHT © 1986 — FORD MOTOR COMPANY — DEARBORN, MICHIGAN

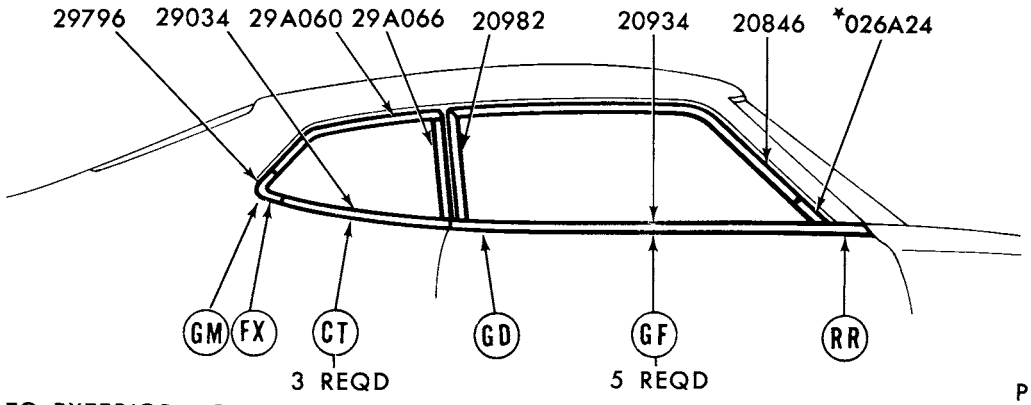

P-12499

REFER TO EXTERIOR MOULDING SECTION 'R' FOR COMPLETE RETAINER INFORMATION

1975 COMET - BODY TYPE 62 - DOOR and QUARTER WINDOW FRAME

GROUP NUMBER	PART NAME	DESCRIPTION	PART NUMBER		QTY.
026A24-5	Moulding (front body pillar outside belt)	W/vinyl roof	(RH)*D0DZ 62026A24-A Not replaced (6/82)	(LH)*D0DZ 62026A25-A Not replaced (6/82)	1
20846-7	Moulding (front door window frame top)		(RH) D2DZ 6220846-A	(LH) D2DZ 6220847-A	1
20934-5	Moulding (front door outside belt)		(RH)♦D3DZ 6220934-A	(LH)♦D3DZ 6220935-A	1
20982-3	Moulding (front door window frame rear)		(RH) D2DZ 6220982-A	(LH) D2DZ 6220983-A	1
29034-5	Moulding (quarter outside belt)		(RH)♦D3DZ 6229034-A	(LH)♦D3DZ 6229035-A	1
290A60-1	Moulding (quarter window outside upper)		(RH)♦D0DZ 62290A60-A	(LH)♦D0DZ 62290A61-A	1
290A66-7	Moulding (quarter window outside front)		(RH)♦D0DZ 62290A66-A	(LH)♦D0DZ 62290A67-A	1
29796-7	Moulding (quarter window outside rear)		(RH) D1DZ 6229796-A	(LH) D1DZ 6229797-A	1

♦ Includes attaching parts

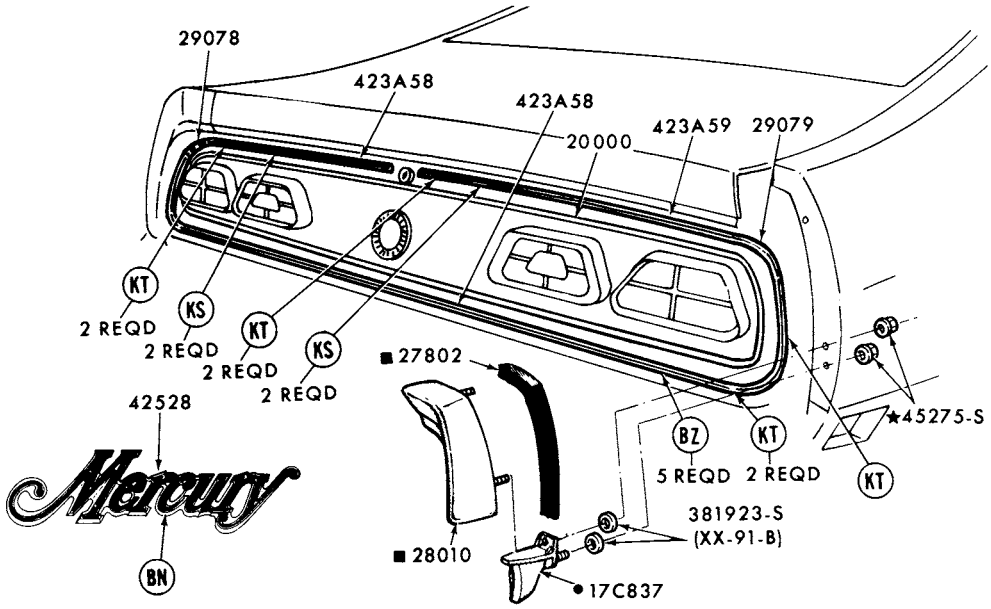

REFER TO EXTERIOR MOULDING SECTION "R" FOR COMPLETE RETAINER INFORMATION
■ REFER TO GROUP IN TEXT SECTION
● REFER TO GROUP IN CHASSIS SECTION

P-11076

1975 COMET - BACK END

GROUP NUMBER	PART NAME	DESCRIPTION	PART NUMBER		QTY.
29078-9	Moulding (quarter extension)		(RH)♠D44Y 6229078-A	(LH)♠D44Y 6229079-A	1
423A58-9	Moulding (lower back panel)	Upper	(RH)♠D44Y 62423A58-A	(LH)♠D44Y 62423A59-A	1
		Lower	♠D44Y 62423A58-B		1
42528	Plate (name)	"Mercury"	♠D44Y 6242528-A		1

♠ Includes attaching parts

COPYRIGHT © 1986 — FORD MOTOR COMPANY — DEARBORN, MICHIGAN

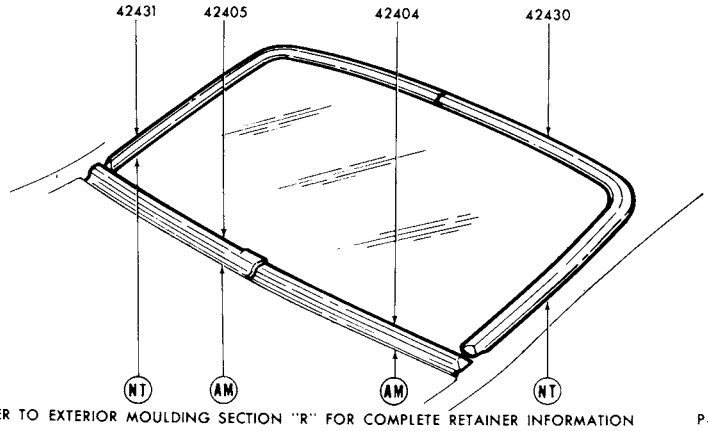

REFER TO EXTERIOR MOULDING SECTION "R" FOR COMPLETE RETAINER INFORMATION P-12468

1975 COMET - BODY TYPE 54 - BACK WINDOW

GROUP NUMBER	PART NAME	DESCRIPTION	PART NUMBER		QTY.
42404-5	Moulding (back window outside lower)		(RH)♦ D1DZ 5442404-A	(LH)♦ D1DZ 5442405-A	1
42430-1	Moulding (back window outside upper)		(RH)♦ D1DZ 5442430-A	(LH)♦ D1DZ 5442431-A	1

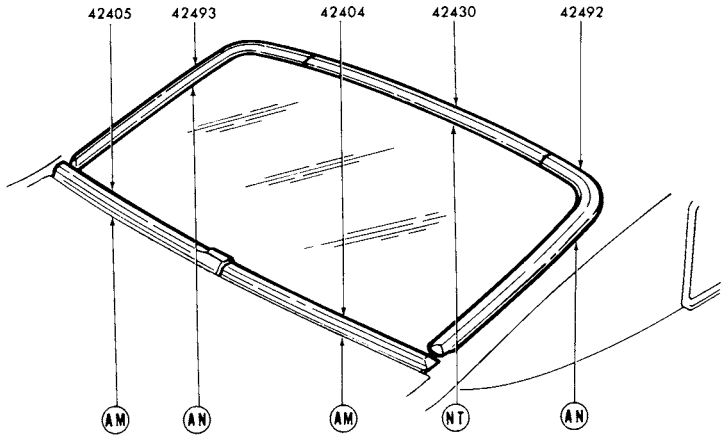

REFER TO EXTERIOR MOULDING SECTION "R" FOR COMPLETE RETAINER INFORMATION P-12467

1975 COMET - BODY TYPE 62 - BACK WINDOW

GROUP NUMBER	PART NAME	DESCRIPTION	PART NUMBER		QTY.
42404-5	Moulding (back window outside lower)		(RH)♦ D1DZ 6242404-A	(LH)♦ D1DZ 6242405-A	1
42430	Moulding (back window outside upper)		♦ D2DZ 6242430-A		1
42492-3	Moulding (back window outside side)		(RH)♦ D0DZ 6242492-A	(LH)♦ D0DZ 6242493-A	1

♦ Includes attaching parts

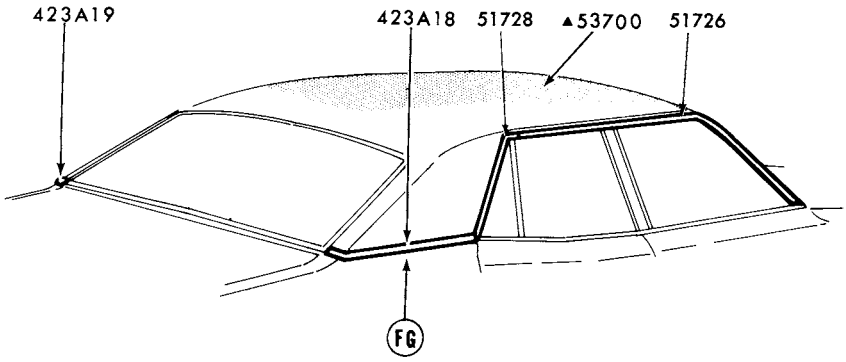

P-12012

▲ REFER TO GROUP IN SOFT TRIM SECTION

REFER TO EXTERIOR MOULDING SECTION'R' FOR COMPLETE RETAINER INFORMATION

1975 COMET - BODY TYPE 54 - ROOF and BACK BELT

GROUP NUMBER	PART NAME	DESCRIPTION	PART NUMBER		QTY.
423A18-9	Moulding (back belt outside side)		(RH)♦D1DZ 54423A18-A	(LH)♦D1DZ 54423A19-A	1
51726-7	Moulding (roof drip side finish)	Front-w/o vinyl roof	(RH) D3DZ 5451726-A	(LH)★D3DZ 5451727-A Not replaced (6/83)	1
			(RH) D1DZ 5451726-C	(LH) D1DZ 5451727-C	1
		Front-w/vinyl roof	(RH) D1DZ 5451726-B	(LH) D1DZ 5451727-B	1

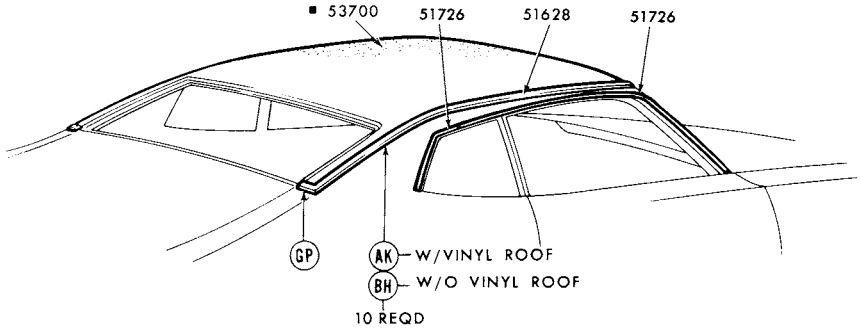

■REFER TO GROUP IN SOFT TRIM SECTION
REFER TO EXTERIOR MOULDING SECTION "R" FOR COMPLETE RETAINER INFORMATION

P-10374

1975 COMET - BODY TYPE 62 - ROOF and BACK BELT

GROUP NUMBER	PART NAME	DESCRIPTION	PART NUMBER		QTY.
51628-9	Moulding (roof outside side)		(RH)♦D3DZ 6251628-A	(LH)♦D3DZ 6251629-A	1
51726-7	Moulding (roof drip side finish)	Front-w/o vinyl roof	(RH) D0DZ 6251726-A	(LH) D0DZ 6251727-A	1
		Rear-w/o vinyl roof	(RH) D0DZ 6251726-C	(LH)★D0DZ 6251727-C Not replaced (6/83)	1
		Front-w/vinyl roof	(RH) D0DZ 6251726-B	(LH)★D0DZ 6251727-B Not replaced (4/84)	1
		Rear-w/vinyl roof	(RH)★D0DZ 6251726-D Not replaced (6/82)	(LH)★D0DZ 6251727-D Not replaced (6/82)	1

♦ Includes attaching parts

COPYRIGHT © 1986 — FORD MOTOR COMPANY — DEARBORN, MICHIGAN

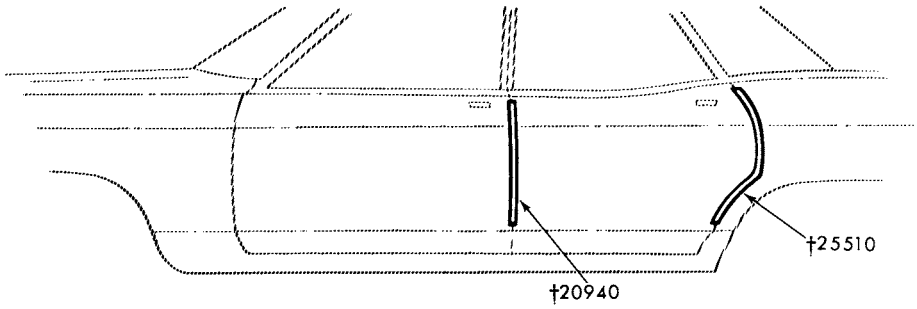

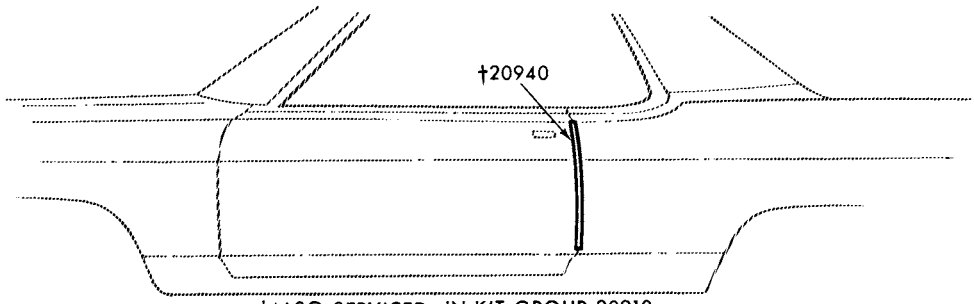

†ALSO SERVICED IN KIT-GROUP 20910

P-10061

1975 COMET - DOOR EDGE GUARDS

GROUP NUMBER	PART NAME	DESCRIPTION	PART NUMBER	QTY.
20910	Moulding kit (door edge guard)	Body type 54	D1DZ 5420910-A	1
		Body type 62	D0DZ 6220910-A	1
20940-1	Moulding (front door edge guard)	Body type 54	(RH) D2DZ 5420940-A (LH) D2DZ 5420941-A	1
		Body type 62	(RH) D2DZ 6220940-A (LH) D2DZ 6220941-A	1
25510-1	Moulding (rear door edge guard)	Body type 54	(RH) D2DZ 5425510-A (LH) D2DZ 5425511-A	1

♦ Includes attaching parts

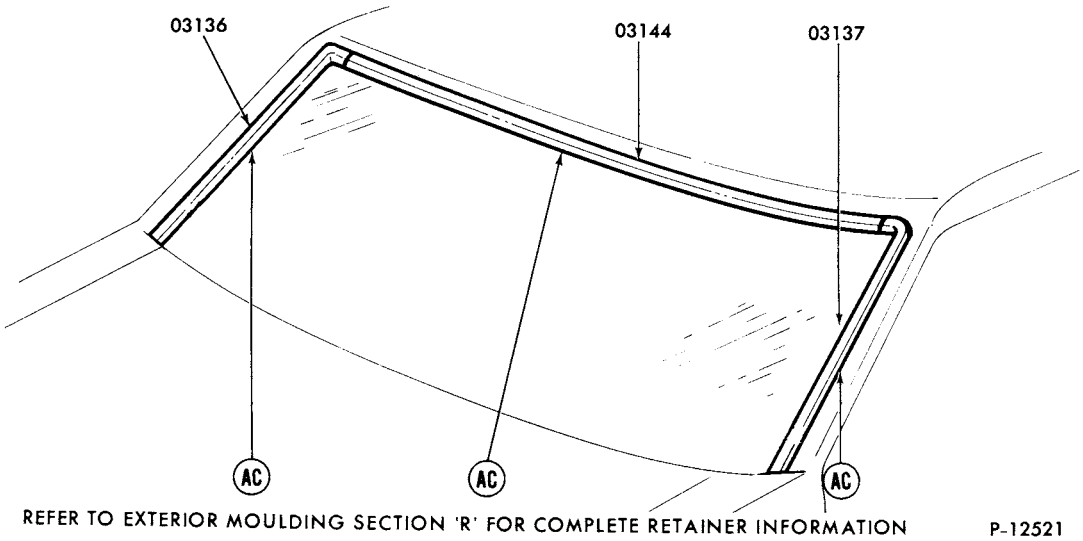

1975 METEOR - WINDSHIELD

GROUP NUMBER	PART NAME	DESCRIPTION	PART NUMBER		QTY.
03136-7	Moulding (windshield outside side)	Body types 53, 71	(RH)♦D7AZ 5303136-A	(LH)♦D7AZ 5303137-A	1
		Body type 65	(RH)♦D7AZ 6003136-A	(LH)♦D7AZ 6003137-A	1
03144	Moulding (windshield outside top)	Body types 53, 71	♦D7AZ 5303144-A		1
		Body type 65	♦D7AZ6003144-A		1

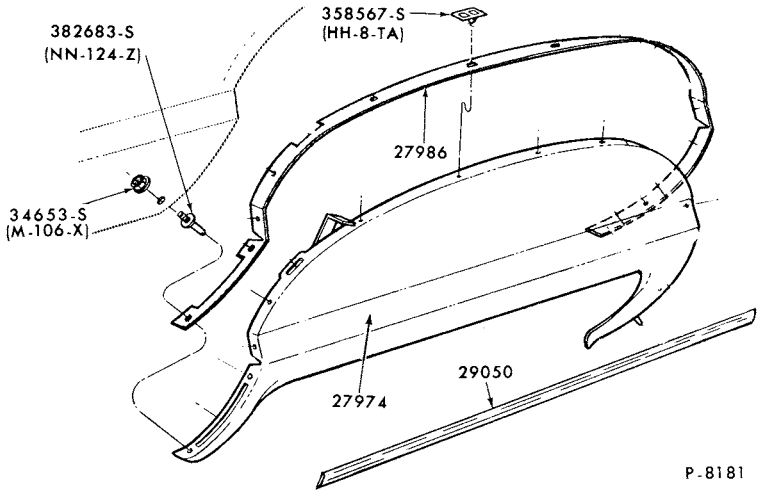

1975 METEOR - BODY TYPES 53 and 65 - WHEEL OPENING COVER PARTS

GROUP NUMBER	PART NAME	DESCRIPTION	PART NUMBER		QTY.
27974-5	Panel (quarter wheel opening cover)		(RH) ♦D3MY 6527974-A	(LH) ♦D3MY 6527975-A	1
27986-7	Seal (quarter wheel opening cover)		(RH) ♦D3MY 6527986-A	(LH) ♦D3MY 6527987-A	1
29050-1	Moulding (quarter wheel opening cover)		(RH) ♦D3MY 6529050-B	(LH) ♦D3MY 6529051-B	1

♦ Includes attaching parts

COPYRIGHT © 1986 — FORD MOTOR COMPANY — DEARBORN, MICHIGAN

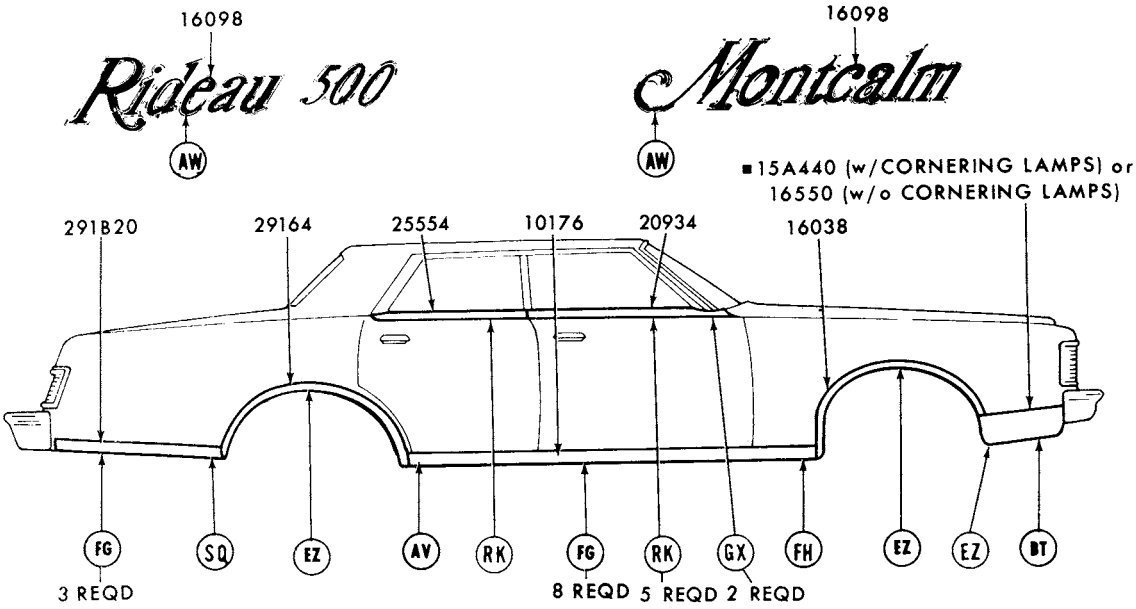

■ REFER TO GROUP IN CHASSIS SECTION
REFER TO EXTERIOR MOULDING SECTION 'R' FOR COMPLETE RETAINER INFORMATION P-12029

1975 METEOR - BODY TYPE 53 - SIDE - w/o WHEEL OPENING COVER

GROUP NUMBER	PART NAME	DESCRIPTION	PART NUMBER		QTY.
10176-7	Moulding (body rocker panel)	90 7/32" long	(RH)♦D3MY 6510176-A	(LH)♦D3MY 6510177-A	1
16038-9	Moulding (front fender wheel opening)	W/rocker panel moulding	(RH)♦D5MY 16038-A	(LH)♦D5MY 16039-A	1
		W/o rocker panel moulding	(RH)♦D5MY 16038-C	(LH)♦D5MY 16039-C	1
16098	Plate (name)	"Montcalm"	♦D3MY 16098-C		2
		"Rideau"	♦D3MY 16098-D		2
		"500"	♦D3MY 16098-E		2
16550-1	Moulding (front fender lower front)		(RH)♦D5MY 16550-A	(LH)♦D5MY 16551-A	1
20934-5	Moulding (front door outside belt)	Incl. weatherstrip	(RH)♦D5AZ 5320934-B	(LH)♦D5AZ 5320935-B	1
25554-5	Moulding (rear door outside belt)	Incl. weatherstrip	(RH)♦D5AZ 5325554-A	(LH)♦D5AZ 5325555-A	1
291B20-1	Moulding (quarter lower)		(RH)♦D4MY 65291B20-A	(LH)♦D4MY 65291B21-A	1
29164-5	Moulding (quarter wheel opening)	W/o rocker panel moulding	(RH)♦D4MY 6529164-A	(LH)♦D4MY 6529165-A	1
		W/rocker panel moulding	(RH)♦D5MY 6529164-A	(LH)♦D5MY 6529165-A	1

♦ Includes attaching parts

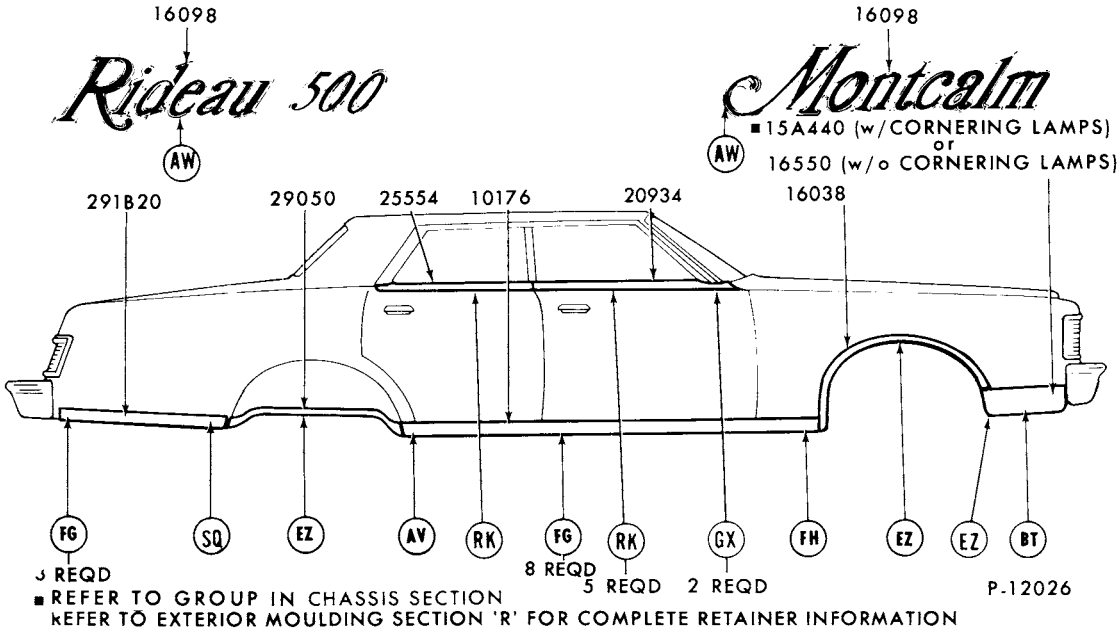

1975 METEOR - BODY TYPE 53 - SIDE - w/WHEEL OPENING COVER

GROUP NUMBER	PART NAME	DESCRIPTION	PART NUMBER		QTY.
10176-7	Moulding (body rocker panel)	90 7/32" long	(RH)♦D3MY 6510176-A	(LH)♦D3MY 6510177-A	1
16038-9	Moulding (front fender wheel opening)	W/rocker panel moulding	(RH)♦D3MY 6510176-A	(LH)♦D3MY 6510177-A	1
		W/o rocker panel moulding	(RH)♦D5MY 16038-C	(LH)♦D5MY 16039-C	1
16098	Plate (name)	"Montcalm"	♦D3MY 16098-C		2
		"Rideau"	♦D3MY 16098-D		2
		"500"	♦D3MY 16098-E		2
16550-1	Moulding (front fender lower front)		(RH)♦D5MY 16550-A	(LH)♦D5MY 16551-A	1
20934-5	Moulding (front door outside belt)	Incl. weatherstrip	(RH)♦D5AZ 5320934-B	(LH)♦D5AZ 5320935-B	1
25554-5	Moulding (rear door outside belt)		(RH)♦D5AZ 5325554-A	(LH)♦D5AZ 5325555-A	1
29050-1	Moulding (quarter wheel opening cover)		(RH)♦D3MY 6529050-A	(LH)♦D3MY 6529051-A	1
291B20-1	Moulding (quarter lower)		(RH)♦D4MY 65291B20-A	(LH)♦D4MY 65291B21-A	1

♦ Incl. attaching parts

COPYRIGHT © 1986 — FORD MOTOR COMPANY — DEARBORN, MICHIGAN

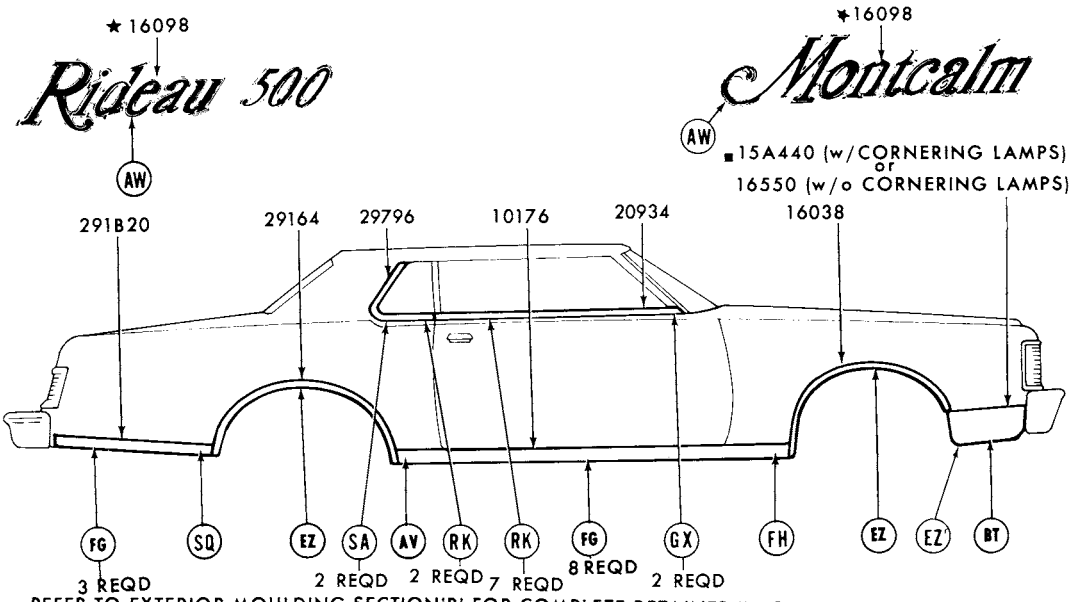

1975 METEOR - BODY TYPE 65 - SIDE - w/o WHEEL OPENING COVER

GROUP NUMBER	PART NAME	DESCRIPTION	PART NUMBER		QTY.
10176-7	Moulding (body rocker panel)	90 7/32" long	(RH)♦D3MY 6510176-A	(LH)♦D3MY 6510177-A	1
16038-9	Moulding (front fender wheel opening)	W/rocker panel moulding	(RH)♦D5MY 16038-A	(LH)♦D5MY 16039-A	1
		W/o rocker panel moulding	(RH)♦D5MY 16038-C	(LH)♦D5MY 16039-C	1
16098	Plate (name)	"Montcalm"	★D3MY 16098-C	Not replaced(4/84)	2
		"Rideau"	★D3MY 16098-D	Not replaced (4/84)	2
		"500"	★D3MY 16098-E	Not replaced(4/84)	2
16550-1	Moulding (front fender lower front)		(RH)♦D5MY 16550-A	(LH)♦D5MY 16551-A	1
20934-5	Moulding (door outside belt)	Incl. weatherstrip	(RH)♦D5AZ 6020934-A	(LH)♦D5AZ 6020935-A	1
291B20-1	Moulding (quarter lower)		(RH)♦D4MY 65291B20-A	(LH)♦D4MY 65291B21-A	1
29164-5	Moulding (quarter wheel opening)	W/o rocker panel moulding	(RH)♦D4MY 6529164-A	(LH)♦D4MY 6529165-A	1
		W/rocker panel moulding	(RH)♦D3MY 6529164-A	(LH)♦D3MY 6529165-A	1
29796-7	Moulding (quarter window outside)		(RH) D5MY 6529796-A	(LH) D5MY 6529797-A	1

♦ Includes attaching parts

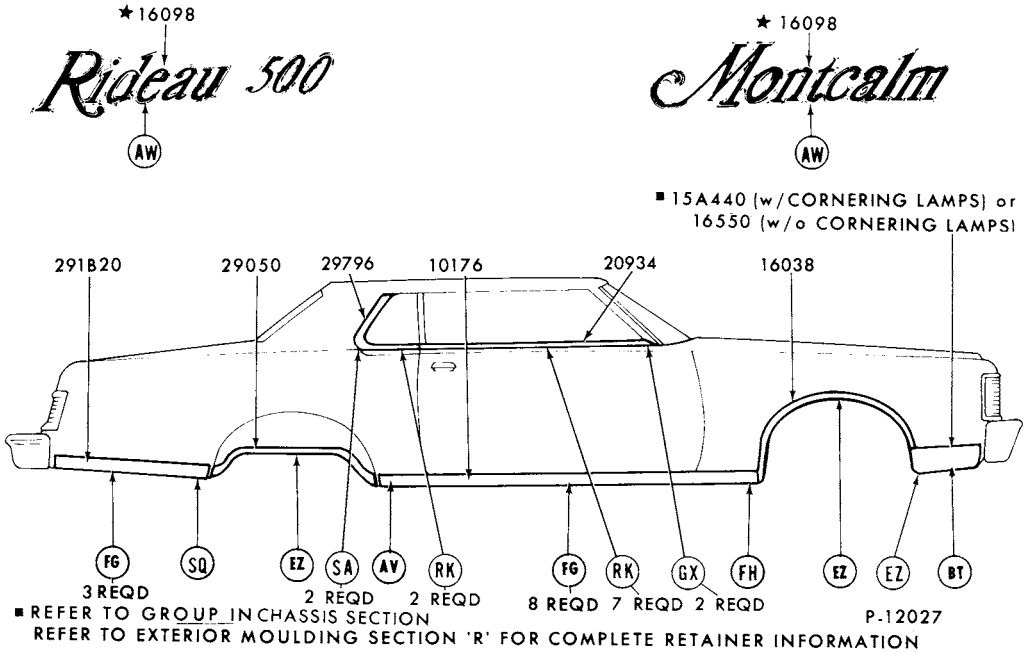

1975 METEOR - BODY TYPE 65 - SIDE - w/WHEEL OPENING COVER

GROUP NUMBER	PART NAME	DESCRIPTION	PART NUMBER		QTY.
10176-7	Moulding (body rocker panel)	90 7/32" long	(RH)♦D3MY 6510176-A	(LH)♦D3MY 6510177-A	1
16038-9	Moulding (front fender wheel opening)	W/rocker panel moulding	(RH)♦D5MY 16038-A	(LH)♦D5MY 16039-A	1
		W/o rocker panel moulding	(RH)♦D5MY 16038-C	(LH)♦D5MY 16039-C	1
16098	Plate (name)	"Montcalm"	★D3MY 16098-C	Not replaced (4/84)	2
		"Rideau"	★D3MY 16098-D	Not replaced (4/84)	2
		"500"	★D3MY 16098-E	Not replaced (4/84)	2
16550-1	Moulding (front fender lower front)		(RH)♦D5MY 16550-A	(LH)♦D5MY 16551-A	1
20934-5	Moulding (door outside belt)	Incl. weatherstrip	(RH)♦D5AZ 6020934-A	(LH)♦D5AZ 6020935-A	1
29050-1	Moulding (quarter wheel opening cover)		(RH)♦D3MY 6529050-A	(LH)♦D3MY 6529051-A	1
291B20-1	Moulding (quarter lower)		(RH)♦D4MY 65291B20-A	(LH)♦D4MY 65291B21-A	1
29796-7	Moulding (quarter window outside)		(RH) D5MY 6529796-A	(LH) D5MY 6529797-A	1

♦ Includes attaching parts

COPYRIGHT © 1986 — FORD MOTOR COMPANY — DEARBORN, MICHIGAN

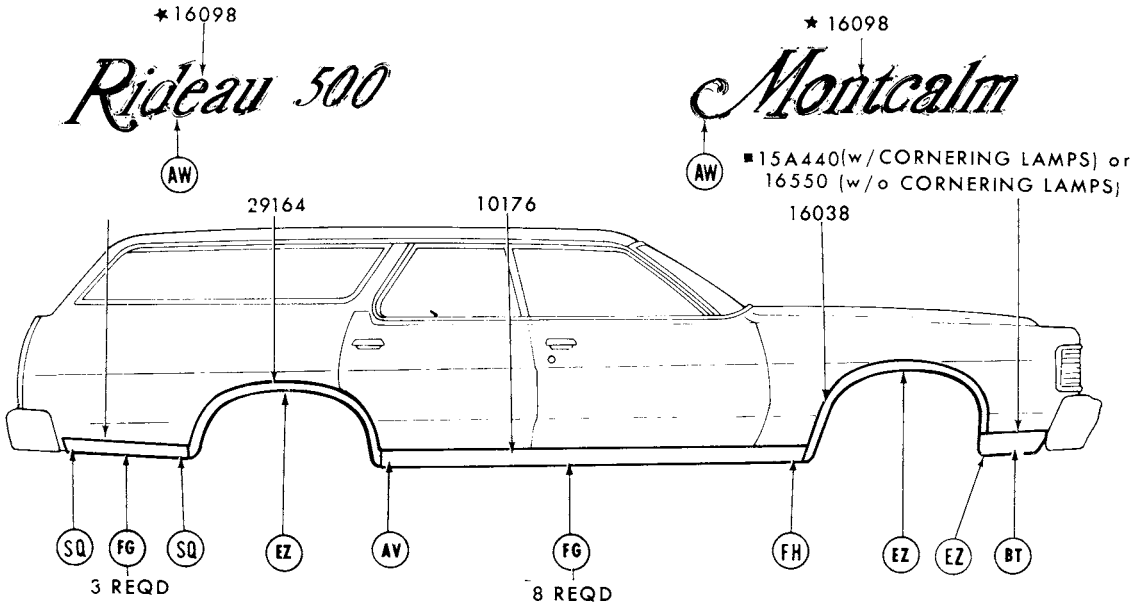

■ REFER TO GROUP IN CHASSIS SECTION
REFER TO EXTERIOR MOULDING SECTION 'R' FOR COMPLETE RETAINER INFORMATION

1975 METEOR - BODY TYPE 71 - SIDE

GROUP NUMBER	PART NAME	DESCRIPTION	PART NUMBER		QTY.
10176-7	Moulding (body rocker panel)	87 3/4" long	(RH)♦D3MY 7110176-A	(LH)♦D3MY 7110177-A	1
16038-9	Moulding (front fender wheel opening)	W/rocker panel moulding	(RH)♦D5MY 16038-A	(LH)♦D5MY 16039-A	1
		W/o rocker panel moulding	(RH)♦D5MY 16038-C	(LH)♦D5MY 16039-C	1
16098	Plate (name)	"Montcalm"	★D3MY 16098-C	Not replaced (4/84)	2
		"Rideau"	★D3MY 16098-D	Not replaced (4/84)	2
		"500"	★D3MY 16098-E	Not replaced (4/84)	2
16550-1	Moulding (front fender lower front)		(RH)♦D5MY 16550-A	(LH)♦D5MY 16551-A	1
291B20-1	Moulding (quarter outside lower)		(RH)♦D5MY 71291B20-A	(LH)♦D5MY 71291B21-A	1
29164-5	Moulding (quarter panel wheel opening)	W/rocker panel and lower rear quarter moulding	(RH)♦D5MY 7129164-A	(LH)♦D5MY 7129165-A	1
		W/o rocker panel moulding and w/o lower quarter moulding	(RH)♦D5MY 7129164-B	(LH)♦D5MY 7129165-B	1
		W/rocker panel moulding and w/o lower quarter moulding	(RH)♦D5MY 7129164-C	(LH)♦D5MY 7129165-C	1

♦ Includes attaching parts

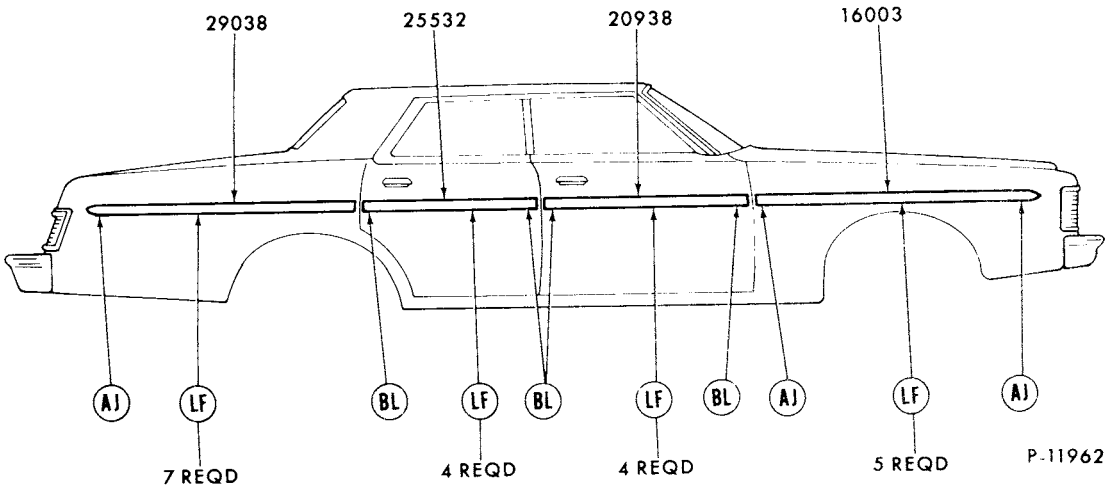

REFER TO EXTERIOR MOULDING SECTION "R" FOR COMPLETE RETAINER INFORMATION

1975 METEOR - BODY TYPE 53 - SIDE PROTECTION

GROUP NUMBER	PART NAME	DESCRIPTION	PART NUMBER		QTY.
16003-4	Moulding (front fender side)	Black vinyl insert	(RH)♦D3MY 16003-B	(LH)♦D3MY 16004-B	1
		Bright finish	(RH)♦D3MY 16003-D	(LH)♦D3MY 16004-D	1
20934-5	Moulding (front door outside belt)	Incl. weatherstrip	(RH)♦D5AZ 5320934-B	(LH)♦D5AZ 5320935-B	1
20938-9	Moulding (front door outside)	Black vinyl insert	(RH)♦D3MY 5320938-A	(LH)♦D3MY 5320939-A	1
		Bright finish	(RH)♦D3MY 5320938-B	(LH)♦D3MY 5320939-B	1
25532-3	Moulding (rear door outside)	Black vinyl insert	(RH)♦D3AZ 5325532-A	(LH)♦D3AZ 5325533-A	1
		Bright finish	(RH)♦D3MY 5325532-B	(LH)♦D3MY 5325533-B	1
25554-5	Moulding (rear door outside belt)	Incl. weatherstrip	(RH)♦D5AZ 5325554-A	(LH)♦D5AZ 5325555-A	1
29038-9	Moulding (quarter outside)	Black vinyl insert	(RH)♦D3MY 5329038-A	(LH)♦D3MY 5329039-A	1
		Bright finish	(RH)♦D3MY 5329038-B	(LH)♦D3MY 5329039-B	1

♦ Includes attaching parts

COPYRIGHT © 1986 — FORD MOTOR COMPANY — DEARBORN MICHIGAN

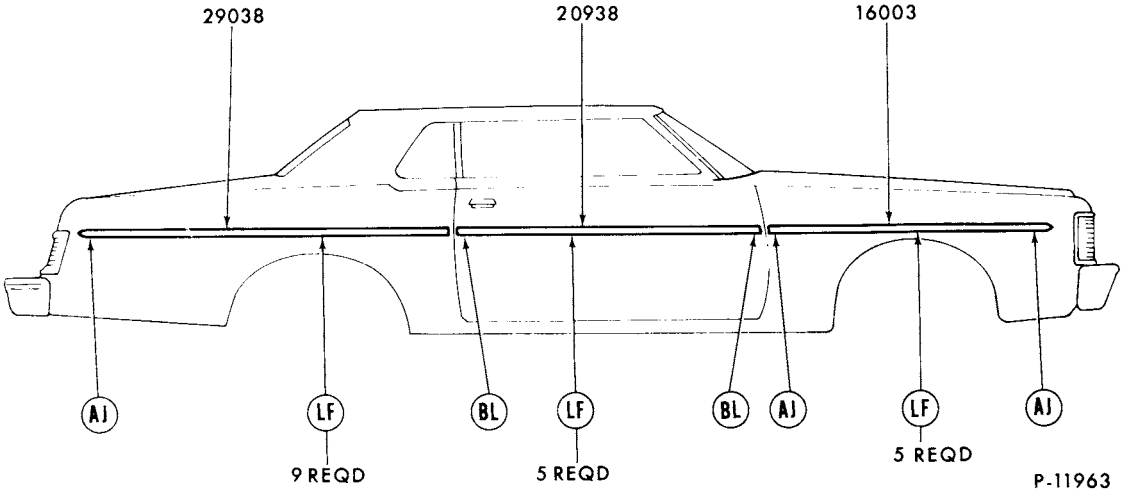

REFER TO EXTERIOR MOULDING SECTION "R" FOR COMPLETE RETAINER INFORMATION

1975 METEOR - BODY TYPE 65 - SIDE PROTECTION

GROUP NUMBER	PART NAME	DESCRIPTION	PART NUMBER		QTY.
16003-4	Moulding (front fender side)	Black vinyl insert	(RH)♦D3MY 16003-B	(LH)♦D3MY 16004-B	1
		Bright finish	(RH)♦D3MY 16003-D	(LH)♦D3MY 16004-D	1
20934-5	Moulding (door outside belt)	Incl. weatherstrip	(RH)♦D5AZ 6020934-A	(LH)♦D5AZ 6020935-A	1
20938-9	Moulding (front door outside)	Black vinyl insert	(RH)♦D3AZ 6520938-A	(LH)♦D3MY 6520939-A	1
		Bright finish	(RH)♦D3MY 6520938-B	(LH)♦D3MY 6520939-B	1
29038-9	Moulding (quarter outside)	Black vinyl insert	(RH)♦D3MY 6529038-A	(LH)♦D3MY 6529039-A	1
		Bright finish	(RH)♦D3MY 6529038-C	(LH)♦D3MY 6529039-C	1
29796-7	Moulding (quarter window outside)		(RH) D5MY 6529796-A	(LH) D5MY 6529797-A	1

♦ Includes attaching parts

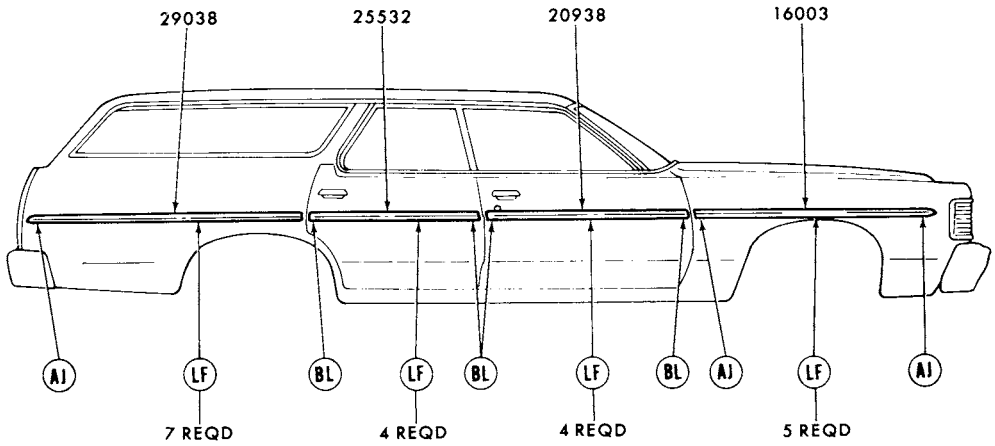

REFER TO EXTERIOR MOULDING SECTION "R" FOR COMPLETE RETAINER INFORMATION P-11964

1975 METEOR - BODY TYPE 71 - SIDE PROTECTION

GROUP NUMBER	PART NAME	DESCRIPTION	PART NUMBER		QTY.
16003-4	Moulding (front fender side)	Black vinyl insert	(RH)♦D3MY 16003-B	(LH)♦D3MY 16004-B	1
		Bright finish	(RH)♦D3MY 16003-D	(LH)♦D3MY 16004-D	1
20938-9	Moulding (front door outside)	Black vinyl insert	(RH)♦D3MY 5320938-A	(LH)♦D3MY 5320939-A	1
		Bright finish	(RH)♦D3MY 5320938-B	(LH)♦D3MY 5320939-B	1
25532-3	Moulding (rear door outside)	Black vinyl insert	(RH)♦D3AZ 5325532-A	(LH)♦D3AZ 5325533-A	1
		Bright finish	(RH)♦D3MY 5325532-B	(LH)♦D3MY 5325533-B	1
29038-9	Moulding (quarter outside)	Black vinyl insert	(RH)♦D3MY 7129038-A	(LH)♦D3MY 7129039-A	1
		Bright finish	(RH)♦D3MY 7129038-D	(LH)♦D3MY 7129039-D	1

♦ Includes attaching parts

COPYRIGHT © 1986 — FORD MOTOR COMPANY — DEARBORN, MICHIGAN

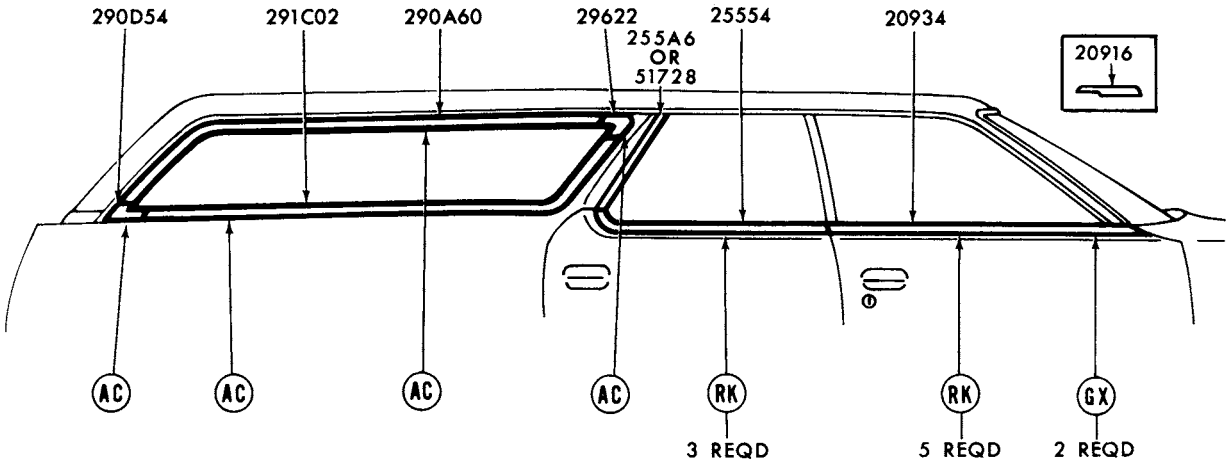

P-12501

1975 METEOR - BODY TYPE 71 - DOOR and QUARTER WINDOW FRAME

GROUP NUMBER	PART NAME	DESCRIPTION	PART NUMBER		QTY.
20916-7	Moulding (front door outside belt-front)		(RH)♦D5AZ 5320916-A	(LH)♦D5AZ 5320917-A	1
20934-5	Moulding (front door outside belt)	Incl. weatherstrip	(RH)♦D5AZ 5320934-B	(LH)♦D5AZ 5320935-B	1
25554-5	Moulding (rear door outside belt)	Incl. weatherstrip	(RH)♦D5AZ 5325554-A	(LH)♦D5AZ 5325555-A	1
255A62-3	Moulding (rear door window outside)		(RH)♦D5AZ 71255A62-A	(LH)♦D5AZ 71255A63-A	1
290D54-5	Moulding (quarter window outside lower rear corner)		(RH)♦D5AZ 71290D54-A	(LH)♦D5AZ 71290D55-A	1
290A60-1	Moulding (quarter window		(RH)♦D5AZ 71290A60-A	(LH)♦D5AZ 71290A61-A	1
291C02-3	Moulding (quarter window outside lower rear)		(RH)♦D5AZ 71291C02-A	(LH)♦D5AZ 71291C03-A	1
29622-3	Moulding (quarter window outside front)		(RH)♦D5AZ 7129622-A	(LH)♦D5AZ 7129623-A	1

♦ Includes attaching parts

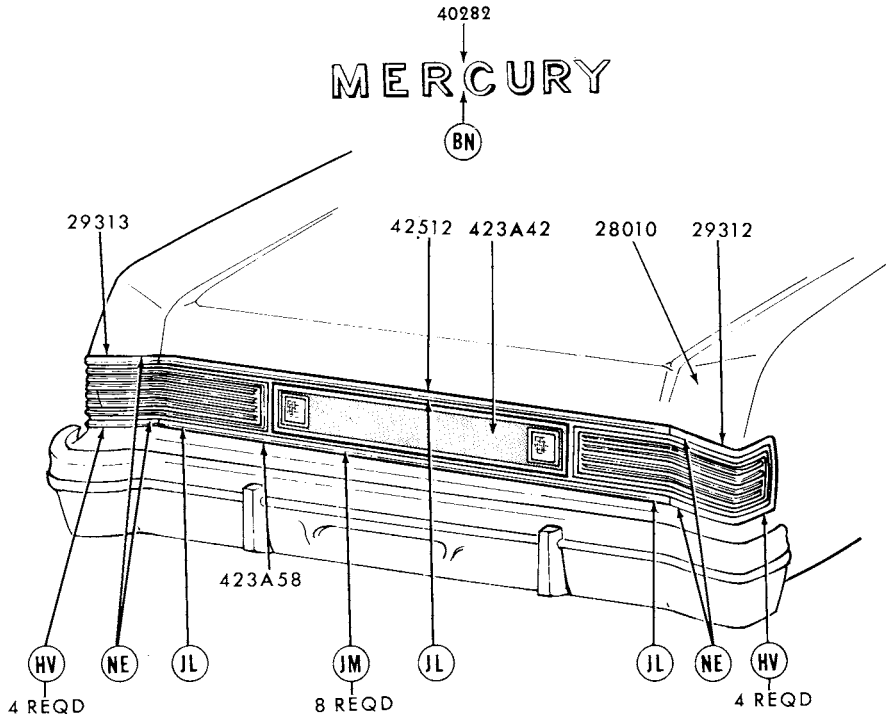

REFER TO EXTERIOR MOULDING SECTION "R" FOR COMPLETE RETAINER INFORMATION

P-11984

1975 METEOR - BODY TYPES 53 and 65 - BACK END

GROUP NUMBER	PART NAME	DESCRIPTION	PART NUMBER		QTY.
28010-1	Extension (quarter rear)		(RH)♦D5MY 6528010-A	(LH)♦D5MY 6528011-A	1
29312-3	Moulding (quarter rear extension)		(RH)♦D5MY 6529312-A	(LH)♦D5MY 6529313-A	1
40282	Letter (name)	"M"	♦D3MY 7140282-A		1
		"E"	♦D3MY 7140282-B		1
		"R"	♦D3MY 7140282-C		2
		"C"	♦D3MY 7140282-D		1
		"U"	♦D3MY 7140282-E		1
		"Y"	♦D3MY 7140282-F		1
423A42	Panel (lower back panel)	Black	D5MY 65423A42-M		1
		Blue	D5MY 65423A42-J		1
		Brown	★D5MY 65423A42-G	Not replaced (6/82)	1
		Green	★D5MY 65423A42-K	Not replaced (6/82)	1
		Red	★D5MY 65423A42-H	Not replaced (7/81)	1
		Tan	★D5MY 65423A42-L	Not replaced (7/81)	1
423A58	Moulding (lower back panel)		♦D5MY 65423A58-B		1
42512	Moulding (luggage compartment door)		♦D5MY 6542512-A		1

COPYRIGHT © 1986 — FORD MOTOR COMPANY — DEARBORN, MICHIGAN

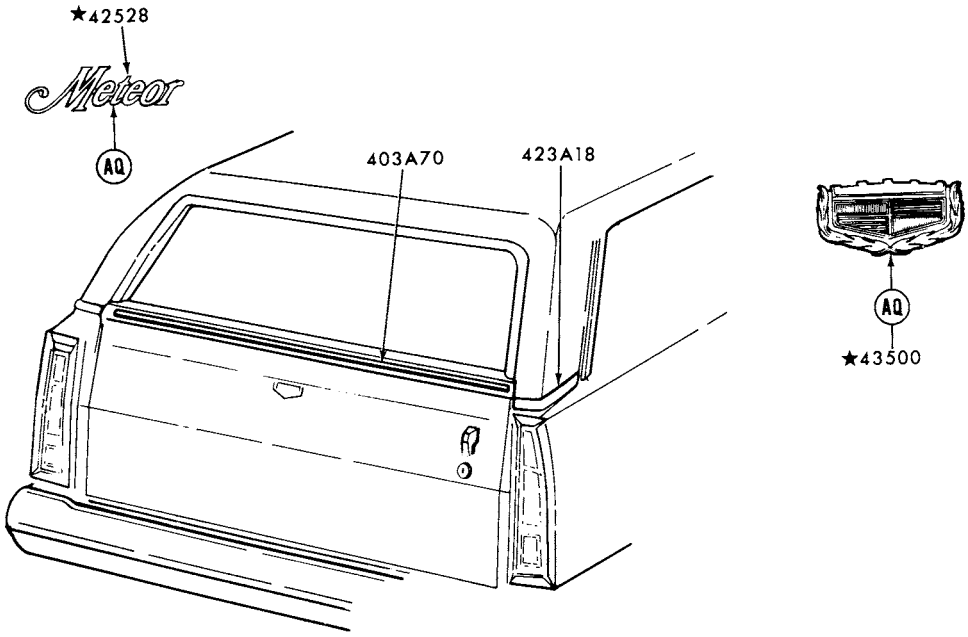

REFER TO EXTERIOR MOULDING SECTION "R" FOR COMPLETE RETAINER INFORMATION P-12278

1975 METEOR - BODY TYPE 71 - BACK END

GROUP NUMBER	PART NAME	DESCRIPTION	PART NUMBER	QTY.
403A70	Moulding (tailgate outside belt)	W/wash and wipe	★D4AZ 71403A70-D	1
		W/o wash and wipe	★♦D4AZ 71403A70-E Not replaced (7/81)	1
42528	Plate (name)	"Meteor"	♦D3MY 6542528-B	1

♦ Includes attaching parts

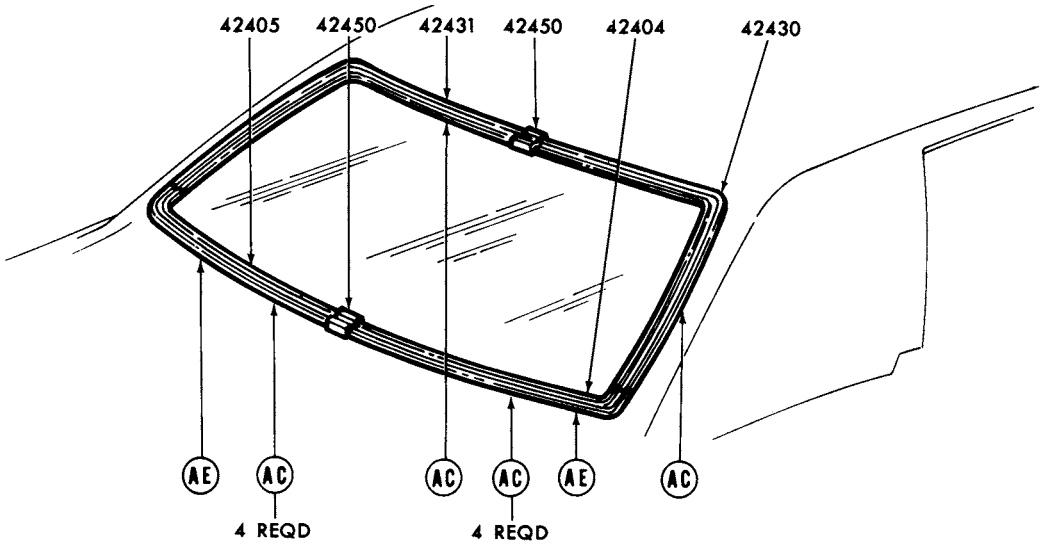

REFER TO EXTERIOR MOULDING SECTION "R" FOR COMPLETE RETAINER INFORMATION

P-12460

1975 METEOR - BODY TYPE 53 - BACK WINDOW

GROUP NUMBER	PART NAME	DESCRIPTION	PART NUMBER	QTY.
42404-5	Moulding (back window outside lower)		(RH)♦ D3AZ 5342404-A (LH)♦ D3AZ 5342405-A	1
42430-1	Moulding (back window outside upper)		(RH)♦ D7AZ 5342430-A (LH)♦ D7AZ 5342431-A	1
42450	Cover (back window outside moulding joint)	Lower	D5AZ 5342450-A	1
		Upper	D5AZ 5342450-B	1

♦ Includes attaching parts

COPYRIGHT © 1986 — FORD MOTOR COMPANY — DEARBORN, MICHIGAN

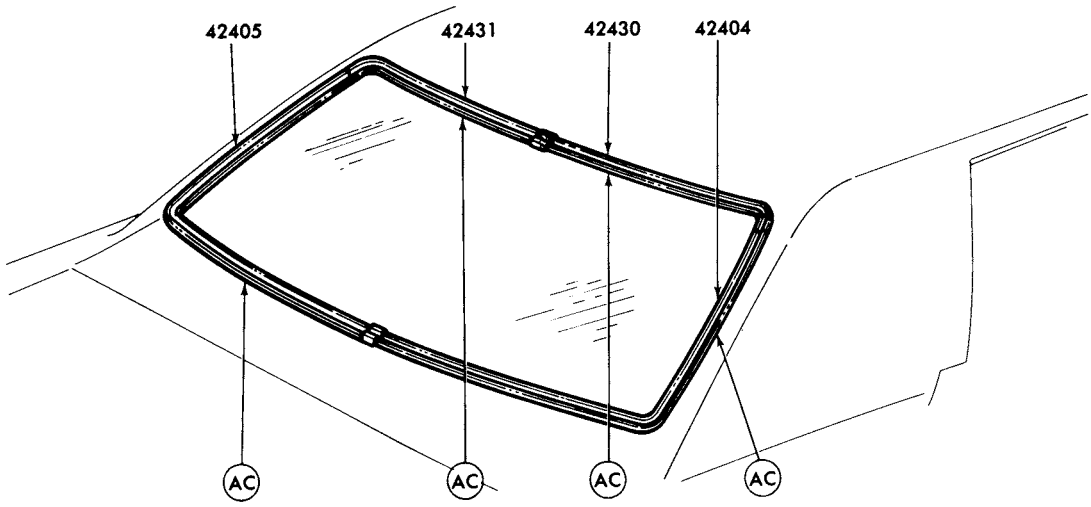

REFER TO EXTERIOR MOULDING SECTION "R" FOR COMPLETE RETAINER INFORMATION

P-12487

1975 METEOR - BODY TYPE 65 - BACK WINDOW

GROUP NUMBER	PART NAME	DESCRIPTION	PART NUMBER		QTY.
42404-5	Moulding (back window outside lower)		(RH)♦ D5MY 6042404-A	(LH)♦ D5MY 6042405-A	1
42430-1	Moulding (back window outside upper)		(RH)♦ D7AZ 6042430-A	(LH)♦ D7AZ 6042431-A	1

♦ Includes attaching parts

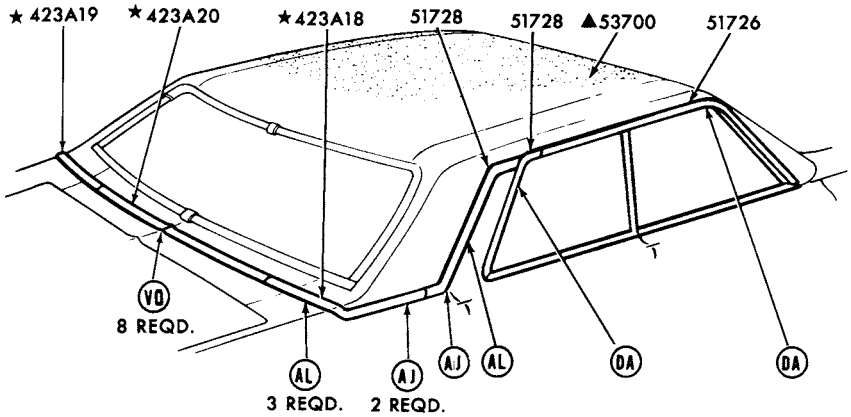

▲ REFER TO GROUP IN SOFT TRIM SECTION
REFER TO EXTERIOR MOULDING SECTION 'R' FOR COMPLETE RETAINER INFORMATION

P-13420

1975 METEOR - BODY TYPE 53 - ROOF and BACK BELT

GROUP NUMBER	PART NAME	DESCRIPTION	PART NUMBER		QTY.
51726-9	Moulding (roof drip side finish)	Front	(RH) D5AZ 5351726-A	(LH) D5AZ 5351727-A	1
		Rear	(RH) D5AZ 5351728-A	(LH) D5AZ 5351729-A	1
51728-9	Moulding (roof drip side finish)	Blue-w/halo roof	(RH★D5MY 5351728-D Not replaced (4/79)	(LH)★D5MY 5351729-D Not replaced (4/79)	1
		Brown-w/halo roof	★(RH) D5MY 5351728-A Not replaced (6/81)	(LH) D5MY 5351729-A	1
		Gold-w/halo roof	(RH) D6MY 5351728-B	(LH) D6MY 5351729-B	1
		Green-w/halo roof	(RH) D5MY 5351728-E	(LH) D5MY 5351729-E	1
		Red-w/halo roof	(RH) D6MY 5351728-A	(LH) D5MY 5351729-A	1
		White-w/halo roof	(RH) D5MY 5351728-B	(LH) D5MY 5351729-B	1

◊ For color verification, refer to the vinyl roof swatches in the 1975 salesman's color and upholstery selections guide.
♦ Includes attaching parts
† Prime - paint to match

COPYRIGHT © 1986 — FORD MOTOR COMPANY — DEARBORN, MICHIGAN

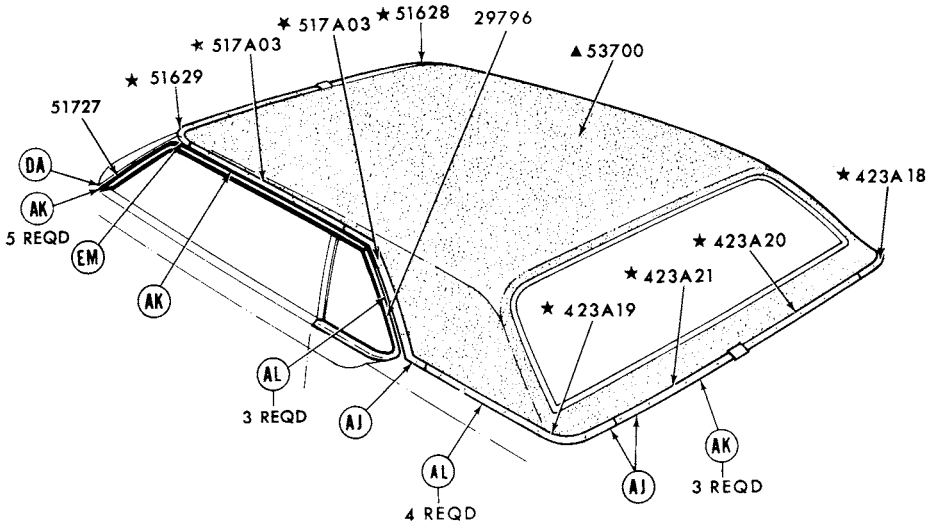

▲REFER TO GROUP IN SOFT TRIM SECTION
REFER TO EXTERIOR MOULDING SECTION "R" FOR COMPLETE RETAINER INFORMATION

P-10120

1975 METEOR - BODY TYPE 65 - ROOF and BACK BELT - w/HALO VINYL ROOF

GROUP NUMBER	PART NAME	DESCRIPTION	PART NUMBER	QTY.
29796-7	Moulding (quarter window outside)		(RH) D5MY 6529796-A (LH) D5MY 6529797-A	1
51726-7	Moulding (roof drip side finish)	Front	(RH) D5MY 6551726-A (LH) D5MY 6551727-A	1

♦ Includes attaching parts

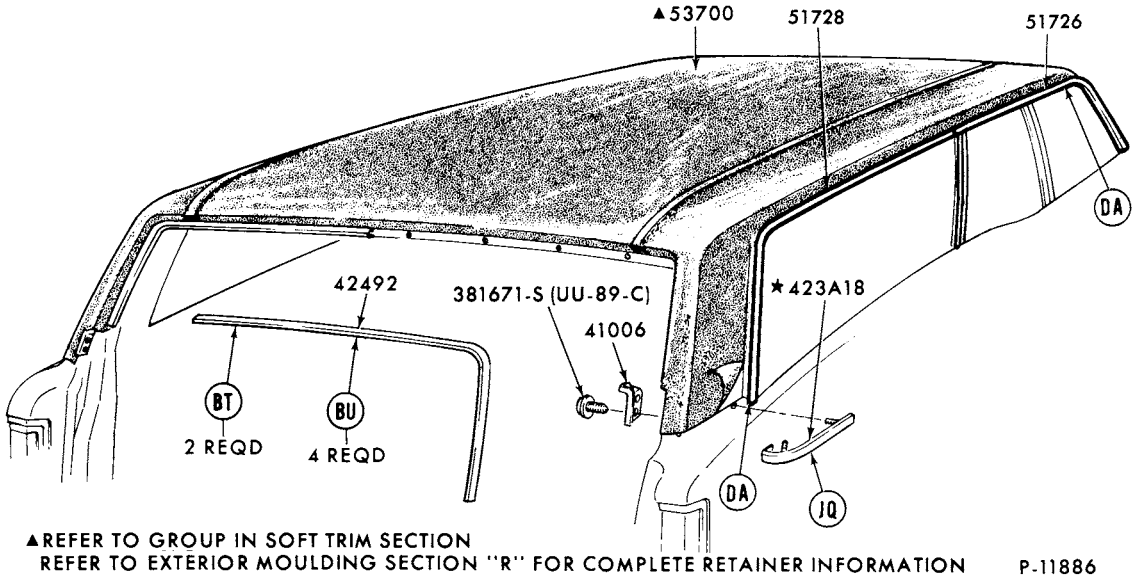

▲REFER TO GROUP IN SOFT TRIM SECTION
REFER TO EXTERIOR MOULDING SECTION "R" FOR COMPLETE RETAINER INFORMATION P-11886

1975 METEOR - BODY TYPE 71 - ROOF and BACK BELT

GROUP NUMBER	PART NAME	DESCRIPTION	PART NUMBER		QTY.
41006-7	Retainer (rear corner pillar cover)		(RH) D5AZ 7141006-A	(LH) D5AZ 7141007-A	1
42492-3	Moulding (back window outside side)		(RH)♠D3AZ 7142492-A	(LH)♠D3AZ 7142493-A	1
51726-9	Moulding (roof drip side finish)	Front	(RH) D5AZ 7151726-A	(LH) D5AZ 7151727-A	1
		Rear	(RH) D5AZ 7151728-A	(LH)✱D5AZ 7151729-A Not replaced (6/82)	1

COPYRIGHT © 1986 — FORD MOTOR COMPANY — DEARBORN, MICHIGAN

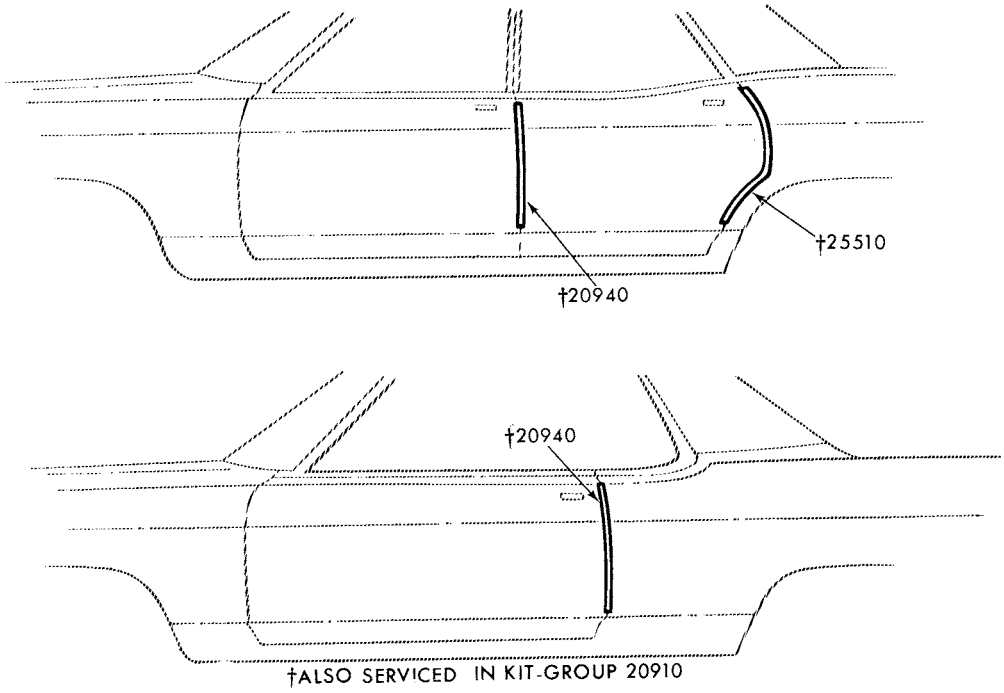

1976 METEOR - DOOR EDGE GUARDS

GROUP NUMBER	PART NAME	DESCRIPTION	PART NUMBER		QTY.
20940-1	Moulding (front door edge guard)	Bright-body types 53 and 71	(RH) D3MY 5320940-A	(LH) D3MY 5320941-A	1
		Body type 65	(RH) D3MY 6520940-A	(LH) D3MY 6520941-A	1
25510-1	Moulding (rear door edge guard)	Bright-body types 53 and 71	(RH) D3MY 5325510-A	(LH) D3MY 5325511-A	1

INDEX

1976

A (MERCURY)

TITLE	SECTION	PAGE	ILLUS. NO.
BACK END			
-body types 53 and 65	76A	21	P-11984
-body type 71	76A	22	P-11985
BACK WINDOW			
-body type 53	76A	23	P-12460
-body type 65	76A	23	P-12487
-body type 71	76A	22	P-11985
BELT and ROOF DRIP			
-body type 53	76A	27	P-13240
-body type 65	76A	28	P-13241
-body type 71	76A	20	P-13209
BODY SIDE			
-body type 53H-w/o wheel opening cover	76A	2	P-11967
-body type 53H-w/wheel opening cover	76A	3	P-11970
-body types 53K, L-w/o vinyl insert mouldings	76A	4, 5	P-11971
-body types 53K, L-w/vinyl insert mouldings	76A	6, 7, 8	P-11966
-body type 65H-w/o wheel opening covers	76A	9	P-11968
-body type 65H-w/wheel opening covers	76A	10	P-11969
-body types 65K, L-w/o vinyl insert mouldings	76A	11, 12	P-11972
-body types 65K, L-w/vinyl insert mouldings	76A	13, 14	P-11965
-body type 71H	76A	15	P-11973
-body type 71K	76A	16, 17	P-11974
BODY SIDE PROTECTION			
-body type 53	76A	18	P-11962
-body type 65	76A	18	P-11963
-body type 71	76A	19	P-11964
DOOR EDGE GUARDS	76A	29	P-10061
LUGGAGE COMPARTMENT - refer to BACK END			
ROOF and BACK BELT			
-body type 53	76A	24	P-13420
-body type 65-w/halo vinyl roof	76A	25	P-10120
-body types 65H, K, L-w/partial vinyl roof	76A	26	P-12761
ROOF DRIP BELT			
-body type 53	76A	27	P-13240
-body type 65	76A	28	P-13241
-body type 71	76A	20	P-13209
STRIPES	76A	28	P-12929
TAILGATE - refer to BACK END			
WHEEL OPENING COVER PARTS			
-body types 53 and 65	76A	1	P-8181
WINDOW FRAME BELT and ROOF DRIP			
-body type 71	76A	20	P-13209
WINDSHIELD	76A	1	P-12521

COPYRIGHT © 1986 — FORD MOTOR COMPANY — DEARBORN, MICHIGAN

INDEX

1976

C (MONTEGO)

TITLE	SECTION	PAGE	ILLUS. NO.
BACK END			
-body types 53B,D and 65B,D	76C	14	P-11190
-body types 53K and 65K	76C	15	P-11189
-body type 71	76C	15,16	P-11191
BACK WINDOW			
-body types 53 and 65	76C	1	P-12457
BELT			
Back-refer to ROOF and BACK BELT			
Front door, Rear door and Quarter-refer to Body Side			
BODY SIDE			
-body types 53B,D-w/rocker panel moulding	76C	2	P-12804
-body type 53D-w/o rocker panel moulding	76C	3,4	P-11181
-body type 53K	76C	5,6	P-12805
-body types 65B,D-w/rocker panel moulding	76C	7	P-12806
-body type 65D-w/o rocker panel moulding	76C	8	P-12969
-body type 65K	76C	9,10	P-12807
-body types 71B,D	76C	11	P-12808
-body type 71K	76C	12,13	P-12809
DOOR EDGE GUARDS	76C	20	P-10061
LUGGAGE COMPARTMENT - refer to BACK END			
ROOF and BACK BELT			
-body types 53 and 71	76C	16	P-12810
-body types 65B,D	76C	17	P-12815
-body type 65K-w/full vinyl roof	76C	18	P-12816
-body type 65K-w/half vinyl roof	76C	19	P-12817
ROOF DRIP - refer to ROOF and BACK BELT			
WINDOW FRAME			
-body type 71	76C	13,14	P-12502
WINDSHIELD	76C	1	P-12521

D (LINCOLN)

TITLE	SECTION	PAGE	ILLUS. NO.
BACK END			
-body types 53 and 60	76D	12	P-11896
BACK WINDOW	76D	12	P-12488
BELT			
Back-refer to ROOF and BACK BELT			
Front door, Rear door and Quarter -refer to Body Side			
BODY SIDE			
-body type 53-w/side mouldings	76D	2,3,4,5	P-12138
-body type 60-w/side mouldings	76D	6,7,8,9	P-12139
BODY SIDE PROTECTION			
-body types 53 and 60	76D	10,11	P-13186
DOOR EDGE GUARDS	76D	1	P-10061
LUGGAGE COMPARTMENT - refer to BACK END			
ROOF and BACK BELT			
-body type 53-w/full vinyl roof and w/o vinyl roof	76D	13	P-11921
-body type 53-w/half vinyl roof and vinyl insert mouldings	76D	14,15	P-12837
-body type 60-w/full vinyl roof and w/o vinyl roof	76D	16	P-11922
-body type 60-w/half vinyl roof and bright mouldings	76D	17	P-12493
-body type 60-w/half vinyl roof and vinyl insert mouldings	76D	18,19	P-12838
ROOF DRIP - refer to ROOF and BACK BELT			
WHEEL OPENING COVER PARTS	76D	20	P-11793
WINDOW FRAME - refer to Body Illustration Index 230			
WINDSHIELD	76D	1	P-12994

INDEX

TITLE	SECTION	PAGE	ILLUS. NO.
1976			
F (COUGAR)			
BACK END	76F	5	P-19196
BACK WINDOW	76F	5	P-12457
BELT			
Back-refer to ROOF and BACK BELT			
Front door and Quarter-refer to Body Side			
BODY SIDE	76F	2,3,4	P-11195
DOOR EDGE GUARDS	76F	1	P-10061
LUGGAGE COMPARTMENT - refer to BACK END			
ROOF and BACK BELT			
-w/half vinyl roof	76F	6	P-12817
-w/full vinyl roof	76F	7	P-12816
ROOF DRIP - refer to ROOF and BACK BELT			
WINDSHIELD	76F	1	P-12521
G (MONARCH)			
BACK END	76G	10	P-11949
BACK WINDOW			
-body type 54	76G	11	P-12485
-body type 66	76G	11	P-12486
BELT			
Back-refer to ROOF and BACK BELT			
Front door, Rear door and Quarter-refer to Body Side			
BODY SIDE			
-body type	76G	3	P-11946
-body type 54K-w/luxury decor	76G	2,3	P-11945
-body type 66K-w/luxury decor	76G	4	P-11944
BODY SIDE PROTECTION			
-body type 54-black vinyl insert	76G	6	P-11943
-body type 54-bright finish	76G	5	P-11948
-body type 66-black vinyl insert	76G	6	P-11942
-body type 66-bright finish	76G	5	P-11941
DOOR EDGE GUARDS	76G	16	P-10061
LUGGAGE COMPARTMENT - refer to BACK END			
ROOF and BACK BELT			
-body types 54H and 54K	76G	12	P-11935
-body type 54K-w/Frenched Back Lite	76G	15	P-12680
-body type 66	76G	13	P-11934
-body type 66-w/half vinyl roof	76G	14	P-12924
ROOF DRIP - refer to ROOF and BACK BELT			
STRIPES	76G	7	P-12021
	76G	9	P-12972
WINDOW FRAME			
-body type 54	76G	8	P-12494
-body type 66	76G	9	P-12496
WINDSHIELD	76G	1	P-12526

COPYRIGHT © 1986 — FORD MOTOR COMPANY — DEARBORN, MICHIGAN

1973/79 LINCOLN-MERCURY CARS

INDEX

1976

TITLE	SECTION	PAGE	ILLUS. NO.
J (CAPRI)			
BACK END	76J	6	P-12292
BACK WINDOW	76J	6	P-12489
BELT			
Back - refer to ROOF and BACK BELT			
Front door and Quarter - refer to Body Side			
BODY SIDE			
-11/16" wide mouldings	76J	2	P-12919
-1 5/8" wide mouldings	76J	3	P-12920
DOOR EDGE GUARDS	76J	8	P-10061
LUGGAGE COMPARTMENT - refer to BACK END			
ROOF and BACK BELT	76J	7	P-12301
STRIPES - CANADA ONLY	76J	9	P-14530
-except Rally Cat stripes	76J	4	P-12912
-Rally Cat stripes	76J	4	P-13510
WINDOW FRAME	76J	5	P-12916
WINDSHIELD	76J	1	P-12608
K (MARK IV)			
BACK END	76K	3,4	P-11078
BACK WINDOW			
-bright	76K	4	P-12459
-color keyed	76K	6,7	P-12490
BELT			
Back-refer to ROOF and BACK BELT			
Front door and Quarter-refer to Body Side			
BODY SIDE			
-Partial length body protection	76K	1	P-11079
-Full length body protection	76K	2,3	P-11913
DOOR EDGE GUARDS	76K	5	P-10061
LUGGAGE COMPARTMENT - refer to BACK END			
ROOF and BACK BELT			
-w/full vinyl roof	76K	8,9	P-11932
-w/half vinyl roof	76K	10	P-13106
ROOF DRIP - refer to ROOF and BACK BELT			
STRIPES - paint and tape	76K	2,3	P-11913
- tape (designer series)	76K	5,6	P-12968
WINDSHIELD	76K	1	P-12521
L (BOBCAT)			
BACK END			
-body types 62 and 64	76L	11	P-11415
-body type 73	76L	12	P-11416
BACK WINDOW			
-body type 62	76L	13	P-12464
-body type 64	76L	13	P-12465
-body type 73	76L	12	P-11416
BELT			
Back - refer to ROOF and BACK BELT			
Front Door and Quarter - refer to Body Side			

INDEX

1976

TITLE	SECTION	PAGE	ILLUS. NO.
L (BOBCAT) - cont'd.			
BODY SIDE			
-body types 62 and 64 -exc. Squire	76L	1,2	P-12314
-body type 64-Squire	76L	4	P-12921
-body type 73B	76L	3	P-12313
-body type 73H	76L	5,6	P-12315
BODY SIDE PROTECTION	76L	7	P-12316
DOOR EDGE GUARDS	76L	16	P-10061
LIFTGATE - refer to BACK END			
LUGGAGE COMPARTMENT - refer to BACK END			
ROOF and BACK BELT			
-body types 62 and 64 - w/ or w/o full vinyl top	76L	14	P-12186
-body types 62 and 64 - roof drip side and partial roof	76L	14	P-12811
ROOF DRIP - refer to ROOF and BACK BELT			
STRIPES			
-body types 62 and 64	76L	7,8, 15	P-12779, P-12980, P-12993
-body type 73	76L	8	P-12690
WINDOW FRAME			
-body types 62 and 64	76L	9	P-12497
-body type 73	76L	10	P-12498
WINDSHIELD	76L	1	P-12522
P (COMET)			
BACK END	76P	8	P-11076
BACK WINDOW			
-body type 54	76P	10	P-12468
-body type 62	76P	10	P-12467
BELT			
Back-refer to ROOF and BACK BELT			
Front door, Rear door and Quarter-refer to Body Side			
BODY SIDE			
-body type 54-w/o luxury decor	76P	1	P-11854
-body type 54-w/luxury decor	76P	2,3	P-10011
-body type 62-w/o luxury decor	76P	2	P-8226
-body type 62-w/luxury decor	76P	4	P-10012
BODY SIDE PROTECTION			
-body type 54	76P	5	P-11855
-body type 62	76P	5,6	P-8186
DOOR EDGE GUARDS	76P	12	P-10061
LUGGAGE COMPARTMENT - refer to BACK END			
ROOF DRIP - refer to ROOF and BACK BELT			
ROOF and BACK BELT			
-body type 54	76P	9	P-12781
-body type 62	76P	11	P-12802
STRIPES	76P	8	P-11076
	76P	9	P-12973
WINDOW FRAME			
-body type 54	76P	6	P-12500
-body type 62	76P	7	P-12499
WINDSHIELD	76P	1	P-12520

COPYRIGHT © 1986 — FORD MOTOR COMPANY — DEARBORN, MICHIGAN

INDEX

1976

Y (METEOR)

TITLE	SECTION	PAGE	ILLUS. NO.
BACK END			
-body types 53 and 65	76Y	11	P-11984
-body type 71	76Y	12	P-12278
BACK WINDOW			
-body type 53	76Y	13	P-12460
-body type 65	76Y	14	P-12487
BELT			
Back-refer to ROOF and BACK BELT			
Front door, Rear Door and Quarter - refer to Body Side			
BODY SIDE			
-body type 53-w/o wheel opening cover	76Y	2	P-12029
-body type 53-w/wheel opening cover	76Y	3	P-12026
-body type 65-w/o wheel opening cover	76Y	4	P-12030
-body type 65-w/wheel opening cover	76Y	5	P-12027
-body type 71	76Y	6	P-12028
BODY SIDE PROTECTION			
-body type 53	76Y	7	P-11962
-body type 65	76Y	8	P-11963
-body type 71	76Y	9	P-11964
DOOR EDGE GUARDS	76Y	18	P-10061
LUGGAGE COMPARTMENT - refer to BACK END			
ROOF and BACK BELT			
-body type 53	76Y	15	P-13420
-body type 65-w/halo vinyl roof	76Y	16	P-10120
-body type 71	76Y	17	P-11886
ROOF DRIP - refer to ROOF and BACK BELT			
TAILGATE - refer to BACK END			
WHEEL OPENING COVER PARTS			
-body types 53 and 65	76Y	1,2	P-8181
WINDOW FRAME			
-body type 71	76Y	10	P-12501
WINDSHIELD	76Y	1	P-12521

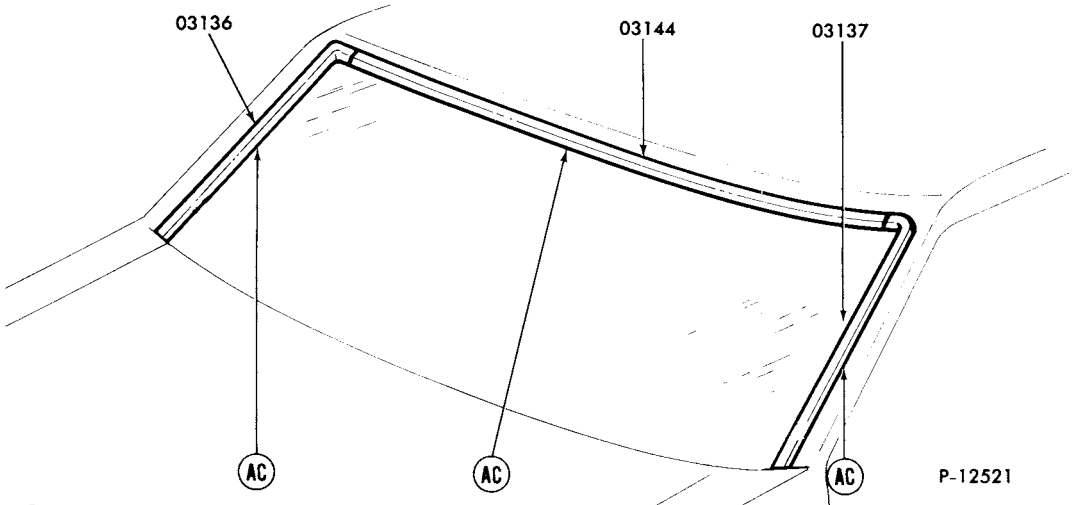

REFER TO EXTERIOR MOULDING SECTION 'R' FOR COMPLETE RETAINER INFORMATION

1976 MERCURY - WINDSHIELD

GROUP NUMBER	PART NAME	DESCRIPTION	PART NUMBER		QTY.
03136-7	Moulding (windshield outside side)	Body types 53 and 71	(RH)♦D7AZ 5303136-A	(LH)♦D7AZ 5303137-A	1
		Body type 65	(RH)♦D7AZ 6003136-A	(LH)♦D7AZ 6003137-A	1
03144	Moulding (windshield outside top)	Body types 53 and 71	♦D7AZ 5303144-A		1
		Body type 65	♦D7AZ 6003144-A		1

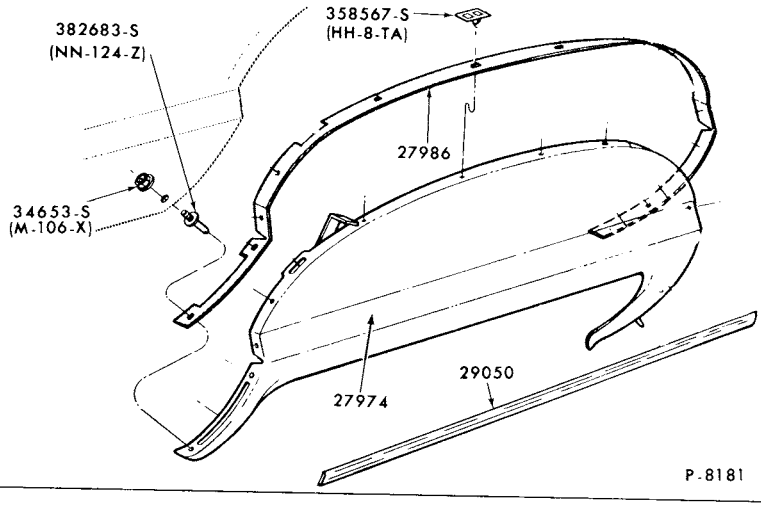

1976 MERCURY - BODY TYPES 53 and 65 - WHEEL OPENING COVER PARTS

GROUP NUMBER	PART NAME	DESCRIPTION	PART NUMBER		QTY.
27974-5	Panel (quarter wheel opening cover)		(RH)♦D3MY 6527974-A	(LH)♦D3MY 6527975-A	1
27986-7	Seal (quarter wheel opening cover)		(RH)♦D3MY 6527986-A	(LH)♦D3MY 6527987-A	1
29050-1	Moulding (quarter wheel opening cover)	Body types 53H,K,X, 57H,K,X.65H.K.X	(RH)♦D3MY 6529050-A	(LH)♦D3MY 6529051-A	1

♦ Includes attaching parts

COPYRIGHT © 1986 — FORD MOTOR COMPANY — DEARBORN, MICHIGAN

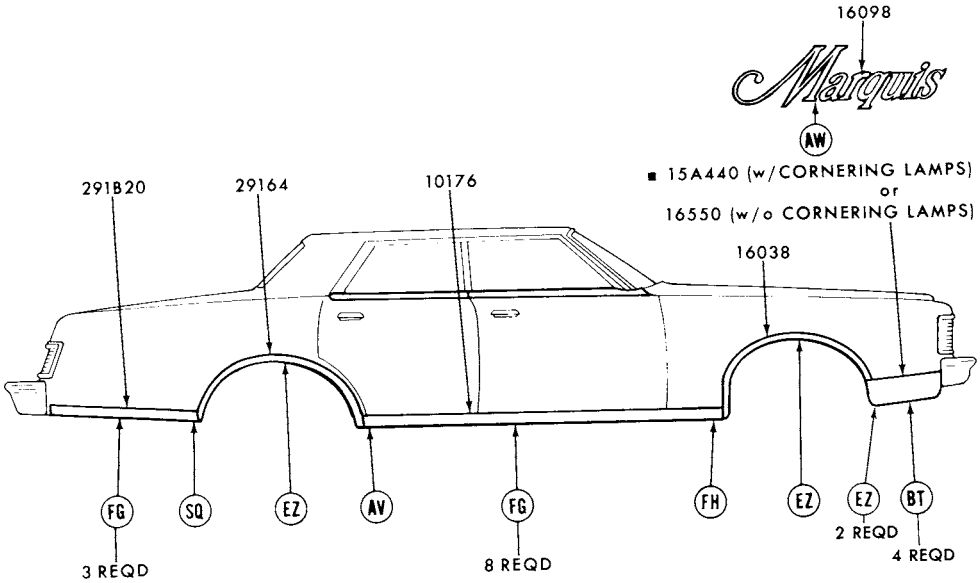

■ REFER TO GROUP IN CHASSIS SECTION
REFER TO EXTERIOR MOULDING SECTION "R" FOR COMPLETE RETAINER INFORMATION

P-11967

1976 MERCURY - BODY TYPE 53H - SIDE - w/o WHEEL OPENING COVERS

GROUP NUMBER	PART NAME	DESCRIPTION	PART NUMBER		QTY.
10176-7	Moulding (body rocker panel)	90 7/32" long	(RH)♦D3MY 6510176-A	(LH)♦D3MY 6510177-A	1
16038-9	Moulding (front fender wheel opening)	W/rocker panel mouldings	(RH)♦D5MY 16038-A	(LH)♦D5MY 16039-A	1
		W/o rocker panel mouldings	(RH)♦D5MY 16038-C	(LH)♦D5MY 16038-C	1
16098	Plate (name)	"Marquis"	♦D3MY 16098-B	R.H. and L.H.	2
16550-1	Moulding (front fender lower front)		(RH)♦D5MY 16550-A	(LH)♦D5MY 16551-A	1
291B20-1	Moulding (quarter lower)		(RH)♦D4MY 65291B20-A	(LH)♦D4MY 65291B21-A	1
29164-5	Moulding (quarter wheel opening)	W/rocker panel mouldings	(RH)♦D5MY 6529164-A	(LH)♦D5MY 6529165-A	1
		W/o rocker panel mouldings	(RH)♦D4MY 6529164-A	(LH)♦D4MY 6529165-A	1

♦ Includes attaching parts

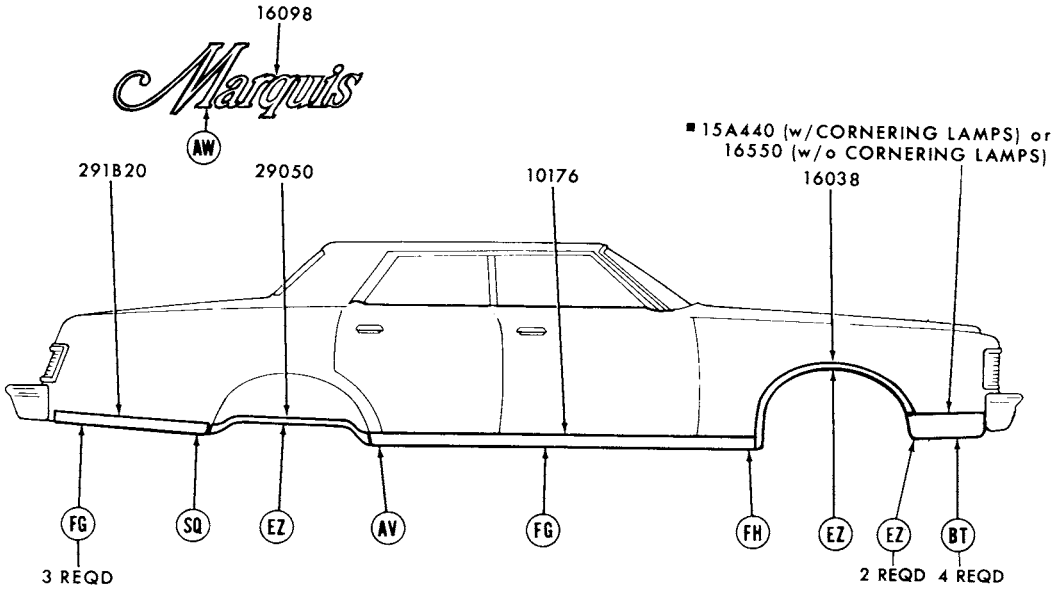

■ REFER TO GROUP IN CHASSIS SECTION
REFER TO EXTERIOR MOULDING SECTION "R" FOR COMPLETE RETAINER INFORMATION

P-11970

1976 MERCURY - BODY TYPE 53H - SIDE - w/WHEEL OPENING COVERS

GROUP NUMBER	PART NAME	DESCRIPTION	PART NUMBER		QTY.
10176-7	Moulding (body rocker panel)	90 7/32" long	(RH)♦D3MY 6510176-A	(LH)♦D3MY 6510177-A	1
16038-9	Moulding (front fender wheel opening)		(RH)♦D5MY 16038-A	(LH)♦D5MY 16039-A	1
16098	Plate (name)	"Marquis"	♦D3MY 16098-B	R.H. and L.H.	2
16550-1	Moulding (front fender lower front)		(RH)♦D5MY 16550-A	(LH)♦D5MY 16551-A	1
29050-1	Moulding (quarter wheel opening cover)	"Before 4/1/76"	(RH)♦D3MY 6529050-A	(LH)♦D3MY 6529051-A	1
		"From 4/1/76"	(RH)♦D3MY 6529050-B	(LH)♦D3MY 6529051-B	1
291B20-1	Moulding (quarter lower)	"Before 4/1/76"	(RH)♦D4MY 65291B20-A	(LH)♦D4MY 65291B21-A	1
		"From 4/1/76"	Not required		

♦ Includes attaching parts

COPYRIGHT © 1986 — FORD MOTOR COMPANY — DEARBORN, MICHIGAN

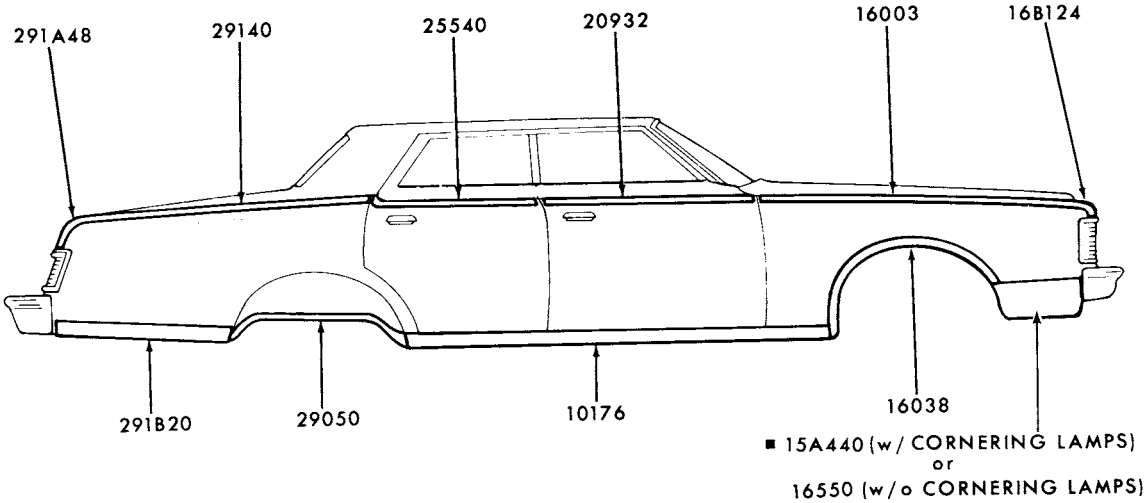

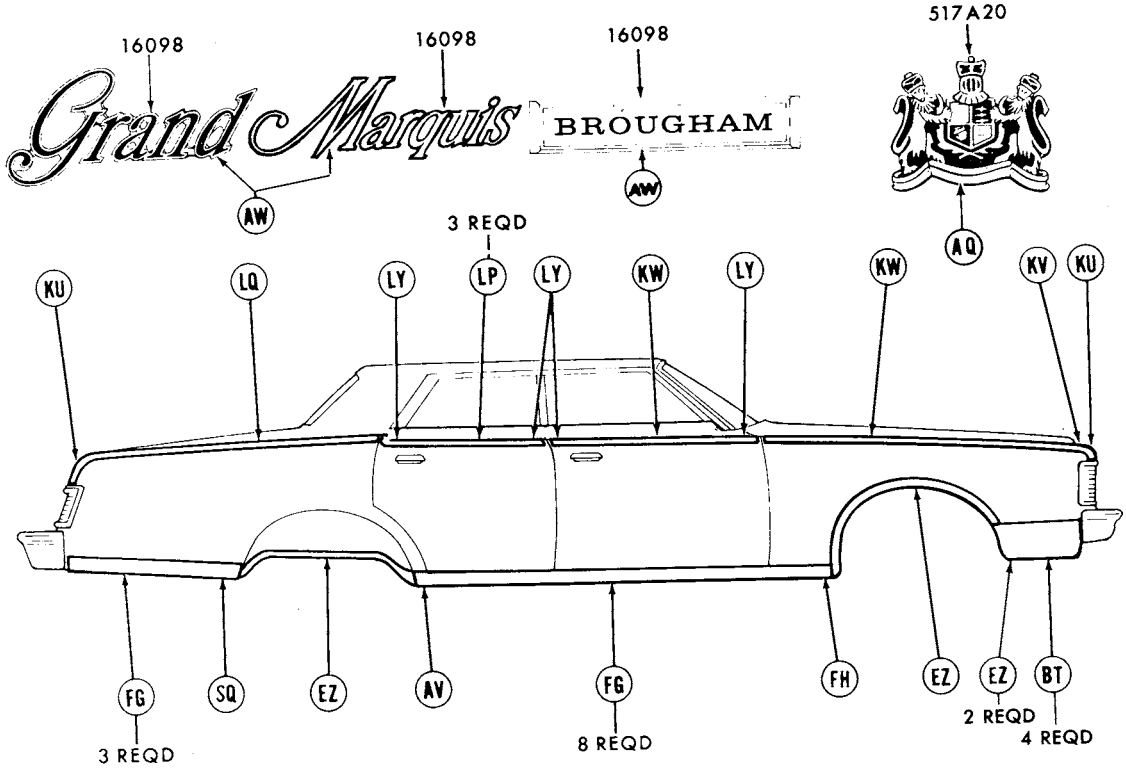

■ REFER TO GROUP IN CHASSIS SECTION
REFER TO EXTERIOR MOULDING SECTION "R" FOR COMPLETE RETAINER INFORMATION

P-11971

1976 MERCURY - BODY TYPES 53K, L - SIDE - w/o VINYL INSERT MOULDINGS

1976 MERCURY - BODY TYPES 53K,L - SIDE - w/o VINYL INSERT MOULDINGS - cont'd.

GROUP NUMBER	PART NAME	DESCRIPTION	PART NUMBER		QTY.
10176-7	Moulding (body rocker panel)	90 7/32" long	(RH)♦D3MY 6510176-A	(LH)♦D3MY 6510177-A	1
16003-4	Moulding (front fender side)		(RH)♦D5MY 16003-A	(LH)♦D5MY 16004-A	1
16038-9	Moulding (front fender wheel opening)		(RH)♦D5MY 16038-A	(LH)♦D5MY 16039-A	1
16098	Plate (name)	"BROUGHAM"	♦D5MY 16098-A	R.H. and L.H.	2
		"Grand"	♦D5MY 16098-C	R.H. and L.H.	2
		"Marquis"	♦D3MY 16098-B	R.H. and L.H.	2
16B124-5	Moulding (front fender front extension)		(RH)♦D5MY 16B124-A	(LH)♦D5MY 16B125-A	1
16550-1	Moulding (front fender lower front)		(RH)♦D5MY 16550-A	(LH)♦D5MY 16551-A	1
20932-3	Moulding (front door outside upper)		(RH)♦D5MY 5320932-A	(LH)♦D5MY 5320933-A	1
25540-1	Moulding (rear door outside upper)		(RH)♦D5MY 5325540-A	(LH)♦D5MY 5325541-A	1
29050-1	Moulding (quarter wheel opening cover)	"Before 4/1/76"	(RH)♦D3MY 6529050-A	(LH)♦D3MY 6529051-A	1
		"From 4/1/76"	(RH)♦D3MY 6529050-B	(LH)♦D3MY 6529051-B	1
291B20-1	Moulding (quarter outside lower)	"Before 4/1/76"	(RH)♦D4MY 65291B20-A	(LH)♦D4MY 65291B21-A	1
		"From 4/1/76"	Not required		
29140-1	Moulding (quarter outside upper)		(RH)♦D5MY 5329140-A	(LH)♦D5MY 5329141-A	1
291A48-9	Moulding (quarter outside upper rear)		(RH)♦D5MY 65291A48-A	(LH)♦D5MY 65291A49-A	1
517A20	Ornament (roof side outside)	Gold	C9MY 65517A20-A	R.H. and L.H.	2
		Silver	♦D0MY 65517A20-A	R.H. and L.H.	2

♦ Includes attaching parts

COPYRIGHT © 1986 — FORD MOTOR COMPANY — DEARBORN, MICHIGAN

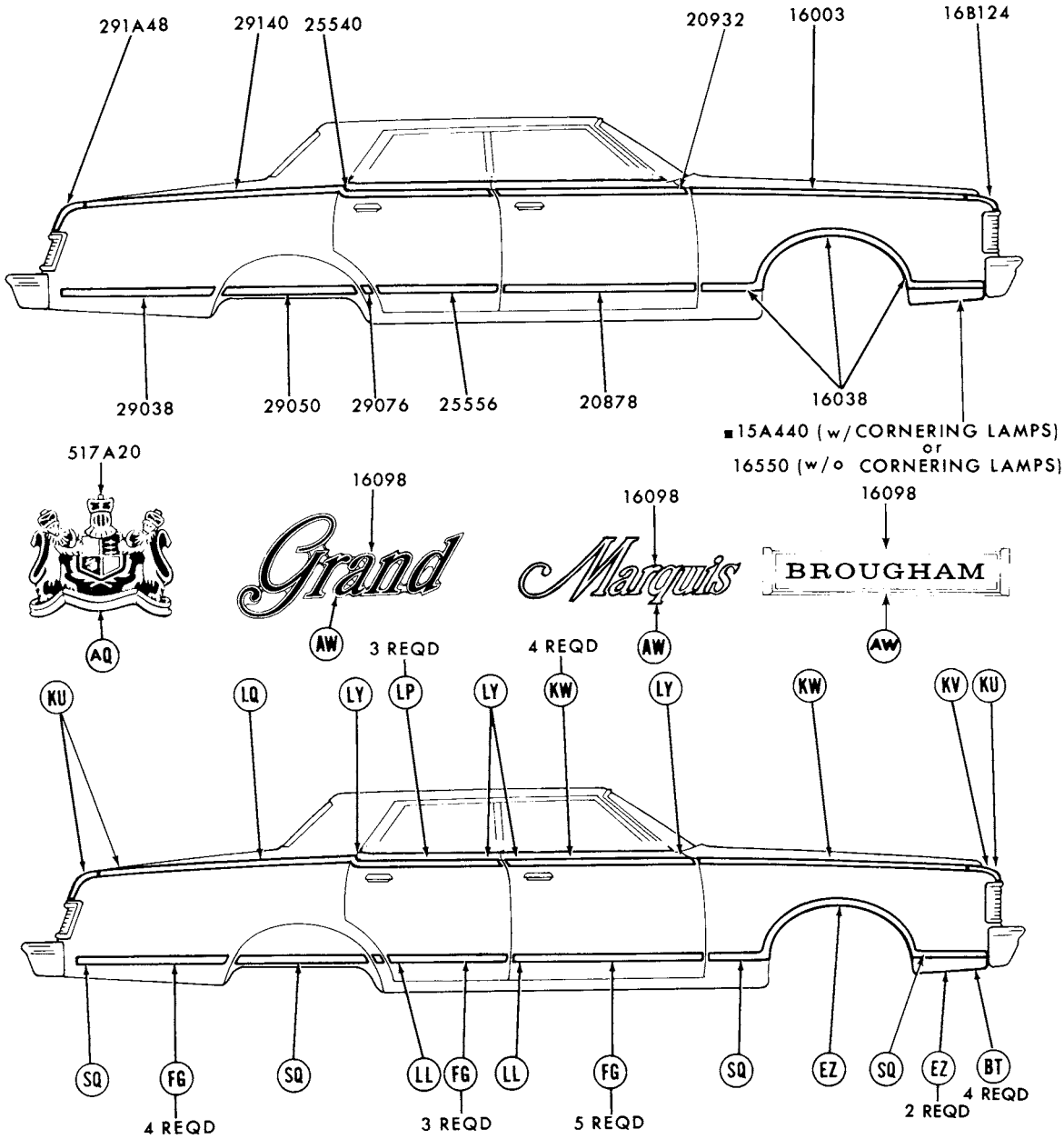

■ REFER TO GROUP IN CHASSIS SECTION
REFER TO EXTERIOR MOULDING SECTION "R" FOR COMPLETE RETAINER INFORMATION

P-11966

1976 MERCURY - BODY TYPES 53K,L - SIDE - w/VINYL INSERT MOULDINGS

1976 MERCURY - BODY TYPES 53K,L - SIDE - w/VINYL INSERT MOULDINGS - cont'd.

GROUP NUMBER	PART NAME	DESCRIPTION	PART NUMBER		QTY.
16003-4	Moulding (front fender side)		(RH)♦D5MY 16003-A	(LH)♦D5MY 16004-A	1
16038-9	Moulding (front fender wheel opening)	◊Black vinyl insert	(RH)♦D5MY 16038-CA	(LH)♦D5MY 16039-CA	1
		◊Blue vinyl insert	(RH)★D5MY 16038-CB	(LH)★D5MY 16039-CB	1
		◊Brown vinyl insert	(RH)★D5MY 16038-CT	(LH)★D5MY 16039-CT Not replaced (4/84)	1
		◊Gold vinyl insert	(RH)★D6MY 16038-AY	(LH)★D6MY 16039-AY Not replaced (4/84)	1
		◊Green vinyl insert	(RH)★D5MY 16038-CG	(LH)★D5MY 16039-CG Not replaced (4/84)	1
		◊Red vinyl insert	(RH)♦D6MY 16038-AD	(LH)♦D6MY 16039-AD	1
		◊Silver vinyl insert	(RH)♦D6MY 16038-AP	(LH)♦D6MY 16039-AP	1
		◊White vinyl insert	(RH)♦D5MY 16038-CW	(LH)♦D5MY 16039-CW	1
16098	Plate (name)	"BROUGHAM"	♦D5MY 16098-A	R.H. and L.H.	2
		"Grand"	♦D5MY 16098-C	R.H. and L.H.	2
		"Marquis"	♦D3MY 16098-B	R.H. and L.H.	2
16B124-5	Moulding (front fender front extension)		(RH)♦D5MY 16B124-A	(LH)♦D5MY 16B125-A	1
16550-1	Moulding (front fender lower front)		(RH)♦D5MY 16550-A	(LH)♦D5MY 16551-A	1
20878-9	Moulding (front door outside)	◊Black vinyl insert	(RH)♦D5MY 5320878-CA	(LH)♦D5MY 5320879-CA	1
		◊Blue vinyl insert	(RH)★D5MY 5320878-CB Not replaced (7/81)	(LH)♦D5MY 5320879-CB	1
		◊Brown vinyl insert	(RH)★D5MY 5320878-CT Not replaced (4/84)	(LH)★D5MY 5320879-CT Not replaced (7/81)	1
		◊Green vinyl insert	(RH)★D5MY 5320878-CG Not replaced (7/81)	(LH)★D5MY 5320878-CG Not replaced (7/81)	1
		◊Red vinyl insert	(RH)♦D6MY 5320878-AD	(LH)♦D6MY 5320879-AD	1
		◊Silver vinyl insert	(RH)♦D6MY 5320878-AP	(LH)♦D6MY 5320879-AP	1
		◊White vinyl insert	(RH)♦D5MY 5320878-CW	(LH)♦D5MY 5320879-CW	1
20932-3	Moulding (front door outside upper)		(RH)♦D5MY 5320932-A	(LH)♦D5MY 5320933-A	1
25540-1	Moulding (rear door outside upper)		(RH)♦D5MY 5325540-A	(LH)♦D5MY 5325541-A	1
25556-7	Moulding (rear door outside)	◊Black vinyl insert	(RH)♦D5MY 5325556-BA	(LH)♦D5MY 5325557-BA	1
		◊Blue vinyl insert	(RH)★D5MY 5325556-BB Not replaced (4/84)	(LH)♦D5MY 5325557-BB	1
		◊Brown vinyl insert	(RH)♦D5MY 5325556-BT	(LH)★D5MY 5325557-BT Not replaced (7/81)	1
		◊Gold vinyl insert	(RH)♦D6MY 5325556-AY	(LH)★D6MY 5325557-AY Not replaced (6/82)	1
		◊Red vinyl insert	(RH)♦D6MY 5325556-AD	(LH)♦D6MY 5325557-AD	1
		◊Silver vinyl insert	(RH)♦D6MY 5325556-AP	(LH)♦D6MY 5325557-AP	1
		◊White vinyl insert	(RH)♦D5MY 5325556-BW	(LH)★D5MY 5325557-BW Not replaced (4/84)	1

♦ Includes attaching parts
◊ For color verification, refer to the vinyl roof swatches in the 1976 Salesman's Color and Upholstery Selections Guide.

COPYRIGHT © 1986 — FORD MOTOR COMPANY — DEARBORN, MICHIGAN

1976 MERCURY - BODY TYPES 53K.L - SIDE - w/VINYL INSERT MOULDINGS - cont'd.

GROUP NUMBER	PART NAME	DESCRIPTION	PART NUMBER		QTY.
29038-9	Moulding (quarter outside)	◊ Black vinyl insert	(RH)♦D5MY 6529038-AA	(LH)♦D5MY 6529039-AA	1
		◊ Blue vinyl insert	(RH)♦D5MY 6529038-AB	(LH)♦D5MY 6529039-AB	1
		◊ Brown vinyl insert	(RH)♦D5MY 6529038-AT	(LH)♦D5MY 6529039-AT	1
		◊ Gold vinyl insert	(RH)✱D6MY 6529038-AY Not replaced (6/83)	(LH)♦D6MY 6529039-AY	1
		◊ Green vinyl insert	(RH)♦D5MY 6529038-AG	(LH)♦D5MY 6529039-AG	1
		◊ Red vinyl insert	(RH)♦D6MY 6529038-AD	(LH)♦D6MY 6529039-AD	1
		◊ Silver vinyl insert	(RH)♦D6MY 6529038-AP	(LH)♦D6MY 6529039-AP	1
		◊ White vinyl insert	(RH)♦D5MY 6529038-AW	(LH)♦D5MY 6529039-AW	1
29050-1	Moulding (quarter wheel opening cover)	◊ Black vinyl insert	(RH)♦D5MY 6529050-AA	(LH)♦D5MY 6529051-AA	1
		◊ Blue vinyl insert	(RH)♦D5MY 6529050-AB	(LH)✱D5MY 6529051-AB Not replaced (6/82)	1
		◊ Gold vinyl insert	(RH)♦D6MY 6529050-AY	(LH)♦D6MY 6529051-AY	1
		◊ Red vinyl insert	(RH)♦D6MY 6529050-AD	(LH)♦D6MY 6529051-AD	1
		◊ Silver vinyl insert	(RH)♦D6MY 6529050-AP	(LH)♦D6MY 6529051-AP	1
		◊ White vinyl insert	(RH)✱D5MY 6529050-AW Not replaced (6/83)	(LH)♦D5MY 6529051-AW	1
29076-7	Moulding (quarter outside lower front)	◊ Black vinyl insert	(RH)♦D5MY 5329076-BA	(LH)♦D5MY 5329077-BA	1
		◊ Blue vinyl insert	(RH)♦D5MY 5329076-BB	(LH)♦D5MY 5329077-BB	1
		◊ Red vinyl insert	(RH)✱D6MY 5329076-BD	(LH)♦D6MY 5329077-BD	1
		◊ Silver vinyl insert	(RH)♦D6MY 5329076-AP	(LH)♦D6MY 5329077-AP	1
		◊ White vinyl insert	(RH)♦D5MY 5329076-BW	(LH)♦D5MY 5329077-BW	1
29140-1	Moulding (quarter outside upper)		(RH)♦D5MY 5329140-A	(LH)♦D5MY 5329141-A	1
291A48-9	Moulding (quarter outside upper rear)		(RH)♦D5MY 65291A48-A	(LH)♦D5MY 65291A49-A	1
517A20	Ornament (roof side outside)	◊ Silver	♦D0MY 65517A20-A	R.H. and L.H.	2
		◊ Gold	♦C9MY 65517A20-A	R.H. and L.H.	2

♦ Includes attaching parts

◊ For color verification, refer to the vinyl roof swatches in the 1976 salesman's color and upholstery selections guide.

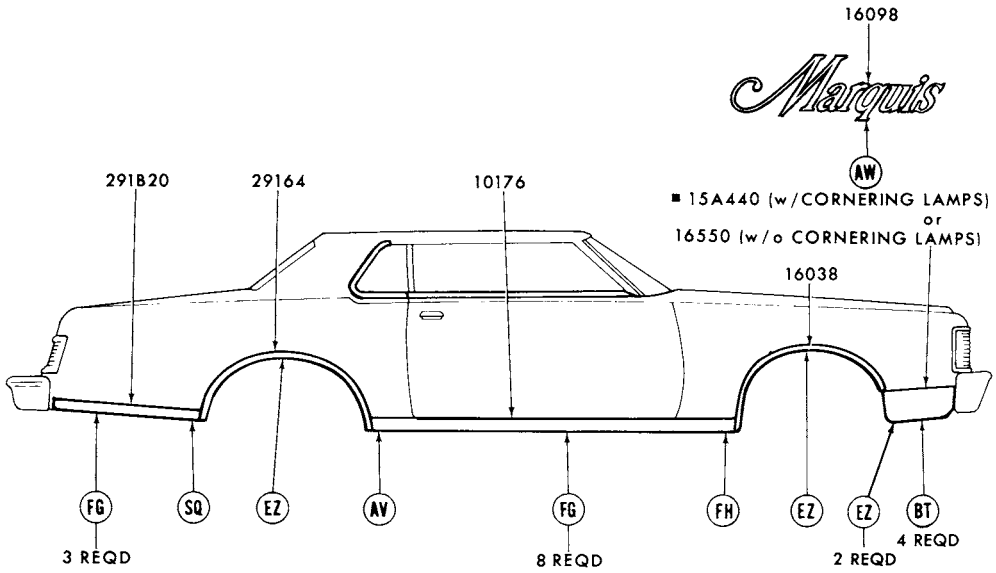

■ REFER TO GROUP IN CHASSIS SECTION
REFER TO EXTERIOR MOULDING SECTION "R" FOR COMPLETE RETAINER INFORMATION

P-11968

1976 MERCURY - BODY TYPE 65H - SIDE - w/o WHEEL OPENING COVER

GROUP NUMBER	PART NAME	DESCRIPTION	PART NUMBER		QTY.
10176-7	Moulding (body rocker panel)	90 7/32" long	(RH)♦D3MY 6510176-A	(LH)♦D3MY 6510177-A	1
16038-9	Moulding (front fender wheel opening)	W/rocker panel mouldings	(RH)♦D5MY 16038-A	(LH)♦D5MY 16039-A	1
		W/o rocker panel mouldings	(RH)♦D5MY 16038-C	(LH)♦D5MY 16039-C	1
16098	Plate (name)	"Marquis"	♦D3MY 16098-B	R.H. and L.H.	2
16550-1	Moulding (front fender lower front)		(RH)♦D5MY 16550-A	(LH)♦D5MY 16551-A	1
291B20-1	Moulding (quarter lower)		(RH)♦D4MY 65291B20-A	(LH)♦D4MY 65291B21-A	1
29164-5	Moulding (quarter wheel opening)	W/rocker panel mouldings	(RH)♦D5MY 6529164-A	(LH)♦D5MY 6529165-A	1
		W/o rocker panel mouldings	(RH)♦D4MY 6529164-A	(LH)♦D4MY 6529165-A	1

♦ Includes attaching parts

COPYRIGHT © 1986 — FORD MOTOR COMPANY — DEARBORN, MICHIGAN

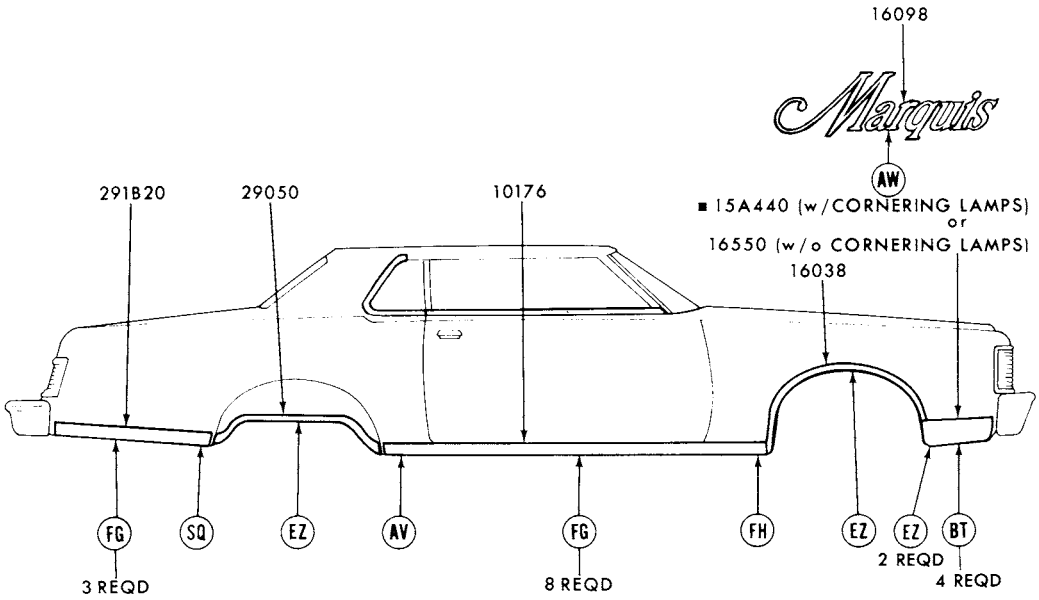

■ REFER TO GROUP IN CHASSIS SECTION
REFER TO EXTERIOR MOULDING SECTION "R" FOR COMPLETE RETAINER INFORMATION P-11969

1976 MERCURY - BODY TYPE 65H - SIDE - w/WHEEL OPENING COVER

GROUP NUMBER	PART NAME	DESCRIPTION	PART NUMBER		QTY.
10176-7	Moulding (body rocker panel)	90 7/32" long	(RH)♦D3MY 6510176-A	(LH)♦D3MY 6510177-A	1
16038-9	Moulding (front fender wheel opening)		(RH)♦D5MY 16038-A	(LH)♦D5MY 16039-A	1
16098	Plate (name)	"Marquis"	♦D3MY 16098-B	R.H. and L.H.	2
16550-1	Moulding (front fender lower front)		(RH)♦D5MY 16550-A	(LH)♦D5MY 16551-A	1
29050-1	Moulding (quarter wheel opening cover)	"Before 4/1/76"	(RH)♦D3MY 6529050-A	(LH)♦D3MY 6529051-A	1
		"From 4/1/76"	(RH)♦D3MY 6529050-B	(LH)♦D3MY 6529051-B	1
291B20-1	Moulding (quarter outside lower)	"Before 4/1/76"	(RH)♦D4MY 65291B20-A	(LH)♦D4MY 65291B21-A	1

♦ Includes attaching parts

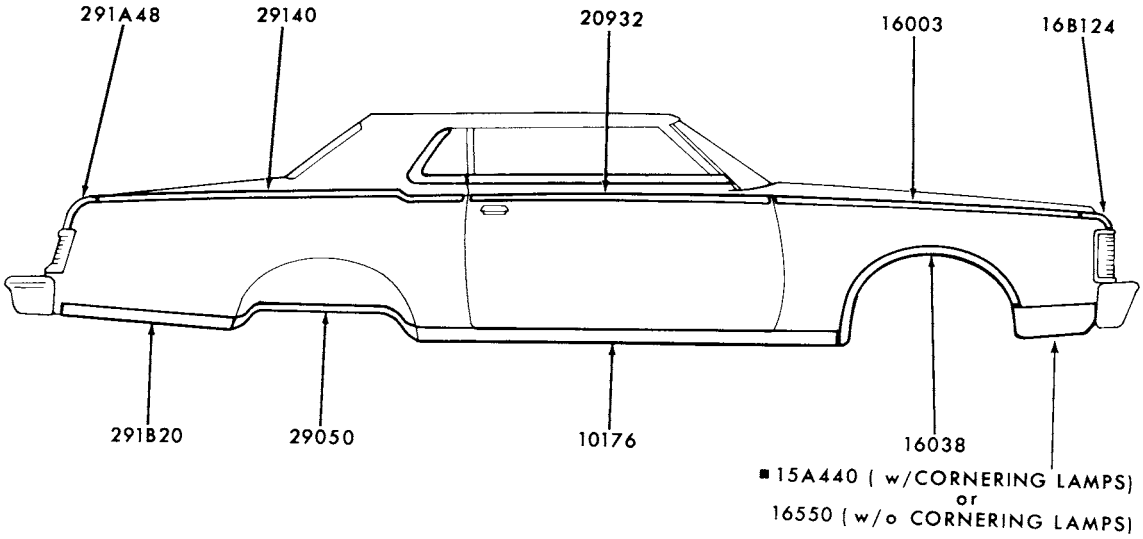

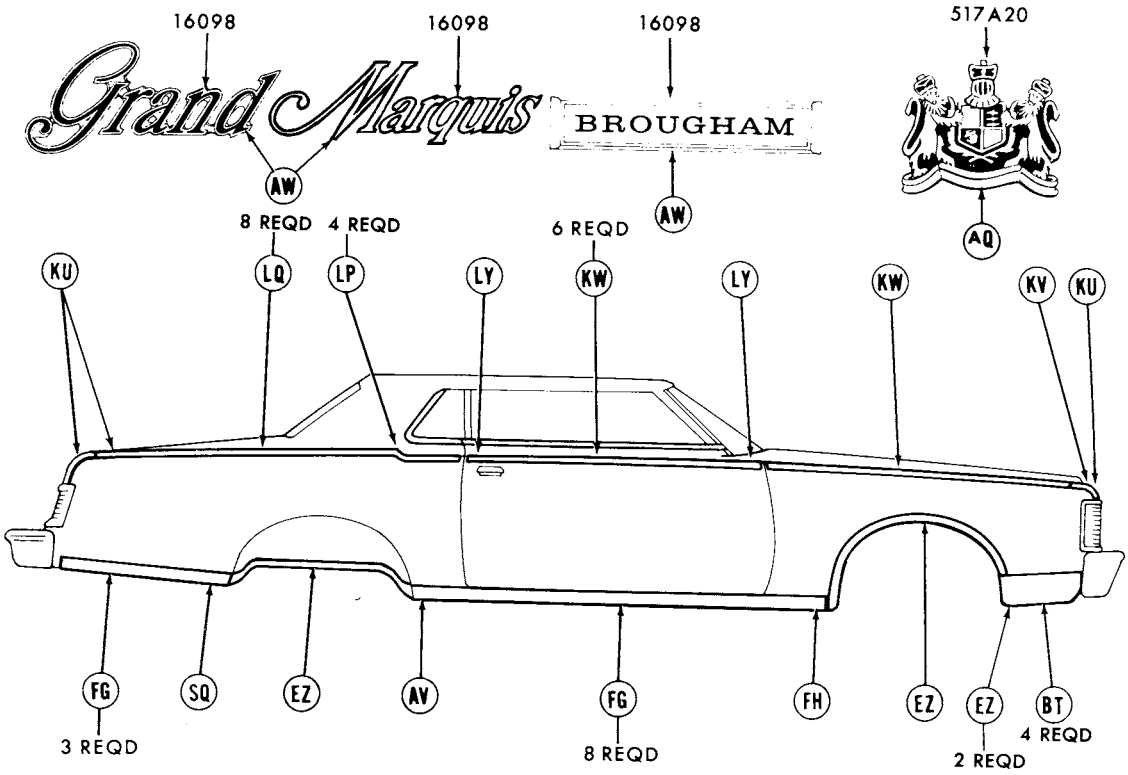

■REFER TO GROUP IN CHASSIS SECTION
REFER TO EXTERIOR MOULDING SECTION "R" FOR COMPLETE RETAINER INFORMATION

P-11972

1976 MERCURY - BODY TYPES 65K,L - SIDE - w/o VINYL INSERT MOULDINGS

COPYRIGHT © 1986 — FORD MOTOR COMPANY — DEARBORN, MICHIGAN

New Issue

1976 MERCURY - BODY TYPES 65K.L - SIDE - w/o VINYL INSERT MOULDINGS - cont'd.

GROUP NUMBER	PART NAME	DESCRIPTION	PART NUMBER		QTY.
10176-7	Moulding (body rocker panel)	90 7/32" long	(RH)♦D3MY 6510176-A	(LH)♦D3MY 6510177-A	1
16003-4	Moulding (front fender side)		(RH)♦D5MY 16003-A	(LH)♦D5MY 16004-A	1
16038-9	Moulding (front fender wheel opening)		(RH)♦D5MY 16038-A	(LH)♦D5MY 16039-A	1
16098	Plate (name)	"BROUGHAM"	♦D5MY 16098-A	R.H. and L.H.	2
		"Grand"	♦D5MY 16098-C	R.H. and L.H.	2
		"Marquis"	♦D3MY 16098-B	R.H. and L.H.	2
16B124-5	Moulding (front fender front extension)		(RH)♦D5MY 16B124-A	(LH)♦D5MY 16B125-A	1
16550-1	Moulding (front fender lower front)		(RH)♦D5MY 16550-A	(LH)♦D5MY 16551-A	1
20932-3	Moulding (front door outside upper)		(RH)♦D5MY 6520932-A	(LH)♦D5MY 6520933-A	1
29050-1	Moulding (quarter wheel opening cover)	"Before 4/1/76"	(RH)♦D3MY 6529050-A	(LH)♦D3MY 6529051-A	1
		"From 4/1/76"	(RH)♦D3MY 6529050-B	(LH)♦D3MY 6529051-B	1
291B20-1	Moulding (quarter outside lower)	"Before 4/1/76"	(RH)♦D4MY 65291B20-A	(LH)♦D4MY 65291B21-A	1
		"From 4/1/76"	Not required		
29140-1	Moulding (quarter outside upper)		(RH)♦D5MY 6529140-A	(LH)♦D5MY 6529141-A	1
291A48-9	Moulding (quarter outside upper rear)		(RH)♦D5MY 65291A48-A	(LH)♦D5MY 65291A49-A	1
517A20	Ornament (roof side outside)	Silver	♦D0MY 65517A20-A	R.H. and L.H.	2
		Gold	♦C9MY 65517A20-A	R.H. and L.H.	2

♦ Includes attaching parts

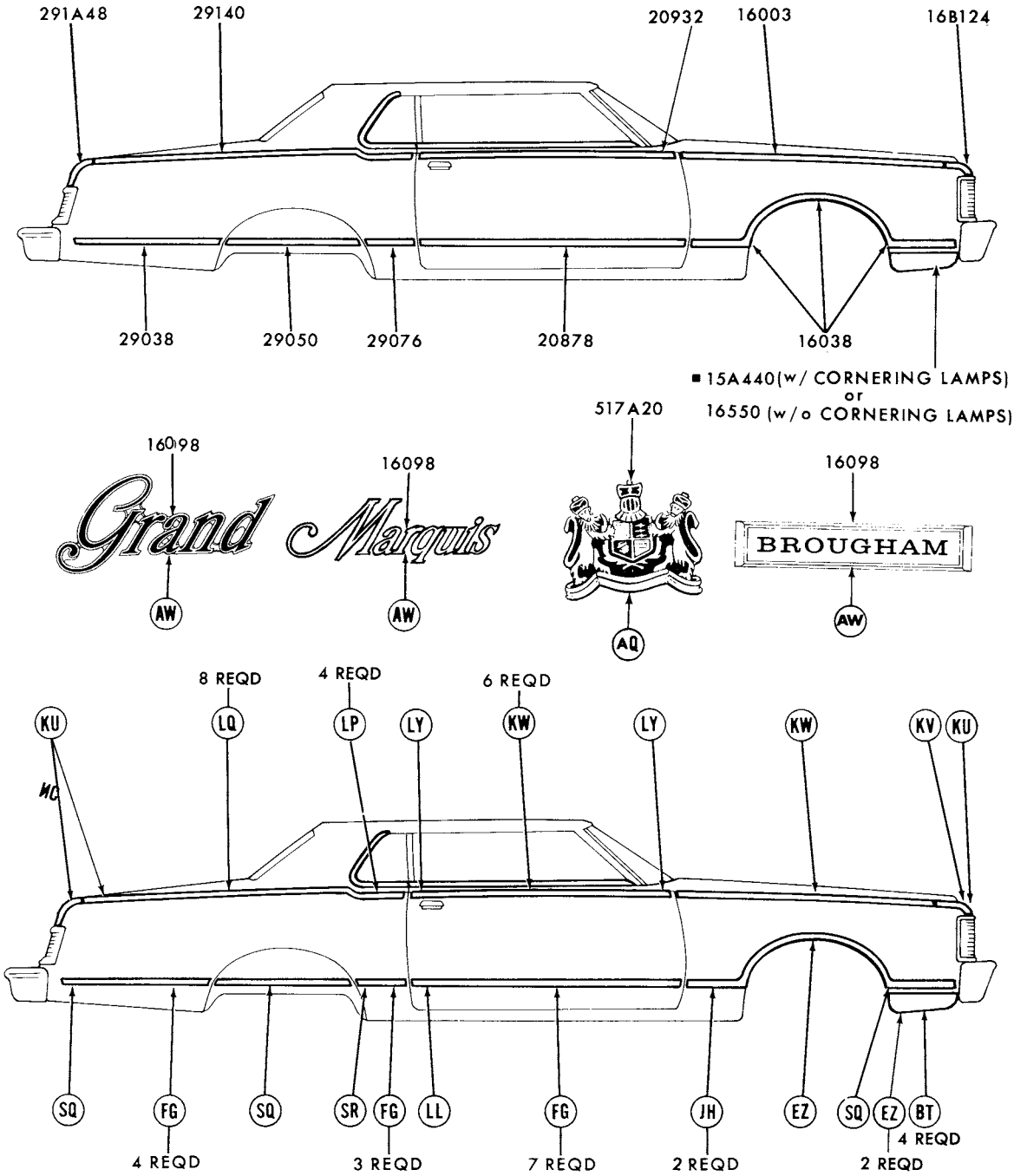

■ REFER TO GROUP IN CHASSIS SECTION
REFER TO EXTERIOR MOULDING SECTION "R" FOR COMPLETE RETAINER INFORMATION

P-11965

1976 MERCURY - BODY TYPE 65K,L - SIDE - w/VINYL INSERT MOULDINGS

COPYRIGHT © 1986 — FORD MOTOR COMPANY — DEARBORN, MICHIGAN

1976 MERCURY - BODY TYPES 65K.L - SIDE - W/VINYL INSERT MOULDINGS - cont'd.

GROUP NUMBER	PART NAME	DESCRIPTION	PART NUMBER		QTY.
16003-4	Moulding (front fender side)		(RH)♦D5MY 16003-A	(LH)♦D5MY 16004-A	1
16038-9	Moulding (front fender wheel opng)	◊ Black vinyl insert	(RH)♦D5MY 16038-CA	(LH)♦D5MY 16039-CA	1
		◊ Blue vinyl insert	(RH)✶D5MY 16038-CB	(LH)✶D5MY 16039-CB	1
		◊ Brown vinyl insert	(RH)✶D5MY 16038-CT	(LH)✶D5MY 16039-CT Not replaced (4/84)	1
		◊ Gold vinyl insert	(RH)✶D6MY 16038-AY	(LH)✶D6MY 16039-AY Not replaced (4/84)	1
		◊ Green vinyl insert	(RH)✶D5MY 16038-CG	(LH)✶D5MY 16039-CG Not replaced (4/84)	1
		◊ Red vinyl insert	(RH)♦D6MY 16038-AD	(LH)♦D6MY 16039-AD	1
		◊ Silver vinyl insert	(RH)♦D6MY 16038-AP	(LH)♦D6MY 16039-AP	1
		◊ White vinyl insert	(RH)♦D5MY 16038-CW	(LH)♦D5MY 16039-CW	1
16098	Plate (name)	"BROUGHAM"	♦D5MY 16098-A	R.H. and L.H.	2
		"Grand"	♦D5MY 16098-C	R.H. and L.H.	2
		"Marquis"	♦D3MY 16098-B	R.H. and L.H.	2
16B124-5	Moulding (front fender front ext)		(RH)♦D5MY 16B124-A	(LH)♦D5MY 16B125-A	1
16550-1	Moulding (front fender lower frt)		(RH)♦D5MY 16550-A	(LH)♦D5MY 16551-A	1
20878-9	Moulding (front door outside)	◊ Black vinyl insert	(RH)♦D5MY 6520878-AA	(LH)♦D5MY 6520879-AA	1
		◊ Gold vinyl insert	(RH)♦D6MY 6520878-AY	(LH)★D6MY 6520879-AY Not replaced (7/81)	1
		◊ Green vinyl insert	(RH)★D5MY 6520878-AG Not replaced (4/83)	(LH)★D5MY 6520879-AG Not replaced (7/81)	1
		◊ Red vinyl insert	(RH)♦D6MY 6520878-AD	(LH)♦D6MY 6520879-AD	1
		◊ Silver vinyl insert	(RH)♦D6MY 6520878-AP	(LH)♦D6MY 6520879-AP	1
		◊ White vinyl insert	(RH)♦D5MY 6520878-AW	(LH)♦D5MY 6520879-AW	1
20932-3	Moulding (front door upper)		(RH)♦D5MY 6520932-A	(LH)♦D5MY 6520933-A	1
29038-9	Moulding (quarter outside)	◊ Black vinyl insert	(RH)♦D5MY 6529038-AA	(LH)♦D5MY 6529039-AA	1
		◊ Blue vinyl insert	(RH)♦D5MY 6529038-AB	(LH)♦D5MY 6529039-AB	1
		◊ Brown vinyl insert	(RH)♦D5MY 6529038-AT	(LH)♦D5MY 6529039-AT	1
		◊ Gold vinyl insert	(RH)♦D6MY 6529038-AY Not replaced (6/83)	(LH)♦D6MY 6529039-AY	1
		◊ Green vinyl insert	(RH)★D5MY 6529038-AG Not replaced (7/81)	(LH)♦D5MY 6529039-AG	1
		◊ Red vinyl insert	(RH)♦D6MY 6529038-AD	(LH)♦D6MY 6529039-AD	1
		◊ Silver vinyl insert	(RH)♦D6MY 6529038-AP	(LH)♦D6MY 6529039-AP	1
		◊ White vinyl insert	(RH)♦D5MY 6529038-AW	(LH)♦D5MY 6529039-AW	1
29050-1	Moulding (quarter wheel op cov)	◊ Black vinyl insert	(RH)♦D5MY 6529050-AA	(LH)♦D5MY 6529051-AA	1
		◊ Blue vinyl insert	(RH)♦D5MY 6529050-AB	(LH)★D5MY 6529051-AB Not replaced (6/82)	1
		◊ Gold vinyl insert	(RH)♦D6MY 6529050-AY	(LH)♦D6MY 6529051-AY	1
		◊ Green vinyl insert	(RH)♦D5MY 6529050-AG	(LH)★D5MY 6529051-AG Not replaced (7/81)	1
		◊ Red vinyl insert	(RH)♦D6MY 6529050-AD	(LH)♦D6MY 6529051-AD	1
		◊ Silver vinyl insert	(RH)♦D6MY 6529050-AP	(LH)♦D6MY 6529051-AP	1
		◊ White vinyl insert	(RH)♦D5MY 6529050-AW Not replaced (6/83)	(LH)♦D5MY 6529051-AW	1
29076-7	Moulding (quarter lower front)	◊ Black vinyl insert	(RH)♦D5MY 6529076-AA	(LH)♦D5MY 6529077-AA	1
		◊ Gold vinyl insert	(RH)✶D6MY 6529076-AY Not replaced (4/84)	(LH)★D6MY 6529077-AY Not replaced (7/81)	1
		◊ Green vinyl insert	(RH)♦D5MY 6529076-AG	(LH)★D5MY 6529077-AG Not replaced (7/81)	1
		◊ Red vinyl insert	(RH)♦D6MY 6529076-AD	(LH)♦D6MY 6529077-AD	1
		◊ Silver vinyl insert	(RH)♦D6MY 6529076-AP	(LH)♦D6MY 6529077-AP	1
		◊ White vinyl insert	(RH)♦D5MY 6529076-AW	(LH)✶D5MY 6529077-AW Not replaced (4/84)	1

♦ Includes attaching parts

◊ For color verification, refer to the vinyl roof swatches in the 1976 salesman's color and upholstery selections guide.

1976 MERCURY - BODY TYPES 65K, L - SIDE - W/VINYL INSERT MOULDINGS - cont'd.

GROUP NUMBER	PART NAME	DESCRIPTION	PART NUMBER		QTY.
29140-1	Moulding (quarter outside upper)		(RH)♦D5MY 6529140-A	(LH)♦D5MY 6529141-A	1
291A48-9	Moulding (quarter upper rear)		(RH)♦D5MY 65291A48-A	(LH)♦D5MY 65291A49-A	1
517A20	Ornament (roof side outside)	Gold	♦C9MY 65517A20-A	R.H. and L.H.	2
		Silver	♦D0MY 65517A20-A	R.H. and L.H.	2

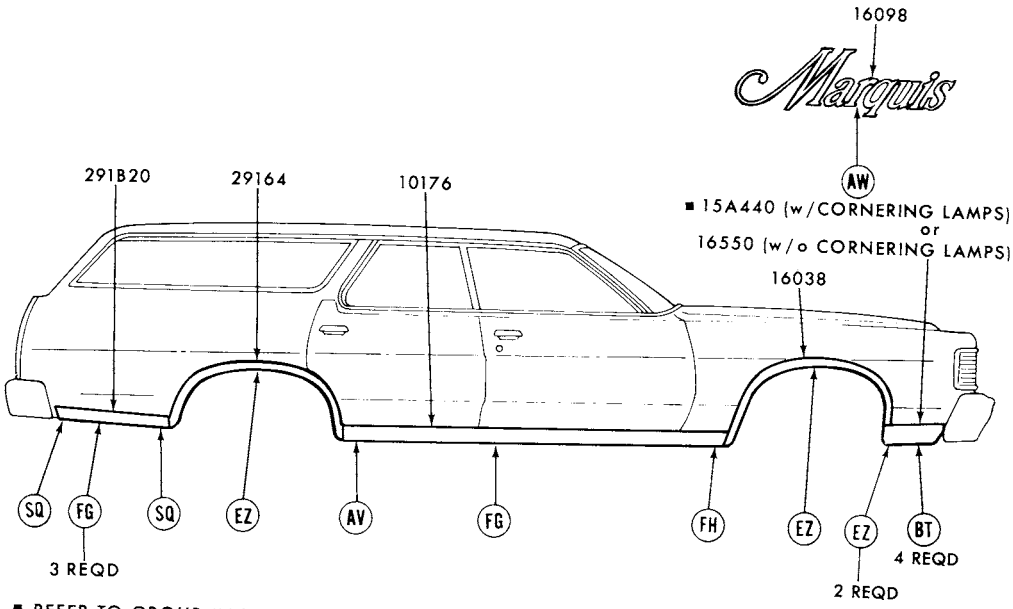

■ REFER TO GROUP IN TEXT SECTION
REFER TO EXTERIOR MOULDING SECTION "R" FOR COMPLETE RETAINER INFORMATION

P-11973

1976 MERCURY - BODY TYPE 71H - SIDE

GROUP NUMBER	PART NAME	DESCRIPTION	PART NUMBER		QTY.
10176-7	Moulding (body rocker panel)	87 3/4" long	(RH)♦D3MY 7110176-A	(LH)♦D3MY 7110177-A	1
16038-9	Moulding (front fender wheel opening)		(RH)♦D5MY 16038-A	(LH)♦D5MY 16039-A	1
16098	Plate (name)	"Marquis"	♦D3MY 16098-B	R.H. and L.H.	2
16550-1	Moulding (front fender lower front)		(RH)♦D5MY 16550-A	(LH)♦D5MY 16551-A	1
291B20-1	Moulding (quarter outside lower)		(RH)♦D5MY 71291B20-A	(LH)♦D5MY 71291B21-A	1
29164-5	Moulding (quarter wheel opening)	W/lower rear quarter moulding	(RH)♦D5MY 7129164-A	(LH)♦D5MY 7129165-A	1
		W/o lower rear quarter moulding	(RH)♦D5MY 7129164-C	(LH)♦D5MY 7129165-C	1

COPYRIGHT © 1986 — FORD MOTOR COMPANY — DEARBORN, MICHIGAN

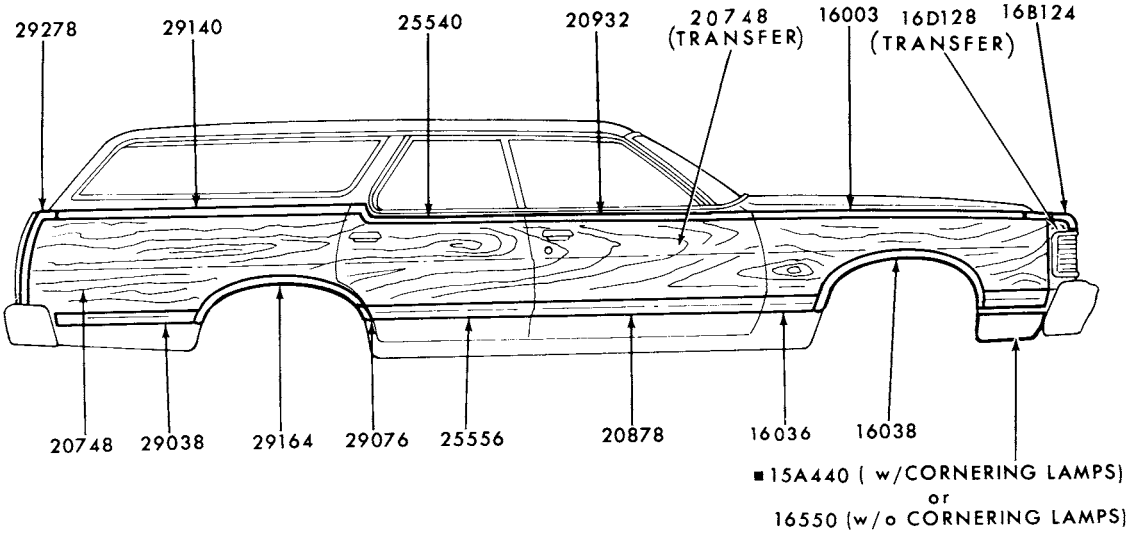

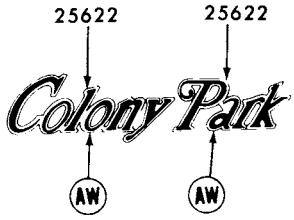

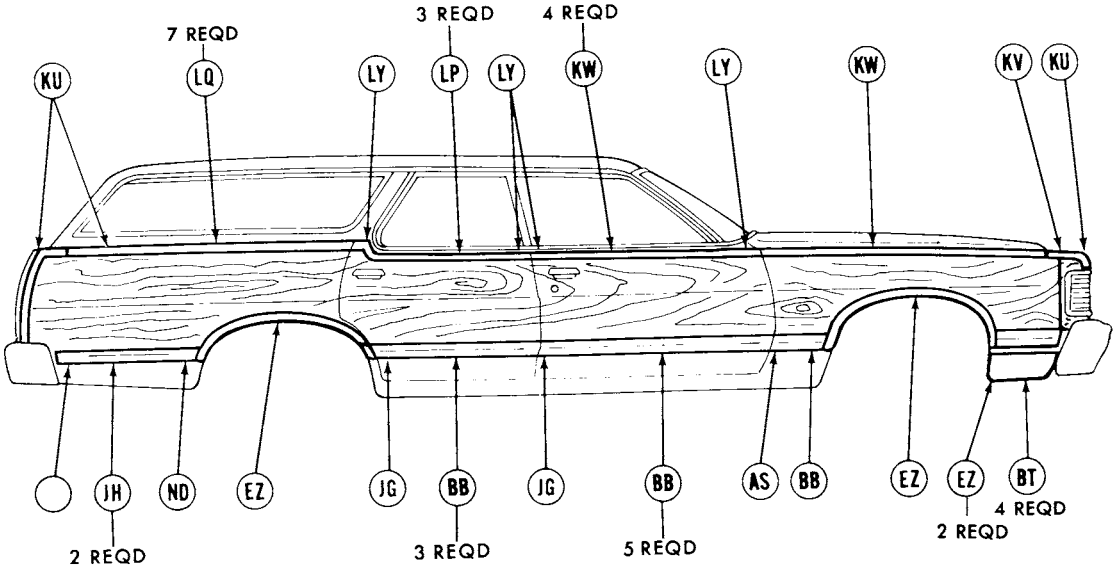

■REFER TO GROUP IN CHASSIS SECTION
REFER TO EXTERIOR MOULDING SECTION "R" FOR COMPLETE RETAINER INFORMATION

P-11974

1976 MERCURY - BODY TYPE 71K - SIDE

1976 MERCURY - BODY TYPE 71K - SIDE - cont'd.

GROUP NUMBER	PART NAME	DESCRIPTION	PART NUMBER		QTY.
16003-4	Moulding (front fender side)		(RH)♦D5MY 16003-A	(LH)♦D5MY 16004-A	1
16036-7	Moulding (front fender lower rear)		(RH)♦D3MY 16036-A	(LH)♦D3MY 16037-A	1
16038-9	Moulding (front fender wheel opening)		(RH)♦D5MY 16038-B	(LH)♦D5MY 16039-B	1
16B124-5	Moulding (front fender front extension)		(RH)♦D5MY 16B124-A	(LH)♦D5MY 16B125-A	1
16D128-9	Transfer (front fender front)	Rosewood-adhesive backed	(RH) D6MY 16D128-A	(LH) D6MY 16D129-A	1
16550-1	Moulding (front fender lower front)		(RH)♦D5MY 16550-A	(LH)♦D5MY 16551-A	1
20748	Transfer (wood grain)	Rosewood-adhesive backed-cut to fit	D6MY 7120748-A		1
20878-9	Moulding (front door outside)		(RH)♦D3MY 7120878-A	(LH)♦D3MY 7120879-A	1
20932-3	Moulding (front door outside upper)		(RH)♦D5MY 5320932-A	(LH)♦D5MY 5320933-A	1
25540-1	Moulding (rear door outside upper)		(RH)♦D5MY 5325540-A	(LH)♦D5MY 5325541-A	1
25556-7	Moulding (rear door outside)		(RH)♦D3MY 7125556-A	(LH)♦D3MY 7125557-A	1
25622	Plate (name)	"Colony"	♦D3MY 7125622-A	R.H. and L.H.	2
		"Park"	♦D3MY 7125622-B	R.H. and L.H.	2
29038-9	Moulding (quarter outside)		(RH)♦D3MY 7129038-C	(LH)♦D3MY 7129039-C	1
29076-7	Moulding (quarter outside lower front)		(RH)♦D3MY 7129076-A	(LH)♦D3MY 7129077-A	1
29140-1	Moulding (quarter outside upper)		(RH)♦D5MY 7129140-A	(LH)♦D5MY 7129141-A	1
29164-5	Moulding (quarter wheel opening)		(RH)♦D3MY 7129164-A	(LH)♦D3MY 7129165-A	1
29278-9	Moulding (quarter outside upper rear)		(RH)♦D5MY 7129278-A	(LH)♦D5MY 7129279-A	1

♦ Includes attaching parts

COPYRIGHT © 1986 — FORD MOTOR COMPANY — DEARBORN, MICHIGAN

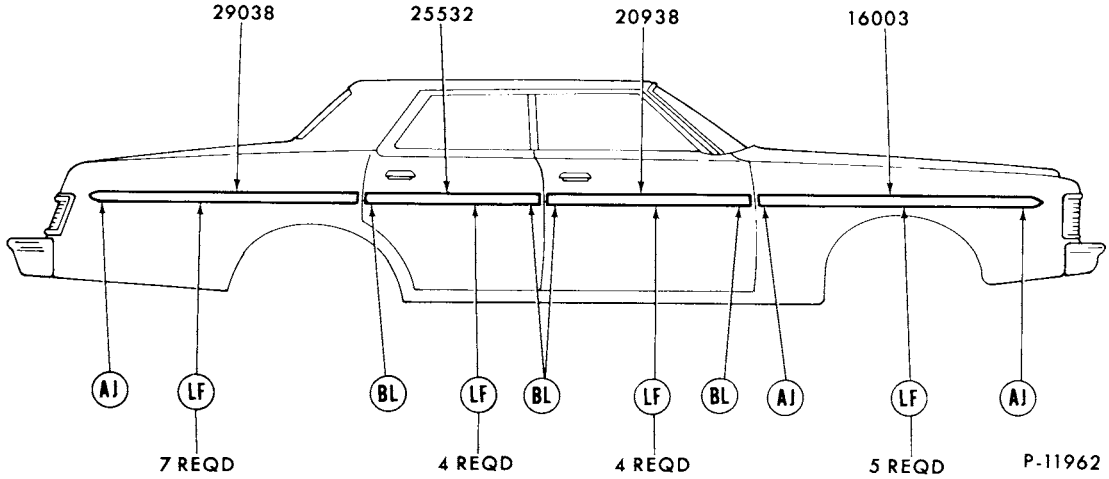

REFER TO EXTERIOR MOULDING SECTION "R" FOR COMPLETE RETAINER INFORMATION

1976 MERCURY - BODY TYPE 53 - SIDE PROTECTION

GROUP NUMBER	PART NAME	DESCRIPTION	PART NUMBER		QTY.
16003-4	Moulding (front fender side)	Black vinyl insert 15 3/4" long	♦D3AZ 16003-A	R.H. and L.H.	2
		57 1/2" long	(RH)♦D3MY 16003-B	(LH)♦D3MY 16004-B	1
20938-9	Moulding (front door outside)	Black vinyl insert	(RH)♦D3MY 5320938-A	(LH)♦D3MY 5320939-A	1
25532-3	Moulding (rear door outside)	Black vinyl insert	(RH)♦D3AZ 5325532-A	(LH)♦D3AZ 5325533-A	1
29038-9	Moulding (quarter outside)	Black vinyl insert 60 1/4" long	(RH)♦D3AZ 5329038-A	(LH)♦ D3AZ 5329039-A	1
		62 1/2" long	(RH)♦D3MY 5329038-A	(LH)♦D3MY 5329039-A	1

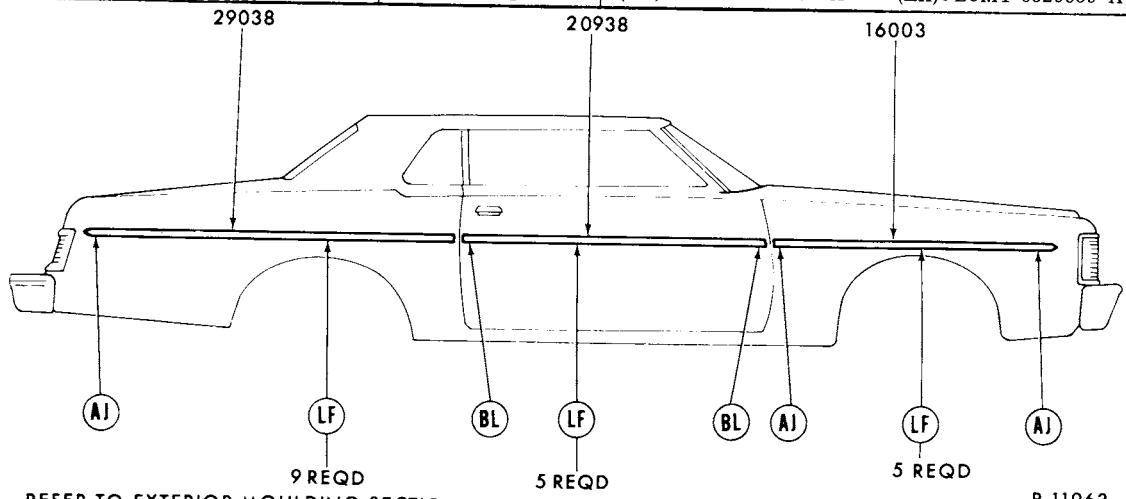

REFER TO EXTERIOR MOULDING SECTION "R" FOR COMPLETE RETAINER INFORMATION

1976 MERCURY - BODY TYPE 65 - SIDE PROTECTION

GROUP NUMBER	PART NAME	DESCRIPTION	PART NUMBER		QTY.
16003-4	Moulding (front fender side)	Black vinyl insert 15 3/4" long	D3AZ 16003-A	R.H. and L.H.	2
		57 1/2" long	(RH)♦D3MY 16003-B	(LH)♦D3MY 16004-B	1
20938-9	Moulding (front door outside)	Black vinyl insert	(RH)♦D3AZ 6520938-A	(LH)♦D3MY 6520939-A	1
29038-9	Moulding (quarter outside)	Black vinyl insert 83" long	♦D3AZ 6529038-A	R.H. and L.H.	2
		85 1/2" long	(RH)♦D3MY 6529038-A	(LH)♦D3MY6529039-A	1

♦ Includes attaching parts

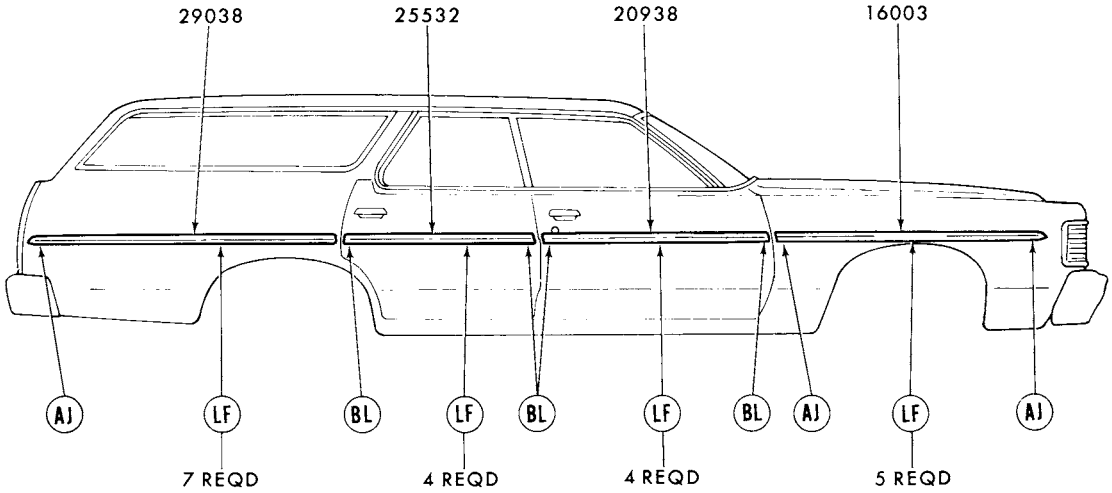

REFER TO EXTERIOR MOULDING SECTION "R" FOR COMPLETE RETAINER INFORMATION P-11964

1976 MERCURY - BODY TYPE 71 - SIDE PROTECTION

GROUP NUMBER	PART NAME	DESCRIPTION	PART NUMBER		QTY.
16003-4	Moulding (front fender side)	Black vinyl insert	(RH)♦D3MY 16003-B	(LH)♦D3MY 16004-B	1
		Bright-w/brown vinyl insert	(RH)✶D3MY 16003-C	(LH)♦D3MY 16004-C	1
20938-9	Moulding (front door outside)	Black vinyl insert	(RH)♦D3MY 5320938-A	(LH)♦D3MY 5320939-A	1
		Bright-w/brown vinyl insert	(RH)♦D3MY 7120938-A	(LH)♦D3MY 7120939-A	1
25532-3	Moulding (rear door outside)	Black vinyl insert	(RH)♦D3AZ 5325532-A	(LH)♦D3AZ 5325533-A	1
		Bright-w/brown vinyl insert	(RH)♦D3MY 7125532-A	(LH)♦D3MY 7125533-A	1
29038-9	Moulding (quarter outside)	Black vinyl insert	(RH)♦D3MY 7129038-A	(LH)♦D3MY 7129039-A	1
		Bright-w/brown vinyl insert	(RH)♦D3MY 7129038-B	(LH)♦D3MY 7129039-B	1

♦ Includes attaching parts

COPYRIGHT © 1986 — FORD MOTOR COMPANY — DEARBORN, MICHIGAN

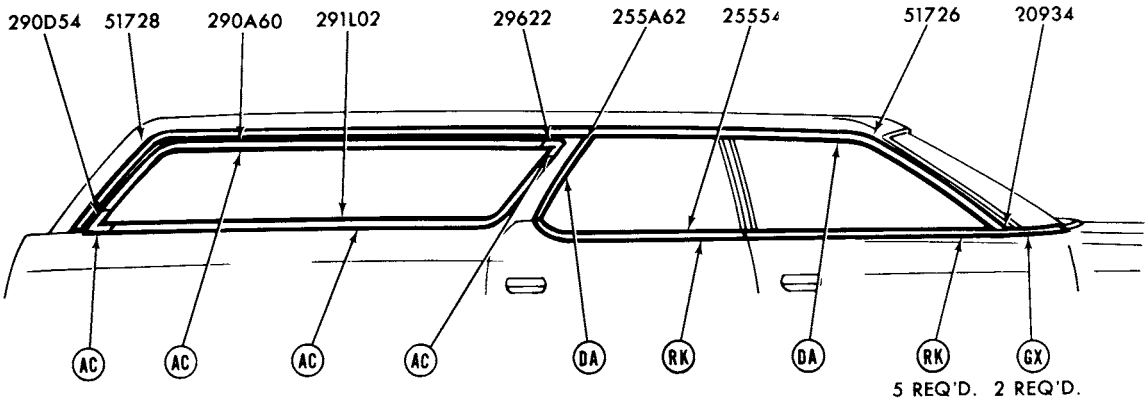

REFER TO EXTERIOR MOULDING SECTION 'R' FOR COMPLETE RETAINER INFORMATION

P-13209

1976 MERCURY - BODY TYPE 71 - DOOR and QUARTER WINDOW FRAME

GROUP NUMBER	PART NAME	DESCRIPTION	PART NUMBER		QTY.
20916-7	Moulding (front door outside belt front)		(RH)♦D5AZ 5320916-A	(LH)♦D5AZ 5320917-A	1
20934-5	Moulding (front door outside belt)	Incl.weatherstrip	(RH)♦D5AZ 5320934-B	(LH)♦D5AZ 5320935-B	1
25554-5	Moulding (rear door outside belt)	Incl. weatherstrip	(RH)♦D5AZ 5325554-A	(LH)♦D5AZ 5325555-A	1
255A62-3	Moulding (rear door window opening outside rear)		(RH)♦D5AZ 71255A62-A	(LH)♦D5AZ 71255A63-A	1
290D54-5	Moulding (quarter window outside lower rear corner)		(RH)♦D5AZ 71290D54-A	(LH)♦D5AZ 71290D55-A	1
290A60-1	Moulding (quarter window upper)		(RH)♦D5AZ 71290A60-A	(LH)♦D5AZ 71290A61-A	1
291C02-3	Moulding (quarter window lower rear)		(RH)♦D5AZ 71291C02-A	(LH)♦D5AZ 71291C03-A	1
29622-3	Moulding (quarter window front)		(RH)♦D5AZ 7129622-A	(LH)♦D5AZ 7129623-A	1
423A18-9	Moulding (back belt outside side)		(RH)♦D3AZ 71423A18-A	(LH)♦D3AZ 71423A19-A	1
51726-7	Moulding (roof drip finish)	Front	(RH)♦D5AZ 7151726-A	(LH)♦D5AZ 7151727-A	1
51728-9	Moulding (roof drip side finish)	Rear-w/bright flange	(RH)♦D3AZ 7151728-B	(LH)♦D3AZ 7151729-B	1

♦ Includes attaching parts

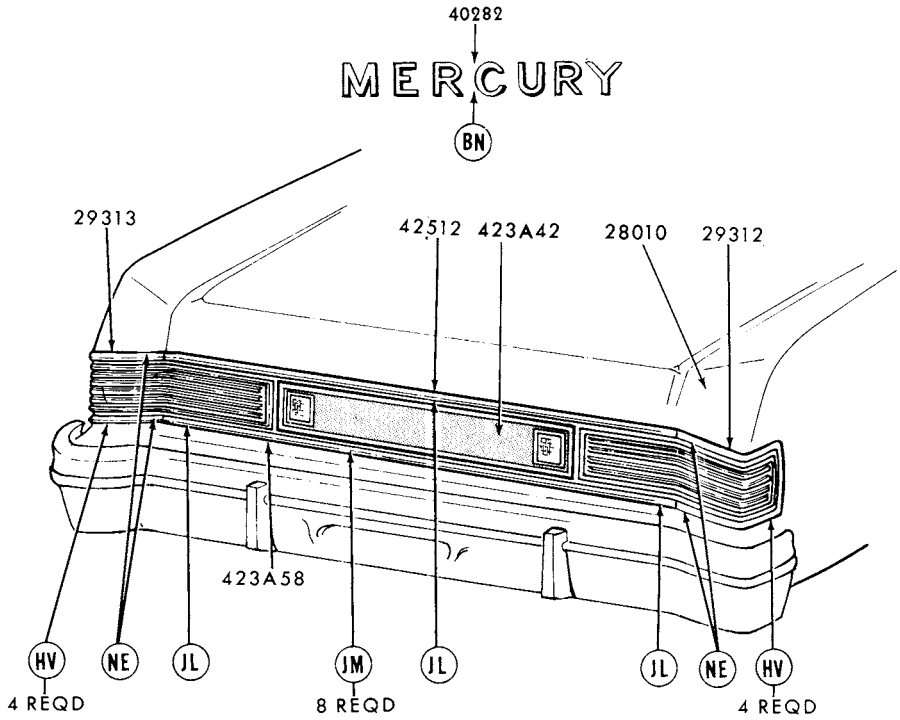

REFER TO EXTERIOR MOULDING SECTION "R" FOR COMPLETE RETAINER INFORMATION

P-11984

1976 MERCURY - BODY TYPES 53 and 65 - BACK END

GROUP NUMBER	PART NAME	DESCRIPTION	PART NUMBER		QTY.
28010-1	Extension (quarter rear)		(RH)♦D5MY 6528010-A	(LH)♦D5MY 6528011-A	1
29312-3	Moulding (quarter rear extension)		(RH)♦D5MY 6529312-A	(LH)♦D5MY 6529313-A	1
40282	Letter (name)	"M"	♦D3MY 7140282-A		1
		"E"	♦D3MY 7140282-B		1
		"R"	♦D3MY 7140282-C		2
		"C"	♦D3MY 7140282-D		1
		"U"	♦D3MY 7140282-E		1
		"Y"	♦D3MY 7140282-F		1
423A42	Panel (lower back finish)	Black	♦D5MY 65423A42-M		1
		Blue	♦D5MY 65423A42-J		1
		Brown	★D5MY 65423A42-G	Not replaced (6/82)	1
		Gold	♦D6MY 65423A42-C		1
		Green	★D5MY 65423A42-K	Not replaced (6/82)	1
		Red	♦D6MY 65423A42-A		1
		Silver	♦D6MY 65423A42-D		1
		White	★D6MY 65423A42-B	Not replaced (6/82)	1
423A58	Moulding (lower back panel)		♦D5MY 65423A58-B		1
42512	Moulding (luggage compartment door)		♦D5MY 6542512-A		1

COPYRIGHT © 1986 — FORD MOTOR COMPANY — DEARBORN, MICHIGAN

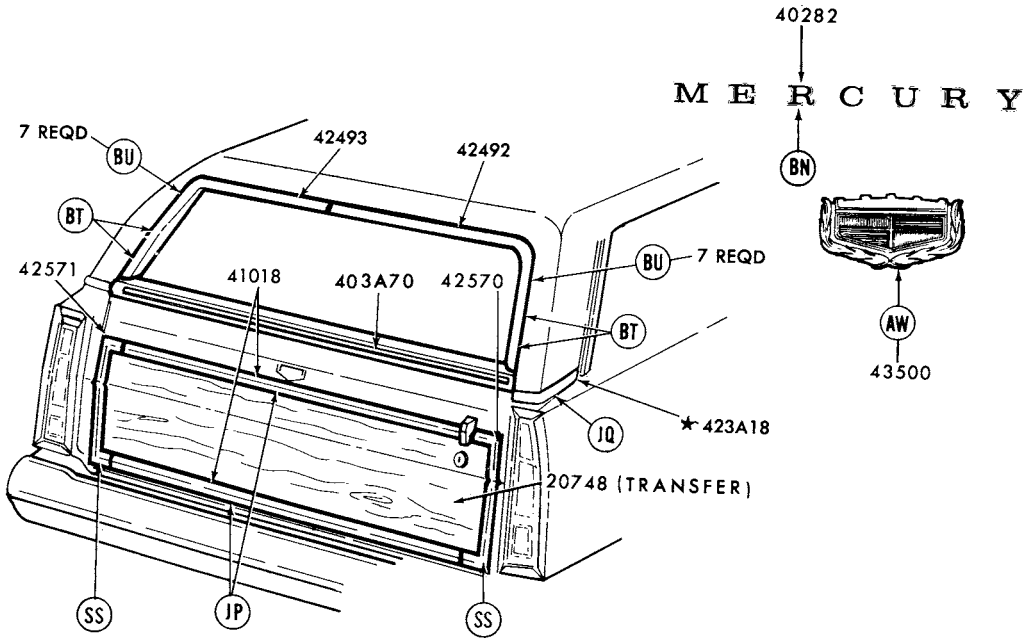

REFER TO EXTERIOR MOULDING SECTION "R" FOR COMPLETE RETAINER INFORMATION P-11985

1976 MERCURY - BODY TYPE 71 - BACK END

GROUP NUMBER	PART NAME	DESCRIPTION	PART NUMBER	QTY.
20748	Transfer (wood grain)	Rosewood-adhesive backed-cut to fit	D6MY 7120748-A	1
40282	Letter (name)	"M"	♦D3MY 7140282-A	1
		"E"	♦D3MY 7140282-B	1
		"R"	♦D3MY 7140282-C	2
		"C"	♦D3MY 7140282-D	1
		"U"	♦D3MY 7140282-E	1
		"Y"	♦D3MY 7140282-F	1
403A70	Moulding (tailgate outside belt)	W/o wash and wipe	♦D4AZ 71403A70-E	1
		W/wash and wipe	★D4AZ 71403A70-D Not replaced (7/81)	1
41018	Moulding (tailgate outside)	Upper and lower	♦D5MY 7141018-A	2
42570-1	Moulding (tailgate outside side)		(RH)♦D5MY 7142570-A (LH)♦D5MY 7142571-A	1
42492-3	Moulding (back window outside side)		(RH)♦D3AZ 7142492-A (LH)♦D3AZ 7142493-A	1
43500	Ornament (tailgate)		♦C9MY 7143500-A	1

♦ Includes attaching parts

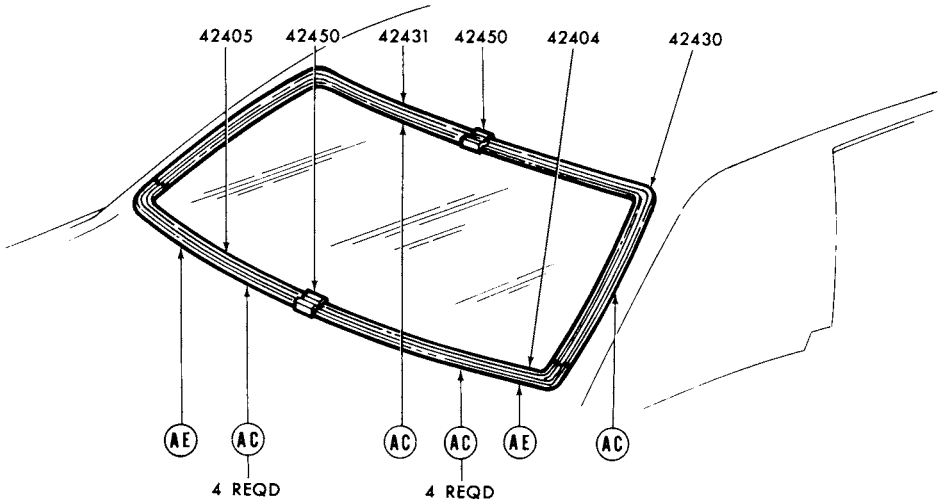

REFER TO EXTERIOR MOULDING SECTION "R" FOR COMPLETE RETAINER INFORMATION P-12460

1976 MERCURY - BODY TYPE 53 - BACK WINDOW

GROUP NUMBER	PART NAME	DESCRIPTION	PART NUMBER		QTY.
42404-5	Moulding (back window outside lower)		(RH)♦D3AZ 5342404-A	(LH)♦D3AZ 5342405-A	1
42430-1	Moulding (back window outside upper)		(RH)♦D7AZ 5342430-A	(LH)♦D7AZ 5342431-A	1
42450	Cover (back window outside moulding joint)	Lower	D5AZ 5342450-A		1
		Upper	D5AZ 5342450-B		1

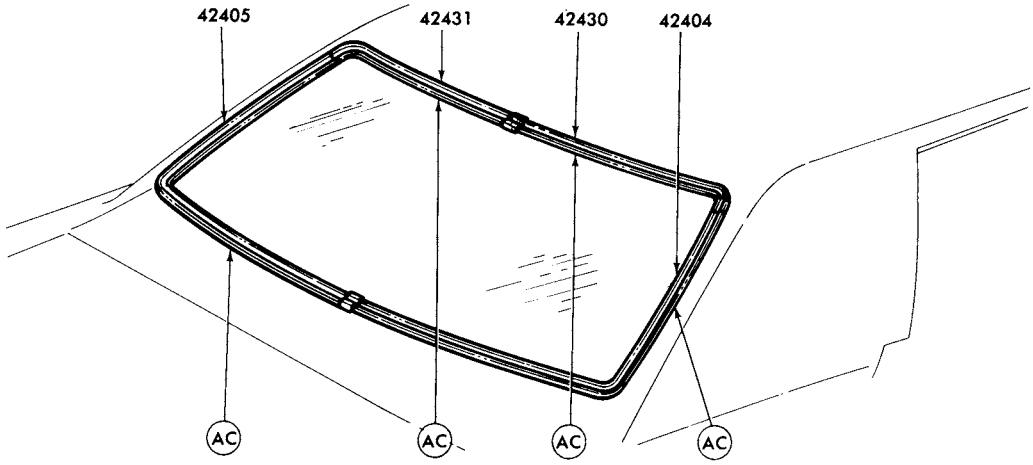

REFER TO EXTERIOR MOULDING SECTION "R" FOR COMPLETE RETAINER INFORMATION P-12487

1976 MERCURY - BODY TYPE 65 - BACK WINDOW

GROUP NUMBER	PART NAME	DESCRIPTION	PART NUMBER		QTY.
42404-5	Moulding (back window outside lower)		(RH)♦D5MY 6042404-A	(LH)♦D5MY 6042405-A	1
42430-1	Moulding (back window outside upper)		(RH)♦D7AZ 6042430-A	(LH)♦D7AZ 6042431-A	1

♦ Includes attaching parts

COPYRIGHT © 1986 — FORD MOTOR COMPANY — DEARBORN, MICHIGAN

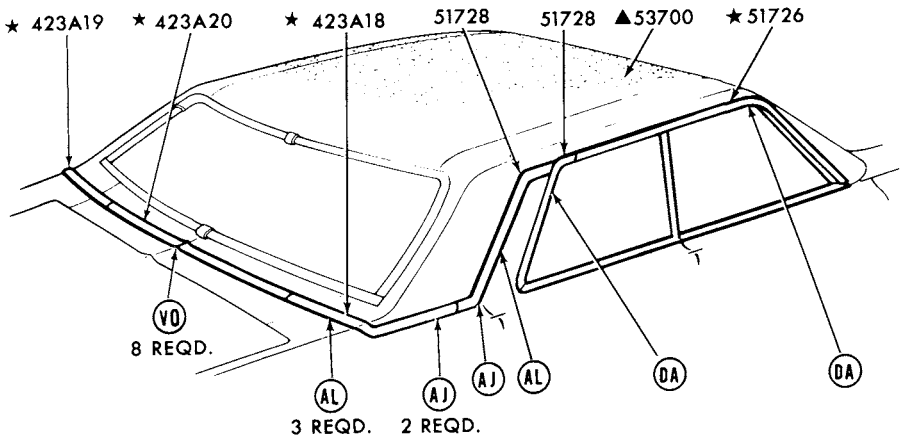

▲ REFER TO GROUP IN SOFT TRIM SECTION
REFER TO EXTERIOR MOULDING SECTION 'R' FOR COMPLETE RETAINER INFORMATION

P-13420

1976 MERCURY - BODY TYPE 53 - ROOF and BACK BELT

GROUP NUMBER	PART NAME	DESCRIPTION	PART NUMBER		QTY.
51728-9	Moulding (roof drip side finish rear)	W/halo roof			
		◊ Black	(RH)♦D6MY 5351728-C	(LH)♦D6MY 5351729-C	1
		◊ Blue	(RH)♦D5MY 5351728-D	(LH)♦D5MY 5351729-D	1
		◊ Brown	(RH)★D5MY 5351728-A Not replaced (7/81)	(LH)♦D5MY 5351729-A	1
		◊ Gold	(RH)♦D6MY 5351728-B	(LH)♦D6MY 5351729-B	1
		◊ Green	(RH)♦D5MY 5351728-E	(LH)♦D5MY 5351729-E	1
		◊ Red	(RH)♦D6MY 5351728-A	(LH)♦D6MY 5351729-A	1
		◊ Silver	(RH)♦D6MY 5351728-D	(LH)♦D6MY 5351729-D	1
		◊ White	(RH)♦D6MY 5351728-E	(LH)♦D6MY 5351729-E	1

♦ Includes attaching parts † Prime - paint to match
◊ For color verification, refer to the vinyl roof swatches in the 1976 Salesman's Color and Upholstery Selections Guide.

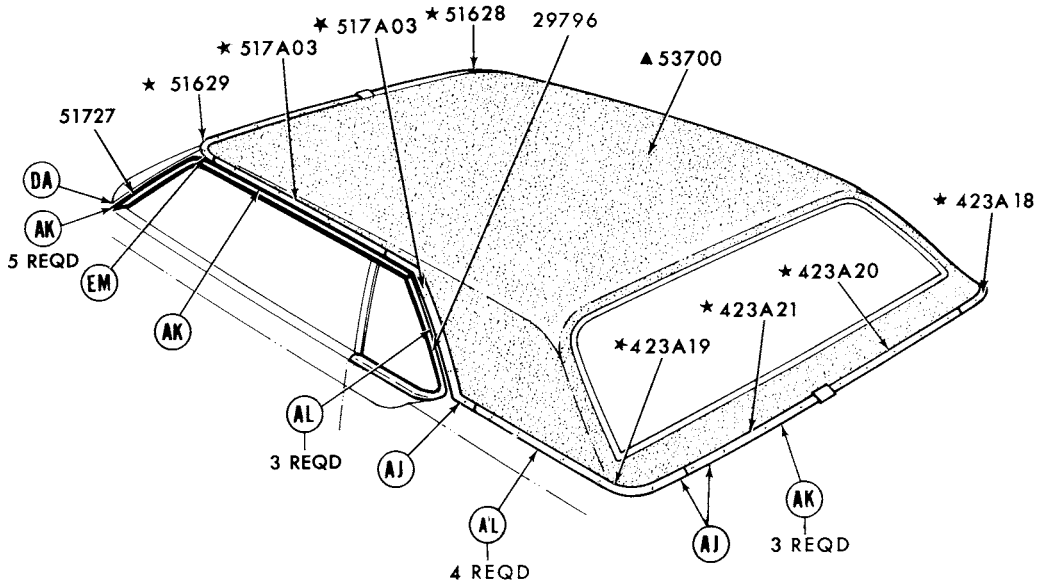

▲REFER TO GROUP IN SOFT TRIM SECTION
REFER TO EXTERIOR MOULDING SECTION "R" FOR COMPLETE RETAINER INFORMATION

P-10120

1976 MERCURY - BODY TYPE 65 - ROOF and BACK BELT - w/HALO VINYL ROOF

GROUP NUMBER	PART NAME	DESCRIPTION	PART NUMBER	QTY.
29796-7	Moulding (quarter window outside side)		(RH)♦D5MY 6529796-A (LH)♦D5MY 6529797-A	1
51726-7	Moulding (roof drip side finish)		(RH)♦D5MY 6551726-A (LH)♦D5MY 6551727-A	1

♦ Includes attaching parts

COPYRIGHT © 1986 — FORD MOTOR COMPANY — DEARBORN, MICHIGAN

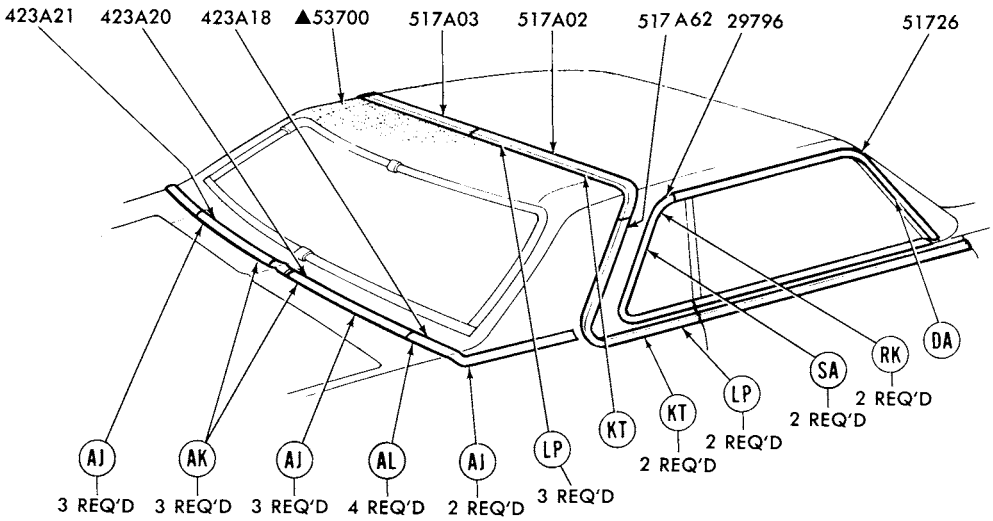

▲REFER TO GROUP IN SOFT TRIM SECTION
REFER TO EXTERIOR MOULDING SECTION "R" FOR COMPLETE RETAINER INFORMATION

P-12761

1976 MERCURY - BODY TYPES 65H,K,L - ROOF and BACK BELT - w/PARTIAL VINYL ROOF

GROUP NUMBER	PART NAME	DESCRIPTION	PART NUMBER		QTY.
29796-7	Moulding (quarter window outside rear)		(RH)♦D5MY 6529796-A	(LH)♦D5MY 6529797-A	1
423A18-9	Moulding (back belt outside side)	Paint to match	(RH)♦D7MY 65423A18-A	(LH)♦D7MY 65423A19-A	1
423A20-1	Moulding (back belt outside)	Paint to match	(RH)♦D3MY 65423A20-B	(LH)♦D3MY 65423A21-B	1
517A02-3	Moulding (roof outside top)		(RH)♦D6MY 65517A02-A	(LH)♦D6MY 65517A03-A	1
51726-7	Moulding (roof drip side finish)		(RH)♦D5MY 6551726-A	(LH)♦D5MY 6551727-A	1
517A62-3	Moulding (roof outside side)		(RH)♦D6MY 65517A62-A	(LH)♦D6MY 65517A63-A	1

♦ Includes attaching parts

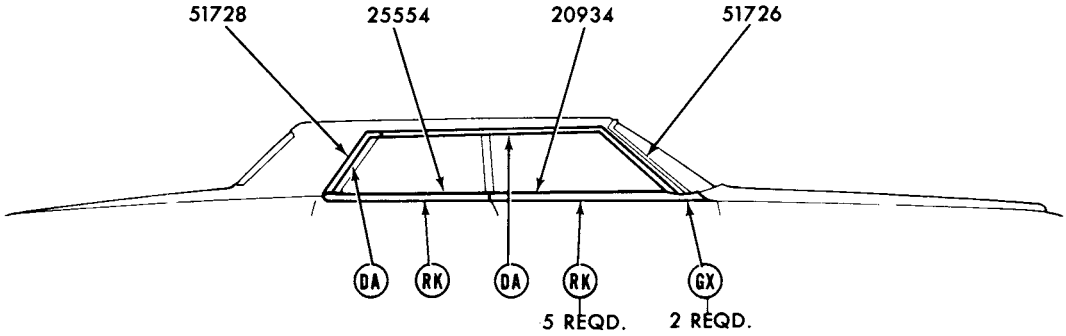

REFER TO EXTERIOR MOULDING SECTION "R" FOR COMPLETE RETAINER INFORMATION

P-13240

1976 MERCURY - BODY TYPE 53 - ROOF DRIP SIDE, FRONT and REAR DOOR BELT MOULDINGS

GROUP NUMBER	PART NAME	DESCRIPTION	PART NUMBER		QTY.
20934-5	Moulding (front door outside belt)	Incl. weatherstrip	(RH)♦D5AZ 5320934-B	(LH)♦D5AZ 5320935-B	1
25554-5	Moulding (rear door outside belt)	Incl. weatherstrip	(RH)♦D5AZ 5325554-A	(LH)♦D5AZ 5325555-A	1
51726-7	Moulding (roof drip side finish front)		(RH)♦D5AZ 5351726-A	(LH)♦D7AZ 5351727-C	1
51728-9	Moulding (roof outside finish rear)		(RH)♦D5AZ 5351728-A	(LH)♦D5AZ 5351729-A	1

♦ Includes attaching parts

COPYRIGHT © 1986 — FORD MOTOR COMPANY — DEARBORN, MICHIGAN

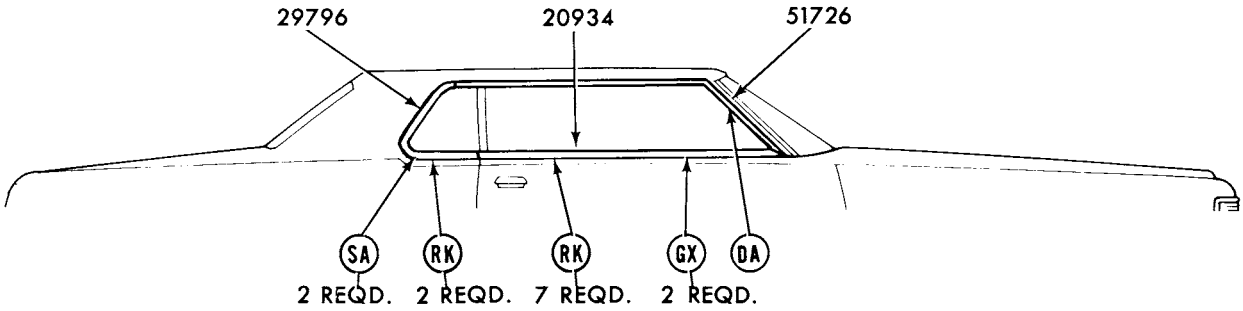

REFER TO EXTERIOR MOULDING SECTION "R" FOR COMPLETE RETAINER INFORMATION

P-13241

1976 MERCURY - BODY TYPE 65 - ROOF DRIP SIDE, DOOR and QUARTER BELT MOULDINGS

GROUP NUMBER	PART NAME	DESCRIPTION	PART NUMBER		QTY.
20934-5	Moulding (door outside belt)	Incl. weatherstrip	(RH) D5AZ 6020934-A	(LH)♦ D5AZ 6020935-A	1
29796-7	Moulding (quarter window)		(RH) D5MY 6529796-A	(LH) D5MY 6529797-A	1
51726-7	Moulding (roof drip side)		(RH) D5MY 6551726-A	(LH) D5MY 6551727-A	1

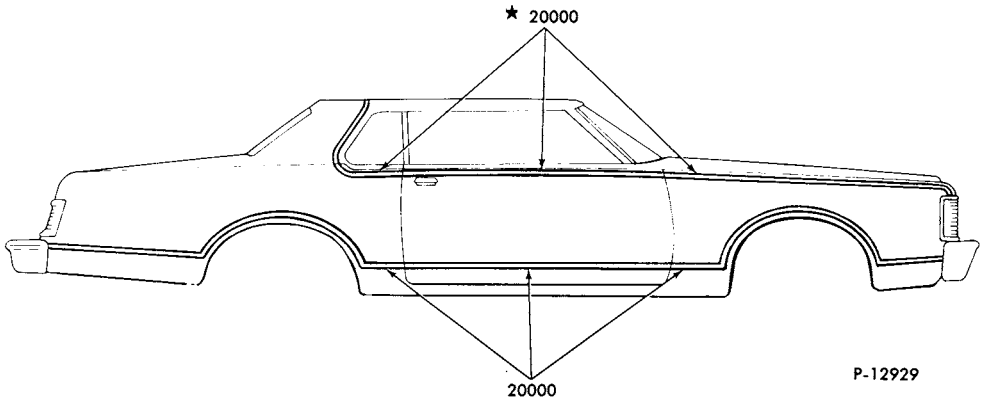

P-12929

ITEMS INDICATED WITH A BLACK STAR (★) MUST BE IMPROVISED OR PROCURED LOCALLY.

♦ Includes attaching parts

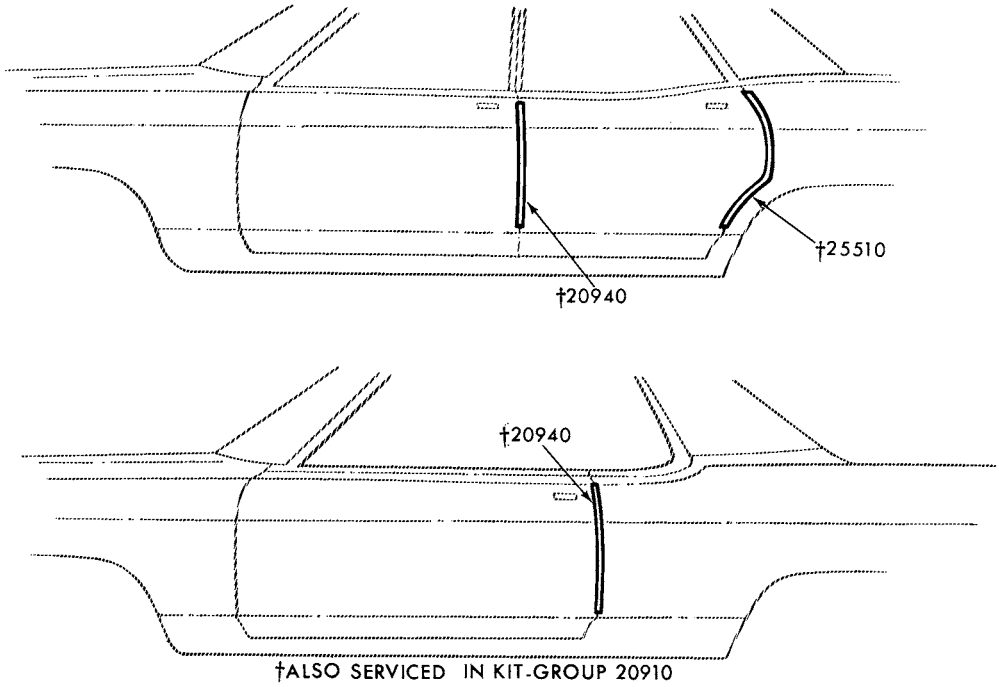

†ALSO SERVICED IN KIT-GROUP 20910

P-10061

1976 MERCURY - DOOR EDGE GUARDS

GROUP NUMBER	PART NAME	DESCRIPTION	PART NUMBER		QTY.
20940-1	Moulding (front door edge guard)	Bright-body types 53 and 71	(RH) D3MY 5320940-A	(LH) D3MY 5320941-A	1
		Body type 65	(RH) D3MY 6520940-A	(LH) D3MY 6520941-A	1
		Wood grain-Colony Park	(RH) D5MY 7120940-A	(LH) D5MY 7120941-A	1
25510-1	Moulding (rear door edge guard)	Bright-body types 53 and 71	(RH) D3MY 5325510-A	(LH) D3MY 5325511-A	1
		Wood grain-Colony Park	(RH) D5MY 7125510-A	(LH) D5MY 7125511-A	1

COPYRIGHT © 1986 — FORD MOTOR COMPANY — DEARBORN, MICHIGAN

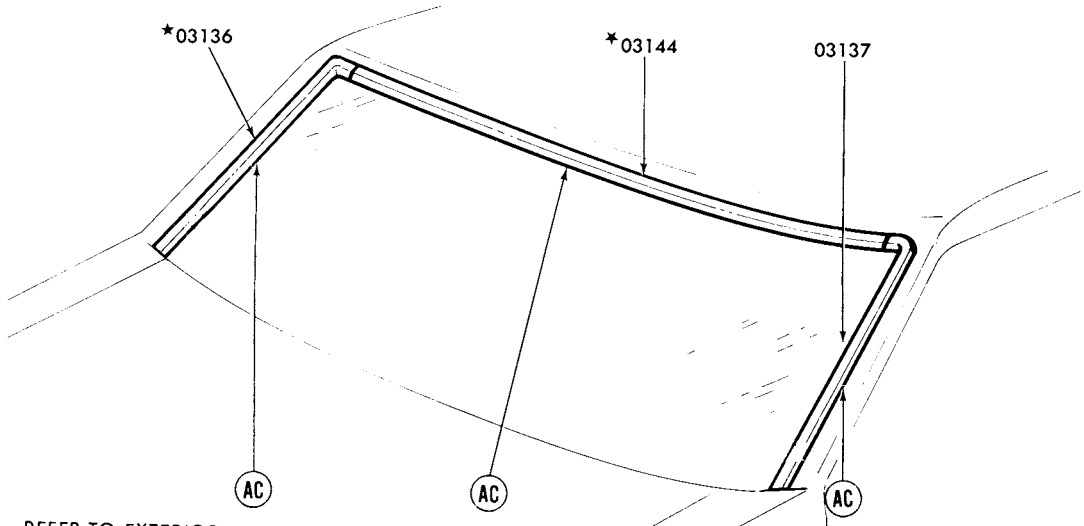

REFER TO EXTERIOR MOULDING SECTION 'R' FOR COMPLETE RETAINER INFORMATION

P-12521

1976 MONTEGO - WINDSHIELD

GROUP NUMBER	PART NAME	DESCRIPTION	PART NUMBER	QTY.
03136-7	Moulding (windshield outside side)		(RH)*D2OZ 6503136-A (LH)♦D2OZ 6503137-A	1
03144	Moulding (windshield outside top)		*D2OZ 6503144-A	1

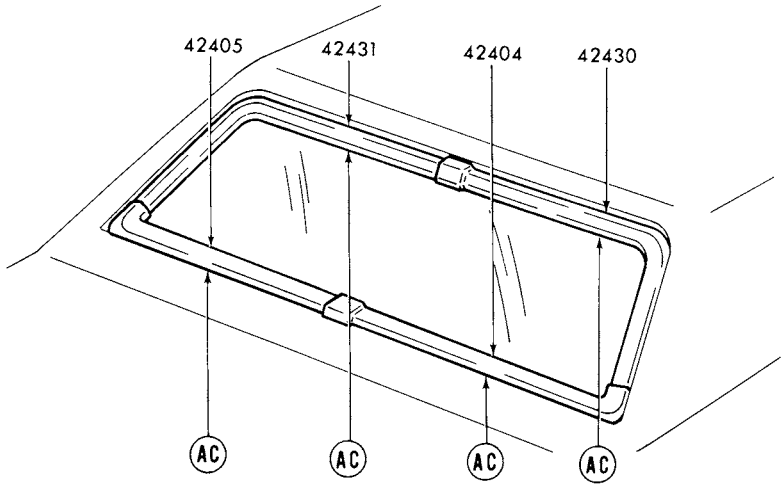

REFER TO EXTERIOR MOULDING SECTION "R" FOR COMPLETE RETAINER INFORMATION

P-12457

1976 MONTEGO - BODY TYPES 53 and 65 - BACK WINDOW

GROUP NUMBER	PART NAME	DESCRIPTION	PART NUMBER	QTY.
42404-5	Moulding (back window outside lower)		(RH)♦D4OZ 6542404-A (LH)♦D4OZ 6542405-A	1
42430-1	Moulding (back window outside upper)		(RH)♦D4OZ 6542430-A (LH)♦D4OZ 6542431-A	1

♦ Includes attaching parts

COPYRIGHT © 1985 — FORD MOTOR COMPANY — DEARBORN, MICHIGAN

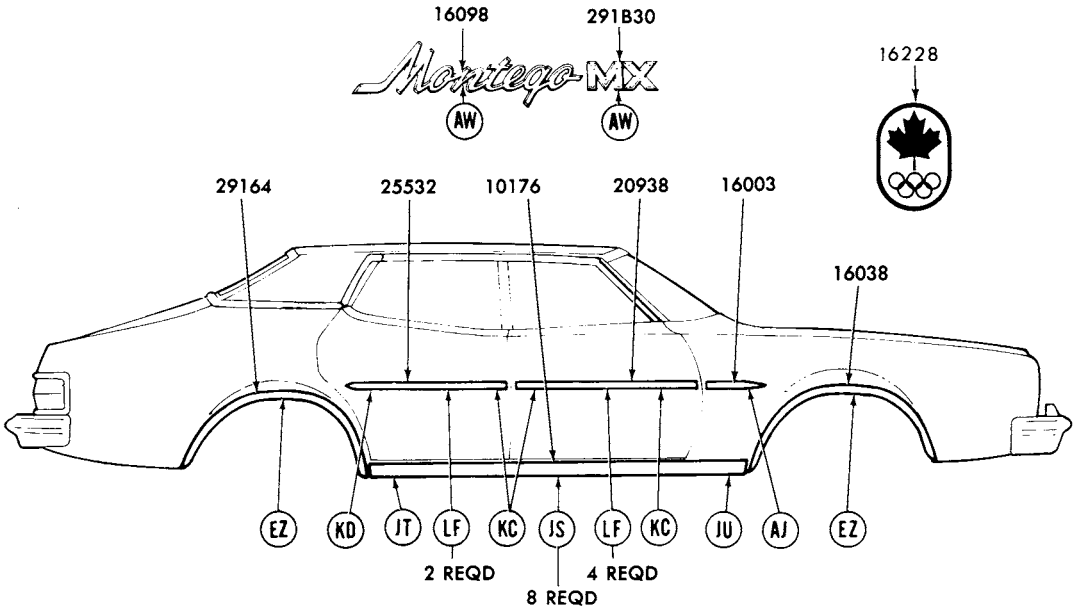

REFER TO EXTERIOR MOULDING SECTION "R" FOR COMPLETE RETAINER INFORMATION

P-12804

1976 MONTEGO - BODY TYPES 53B,D - SIDE - w/ROCKER PANEL MOULDING

GROUP NUMBER	PART NAME	DESCRIPTION	PART NUMBER		QTY.
10176-7	Moulding (body rocker panel)	Body type 53D	(RH)♦D2GY 5310176-A	(LH)♦D2GY 5310177-A	1
16003-4	Moulding (front fender side)	Bright finish	♦D4GY 16003-A	R.H. and L.H.	2
		Black vinyl insert-adhesive backed-57" long-cut to fit	D4GZ 16003-A	R.H. and L.H.	AR
16038-9	Moulding (front fender wheel opening)		(RH)♦D2GY 16038-A	(LH)♦D2GY 16039-A	1
16098	Plate (name)	"Montego"	♦D2GY 16098-C	R.H. and L.H.	2
16228	Transfer (front fender emblem)	Olympic crest-incl. R.H. and L.H.	@D6OZ 16228-A		1
20938-9	Moulding (front door outside)	Bright finish	♦D4GY 5320938-A	R.H. and L.H.	2
		Black vinyl insert-adhesive backed-57" long-cut to fit	D4GZ 16003-A	R.H. and L.H.	AR
25532-3	Moulding (rear door outside)	Bright finish	♦D4GY 5325532-A	R.H. and L.H.	2
		Black vinyl insert-adhesive backed-57" long-cut to fit	D4GZ 16003-A	R.H. and L.H.	AR
291B30	Plate (name)	"MX"-body type 53D	♦C8GY 54291B30-A	R.H. and L.H.	2
29164-5	Moulding (quarter wheel opening)		(RH)♦D2GY 6529164-A	(LH)♦D2GY 6529165-A	1

♦ Includes attaching parts @ Canada only

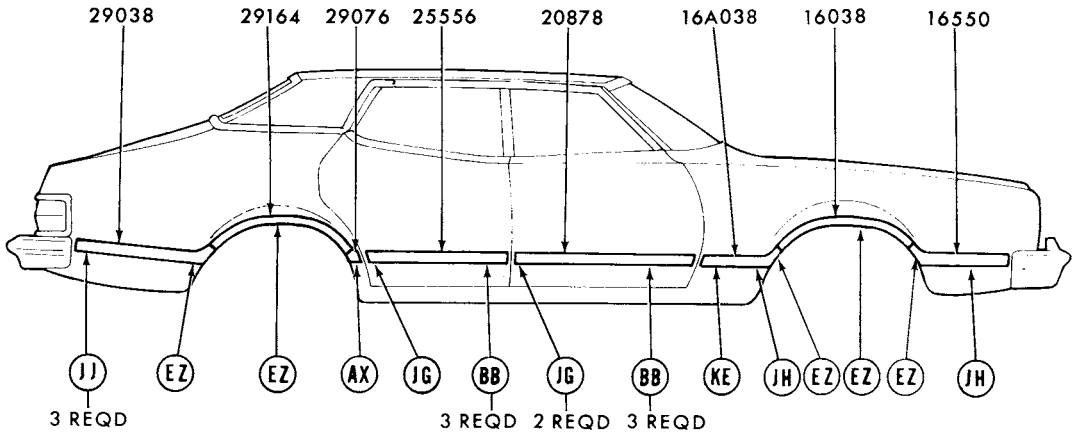

REFER TO EXTERIOR MOULDING SECTION "R" FOR COMPLETE RETAINER INFORMATION P-11181

1976 MONTEGO - BODY TYPE 53D - w/o ROCKER PANEL MOULDING

GROUP NUMBER	PART NAME	DESCRIPTION	PART NUMBER		QTY.
16038-9	Moulding (front fender wheel opening)		(RH)♦D4GY 16038-A	(LH)♦D4GY 16039-A	1
16A038-9	Moulding (front fender side rear)	Incl. vinyl insert			
		◊ Black	(RH)♦D4WY 16A038-AA	(LH)♦D4WY 16A039-AA	1
		◊ Blue	(RH)✱D6WY 16A038-AB Not replaced (4/84)	(LH)✱D6WY 16A039-AB	1
		◊ Green	(RH)♦D5WY 16A038-AG	(LH)♦D5WY 16A039-AG	1
		◊ Red	(RH)✱D6WY 16A038-AD Not replaced (4/84)	(LH)✱D6WY 16A039-AD Not replaced (4/84)	1
		◊ Silver	(RH)★D4WY 16A038-AP	(LH)★D4WY 16A039-AP	1
		◊ Tan (dark)	(RH)✱D6WY 16A038-AU Not replaced (4/84)	(LH)✱D6WY 16A039-AU Not replaced (4/84)	1
		◊ Tan (light)	(RH)♦D6WY 16A038-BU	(LH)♦D6WY 16A039-BU	1
		◊ White	(RH)♦D4WY 16A038-AW	(LH)♦D4WY 16A039-AW	1
16550-1	Moulding (front fender lower front)	Incl. vinyl insert			
		◊ Black	(RH)♦D4GY 16550-AA	(LH)♦D4GY 16551-AA	1
		◊ Blue	(RH)★D4GY 16550-AB Not replaced (4/84)	(LH)★D4GY 16551-AB	1
		◊ Green	(RH)✱D5GY 16550-AG Not replaced (4/84)	(LH)✱D5GY 16551-AG	1
		◊ Red	(RH)★D6WY 16550-AD Not replaced (4/84)	(LH)★D6WY 16551-AD	1
		◊ Silver	(RH)♦D4WY 16550-AP	(LH)♦D4WY 16551-AP	1
		◊ Tan (dark)	(RH)✱D6WY 16550-AU Not replaced (4/84)	(LH)✱D6WY 16551-AU Not replaced (4/84)	1
		◊ Tan (light)	(RH)♦D5GY 16550-AU	(LH)♦D5GY 16551-AU	1
		◊ White	(RH)♦D4GY 16550-AW	(LH)♦D4GY 16551-AW	1

♦ Includes attaching parts
◊ For color verification, refer to the vinyl roof swatches in the 1976 salesman's color and upholstery selections guide.

COPYRIGHT © 1986 — FORD MOTOR COMPANY — DEARBORN, MICHIGAN

1976 MONTEGO - BODY TYPE 53D - w/o ROCKER PANEL MOULDING - cont'd.

GROUP NUMBER	PART NAME	DESCRIPTION	PART NUMBER		QTY.
20878-9	Moulding (front door lower)	Incl. vinyl insert			
		◊ Black	(RH)♦D6GY 5320878-AA	(LH)♦D6GY 5320879-AA	1
		◊ Blue	(RH)♦D6GY 5320878-AB	(LH)♦D6GY 5320879-AB	1
		◊ Green	(RH)♦D6GY 5320878-AG	(LH)♦D6GY 5320879-AG	1
		◊ Red	(RH)♦D6GY 5320878-AD	(LH)♦D6GY 5320879-AD	1
		◊ Silver	(RH)♦D6GY 5320878-AP	(LH)♦D6GY 5320879-AP	1
		◊ Tan (dark)	(RH)♦D6GY 5320878-AU	(LH)♦D6GY 5320879-AU	1
		◊ Tan (light)	(RH)♦D5GY 5320878-B	(LH)♦D5GY 5320879-B	1
		◊ White	(RH)♦D6GY 5320878-AW	(LH)♦D6GY 5320879-AW	1
25556-7	Moulding (rear door lower)	Incl. vinyl insert			
		◊ Black	(RH)♦D6GY 5325556-AA	(LH)♦D6GY 5325557-AA	1
		◊ Blue	(RH)♦D6GY 5325556-AB	(LH)♦D6GY 5325557-AB	1
		◊ Green	(RH)★D6GY 5325556-AG Not replaced (2/81)	(LH)♦D6GY 5325557-AG	1
		◊ Red	(RH)♦D6GY 5325556-AD	(LH)♦D6GY 5325557-AD	1
		◊ Silver	(RH)♦D6GY 5325556-AP	(LH)♦D6GY 5325557-AP	1
		◊ Tan (dark)	(RH)♦D6GY 5325556-AU	(LH)♦D6GY 5325557-AU	1
		◊ Tan (light)	(RH)♦D5GY 5325556-AU	(LH)♦D5GY 5325557-AU	1
		◊ White	(RH)♦D6GY 5325556-AW	(LH)♦D6GY 5325557-AW	1
29038-9	Moulding (quarter outside lower rear)	Incl. vinyl insert			
		◊ Black	(RH)★D4GY 6529038-AA Not replaced (4/84)	(LH)♦D4GY 6529039-AA	1
		◊ Blue	(RH)♦D4GY 6529038-AB	(LH)♦D4GY 6529039-AB	1
		◊ Green	(RH)★D5GY 6529038-AG Not replaced (6/83)	(LH)★D5GY 6529039-AG Not replaced (6/83)	1
		◊ Red	(RH)★D6WY 6529038-AD	(LH)♦D6WY 6529039-AD	1
		◊ Silver	(RH)♦D4WY 6529038-BP	(LH)♦D4WY 6529039-BP	1
		◊ Tan (dark)	(RH)★D6WY 6529038-AU Not replaced (4/84)	(LH)♦D6WY 6529039-AU	1
		◊ Tan (light)	(RH)♦D5GY 6529038-AU	(LH)♦D5GY 6529039-AU	1
		◊ White	(RH)♦D4GY 6529038-AW	(LH)♦D4GY 6529039-AW	1
29076-7	Moulding (quarter lower front)	Incl. vinyl insert			
		◊ Black	(RH)♦D6GY 5329076-AA	(LH)♦D6GY 5329077-AA	1
		◊ Blue	(RH)♦D6GY 5329076-AB	(LH)♦D6GY 5329077-AB	1
		◊ Green	(RH)★D6GY 5329076-AG Not replaced (6/83)	(LH)♦D6GY 5329077-AG	1
		◊ Red	(RH)♦D6GY 5329076-AD	(LH)♦D6GY 5329077-AD	1
		◊ Silver	(RH)♦D6GY 5329076-AP	(LH)♦D6GY 5329077-AP	1
		◊ Tan (dark)	(RH)♦D6GY 5329076-AU	(LH)♦D6GY 5329077-AU	1
		◊ Tan (light)	(RH)♦D5GY 5329076-AU	(LH)♦D5GY 5329077-AU	1
		◊ White	(RH)♦D6GY 5329076-AW	(LH)♦D6GY 5329077-AW	1
29164-5	Moulding (quarter wheel opening)		(RH)♦D4GY 6529164-A	(LH)♦D4GY 6529165-A	1

♦ Includes attaching parts

◊ For color verification, refer to the vinyl roof swatches in the 1976 salesman's color and upholstery selections guide.

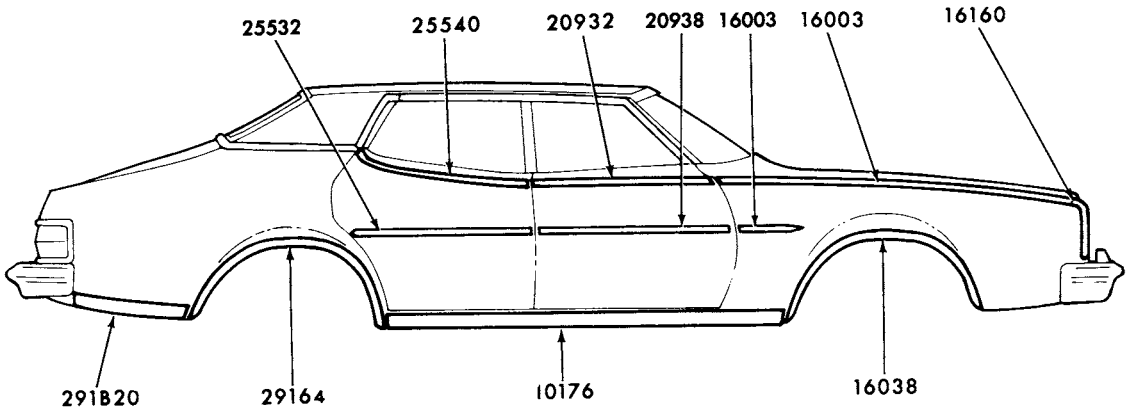

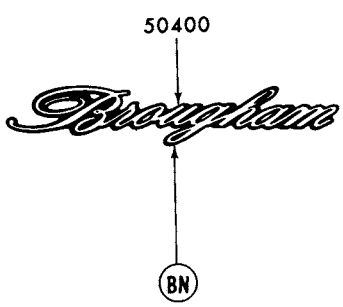

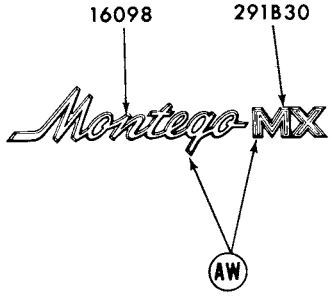

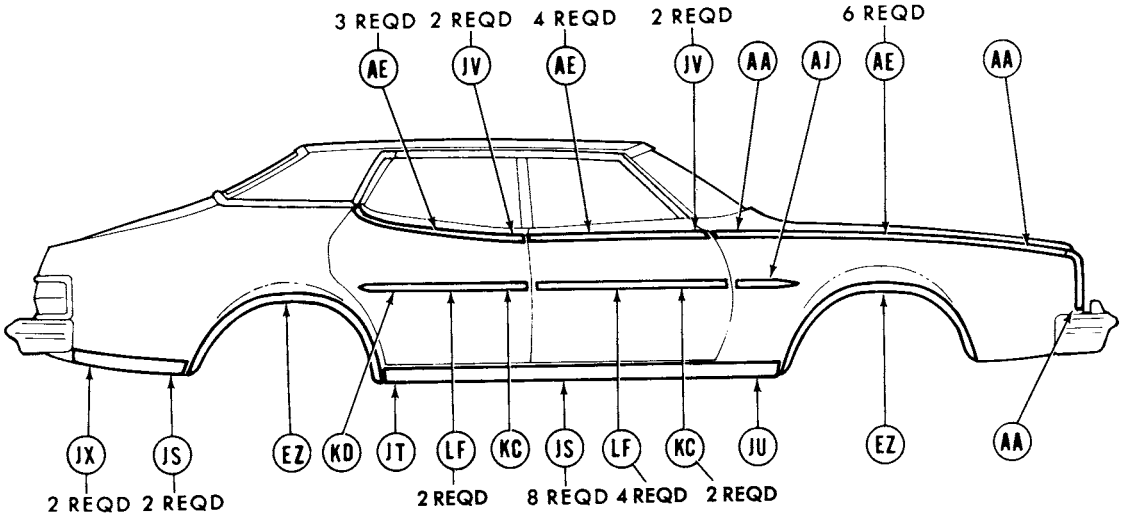

REFER TO EXTERIOR MOULDING SECTION "R" FOR COMPLETE RETAINER INFORMATION

P-12805

1976 MONTEGO - BODY TYPE 53K - SIDE

COPYRIGHT © 1986 — FORD MOTOR COMPANY — DEARBORN, MICHIGAN

1976 MONTEGO - BODY TYPE 53K - SIDE - cont'd.

GROUP NUMBER	PART NAME	DESCRIPTION	PART NUMBER		QTY.
10176-7	Moulding (body rocker panel)		(RH)♦D2GY 5310176-A	(LH)♦D2GY 5310177-A	1
16003-4	Moulding (front fender upper)		(RH)♦D2GY 16003-B	(LH)♦D2GY 16004-B	1
16003-4	Moulding (front fender side)	Bright finish	♦D4GY 16003-A	R.H. and L.H.	2
		Black vinyl insert-adhesive backed-57" long-cut to fit	D4GZ 16003-A	R.H. and L.H.	AR
16038-9	Moulding (front fender wheel opening)		(RH)♦D2GY 16038-A	(LH)♦D2GY 16039-A	1
16098	Plate (front fender name)	"Montego"	♦D2GY 16098-C	R.H. and L.H.	2
16160-1	Moulding (front fender front)		(RH)♦D3GY 16160-A	(LH)♦D3GY 16161-A	1
20932-3	Moulding (front door outside upper)		(RH)♦D4GY 5320932-A	(LH)♦D4GY 5320933-A	1
20938-9	Moulding (front door outside)	Bright finish	♦D4GY 5320938-A	R.H. and L.H.	2
		Black vinyl insert-adhesive backed-57" long-cut to fit	D4GZ 16003-A	R.H. and L.H.	AR
25532-3	Moulding (rear door outside)	Bright finish	♦D4GY 5325532-A	R.H. and L.H.	2
		Black vinyl insert-adhesive backed-57" long-cut to fit	D4GZ 16003-A	R.H. and L.H.	AR
25540-1	Moulding (rear door outside upper)		(RH)♦D4GY 5325540-A	(LH)♦D4GY 5325541-A	1
291B20-1	Moulding (quarter outside lower)		(RH)♦D4GY 65291B20-A	(LH)♦D4GY 65291B21-A	1
291B30	Plate (name)	"MX"	♦C8GY 54291B30-A	R.H. and L.H.	2
29164-5	Moulding (quarter wheel opening)		(RH)♦D2GY 6529164-A	(LH)♦D2GY 6529165-A	1
50400	Plate (name)	"Brougham"	♦C7MY 5450400-A	R.H. and L.H.	2
517A20	Ornament (roof side outside)		C9MY 65517A20-A	R.H. and L.H.	2

♦ Includes attaching parts

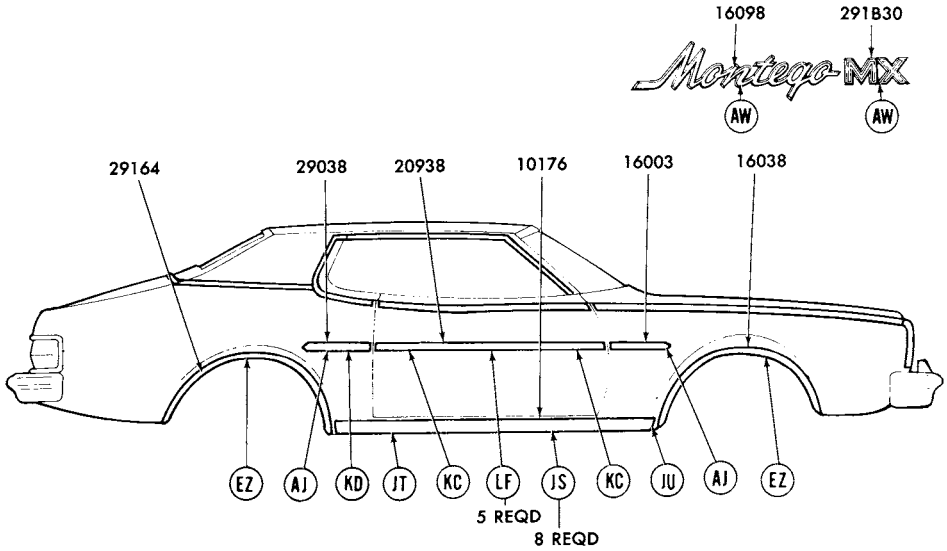

REFER TO EXTERIOR MOULDING SECTION "R" FOR COMPLETE RETAINER INFORMATION

P-12806

1976 MONTEGO - BODY TYPES 65B,D - SIDE - w/ROCKER PANEL MOULDING

GROUP NUMBER	PART NAME	DESCRIPTION	PART NUMBER		QTY.
10176-7	Moulding (body rocker panel)		(RH)♦D2GY 6510176-A	(LH)♦D2GY 6510177-A	1
16003-4	Moulding (front fender side)	Bright finish	♦D4GY 16003-A	R.H. and L.H.	2
		Black vinyl insert-adhesive backed-57" long-cut to fit	D4GZ 16003-A	R.H. and L.H.	AR
16038-9	Moulding (front fender wheel opening)		(RH)♦D2GY 16038-A	(LH)♦D2GY 16039-A	1
16098	Plate (name)	"Montego"	♦D2GY 16098-C	R.H. and L.H.	2
20938-9	Moulding (front door outside)	Bright finish	♦D4GY 6520938-A	R.H. and L.H.	2
		Black vinyl insert-adhesive backed-57" long-cut to fit	D4GZ 16003-A	R.H. and L.H.	AR
29038-9	Moulding (quarter outside)	Bright finish	♦D4GY 16003-A	R.H. and L.H.	2
		Black vinyl insert-adhesive backed-57" long-cut to fit	D4GZ 16003-A	R.H. and L.H.	AR
291B30	Plate (name)	"MX"-body type 65D	♦C8GY 54291B30-A	R.H. and L.H.	2
29164-5	Moulding (quarter wheel opening)		(RH)★D2GY 6529164-A Not replaced (4/82)	(LH)♦D2GY 6529165-A	1

COPYRIGHT © 1986 — FORD MOTOR COMPANY — DEARBORN, MICHIGAN

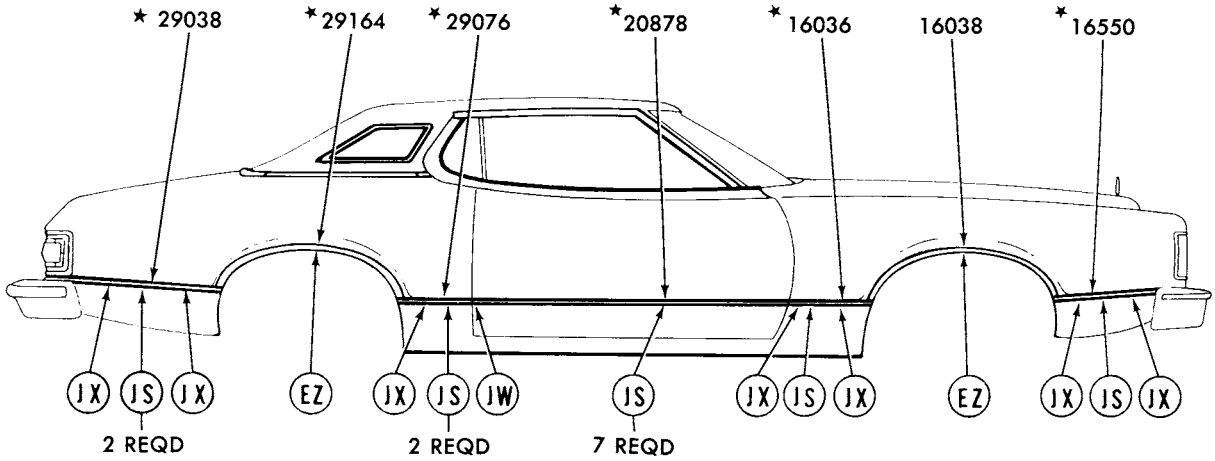

REFER TO EXTERIOR MOULDING SECTION "R" FOR COMPLETE RETAINER INFORMATION

P-12969

1976 MONTEGO - BODY TYPE 65D - SIDE - w/o ROCKER PANEL MOULDING

GROUP NUMBER	PART NAME	DESCRIPTION	PART NUMBER		QTY.
16036-7	Moulding (front fender side lower rear)		(RH)★D2GY 16036-A	(LH)★D2GY 16037-A Not replaced (4/84)	1
16038-9	Moulding (front fender wheel opening)		(RH)♦D4GY 16038-B	(LH)♦D4GY 16039-B	1
16550-1	Moulding assy. (front fender side lower front)		(RH)★D3GY 16550-A	(LH)★D3GY 16551-A	1
20878-9	Moulding (front door lower)		(RH)★D2GY 6320878-A	(LH)★D2GY 6320879-A	1
29038-9	Moulding (quarter lower rear)		(RH)★D4WY 6529038-A Not replaced (4/81)	(LH)★D4WY 6529039-A Not replaced (4/81)	1
29076-7	Moulding (quarter lower front)		(RH)★D2GY 6329076-A	(LH)★D2GY 6329077-A	1
29164-5	Moulding (quarter wheel opening)		(RH)★D2GY 6329164-A Not replaced (4/82)	(LH)★D2GY 6329165-A	1

♦ Includes attaching parts

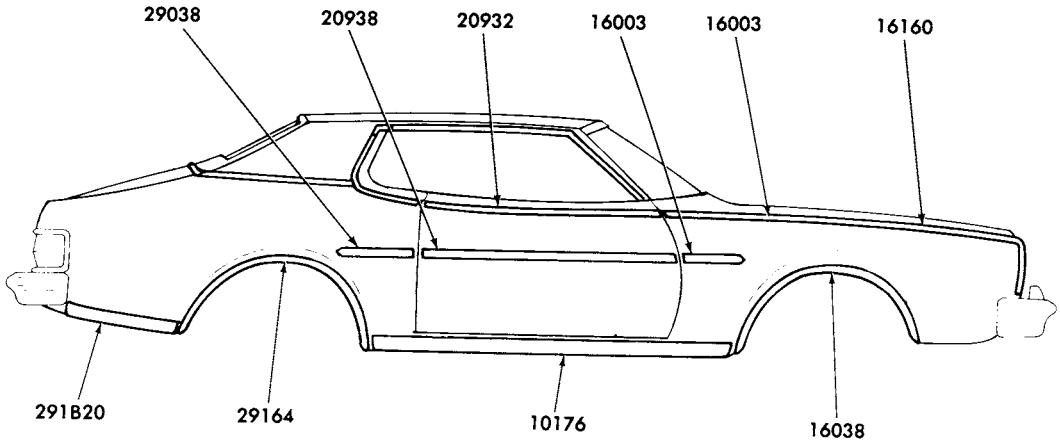

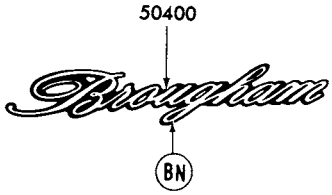

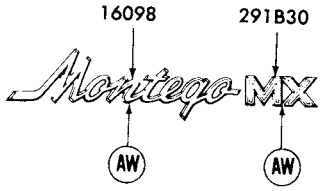

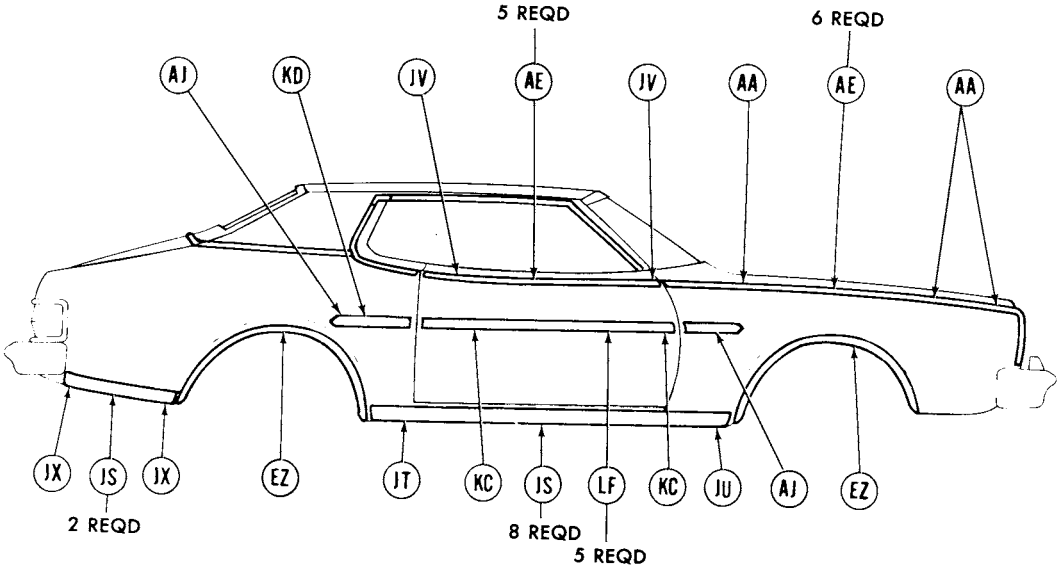

REFER TO EXTERIOR MOULDING SECTION "R" FOR COMPLETE RETAINER INFORMATION

P-12807

1976 MONTEGO - BODY TYPE 65K - SIDE

COPYRIGHT © 1986 — FORD MOTOR COMPANY — DEARBORN, MICHIGAN

1976 MONTEGO - BODY SIDE 65K - SIDE - cont'd.

GROUP NUMBER	PART NAME	DESCRIPTION	PART NUMBER		QTY.
10176-7	Moulding (body rocker panel)		(RH)♦D2GY 6510176-A	(LH)♦D2GY 6510177-A	1
16003-4	Moulding (front fender upper)		(RH)♦D2GY 16003-B	(LH)♦D2GY 16004-B	1
16003-4	Moulding (front fender side)	Bright finish	♦D4GY 16003-A	R.H. and L.H.	2
		Black vinyl insert-adhesive backed-57" long-cut to fit	D4GZ 16003-A	R.H. and L.H.	AR
16038-9	Moulding (front fender wheel opening)		(RH)♦D2GY 16038-A	(LH)♦D2GY 16039-A	1
16098	Plate (front fender name)	"Montego"	♦D2GY 16098-C	R.H. and L.H.	2
16160-1	Moulding (front fender front)		(RH)♦D3GY 16160-A	(LH)♦D3GY 16161-A	1
20932-3	Moulding (front door outside upper)		(RH)♦D4GY 6520932-A	(LH)♦D4GY 6520933-A	1
20938-9	Moulding (front door outside)	Bright finish	♦D4GY 6520938-A	R.H. and L.H.	2
		Black vinyl insert-adhesive backed-57" long-cut to fit	D4GZ 16003-A	R.H. and L.H.	AR
29038-9	Moulding (quarter outside)	Bright finish	♦D4GY 16003-A	R.H. and L.H.	2
		Black vinyl insert-adhesive backed-57" long-cut to fit	D4GZ 16003-A	R.H. and L.H.	AR
291B20-1	Moulding (quarter panel outside lower rear)		(RH)♦D4GY 65291B20-A	(LH)♦D4GY 65291B21-A	1
291B30	Plate (name)	"MX"	♦C8GY 54291B30-A	R.H. and L.H.	2
29164-5	Moulding (quarter wheel opening)		(RH)♦D2GY 6529164-A	(LH)♦D2GY 6529165-A	1
50400	Plate (roof name)	"Brougham"	♦C7MY 5450400-A	R.H. and L.H.	2
517A20	Ornament (roof side outside)		♦C9MY 65517A20-A	R.H. and L.H.	2

♦ Includes attaching parts

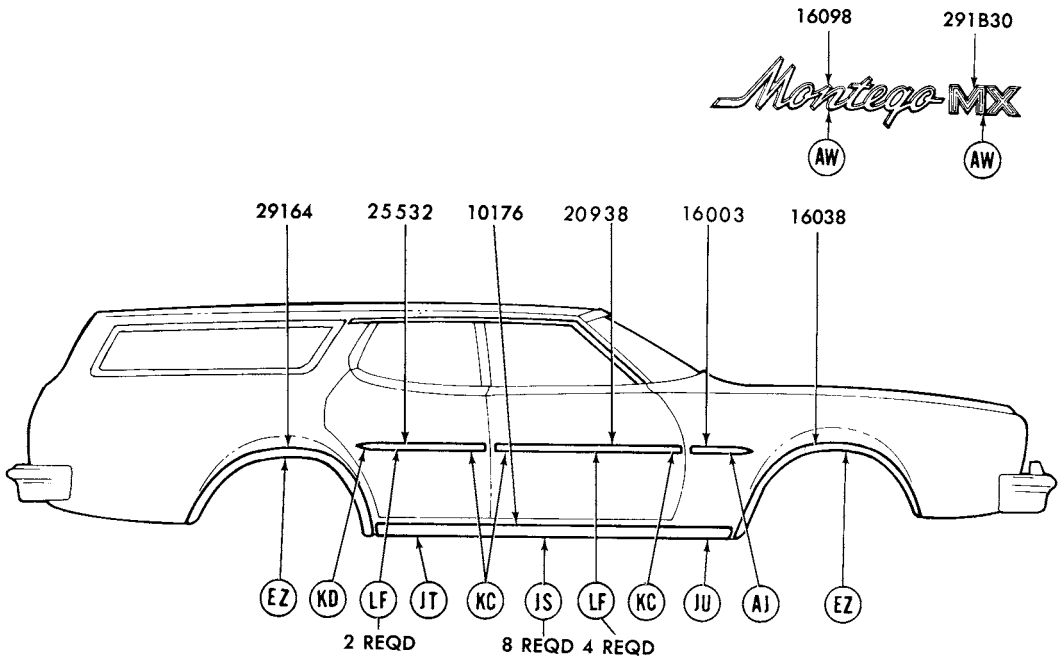

REFER TO EXTERIOR MOULDING SECTION "R" FOR COMPLETE RETAINER INFORMATION

P-12808

1976 MONTEGO - BODY TYPES 71B,D - SIDE

GROUP NUMBER	PART NAME	DESCRIPTION	PART NUMBER		QTY.
10176-7	Moulding (body rocker panel)	Body type 71D	(RH)♦D2GY 5310176-A	(LH)♦D2GY 5310177-A	1
16003-4	Moulding (front fender side)	Bright finish	♦D4GY 16003-A	R.H. and L.H.	2
		Black vinyl insert-adhesive backed-57" long-cut to fit	D4GZ 16003-A	R.H. and L.H.	AR
16038-9	Moulding (front fender wheel opening)		(RH)♦D2GY 16038-A	(LH)♦D2GY 16039-A	1
16098	Plate (front fender name)	"Montego"	♦D2GY 16098-C	R.H. and L.H.	2
20938-9	Moulding (front door outside)	Bright finish	♦D4GY 5320938-A	R.H. and L.H.	2
		Black vinyl-adhesive backed-57" long-cut to fit	D4GZ 16003-A	R.H. and L.H.	AR
25532-3	Moulding (rear door outside)	Bright finish	♦D4GY 5325532-A	R.H. and L.H.	2
		Black vinyl insert-adhesive backed-57" long-cut to fit	D4GZ 16003-A	R.H. and L.H.	AR
291B30	Plate (name)	"MX"	♦C8GY 54291B30-A	R.H. and L.H.	2
29164-5	Moulding (quarter wheel opening)		(RH)♦D2GY 7129164-A	(LH)★D2GY 7129165-A Not replaced (5/82)	1

COPYRIGHT © 1986 — FORD MOTOR COMPANY — DEARBORN, MICHIGAN

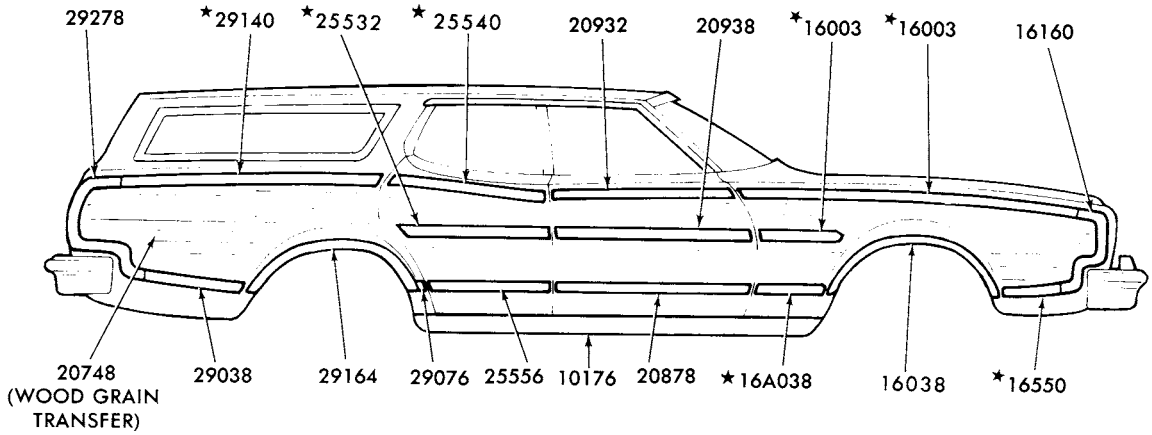

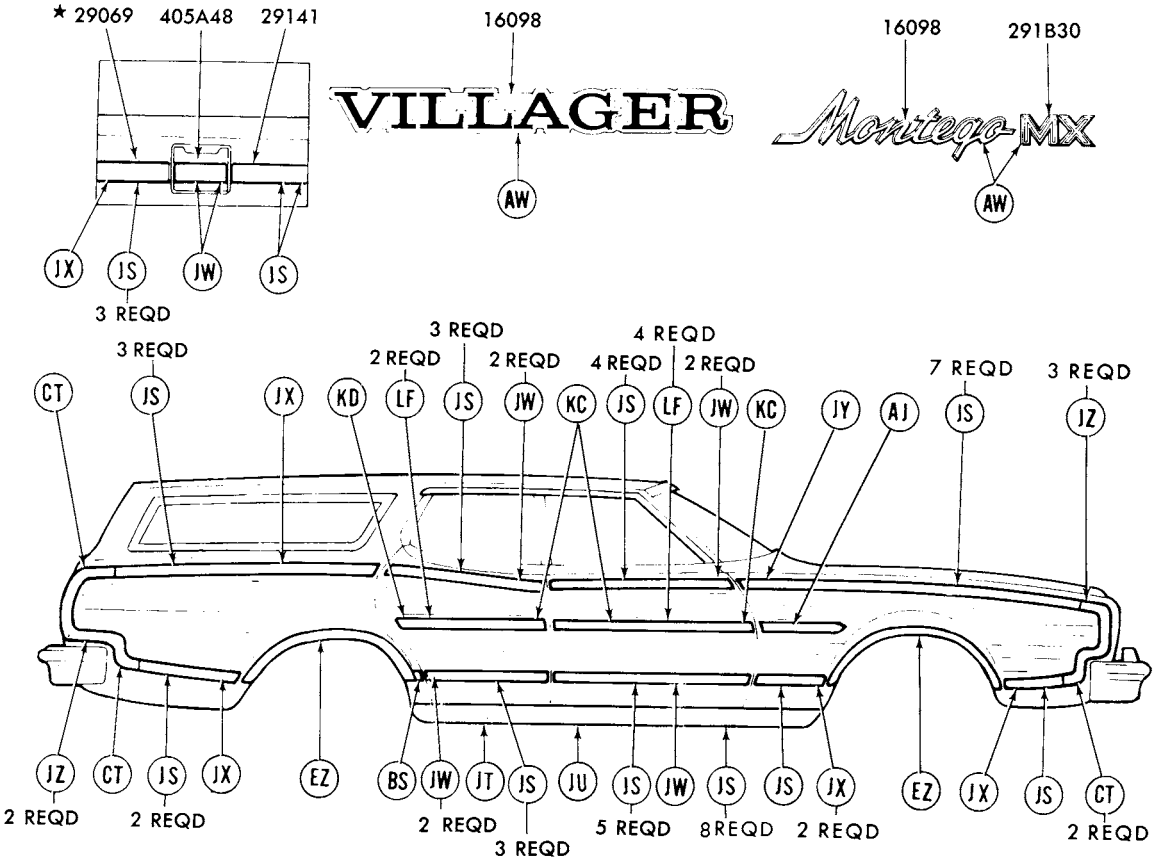

REFER TO EXTERIOR MOULDING SECTION "R" FOR COMPLETE RETAINER INFORMATION

P-12809

1976 MONTEGO - BODY TYPE 71K - SIDE

1976 MONTEGO - BODY TYPE 71K - SIDE - cont'd.

GROUP NUMBER	PART NAME	DESCRIPTION	PART NUMBER		QTY.
10176-7	Moulding (body rocker panel)		(RH)♦D6GY 7110176-A	(LH)♦D6GY 7110177-A	1
16003-4	Moulding (front fender upper)		(RH)★D2GY 16003-C Not replaced (4/84)	(LH)★D2GY 16004-C Not replaced (4/84)	1
16003	Moulding (front fender side)	Wood grain vinyl insert	★D3GY 16003-B Not replaced (4/84)	R.H. and L.H.	2
16038-9	Moulding (front fender wheel opening)		(RH)♦D4GY 16038-B	(LH)★D4GY 16039-B Not replaced (4/84)	1
16A038-9	Moulding (front fender side lower rear)		(RH)★D4GY 16A038-A Not replaced (3/82)	(LH)★D4GY 16A039-A Not replaced (3/82)	1
16098	Plate (front fender name)	"Montego"	♦D2GY 16098-C	R.H. and L.H.	2
		"VILLAGER"	♦D2GY 16098-B	R.H. and L.H.	2
16160-1	Moulding (front fender front)		(RH)♦D2GY 16160-A	(LH)♦D2GY 16161-A	1
16550-1	Moulding (front fender lower front)		(RH)★D2GY 16550-B Not replaced (4/84)	(LH)★D2GY 16551-B	1
20748	Transfer (wood grain)	Cherry (wood grain)-20 3/4" x 70 5/8"-cut to fit	D6GY 7120748-A		1
20878-9	Moulding (front door outside lower)		(RH)♦D2GY 7120878-A	(LH)♦D2GY 7120879-A	1
20932-3	Moulding (front door outside upper)		(RH)♦D2GY 7120932-A	(LH)★D2GY 7120933-A	1
20938	Moulding (front door outside)	Wood grain vinyl insert	♦D3GY 7120938-B	R.H. and L.H.	2
25532	Moulding (rear door outside)	Wood grain vinyl	★D3GY 7125532-B Not replaced (3/82)	R.H. and L.H.	2
25540-1	Moulding (rear door outside upper)		(RH)★D2GY 7125540-A Not replaced (2/81)	(LH)★D2GY 7125541-A Not replaced (2/81)	1
25556-7	Moulding (rear door outside lower)		(RH)♦D2GY 7125556-A	(LH)♦D2GY 7125557-A	1
29038-9	Moulding (quarter outside)		(RH)♦D2GY 7129038-A	(LH)♦D2GY 7129039-A	1
29069	Moulding (quarter outside upper front)			(LH)★D2GY 7129069-A Not replaced (3/82)	1
29076-7	Moulding (quarter outside lower front)		(RH)♦D2GY 7129076-A	(LH)♦D2GY 7129077-A	1
291B30	Plate (name)	"MX"	♦C8GY 54291B30-A	R.H. and L.H.	2
29140-1	Moulding (quarter outside upper)		(RH)★D2GY 7129140-A	(LH)★D2GY 7129141-A Not replaced (3/82)	1
29164-5	Moulding (quarter wheel opening)		(RH)♦D2GY 7129164-B	(LH)♦D2GY 7129165-B	1
29278-9	Moulding (quarter outside rr. end)		(RH)♦D2GY 7129278-A	(LH)♦D2GY 7129279-A	1
405A48	Moulding (fuel filler door)		♦D2GY 71405A48-A		1

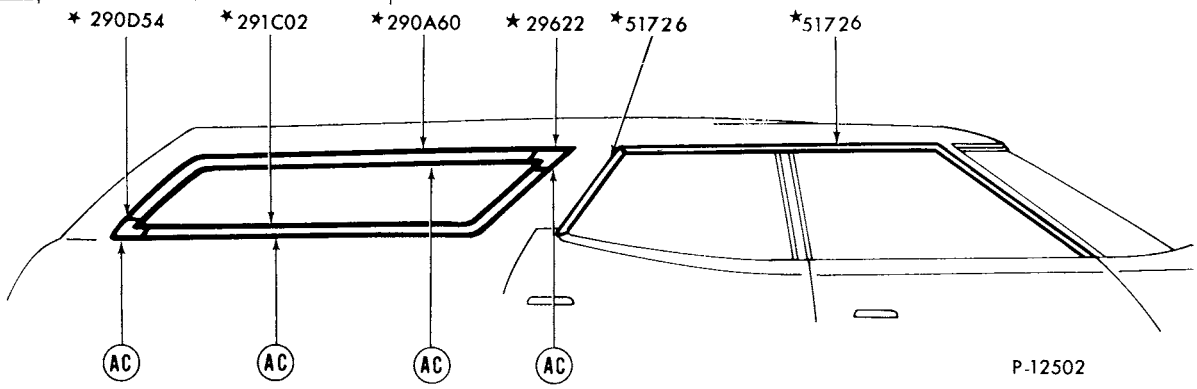

REFER TO EXTERIOR MOULDING SECTION 'R' FOR COMPLETE RETAINER INFORMATION

1976 MONTEGO - BODY TYPE 71 - DOOR and QUARTER WINDOW FRAME

♦ Includes attaching parts

COPYRIGHT © 1986 — FORD MOTOR COMPANY — DEARBORN, MICHIGAN

1976 MONTEGO - BODY TYPE 71 - DOOR and QUARTER WINDOW FRAME - cont'd.

GROUP NUMBER	PART NAME	DESCRIPTION	PART NUMBER	QTY.
290D54	Moulding (quarter window outside lower rear corner)		★ D2OZ 71290D54-A	2
290A60-1	Moulding (quarter window outside upper)		(RH)★D2OZ 71290A60-A (LH)★D2OZ 71290A61-A Not replaced (3/82)	1
291C02-3	Moulding (quarter window outside lower rear)		(RH)★D2OZ 71291C02-A (LH)★D2OZ 71291C03-A	1
51726-7	Moulding (roof drip rail finish)		(RH)★D2GY 7151726-A (LH)★D2GY 7151727-A	1

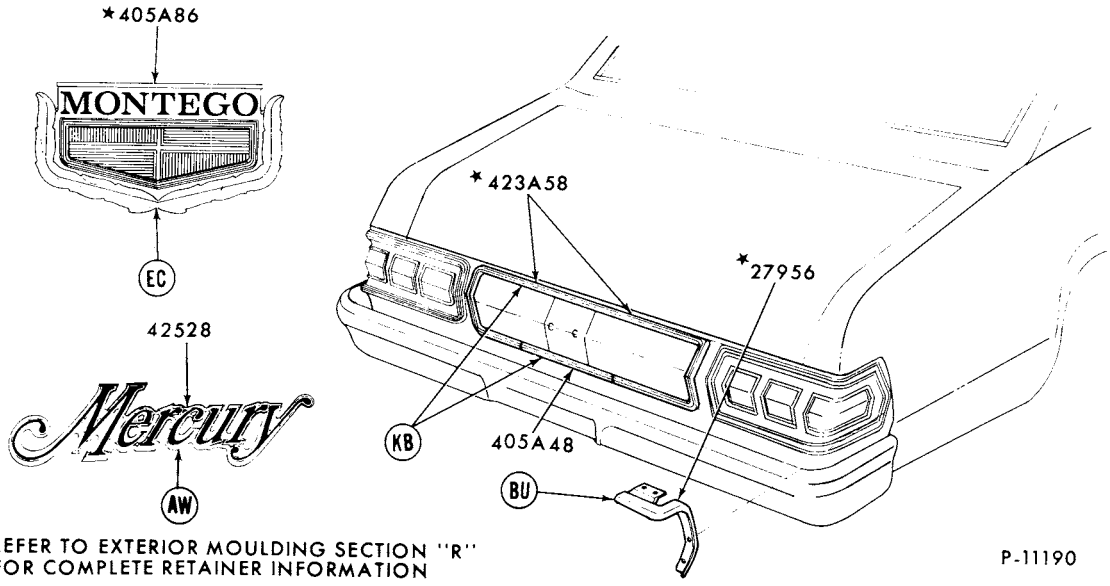

REFER TO EXTERIOR MOULDING SECTION "R" FOR COMPLETE RETAINER INFORMATION

1976 MONTEGO - BODY TYPES 53B,D and 65B,D - BACK END

GROUP NUMBER	PART NAME	DESCRIPTION	PART NUMBER	QTY.
27956-7	Filler (quarter panel rear lamp opening)		Not used in 1976	
405A48	Moulding (fuel filler door)		★ D4GY 65405A48-A	1
405A86	Plate (fuel filler door name)	"MONTEGO"	★D4GY 65405A86-A Not replaced (4/83)	1
423A58	Moulding (lower back panel)		★D4GY 65423A58-A	1
42528	Plate (name)	"Mercury"	♦D4GY 6542528-A	1

♦ Includes attaching parts

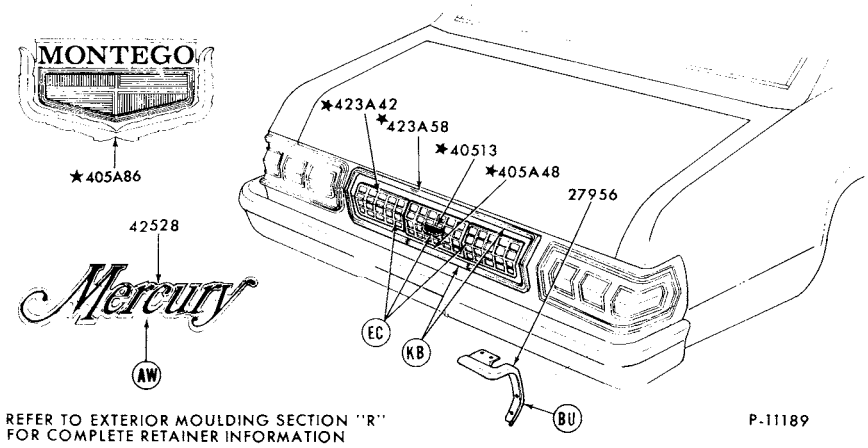

1976 MONTEGO - BODY TYPES 53K and 65K - BACK END

GROUP NUMBER	PART NAME	DESCRIPTION	PART NUMBER		QTY.
27956-7	Filler (quarter panel rear lamp opening)		Not used in 1976		
40513	Panel (fuel filler door finish)		✶D4GY 6540513-A	Not replaced (4/83)	1
405A48	Moulding (fuel filler door)		★ D4GY 65405A48-A		1
405A86	Plate (fuel filler door name)	"MONTEGO"	★D4GY 65405A86-A	Not replaced (4/83)	1
423A42	Panel (lower back finish)		(RH)✶D4GY 65423A42-A Not replaced (4/83)	(LH)✶D4GY 65423A42-B Not replaced (4/83)	1
423A58	Moulding (lower back panel)		✶ D4GY 65423A58-A		1
42528	Plate (name)	"Mercury"	♦D4GY 6542528-A		1

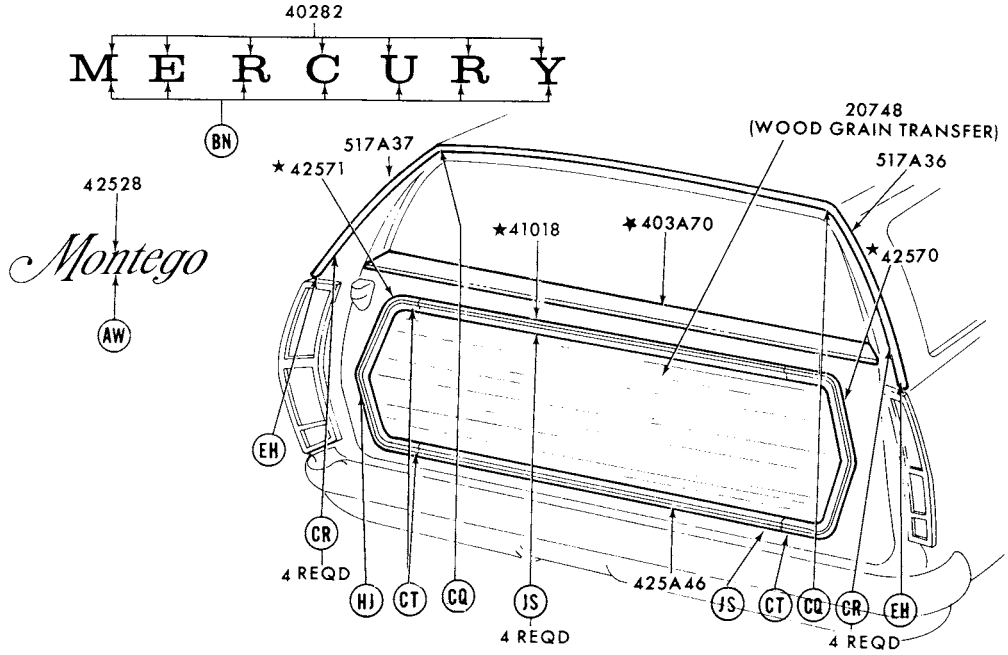

1976 MONTEGO - BODY TYPE 71 - BACK END

♦ Includes attaching parts

COPYRIGHT © 1986 — FORD MOTOR COMPANY — DEARBORN, MICHIGAN

1976 MONTEGO - BODY TYPE 71 - BACK END - cont'd.

GROUP NUMBER	PART NAME	DESCRIPTION	PART NUMBER		QTY.
20748	Transfer (wood grain)	Cherry wood grain-20 3/4"x70 5/8"-cut to fit-body type 71K	D6GY 7120748-A		1
40282	Letter (name)	"M"	♦D3MY 7140282-A		1
		"E"	♦D3MY 7140282-B		1
		"R"	♦D3MY 7140282-C		2
		"C"	♦D3MY 7140282-D		1
		"U"	♦D3MY 7140282-E		1
		"Y"	♦D3MY 7140282-F		1
403A70	Moulding (tailgate outside belt)		★D2OZ 71403A70-A	Not replaced (4/84)	1
41018	Moulding (tailgate outside upper)	Body type 71K	✱D2GY 7141018-A	Not replaced (4/83)	1
42528	Plate (tailgate name)	"Montego"	♦D4GY 7142528-A		1
425A46	Moulding (tailgate outside lower)		♦D2GY 71425A46-A		1
42570-1	Moulding (tailgate outside side)		(RH)✱D2GY 7142570-A Not replaced (4/83)	(LH)✱D2GY 7142571-A Not replaced (4/83)	1
517A36-7	Moulding (roof outside rear)		(RH)♦D2GY 71517A36-A	(LH)♦D2GY 71517A37-A	1

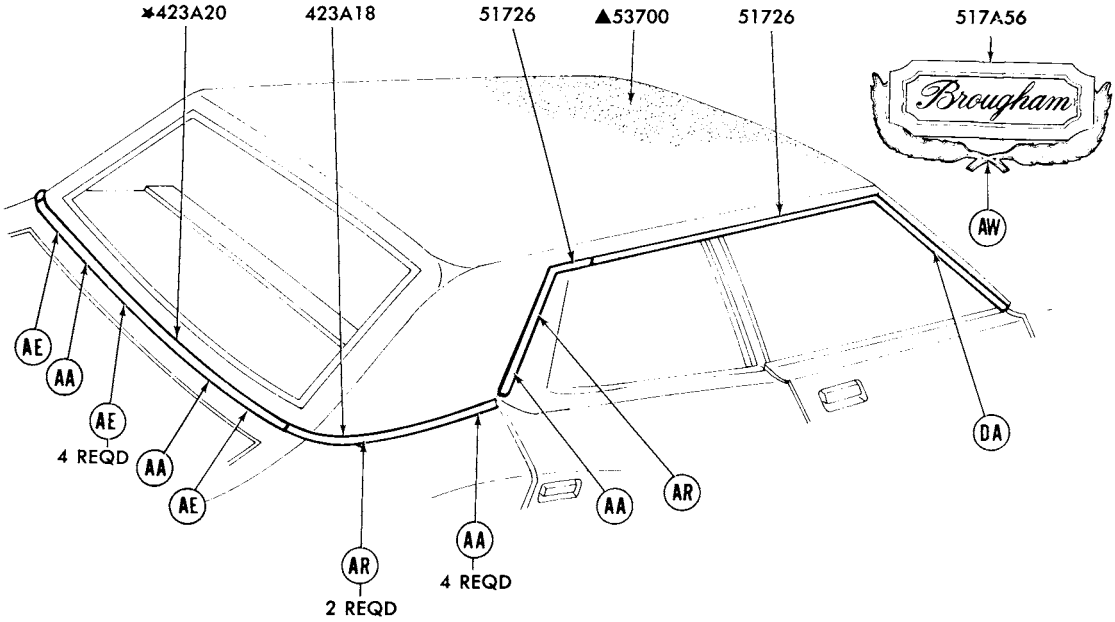

REFER TO EXTERIOR MOULDING SECTION 'R' FOR COMPLETE RETAINER INFORMATION
▲REFER TO SOFT TRIM SECTION

P-12810

1976 MONTEGO - BODY TYPE 53 and 71 - ROOF and BACK BELT

GROUP NUMBER	PART NAME	DESCRIPTION	PART NUMBER		QTY.
423A18-9	Moulding (back belt outside side)		(RH)♦D4GY 53423A18-A	(LH)♦D4GY 53423A19-A	1
423A20	Moulding (back belt outside)		★D4OZ 65423A20-H	Not replaced (4/84)	1
51726-9	Moulding (roof drip side finish)	Body type 53-w/o vinyl roof	(RH)♦D2GY 5351726-B	(LH)♦D2GY 5351727-B	1
		Body type 53-w/vinyl roof-front	(RH)♦D2GY 5351726-A	(LH)♦D2GY 5351727-A	1
		Rear	(RH)♦D4GY 5351728-A	(LH)♦D4GY 5351729-A	1
		Body type 71	(RH)♦D2GY 7151726-A	(LH)♦D2GY 7151727-A	1

♦ Includes attaching parts

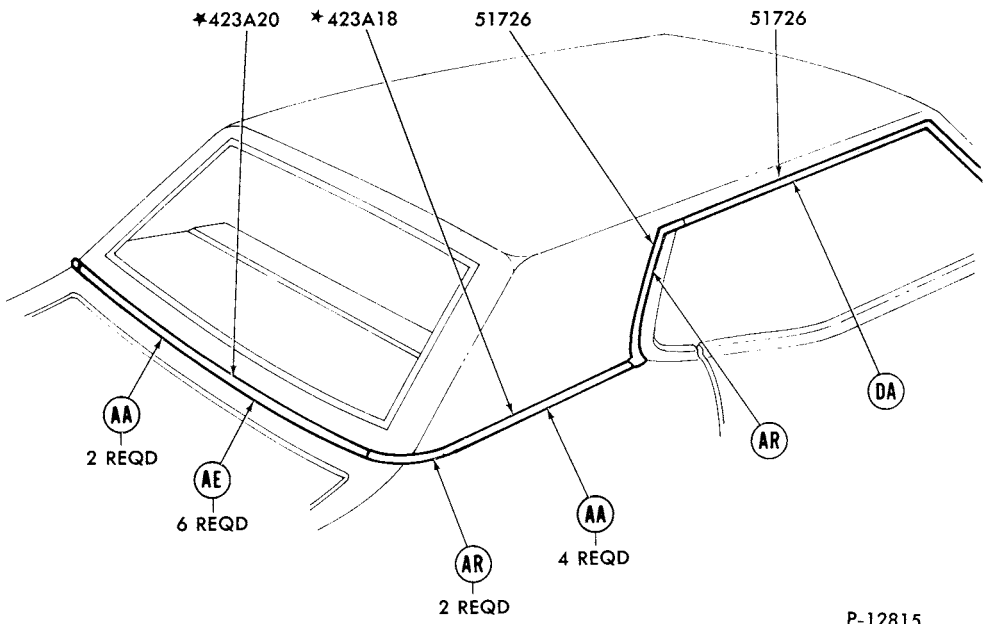

REFER TO EXTERIOR MOULDING SECTION "R" FOR COMPLETE RETAINER INFORMATION

P-12815

1976 MONTEGO - BODY TYPES 65B.D - ROOF and BACK BELT

GROUP NUMBER	PART NAME	DESCRIPTION	PART NUMBER		QTY.
423A18-9	Moulding (back belt outside side)	Front	(RH)★D4GY 65423A18-B	(LH)★D4GY 65423A19-B Not replaced (4/83)	1
		Rear	(RH)★D4GY 65423A18-C	(LH)★D4GY 65423A19-C	1
423A20	Moulding (back belt outside)		★D4OZ 65423A20-H	Not replaced (4/84)	1
51726-7	Moulding (roof drip side finish)	Front	(RH)♦D4WY 6551726-A	(LH)★D4WY 6551727-A	1
		Rear	(RH)♦D2GY 6551726-B	(LH)♦D2GY 6551727-B	1

COPYRIGHT © 1986 — FORD MOTOR COMPANY — DEARBORN, MICHIGAN

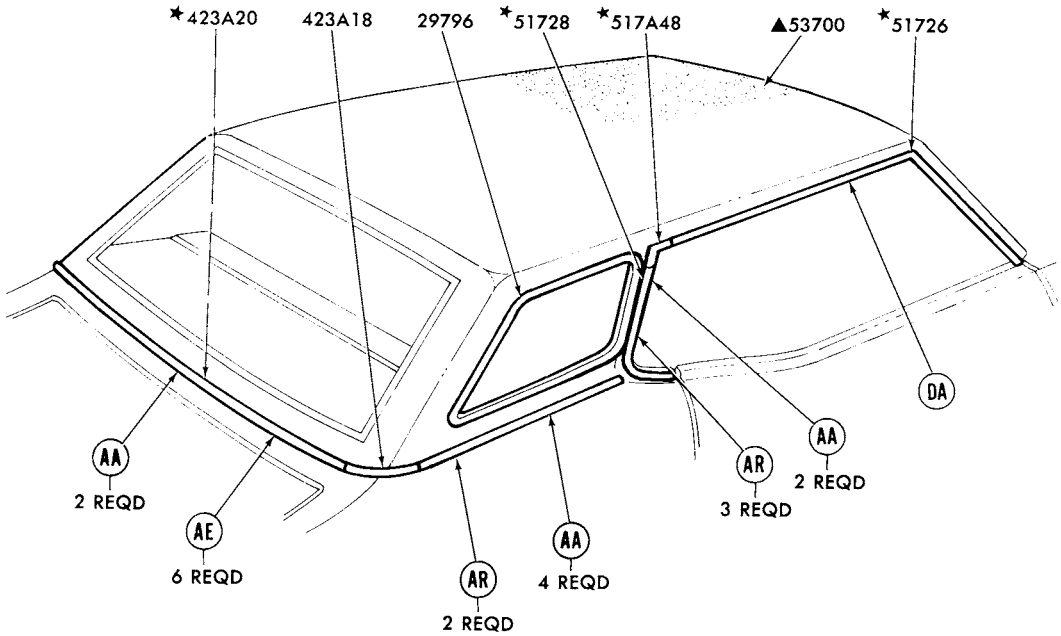

REFER TO EXTERIOR MOULDING SECTION "R" FOR COMPLETE RETAINER INFORMATION
▲REFER TO SOFT TRIM SECTION

P-12816

1976 MONTEGO - BODY TYPES 65K - ROOF and BACK BELT - w/FULL VINYL ROOF

GROUP NUMBER	PART NAME	DESCRIPTION	PART NUMBER		QTY.
29796-7	Moulding (opera window outside)		(RH)♠D4GY 6529796-C	(LH)♠D4GY 6529797-C	1
423A18-9	Moulding (back belt outside side)		(RH)♠D4GY 65423A18-A	(LH)♠D4GY 65423A19-A	1
423A20	Moulding (back belt outside)		★D4OZ 65423A20-H	Not replaced (4/84)	1
51726-9	Moulding (roof drip side finish)	Front	(RH)★D2GY 6551726-C Not replaced (3/82)	(LH)★D2GY 6551727-C	1
		Rear	(RH)★D3GY 6551728-A	(LH)★D3GY 6551729-A	1
517A48-9	Moulding (roof drip side rear corner finish)		(RH)★D2GY 65517A48-A	(LH)★D2GY 65517A49-A	1

♠ Includes attaching parts

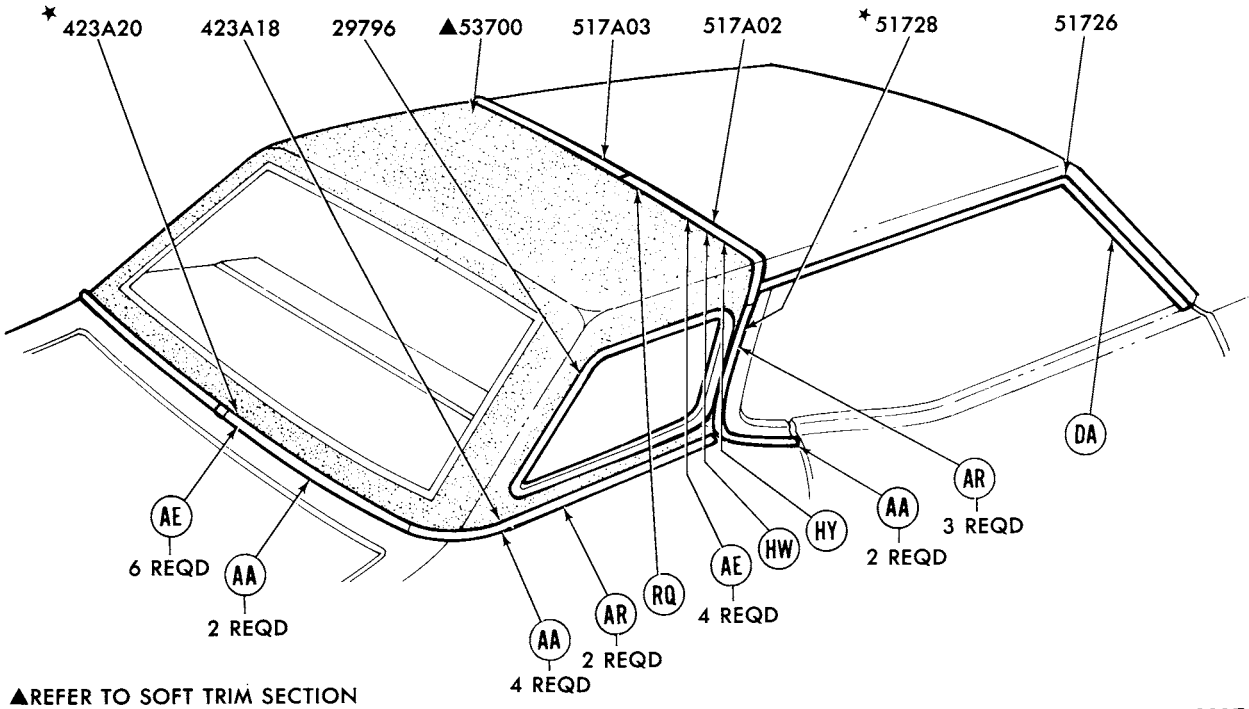

▲REFER TO SOFT TRIM SECTION
REFER TO EXTERIOR MOULDING SECTION "R" FOR COMPLETE RETAINER INFORMATION

P-12817

1976 MONTEGO - BODY TYPE 65K - ROOF and BACK PELT - w/HALF VINYL ROOF

GROUP NUMBER	PART NAME	DESCRIPTION	PART NUMBER		QTY.
29796-7	Moulding (opera window outside)		(RH)♦D4GY 6529796-C	(LH)♦D4GY 6529797-C	1
423A18-9	Moulding (back belt outside side)		(RH)♦D4GY 65423A18-A	(LH)♦D4GY 65423A19-A	1
423A20	Moulding (back belt outside)		★D4OZ 65423A20-H	Not replaced (4/84)	1
517A02-3	Moulding (roof outside side)		(RH)♦D4WY 65517A02-A	(LH)♦D4WY 65517A03-A	1
51726-9	Moulding (roof drip side finish)	Front	(RH)♦D4WY 6551726-A	(LH)♦D4WY 6551727-A	1
		Rear	(RH)★D3GY 6551728-A	(LH)★D3GY 6551729-A	1

♦ Includes attaching parts

COPYRIGHT © 1986 — FORD MOTOR COMPANY — DEARBORN, MICHIGAN

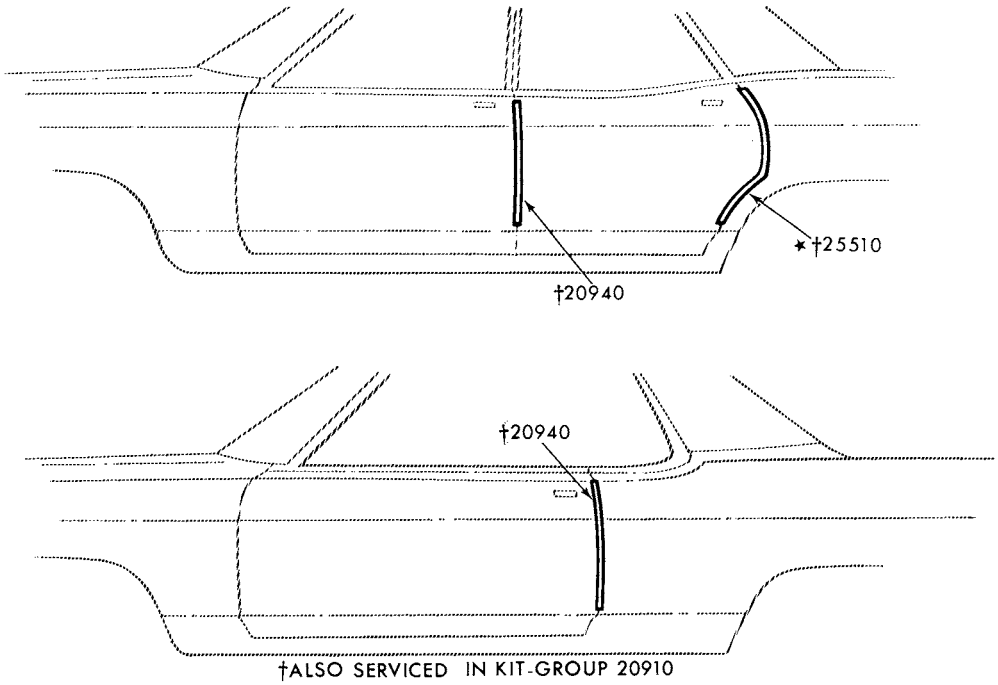

†ALSO SERVICED IN KIT-GROUP 20910

P-10061

1976 MONTEGO - DOOR EDGE GUARDS

GROUP NUMBER	PART NAME	DESCRIPTION	PART NUMBER		QTY.
20910	Moulding kit (door edge guard)	Body type 65	★D4GY 6520910-A		1
20940-1	Moulding (front door edge guard)	Body types 53 and 71B,D	(RH)★D4GY 5320940-A	(LH)★D4GY 5320941-A Not replaced (3/81)	1
		Body type 65	(RH) D4GY 6520940-A	(LH) D4GY 6520941-A	1
		Body type 71K	(RH)★D4GY 7120940-A	(LH)★D4GY 7120941-A	1
25510-1	Moulding (rear door edge guard)	Body types 53 and 71B,D	(RH)★D4GY 5325510-A	(LH)★D4GY 5325511-A Not replaced (3/81)	1
		Body type 71K	(RH)★D4GY 7125510-A Not replaced (2/81)	(LH)★D4GY 7125511-A Not replaced (2/81)	1

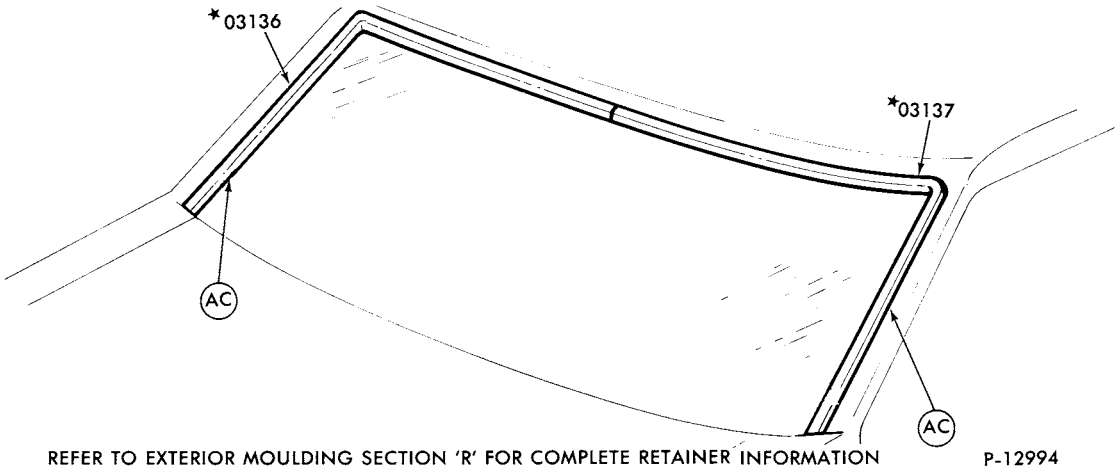

REFER TO EXTERIOR MOULDING SECTION 'R' FOR COMPLETE RETAINER INFORMATION P-12994

1976 LINCOLN - WINDSHIELD

GROUP NUMBER	PART NAME	DESCRIPTION	PART NUMBER		QTY.
03136-7	Moulding (windshield outside side)		(RH)★D5VY 6003136-A	(LH)★D5VY 6003137-A	1

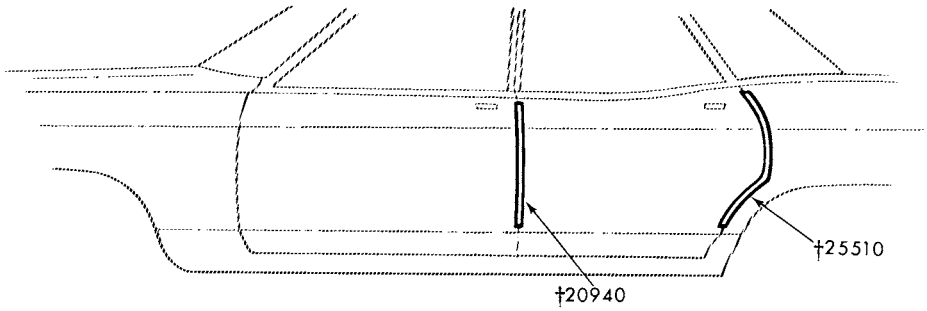

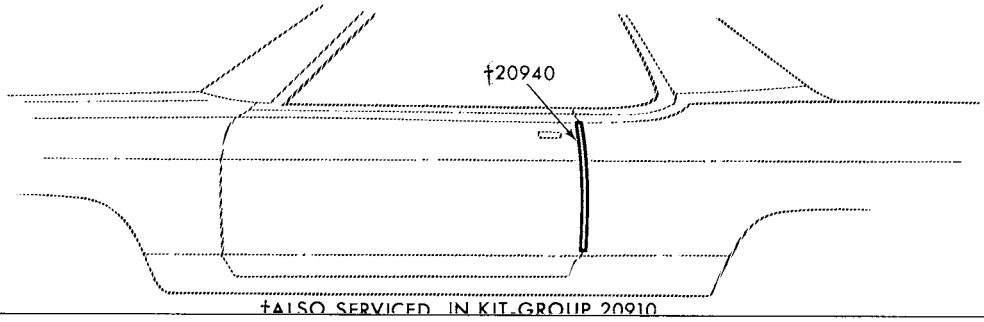

†ALSO SERVICED IN KIT-GROUP 20910 P-10061

1976 LINCOLN - DOOR EDGE GUARDS

GROUP NUMBER	PART NAME	DESCRIPTION	PART NUMBER		QTY.
20910	Moulding kit (door edge guard)	Body type 53	D5VY 5320910-A		1
		Body type 60	D5VY 6020910-A		1
20940-1	Moulding (front door edge guard)	Body type 53	(RH)★D5VY 5320940-A	(LH)★D5VY 5320941-A R/B D5VY 5320940-A (11/81)	1
		Body type 60	(RH)★D5VY 6020940-A	(LH)★D5VY 6020941-A R/B D5VY 6020940-A (11/81)	1
25510-1	Moulding (rear door edge guard)	Body type 53	(RH) D5VY 5325510-A	(LH) D5VY 5325511-A	1

♦ Includes attaching parts

COPYRIGHT © 1986 — FORD MOTOR COMPANY — DEARBORN, MICHIGAN

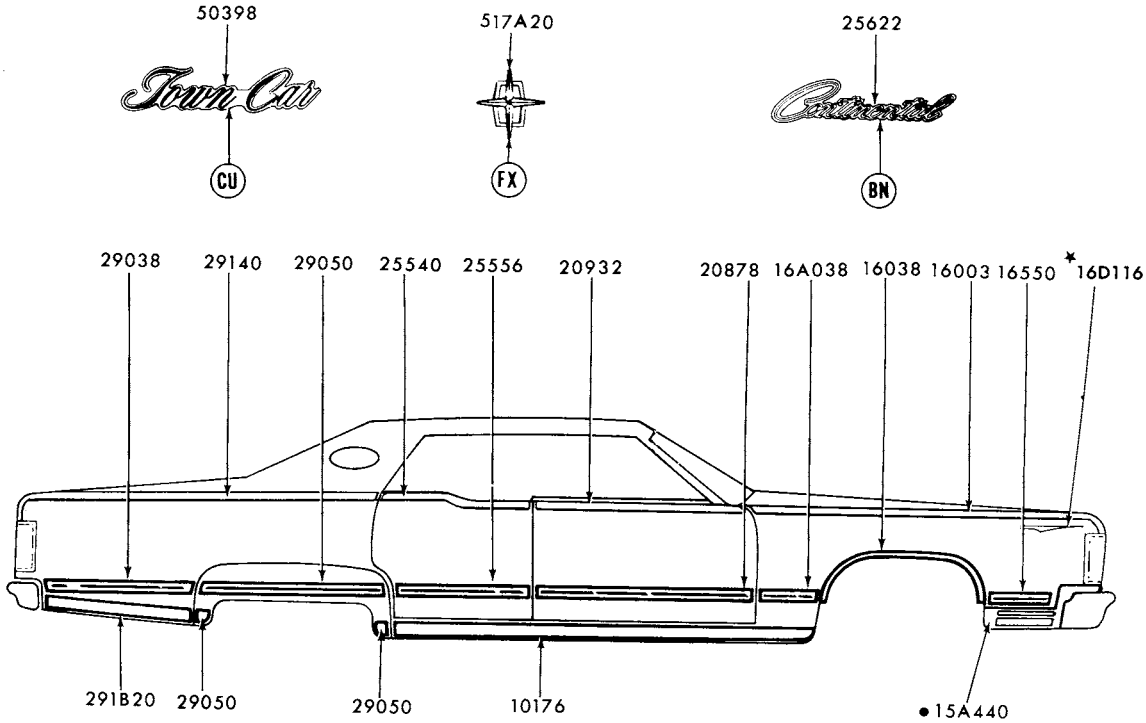

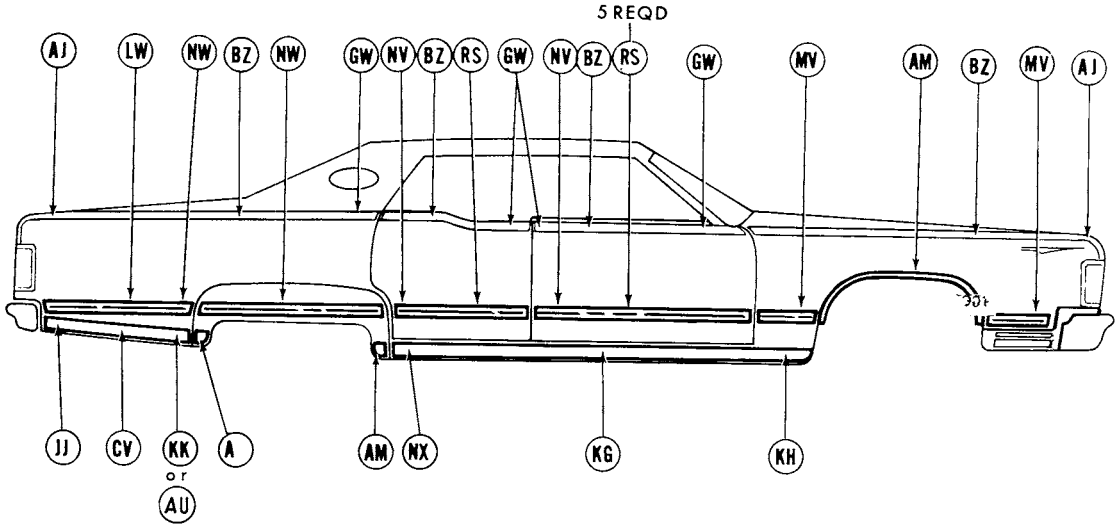

•REFER TO GROUP IN CHASSIS SECTION
REFER TO EXTERIOR MOULDING SECTION "R" FOR COMPLETE RETAINER INFORMATION

P-12138

1976 LINCOLN - BODY TYPE 53 - w/SIDE MOULDINGS

1976 LINCOLN - BODY TYPE 53 - w/SIDE MOULDINGS - cont'd.

GROUP NUMBER	PART NAME	DESCRIPTION	PART NUMBER		QTY.
10176-7	Moulding (body rocker panel)		(RH)♠D5VY 6010176-A	(LH)♠D5VY 6010177-A	1
16003-4	Moulding (front fender upper)		(RH)♠D5VY 16003-A	(LH)♠D5VY 16004-A	1
16038-9	Moulding (front fender wheel opening)		(RH)♠D5VY 16038-A	(LH)♠D5VY 16039-A	1
16A038-9	Moulding (front fender rear)	Incl. vinyl insert			
		◊ Black	(RH)♠D5VY 16A038-AA	(LH)✶D5VY 16A039-AA	1
		◊ Blue	(RH)♠D5VY 16A038-AB	(LH)★D5VY 16A039-AB	1
		◊ Cream	(RH) ♦	(LH) ♦	1
		◊ Gold	(RH)♠D5VY 16A038-AY	(LH)♠D5VY 16A039-AY	1
		◊ Gold flare	(RH) Δ	(LH) Δ	1
		◊ Gray	(RH)★D6VY 16A038-BP	(LH)★D6VY 16A039-BP Not replaced (6/82)	1
		◊ Jade (dark)	(RH)✶D5VY 16A038-AR	(LH)✶D5VY 16A039-AR	1
		◊ Jade (light)	(RH)★D6VY 16A038-BR	(LH)✶D6VY 16A039-BR	1
		◊ Red	(RH)✶D5VY 16A038-AD	(LH)★D5VY 16A039-AD	1
		◊ Saddle	(RH)♠D5VY 16A038-AZ	(LH)♠D5VY 16A039-AZ	1
		◊ Silver	(RH)✶D5VY 16A038-AP	(LH)★D5VY 16A039-AP	1
		◊ Silver blue	(RH)★D6VY 16A038-BB	(LH)✶D6VY 16A039-BB	1
		◊ Taupe	(RH) Δ	(LH) Δ	1
		◊ White	(RH)♠D5VY 16A038-AW	(LH)♠D5VY 16A039-AW	1
16D116-7	Transfer (front fender stripe)				
		Black	(RH)✶D5VY 16D116-B	(LH)✶D5VY 16D117-B	1
		Blue	(RH)★D5VY 16D116-K · Not replaced (2/81)	(LH)★D5VY 16D117-K · Not replaced (2/81)	1
		Brown	(RH)★D5VY 16D116-H	(LH)★D5VY 16D117-H	1
		Gold	(RH)✶D5VY 16D116-D	(LH)★D5VY 16D117-D	1
		Jade (dark)	(RH)★D6VY 16D116-R	(LH)✶D6VY 16D117-R	1
		Jade (light)	(RH)✶D6VY 16D116-AR	(LH)★D6VY 16D117-AR	1
		Red (dark)	(RH)✶D6VY 16D116-D	(LH)★D6VY 16D117-D	1
		Red (bright)	(RH)✶D6VY 16D116-AD	(LH)★D6VY 16D117-AD	1
		Silver	(RH)✶D6VY 16D116-P	(LH)✶D6VY 16D117-P	1
		Tan	(RH)★D5VY 16D116-J	(LH)✶D5VY 16D117-J	1
		White	(RH)★D5VY 16D116-C	(LH)✶D5VY 16D117-C	1
		Yellow	(RH)✶D6VY 16D116-V	(LH)✶D6VY 16D117-V	1
16550-1	Moulding (front fender front)	Incl. vinyl insert			
		◊ Black	(RH)♠D5VY 16550-AA	(LH)♠D5VY 16551-AA	1
		◊ Blue	(RH)★D5VY 16550-AB	(LH)♠D5VY 16551-AB	1
		◊ Cream	(RH) ♦	(LH) ♦	1
		◊ Gold	(RH)♠D5VY 16550-AY	(LH)♠D5VY 16551-AY	1
		◊ Gold flare	(RH) Δ	(LH) Δ	1
		◊ Gray	(RH)✶D6VY 16550-BP Not replaced (4/84)	(LH)★D6VY 16551-BP Not replaced (2/81)	1
		◊ Jade (dark)	(RH)✶D5VY 16550-AR Not replaced (4/84)	(LH)✶D5VY 16551-AR	1
		◊ Jade (light)	(RH)♠D6VY 16550-BR	(LH)♠D6VY 16551-BR	1
		◊ Red	(RH)✶D5VY 16550-AD Not replaced (4/84)	(LH)✶D5VY 16551-AD	1
		◊ Saddle	(RH)♠D5VY 16550-AZ	(LH)★D5VY 16551-AZ	1
		◊ Silver	(RH)♠D5VY 16550-AP	(LH)✶D5VY 16551-AP Not replaced (4/84)	1
		◊ Silver blue	(RH)✶D6VY 16550-BB	(LH)✶D6VY 16551-BB	1
		◊ Taupe	(RH) Δ	(LH) Δ	1
		◊ White	(RH)♠D5VY 16550-AW	(LH)♠D5VY 16551-AW	1

◊ For color verification, refer to the vinyl roof swatches in the 1976 salesman's color and upholstery selections guide.
♠ Includes attaching parts Δ Use saddle ♦ Use gold

COPYRIGHT © 1986 — FORD MOTOR COMPANY — DEARBORN, MICHIGAN

1976 LINCOLN - BODY TYPE 53 - w/SIDE MOULDINGS - cont'd.

GROUP NUMBER	PART NAME	DESCRIPTION	PART NUMBER		QTY.
20878-9	Moulding (front door lower)	Incl. vinyl insert			
		◊ Black	(RH)♠D5VY 5320878-AA	(LH)♠D5VY 5320879-AA	1
		◊ Blue	(RH)♠D5VY 5320878-AB	(LH)♠D5VY 5320879-AB	1
		◊ Cream	(RH) ♦	(LH) ♦	1
		◊ Gold	(RH)♠D5VY 5320878-AY	(LH)♠D5VY 5320879-AY	1
		◊ Gold flare	(RH) Δ	(LH) Δ	1
		◊ Gray	(RH)♠D6VY 5320878-AP	(LH)★D6VY 5320879-AP	1
		◊ Jade (dark)	(RH)★D5VY 5320878-AR	(LH)♠D5VY 5320879-AR	1
		◊ Jade (light)	(RH)★D6VY 5320878-AR Not replaced (2/81)	(LH)♠D6VY 5320879-AR	1
		◊ Red	(RH)♠D5VY 5320878-AD	(LH)★D5VY 5320879-AD	1
		◊ Saddle	(RH)♠D5VY 5320878-AZ	(LH)♠D5VY 5320879-AZ	1
		◊ Silver	(RH)★D5VY 5320878-AP	(LH)★D5VY 5320879-AP	1
		◊ Silver blue	(RH)♠D6VY 5320878-AB	(LH)♠D6VY 5320879-AB	1
		◊ Taupe	(RH) Δ	(LH) Δ	1
		◊ White	(RH)♠D5VY 5320878-AW	(LH)♠D5VY 5320879-AW	1
20916-33	Moulding (front door upper)	R.H.-w/o mirror	♠D5VY 5320932-A		1
		R.H.-w/mirror-front	♠D5VY 6020916-A		1
		R.H.-w/mirror-rear	♠D5VY 5320932-B		1
		L.H.-front	♠D5VY 6020917-A		1
		L.H.-rear	♠D5VY 5320933-A		1
25540-1	Moulding (rear door upper)		(RH)♠D5VY 5325540-A	(LH)♠D5VY 5325541-A	1
25556-7	Moulding (rear door lower)	Incl. vinyl insert			
		◊ Black	(RH)♠D5VY 5325556-AA	(LH)♠D5VY 5325557-AA	1
		◊ Blue	(RH)★D5VY 5325556-AB Not replaced (2/81)	(LH)♠D5VY 5325557-AB	1
		◊ Cream	(RH) ♦	(LH) ♦	1
		◊ Gold	(RH)♠D5VY 5325556-AY	(LH)♠D5VY 5325557-AY	1
		◊ Gold flare	(RH) Δ	(LH) Δ	1
		◊ Gray	(RH)★D6VY 5325556-AP	(LH)★D6VY 5325557-AP	1
		◊ Jade (dark)	(RH)♠D5VY 5325556-AR	(LH)★D5VY 5325557-AR	1
		◊ Jade (light)	(RH)★D6VY 5325556-AR Not replaced (5/81)	(LH)★D6VY 5325557-AR	1
		◊ Red	(RH)★D5VY 5325556-AD	(LH)★D5VY 5325557-AD	1
		◊ Saddle	(RH)♠D5VY 5325556-AZ	(LH)♠D5VY 5325557-AZ	1
		◊ Silver	(RH)♠D5VY 5325556-AP	(LH)♠D5VY 5325557-AP	1
		◊ Silver blue	(RH)★D6VY 5325556-AB Not replaced (5/81)	(LH)★D6VY 5325557-AB	1
		◊ Taupe	(RH) Δ	(LH) Δ	1
		◊ White	(RH)♠D5VY 5325556-AW	(LH)♠D5VY 5325557-AW	1
25622	Plate (name)	"Continental"	♠D5VY 6525622-A	R.H. and L.H.	2

◊ For color verification, refer to the vinyl roof swatches in the 1976 salesman's color and upholstery selections guide.
♠ Includes attaching parts Δ Use saddle ♦ Use gold

1976 LINCOLN - BODY TYPE 53 - w/SIDE MOULDINGS - cont'd.

GROUP NUMBER	PART NAME	DESCRIPTION	PART NUMBER		QTY.
29038-9	Moulding (quarter outside)	Incl. vinyl insert			
		◊ Black	(RH)♠D5VY 6029038-AA	(LH)♠D5VY 6029039-AA	1
		◊ Blue	(RH)♠D5VY 6029038-AB	(LH)♠D5VY 6029039-AB	1
		◊ Cream	(RH) ♦	(LH) ♦	1
		◊ Gold	(RH)♠D5VY 6029038-AY	(LH)♠D5VY 6029039-AY	1
		◊ Gold flare	(RH) Δ	(LH) Δ	1
		◊ Gray	(RH)♠D6VY 6029038-AP	(LH)♠D6VY 6029039-AP	1
		◊ Jade (dark)	(RH)♠D5VY 6029038-AR	(LH)♠D5VY 6029039-AR	1
		◊ Jade (light)	(RH)★D6VY 6029038-AR Not replaced (2/81)	(LH)★D6VY 6029039-AR Not replaced (2/81)	1
		◊ Red	(RH)★D5VY 6029038-AD	(LH)★D5VY 6029039-AD	1
		◊ Saddle	(RH)♠D5VY 6029038-AZ	(LH)♠D5VY 6029039-AZ	1
		◊ Silver	(RH)♠D5VY 6029038-AP	(LH)♠D5VY 6029039-AP	1
		◊ Silver blue	(RH)★D6VY 6029038-AB	(LH)★D6VY 6029039-AB Not replaced (2/81)	1
		◊ Taupe	(RH) Δ	(LH) Δ	1
		◊ White	(RH)♠D5VY 6029038-AW	(LH)♠D5VY 6029039-AW	1
29050-1	Moulding (quarter wheel opening cover lower)	Front	(RH)♠D5VY 6029050-B	(LH)♠D5VY 6029051-B	1
		Rear	(RH)♠D5VY 6029050-C	(LH)♠D5VY 6029051-C	1
29050-1	Moulding (quarter wheel opening cover upper)	Incl. vinyl insert			
		◊ Black	(RH)♠D5VY 6029050-AA	(LH)♠D5VY 6029051-AA	1
		◊ Blue	(RH)♠D5VY 6029050-AB	(LH)♠D5VY 6029051-AB	1
		◊ Cream	(RH) ♦	(LH) ♦	1
		◊ Gold	(RH)♠D5VY 6029050-AY	(LH)♠D5VY 6029051-AY	1
		◊ Gold flare	(RH) Δ	(LH) Δ	1
		◊ Gray	(RH)♠D6VY 6029050-AP	(LH)★D6VY 6029051-AP	1
		◊ Jade (dark)	(RH)♠D5VY 6029050-AR	(LH)♠D5VY 6029051-AR	1
		◊ Jade (light)	(RH)★D6VY 6029050-AR	(LH)★D6VY 6029051-AR	1
		◊ Red	(RH)♠D5VY 6029050-AD	(LH)♠D5VY 6029051-AD	1
		◊ Saddle	(RH)♠D5VY 6029050-AZ	(LH)♠D5VY 6029051-AZ	1
		◊ Silver	(RH)♠D5VY 6029050-AP	(LH)♠D5VY 6029051-AP	1
		◊ Silver blue	(RH)♠D6VY 6029050-AB	(LH)♠D6VY 6029051-AB	1
		◊ Taupe	(RH) Δ	(LH) Δ	1
		◊ White	(RH)♠D5VY 6029050-AW	(LH)♠D5VY 6029051-AW	1
291B20-1	Moulding (quarter outside lower)		(RH)♠D5VY 60291B20-A	(LH)♠D5VY 60291B21-A	1
29140-1	Moulding (quarter outside upper)		(RH)♠D5VY 5329140-A	(LH)♠D5VY 5329141-A	1
50398	Plate (front fender name)	"Town Car"	♠D3VY 5350398-A	R.H. and L.H.	2
517A20	Ornament (roof side)	W/o opera window	♠C9VY 53517A20-A	R.H. and L.H.	2

◊ For color verification, refer to the vinyl roof swatches in the 1976 salesman's color and upholstery selections guide.
♠ Includes attaching parts Δ Use saddle ♦ Use gold

COPYRIGHT © 1986 — FORD MOTOR COMPANY — DEARBORN, MICHIGAN

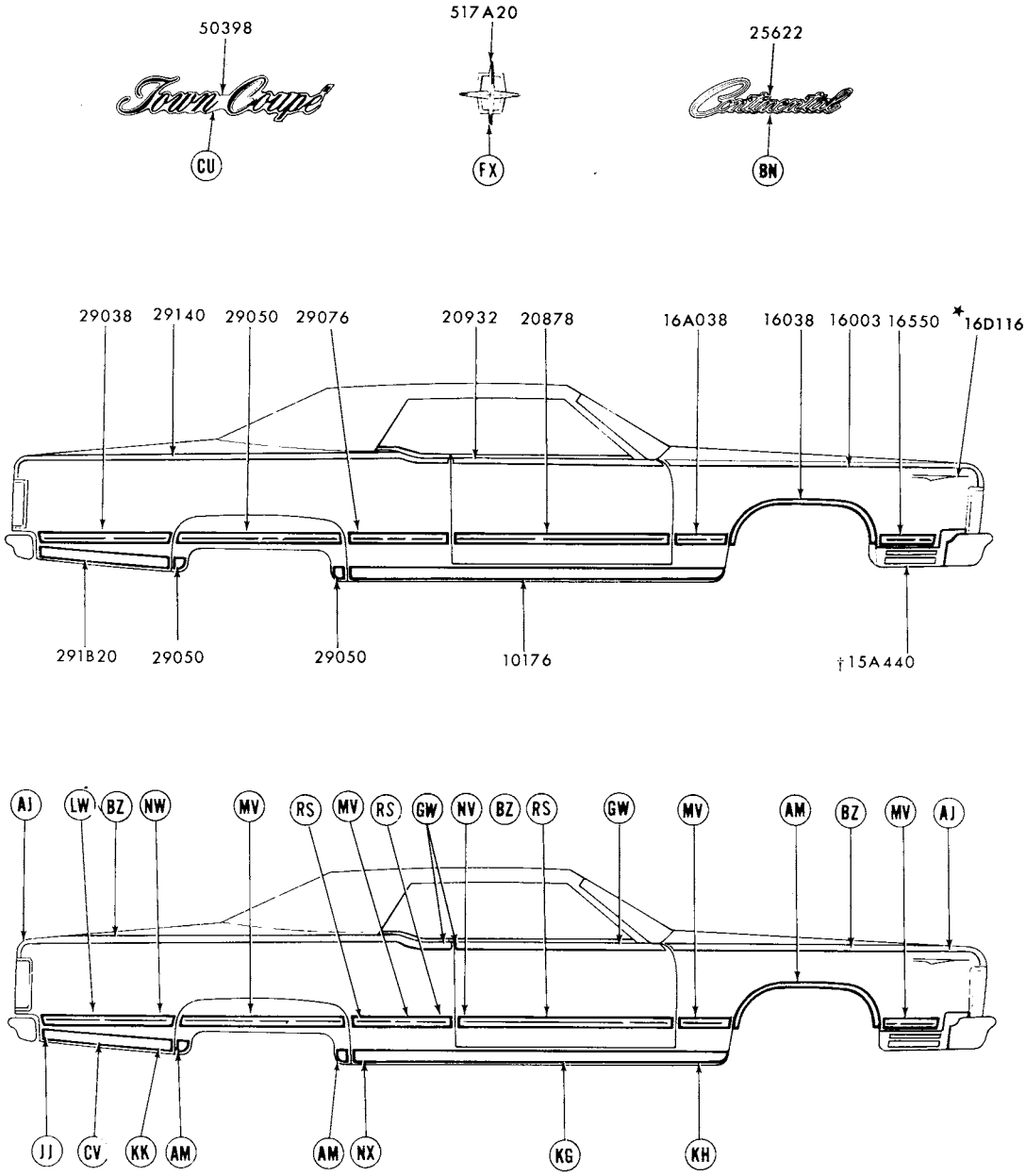

REFER TO EXTERIOR MOULDING SECTION "R" FOR COMPLETE RETAINER INFORMATION
† REFER TO GROUP IN CHASSIS SECTION

P-12139

1976 LINCOLN - BODY TYPE 60 - w/SIDE MOULDINGS

1976 LINCOLN - BODY TYPE 60 - w/SIDE MOULDINGS - cont'd.

GROUP NUMBER	PART NAME	DESCRIPTION	PART NUMBER		QTY.
10176-7	Moulding (body rocker panel)		(RH)♠D5VY 6010176-A	(LH)♠D5VY 6010177-A	1
16003-4	Moulding (front fender side)		(RH)♠D5VY 16003-A	(LH)♠D5VY 16004-A	1
16038-9	Moulding (front fender wheel opening)		(RH)♠D5VY 16038-A	(LH)♠D5VY 16039-A	1
16A038-9	Moulding (front fender rear)	Incl. vinyl insert			
		◊ Black	(RH)♠D5VY 16A038-AA	(LH)✶D5VY 16A039-AA	1
		◊ Blue	(RH)✶D5VY 16A038-AB	(LH)✶D5VY 16A039-AB	1
		◊ Cream	(RH) ♦	(LH) ♦	1
		◊ Gold	(RH)♠D5VY 16A038-AY	(LH)♠D5VY 16A039-AY	1
		◊ Gold flare	(RH) Δ	(LH) Δ	1
		◊ Gray	(RH)★D6VY 16A038-BP	(LH)✶D6VY 16A039-BP	1
		◊ Jade (dark)	(RH)✶D5VY 16A038-AR	(LH)✶D5VY 16A039-AR	1
		◊ Jade (light)	(RH)♠D6VY 16A038-BR	(LH)♠D6VY 16A039-BR	1
		◊ Red	(RH)✶D5VY 16A038-AD	(LH)✶D5VY 16A039-AD	1
		◊ Saddle	(RH)♠D5VY 16A038-AZ	(LH)♠D5VY 16A039-AZ	1
		◊ Silver	(RH)✶D5VY 16A038-AP	(LH)✶D5VY 16A039-AP	1
		◊ Silver blue	(RH)✶D6VY 16A038-BB	(LH)✶D6VY 16A039-BB	1
		◊ Taupe	(RH) Δ	(LH) Δ	
		◊ White	(RH)♠D5VY 16A038-AW	(LH)♠D5VY 16A039-AW	1
16D116-7	Transfer (front fender stripe)	Black	(RH)★D5VY 16D116-B	(LH)✶D5VY 16D117-B	1
		Blue	(RH)✶D5VY 16D116-K Not replaced (4/84)	(LH)✶D5VY 16D117-K Not replaced (4/84)	1
		Brown	(RH)★D5VY 16D116-H	(LH)✶D5VY 16D117-H	1
		Gold	(RH)★D5VY 16D116-D	(LH)✶D5VY 16D117-D	1
		Jade (dark)	(RH)✶D6VY 16D116-R	(LH)✶D6VY 16D117-R	1
		Jade (light)	(RH)✶D6VY 16D116-AR	(LH)★D6VY 16D117-AR	1
		Red (dark)	(RH)✶D6VY 16D116-D	(LH)✶D6VY 16D117-D	1
		Red (bright)	(RH)✶D6VY 16D116-AD	(LH)✶D6VY 16D117-AD	1
		Silver	(RH)★D6VY 16D116-P	(LH)✶D6VY 16D117-P	1
		Tan	(RH)★D5VY 16D116-J	(LH)★D5VY 16D117-J	1
		White	(RH)★D5VY 16D116-C	(LH)★D5VY 16D117-C	1
		Yellow	(RH)✶D6VY 16D116-V	(LH)✶D6VY 16D117-V	1
16550-1	Moulding (front fender front)	Incl. vinyl insert			
		◊ Black	(RH)♠D5VY 16550-AA	(LH)♠D5VY 16551-AA	1
		◊ Blue	(RH)✶D5VY 16550-AB	(LH)♠D5VY 16551-AB	1
		◊ Cream	(RH) ♦	(LH) ♦	1
		◊ Gold	(RH)♠D5VY 16550-AY	(LH)♠D5VY 16551-AY	1
		◊ Gold flare	(RH) Δ	(LH) Δ	1
		◊ Gray	(RH)✶D6VY 16550-BP Not replaced (4/84)	(LH)✶D6VY 16551-BP Not replaced (4/84)	1
		◊ Jade (dark)	(RH)✶D5VY 16550-AR Not replaced (4/84)	(LH)✶D5VY 16551-AR	1
		◊ Jade (light)	(RH)♠D6VY 16550-BR	(LH)♠D6VY 16551-BR	1
		◊ Red	(RH)✶D5VY 16550-AD Not replaced (4/84)	(LH)✶D5VY 16551-AD	1
		◊ Saddle	(RH)♠D5VY 16550-AZ	(LH)✶D5VY 16551-AZ	1
		◊ Silver	(RH)♠D5VY 16550-AP	(LH)★D5VY 16551-AP Not replaced (2/81)	1
		◊ Silver blue	(RH)✶D6VY 16550-BB	(LH)✶D6VY 16551-BB	1
		◊ Taupe	(RH) Δ	(LH) Δ	1
		◊ White	(RH)♠D5VY 16550-AW	(LH)♠D5VY 16551-AW	1

◊ For color verification, refer to the vinyl roof swatches in the 1976 salesman's color and upholstery selections guide.
♠ Includes attaching parts Δ Use saddle ♦ Use gold

COPYRIGHT © 1986 — FORD MOTOR COMPANY — DEARBORN, MICHIGAN

1976 LINCOLN - BODY TYPE 60 - w/SIDE MOULDINGS - cont'd.

GROUP NUMBER	PART NAME	DESCRIPTION	PART NUMBER		QTY.
20878-9	Moulding (front door outside lower)	Incl. vinyl insert			
		◊ Black	(RH)✶D5VY 6020878-AA	(LH)★D5VY 6020879-AA	1
		◊ Blue	(RH)♠D5VY 6020878-AB	(LH)♠D5VY 6020879-AB	1
		◊ Cream	(RH) ♦	(LH) ♦	1
		◊ Gold	(RH)♠D5VY 6020878-AY	(LH)✶D5VY 6020879-AY	1
		◊ Gold flair	(RH) Δ	(LH) Δ	1
		◊ Gray	(RH)✶D6VY 6020878-AP	(LH)★D6VY 6020879-AP Not replaced (2/81)	1
		◊ Jade (dark)	(RH)♠D5VY 6020878-AR	(LH)★D5VY 6020879-AR	1
		◊ Jade (light)	(RH)♠D6VY 6020878-AR	(LH)♠D6VY 6020879-AR	1
		◊ Red	(RH)✶D5VY 6020878-AD	(LH)♠D5VY 6020879-AD	1
		◊ Saddle	(RH)✶D5VY 6020878-AZ	(LH)♠D5VY 6020879-AZ	1
		◊ Silver	(RH)♠D5VY 6020878-AP	(LH)♠D5VY 6020879-AP	1
		◊ Silver blue	(RH)♠D6VY 6020878-AB	(LH)♠D6VY 6020879-AB	1
		◊ Taupe	(RH) Δ	(LH) Δ	1
		◊ White	(RH)♠D5VY 6020878-AW	(LH)♠D5VY 6020879-AW	1
20916-33	Moulding (front door upper)	R.H. -w/o mirror	♠D5VY 6020932-A		1
		R.H.-w/mirror-front	♠D5VY 6020916-A		1
		R.H.-w/mirror-rear	♠D5VY 6020933-B		1
		L.H.-front	♠D5VY 6020917-A		1
		L.H.-rear	♠D5VY 6020933-B		1
25622	Plate (name)	"Continental"	D5VY 6525622-A	R.H. and L.H.	2
29038-9	Moulding (quarter lower rear)	Incl. vinyl insert			
		◊ Black	(RH)✶D5VY 6029038-AA	(LH)★D5VY 6029039-AA	1
		◊ Blue	(RH)♠D5VY 6029038-AB	(LH)♠D5VY 6029039-AB	1
		◊ Cream	(RH) ♦	(LH) ♦	1
		◊ Gold	(RH)♠D5VY 6029038-AY	(LH)♠D5VY 6029039-AY	1
		◊ Gold flair	(RH) Δ	(LH) Δ	1
		◊ Gray	(RH)♠D6VY 6029038-AP	(LH)♠D6VY 6029039-AP	1
		◊ Jade (dark)	(RH)♠D5VY 6029038-AR	(LH)✶D5VY 6029039-AR	1
		◊ Jade (light)	(RH)♠D6VY 6029038-AR	(LH)♠D6VY 6029039-AR	1
		◊ Red	(RH)✶D5VY 6029038-AD	(LH)♠D5VY 6029039-AD	1
		◊ Saddle	(RH)✶D5VY 6029038-AZ	(LH)♠D5VY 6029039-AZ	1
		◊ Silver	(RH)♠D5VY 6029038-AP	(LH)♠D5VY 6029039-AP	1
		◊ Silver blue	(RH)✶D6VY 6029038-AB Not replaced (4/84)	(LH)★D6VY 6029039-AB	1
		◊ Taupe	(RH) Δ	(LH) Δ	1
		◊ White	(RH)♠D5VY 6029038-AW	(LH)♠D5VY 6029039-AW	1
29050-1	Moulding (quarter wheel opening cover lower)	Front	(RH)♠D5VY 6029050-B	(LH)♠D5VY 6029051-B	1
		Rear	(RH)♠D5VY 6029050-C	(LH)♠D5VY 6029051-C	1
291B20-1	Moulding (quarter lower rear)		(RH)♠D5VY 60291B20-A	(LH)♠D5VY 60291B21-A	1

◊ For color verification, refer to the vinyl roof swatches in the 1976 salesman's color and upholstery selections guide.
♠ Includes attaching parts Δ Use saddle ♦ Use gold

1976 LINCOLN - BODY TYPE 60 - w/SIDE MOULDINGS - cont'd.

GROUP NUMBER	PART NAME	DESCRIPTION	PART NUMBER		QTY.
29050-1	Moulding (quarter wheel opening cover upper)	Incl. vinyl insert			
		◊ Black	(RH)♠D5VY 6029050-AA	(LH)♠D5VY 6029051-AA	1
		◊ Blue	(RH)♠D5VY 6029050-AB	(LH)♠D5VY 6029051-AB	1
		◊ Cream	(RH) ♦	(LH) ♦	1
		◊ Gold	(RH)♠D5VY 6029050-AY	(LH)♠D5VY 6029051-AY	1
		◊ Gold flair	(RH) Δ	(LH) Δ	1
		◊ Gray	(RH)♠D6VY 6029050-AP	(LH)★D6VY 6029051-AP	1
		◊ Jade (dark)	(RH)♠D5VY 6029050-AR	(LH)✱D5VY 6029051-AR Not replaced (4/83)	1
		◊ Jade (light)	(RH)✱D6VY 6029050-AR	(LH)★D6VY 6029051-AR	1
		◊ Red	(RH)✱D5VY 6029050-AD Not replaced(4/84)	(LH)♠D5VY 6029051-AD	1
		◊ Saddle	(RH)♠D5VY 6029050-AZ	(LH)♠D5VY 6029051-AZ	1
		◊ Silver	(RH)♠D5VY 6029050-AP	(LH)♠D5VY 6029051-AP	1
		◊ Silver blue	(RH)★D6VY 6029050-AB Not replaced (4/84)	(LH)✱D6VY 6029051-AB Not replaced (4/83)	1
		◊ Taupe	(RH) Δ	(LH) Δ	1
		◊ White	(RH)♠D5VY 6029050-AW	(LH)♠D5VY 6029051-AW	1
29076-7	Moulding (quarter lower front)	Incl. vinyl insert			
		◊ Black	(RH)♠D5VY 6029076-AA	(LH)★D5VY 6029077-AA	1
		◊ Blue	(RH)♠D5VY 6029076-AB	(LH)★D5VY 6029077-AB	1
		◊ Cream	(RH) ♦	(LH) ♦	1
		◊ Gold	(RH)♠D5VY 6029076-AY	(LH)♠D5VY 6029077-AY	1
		◊ Gold flair	(RH) Δ	(LH) Δ	1
		◊ Gray	(RH)★D6VY 6029076-AP	(LH)✱D6VY 6029077-AP Not replaced (4/83)	1
		◊ Jade (dark)	(RH)♠D5VY 6029076-AR	(LH)♠D5VY 6029077-AR	1
		◊ Jade (light)	(RH)★D6VY 6029076-AR	(LH)★D6VY 6029077-AR	1
		◊ Red	(RH)♠D5VY 6029076-AD	(LH)♠D5VY 6029077-AD	1
		◊ Saddle	(RH)♠D5VY 6029076-AZ	(LH)♠D5VY 6029077-AZ	1
		◊ Silver	(RH)♠D5VY 6029076-AP	(LH)♠D5VY 6029077-AP	1
		◊ Silver blue	(RH)♠D6VY 6029076-AB	(LH)♠D6VY 6029077-AB	1
		◊ Taupe	(RH) Δ	(LH) Δ	1
		◊ White	(RH)♠D5VY 6029076-AW	(LH)♠D5VY 6029077-AW	1
291B20-1	Moulding (quarter outside lower)		(RH)♠D5VY 60291B20-A	(LH)♠D5VY 60291B21-A	1
29140-1	Moulding (quarter outside upper)		(RH)♠D5VY 6029140-A	(LH)♠D5VY 6029141-A	1
50398	Plate (front fender name)	"Town Coupe"	♠D3VY 6550398-A	R.H. and L.H.	2

◊ For color verification, refer to the vinyl roof swatches in the 1976 salesman's color and upholstery selections guide.
♠ Includes attaching parts Δ Use saddle ♦ Use gold

COPYRIGHT © 1986 — FORD MOTOR COMPANY — DEARBORN, MICHIGAN

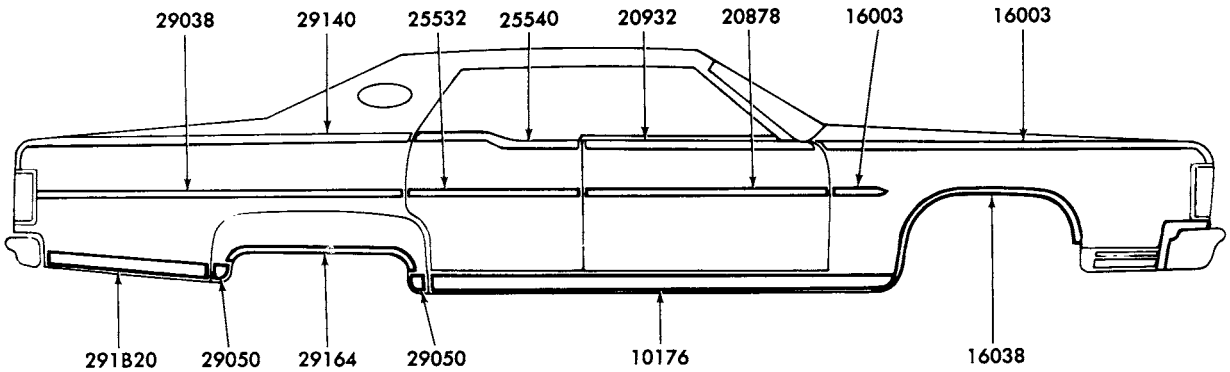

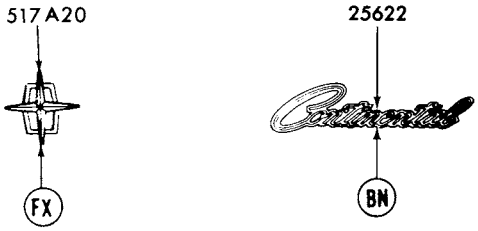

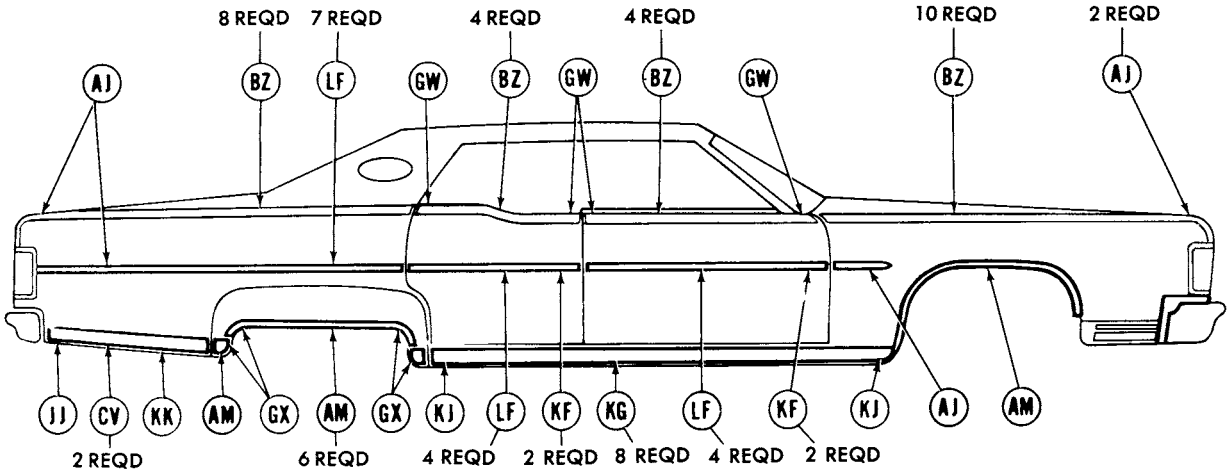

REFER TO EXTERIOR MOULDING SECTION "R" FOR COMPLETE RETAINER INFORMATION

P-12886

1976 LINCOLN - BODY TYPES 53 and 60 - w/BODY SIDE PROTECTION

1976 LINCOLN - BODY TYPES 53 and 60 - w/BODY SIDE PROTECTION - cont'd.

GROUP NUMBER	PART NAME	DESCRIPTION	PART NUMBER		QTY.
10176-7	Moulding (body rocker panel)		(RH)♦D5VY 6010176-A	(LH)♦D5VY 6010177-A	1
16003	Moulding (front fender side)		♦D2LY 16003-B	R.H. and L.H.	2
16003-4	Moulding (front fender upper)		(RH)♦D5VY 16003-A	(LH)♦D5VY 16004-A	1
16038-9	Moulding (front fender wheel		(RH)♦D5VY 16038-B	(LH)♦D5VY 16039-B	1
20878-9	Moulding (front door outside lower)	Body type 53	♦D2VY 5320878-B	R.H. and L.H.	2
		Body type 60	♦D2VY 6520878-B	R.H. and L.H.	2
20916-33	Moulding (front door outside upper)	Body type 53-R.H.	♦D5VY 5320932-A		1
		R.H.-w/mirror-front	★D5VY 6020916-A		1
		R.H.-w/mirror-rear	★D5VY 5320932-B		1
		L.H.-front	★D5VY 6020917-A		1
		L.H.-rear	★D5VY 5320933-A		1
		Body type 60-R.H.	★D5VY 6020932-A		1
		R.H.-w/mirror-front	★D5VY 6020916-A		1
		R.H.-w/mirror-rear	★D5VY 6020933-B		1
		L.H.-front	★D5VY 6020917-A		1
		L.H.-rear	★D5VY 6020933-B		1
25532-3	Moulding (rear door outside)		♦D2VY 5325532-B	R.H. and L.H.	2
25540-1	Moulding (rear door outside upper)		(RH)♦D5VY 5325540-A	(LH)♦D5VY 5325541-A	1
29038	Moulding (quarter outside)	Body type 53	♦D2VY 5329038-B	R.H. and L.H.	2
		Body type 60	♦D6VY 6029038-A	R.H. and L.H.	2
29050-1	Moulding (quarter wheel opening cover)	Front	(RH)♦D5VY 6029050-B	(LH)♦D5VY 6029051-B	1
		Rear	(RH)♦D5VY 6029050-C	(LH)♦D5VY 6029051-C	1
291B20-1	Moulding (quarter outside lower)		(RH)♦D5VY 60291B20-A	(LH)♦D5VY 60291B21-A	1
29140-1	Moulding (quarter outside upper)	Body type 53	(RH)♦D5VY 5329140-A	(LH)♦D5VY 5329141-A	1
		Body type 60	(RH)♦D5VY 6029140-A	(LH)♦D5VY 6029141-A	1
29164-5	Moulding (quarter wheel opening cover)		(RH)♦D5VY 6029164-A	(LH)♦D5VY 6029165-A	1
517A20	Ornament (roof side)	Body type 53-w/o opera window	♦C9VY 53517A20-A	R.H.and L.H.	2

♦ Includes attaching parts

COPYRIGHT © 1986 — FORD MOTOR COMPANY — DEARBORN, MICHIGAN

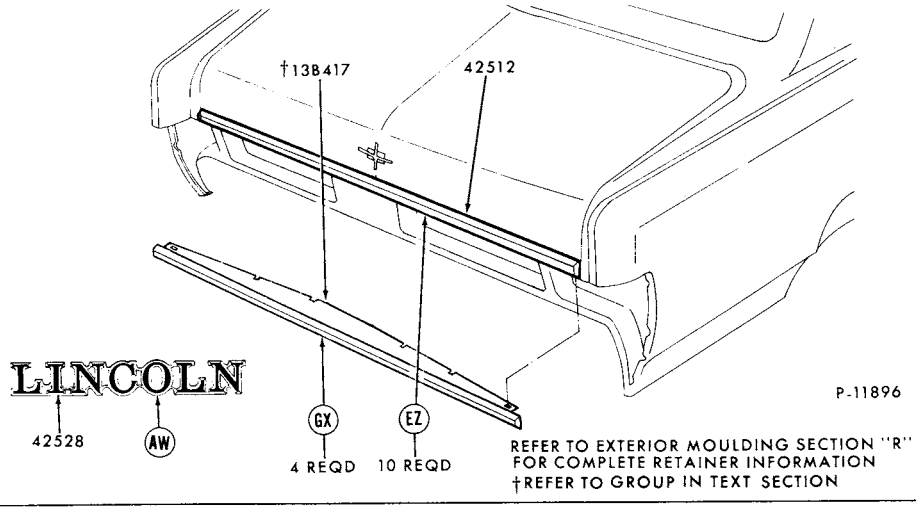

1976 LINCOLN - BACK END

GROUP NUMBER	PART NAME	DESCRIPTION	PART NUMBER	QTY.
42512	Moulding (luggage compartment door)		♦D5VY 6042512-A	1
42528	Plate (name)	"LINCOLN"	♦E1VY 5442528-A	1

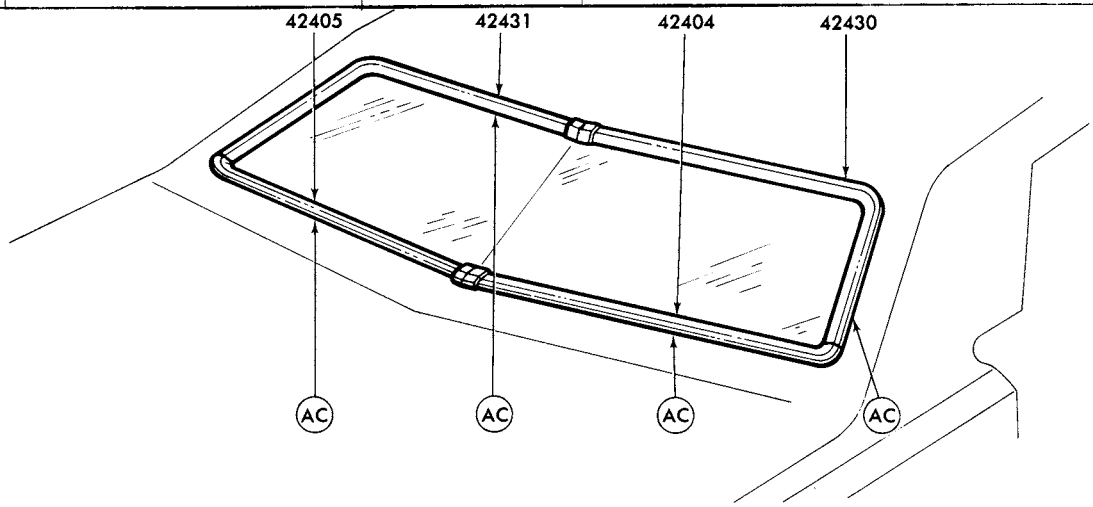

REFER TO EXTERIOR MOULDING SECTION "R" FOR COMPLETE RETAINER INFORMATION P-12488

1976 LINCOLN - BACK WINDOW

GROUP NUMBER	PART NAME	DESCRIPTION	PART NUMBER		QTY.
42404-5	Moulding (back window outside lower)	Body type 53	(RH)♦D5VY 5342404-A	(LH)♦D5VY 5342405-A	1
		Body type 60	(RH)★D5VY 6042404-A	(LH)★D5VY 6042405-A Not replaced (4/84)	1
42430-1	Moulding (back window outside upper)	Body type 53	(RH)★D5VY 5342430-A	(LH)★D5VY 5342431-A Not replaced (4/84)	1
		Body type 60	(RH)★D5VY 6042430-A	(LH)★D5VY 6042431-A Not replaced (4/84)	1

♦ Includes attaching parts

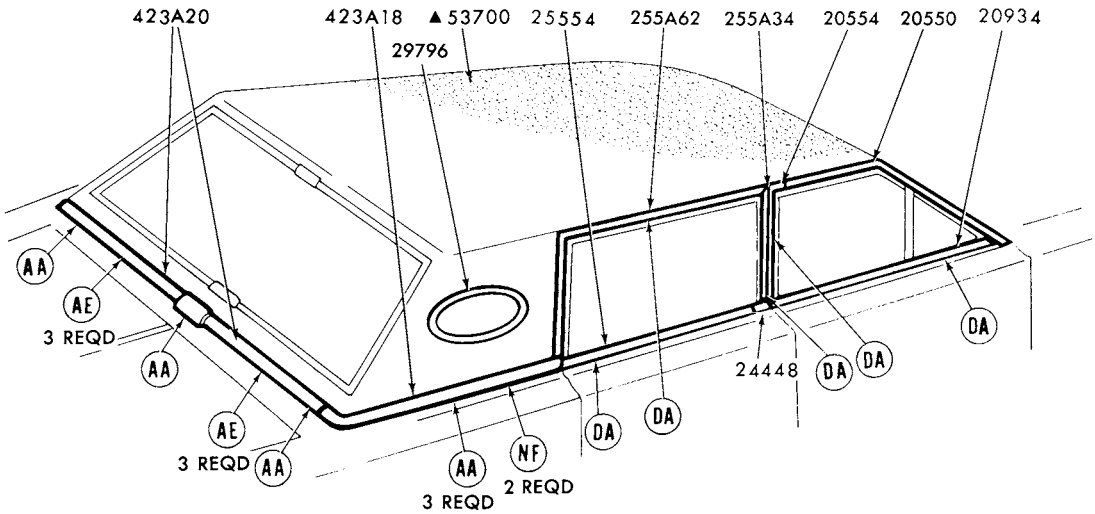

▲REFER TO GROUP IN SOFT TRIM SECTION
REFER TO EXTERIOR MOULDING SECTION "R" FOR COMPLETE RETAINER INFORMATION P-11921

1976 LINCOLN - BODY TYPE 53 - ROOF and BACK BELT - w/FULL VINYL ROOF
1976 LINCOLN - BODY TYPE 53 - ROOF and BACK BELT - w/o VINYL ROOF

GROUP NUMBER	PART NAME	DESCRIPTION	PART NUMBER		QTY.
20550-5	Moulding (front door window)	Front	(RH) D5VY 5320550-A	(LH) D5VY 5320551-A	1
		Rear	(RH) D5VY 5320554-A	(LH) D5VY 5320555-A	1
20934-5	Moulding (front door belt)		(RH)♦D5VY 5320934-A	(LH)♦D5VY 5320935-A	1
24448-9	Moulding (center body pillar belt)		(RH)★D5VY 5324448-A	(LH)♦D5VY 5324449-A	1
255A34-5	Moulding (rear door window)	Front	(RH) D5VY 53255A34-A	(LH) D5VY 53255A35-A	1
25554-5	Moulding (rear door belt)		(RH)♦D5VY 5325554-A	(LH)♦D5VY 5325555-A	1
255A62-3	Moulding (rear door window)	Rear	(RH) D5VY 53255A62-A	(LH) D5VY 53255A63-A	1
29796-7	Moulding (opera window outside)	Bright finish	★ D2LY 6529796-B	R.H. and L.H.	2
		Bright finish w/ vinyl tape			
		◊ Black	D6LY 6529796-A	R.H. and L.H.	2
		◊ Blue	★D5LY 6529796-D	R.H. and L.H.	2
		◊ Cream	★ D6LY 6529796-V	R.H. and L.H.	2
		◊ Gold flare	★D5LY 6529796-L	R.H. and L.H.	2
		◊ Gold	★D5LY 6529796-K	R.H. and L.H.	2
		◊ Gray	★D6LY 6529796-AP	R.H. and L.H.	2
		◊ Jade (dark)	★ D5LY 6529796-P	R.H. and L.H.	2
		◊ Jade (light)	★ D6LY 6529796-J	R.H. and L.H.	2
		◊ Red	★ D5LY 6529796-B	R.H. and L.H.	2
		◊ Saddle	★ D5LY 6529796-J	R.H. and L.H.	2
		◊ Silver blue	★ D5LY 6529796-C	R.H. and L.H.	2
		◊ Silver	★D5LY 6529796-M	R.H. and L.H.	2
		◊ Taupe	★D5LY 6529796-N	R.H. and L.H.	2
		◊ White	★ D5LY 6529796-A	R.H. and L.H.	2
423A18-9	Moulding (back belt side)	Paint to match - all colors exc.white	(RH) D7VY 53423A18-A	(LH)♦D5VY 53423A19-G	1
		White	(RH)★D6VY 53423A18-BW R/BD7VY 53423A18-A(4/83)	(LH)★D6VY 53423A19-BW R/BD7VY 53423A19-A (4/83)	1
423A20	Moulding (back belt rear)	Paint to match - all colors exc. white	★D5VY 53423A20-G R/B D7VY 53423A20-A (4/83)		1

◊ For color verification, refer to the vinyl roof swatches in the 1976 salesman's color and upholstery selections guide.
♦ Includes attaching parts

COPYRIGHT © 1986 — FORD MOTOR COMPANY — DEARBORN, MICHIGAN

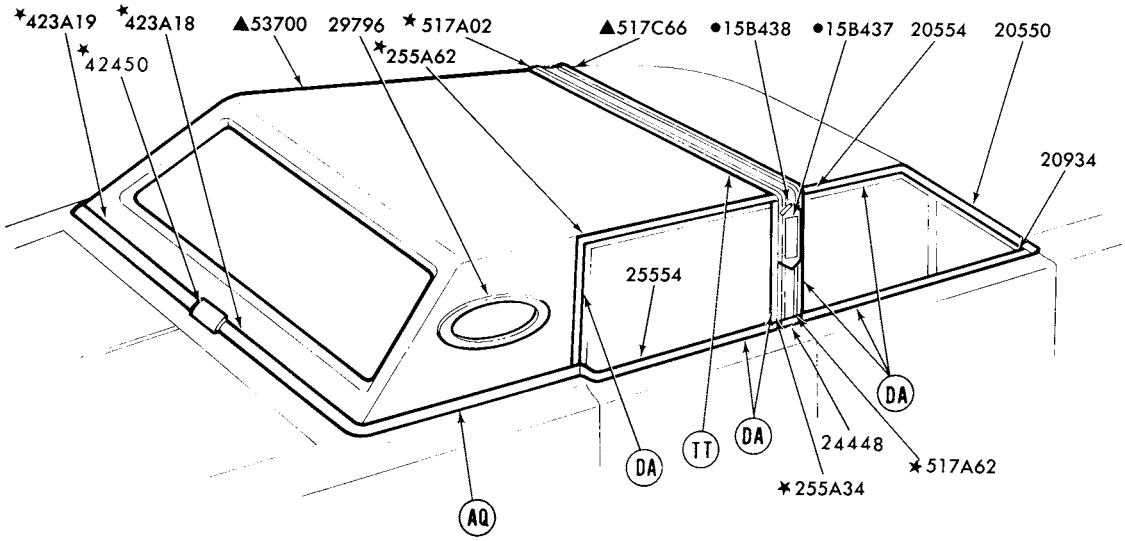

▲ REFER TO GROUP IN SOFT TRIM SECTION
• REFER TO GROUP IN CHASSIS SECTION
REFER TO EXTERIOR MOULDING SECTION "R" FOR COMPLETE RETAINER INFORMATION

P-12837

1976 LINCOLN - BODY TYPE 53 - ROOF and BACK BELT-w/HALF VINYL ROOF and VINYL INSERT MOULDINGS

GROUP NUMBER	PART NAME	DESCRIPTION	PART NUMBER		QTY.
20550-5	Moulding (front door window opening)	Front	(RH) D5VY 5320550-A	(LH) D5VY 5320551-A	1
		Rear	(RH) D5VY 5320554-A	(LH) D5VY 5320555-A	1
20934-5	Moulding (front door belt)		(RH)♦D5VY 5320934-A	(LH)♦D5VY 5320935-A	1
24448-9	Moulding (center body pillar belt)		(RH)♦D5VY 5324448-A	(LH)♦D5VY 5324449-A	1
25554-5	Moulding (rear door belt)		(RH)♦D5VY 5325554-A	(LH)♦D5VY 5325555-A	1
29796-7	Moulding (opera window)	◊Black	D6LY 6529796-A	R.H. and L.H.	2
		◊Blue	★ D5LY 6529796-D	R.H. and L.H.	2
		◊Cream	★ D6LY 6529796-V	R.H. and L.H.	2
		◊Gold	★ D5LY 6529796-K	R.H. and L.H.	2
		◊Gold flare	★ D5LY 6529796-L	R.H. and L.H.	2
		◊Gray	★ D6LY 6529796-AP	R.H. and L.H.	2
		◊Jade (dark)	★ D5LY 6529796-P	R.H. and L.H.	2
		◊Jade (light)	★ D6LY 6529796-J	R.H. and L.H.	2
		◊Red	★ D5LY 6529796-B	R.H. and L.H.	2
		◊Saddle	★ D5LY 6529796-J	R.H. and L.H.	2
		◊Silver	★ D6LY 6529796-S	R.H. and L.H.	2
		◊Silver blue	★ D5LY 6529796-C	R.H. and L.H.	2
		◊Taupe	★ D5LY 6529796-N	R.H. and L.H.	2
		◊White	★ D6LY 6529796-W	R.H. and L.H.	2
423A18-9	Moulding (back belt side)	◊Black	(RH)★D6VY 53423A18-AA	(LH)★D6VY 53423A19-AA	1
		◊Blue	(RH)★D6VY 53423A18-AB	(LH)★D6VY 53423A19-AB	1
		◊Cream	(RH)★D6VY 53423A18-AV	(LH)★D6VY 53423A19-AV	1
		◊Gold	(RH)★D6VY 53423A18-AY	(LH)★D6VY 53423A19-AY	1
		◊Gold flare	(RH)★D6VY 53423A18-AF	(LH)★D6VY 53423A19-AF	1
		◊Grey	(RH)★D6VY 53423A18-AP	(LH)★D6VY 53423A19-AP	1
		◊Jade (dark)	(RH)★D6VY 53423A18-AJ	(LH)★D6VY 53423A19-AJ	1
		◊Jade (light)	(RH)★D6VY 53423A18-AR	(LH)★D6VY 53423A19-AR	1

♦ Includes attaching parts and upholstery guide

◊ For color verification, refer to the vinyl roof swatches in the 1976 salesman's color and upholstery guide

1976 LINCOLN - BODY TYPE 53 - ROOF and BACK BELT-w/HALF VINYL ROOF and VINYL INSERT MOULDINGS - cont'd.

GROUP NUMBER	PART NAME	DESCRIPTION	PART NUMBER		QTY.
423A18-9 (cont'd.)	Moulding (back belt side)	◊Red	(RH)★D6VY 53423A18-AD	(LH)★D6VY 53423A19-AD	1
		◊Saddle	(RH)★D6VY 53423A18-AT	(LH)★D6VY 53423A19-AT	1
		◊Silver	(RH)★D6VY 53423A18-AS	(LH)★D6VY 53423A19-AS	1
		◊Silver blue	(RH)★D6VY 53423A18-AC	(LH)★D6VY 53423A19-AC	1
		◊Taupe	(RH)★D6VY 53423A18-AT	(LH)★D6VY 53423A19-AT	1
		◊White	(RH)★D6VY 53423A18-AW	(LH)★D6VY 53423A19-AW	1
42450	Cover (back window lower moulding joint)	◊Black	★D6VY 6042450-AA		1
		◊Blue	★D6VY 6042450-AB		1
		◊Cream	★D6VY 6042450-AV		1
		◊Gold	★D6VY 6042450-AY		1
		◊Gold flare	★D6VY 6042450-AF		1
		◊Grey	★D6VY 6042450-AP		1
		◊Jade (dark)	★D6VY 6042450-AJ		1
		◊Jade (light)	★D6VY 6042450-AR		1
		◊Red	★D6VY 6042450-AD		1
		◊Saddle	★D6VY 6042450-AZ		1
		◊Silver	★D6VY 6042450-AS		1
		◊Silver blue	★D6VY 6042450-AC		1
		◊Taupe	★D6VY 6042450-AT		1
		◊White	★D6VY 6042450-AW		1
517A02	Moulding (roof top)	Incl. vinyl insert			
		◊Black (high luster)	★D6VY 53517A02-BA	Not replaced (4/83)	1
		◊Black (low luster)	★D6VY 53517A02-AA	Not replaced (4/83)	1
		◊Blue	★D6VY 53517A02-AB	Not replaced (4/83)	1
		◊Cream	★D6VY 53517A02-AV	Not replaced (4/83)	1
		◊Gold	★D6VY 53517A02-AY	Not replaced (4/83)	1
		◊Gold flare	★D6VY 53517A02-AF	Not replaced (4/83)	1
		◊Gray	★D6VY 53517A02-AP	Not replaced (4/83)	1
		◊Jade (dark)	★D6VY 53517A02-BR	Not replaced (4/83)	1
		◊Jade (light)	★D6VY 53517A02-AR	Not replaced (4/83)	1
		◊Red	★D6VY 53517A02-AD	Not replaced (4/83)	1
		◊Saddle	★D6VY 53517A02-AZ	Not replaced (4/83)	1
		◊Silver	★D6VY 53517A02-CP	Not replaced (4/83)	1
		◊Silver blue	★D6VY 53517A02-BP	Not replaced (4/83)	1
		◊Taupe	★D6VY 53517A02-AJ	Not replaced (4/83)	1
		◊White	★D6VY 53517A02-AW	Not replaced (4/83)	1
517A62	Moulding (roof side)	Incl. vinyl insert			
		◊Black (high luster)	★D6VY 53517A62-BA	R.H. and L.H. N/R(4/83)	2
		◊Black (low luster)	★D6VY 53517A62-AA	R.H. and L.H. N/R(4/83)	2
		◊Blue	★D6VY 53517A62-AB	R.H. and L.H. N/R(4/83)	2
		◊Cream	★D6VY 53517A62-AV	R.H. and L.H. N/R(4/83)	2
		◊Gold	★D6VY 53517A62-AY	R.H. and L.H. N/R(4/83)	2
		◊Gold flare	★D6VY 53517A62-AF	R.H. and L.H. N/R(4/83)	2
		◊Grey	★D6VY 53517A62-AP	R.H. and L.H. N/R(4/83)	2
		◊Jade (dark)	★D6VY 53517A62-BR	R.H. and L.H. N/R(4/83)	2
		◊Jade (light)	★D6VY 53517A62-AR	R.H. and L.H. N/R(4/83)	2
		◊Red	★D6VY 53517A62-AD	R.H. and L.H. N/R(4/83)	2
		◊Saddle	★D6VY 53517A62-AZ	R.H. and L.H. N/R(4/83)	2
		◊Silver	★D6VY 53517A62-CP	R.H. and L.H. N/R(4/83)	2
		◊Silver blue	★D6VY 53517A62-BP	R.H. and L.H. N/R(4/83)	2
		◊Taupe	★D6VY 53517A62-AJ	R.H. and L.H. N/R(4/83)	2
		◊White	★D6VY 53517A62-AW	R.H. and L.H. N/R(4/83)	2

◊ For color verification, refer to the vinyl roof swatches in the 1976 salesman's color and upholstery selections guide.
♦ Includes attaching parts

COPYRIGHT © 1986 — FORD MOTOR COMPANY — DEARBORN, MICHIGAN

1973/79 LINCOLN-MERCURY CARS

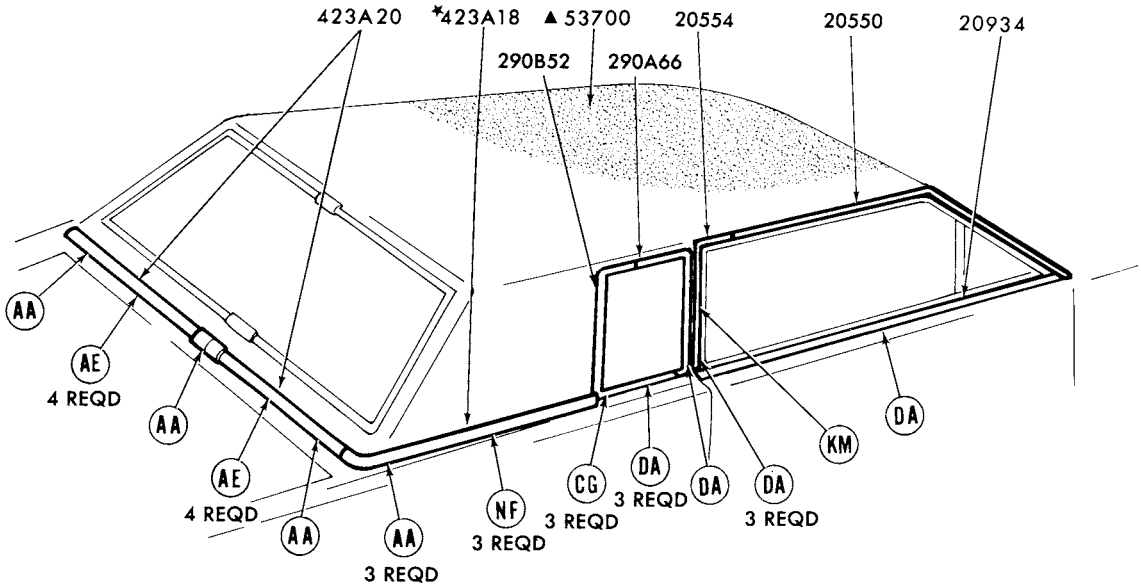

▲REFER TO GROUP IN SOFT TRIM SECTION
REFER TO EXTERIOR MOULDING SECTION "R" FOR COMPLETE RETAINER INFORMATION P-11922

1976 LINCOLN - BODY TYPE 60 - ROOF and BACK BELT-w/o VINYL ROOF
1976 LINCOLN - BODY TYPE 60 - ROOF and BACK BELT - w/FULL VINYL ROOF

GROUP NUMBER	PART NAME	DESCRIPTION	PART NUMBER		QTY.
20550-5	Moulding (front window opening)	Front	(RH) D5VY 6020550-A	(LH) D5VY 6020551-A	1
		Rear	(RH) D5VY 6020554-A	(LH) D5VY 6020555-A	1
20934	Moulding and weatherstrip-(front door belt)		(RH)♦D5VY 6020934-A	(LH)♦D5VY 6020935-A	1
290B52-3	Moulding (quarter window rear)	"Before 3/1/76"	(RH)*D5VY 60290B52-A Not replaced (4/83)	(LH)*D5VY 60290B53-A	1
		"From 3/1/76"	(RH)♦D6VY 60290B52-A	(LH)♦D6VY 60290B53-A	1
290A66-7	Moulding (quarter window front)	W/vinyl roof-"Before 3/1/76"	(RH) D5VY 60290A66-A	(LH) D5VY 60290A67-A	1
		W/vinyl roof-"From 3/1/76"	(RH)★D6VY 60290A66-B Not replaced (4/84)	(LH)♦D6VY 60290A67-B	1
		W/o vinyl roof	(RH)♦D6VY 60290A66-A	(LH)♦D6VY 60290A67-A	1
423A18-9	Moulding (back belt side)	Paint to match-all colors exc. white	(RH)★D5VY 60423A18-G R/B D7VY 60423A18-B(7/81)	(LH)★D5VY 60423A19-G R/B D7VY 60423A19-B(4/83)	1
		White	(RH)*D6VY 60423A18-BW	(LH)★D6VY 60423A19-BW	1
423A20	Moulding (back belt rear)	Paint to match-all colors exc.white	*D5VY 53423A20-G R/B D7VY 53423A20-A (4/83)		1
		White	★D6VY 53423A20-AW		1

♦ Includes attaching parts

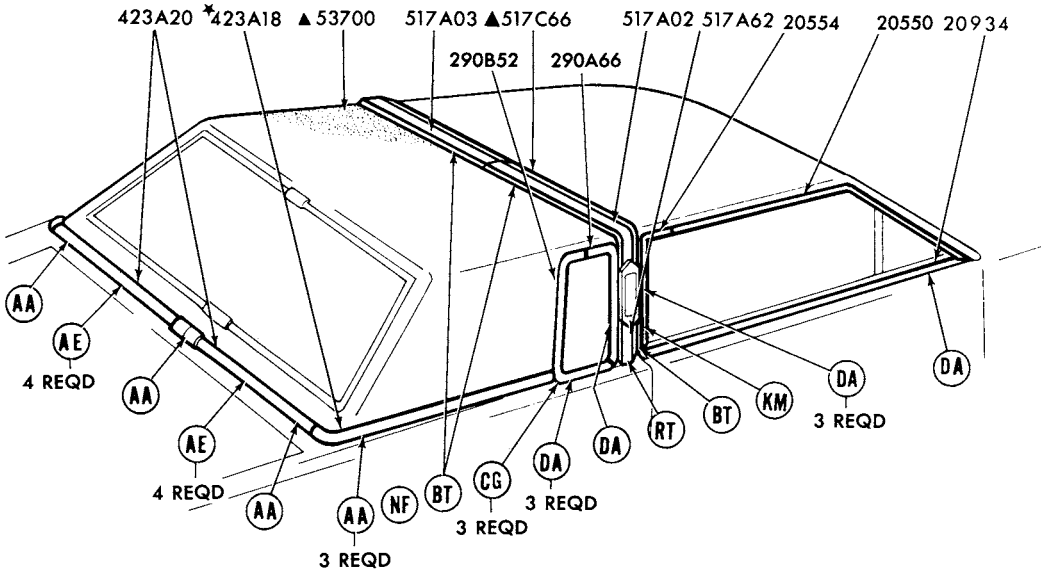

REFER TO EXTERIOR MOULDING SECTION 'R' FOR COMPLETE RETAINER INFORMATION
▲ REFER TO GROUP IN SOFT TRIM SECTION

P-12493

1976 LINCOLN - BODY TYPE 60 - ROOF and BACK BELT-w/HALF VINYL ROOF and BRIGHT MOULDINGS

GROUP NUMBER	PART NAME	DESCRIPTION	PART NUMBER		QTY.
20550-5	Moulding (front window opening)	Front	(RH) D5VY 6020550-A	(LH) D5VY 6020551-A	1
		Rear	(RH) D5VY 6020554-A	(LH) D5VY 6020555-A	1
20934	Moulding and weatherstrip-(front door belt)		(RH)♦D5VY 6020934-A	(LH)♦D5VY 6020935-A	1
290B97-3	Moulding (quarter window rear)	"Before 3/1/76"	(RH)★D5VY 60290B52-A Not replaced (4/83)	(LH)★D5VY 60290B53-A	1
		"From 3/1/76"	(RH)♦D6VY 60290B52-A	(LH)♦D6VY 60290B53-A	1
290A66-7	Moulding (quarter window front)	"Before 3/1/76"	(RH)★D5VY 60290A66-A	(LH)★D5VY 60290A67-A	1
		"From 3/1/76"	(RH)♦D6VY 60290A66-B	(LH)♦D6VY 60290A67-B	1
423A18-9	Moulding (back belt side)	Paint to match-all colors exc. white	(RH)★D5VY 60423A18-G R/B★D7VY 60423A18-B(7/81)	(LH)★D5VY 60423A19-G R/B★D7VY 60423A19-B(4/83)	1
		White	(RH)★D6VY 60423A18-BW	(LH)★D6VY 60423A19-BW	1
423A20	Moulding (back belt rear)	Paint to match-all colors exc.white	★D5VY 53423A20-G R/B★D7VY 53423A20-A (4/83)		1
		White	★D6VY 53423A20-AW		1
517A02-3	Moulding (roof top)		(RH)♦D6VY 60517A02-A	(LH)♦D6VY 60517A03-A	1
517A62	Moulding (roof side)		♦D6VY 60517A62-A	R.H. and L.H.	2

♦ Includes attaching parts

COPYRIGHT © 1986 — FORD MOTOR COMPANY — DEARBORN, MICHIGAN

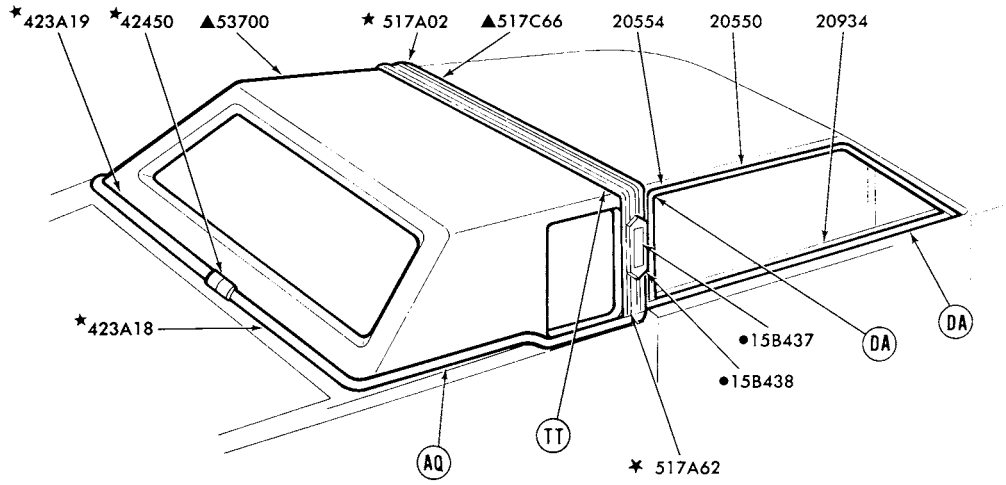

▲REFER TO GROUP IN SOFT TRIM SECTION
●REFER TO GROUP IN CHASSIS SECTION
REFER TO EXTERIOR MOULDING SECTION "R" FOR COMPLETE RETAINER INFORMATION

P-12838

1976 LINCOLN - BODY TYPE 60 - ROOF and BACK BELT-w/HALF VINYL ROOF and VINYL INSERT MOULDINGS

GROUP NUMBER	PART NAME	DESCRIPTION	PART NUMBER		QTY.
20550-5	Moulding (front window opening)	Front	(RH) D5VY 6020550-A	(LH) D5VY 6020551-A	1
		Rear	(RH) D5VY 6020554-A	(LH) D5VY 6020555-A	1
20934	Moulding and weatherstrip (front door outside belt)		(RH)♦D5VY 6020934-A	(LH)♦D5VY 6020935-A	1
423A18-9	Moulding (back belt outside)	◊Black	(RH)★D6VY 60423A18-AA	(LH)★D6VY 60423A19-AA	1
		◊Blue	(RH)★D6VY 60423A18-AB	(LH)★D6VY 60423A19-AB	1
		◊Cream	(RH)★D6VY 60423A18-AV	(LH)★D6VY 60423A19-AV	1
		◊Gold	(RH)★D6VY 60423A18-AY	(LH)★D6VY 60423A19-AY	1
		◊Gold flare	(RH)★D6VY 60423A18-AF	(LH)★D6VY 60423A19-AF	1
		◊Grey	(RH)★D6VY 60423A18-AP	(LH)★D6VY 60423A19-AP	1
		◊Jade (dark)	(RH)★D6VY 60423A18-AJ	(LH)★D6VY 60423A19-AJ	1
		◊Jade (light)	(RH)★D6VY 60423A18-AR	(LH)★D6VY 60423A19-AR	1
		◊Red	(RH)★D6VY 60423A18-AD	(LH)★D6VY 60423A19-AD	1
		◊Saddle	(RH)★D6VY 60423A18-AZ	(LH)★D6VY 60423A19-AZ	1
		◊Silver	(RH)★D6VY 60423A18-AS	(LH)★D6VY 60423A19-AS	1
		◊Silver blue	(RH)★D6VY 60423A18-AC	(LH)★D6VY 60423A19-AC	1
		◊Taupe	(RH)★D6VY 60423A18-AT	(LH)★D6VY 60423A19-AT	1
		◊White	(RH)★D6VY 60423A18-AW	(LH)★D6VY 60423A19-AW	1
42450	Cover (back window outside lower moulding joint)	◊Black	★D6VY 6042450-AA		1
		◊Blue	★D6VY 6042450-AB		1
		◊Cream	★D6VY 6042450-AV		1
		◊Gold	★D6VY 6042450-AY		1
		◊Gold flare	★D6VY 6042450-AF		1
		◊Grey	★D6VY 6042450-AP		1
		◊Jade (dark)	★D6VY 6042450-AJ		1
		◊Jade (light)	★D6VY 6042450-AR		1
		◊Red	★D6VY 6042450-AD		1
		◊Saddle	★D6VY 6042450-AZ		1
		◊Silver	★D6VY 6042450-AS		1
		◊Silver blue	★D6VY 6042450-AC		1
		◊Taupe	★D6VY 6042450-AT		1
		◊White	★D6VY 6042450-AW		1

◊ For color verification, refer to the vinyl roof swatches in the 1976 salesman's color and upholstery selections guide.
♦ Includes attaching parts

1976 LINCOLN - BODY TYPE 60 - ROOF and BACK BELT-w/HALF VINYL ROOF and VINYL INSERT MOULDINGS - cont'd.

GROUP NUMBER	PART NAME	DESCRIPTION	PART NUMBER		QTY.
517A02	Moulding (roof top)	Incl. vinyl insert			
		◊Black (high luster)	★D6VY 60517A02-BA	Not replaced (4/83)	1
		◊Black (low luster)	★D6VY 60517A02-AA	Not replaced (4/83)	1
		◊Blue	★D6VY 60517A02-AB	Not replaced (4/83)	1
		◊Cream	★D6VY 60517A02-AV	Not replaced (4/83)	1
		◊Gold	★D6VY 60517A02-AY	Not replaced (4/83)	1
		◊Gold flare	★D6VY 60517A02-AF	Not replaced (4/83)	1
		◊Jade (dark)	★D6VY 60517A02-BR	Not replaced (4/83)	1
		◊Jade (light)	★D6VY 60517A02-AR	Not replaced (4/83)	1
		◊Red	★D6VY 60517A02-AD	Not replaced (4/83)	1
		◊Saddle	★D6VY 60517A02-AZ	Not replaced (4/83)	1
		◊Gray	★D6VY 60517A02-AP	Not replaced (4/83)	1
		◊Silver	★D6VY 60517A02-CP	Not replaced (4/83)	1
		◊Silver blue	★D6VY 60517A02-BP	Not replaced (4/83)	1
		◊Taupe	★D6VY 60517A02-AJ	Not replaced (4/83)	1
		◊White	★D6VY 60517A02-AW	Not replaced (4/83)	1
517A62	Moulding (roof side)	Incl. vinyl insert			
		◊Black (high luster)	★D6VY 60517A62-BA Not replaced (4/83)	R.H. and L.H.	2
		◊Black (low luster)	★D6VY 60517A62-AA Not replaced (4/83)	R.H. and L.H.	2
		◊Blue	★D6VY 60517A62-AB Not replaced (4/83)	R.H. and L.H.	2
		◊Cream	★D6VY 60517A62-AV Not replaced (4/83)	R.H. and L.H.	2
		◊Gold	★D6VY 60517A62-AY Not replaced (4/83)	R.H. and L.H.	2
		◊Gold flare	★D6VY 60517A62-AF Not replaced (4/83)	R.H. and L.H.	2
		◊Grey	★D6VY 60517A62-AP Not replaced (4/83)	R.H. and L.H.	2
		◊Jade (dark)	★D6VY 60517A62-BR Not replaced (4/83)	R.H. and L.H.	2
		◊Jade (light)	★D6VY 60517A62-AR Not replaced (4/83)	R.H. and L.H.	2
		◊Red	★D6VY 60517A62-AD Not replaced (4/83)	R.H. and L.H.	2
		◊Saddle	★D6VY 60517A62-AZ Not replaced (4/83)	R.H. and L.H.	2
		◊Silver	★D6VY 60517A62-CP Not replaced (4/83)	R.H. and L.H.	2
		◊Silver blue	★D6VY 60517A62-BP Not replaced (4/83)	R.H. and L.H.	2
		◊Taupe	★D6VY 60517A62-AJ Not replaced (4/83)	R.H. and L.H.	2
		◊White	★D6VY 60517A62-AW Not replaced (4/83)	R.H. and L.H.	2

◊ For color verification, refer to the vinyl roof swatches in the 1976 salesman's color and upholstery selections guide.
♦ Includes attaching parts

COPYRIGHT © 1986 — FORD MOTOR COMPANY — DEARBORN, MICHIGAN

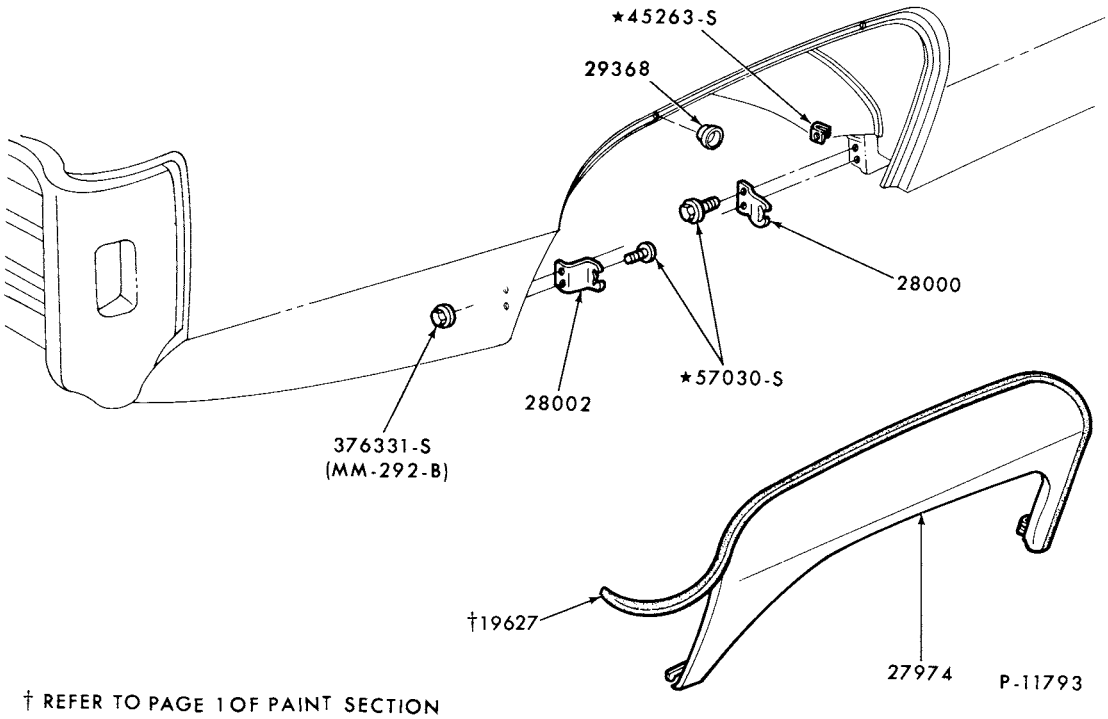

† REFER TO PAGE 1 OF PAINT SECTION

1976 LINCOLN - WHEEL OPENING COVER PARTS

GROUP NUMBER	PART NAME	DESCRIPTION	PART NUMBER		QTY.
27974-5	Panel (quarter wheel opening cover)		(RH) D5VY 6027974-B	(LH) D5VY 6027975-B	1
28000-2	Bracket (quarter wheel opening cover)	Front	D5VY 6028000-A	R.H. and L.H.	2
		Rear	D5VY 6028002-C	R.H. and L.H.	2
29368	Insert (wheel opening cover)	Nylon	D5VY 6029368-A	R.H. and L.H.	4

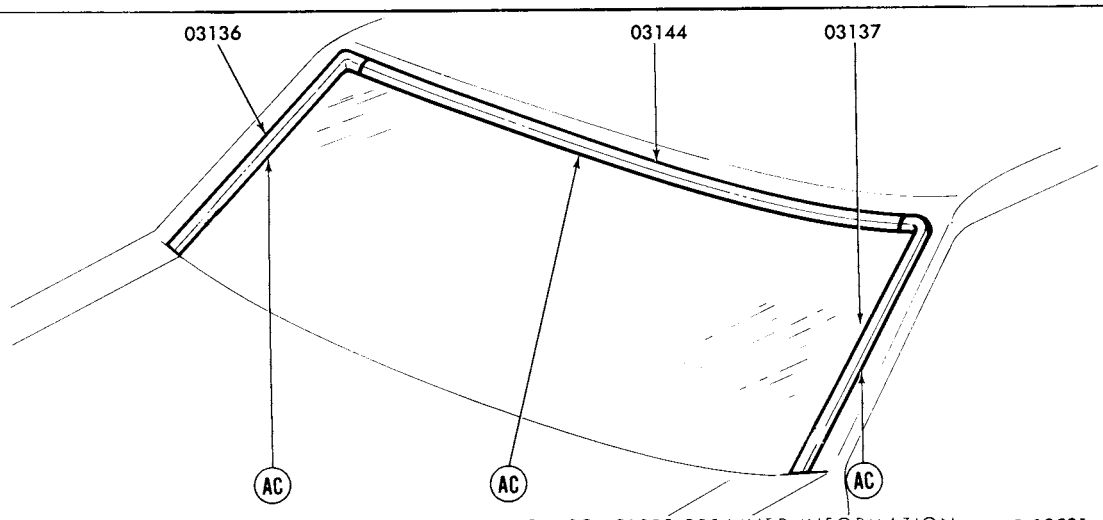

REFER TO EXTERIOR MOULDING SECTION 'R' FOR COMPLETE RETAINER INFORMATION

P-12521

1976 COUGAR - WINDSHIELD

GROUP NUMBER	PART NAME	DESCRIPTION	PART NUMBER	QTY.
03136-7	Moulding (windshield outside side)		(RH)♦D7OZ 6503136-A (LH)♦D7OZ 6503137-A	1
03144	Moulding (windshield outside top)		♦D7OZ 6503144-A	1

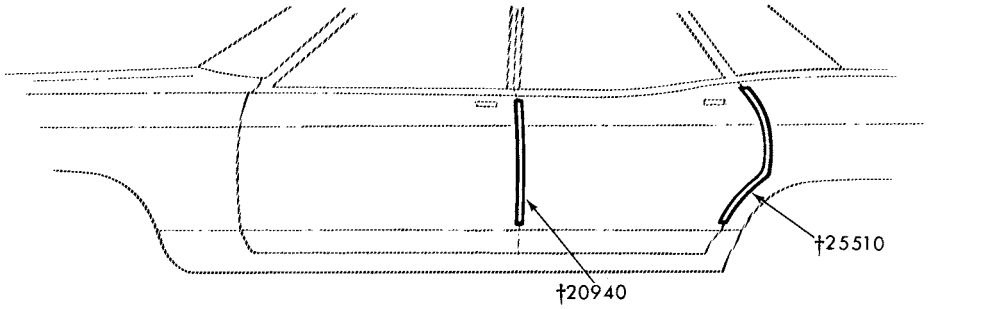

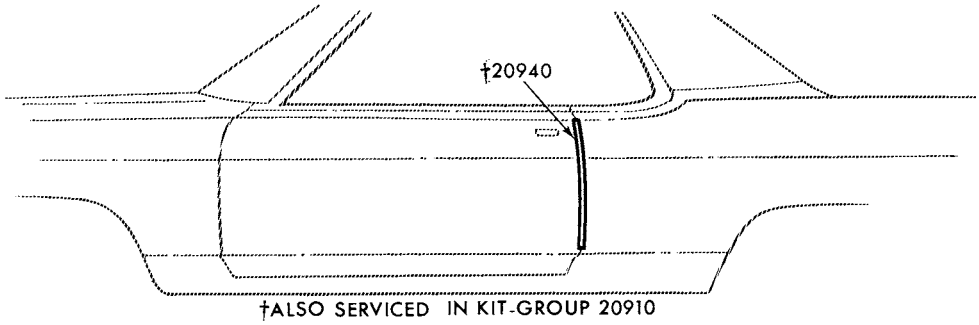

†ALSO SERVICED IN KIT-GROUP 20910

P-10061

1976 COUGAR - DOOR EDGE GUARDS

GROUP NUMBER	PART NAME	DESCRIPTION	PART NUMBER	QTY.
20910	Moulding kit (door edge guard)		D4GY 6520910-A	1
20940-1	Moulding (front door edge guard)		(RH) D4GY 6520940-A (LH) D4GY 6520941-A	1

♦ Includes attaching parts

COPYRIGHT © 1986 — FORD MOTOR COMPANY — DEARBORN, MICHIGAN

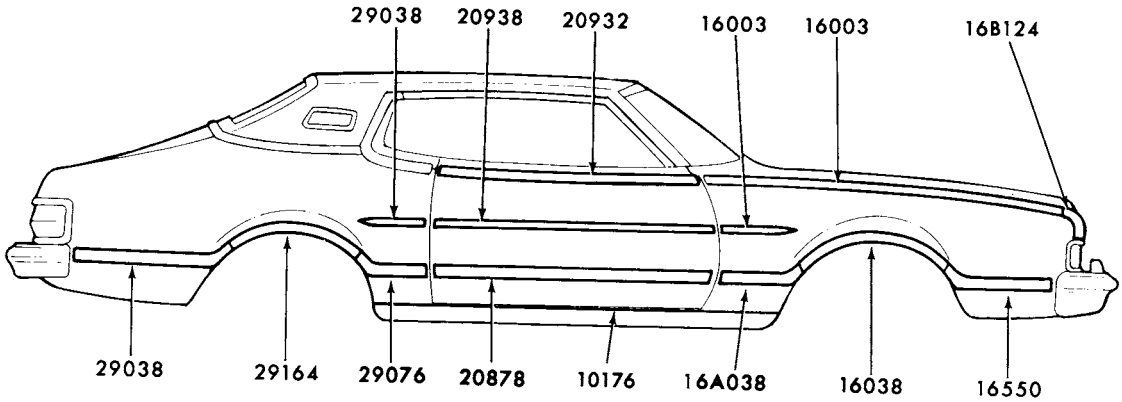

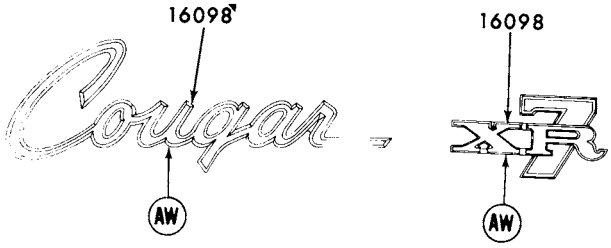

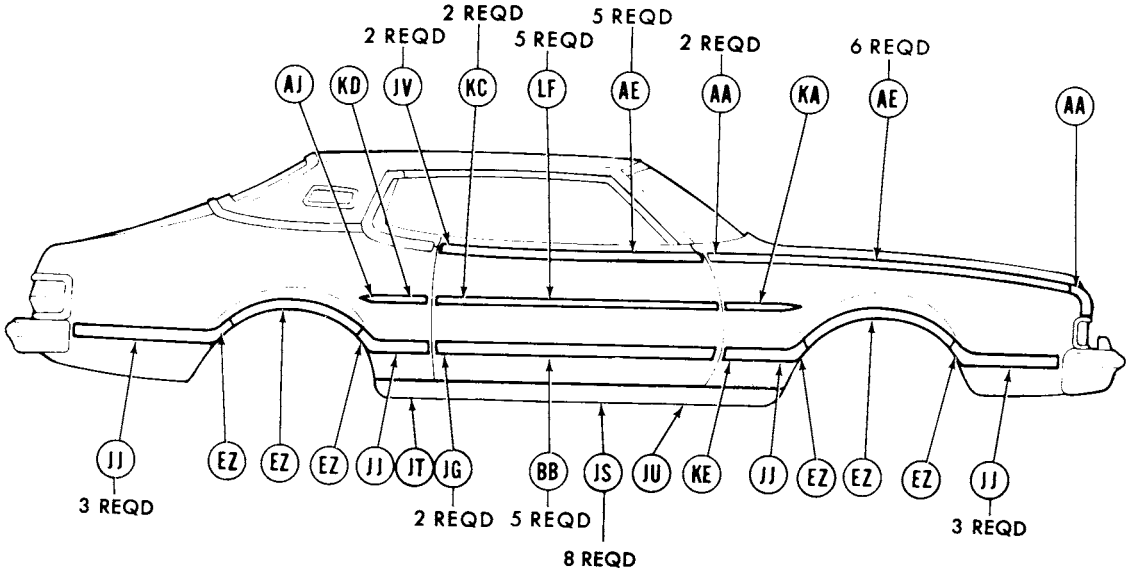

REFER TO EXTERIOR MOULDING SECTION "R" FOR COMPLETE RETAINER INFORMATION

P-11195

1976 COUGAR - SIDE

1976 COUGAR - SIDE - cont'd.

GROUP NUMBER	PART NAME	DESCRIPTION	PART NUMBER		QTY.
10176	Moulding (body rocker panel)		♦D6WY 6510176-A	R.H.and L.H.	2
16003	Moulding (front fender side)	Bright finish	♦D4GY 16003-A	R.H. and L.H.	2
16003-4	Moulding (front fender upper)		(RH)♦D2GY 16003-B	(LH)♦D2GY 16004-B	1
16038-9	Moulding (front fender wheel opening)		(RH)♦D4GY 16038-A	(LH)♦D4GY 16039-A	1
16A038-9	Moulding (front fender side rear)	Incl. vinyl insert			
		◊Aqua	(RH)★D6WY 16A038-AK Not replaced (2/81)	(LH)♦D6WY 16A039-AK	1
		◊Black	(RH)♦D4WY 16A038-AA	(LH)♦D4WY 16A039-AA	1
		◊Blue	(RH)★D6WY 16A038-AB Not replaced (4/84)	(LH)♦D6WY 16A039-AB	1
		◊Cream	(RH)★D6WY 16A038-AV Not replaced (4/84)	(LH)★D6WY 16A039-AV Not replaced (4/84)	1
		◊Gold	(RH)★D6WY 16A038-AY Not replaced (4/84)	(LH)★D6WY 16A039-AY Not replaced (4/84)	1
		◊Green	(RH)★D5WY 16A038-AG	(LH)★D5WY 16A039-AG Not replaced (2/81)	1
		◊Jade	(RH)♦D6WY 16A038-AR	(LH)♦D6WY 16A039-AR	1
		◊Red	(RH)★D6WY 16A038-AD Not replaced (4/84)	(LH)★D6WY 16A039-AD Not replaced (4/84)	1
		◊Silver gray	(RH)★D4WY 16A038-AP	(LH)★D4WY 16A039-AP	1
		◊Tan	(RH)★D6WY 16A038-AU Not replaced (4/84)	(LH)★D6WY 16A039-AU Not replaced (4/84)	1
		◊White	(RH)♦D4WY 16A038-AW	(LH)♦D4WY 16A039-AW	1
16098	Plate (name)	"Cougar"	♦D4WY 16098-A	R.H. and L.H.	2
		"XR7"	♦D4WY 16098-B	R.H. and L.H.	2
16B124-5	Moulding (front fender front extension)		(RH)♦D4WY 16B124-A	(LH)♦D4WY 16B125-A	1
16550-1	Moulding (front fender lower front)	Incl. vinyl insert			
		◊Aqua	(RH)★D6WY 16550-AK Not replaced (2/81)	(LH)★D6WY 16551-AK Not replaced (2/81)	1
		◊Black	(RH)★D4GY 16550-AA	(LH)★D4GY 16551-AA	1
		◊Blue	(RH)★D4GY 16550-AB Not replaced (4/84)	(LH)★D4GY 16551-AB	1
		◊Cream	(RH)★D6WY 16550-AV Not replaced (4/84)	(LH)★D6WY 16551-AV Not replaced (4/84)	1
		◊Gold	(RH)★D6WY 16550-AY	(LH)★D6WY 16551-AY Not replaced (4/84)	1
		◊Green	(RH)★D5GY 16550-AG Not replaced (4/84)	(LH)★D5GY 16551-AG	1
		◊Jade	(RH)★D6WY 16550-AR Not replaced (4/84)	(LH)★D6WY 16551-AR	1
		◊Red	(RH)★D6WY 16550-AD Not replaced (4/84)	(LH)★D6WY 16551-AD	1
		◊Silver gray	(RH)★D4WY 16550-AP	(LH)★D4WY 16551-AP	1
		◊Tan	(RH)★D6WY 16550-AU Not replaced (4/84)	(LH)★D6WY 16551-AU Not replaced (4/84)	1
		◊White	(RH)♦D4GY 16550-AW	(LH)♦D4GY 16551-AW	1
20878-9	Moulding (front door outside)	Incl. vinyl insert			
		◊Aqua	(RH)♦D6WY 6520878-AK	(LH)♦D6WY 6520879-AK	1
		◊Black	(RH)♦D4GY 6520878-E	(LH)♦D4GY 6520879-E	1
		◊Blue	(RH)★D4GY 6520878-F	(LH)★D4GY 6520879-F Not replaced (4/84)	1
		◊Cream	(RH)★D6WY 6520878-AV Not replaced(4/84)	(LH)★D6WY 6520879-AV	1
		◊Gold	(RH)★D6WY 6520878-AY Not replaced (4/84)	(LH)★D6WY 6520879-AY	1
		◊Green	(RH)★D5GY 6520878-A Not replaced (2/81)	(LH)★D5GY 6520879-A Not replaced (3/82)	1

◊ For color verification, refer to the vinyl roof swatches in the 1976 salesman's color and upholstery selections guide.
♦ Includes attaching parts

COPYRIGHT © 1986 — FORD MOTOR COMPANY — DEARBORN, MICHIGAN

1976 COUGAR - SIDE - cont'd.

GROUP NUMBER	PART NAME	DESCRIPTION	PART NUMBER		QTY.
20878-9	Moulding (front door outside)	◊ Jade	(RH)♦D6WY 6520878-AR	(LH)♦D6WY 6520879-AR	1
		◊ Red	(RH)✶D6WY 6520878-AD	(LH)★D6WY 6520879-AD Not replaced (4/84)	1
		◊ Silver gray	(RH)★D4WY 6520878-CP	(LH)✶D4WY 6520879-CP	1
		◊ Tan	(RH)★D6WY 6520878-AU	(LH)★D6WY 6520879-AU Not replaced (4/84)	1
		◊ White	(RH)♦D4GY 6520878-A	(LH)♦D4GY 6520879-A	1
20932-3	Moulding (front door outside upper)		(RH)♦D4GY 6520932-A	(LH)♦D4GY 6520933-A	1
20938	Moulding (front door outside)	Bright finish	♦D4GY 6520938-A	R.H. and L.H.	2
29038	Moulding (quarter outside lower front)	Bright finish	♦D4GY 16003-A	R.H. and L.H.	2
29038-9	Moulding (quarter outside lower rear)	Incl. vinyl insert			
		◊ Aqua	(RH)★D6WY 6529038-AK Not replaced (2/80)	(LH)★D6WY 6529039-AK Not replaced (2/80)	1
		◊ Black	(RH)♦D4GY 6529038-AA	(LH)♦D4GY 6529039-AA	1
		◊ Blue	(RH)★D4GY 6529038-AB Not replaced (4/84)	(LH)✶D4GY 6529039-AB	1
		◊ Cream	(RH)★D6WY 6529038-AV Not replaced (4/84)	(LH)★D6WY 6529039-AV Not replaced (4/84)	1
		◊ Gold	(RH)✶D6WY 6529038-AY Not replaced (4/84)	(LH)✶D6WY 6529039-AY	1
		◊ Green	(RH)✶D5GY 6529038-AG Not replaced (4/83)	(LH)✶D5GY 6529039-AG	1
		◊ Jade	(RH)✶D6WY 6529038-AR Not replaced (2/80)	(LH)★D6WY 6529039-AR Not replaced (2/80)	1
		◊ Red	(RH)✶D6WY 6529038-AD	(LH)★D6WY 6529039-AD	1
		◊ Silver gray	(RH) D4WY 6529038-BP	(LH) D4WY 6529039-BP	1
		◊ Tan	(RH)✶D6WY 6529038-AU Not replaced (4/84)	(LH)✶D6WY 6529039-AU	1
		◊ White	(RH)♦D4GY 6529038-AW	(LH)♦D4GY 6529039-AW	1
29076-7	Moulding (quarter outside lower front)	Incl. vinyl insert			
		◊ Aqua	(RH)♦D6WY 6529076-AK	(LH)♦D6WY 6529077-AK	1
		◊ Black	(RH)♦D4GY 6529076-AA	(LH)♦D4GY 6529077-AA	1
		◊ Blue	(RH)♦D4GY 6529076-AB	(LH)★D4GY 6529077-AB	1
		◊ Cream	(RH)✶D6WY 6529076-AV	(LH)★D6WY 6529077-AV Not replaced (4/83)	1
		◊ Gold	(RH)✶D6WY 6529076-AY Not replaced (4/84)	(LH)★D6WY 6529077-AY Not replaced (4/84)	1
		◊ Green	(RH)★D5GY 6529076-AG Not replaced (2/81)	(LH)★D5GY 6529077-AG Not replaced (2/81)	1
		◊ Jade	(RH)♦D6WY 6529076-AR	(LH)♦D6WY 6529077-AR	1
		◊ Red	(RH)♦D6WY 6529076-AD	(LH)♦D6WY 6529077-AD	1
		◊ Silver gray	(RH)♦D4WY 6529076-BP	(LH)♦D4WY 6529077-BP	1
		◊ Tan	(RH)★D6WY 6529076-AU Not replaced (4/84)	(LH)★D6WY 6529077-AU Not replaced (4/83)	1
		◊ White	(RH)♦D4GY 6529076-AW	(LH)♦D4GY 6529077-AW	1
29164-5	Moulding (quarter wheel opening)		(RH)♦D4GY 6529164-A	(LH)♦D4GY 6529165-A	1
42528	Plate (name)	"Mercury"	♦D4GY 6542528-A		1

◊ For color verification, refer to the vinyl roof swatches in the 1976 salesman's color and upholstery selections guide.
♦ Includes attaching parts

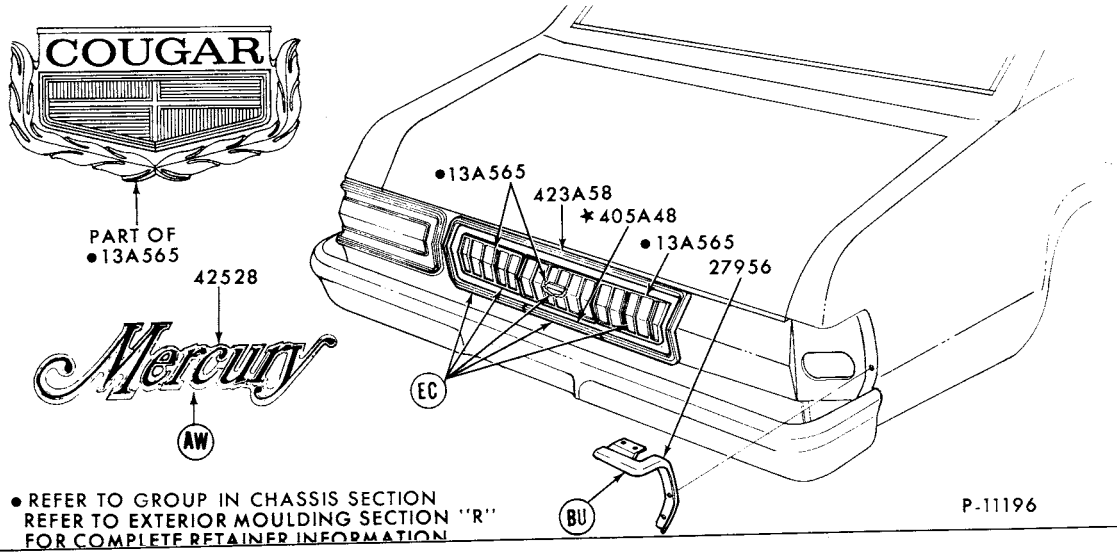

• REFER TO GROUP IN CHASSIS SECTION
REFER TO EXTERIOR MOULDING SECTION "R"
FOR COMPLETE RETAINER INFORMATION

1976 COUGAR - BACK END

GROUP NUMBER	PART NAME	DESCRIPTION	PART NUMBER	QTY.
27956-7	Filler (quarter panel rear lamp opening)		Not used in 1975	
405A48	Moulding (fuel filler door)		★D4WY 65405A48-A Not replaced (4/83)	1
423A58	Moulding (lower back panel)		♦D4WY 65423A58-A	1
42528	Plate (name)	"Mercury"	♦D4GY 6542528-A	1

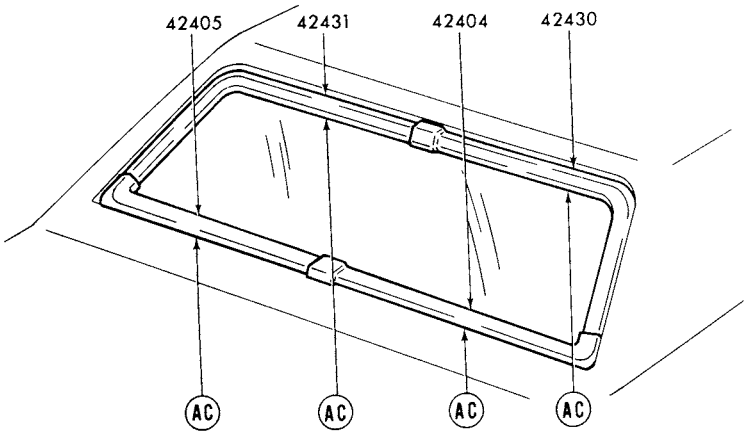

REFER TO EXTERIOR MOULDING SECTION "R" FOR COMPLETE RETAINER INFORMATION

P-12457

1976 COUGAR - BACK WINDOW

GROUP NUMBER	PART NAME	DESCRIPTION	PART NUMBER		QTY.
42404-5	Moulding (back window outside lower)		(RH)♦D4OZ 6542404-A	(LH)♦D4OZ 6542405-A	1
42430-1	Moulding (back window outside upper)		(RH)♦D4OZ 6542430-A	(LH)♦D4OZ 6542431-A	1

COPYRIGHT © 1986 — FORD MOTOR COMPANY — DEARBORN, MICHIGAN

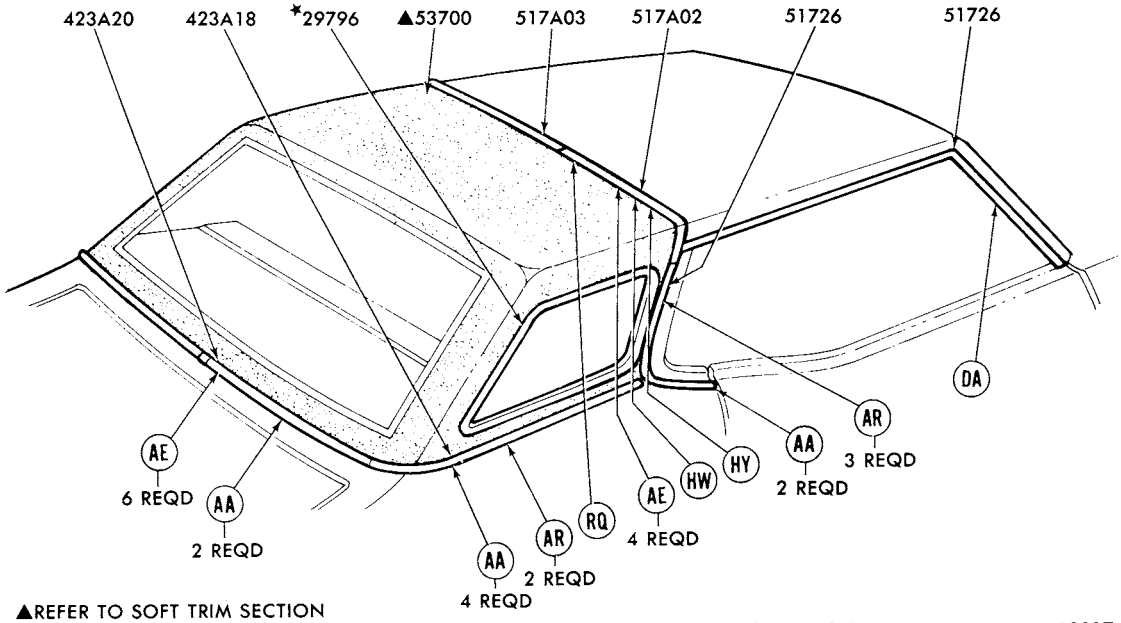

▲REFER TO SOFT TRIM SECTION
REFER TO EXTERIOR MOULDING SECTION "R" FOR COMPLETE RETAINER INFORMATION

P-12817

1976 COUGAR - ROOF and BACK BELT

GROUP NUMBER	PART NAME	DESCRIPTION	PART NUMBER		QTY.
29796-7	Moulding (opera window outside)		(RH)★D4WY 6529796-B Not replaced (4/83)	(LH)★D4WY 6529797-B	1
423A18-9	Moulding (back belt outside side)		(RH)♦D4GY 65423A18-A	(LH)♦D4GY 65423A19-A	1
423A20	Moulding (back belt outside)		♦D4OZ 65423A20-H	R.H.	1
517A02-3	Moulding (roof outside side)		(RH)♦D4WY 65517A02-A	(LH)♦D4WY 65517A03-A	1
51726-9	Moulding (roof drip side finish)	Front	(RH)♦D4WY 6551726-A	(LH)♦D4WY 6551727-A	1
		Rear	(RH)♦D3GY 6551728-A	(LH)♦D3GY 6551729-A	1

♦ Includes attaching parts

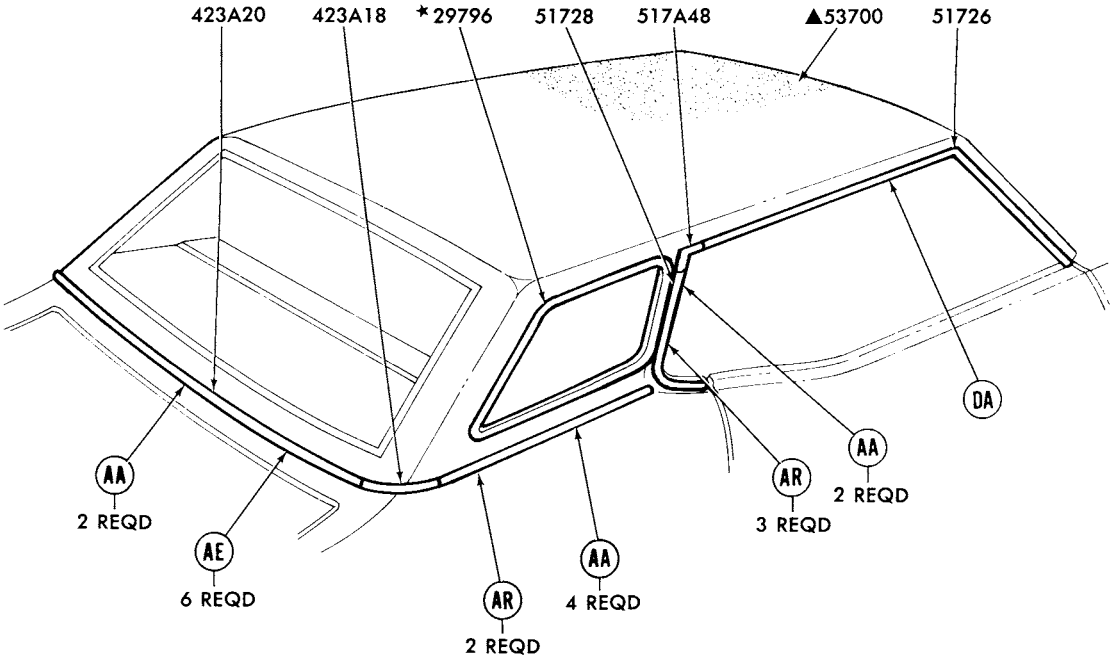

REFER TO EXTERIOR MOULDING SECTION "R" FOR COMPLETE RETAINER INFORMATION
▲REFER TO SOFT TRIM SECTION

P-12816

1976 COUGAR - ROOF and BACK BELT - w/ FULL VINYL ROOF

GROUP NUMBER	PART NAME	DESCRIPTION	PART NUMBER		QTY.
29796-7	Moulding (opera window outside)		(RH)*D4WY 6529796-B Not replaced (4/83)	(LH)*D4WY 6529797-B	1
423A18-9	Moulding (back belt outside side)		(RH)♦D4GY 65423A18-A	(LH)♦D4GY 65423A19-A	1
423A20	Moulding (back belt outside)		♦D4OZ 65423A20-H		1
51726-9	Moulding (roof drip side finish)	Front	(RH)♦D2GY 6551726-C	(LH)♦D2GY 6551727-C	1
		Rear	(RH)♦D3GY 6551728-A	(LH)♦D3GY 6551729-A	1
517A48-9	Moulding (roof drip side rear corner finish)		(RH) D2GY 65517A48-A	(LH) D2GY 65517A49-A	1

♦ Includes attaching parts

COPYRIGHT © 1986 — FORD MOTOR COMPANY — DEARBORN, MICHIGAN

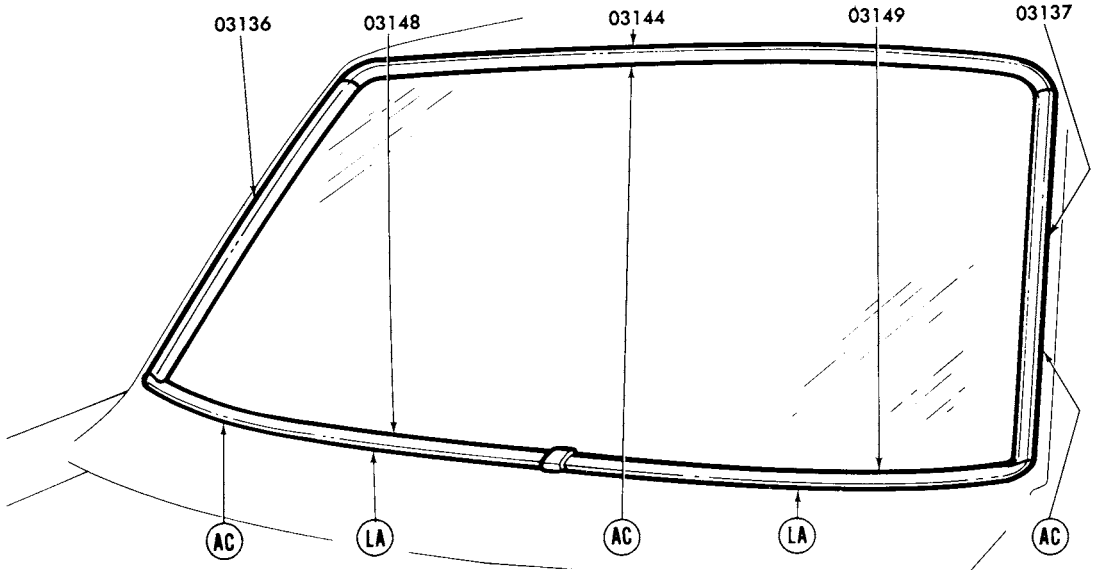

REFER TO EXTERIOR MOULDING SECTION 'R' FOR COMPLETE RETAINER INFORMATION P-12526

1976 MONARCH - WINDSHIELD

GROUP NUMBER	PART NAME	DESCRIPTION	PART NUMBER	QTY.
03136-7	Moulding (windshield outside side)		(RH)♦D5DZ 6603136-A (LH)♦D5DZ 6603137-A	1
03144	Moulding (windshield outside top)		♦D5DZ 6603144-A	1
03148-9	Moulding (windshield outside belt)		(RH)♦D5DZ 6603148-A (LH)♦D5DZ 6603149-A	1

♦ Includes attaching parts

COPYRIGHT © 1986 — FORD MOTOR COMPANY — DEARBORN, MICHIGAN

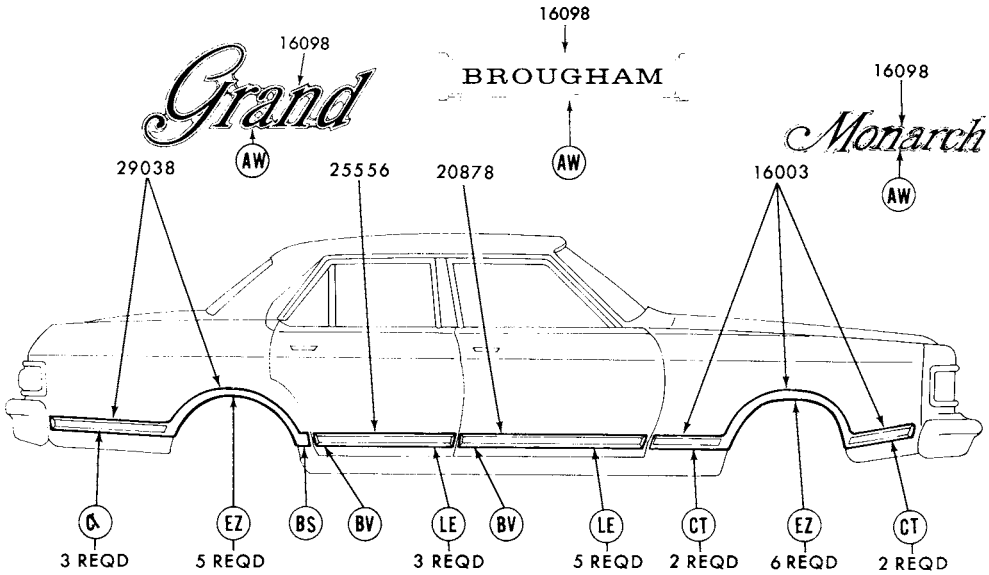

REFER TO EXTERIOR MOULDING SECTION "R" FOR COMPLETE RETAINER INFORMATION P-11945

1976 MONARCH - BODY TYPE 54K - SIDE - w/LUXURY DECOR

GROUP NUMBER	PART NAME	DESCRIPTION	PART NUMBER		QTY.
16003-4	Moulding (front fender side)	Incl. vinyl insert			
		◊ Black	(RH)♠D5DZ 16003-CA	(LH)♠D5DZ 16004-CA	1
		◊ Blue	(RH)♠D5DZ 16003-CB	(LH)♠D5DZ 16004-CB	1
		◊ Brown	(RH)★D5DZ 16003-CT	(LH)♠D5DZ 16004-CT	1
		◊ Gray	(RH)♠D6DZ 16003-AP	(LH)♠D6DZ 16004-AP	1
		◊ Green	(RH)★D5DZ 16003-CG	(LH)♠D5DZ 16004-CG	1
		◊ Jade	(RH)♠D6DZ 16003-AR	(LH)♠D6DZ 16004-AR	1
		◊ Red	(RH)♠D5DZ 16003-CD	(LH)♠D5DZ 16004-CD	1
		◊ Silver	(RH)♠D5DZ 16003-CP	(LH)♠D5DZ 16004-CP	1
		◊ Tan	(RH)♠D5DZ 16003-CU	(LH)♠D5DZ 16004-CU	1
		◊ White	(RH)♠D5DZ 16003-CW	(LH)♠D5DZ 16004-CW	1
16098	Plate (name)	"Brougham"	D5MY 16098-A	R.H. and L.H.	2
		"Grand"	♠D5MY 16098-C	R.H. and L.H.	2
		"Monarch"	♠D54Y 16098-B	R.H. and L.H.	2
20878-9	Moulding (front door outside)	Incl. vinyl insert			
		◊ Black	(RH)♠D5DZ 5420878-CA	(LH)♠D5DZ 5420879-CA	1
		◊ Blue	(RH)♠D5DZ 5420878-CB	(LH)♠D5DZ 5420879-CB	1
		◊ Brown	(RH)♠D5DZ 5420878-CT	(LH)♠D5DZ 5420879-CT	1
		◊ Gray	(RH)♠D6DZ 5420878-AP	(LH)♠D6DZ 5420879-AP	1
		◊ Green	(RH)★D5DZ 5420878-CG Not replaced (6/83)	(LH)♠D5DZ 5420879-CG	1
		◊ Jade	(RH)♠D6DZ 5420878-AR	(LH)♠D6DZ 5420879-AR	
		◊ Red	(RH)♠D5DZ 5420878-CD	(LH)♠D5DZ 5420879-CD	1
		◊ Silver	(RH)♠D5DZ 5420878-DP	(LH)♠D5DZ 5420879-DP	1
		◊ Tan	(RH)♠D5DZ 5420878-DU	(LH)♠D5DZ 5420879-DU	1
		◊ White	(RH)♠D5DZ 5420878-CW	(LH)♠D5DZ 5420879-CW	1
25556-7	Moulding (rear door outside)	Incl. vinyl insert			
		◊ Black	(RH)♠D5DZ 5425556-CA	(LH)♠D5DZ 5425557-CA	1
		◊ Blue	(RH)♠D5DZ 5425556-CB	(LH)♠D5DZ 5425557-CB	1
		◊ Brown	(RH)♠D5DZ 5425556-CT	(LH)♠D5DZ 5425557-CT	1
		◊ Gray	(RH)♠D6DZ 5425556-AP	(LH)♠D6DZ 5425557-AP	1
		◊ Green	(RH)★D5DZ 5425556-CG Not replaced (6/83)	(LH)★D5DZ 5425557-CG Not replaced (6/83)	1
		◊ Jade	(RH)♠D6DZ 5425556-AR	(LH)♠D6DZ 5425557-AR	1
		◊ Red	(RH)♠D5DZ 5425556-CD	(LH)♠D5DZ 5425557-CD	1
		◊ Silver	(RH)♠D5DZ 5425556-CP	(LH)♠D5DZ 5425557-CP	1
		◊ Tan	(RH)♠D5DZ 5425556-CU	(LH)♠D5DZ 5425557-CU	1
		◊ White	(RH)♠D5DZ 5425556-CW	(LH) D5DZ 5425557-CW	1

◊ For color verification, refer to the vinyl roof swatches in the 1976 salesman's color and upholstery selections guide.

♠ Includes attaching parts

1976 MONARCH - BODY TYPE 54K - SIDE - w/LUXURY DECOR - cont'd.

GROUP NUMBER	PART NAME	DESCRIPTION	PART NUMBER		QTY.
29038-9	Moulding (quarter outside)	Incl. vinyl insert			
		◊ Black	(RH)♦D5DZ 5429038-CA	(LH)♦D5DZ 5429039-CA	1
		◊ Blue	(RH)♦D5DZ 5429038-CB	(LH)♦D5DZ 5429039-CB	1
		◊ Brown	(RH)♦D5DZ 5429038-CT	(LH)♦D5DZ 5429039-CT	1
		◊ Gray	(RH)♦D6DZ 5429038-AP	(LH)♦D6DZ 5429039-AP	1
		◊ Green	(RH)♦D5DZ 5429038-CG	(LH)♦D5DZ 5429039-CG	1
		◊ Jade	(RH)♦D6DZ 5429038-AR	(LH)♦D6DZ 5429039-AR	1
		◊ Red	(RH)♦D5DZ 5429038-CD	(LH)♦D5DZ 5429039-CD	1
		◊ Silver	(RH)♦D5DZ 5429038-CP	(LH)♦D5DZ 5429039-CP	1
		◊ Tan	(RH)♦D5DZ 5429038-CU	(LH)♦D5DZ 5429039-CU	1
		◊ White	(RH)♦D5DZ 5429038-CW	(LH)♦D5DZ 5429039-CW	1

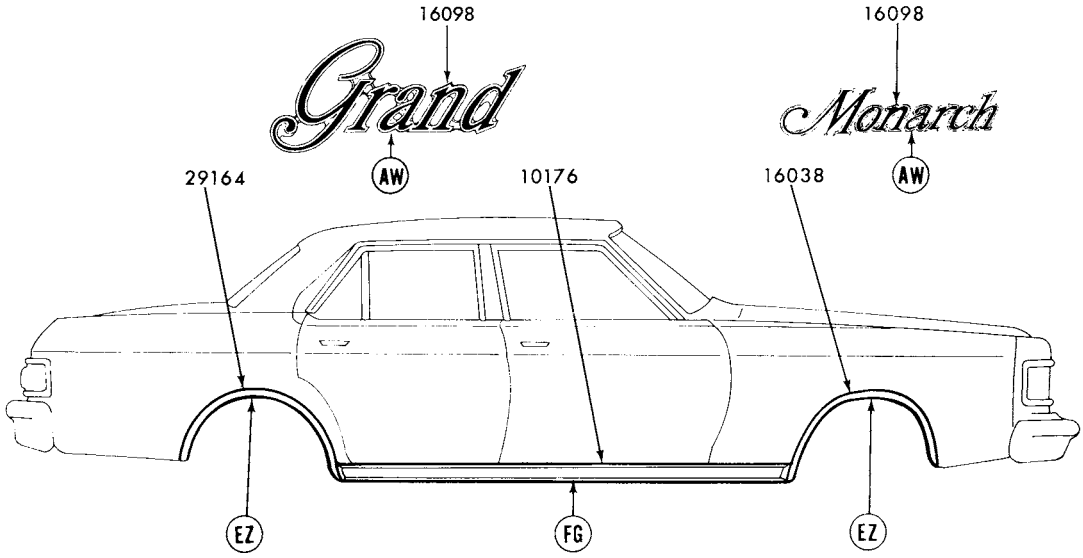

REFER TO EXTERIOR MOULDING SECTION "R" FOR COMPLETE RETAINER INFORMATION P-11946

1976 MONARCH - SIDE

GROUP NUMBER	PART NAME	DESCRIPTION	PART NUMBER		QTY.
10176	Moulding (body rocker panel)	W/wheel opening mouldings - 78 3/4" long	♦D54Y 6610176-A	R.H. and L.H.	2
		W/o wheel opening mouldings - 78 3/4" long	(RH)♦D6DZ 6610176-A	(LH)♦D6DZ 6610177-A	1
16038-9	Moulding (front fender wheel opening)		(RH)♦D5DZ 16038-A	(LH)♦D5DZ 16039-A	1
16098	Plate (name)	"Grand"	♦D5MY 16098-C	R.H. and L.H.	2
		"Monarch"	♦D54Y 16098-B	R.H. and L.H.	2
29164-5	Moulding (quarter wheel opening)		(RH)♦D5DZ 6629164-A	(LH)♦D5DZ 6629165-A	1

◊ For color verification, refer to the vinyl roof swatches in the 1976 salesman's color and upholstery selections guide.
♦ Includes attaching parts

COPYRIGHT © 1986 — FORD MOTOR COMPANY — DEARBORN, MICHIGAN

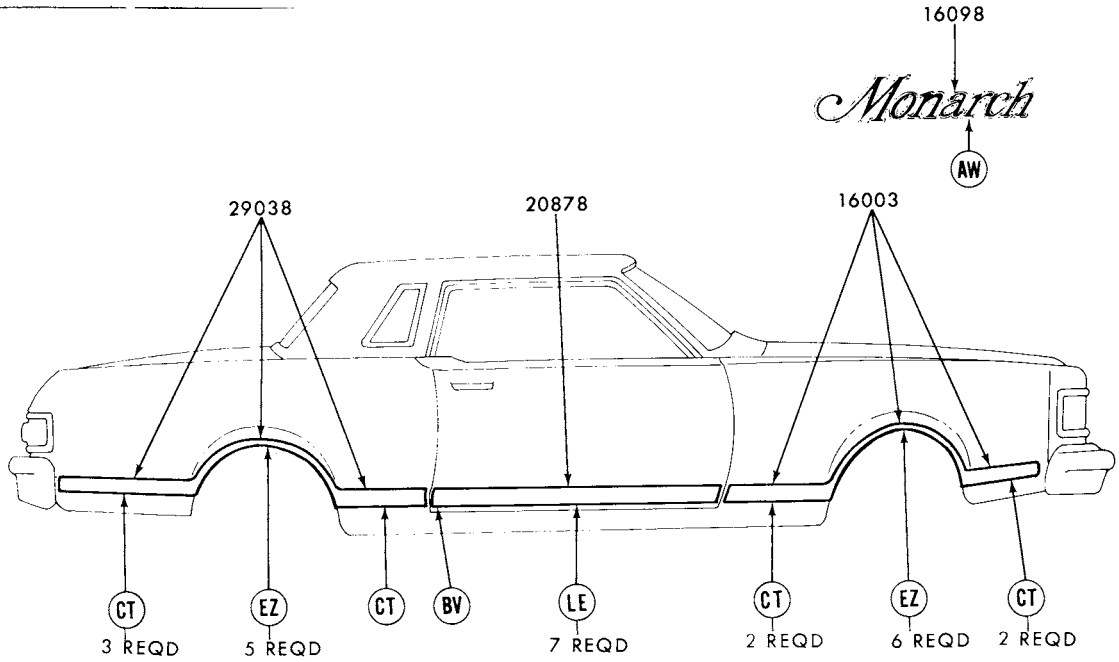

REFER TO EXTERIOR MOULDING SECTION "R" FOR COMPLETE RETAINER INFORMATION P-11944

1976 MONARCH - BODY TYPE 66K - SIDE - w/LUXURY DECOR

GROUP NUMBER	PART NAME	DESCRIPTION	PART NUMBER		QTY.
16003-4	Moulding (front fender side)	Incl. vinyl insert			
		◊ Black	(RH)♦D5DZ 16003-CA	(LH)♦D5DZ 16004-CA	1
		◊ Blue	(RH)♦D5DZ 16003-CB	(LH)♦D5DZ 16004-CB	1
		◊ Brown	(RH)★D5DZ 16003-CT	(LH)♦D5DZ 16004-CT	1
		◊ Gray	(RH)♦D6DZ 16003-AP	(LH)♦D6DZ 16004-AP	1
		◊ Green	(RH)♦D5DZ 16003-CG	(LH)♦D5DZ 16004-CG	1
		◊ Jade	(RH)♦D6DZ 16003-AR	(LH)♦D6DZ 16004-AR	1
		◊ Red	(RH)♦D5DZ 16003-CD	(LH)♦D5DZ 16004-CD	1
		◊ Silver	(RH)♦D5DZ 16003-CP	(LH)♦D5DZ 16004-CP	1
		◊ Tan	(RH)♦D5DZ 16003-CU	(LH)♦D5DZ 16004-CU	1
		◊ White	(RH)♦D5DZ 16003-CW	(LH)♦D5DZ 16004-CW	1
16098	Plate (name)	"Monarch"	♦D54Y 16098-B	R.H. and L.H.	2
20878-9	Moulding (front door outside)	Incl. vinyl insert			
		◊ Black	(RH)♦D5DZ 6620878-AA	(LH)♦D5DZ 6620879-AA	1
		◊ Blue	(RH)♦D5DZ 6620878-AB	(LH)♦D5DZ 6620879-AB	1
		◊ Brown	(RH)★D5DZ 6620878-AT Not replaced (6/83)	(LH)★D5DZ 6620879-AT Not replaced (6/83)	1
		◊ Jade	(RH)♦D6DZ 6620878-AR	(LH)♦D6DZ 6620879-AR	1
		◊ Red	(RH)♦D5DZ 6620878-AD	(LH)♦D5DZ 6620879-AD	1
		◊ Silver	(RH)♦D5DZ 6620878-AP	(LH)♦D5DZ 6620879-AP	1
		◊ Tan	(RH)♦D5DZ 6620878-AU	(LH)♦D5DZ 6620879-AU	1
		◊ White	(RH)♦D5DZ 6620878-AW	(LH)♦D5DZ 6620879-AW	1
29038-9	Moulding (quarter outside)	Incl. vinyl insert			
		◊ Black	(RH)♦D5DZ 6629038-CA	(LH)♦D5DZ 6629039-CA	1
		◊ Blue	(RH)♦D5DZ 6629038-CB	(LH)♦D5DZ 6629039-CB	1
		◊ Brown	(RH)♦D5DZ 6629038-CT	(LH)♦D5DZ 6629039-CT	1
		◊ Gray	(RH)♦D6DZ 6629038-AP	(LH)♦D6DZ 6629039-AP	1
		◊ Green	(RH)♦D5DZ 6629038-CG	(LH)♦D5DZ 6629039-CG	1
		◊ Jade	(RH)♦D6DZ 6629038-AR	(LH)♦D6DZ 6629039-AR	1
		◊ Red	(RH)♦D5DZ 6629038-CD	(LH)♦D5DZ 6629039-CD	1
		◊ Silver	(RH)♦D5DZ 6629038-CP	(LH)♦D5DZ 6629039-CP	1
		◊ Tan	(RH)♦D5DZ 6629038-CU	(LH)♦D5DZ 6629039-CU	1
		◊ White	(RH)♦D5DZ 6629038-CW	(LH)♦D5DZ 6629039-CW	1

◊ For color verification, refer to the vinyl roof swatches in the 1976 salesman's color and upholstery selections guide.

♦ Includes attaching parts

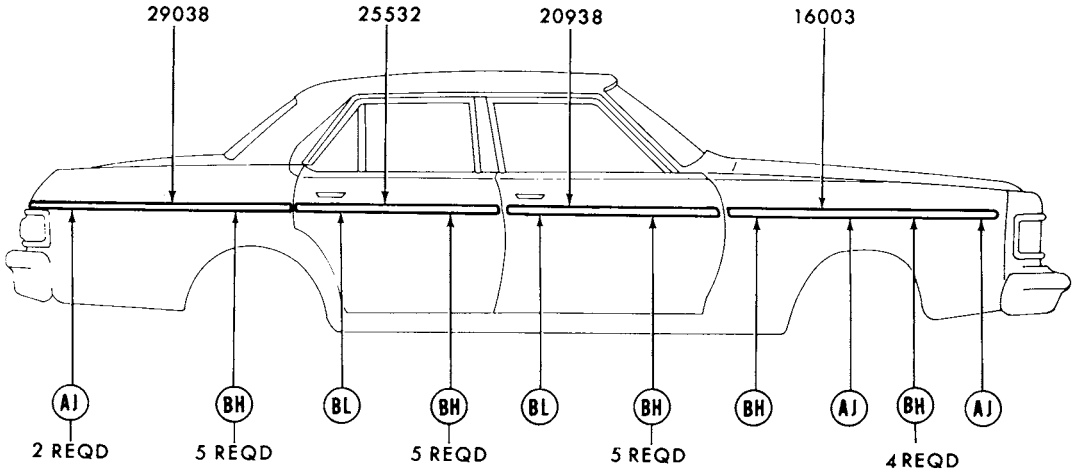

REFER TO EXTERIOR MOULDING SECTION "R" FOR COMPLETE RETAINER INFORMATION P-11948

1976 MONARCH - BODY TYPE 54 - SIDE PROTECTION

GROUP NUMBER	PART NAME	DESCRIPTION	PART NUMBER		QTY.
16003-4	Moulding (front fender side)	Bright finish	(RH)♦D5DZ 16003-A	(LH)♦D5DZ 16004-A	
20938-9	Moulding (front door outside)	Bright finish	(RH)♦D5DZ 5420938-A	(LH)♦D5DZ 5420939-A	1
25532-3	Moulding (rear door outside)	Bright finish	(RH)♦D5DZ 5425532-A	(LH)♦D5DZ 5425533-A	1
29038-9	Moulding (quarter outside)	Bright finish	(RH)♦D5DZ 5429038-A	(LH)♦D5DZ 5429039-A	1

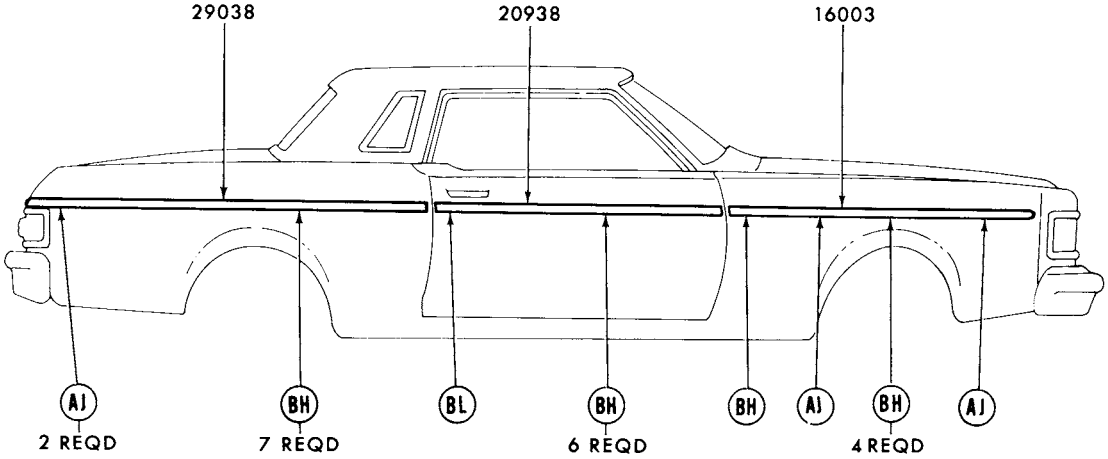

REFER TO EXTERIOR MOULDING SECTION "R" FOR COMPLETE RETAINER INFORMATION P-11941

1976 MONARCH - BODY TYPE 66 - SIDE PROTECTION

GROUP NUMBER	PART NAME	DESCRIPTION	PART NUMBER		QTY.
16003-4	Moulding (front fender side)	Bright finish	(RH)♦D5DZ 16003-A	(LH)♦D5DZ 16004-A	1
20938-9	Moulding (front door outside)	Bright finish	(RH)♦D5DZ 6620938-A	(LH)♦D5DZ 6620939-A	1
29038-9	Moulding (quarter outside)	Bright finish	(RH)♦D5DZ 6629038-A	(LH)♦D5DZ 6629039-A	1

♦ Includes attaching parts

COPYRIGHT © 1986 — FORD MOTOR COMPANY — DEARBORN, MICHIGAN

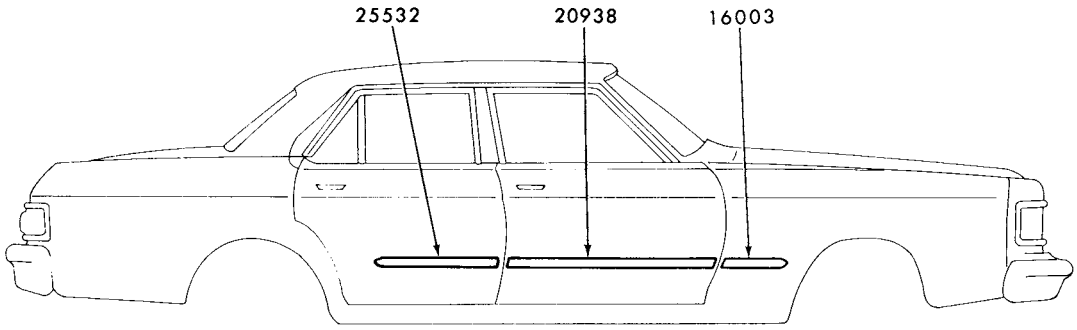

P-11943

1976 MONARCH - BODY TYPE 54 - SIDE PROTECTION

GROUP NUMBER	PART NAME	DESCRIPTION	PART NUMBER		QTY.
16003-4	Moulding (front fender side)	Black vinyl insert-adhesive backed-cut to fit	D5DZ 5425532-D	R.H. and L.H.	2
20938	Moulding (front door outside)	Black vinyl insert-adhesive backed-cut to fit	D1OZ 6529038-B	R.H. and L.H.	2
25532-3	Moulding (rear door outside)	Black vinyl insert-adhesive backed	D5DZ 5425532-D	R.H. and L.H.	2

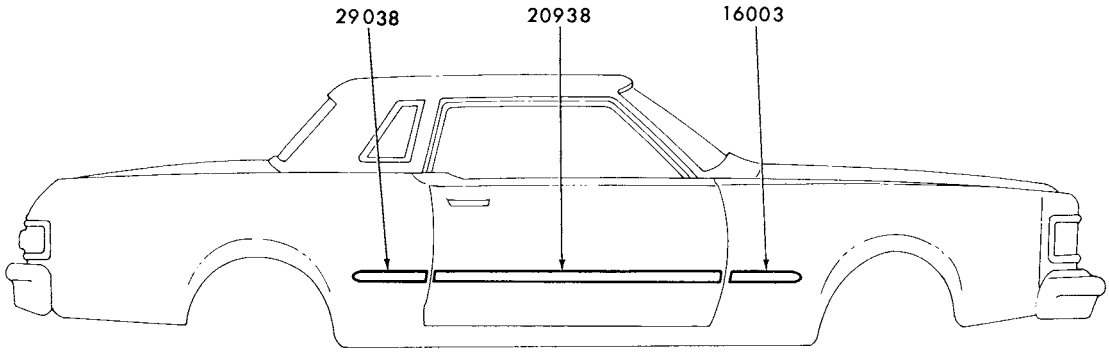

P-11942

1976 MONARCH - BODY TYPE 66 - SIDE PROTECTION

GROUP NUMBER	PART NAME	DESCRIPTION	PART NUMBER		QTY.
16003-4	Moulding (front fender side)	Black vinyl insert-adhesive backed-cut to fit	D5DZ 5425532-D	R.H. and L.H.	2
20938	Moulding (front door outside)	Black vinyl insert-adhesive backed	D1OZ 6529038-B	R.H. and L.H.	2
29038	Moulding (quarter outside)	Black vinyl insert-adhesive backed-cut to fit	D5DZ 5425532-D	R.H. and L.H.	2

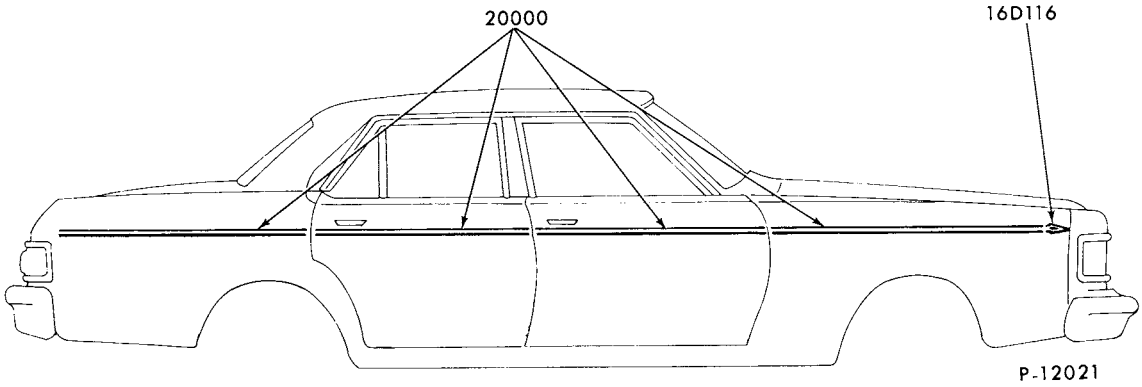

1976 MONARCH - STRIPES

GROUP NUMBER	PART NAME	DESCRIPTION	PART NUMBER		QTY.
16D116-7	Transfer (front fender)	Black arrowhead	(RH)★D5DZ 16D116-A Not replaced (7/81)	(LH)★D5DZ 16D117-A Not replaced (7/81)	1
		Blue arrowhead	(RH)★D5DZ 16D116-B	(LH)★D5DZ 16D117-B	1
		Brown arrowhead	(RH) D5DZ 16D116-C	(LH)★D5DZ 16D117-C Not replaced (6/82)	1
		Gold arrowhead	(RH)★D5DZ 16D116-D	(LH) D5DZ 16D117-D	1
		Green arrowhead	(RH) D6DZ 16D116-A	(LH) D6DZ 16D117-A	1
		Red (bright) arrowhead	(RH) D6DZ 16D116-AD	(LH) D6DZ 16D117-AD	1
		Red (medium) arrowhead	(RH)★D5DZ 16D116-F	(LH) D5DZ 16D117-F	1
		Silver arrowhead	(RH)★D5DZ 16D116-G	(LH)★D5DZ 16D117-G	1
		Tan arrowhead	(RH)★D5DZ 16D116-H	(LH)★D5DZ 16D117-H	1
		White arrowhead	(RH)★D5DZ 16D116-J	(LH)★D5DZ 16D117-J	1
20000	Stripe kit (body side)	Dual stripe-25 foot roll			
		Black	D5DZ 6620000-F		1
		Blue	D5DZ 6620000-G		1
		Brown	★D5DZ 6620000-C	Not replaced (6/82)	1
		Gold	D5DZ 6620000-H		1
		Green	★D5DZ 6620000-A	Not replaced (6/82)	1
		Red (bright)	★D6DZ 6620000-AD	Not replaced (6/82)	1
		Red (medium)	D5DZ 6620000-J		1
		Silver	D5DZ 6620000-D		1
		Tan	D5DZ 6620000-E		1
		White	D5DZ 6620000-B		1

COPYRIGHT © 1986 — FORD MOTOR COMPANY — DEARBORN, MICHIGAN

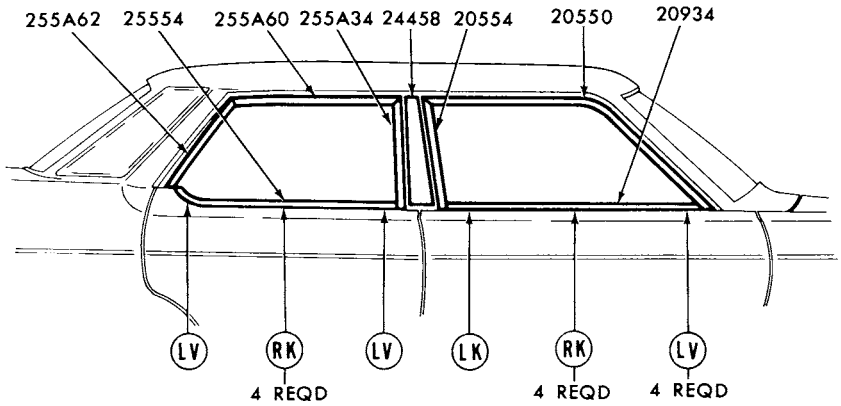

P-12494

REFER TO EXTERIOR MOULDING SECTION 'R' FOR COMPLETE RETAINER INFORMATION

1976 MONARCH - BODY TYPE 54 - DOOR WINDOW FRAME

GROUP NUMBER	PART NAME	DESCRIPTION	PART NUMBER		QTY.
20550-1	Moulding (front door window frame front)		(RH) D5DZ 5420550-A	(LH) D5DZ 5420551-A	1
20554-5	Moulding (front door window frame rear)		(RH) D5DZ 5420554-A	(LH) D5DZ 5420555-A	1
20934-5	Moulding (front door outside belt)		(RH)♦ D5DZ 5420934-A	(LH)♦ D5DZ 5420935-A	1
24458-9	Moulding (center body pillar outside upper)		Refer to roof and back belt		
255A34-5	Moulding (rear door window frame upper)		(RH) D5DZ 54255A34-A	(LH) D5DZ 54255A35-A	1
25554-5	Moulding (rear door outside belt)		(RH)♦ D5DZ 5425554-A	(LH)♦ D5DZ 5425555-A	1
255A60-1	Moulding (rear door window frame upper)		(RH) D5DZ 54255A60-A	(LH) D5DZ 54255A61-A	1
255A62-3	Moulding (rear door window frame rear)		(RH) D5DZ 54255A62-A	(LH) D5DZ 54255A63-A	1

♦ Includes attaching parts

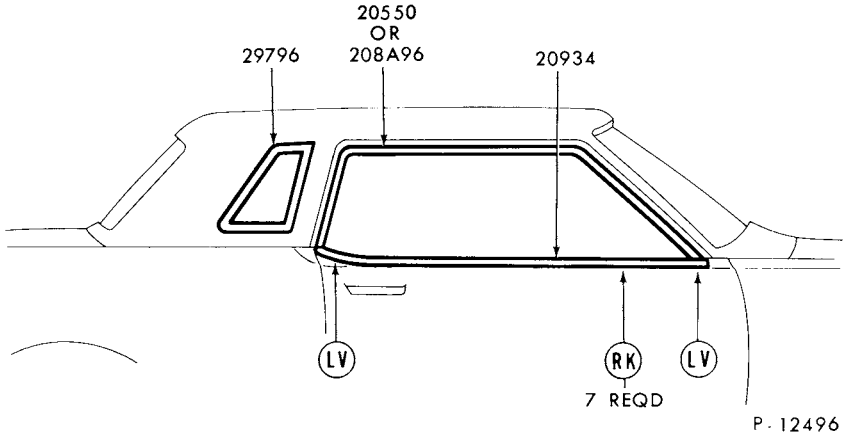

REFER TO EXTERIOR MOULDING SECTION 'R' FOR COMPLETE RETAINER INFORMATION

1976 MONARCH - BODY TYPE 66 - DOOR and QUARTER WINDOW FRAME

GROUP NUMBER	PART NAME	DESCRIPTION	PART NUMBER		QTY.
20550-1	Moulding (front door window frame)		(RH) D5DZ 6620550-A	(LH) D5DZ 6620551-A	1
20934-5	Moulding (front door outside belt)		(RH) D5DZ 6620934-C	(LH) D5DZ 6620935-C	1
29796-7	Moulding (quarter window outside)		(RH)★D5DZ 6629796-A Not replaced (4/84)	(LH) D5DZ 6629797-A	1

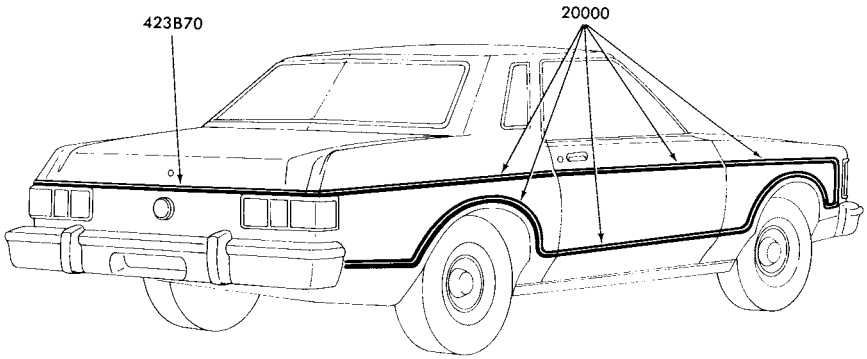

1976 MONARCH - BODY TYPE 66 - STRIPES

GROUP NUMBER	PART NAME	DESCRIPTION	PART NUMBER	QTY.
20000	Stripe kit (body side) complete	Gold	D6DZ 6620000-B	1
423B70	Stripe kit (luggage compartment door)	Gold	D6DZ 66423B70-A	1

COPYRIGHT © 1986 — FORD MOTOR COMPANY — DEARBORN, MICHIGAN

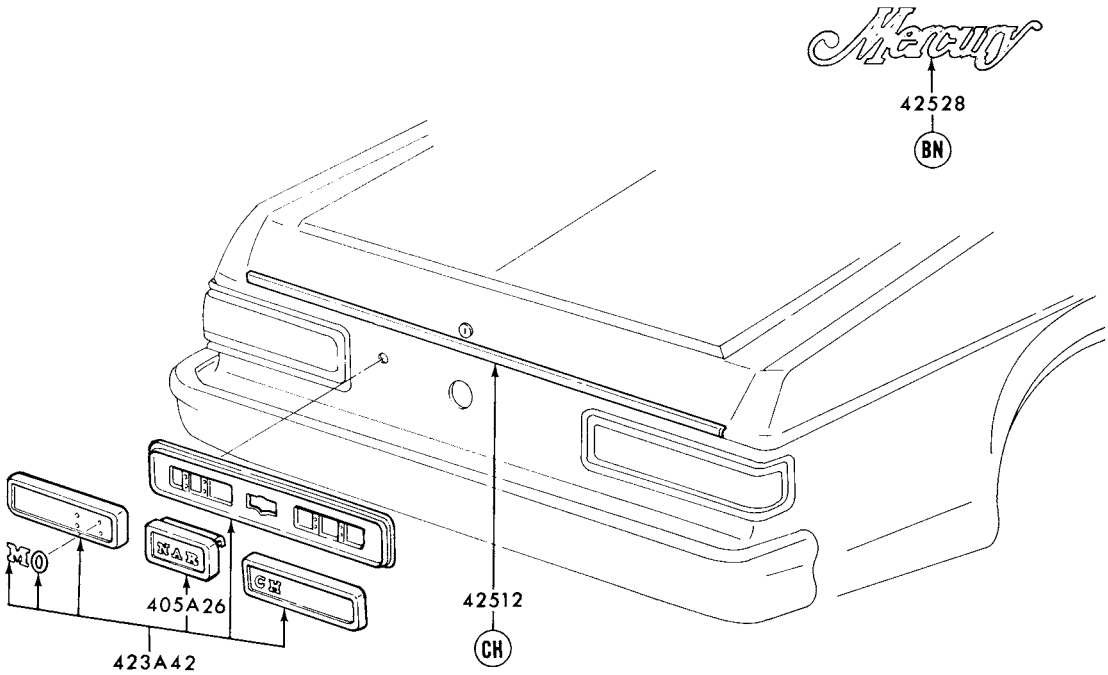

REFER TO EXTERIOR MOULDING SECTION "R" FOR COMPLETE RETAINER INFORMATION P-11949

1976 MONARCH - BACK END

GROUP NUMBER	PART NAME	DESCRIPTION	PART NUMBER	QTY.
405A26	Door (fuel filler opening)	◊ Black	♦ D64Y 66405A26-AA	1
		◊ Brown	♦ D64Y 66405A26-AT	1
		◊ Gray	♦ D64Y 66405A26-BP	
		◊ Green	♦ D64Y 66405A26-AG	1
		◊ Jade	★ D64Y 66405A26-AR Not replaced (6/82)	1
		◊ Red	♦ D64Y 66405A26-AD	1
		◊ Silver	♦ D64Y 66405A26-AP	1
		◊ Silver blue	♦ D64Y 66405A26-AB	1
		◊ Tan	♦ D64Y 66405A26-AU	1
		◊ White	♦ D64Y 66405A26-AW	1
423A42	Panel lower back finish)	◊ Black	♦ D64Y 66423A42-AA	1
		◊ Brown	♦ D64Y 66423A42-AT	1
		◊ Gray	♦ D64Y 66423A42-BP	1
		◊ Green	★ D64Y 66423A42-AG Not replaced (6/82)	1
		◊ Jade	★ D64Y 66423A42-AR Not replaced (6/82)	1
		◊ Red	♦ D64Y 66423A42-AD	1
		◊ Silver	♦ D64Y 66423A42-AP	1
		◊ Silver blue	♦ D64Y 66423A42-AB	1
		◊ Tan	♦ D64Y 66423A42-AU	1
		◊ White	♦ D64Y 66423A42-AW	1
42512	Moulding(luggage compartment door)		♦ D5DZ 6642512-A	1
42528	Plate (name)	"Mercury"	♦ D54Y 6642528-A	1

◊ For color verification, refer to the vinyl roof swatches in the 1976 salesman's color and upholstery selections guide.
♦ Includes attaching parts

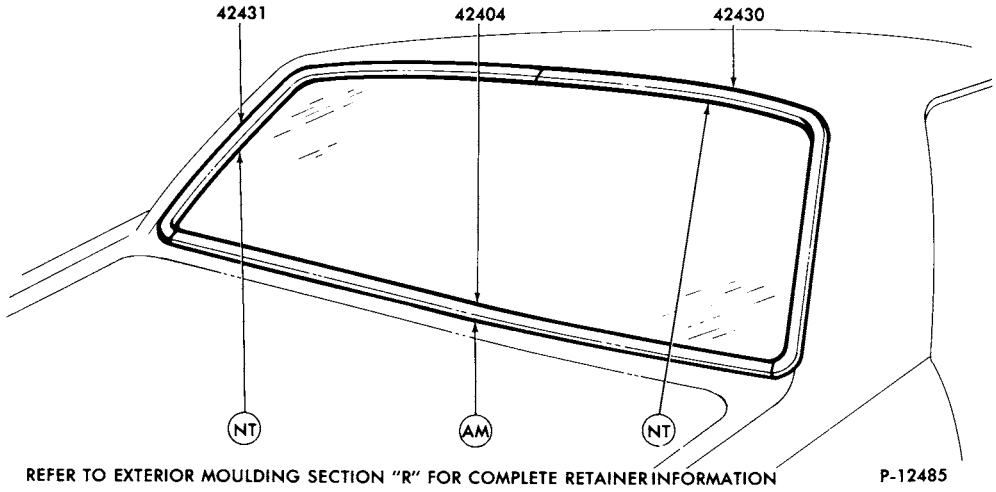

1976 MONARCH - BODY TYPE 54 - BACK WINDOW

GROUP NUMBER	PART NAME	DESCRIPTION	PART NUMBER	QTY.
42404-5	Moulding (back window lower)	Back window	♦D5DZ 5442404-A	1
42430-1	Moulding (back window upper)		(RH)♦D5DZ 5442430-A (LH)♦D5DZ 5442431-A	1

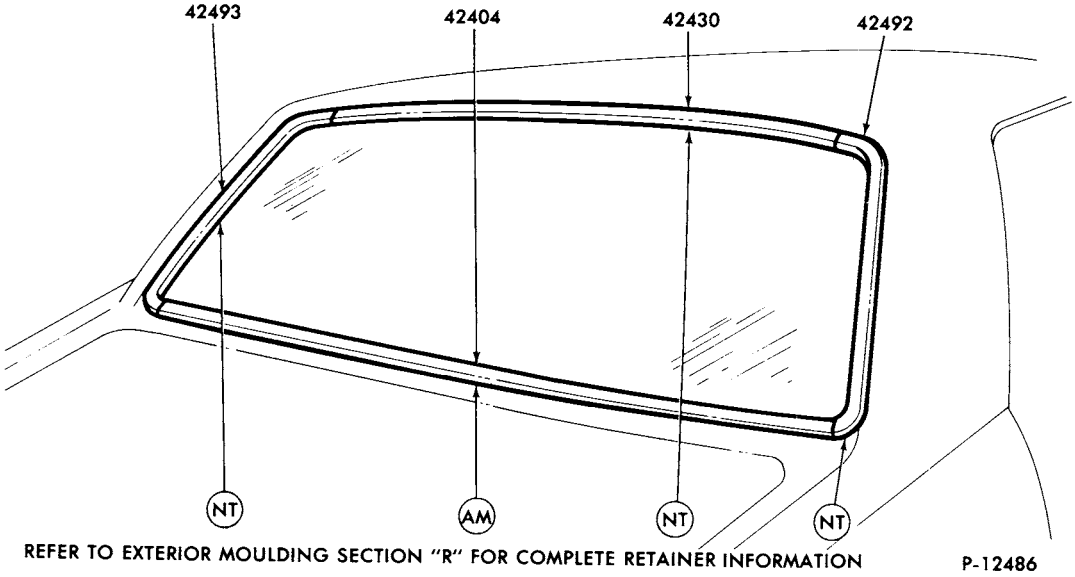

1976 MONARCH - BODY TYPE 66 - BACK WINDOW

GROUP NUMBER	PART NAME	DESCRIPTION	PART NUMBER	QTY.
42404-5	Moulding (back window lower)		♦D5DZ 6642404-A	1
42430-1	Moulding (back window upper)		♦D5DZ 6642430-A	1
42492-3	Moulding (back window side)		(RH)♦D5DZ 6642492-A (LH)♦D5DZ 6642493-A	1

♦ Includes attaching parts

COPYRIGHT © 1986 — FORD MOTOR COMPANY — DEARBORN, MICHIGAN

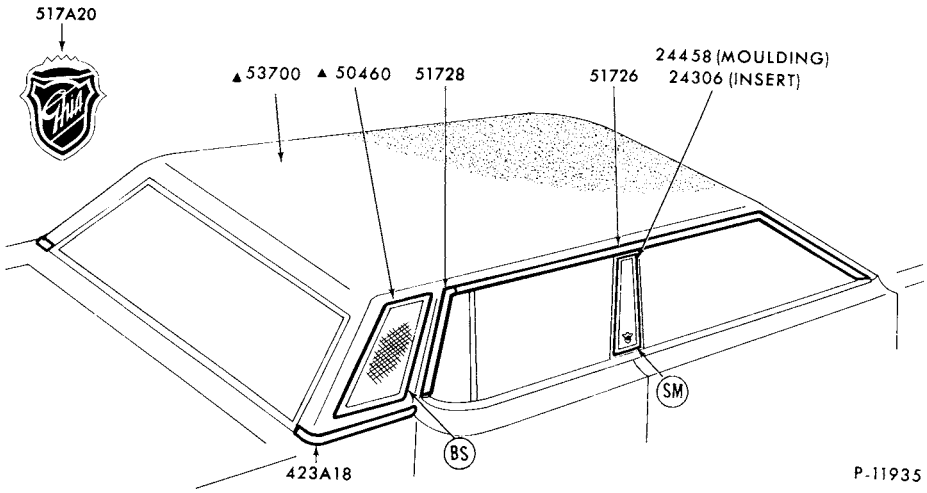

▲REFER TO GROUP IN SOFT TRIM SECTION
REFER TO EXTERIOR MOULDING SECTION "R" FOR COMPLETE RETAINER INFORMATION

1976 MONARCH - BODY TYPE 54 - ROOF and BACK BELT

GROUP NUMBER	PART NAME	DESCRIPTION	PART NUMBER		QTY.
24306-7	Insert (center body pillar outside moulding)	◊ Paint to match-W/o vinyl roof	(RH)★D5DZ 5424306-A Not replaced (6/82)	(LH)★D5DZ 5424307-A Not replaced (6/82)	1
		◊ Black-w/vinyl roof	(RH)♦D5DZ 5424306-BA	(LH)♦D5DZ 5424307-BA	1
		◊ Red-unpadded	(RH)♦D5DZ 5424306-BD	(LH)♦D5DZ 5424307-BD	1
		◊ Silver-w/vinyl roof	(RH)♦D5DZ 5424306-BP	(LH)♦D5DZ 5424307-BP	1
		◊ Silver blue-w/vinyl roof	(RH)♦D5DZ 5424306-BB	(LH)★D5DZ 5424307-BB Not replaced (6/83)	1
		◊ Tan-w/vinyl roof	(RH)★D5DZ 5424306-BU Not replaced (6/82)	(LH)★D5DZ 5424307-BU Not replaced (6/82)	1
		◊ White-w/vinyl roof	(RH)★D6DZ 5424306-BW Not replaced (6/82)	(LH)★D6DZ 5424307-BW Not replaced (6/83)	1
24458-9	Moulding (center body pillar outside upper)		(RH)♦D5DZ 5424458-A	(LH)♦D5DZ 5424459-A	1
423A18-9	Moulding (back belt outside side)	Incl. vinyl insert			
		◊ Black	(RH)♦D6DZ 54423A18-A	(LH)♦D7DZ 54423A19-A	1
		◊ Brown	(RH)†D7DZ 54423A18-A	(LH)♦D5DZ 54423A19-E	1
		◊ Gray	(RH)†D7DZ 54423A18-A	(LH)♦D7DZ 54423A19-A	1
		◊ Green	(RH)†D7DZ 54423A18-A	(LH)♦D5DZ 54423A19-D	1
		◊ Jade	(RH)†D7DZ 54423A18-A	(LH)♦D6DZ 54423A19-D	1
		◊ Red	(RH)♦D7DZ 54423A18-A	(LH)♦D5DZ 54423A19-C	1
		◊ Silver	(RH)†D7DZ 54423A18-A	(LH)†D7DZ 54423A19-A	1
		◊ Silver blue	(RH)†D7DZ 54423A18-A	(LH)♦D5DZ 54423A19-B	1
		◊ Tan	(RH)♦D5DZ 54423A18-G	(LH)♦D5DZ 54423A19-G	1
		◊ White	(RH)†D7DZ 54423A18-A	(LH)†D7DZ 54423A19-A	1

◊ For color verification, refer to the vinyl roof swatches in the 1976 salesman's color and upholstery selections guide.
♦ Includes attaching parts † Prime - paint to match

1976 MONARCH - BODY TYPE 54 - ROOF and BACK BELT

GROUP NUMBER	PART NAME	DESCRIPTION	PART NUMBER	QTY.
517A20	Ornament (roof side)	"Ghia"	♦D5ZZ 60517A20-A	2
51726-7	Moulding (roof drip side finish)	Front	(RH) D5DZ 5451726-A (LH) D5DZ 5451727-A	1
51728-9	Moulding (roof drip side finish)	Rear	(RH) D5DZ 5451728-A (LH) D5DZ 5451729-A	1

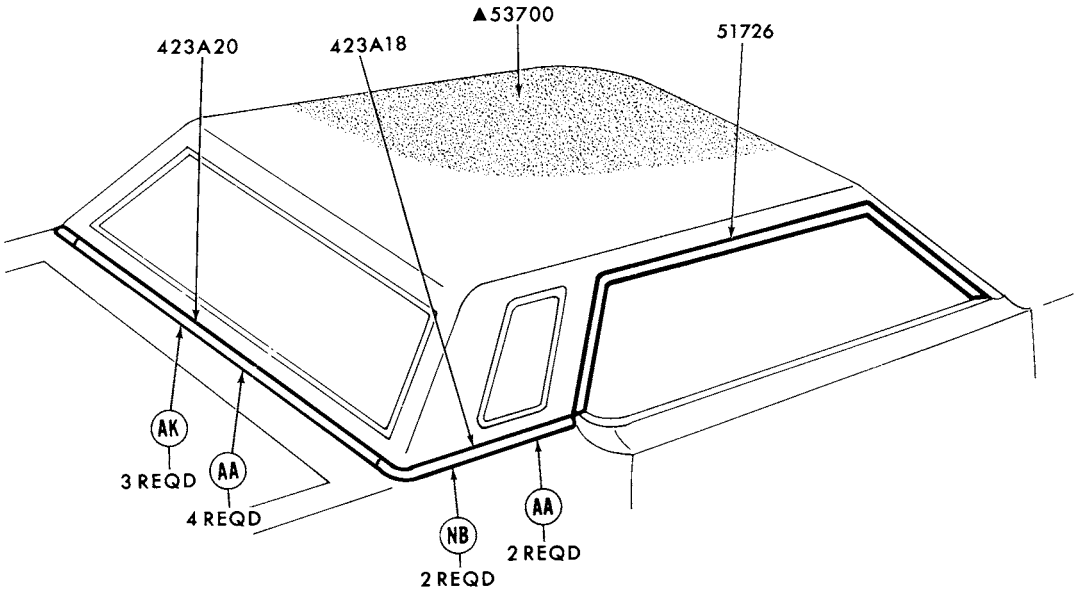

▲REFER TO GROUP IN SOFT TRIM SECTION
REFER TO EXTERIOR MOULDING SECTION "R" FOR COMPLETE RETAINER INFORMATION P-11934

1976 MONARCH - BODY TYPE 66 - ROOF and BACK BELT

GROUP NUMBER	PART NAME	DESCRIPTION	PART NUMBER	QTY.
423A18-9	Moulding (back belt outside side)	Prime-paint to match	† (RH)♦D7DZ 66423A18-A † (LH)♦D7DZ 66423A19-A	1
423A20	Moulding (back belt outside)	Prime-paint to match	♦D7DZ 66423A20-A	1
51726-7	Moulding (roof drip side finish)		(RH) D7DZ 6651726-C (LH) D7DZ 6651727-C	1

◊ For color verification, refer to the vinyl roof swatches in the 1976 salesman's color and upholstery selections guide.
♦ Includes attaching parts † Prime - paint to match

COPYRIGHT © 1986 — FORD MOTOR COMPANY — DEARBORN, MICHIGAN

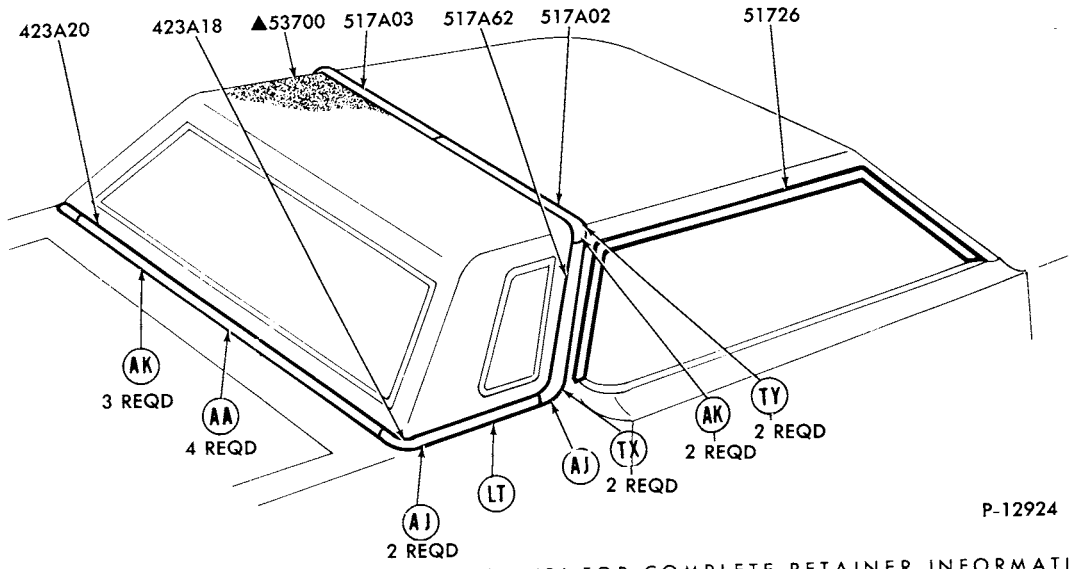

REFER TO EXTERIOR MOULDING SECTION 'R' FOR COMPLETE RETAINER INFORMATION

1976 MONARCH - BODY TYPE 66 - ROOF and BACK BELT - w/HALF VINYL ROOF

GROUP NUMBER	PART NAME	DESCRIPTION	PART NUMBER		QTY.
423A18-9	Moulding (back belt side)	Prime-paint to match	(RH)♦D6DZ 66423A18-D	(LH)♦D6DZ 66423A19-D	1
423A20	Moulding (back belt outside)	Prime-paint to match	◊D7DZ 66423A20-A		1
517A02-3	Moulding (roof outside top)	Prime-paint to match	(RH)♦D6DZ 66517A02-A	(LH)♦D6DZ 66517A03-A	1
51726-7	Moulding (roof drip side finish)		(RH)♦D7DZ 6651726-C	(LH)♦D7DZ 6651727-C	1
517A62-3	Moulding (roof outside side)	Prime-paint to match	(RH)♦D6DZ 66517A62-A	(LH)♦D6DZ 66517A63-A	1

♦ Includes attaching parts
◊ For color verification, refer to the vinyl roof swatches in the 1976 salesman's color and upholstery selections guide.

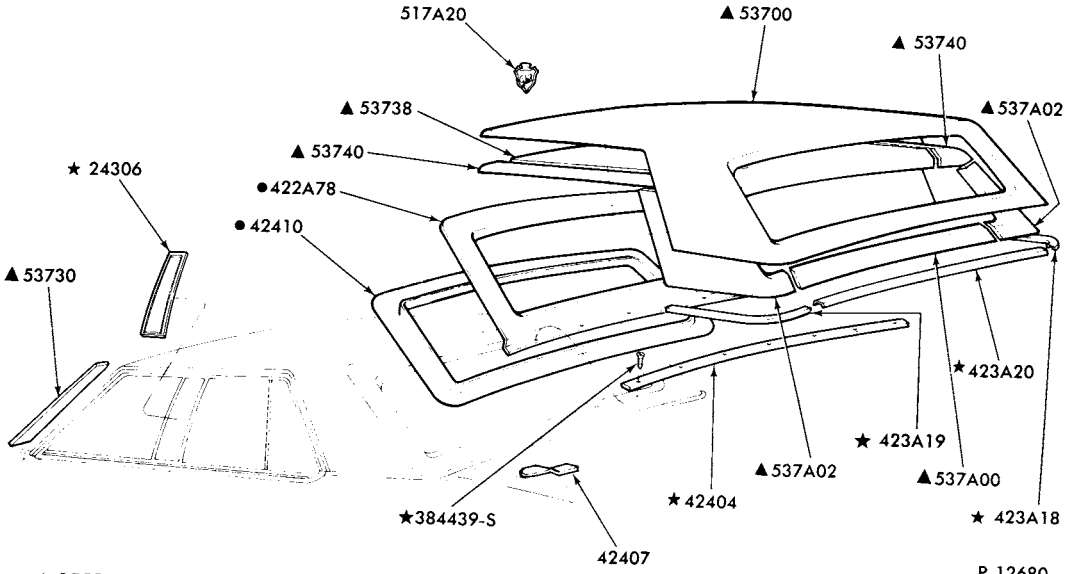

▲ REFER TO GROUP IN SOFT TRIM SECTION
● REFER TO GROUP IN TEXT SECTION

1976 MONARCH - BODY TYPE 54K - ROOF w/FRENCHED BACK WINDOW

GROUP NUMBER	PART NAME	DESCRIPTION	PART NUMBER	QTY.
42406-7	Moulding (back window outside lower corner)		(RH) D5DY 5442406-A (LH) D5DY 5442407-A	1
517A20	Ornament (roof side)	"GHIA"	♦D5ZZ 60517A20-A R.H. and L.H.	2

♦ Includes attaching parts
◊ For color verification, refer to the vinyl roof swatches in the 1976 salesman's color and upholstery selections guide.

COPYRIGHT © 1986 — FORD MOTOR COMPANY — DEARBORN, MICHIGAN

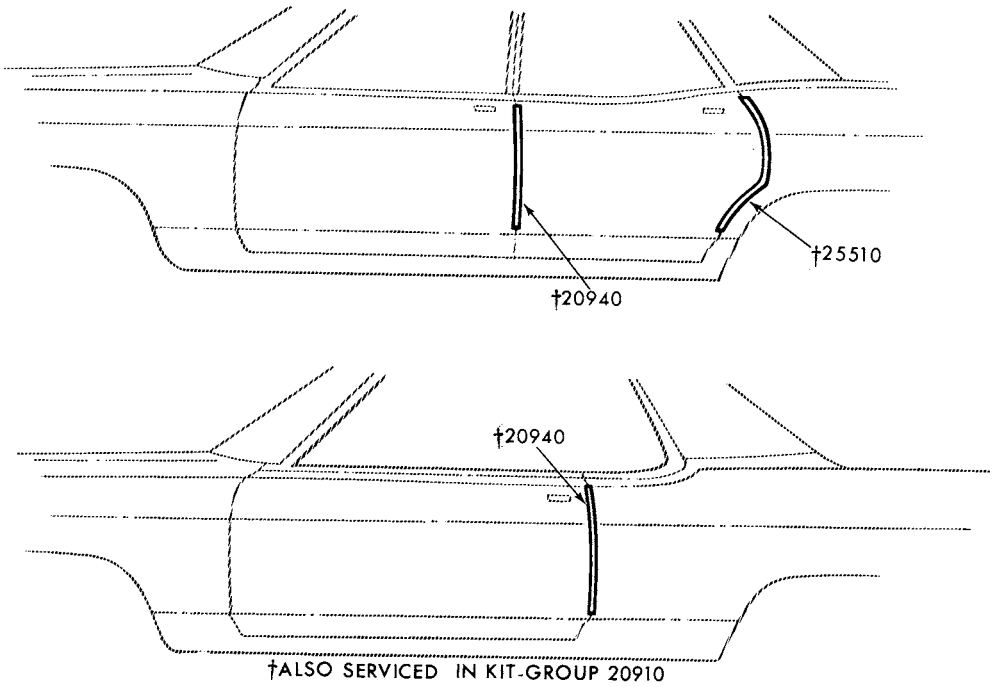

†ALSO SERVICED IN KIT-GROUP 20910

P-10061

1976 MONARCH - DOOR EDGE GUARDS

GROUP NUMBER	PART NAME	DESCRIPTION	PART NUMBER		QTY.
20910	Moulding kit (door edge guard)	Body type 54	★D5DZ 5420910-A	Not replaced (6/83)	1
		Body type 66	★D5DZ 6620910-A	Not replaced (6/83)	1
20910-1	Moulding (front door edge guard)	Body type 54	(RH) D5DZ 5420940-A	(LH) D5DZ 5420941-A	1
		Body type 66	(RH) D5DZ 6620940-A	(LH) D5DZ 6620941-A	1
25510-1	Moulding (rear door edge guard)	Body type 54	(RH) D5DZ 5425510-A	(LH) D5DZ 5425511-A	1

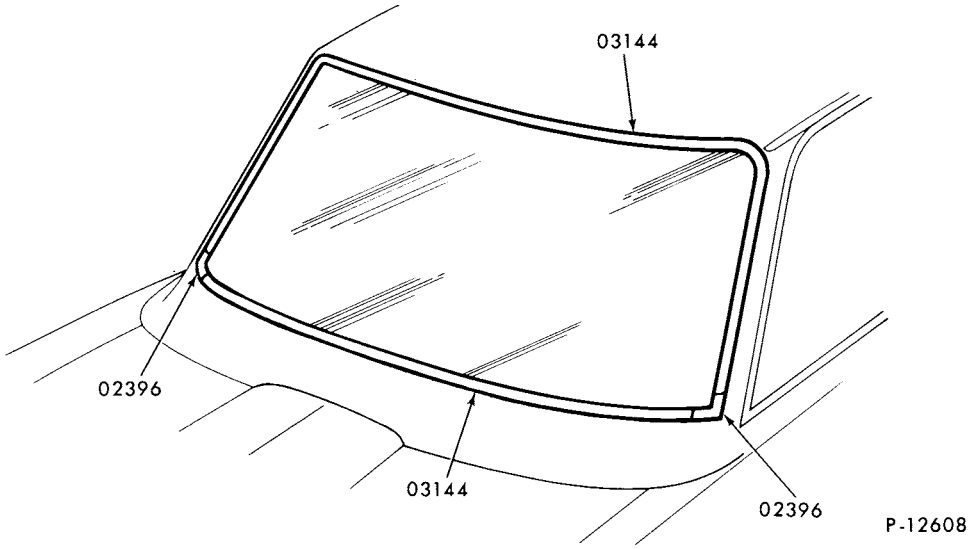

1976 CAPRI - WINDSHIELD

GROUP NUMBER	PART NAME	DESCRIPTION	PART NUMBER	QTY.
02396	Cover (windshield moulding joint)	Bright finish	D5RY 6402396-B	2
		Black	D6RY 6402396-A	2
03606	Moulding (windshield)		Refer to group 03144	
03144-5	Moulding (windshield outside)	Bright finish upper and lower-cut to fit	D5RY 6403144-A	AR
		Black finish upper and lower-cut to fit	★ D6RY 6403606-A Not replaced (2/82)	AR

COPYRIGHT © 1986 — FORD MOTOR COMPANY — DEARBORN, MICHIGAN

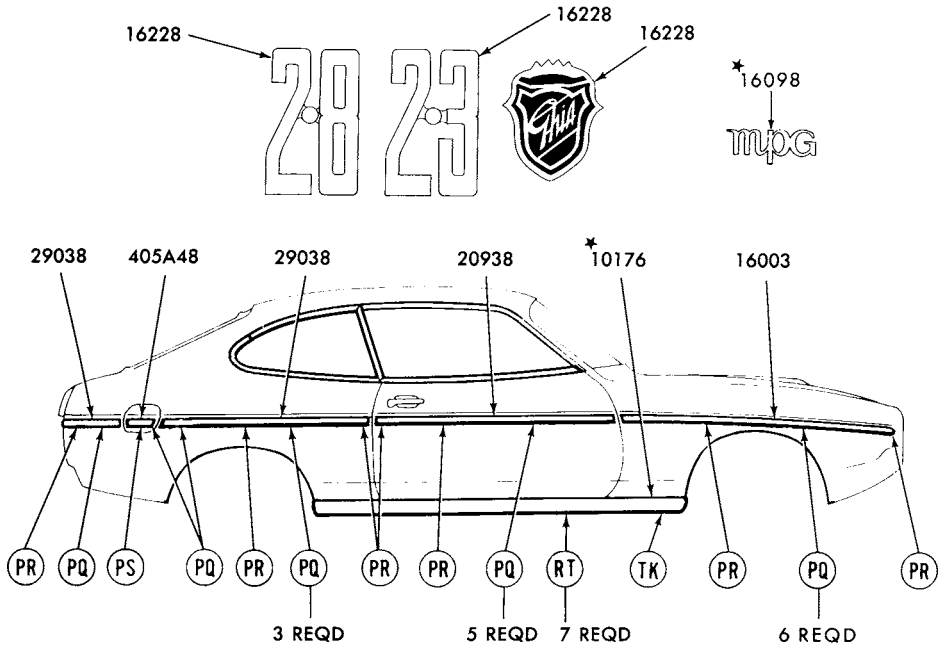

REFER TO EXTERIOR MOULDING SECTION 'R' FOR COMPLETE RETAINER INFORMATION

P-12919

1976 CAPRI - WITH 11/16" WIDE SIDE MOULDINGS

GROUP NUMBER	PART NAME	DESCRIPTION	PART NUMBER		QTY.
10176	Moulding (body rocker panel)		✶ D5RY 6410176-B	R.H. and L.H.	2
16003-4	Moulding (front fender side)	Incl. vinyl insert			
		Black	(RH)♦D5RY 16003-A	(LH)♦D5RY 16004-A	1
		Tobacco	(RH)✶D5RY 16003-B Not replaced (4/84)	(LH)★D5RY 16004-B	1
16098	Transfer (front fender name)	"MPG"-incl. R.H. and L.H.	★ D6RY 16098-A Not replaced (3/82)		1
16228	Plate (front fender name)	"2.3"-bright finish	♦D5RY 16228-C	R.H. and L.H.	2
		"2.8"-bright finish	♦D5RY 16228-B	R.H. and L.H.	2
		"2.3"-gold	♦D6RY 16228-A	R.H. and L.H.	2
		"2.8"-gold	♦D6RY 16228-B	R.H. and L.H.	2
		"Ghia"	✶D5RY 16228-D R/B✶D9RY 16228-A (7/81)	R.H. and L.H.	2
20938-9	Moulding (front door outside)	Incl. vinyl insert			
		Black	(RH)♦D5RY 6420938-A	(LH)♦D5RY 6420939-A	1
		Tobacco	(RH)♦D5RY 6420938-B	(LH)♦D5RY 6420939-B	1
29038-9	Moulding (quarter)	Incl. vinyl insert			
		Black	♦D5RY 6429038-C	R.H.-front	1
		Black	♦D5RY 6429038-A	R.H.-rear	1
		Black	♦D5RY 6429039-A	L.H.	1
		Tobacco	✶D5RY 6429038-D	R.H.-front	1
		Tobacco	✶D5RY 6429038-B	R.H.-rear	1
		Tobacco	★ D5RY 6429039-B	L.H.	1
405A48	Moulding (fuel filler door)	Incl. vinyl insert			
		Black	D5RY 64405A48-B		1
		Tobacco	★D5RY 64405A48-A	Not replaced (2/81)	1

♦ Includes attaching parts

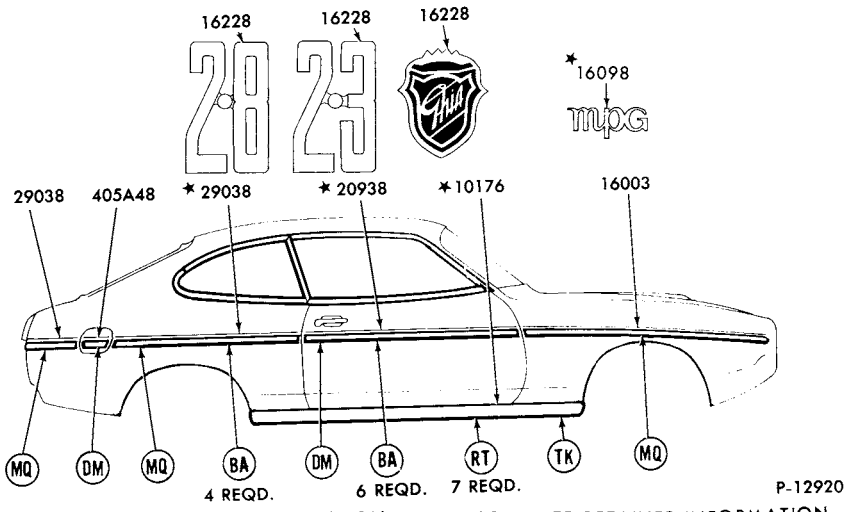

REFER TO EXTERIOR MOULDING SECTION 'R' FOR COMPLETE RETAINER INFORMATION

1976 CAPRI - WITH 1 5/8" WIDE SIDE MOULDINGS

GROUP NUMBER	PART NAME	DESCRIPTION	PART NUMBER		QTY.
10176	Moulding (body rocker panel)		★D5RY 6410176-A	R.H. and L.H.	2
16003-4	Moulding (front fender side)	Incl. vinyl insert			
		Black	(RH)★D6RY 16003-AA	(LH)♦D6RY 16004-AA	1
		Silver	(RH)★D6RY 16003-AP Not replaced (2/81)	(LH)★D6RY 16004-AP Not replaced (2/81)	1
		Tobacco	(RH)★D6RY 16003-AU Not replaced (4/84)	(LH)★D6RY 16004-AU Not replaced (4/84)	1
		White	(RH)★D6RY 16003-AW Not replaced (4/84)	(LH)★D6RY 16004-AW Not replaced (4/84)	1
16098	Transfer (front fender name)	"MPG"-incl.	★D6RY 16098-A	R.H. and L.H.	1
16228	Plate (front fender name)	"2.3"-bright finish	♦D5RY 16228-C	R.H. and L.H.	2
		"2.8"-bright finish	♦D5RY 16228-B	R.H. and L.H.	2
		"2.3"-gold	♦D6RY 16228-A	R.H. and L.H.	2
		"2.8"-gold	♦D6RY 16228-B	R.H. and L.H.	2
		"Ghia"	★D5RY 16228-D R/B★D9RY 16228-A (7/81)	R.H. and L.H.	2
20938-9	Moulding (front door outside)	Incl. vinyl insert			
		Black	(RH)★D6RY 6420938-AA	(LH)★D6RY 6420939-AA	1
		Silver	(RH)★D6RY 6420938-AP	(LH)★D6RY 6420939-AP	1
		Tobacco	(RH)★D6RY 6420938-AU	(LH)★D6RY 6420939-AU	1
		White	(RH)★D6RY 6420938-AW	(LH)★D6RY 6420939-AW	1
29038-9	Moulding (quarter)	Incl. vinyl insert			
		Black	★D6RY 6429038-AA	R.H.-front	1
		Black	★D6RY 6429038-BA Not replaced(4/84)	R.H.-rear	1
		Black	★D6RY 6429039-AA	L.H.	1
		Silver	★D6RY 6429038-AP	R.H.-front	1
		Silver	★D6RY 6429038-BP	R.H.-rear	1
		Silver	★D6RY 6429039-AP	L.H.	1
		Tobacco	★D6RY 6429038-AU Not replaced (4/84)	R.H.-front	1
		Tobacco	★D6RY 6429038-BU	R.H.-rear	1
		Tobacco	★D6RY 6429039-AU	L.H.	1
		White	★D6RY 6429038-AW Not replaced(4/84)	R.H.-front	1
		White	★D6RY 6429038-BW	R.H.-rear	1
		White	★D6RY 6429039-AW	L.H.	1
405A48	Moulding (fuel filler door)	Incl. vinyl insert			
		Black	♦D6RY 64405A48-AA		1
		Silver	♦D6RY 64405A48-AP		1
		Tobacco	★D6RY 64405A48-AU	Not replaced (4/83)	1
		White	♦D6RY 64405A48-AW		1

♦ Includes attaching parts

COPYRIGHT © 1986 — FORD MOTOR COMPANY — DEARBORN, MICHIGAN

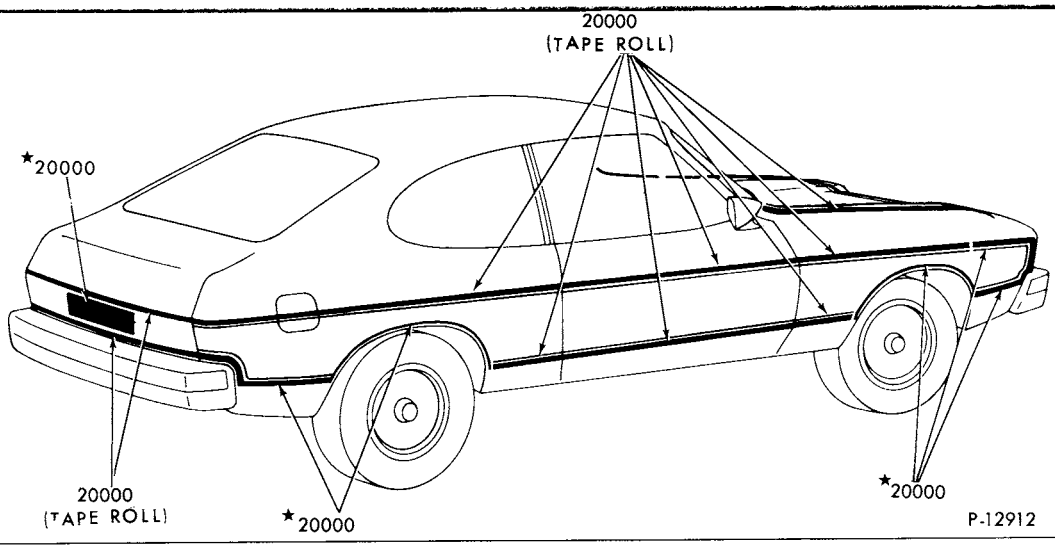

1976 CAPRI - EXCEPT RALLY CAT - STRIPES

GROUP NUMBER	PART NAME	DESCRIPTION	PART NUMBER	QTY
20000	Stripe kit (body side)	Gold-164' roll- "Before 4/1/79"	★D6RY 6420000-A r/b★D7RY 6420000-B (10/80)	AR
		Gold-32' roll- "From 4/1/79"	★D7RY 6420000-A r/b★D7RY 6420000-B (10/80)	AR
	Stripe kit (fender and quarter panel)	Gold	(RH)★D6RY 6420000-B (LH)★D6RY 6420001-B	1
	Stripe kit (back panel)	Gold	★D6RY 6420000-C Not replaced (2/81)	1
	Stripe kit (fender top and hood)	Gold-23'4" roll	★D6RY 6420000-D	1

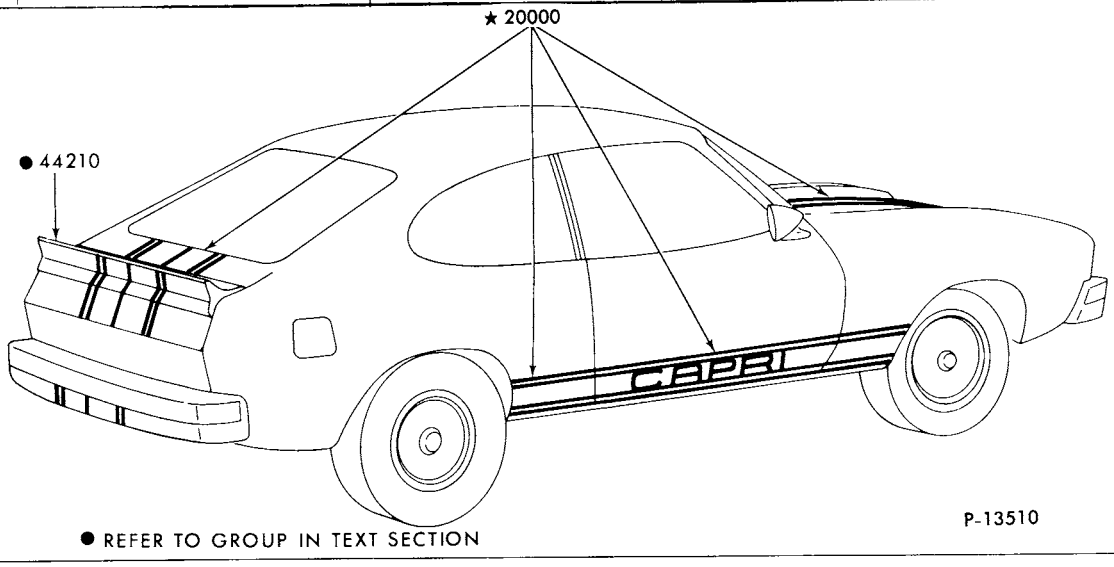

1976 CAPRI - RALLY CAT - STRIPES

GROUP NUMBER	PART NAME	DESCRIPTION	PART NUMBER	QTY.
20000	Stripe kit	Black	★D6RY 6420000-BA Not replaced (3/82)	1
		White	★D6RY 6420000-BW Not replaced (3/82)	1

♦ Includes attaching parts

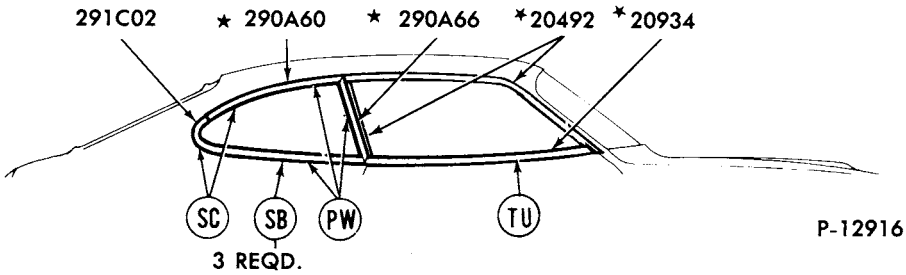

REFER TO EXTERIOR MOULDING SECTION 'R' FOR COMPLETE RETAINER INFORMATION

1976 CAPRI - SIDE WINDOW

GROUP NUMBER	PART NAME	DESCRIPTION	PART NUMBER		QTY.
20492-3	Moulding (front door window frame)	Bright finish	(RH)★D5RY 6420492-A Not replaced (3/82)	(LH) D5RY 6420493-A	1
		Black	(RH)★D6RY 6420492-A	(LH)★D6RY 6420493-A	1
20934-5	Moulding and weatherstrip-front door outside belt)	Bright finish	(RH)★D5RY 6420934-B	(LH)★D5RY 6420935-B	1
		Black	(RH)★D6RY 6420934-A	(LH)★D6RY 6420935-A	1
291C02-3	Moulding (quarter window rear)	Bright finish	(RH) D5RY 64291C02-A	(LH)★D5RY 64291C03-A	1
		Black	(RH)★D6RY 64291C02-A R/B★D6RY 64291C02-B (4/83)	(LH)★D6RY 64291C03-A R/B★D6RY 64291C03-B (4/83)	1

♦ Includes attaching parts

COPYRIGHT © 1986 — FORD MOTOR COMPANY — DEARBORN, MICHIGAN

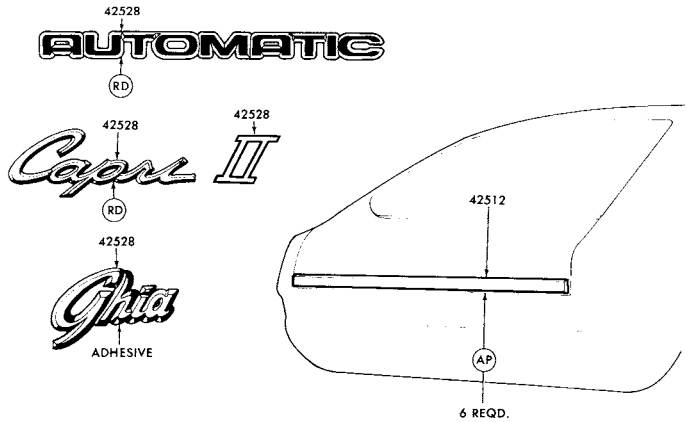

REFER TO EXTERIOR MOULDING SECTION 'R' FOR COMPLETE RETAINER INFORMATION P-12292

1976 CAPRI - BACK END

GROUP NUMBER	PART NAME	DESCRIPTION	PART NUMBER	QTY.
42512	Moulding (luggage compartment door)		♦D5RY 6442512-E	1
42528	Plate (name)	"Capri"-bright finish	D5RY 6442528-A	1
		"Capri"-gold	♦D6RY 6442528-B	1
		"II"-decal	D5RY 6442528-C	1
		"Ghia"- adhesive backed	D5RY 6442528-D	1
		"Automatic"	♦D5RY 6442528-E	1

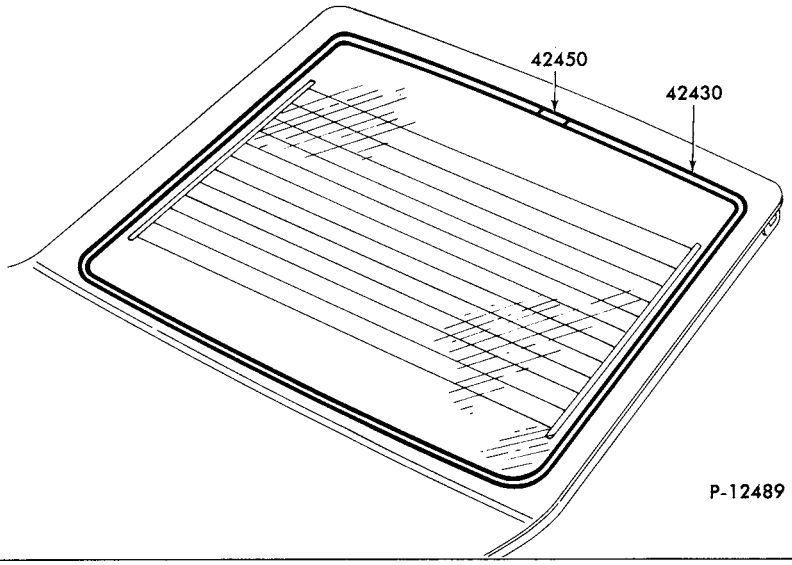

1976 CAPRI - BACK WINDOW

GROUP NUMBER	PART NAME	DESCRIPTION	PART NUMBER	QTY.
42416	Moulding (back window)		Refer to group 42430	
42430	Moulding (back window upper)	Bright finish -cut to fit	✶D5RY 6442430-A R/B♦EORZ 6442430-A (4/83)	AR
		Black finish -cut to fit	✶D6RY 6442416-A	AR
42450	Cover (back window moulding joint)	Bright finish	D5RY 6442450-A	1
		Black finish	D6RY 6442458-A	1

♦ Includes attaching parts

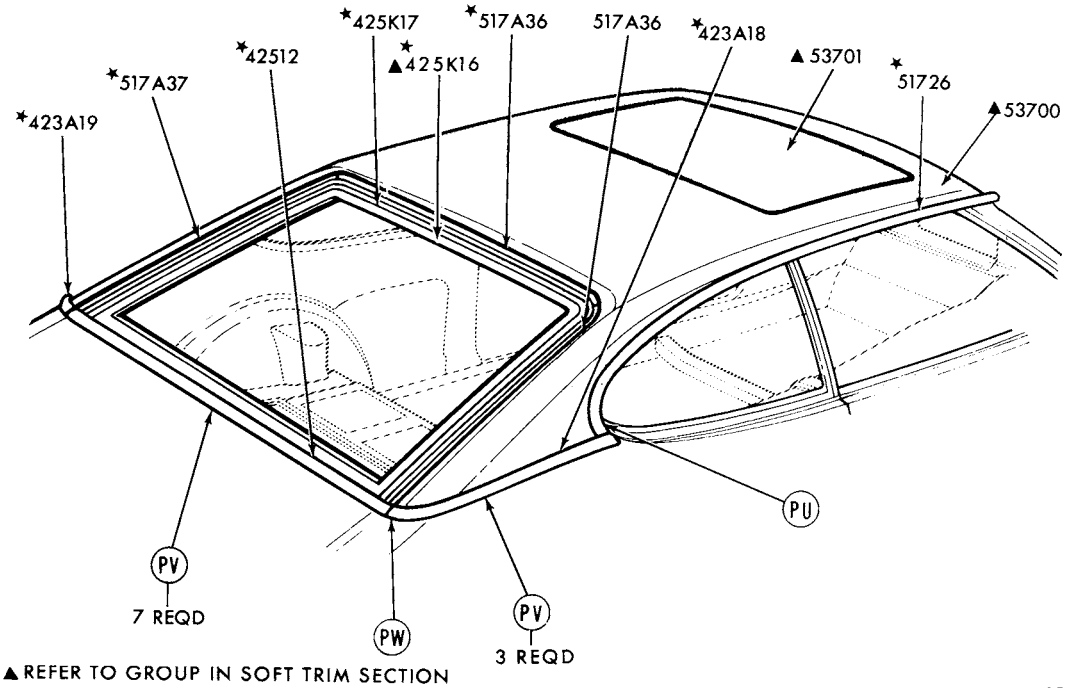

▲ REFER TO GROUP IN SOFT TRIM SECTION
■ REFER TO GROUP IN TEXT SECTION
REFER TO EXTERIOR MOULDING SECTION 'R' FOR COMPLETE RETAINER INFORMATION

P-12301

1976 CAPRI - ROOF and BACK BELT

GROUP NUMBER	PART NAME	DESCRIPTION	PART NUMBER		QTY.
423A18-9	Moulding (back belt outside side)	Black	(RH)★D5RY 64423A18-D	(LH)★D5RY 64423A19-D	1
		Tobacco	(RH)★D5RY 64423A18-E	(LH)★D5RY 64423A19-E	1
42512	Moulding (liftgate outside upper)	Black	★D5RY 6442512-G		1
		Tobacco	★D5RY 6442512-H		1
425K17	Retainer (liftgate cover)		★D5RY 64425K17-A	R.H. and L.H.	2
51726-7	Moulding (roof drip side finish)	W/o vinyl roof	(RH)★D5RY 6451726-B	(LH)★D5RY 6451727-B	1
		W/vinyl roof	(RH)★D5RY 6451726-A	(LH)★D5RY 6451727-A	1
517A36-7	Moulding (roof outside rear)	Black-center	★D5RY 64517A36-A		1
		Black-side	(RH)★D5RY 64517A36-C	(LH) D5RY 64517A37-A	1
		Tobacco-center	★D5RY 64517A36-B		1
		Tobacco-side	(RH)★D5RY 64517A36-D	(LH) D5RY 64517A37-B	1

COPYRIGHT © 1986 — FORD MOTOR COMPANY — DEARBORN, MICHIGAN

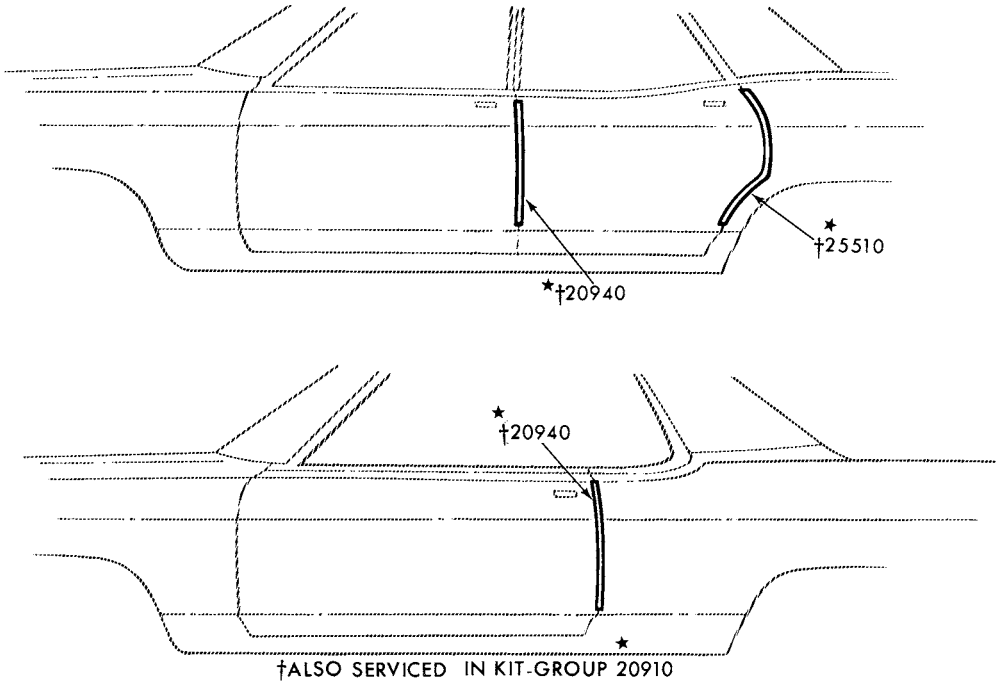

†ALSO SERVICED IN KIT-GROUP 20910

P-10061

1976 CAPRI - DOOR EDGE GUARDS

GROUP NUMBER	PART NAME	DESCRIPTION	PART NUMBER	QTY.
20910	Moulding kit (door edge guard)		★D5RY 6420910-A Not replaced (4/83)	1

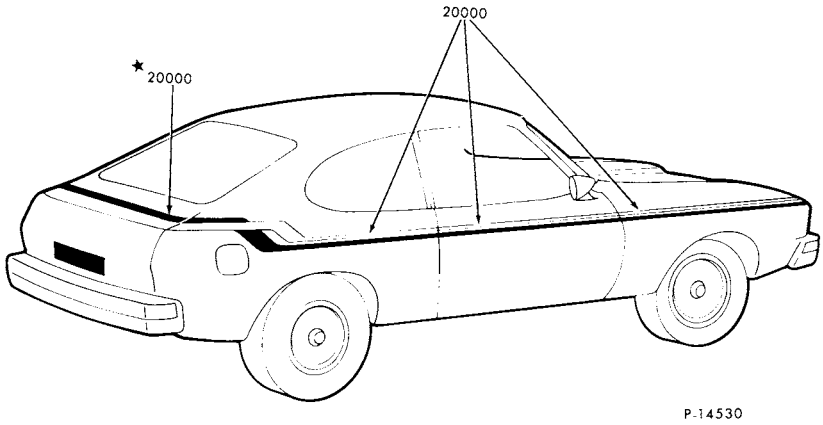

1978 CAPRI - TAPE STRIPES - CANADA ONLY

GROUP NUMBER	PART NAME	DESCRIPTION	PART NUMBER	QTY.
20000-1	Stripe kit (body side)	Black/Gray	(RH)★D8RY 6420000-A ★ (LH) D8RY 6420001-A Not replaced (5/81)	1
		Black/Burgundy	(RH)★D8RY 6420000-B (LH)★D8RY 6420001-B	1
		Black/Red	(RH) D8RY 6420000-C (LH)★D8RY 6420001-C	1
		Orange/Brown	(RH)★D8RY 6420000-D ★ (LH)★D8RY 6420001-D Not replaced (5/81)	1
		Brown Shades	(RH) D8RY 6420000-E ★ (LH)★D8RY 6420001-E Not replaced (5/81)	1
20000	Stripe kit (back panel)	Black/Gray	★D8RY 6420000-F	1
		Black/Burgundy	★D8RY 6420000-G	1
		Black/Red	★D8RY 6420000-H	1
		Orange/Brown	★D8RY 6420000-J	1
		Brown Shades	★D8RY 6420000-K	1

COPYRIGHT © 1986 — FORD MOTOR COMPANY — DEARBORN, MICHIGAN

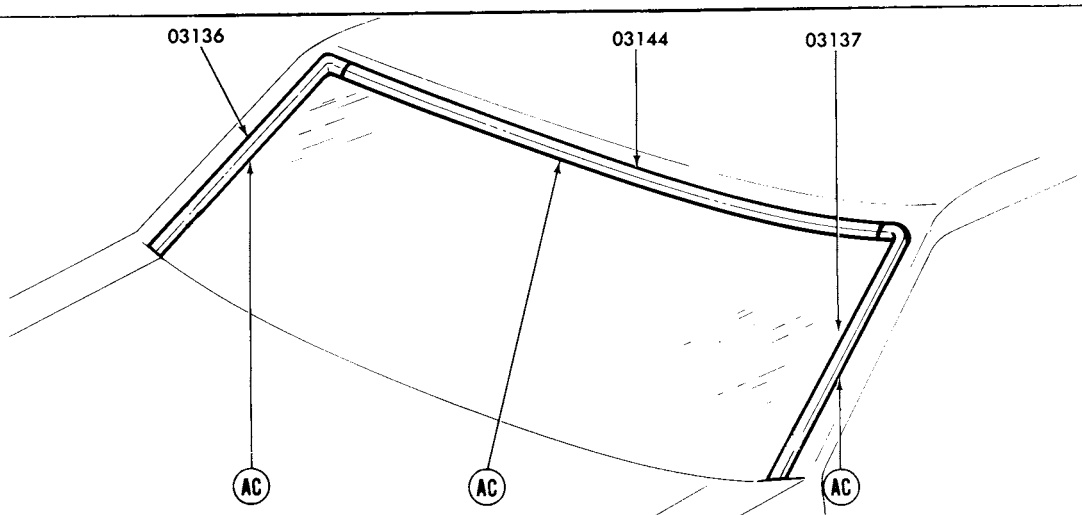

REFER TO EXTERIOR MOULDING SECTION 'R' FOR COMPLETE RETAINER INFORMATION P-12521

1976 MARK IV - WINDSHIELD

GROUP NUMBER	PART NAME	DESCRIPTION	PART NUMBER		QTY.
03136-7	Moulding (windshield outside side)		(RH)♦D2SZ 6503136-A	(LH)♦D2SZ 6503137-A	1
03144	Moulding (windshield outside top)		♦D2SZ 6503144-A		1

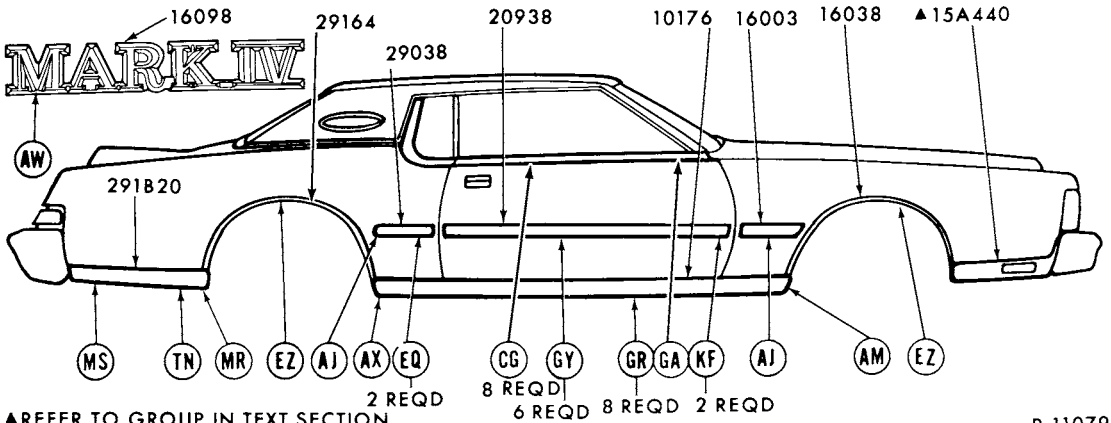

▲REFER TO GROUP IN TEXT SECTION
REFER TO EXTERIOR MOULDING SECTION "R" FOR COMPLETE RETAINER INFORMATION P-11079

1976 MARK IV - SIDE - PARTIAL LENGTH BODY PROTECTION

GROUP NUMBER	PART NAME	DESCRIPTION	PART NUMBER		QTY.
10176-7	Moulding (body rocker panel)		(RH)♦D2SZ 6510176-A	(LH)♦D2SZ 6510177-A	1
16003	Moulding (front fender side)	Black vinyl insert	♦D2LY 16003-B	R.H. and L.H.	2
16038-9	Moulding (front fender wheel opening)		(RH)♦D4LY 16038-A	(LH)♦D4LY 16039-A	1
16098	Plate (front fender name)	"MARK IV"	♦D2LY 16098-A	R.H. and L.H.	2
20938-9	Moulding (front door outside)	Black vinyl insert	♦D2LY 6520938-B	R.H. and L.H.	2
29038	Moulding (quarter)	Black vinyl insert	♦D2LY 16003-B	R.H. and L.H.	2
291B20-1	Moulding (quarter outside lower)		(RH)♦D4LY 65291B20-A	(LH)♦D4LY 65291B21-A	1
29164-5	Moulding (quarter wheel opening)		(RH)♦D2LY 6529164-A	(LH)♦D2LY 6529165-A	1

♦ Includes attaching parts

COPYRIGHT © 1986 — FORD MOTOR COMPANY — DEARBORN, MICHIGAN

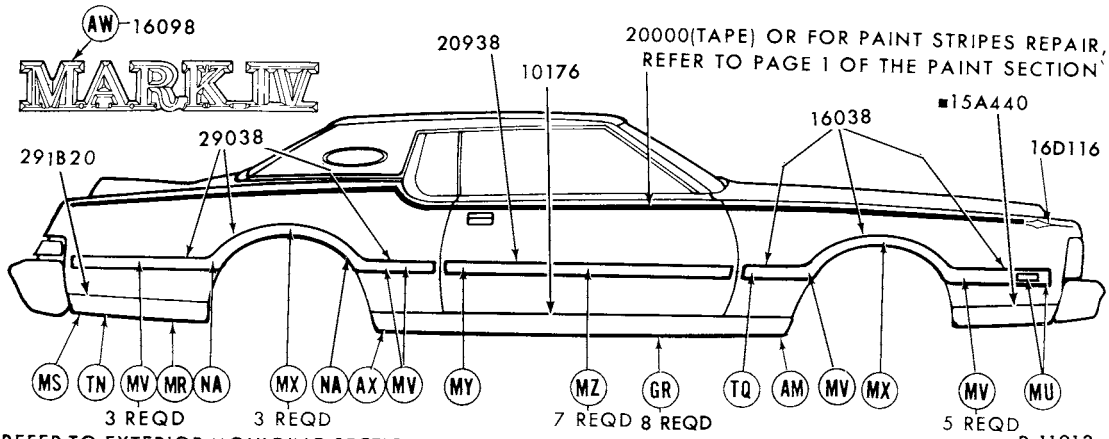

REFER TO EXTERIOR MOULDING SECTION "R" FOR COMPLETE RETAINER INFORMATION
■ REFER TO GROUP IN TEXT SECTION

1976 MARK IV - FULL LENGTH BODY SIDE PROTECTION

GROUP NUMBER	PART NAME	DESCRIPTION	PART NUMBER		QTY.
10176-7	Moulding (body rocker panel)		(RH)♦D2SZ 6510176-A	(LH)♦D2SZ 6510177-A	1
16038-9	Moulding (front fender wheel opening)	Incl. vinyl insert			
		◊Aqua	(RH)✶D5LY 16038-AK	(LH)★D5LY 16039-AK	1
		◊Black	(RH)♦D5LY 16038-AA	(LH)♦D5LY 16039-AA	1
		◊Blue	(RH)✶D5LY 16038-AB	(LH)♦D5LY 16039-AB	1
		◊Cream	(RH)♦D6LY 16038-AV	(LH)♦D6LY 16039-AV	1
		◊Gold	(RH)♦D5LY 16038-AY	(LH)♦D5LY 16039-AY	1
		◊Gray	(RH)♦D6LY 16038-AP	(LH)♦D6LY 16039-AP	1
		◊Jade(dark)	(RH)✶D6LY 16038-BR	(LH)★D6LY 16039-BR	1
		◊Jade(light)	(RH)♦D6LY 16038-AR	(LH)★D6LY 16039-AR Not replaced (4/84)	1
		◊Lipstick red (bright)	(RH)★D5LY 16038-CD	(LH)♦D5LY 16039-CD	1
		◊Red (dark)	(RH)♦D5LY 16038-AD	(LH)♦D5LY 16039-AD	1
		◊Rose	(RH)★D6LY 16038-AD Not replaced (4/84)	(LH)★D6LY 16039-AD Not replaced (4/84)	1
		◊Saddle	(RH)♦D5LY 16038-AZ	(LH)♦D5LY 16039-AZ	1
		◊Silver	(RH)♦D5LY 16038-AP	(LH)♦D5LY 16039-AP	1
		◊White	(RH)♦D5LY 16038-AW	(LH)♦D5LY 16039-AW	1
16098	Plate (name)	"MARK IV"	♦D2LY 16098-A	R.H. and L.H.	2
16D116	Transfer (front fender stripe)	◊Aqua	★D5LY 16D116-A		2
		◊Black	D3LY 16D116-A		2
		◊Blue	★D3LY 16D116-G	Not replaced (3/82)	2
		◊Brown	★D3LY 16D116-F	Not replaced (2/81)	2
		◊Cream	★D6LY 16D116-B	Not replaced (2/81)	2
		◊Gold	✶D3LY 16D116-B		2
		◊Jade(dark)	★D6LY 16D116-C		2
		◊Jade(light)	★D6LY 16D116-A		2
		◊Lipstick red (bright)	★D5LY 16D116-C	Not replaced (2/81)	2
		◊Red(dark)	D4LY 16D116-A		2
		◊Silver	★D3LY 16D116-C	Not replaced (3/82)	2
		◊Tan	★D4L' 16D116-C	Not replaced (2/81)	2
		◊White	✶D3LY 16D116-E		2
		◊Yellow	★D5LY 16D116-B		2
20000	Stripe kit		Refer to page 1 of the Paint Section		

♦ Includes attaching parts

1976 MARK IV - FULL LENGTH BODY SIDE PROTECTION - cont'd.

GROUP NUMBER	PART NAME	DESCRIPTION	PART NUMBER		QTY.
20938-9	Moulding (front door outside)	Incl. vinyl insert			
		◊Aqua	(RH)★D5LY 6520938-AK	(LH)♦D5LY 6520939-AK	1
		◊Black	(RH)♦D5LY 6520938-AA	(LH)♦D5LY 6520939-AA	1
		◊Blue	(RH)♦D5LY 6520938-AB	(LH)♦D5LY 6520939-AB	1
		◊Cream	(RH)♦D6LY 6520938-AV	(LH)♦D6LY 6520939-AV	1
		◊Gold	(RH)♦D5LY 6520938-AY	(LH)♦D5LY 6520939-AY	1
		◊Gray	(RH)♦D6LY 6520938-BP	(LH)♦D6LY 6520939-BP	1
		◊Jade (dark)	(RH)★D6LY 6520938-BR	(LH)♦D6LY 6520939-BR	1
		◊Jade (light)	(RH ✶D6LY 6520938-AR Not replaced (4/83)	(LH)✶D6LY 6520939-AR	1
		◊Lipstick red (bright)	(RH)♦D5LY 6520938-CD	(LH)✶D5LY 6520939-CD Not replaced (4/84)	1
		◊Red (dark)	(RH)★D5LY 6520938-AD	(LH)♦D5LY 6520939-AD	1
		◊Rose	(RH)♦D6LY 6520938-AD	(LH)✶D6LY 6520939-AD Not replaced (4/84)	1
		◊Saddle	(RH)♦D5LY 6520938-AZ	(LH)♦D5LY 6520939-AZ	1
		◊Silver	(RH)♦D5LY 6520938-AP	(LH)♦D5LY 6520939-AP	1
		◊White	(RH)♦D5LY 6520938-AW	(LH)♦D5LY 6520939-AW	1
29038-9	Moulding (quarter panel outside)	Incl. vinyl insert			
		◊Aqua	(RH)✶D5LY 6529038-AK Not replaced (4/84)	(LH)♦D5LY 6529039-AK	1
		◊Black	(RH)♦D5LY 6529038-AA	(LH)♦D5LY 6529039-AA	1
		◊Blue	(RH)♦D5LY 6529038-AB	(LH)♦D5LY 6529039-AB	1
		◊Cream	(RH)♦D6LY 6529038-AV	(LH)♦D6LY 6529039-AV	1
		◊Gold	(RH)♦D5LY 6529038-AY	(LH)♦D5LY 6529039-AY	1
		◊Gray	(RH)♦D6LY 6529038-AP	(LH)♦D6LY 6529039-AP	1
		◊Jade (dark)	(RH)♦D6LY 6529038-BR	(LH)✶D6LY 6529039-BR	1
		◊Jade (light)	(RH)✶D6LY 6529038-AR Not replaced (4/83)	(LH)✶D6LY 6529039-AR Not replaced (4/83)	1
		◊Lipstick red (bright)	(RH)✶D5LY 6529038-CD Not replaced (4/83)	(LH)♦D5LY 6529039-CD	1
		◊Red (dark)	(RH)♦D5LY 6529038-AD	(LH)♦D5LY 6529039-AD	1
		◊Rose	(RH)★D6LY 6529038-AD	(LH)♦D6LY 6529039-AD	1
		◊Saddle	(RH)♦D5LY 6529038-AZ	(LH)♦D5LY 6529039-AZ	1
		◊Silver	(RH)♦D5LY 6529038-AP	(LH)♦D5LY 6529039-AP	1
		◊White	(RH)♦D5LY 6529038-AW	(LH)♦D5LY 6529039-AW	1
291B20-1	Moulding (quarter outside lower)		(RH)♦D4LY 65291B20-A	(LH)♦D4LY 65291B21-A	1

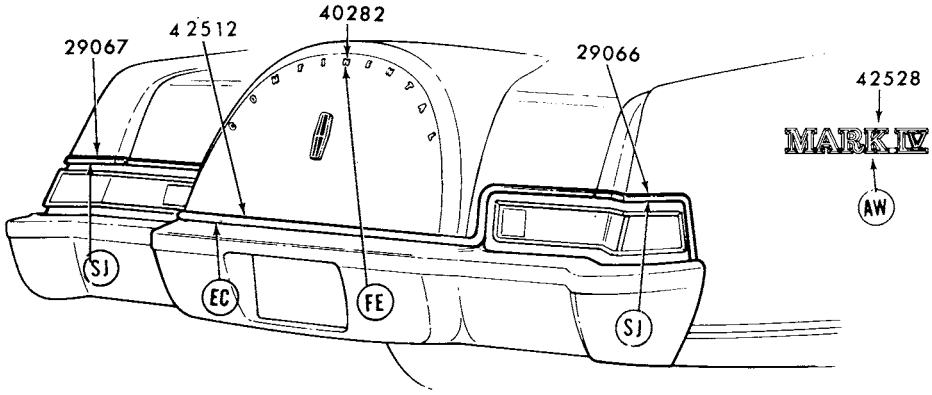

REFER TO EXTERIOR MOULDING SECTION "R" FOR COMPLETE RETAINER INFORMATION P-11078

1976 MARK IV - BACK END

♦ Includes attaching parts
◊ For color verification, refer to the vinyl roof swatches in the 1976 salesman's color and upholstery selections guide

COPYRIGHT © 1986 — FORD MOTOR COMPANY — DEARBORN, MICHIGAN

1976 MARK IV - BACK END - cont'd.

GROUP NUMBER	PART NAME	DESCRIPTION	PART NUMBER	QTY.
29066-7	Moulding (quarter lower rear)		(RH)♦ D4LY 6529066-A (LH)♦ D4LY 6529067-A	1
40282	Letter (name)	"C"	★♦ D3VY 16606-K	1
		"O"	★♦ D0LY 6540282-B	1
		"N"	★♦ D0LY 6540282-C	3
		"T"	★♦ D0LY 6540282-D	2
		"I"	★♦ D0LY 6540282-E	1
		"E"	★♦ D0LY 6540282-F	1
		"A"	★♦ D0LY 6540282-G	1
		"L"	★♦ D7LY 6540282-B	1
42512	Moulding (luggage compartment door)		♦ D4LY 6542512-A	1
42528	Plate (name)		♦ D2LY 6542528-A	1

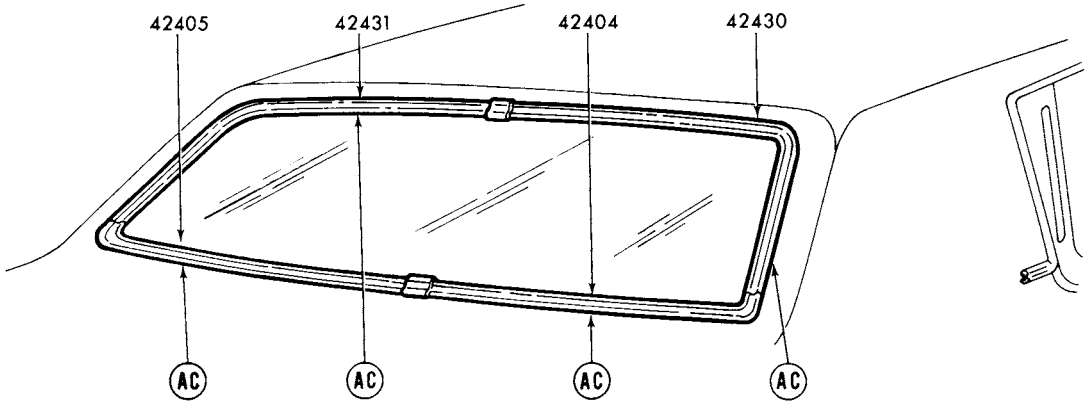

REFER TO EXTERIOR MOULDING SECTION "R" FOR COMPLETE RETAINER INFORMATION

P-12459

1976 MARK IV - BACK WINDOW - BRIGHT

GROUP NUMBER	PART NAME	DESCRIPTION	PART NUMBER	QTY.
42404-5	Moulding (back window outside lower)		(RH)♦ D2SZ 6542404-A (LH)♦ D2SZ 6542405-A	1
42430-1	Moulding (back window outside upper)		(RH)♦ D2SZ 6542430-A (LH)♦ D2SZ 6542431-A	1

♦ Includes attaching parts

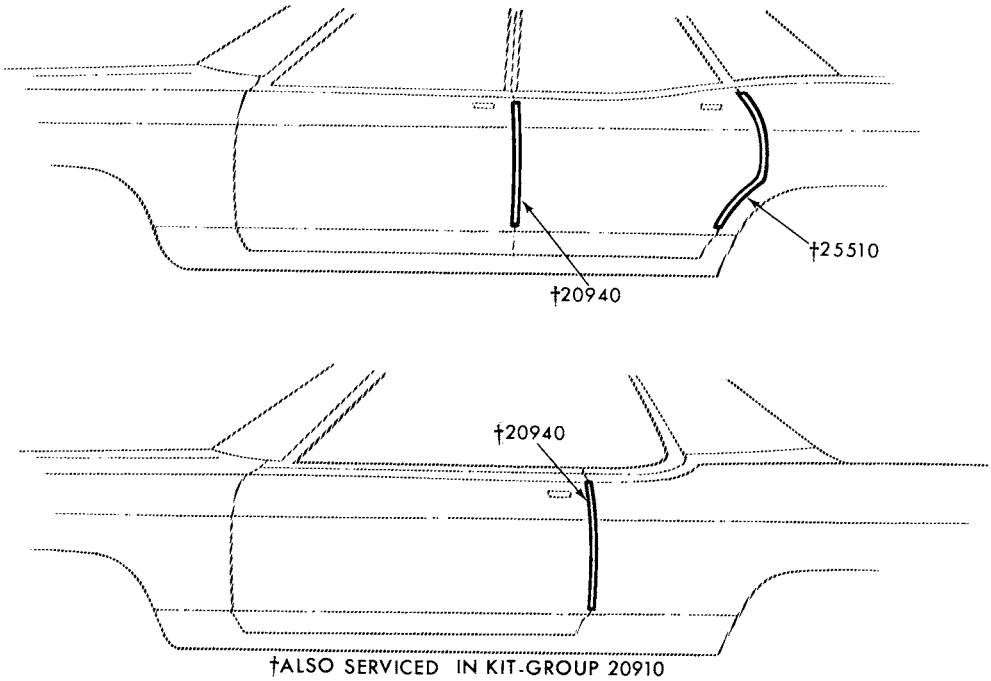

1976 MARK IV - DOOR EDGE GUARD

GROUP NUMBER	PART NAME	DESCRIPTION	PART NUMBER	QTY.
20940-1	Moulding (front door edge guard)		(RH) D2LY 6520940-A (LH) D2LY 6520941-A	1

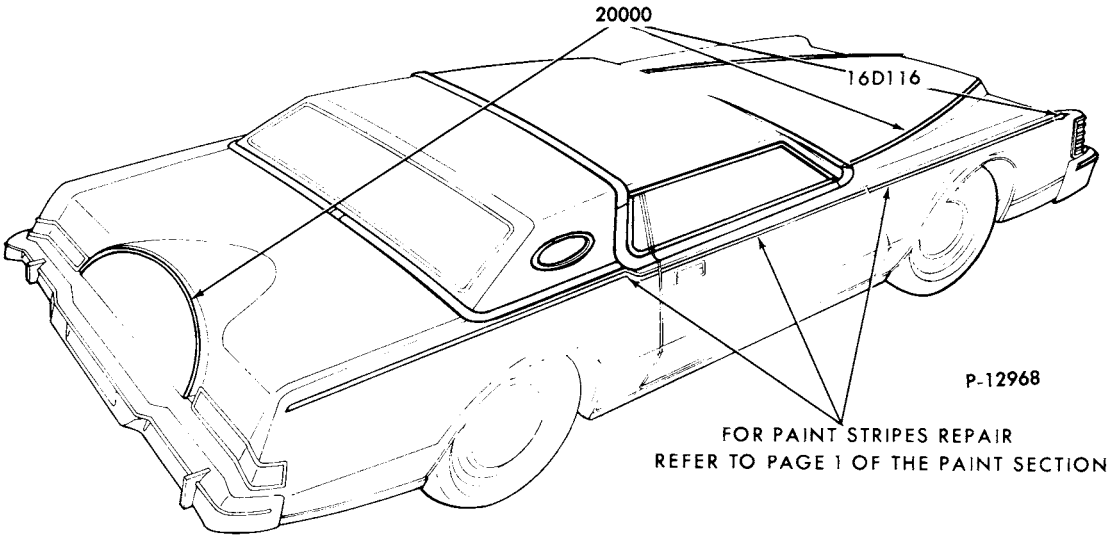

1976 MARK IV - STRIPES

COPYRIGHT © 1986 — FORD MOTOR COMPANY — DEARBORN, MICHIGAN

1976 MARK IV - STRIPES - cont'd.

GROUP NUMBER	PART NAME	DESCRIPTION	PART NUMBER		QTY.
16D116	Transfer (front fender stripe)	Black/white	(RH) D6LY 16D116-AA	(LH)★D6LY 16D117-AA Not replaced (3/82)	1
		Bright red/silver	(RH) D6LY 16D116-AD	(LH) D6LY 16D117-AD	1
		Gold/yellow	(RH)★D6LY 16D116-AG Not replaced (2/81)	(LH)★D6LY 16D117-AG Not replaced (2/81)	1
		Jade/white	(RH) D6LY 16D116-AR	(LH) D6LY 16D117-AR	1
		White/bright red	(RH)★D6LY 16D116-AW Not replaced (2/81)	(LH) D6LY 16D117-AW	1
20000	Stripe kit (hood and luggage compartment)	Black/white	D6LY 6520000-AA		1
		Bright red/silver	D6LY 6520000-AD		1
		Brown/tan	D6LY 6520000-AU		1
		Gold/yellow	D6LY 6520000-AG		1
		Jade/white	D6LY 6520000-AR		1
		White/bright red	D6LY 6520000-AW		1

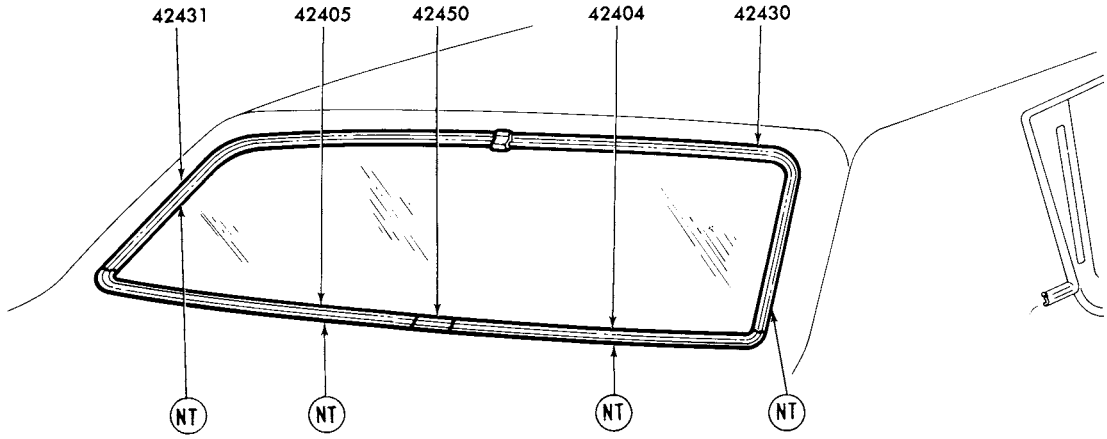

REFER TO EXTERIOR MOULDING SECTION "R" FOR COMPLETE RETAINER INFORMATION P-12490

1976 MARK IV - BACK WINDOW - COLOR KEYED

GROUP NUMBER	PART NAME	DESCRIPTION	PART NUMBER		QTY.
42404-5	Moulding (back window lower)	Incl. vinyl insert			
		◊Aqua	(RH)♦ D5LY 6542404-D	(LH)♦ D5LY 6542405-D	1
		◊Black	(RH)♦D5LY 6542404-F	(LH)♦D5LY 6542405-F	1
		◊Blue	(RH)♦D6LY 6542404-K	(LH)♦D6LY 6542405-K	1
		◊Cream	(RH)♦D6LY 6542404-A	(LH)♦D6LY 6542405-A	1
		◊Gold	(RH)♦D6LY 6542404-H	(LH)♦D6LY 6542405-H	1
		◊Gray	(RH)♦D6LY 6542404-P	(LH)♦D6LY 6542405-P	1
		◊Jade(dark)	(RH)♦D6LY 6542404-D	(LH)♦D6LY 6542405-D	1
		◊Jade(light)	(RH)♦D6LY 6542404-E	(LH)♦D6LY 6542405-E	1
		◊Lipstick red (bright)	(RH)♦D6LY 6542404-F	(LH)♦D6LY 6542405-F	1
		◊Red(dark)	(RH)♦ D5LY 6542404-G	(LH)♦ D5LY 6542405-G	1
		◊Rose	(RH)♦D6LY 6542404-B	(LH)♦D6LY 6542405-B	1
		◊Saddle	(RH)♦D6LY 6542404-J	(LH)♦D6LY 6542405-J	1
		◊Silver	(RH)♦D5LY 6542404-C	(LH)♦D5LY 6542405-C	1
		◊Tan	(RH)♦D6LY 6542404-N	(LH)♦D6LY 6542405-N	1
		◊White	(RH)♦D6LY 6542404-C	(LH)♦D6LY 6542405-C	1

♦ Includes attaching parts

◊ For color verification, refer to the vinyl roof swatches in the 1976 salesman's color and upholstery selections guide.

1976 MARK IV - BACK WINDOW - COLOR KEYED - cont'd.

GROUP NUMBER	PART NAME	DESCRIPTION	PART NUMBER		QTY.
42430-1	Moulding (back window upper)	Incl. vinyl insert			
		◊ Aqua	(RH)♦ D5LY 6542430-D	(LH)♦ D5LY 6542431-D	1
		◊ Black	(RH)♦ D5LY 6542430-F	(LH)♦ D5LY 6542431-F	1
		◊ Blue	(RH)♦ D6LY 6542430-K	(LH)♦ D6LY 6542431-K	1
		◊ Cream	(RH)♦ D6LY 6542430-A	(LH)♦ D6LY 6542431-A	1
		◊ Gold	(RH)♦ D6LY 6542430-H	(LH)♦ D6LY 6542431-H	1
		◊ Gray	(RH)♦ D6LY 6542430-R	(LH)♦ D6LY 6542431-R	1
		◊ Jade (dark)	(RH)♦ D6LY 6542430-D	(LH)♦ D6LY 6542431-D	1
		◊ Jade (light)	(RH)♦ D6LY 6542430-E	(LH)♦ D6LY 6542431-E	1
		◊ Lipstick red (bright)	(RH)♦ D6LY 6542430-F	(LH)♦ D6LY 6542431-F	1
		◊ Red (dark)	(RH)♦ D5LY 6542430-G	(LH)♦ D5LY 6542431-G	1
		◊ Rose	(RH)♦ D6LY 6542430-B	(LH)♦ D6LY 6542431-B	1
		◊ Silver	(RH)♦ D5LY 6542430-C	(LH)♦ D5LY 6542431-C	1
		◊ Tan	(RH)♦ D6LY 6542430-P	(LH)♦ D6LY 6542431-P	1
		◊ White	(RH)✱ D6LY 6542430-C Not replaced (4/83)	(LH)♦ D6LY 6542431-L	1
42450	Cover (back window moulding joint)	Incl. vinyl insert			
		◊ Aqua	D5LY 6542450-D		1
		◊ Black	D5LY 6542450-F		1
		◊ Blue	D6LY 6542450-K		1
		◊ Cream	D6LY 6542450-A		1
		◊ Gold	D6LY 6542450-H		1
		◊ Gray	D6LY 6542450-P		1
		◊ Jade (dark)	D6LY 6542450-D		1
		◊ Jade (light)	D6LY 6542450-E		1
		◊ Lipstick red (bright)	D6LY 6542450-F		1
		◊ Red (dark)	D5LY 6542450-G		1
		◊ Rose	D6LY 6542450-B		1
		◊ Saddle	D6LY 6542450-J		1
		◊ Silver	D5LY 6542450-C		1
		◊ Tan	D6LY 6542450-N		1
		◊ White	✱ D6LY 6542450-C Not replaced (4/83)		1

♦ Includes attaching parts

◊ For color verification, refer to the vinyl roof swatches in the 1976 salesman's color and upholstery selections guide.

COPYRIGHT © 1986 — FORD MOTOR COMPANY — DEARBORN, MICHIGAN

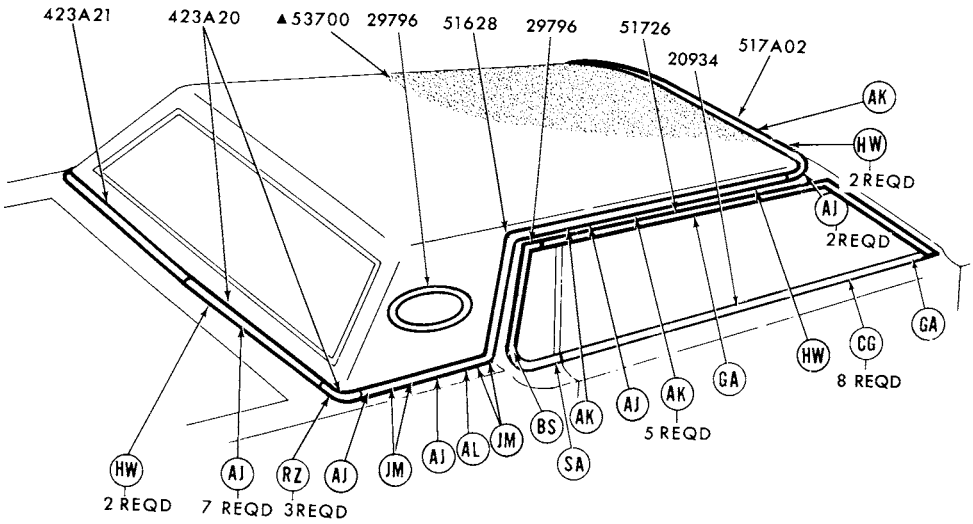

REFER TO EXTERIOR MOULDING SECTION "R" FOR COMPLETE RETAINER INFORMATION
▲ REFER TO GROUP IN SOFT TRIM SECTION

P-11932

1976 MARK IV - ROOF and BACK BELT - w/FULL VINYL ROOF

GROUP NUMBER	PART NAME	DESCRIPTION	PART NUMBER		QTY.
20934-5	Moulding and weatherstrip (front door outside belt)		(RH)♦ D4LY 6520934-A	(LH)♦ D4LY 6520935-A	1
29796-7	Moulding (quarter window outside)		(RH) D2LY 6529796-C	(LH) D2LY 6529797-C	1
29796	Moulding (opera window)	Bright finish	D2LY 6529796-B	R.H. and L.H.	2
		Bright finish w/ vinyl tape			
		◊Aqua	D5LY 6529796-F	R.H. and L.H.	2
		◊Black	D6LY 6529796-A	R.H. and L.H.	2
		◊Blue	D5LY 6529796-D	R.H. and L.H.	2
		◊Cream	D6LY 6529796-V	R.H. and L.H.	2
		◊Gold	D5LY 6529796-K	R.H. and L.H.	2
		◊Gray	D6LY 6529796-AP	R.H. and L.H.	2
		◊Jade(dark)	D5LY 6529796-P	R.H. and L.H.	2
		◊Jade(light)	D6LY 6529796-J	R.H. and L.H.	2
		◊Lipstick red (bright)	D6LY 6529796-D	R.H. and L.H.	2
		◊Red(dark)	D5LY 6529796-B	R.H. and L.H.	2
		◊Rose	D6LY 6529796-R	R.H. and L.H.	2
		◊Saddle	D5LY 6529796-J	R.H. and L.H.	2
		◊Silver	D5LY 6529796-M	R.H. and L.H.	2
		◊Tan	D5LY 6529796-G	R.H. and L.H.	2
		◊White	D6LY 6529796-W	R.H. and L.H.	2

♦ Includes attaching parts
◊ For color verification, refer to the vinyl roof swatches in the 1976 salesman's color and upholstery selections guide.

1976 MARK IV - ROOF and BACK BELT - w/FULL VINYL ROOF - cont'd.

GROUP NUMBER	PART NAME	DESCRIPTION	PART NUMBER		QTY.
423A20-1	Moulding back belt)	Incl. vinyl tape			
		◊Aqua	(RH)♦D5LY 65423A20-H	(LH)♦D5LY 65423A21-H	1
		◊Black	(RH)♦D6LY 65423A20-A	(LH)♦D6LY 65423A21-A	1
		◊Blue	(RH)♦D5LY 65423A20-F	(LH)♦D5LY 65423A21-F	1
		◊ Cream	(RH)♦D6LY 65423A20-V	(LH)♦D6LY 65423A21-V	1
		◊Gold	(RH)♦D5LY 65423A20-K	(LH)♦D5LY 65423A21-K	1
		◊ Gray	(RH)♦D6LY 65423A20-AP	(LH)♦D6LY 65423A21-AP	1
		◊ Jade(dark)	(RH)♦D6LY 65423A20-AR	(LH)♦D6LY 65423A21-AR	1
		◊ Jade(light)	(RH)♦D6LY 65423A20-R	(LH)♦D6LY 65423A21-R	1
		◊Lipstick red(bright)	(RH)♦D6LY 65423A20-D	(LH)♦D6LY 65423A21-D	1
		◊Red(dark)	(RH)♦D5LY 65423A20-D	(LH)♦D5LY 65423A21-D	1
		◊Rose	(RH)♦D6LY 65423A20-E	(LH)♦D6LY 65423A21-E	1
		◊Saddle	(RH)♦D5LY 65423A20-G	(LH)♦D5LY 65423A21-G	1
		◊Silver	(RH)♦D6LY 65423A20-P	(LH)♦D6LY 65423A21-P	1
		◊Tan	(RH)♦D5LY 65423A20-J	(LH)♦D5LY 65423A21-J	1
		◊White	(RH)♦D6LY 65423A20-W	(LH)♦D6LY 65423A21-W	1
51628-9	Moulding (roof side)	Incl. vinyl tape			
		◊Aqua	(RH)♦D5LY 6551628-G	(LH)♦D5LY 6551629-G	1
		◊Black	(RH)♦D6LY 6551628-A	(LH)♦D6LY 6551629-A	1
		◊Blue	(RH)♦D5LY 6551628-F	(LH)♦D5LY 6551629-F	1
		◊Cream	(RH)♦D6LY 6551628-V	(LH)♦D6LY 6551629-V	1
		◊Gold	(RH)♦D5LY 6551628-K	(LH)♦D5LY 6551629-K	1
		◊ Gray	(RH)♦D6LY 6551628-AP	(LH)♦D6LY 6551629-AP	1
		◊ Jade(dark)	(RH)♦D6LY 6551628-AR	(LH)♦D6LY 6551629-AR	1
		◊ Jade(light)	(RH)♦D6LY 6551628-R	(LH)♦D6LY 6551629-R	1
		◊Lipstick red (bright)	(RH)♦D6LY 6551628-D	(LH)♦D6LY 6551629-D	1
		◊Red(dark)	(RH)♦D5LY 6551628-D	(LH)♦D5LY 6551629-D	1
		◊Rose	(RH)♦D6LY 6551628-E	(LH)♦D6LY 6551629-E	1
		◊Saddle	(RH)♦D5LY 6551628-J	(LH)♦D5LY 6551629-J	1
		◊Silver	(RH)♦D6LY 6551628-P	(LH)♦D6LY 6551629-P	1
		◊Tan	(RH)♦D5LY 6551628-H	(LH)♦D5LY 6551629-H	1
		◊White	(RH)♦D6LY 6551628-W	(LH)♦D6LY 6551629-W	1
517A02	Moulding (roof front)	Incl. vinyl tape			
		◊Aqua	★D5LY 65517A02-G	Not replaced (4/83)	1
		◊Black	♦D6LY 65517A02-A		1
		◊Blue	★D5LY 65517A02-F	Not replaced (4/83)	1
		◊Cream	♦D6LY 65517A02-V		1
		◊Gold	♦D5LY 65517A02-K		1
		◊ Gray	♦D6LY 65517A02-AP		1
		◊ Jade(dark)	♦D6LY 65517A02-BR		1
		◊ Jade(light)	♦D6LY 65517A02-R		1
		◊Lipstick red (bright)	♦D6LY 65517A02-D		1
		◊Red(dark)	♦D5LY 65517A02-D		1
		◊Rose	♦D6LY 65517A02-E		1
		◊Saddle	★D5LY 65517A02-J	Not replaced (4/83)	1
		◊Silver	♦D6LY 65517A02-P		1
		◊Tan	♦D5LY 65517A02-H		1
		◊White	★D6LY 65517A02-W	Not replaced (4/83)	1
51726-7	Moulding (roof drip side finish)	Black	(RH)♦D6LY 6551726-AA	(LH)♦D6LY 6551727-AA	1
		Cream	(RH)♦D6LY 6551726-AV	(LH)♦D6LY 6551727-AV	1

♦ Includes attaching parts
◊ For color verification, refer to the vinyl roof swatches in the 1976 salesman's color and upholstery selections guide

COPYRIGHT © 1986 — FORD MOTOR COMPANY — DEARBORN, MICHIGAN

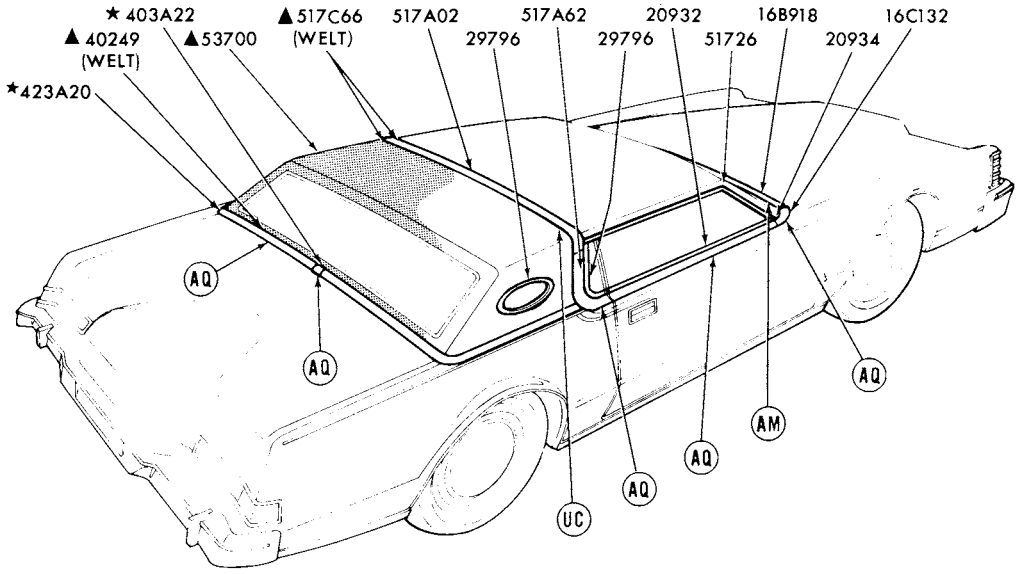

▲ REFER TO GROUP IN SOFT TRIM SECTION
REFER TO EXTERIOR MOULDING SECTION "R" FOR COMPLETE RETAINER INFORMATION P-13106

1976 MARK IV - ROOF and BACK BELT - w/HALF VINYL ROOF

GROUP NUMBER	PART NAME	DESCRIPTION	PART NUMBER		QTY.
16C132-3	Moulding (front fender upper rear)		(RH)♦D5LY 16C132-A	(LH)♦D5LY 16C133-A	1
16B918	Moulding (hood rear)		♦D5LY 16B918-A		1
20932-3	Moulding (door upper)	W/mirror	(RH)★D5LY 6520932-A	(LH)★D5LY 6520933-A	1
		W/o mirror	(RH)♦D5LY 6520932-B	(LH)♦D5LY 6520933-B	1
20934-5	Moulding and weatherstrip (front door belt)		(RH)♦D4LY 6520934-A	(LH)♦D4LY 6520935-A	1
29796-7	Moulding (quarter window)		(RH) D2LY 6529796-C	(LH) D2LY 6529797-C	1
29796	Moulding (opera window)	Bright finish w/vinyl tape			
		Cream	D6LY 6529796-V	R.H. and L.H.	2
		Gray	D6LY 6529796-AP	R.H. and L.H.	2
		Jade	D6LY 6529796-J	R.H. and L.H.	2
		Silver	D6LY 6529796-S	R.H. and L.H.	2
		White	D6LY 6529796-W	R.H. and L.H.	2
403A22	Cover (back belt moulding joint)		★D5LY 65403A22-A Not replaced (4/83)		1
423A20-1	Moulding (back belt)		(RH)★D5LY 65423A20-R Not replaced (4/83)	(LH)★D5LY 65423A21-R Not replaced (4/83)	1
517A02	Moulding (roof rear side)		♦D6LY 65517A02-B		1
51726-7	Moulding (roof drip side finish)	Black	(RH)♦D6LY 6551726-AA	(LH)♦D6LY 6551727-AA	1
		Cream	(RH)♦D6LY 6551726-AV	(LH)★D6LY 6551727-AV Not replaced (4/83)	1
517A62	Moulding (roof side rear)		(RH)♦D5LY 65517A62-A	(LH)♦D5LY 65517A63-A	1

♦ Includes attaching parts

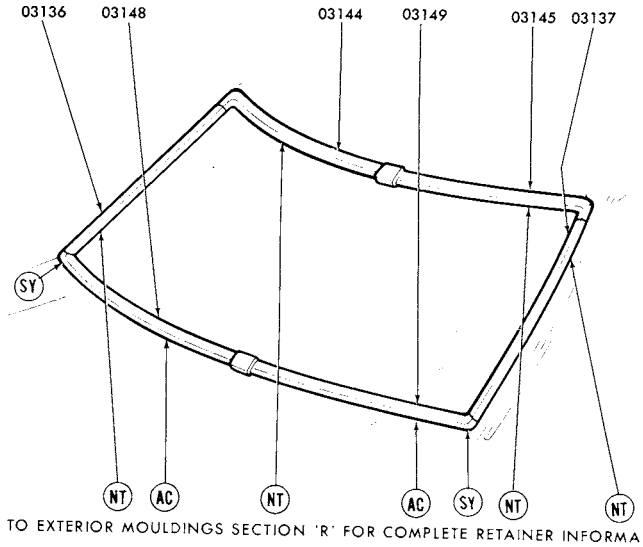

REFER TO EXTERIOR MOULDINGS SECTION 'R' FOR COMPLETE RETAINER INFORMATION

P-12522

1976 BOBCAT - WINDSHIELD

GROUP NUMBER	PART NAME	DESCRIPTION	PART NUMBER		QTY.
03136-7	Moulding (windshield outside side)	Bright	(RH)♦D1FZ 6203136-A	(LH)♦D1FZ 6203137-A	1
		Black	(RH)♦D6FZ 6403136-A	(LH)♦D6FZ 6403137-A	1
03144-5	Moulding (windshield outside top)	Bright	(RH)♦D1FZ 6203144-A	(LH)♦D1FZ 6203145-A	1
		Black	(RH)✶D6FZ 6403144-A	(LH)♦D6FZ 6403145-A	1
03148-9	Moulding (windshield outside belt)	Bright	(RH)♦D4FZ 6203148-A	(LH)♦D4FZ 6203149-A	1
		Black	(RH)♦D6FZ 6403148-A	(LH)♦D6FZ 6403149-A	1

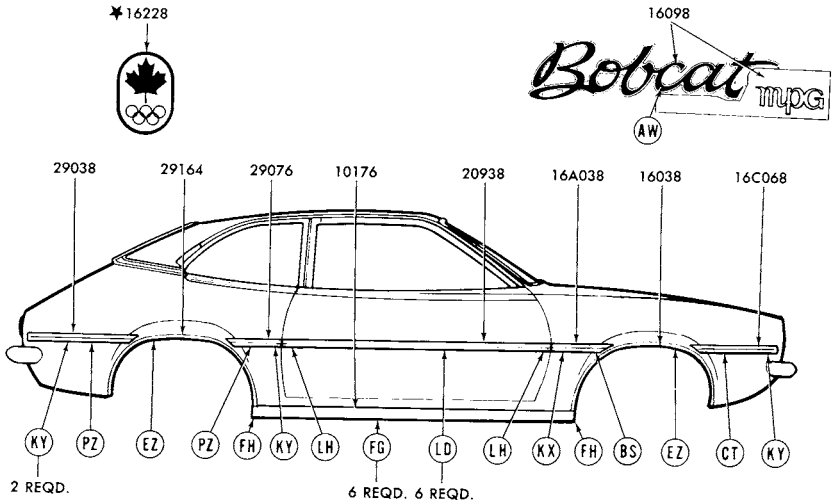

REFER TO EXTERIOR MOULDING SECTION "R" FOR COMPLETE RETAINER INFORMATION.

P-12314

1976 BOBCAT - BODY TYPES 62 and 64 - SIDE

♦ Includes attaching parts

COPYRIGHT © 1986 — FORD MOTOR COMPANY — DEARBORN, MICHIGAN

1976 BOBCAT - BODY TYPES 62 and 64 - SIDE - cont'd.

GROUP NUMBER	PART NAME	DESCRIPTION	PART NUMBER		QTY.
10176-7	Moulding (body rocker panel)	W/wheel opening mouldings - 63 1/2" long	(RH)♦D5FZ 6210176-B	(LH)♦D5FZ 6210177-B	1
		W/o wheel opening mouldings	♦D6FZ 6210176-A	R.H. and L.H.	2
16038-9	Moulding (front fender wheel opening)		(RH)♦D5FZ 16038-A	(LH)♦D5FZ 16039-A	1
16A038-9	Moulding (front fender lower rear)	Incl. vinyl insert			
		◊Black	(RH)★D5FZ 16A038-AA	(LH)♦D5FZ 16A039-AA	1
		◊Blue	(RH)★D5FZ 16A038-AB	(LH)★D5FZ 16A039-AB	1
		◊Green	(RH)★D5FZ 16A038-AG	(LH)♦D5FZ 16A039-AG	1
		◊Red	(RH)♦D6FZ 16A038-AD	(LH)♦D6FZ 16A039-AD	1
		◊Tan	(RH)♦D6FZ 16A038-AU	(LH)♦D6FZ 16A039-AU	1
		◊White	(RH)★D5FZ 16A038-AW	(LH)★D5FZ 16A039-AW	1
16C068-9	Moulding (front fender lower front)	Incl. vinyl insert			
		◊Black	(RH)♦D5FZ 16C068-AA	(LH)♦D5FZ 16C069-AA	1
		◊Blue	(RH)♦D5FZ 16C068-AB	(LH)♦D5FZ 16C069-AB	1
		◊Green	(RH)♦D5FZ 16C068-AG	(LH)♦D5FZ 16C069-AG	1
		◊Red	(RH)♦D6FZ 16C068-AD	(LH)♦D6FZ 16C069-AD	1
		◊Tan	(RH)♦D6FZ 16C068-AU	(LH)♦D6FZ 16C069-AU	1
		◊White	(RH)♦D5FZ 16C068-AW	(LH)♦D5FZ 16C069-AW	1
16098	Plate (name)	"Bobcat"	♦D5YY 16098-A	R.H. and L.H.	2
16098	Transfer (front fender)	"MPG"			
		"Before 3/15/76"	D5YY 16098-B	Incl. R.H. and L.H.	1
		"From 3/15/76"	D6FZ 16098-E	Incl. R.H. and L.H.	1
		"Special MPG"- "Before 3/16/76"	✱D6YY 16098-A Not replaced (4/84)	R.H. and L.H.	2
		"From 3/16/76"	D6YY 16098-B	R.H. and L.H.	2
16228	Transfer (front fender)	Olympic crest- green, red and white - incl. R.H. and L.H.	★D6FZ 16228-A Not replaced (4/84)		1
20938-9	Moulding (front door outside)	Incl. vinyl insert			
		◊Black	(RH)♦D5FZ 6220938-AA	(LH)♦D5FZ 6220939-AA	1
		◊Blue	(RH)♦D5FZ 6220938-AB	(LH)♦D5FZ 6220939-AB	1
		◊Green	(RH)♦D5FZ 6220938-AG	(LH)♦D5FZ 6220939-AG	1
		◊Red	(RH)♦D6FZ 6220938-AD	(LH)♦D6FZ 6220939-AD	1
		◊Tan	(RH)♦D6FZ 6220938-AU	(LH)♦D6FZ 6220939-AU	1
		◊White	(RH)♦D5FZ 6220938-AW	(LH)♦D5FZ 6220939-AW	1
29038-9	Moulding (quarter outside lower rear)	Incl. vinyl insert			
		◊Black	(RH)♦D5FZ 6229038-AA	(LH)♦D5FZ 6229039-AA	1
		◊Blue	(RH)♦D5FZ 6229038-AB	(LH)♦D5FZ 6229039-AB	1
		◊Green	(RH)♦D5FZ 6229038-AG	(LH)♦D5FZ 6229039-AG	1
		◊Red	(RH)♦D6FZ 6229038-AD	(LH)♦D6FZ 6229039-AD	1
		◊Tan	(RH)♦D6FZ 6229038-AU	(LH)♦D6FZ 6229039-AU	1
		◊White	(RH)♦D5FZ 6229038-AW	(LH)♦D5FZ 6229039-AW	1
29076-7	Moulding (quarter outside lower front)	Incl. vinyl insert			
		◊Black	(RH)♦D5FZ 6229076-AA	(LH)♦D5FZ 6229077-AA	1
		◊Blue	(RH)♦D5FZ 6229076-AB	(LH)♦D5FZ 6229077-AB	1
		◊Green	(RH)♦D5FZ 6229076-AG	(LH)♦D5FZ 6229077-AG	1
		◊Red	(RH)♦D6FZ 6229076-AD	(LH)♦D6FZ 6229077-AD	1
		◊Tan	(RH)★D6FZ 6229076-AU Not replaced (6/83)	(LH)♦D6FZ 6229077-AU	1
		◊White	(RH)♦D5FZ 6229076-AW	(LH)★D5FZ 6229077-AW Not replaced (6/83)	1
29164-5	Moulding (quarter wheel opening)		(RH)♦D5FZ 6229164-A	(LH)♦D5FZ 6229165-A	1

♦ Includes attaching parts @ Canada only

◊ For color verification, refer to the vinyl roof swatches in the 1976 salesman's color and upholstery selections guide.

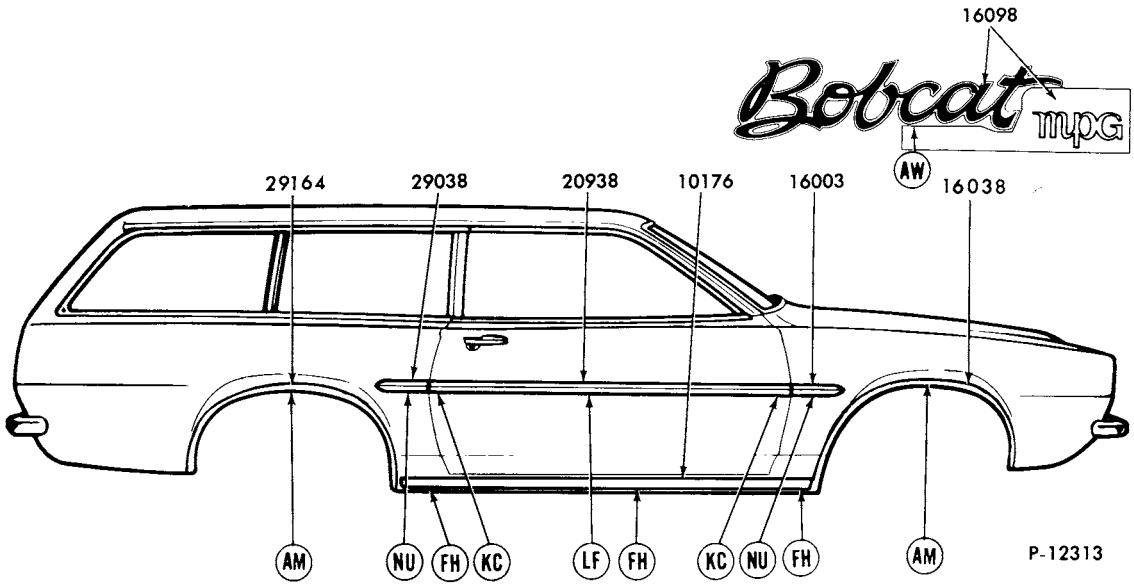

REFER TO EXTERIOR MOULDING SECTION "R" FOR COMPLETE RETAINER INFORMATION

1975 BOBCAT - BODY TYPE 73B - SIDE

GROUP NUMBER	PART NAME	DESCRIPTION	PART NUMBER		QTY
10176-7	Moulding (body rocker panel)		(RH)♦D5FZ 6210176-B	(LH)♦D5FZ 6210177-B	1
16003	Moulding (front fender side)	Black vinyl insert-adhesive backed-57" long-cut to fit	D4GZ 16003-A	R.H. and L.H.	2
16038-9	Moulding (front fender wheel opening)		(RH)♦D5FZ 16038-A	(LH)♦D5FZ 16039-A	1
16098	Plate (front fender name)	"Bobcat"	♦D5YY 16098-A	R.H. and L.H.	2
16098	Transfer (front fender)	"MPG"			
		"Before 3/15/76"	D5YY 16098-B	Incl. R.H. and L.H.	1
		"From 3/15/76"	D6FZ 16098-C	Incl. R.H. and L.H.	1
		"Special MPG"-"Before 3/15/76"	D6YY 16098-A	Incl. R.H. and L.H.	1
		"From 3/15/76"	D6YY 16098-B	Incl. R.H. and L.H.	1
20938	Moulding (front door outside)	Black vinyl insert-adhesive backed-57" long-cut to fit	D4GZ 16003-A	R.H. and L.H.	2
29038	Moulding (quarter panel outside)	Black vinyl insert-adhesive backed-57" long-cut to fit	D4GZ 16003-A	R.H. and L.H.	2
29164-5	Moulding (quarter wheel opening)		(RH)♦D5FZ 7329164-A	(LH)♦D5FZ 7329165-A	1

♦ Includes attaching parts

COPYRIGHT © 1986 — FORD MOTOR COMPANY — DEARBORN, MICHIGAN

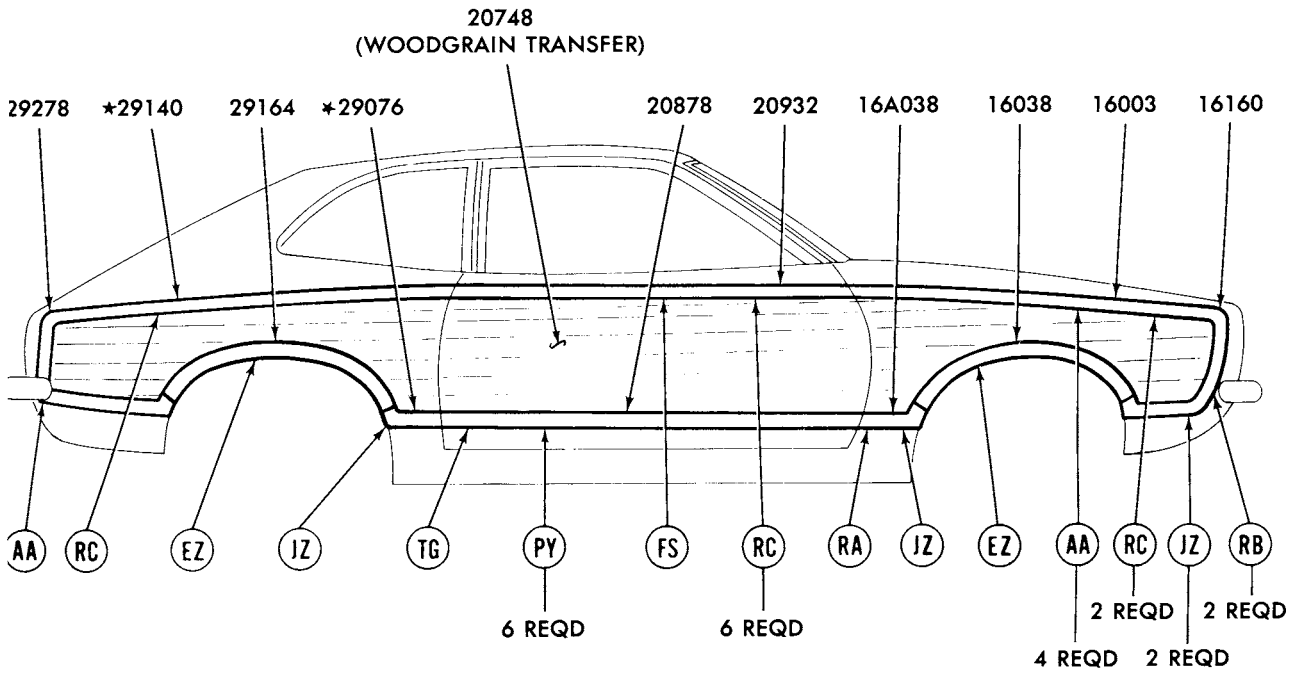

P-12921

1976 BOBCAT - BODY TYPE 64H - SIDE

GROUP NUMBER	PART NAME	DESCRIPTION	PART NUMBER		QTY.
16003-4	Moulding (front fender upper)		(RH)♦D5YY 16003-A	(LH)♦D5YY 16004-A	1
16038-9	Moulding (front fender wheel opening)		(RH)♦D5YY 16038-A	(LH)♦D5YY 16039-A	1
16A038-9	Moulding (front fender lower rear)		(RH)♦D5YY 16A038-A	(LH)♦D5YY 16A039-A	1
16160-1	Moulding (front fender front)		(RH)♦D5YY 16160-A	(LH)♦D5YY 16161-A	1
20748	Transfer (wood grain)	Med. cherry wood grain-adhesive type-60" x 19 1/2"-cut to fit	D6FZ 6420748-A		AR
20878-9	Moulding (door outside lower)		(RH)♦D5YY 7320878-A	(LH)♦D5YY 7320879-A	1
20932-3	Moulding (door outside upper)		(RH)♦D5YY 7320932-A	(LH)♦D5YY 7320933-A	1
29164-5	Moulding (quarter wheel opening)		(RH)♦D6FZ 6429164-A	(LH)♦D6FZ 6429165-A	1
29278-9	Moulding (quarter outside rear)		(RH)♦D6FZ 6429278-A	(LH)*D6FZ 6429279-A Not replaced (6/82)	1

♦ Includes attaching parts

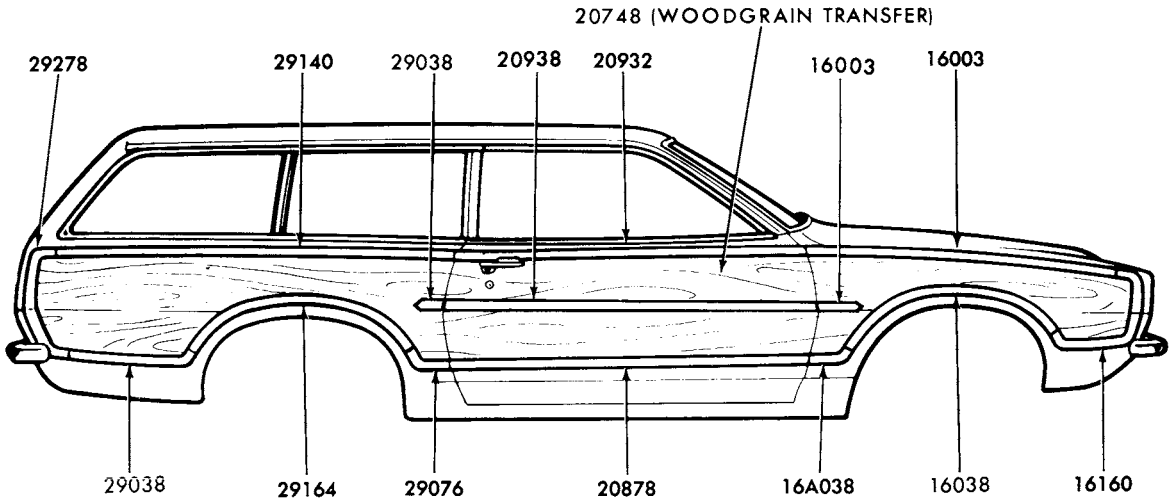

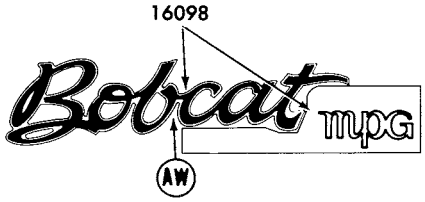

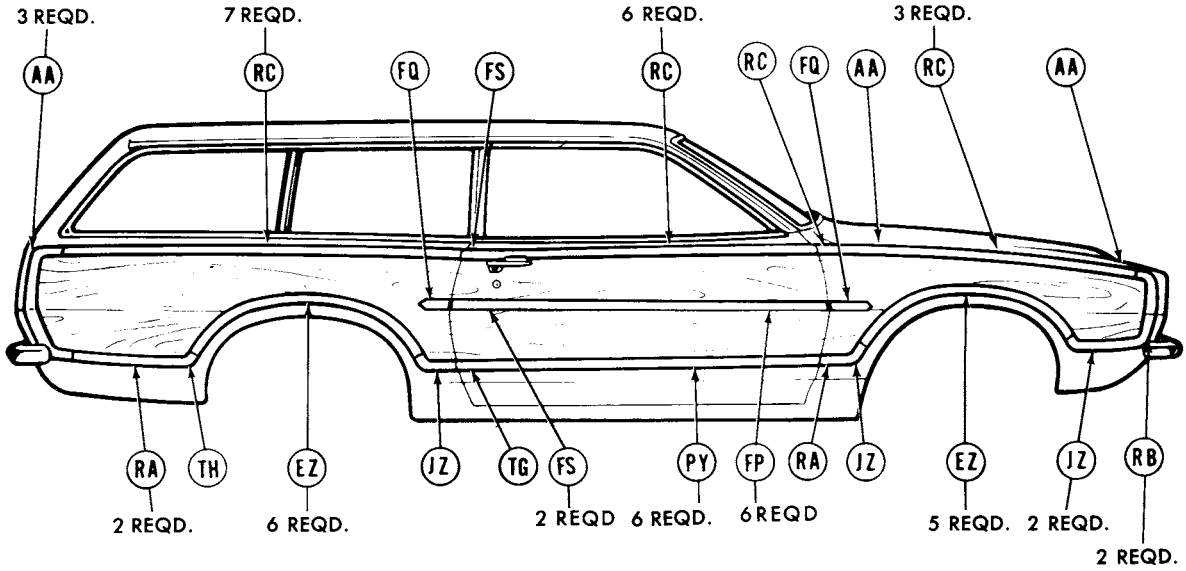

REFER TO EXTERIOR MOULDING SECTION "R" FOR COMPLETE RETAINER INFORMATION.

P-12315

1976 BOBCAT - BODY TYPE 73H - SIDE

COPYRIGHT © 1986 — FORD MOTOR COMPANY — DEARBORN, MICHIGAN

1976 BOBCAT - BODY TYPE 73H - SIDE - cont'd.

GROUP NUMBER	PART NAME	DESCRIPTION	PART NUMBER		QTY.
16003-4	Moulding (front fender upper)	Bright finish	(RH)♦D5YY 16003-A	(LH)♦D5YY 16004-A	1
16003	Moulding (front fender side)	Brown vinyl insert	♦D4FZ 16003-B	R.H. and L.H.	2
16038-9	Moulding (front fender wheel opening)		(RH)♦D5YY 16038-A	(LH)♦D5YY 16039-A	1
16A038-9	Moulding (front lower rear)		(RH) D5YY 16A038-A	(LH) D5YY 16A039-A	1
16098	Plate (front fender name)	"BOBCAT"	♦D5YY 16098-A	R.H. and L.H.	2
		"VILLAGER"	♦D2GY 16098-B	R.H. and L.H.	2
16098	Transfer (front fender)	"MPG"	D5YY 16098-B	R.H. and L.H.	2
16160-1	Moulding (front fender front)		(RH)♦D5YY 16160-A	(LH)♦D5YY 16161-A	1
20748	Transfer (wood grain)	Rosewood grain-adhesive type-17" x 60"-cut to fit-"Before 1/1/76"	D5YY 7320748-A		AR
		Rosewood-"From 1/1/76"	♦D6YY 7320748-A		AR
20878-9	Moulding (front door outside lower)	Bright finish	(RH)♦D5YY 7320878-A	(LH)♦D5YY 7320879-A	1
20932-3	Moulding (front door outside upper)	Bright finish	(RH)♦D5YY 7320932-A	(LH)♦D5YY 7320933-A	1
20938	Moulding (front door outside)	Brown vinyl insert	♦D4FZ 7320938-A	R.H. and L.H.	2
29038-9	Moulding (quarter panel)	Bright finish-lower rear	(RH)♦D5YY 7329038-A	(LH)♦D5YY 7329039-A	1
		Brown vinyl insert	♦D4FZ 16003-B	R.H. and L.H.	2
29076-7	Moulding (quarter outside lower front)	Bright finish	(RH)♦D5YY 7329076-A	(LH)♦D5YY 7329077-A	1
29140-1	Moulding (quarter outside upper)	Bright finish	(RH)♦D5YY 7329140-A	(LH)♦D5YY 7329141-A	1
29164-5	Moulding (quarter wheel opening)	Bright finish	(RH)♦D5YY 7329164-A	(LH)♦D5YY 7329165-A	1
29278-9	Moulding (quarter outside rear)	Bright finish	(RH)♦D5YY 7329278-A	(LH)♦D5YY 7329279-A	1

♦ Includes attaching parts

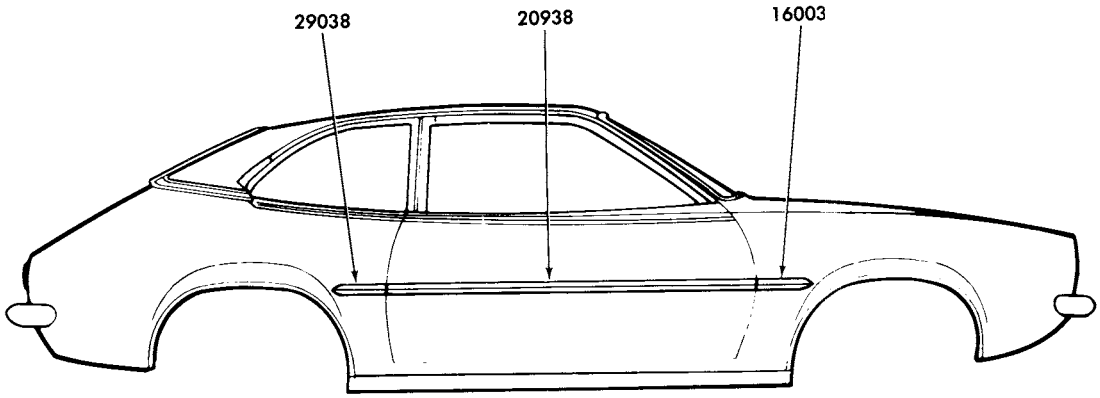

P-12316

1976 BOBCAT - SIDE PROTECTION

GROUP NUMBER	PART NAME	DESCRIPTION	PART NUMBER		QTY.
16003	Moulding (front fender side)	Black vinyl insert-adhesive backed-cut to fit	D5DZ 5425532-D	R.H. and L.H.	2
20938	Moulding (front door outside)	Black vinyl insert-adhesive backed-cut to fit	D1OZ 6529038-B	R.H. and L.H.	2
29038	Moulding (quarter panel outside)	Black vinyl insert-adhesive backed-cut to fit	D5DZ 5425532-D	R.H. and L.H.	2

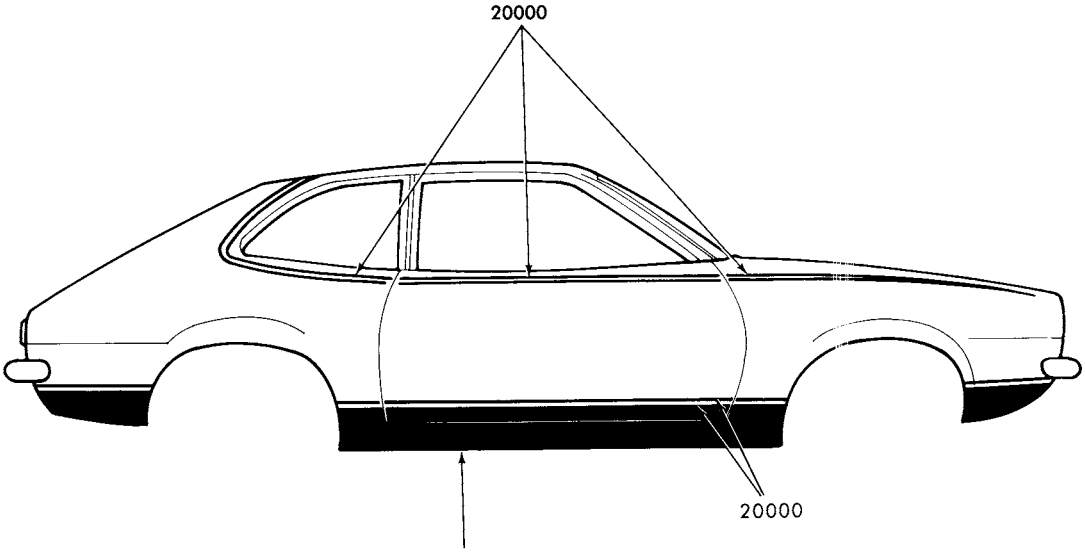

P-12779

1976 BOBCAT - BODY TYPE 62 - STRIPES

COPYRIGHT © 1986 — FORD MOTOR COMPANY — DEARBORN, MICHIGAN

1976 BOBCAT - BODY TYPE 62 - STRIPES - cont'd.

GROUP NUMBER	PART NAME	DESCRIPTION	PART NUMBER	QTY.
20000	Stripe kit (body side lower)	25' roll		
		Blue	★ D6FZ 6220000-B Not replaced (7/81)	AR
		Red	D6FZ 6220000-D	AR
		Tan	★ D6FZ 6220000-U Not replaced (7/81)	AR
		White	D4FZ 6220000-B	1
	Stripe kit (body side upper)	Blue-complete	D6FZ 6220000-A	1
		Green	D6FZ 6220000-F	1
		Orange	D6FZ 6220000-C	1
		Red	D6FZ 6220000-H	1
		White	★ D6FZ 6220000-E Not replaced (7/81)	1

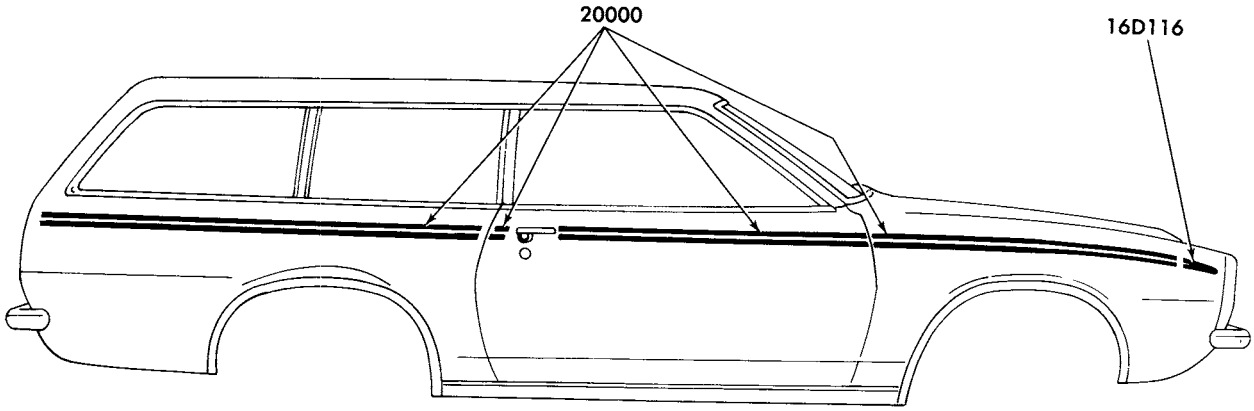

P12690

1976 BOBCAT - BODY TYPE 73 - STRIPES

GROUP NUMBER	PART NAME	DESCRIPTION	PART NUMBER	QTY.
16D116-7	Transfer (front fender front)	Gold	(RH) D5YY 16D116-A (LH) D5YY 16D117-A	1
20000	Stripe kit (body side)	Gold-1 1/2" wide x 25 ft. roll	D5YY 7320000-A	1

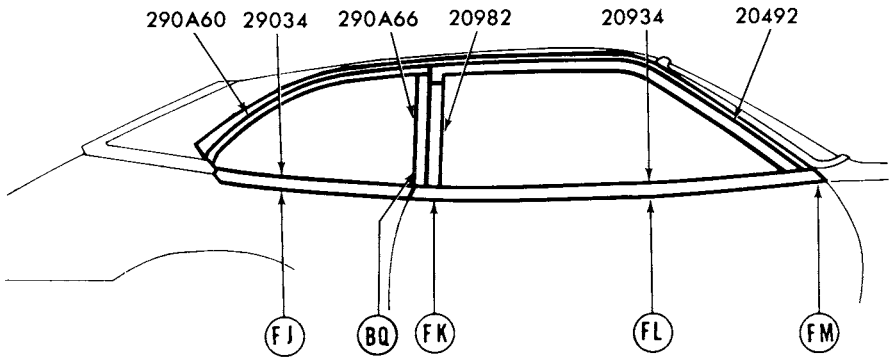

P-12497

REFER TO EXTERIOR MOULDING SECTION 'R' FOR COMPLETE RETAINER INFORMATION

1976 BOBCAT - BODY TYPES 62 and 64 - DOOR and QUARTER WINDOW FRAME

GROUP NUMBER	PART NAME	DESCRIPTION	PART NUMBER		QTY.
20492-3	Moulding (front door window frame top)		(RH) D1FZ 6220492-A	(LH) D1FZ 6220493-A	1
20934-5	Moulding (front door outside belt)	Bright-R.H.-w/mirror	♦D4FZ 6220934-B		1
		Bright-R.H.-w/o mirror	♦D4FZ 6220934-A		1
		L.H.	♦D4FZ 6220935-A		1
20982-3	Moulding (front door window frame rear)		(RH) D2FZ 6220982-A	(LH) D2FZ 6220983-A	1
29034-5	Moulding (quarter outside belt)	Bright	(RH)♦D2FZ 6229034-A	(LH)♦D2FZ 6229035-A	1
290A60-1	Moulding (quarter window outside upper)	One piece design-stationary window	(RH) D2FZ 62290A60-B	(LH) D2FZ 62290A61-B	1
		Two piece design-stationary window	(RH) D2FZ 62290A60-C	(LH) D2FZ 62290A61-C	1
290A66-7	Moulding (quarter window outside front)	Two piece design-stationary window	(RH) D2FZ 62290A66-B	(LH) D2FZ 62290A67-B	1

♦ Includes attaching parts

COPYRIGHT © 1986 — FORD MOTOR COMPANY — DEARBORN, MICHIGAN

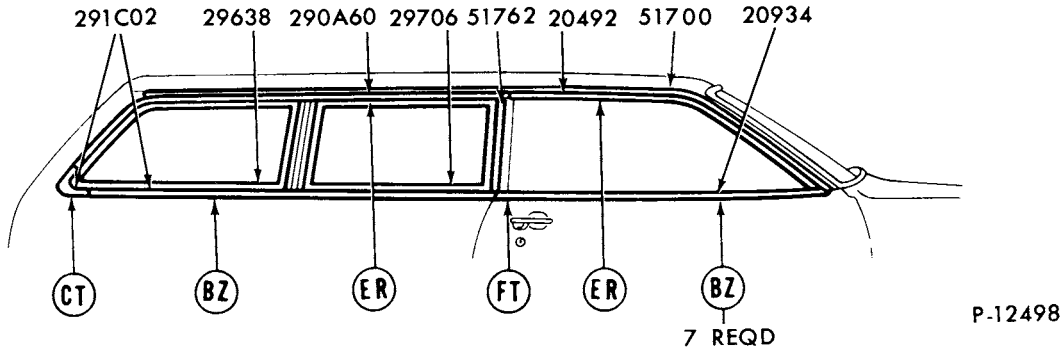

REFER TO EXTERIOR MOULDING SECTION 'R' FOR COMPLETE RETAINER INFORMATION

1976 BOBCAT - BODY TYPE 73 - DOOR and QUARTER WINDOW FRAME

GROUP NUMBER	PART NAME	DESCRIPTION	PART NUMBER		QTY.
20492-3	Moulding (front door window frame top)		(RH) D2FZ 7320492-B	(LH) D2FZ 7320493-B	1
20934-5	Moulding (front door outside belt)	R.H.-w/mirror	♦D2FZ 7320934-D		1
		R.H.-w/o mirror	♦D2FZ 7320934-C		1
		L.H.	♦D2FZ 7320935-B		1
290A60-1	Moulding (quarter window outside upper)		(RH)♦D2FZ 73290A60-A	(LH)♦D2FZ 73290A61-A	1
291C02-3	Moulding (quarter window outside lower rear)		(RH)♦D2FZ 73291C02-A	(LH)♦D2FZ 73291C03-A	1
29638-9	Moulding (rear quarter window outside front)		(RH) D4FZ 7329638-A	(LH) D4FZ 7329639-A	1
29706-7	Moulding (front quarter window)	Serviced only in assy.-refer to group 29706-11 in text section			

♦ Includes attaching parts

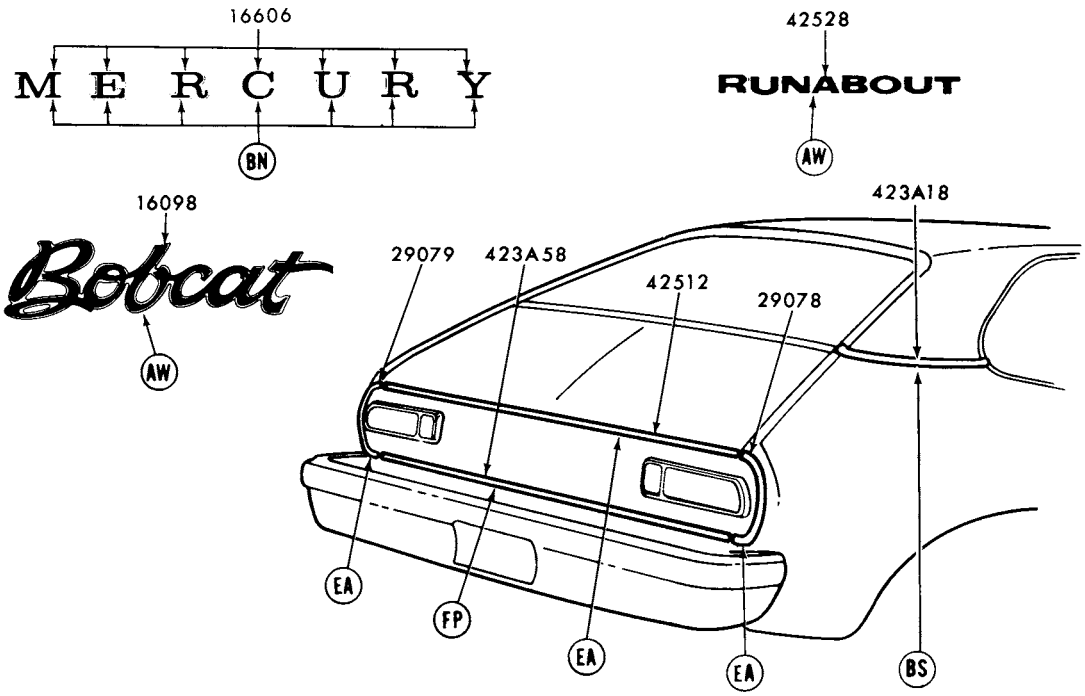

REFER TO EXTERIOR MOULDING SECTION "R" FOR COMPLETE RETAINER INFORMATION

P-11415

1976 BOBCAT - BODY TYPES 62 and 64 - BACK END

GROUP NUMBER	PART NAME	DESCRIPTION	PART NUMBER	QTY.
16098	Plate (luggage compartment name)	"Bobcat"	♦D5YY 16098-A	1
16606	Letter (luggage compartment door)	"M"	♦D54Y 16606-A	1
		"E"	♦D54Y 16606-B	1
		"R"	♦D54Y 16606-C	1
		"C"-body type 62	♦D5YY 6240282-A	1
		"C"-body type 64	♦D5YY 6440282-A	1
		"U"	♦D54Y 16606-E	1
		"Y"	♦D54Y 16606-F	1
29078-9	Moulding (quarter panel extension)		(RH)♦D4FZ 6229078-A (LH)♦D4FZ 6229079-A	1
423A18-9	Moulding (back belt outside side)	Body type 62	(RH)♦D1FZ 62423A18-B (LH)♦D1FZ 62423A19-B	1
		Body type 64	(RH)♦D2FZ 64423A18-A (LH)♦D2FZ 64423A19-A	1
423A58	Moulding (lower back panel)		♦D4FZ 62423A58-A	1
42512	Moulding (luggage compartment door)		♦D4FZ 6242512-A	1
62526	Plate (luggage compartment door name)	"RUNABOUT"	♦D1FZ 6442528-A	2

♦ Includes attaching parts

COPYRIGHT © 1986 — FORD MOTOR COMPANY — DEARBORN, MICHIGAN

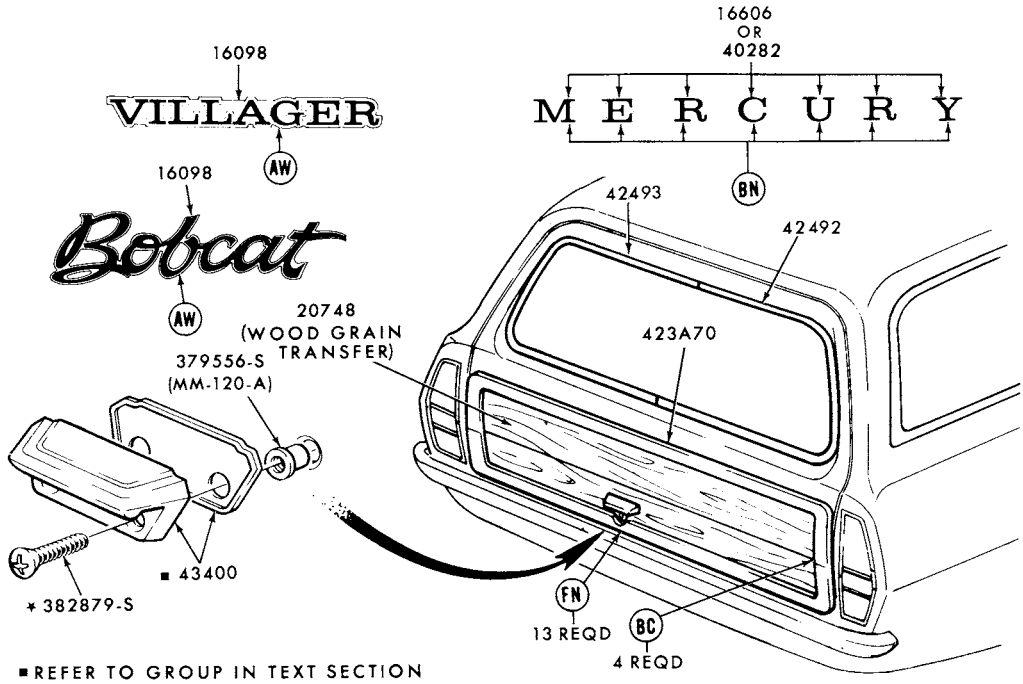

■ REFER TO GROUP IN TEXT SECTION
REFER TO EXTERIOR MOULDING SECTION "R" FOR COMPLETE RETAINER INFORMATION P-11416

1976 BOBCAT - BODY TYPE 73 - BACK END

GROUP NUMBER	PART NAME	DESCRIPTION	PART NUMBER	QTY.
16098	Plate (liftgate name)	"Bobcat"	♦D5YY 16098-A	1
		"Villager"	*D2GY 16098-B	1
16606	Letter (liftgate door)	"M"	♦D54Y 16606-A	1
		"E"	♦D54Y 16606-B	1
		"R"	♦D54Y 16606-C	1
		"C"	♦D5YY 6440282-A	1
		"U"	♦D54Y 16606-E	1
		"Y"	♦D54Y 16606-F	1
20748	Transfer (wood grain)	"Before"1/1/76" 17" x 60"	D5YY 7320748-A	AR
		"From" 1/1/76" 19.5" x 60"	D6YY 7320748-A	AR
423A70	Moulding (liftgate outside)		♦D5YY 73423A70-A	1
42492-3	Moulding (back window outside side)		(RH) D2FZ 7342492-A (LH) D2FZ 7342493-A	1

♦ Includes attaching parts

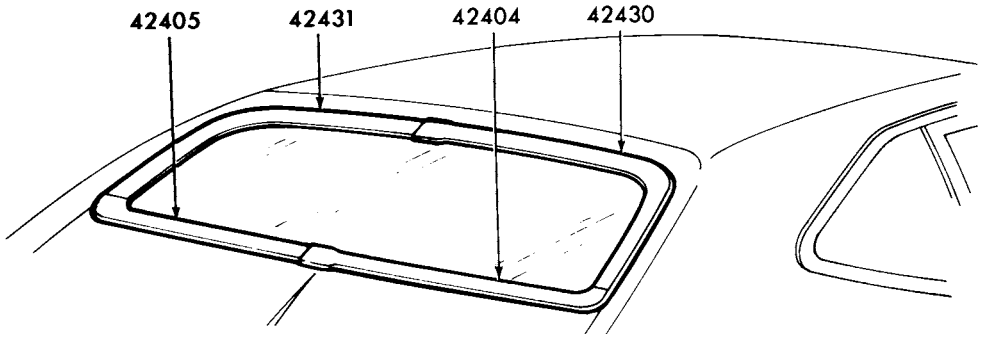

P-12464

1976 BOBCAT - BODY TYPE 62 - BACK WINDOW

GROUP NUMBER	PART NAME	DESCRIPTION	PART NUMBER	QTY.
42404-5	Moulding (back window outside lower)		(RH) D1FZ 6242404-A (LH) D1FZ 6242405-A	1
42430-1	Moulding (back window outside upper)		(RH) D1FZ 6242430-A (LH) D1FZ 6242431-A	1

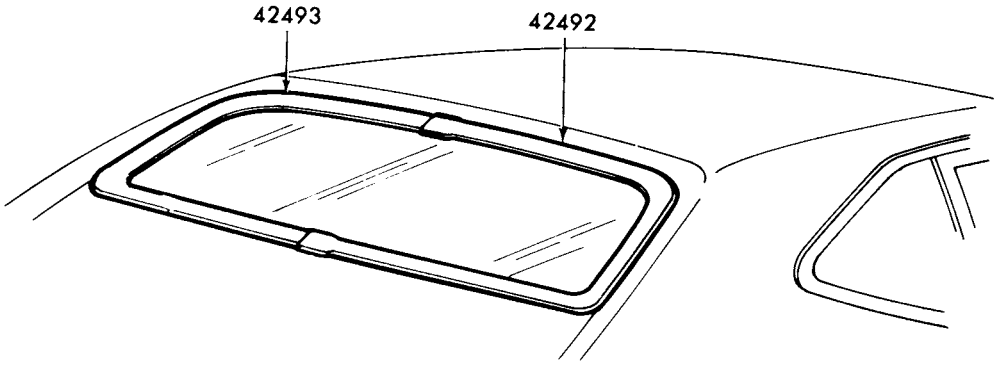

P-12465

1976 BOBCAT - BODY TYPE 64 - BACK WINDOW

GROUP NUMBER	PART NAME	DESCRIPTION	PART NUMBER	QTY.
42492-3	Moulding (back window outside side)		(RH) D2FZ 6442492-A (LH) D2FZ 6442493-A	1

COPYRIGHT © 1986 — FORD MOTOR COMPANY — DEARBORN, MICHIGAN

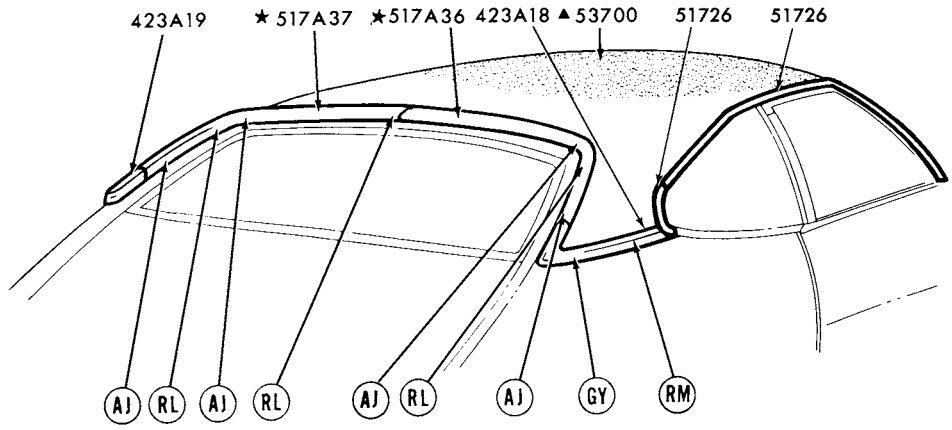

▲REFER TO GROUP IN SOFT TRIM SECTION
REFER TO EXTERIOR MOULDING SECTION "R" FOR COMPLETE RETAINER INFORMATION

P-12186

1976 BOBCAT - BODY TYPES 62 and 64 - ROOF BACK BELT DRIP SIDE

GROUP NUMBER	PART NAME	DESCRIPTION	PART NUMBER		QTY.
423A18-9	Moulding (back belt outside side)	Body type 62	(RH)♦D1FZ 62423A18-B	(LH)♦D1FZ 62423A19-B	1
		Body type 64	(RH)♦D2FZ 64423A18-A	(LH)♦D2FZ 64423A19-A	1
51726-7	Moulding (roof drip side finish)	Rear-w/o vinyl roof	(RH) D4FZ 6251726-A	(LH) D4FZ 6251727-A	1
		Front-w/o vinyl roof	(RH) D4FZ 6251726-C	(LH)★D4FZ 6251727-C Not replaced (6/83)	1
		Rear-w/full vinyl roof	(RH) D4FZ 6251726-B	(LH) D4FZ 6251727-B	1
		Front-w/full vinyl roof	(RH) D4FZ 6251726-D	(LH) D4FZ 6251727-D	1

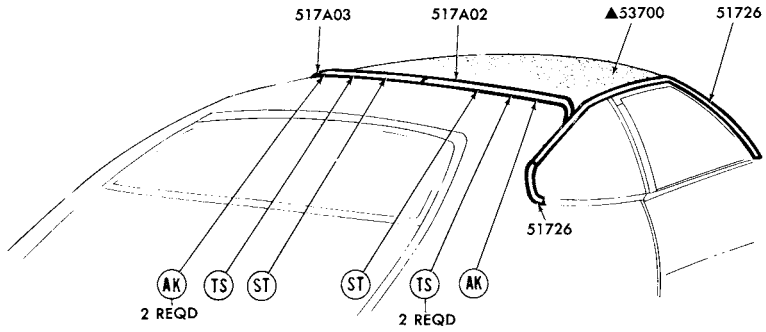

▲REFER TO GROUP IN SOFT TRIM SECTION
REFER TO EXTERIOR MOULDING SECTION "R" FOR COMPLETE RETAINER INFORMATION

P-12811

1976 BOBCAT - BODY TYPES 62 and 64 - ROOF DRIP SIDE and PARTIAL TOP

GROUP NUMBER	PART NAME	DESCRIPTION	PART NUMBER		QTY.
517A02-3	Moulding (roof outside top)	Half vinyl roof	(RH)♦D6FZ 62517A02-A	(LH)♦D6FZ 62517A03-A	1
51726-7	Moulding (roof drip side finish)	Rear	(RH) D4FZ 6251726-B	(LH) D4FZ 6251727-B	1
		Front	(RH) D4FZ 6251726-D	(LH) D4FZ 6251727-D	1

♦ Includes attaching parts

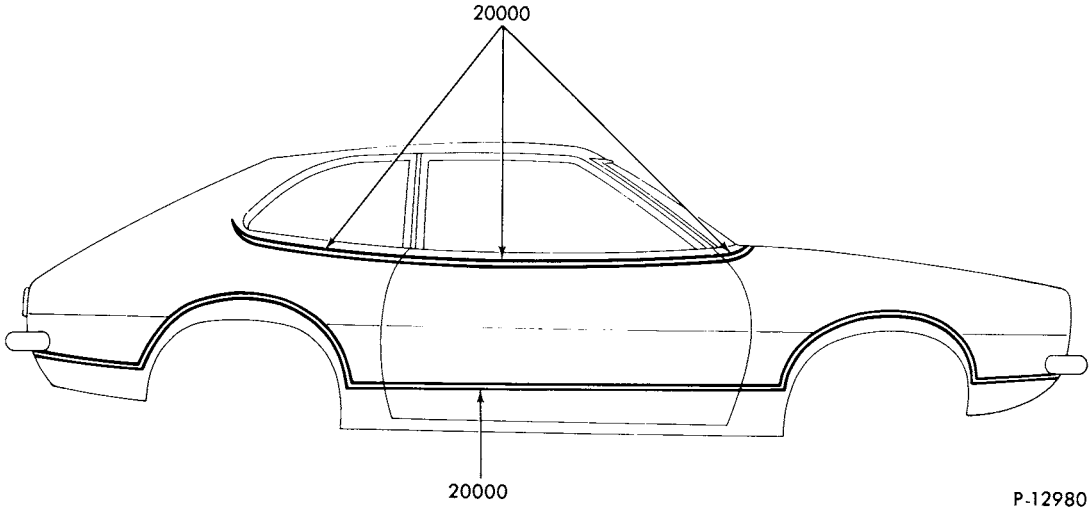

1976 BOBCAT - BODY TYPES 62 and 64 - STRIPES

GROUP NUMBER	PART NAME	DESCRIPTION	PART NUMBER	QTY.
20000	Stripe kit (body side upper)-complete	Red	@ D6FZ 6220000-M	1
20000	Stripe kit (body side lower)-complete	Red	@ D6FZ 6420000-P	1

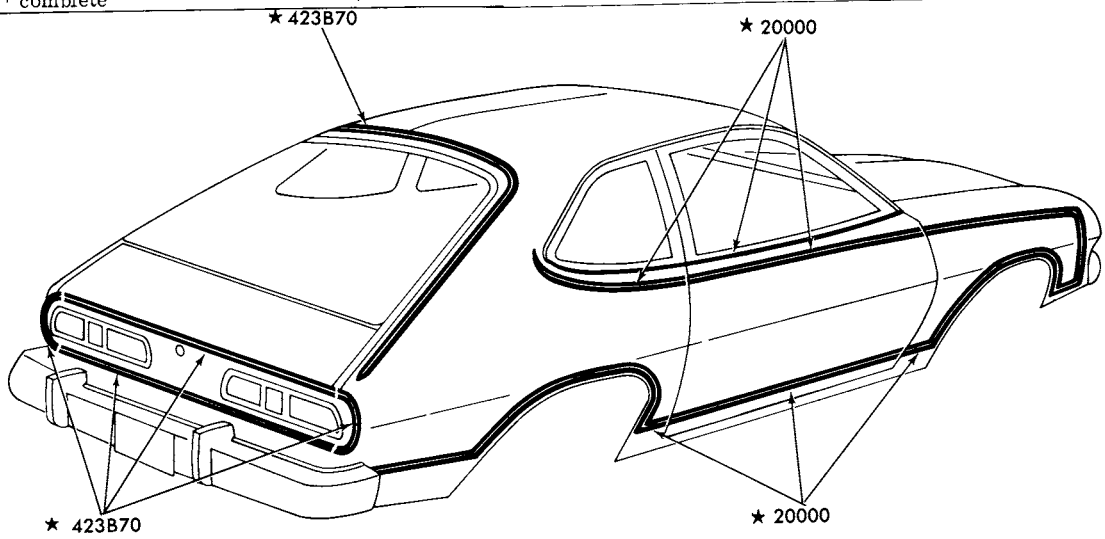

1976 BOBCAT - BODY TYPE 64H - STRIPES

GROUP NUMBER	PART NAME	DESCRIPTION	PART NUMBER	QTY.

ITEMS INDICATED WITH A BLACK STAR (★) MUST BE IMPROVISED OR PROCURED LOCALLY

@ Canada only

COPYRIGHT © 1986 — FORD MOTOR COMPANY — DEARBORN, MICHIGAN

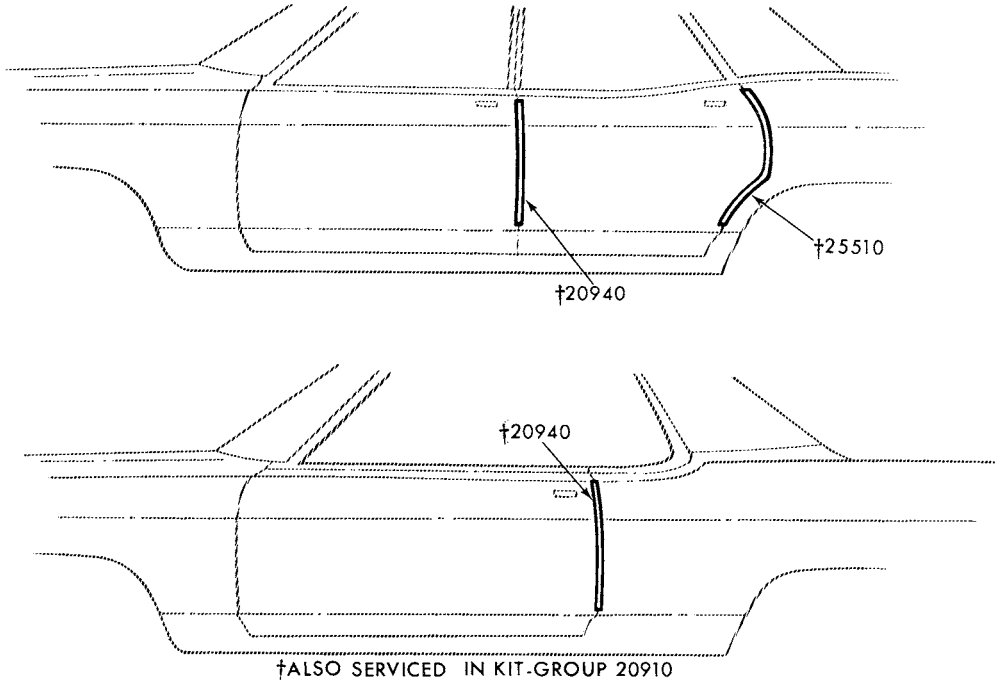

†ALSO SERVICED IN KIT-GROUP 20910

P-10061

1976 BOBCAT - DOOR EDGE GUARDS

GROUP NUMBER	PART NAME	DESCRIPTION	PART NUMBER	QTY.
20910	Moulding kit (door edge guards)	Bright	★ D1FZ 6220910-A Not replaced (6/83)	1
		Wood grain	D2FZ 7320910-A	1
20940-1	Moulding (door edge guard)	Bright	(RH) D2FZ 6220940-A (LH) D2FZ 6220941-A	1
		Wood grain	(RH) D3FZ 7320940-A (LH) D3FZ 7320941-A	1

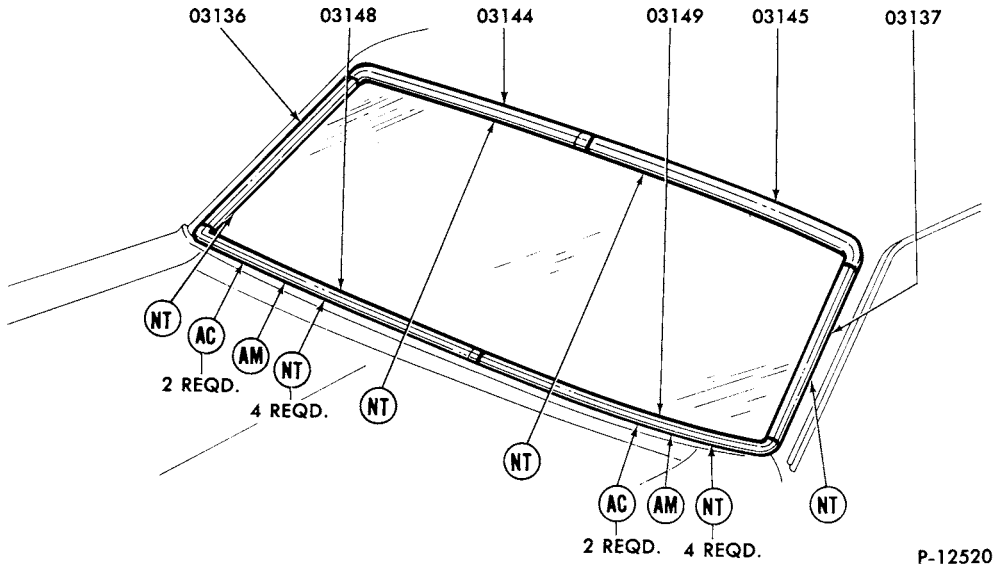

REFER TO EXTERIOR MOULDINGS SECTION 'R' FOR COMPLETE RETAINER INFORMATION

1976 COMET - WINDSHIELD

GROUP NUMBER	PART NAME	DESCRIPTION	PART NUMBER		QTY.
03136-7	Moulding (windshield side)		(RH)♦D0DZ 6203136-A	(LH)♦D0DZ 6203137-A	1
03144-5	Moulding (windshield top)		(RH)♦D0DZ 6203144-A	(LH)♦D0DZ 6203145-A	1
03148-9	Moulding (windshield belt)		(RH)♦D0DZ 6203148-A	(LH)♦D0DZ 6203149-A	1

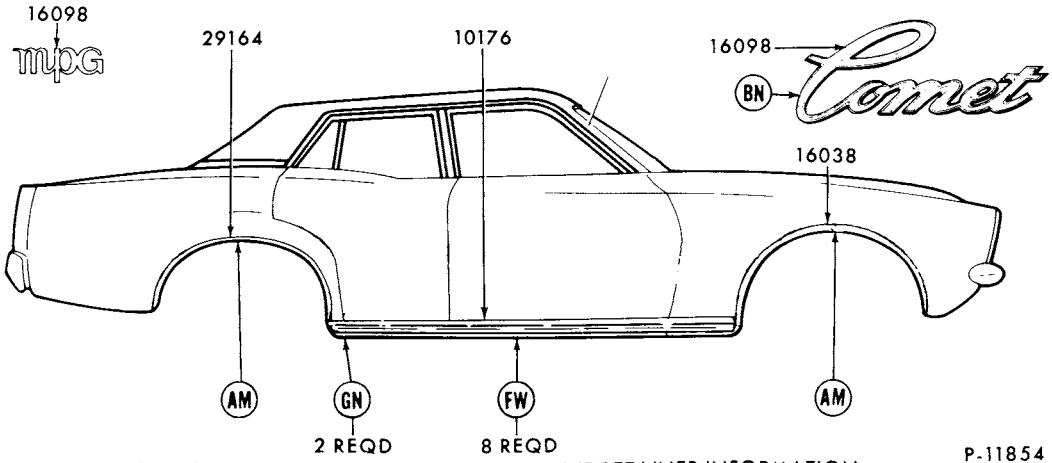

REFER TO EXTERIOR MOULDING SECTION "R" FOR COMPLETE RETAINER INFORMATION

1976 COMET - BODY TYPE 54 - SIDE - w/o LUXURY DECOR

GROUP NUMBER	PART NAME	DESCRIPTION	PART NUMBER		QTY.
10176	Moulding (body rocker panel)	78 3/4" long	♦D44Y 5410176-A	R.H. and L.H.	2
16038-9	Moulding (front fender wheel opening)		(RH)♦D4DZ 16038-A	(LH)♦D4DZ 16039-A	1
16098	Plate (name)	"Comet"	♦D14Y 16098-A	R.H. and L.H.	2
29164-5	Moulding (quarter wheel opening)		(RH)♦D0DZ 6229164-A	(LH)♦D0DZ 6229165-A	1

♦ Includes attaching parts

COPYRIGHT © 1986 — FORD MOTOR COMPANY — DEARBORN, MICHIGAN

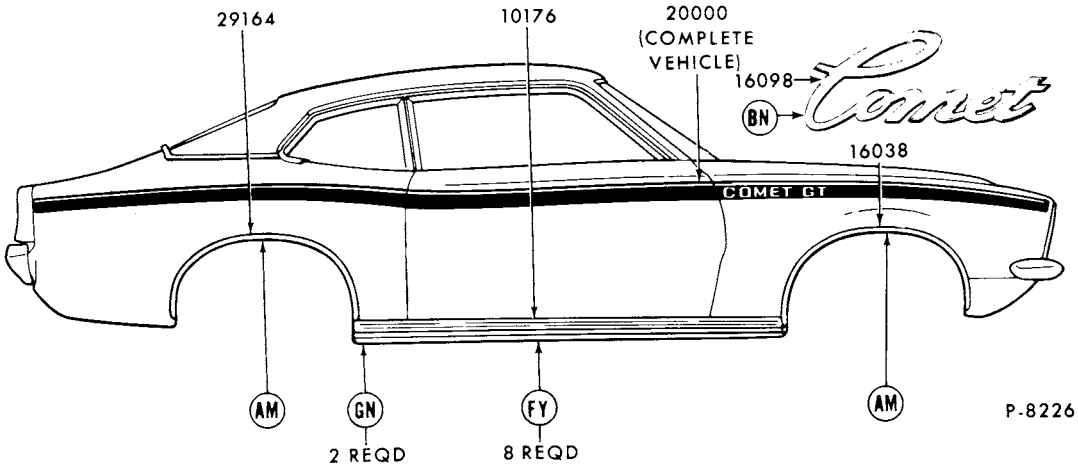

REFER TO EXTERIOR MOULDING SECTION "R" FOR COMPLETE RETAINER INFORMATION

1976 COMET - BODY TYPE 62 - SIDE - w/o LUXURY DECOR

GROUP NUMBER	PART NAME	DESCRIPTION	PART NUMBER		QTY.
10176	Moulding (body rocker panel)	71 55/64" long	♦D44Y 6210176-A	R.H. and L.H.	2
16038-9	Moulding (front fender wheel opening)		(RH)♦D4DZ 16038-A	(LH)♦D4DZ 16039-A	1
16098	Plate (name)	"Comet"	♦D14Y 16098-A	R.H. and L.H.	2
20000	Stripe kit (fender door and quarter panel)		Not used in 1976		
29164-5	Moulding (quarter wheel opening)		(RH)♦D0DZ 6229164-A	(LH)♦D0DZ 6229165-A	1

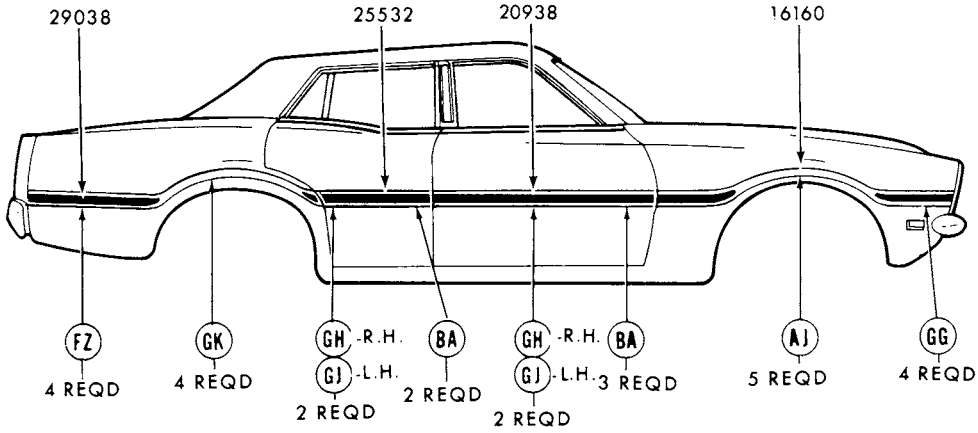

REFER TO EXTERIOR MOULDING SECTION "R" FOR COMPLETE RETAINER INFORMATION P-10011

1976 COMET - BODY TYPE 54 - SIDE - w/LUXURY DECOR

♦ Includes attaching parts

1976 COMET - BODY TYPE 54 - SIDE - w/LUXURY DECOR - cont'd.

GROUP NUMBER	PART NAME	DESCRIPTION	PART NUMBER		QTY.
16160-1	Moulding (front fender front)	W/vinyl insert			
		◊Blue	(RH)★D6DZ 16160-AB Not replaced (4/84)	(LH)★D6DZ 16161-AB Not replaced (4/84)	1
		◊Brown	(RH)★D6DZ 16160-AT	(LH)★D6DZ 16161-AT Not replaced (4/84)	1
		◊Green	(RH)♠D6DZ 16160-AG	(LH)♠D6DZ 16161-AG	1
		◊White "Before 5/3/76"	(RH)★D4DZ 16160-AW	(LH)♠D4DZ 16161-AW	1
20938-9	Moulding (front door outside)	W/vinyl insert			
		◊Blue	(RH)♠D6DZ 5420938-AB	(LH)♠D6DZ 5420939-AB	1
		◊Brown	(RH)★D6DZ 5420938-AT Not replaced (7/81)	(LH)♠D6DZ 5420939-AT	1
		◊White "Before 5/3/76"	(RH)♠D4DZ 5420938-CW	(LH)♠D4DZ 5420939-CW	1
25522-3	Moulding (rear door outside)	W/vinyl insert			
		◊Blue	(RH)♠D6DZ 5425532-AB	(LH)♠D6DZ 5425533-AB	1
		◊White "Before 5/3/76"	(RH)♠D4DZ 5425532-BW	(LH)♠D4DZ 5425533-BW	1
29038-9	Moulding (quarter outside)	W/vinyl insert			
		◊Blue	(RH)♠D6DZ 5429038-AB	(LH)★D6DZ 5429039-AB Not replaced (6/82)	1
		◊Brown	(RH)★D6DZ 5429038-AT Not replaced (6/82)	(LH)★D6DZ 5429039-AT Not replaced (6/82)	1
		◊White "Before 5/3/76"	(RH)★D4DZ 5429038-AW Not replaced (6/82)	(LH)♠D4DZ 5429039-AW	1

◊ For color verification, refer to the vinyl roof swatches in the 1976 salesman's color and upholstery selections guide.
♠ Includes attaching parts

COPYRIGHT © 1986 — FORD MOTOR COMPANY — DEARBORN, MICHIGAN

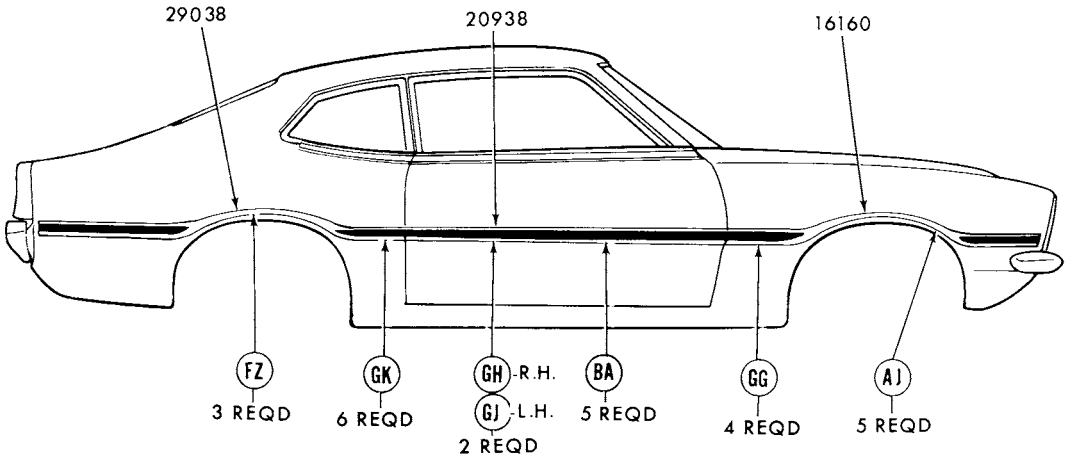

REFER TO EXTERIOR MOULDING SECTION "R" FOR COMPLETE RETAINER INFORMATION P-10012

1976 COMET - BODY TYPE 62 - SIDE - w/LUXURY DECOR

GROUP NUMBER	PART NAME	DESCRIPTION	PART NUMBER		QTY.
16160-1	Moulding (front fender front)	W/vinyl insert			
		◊Blue	(RH)✱D6DZ 16160-AB Not replaced (4/84)	(LH)✱D6DZ 16161-AB Not replaced (4/84)	1
		◊Brown	(RH)★D6DZ 16160-AT	(LH)★D6DZ 16161-AT Not replaced (4/84)	1
		◊Green	(RH)♦D6DZ 16160-AG	(LH)♦D6DZ 16161-AG	1
		◊White "Before 5/3/76"	(RH)♦D4DZ 16160-AW	(LH)♦D4DZ 16161-AW	1
20938-9	Moulding (front door outside)	W/vinyl insert			
		◊Brown	(RH)♦D6DZ 6220938-AT	(LH)♦D6DZ 6220939-AT	1
		◊White "Before 5/3/76"	(RH)♦D4DZ 6220938-CW	(LH)♦D4DZ 6220939-CW	1
29038-9	Moulding (quarter outside)	W/vinyl insert			
		◊Blue	(RH)♦D6DZ 6229038-AB	(LH)✱D6DZ 6229039-AB Not replaced (6/83)	1
		◊Brown	(RH)★D6DZ 6229038-AT Not replaced (6/83)	(LH)♦D6DZ 6229039-AT	1
		◊Green	(RH)★D6DZ 6229038-AG Not replaced (7/81)	(LH)♦D6DZ 6229039-AG	1
		◊White "Before 5/3/76"	(RH)♦D4DZ 6229038-AW	(LH)♦D4DZ 6229039-AW	1
		◊ White "From 5/3/76"	(RH)♦D6DZ 6229038-AW	(LH)♦D6DZ 6229039-AW	1

♦ Includes attaching parts

◊ For color verification, refer to the vinyl roof swatches in the 1976 salesman's color and upholstery selections guide.

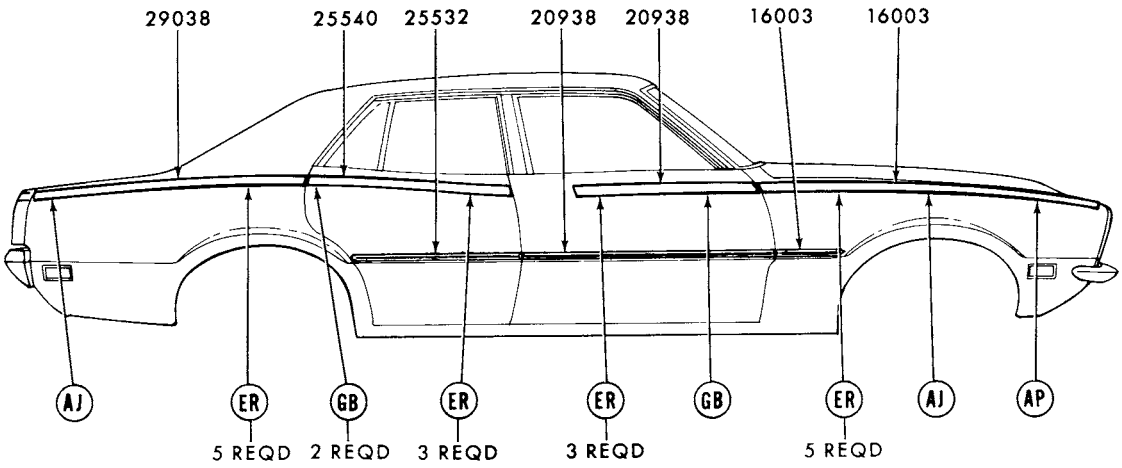

REFER TO EXTERIOR MOULDING SECTION "R" FOR COMPLETE RETAINER INFORMATION P-11855

1976 COMET - BODY TYPE 54 - SIDE PROTECTION

GROUP NUMBER	PART NAME	DESCRIPTION	PART NUMBER		QTY.
16003-4	Moulding (front fender)	Black vinyl insert-cut to fit-lower	D5DZ 5425532-D	R.H. and L.H.	2
		Bright finish-upper	(RH)♦D44Y 16003-A	(LH)♦D44Y 16004-A	1
20938-9	Moulding (front door outside)	Black vinyl insert-cut to fit-lower	D1OZ 6529038-B	R.H. and L.H.	AR
		Bright finish-upper	(RH)♦D44Y 5420938-A	(LH)♦D44Y 5420939-A	1
25532-3	Moulding (rear door outside)	Black vinyl insert-cut to fit-lower	D1OZ 6529038-B	R.H. and L.H.	AR
25540-1	Moulding (rear door outside)	Bright finish	(RH)♦D44Y 5425540-A	(LH)♦D44Y 5425541-A Not replaced (6/82)	1
29038-9	Moulding (quarter outside)	Bright finish	(RH)♦D44Y 5429038-A	(LH)♦D44Y 5429039-A	1

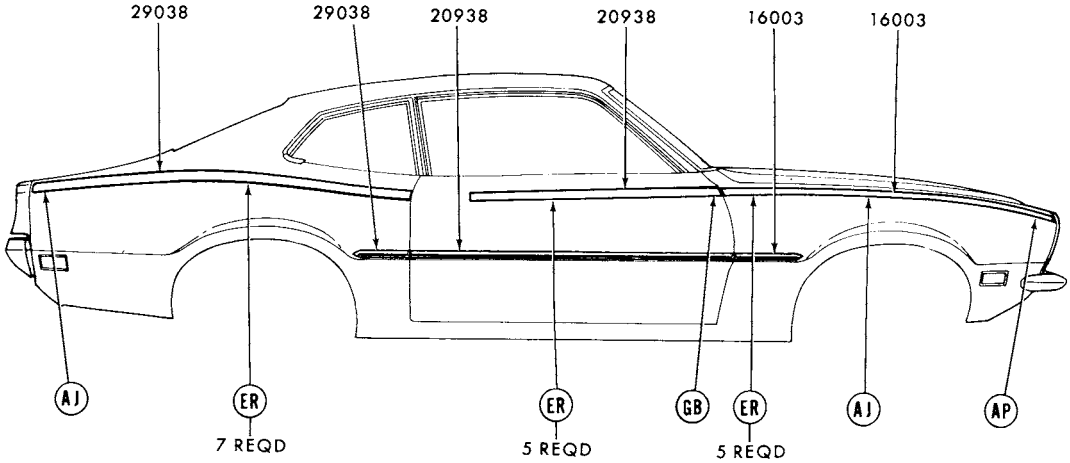

REFER TO EXTERIOR MOULDING SECTION "R" FOR COMPLETE RETAINER INFORMATION P-8186

1976 COMET - BODY TYPE 62 - SIDE PROTECTION

♦ Includes attaching parts

COPYRIGHT © 1986 — FORD MOTOR COMPANY — DEARBORN, MICHIGAN

1976 COMET - BODY TYPE 62 - SIDE PROTECTION - cont'd.

GROUP NUMBER	PART NAME	DESCRIPTION	PART NUMBER		QTY.
16003-4	Moulding (front fender)	Bright finish-upper	(RH)♦D44Y 16003-A	(LH)♦D44Y 16004-A	1
		Black vinyl insert-cut to fit-lower	D5DZ 5425532-D	R.H. and L.H.	2
20938-9	Moulding (front door outside)	Bright finish-upper	(RH)♦D44Y 6220938-A	(LH)♦D44Y 6220939-A	1
		Black vinyl insert-cut to fit-lower	D1OZ 6529038-B	R.H. and L.H.	AR
29038-9	Moulding (quarter outside)	Bright finish-upper	(RH)♦D44Y 6229038-A	(LH)♦D44Y 6229039-A	1
		Black vinyl insert-cut to fit-lower	D5DZ 5425532-D	R.H. and L.H.	2

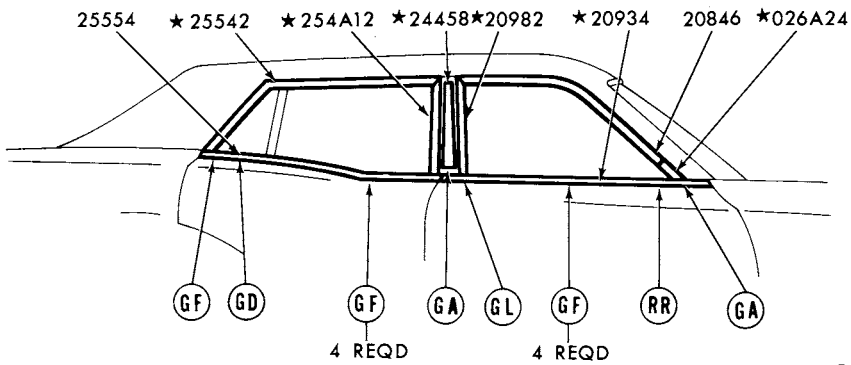

P-12500

REFER TO EXTERIOR MOULDINGS SECTION 'R' FOR COMPLETE RETAINER INFORMATION

1976 COMET - BODY TYPE 54 - DOOR and QUARTER WINDOW FRAME

GROUP NUMBER	PART NAME	DESCRIPTION	PART NUMBER		QTY.
026A24-5	Moulding (front body pillar belt)	W/vinyl roof	(RH)★D0DZ 62026A24-A Not replaced (6/82)	(LH)★D0DZ 62026A25-A Not replaced (6/82)	1
20846-7	Moulding (front door window window frame top)		(RH)★D1DZ 5420846-A Not replaced (6/82)	(LH) D1DZ 5420847-A	1
25554-5	Moulding (rear door belt)		(RH)♦D3DZ 5425554-A	(LH)♦D3DZ 5425555-A	1

♦ Includes attaching parts

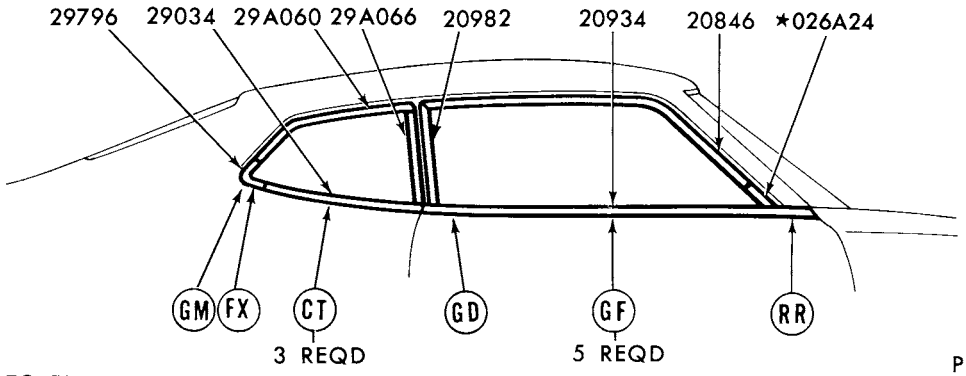

P-12499

REFER TO EXTERIOR MOULDING SECTION 'R' FOR COMPLETE RETAINER INFORMATION

1976 COMET - BODY TYPE 62 - DOOR and QUARTER WINDOW FRAME

GROUP NUMBER	PART NAME	DESCRIPTION	PART NUMBER		QTY.
026A24-5	Moulding (front body pillar outside belt)	W/vinyl roof	(RH)★D0DZ 62026A24-A Not replaced (6/82)	(LH)★D0DZ 62026A25-A Not replaced (6/82)	1
20846-7	Moulding (front door window frame top)		(RH) D2DZ 6220846-A	(LH) D2DZ 6220847-A	1
20934-5	Moulding (front door outside belt)		(RH)♦D3DZ 6220934-A	(LH)♦D3DZ 6220935-A	1
20982-3	Moulding (front door window frame rear)		(RH) D2DZ 6220982-A	(LH) D2DZ 6220983-A	1
29034-5	Moulding (quarter outside belt)		(RH)♦D3DZ 6229034-A	(LH)♦D3DZ 6229035-A	
290A60-1	Moulding (quarter window outside upper)		(RH)♦D0DZ 62290A60-A	(LH)♦D0DZ 62290A61-A	1
290A66-7	Moulding (quarter window outside front)		(RH)♦D0DZ 62290A66-A	(LH)♦D0DZ 62290A67-A	1
29796-7	Moulding (quarter window outside)		(RH) D1DZ 6229796-A	(LH) D1DZ 6229797-A	1

♦ Includes attaching parts

COPYRIGHT © 1986 — FORD MOTOR COMPANY — DEARBORN, MICHIGAN

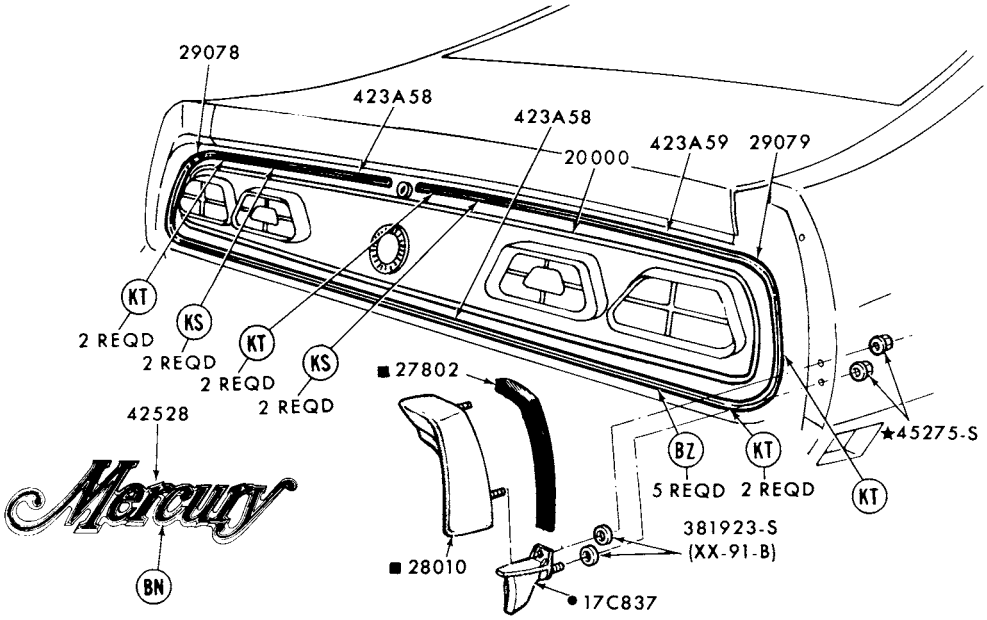

REFER TO EXTERIOR MOULDING SECTION "R" FOR COMPLETE RETAINER INFORMATION
■ REFER TO GROUP IN TEXT SECTION
● REFER TO GROUP IN CHASSIS SECTION

P-11076

1976 COMET - BACK END

GROUP NUMBER	PART NAME	DESCRIPTION	PART NUMBER		QTY.
29078-9	Moulding (quarter extension)		(RH)♦D44Y 6229078-A	(LH)♦D44Y 6229079-A	1
423A58-9	Moulding (lower back panel)	Upper	(RH)♦D44Y 62423A58-A	(LH)♦D44Y 62423A59-A	1
		Lower	♦D44Y 62423A58-B		1
42528	Plate (name)	"Mercury"	♦D44Y 6242528-A		1

♦ Includes attaching parts

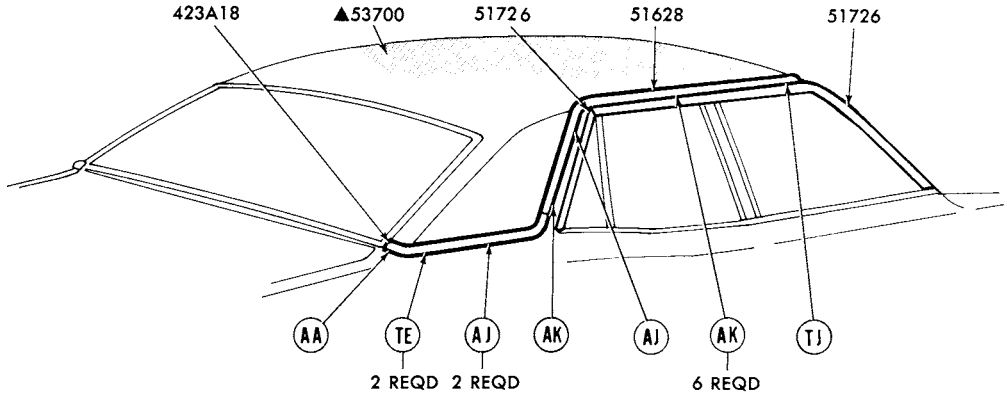

▲REFER TO GROUP IN SOFT TRIM SECTION
REFER TO EXTERIOR MOULDING SECTION "R" FOR COMPLETE RETAINER INFORMATION

P-12781

1976 COMET - BODY TYPE 54 - ROOF

GROUP NUMBER	PART NAME	DESCRIPTION	PART NUMBER		QTY.
423A18-9	Moulding (back belt outside side)	W/vinyl roof	(RH)♦D6BZ 54423A18-A	(LH)♦D6BZ 54423A19-A	1
51628-9	Moulding (roof outside side)	W/vinyl roof	(RH)♦D6BZ 5451628-A Not replaced (6/82)	(LH)♦D6BZ 5451629-A	1
517A20	Ornament (roof side)	3 lions	♦D6OZ 60517A20-A	R.H. and L.H.	2
51726-7	Moulding (roof drip side finish)	Front	(RH) D3DZ 5451726-A	(LH)★D3DZ 5451727-A Not replaced (6/83)	1
		Rear	(RH) D1DZ 5451726-C	(LH) D1DZ 5451727-C	1

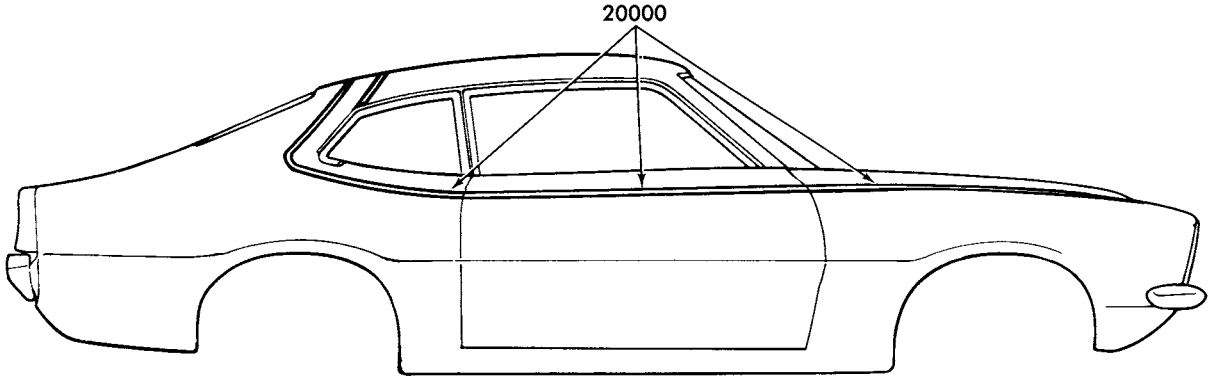

P-12973

1976 COMET - BODY TYPE 62 - STRIPES

GROUP NUMBER	PART NAME	DESCRIPTION	PART NUMBER	QTY.
20000	Stripe kit (body side complete)	Fender, door and quarter panel		
		Black	D6DZ 6220000-G	1
		Blue	D6DZ 6220000-A	1
		Gold	D6DZ 6220000-F	1
		White	D6DZ 6220000-D	1

♦ Includes attaching parts

COPYRIGHT © 1986 — FORD MOTOR COMPANY — DEARBORN, MICHIGAN

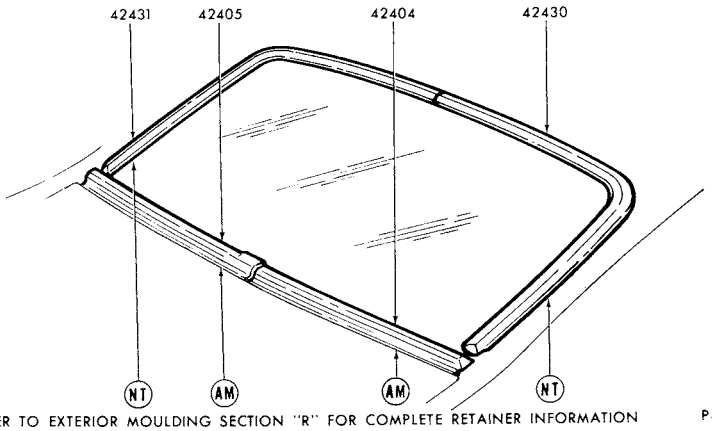

REFER TO EXTERIOR MOULDING SECTION "R" FOR COMPLETE RETAINER INFORMATION P-12468

1976 COMET - BODY TYPE 54 - BACK WINDOW

GROUP NUMBER	PART NAME	DESCRIPTION	PART NUMBER		QTY.
42404-5	Moulding (back window outside lower)		(RH)♦D1DZ 5442404-A	(LH)♦D1DZ 5442405-A	1
42430-1	Moulding (back window outside upper)		(RH)♦D1DZ 5442430-A	(LH)♦D1DZ 5442431-A	1

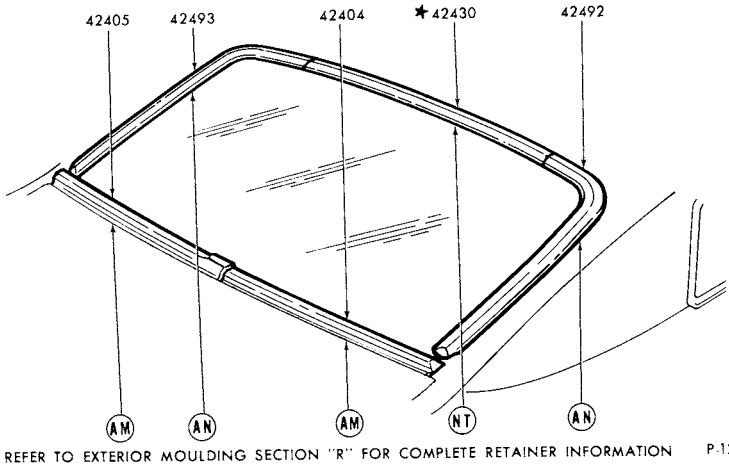

REFER TO EXTERIOR MOULDING SECTION "R" FOR COMPLETE RETAINER INFORMATION P-12467

1976 COMET - BODY TYPE 62 - BACK WINDOW

GROUP NUMBER	PART NAME	DESCRIPTION	PART NUMBER		QTY.
42404-5	Moulding (back window outside lower)		(RH)♦D1DZ 6242404-A	(LH)♦D1DZ 6242405-A	1
42430	Moulding (back window outside upper)		★D2DZ 6242430-A	Not replaced (6/83)	1
42492-3	Moulding (back window side)		(RH)♦D0DZ 6242492-A	(LH)♦D0DZ 6242493-A	1

♦ Includes attaching parts

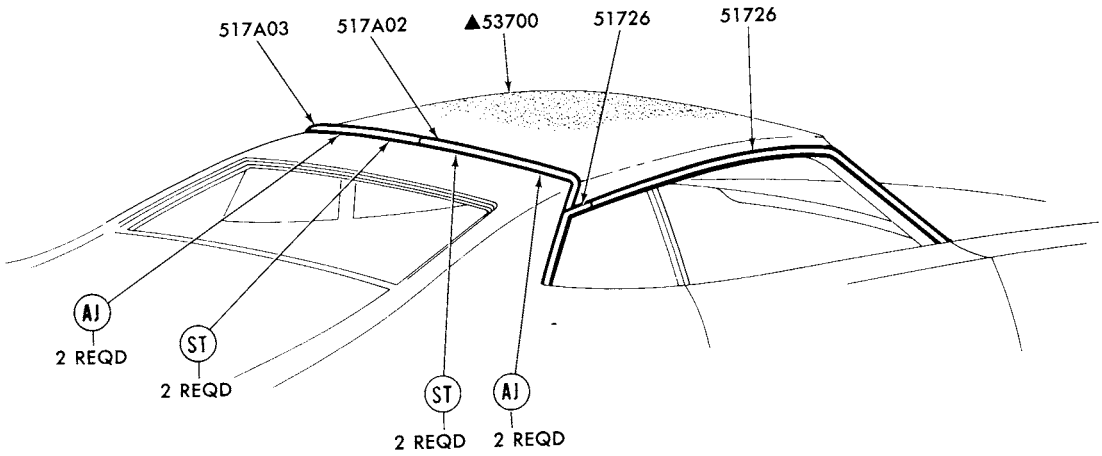

P-12802

1976 COMET - BODY TYPE 62 - ROOF

GROUP NUMBER	PART NAME	DESCRIPTION	PART NUMBER		QTY.
517A02-3	Moulding (roof outside top)	W/partial vinyl roof	(RH)♦D6DZ 62517A02-A	(LH)♦D6DZ 62517A03-A	1
51726-7	Moulding (roof drip side finish)	Front-w/vinyl roof	(RH) D0DZ 6251726-B	(LH)✱D0DZ 6251727-B Not replaced (4/84)	1
		Front-w/o vinyl roof	(RH) D0DZ 6251726-A	(LH) D0DZ 6251727-A	1
		Rear	(RH) D0DZ 6251726-C	(LH)★D0DZ 6251727-C Not replaced (6/83)	1

♦ Includes attaching parts

COPYRIGHT © 1986 — FORD MOTOR COMPANY — DEARBORN, MICHIGAN

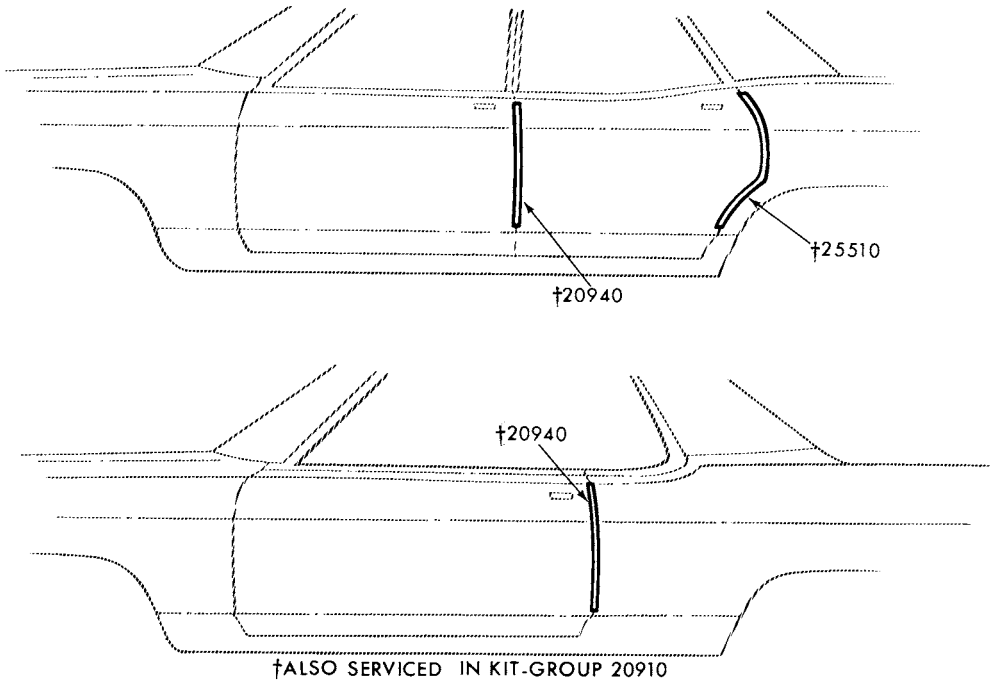

†ALSO SERVICED IN KIT-GROUP 20910

P-10061

1976 COMET - DOOR EDGE GUARDS

GROUP NUMBER	PART NAME	DESCRIPTION	PART NUMBER	QTY.
20910	Moulding kit (door edge guard)	Body type 54	D1DZ 5420910-A	1
		Body type 62	D0DZ 6220910-A	1
20940-1	Moulding (front door edge guard)	Body type 54	(RH) D2DZ 5420940-A (LH) D2DZ 5420941-A	1
		Body type 62	(RH) D2DZ 6220940-A (LH) D2DZ 6220941-A	1
25510-1	Moulding (rear door edge guard)	Body type 54	(RH) D2DZ 5425510-A (LH) D2DZ 5425511-A	1

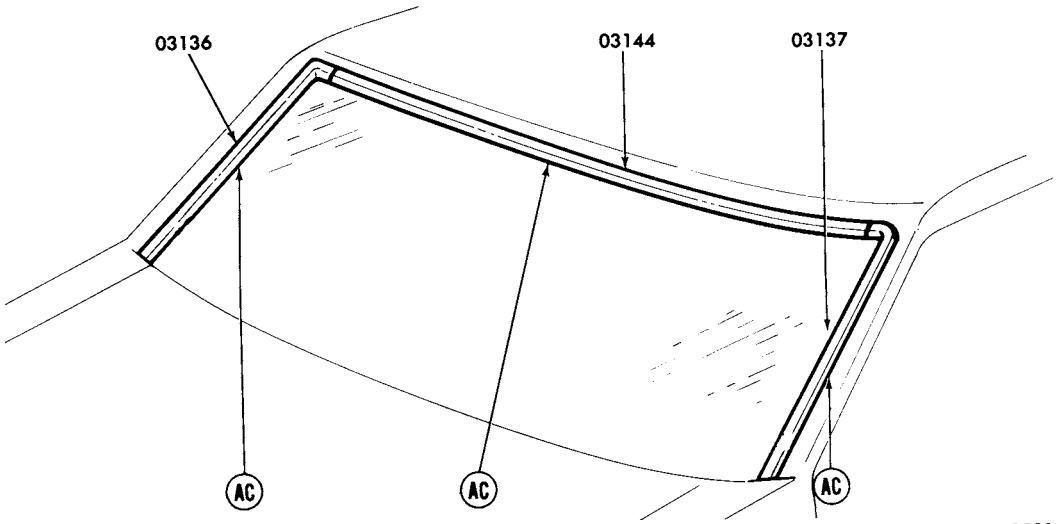

REFER TO EXTERIOR MOULDING SECTION 'R' FOR COMPLETE RETAINER INFORMATION

P-12521

1976 METEOR - WINDSHIELD

GROUP NUMBER	PART NAME	DESCRIPTION	PART NUMBER		QTY.
03136-7	Moulding (windshield outside side)	Body type 53 and 71	(RH)♦D7AZ 5303136-A	(LH)♦D7AZ 5303137-A	1
		Body type 65	(RH)♦D7AZ 6003136-A	(LH)♦D7AZ 6003137-A	1
03144	Moulding (windshield outside top)	Body type 53 and 71	♦D7AZ 5303144-A		1
		Body type 65	♦D7AZ 6003144-A		1

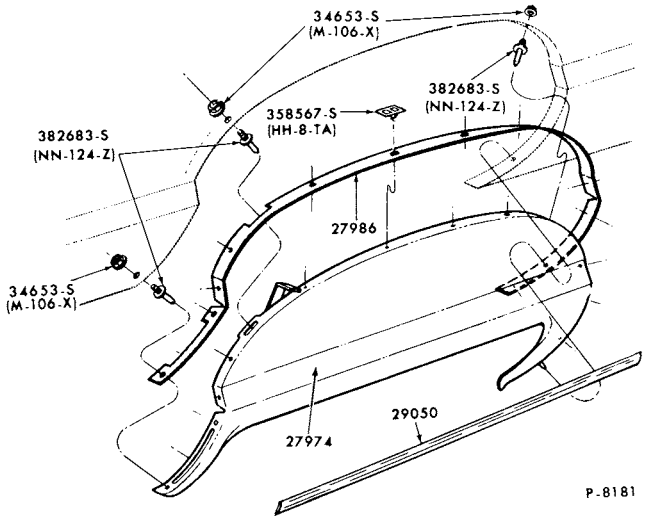

1976 METEOR - BODY TYPES 53 and 65 - WHEEL OPENING COVER PARTS

♦ Includes attaching parts

COPYRIGHT © 1986 — FORD MOTOR COMPANY — DEARBORN, MICHIGAN

1976 METEOR - BODY TYPES 53 and 65 - WHEEL OPENING COVER PARTS - cont'd.

GROUP NUMBER	PART NAME	DESCRIPTION	PART NUMBER		QTY.
27974-5	Panel (quarter wheel opening cover)		(RH)♠D3MY 6527974-A	(LH)♠D3MY 6527975-A	1
27986-7	Seal (quarter wheel opening cover)		(RH)♠D3MY 6527986-A	(LH)♠D3MY 6527987-A	1
29050-1	Moulding (quarter wheel opening cover)		(RH)♠D3MY 6529050-B	(LH)♠D3MY 6529051-B	1

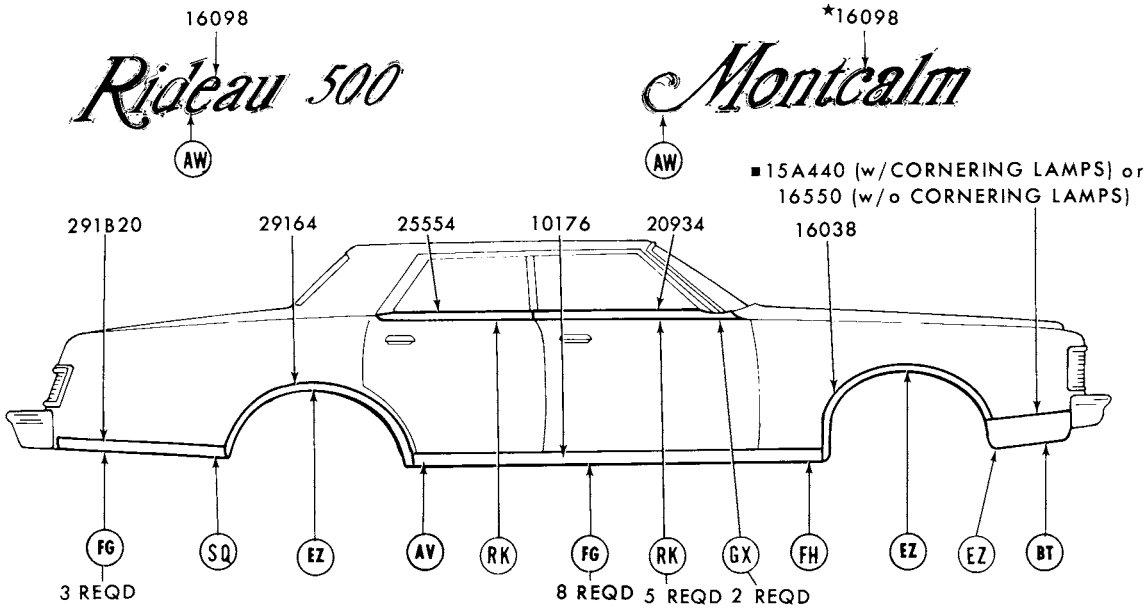

■ REFER TO GROUP IN CHASSIS SECTION
REFER TO EXTERIOR MOULDING SECTION 'R' FOR COMPLETE RETAINER INFORMATION P-12029

1976 METEOR - BODY TYPE 53 - SIDE - w/o WHEEL OPENING COVER

GROUP NUMBER	PART NAME	DESCRIPTION	PART NUMBER		QTY.
10176-7	Moulding (body rocker panel)	90 7/32" long	(RH)♠D3MY 6510176-A	(LH)♠D3MY 6510177-A	1
16038-9	Moulding (front fender wheel opening)	W/rocker panel moulding	(RH)♠D5MY 16038-A	(LH)♠D5MY 16039-A	1
		W/o rocker panel moulding	(RH)♠D5MY 16038-C	(LH)♠D5MY 16039-C	1
16098	Plate (name)	"Montcalm"	*D3MY 16098-C		2
		"Rideau"	*D3MY 16098-D		2
		"500"	*D3MY 16098-E		2
16550-1	Moulding (front fender lower front)		(RH)♠D5MY 16550-A	(LH)♠D5MY 16551-A	1
20934-5	Moulding (front door outside belt)	Incl. weatherstrip	(RH)♠D5AZ 5320934-B	(LH)♠D5AZ 5320935-B	1
25554-5	Moulding (rear door outside belt)	Incl. weatherstrip	(RH) D5AZ 5325554-A	(LH) D5AZ 5325555-A	1
291B20-1	Moulding (quarter lower)		(RH)♠D4MY 65291B20-A	(LH)♠D4MY 65291B21-A	1
29164-5	Moulding (quarter wheel opening)	W/o rocker panel moulding	(RH)♠D4MY 6529164-A	(LH)♠D4MY 6529165-A	1
		W/rocker panel moulding	(RH)♠D5MY 6529164-A	(LH)♠D5MY 6529165-A	1

♠ Includes attaching parts

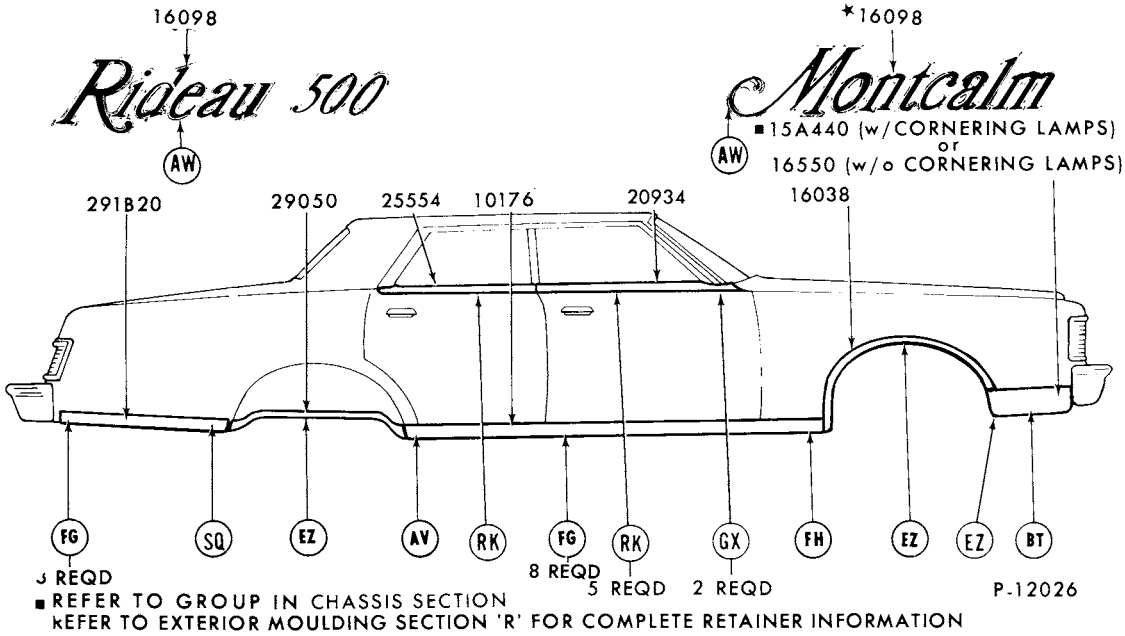

1976 METEOR - BODY TYPE 53 - SIDE - w/WHEEL OPENING COVER

GROUP NUMBER	PART NAME	DESCRIPTION	PART NUMBER		QTY.
10176-7	Moulding (body rocker panel)	90 7/32" long	(RH)♦D3MY 6510176-A	(LH)♦D3MY 6510177-A	1
16038-9	Moulding (front fender wheel opening)	W/rocker panel moulding	(RH)♦D3MY 6510176-A	(LH)♦D3MY 6510177-A	1
		W/o rocker panel moulding	(RH)♦D5MY 16038-C	(LH)♦D5MY 16039-C	1
16098	Plate (name)	"Montcalm"	★D3MY 16098-C		2
		"Rideau"	★D3MY 16098-D		2
		"500"	★D3MY 16098-E		2
16550-1	Moulding (front fender lower front)		(RH)♦D5MY 16550-A	(LH)♦D5MY 16551-A	1
20934-5	Moulding (front door outside belt)	Incl. weatherstrip	(RH)♦D5AZ 5320934-B	(LH)♦D5AZ 5320935-B	1
25554-5	Moulding (rear door outside belt)	Incl. weatherstrip	(RH)♦D5AZ 5325554-A	(LH)♦D5AZ 5325555-A	1
29050-1	Moulding (quarter wheel opening cover)		(RH)♦D3MY 6529050-A	(LH)♦D3MY 6529051-A	1
291B20-1	Moulding (quarter lower)		(RH)♦D4MY 65291B20-A	(LH)♦D4MY 65291B21-A	1

♦ Incl. attaching parts

COPYRIGHT © 1986 — FORD MOTOR COMPANY — DEARBORN, MICHIGAN

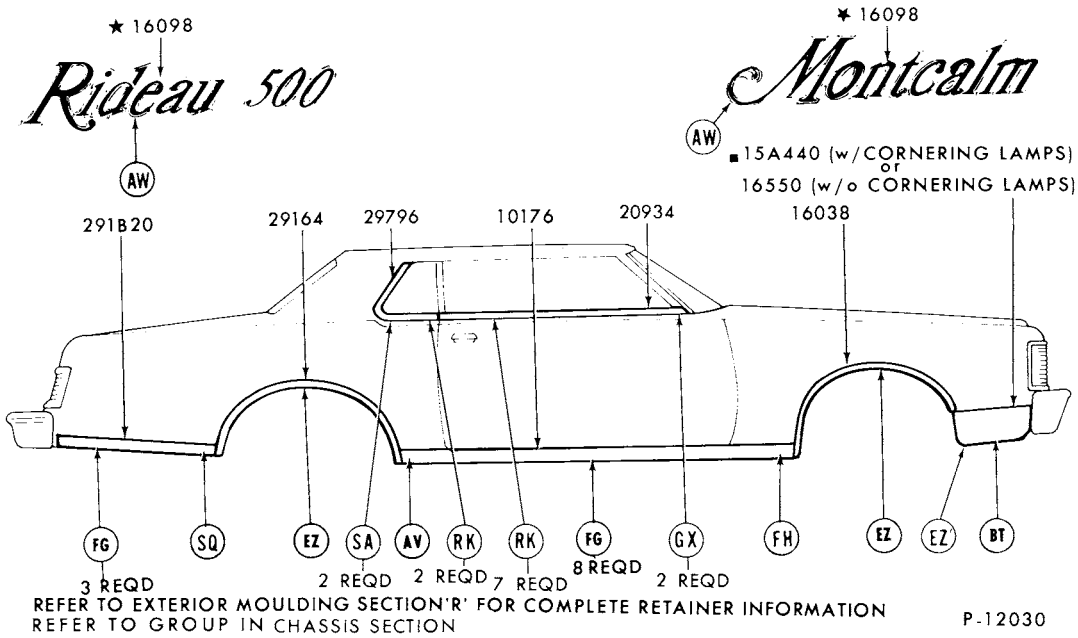

1976 METEOR - BODY TYPE 65 - SIDE - w/o WHEEL OPENING COVER

GROUP NUMBER	PART NAME	DESCRIPTION	PART NUMBER		QTY.
10176-7	Moulding (body rocker panel)	90 7/32" long	(RH)♦D3MY 6510176-A	(LH)♦D3MY 6510177-A	1
16038-9	Moulding (front fender wheel opening)	W/rocker panel moulding	(RH)♦D5MY 16038-A	(LH)♦D5MY 16039-A	1
		W/o rocker panel moulding	(RH)♦D5MY 16038-C	(LH)♦D5MY 16039-C	1
16098	Plate (name)	"Montcalm"	★D3MY 16098-C	Not replaced (4/84)	2
		"Rideau"	★D3MY 16098-D	Not replaced(4/84)	2
		"500"	★D3MY 16098-E	Not replaced (4/84)	2
16550-1	Moulding (front fender lower front)		(RH)♦D5MY 16550-A	(LH)♦D5MY 16551-A	1
20934-5	Moulding (door outside belt)	Incl. weatherstrip	(RH)♦D5AZ 6020934-A	(LH)♦D5AZ 6020935-A	1
291B20-1	Moulding (quarter lower)		(RH)♦D4MY 65291B20-A	(LH)♦D4MY 65291B21-A	1
29164-5	Moulding (quarter wheel opening)	W/o rocker panel moulding	(RH)♦D4MY 6529164-A	(LH)♦D4MY 6529165-A	1
		W/rocker panel moulding	(RH)♦D3MY 6529164-A	(LH)♦D3MY 6529165-A	1
29796-7	Moulding (moulding quarter window outside)		(RH) D5MY 6529796-A	(LH) D5MY 6529797-A	1

♦ Includes attaching parts

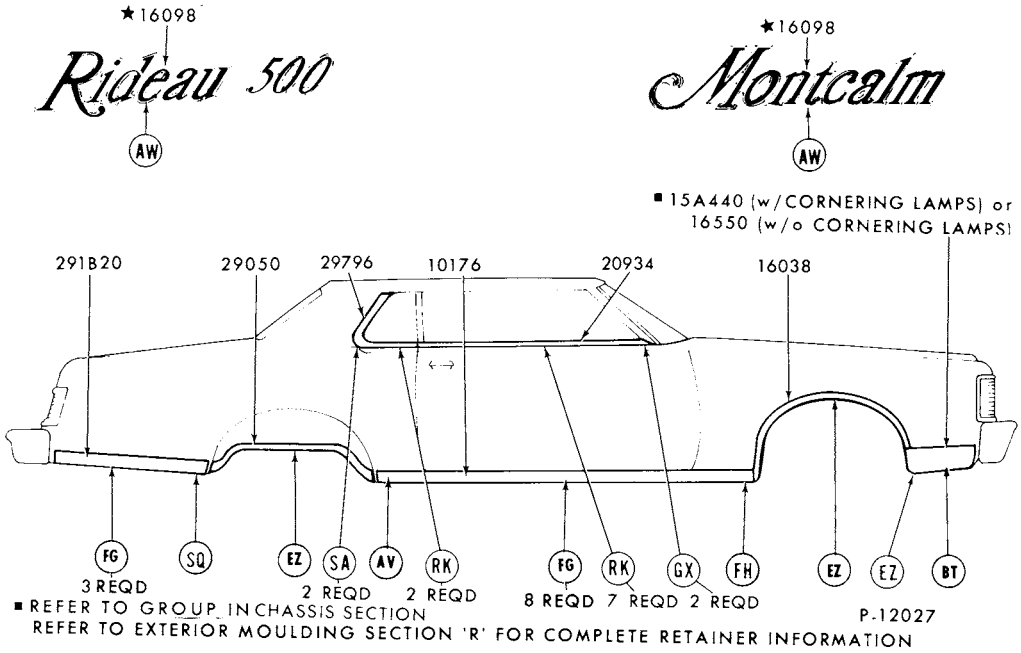

1976 METEOR - BODY TYPE 65 - SIDE - w/WHEEL OPENING COVER

GROUP NUMBER	PART NAME	DESCRIPTION	PART NUMBER		QTY.
10176-7	Moulding (body rocker panel)	90 7/32" long	(RH)♦ D3MY 6510176-A	(LH)♦ D3MY 6510177-A	1
16038-9	Moulding (front fender wheel opening)	W/rocker panel moulding	(RH)♦ D5MY 16038-A	(LH)♦ D5MY 16039-A	1
		W/o rocker panel moulding	(RH)♦ D5MY 16038-C	(LH)♦ D5MY 16039-C	1
16098	Plate (name)	"Montcalm"	★D3MY 16098-C	Not replaced (4/84)	2
		"Rideau"	★D3MY 16098-D	Not replaced (4/84)	2
		"500"	★D3MY 16098-E	Not replaced (4/84)	2
16550-1	Moulding (front fender lower front)		(RH)♦ D5MY 16550-A	(LH)♦ D5MY 16551-A	1
20934-5	Moulding (door outside belt)	Incl. weatherstrip	(RH)♦ D5AZ 6020934-A	(LH)♦ D5AZ 6020935-A	1
29050-1	Moulding (quarter wheel opening cover)	"Before 4/1/76"	(RH)♦ D3MY 6529050-A	(LH)♦ D3MY 6529051-A	1
		"From 4/1/76"	(RH)♦ D3MY 6529050-B	(LH)♦ D3MY 6529051-B	1
291B20-1	Moulding (quarter lower)	"Before 4/1/76"	(RH)♦ D4MY 65291B20-A	(LH)♦ D4MY 65291B21-A	1
		"From 4/1/76"	Not required		
29796-7	Moulding (moulding quarter window outside)		(RH) D5MY 6529796-A	(LH) D5MY 6529797-A	1

♦ Includes attaching parts

COPYRIGHT © 1986 — FORD MOTOR COMPANY — DEARBORN, MICHIGAN

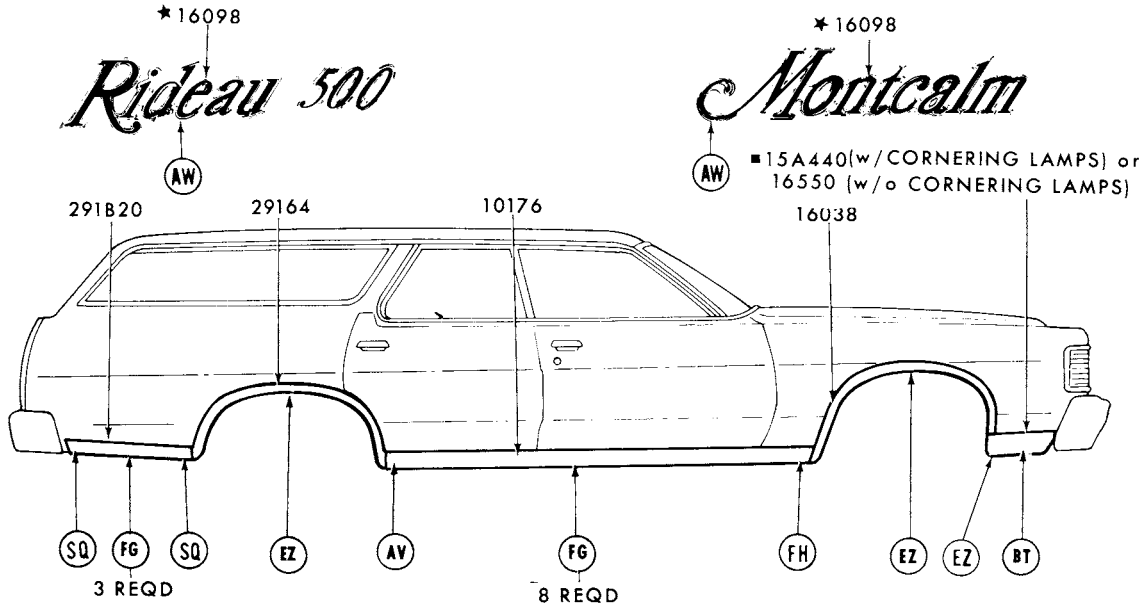

■ REFER TO GROUP IN TEXT SECTION

REFER TO EXTERIOR MOULDING SECTION 'R' FOR COMPLETE RETAINER INFORMATION

P-12028

1976 METEOR - BODY TYPE 71 - SIDE

GROUP NUMBER	PART NAME	DESCRIPTION	PART NUMBER		QTY.
10176-7	Moulding (body rocker panel)	87 3/4" long	(RH)♦D3MY 7110176-A	(LH)♦D3MY 7110177-A	1
16038-9	Moulding (front fender wheel opening)	W/rocker panel moulding	(RH)♦D5MY 16038-A	(LH)♦D5MY 16039-A	1
		W/o rocker panel moulding	(RH)♦D5MY 16038-C	(LH)♦D5MY 16039-C	1
16098	Plate (name)	"Montcalm"	✶D3MY 16098-C	Not replaced (4/84)	2
		"Rideau"	★D3MY 16098-D	Not replaced (4/84)	2
		"500"	★D3MY 16098-E	Not replaced (4/84)	2
16550-1	Moulding (front fender lower front)		(RH)♦D5MY 16550-A	(LH)♦D5MY 16551-A	1
291B20-1	Moulding (quarter outside lower)		(RH)♦D5MY 71291B20-A	(LH)♦D5MY 71291B21-A	1
29164-5	Moulding (quarter panel wheel opening)	W/rocker panel and lower rear quarter moulding	(RH)♦D5MY 7129164-A	(LH)♦D5MY 7129165-A	1
		W/o rocker panel moulding and w/o lower quarter moulding	(RH)♦D5MY 7129164-B	(LH)♦D5MY 7129165-B	1
		W/rocker panel moulding and w/o lower quarter moulding	(RH)♦D5MY 7129164-C	(LH)♦D5MY 7129165-C	1

♦ Includes attaching parts

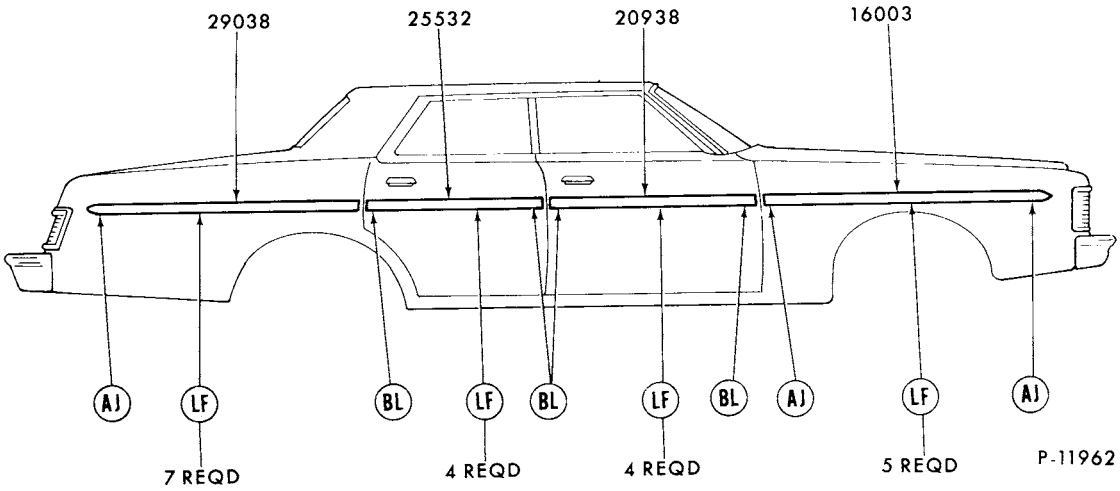

REFER TO EXTERIOR MOULDING SECTION "R" FOR COMPLETE RETAINER INFORMATION

1976 METEOR - BODY TYPE 53 - SIDE PROTECTION

GROUP NUMBER	PART NAME	DESCRIPTION	PART NUMBER		QTY.
16003-4	Moulding (front fender side)	Black vinyl insert	(RH)♠D3MY 16003-B	(LH)♠D3MY 16004-B	1
		Bright finish	(RH)♠D3MY 16003-D	(LH)♠D3MY 16004-D	1
20938-9	Moulding (front door outside)	Black vinyl insert	(RH)♠D3MY 5320938-A	(LH)♠D3MY 5320939-A	1
		Bright finish	(RH)♠D3MY 5320938-B	(LH)♠D3MY 5320939-B	1
25532-3	Moulding (rear door outside)	Black vinyl insert	(RH)♠D3AZ 5325532-A	(LH)♠D3AZ 5325533-A	1
		Bright finish	(RH)★D3MY 5325532-B Not replaced (6/82)	(LH)★D3MY 5325533-B Not replaced (6/82)	1
29038-9	Moulding (quarter outside)	Black vinyl insert	(RH)♠D3MY 5329038-A	(LH)♠D3MY 5329039-A	1
		Bright finish	(RH)♠D3MY 5329038-B	(LH)♠D3MY 5329039-B	1

♠ Includes attaching parts

COPYRIGHT © 1986 — FORD MOTOR COMPANY — DEARBORN, MICHIGAN

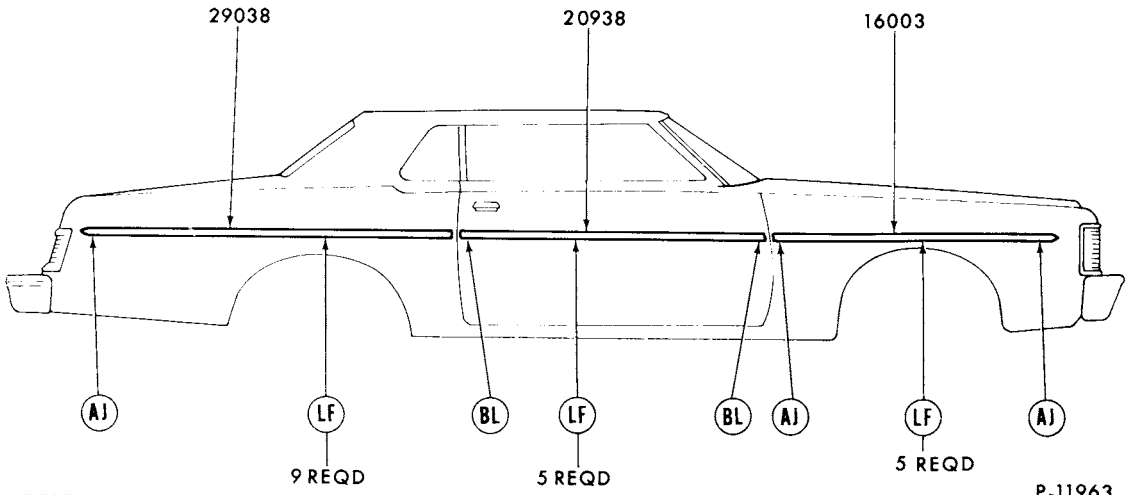

REFER TO EXTERIOR MOULDING SECTION "R" FOR COMPLETE RETAINER INFORMATION

1976 METEOR - BODY TYPE 65 - SIDE PROTECTION

GROUP NUMBER	PART NAME	DESCRIPTION	PART NUMBER		QTY.
16003-4	Moulding (front fender side)	Black vinyl insert	(RH)♦D3MY 16003-B	(LH)♦D3MY 16004-B	1
		Bright finish	(RH)♦D3MY 16003-D	(LH)♦D3MY 16004-D	1
20938-9	Moulding (front door outside)	Black vinyl insert	(RH)♦D3AZ 6520938-A	(LH)♦D3MY 6520939-A	1
		Bright finish	(RH)♦D3MY 6520938-B	(LH)♦D3MY 6520939-B	1
29038-9	Moulding (quarter outside)	Black vinyl insert	(RH)♦D3MY 6529038-A	(LH)♦D3MY 6529039-A	1
		Bright finish	(RH)♦D3MY 6529038-C	(LH)♦D3MY 6529039-C	1

♦ Includes attaching parts

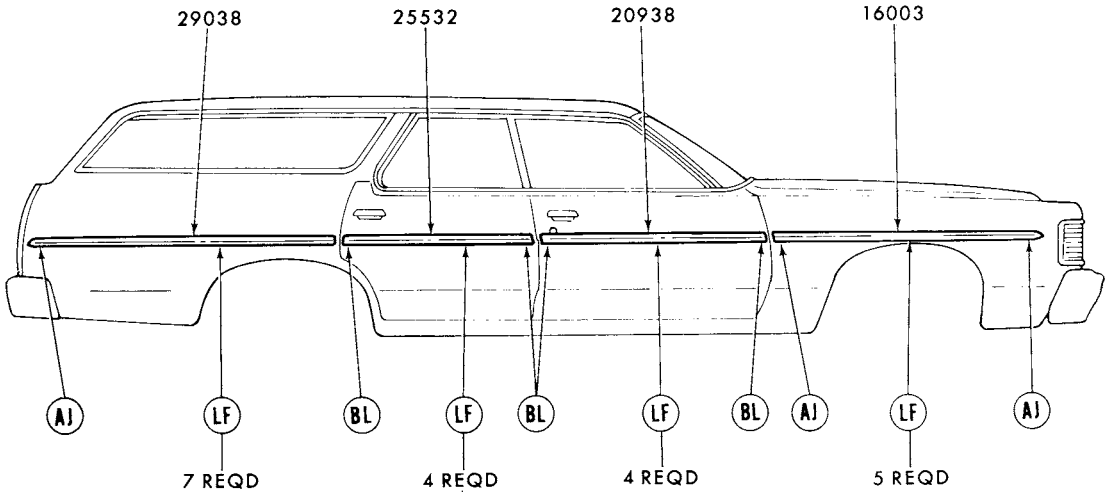

REFER TO EXTERIOR MOULDING SECTION "R" FOR COMPLETE RETAINER INFORMATION P-11964

1976 METEOR - BODY TYPE 71 - SIDE PROTECTION

GROUP NUMBER	PART NAME	DESCRIPTION	PART NUMBER		QTY.
16003-4	Moulding (front fender side)	Black vinyl insert	(RH)♠D3MY 16003-B	(LH)♠D3MY 16004-B	1
		Bright finish	(RH)♠D3MY 16003-D	(LH)♠D3MY 16004-D	1
20938-9	Moulding (front door outside)	Black vinyl insert	(RH)♠D3MY 5320938-A	(LH)♠D3MY 5320939-A	1
		Bright finish	(RH)♠D3MY 5320938-B	(LH)♠D3MY 5320939-B	1
25532-3	Moulding (rear door outside)	Black vinyl insert	(RH)♠D3AZ 5325532-A	(LH)♠D3AZ 5325533-A	1
		Bright finish	(RH)*D3MY 5325532-B Not replaced (6/82)	(LH)*D3MY 5325533-B Not replaced (6/82)	1
29038-9	Moulding (quarter outside)	Black vinyl insert	(RH)♠D3MY 7129038-A	(LH)♠D3MY 7129039-A	1
		Bright finish	(RH)♠D3MY 7129038-D	(LH)♠D3MY 7129039-D	1

♠ Includes attaching parts

COPYRIGHT © 1986 — FORD MOTOR COMPANY — DEARBORN, MICHIGAN

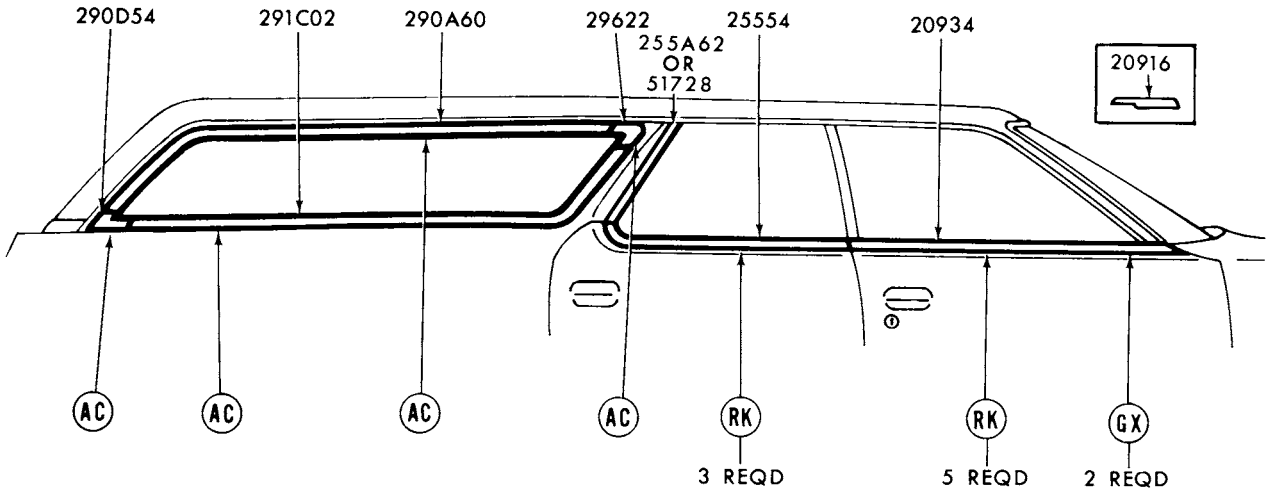

P-12501

1976 METEOR - BODY TYPE 71 - DOOR and QUARTER WINDOW FRAME

GROUP NUMBER	PART NAME	DESCRIPTION	PART NUMBER		QTY.
20916-7	Moulding (front door outside belt front)		(RH)♦D5AZ 5320916-A	(LH)♦D5AZ 5320917-A	1
20934-5	Moulding (front door outside belt)	Incl. weatherstrip	(RH)♦D5AZ 5320934-B	(LH)♦D5AZ 5320935-B	1
25554-5	Moulding (rear door outside belt)	Incl. weatherstrip	(RH)♦D5AZ 5325554-A	(LH)♦D5AZ 5325555-A	1
255A62-3	Moulding (rear door window opening rear)		(RH)♦D5AZ 71255A62-A	(LH)♦D5AZ 71255A63-A	1
290D54-5	Moulding (quarter window outside lower rear corner)		(RH) D5AZ 71290D54-A	(LH) D5AZ 71290D55-A	1
290A60-1	Moulding (quarter window outside upper)		(RH)♦D5AZ 71290A60-A	(LH)♦D5AZ 71290A61-A	1
291C02-3	Moulding (quarter window outside lower rear)		(RH)♦D5AZ 71291C02-A	(LH)♦D5AZ 71291C03-A	1
29622-3	Moulding (quarter window outside front		(RH) D5AZ 7129622-A	(LH) D5AZ 7129623-A	1
51728-9	Moulding (rear door window outside)		Not used in 1976		

♦ Includes attaching parts

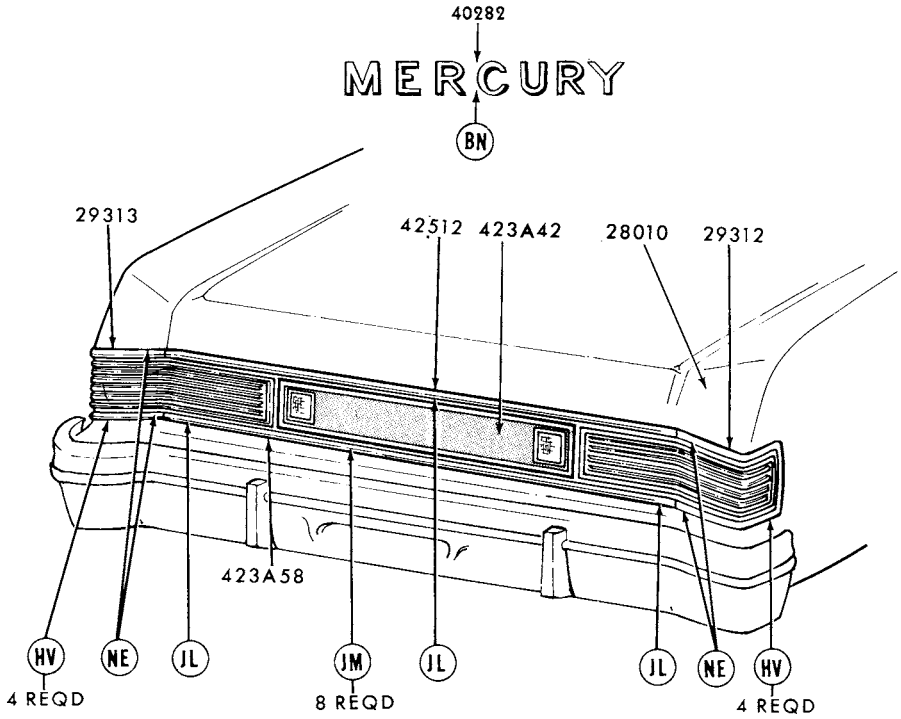

REFER TO EXTERIOR MOULDING SECTION "R" FOR COMPLETE RETAINER INFORMATION

P-11984

1976 METEOR - BODY TYPES 53 and 65 - BACK END

GROUP NUMBER	PART NAME	DESCRIPTION	PART NUMBER		QTY.
28010-1	Extension (quarter rear)		(RH)♦D5MY 6528010-A	(LH)♦D5MY 6528011-A	1
29312-3	Moulding (quarter rear extension)		(RH)♦D5MY 6529312-A	(LH)♦D5MY 6529313-A	1
40282	Letter (name)	"M"	♦D3MY 7140282-A		1
		"E"	♦D3MY 7140282-B		1
		"R"	♦D3MY 7140282-C		2
		"C"	♦D3MY 7140282-D		1
		"U"	♦D3MY 7140282-E		1
		"Y"	♦D3MY 7140282-F		1
423A42	Panel (lower back panel)	Black	♦D5MY 65423A42-M		1
		Blue	♦D5MY 65423A42-J		1
		Brown	★D5MY 65423A42-G	Not replaced (6/82)	1
		Gold	♦D6MY 65423A42-C		1
		Green	★D5MY 65423A42-K	Not replaced (6/82)	1
		Red	♦D6MY 65423A42-A		1
		White	★D6MY 65423A42-B	Not replaced (6/82)	1
423A58	Moulding (lower back panel)		♦D5MY 65423A58-B		1
42512	Moulding (luggage compartment door)		♦D5MY 6542512-A		1

♦ Includes attaching parts

COPYRIGHT © 1986 — FORD MOTOR COMPANY — DEARBORN, MICHIGAN

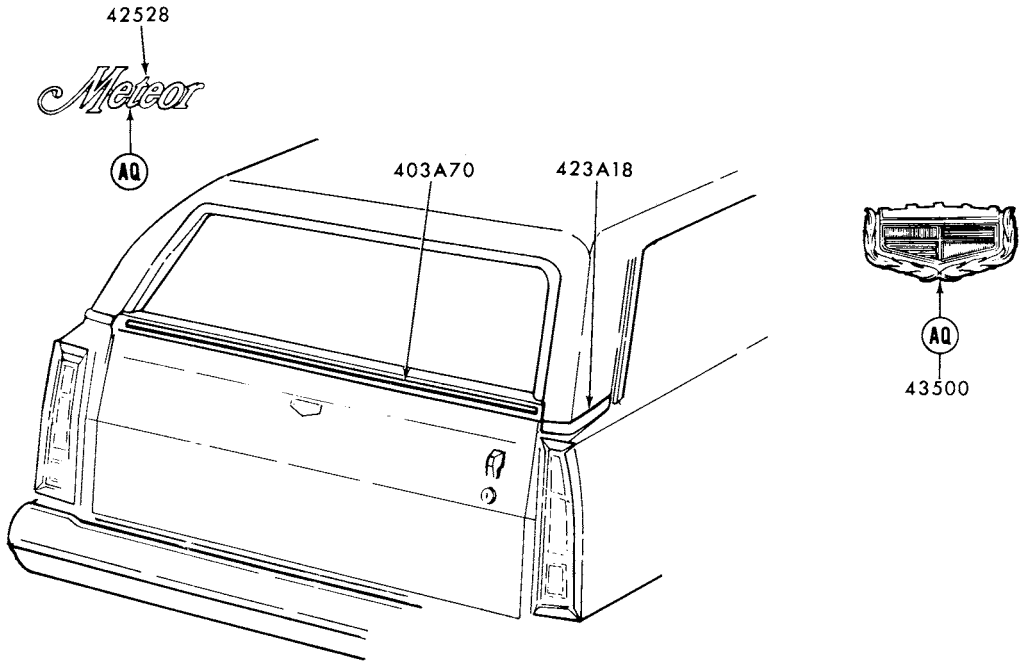

REFER TO EXTERIOR MOULDING SECTION "R" FOR COMPLETE RETAINER INFORMATION P-12278

1976 METEOR - BODY TYPE 71 - BACK END

GROUP NUMBER	PART NAME	DESCRIPTION	PART NUMBER	QTY.
40282	Letter (name)	"M"	♦D3MY 7140282-A	1
		"E"	♦D3MY 7140282-B	1
		"R"	♦D3MY 7140282-C	2
		"C"	♦D3MY 7140282-D	1
		"U"	♦D3MY 7140282-E	1
		"Y"	♦D3MY 7140282-F	1
403A70	Moulding (tailgate outside belt)	W/wash and wipe	★D4AZ 71403A70-D Not replaced (7/81)	1
		W/o wash and wipe	♦D4AZ 71403A70-E	1
42528	Plate (name)	"Meteor"	♦D3MY 6542528-B	1

♦ Includes attaching parts

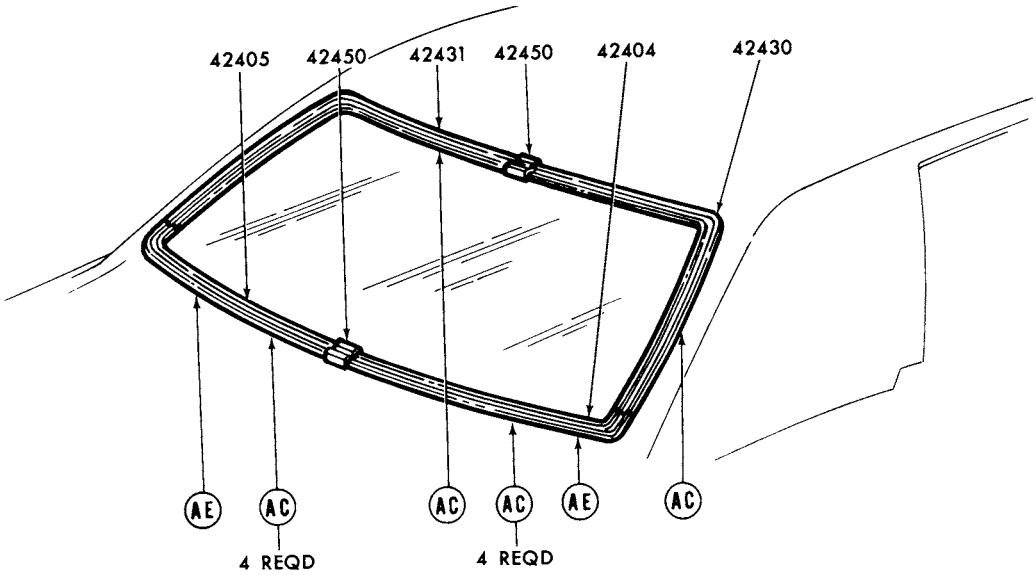

REFER TO EXTERIOR MOULDING SECTION "R" FOR COMPLETE RETAINER INFORMATION

P-12460

1976 METEOR - BODY TYPE 53 - BACK WINDOW

GROUP NUMBER	PART NAME	DESCRIPTION	PART NUMBER	QTY.
42404-5	Moulding (back window outside lower)		(RH)♦ D3AZ 5342404-A (LH)♦ D3AZ 5342405-A	1
42430-1	Moulding (back window outside upper)		(RH)♦ D7AZ 5342430-A (LH)♦ D7AZ 5342431-A	1
42450	Cover (back window outside moulding joint)	Lower	D5AZ 5342450-A	1
		Upper	D5AZ 5342450-B	1

♦ Includes attaching parts

COPYRIGHT © 1986 — FORD MOTOR COMPANY — DEARBORN, MICHIGAN

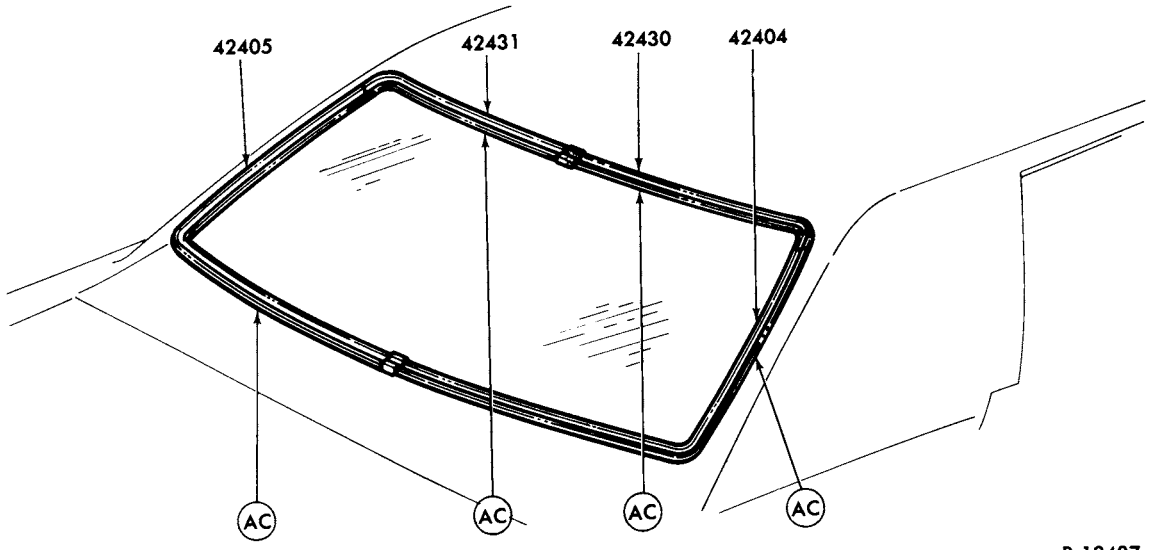

P-12487

REFER TO EXTERIOR MOULDING SECTION "R" FOR COMPLETE RETAINER INFORMATION

1976 METEOR - BODY TYPE 65 - BACK WINDOW

GROUP NUMBER	PART NAME	DESCRIPTION	PART NUMBER	QTY.
42404-5	Moulding (back window outside lower)		(RH)♦ D5MY 6042404-A (LH)♦ D5MY 6042405-A	1
42430-1	Moulding (back window outside upper)		(RH)♦ D7AZ 6042430-A (LH)♦ D7AZ 6042431-A	1

♦ Includes attaching parts

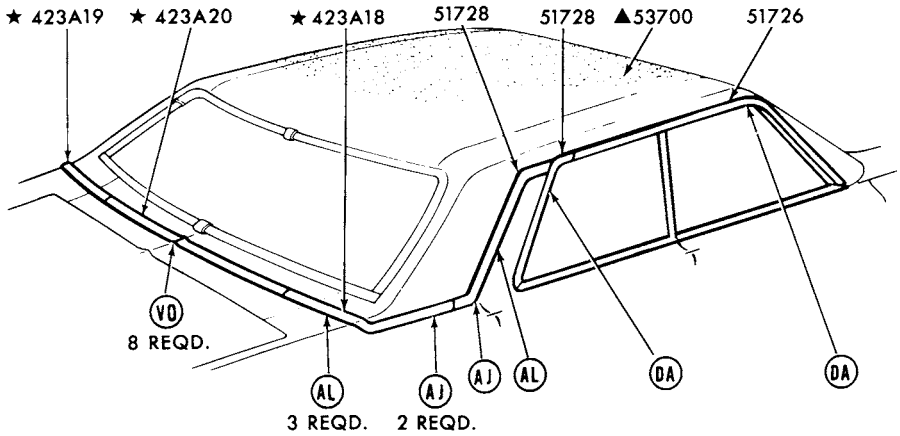

▲ REFER TO GROUP IN SOFT TRIM SECTION
REFER TO EXTERIOR MOULDING SECTION 'R' FOR COMPLETE RETAINER INFORMATION

P-13420

1976 METEOR - BODY TYPE 53 - ROOF and BACK BELT

GROUP NUMBER	PART NAME	DESCRIPTION	PART NUMBER		QTY.
403A22	Cover (back belt moulding)		Not used in 1976		
51726-9	Moulding (roof drip side finish)	Front	(RH)♦D5AZ 5351726-A	(LH)♦D7AZ 5351727-C	1
		Rear	(RH)♦D5AZ 5351728-A	(LH)♦D5AZ 5351729-A	1
51728-9	Moulding (roof drip side finish)	Black w/Halo roof	(RH)♦D6MY 5351728-C	(LH)♦D6MY 5351729-C	1
		Blue	(RH)♦D5MY 5351728-D	(LH)♦D5MY 5351729-D	1
		Brown	(RH)★D5MY 5351728-A Not replaced (7/81)	(LH)♦D5MY 5351729-A	1
		Gold	(RH)♦D6MY 5351728-B	(LH)♦D6MY 5351729-B	1
		Green	(RH)♦D5MY 5351728-E	(LH)♦D5MY 5351729-E	1
		Red	(RH)♦D6MY 5351728-A	(LH)♦D6MY 5351729-A	1
		Silver	(RH)♦D6MY 5351728-D	(LH)♦D6MY 5351729-D	1
		White	(RH)♦D5MY 5351728-B	(LH)♦D5MY 5351729-B	1

◊ For color verification, refer to the vinyl roof swatches in the 1976 salesman's color and upholstery selections guide.
♦ Includes attaching parts
† Prime Paint to Match

COPYRIGHT © 1986 — FORD MOTOR COMPANY — DEARBORN, MICHIGAN

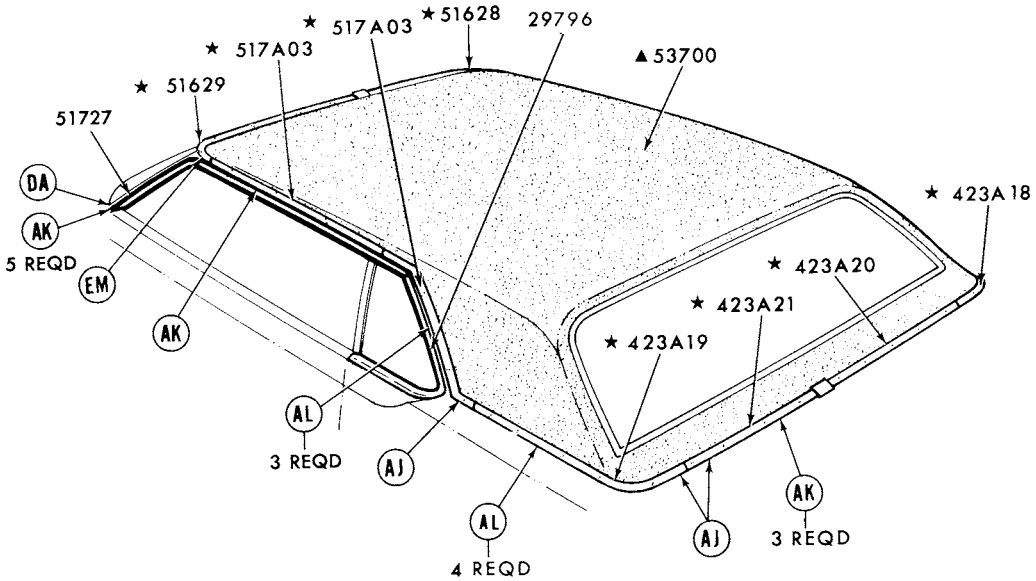

▲REFER TO GROUP IN SOFT TRIM SECTION
REFER TO EXTERIOR MOULDING SECTION "R" FOR COMPLETE RETAINER INFORMATION

P-10120

1976 METEOR - BODY TYPE 65 - ROOF and BACK BELT - w/HALO VINYL ROOF

GROUP NUMBER	PART NAME	DESCRIPTION	PART NUMBER	QTY.
29796-7	Moulding (quarter window outside rear)		(RH) D5MY 6529796-A (LH) D5MY 6529797-A	1
51726-7	Moulding (roof drip side finish)	Front	(RH)♦D5MY 6551726-A (LH)♦D5MY 6551727-A	1

♦ Includes attaching parts

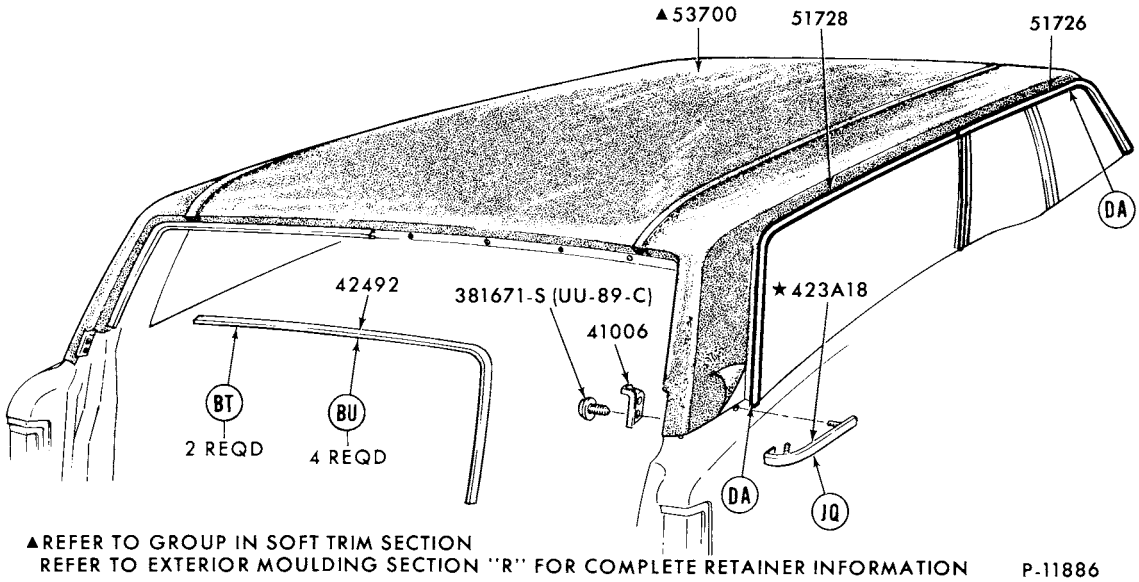

▲REFER TO GROUP IN SOFT TRIM SECTION
REFER TO EXTERIOR MOULDING SECTION "R" FOR COMPLETE RETAINER INFORMATION

P-11886

1976 METEOR - BODY TYPE 71 - ROOF and BACK BELT

GROUP NUMBER	PART NAME	DESCRIPTION	PART NUMBER		QTY.
41006-7	Retainer (rear corner pillar cover)		(RH) D5AZ 7141006-A	(LH) D5AZ 7141007-A	1
42492-3	Moulding (back window outside side)		(RH)♦D3AZ 7142492-A	(LH)♦D3AZ 7142493-A	1
51726-7	Moulding (roof drip side finish)	Front	(RH)♦D5AZ 7151726-A	(LH)♦D5AZ 7151727-A	1
51728-9	Moulding (roof drip side finish)	Rear	(RH) D5AZ 7151728-A	(LH)★D5AZ 7151729-A Not replaced (6/82)	1

♦ Includes attaching parts

COPYRIGHT © 1986 — FORD MOTOR COMPANY — DEARBORN, MICHIGAN

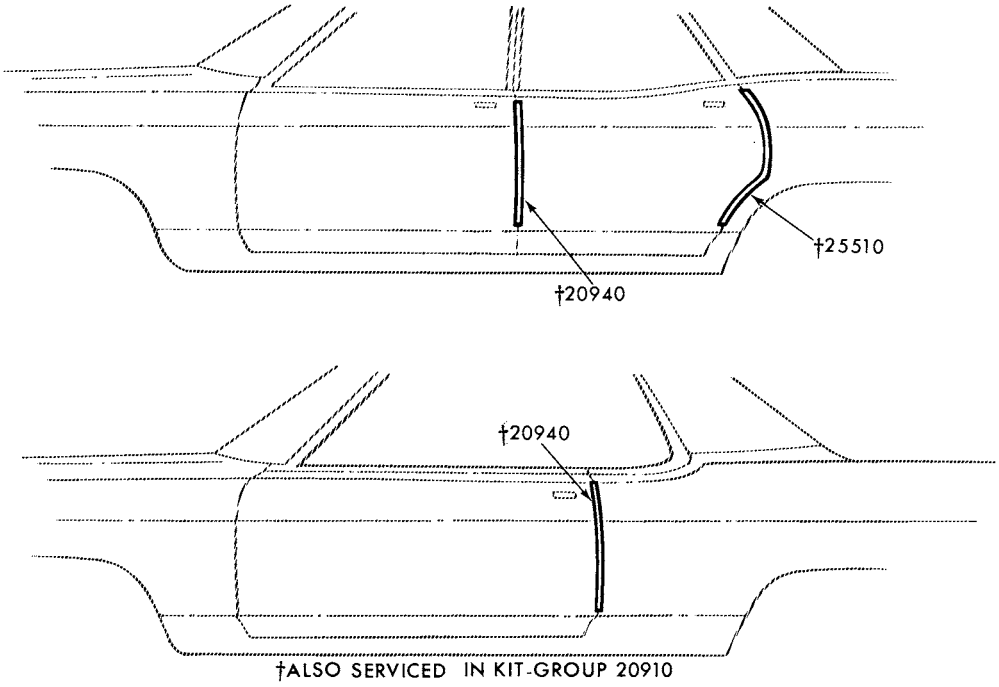

†ALSO SERVICED IN KIT-GROUP 20910

P-10061

1976 METEOR - DOOR EDGE GUARDS

GROUP NUMBER	PART NAME	DESCRIPTION	PART NUMBER	QTY.
20940-1	Moulding (front door edge guard)	Bright-body types 53 and 71	(RH) D3MY 5320940-A (LH) D3MY 5320941-A	1
		Body type 65	(RH) D3MY 6520940-A (LH) D3MY 6520941-A	1
25510-1	Moulding (rear door edge guard)	Bright-body types 53 and 71	(RH) D3MY 5325510-A (LH) D3MY 5325511-A	1

INDEX

TITLE	SECTION	PAGE	ILLUS. NO.
1977			
A (MERCURY)			
BACK END			
-body types 53 and 65	77A	21	P-11984
-body type 71	77A	22	P-11985
BACK WINDOW			
-body type 53	77A	23	P-12460
-body type 65	77A	23	P-12487
BELT and ROOF DRIP			
-body type 53	77A	26	P-13240
-body type 65	77A	26	P-13241
-body type 71	77A	20	P-13209
BODY SIDE			
-body type 53H-w/o wheel opening cover	77A	2	P-11967
-body type 53H-w/wheel opening cover	77A	3	P-11970
-body type 53K-w/o vinyl insert mouldings	77A	4.5	P-11971
-body type 53L-w/vinyl insert mouldings	77A	6,7,8	P-11966
-body type 65H-w/o wheel opening covers	77A	9	P-11968
-body type 65H-w/wheel opening covers	77A	10	P-11969
-body type 65K-w/o vinyl insert mouldings	77A	11,12	P-11972
-body type 65L-w/vinyl insert mouldings	77A	13,14,15	P-11965
-body type 71 exc. "Colony Park"	77A	15	P-11973
-body type 71 "Colony Park"	77A	16,17	P-11974
BODY SIDE PROTECTION			
-body type 53	77A	18	P-11962
-body type 65	77A	18	P-11963
-body type 71	77A	19	P-11964
DOOR EDGE GUARDS	77A	27	P-10061
LUGGAGE COMPARTMENT - refer to BACK END			
ROOF and BACK BELT			
-body type 53	77A	24	P-13242
-body type 65-w/full vinyl roof	77A	24	P-13243
-body type 65-w/partial vinyl roof	77A	25	P-12761
ROOF DRIP and BELT			
-body type 53	77A	26	P-13240
-body type 65	77A	26	P-13241
-body type 71	77A	20	P-13209
STRIPES	77A	20	P-12929
TAILGATE-refer to BACK END			
WHEEL OPENING COVER PARTS			
-body types 53 and 65	77A	5	P-8181
WINDOW FRAME			
-body type 71	77A	20	P-13209
WINDSHIELD	77A	1	P-12521

COPYRIGHT © 1986 — FORD MOTOR COMPANY — DEARBORN, MICHIGAN

INDEX

1977

D (LINCOLN)

TITLE	SECTION	PAGE	ILLUS. NO.
BACK END			
- body types 53 and 60	77D	1	P-11896
BACK WINDOW			
- w/o vinyl roof and w/full vinyl roof	77D	10	P-12488
- w/half vinyl roof	77D	10	P-13189
BODY SIDE			
- body type 53-w/side mouldings	77D	2,3,4	P-13185
- body type 60-w/side mouldings	77D	5,6,7	P-13183
BODY SIDE PROTECTION			
- body types 53,60	77D	8,9	P-13186
DOOR BELT and WINDOW			
- body type 53	77D	11	P-13191
- body type 60	77D	12	P-13190
DOOR EDGE GUARDS	77D	15	P-10061
LUGGAGE COMPARTMENT - Refer to BACK END			
ROOF and BACK BELT			
- body type 53	77D	13,14,15	P-13187
- body type 60	77D	16,17,18	P-13188
ROOF DRIP - refer to ROOF and BACK BELT			
WHEEL OPENING COVER PARTS	77D	12	P-11793
WINDOW FRAME - refer to Body Illustration Index 230			
WINDSHIELD	77D	1	P-12994

F (COUGAR)

TITLE	SECTION	PAGE	ILLUS. NO.
BACK END			
- body types 53 and 65D,K	77F	13	P-13156
- body type 65L	77F	14	P-13159
- body type 71	77F	15	P-13157
BACK WINDOW			
- body types 53 and 65	77F	16	P-13039
BELT, DRIP RAIL and QUARTER WINDOW			
- body type 53	77F	12	P-13141
- body type 65	77F	13	P-13142
BODY SIDE			
- body types 53B,D-w/narrow mouldings	77F	2	P-13144
- body types 53D,K-w/wide mouldings	77F	3,4	P-13147
- body type 65-w/narrow mouldings	77F	5	P-13143
- body types 65D,K,L-w/wide mouldings	77F	6,7,8	P-13148
- body types 71B,D	77F	9	P-13153
- body type 71K	77F	10,11	P-13139
DOOR EDGE GUARDS	77F	18	P-10061
LUGGAGE COMPARTMENT - refer to BACK END			
ROOF and BACK BELT			
- body types 53 and 65D,K	77F	16,17	P-13160
- body type 65L	77F	17	P-13162
ROOF DRIP - refer to BELT, DRIP RAIL and QUARTER WINDOW			
WINDOW FRAME			
- body type 71	77F	11,12	P-12502
WINDSHIELD	77F	1	P-12521

INDEX

TITLE	SECTION	PAGE	ILLUS. NO.
1977			
G (MONARCH)			
BACK END	77G	10	P-11949
BACK WINDOW			
-body type 54	77G	11	P-12485
-body type 66	77G	11	P-12486
BELT			
Back-refer to ROOF and BACK BELT			
Front door, Rear door and Quarter-refer to BODY SIDE			
BODY SIDE			
	77G	3	P-11946
-body type 54K-w/luxury decor	77G	2,3	P-11945
-body type 66K-w/luxury decor	77G	4	P-11944
BODY SIDE PROTECTION			
-body type 54-black vinyl insert	77G	6	P-11943
-body type 54-bright finish	77G	5	P-11948
-body type 66-black vinyl insert	77G	6	P-11942
-body type 66-bright finish	77G	5	P-11941
DOOR EDGE GUARDS	77G	16	P-10061
LUGGAGE COMPARTMENT-refer to BACK END			
ROOF and BACK BELT			
-body type 54	77G	12	P-11935
-body type 66	77G	13	P-11934
-body type 66-w/half vinyl roof	77G	14	P-12924
ROOF DRIP-refer to ROOF and BACK BELT			
STRIPES			
-body type 66	77G	9	P-12972
-body type 66 - single color	77G	7	P-12021
-body type 66H - multiple colors	77G	15	P-13598
WINDOW FRAME			
-body type 54	77G	8	P-12494
-body type 66	77G	9	P-12496
WINDSHIELD	77G	1	P-12526
J (CAPRI)			
- For 1977 model year - use 1976 index			
K (MARK V)			
BACK END	77K	4	P-13170
BACK WINDOW	77K	5	P-12459
BELT			
Back - refer to ROOF and BACK BELT			
Front door and Quarter - refer to Drip Rail, Door Belt and Quarter Window			
BODY SIDE			
- with Rocker Panel Moulding	77K	1,2	P-13169
- with Wide Mouldings	77K	2,3	P-13168

COPYRIGHT © 1986 — FORD MOTOR COMPANY — DEARBORN, MICHIGAN

INDEX

1977

K (MARK V) - cont'd.

TITLE	SECTION	PAGE	ILLUS. NO.
DOOR EDGE GUARDS	77K	11	P-10061
DRIP RAIL, DOOR BELT and QUARTER WINDOW	77K	6	P-13179
LUGGAGE COMPARTMENT - refer to BACK END			
ROOF and BACK BELT			
- w/full vinyl roof	77K	6,7	P-13181
- w/half vinyl roof	77K	8,9,10	P-13182
ROOF DRIP - refer to Drip Rail, Door Belt and Quarter Window			
STRIPES			
- luggage compartment door-except Designer Series Givenchy-refer to Back End			
- luggage compartment door-Designer Series Givenchy	77K	10	P-13502
- radiator grille opening panel-Designer Series Givenchy-refer to group 8C077 in Text Section			
- body side-Designer Series Pucci	77K	11	P-13501
WINDSHIELD	77K	1	P-12994

L (BOBCAT)

TITLE	SECTION	PAGE	ILLUS. NO.
BACK END			
- body type 62 and 64	77L	10	P-11415
- body type 73	77L	11	P-12312
BACK WINDOW			
- body type 62	77L	11,12	P-12464
- body type 64	77L	13	P-12465
- body type 73	77L	11	P-12312
BELT			
Back - refer to ROOF and BACK BELT			
Front Door and Quarter - refer to Body Side			
BODY SIDE			
- body types 62 and 64-exc. Squire	77L	1,2	P-12314
- body type 73B	77L	3	P-13195
- body type 73H	77L	4,5	P-12315
BODY SIDE PROTECTION	77L	5,6	P-12316
DOOR EDGE GUARDS	77L	13	P-10061
LIFTGATE - refer to BACK END			
LUGGAGE COMPARTMENT - refer to BACK END			
ROOF and BACK BELT			
- body types 62 and 64 - roof drip side and partial roof	77L	12	P-12811
ROOF DRIP - refer to ROOF and BACK BELT			

INDEX

TITLE	SECTION	PAGE	ILLUS. NO.
1977			
L (BOBCAT) - cont'd.			
STRIPES			
- body types 62 and 64	77L	7,12	P-12993, P-13546
- body types 62 and 64	77L	6	P-12779
- body type 73	77L	7	P-12690
WINDOW FRAME			
- body types 62 and 64	77L	8	P-12497
- body type 73	77L	9	P-12498
WINDSHIELD	77L	1	P-12522
P (COMET)			
BACK END	77P	8	P-11076
BACK WINDOW			
- body type 54	77P	10	P-12468
- body type 62	77P	10	P-12467
BELT			
Back - refer to ROOF and BACK BELT			
Front door, Rear door and Quarter - refer to Body Side			
BODY SIDE			
- body type 54 - w/o luxury decor	77P	1	P-11854
- body type 54 - w/luxury decor	77P	2,3	P-10011
- body type 62 - w/o luxury decor	77P	2	P-8226
- body type 62 - w/luxury decor	77P	4	P-10012
BODY SIDE PROTECTION			
- body type 54	77P	5	P-11855
- body type 62	77P	5,6	P-8186
DOOR EDGE GUARDS	77P	14	P-10061
LUGGAGE COMPARTMENT - refer to BACK END			
ROOF and BACK BELT			
- body type 54	77P	9	P-12781
- body type 62	77P	12	P-12802
ROOF DRIP - refer to ROOF and BACK BELT			
STRIPES			
-body type 54, 62	77P	11	P-13430
-body type 62	77P	9	P-12973
-body type 62	77P	13	P-13511
WINDOW FRAME			
- body type 54	77P	6	P-12500
- body type 62	77P	7	P-12499
WINDSHIELD	77P	1	P-12520

COPYRIGHT © 1986 — FORD MOTOR COMPANY — DEARBORN, MICHIGAN

INDEX

TITLE	SECTION	PAGE	ILLUS. NO.
1977			
V (VERSAILLES)			
BACK END	77V	3	P-13340
BELT	77V	5	P-12494
BODY SIDE			
- w/ rocker panel and wheel lip moulding	77V	1	P-13343
- w/ side protection moulding	77V	2	P-13342
BODY SIDE PROTECTION	77V	3	P-11943
DOOR EDGE GUARDS	77V	7	P-10061
LUGGAGE COMPARTMENT DOOR	77V	3	P-13340
ROOF and BACK BELT	77V	6	P-13341
ROOF DRIP	77V	6	P-13341
STRIPES	77V	4	P-12021
WINDOW FRAME	77V	5	P-12494
WINDSHIELD	77V	1	P-12526

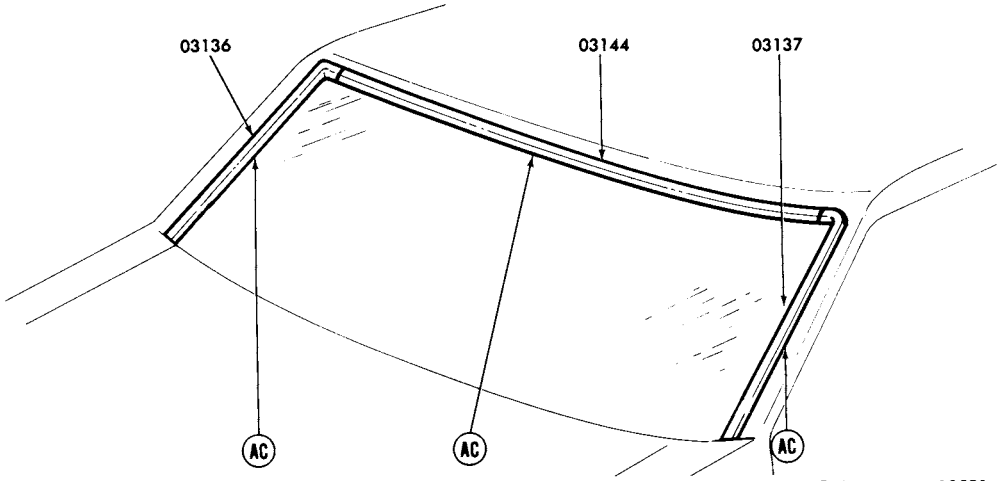

REFER TO EXTERIOR MOULDING SECTION 'R' FOR COMPLETE RETAINER INFORMATION P-12521

1977 MERCURY - WINDSHIELD

GROUP NUMBER	PART NAME	DESCRIPTION	PART NUMBER	QTY.
03136-7	Moulding (windshield outside side)	Body types 53 and 71	(RH)♦ D7AZ 5303136-A (LH)♦ D7AZ 5303137-A	1
		Body type 65	(RH)♦ D7AZ 6003136-A (LH)♦ D7AZ 6003137-A	1
03144	Moulding (windshield outside top)	Body types 53 and 71	♦ D7AZ 5303144-A	1
		Body type 65	♦D7AZ 6003144-A	1

♦ Includes attaching parts

COPYRIGHT © 1986 — FORD MOTOR COMPANY — DEARBORN, MICHIGAN

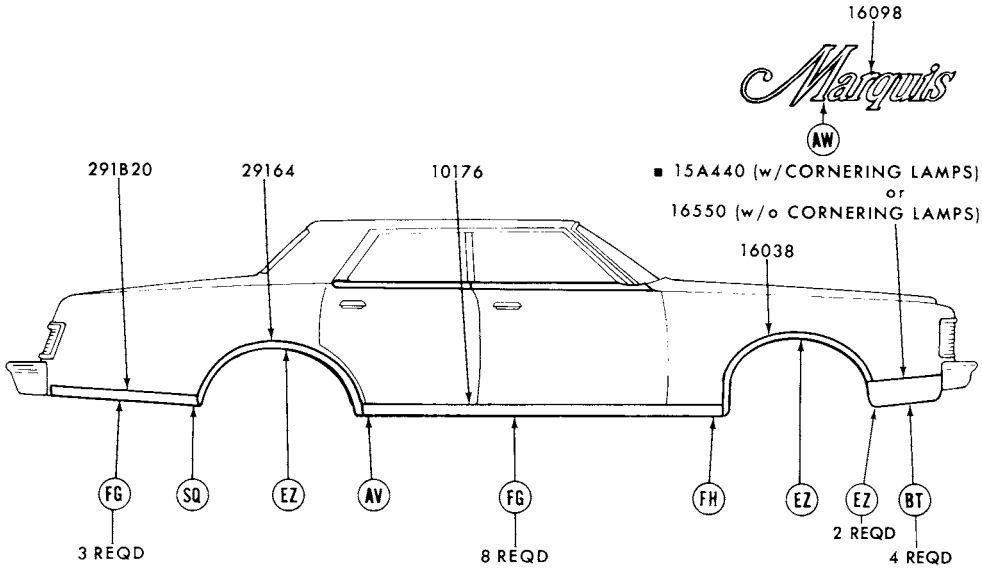

■ REFER TO GROUP IN CHASSIS SECTION
REFER TO EXTERIOR MOULDING SECTION "R" FOR COMPLETE RETAINER INFORMATION P-11967

1977 MERCURY - BODY TYPE 53H - SIDE - w/o WHEEL OPENING COVERS

GROUP NUMBER	PART NAME	DESCRIPTION	PART NUMBER		QTY.
10176-7	Moulding (body rocker panel)	90 7/32" long	(RH)♦D3MY 6510176-A	(LH)♦D3MY 6510177-A	1
16038-9	Moulding (Front fender wheel opening)	W/rocker panel mouldings	(RH)♦D5MY 16038-A	(LH)♦D5MY 16039-A	1
		W/o rocker panel mouldings	(RH)♦D5MY 16038-C	(LH)♦D5MY 16039-C	1
16098	Plate (name)	"Marquis"	♦D3MY 16098-B	R.H. and L.H.	2
16550-1	Moulding (front fender lower front)		(RH)♦D5MY 16550-A	(LH)♦D5MY 16551-A	
291B20-1	Moulding (quarter lower)		Not used in 1977		
29164-5	Moulding (quarter wheel opening)	W/rocker panel mouldings)	(RH)♦D3MY 6529164-A	(LH)♦D3MY 6529165-A	1
		W/o rocker panel mouldings	(RH)♦D4MY 6529164-A	(LH)♦D4MY 6529165-A	1

♦ Includes attaching parts

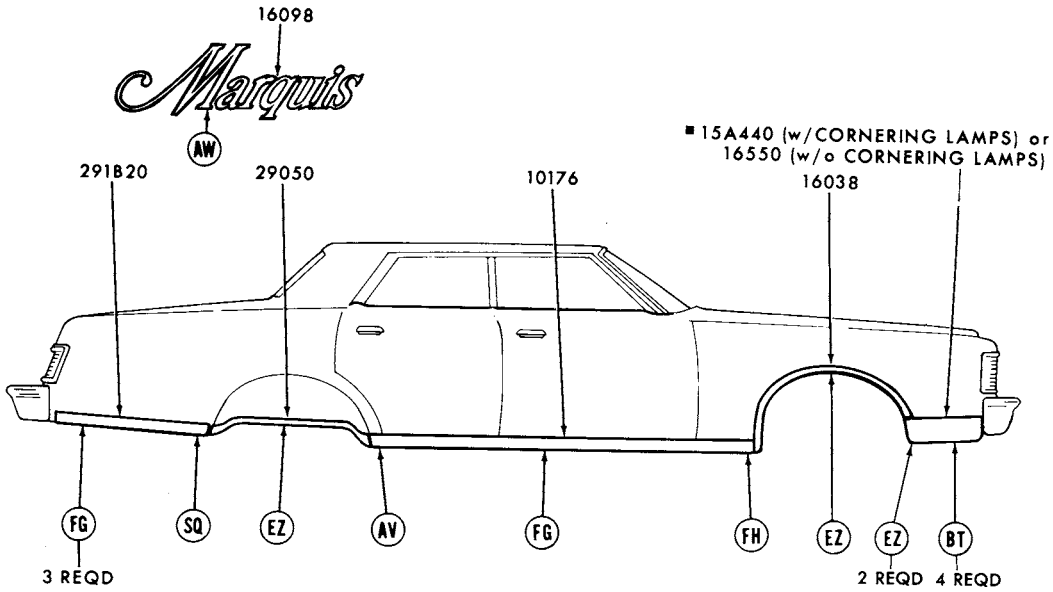

■ REFER TO GROUP IN CHASSIS SECTION
REFER TO EXTERIOR MOULDING SECTION "R" FOR COMPLETE RETAINER INFORMATION

P-11970

1977 MERCURY - BODY TYPE 53H - SIDE - w/WHEEL OPENING COVERS

GROUP NUMBER	PART NAME	DESCRIPTION	PART NUMBER		QTY.
10176-7	Moulding (body rocker panel)	90 7/32" long	(RH)♦D3MY 6510176-A	(LH)♦D3MY 6510177-A	1
16038-9	Moulding (front fender wheel opening)		(RH)♦D5MY 16038-A	(LH)♦D5MY 16039-A	1
16098	Plate (name)	"Marquis"	♦D3MY 16098-B	R.H. and L.H.	2
16550-1	Moulding (front fender lower front)		(RH)♦D5MY 16550-A	(LH)♦D5MY 16551-A	1
29050-1	Moulding (quarter wheel opening cover)		(RH)♦D3MY 6529050-B	(LH)♦D3MY 6529051-B	1
291B20-1	Moulding (quarter lower)		Not used in 1977		

♦ Includes attaching parts

COPYRIGHT © 1986 — FORD MOTOR COMPANY — DEARBORN, MICHIGAN

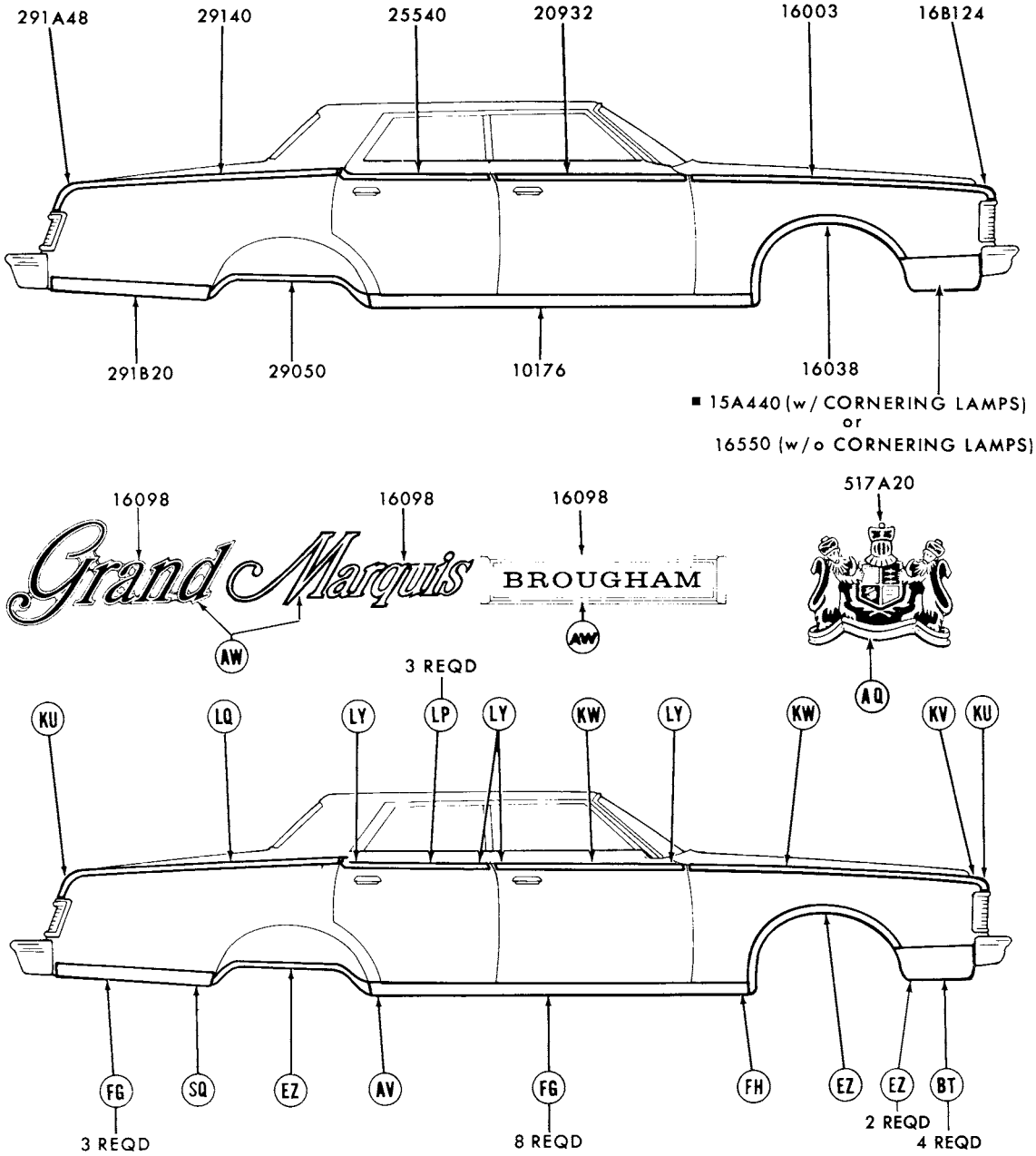

■ REFER TO GROUP IN CHASSIS SECTION
REFER TO EXTERIOR MOULDING SECTION "R" FOR COMPLETE RETAINER INFORMATION P-11971

1977 MERCURY - BODY TYPE 53K - SIDE - w/o VINYL INSERT MOULDINGS - cont'd.

GROUP NUMBER	PART NAME	DESCRIPTION	PART NUMBER		QTY.
10176-7	Moulding (body rocker panel)	90 7/32" long	(RH)♦D3MY 6510176-A	(LH)♦D3MY 6510177-A	
16003-4	Moulding (front fender side)		(RH)♦D5MY 16003-A	(LH)♦D5MY 16004-A	1
16038-9	Moulding (front fender wheel opening)		(RH)♦D5MY 16038-A	(LH)♦D5MY 16039-A	1
16098	Plate (name)	"BROUGHAM"	♦D5MY 16098-A	R.H. and L.H.	2
		"Grand"	♦D5MY 16098-C	R.H. and L.H.	2
		"Marquis"	♦D3MY 16098-B	R.H. and L.H.	2
16B124-5	Moulding (front fender front extension)		(RH)♦D5MY 16B124-A	(LH)♦D5MY 16B125-A	1
16550-1	Moulding (front fender lower front)		(RH)♦D5MY 16550-A	(LH)♦D5MY 16551-A	1
20932-3	Moulding (front door outside upper)		(RH)♦D5MY 5320932-A	(LH)♦D5MY 5320933-A	1
25540-1	Moulding (rear door outside upper)		(RH)♦D5MY 5325540-A	(LH)♦D5MY 5325541-A	1
29050-1	Moulding (quarter wheel opening cover)		(RH)♦D3MY 6529050-B	(LH)♦D3MY 6529051-B	1
291B20-1	Moulding (quarter outside lower)		Not used in 1977		
29140-1	Moulding (quarter outside upper)		(RH)♦D5MY 5329140-A	(LH)♦D5MY 5329141-A	1
291A48-9	Moulding (quarter outside upper rear)		(RH)♦D5MY 65291A48-A	(LH)♦D5MY 65291A49-A	1
517A20	Ornament (roof side outside)	Gold	♦C9MY 65517A20-A	R.H. and L.H.	2
		Silver	♦D0MY 65517A20-A	R.H. and L.H.	2

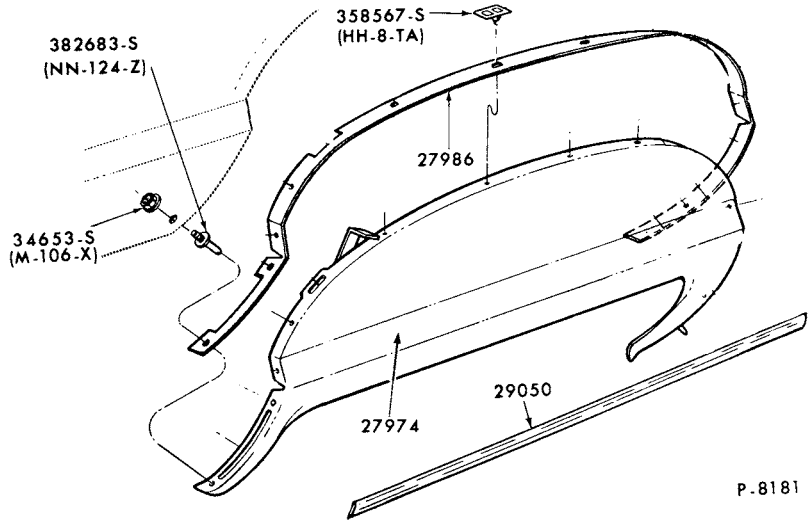

1977 MERCURY - BODY TYPES 53 and 65 - WHEEL OPENING COVER PARTS

GROUP NUMBER	PART NAME	DESCRIPTION	PART NUMBER		QTY.
27974-5	Panel (quarter wheel opening cover)		(RH)♦D3MY 6527974-A	(LH)♦D3MY 6527975-A	1
27986-7	Seal (quarter wheel opening cover)		(RH)♦D3MY 6527986-A	(LH)♦D3MY 6527987-A	1
29050-1	Moulding (quarter wheel opening cover)	Body types 53H, K, 65H, K	(RH)♦D3MY 6529050-B	(LH)♦D3MY 6529051-B	1

♦ Includes attaching parts

COPYRIGHT © 1986 — FORD MOTOR COMPANY — DEARBORN, MICHIGAN

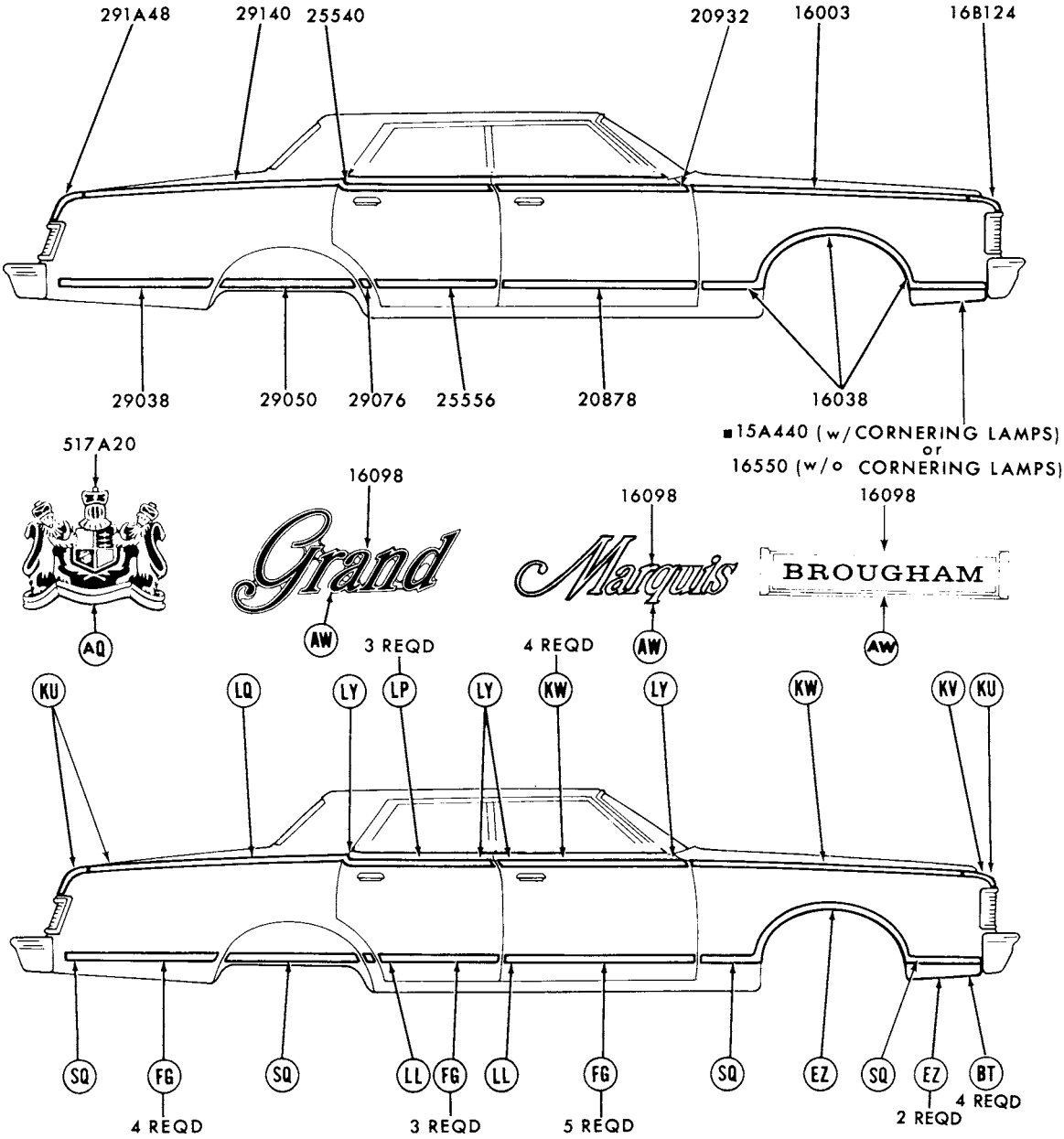

■ REFER TO GROUP IN CHASSIS SECTION
REFER TO EXTERIOR MOULDING SECTION "R" FOR COMPLETE RETAINER INFORMATION P-11966

1977 MERCURY - BODY TYPE 53L - SIDE - w/VINYL INSERT MOULDINGS

1977 MERCURY - BODY TYPE 53L - SIDE - w/VINYL INSERT MOULDINGS - cont'd.

GROUP NUMBER	PART NAME	DESCRIPTION	PART NUMBER		QTY.
16003-4	Moulding (front fender side)		(RH)♦D5MY 16003-A	(LH)♦D5MY 16004-A	1
16038-9	Moulding (front fender wheel opening)	Incl. vinyl insert-			
		◊ Black	(RH)♦D5MY 16038-CA	(LH)♦D5MY 16039-CA	1
		◊ Blue	(RH)★D7MY 16038-AB	(LH)♦D7MY 16039-AB	1
		◊ Brown	(RH)♦D7MY 16038-AT	(LH)★D7MY 16039-AT	1
		◊ Cream	(RH)♦D7MY 16038-AV	(LH)♦D7MY 16039-AV	1
		◊ Gray	(RH)♦D7MY 16038-AP	(LH)♦D7MY 16039-AP	1
		◊ Jade	(RH)♦D7MY 16038-AR	(LH)♦D7MY 16039-AR	1
		◊ Red	(RH)♦D6MY 16038-AD	(LH)♦D6MY 16039-AD	1
		◊ Silver	(RH)♦D6MY 16038-AP	(LH)♦D6MY 16039-AP	1
		◊ White	(RH)♦D7MY 16038-AW	(LH)♦D7MY 16039-AW	1
16098	Plate (name)	"BROUGHAM"	♦D5MY 16098-A	R.H. and L.H.	2
		"Grand"	♦D5MY 16098-C	R.H. and L.H.	2
		"Marquis"	♦D3MY 16098-B	R.H. and L.H.	2
16B124-5	Moulding (front fender front extension)		(RH)♦D5MY 16B124-A	(LH)♦D5MY 16B125-A	1
16550-1	Moulding (front fender lower front)		(RH)♦D5MY 16550-A	(LH)♦D5MY 16551-A	1
20878-9	Moulding (front door outside)	Incl. vinyl insert-			
		◊ Black	(RH)♦D5MY 5320878-CA	(LH)♦D5MY 5320879-CA	1
		◊ Blue	(RH)★D7MY 5320878-AB Not replaced (6/83)	(LH)★D7MY 5320879-AB Not replaced (7/81)	1
		◊ Brown	(RH)♦D7MY 5320878-AT	(LH)♦D7MY 5320879-AT	1
		◊ Cream	(RH)♦D7MY 5320878-AV	(LH)♦D7MY 5320879-AV	1
		◊ Gray	(RH)♦D7MY 5320878-AP	(LH)♦D7MY 5320879-AP	1
		◊ Jade	(RH)♦D7MY 5320878-AR	(LH)♦D7MY 5320879-AR	1
		◊ Red	(RH)♦D6MY 5320878-AD	(LH)♦D6MY 5320879-AD	1
		◊ Silver	(RH)♦D6MY 5320878-AP	(LH)♦D6MY 5320879-AP	1
		◊ White	(RH)♦D7MY 5320878-AW	(LH)♦D7MY 5320879-AW	1
20932-3	Moulding (front door outside upper)		(RH)♦D5MY 5320932-A	(LH)♦D5MY 5320933-A	1
25540-1	Moulding (rear door outside upper)		(RH)♦D5MY 5325540-A	(LH)♦D5MY 5325541-A	1
25556-7	Moulding (rear door outside)	Incl. vinyl insert-			
		◊ Black	(RH)♦D5MY 5325556-BA	(LH)♦D5MY 5325557-BA	1
		◊ Blue	(RH)♦D7MY 5325556-AB	(LH)★D7MY 5325557-AB Not replaced (6/82)	1
		◊ Brown	(RH)♦D7MY 5325556-AT	(LH)♦D7MY 5325557-AT	1
		◊ Cream	(RH)♦D7MY 5325556-AV	(LH)♦D7MY 5325557-AV	1
		◊ Gray	(RH)♦D7MY 5325556-AP	(LH)♦D7MY 5325557-AP	1
		◊ Jade	(RH)♦D7MY 5325556-AR	(LH)♦D7MY 5325557-AR	1
		◊ Red	(RH)♦D6MY 5325556-AD	(LH)♦D6MY 5325557-AD	1
		◊ Silver	(RH)♦D6MY 5325556-AP	(LH)♦D6MY 5325557-AP	1
		◊ White	(RH)♦D7MY 5325556-AW	(LH)♦D7MY 5325557-AW	1

♦ Includes attaching parts
◊ For color verification, refer to the vinyl roof swatches in the 1977 Salesman's Color and Upholstery Selections Guide.

COPYRIGHT © 1986 — FORD MOTOR COMPANY — DEARBORN, MICHIGAN

1977 MERCURY - BODY TYPE 53L - SIDE - w/VINYL INSERT MOULDINGS - cont'd.

GROUP NUMBER	PART NAME	DESCRIPTION	PART NUMBER		QTY.
29038-9	Moulding (quarter outside)	Incl. vinyl insert-			
		◊ Black	(RH)♦ D5MY 6529038-AA	(LH)♦ D5MY 6529039-AA	1
		◊ Blue	(RH)♦ D7MY 6529038-AB	(LH)♦ D7MY 6529039-AB	1
		◊ Brown	(RH)♦ D7MY 6529038-AT	(LH)♦ D7MY 6529039-AT	1
		◊ Cream	(RH)♦ D7MY 6529038-AV	(LH)♦ D7MY 6529039-AV	1
		◊ Gray	(RH)♦ D7MY 6529038-AP	(LH)♦ D7MY 6529039-AP	1
		◊ Jade	(RH)♦ D7MY 6529038-AR	(LH) D7MY 6529039-AR	1
		◊ Red	(RH)♦ D6MY 6529038-AD	(LH)♦ D6MY 6529039-AD	1
		◊ Silver	(RH)♦ D6MY 6529038-AP	(LH)♦ D6MY 6529039-AP	1
		◊ White	(RH)♦ D7MY 6529038-AW	(LH)♦ D7MY 6529039-AW	1
29050-1	Moulsing (quarter wheel opening cover)	Incl. vinyl insert-			
		◊ Black	(RH)♦ D5MY 6529050-AA	(LH)♦ D5MY 6529051-AA	1
		◊ Blue	(RH)♦ D7MY 6529050-AB	(LH)✱ D7MY 6529051-AB Not replaced (4/84)	1
		◊ Brown	(RH)♦ D7MY 6529050-AT	(LH)♦ D7MY 6529051-AT	1
		◊ Cream	(RH)♦ D7MY 6529050-AV	(LH)♦ D7MY 6529051-AV	1
		◊ Gray	(RH)♦ D7MY 6529050-AP	(LH)♦ D7MY 6529051-AP	1
		◊ Jade	(RH)♦ D7MY 6529050-AR	(LH)♦ D7MY 6529051-AR	1
		◊ Red	(RH)♦ D6MY 6529050-AD	(LH)♦ D6MY 6529051-AD	1
		◊ Silver	(RH)♦ D6MY 6529050-AP	(LH)♦ D6MY 6529051-AP	1
		◊ White	(RH)♦ D7MY 6529050-AW	(LH)♦ D7MY 6529051-AW	1
29076-7	Moulding (quarter outside lower front)	Incl. vinyl insert-			
		◊ Black	(RH)♦ D5MY 5329076-BA	(LH)♦ D5MY 5329077-BA	1
		◊ Brown	(RH)♦ D7MY 5329076-AT	(LH)♦ D7MY 5329077-AT	1
		◊ Cream	(RH)♦ D7MY 5329076-AV	(LH)✱ D7MY 5329077-AV Not replaced (6/82)	1
		◊ Gray	(RH)♦ D7MY 5329076-AP	(LH)✱ D7MY 5329077-AP Not replaced (6/82)	1
		◊ Jade	(RH)♦ D7MY 5329076-AR	(LH) D7MY 5329077-AR	1
		◊ Red	(RH)♦ D6MY 5329076-BD	(LH)♦ D6MY 5329077-BD	1
		◊ Silver	(RH)♦ D6MY 5329076-AP	(LH)♦ D6MY 5329077-AP	1
		◊ White	(RH)♦ D7MY 5329076-AW	(LH)♦ D7MY 5329077-AW	1
29140-1	Moulding (quarter outside upper)		(RH)♦ D5MY 5329140-A	(LH)♦ D5MY 5329141-A	1
291A48-9	Moulding (quarter outside upper rear)		(RH)♦ D5MY 65291A48-A	(LH)♦ D5MY 65291A49-A	1
517A20	Ornament (roof side outside)	Gold	♦ C9MY 65517A20-A	R.H. and L.H.	2
		Silver	♦ D0MY 65517A20-A	R.H. and L.H.	2

♦ Includes attaching parts

◊ For color verification, refer to the vinyl roof swatches in the 1977 Salesman's Color and Upholstery Selections Guide.

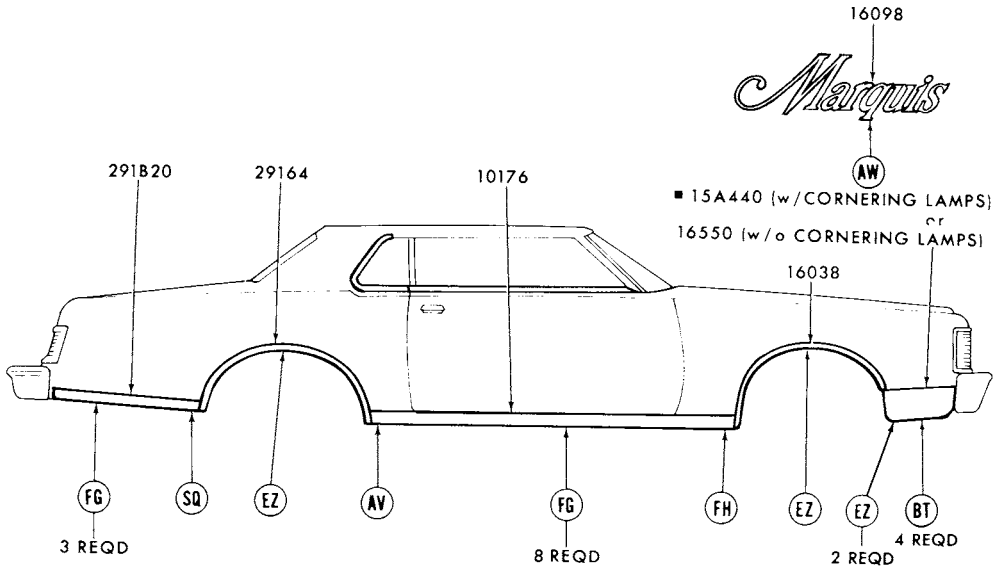

■ REFER TO GROUP IN CHASSIS SECTION
REFER TO EXTERIOR MOULDING SECTION "R" FOR COMPLETE RETAINER INFORMATION

P-11968

1977 MERCURY - BODY TYPE 65H - SIDE - w/o WHEEL OPENING COVER

GROUP NUMBER	PART NAME	DESCRIPTION	PART NUMBER		QTY.
10176-7	Moulding (body rocker panel)	90 7/32" long	(RH)♦D3MY 6510176-A	(LH)♦D3MY 6510177-A	1
16038-9	Moulding (front fender wheel opening)	W/rocker panel mouldings	(RH)♦D5MY 16038-A	(LH)♦D5MY 16039-A	1
		W/o rocker panel mouldings	(RH)♦D5MY 16038-C	(LH)♦D5MY 16039-C	1
16098	Plate (name)	"Marquis"	♦D3MY 16098-B	R.H. and L.H.	2
16550-1	Moulding (front fender lower front)		(RH)♦D5MY 16550-A	(LH)♦D5MY 16551-A	1
291B20-1	Moulding (quarter lower)		Not used in 1977		
29164-5	Moulding (quarter wheel opening)	W/rocker panel mouldings	(RH)♦D3MY 6529164-A	(LH)♦D3MY 6529165-A	1
		W/o rocker panel mouldings	(RH)♦D4MY 6529164-A	(LH)♦D4MY 6529165-A	1

♦ Includes attaching parts

COPYRIGHT © 1986 — FORD MOTOR COMPANY — DEARBORN, MICHIGAN

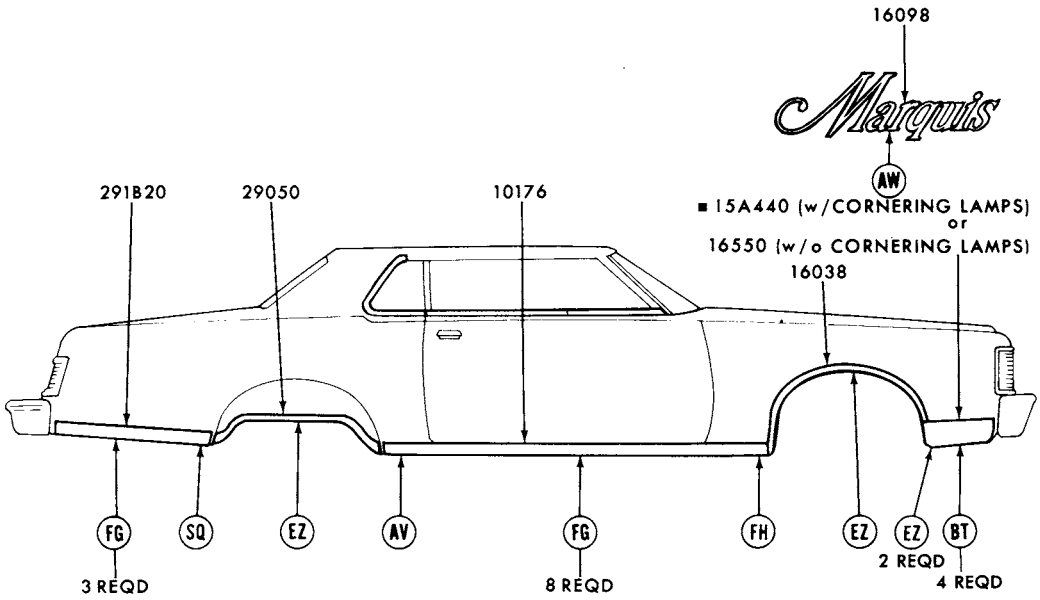

■ REFER TO GROUP IN CHASSIS SECTION
REFER TO EXTERIOR MOULDING SECTION "R" FOR COMPLETE RETAINER INFORMATION P-11969

1977 MERCURY - BODY TYPE 65H - SIDE - w/WHEEL OPENING COVER

GROUP NUMBER	PART NAME	DESCRIPTION	PART NUMBER		QTY.
10176-7	Moulding (body rocker panel)	90 7/32" long	(RH)♦D3MY 6510176-A	(LH)♦D3MY 6510177-A	1
16038-9	Moulding (front fender wheel opening)		(RH)♦D5MY 16038-A	(LH)♦D5MY 16039-A	1
16098	Plate (name)	"Marquis"	♦D3MY 16098-B	R.H. and L.H.	2
16550-1	Moulding (front fender lower front)		(RH)♦D5MY 16550-A	(LH)♦D5MY 16551-A	1
29050-1	Moulding (quarter wheel opening cover)		(RH)♦D3MY 6529050-B	(LH)♦D3MY 6529051-B	1
291B20-1	Moulding (quarter outside lower)		Not used in 1977		

♦ Includes attaching parts

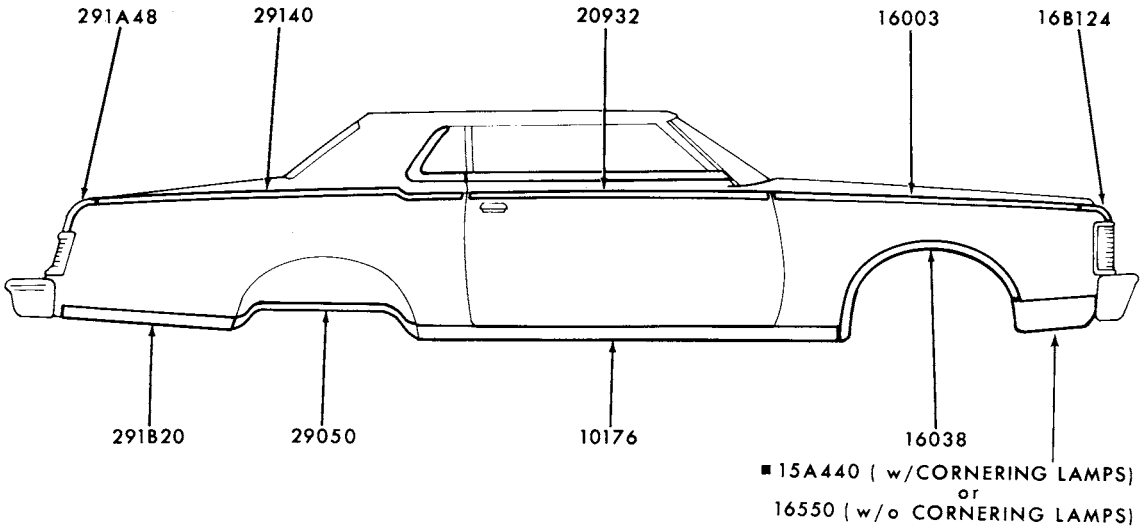

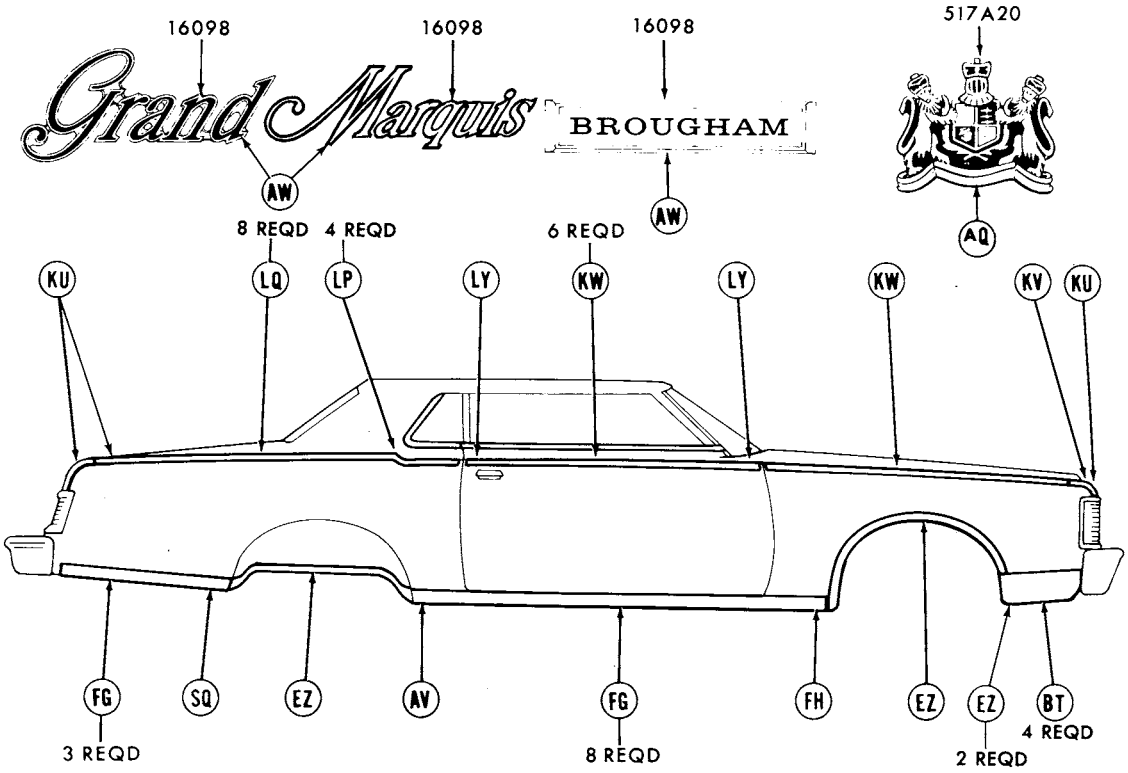

■REFER TO GROUP IN CHASSIS SECTION
REFER TO EXTERIOR MOULDING SECTION "R" FOR COMPLETE RETAINER INFORMATION

P-11972

1977 MERCURY - BODY TYPE 65K - SIDE - w/o VINYL INSERT MOULDINGS

COPYRIGHT © 1986 — FORD MOTOR COMPANY — DEARBORN, MICHIGAN

1977 MERCURY - BODY TYPE 65K - SIDE - w/o VINYL INSERT MOULDINGS - cont'd.

GROUP NUMBER	PART NAME	DESCRIPTION	PART NUMBER		QTY.
10176-7	Moulding (body rocker panel)	90 7/32" long	(RH)♦D3MY 6510176-A	(LH)♦D3MY 6510177-A	1
16003-4	Moulding (front fender side)		(RH)♦D5MY 16003-A	(LH)♦D5MY 16004-A	1
16038-9	Moulding (front fender wheel opening)		(RH)♦D5MY 16038-A	(LH)♦D5MY 16039-A	1
16098	Plate (name)	"BROUGHAM"	♦D5MY 16098-A	R.H. and L.H.	2
		"Grand"	♦D5MY 16098-C	R.H. and L.H.	2
		"Marquis"	♦D3MY 16098-B	R.H. and L.H.	2
16B124-5	Moulding (front fender front extension)		(RH)♦D5MY 16B124-A	(LH)♦D5MY 16B125-A	1
16550-1	Moulding (front fender lower front)		(RH)♦D5MY 16550-A	(LH)♦D5MY 16551-A	1
20932-3	Moulding (front door outside upper)		(RH)♦D5MY 6520932-A	(LH)♦D5MY 6520933-A	1
29050-1	Moulding (quarter wheel opening cover)		(RH)♦D3MY 6529050-B	(LH)♦D3MY 6529051-B	1
291B20-1	Moulding (quarter outside lower)		Not used in 1977		
29140-1	Moulding (quarter outside upper)		(RH)♦D5MY 6529140-A	(LH)♦D5MY 6529141-A	1
291A48-9	Moulding (quarter outside upper rear)		(RH)♦D5MY 65291A48-A	(LH)♦D5MY 65291A49-A	1
517A20	Ornament (roof side outside)	Gold	♦C9MY 65517A20-A	R.H. and L.H.	2
		Silver	♦D0MY 65517A20-A	R.H. and L.H.	2

♦ Includes attaching parts

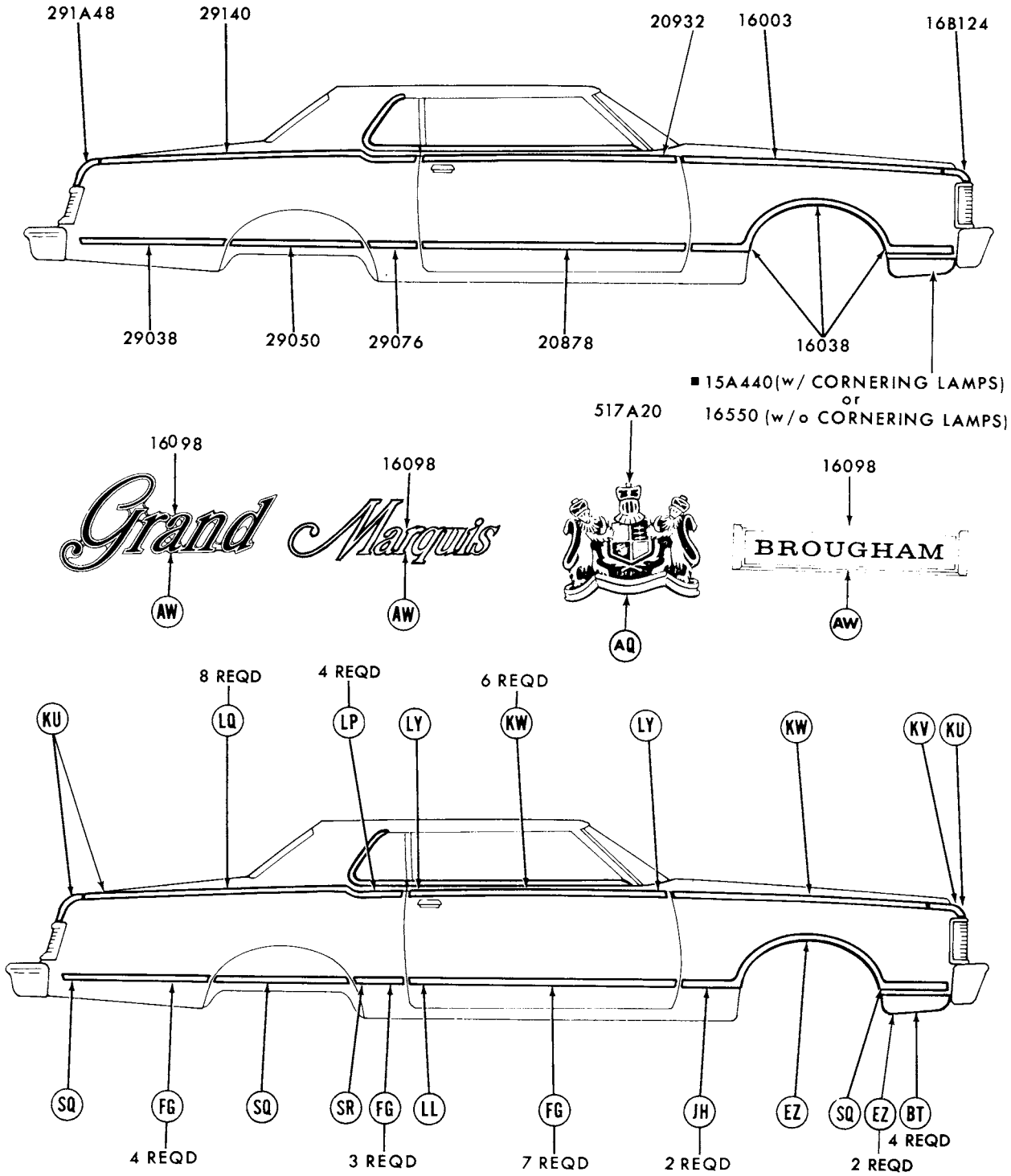

■ REFER TO GROUP IN TEXT SECTION
REFER TO EXTERIOR MOULDING SECTION "R" FOR COMPLETE RETAINER INFORMATION

P-11965

1977 MERCURY - BODY TYPE 65L - SIDE - w/VINYL INSERT MOULDINGS

COPYRIGHT © 1986 — FORD MOTOR COMPANY — DEARBORN, MICHIGAN

1977 MERCURY - BODY TYPE 65L - SIDE - w/VINYL INSERT MOULDINGS - cont'd.

GROUP NUMBER	PART NAME	DESCRIPTION	PART NUMBER		QTY.
16003-4	Moulding (front fender side)		(RH)♦D5MY 16003-A	(LH)♦D5MY 16004-A	1
16038-9	Moulding (front fender wheel opening)	Incl. vinyl insert-			
		◊ Black	(RH)♦D5MY 16038-CA	(LH)♦D5MY 16039-CA	1
		◊ Blue	(RH)★D7MY 16038-AB	(LH)♦D7MY 16039-AB	1
		◊ Brown	(RH)♦D7MY 16038-AT	(LH)♦D7MY 16039-AT	1
		◊ Cream	(RH)♦D7MY 16038-AV	(LH)♦D7MY 16039-AV	1
		◊ Gray	(RH)♦D7MY 16038-AP	(LH)♦D7MY 16039-AP	1
		◊ Jade	(RH)♦D7MY 16038-AR	(LH)♦D7MY 16039-AR	1
		◊ Red	(RH)♦D6MY 16038-AD	(LH)♦D6MY 16039-AD	1
		◊ Silver	(RH)♦D6MY 16038-AP	(LH)♦D6MY 16039-AP	1
		◊ White	(RH)♦D7MY 16038-AW	(LH)♦D7MY 16039-AW	1
16098	Plate (name)	"BROUGHAM"	♦D5MY 16098-A	R.H. and L.H.	2
		"Grand"	♦D5MY 16098-C	R.H. and L.H.	2
		"Marquis"	♦D3MY 16098-B	R.H. and L.H.	2
16B124-5	Moulding (front fender front extension)		(RH)♦D5MY 16B124-A	(LH)♦D5MY 16B125-A	1
16550-1	Moulding (front fender lower front)		(RH)♦D5MY 16550-A	(LH)♦D5MY 16551-A	1
20878-9	Moulding (front door outside)	Incl. vinyl insert-			
		◊ Black	(RH)♦D5MY 6520878-AA	(LH)♦D5MY 6520879-AA	1
		◊ Blue	(RH)♦D7MY 6520878-AB	(LH)♦D7MY 6520879-AB	1
		◊ Brown	(RH)♦D7MY 6520878-AT	(LH)♦D7MY 6520879-AT	1
		◊ Cream	(RH)♦D7MY 6520878-AV	(LH)♦D7MY 6520879-AV	1
		◊ Gray	(RH)★D7MY 6520878-AP Not replaced (6/82)	(LH)♦D7MY 6520879-AP	1
		◊ Jade	(RH)♦D7MY 6520878-AR	(LH)♦D7MY 6520879-AR	1
		◊ Red	(RH)♦D6MY 6520878-AD	(LH)♦D6MY 6520879-AD	1
		◊ Silver	(RH)♦D6MY 6520878-AP	(LH)♦D6MY 6520879-AP	1
		◊ White	(RH)♦D7MY 6520878-AW	(LH)♦D7MY 6520879-AW	1
20932-3	Moulding (front door upper)		(RH)♦D5MY 6520932-A	(LH)♦D5MY 6520933-A	1
29038-9	Moulding (quarter outside)	Incl. vinyl insert-			
		◊ Black	(RH)♦D5MY 6529038-AA	(LH)♦D5MY 6529039-AA	1
		◊ Brown	(RH)♦D7MY 6529038-AT	(LH)♦D7MY 6529039-AT	1
		◊ Cream	(RH)♦D7MY 6529038-AV	(LH)♦D7MY 6529039-AV	1
		◊ Gray	(RH)♦D7MY 6529038-AP	(LH)★D7MY 6529039-AP Not replaced (7/81)	1
		◊ Jade	(RH)♦D7MY 6529038-AR	(LH)♦D7MY 6529039-AR	1
		◊ Red	(RH)♦D6MY 6529038-AD	(LH)♦D6MY 6529039-AD	1
		◊ Silver	(RH)♦D6MY 6529038-AP	(LH)♦D6MY 6529039-AP	1
		◊ White	(RH)♦D7MY 6529038-AW	(LH)♦D7MY 6529039-AW	1
29050-1	Moulding (quarter wheel opening cover)	Incl. vinyl insert-			
		◊ Black	(RH)♦D5MY 6529050-AA	(LH)♦D5MY 6529051-AA	1
		◊ Blue	(RH)♦D7MY 6529050-AB	(LH)♦D7MY 6529051-AB	1
		◊ Brown	(RH)♦D7MY 6529050-AT	(LH)♦D7MY 6529051-AT	1
		◊ Cream	(RH)♦D7MY 6529050-AV	(LH)♦D7MY 6529051-AV	1
		◊ Gray	(RH)♦D7MY 6529050-AP	(LH)♦D7MY 6529051-AP	1
		◊ Jade	(RH)♦D7MY 6529050-AR	(LH)♦D7MY 6529051-AR	1
		◊ Red	(RH)♦D6MY 6529050-AD	(LH)♦D6MY 6529051-AD	1
		◊ Silver	(RH)♦D6MY 6529050-AP	(LH)♦D6MY 6529051-AP	1
		◊ White	(RH)♦D7MY 6529050-AW	(LH)♦D7MY 6529051-AW	1

♦ Includes attaching parts

◊ For color verification, refer to the vinyl roof swatches in the 1977 Salesman's Color and Upholstery Selections Guide.

1977 MERCURY - BODY TYPE 65L - SIDE - w/VINYL INSERT MOULDINGS - cont'd.

GROUP NUMBER	PART NAME	DESCRIPTION	PART NUMBER		QTY.
29076-7	Moulding (quarter lower front)	Incl. vinyl insert-			
		◊ Black	(RH)♦D5MY 6529076-AA	(LH)♦D5MY 6529077-AA	1
		◊ Blue	(RH)♦D7MY 6529076-AB	(LH)♦D7MY 6529077-AB	1
		◊ Brown	(RH)♦D7MY 6529076-AT	(LH)♦D7MY 6529077-AT	1
		◊ Cream	(RH)♦D7MY 6529076-AV	(LH)✱D7MY 6529077-AV Not replaced (6/83)	1
		◊ Gray	(RH)✱D7MY 6529076-AP Not replaced (6/83)	(LH)♦D7MY 6529077-AP	1
		◊ Jade	(RH)♦D7MY 6529076-AR	(LH)♦D7MY 6529077-AR	1
		◊ Red	(RH)♦D6MY 6529076-AD	(LH)♦D6MY 6529077-AD	1
		◊ Silver	(RH)♦D6MY 6529076-AP	(LH)♦D6MY 6529077-AP	1
		◊ White	(RH)♦D7MY 6529076-AW	(LH)♦D7MY 6529077-AW	1
29140-1	Moulding (quarter outside upper)		(RH)♦D5MY 6529140-A	(LH)♦D5MY 6529141-A	1
291A48-9	Moulding (quarter upper rear)		(RH)♦D5MY 65291A48-A	(LH)♦D5MY 65291A49-A	1
517A20	Ornament (roof side outside)	Gold	♦C9MY 65517A20-A	R.H. and L.H.	2
		Silver	♦D0MY 65517A20-A	R.H. and L.H.	2

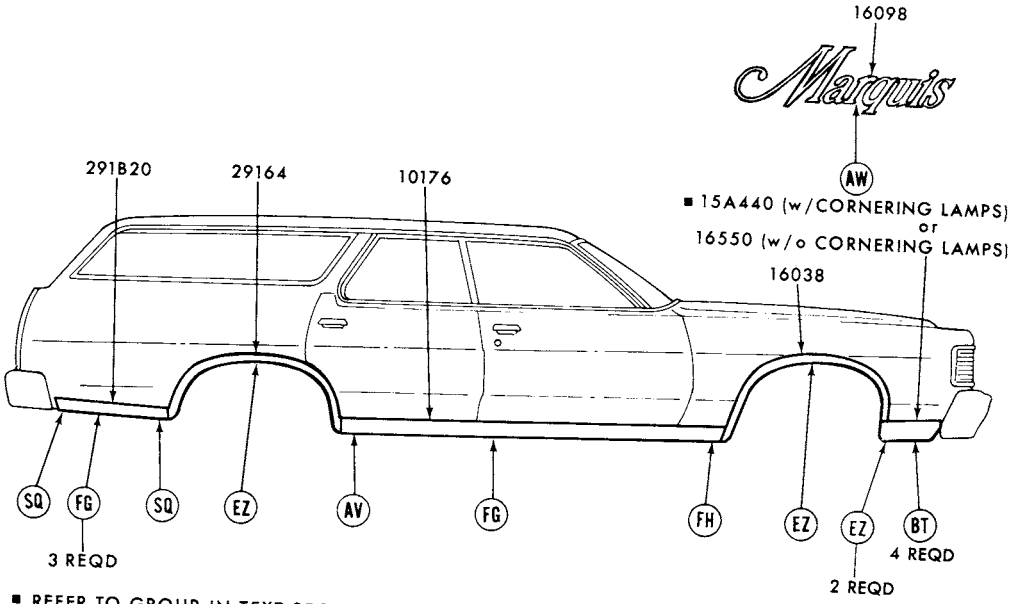

■ REFER TO GROUP IN TEXT SECTION
REFER TO EXTERIOR MOULDING SECTION "R" FOR COMPLETE RETAINER INFORMATION

P-11973

1977 MERCURY - BODY TYPE EXCEPT 71 "COLONY PARK" - SIDE

GROUP NUMBER	PART NAME	DESCRIPTION	PART NUMBER		QTY.
10176-7	Moulding (body rocker panel)	87 3/4" long	(RH)♦D3MY 7110176-A	(LH)♦D3MY 7110177-A	1
16038-9	Moulding (front fender wheel opening)		(RH)♦D5MY 16038-A	(LH)♦D5MY 16039-A	1
16098	Plate (name)	"Marquis"	♦D3MY 16098-B	R.H. and L.H.	2
16550-1	Moulding (front fender lower front)		(RH)♦D5MY 16550-A	(LH)♦D5MY 16551-A	1
291B20-1	Moulding (quarter outside lower)		(RH)♦D5MY 71291B20-A	(LH)♦D5MY 71291B21-A	1
29164-5	Moulding (quarter wheel opening)	W/lower rear quarter moulding	(RH)♦D5MY 7129164-A	(LH)♦D5MY 7129165-A	1
		W/o lower rear quarter moulding	(RH)♦D5MY 7129164-C	(LH)♦D5MY 7129165-C	1

♦ Includes attaching parts
◊ For color verification, refer to the vinyl roof swatches in the 1977 Salesman's Color and Upholstery Selections Guide.

COPYRIGHT © 1986 — FORD MOTOR COMPANY — DEARBORN, MICHIGAN

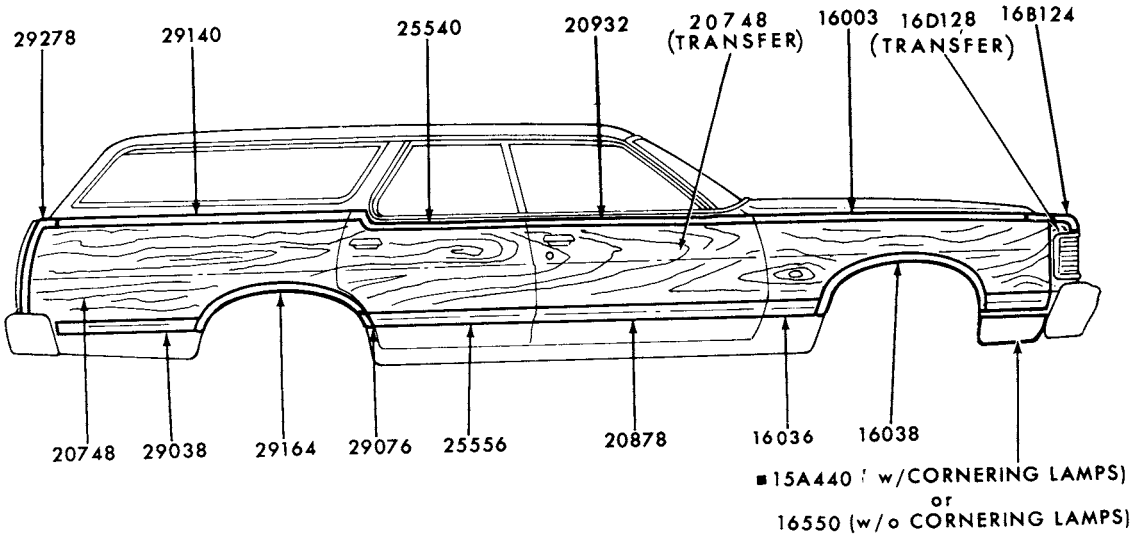

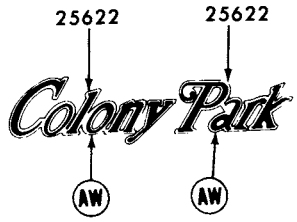

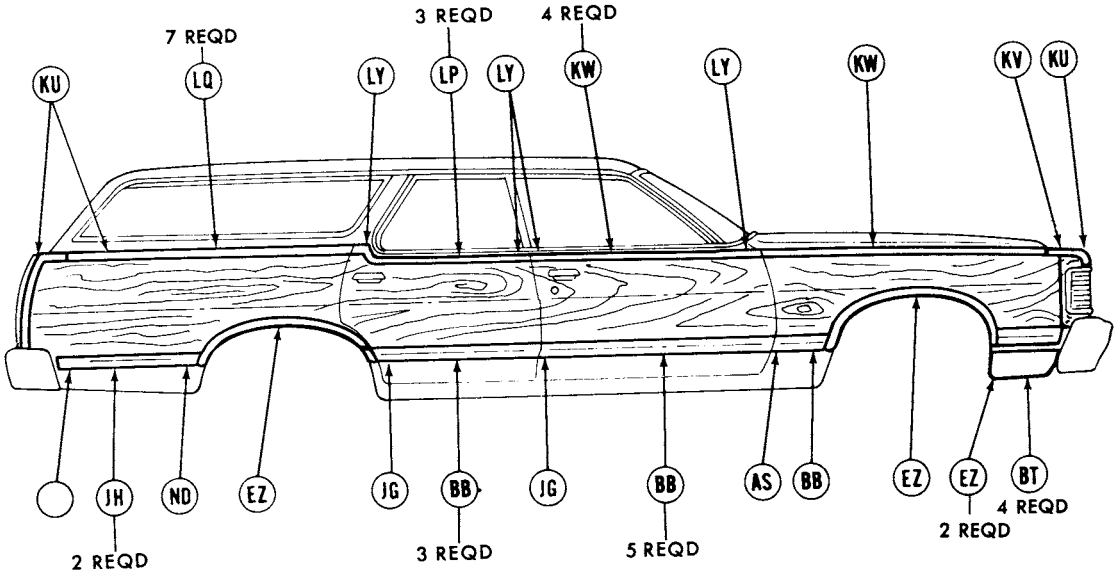

■REFER TO GROUP IN CHASSIS SECTION
REFER TO EXTERIOR MOULDING SECTION "R" FOR COMPLETE RETAINER INFORMATION

P-11974

1977 MERCURY - BODY TYPE 71 "COLONY PARK" - SIDE

1977 MERCURY - BODY TYPE 71 "COLONY PARK" - SIDE - cont'd.

GROUP NUMBER	PART NAME	DESCRIPTION	PART NUMBER		QTY.
16003-4	Moulding (front fender side)		(RH)♦D5MY 16003-A	(LH)♦D5MY 16004-A	1
16036-7	Moulding (front fender lower rear)		(RH)♦D3MY 16036-A	(LH)♦D3MY 16037-A	1
16038-9	Moulding (front fender wheel opening)		(RH)♦D5MY 16038-B	(LH)♦D5MY 16039-B	1
16B124-5	Moulding (front fender front extension)		(RH)♦D5MY 16B124-A	(LH)♦D5MY 16B125-A	1
16D128-9	Transfer (front fender front)	Rosewood-adhesive backed	(RH) D6MY 16D128-A	(LH) D6MY 16D129-A	1
16550-1	Moulding (front fender lower front)		(RH)♦D5MY 16550-A	(LH)♦D5MY 16551-A	1
20748	Transfer (wood grain)	Rosewood-adhesive backed-cut to fit	D6MY 7120748-A		1
20878-9	Moulding (front door outside)		(RH)♦D3MY 7120878-A	(LH)♦D3MY 7120879-A	1
20932-2	Moulding (front door outside upper)		(RH)♦D5MY 5320932-A	(LH)♦D5MY 5320933-A	1
25540-1	Moulding (rear door outside upper)		(RH)♦D5MY 5325540-A	(LH)♦D5MY 5325541-A	1
25556-7	Moulding (rear door outside lower)		(RH)♦D3MY 7125556-A	(LH)♦D3MY 7125557-A	1
25622	Plate (name)	"Colony"	♦D3MY 7125622-A	R.H. and L.H.	2
		"Park"	♦D3MY 7125622-B	R.H. and L.H.	2
29038-9	Moulding (quarter outside)		(RH)♦D3MY 7129038-C	(LH)♦D3MY 7129039-C	1
29076-7	Moulding (quarter outside lower front)		(RH)♦D3MY 7129076-A	(LH)♦D3MY 7129077-A	1
29140-1	Moulding (quarter outside upper)		(RH)♦D5MY 7129140-A	(LH)♦D5MY 7129141-A	1
29164-5	Moulding (quarter wheel opening)		(RH)♦D3MY 7129164-A	(LH)♦D3MY 7129165-A	1
29278-9	Moulding (quarter outside upper rear)		(RH)♦D5MY 7129278-A	(LH)♦D5MY 7129279-A	1

♦ Includes attaching parts

COPYRIGHT © 1986 — FORD MOTOR COMPANY — DEARBORN, MICHIGAN

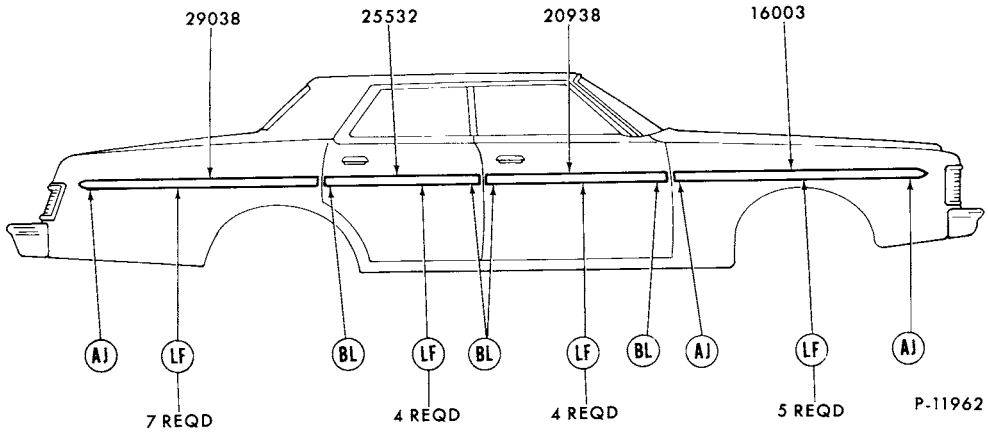

REFER TO EXTERIOR MOULDING SECTION "R" FOR COMPLETE RETAINER INFORMATION

1977 MERCURY - BODY TYPE 53 - SIDE PROTECTION

GROUP NUMBER	PART NAME	DESCRIPTION	PART NUMBER		QTY.
16003-4	Moulding (front fender side)	Black vinyl insert 15 3/4" long	♦D3AZ 16003-A	R.H. and L.H.	2
20938-9	Moulding (front door outside)	Black vinyl insert	(RH)♦D3MY 5320938-A	(LH)♦D3MY 5320939-A	1
25552-3	Moulding (rear door outside)	Black vinyl insert	(RH)♦D3AZ 5325532-A	(LH)♦D3AZ 5325533-A	1
29038-9	Moulding (quarter outside)	Black vinyl insert	(RH)♦D3AZ 5329038-A	(LH)♦D3AZ 5329039-A	1

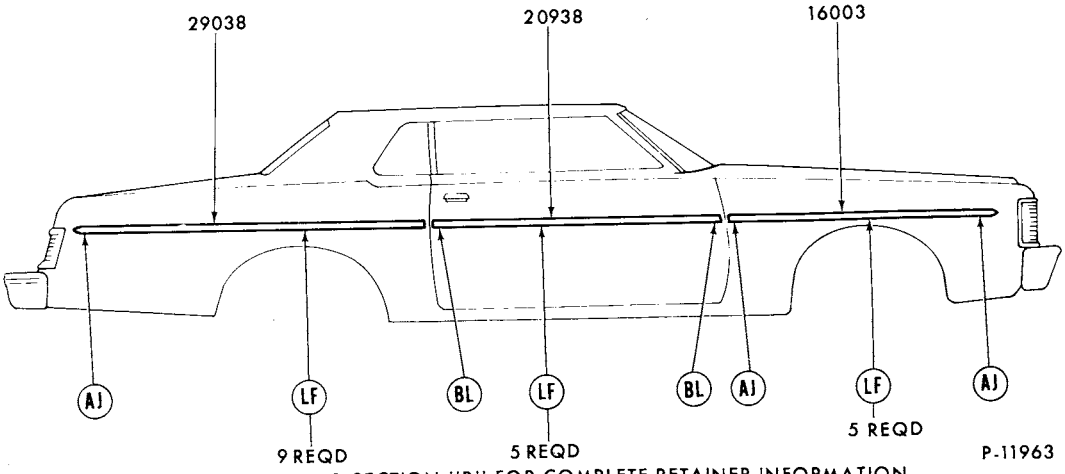

REFER TO EXTERIOR MOULDING SECTION "R" FOR COMPLETE RETAINER INFORMATION

1977 MERCURY - BODY TYPE 65 - SIDE PROTECTION

GROUP NUMBER	PART NAME	DESCRIPTION	PART NUMBER		QTY.
16003-4	Moulding (front fender side)	Black vinyl insert 15 3/4" long	D3AZ 16003-A	R.H. and L.H.	2
20938-9	Moulding (front door outside)	Black vinyl insert	(RH)♦D3AZ 6520938-A	(LH)♦D3MY 6520939-A	1
29038-9	Moulding (quarter outside)	Black vinyl insert	♦D3AZ 6529038-A		2

♦ Includes attaching parts

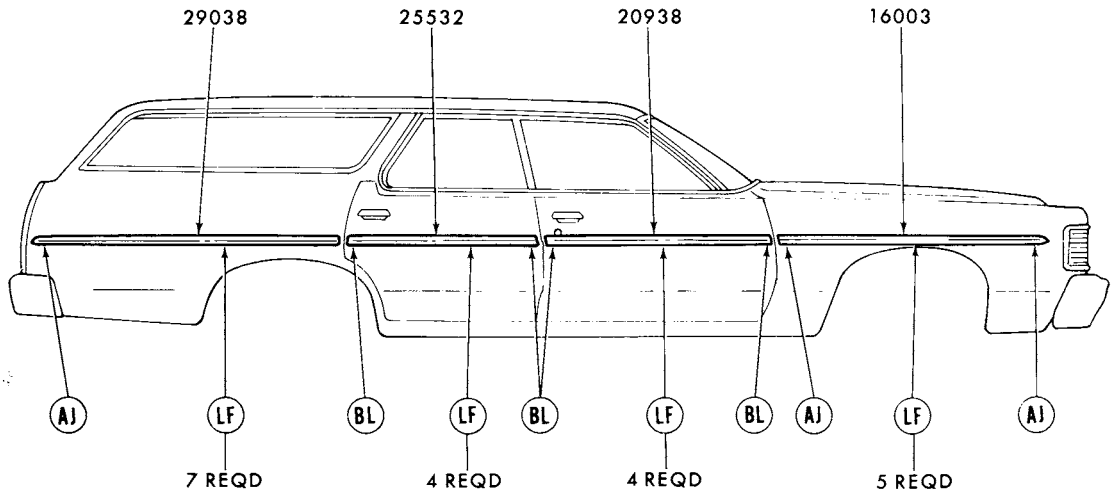

REFER TO EXTERIOR MOULDING SECTION "R" FOR COMPLETE RETAINER INFORMATION

P-11964

1977 MERCURY - BODY TYPE 71 - SIDE PROTECTION

GROUP NUMBER	PART NAME	DESCRIPTION	PART NUMBER		QTY.
16003-4	Moulding (front fender side)	Black vinyl insert 15 3/4" long	♦D3AZ 16003-A	R.H. and L.H.	2
		Bright-w/brown vinyl insert- 57 1/2" long	(RH)✶D3MY 16003-C	(LH)♦D3MY 16004-C	1
		Bright-w/brown vinyl insert- 15 11/16" long	D7MY 16003-A	R.H. and L.H.	2
20938-9	Moulding (front door outside)	Black vinyl insert	(RH)♦D3MY 5320938-A	(LH)♦D3MY 5320939-A	1
		Bright-w/brown vinyl insert	(RH)♦D3MY 7120938-A	(LH)♦D3MY 7120939-A	1
25532-3	Moulding (rear door outside)	Black vinyl insert	(RH)♦D3AZ 5325532-A	(LH)♦D3AZ 5325533-A	1
		Bright-w/brown vinyl insert	(RH)♦D3MY 7125532-A	(LH)♦D3MY 7125533-A	1
29038-9	Moulding (quarter outside)	Black vinyl insert	(RH)♦D3MY 7129038-A	(LH)♦D3MY 7129039-A	1
		Bright-w/brown vinyl insert	(RH)♦D3MY 7129038-B	(LH)♦D3MY 7129039-B	1

♦ Includes attaching parts

COPYRIGHT © 1986 — FORD MOTOR COMPANY — DEARBORN, MICHIGAN

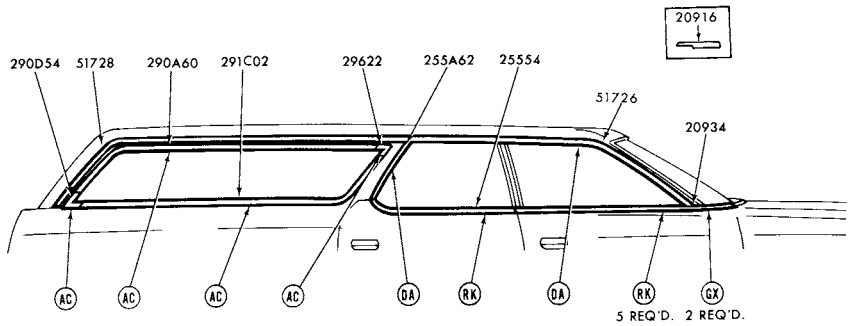

REFER TO EXTERIOR MOULDING SECTION 'R' FOR COMPLETE RETAINER INFORMATION

P-13209

1977 MERCURY - BODY TYPE 71 - DOOR, QUARTER WINDOW FRAME, ROOF and BELT

GROUP NUMBER	PART NAME	DESCRIPTION	PART NUMBER		QTY.
20916-7	Moulding (front door outside belt -front)		(RH)♦D5AZ 5320916-A	(LH)♦D5AZ 5320917-A	1
20934-5	Moulding (front door outside belt)	Incl. weatherstrip	(RH)♦D5AZ 5320934-B	(LH)♦D5AZ 5320935-B	1
25554-5	Moulding (rear door outside belt)	Incl. weatherstrip	(RH)♦D5AZ 5325554-A	(LH)♦D5AZ 5325555-A	1
255A62-3	Moulding (rear door window opening outside rear)		(RH)♦D5AZ 71255A62-A	(LH)♦D5AZ 71255A63-A	1
290D54-5	Moulding (quarter window outside lower rear corner)		(RH)♦D5AZ 71290D54-A	(LH)♦D5AZ 71290D55-A	1
290A60-1	Moulding (quarter window upper		(RH) ♦D5AZ 71290A60-A	(LH)♦D5AZ 71290A61-A	1
291C02-3	Moulding (quarter window lower rear)		(RH)♦D5AZ 71291C02-A	(LH)♦D5AZ 71291C03-A	1
29622-3	Moulding (quarter window front)		(RH)♦D5AZ 7129622-A	(LH)♦D5AZ 7129623-A	1
423A18-9	Moulding (back belt outside side)		(RH)♦D3AZ 71423A18-A	(LH)♦D3AZ 71423A19-A	1
51726-7	Moulding (roof drip finish)	Front	(RH)♦D5AZ 7151726-A	(LH)♦D5AZ 7151727-A	1
51728-9	Moulding (roof drip side finish)	Rear-w/bright flange	(RH)♦D3AZ 7151728-B	(LH)♦D3AZ 7151729-B	1

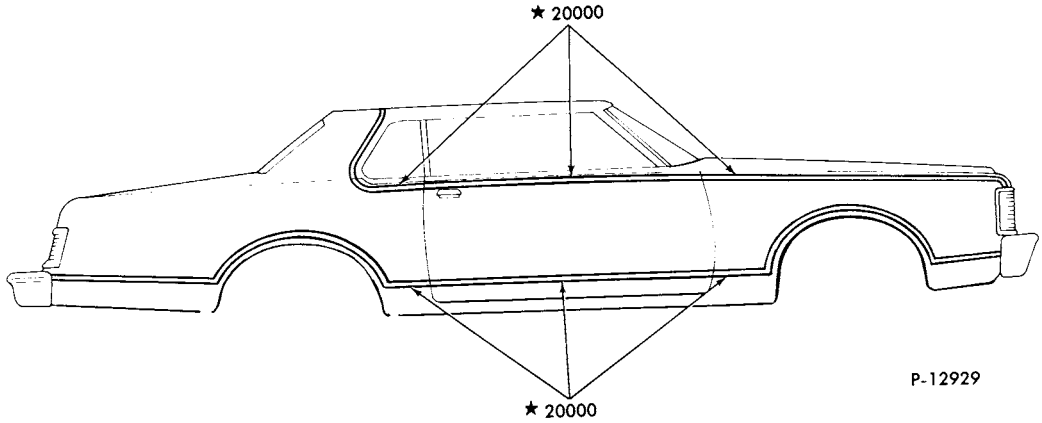

P-12929

1977 MERCURY - BODY TYPE 65K - STRIPES

GROUP NUMBER	PART NAME	DESCRIPTION	PART NUMBER	QTY.

ITEMS INDICATED WITH A BLACK STAR (★) MUST BE IMPROVISED OR PROCURED LOCALLY

♦ Includes attaching parts

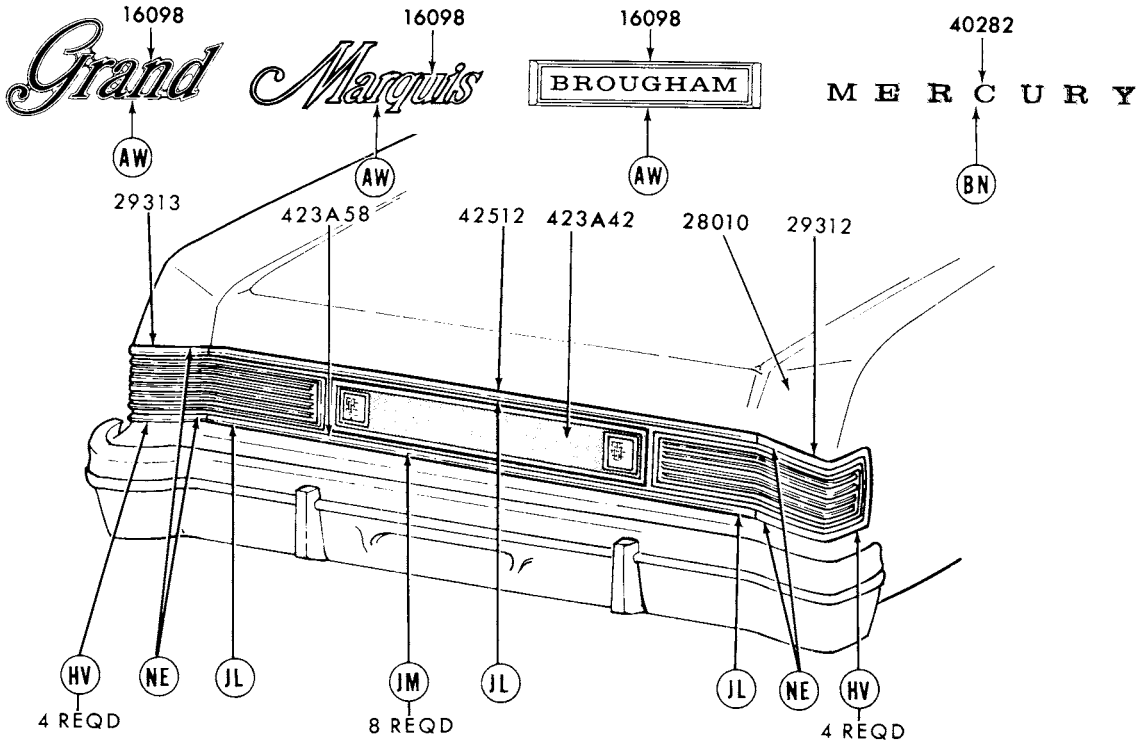

REFER TO EXTERIOR MOULDING SECTION "R" FOR COMPLETE RETAINER INFORMATION

P-11984

1977 MERCURY - BODY TYPES 53 and 65 - BACK END

GROUP NUMBER	PART NAME	DESCRIPTION	PART NUMBER	QTY.
16098	Plate (name)	"BROUGHAM"	♦D5MY 16098-A	1
		"Grand"	♦D5MY 16098-C	1
		"Marquis"	♦D3MY 16098-B	1
29312-3	Moulding (quarter rear extension)		(RH)♦D5MY 6529312-A (LH)♦D5MY 6529313-A	1
40282	Letter (name)	"M"	♦D3MY 7140282-A	1
		"E"	♦D3MY 7140282-B	1
		"R"	♦D3MY 7140282-C	2
		"C"	♦D3MY 7140282-D	1
		"U"	♦D3MY 7140282-E	1
		"Y"	♦D3MY 7140282-F	1
423A42	Panel (lower back finish)	Black	♦D5MY 65423A42-M	1
		Blue	♦D7MY 65423A42-AB	1
		Brown	♦D7MY 65423A42-AT	1
		Cream	♦D7MY 65423A42-AV	1
		Jade	♦D7MY 65423A42-AR	1
		Gray	♦D7MY 65423A42-BP	1
		Red	♦D6MY 65423A42-A	1
		Silver	♦D7MY 65423A42-AP	1
		White	♦D7MY 65423A42-AW	1
423A58	Moulding (lower back panel)		♦D5MY 65423A58-B	1
42512	Moulding (luggage compartment door)		♦D5MY 6542512-A	1

♦ Includes attaching parts

COPYRIGHT © 1986 — FORD MOTOR COMPANY — DEARBORN, MICHIGAN

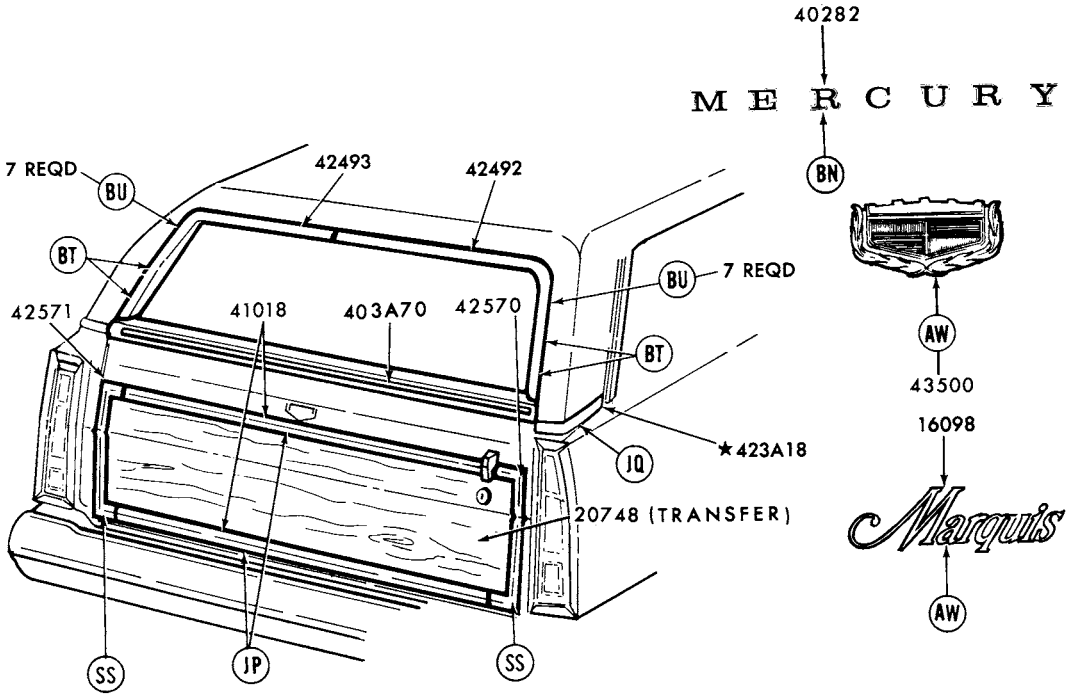

REFER TO EXTERIOR MOULDING SECTION "R" FOR COMPLETE RETAINER INFORMATION P-11985

1977 MERCURY - BODY TYPE 71 - BACK END

GROUP NUMBER	PART NAME	DESCRIPTION	PART NUMBER	QTY.
16098	Plate (name)	"Marquis"	♦D3MY 16098-B	1
20748	Transfer (wood grain)	Rosewood-adhesive backed-cut to fit	D6MY 7120748-A	1
40282	Letter (name)	"M"	♦D3MY 7140282-A	1
		"E"	♦D3MY 7140282-B	1
		"R"	♦D3MY 7140282-C	2
		"C"	♦D3MY 7140282-D	1
		"U"	♦D3MY 7140282-E	1
		"Y"	♦D3MY 7140282-F	1
403A70	Moulding (tailgate belt)		♦D4AZ 71403A70-E	1
41018	Moulding (tailgate)	Upper and lower	♦D5MY 7141018-A	2
42570-1	Moulding (tailgate side)		(RH)♦D5MY 7142570-A (LH)♦D5MY 7142571-A	1
42492-3	Moulding (back window side)		(RH)♦D3AZ 7142492-A (LH)♦D3AZ 7142493-A	1
43500	Ornament (tailgate)		Not used in 1977	

♦ Includes attaching parts

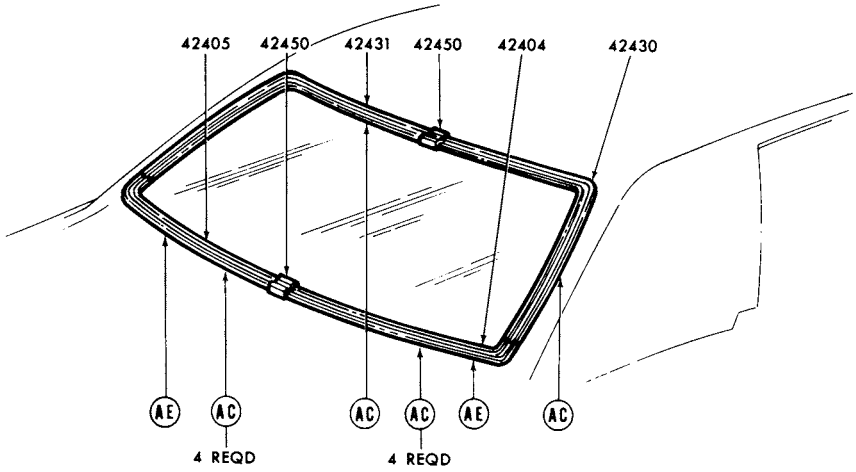

REFER TO EXTERIOR MOULDING SECTION "R" FOR COMPLETE RETAINER INFORMATION P-12460

1977 MERCURY - BODY TYPE 53 - BACK WINDOW

GROUP NUMBER	PART NAME	DESCRIPTION	PART NUMBER		QTY.
42404-5	Moulding (back window outside lower)		(RH)♦D3AZ 5342404-A	(LH)♦D3AZ 5342405-A	1
42430-1	Moulding (back window outside upper)		(RH)♦ D7AZ 5342430-A	(LH)♦ D7AZ 5342431-A	1
42450	Cover (back window outside moulding joint)	Lower	D5AZ 5342450-A		1
		Upper	D5AZ 5342450-B		1

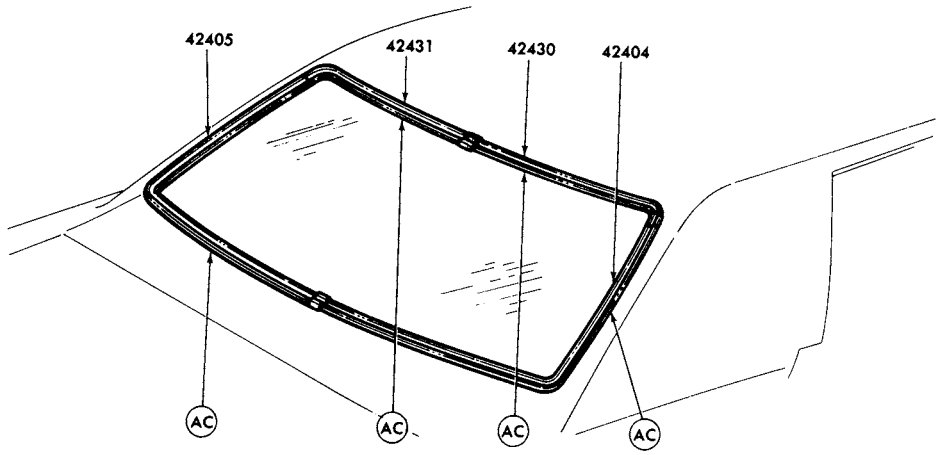

REFER TO EXTERIOR MOULDING SECTION "R" FOR COMPLETE RETAINER INFORMATION P-12487

1977 MERCURY - BODY TYPE 65 - BACK WINDOW

GROUP NUMBER	PART NAME	DESCRIPTION	PART NUMBER		QTY.
42404-5	Moulding (back window outside lower)		(RH)♦D5MY 6042404-A	(LH)♦D5MY 6042405-A	1
42430-1	Moulding (back window outside upper)		(RH)♦ D7AZ 6042430-A	(LH)♦ D7AZ 6042431-A	1

♦ Includes attaching parts

COPYRIGHT © 1986 — FORD MOTOR COMPANY — DEARBORN, MICHIGAN

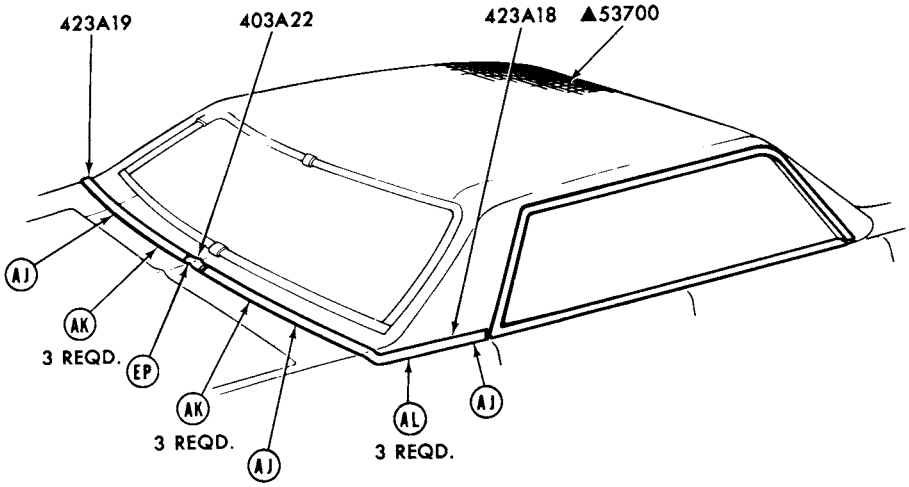

P-13242

▲REFER TO GROUP IN SOFT TRIM SECTION
REFER TO EXTERIOR MOULDING SECTION 'R' FOR COMPLETE RETAINER INFORMATION

1977 MERCURY - BODY TYPE 53 - ROOF and BACK BELT

GROUP NUMBER	PART NAME	DESCRIPTION	PART NUMBER	QTY.
403A22	Cover (back belt moulding)		D3MY 53403A22-B	1
423A18-9	Moulding (back belt)		(RH)♦D4MY 53423A18-A (LH)♦D4MY 53423A19-A	1

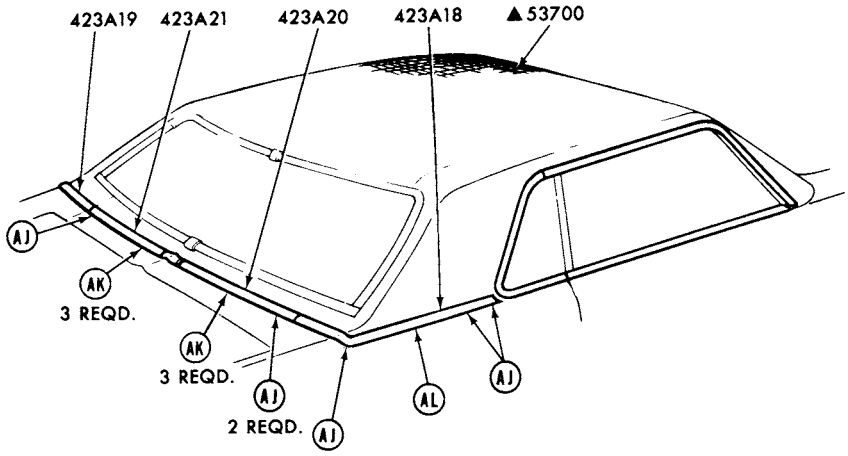

▲REFER TO GROUP IN SOFT TRIM SECTION

P-13243

REFER TO EXTERIOR MOULDING SECTION 'R' FOR COMPLETE RETAINER INFORMATION

1977 MERCURY - BODY TYPE 65 - ROOF and BACK BELT

GROUP NUMBER	PART NAME	DESCRIPTION	PART NUMBER	QTY.
423A18-9	Moulding (back belt outside side)	Full vinyl roof-Bright finish	(RH)♦D4MY 65423A18-A (LH)♦D4MY 65423A19-A	1
423A20-1	Moulding (back belt outside)	Full vinyl roof-Bright finish	(RH)♦D3MY 65423A20-C (LH)♦D3MY 65423A21-C	1

♦ Includes attaching parts

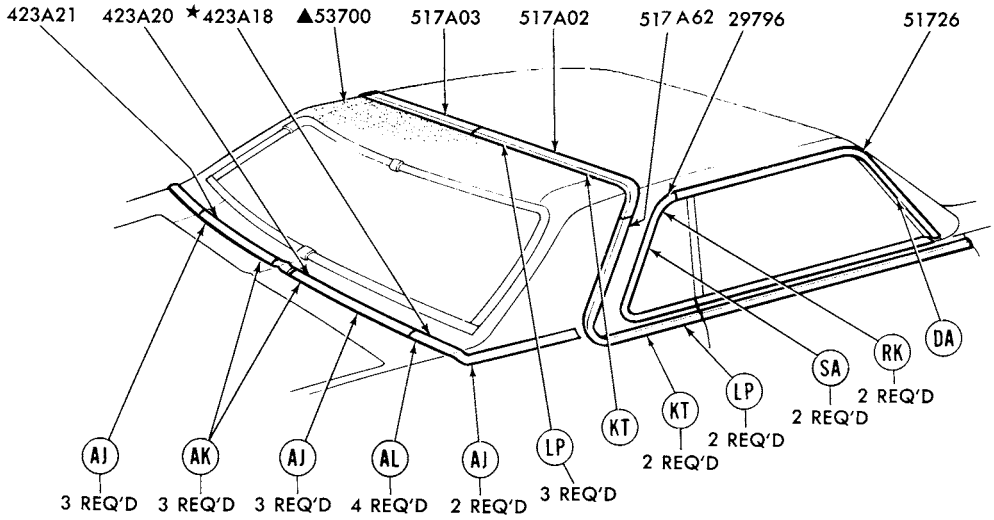

▲REFER TO GROUP IN SOFT TRIM SECTION
REFER TO EXTERIOR MOULDING SECTION "R" FOR COMPLETE RETAINER INFORMATION

P-12761

1977 MERCURY - BODY TYPES 65H,K,L - ROOF and BACK BELT - w/PARTIAL VINYL ROOF

GROUP NUMBER	PART NAME	DESCRIPTION	PART NUMBER		QTY.
29796-7	Moulding (quarter window outside rear)		(RH)♦D5MY 6529796-A	(LH)♦D5MY 6529797-A	1
423A18-9	Moulding (back belt outside side)		(RH)★D7MY 65423A18-A Not replaced (6/82)	(LH)★D7MY 65423A19-A Not replaced (6/83)	1
423A20-1	Moulding (back belt outside)		(RH)♦D3MY 65423A20-C	(LH)♦D3MY 65423A21-C	1
517A02-3	Moulding (roof outside top)		(RH)♦D6MY 65517A02-A	(LH)♦D6MY 65517A03-A	1
51726-7	Moulding (roof drip side finish)		(RH)♦D5MY 6551726-A	(LH)♦D5MY 6551727-A	1
517A62-3	Moulding (roof outside side)		(RH)♦D6MY 65517A62-A	(LH)♦D6MY 65517A63-A	1

♦ Includes attaching parts

COPYRIGHT © 1986 — FORD MOTOR COMPANY — DEARBORN, MICHIGAN

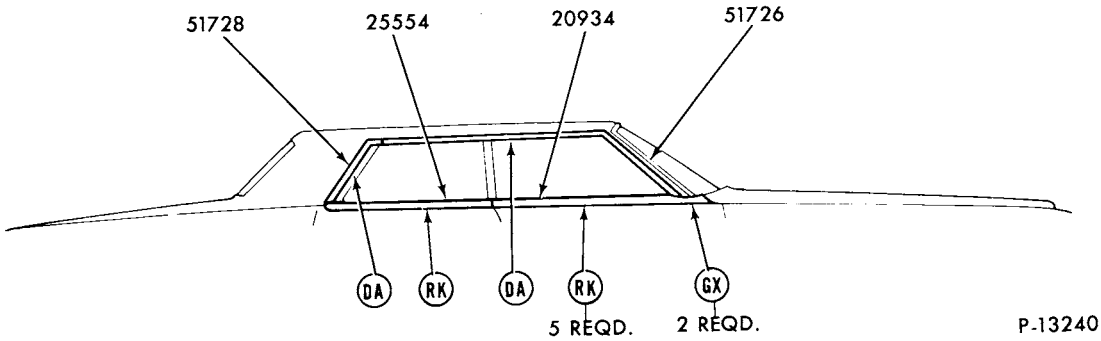

REFER TO EXTERIOR MOULDING SECTION "R" FOR COMPLETE RETAINER INFORMATION

1977 MERCURY - BODY TYPE 53 - ROOF DRIP SIDE, FRONT and REAR DOOR BELT MOULDINGS

GROUP NUMBER	PART NAME	DESCRIPTION	PART NUMBER		QTY.
20934-5	Moulding (front door outside belt)	Incl. weatherstrip	(RH)♦D5AZ 5320934-B	(LH)♦D5AZ 5320935-B	1
25554-5	Moulding (rear door outside belt)	Incl. weatherstrip	(RH)♦D5AZ 5325554-A	(LH)♦D5AZ 5325555-A	1
51726-7	Moulding (roof drip side finish front)		(RH)♦D7AZ 5351726-B	(LH)♦D7AZ 5351727-B	1
51728-9	Moulding (roof drip side finish rear)		(RH)♦D5AZ 5351728-A	(LH)♦D5AZ 5351729-A	1

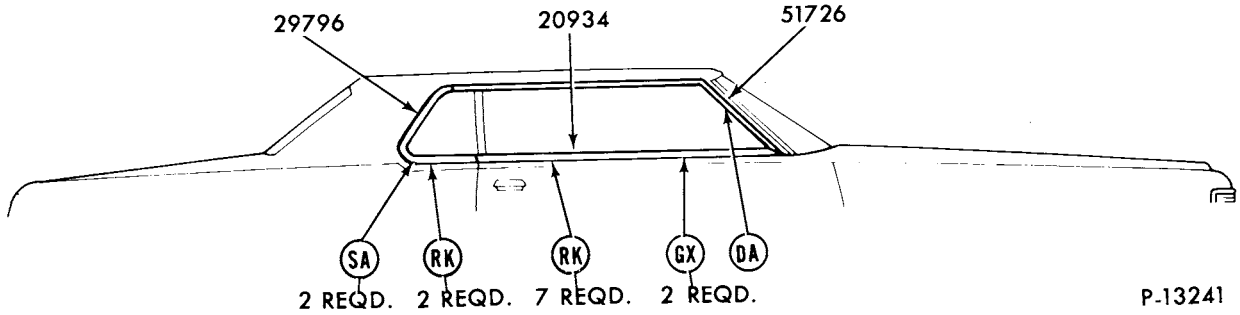

REFER TO EXTERIOR MOULDING SECTION "R" FOR COMPLETE RETAINER INFORMATION

1977 MERCURY - BODY TYPE 65 - ROOF DRIP SIDE, FRONT and REAR DOOR BELT MOULDINGS

GROUP NUMBER	PART NAME	DESCRIPTION	PART NUMBER		QTY.
20934-5	Moulding (door outside belt)	Incl. weatherstrip	(RH)♦D5AZ 6020934-A	(LH)♦D5AZ 6020935-A	1
29796-7	Moulding (quarter window)		(RH)♦D5MY 6529796-A	(LH)♦D5MY 6529797-A	1
51726-7	Moulding (roof drip side)		(RH)♦D5MY 6551726-A	(LH)♦D5MY 6551727-A	1

♦ Includes attaching parts

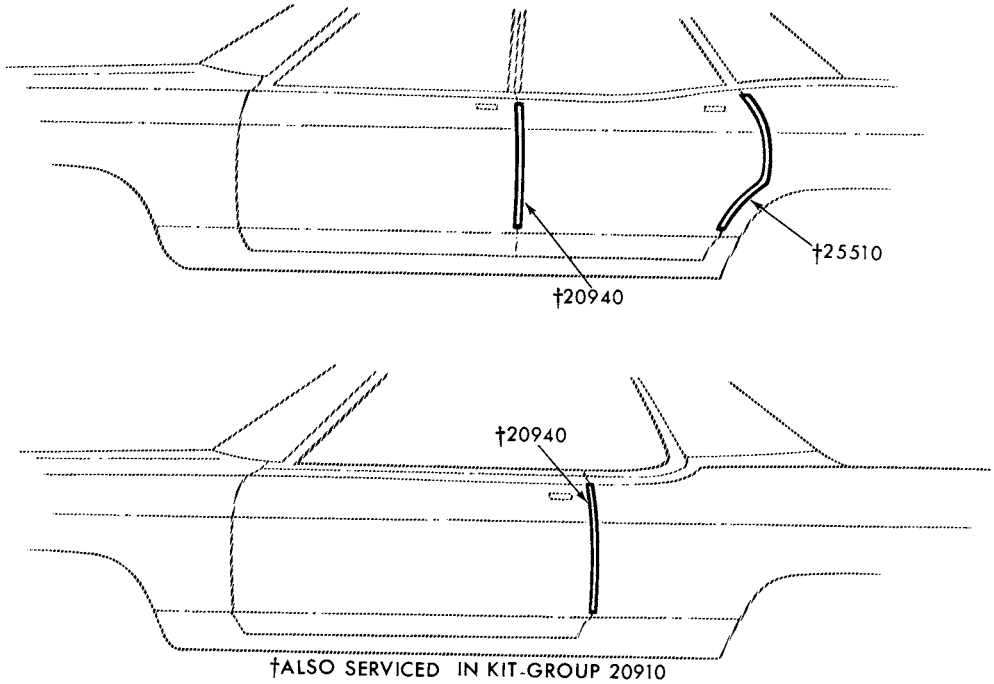

†ALSO SERVICED IN KIT-GROUP 20910

P-10061

1977 MERCURY - DOOR EDGE GUARDS

GROUP NUMBER	PART NAME	DESCRIPTION	PART NUMBER		QTY.
20940-1	Moulding (front door edge guard)	Bright-body types 53 and 71	(RH) D3MY 5320940-A	(LH) D3MY 5320941-A	
		Body type 65	(RH) D3MY 6520940-A	(LH) D3MY 6520941-A	
		Wood grain-body type 71-Colony Park	(RH) D5MY 7120940-A	(LH) D5MY 7120941-A	
25510-1	Moulding (rear door edge guard)	Bright-body types 53 and 71	(RH) D3MY 5325510-A	(LH) D3MY 5325511-A	1
		Wood grain-body type 71-Colony Park	(RH) D5MY 7125510-A	(LH) D5MY 7125511-A	1

COPYRIGHT © 1986 — FORD MOTOR COMPANY — DEARBORN, MICHIGAN

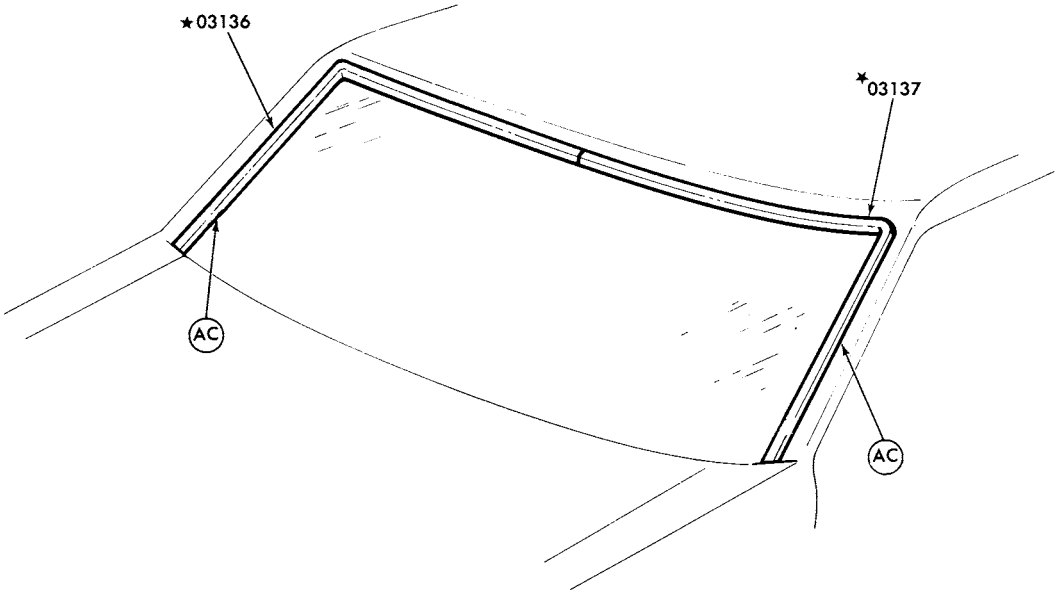

REFER TO EXTERIOR MOULDING SECTION 'R' FOR COMPLETE RETAINER INFORMATION P-12994

1977 LINCOLN - WINDSHIELD

GROUP NUMBER	PART NAME	DESCRIPTION	PART NUMBER	QTY.
03136-7	Moulding (windshield outside		(RH)*D5VY 6003136-A (LH)*D5VY 6003137-A	1

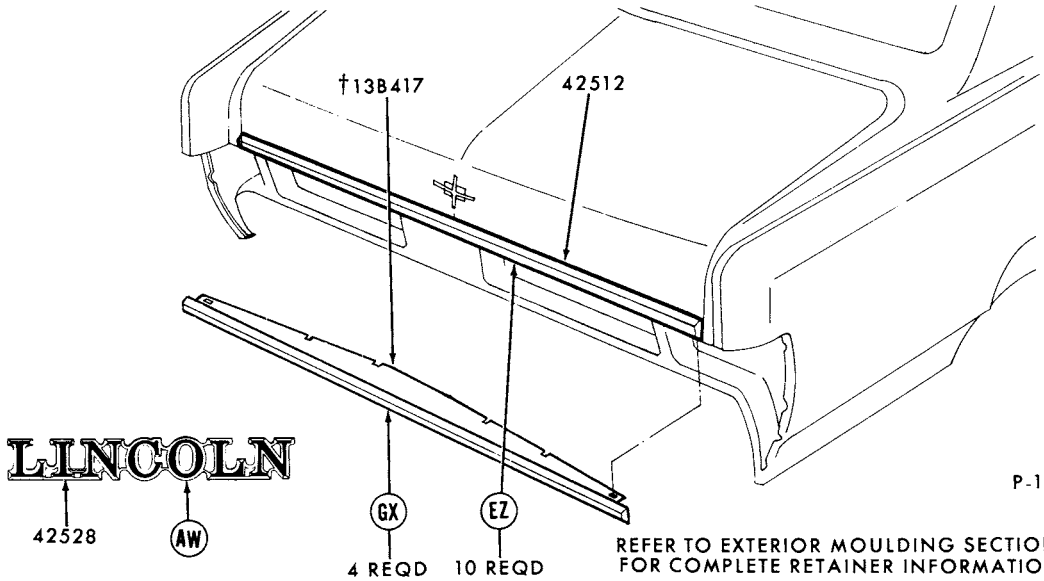

P-11896

REFER TO EXTERIOR MOULDING SECTION "R" FOR COMPLETE RETAINER INFORMATION
†REFER TO GROUP IN TEXT SECTION

1977 LINCOLN - BACK END

GROUP NUMBER	PART NAME	DESCRIPTION	PART NUMBER	QTY.
42512	Moulding (luggage compartment door)		♦D5VY 6042512-A	1
42528	Plate (name)	"LINCOLN"	♦E1VY 5442528-A	1

♦ Includes attaching parts

COPYRIGHT © 1986 — FORD MOTOR COMPANY — DEARBORN, MICHIGAN

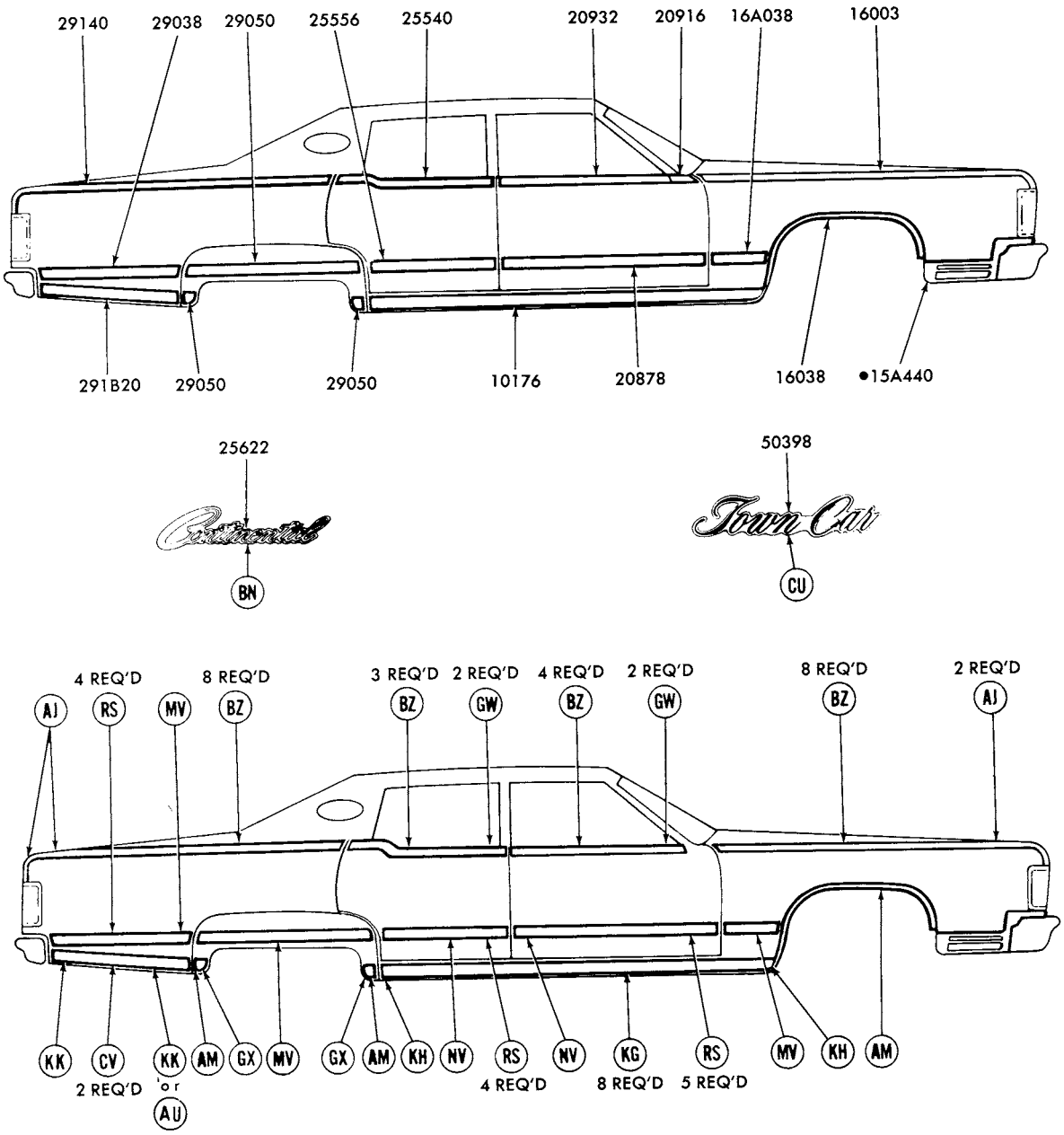

REFER TO EXTERIOR MOULDING SECTION "R" FOR COMPLETE RETAINER INFORMATION

● REFER TO GROUP IN TEXT SECTION

P-13185

1977 LINCOLN - BODY TYPE 53 - w/SIDE MOULDINGS - cont'd.

GROUP NUMBER	PART NAME	DESCRIPTION	PART NUMBER		QTY.
10176-7	Moulding (body rocker panel)		(RH)♦D5VY 6010176-A	(LH)♦D5VY 6010177-A	1
16003-4	Moulding (front fender upper)		(RH)♦D5VY 16003-A	(LH)♦D5VY 16004-A	1
16038-9	Moulding (front fender wheel opening)		(RH)♦D5VY 16038-A	(LH)♦D5VY 16039-A	1
16A038-9	Moulding (front fender rear)	Incl. vinyl insert			
		◊Black	(RH)♦D7VY 16A038-AA	(LH)♦D7VY 16A039-AA	1
		◊Blue (dark)	(RH)♦D7VY 16A038-BB	(LH)♦D7VY 16A039-BB	1
		◊Blue (light)	(RH)♦D7VY 16A038-AB	(LH)♦D7VY 16A039-AB	1
		◊Chamois	(RH)★D7VY 16A038-BT	(LH)★D7VY 16A039-BT	1
		◊Cordovan	(RH)♦D7VY 16A038-AF	(LH)♦D7VY 16A039-AF	1
		◊Cream	(RH)♦D7VY 16A038-AV	(LH)♦D7VY 16A039-AV	1
		◊Ember	(RH)♦D7VY 16A038-CT	(LH)♦D7VY 16A039-CT	1
		◊Gold	(RH)♦D7VY 16A038-AY	(LH)★D7VY 16A039-AY Not replaced (3/82)	1
		◊Gray	(RH)♦D7VY 16A038-AP	(LH)♦D7VY 16A039-AP	1
		◊Jade (dark)	(RH)★D7VY 16A038-BR	(LH)★D7VY 16A039-BR Not replaced (4/83)	1
		◊Jade (light)	(RH)★D7VY 16A038-AR Not replaced (4/84)	(LH)★D7VY 16A039-AR Not replaced (3/82)	1
		◊Red	(RH)♦D7VY 16A038-AD	(LH)♦D7VY 16A039-AD	1
		◊Silver	(RH)♦D7VY 16A038-BP	(LH)♦D7VY 16A039-BP	1
		◊White	(RH)♦D7VY 16A038-AW	(LH)♦D7VY 16A039-AW	1
20878-9	Moulding (front door lower)	Incl. vinyl insert			
		◊Black	(RH)♦D7VY 5320878-AA	(LH)♦D7VY 5320879-AA	1
		◊Blue (dark)	(RH)♦D7VY 5320878-BB	(LH)♦D7VY 5320879-BB	1
		◊Blue (light)	(RH)♦D7VY 5320878-AB	(LH)★D7VY 5320879-AB	1
		◊Chamois	(RH)♦D7VY 5320878-BT	(LH)♦D7VY 5320879-BT	1
		◊Cordovan	(RH)♦D7VY 5320878-AF	(LH)♦D7VY 5320879-AF	1
		◊Cream	(RH)♦D7VY 5320878-AV	(LH)♦D7VY 5320879-AV	1
		◊Ember	(RH)★D7VY 5320878-CT Not replaced (2/81)	(LH)♦D7VY 5320879-CT	1
		◊Gold	(RH)♦D7VY 5320878-AY	(LH)♦D7VY 5320879-AY	1
		◊Gray	(RH)♦D7VY 5320878-AP	(LH)♦D7VY 5320879-AP	1
		◊Jade (dark)	(RH)♦D7VY 5320878-BR	(LH)★D7VY 5320879-BR	1
		◊Jade (light)	(RH)♦D7VY 5320878-AR	(LH)★D7VY 5320879-AR	1
		◊Red	(RH)♦D7VY 5320878-AD	(LH)♦D7VY 5320879-AD	1
		◊Silver	(RH)♦D7VY 5320878-BP	(LH)♦D7VY 5320879-BP	1
		◊White	(RH)♦D7VY 5320878-AW	(LH)♦D7VY 5320879-AW	1
20916-33	Moulding (front door upper)	R.H.-w/o mirror	♦D5VY 5320932-A		1
		R.H.-w/mirror-front	♦D5VY 6020916-A		1
		R.H.-w/mirror-rear	♦D5VY 5320932-B		1
		L.H.-front	♦D5VY 6020917-A		1
		L.H.-rear	♦D5VY 5320933-A		1
25540-1	Moulding (rear door upper)		(RH)♦D5VY 5325540-A	(LH)♦D5VY 5325541-A	1

◊ For color verification, refer to the vinyl roof swatches in the 1977 Salesman's Color and Upholstery Selection Guide
♦ Includes attaching parts

COPYRIGHT © 1986 — FORD MOTOR COMPANY — DEARBORN, MICHIGAN

1977 LINCOLN - BODY TYPE 53 - w/SIDE MOULDINGS - cont'd.

GROUP NUMBER	PART NAME	DESCRIPTION	PART NUMBER		QTY.
25556-7	Moulding (rear door lower)	Incl. vinyl insert			
		◊Black	(RH)♦D7VY 5325556-AA	(LH)♦D7VY 5325557-AA	1
		◊Blue (dark)	(RH)♦D7VY 5325556-BB	(LH)♦D7VY 5325557-BB	1
		◊Blue (light)	(RH)♦D7VY 5325556-AB	(LH)♦D7VY 5325557-AB	1
		◊Chamois	(RH)♦D7VY 5325556-BT	(LH)♦C7VY 5325557-BT	1
		◊Cordovan	(RH)♦D7VY 5325556-AF	(LH)♦D7VY 5325557-AF	1
		◊Cream	(RH)♦D7VY 5325556-AV	(LH)♦D7VY 5325557-AV	1
		◊Ember	(RH)★D7VY 5325556-CT Not replaced (4/84)	(LH)★D7VY 5325557-CT Not replaced (4/83)	1
		◊Gold	(RH)♦D7VY 5325556-AY	(LH)♦D7VY 5325557-AY	1
		◊Gray	(RH)♦D7VY 5325556-AP	(LH)♦D7VY 5325557-AP	1
		◊Jade (dark)	(RH)♦D7VY 5325556-BR	(LH)★D7VY 5325557-BR Not replaced (4/84)	1
		◊Jade (light)	(RH)♦D7VY 5325556-AR	(LH)♦D7VY 5325557-AR	1
		◊Red	(RH)♦D7VY 5325556-AD	(LH)♦D7VY 5325557-AD	1
		◊Silver	(RH)♦D7VY 5325556-BP	(LH)♦D7VY 5325557-BP	1
		◊White	(RH)♦D7VY 5325556-AW	(LH)♦D7VY 5325557-AW	1
25622	Plate (name)	"Continental"	♦D5VY 6525622-A	R.H. and L.H.	2
29038-9	Moulding (quarter panel side)	Incl. vinyl insert			
		◊Black	(RH)♦D7VY 6029038-AA	(LH)♦D7VY 6029039-AA	1
		◊Blue (dark)	(RH)♦D7VY 6029038-BB	(LH)♦D7VY 6029039-BB	1
		◊Blue (light)	(RH)♦D7VY 6029038-AB	(LH)♦D7VY 6029039-AB	1
		◊Chamois	(RH)♦D7VY 6029038-BT	(LH)♦D7VY 6029039-BT	1
		◊Cordovan	(RH)♦D7VY 6029038-AF	(LH)♦D7VY 6029039-AF	1
		◊Cream	(RH)♦D7VY 6029038-AV	(LH)♦D7VY 6029039-AV	1
		◊Ember	(RH)♦D7VY 6029038-CT	(LH)♦D7VY 6029039-CT	1
		◊Gold	(RH)♦D7VY 6029038-AY	(LH)♦D7VY 6029039-AY	1
		◊Gray	(RH)♦D7VY 6029038-AP	(LH)♦D7VY 6029039-AP	1
		◊Jade (dark)	(RH)♦D7VY 6029038-BR	(LH)♦D7VY 6029039-BR	1
		◊Jade (light)	(RH)♦D7VY 6029038-AR	(LH)♦D7VY 6029039-AR	1
		◊Red	(RH)♦D7VY 6029038-AD	(LH)♦D7VY 6029039-AD	1
		◊Silver	(RH)♦D7VY 6029038-BP	(LH)♦D7VY 6029039-BP	1
		◊White	(RH)♦D7VY 6029038-AW	(LH)♦D7VY 6029039-AW	1
29050-1	Moulding (quarter wheel opening cover lower)	Front	(RH)♦D5VY 6029050-B	(LH)♦D5VY 6029051-B	1
		Rear	(RH)♦D5VY 6029050-C	(LH)♦D5VY 6029051-C	1
29050-1	Moulding (quarter wheel opening cover upper)	Incl. vinyl insert			
		◊Black	(RH)♦D7VY 6029050-AA	(LH)♦D7VY 6029051-AA	1
		◊Blue (dark)	(RH)♦D7VY 6029050-BB	(LH)♦D7VY 6029051-BB	1
		◊Blue (light)	(RH)♦D7VY 6029050-AB	(LH)♦D7VY 6029051-AB	1
		◊Chamois	(RH)♦D7VY 6029050-BT	(LH)♦D7VY 6029051-BT	1
		◊Cordovan	(RH)♦D7VY 6029050-AF	(LH)♦D7VY 6029051-AF	1
		◊Cream	(RH)♦D7VY 6029050-AV	(LH)♦D7VY 6029051-AV	1
		◊Ember	(RH)♦D7VY 6029050-CT	(LH)★D7VY 6029051-CT	1
		◊Gold	(RH)♦D7VY 6029050-AY	(LH)♦D7VY 6029051-AY	1
		◊Gray	(RH)♦D7VY 6029050-AP	(LH)♦D7VY 6029051-AP	1
		◊Jade (dark)	(RH)♦D7VY 6029050-BR	(LH)♦D7VY 6029051-BR	1
		◊Jade (light)	(RH)♦D7VY 6029050-AR	(LH)★D7VY 6029051-AR	1
		◊Red	(RH)♦D7VY 6029050-AD	(LH)♦D7VY 6029051-AD	1
		◊Silver	(RH)♦D7VY 6029050-BP	(LH)♦D7VY 6029051-BP	1
		◊White	(RH)♦D7VY 6029050-AW	(LH)♦D7VY 6029051-AW	1
291B20-1	Moulding (quarter panel lower)		(RH)♦D5VY 60291B120-A	(LH)♦D5VY 60291B21-A	1
29140-1	Moulding (quarter panel top)		(RH)♦D5VY 5329140-A	(LH)♦D5VY 5329141-A	1
50398	Plate (roof side)	"Town Car"	♦D3VY 5350398-A	R.H. and L.H.	2
517A20	Ornament (roof side)	W/o opera window	♦C9VY 53517A20-A	R.H. and L.H.	2

◊ For color verification, refer to the vinyl roof swatches in the 1977 Salesman's Color and Upholstery Selection Guide
♦ Includes attaching parts

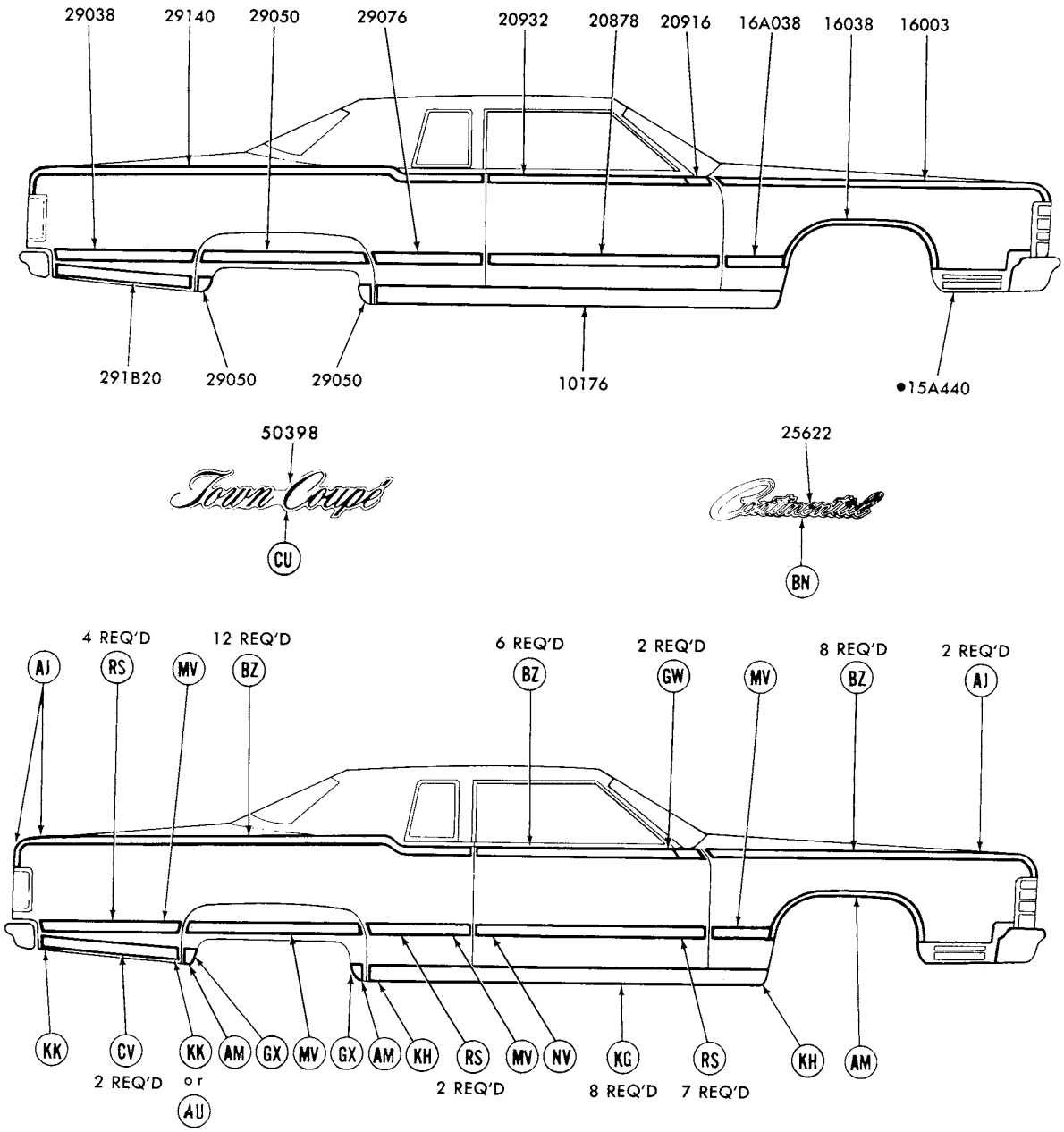

REFER TO EXTERIOR MOULDING SECTION "R" FOR COMPLETE RETAINER INFORMATION
•REFER TO GROUP IN TEXT SECTION

P-13183

1977 LINCOLN - BODY TYPE 60 - w/SIDE MOULDINGS

COPYRIGHT © 1986 — FORD MOTOR COMPANY — DEARBORN, MICHIGAN

1977 LINCOLN - BODY TYPE 60 - w/SIDE MOULDINGS - cont'd.

GROUP NUMBER	PART NAME	DESCRIPTION	PART NUMBER		QTY.
10176-7	Moulding (body rocker panel)		(RH)♦D5VY 6010176-A	(LH)♦D5VY 6010177-A	1
16003-4	Moulding (front fender top)		(RH)♦D5VY 16003-A	(LH)♦D5VY 16004-A	1
16038-9	Moulding (front fender wheel opening)		(RH)♦D5VY 16038-A	(LH)♦D5VY 16039-A	1
16A038-9	Moulding (front fender rear)	Incl. vinyl insert			
		◊Black	(RH)♦D7VY 16A038-AA	(LH)♦D7VY 16A039-AA	1
		◊Blue (dark)	(RH)♦D7VY 16A038-BB	(LH)♦D7VY 16A039-BB	1
		◊Blue (light)	(RH)♦D7VY 16A038-AB	(LH)♦D7VY 16A039-AB	1
		◊Chamois	(RH)♦D7VY 16A038-BT	(LH)★D7VY 16A039-BT Not replaced (2/81)	1
		◊Cordovan	(RH)♦D7VY 16A038-AF	(LH)♦D7VY 16A039-AF	1
		◊Cream	(RH)♦D7VY 16A038-AV	(LH)♦D7VY 16A039-AV	1
		◊Gold	(RH)♦D7VY 16A038-AY	(LH)✱D7VY 16A039-AY Not replaced (4/84)	1
		◊Gray	(RH)♦D7VY 16A038-AP	(LH)♦D7VY 16A039-AP	1
		◊Jade (dark)	(RH)♦D7VY 16A038-BR Not replaced (4/84)	(LH)✱D7VY 16A039-BR Not replaced (4/83)	1
		◊Jade (light)	(RH)★D7VY 16A038-AR Not replaced (4/84)	(LH)★D7VY 16A039-AR Not replaced (4/84)	1
		◊Red	(RH)♦D7VY 16A038-AD	(LH)♦D7VY 16A039-AD	1
		◊Silver	(RH)♦D7VY 16A038-BP	(LH)♦D7VY 16A039-BP	1
		◊White	(RH)♦D7VY 16A038-AW	(LH)♦D7VY 16A039-AW	1
20878-9	Moulding (front door lower)	Incl. vinyl insert			
		◊Black	(RH)♦D7VY 6020878-AA	(LH)♦D7VY 6020879-AA	1
		◊Blue (dark)	(RH)♦D7VY 6020878-BB	(LH)♦D7VY 6020879-BB	1
		◊Blue (light)	(RH)★D7VY 6020878-AB Not replaced (2/81)	(LH)♦D7VY 6020879-AB	1
		◊Cordovan	(RH)♦D7VY 6020878-AF	(LH)♦D7VY 6020879-AF	1
		◊Cream	(RH)♦D7VY 6020878-AV	(LH)♦D7VY 6020879-AV	1
		◊Gold	(RH)✱D7VY 6020878-AY Not replaced (4/83)	(LH)★D7VY 6020879-AY Not replaced (4/84)	1
		◊Gray	(RH)♦D7VY 6020878-AP	(LH)♦D7VY 6020879-AP	1
		◊Jade (light)	(RH)✱D7VY 6020878-AR Not replaced (4/83)	(LH)♦D7VY 6020879-AR	1
		◊Red	(RH)♦D7VY 6020878-AD	(LH)♦D7VY 6020879-AD	1
		◊Silver	(RH)★D7VY 6020878-BP Not replaced (4/84)	(LH)★D7VY 6020879-BP Not replaced (4/84)	1
		◊White	(RH)♦D7VY 6020878-AW	(LH)♦D7VY 6020879-AW	1
20916-33	Moulding (front door upper)	R.H.-w/o mirror	♦D5VY 6020932-A		1
		R.H.-w/mirror-front	♦D5VY 6020916-A		1
		R.H.-w/mirror-rear	♦D5VY 6020933-B		1
		L.H.-front	♦D5VY 6020917-A		1
		L.H.-rear	♦D5VY 6020933-B		1
25622	Plate (name)	"Continental"	♦D5VY 6525622-A	R.H. and L.H.	2

◊ For color verification, refer to the vinyl roof swatches in the 1977 Salesman's Color and Upholstery Selection Guide
♦ Includes attaching parts

1977 LINCOLN - BODY TYPE 60 - w/SIDE MOULDINGS - cont'd.

GROUP NUMBER	PART NAME	DESCRIPTION	PART NUMBER		QTY.
29038-9	Moulding (quarter panel side)	Incl. vinyl insert			
		◊Black	(RH)♦D7VY 6029038-AA	(LH)♦D7VY 6029039-AA	1
		◊Blue (dark)	(RH)♦D7VY 6029038-BB	(LH)♦D7VY 6029039-BB	1
		◊Blue (light)	(RH)♦D7VY 6029038-AB	(LH)♦D7VY 6029039-AB	1
		◊Chamois	(RH)♦D7VY 6029038-BT	(LH)♦D7VY 6029039-BT	1
		◊Cordovan	(RH)♦D7VY 6029038-AF	(LH)♦D7VY 6029039-AF	1
		◊Cream	(RH)♦D7VY 6029038-AV	(LH)♦D7VY 6029039-AV	1
		◊Ember	(RH)♦D7VY 6029038-CT	(LH)♦D7VY 6029039-CT	1
		◊Gold	(RH)♦D7VY 6029038-AY	(LH)♦D7VY 6029039-AY	1
		◊Gray	(RH)♦D7VY 6029038-AP	(LH)♦D7VY 6029039-AP	1
		◊Jade (dark)	(RH)♦D7VY 6029038-BR	(LH)♦D7VY 6029039-BR	1
		◊Jade (light)	(RH)♦D7VY 6029038-AR	(LH)♦D7VY 6029039-AR	1
		◊Red	(RH)♦D7VY 6029038-AD	(LH)♦D7VY 6029039-AD	1
		◊Silver	(RH)♦D7VY 6029038-BP	(LH)♦D7VY 6029039-BP	1
		◊White	(RH)♦D7VY 6029038-AW	(LH)♦D7VY 6029039-AW	1
29050-1	Moulding (quarter wheel opening cover lower)	Front	(RH)♦D5VY 6029050-B	(LH)♦D5VY 6029051-B	1
		Rear	(RH)♦D5VY 6029050-C	(LH)♦D5VY 6029051-C	1
29050-1	Moulding (quarter wheel opening cover upper)	Incl. vinyl insert			
		◊Black	(RH)♦D7VY 6029050-AA	(LH)♦D7VY 6029051-AA	1
		◊Blue (dark)	(RH)♦D7VY 6029050-BB	(LH)♦D7VY 6029051-BB	1
		◊Blue (light)	(RH)♦D7VY 6029050-AB	(LH)♦D7VY 6029051-AB	1
		◊Chamois	(RH)♦D7VY 6029050-BT	(LH)♦D7VY 6029051-BT	1
		◊Cordovan	(RH)♦D7VY 6029050-AF	(LH)♦D7VY 6029051-AF	1
		◊Cream	(RH)♦D7VY 6029050-AV	(LH)♦D7VY 6029051-AV	1
		◊Ember	(RH)♦D7VY 6029050-CT	(LH)♦D7VY 6029051-CT	1
		◊Gold	(RH)♦D7VY 6029050-AY	(LH)♦D7VY 6029051-AY	1
		◊Gray	(RH)♦D7VY 6029050-AP	(LH)♦D7VY 6029051-AP	1
		◊Jade (dark)	(RH)♦D7VY 6029050-BR	(LH)♦D7VY 6029051-BR	1
		◊Jade (light)	(RH)♦D7VY 6029050-AR	(LH)♦D7VY 6029051-AR	1
		◊Red	(RH)♦D7VY 6029050-AD	(LH)♦D7VY 6029051-AD	1
		◊Silver	(RH)♦D7VY 6029050-BP	(LH)♦D7VY 6029051-BP	1
		◊White	(RH)♦D7VY 6029050-AW	(LH)♦D7VY 6029051-AW	1
29076-7	Moulding (quarter lower front)	Incl. vinyl insert			
		◊Black	(RH)♦D7VY 6029076-AA	(LH)♦D7VY 6029077-AA	1
		◊Blue (dark)	(RH)♦D7VY 6029076-BB	(LH)★D7VY 6029077-BB Not replaced (4/83)	1
		◊Blue (light)	(RH)★D7VY 6029076-AB Not replaced (4/83)	(LH) D7VY 6029077-AB	1
		◊Chamois	(RH)★D7VY 6029076-BT Not replaced (4/83)	(LH)★D7VY 6029077-BT Not replaced (4/83)	1
		◊Cordovan	(RH)♦D7VY 6029076-AF	(LH)♦D7VY 6029077-AF	1
		◊Cream	(RH)♦D7VY 6029076-AV	(LH)♦D7VY 6029077-AV	1
		◊Ember	(RH)★D7VY 6029076-CT Not replaced (4/83)	(LH)★D7VY 6029077-CT Not replaced (4/83)	1
		◊Gold	(RH)♦D7VY 6029076-AY	(LH)♦D7VY 6029077-AY	1
		◊Gray	(RH)♦D7VY 6029076-AP	(LH)♦D7VY 6029077-AP	1
		◊Jade (dark)	(RH)★D7VY 6029076-BR Not replaced (4/83)	(LH)★D7VY 6029077-BR Not replaced (4/83)	1
		◊Jade (light)	(RH)★D7VY 6029076-AR Not replaced (4/84)	(LH)♦D7VY 6029077-AR	1
		◊Red	(RH)♦D7VY 6029076-AD	(LH)♦D7VY 6029077-AD	1
		◊Silver	(RH)♦D7VY 6029076-BP	(LH)♦D7VY 6029077-BP	1
		◊White	(RH)♦D7VY 6029076-AW	(LH)♦D7VY 6029077-AW	1
291B20-1	Moulding (quarter panel lower)		(RH)♦D5VY 60291B20-A	(LH)♦D5VY 60291B21-A	1
29140-1	Moulding (quarter panel upper)		(RH)♦D5VY 6029140-A	(LH)♦D5VY 6029141-A	1
50398	Plate (front fender name)	"Town Coupe"	♦D3VY 6550398-A	R.H. and L.H.	2

◊ For color verification, refer to the vinyl roof swatches in the 1977 Salesman's Color and Upholstery Selection Guide
♦ Includes attaching parts

COPYRIGHT © 1986 — FORD MOTOR COMPANY — DEARBORN, MICHIGAN

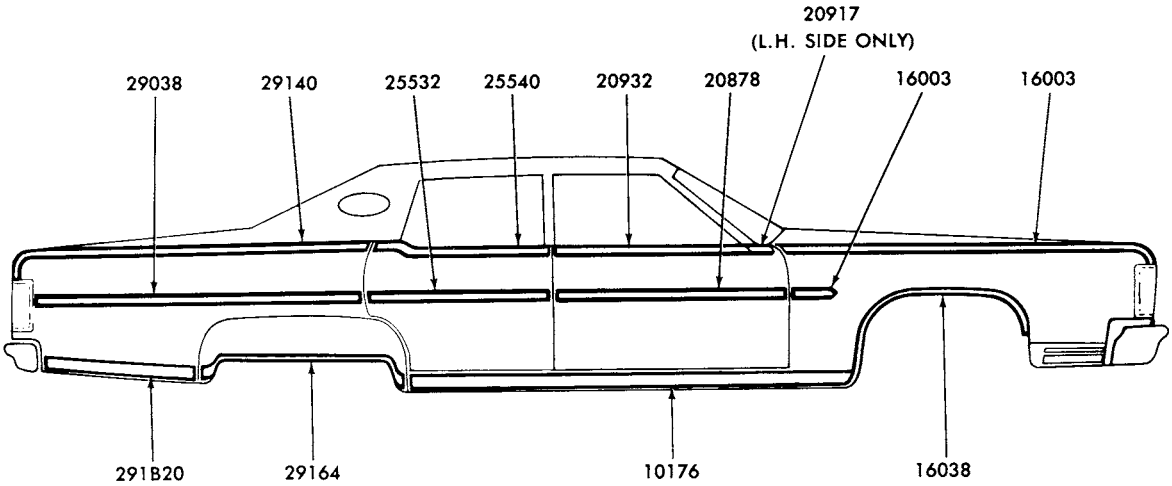

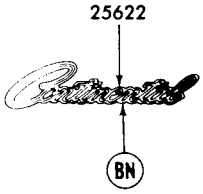

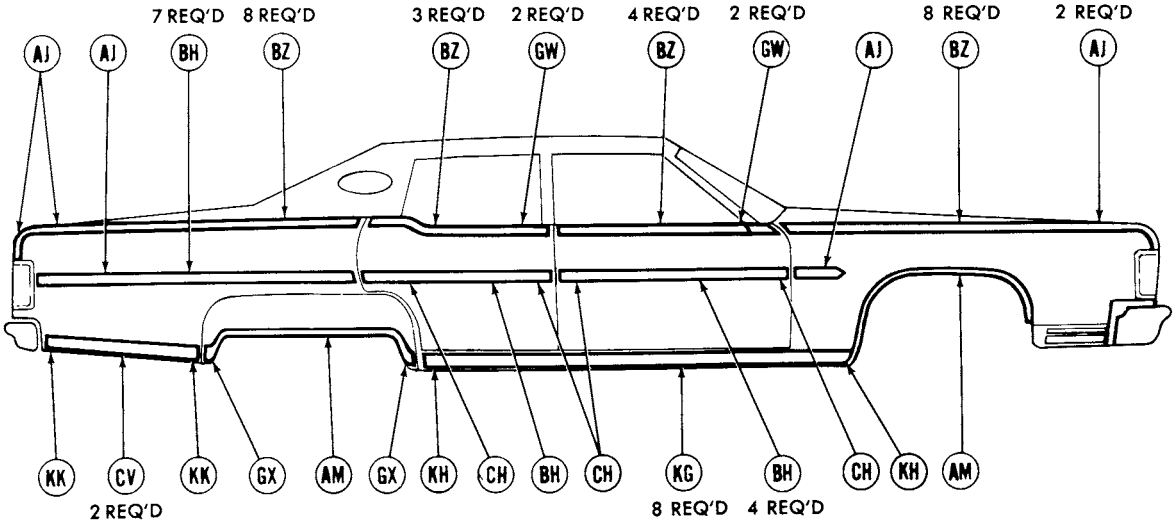

REFER TO EXTERIOR MOULDING SECTION "R" FOR COMPLETE RETAINER INFORMATION

P-13186

1977 LINCOLN - BODY TYPES 53 and 60 - w/BODY SIDE PROTECTION

1977 LINCOLN - BODY TYPES 53 and 60 - w/BODY SIDE PROTECTION - cont'd.

GROUP NUMBER	PART NAME	DESCRIPTION	PART NUMBER		QTY.
10176-7	Moulding (body rocker panel)		(RH)♦D5VY 6010176-A	(LH)♦D5VY 6010177-A	1
16003	Moulding (front fender side)		♦D2LY 16003-B	R.H. and L.H.	2
16003-4	Moulding (front fender upper)		(RH)♦D5VY 16003-A	(LH)♦D5VY 16004-A	1
16038-9	Moulding (front fender wheel)		(RH)♦D5VY 16038-B	(LH)♦D5VY 16039-B	1
20878-9	Moulding (front door lower)	Body type 53	♦D2VY 5320878-B	R.H. and L.H.	2
		Body type 60	♦D2VY 6520878-B	R.H. and L.H.	2
20916-33	Moulding (front door upper)	Body type 53			1
		R.H.	♦D5VY 5320932-A		1
		R.H.-w/mirror-front	♦D5VY 6020916-A		1
		R.H.-w/mirror-rear	♦D5VY 5320932-B		1
		L.H.-front	♦D5VY 6020917-A		1
		L.H.-rear	♦D5VY 5320933-A		1
		Body type 60			1
		R.H.	♦D5VY 6020932-A		1
		R.H.-w/mirror-front	♦D5VY 6020916-A		1
		R.H.-w/mirror-rear	♦D5VY 6020933-B		1
		L.H.-front	♦D5VY 6020917-A		1
		L.H.-rear	♦D5VY 6020933-B		1
25532-3	Moulding (rear door lower)		♦D2VY 5325532-B	R.H. and L.H.	2
25540-1	Moulding (rear door upper)		(RH)♦D5VY 5325540-A	(LH)♦D5VY 5325541-A	1
25622	Plate (Name)	"Continental"	♦ D5VY 6525622-A	R.H. and L.H.	2
29038-9	Moulding (quarter panel side)	Body type 53	♦D2VY 5329038-B	R.H. and L.H.	2
		Body type 60	(RH)♦D6VY 6029038-A	R.H. and L.H.	2
29050-1	Moulding (quarter wheel opening cover)	Front	(RH)♦D5VY 6029050-B	(LH)♦D5VY 6029051-B	1
		Rear	(RH)♦D5VY 6029050-C	(LH)♦D5VY 6029051-C	1
291B20-1	Moulding (quarter panel lower)		(RH)♦D5VY 60291B20-A	(LH)♦D5VY 60291B21-A	1
29140-1	Moulding (quarter panel upper)	Body type 53	(RH)♦D5VY 5329140-A	(LH)♦D5VY 5329141-A	1
		Body type 60	(RH)♦D5VY 6029140-A	(LH)♦D5VY 6029141-A	1
29164-5	Moulding (quarter wheel opening cover)		(RH)♦D5VY 6029164-A	(LH)♦D5VY 6029165-A	1
517A20	Ornament (roof side)	Body type 53-w/o opera window	♦C9VY 53517A20-A	R.H. and L.H.	2

♦ Includes attaching parts

COPYRIGHT © 1986 — FORD MOTOR COMPANY — DEARBORN, MICHIGAN

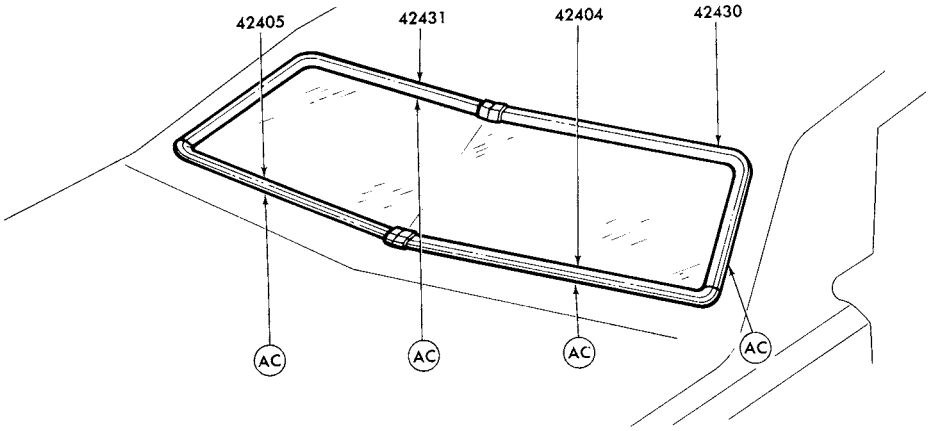

REFER TO EXTERIOR MOULDING SECTION "R" FOR COMPLETE RETAINER INFORMATION

P-12488

1977 LINCOLN - BACK WINDOW - w/o VINYL ROOF and w/FULL VINYL ROOF

GROUP NUMBER	PART NAME	DESCRIPTION	PART NUMBER		QTY.
42404-5	Moulding (back window lower)	Body type 53	(RH)♦D5VY 5342404-A	(LH)★D5VY 5342405-A Not replaced (4/84)	1
		Body type 60	(RH)★D5VY 6042404-A	(LH)★D5VY 6042405-A Not replaced (4/84)	1
42430-1	Moulding (back window upper)	Body type 53	(RH)♦D5VY 5342430-A	(LH)♦D5VY 5342431-A	1
		Body type 60	(RH)★D5VY 6042430-A	(LH)★D5VY 6042431-A Not replaced (4/84)	1

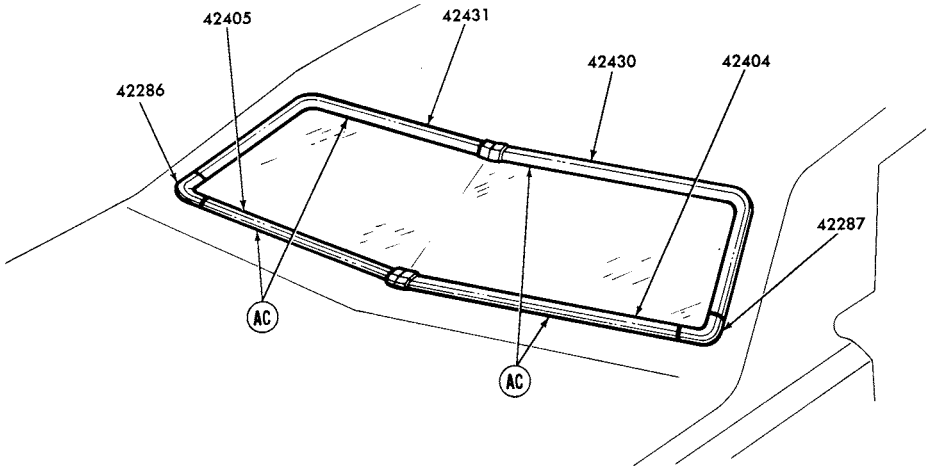

REFER TO EXTERIOR MOULDING SECTION "R" FOR COMPLETE RETAINER INFORMATION

P-13189

1977 LINCOLN - BACK WINDOW - w/HALF VINYL ROOF

GROUP NUMBER	PART NAME	DESCRIPTION	PART NUMBER		QTY.
42286	Moulding (back window lower corner)		♦D7VY 6042286-A	R.H. and L.H.	2
42404-5	Moulding (back window lower)	Body type 53	(RH)♦D7VY 5342404-A	(LH)♦D7VY 5342405-A	1
		Body type 60	(RH)♦D7VY 6042404-A	(LH)♦D7VY 6042405-A	1
42430-1	Moulding (back window upper)	Body type 53	(RH)♦D7VY 5342430-A	(LH)♦D7VY 5342431-A	1
		Body type 60	(RH)♦D7VY 6042430-A	(LH)♦D7VY 6042431-A	1

♦ Includes attaching parts

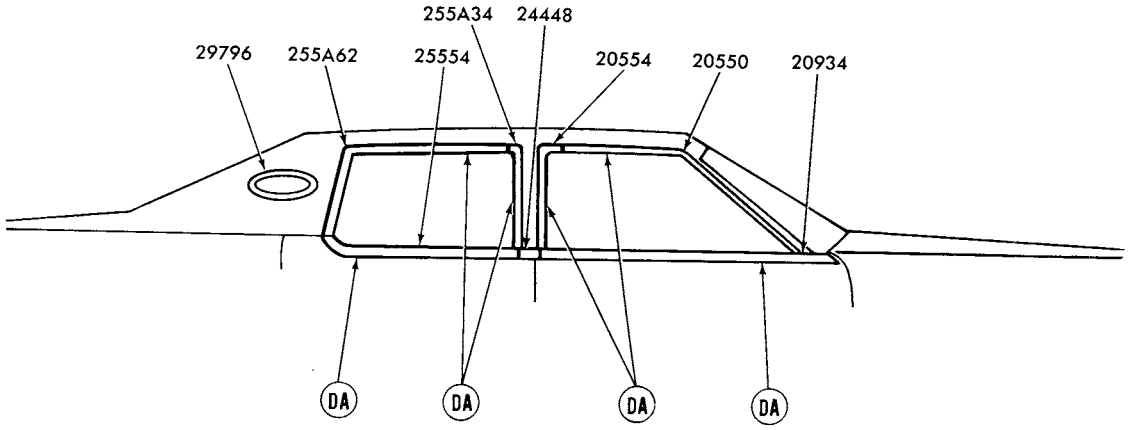

REFER TO EXTERIOR MOULDING SECTION "R" FOR COMPLETE RETAINER INFORMATION

P-13191

1977 LINCOLN - BODY TYPE 53 - DOOR BELT and WINDOW

GROUP NUMBER	PART NAME	DESCRIPTION	PART NUMBER		QTY.
20550-5	Moulding (front door window)	Front	(RH) D5VY 5320550-A	(LH) D5VY 5320551-A	1
		Rear	(RH) D5VY 5320554-A	(LH) D5VY 5320555-A	1
20934-5	Moulding (front door belt)		(RH)♦D5VY 5320934-A	(LH)♦D5VY 5320935-A	1
24448-9	Moulding (center body pillar)	W/half vinyl roof	(RH)♦D7VY 5324448-A	(LH)♦D7VY 5324449-A	1
		Standard	(RH)★D5VY 5324448-A	(LH)♦D5VY 5324449-A	1
255A34-5	Moulding (rear door window)	Front-w/o half vinyl roof	(RH) D5VY 53255A34-A	(LH) D5VY 53255A35-A	1
		Front-w/half vinyl roof	(RH)★D6VY 53255A34-A Not replaced (3/82)	(LH)★D6VY 53255A35-A Not replaced (3/82)	1
25554-5	Moulding (rear door belt)		(RH)♦D5VY 5325554-A	(LH)♦D5VY 5325555-A	1
255A62-3	Moulding (rear door window)	Rear-w/full vinyl roof	(RH)★D5VY 53255A62-A Not replaced (3/82)	(LH)★D5VY 53255A63-A Not replaced (3/82)	1
		Rear-w/half vinyl roof	(RH)♦D6VY 53255A62-A	(LH)♦D6VY 53255A63-A	1
29796-7	Moulding (opera window)	Bright finish w/ vinyl tape			
		Black	D6LY 6529796-A	R.H. and L.H.	2

♦ Includes attaching parts

COPYRIGHT © 1986 — FORD MOTOR COMPANY — DEARBORN, MICHIGAN

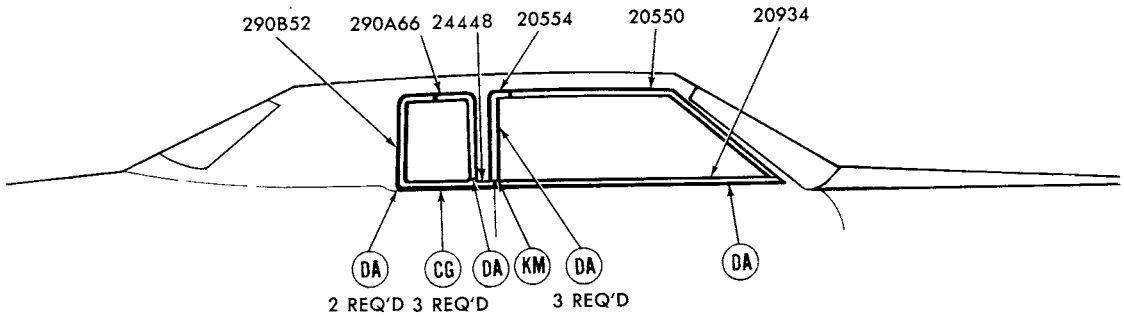

REFER TO EXTERIOR MOULDING SECTION "R" FOR COMPLETE RETAINER INFORMATION

P-13190

1977 LINCOLN - BODY TYPE 60 - DOOR BELT and WINDOW

GROUP NUMBER	PART NAME	DESCRIPTION	PART NUMBER		QTY.
20550-5	Moulding (front window opening)	Front	(RH) D5VY 6020550-A	(LH) D5VY 6020551-A	1
		Rear	(RH) D5VY 6020554-A	(LH) D5VY 6020555-A	1
20934	Moulding and weatherstrip-(front door belt)		(RH)♦D5VY 6020934-A	(LH)♦D5VY 6020935-A	1
24448-9	Moulding (center body pillar)		(RH) D7VY 6024448-A	(LH) D7VY 6024449-A	1
290B52-3	Moulding (quarter window rear)		(RH)♦D6VY 60290B52-A	(LH)♦D6VY 60290B53-A	1
290A66-7	Moulding (quarter window front)	W/vinyl roof	(RH)★D6VY 60290A66-B Not replaced (4/84)	(LH)♦D6VY 60290A67-B	1
		W/o vinyl roof	(RH)♦D6VY 60290A66-A	(LH)♦D6VY 60290A67-A	1

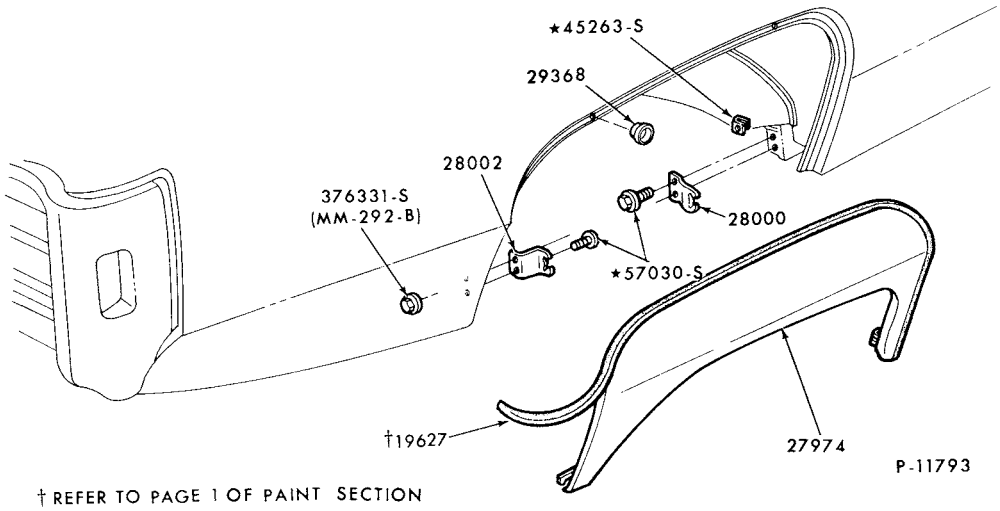

† REFER TO PAGE 1 OF PAINT SECTION

1977 LINCOLN - WHEEL OPENING COVER PARTS

GROUP NUMBER	PART NAME	DESCRIPTION	PART NUMBER		QTY.
27974-5	Panel (quarter wheel opening cover)		(RH) D5VY 6027974-B	(LH) D5VY 6027975-B	1
28000-2	Bracket (quarter wheel opening cover)	Front	D5VY 6028000-A	R.H. and L.H.	2
		Rear	D5VY 6028002-C	R.H. and L.H.	2
29368	Insert (wheel opening cover)	Nylon	D5VY 6029368-A	R.H. and L.H.	4

♦ Includes attaching parts

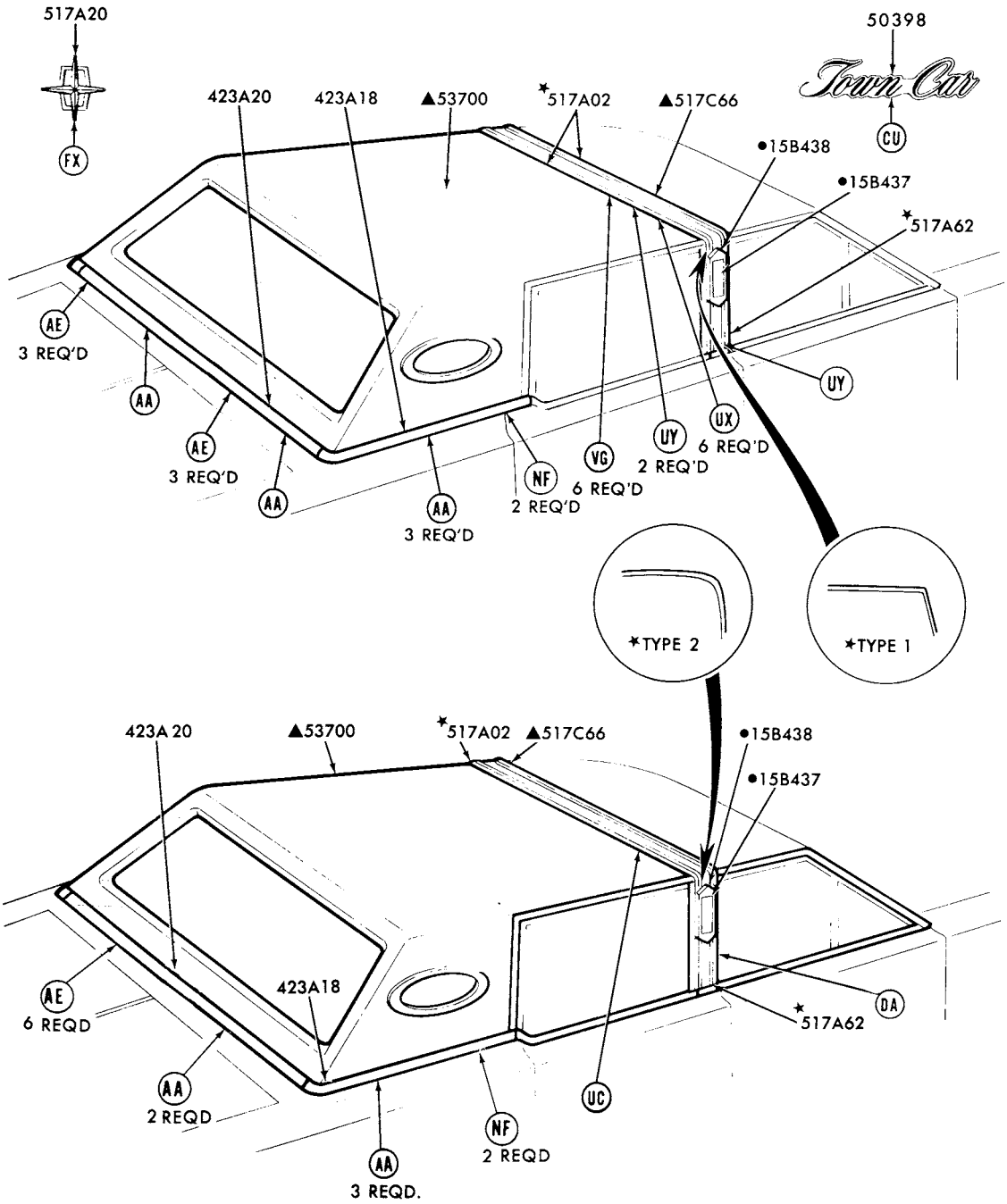

▲ REFER TO GROUP IN SOFT TRIM SECTION
• REFER TO GROUP IN CHASSIS SECTION
REFER TO EXTERIOR MOULDING SECTION "R" FOR COMPLETE RETAINER INFORMATION

P-13187

1977 LINCOLN - BODY TYPE 53 - ROOF and BACK BELT

COPYRIGHT © 1986 — FORD MOTOR COMPANY — DEARBORN, MICHIGAN

1977 LINCOLN - BODY TYPE 53 - ROOF and BACK BELT - cont'd.

GROUP NUMBER	PART NAME	DESCRIPTION	PART NUMBER	QTY.
423A18-9	Moulding (back belt side)	Paint to match	(RH)♦D7VY 53423A18-A (LH)♦D7VY 53423A19-A	1
423A20	Moulding (back belt rear)	Paint to match	♦D7VY 53423A20-A	1
50398	Plate (roof side outer)	"Town Car"	♦D3VY 5350398-A R.H. and L.H.	2
517A02	Moulding (roof top)	●Type 1 - incl.vinyl insert		
		◊Black	★D7VY 53517A02-AA	1
		◊Blue (dark)	★D7VY 53517A02-BB	1
		◊Blue (light)	★D7VY 53517A02-AB Not replaced (4/83)	1
		◊Chamois	★D7VY 53517A02-BT Not replaced (4/83)	1
		◊Cordovan	★D7VY 53517A02-AF	1
		◊Cream	★D7VY 53517A02-AV	1
		◊Ember	★D7VY 53517A02-CT Not replaced (4/83)	1
		◊Gold	★D7VY 53517A02-AY Not replaced (4/83)	1
		◊Gray	★D7VY 53517A02-AP	1
		◊Jade (dark)	★D7VY 53517A02-BR Not replaced (4/83)	1
		◊Jade (light)	★D7VY 53517A02-AR	1
		◊Red	★D7VY 53517A02-AD	1
		◊Silver	★D7VY 53517A02-BP	1
		◊White	★D7VY 53517A02-AW Not replaced (4/84)	1
		▲Type 2-incl.vinyl insert		
		◊Black	★D7VY 53517A02-BA Not replaced (4/84)	1
		◊Blue (dark)	★D7VY 53517A02-DB Not replaced(4/84)	1
		◊Blue (light)	★D7VY 53517A02-CB Not replaced (4/83)	1
		◊Chamois	★D7VY 53517A02-DT Not replaced (4/83)	1
		◊Cordovan	★D7VY 53517A02-BF Not replaced (4/84)	1
		◊Cream	★D7VY 53517A02-BV Not replaced (4/84)	1
		◊Ember	★D7VY 53517A02-ET Not replaced (4/83)	1
		◊Gold	★D7VY 53517A02-BY Not replaced (4/83)	1
		◊Gray	★D7VY 53517A02-CP	1
		◊Jade (dark)	★D7VY 53517A02-DR Not replaced (4/83)	1
		◊Jade (light)	★D7VY 53517A02-CR Not replaced (4/84)	1
		◊Red	★D7VY 53517A02-BD Not replaced (4/84)	1
		◊Silver	★D7VY 53517A02-DP Not replaced (4/84)	1
		◊White	★D7VY 53517A02-BW Not replaced (4/84)	1
517A20	Ornament (roof side)	w/o Opera Window	♦C9VY 53517A20-A R.H. and L.H.	2
517A62	Moulding (roof side)	■Incl.vinyl insert		
		◊Black	★D7VY 53517A62-AA R.H. and L.H.	2
		◊Blue (dark)	★D7VY 53517A62-BB R.H. and L.H.	2
		◊Blue (light)	★D7VY 53517A62-AB R.H. and L.H. N/R(4/83)	2
		◊Chamois	★D7VY 53517A62-BT R.H. and L.H. N/R(4/83)	2
		◊Cordovan	★D7VY 53517A62-AF R.H. and L.H.	2
		◊Cream	★D7VY 53517A62-AV R.H. and L.H.	2
		◊Ember	★D7VY 53517A62-CT R.H. and L.H. N/R(4/83)	2
		◊Gold	★D7VY 53517A62-AY R.H. and L.H. N/R(4/83)	2
		◊Gray	★D7VY 53517A62-AP R.H. and L.H.	2
		◊Jade (dark)	★D7VY 53517A62-BR R.H. and L.H. N/R(4/83)	2
		◊Jade (light)	★D7VY 53517A62-AR R.H. and L.H.	2
		◊Red	★D7VY 53517A62-AD R.H. and L.H.	2
		◊Silver	★D7VY 53517A62-BP R.H. and L.H.	2
		◊White	★D7VY 53517A62-AW R.H. and L.H.	2

♦ Includes attaching parts
◊ For color verification, refer to the vinyl roof swatches in the 1977 Salesman's Color and Upholstery Selections Guide.
■ Moulding has channeled groove on the bottom-must be used w/type 1 roof top moulding
● Type 1 - Angled side corners, moulding has a channeled groove on the bottom for clip and nut type retainers.
▲ Type 2 - Rounded side corners, moulding has a flat bottom and includes 2 steel and 6 plastic push-in type studs.

1977 LINCOLN - BODY TYPE 53 - ROOF and BACK BELT - cont'd.

GROUP NUMBER	PART NAME	DESCRIPTION	PART NUMBER			QTY.
517A62	Moulding (roof side)-cont'd.	‡Incl. vinyl insert				
		◊Black	✶D7VY 53517A62-BA	R.H. and L.H.	N/R(4/83)	2
		◊Blue (dark)	✶D7VY 53517A62-DB	R.H. and L.H.	N/R(4/83)	2
		◊Blue (light)	✶D7VY 53517A62-CB	R.H. and L.H.	N/R(4/83)	2
		◊Chamois	✶D7VY 53517A62-DT	R.H. and L.H.	N/R(4/83)	2
		◊Cordovan	✶D7VY 53517A62-BF	R.H. and L.H.	N/R(4/83)	2
		◊Cream	✶D7VY 53517A62-BV	R.H. and L.H.	N/R(4/83)	2
		◊Ember	★D7VY 53517A62-ET	R.H. and L.H.		2
		◊Gold	✶D7VY 53517A62-BY	R.H. and L.H.	N/R(4/83)	2
		◊Gray	★D7VY 53517A62-CP	R.H. and L.H.		2
		◊Jade (dark)	✶D7VY 53517A62-DR	R.H. and L.H.	N/R(4/83)	2
		◊Jade (light)	✶D7VY 53517A62-CR	R.H. and L.H.	N/R(4/83)	2
		◊Red	✶D7VY 53517A62-BD	R.H. and L.H.	N/R(4/83)	2
		◊Silver	✶D7VY 53517A62-DP	R.H. and L.H.	N/R(4/83)	2
		◊White	✶D7VY 53517A62-BW	R.H. and L.H.	N/R(4/83)	2

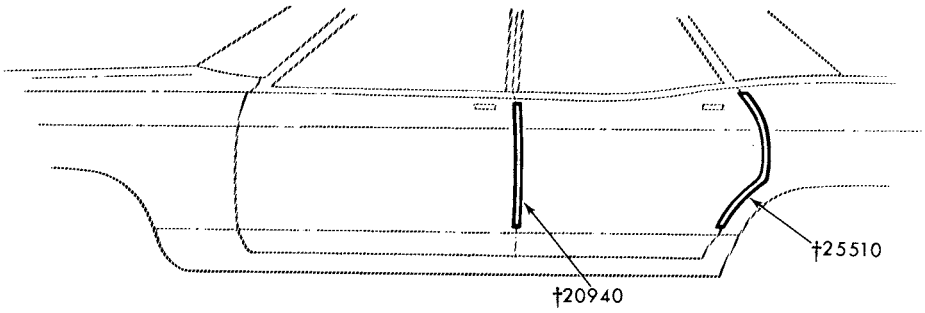

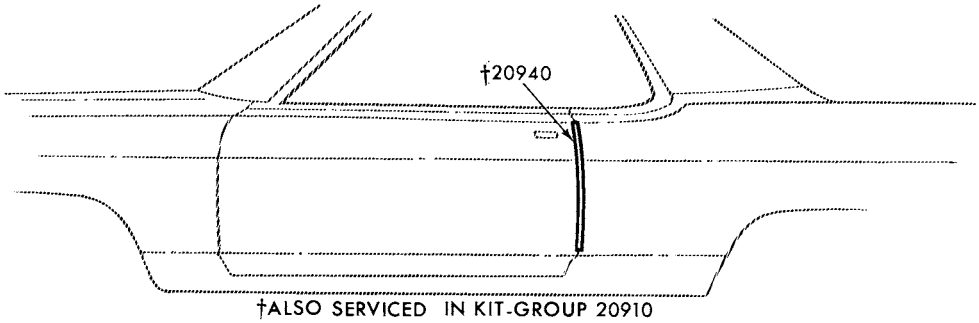

†ALSO SERVICED IN KIT-GROUP 20910

P-10061

1977 LINCOLN - DOOR EDGE GUARDS

GROUP NUMBER	PART NAME	DESCRIPTION	PART NUMBER		QTY.
20910	Moulding kit (door edge guard)	Body type 53	D5VY 5320910-A		1
		Body type 60	D5VY 6020910-A		1
20940-1	Moulding (front door edge guard)	Body type 53	(RH) D5VY 5320940-A	(LH)✶D5VY 5320941-A R/B D5VY 5320940-A (11/81)	1
		Body type 60	(RH) D5VY 6020940-A	(LH)✶D5VY 6020941-A R/B D5VY 6020940-A (11/81)	1
25510-1	Moulding (rear door edge guard)	Body type 53	(RH) D5VY 5325510-A	(LH) D5VY 5325511-A	1

‡ Moulding has flat bottom - must be used with type 2 roof top mldg.

♦ Includes attaching parts

◊ For color verification, refer to the vinyl roof swatches in the 1977 Salesman's Color and Upholstery Selection Guide

COPYRIGHT © 1986 — FORD MOTOR COMPANY — DEARBORN, MICHIGAN

New Issue

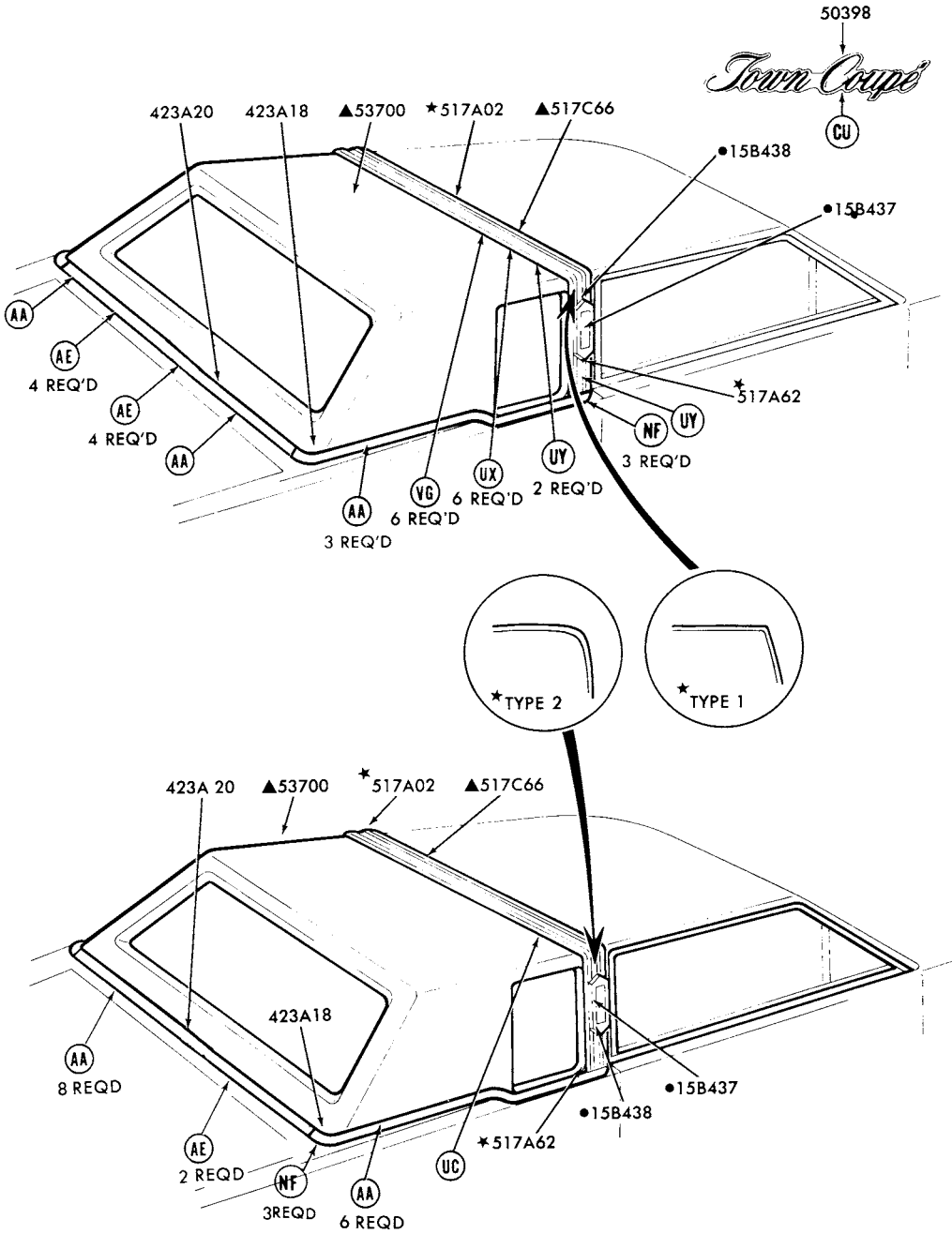

▲REFER TO GROUP IN SOFT TRIM SECTION
●REFER TO GROUP IN CHASSIS SECTION
REFER TO EXTERIOR MOULDING SECTION "R" FOR COMPLETE RETAINER INFORMATION

P-13188

1977 LINCOLN - BODY TYPE 60 - ROOF and BACK BELT - cont'd.

GROUP NUMBER	PART NAME	DESCRIPTION	PART NUMBER		QTY.
423A18-9	Moulding (back belt side)	W/full vinyl roof	(RH)✶D7VY 60423A18-B	(LH)✶D7VY 60423A19-B	1
		W/half vinyl roof	(RH)♦D7VY 60423A18-A	(LH)♦D7VY 60423A19-A	1
423A20	Moulding (back belt rear)		♦D7VY 53423A20-A		1
50398	Plate (front fender name)	"Town Coupe"	♦D3VY 6550398-A	R.H. and L.H.	2
517A02	Moulding (roof top)	●Type 1-incl.vinyl insert			
		◊Black	★D7VY 60517A02-AA		1
		◊Blue (dark)	★D7VY 60517A02-BB		1
		◊Blue (light)	✶D7VY 60517A02-AB	Not replaced (4/83)	1
		◊Chamois	✶D7VY 60517A02-BT	Not replaced (4/83)	1
		◊Cordovan	✶D7VY 60517A02-AF		1
		◊Cream	✶D7VY 60517A02-AV		1
		◊Ember	✶D7VY 60517A02-CT	Not replaced (4/83)	1
		◊Gold	✶D7VY 60517A02-AY	Not replaced (4/83)	1
		◊Gray	★D7VY 60517A02-AP		1
		◊Jade (dark)	✶D7VY 60517A02-BR	Not replaced (4/83)	1
		◊Jade (light)	★D7VY 60517A02-AR		1
		◊Red	★D7VY 60517A02-AD		1
		◊Silver	✶D7VY 60517A02-BP		1
		◊White	✶D7VY 60517A02-AW		1
		▲Type 2-incl. vinyl insert			
		◊Black	✶D7VY 60517A02-BA	Not replaced (4/83)	1
		◊Blue (dark)	✶D7VY 60517A02-DB	Not replaced (4/83)	1
		◊Blue (light)	✶D7VY 60517A02-CB	Not replaced (4/83)	1
		◊Chamois	✶D7VY 60517A02-DT	Not replaced (4/83)	1
		◊Cordovan	✶D7VY 60517A02-BF	Not replaced (4/83)	1
		◊Cream	✶D7VY 60517A02-BV	Not replaced (4/83)	1
		◊Ember	✶D7VY 60517A02-ET	Not replaced (4/83)	1
		◊Gold	✶D7VY 60517A02-BY	Not replaced (4/83)	1
		◊Gray	★D7VY 60517A02-CP	Not replaced (6/82)	1
		◊Jade (dark)	✶D7VY 60517A02-DR	Not replaced (4/83)	1
		◊Jade (light)	✶D7VY 60517A02-CR	Not replaced (4/83)	1
		◊Red	✶D7VY 60517A02-BD	Not replaced (4/83)	1
		◊Silver	✶D7VY 60517A02-DP	Not replaced (4/83)	1
		◊White	✶D7VY 60517A02-BW	Not replaced (4/83)	1

● Type 1 - Angled side corners, moulding has a channeled groove on the bottom for clip and nut type retainers
▲ Type 2 - Rounded side corners, moulding has a flat bottom and includes 2 steel and 6 plastic push-in type studs
♦ Includes attaching parts
◊ For color verification, refer to the vinyl roof swatches in the 1977 Salesman's Color and Upholstery Selection Guide

COPYRIGHT © 1986 — FORD MOTOR COMPANY — DEARBORN, MICHIGAN

1 . LINCOLN - BODY TYPE 60 - ROOF and BACK BELT - cont'd

GROUP NUMBER	PART NAME	DESCRIPTION	PART NUMBER	QTY.
517A62	Moulding (roof side)	■ Includes vinyl insert		
		◊ Black	★D7VY 60517A62-AA R.H. and L.H.	2
		◊Blue (dark)	★D7VY 60517A62-BB R.H. and L.H.	2
		◊Blue (light)	★D7VY 60517A62-AB R.H. and L.H.	2
		◊Cinnamon Gold	★D7VY 60517A62-BT R.H. and L.H.	2
		◊Cordovan	★D7VY 60517A62-AF R.H. and L.H.	2
		◊Cream	★D7VY 60517A62-AV R.H. and L.H.	2
		◊Ember	★D7VY 60517A62-CT R.H. and L.H.	2
		◊Gold	★D7VY 60517A62-AY R.H. and L.H.	2
		◊Gray	★D7VY 60517A62-AP R.H. and L.H.	2
		◊Jade (dark)	★D7VY 60517A62-BR R.H. and L.H.	2
		◊Jade (light)	★D7VY 60517A62-AR R.H. and L.H.	2
		◊Red	★D7VY 60517A62-AD R.H. and L.H.	2
		◊Silver	★D7VY 60517A62-BP R.H. and L.H.	2
		◊White	★D7VY 60517A62-AW R.H. and L.H.	2
		‡ Incl.vinyl insert		
		◊Black	★D7VY 60517A62-BA R.H. and L.H. Not replaced (4/83)	2
		◊Blue (dark)	★D7VY 60517A62-DB R.H. and L.H. Not replaced (4/83)	2
		◊Blue (light)	★D7VY 60517A62-CB R.H. and L.H. Not replaced (4/83)	2
		◊Cinnamon Gold	★D7VY 60517A62-DT R.H. and L.H. Not replaced (4/83)	2
		◊Cordovan	★D7VY 60517A62-BF R.H. and L.H. Not replaced (4/83)	2
		◊Cream	★D7VY 60517A62-BV R.H. and L.H. Not replaced (4/83)	2
		◊Ember	★D7VY 60517A62-ET R.H. and L.H. Not replaced (4/83)	2
		◊Gold	★D7VY 60517A62-BY R.H. and L.H. Not replaced (4/83)	2
		◊Gray	★D7VY 60517A62-CP R.H. and L.H. Not replaced (4/83)	2
		◊Jade (dark)	★D7VY 60517A62-DR R.H. and L.H. Not replaced (4/83)	2
		◊Jade (light)	★D7VY 60517A62-CR R.H. and L.H. Not replaced (4/83)	2
		◊Red	★D7VY 60517A62-BD R.H. and L.H. Not replaced (4/83)	2
		◊Silver	★D7VY 60517A62-DP R.H. and L.H. Not replaced (4/83)	2
		◊White	★D7VY 60517A62-BW R.H. and L.H. Not replaced (4/83)	2

♦ Includes attaching parts
■ Moulding has channeled groove on the bottom-must be used w/type 1 roof top mldg.
◊ For color verification, refer to the vinyl roof swatches in the 1977 Salesman's Color and Upholstery Selection Guide
‡ Moulding has flat bottom - must be used with type 2 roof top mldg.

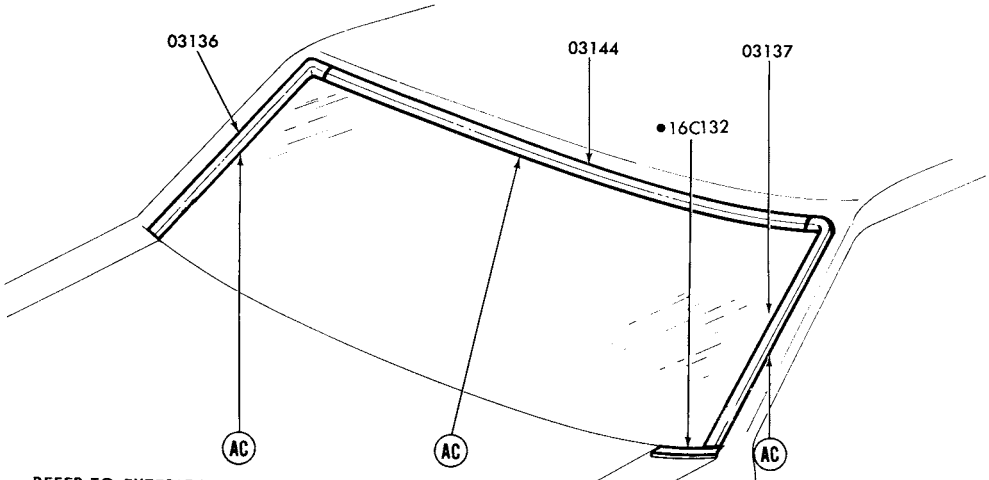

REFER TO EXTERIOR MOULDING SECTION 'R' FOR COMPLETE RETAINER INFORMATION
•REFER TO GROUP IN CHASSIS SECTION

P-12521

1977 COUGAR - WINDSHIELD
Δ Refer to Group in Chassis Section

GROUP NUMBER	PART NAME	DESCRIPTION	PART NUMBER	QTY.
03136-7	Moulding (windshield side)		(RH)♦D7OZ 6503136-A (LH)♦D7OZ 6503137-A	1
03144	Moulding (windshield top)		♦D7OZ 6503144-A	1

♦ Includes attaching parts

COPYRIGHT © 1986 — FORD MOTOR COMPANY — DEARBORN, MICHIGAN

New Issue

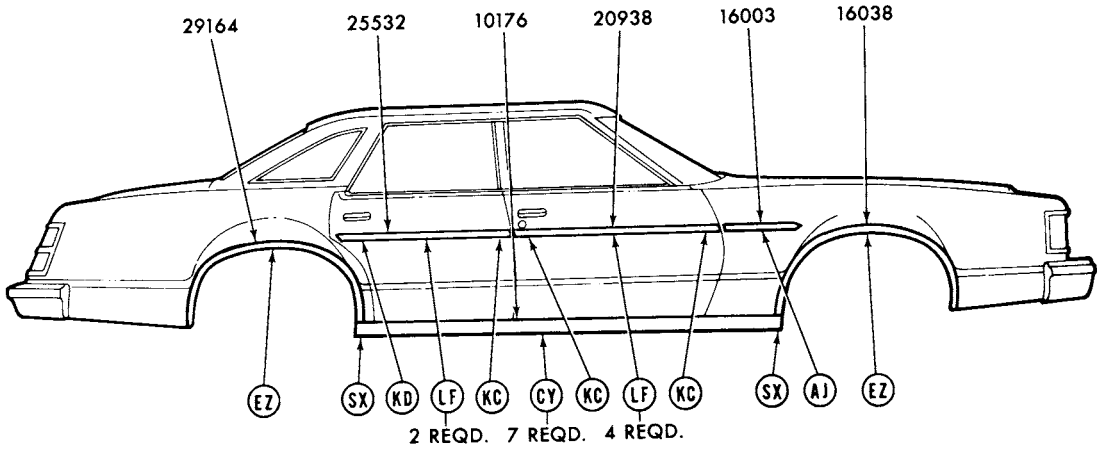

REFER TO EXTERIOR MOULDING SECTION "R" FOR COMPLETE RETAINER INFORMATION

P-13144

1977 COUGAR - BODY TYPE 53 - SIDE w/NARROW MOULDINGS

GROUP NUMBER	PART NAME	DESCRIPTION	PART NUMBER		QTY.
10176-7	Moulding (body rocker panel)	Body type 53	(RH)♦D7OZ 5310176-A	(LH)♦D7OZ 5310177-A	1
16003	Moulding (front fender side)	Bright finish	♦D4GY 16003-A	R.H. and L.H.	2
		Black vinyl insert-adhesive backed-27 1/2" long-cut to fit	D5DZ 5425532-D	R.H. and L.H.	AR
16038-9	Moulding (front fender wheel opening)		(RH)♦D7WY 16038-B	(LH)♦D7WY 16039-B	1
20938	Moulding (front door)	Bright finish	♦D4GY 5320938-A	R.H. and L.H.	2
		Black vinyl insert-adhesive backed-57" long-cut to fit	D4GZ 16003-A	R.H. and L.H.	AR
25532	Moulding (rear door)	Bright finish	♦D4GY 5325532-A	R.H. and L.H.	2
		Black vinyl insert-adhesive backed-57" long-cut to fit	D4GZ 16003-A	R.H. and L.H.	AR
29164-5	Moulding (quarter wheel opening)		(RH)♦D7OZ 6529164-B	(LH)♦D7OZ 6529165-B	1

♦ Includes attaching parts

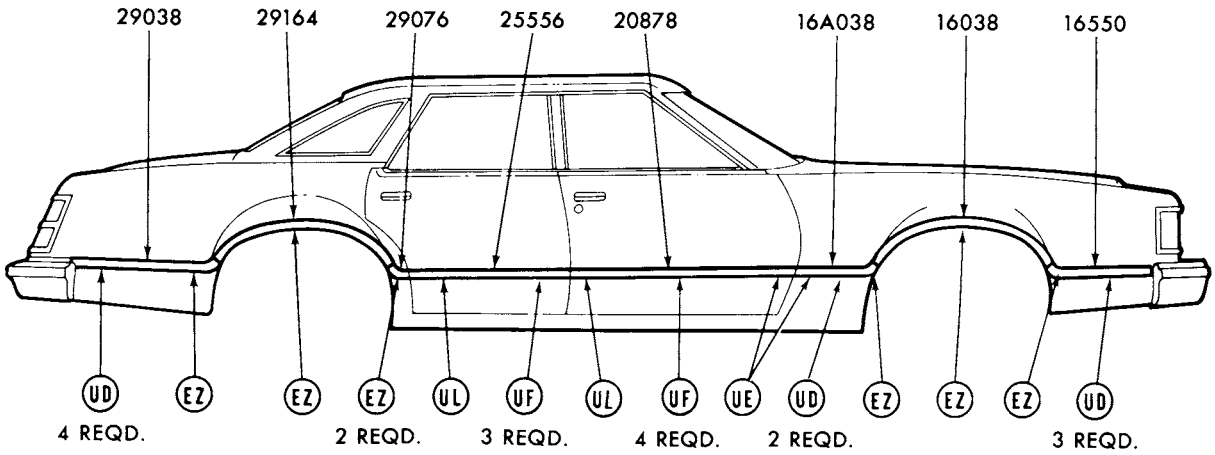

REFER TO EXTERIOR MOULDING SECTION "R" FOR COMPLETE RETAINER INFORMATION

P-13147

1977 COUGAR - BODY TYPE 53D,K - SIDE w/WIDE MOULDINGS

GROUP NUMBER	PART NAME	DESCRIPTION	PART NUMBER		QTY.
16038-9	Moulding (front fender wheel opening)		(RH)♦D7OZ 16038-A	(LH)♦D7OZ 16039-A	1
16A038-9	Moulding (front fender side rear)	Bright with black paint in groove	(RH)♦D7OZ 16A038-A	(LH)♦D7OZ 16A039-A	1
		Bright incl. vinyl insert			
		◊Black	(RH)♦D7OZ 16A038-AA	(LH)♦D7OZ 16A039-AA	1
		◊Blue	(RH)♦D7OZ 16A038-AB	(LH)♦D7OZ 16A039-AB	1
		◊Brown	(RH)♦D7OZ 16A038-AT	(LH)♦D7OZ 16A039-AT	1
		◊Chamois (light)	(RH)♦D8OZ 16A038-BT	(LH)♦D8OZ 16A039-BT	1
		◊Chamois (medium)	(RH)♦D7SZ 16A038-AT	(LH)♦D7SZ 16A039-AT	1
		◊Cream	(RH)♦D7OZ 16A038-AV	(LH)♦D7OZ 16A039-AV	1
		◊Jade	(RH)♦D7OZ 16A038-AR	(LH)♦D7OZ 16A039-AR	1
		◊Red	(RH)♦D7OZ 16A038-AD	(LH)♦D7OZ 16A039-AD	1
		◊Silver	(RH)♦D7OZ 16A038-AP	(LH)♦D7OZ 16A039-AP	1
		◊White	(RH)♦D7OZ 16A038-AW	(LH)♦D7OZ 16A039-AW	1
16550-1	Moulding (front fender lower front)	Bright with black paint in groove	(RH)♦D7OZ 16550-A	(LH)♦D7OZ 16551-A	1
		Bright incl. vinyl insert			
		◊Black	(RH)♦D7OZ 16550-AA	(LH)♦D7OZ 16551-AA	1
		◊Blue	(RH)♦D7OZ 16550-AB	(LH)♦D7OZ 16551-AB	1
		◊Brown	(RH)♦D7OZ 16550-AT	(LH)♦D7OZ 16551-AT	1
		◊Chamois (light)	(RH)♦D8OZ 16550-BT	(LH)♦D8OZ 16551-BT	1
		◊Chamois (medium)	(RH)♦D7SZ 16550-AT	(LH)♦D7SZ 16551-AT	1
		◊Cream	(RH)♦D7OZ 16550-AV	(LH)♦D7OZ 16551-AV	1
		◊Jade	(RH)♦D7OZ 16550-AR	(LH)♦D7OZ 16551-AR	1
		◊Red	(RH)♦D7OZ 16550-AD	(LH)♦D7OZ 16551-AA	1
		◊Silver	(RH)♦D7OZ 16550-AP	(LH)♦D7OZ 16551-AP	1
		◊White	(RH)♦D7OZ 16550-AW	(LH)♦D7OZ 16551-AW	1

♦ Includes attaching parts
◊ For color verification, refer to the vinyl roof swatches in the 1977 Salesman's Color and Upholstery Selections Guide.

COPYRIGHT © 1986 — FORD MOTOR COMPANY — DEARBORN, MICHIGAN

1977 COUGAR - BODY TYPE 53D,K - SIDE w/WIDE MOULDINGS - cont'd.

GROUP NUMBER	PART NAME	DESCRIPTION	PART NUMBER		QTY.
20878-9	Moulding (front door lower)	Bright with black paint in groove	(RH)♦D7OZ 5320878-A	(LH)♦D7OZ 5320879-A	1
		Bright incl. vinyl insert			
		◊Black	(RH)♦D7OZ 5320878-AA	(LH)♦D7OZ 5320879-AA	1
		◊Blue	(RH)♦D7OZ 5320878-AB	(LH)★D7OZ 5320879-AB Not replaced (4/84)	1
		◊Brown	(RH)♦D7OZ 5320878-AT	(LH)♦D7OZ 5320879-AT	1
		◊Chamois (light)	(RH)♦D8OZ 5320878-BT	(LH)♦D8OZ 5320879-BT	1
		◊Chamois (medium)	(RH)★D7OZ 5320878-CT Not replaced (2/81)	(LH)★D7OZ 5320879-CT Not replaced (2/81)	1
		◊Cream	(RH)★D7OZ 5320878-AV Not replaced (2/81)	(LH)★D7OZ 5320879-AV Not replaced (2/81)	1
		◊Jade	(RH)♦D7OZ 5320878-AR	(LH)♦D7OZ 5320879-AR	1
		◊Red	(RH)♦D7OZ 5320878-AD	(LH)★D7OZ 5320879-AD Not replaced (2/81)	1
		◊Silver	(RH)★D7OZ 5320878-AP	(LH)★D7OZ 5320879-AP	1
		◊White	(RH)♦D7OZ 5320878-AW	(LH)♦D7OZ 5320879-AW	1
25556-7	Moulding (rear door lower)	Bright with black paint in groove	(RH)♦D7OZ 5325556-A	(LH)♦D7OZ 5325557-A	1
		Bright incl. vinyl insert			
		◊Black	(RH)♦D7OZ 5325556-AA	(LH)♦D7OZ 5325557-AA	1
		◊Blue	(RH)♦D7OZ 5325556-AB	(LH)♦D7OZ 5325557-AB	1
		◊Brown	(RH)♦D7OZ 5325556-AT	(LH)♦D7OZ 5325557-AT	1
		◊Chamois (light)	(RH)♦D8OZ 5325556-BT	(LH)♦D8OZ 5325557-BT	1
		◊Chamois (medium)	(RH)★D7OZ 5325556-CT Not replaced (2/81)	(LH)★D7OZ 5325557-CT Not replaced (2/81)	1
		◊Cream	(RH)★D7OZ 5325556-AV Not replaced (2/81)	(LH)★D7OZ 5325557-AV Not replaced (2/81)	1
		◊Jade	(RH)♦D7OZ 5325556-AR	(LH)♦D7OZ 5325557-AR	1
		◊Red	(RH)♦D7OZ 5325556-AD	(LH)♦D7OZ 5325557-AD	1
		◊Silver	(RH)♦D7OZ 5325556-AP	(LH)♦D7OZ 5325557-AP	1
		◊White	(RH)♦D7OZ 5325556-AW	(LH)♦D7OZ 5325557-AW	1
29038-9	Moulding (quarter lower rear)	Bright with black paint in groove	(RH)♦D7OZ 6529038-A	(LH)♦D7OZ 6529039-A	1
		Bright incl. vinyl insert			
		◊Black	(RH)♦D7OZ 6529038-AA	(LH)♦D7OZ 6529039-AA	1
		◊Blue	(RH)♦D7OZ 6529038-AB	(LH)♦D7OZ 6529039-AB	1
		◊Brown	(RH)♦D7OZ 6529038-AT	(LH)★D7OZ 6529039-AT	1
		◊Chamois (light)	(RH)♦D8OZ 6529038-BT	(LH)♦D8OZ 6529039-BT	1
		◊Chamois (medium)	(RH)♦D7WY 6529038-AT	(LH)♦D7WY 6529039-AT	1
		◊Cream	(RH)♦D7OZ 6529038-AV	(LH)♦D7OZ 6529039-AV	1
		◊Jade	(RH)♦D7OZ 6529038-AR	(LH)♦D7OZ 6529039-AR	1
		◊Red	(RH)♦D7OZ 6529038-AD	(LH)♦D7OZ 6529039-AD	1
		◊Silver	(RH)♦D7OZ 6529038-AP	(LH)♦D7OZ 6529039-AP	1
		◊White	(RH)♦D7OZ 6529038-AW	(LH)♦D7OZ 6529039-AW	1
29076-7	Moulding (quarter lower front)		(RH)♦D7OZ 5329076-A	(LH)♦D7OZ 5329077-A	1
29164-5	Moulding (quarter wheel opening)		(RH)♦D7OZ 6529164-A	(LH)♦D7OZ 6529165-A	1

♦ Includes attaching parts

◊ For color verification, refer to the vinyl roof swatches in the 1977 Salesman's Color and Upholstery Selections Guide.

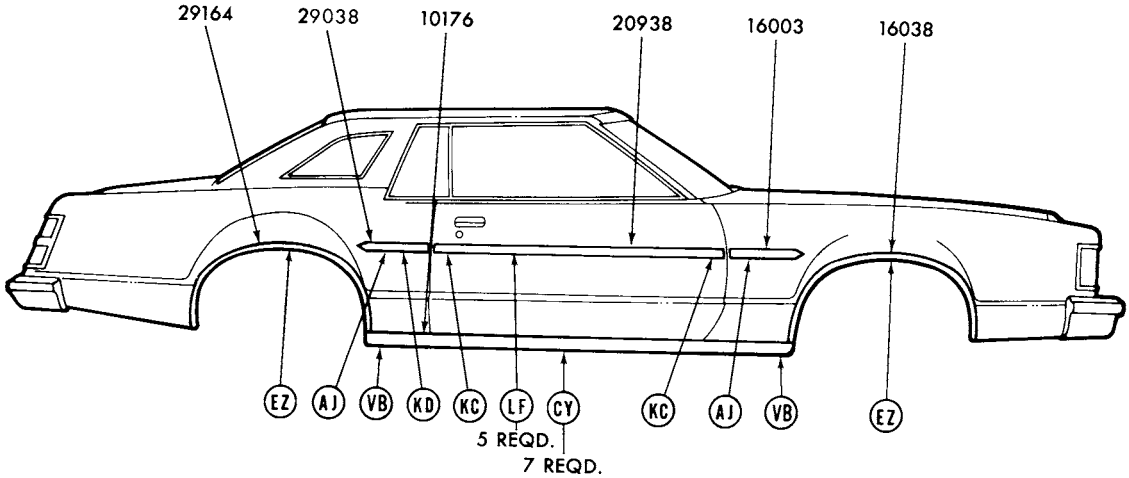

REFER TO EXTERIOR MOULDING SECTION "R" FOR COMPLETE RETAINER INFORMATION

P-13143

1977 COUGAR - BODY TYPES 65 - SIDE - w/NARROW MOULDINGS

GROUP NUMBER	PART NAME	DESCRIPTION	PART NUMBER		QTY.
10176-7	Moulding (body rocker panel)		(RH)♦D7OZ 6510176-A	R.H. and L.H.	2
16003-4	Moulding (front fender side)	Bright finish	♦D4GY 16003-A	R.H. and L.H.	2
		Black vinyl insert-adhesive backed-27 1/2" long-cut to fit	D5DZ 5425532-D	R.H. and L.H.	2
16038-9	Moulding (front fender wheel opening)		(RH)♦D7WY 16038-B	(LH)♦D7WY 16039-B	1
20938	Moulding (front door)	Bright finish	♦D4GY 6520938-A	R.H. and L.H.	2
		Black vinyl insert-adhesive backed-57" long-cut to fit	D4GZ 16003-A	R.H. and L.H.	AR
29038	Moulding (quarter)	Bright finish	♦D4GY 16003-A	R.H. and L.H.	2
		Black vinyl insert-adhesive backed-27 1/2" long-cut to fit	D5DZ 5425532-D	R.H. and L.H.	AR
29164-5	Moulding (quarter wheel opening)		(RH)♦D7OZ 6529164-B	(LH)♦D7OZ 6529165-B	1

♦ Includes attaching parts

COPYRIGHT © 1986 — FORD MOTOR COMPANY — DEARBORN, MICHIGAN

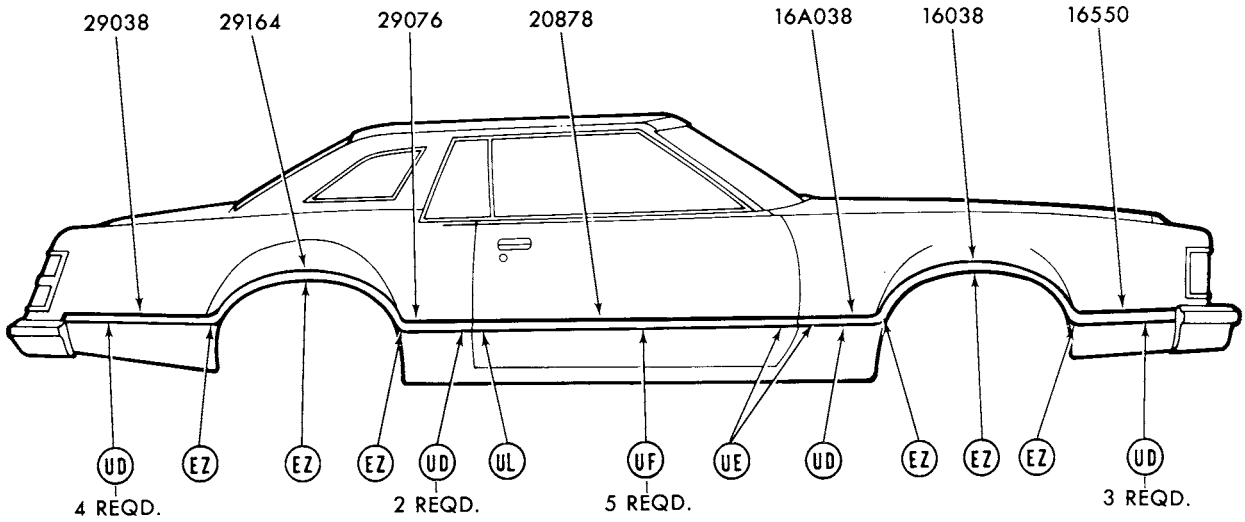

REFER TO EXTERIOR MOULDING SECTION "R" FOR COMPLETE RETAINER INFORMATION P-13148

1977 COUGAR - BODY TYPES 65D, K, L - SIDE w/WIDE MOULDINGS

GROUP NUMBER	PART NAME	DESCRIPTION	PART NUMBER		QTY.
16038-9	Moulding (front fender wheel opening)		(RH)♦D7OZ 16038-A	(LH)♦D7OZ 16039-A	1
16A038-9	Moulding (front fender side rear)	Bright with black paint in groove	(RH)♦D7OZ 16A038-A	(LH)♦D7OZ 16A039-A	1
		Bright incl. vinyl insert			
		◊Black	(RH)♦D7OZ 16A038-AA	(LH)♦D7OZ 16A039-AA	1
		◊Blue	(RH)♦D7OZ 16A038-AB	(LH)♦D7OZ 16A039-AB	1
		◊Brown	(RH)♦D7OZ 16A038-AT	(LH)♦D7OZ 16A039-AT	1
		◊Chamois (light)	(RH)♦D8OZ 16A038-BT	(LH)♦D8OZ 16A039-BT	1
		◊Chamois (medium)	(RH)♦D7SZ 16A038-AT	(LH)♦D7SZ 16A039-AT	1
		◊Cream	(RH)♦D7OZ 16A038-AV	(LH)♦D7OZ 16A039-AV	1
		◊Gray	(RH)♦D7SZ 16A038-AP	(LH)♦D7SZ 16A039-AP	1
		◊Jade	(RH)♦D7OZ 16A038-AR	(LH)♦D7OZ 16A039-AR	1
		◊Lipstick Red (bright)	(RH)♦D7SZ 16A038-CD	(LH)♦D7SZ 16A039-CD	1
		◊Red (dark)	(RH)♦D7SZ 16A038-AD	(LH)♦D7SZ 16A039-AD	1
		◊Red (medium)	(RH)♦D7OZ 16A038-AD	(LH)♦D7OZ 16A039-AD	1
		◊Silver	(RH)♦D7OZ 16A038-AP	(LH)♦D7OZ 16A039-AP	1
		◊White	(RH)♦D7OZ 16A038-AW	(LH)♦D7OZ 16A039-AW	1

♦ Includes attaching parts
◊ For color verification, refer to the vinyl roof swatches in the 1977 Salesman's Color and Upholstery Selections Guide.

1977 COUGAR - BODY TYPES 65D,K,L - SIDE w/WIDE MOULDINGS - cont'd.

GROUP NUMBER	PART NAME	DESCRIPTION	PART NUMBER		QTY.
16550-1	Mouldings (front fender side front)	Bright with black paint in groove	(RH)♦D7OZ 16550-A	(LH)♦D7OZ 16551-A	1
		Bright incl. vinyl insert			
		◊Black	(RH)♦D7OZ 16550-AA	(LH)♦D7OZ 16551-AA	1
		◊Blue	(RH)♦D7OZ 16550-AB	(LH)♦D7OZ 16551-AB	1
		◊Brown	(RH)♦D7OZ 16550-AT	(LH)♦D7OZ 16551-AT	1
		◊Chamois (light)	(RH)♦D8OZ 16550-BT	(LH)♦D8OZ 16551-BT	1
		◊Chamois (medium)	(RH)♦D7SZ 16550-AT	(LH)♦D7SZ 16551-AT	1
		◊Cream	(RH)♦D7OZ 16550-AV	(LH)♦D7OZ 16551-AV	1
		◊Gray	(RH)♦D7SZ 16550-AP	(LH)♦D7SZ 16551-AP	1
		◊Jade	(RH)♦D7OZ 16550-AR	(LH)♦D7OZ 16551-AR	1
		◊Lipstick Red (bright)	(RH)♦D7SZ 16550-CD	(LH)♦D7SZ 16551-CD	1
		◊Red (dark)	(RH)♦D7SZ 16550-AD	(LH)♦D7SZ 16551-AD	1
		◊Red (medium)	(RH)♦D7OZ 16550-AD	(LH)♦D7OZ 16551-AA	1
		◊Silver	(RH)♦D7OZ 16550-AP	(LH)♦D7OZ 16551-AP	1
		◊White	(RH)♦D7OZ 16550-AW	(LH)♦D7OZ 16551-AW	1
20878-9	Moulding (front door)	Bright with black paint in groove	(RH)♦D7OZ 6520878-A	(LH)♦D7OZ 6520879-A	1
		Bright incl. vinyl insert			
		◊Black	(RH)♦D7SZ 6520878-AA	(LH)♦D7SZ 6520879-AA	1
		◊Blue	(RH)♦D7SZ 6520878-AB	(LH)♦D7SZ 6520879-AB	1
		◊Brown	(RH)♦D7SZ 6520878-AT	(LH)♦D7SZ 6520879-AT	1
		◊Chamois (light)	(RH)♦D8OZ 6520878-BT	(LH)♦D8OZ 6520879-BT	1
		◊Chamois (medium)	(RH)♦D7SZ 6520878-BT	(LH)♦D7SZ 6520879-BT	1
		◊Cream	(RH)♦D7SZ 6520878-AV	(LH)♦D7SZ 6520879-AV	1
		◊Gray	(RH)♦D7SZ 6520878-BP	(LH)♦D7SZ 6520879-BP	1
		◊Jade	(RH)♦D7SZ 6520878-AR	(LH)♦D7SZ 6520879-AR	1
		◊Lipstick Red (bright)	(RH)♦D7SZ 6520878-CD	(LH)♦D7SZ 6520879-CD	1
		◊Red (dark)	(RH)♦D7SZ 6520878-AD	(LH)★D7SZ 6520879-AD Not replaced (8/83)	1
		◊Red (medium)	(RH)♦D7GY 6520878-AD	(LH)♦D7GY 6520879-AD	1
		◊Silver	(RH)♦D7SZ 6520878-AP	(LH)♦D7SZ 6520879-AP	1
		◊White	(RH)♦D7SZ 6520878-AW	(LH)♦D7SZ 6520879-AW	1

♦ Includes attaching parts
◊ For color verification, refer to the vinyl roof swatches in the 1977 Salesman's Color and Upholstery Selections Guide.

COPYRIGHT © 1986 — FORD MOTOR COMPANY — DEARBORN, MICHIGAN

1977 COUGAR - BODY TYPES 65D,K,L - SIDE w/WIDE MOULDINGS - cont'd.

GROUP NUMBER	PART NAME	DESCRIPTION	PART NUMBER		QTY.
29038-9	Moulding (quarter panel rear)	Bright with black paint in groove	(RH)♦D7OZ 6529038-A	(LH)♦D7OZ 6529039-A	1
		Bright incl. vinyl insert			
		◊Black	(RH)♦D7OZ 6529038-AA	(LH)♦D7OZ 6529039-AA	1
		◊Blue	(RH)♦D7OZ 6529038-AB	(LH)♦D7OZ 6529039-AB	1
		◊Brown	(RH)♦D7OZ 6529038-AT	(LH)♦D7OZ 6529039-AT	1
		◊Chamois (light)	(RH)♦D8OZ 6529038-BT	(LH)♦D8OZ 6529039-BT	1
		◊Chamois (medium)	(RH)♦D7WY 6529038-AT	(LH)♦D7WY 6529039-AT	1
		◊Cream	(RH)♦D7OZ 6529038-AV	(LH)♦D7OZ 6529039-AV	1
		◊Gray	(RH)♦D7WY 6529038-AP	(LH)♦D7WY 6529039-AP	1
		◊Jade	(RH)♦D7OZ 6529038-AR	(LH)♦D7OZ 6529039-AR	1
		◊Lipstick Red (bright)	(RH)♦D7WY 6529038-BD	(LH)♦D7WY 6529039-BD	1
		◊Red (dark)	(RH)♦D7WY 6529038-AD	(LH)♦D7WY 6529039-AD	1
		◊Red (medium)	(RH)♦D7OZ 6529038-AD	(LH)♦D7OZ 6529039-AD	1
		◊Silver	(RH)♦D7OZ 6529038-AP	(LH)♦D7OZ 6529039-AP	1
		◊White	(RH)♦D7OZ 6529038-AW	(LH)♦D7OZ 6529039-AW	1
29076-7	Moulding (quarter panel front)	Bright with black paint in groove	(RH)♦D7OZ 6529076-A	(LH)♦D7OZ 6529077-A	1
		Bright incl. vinyl insert			
		◊Black	(RH)♦D7SZ 6029076-AA	(LH)♦D7SZ 6029077-AA	1
		◊Blue	(RH)♦D7SZ 6029076-AB	(LH)♦D7SZ 6029077-AB	1
		◊Brown	(RH)♦D7SZ 6029076-AT	(LH)♦D7SZ 6029077-AT	1
		◊Chamois (light)	(RH)♦D8SZ 6029076-BT	(LH)♦D8SZ 6029077-BT	1
		◊Chamois (medium)	(RH)♦D7SZ 6029076-BT	(LH)♦D7SZ 6029077-BT	1
		◊Cream	(RH)♦D7SZ 6029076-AV	(LH)♦D7SZ 6029077-AV	1
		◊Gray	(RH)♦D7SZ 6029076-BP	(LH)♦D7SZ 6029077-BP	1
		◊Jade	(RH)♦D7SZ 6029076-AR	(LH)♦D7SZ 6029077-AR	1
		◊Lipstick Red (bright)	(RH)♦D7SZ 6029076-CD	(LH)♦D7SZ 6029077-CD	1
		◊Red (dark)	(RH)♦D7SZ 6029076-AD	(LH)♦D7SZ 6029077-AD	1
		◊Red (medium)	(RH)♦D7OZ 6529076-AD	(LH)♦D7OZ 6529077-AD	1
		◊Silver	(RH)♦D7SZ 6029076-AP	(LH)♦D7SZ 6029077-AP	1
		◊White	(RH)♦D7SZ 6029076-AW	(LH)♦D7SZ 6029077-AW	1
29164-5	Moulding (quarter wheel opening)		(RH)♦D7OZ 6529164-A	(LH)♦D7OZ 6529165-A	1

♦ Includes attaching parts
◊ For color verification, refer to the vinyl roof swatches in the 1977 Salesman's Color and Upholstery Selections Guide.

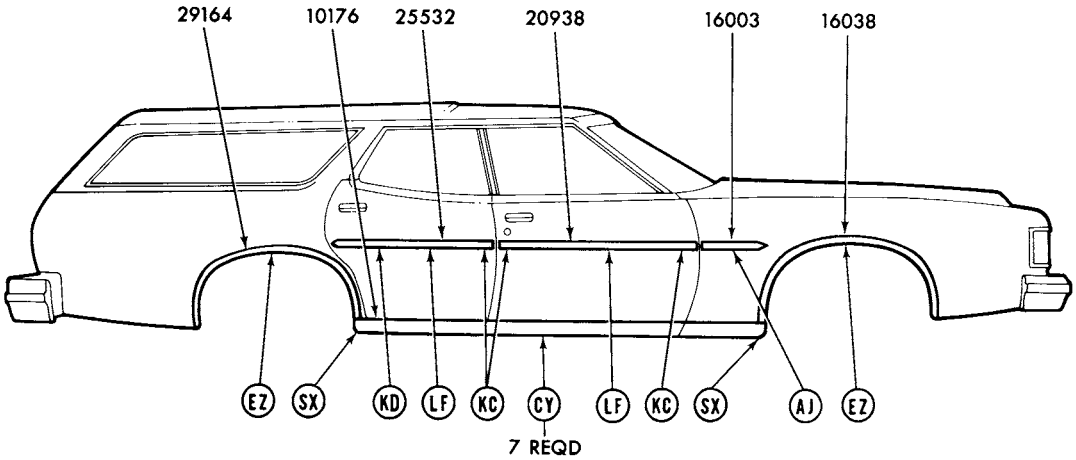

REFER TO EXTERIOR MOULDING SECTION 'R' FOR COMPLETE RETAINER INFORMATION

P-13153

1977 COUGAR - BODY TYPES 71B,D - SIDE

GROUP NUMBER	PART NAME	DESCRIPTION	PART NUMBER		QTY.
10176-7	Moulding (body rocker panel)	Body type 71D	(RH)♦D7OZ 5310176-A	(LH)♦D7OZ 5310177-A	1
16003	Moulding (front fender side)	Bright finish	♦D4GY 16003-A	R.H. and L.H.	2
		Black vinyl insert-adhesive backed-57" long-cut to fit	D4GZ 16003-A	R.H. and L.H.	AR
16038-9	Moulding (front fender wheel opening)		(RH)♦D7WY 16038-B	(LH)♦D7WY 16039-B	1
20938	Moulding (front door)	Bright finish	♦D4GY 5320938-A	R.H. and L.H.	2
		Black vinyl-adhesive backed-57" long-cut to fit	D4GZ 16003-A	R.H. and L.H.	AR
25532	Moulding (rear door)	Bright finish	♦D4GY 5325532-A	R.H. and L.H.	2
		Black vinyl insert-adhesive backed-57" long-cut to fit	D4GZ 16003-A	R.H. and L.H.	AR
29164-5	Moulding (quarter wheel opening)		(RH)♦D7OZ 7129164-A	(LH)♦D7OZ 7129165-A	1

♦ Includes attaching parts

COPYRIGHT © 1986 — FORD MOTOR COMPANY — DEARBORN, MICHIGAN

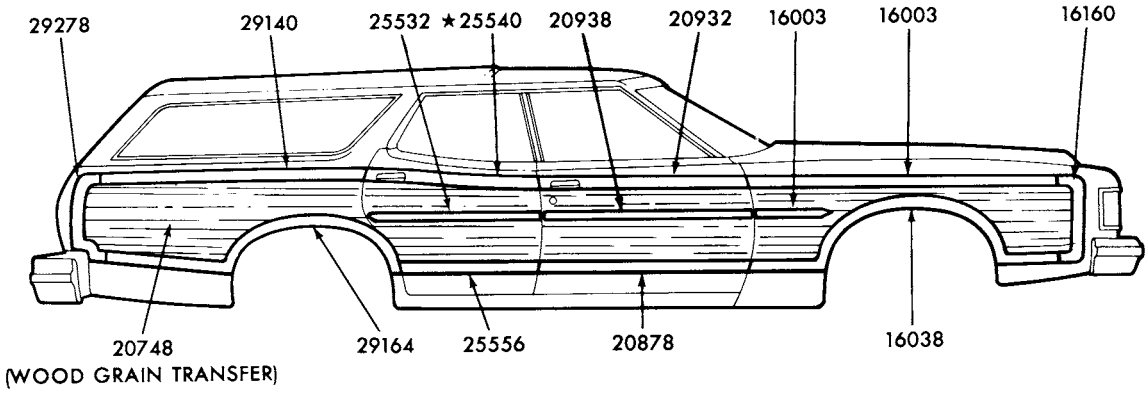

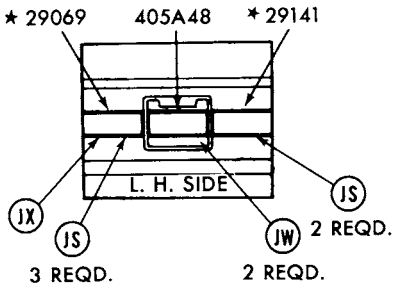

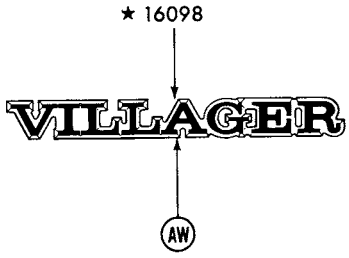

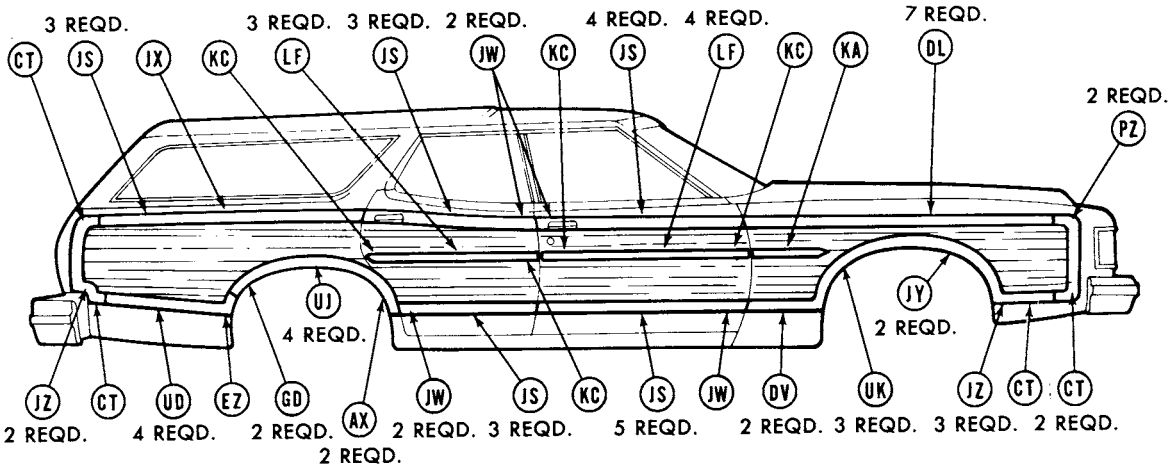

REFER TO EXTERIOR MOULDING SECTION "R" FOR COMPLETE RETAINER INFORMATION

P-13139

1977 COUGAR - BODY TYPE 71K - SIDE - cont'd.

GROUP NUMBER	PART NAME	DESCRIPTION	PART NUMBER		QTY.
16003-4	Moulding (front fender upper)		(RH)♦D7WY 16003-A	(LH)♦D7WY 16004-A	1
16003	Moulding (front fender side)	Wood grain vinyl insert	★D7OZ 16003-A	R.H. and L.H.	2
		Wood grain vinyl-cut to fit-adhesive backed	★D7OZ 16003-B Not replaced (4/84)	R.H. and L.H.	2
16038-9	Moulding (front fender wheel opening)		(RH)♦D7WY 16038-A	(LH)♦D7WY 16039-A	1
16098	Plate (front fender name)	"VILLAGER"	★D7WY 16098-A Not replaced (3/82)	R.H. and L.H.	2
16160-1	Moulding (front fender front)		(RH)♦D7WY 16160-A	(LH)♦D7WY 16161-A	1
20748	Transfer (wood grain)	Cherry wood grain - 20" x 84" - cut to fit			
		For vehicles built at Atlanta assy. plant	D7OZ 7120748-A		AR
		For vehicles built at Lorain assy. plant	D7OZ 7120748-B		AR
20878-9	Moulding (front door lower)		(RH)♦D2GY 7120878-A	(LH)♦D2GY 7120879-A	1
20932-3	Moulding (front door upper)		(RH)♦D2GY 7120932-A	(LH)★D2GY 7120933-A Not replaced(3/82)	1
20938	Moulding (front door)	Wood grain vinyl insert	♦D7OZ 7120938-A	R.H. and L.H.	2
		Wood grain vinyl-adhesive backed	★D7OZ 7120938-B Not replaced (4/84)	R.H. and L.H.	2
25532	Moulding (rear door)	Wood grain vinyl insert	♦D7OZ 7125532-A	R.H. and L.H.	2
		Wood grain vinyl-cut to fit-adhesive backed	D7OZ 16003-B	R.H. and L.H.	2
25540-1	Moulding (rear door upper)		(RH)★D2GY 7125540-A Not replaced (2/81)	(LH)★D2GY 7125541-A Not replaced (2/81)	1
25556-7	Moulding (rear door lower)		(RH)♦D2GY 7125556-A	(LH)♦D2GY 7125557-A	1
29069	Moulding (quarter upper front)			(LH)★D2GY 7129069-A Not replaced (3/82)	1
29140-1	Moulding (quarter upper)		(RH)♦D2GY 7129140-A	(LH)★D2GY 7129141-A Not replaced (3/82)	1
29164-5	Moulding (quarter wheel opening)		(RH)♦D7WY 7129164-A	(LH)♦D7WY 7129165-A	1
29278-9	Moulding (quarter rear end)		(RH)♦D2GY 7129278-A	(LH)♦D2GY 7129279-A	1
405A48	Moulding (fuel filler door)		♦D2GY 71405A48-A		1

COPYRIGHT © 1986 — FORD MOTOR COMPANY — DEARBORN, MICHIGAN

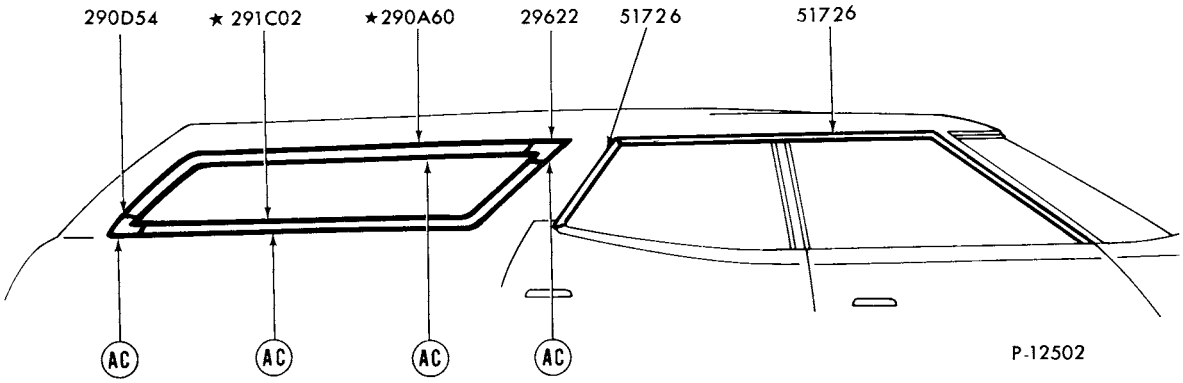

REFER TO EXTERIOR MOULDING SECTION 'R' FOR COMPLETE RETAINER INFORMATION

1977 COUGAR - BODY TYPE 71 - DOOR and QUARTER WINDOW FRAME

GROUP NUMBER	PART NAME	DESCRIPTION	PART NUMBER		QTY.
290D54	Moulding (quarter window lower rear corner)	"Before 1/15/77"- paint in groove	D2OZ 71290D54-A		2
		"From 1/15/77"- all bright	★ D7OZ 71290D54-A Not replaced (4/83)		2
290A60-1	Moulding (quarter window upper)	"Before 1/15/77"- paint in groove	(RH)♦D2OZ 71290A60-A	(LH)★D2OZ 71290A61-A Not replaced (3/82)	1
		"From 1/15/77"- all bright	(RH)★D7OZ 71290A60-A Not replaced (4/83)	(LH)★D7OZ 71290A61-A Not replaced (4/83)	1
29622	Moulding (quarter window upper front corner)	"Before 1/15/77"- paint in groove	★D2OZ 7129622-A Not replaced (4/83)	R.H. and L.H.	2
		"From 1/15/77" - all bright	D7OZ 7129622-A	R.H. and L.H.	2
51726-7	Moulding (roof drip rail finish)	"Before 9/15/76"	(RH)♦D2GY 7151726-A	(LH)♦D2GY 7151727-A	1
		"From 9/15/76"	(RH)★D7OZ 7151726-A Not replaced (4/83)	(LH)★D7OZ 7151727-A Not replaced (4/83)	1

♦ Includes attaching parts

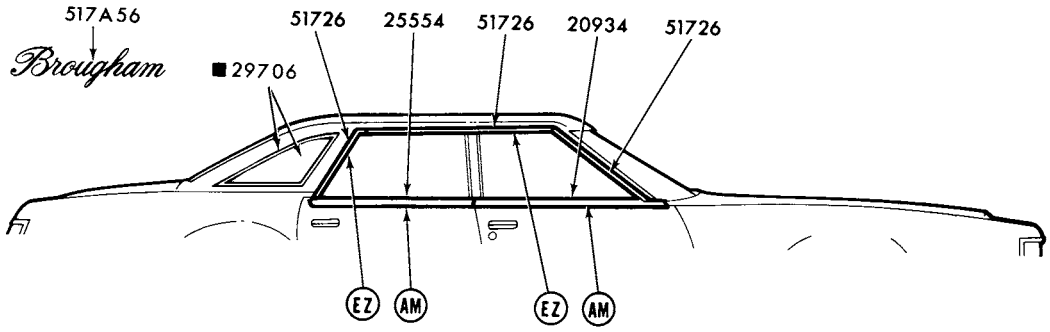

REFER TO EXTERIOR MOULDING SECTION "R" FOR COMPLETE RETAINER INFORMATION
■ REFER TO GROUP IN TEXT SECTION

P-13141

1977 COUGAR - BODY TYPE 53 - DOOR BELT, DRIP RAIL

GROUP NUMBER	PART NAME	DESCRIPTION	PART NUMBER		QTY.
20934-5	Moulding (front door belt)	Body types 53D,K	(RH)♦D7OZ 5320934-A	(LH)♦D7OZ 5320935-A	1
25554-5	Moulding (rear door belt)	Body types 53D,K	(RH)♦D7OZ 5325554-A	(LH)♦D7OZ 5325555-A	1
51726-7	Moulding (roof drip rail finish)	Front	(RH)♦D7OZ 5351726-A	(LH)♦D7OZ 5351727-A	1
		Rear	(RH)♦D7OZ 5351726-B	(LH)♦D7OZ 5351727-B	1
517A56	Ornament (roof side)	"Brougham"	D7OZ 53517A56-A	R.H. and L.H.	2

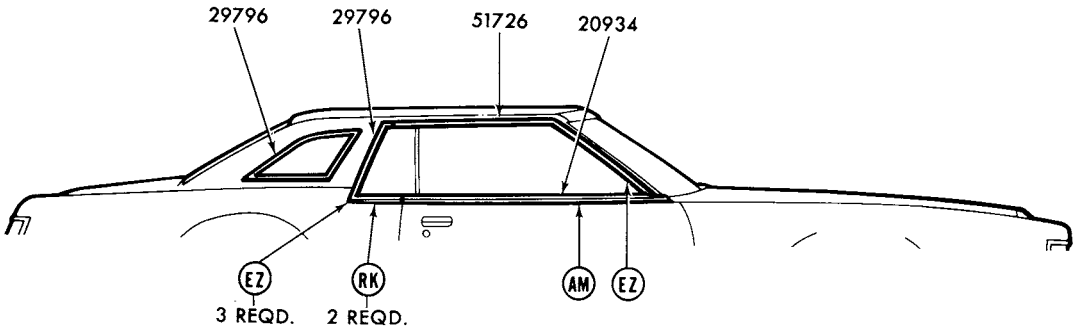

REFER TO EXTERIOR MOULDING SECTION "R" FOR COMPLETE RETAINER INFORMATION

P-13142

1977 COUGAR - BODY TYPE 65 - DOOR BELT, ROOF DRIP & QUARTER WINDOW

GROUP NUMBER	PART NAME	DESCRIPTION	PART NUMBER		QTY.
20934-5	Moulding (front door belt)	Body types 65 D,L	(RH)♦D7SZ 6020934-A	(LH)♦D7SZ 6020935-A	1
29796-7	Moulding (front quarter window)	Body types 65D,K	(RH)♦D7OZ 6529796-A	(LH)♦D7OZ 6529797-A	1
		Body type 65L	(RH)♦D7WY 6529796-A	(LH)♦D7WY 6529797-A	1
29796-7	Moulding (rear quarter window)	Body types 65D,K	(RH)♦D7OZ 6529796-C	(LH)♦D7OZ 6529797-C	1
		Body type 65L	Serviced in assy. - refer to Group 29706 in Text		
51726-7	Moulding (roof drip rail finish)	Body types 65D,K	(RH)♦D7OZ 6551726-A	(LH)♦D7OZ 6551727-A	1
		Body type 65L	(RH)♦D7WY 6551726-A	(LH)♦D7WY 6551727-A	1

♦ Includes attaching parts @ Canada only

COPYRIGHT © 1986 — FORD MOTOR COMPANY — DEARBORN, MICHIGAN

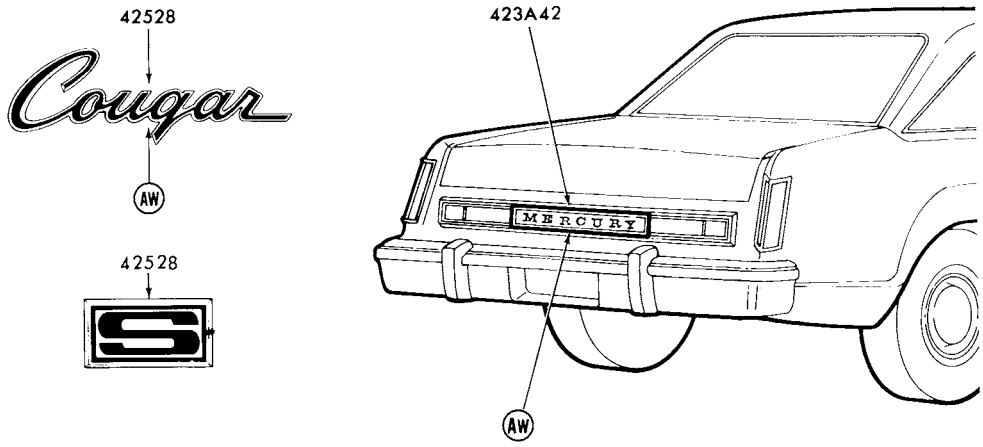

REFER TO EXTERIOR MOULDING SECTION "R" FOR COMPLETE RETAINER INFORMATION P-13156

1977 COUGAR - BODY TYPE 65 - DOOR BELT, ROOF DRIP & QUARTER WINDOW

GROUP NUMBER	PART NAME	DESCRIPTION	PART NUMBER	QTY.
423A42	Panel (lower back finish)	Incl."Mercury"	♦D7WY 65423A42-A	1
42528	Plate (name)	"Cougar"	♦D7WY 6542528-A	1
		"S"-adhesive backed	@D7OZ 6542528-B	1

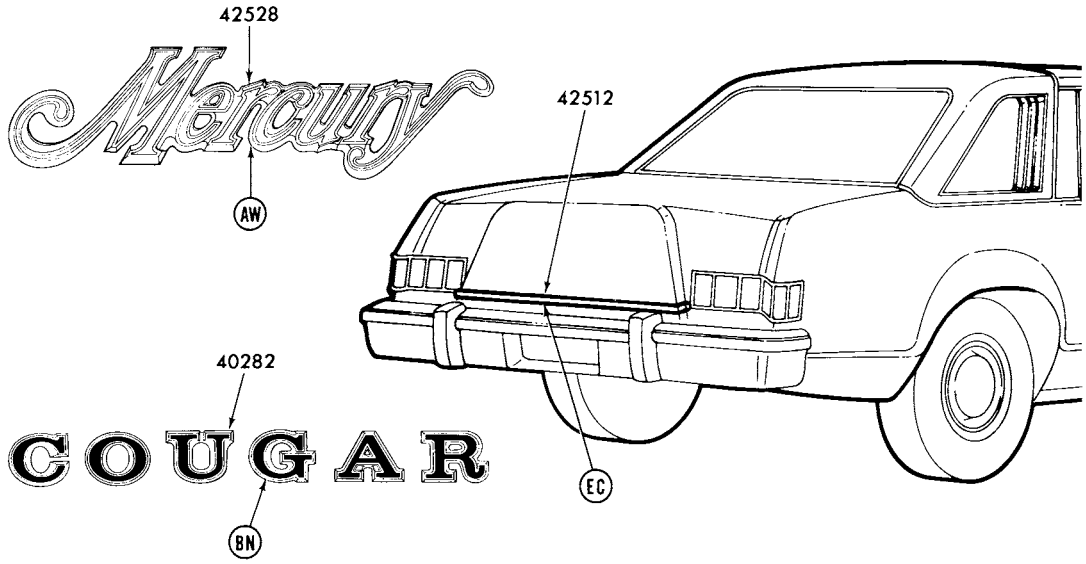

REFER TO EXTERIOR MOULDING SECTION "R" FOR COMPLETE RETAINER INFORMATION P-13159

1977 COUGAR - BODY TYPE 65L - BACK END

GROUP NUMBER	PART NAME	DESCRIPTION	PART NUMBER	QTY.
40282	Letter (name)	"C"	♦D7WY 6540282-A	1
		"O"	♦D7WY 6540282-B	1
		"U"	♦D7WY 6540282-C	1
		"G"	♦D7WY 6540282-D	1
		"A"	♦D7WY 6540282-E	1
		"R"	♦D7WY 6540282-F	1
42512	Moulding (luggage compartment door)		♦D7WY 6542512-A	1
42528	Plate (name)	"Mercury"	♦D54Y 6642528-A	1

♦ Includes attaching parts

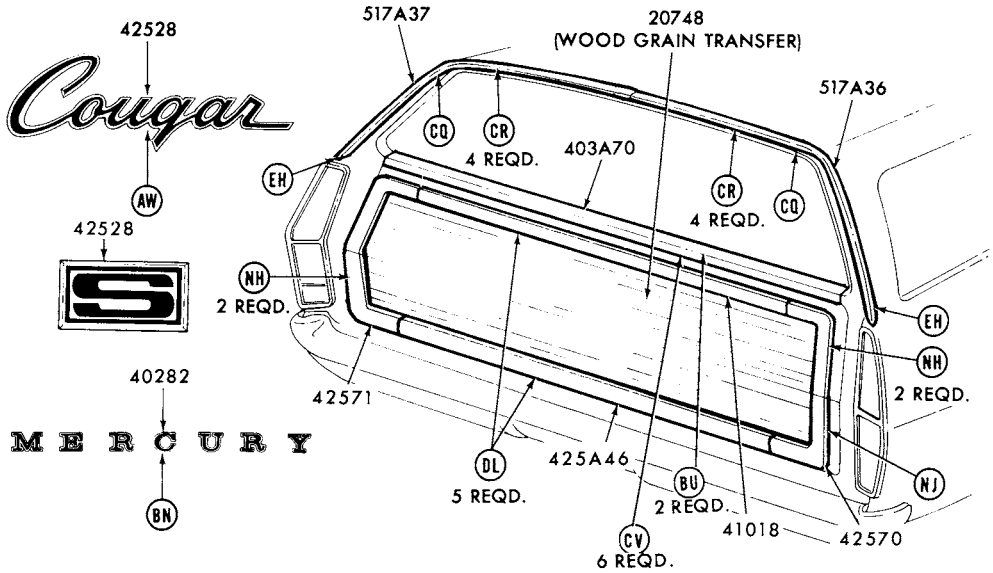

REFER TO EXTERIOR MOULDING SECTION "R" FOR COMPLETE RETAINER INFORMATION

P-13157

1977 COUGAR - BODY TYPE 71 - BACK END

GROUP NUMBER	PART NAME	DESCRIPTION	PART NUMBER		QTY.
20748	Transfer (wood grain)	Cherry wood grain-cut to fit-body type 71K	D7OZ 7120748-A		1
40282	Letter (name)	"M"	♦D3MY 7140282-A		1
		"E"	♦D3MY 7140282-B		1
		"R"	♦D3MY 7140282-C		2
		"C"	♦D3MY 7140282-D		1
		"U"	♦D3MY 7140282-E		1
		"Y"	♦D3MY 7140282-F		1
403A70	Moulding (tailgate outside belt)		★D2OZ 71403A70-A	Not replaced (4/84)	1
41018	Moulding (tailgate outside upper)	Body type 71K	♦D2GY 7141018-A		1
42528	Plate (tailgate name)	"Cougar"	♦D7WY 6542528-A		1
		"S"-adhesive backed	@D7OZ 6542528-B		1
425A46	Moulding (tailgate outside lower)	Body type 71K	♦D2GY 71425A46-A		1
42570-1	Moulding (tailgate outside side)	Body type 71K	(RH)★D2GY 7142570-A Not replaced (4/83)	(LH)★D2GY 7142571-A Not replaced (4/83)	1
517A36-7	Moulding (roof outside rear)		(RH)♦D2GY 71517A36-A	(LH)♦D2GY 71517A37-A	1

♦ Includes attaching parts @ Canada only

COPYRIGHT © 1986 — FORD MOTOR COMPANY — DEARBORN, MICHIGAN

New Issue

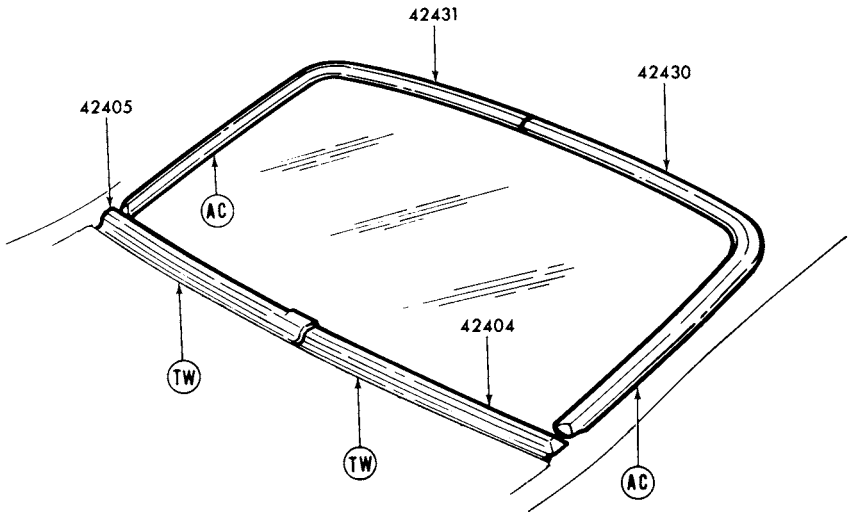

REFER TO EXTERIOR MOULDING SECTION "R" FOR COMPLETE RETAINER INFORMATION P-13039

1977 COUGAR - BODY TYPES 53 and 65 - BACK WINDOW

GROUP NUMBER	PART NAME	DESCRIPTION	PART NUMBER		QTY.
42404-5	Moulding (back window lower)		(RH)♦D7OZ 6542404-A	(LH)♦D7OZ 6542405-A	1
42430-1	Moulding (back window upper)		(RH)♦D7OZ 6542430-A	(LH)♦D7OZ 6542431-A	1

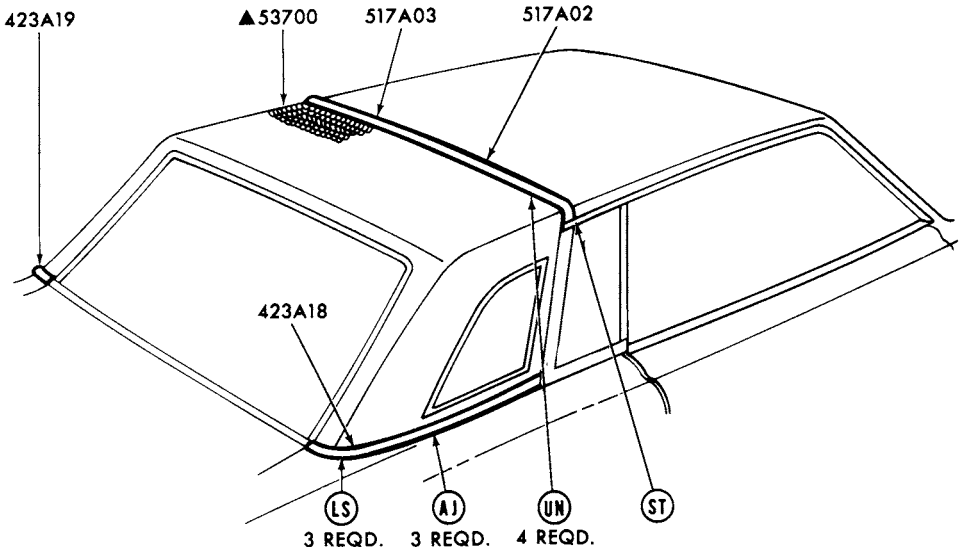

▲ REFER TO SOFT TRIM SECTION
REFER TO EXTERIOR MOULDING SECTION "R" FOR COMPLETE RETAINER INFORMATION P-13160

1977 COUGAR - BODY TYPES 53 and 65D,K - ROOF and BACK BELT

♦ Includes attaching parts

1977 COUGAR - BODY TYPES 53 and 65D,K - ROOF and BACK BELT - cont'd.

GROUP NUMBER	PART NAME	DESCRIPTION	PART NUMBER		QTY.
423A18-9	Moulding (back belt side)	Body type 53-paint to match	(RH)♦D7OZ 53423A18-A	(LH)♦D7OZ 53423A19-A	1
		Body types 65D,K-paint to match	(RH)♦D7OZ 65423A18-A	(LH)♦D7OZ 65423A19-A	1
517A02-3	Moulding (roof top rear)	Body types 65D,K	(RH)♦D7OZ 65517A02-A	(LH)♦D7OZ 65517A03-A	1

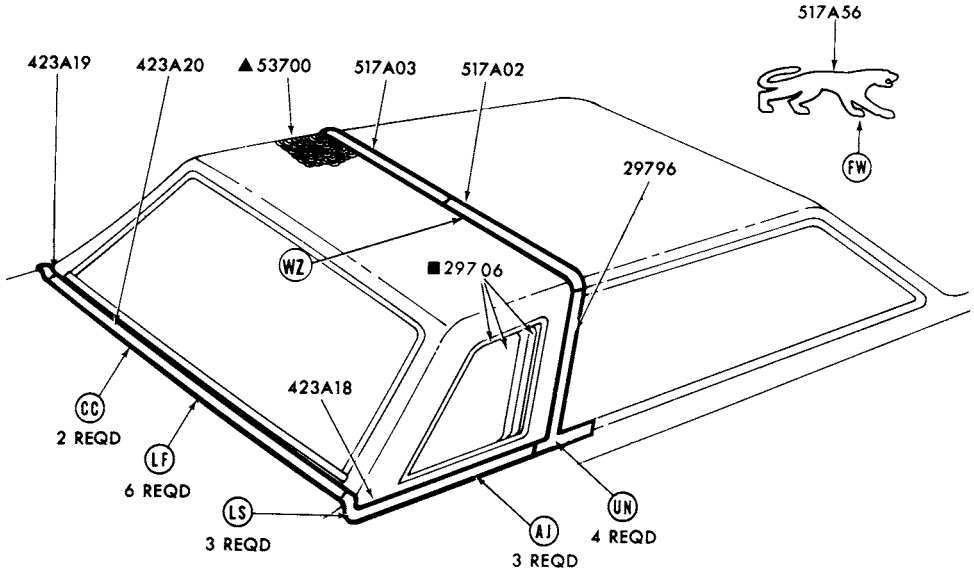

REFER TO EXTERIOR MOULDING SECTION "R" FOR COMPLETE RETAINER INFORMATION
▲ REFER TO GROUP IN SOFT TRIM SECTION
■ REFER TO GROUP IN TEXT SECTION

P-13162

1977 COUGAR - BODY TYPE 65L - ROOF and BACK BELT

GROUP NUMBER	PART NAME	DESCRIPTION	PART NUMBER		QTY.
29796-7	Moulding (front quarter window)		(RH)♦D7WY 6529796-A	(LH)♦D7WY 6529797-A	1
423A18-9	Moulding (back belt side)		(RH)♦D7WY 65423A18-A	(LH)♦D7WY 65423A19-A	1
423A20	Moulding (back belt)		♦D7WY 65423A20-A		1
517A02-3	Moulding (roof side)		(RH)♦D7WY 65517A02-A	(LH)♦D7WY 65517A03-A	1
517A56-7	Plate (roof side name)		(RH)♦D7WY 65517A56-A	(LH)♦D7WY 65517A57-A	1

♦ Includes attaching parts

COPYRIGHT © 1986 — FORD MOTOR COMPANY — DEARBORN, MICHIGAN

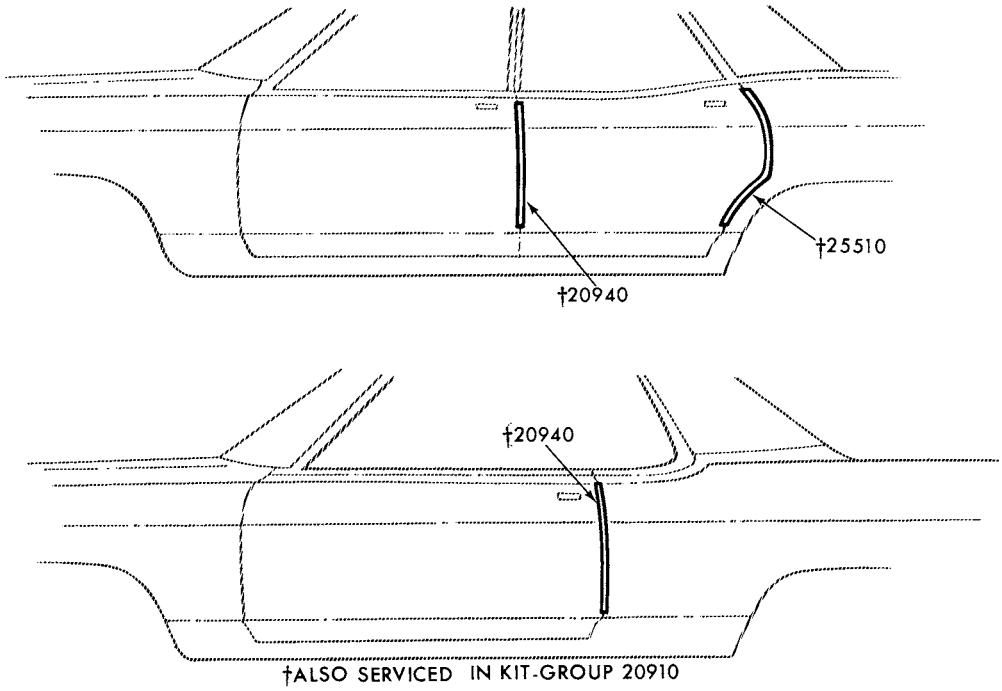

†ALSO SERVICED IN KIT-GROUP 20910

P-10061

1977 COUGAR - DOOR EDGE GUARDS

GROUP NUMBER	PART NAME	DESCRIPTION	PART NUMBER		QTY.
20910	Moulding kit (door edge guard)	Body type 53	D7OZ 5320910-A		1
		Body type 65	D7OZ 6520910-A		1
		Body type 71-wood grain	D7OZ 7120910-A		1
20940-1	Moulding (front door edge guard)	Body type 53	(RH) D2GY 5320940-A	(LH) D2GY 5320941-A	1
		Body type 65	(RH) D7OZ 6520940-A	(LH) D7OZ 6520941-A	1
		Body type 71-bright finish	(RH) D2GY 5320940-A	(LH) D2GY 5320941-A	1
		Body type 71-wood grain-23" long	(RH) D4GY 7120940-A	(LH) D4GY 7120941-A	1
		17 3/4" long	(RH) D7OZ 7120940-A	(LH) D7OZ 7120941-A	1
25510-1	Moulding (rear door edge guard)	Body type 53	(RH) D7OZ 5325510-A	(LH) D7OZ 5325511-A	1
		Body type 71-bright finish	(RH) D7OZ 5325510-A	(LH) D7OZ 5325511-A	1
		Body type 71-25 1/4" long	(RH) D4GY 7125510-A	(LH) D4GY 7125511-A	1
		20" long	(RH)★D7OZ 7125510-A Not replaced (2/81)	(LH)★D7OZ 7125511-A Not replaced (2/81)	1

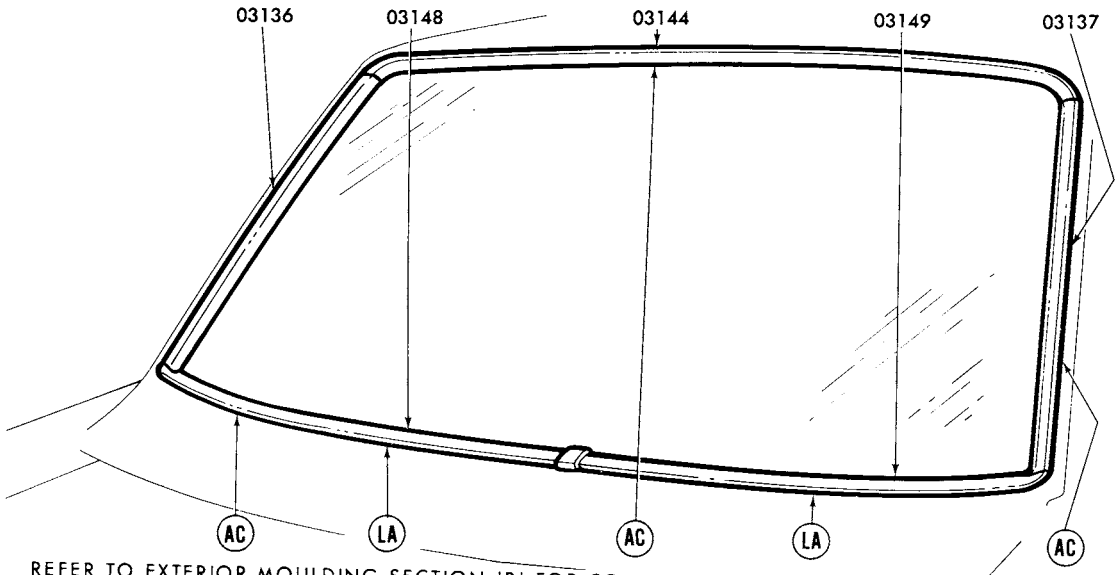

REFER TO EXTERIOR MOULDING SECTION 'R' FOR COMPLETE RETAINER INFORMATION

P-12526

1977 MONARCH - WINDSHIELD

GROUP NUMBER	PART NAME	DESCRIPTION	PART NUMBER		QTY.
03136-7	Moulding (windshield outside side)	Black	(RH)♦D7DZ 6603136-A	(LH)♦D7DZ 6603137-A	1
		Bright	(RH)♦D5DZ 6603136-A	(LH)♦D5DZ 6603137-A	1
03144	Moulding (windshield outside top)	Black	★D7DZ 6603144-A Not replaced (6/82)		1
		Bright	♦D5DZ 6603144-A		1
03148-9	Moulding (windshield outside belt)	Black	(RH)★D7DZ 6603148-B Not replaced (6/82)	(LH)★D7DZ 6603149-B Not replaced (6/82)	1
		Bright	(RH)♦D5DZ 6603148-A	(LH)♦D5DZ 6603149-A	1

♦ Includes attaching parts

COPYRIGHT © 1986 — FORD MOTOR COMPANY — DEARBORN, MICHIGAN

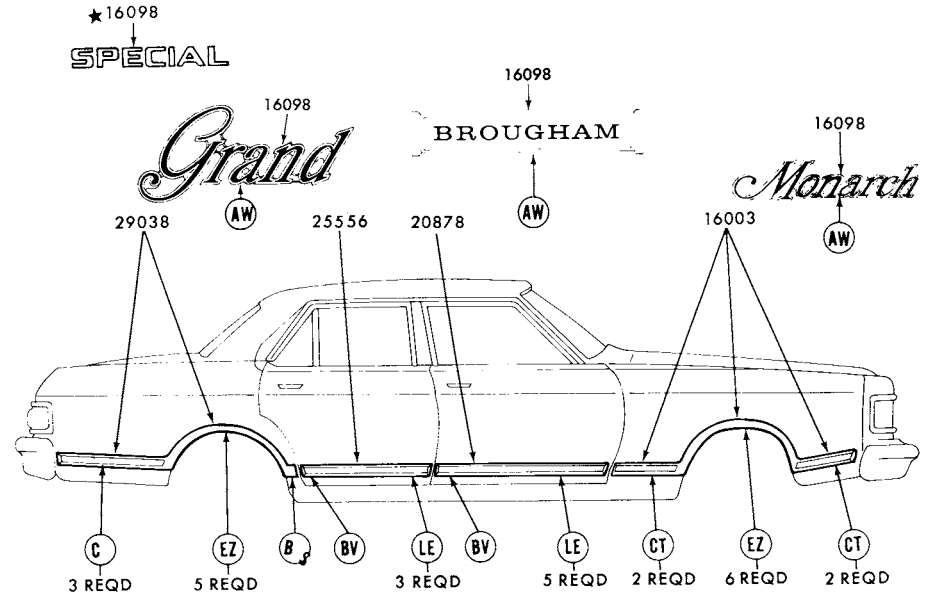

REFER TO EXTERIOR MOULDING SECTION "R" FOR COMPLETE RETAINER INFORMATION P-11945

1977 MONARCH - BODY TYPE 54K - SIDE - w/LUXURY DECOR

GROUP NUMBER	PART NAME	DESCRIPTION	PART NUMBER		QTY.
16003-4	Moulding (front fender side)	Incl. vinyl insert			
		◊Black	(RH)♦D5DZ 16003-CA	(LH)♦D5DZ 16004-CA	1
		◊Blue	(RH)♦D7DZ 16003-AB	(LH)♦D7DZ 16004-AB	1
		◊Brown	(RH)♦D7DZ 16003-AT	(LH)♦D7DZ 16004-AT	1
		◊Cream	(RH)♦D7DZ 16003-AV	(LH)♦D7DZ 16004-AV	1
		◊Gray	(RH)♦D6DZ 16003-AP	(LH)♦D6DZ 16004-AP	1
		◊Jade	(RH)♦D6DZ 16003-AR	(LH)♦D6DZ 16004-AR	1
		◊Red	(RH)♦D5DZ 16003-CD	(LH)♦D5DZ 16004-CD	1
		◊Silver	(RH)♦D5DZ 16003-CP	(LH)♦D5DZ 16004-CP	1
		◊White	(RH)♦D7DZ 16003-AW	(LH)♦D7DZ 16004-AW	1
16098	Plate (name)	"Brougham"	Not used in 1977		
		"Grand"	♦D5MY 16098-C	R.H. and L.H.	2
		"Monarch"	♦D54Y 16098-B	R.H. and L.H.	2
16098	Transfer (front fender name)	"SPECIAL"	✱D7DZ 16098-A Not replaced (4/84)	R.H. and L.H.	2
		"SPECIAL EDITION"	@D7DZ 16098-B	R.H. and L.H.	2
20878-9	Moulding (front door outside)	Incl. vinyl insert			
		◊Black	(RH)♦D5DZ 5420878-CA	(LH)♦D5DZ 5420879-CA	1
		◊Blue	(RH)♦D7DZ 5420878-AB	(LH)♦D7DZ 5420879-AB	1
		◊Brown	(RH)♦D7DZ 5420878-AT	(LH)♦D7DZ 5420879-AT	1
		◊Cream	(RH)♦D7DZ 5420878-AV	(LH)♦D7DZ 5420879-AV	1
		◊Gray	(RH)♦D6DZ 5420878-AP	(LH)♦D6DZ 5420879-AP	1
		◊Jade	(RH)♦D6DZ 5420878-AR	(LH)♦D6DZ 5420879-AR	1
		◊Red	(RH)♦D5DZ 5420878-CD	(LH)♦D5DZ 5420879-CD	1
		◊Silver	(RH)♦D5DZ 5420878-DP	(LH)♦D5DZ 5420879-DP	1
		◊White	(RH)♦D7DZ 5420878-AW	(LH)♦D7DZ 5420879-AW	1
25556-7	Moulding (rear door outside)	Incl. vinyl insert			
		◊Black	(RH)♦D5DZ 5425556-CA	(LH)♦D5DZ 5425557-CA	1
		◊Blue	(RH)♦D7DZ 5425556-AB	(LH)♦D7DZ 5425557-AB	1
		◊Brown	(RH)♦D7DZ 5425556-AT	(LH)♦D7DZ 5425557-AT	1
		◊Cream	(RH)★D7DZ 5425556-AV Not replaced (4/84)	(LH)♦D7DZ 5425557-AV	1
		◊Gray	(RH)♦D6DZ 5425556-AP	(LH)♦D6DZ 5425557-AP	1
		◊Jade	(RH)♦D6DZ 5425556-AR	(LH)♦D6DZ 5425557-AR	1
		◊Red	(RH)♦D5DZ 5425556-CD	(LH)♦D5DZ 5425557-CD	1
		◊Silver	(RH)♦D5DZ 5425556-CP	(LH)♦D5DZ 5425557-CP	1
		◊White	(RH)♦D7DZ 5425556-AW	(LH)♦D7DZ 5425557-AW	1

♦ Includes attaching parts @ Canada only

◊ For color verification, refer to the vinyl roof swatches in the 1977 Salesman's Color and Upholstery Selections Guide.

1977 MONARCH - BODY TYPE 54K - SIDE - w/LUXURY DECOR - cont'd.

GROUP NUMBER	PART NAME	DESCRIPTION	PART NUMBER		QTY.
29038-9	Moulding (quarter outside)	Incl. vinyl insert			
		◊Black	(RH)♦D5DZ 5429038-CA	(LH)♦D5DZ 5429039-CA	1
		◊Blue	(RH)♦D7DZ 5429038-AB	(LH)♦D7DZ 5429039-AB	1
		◊Brown	(RH)♦D7DZ 5429038-AT	(LH)♦D7DZ 5429039-AT	1
		◊Cream	(RH)♦D7DZ 5429038-AV	(LH)♦D7DZ 5429039-AV	1
		◊Gray	(RH)♦D6DZ 5429038-AP	(LH)♦D6DZ 5429039-AP	1
		◊Jade	(RH)♦D6DZ 5429038-AR	(LH)♦D6DZ 5429039-AR	1
		◊Red	(RH)♦D5DZ 5429038-CD	(LH)♦D5DZ 5429039-CD	1
		◊Silver	(RH)♦D5DZ 5429038-CP	(LH)♦D5DZ 5429039-CP	1
		◊White	(RH)♦D7DZ 5429038-AW	(LH)♦D7DZ 5429039-AW	1

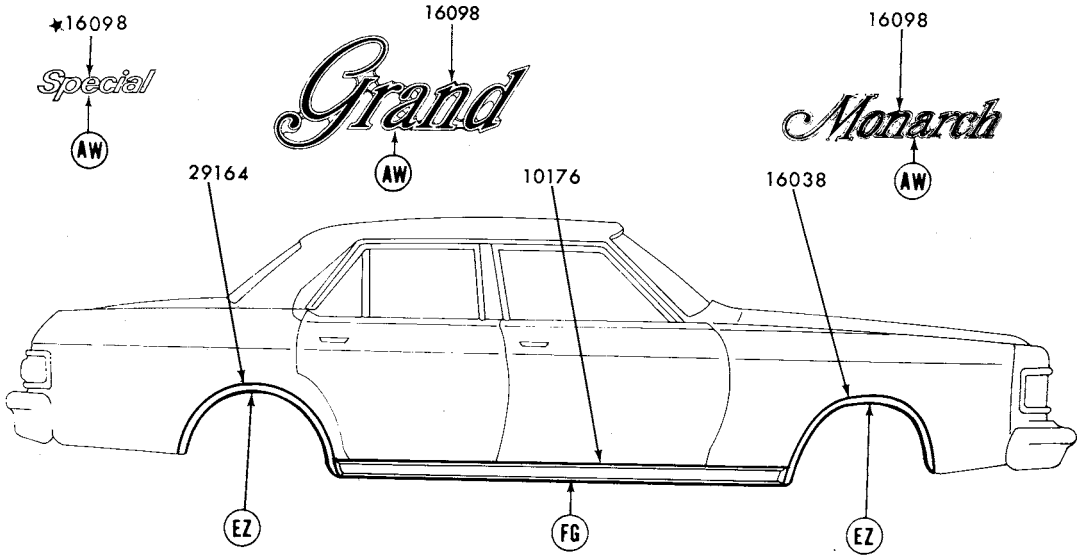

REFER TO EXTERIOR MOULDING SECTION "R" FOR COMPLETE RETAINER INFORMATION P-11946

1977 MONARCH - SIDE

GROUP NUMBER	PART NAME	DESCRIPTION	PART NUMBER		QTY.
10176	Moulding (body rocker panel)	W/wheel opening mouldings-78 3/4" long	♦D54Y 6610176-A	R.H. and L.H.	2
		W/o wheel opening mouldings-78 3/4" long	(RH)♦D6DZ 6610176-A	(LH)♦D6DZ 6610177-A	1
16038-9	Moulding (front fender wheel opng.)		(RH)♦D5DZ 16038-A	(LH)♦D5DZ 16039-A	1
16098	Plate (name)	"Grand"	♦D5MY 16098-C	R.H. and L.H.	2
		"Monarch"	♦D54Y 16098-B	R.H. and L.H.	2
16098	Transfer (front fender name)	"SPECIAL"	★D7DZ 16098-A Not replaced (4/84)	R.H. and L.H.	2
		"SPECIAL EDITION"	@D7DZ 16098-B	R.H. and L.H.	2
29164-5	Moulding (quarter wheel opening)		(RH)♦D5DZ 6629184-A	(LH)♦D5DZ 6629165-A	1

♦ Includes attaching parts @ Canada only

◊ For color verification, refer to the vinyl roof swatches in the 1977 Salesman's Color and Upholstery Selections Guide.

COPYRIGHT © 1986 — FORD MOTOR COMPANY — DEARBORN, MICHIGAN

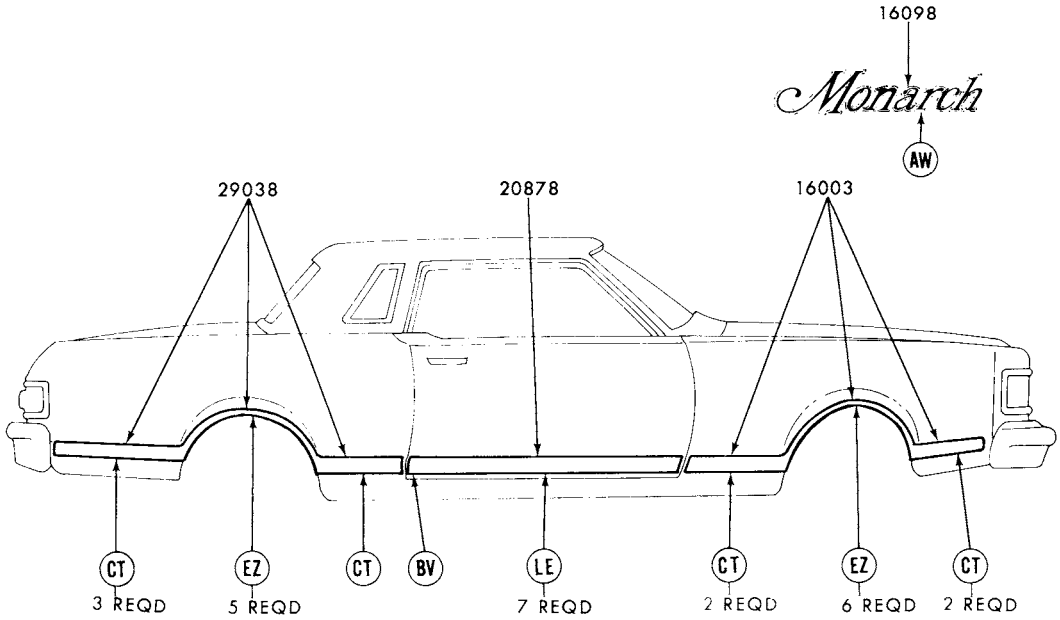

REFER TO EXTERIOR MOULDING SECTION "R" FOR COMPLETE RETAINER INFORMATION P-11944

1977 MONARCH - BODY TYPES 66H, K - SIDE - w/LUXURY DECOR

GROUP NUMBER	PART NAME	DESCRIPTION	PART NUMBER		QTY.
16003-4	Moulding (front fender side)	Incl. vinyl insert			
		◊Black	(RH)♦D5DZ 16003-CA	(LH)♦D5DZ 16004-CA	1
		◊Blue	(RH)♦D7DZ 16003-AB	(LH)♦D7DZ 16004-AB	1
		◊Brown	(RH)♦D7DZ 16003-AT	(LH)♦D7DZ 16004-AT	1
		◊Cream	(RH)♦D7DZ 16003-AV	(LH)♦D7DZ 16004-AV	1
		◊Gray	(RH)♦D6DZ 16003-AP	(LH)♦D6DZ 16004-AP	1
		◊Jade	(RH)♦D6DZ 16003-AR	(LH)♦D6DZ 16004-AR	1
		◊Red	(RH)♦D5DZ 16003-CD	(LH)♦D5DZ 16004-CD	1
		◊Silver	(RH)♦D5DZ 16003-CP	(LH)♦D5DZ 16004-CP	1
		◊White	(RH)♦D7DZ 16003-AW	(LH)♦D7DZ 16004-AW	1
16098	Plate (name)	"Monarch"	♦D54Y 16098-B	R.H. and L.H.	2
20878-9	Moulding (front door outside)	Incl. vinyl insert			
		◊Black	(RH)♦D5DZ 6620878-AA	(LH)♦D5DZ 6620879-AA	1
		◊Blue	(RH)♦D7DZ 6620878-AB	(LH)♦D7DZ 6620879-AB	1
		◊Brown	(RH)♦D7DZ 6620878-AT	(LH)♦D7DZ 6620879-AT	1
		◊Cream	(RH)♦D7DZ 6620878-AV	(LH)♦D7DZ 6620879-AV	1
		◊Gray	(RH)♦D6DZ 6620878-AP	(LH)♦D6DZ 6620879-AP	1
		◊Jade	(RH)♦D6DZ 6620878-AR	(LH)♦D6DZ 6620879-AR	1
		◊Red	(RH)♦D5DZ 6620878-AD	(LH)♦D5DZ 6620879-AD	1
		◊Silver	(RH)♦D5DZ 6620878-AP	(LH)♦D5DZ 6620879-AP	1
		◊White	(RH)♦D7DZ 6620878-AW	(LH)♦D7DZ 6620879-AW	1
29038-9	Moulding (quarter outside)	Incl. vinyl insert			
		◊Black	(RH)♦D5DZ 6629038-CA	(LH)♦D5DZ 6629039-CA	1
		◊Blue	(RH)♦D7DZ 6629038-AB	(LH)♦D7DZ 6629039-AB	1
		◊Brown	(RH)♦D7DZ 6629038-AT	(LH)♦D7DZ 6629039-AT	1
		◊Cream	(RH)♦D7DZ 6629038-AV	(LH)♦D7DZ 6629039-AV	1
		◊Gray	(RH)♦D6DZ 6629038-AP	(LH)♦D6DZ 6629039-AP	1
		◊Jade	(RH)♦D6DZ 6629038-AR	(LH)♦D6DZ 6629039-AR	1
		◊Red	(RH)♦D5DZ 6629038-CD	(LH)♦D5DZ 6629039-CD	1
		◊Silver	(RH)♦D5DZ 6629038-CP	(LH)♦D5DZ 6629039-CP	1
		◊White	(RH)♦D7DZ 6629038-AW	(LH)♦D7DZ 6629039-AW	1

♦ Includes attaching parts

◊ For color verification, refer to the vinyl roof swatches in the 1977 Salesman's Color and Upholstery Selections Guide.

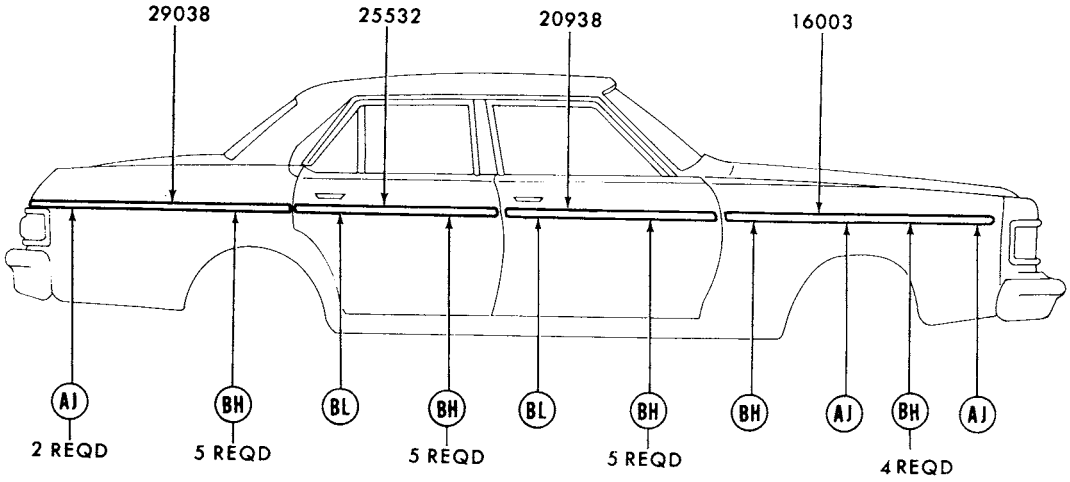

REFER TO EXTERIOR MOULDING SECTION "R" FOR COMPLETE RETAINER INFORMATION P-11948

1977 MONARCH - BODY TYPE 54 - SIDE PROTECTION

GROUP NUMBER	PART NAME	DESCRIPTION	PART NUMBER		QTY.
16003-4	Moulding (front fender side)	Bright finish	(RH)♦D5DZ 16003-A	(LH)♦D5DZ 16004-A	1
20938-9	Moulding (front door outside)	Bright finish	(RH)♦D5DZ 5420938-A	(LH)♦D5DZ 5420939-A	1
25532-3	Moulding (rear door outside)	Bright finish	(RH)♦D5DZ 5425532-A	(LH)♦D5DZ 5425533-A	1
29038-9	Moulding (quarter outside)	Bright finish	(RH)♦D5DZ 5429038-A	(LH)♦D5DZ 5429039-A	1

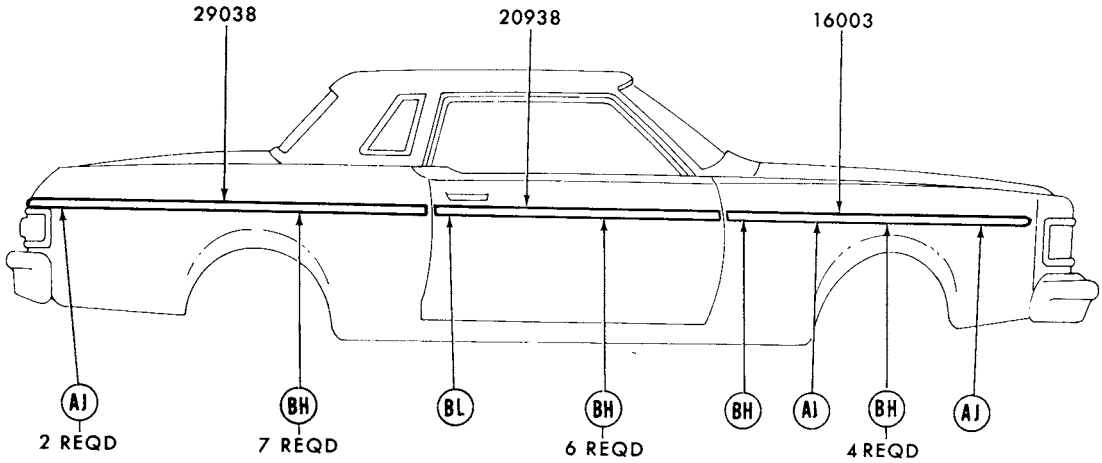

REFER TO EXTERIOR MOULDING SECTION "R" FOR COMPLETE RETAINER INFORMATION P-11941

1977 MONARCH - BODY TYPE 66 - SIDE PROTECTION

GROUP NUMBER	PART NAME	DESCRIPTION	PART NUMBER		QTY.
16003-4	Moulding (front fender side)	Bright finish	(RH)♦D5DZ 16003-A	(LH)♦D5DZ 16004-A	1
20938-9	Moulding (front door outside)	Bright finish	(RH)♦D5DZ 6620938-A	(LH)♦D5DZ 6620939-A	1
29038-9	Moulding (quarter outside)	Bright finish	(RH)♦D5DZ 6629038-A	(LH)♦D5DZ 6629039-A	1

♦ Includes attaching parts

COPYRIGHT © 1986 — FORD MOTOR COMPANY — DEARBORN, MICHIGAN

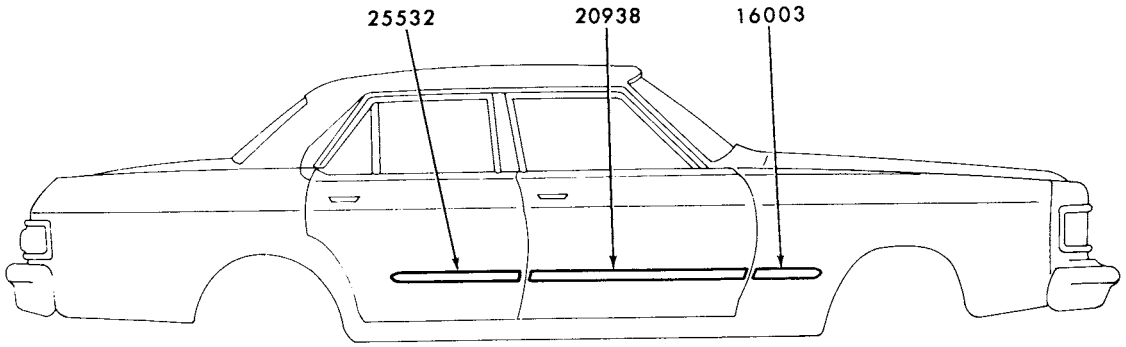

P-11943

1977 MONARCH - BODY TYPE 54 - SIDE PROTECTION

GROUP NUMBER	PART NAME	DESCRIPTION	PART NUMBER		QTY.
16003-4	Moulding (front fender side)	Black vinyl insert-adhesive backed-cut to fit	D5DZ 5425532-D	R.H. and L.H.	2
20938	Moulding (front door outside)	Black vinyl insert-adhesive backed-cut to fit	D1OZ 6529038-B	R.H. and L.H.	2
25532	Moulding (rear door outside)	Black vinyl insert-adhesive backed	D5DZ 5425532-D	R.H. and L.H.	2

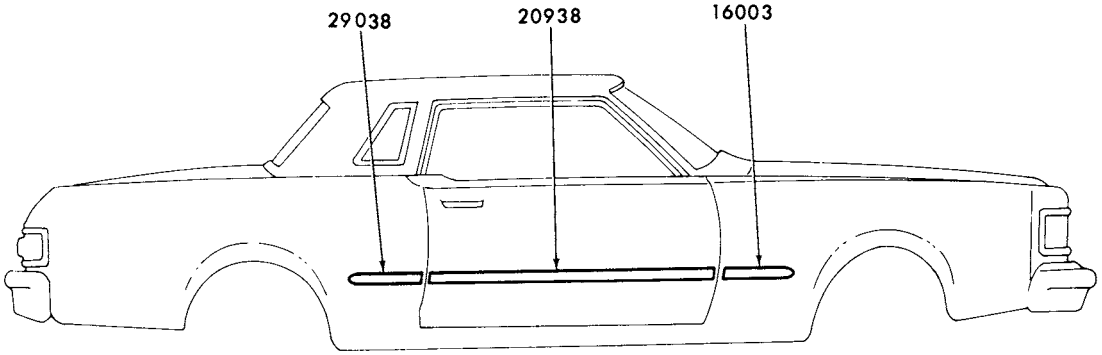

P-11942

1977 MONARCH - BODY TYPE 66 - SIDE PROTECTION

GROUP NUMBER	PART NAME	DESCRIPTION	PART NUMBER		QTY.
16003-4	Moulding (front fender side)	Black vinyl insert-adhesive backed-cut to fit	D5DZ 5425532-D	R.H. and L.H.	2
20938	Moulding (front door outside)	Black vinyl insert-adhesive backed	D1OZ 6529038-B	R.H. and L.H.	2
29038	Moulding (quarter outside)	Black vinyl insert-adhesive backed-cut to fit	D5DZ 5425532-D	R.H. and L.H.	2

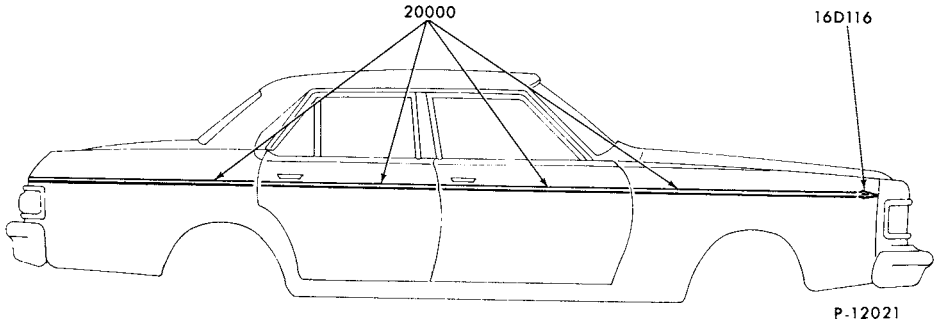

1977 MONARCH - BODY TYPE 66 - STRIPES

GROUP NUMBER	PART NAME	DESCRIPTION	PART NUMBER	QTY.
16D116-7	Transfer (front fender)		Not used in 1977	
20000	Stripe kit (body side)	Dual stripe- 25 foot roll		
		Black	D5DZ 6620000-F	AR
		Blue (light)	★ D7DZ 6620000-AB Not replaced (6/82)	AR
		Blue (medium)	D7DZ 6620000-BB	AR
		Brown	★ D5DZ 6620000-C Not replaced (6/82)	AR
		Gold	D5DZ 6620000-H	AR
		Jade (light)	D7DZ 6620000-BR	AR
		Jade (medium)	D7DZ 6620000-AR	AR
		Orange	★ D7DZ 6620000-AC Not replaced (7/81)	AR
		Red	★ D7DZ 6620000-AD Not replaced (6/82)	AR
		Silver	D5DZ 6620000-D	AR
		White	D5DZ 6620000-B	AR
		Yellow	D7DZ 6620000-AV	AR

COPYRIGHT © 1986 — FORD MOTOR COMPANY — DEARBORN, MICHIGAN

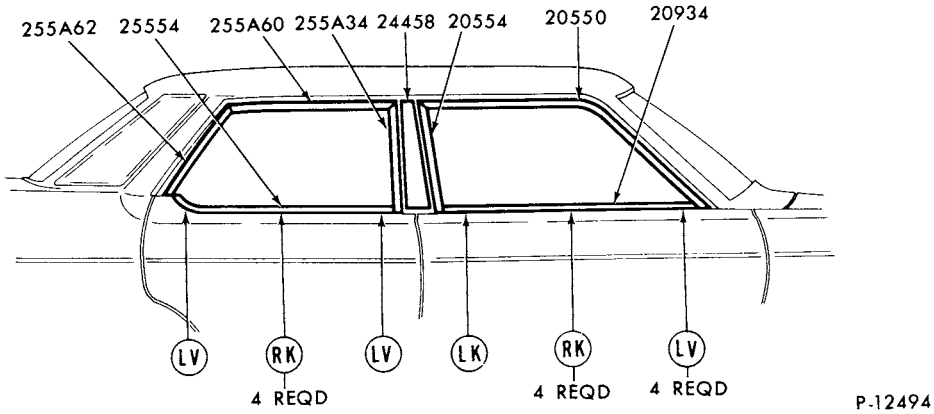

REFER TO EXTERIOR MOULDING SECTION 'R' FOR COMPLETE RETAINER INFORMATION

1977 MONARCH - BODY TYPE 54 - DOOR WINDOW FRAME

GROUP NUMBER	PART NAME	DESCRIPTION	PART NUMBER		QTY.
20550-1	Moulding (front door window frame front)		(RH) D5DZ 5420550-A	(LH) D5DZ 5420551-A	1
20554-5	Moulding (front door window frame rear)		(RH) D5DZ 5420554-A	(LH) D5DZ 5420555-A	1
20934-5	Moulding (front door outside belt)		(RH)♦D5DZ 5420934-A	(LH)♦D5DZ 5420935-A	1
24458-9	Moulding (center body pillar outside upper)		Refer to roof and back belt		
255A34-5	Moulding (rear door window frame upper)		(RH) D5DZ 54255A34-A	(LH) D5DZ 54255A35-A	1
25554-5	Moulding (rear door outside belt)		(RH)♦D5DZ 5425554-A	(LH)♦D5DZ 5425555-A	1
255A60-1	Moulding (rear door window frame upper)		(RH) D5DZ 54255A60-A	(LH) D5DZ 54255A61-A	1
255A62-3	Moulding (rear door window frame rear)		(RH) D5DZ 54255A62-A	(LH) D5DZ 54255A63-A	1

♦ Includes attaching parts

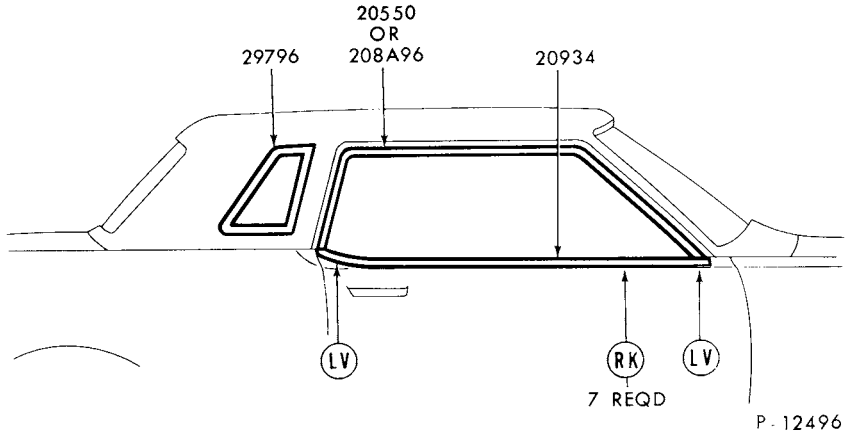

REFER TO EXTERIOR MOULDING SECTION 'R' FOR COMPLETE RETAINER INFORMATION

1977 MONARCH - BODY TYPE 66 - DOOR and QUARTER WINDOW FRAME

GROUP NUMBER	PART NAME	DESCRIPTION	PART NUMBER		QTY.
20550-1	Moulding (front door window frame)	Black	(RH)★D7DZ 6620550-A Not replaced (6/82)	(LH)★D7DZ 6620551-A Not replaced (6/82)	1
		Bright	(RH) D5DZ 6620550-A	(LH) D5DZ 6620551-A	1
20934-5	Moulding (front door outside belt)	Black	(RH)★D7DZ 6620934-A Not replaced (6/82)	(LH)★D7DZ 6620935-A Not replaced (6/82)	1
		Bright	(RH) D5DZ 6620934-C	(LH) D5DZ 6620935-C	1
29796-7	Moulding (quarter window outside)	Non-louvered	(RH)★D5DZ 6629796-A Not replaced(4/84)	(LH) D5DZ 6629797-A	1
		Louvered			
		Cream	† (RH) D7DZ 6629796-CW	† (LH) D7DZ 6629797-CW	1
		Silver	(RH) D7DZ 6629796-CP	† (LH) D7DZ 6629797-CW	1
		White	(RH) D7DZ 6629796-CW	(LH) D7DZ 6629797-CW	1

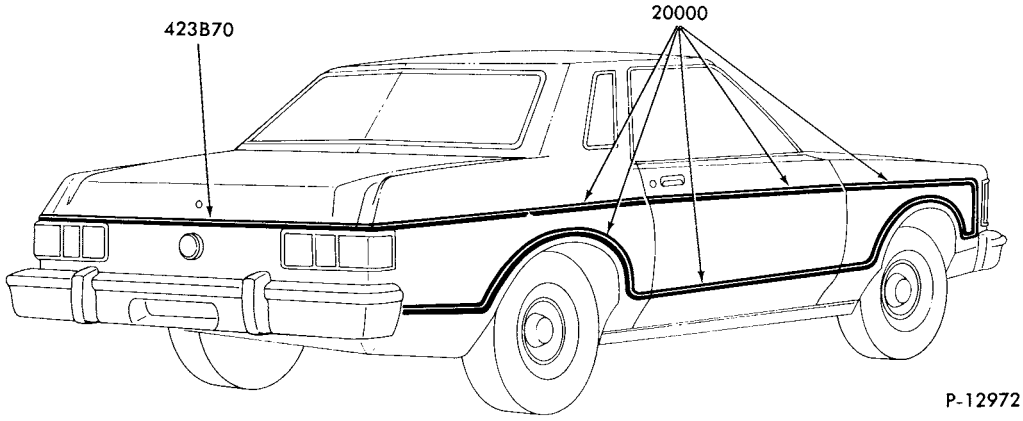

1977 MONARCH - BODY TYPE 66 - STRIPES

GROUP NUMBER	PART NAME	DESCRIPTION	PART NUMBER	QTY.
20000	Stripe kit (body side) complete	Gold	D7DZ 6620000-A	1
423B70	Stripe kit (luggage compartment door)	Gold	D6DZ 66423B70-A	1

† Paint to match

COPYRIGHT © 1986 — FORD MOTOR COMPANY — DEARBORN, MICHIGAN

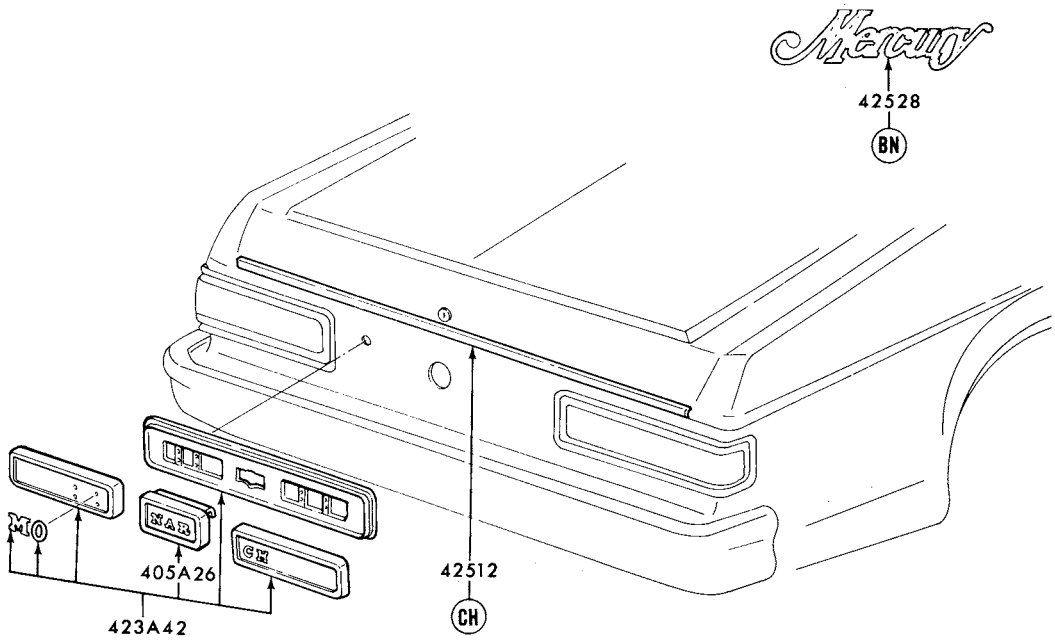

REFER TO EXTERIOR MOULDING SECTION "R" FOR COMPLETE RETAINER INFORMATION

P-11949

1977 MONARCH - BACK END

GROUP NUMBER	PART NAME	DESCRIPTION	PART NUMBER	QTY.
405A26	Door (fuel filler opening)	◊Black	★D74Y 66405A26-AA Not replaced (6/82)	1
		◊Blue	♦D74Y 66405A26-AB	1
		◊Cream	★D74Y 66405A26-AV Not replaced (6/82)	1
		◊Brown	♦D74Y 66405A26-AT	1
		◊Gray	♦D64Y 66405A26-BP	1
		◊Jade	★D64Y 66405A26-AR Not replaced (6/82)	1
		◊Red	♦D64Y 66405A26-AD	1
		◊Silver	★D74Y 66405A26-AP Not replaced (6/82)	1
		◊White	★D74Y 66405A26-AW Not replaced (6/82)	1
423A42	Panel (lower back finish)	◊Black	♦D74Y 66423A42-AA	1
		◊Blue	♦D74Y 66423A42-AB	1
		◊Brown	♦D74Y 66423A42-AT	1
		◊Cream	♦D74Y 66423A42-AV	1
		◊Gray	♦D64Y 66423A42-BP	1
		◊Jade	★D64Y 66423A42-AR Not replaced (6/82)	1
		◊Red	♦D64Y 66423A42-AD	1
		◊Silver	♦D74Y 66423A42-AP	1
		◊White	♦D74Y 66423A42-AW	1
42512	Moulding (luggage compartment door)		♦D5DZ 6642512-A	1
42528	Plate (name)	"Mercury"	♦D54Y 6642528-A	1

♦ Includes attaching parts

◊ For color verification, refer to the vinyl roof swatches in the 1977 Salesman's Color and Upholstery selections guide.

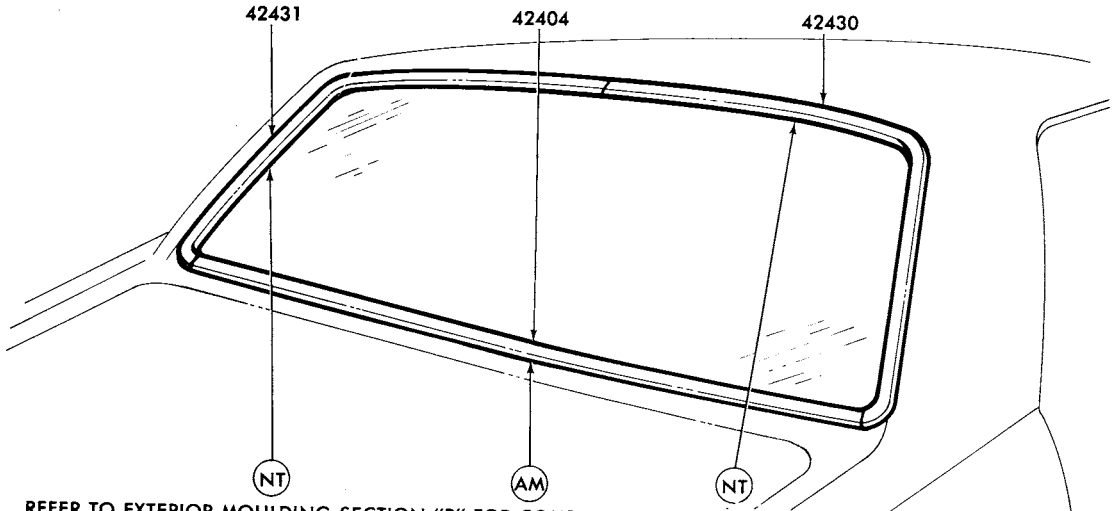

REFER TO EXTERIOR MOULDING SECTION "R" FOR COMPLETE RETAINER INFORMATION P-12485

1977 MONARCH - BODY TYPE 54 - BACK WINDOW

GROUP NUMBER	PART NAME	DESCRIPTION	PART NUMBER	QTY.
42404	Moulding (back window lower)	Back window	♦D5DZ 5442404-A	1
42430-1	Moulding (back window upper)		(RH)♦D5DZ 5442430-A (LH)♦D5DZ 5442431-A	1

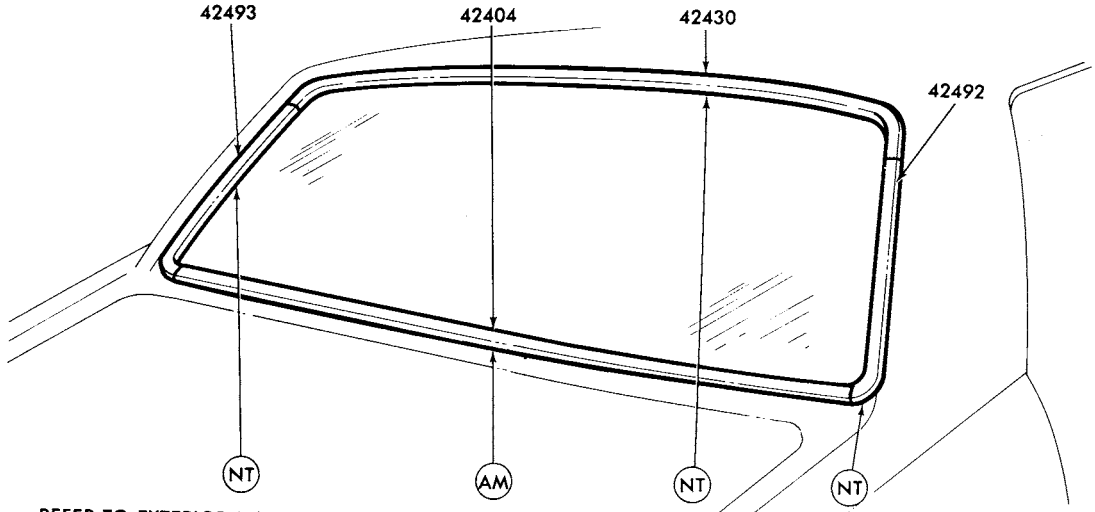

REFER TO EXTERIOR MOULDING SECTION "R" FOR COMPLETE RETAINER INFORMATION P-12486

1977 MONARCH - BODY TYPE 66 - BACK WINDOW

GROUP NUMBER	PART NAME	DESCRIPTION	PART NUMBER	QTY.
42404	Moulding (back window lower)	Black	★D7DZ 6642404-A Not replaced (7/81)	1
		Bright	♦D5DZ 6642404-A	1
42430	Moulding (back window upper)	Black	★D7DZ 6642430-A Not replaced (7/81)	1
		Bright	♦D5DZ 6642430-A	1
42492-3	Moulding (back window side)	Black	(RH)★D7DZ 6642492-A Not replaced (7/81) (LH)★D7DZ 6642493-A Not replaced (7/81)	1
		Bright	(RH)♦D5DZ 6642492-A (LH)♦D5DZ 6642493-A	1

♦ Includes attaching parts

COPYRIGHT © 1986 — FORD MOTOR COMPANY — DEARBORN, MICHIGAN

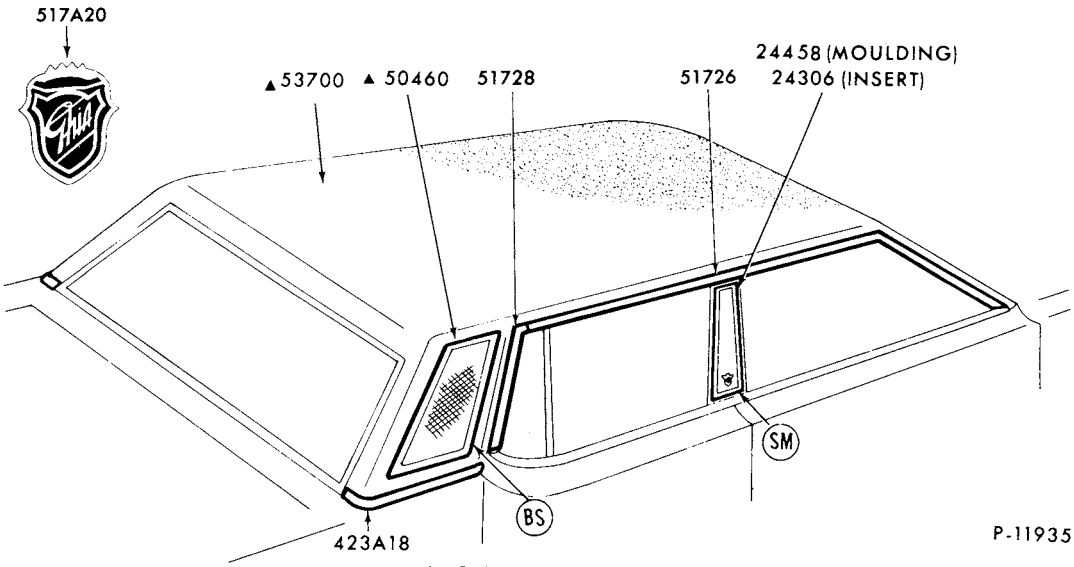

▲REFER TO GROUP IN SOFT TRIM SECTION
REFER TO EXTERIOR MOULDING SECTION "R" FOR COMPLETE RETAINER INFORMATION

1977 MONARCH - BODY TYPE 54 - ROOF and BACK BELT

GROUP NUMBER	PART NAME	DESCRIPTION	PART NUMBER		QTY.
24306-7	Moulding (center body pillar outside moulding)		(RH)♦D5DZ 5424306-A	(LH)♦D5DZ 5424307-A	1
24458-9	Moulding (center body pillar outside upper)		(RH)♦D5DZ 5424458-A	(LH)♦D5DZ 5424459-A	1
423A18-9	Moulding (back belt outside side)	Prime-paint to match	(RH)♦D7DZ 54423A18-A	(LH)♦D7DZ 54423A19-A	1
517A20	Ornament (roof side)	"Ghia"	♦D5ZZ 60517A20-A		2
51726-9	Moulding (roof drip side finish)	"Before 6/1/77"			
		Front	(RH) D5DZ 5451726-A	(LH) D5DZ 5451727-A	1
		Rear	(RH) D5DZ 5451728-A	(LH) D5DZ 5451729-A	1
		"From 6/1/77"			
		Front	(RH) D7DZ 5451726-A	(LH) D7DZ 5451727-A	1
		Rear	(RH) D7DZ 5451728-A	(LH) D7DZ 5451729-A	1

♦ Includes attaching parts

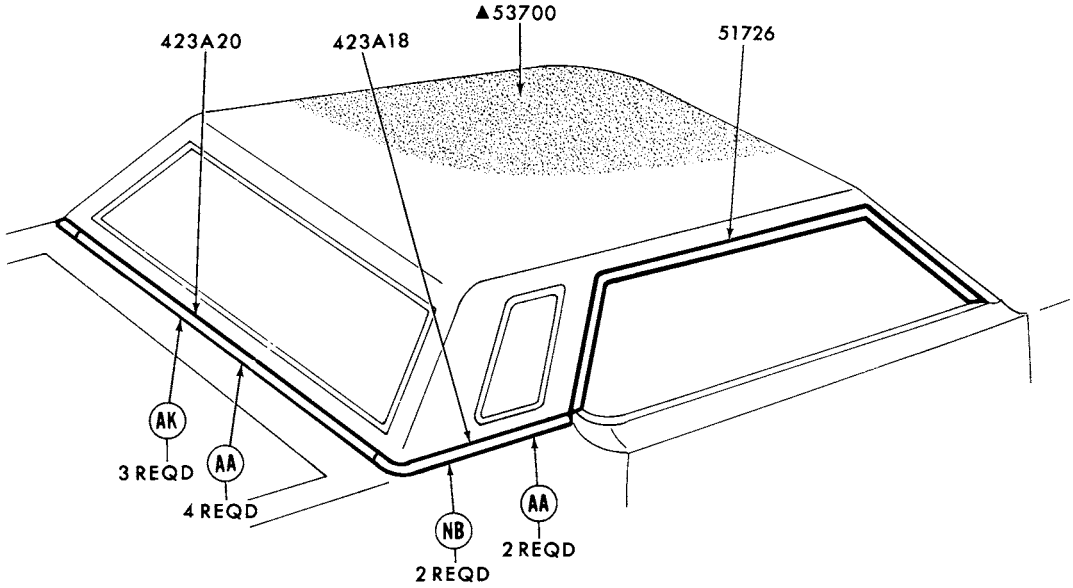

▲REFER TO GROUP IN SOFT TRIM SECTION
_ REFER TO EXTERIOR MOULDING SECTION "R" FOR COMPLETE RETAINER INFORMATION

P-11934

1977 MONARCH - BODY TYPE 66 - ROOF and BACK BELT

GROUP NUMBER	PART NAME	DESCRIPTION	PART NUMBER		QTY.
423A18-9	Moulding (back belt outside side)	Prime-paint to match	(RH) D7DZ 66423A18-A	(LH) D7DZ 66423A19-A	1
423A20	Moulding (back belt outside)	Prime-paint to match	♦D7DZ 66423A20-A		1
51726-7	Moulding (roof drip side finish)	"Before 6/1/77"			
		Black	(RH)✱D7DZ 6651726-A Not replaced (6/82)	(LH) D7DZ 6651727-A	1
		Bright	(RH) D7DZ 6651726-C	(LH) D5DZ 6651727-A	1
		"From 6/1/77"			
		Black	(RH)★D7DZ 6651726-B Not replaced (7/81)	(LH)★D7DZ 6651727-B Not replaced (7/81)	1
		Bright	(RH) D7DZ 6651726-C	(LH) D7DZ 6651727-C	1

♦ Includes attaching parts

COPYRIGHT © 1986 — FORD MOTOR COMPANY — DEARBORN, MICHIGAN

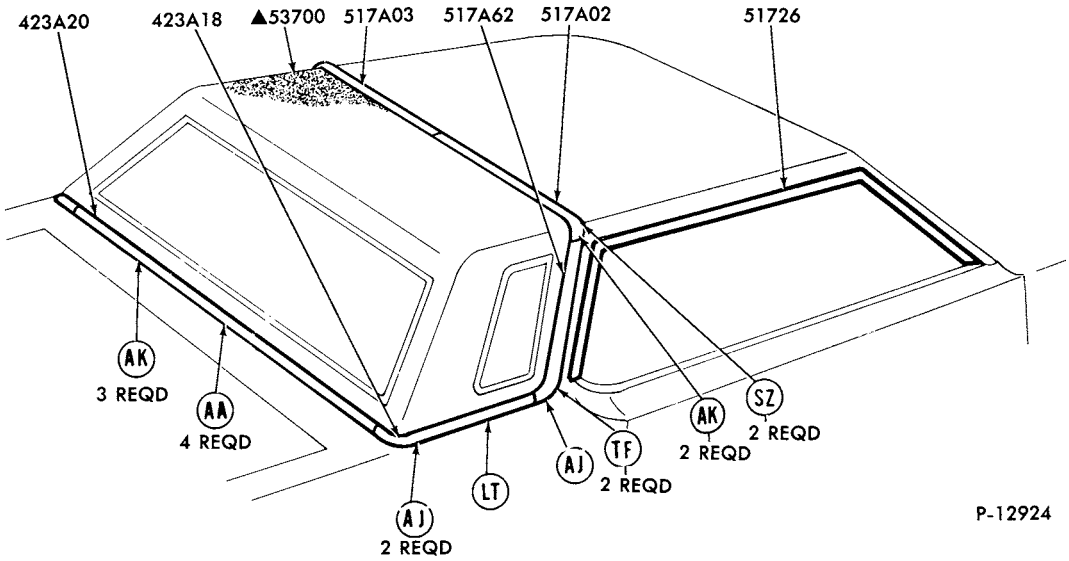

REFER TO EXTERIOR MOULDING SECTION 'R' FOR COMPLETE RETAINER INFORMATION

1977 MONARCH - BODY TYPE 66 - ROOF and BACK BELT - w/HALF VINYL ROOF

GROUP NUMBER	PART NAME	DESCRIPTION	PART NUMBER		QTY.
423A18-9	Moulding (back belt side)	Prime-paint to match	(RH)♦D6DZ 66423A18-D	(LH)♦D6DZ 66423A19-D	1
423A20	Moulding (back belt outside)	Prime-paint to match	♦D7DZ 66423A20-A		1
517A02-3	Moulding (roof outside top)	Prime-paint to match	(RH)♦D6DZ 66517A02-A	(LH)♦D6DZ 66517A03-A	1
51726-7	Moulding (roof drip side finish)	"Before 6/1/77"-			
		Black	(RH) D7DZ 6651726-A	(LH) D7DZ 6651727-A	1
		Bright	(RH) D5DZ 6651726-A	(LH) D5DZ 6651727-A	1
		"From 6/1/77" -			
		Black	(RH) D7DZ 6651726-B	(LH) D7DZ 6651727-B	1
		Bright	(RH) D7DZ 6651726-C	(LH) D7DZ 6651727-C	1
517A62-3	Moulding (roof outside side)	Prime-paint to match	(RH)♦D6DZ 66517A62-A	(LH)♦D6DZ 66517A63-A	1

♦ Includes attaching parts

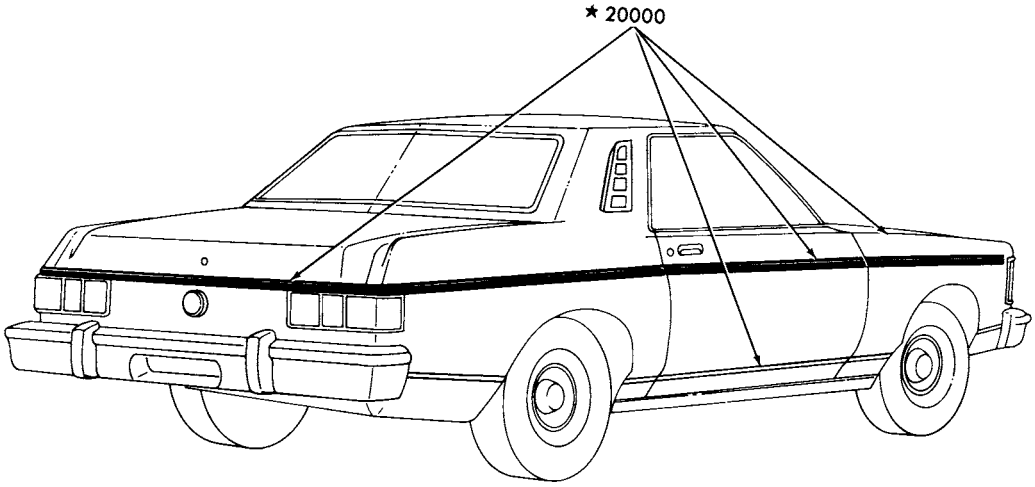

P-13598

1977 MONARCH - BODY TYPE 66H - STRIPES

GROUP NUMBER	PART NAME	DESCRIPTION	PART NUMBER	QTY.

ITEMS INDICATED WITH A BLACK STAR (★) MUST BE IMPROVISED OR PROCURED LOCALLY

COPYRIGHT © 1986 — FORD MOTOR COMPANY — DEARBORN, MICHIGAN

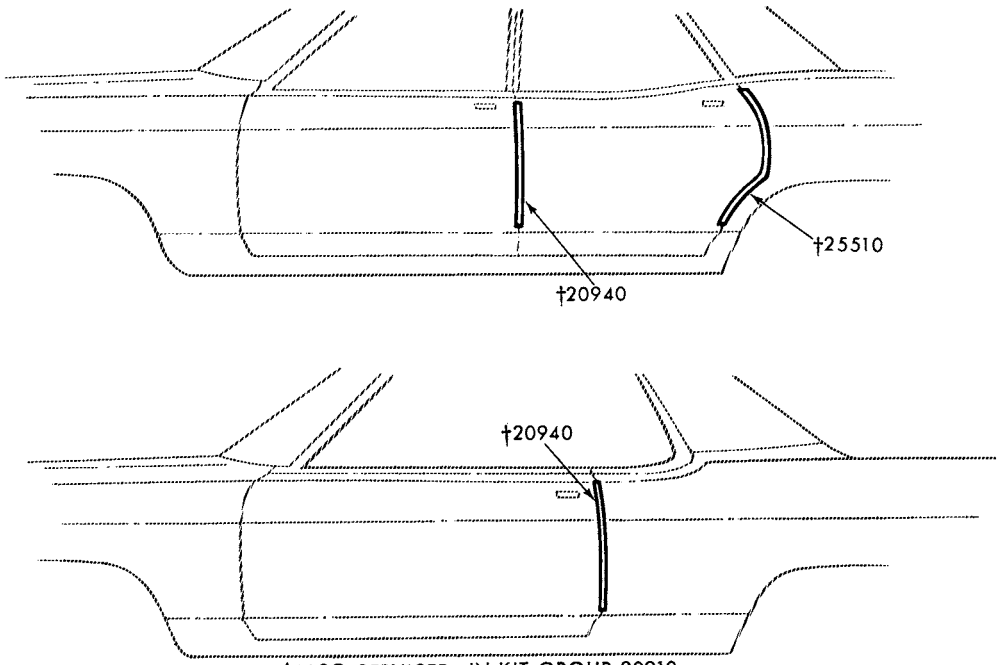

†ALSO SERVICED IN KIT-GROUP 20910

P-10061

1977 MONARCH - DOOR EDGE GUARDS

GROUP NUMBER	PART NAME	DESCRIPTION	PART NUMBER		QTY.
20910	Moulding kit (door edge guard)	Body type 54	★D5DZ 5420910-A	Not replaced (6/83)	1
		Body type 66	★D5DZ 6620910-A	Not replaced (6/83)	1
20940-1	Moulding (front door edge guard)	Body type 54	(RH) D5DZ 5420940-A	(LH) D5DZ 5420941-A	1
		Body type 66	(RH) D5DZ 6620940-A	(LH) D5DZ 6620941-A	1
25510-1	Moulding (rear door edge guard)	Body type 54	(RH) D5DZ 5425510-A	(LH) D5DZ 5425511-A	1

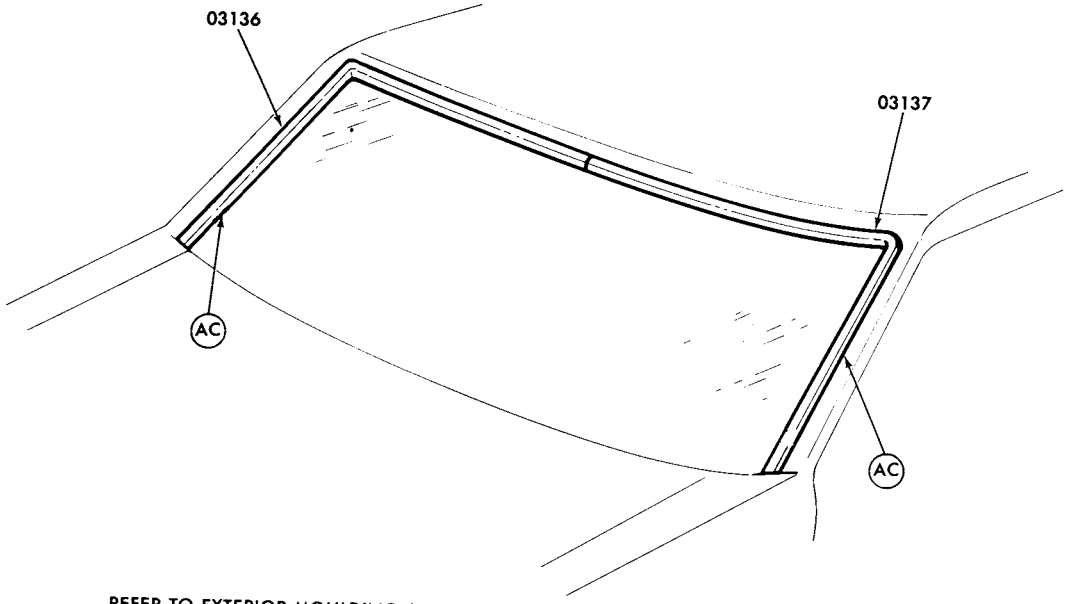

REFER TO EXTERIOR MOULDING SECTION 'R' FOR COMPLETE RETAINER INFORMATION

P-12994

1977 MARK V - WINDSHIELD

GROUP NUMBER	PART NAME	DESCRIPTION	PART NUMBER	QTY.
03136-7	Moulding (windshield outside side)		(RH)♦D7LY 6503136-A (LH)♦D7LY 6503137-A	1

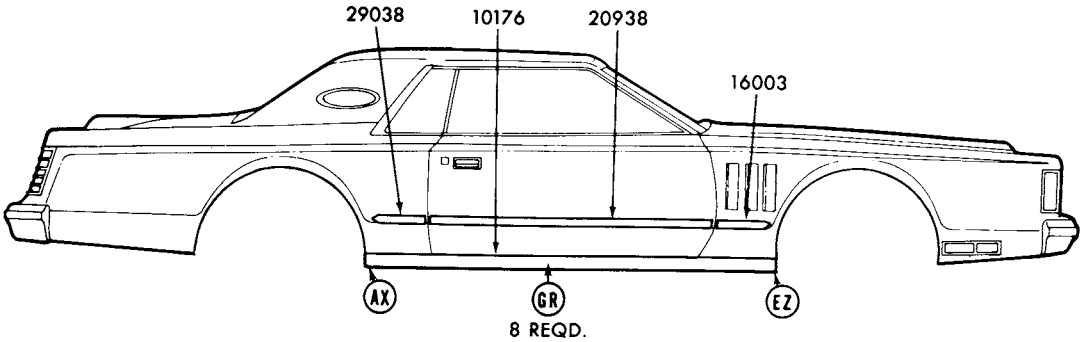

REFER TO EXTERIOR MOULDING SECTION "R" FOR COMPLETE RETAINER INFORMATION

P-13169

1977 MARK V - SIDE - w/ROCKER PANEL MOULDING

♦ Includes attaching parts

COPYRIGHT © 1986 — FORD MOTOR COMPANY — DEARBORN, MICHIGAN

1977 MARK V - SIDE - w/ROCKER PANEL MOULDING - cont'd.

GROUP NUMBER	PART NAME	DESCRIPTION	PART NUMBER		QTY.
10176-7	Moulding (body rocker panel)		(RH)♦D7LY 6510176-A	(LH)♦D7LY 6510177-A	1
16003	Moulding (front fender side)	Black vinyl insert	♦D2LY 16003-B	R.H. and L.H.	2
20938-9	Moulding (front door)	Black vinyl insert	♦D2LY 6520938-B	R.H. and L.H.	2
29038	Moulding (quarter)	Black vinyl insert	♦D2LY 16003-B	R.H. and L.H.	2

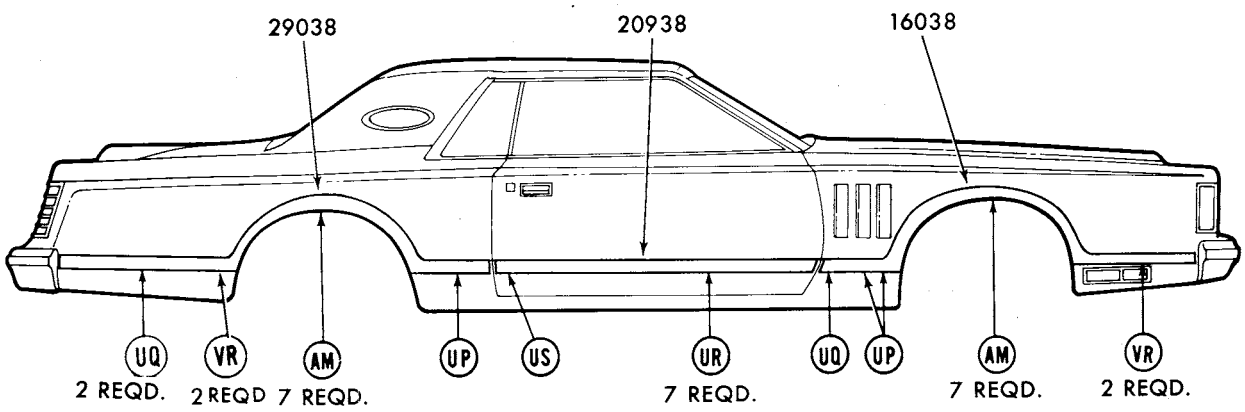

REFER TO EXTERIOR MOULDING SECTION "R" FOR COMPLETE RETAINER INFORMATION

P-13168

1977 MARK V - SIDE - w/WIDE MOULDINGS

GROUP NUMBER	PART NAME	DESCRIPTION	PART NUMBER		QTY.
16038-9	Moulding (front fender wheel opening)	Incl. vinyl insert			
		◊Black	(RH)♦D7LY 16038-AA	(LH)♦D7LY 16039-AA	1
		◊Blue (dark/midnight)	(RH)♦D7LY 16038-AB	(LH)♦D7LY 16039-AB	1
		◊Blue (light/ice)	(RH)♦D7LY 16038-BB	(LH)♦D7LY 16039-BB	1
		◊Blue (dark/metallic)	(RH)★D7LY 16038-CB Not replaced (2/81)	(LH)★D7LY 16039-CB Not replaced (4/83)	1
		◊Cinnamon Gold	(RH)♦D7LY 16038-AT	(LH)★D7LY 16039-AT Not replaced (4/84)	1
		◊Chamois	(RH)♦D7LY 16038-CT	(LH)♦D7LY 16039-CT	1
		◊Cordovan	(RH)♦D7LY 16038-AF	(LH)♦D7LY 16039-AF	1
		◊Cream	(RH)♦D7LY 16038-AV	(LH)♦D7LY 16039-AV	1
		◊Ember	(RH)★D7LY 16038-BT Not replaced (4/84)	(LH)★D7LY 16039-BT Not replaced (4/84)	1
		◊Gold	(RH)♦D7LY 16038-AY	(LH)♦D7LY 16039-AY	1
		◊Gray	(RH)♦D7LY 16038-AP	(LH)♦D7LY 16039-AP	1
		◊Jade (dark)	(RH)♦D7LY 16038-BR	(LH)♦D7LY 16039-BR	1
		◊Jade (light)	(RH)★D7LY 16038-AR Not replaced (2/81)	(LH)♦D7LY 16039-AR	1
		◊Red	(RH)♦D7LY 16038-AD	(LH)♦D7LY 16039-AD	1
		◊Rose	(RH)★D7LY 16038-BD Not replaced (2/81)	(LH)★D7LY 16039-BD Not replaced (4/84)	1
		◊Silver	(RH)♦D7LY 16038-BP	(LH)♦D7LY 16039-BP	1
		◊White	(RH)♦D7LY 16038-AW	(LH)♦D7LY 16039-AW	1

♦ Includes attaching parts

◊ For color verification, refer to the vinyl roof swatches in the 1977 Salesman's Color and Upholstery Selections Guide.

1977 MARK V - SIDE - w/WIDE MOULDINGS - cont'd.

GROUP NUMBER	PART NAME	DESCRIPTION	PART NUMBER		QTY.
20938-9	Moulding (front door outside)	Incl. vinyl insert			
		◊Black	(RH)♦D7LY 6520938-AA	(LH)♦D7LY 6520939-AA	1
		◊Blue (dark/midnight)	(RH)♦D7LY 6520938-AB	(LH)♦D7LY 6520939-AB	1
		◊Blue (light/ice)	(RH)★D7LY 6520938-BB Not replaced (4/83)	(LH)♦D7LY 6520939-BB	1
		◊Blue (dark/metallic)	(RH)♦D7LY 6520938-CB	(LH)★D7LY 6520939-CB Not replaced (4/83)	1
		◊Chamois	(RH)♦D7LY 6520938-CT	(LH)♦D7LY 6520939-CT	1
		◊Cinnamon Gold	(RH)♦D7LY 6520938-AT	(LH)★D7LY 6520939-AT Not replaced (4/84)	1
		◊Cordovan	(RH)♦D7LY 6520938-AF	(LH)♦D7LY 6520939-AF	1
		◊Cream	(RH)♦D7LY 6520938-AV	(LH)♦D7LY 6520939-AV	1
		◊Ember	(RH)♦D7LY 6520938-BT	(LH)★D7LY 6520939-BT Not replaced (4/83)	1
		◊Gold	(RH)♦D7LY 6520938-AY	(LH)♦D7LY 6520939-AY	1
		◊Gray	(RH)♦D7LY 6520938-AP	(LH)♦D7LY 6520939-AP	1
		◊Jade (dark)	(RH)♦D7LY 6520938-BR	(LH)♦D7LY 6520939-BR	1
		◊Jade (light)	(RH)♦D7LY 6520938-AR	(LH)♦D7LY 6520939-AR	1
		◊Red	(RH)♦D7LY 6520938-AD	(LH)♦D7LY 6520939-AD	1
		◊Rose	(RH)♦D7LY 6520938-BD	(LH)★D7LY 6520939-BD Not replaced (4/83)	1
		◊Silver	(RH)♦D7LY 6520938-BP	(LH)♦D7LY 6520939-BP	1
		◊White	(RH)♦D7LY 6520938-AW	(LH)♦D7LY 6520939-AW	1
29038-9	Moulding (quarter panel outside)	Incl. vinyl insert			
		◊Black	(RH)♦D7LY 6529038-AA	(LH)♦D7LY 6529039-AA	1
		◊Blue (dark/midnight)	(RH)♦D7LY 6529038-AB	(LH)♦D7LY 6529039-AB	1
		◊Blue (light/ice)	(RH)♦D7LY 6529038-BB	(LH)♦D7LY 6529039-BB	1
		◊Blue (dark/metallic)	(RH)♦D7LY 6529038-CB	(LH)★D7LY 6529039-CB Not replaced (2/81)	1
		◊Chamois	(RH)♦D7LY 6529038-CT	(LH)♦D7LY 6529039-CT	1
		◊Cinnamon Gold	(RH)♦D7LY 6529038-AT	(LH)♦D7LY 6529039-AT	1
		◊Cordovan	(RH)♦D7LY 6529038-AF	(LH)♦D7LY 6529039-AF	1
		◊Cream	(RH)♦D7LY 6529038-AV	(LH)♦D7LY 6529039-AV	1
		◊Ember	(RH)♦D7LY 6529038-BT	(LH)★D7LY 6529039-BT Not replaced (2/81)	1
		◊Gold	(RH)♦D7LY 6529038-AY	(LH)♦D7LY 6529039-AY	1
		◊Gray	(RH)♦D7LY 6529038-AP	(LH)♦D7LY 6529039-AP	1
		◊Jade (dark)	(RH)♦D7LY 6529038-BR	(LH)♦D7LY 6529039-BR	1
		◊Jade (light)	(RH)♦D7LY 6529038-AR	(LH)♦D7LY 6529039-AR	1
		◊Red	(RH)♦D7LY 6529038-AD	(LH)♦D7LY 6529039-AD	1
		◊Rose	(RH)♦D7LY 6529038-BD	(LH)♦D7LY 6529039-BD	1
		◊Silver	(RH)♦D7LY 6529038-BP	(LH)♦D7LY 6529039-BP	1
		◊White	(RH)♦D7LY 6529038-AW	(LH)♦D7LY 6529039-AW	1

♦ Includes attaching parts
◊ For color verification, refer to the vinyl roof swatches in the 1977 Salesman's Color and Upholstery Selections Guide.

COPYRIGHT © 1986 — FORD MOTOR COMPANY — DEARBORN, MICHIGAN

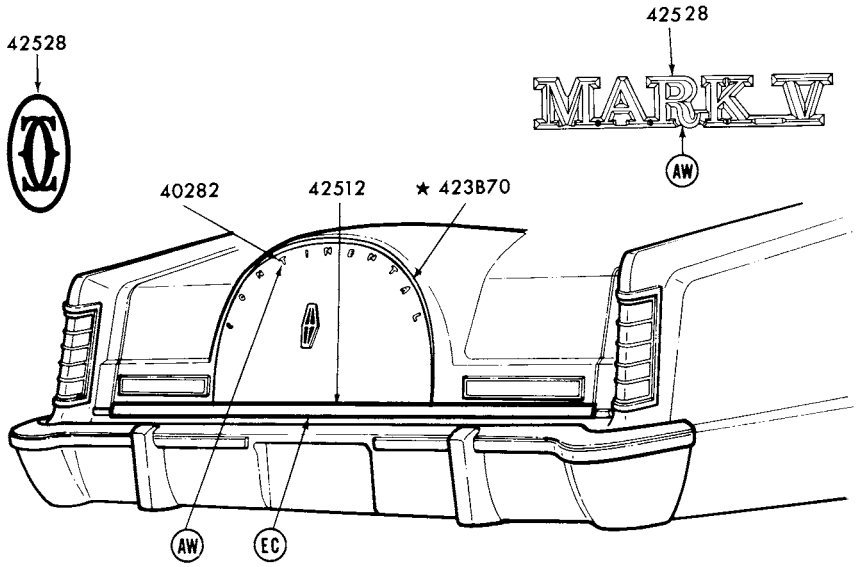

REFER TO EXTERIOR MOULDING SECTION "R" FOR COMPLETE RETAINER INFORMATION

P-13170

1977 MARK V - BACK END

GROUP NUMBER	PART NAME	DESCRIPTION	PART NUMBER	QTY.
40282	Letter (name)	"C"	♦D7LY 6540282-A	1
		"O"	♦D7LY 6540282-B	1
		"N" - sides	♦D7LY 6540282-C	2
		"N" - top	♦D7LY 6540282-F	1
		"T"	♦D7LY 6540282-D	2
		"I"	♦D7LY 6540282-E	1
		"E"	♦D7LY 6540282-G	1
		"A"	♦D7LY 6540282-H	1
		"L"	♦D7LY 6540282-J	1
42512	Moulding (luggage compartment door)		♦D7LY 6542512-A	1
42528	Transfer (name)	"MARK V"	♦D7LY 6542528-A	1
		" ☡"-Red	D7LY 6542528-AD	1

♦ Includes attaching parts

◊ For color verification, refer to the vinyl roof swatches in the 1977 Salesman's Color and Upholstery Selections Guide.

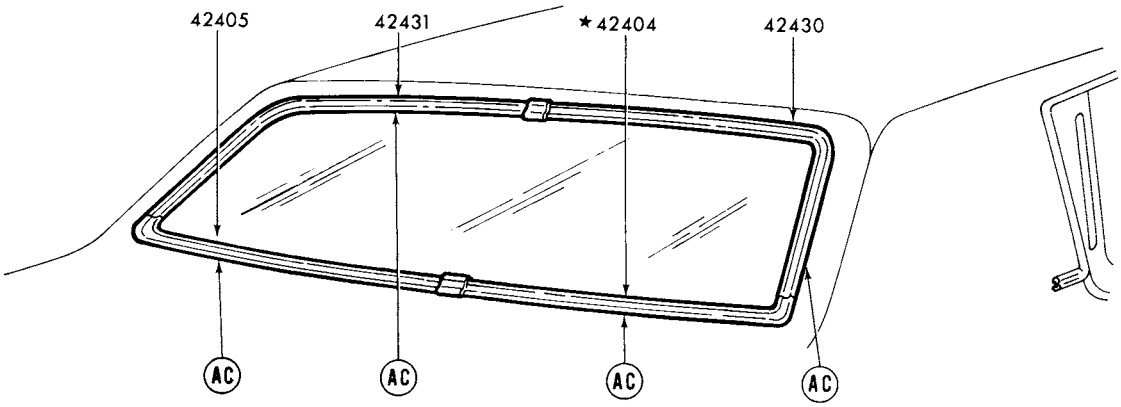

REFER TO EXTERIOR MOULDING SECTION "R" FOR COMPLETE RETAINER INFORMATION

P-12459

1977 MARK V - BACK WINDOW

GROUP NUMBER	PART NAME	DESCRIPTION	PART NUMBER		QTY.
42404-5	Moulding (back window lower)	W/o vinyl roof	(RH)♦D7LY 6542404-A	(LH)♦D7LY 6542405-A	1
		W/half vinyl roof	(RH)♦D7LY 6542404-B	(LH)♦D7LY 6542405-B	1
		W/full vinyl roof			
		◊Black	(RH)★D7LY 6542404-AA	(LH)★D7LY 6542405-AA	1
		◊Blue (dark/midnight)	(RH)★D7LY 6542404-BB	(LH)★D7LY 6542405-BB	1
		◊Blue (light/ice)	(RH)★D7LY 6542404-AB Not replaced (4/83)	(LH)★D7LY 6542405-AB Not replaced (4/83)	1
		◊Blue (dark/metallic)	(RH)★D7LY 6542404-CB Not replaced (4/83)	(LH)★D7LY 6542405-CB Not replaced (4/83)	1
		◊Chamois	(RH)★D7LY 6542404-CT Not replaced (4/83)	(LH)★D7LY 6542405-CT Not replaced (4/83)	1
		◊Cinnamon Gold	(RH)★D7LY 6542404-DT Not replaced (4/83)	(LH)★D7LY 6542405-DT Not replaced (4/83)	1
		◊Cordovan	(RH)★D7LY 6542404-AF Not replaced(4/84)	(LH)★D7LY 6542405-AF	1
		◊Cream	(RH)★D7LY 6542404-AV	(LH)★D7LY 6542405-AV	1
		◊Ember	(RH)★D7LY 6542404-BT Not replaced (4/83)	(LH)★D7LY 6542405-BT Not replaced (4/83)	1
		◊Gold	(RH)★D7LY 6542404-AY Not replaced (4/83)	(LH)★D7LY 6542405-AY Not replaced (4/83)	1
		◊Gray	(RH)★D7LY 6542404-AP	(LH)★D7LY 6542405-AP	1
		◊Jade (dark)	(RH)★D7LY 6542404-BR Not replaced (4/83)	(LH)★D7LY 6542405-BR Not replaced (4/83)	1
		◊Jade (light)	(RH)★D7LY 6542404-AR	(LH)★D7LY 6542405-AR	1
		◊Red	(RH)★D7LY 6542404-AD	(LH)★D7LY 6542405-AD	1
		◊Rose	(RH)★D7LY 6542404-BD Not replaced (4/83)	(LH)★D7LY 6542405-BD Not replaced (4/83)	1
		◊Silver	(RH)★D7LY 6542404-BP	(LH)★D7LY 6542405-BP	1
		◊White	(RH)★D7LY 6542404-AW Not replaced (4/83)	(LH)★D7LY 6542405-AW Not replaced (4/83)	1
42430-1	Moulding (back window upper)	W/o vinyl roof	(RH)♦D7LY 6542430-A	(LH)♦D7LY 6542431-A	1
		W/half vinyl roof	(RH)★D7LY 6542430-B Not replaced (4/83)	(LH)★D7LY 6542431-B Not replaced (4/83)	1
		W/full vinyl roof			
		◊Black	(RH)★D7LY 6542430-AA	(LH)★D7LY 6542431-AA	1
		◊Blue (dark/midnight)	(RH)★D7LY 6542430-BB	(LH)★D7LY 6542431-BB	1
		◊Blue (light/ice)	(RH)★D7LY 6542430-AB Not replaced (4/83)	(LH)★D7LY 6542431-AB Not replaced (4/83)	1
		◊Blue (dark/metallic)	(RH)★D7LY 6542430-CB Not replaced (4/83)	(LH)★D7LY 6542431-CB Not replaced (4/83)	1

♦ Includes attaching parts

◊ For color verification, refer to the vinyl roof swatches in the 1977 Salesman's Color and Upholstery Selections Guide.

COPYRIGHT © 1986 — FORD MOTOR COMPANY — DEARBORN, MICHIGAN

New Issue

1977 MARK V - BACK WINDOW

GROUP NUMBER	PART NAME	DESCRIPTION	PART NUMBER		QTY.
42430-1	Moulding (back wdw. uppr)cont'd.	◊Chamois	(RH)♦D7LY 6542430-CT	(LH)♦D7LY 6542431-CT	
		◊Cinnamon Gold	(RH)★D7LY 6542430-DT Not replaced (4/83)	(LH)★D7LY 6542431-DT Not replaced (4/83)	1
		◊Cordovan	(RH)♦D7LY 6542430-AF	(LH)♦D7LY 6542431-AF	1
		◊Cream	(RH)♦D7LY 6542430-AV	(LH)♦D7LY 6542431-AV	1
		◊Ember	(RH)★D7LY 6542430-BT Not replaced (4/83)	(LH)★D7LY 6542431-BT Not replaced (4/83)	1
		◊Gold	(RH)★D7LY 6542430-AY Not replaced (4/83)	(LH)★D7LY 6542431-AY Not replaced (4/83)	1
		◊Gray	(RH)♦D7LY 6542430-AP	(LH)♦D7LY 6542431-AP	1
		◊Jade (dark)	(RH)★D7LY 6542430-BR Not replaced (4/83)	(LH)★D7LY 6542431-BR Not replaced (4/83)	1
		◊Jade (light)	(RH)♦D7LY 6542430-AR	(LH)♦D7LY 6542431-AR	1
		◊Red	(RH)♦D7LY 6542430-AD	(LH)♦D7LY 6542431-AD	1
		◊Rose	(RH)★D7LY 6542430-BD Not replaced (4/83)	(LH)★D7LY 6542431-BD Not replaced (4/83)	1
		◊Silver	(RH)♦D7LY 6542430-BP	(LH)♦D7LY 6542431-BP	1
		◊White	(RH)♦D7LY 6542430-AW	(LH)♦D7LY 6542431-AW	1

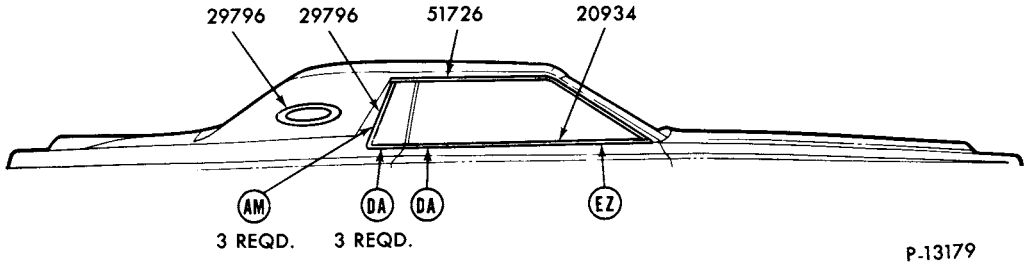

REFER TO EXTERIOR MOULDING SECTION "R" FOR COMPLETE RETAINER INFORMATION

1977 MARK V - DRIP RAIL, DOOR BELT and QUARTER WINDOW

GROUP NUMBER	PART NAME	DESCRIPTION	PART NUMBER		QTY.
20934-5	Moulding and weatherstrip (front door belt)		(RH)♦D7LY 6520934-A	(LH)♦D7LY 6520935-A	1
29796-7	Moulding (front quarter window)		(RH)♦D7LY 6529796-A	(LH)♦D7LY 6529797-A	1
29796-7	Moulding (opera window)	W/vinyl roof	D7LY 6529796-BA	R.H. and L.H.	2
		W/o vinyl roof	D7LY 6529796-AA	R.H. and L.H.	2
51726-7	Moulding (roof drip rail side)	W/o full vinyl roof	(RH)♦D7LY 6551726-B	(LH)♦D7LY 6551727-B	1
		W/full vinyl roof	(RH)♦D7LY 6551726-D	(LH)♦D7LY 6551727-D	1

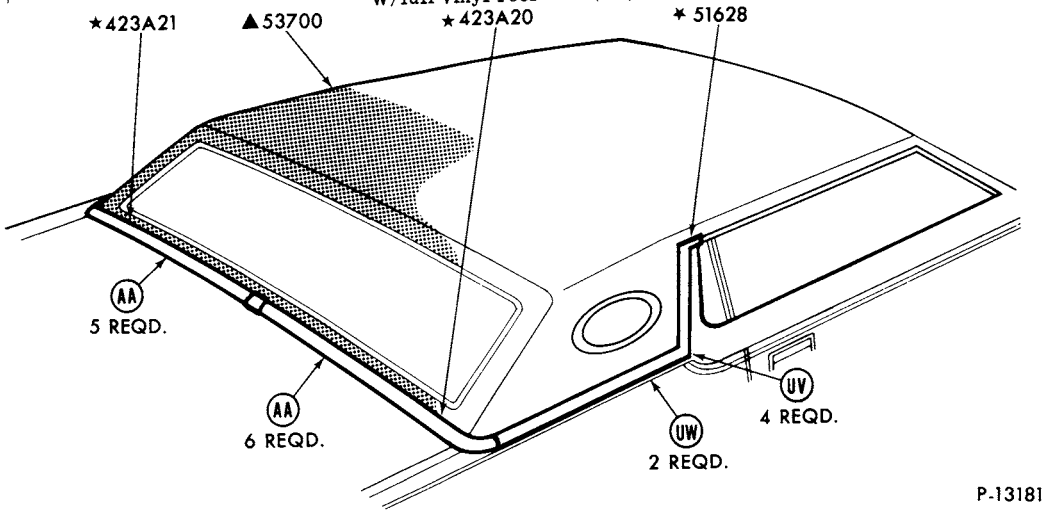

▲REFER TO GROUP IN SOFT TRIM SECTION
REFER TO EXTERIOR MOULD SECTION "R" FOR COMPLETE RETAINER INFORMATION

1977 MARK V - ROOF and BACK BELT - w/FULL VINYL ROOF

♦ Includes attaching parts

1977 MARK V - ROOF and BACK BELT - w/FULL VINYL ROOF - Cont'd.

GROUP NUMBER	PART NAME	DESCRIPTION	PART NUMBER		QTY.
423A20-1	Moulding (back belt rear)	◊Black	(RH)★D7LY 65423A20-AA	(LH)★D7LY 65423A21-AA	1
		◊Blue (dark/midnight)	(RH)★D7LY 65423A20-BB	(LH)★D7LY 65423A21-BB	1
		◊Blue (light/ice)	(RH)★D7LY 65423A20-AB Not replaced (4/83)	(LH)★D7LY 65423A21-AB Not replaced (4/83)	1
		◊Blue (dark/metallic)	(RH)★D7LY 65423A20-CB Not replaced (4/83)	(LH)★D7LY 65423A21-CB Not replaced (4/83)	1
		◊Chamois	(RH)★D7LY 65423A20-CT Not replaced(4/84)	(LH)★D7LY 65423A21-CT	1
		◊Cinnamon Gold	(RH)★D7LY 65423A20-DT Not replaced (4/83)	(LH)★D7LY 65423A21-DT Not replaced (4/83)	1
		◊Cordovan	(RH)★D7LY 65423A20-AF	(LH)★D7LY 65423A21-AF	1
		◊Cream	(RH)★D7LY 65423A20-AV	(LH)★D7LY 65423A21-AV	1
		◊Ember	(RH)★D7LY 65423A20-BT Not replaced (4/83)	(LH)★D7LY 65423A21-BT Not replaced (4/83)	1
		◊Gold	(RH)★D7LY 65423A20-AY Not replaced (4/83)	(LH)★D7LY 65423A21-AY Not replaced (4/83)	1
		◊Gray	(RH)★D7LY 65423A20-AP	(LH)★D7LY 65423A21-AP	1
		◊Jade (dark)	(RH)★D7LY 65423A20-BR Not replaced (4/83)	(LH)★D7LY 65423A21-BR Not replaced (4/83)	1
		◊Jade (light)	(RH)★D7LY 65423A20-AR	(LH)★D7LY 65423A21-AR	1
		◊Red	(RH)★D7LY 65423A20-BD	(LH)★D7LY 65423A21-BD	1
		◊Rose	(RH)★D7LY 65423A20-CD Not replaced (4/83)	(LH)★D7LY 65423A21-CD Not replaced (4/83)	1
		◊Silver	(RH)★D7LY 65423A20-BP	(LH)★D7LY 65423A21-BP	1
		◊White	(RH)★D7LY 65423A20-AW	(LH)★D7LY 65423A21-AW	1
51628-9	Moulding (back belt side)	◊Black	(RH)★D7LY 6551628-AA	(LH)★D7LY 6551629-AA	1
		◊Blue (dark/midnight)	(RH)★D7LY 6551628-BB	(LH)★D7LY 6551629-BB	1
		◊Blue (light/ice)	(RH)★D7LY 6551628-AB Not replaced (4/83)	(LH)★D7LY 6551629-AB Not replaced (4/83)	1
		◊Blue (dark/metallic)	(RH)★D7LY 6551628-CB Not replaced (4/83)	(LH)★D7LY 6551629-CB Not replaced (4/83)	1
		◊Chamois	(RH)★D7LY 6551628-CT	(LH)★D7LY 6551629-CT	1
		◊Cinnamon Gold	(RH)★D7LY 6551628-DT Not replaced (4/83)	(LH)★D7LY 6551629-DT Not replaced (4/83)	1
		◊Cordovan	(RH)★D7LY 6551628-AF	(LH)★D7LY 6551629-AF	1
		◊Cream	(RH)★D7LY 6551628-AV	(LH)★D7LY 6551629-AV	1
		◊Ember	(RH)★D7LY 6551628-BT Not replaced (4/83)	(LH)★D7LY 6551629-BT Not replaced (4/83)	1
		◊Gold	(RH)★D7LY 6551628-AY Not replaced (4/83)	(LH)★D7LY 6551629-AY Not replaced (4/83)	1
		◊Gray	(RH)★D7LY 6551628-AP	(LH)★D7LY 6551629-AP	1
		◊Jade (dark)	(RH)★D7LY 6551628-BR Not replaced (4/83)	(LH)★D7LY 6551629-BR Not replaced (4/83)	1
		◊Jade (light)	(RH)★D7LY 6551628-AR	(LH)★D7LY 6551629-AR	1
		◊Red	(RH)★D7LY 6551628-BD	(LH)★D7LY 6551629-BD	1
		◊Rose	(RH)★D7LY 6551628-CD	(LH)★D7LY 6551629-CD	1
		◊Silver	(RH)★D7LY 6551628-BP	(LH)★D7LY 6551629-BP	1
		◊White	(RH)★D7LY 6551628-AW	(LH)★D7LY 6551629-AW	1

♦ Includes attaching parts
◊ For color verification, refer to the vinyl roof swatches in the 1977 Salesman's Color and Upholstery Selections Guide.

COPYRIGHT © 1986 — FORD MOTOR COMPANY — DEARBORN, MICHIGAN

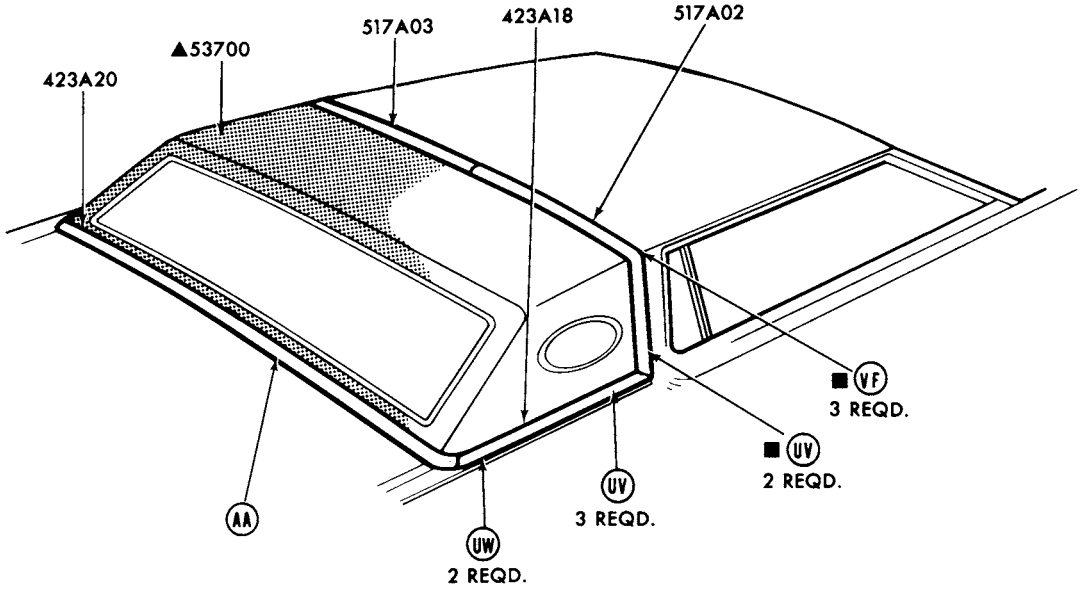

■ REFER TO GROUP 517A78 KIT FOR RETAINERS WITH SLIDING ROOF

REAR HALF VINYL ROOF

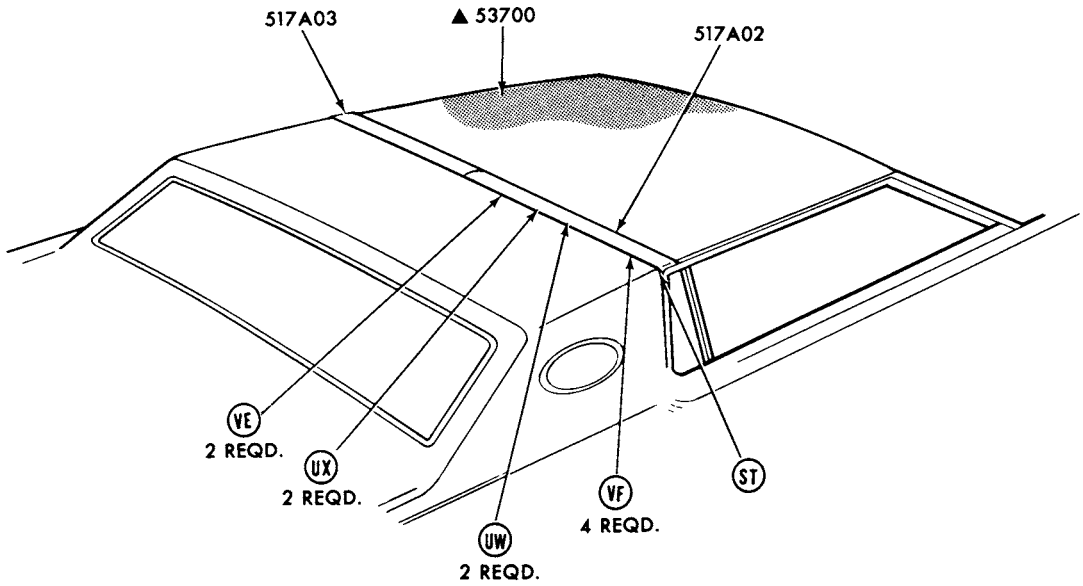

▲ REFER TO GROUP IN SOFT TRIM SECTION
REFER TO EXTERIOR MOULDING SECTION 'R' FOR COMPLETE RETAINER INFORMATION

FRONT HALF VINYL ROOF

P-13182

1977 MARK V - ROOF and BACK BELT - w/HALF VINYL ROOF

1977 MARK V - ROOF and BACK BELT - w/HALF VINYL ROOF - cont'd.

GROUP NUMBER	PART NAME	DESCRIPTION	PART NUMBER		QTY.
423A18-9	Moulding (back belt side)	◊Black	(RH)✶D7LY 65423A18-AA	(LH)✶D7LY 65423A19-AA	1
		◊Blue (dark/midnight)	(RH)✶D7LY 65423A18-BB Not replaced (4/84)	(LH)✶D7LY 65423A19-BB Not replaced (4/83)	1
		◊Blue (light/ice)	(RH)✶D7LY 65423A18-AB Not replaced (4/83)	(LH)✶D7LY 65423A19-AB Not replaced (4/83)	1
		◊Blue (dark/metallic)	(RH)✶D7LY 65523A18-CB Not replaced (4/83)	(LH)★D7LY 65523A19-CB	1
		◊Chamois	(RH)✶D7LY 65423A18-CT	(LH)✶D7LY 65423A19-CT Not replaced (4/83)	1
		◊Cinnamon Gold	(RH)✶D7LY 65423A18-DT Not replaced (4/83)	(LH)✶D7LY 65423A19-DT Not replaced (4/83)	1
		◊Cordovan	(RH)✶D7LY 65423A18-AF	(LH)★D7LY 65423A19-AF	1
		◊Cream	(RH)✶D7LY 65423A18-AV	(LH)✶D7LY 65423A19-AV	1
		◊Ember	(RH)✶D7LY 65423A18-BT Not replaced (4/83)	(LH)✶D7LY 65423A19-BT Not replaced (4/83)	1
		◊Gold	(RH)✶D7LY 65423A18-AY Not replaced (4/83)	(LH)✶D7LY 65423A19-AY Not replaced (4/83)	1
		◊Gray	(RH)✶D7LY 65423A18-AP	(LH)✶D7LY 65423A19-AP	1
		◊Jade (dark)	(RH)✶D7LY 65423A18-BR Not replaced (4/83)	(LH)✶D7LY 65423A19-BR Not replaced (4/83)	1
		◊Jade (light)	(RH)★D7LY 65423A18-AR Not replaced (4/84)	(LH)✶D7LY 65423A19-AR Not replaced (4/83)	1
		◊Red	(RH)✶D7LY 65423A18-BD	(LH)★D7LY 65423A19-BD	1
		◊Rose	(RH)✶D7LY 65423A18-CD Not replaced (4/83)	(LH)✶D7LY 65423A19-CD Not replaced (4/83)	1
		◊Silver	(RH)✶D7LY 65423A18-BP	(LH)★D7LY 65423A19-BP	1
		◊White	(RH)♦D7LY 65423A18-AW	(LH)♦D7LY 65423A19-AW	1
423A20-1	Moulding (back belt rear)	◊Black	(RH)✶D7LY 65423A20-AA	(LH)✶D7LY 65423A21-AA	1
		◊Blue (dark/midnight)	(RH)✶D7LY 65423A20-BB	(LH)★D7LY 65423A21-BB	1
		◊Blue (light/ice)	(RH)✶D7LY 65423A20-AB	(LH)★D7LY 65423A21-AA	1
		◊Blue (dark/metallic)	(RH)✶D7LY 65423A20-CB	(LH)★D7LY 65423A21-CB	1
		◊Chamois	(RH)★D7LY 65423A20-CT Not replaced (4/84)	(LH)✶D7LY 65423A21-CT	1
		◊Cinnamon Gold	(RH)★D7LY 65423A20-DT	(LH)✶D7LY 65423A21-DT	1
		◊Cordovan	(RH)✶D7LY 65423A20-AF	(LH)★D7LY 65423A21-AF	1
		◊Cream	(RH)★D7LY 65423A20-AV	(LH)★D7LY 65423A21-AV	1
		◊Ember	(RH)★D7LY 65423A20-BT	(LH)★D7LY 65423A21-BT	1
		◊Gold	(RH)★D7LY 65423A20-AY	(LH)★D7LY 65423A21-AY	1
		◊Gray	(RH)✶D7LY 65423A20-AP	(LH)✶D7LY 65423A21-AP	1
		◊Jade (dark)	(RH)★D7LY 65423A20-BR	(LH)✶D7LY 65423A21-BR	1
		◊Jade (light)	(RH)★D7LY 65423A20-AR	(LH)✶D7LY 65423A21-AR	1
		◊Red	(RH)★D7LY 65423A20-BD	(LH)★D7LY 65423A21-BD	1
		◊Rose	(RH)★D7LY 65423A20-CD	(LH)✶D7LY 65423A21-CD	1
		◊Silver	(RH)★D7LY 65423A20-BP	(LH)✶D7LY 65423A21-BP	1
		◊White	(RH)✶D7LY 65423A20-AW	(LH)★D7LY 65423A21-AW	1

◊ For color verification, refer to the vinyl roof swatches in the 1977 Salesman's Color and Upholstery Selections Guide.
♦ Includes attaching parts

COPYRIGHT © 1986 — FORD MOTOR COMPANY — DEARBORN, MICHIGAN

1977 MARK V - ROOF and BACK BELT - w/HALF VINYL ROOF - cont'd.

GROUP NUMBER	PART NAME	DESCRIPTION	PART NUMBER		QTY.
517A02-3	Moulding (roof top)	With rear half vinyl roof			
		◊Black	(RH)♦D7LY 65517A02-AA	(LH)♦D7LY 65517A03-AA	1
		◊Blue(dark/midnight)	(RH)♦D7LY 65517A02-BB	(LH)✶D7LY 65517A03-BB Not replaced (4/83)	1
		◊Blue (light/ice)	(RH)✶D7LY 65517A02-AB Not replaced (4/83)	(LH)✶D7LY 65517A03-AB Not replaced (4/83)	1
		◊Blue(dark/metallic)	(RH)✶D7LY 65517A02-CB Not replaced (4/83)	(LH)✶D7LY 65517A03-CB Not replaced (4/83)	1
		◊Chamois	(RH)✶D7LY 65517A02-CT Not replaced (4/84)	(LH)✶D7LY 65517A03-CT Not replaced (4/83)	1
		◊Cinnamon Gold	(RH)✶D7LY 65517A02-DT Not replaced (4/83)	(LH)✶D7LY 65517A03-DT Not replaced (4/83)	1
		◊Cordovan	(RH)♦D7LY 65517A02-AF	(LH)♦D7LY 65517A03-AF	1
		◊Cream	(RH)♦D7LY 65517A02-AV	(LH)✶D7LY 65517A03-AV Not replaced (4/84)	1
		◊Ember	(RH)✶D7LY 65517A02-BT Not replaced (4/83)	(LH)✶D7LY 65517A03-BT Not replaced (4/83)	1
		◊Gold	(RH)✶D7LY 65517A02-AY Not replaced (4/83)	(LH)✶D7LY 65517A03-AY Not replaced (4/83)	1
		◊Gray	(RH)♦D7LY 65517A02-AP	(LH)♦D7LY 65517A03-AP	1
		◊Jade (dark)	(RH)✶D7LY 65517A02-BR Not replaced (4/83)	(LH)✶D7LY 65517A03-BR Not replaced (4/83)	1
		◊Jade (light)	(RH)♦D7LY 65517A02-AR	(LH)✶D7LY 65517A03-AR Not replaced (4/84)	1
		◊Red	(RH)♦D7LY 65517A02-AD	(LH)♦D7LY 65517A03-AD	1
		◊Rose	(RH)✶D7LY 65517A02-BD Not replaced (4/83)	(LH)✶D7LY 65517A03-BD Not replaced (4/83)	1
		◊Silver	(RH)♦D7LY 65517A02-BP	(LH)♦D7LY 65517A03-BP	1
		◊White	(RH)♦D7LY 65517A02-AW	(LH)♦D7LY 65517A03-AW	1
		With front half vinyl roof			
		◊Chamois	(RH)♦D7LY 65517A02-ET	(LH)♦D7LY 65517A03-ET	1
517A78	Retainer kit (roof top moulding)	W/sliding moon roof	D7LY 65517A78-A		1

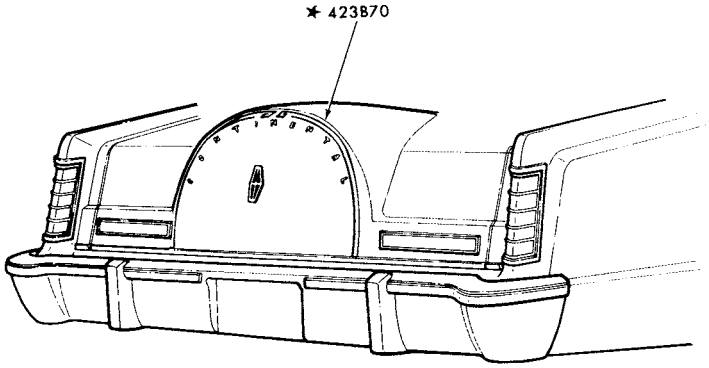

P-13502

1977 MARK V - STRIPE - LUGGAGE COMPARTMENT - DESIGNER SERIES GIVENCHY

GROUP NUMBER	PART NAME	DESCRIPTION	PART NUMBER	QTY.
423B70	Transfer (luggage compartment door)	◊Chamois	✶D7LY 65423B70-DC Not replaced (4/83)	1

♦ Includes attaching parts, to be used w/o sliding moon roof. Retainer kit D7LY 65517A78-A must be used to attach moulding with sliding moon roof only

♦ Includes attaching parts

◊ For color verification, refer to the vinyl roof swatches in the 1977 Salesman's Color and Upholstery Selections Guide.

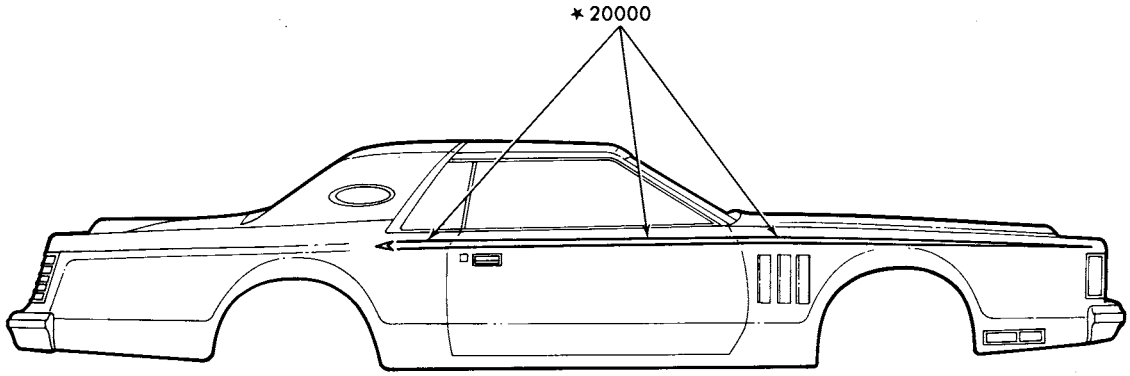

P-13501

1977 MARK V - STRIPES - DESIGNER SERIES PUCCI

GROUP NUMBER	PART NAME	DESCRIPTION	PART NUMBER	QTY.
20000	Stripes (body side)	Incl.-front fender, door and quarter panel -white/aqua blue	★D7LY 6520000-AW	1

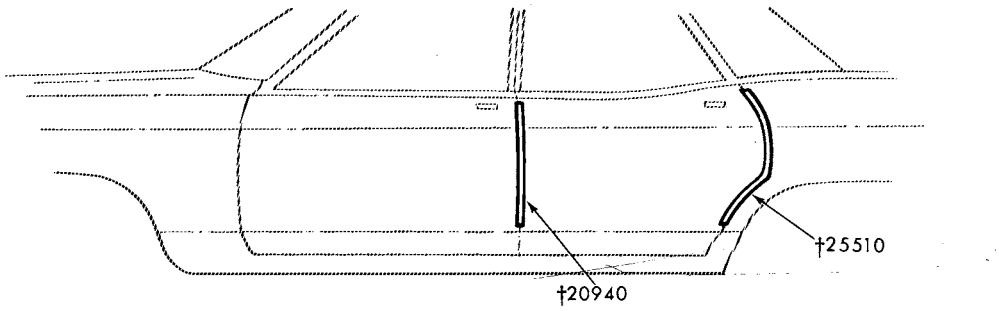

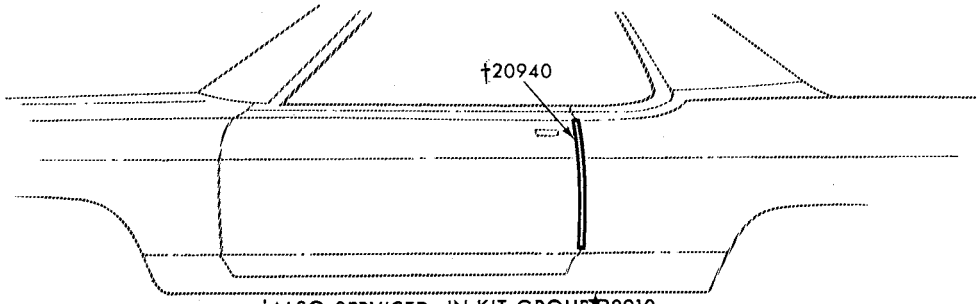

†ALSO SERVICED IN KIT-GROUP*20910

P-10061

1977 MARK V - DOOR EDGE GUARDS

GROUP NUMBER	PART NAME	DESCRIPTION	PART NUMBER	QTY.
20910	Moulding kit (door edge guard)		★D7LY 6520910-A Not replaced (4/83)	1
20940-1	Moulding (front door edge guard)		(RH) D7LY 6520940-A (LH) D7LY 6520941-A	1

COPYRIGHT © 1986 — FORD MOTOR COMPANY — DEARBORN, MICHIGAN

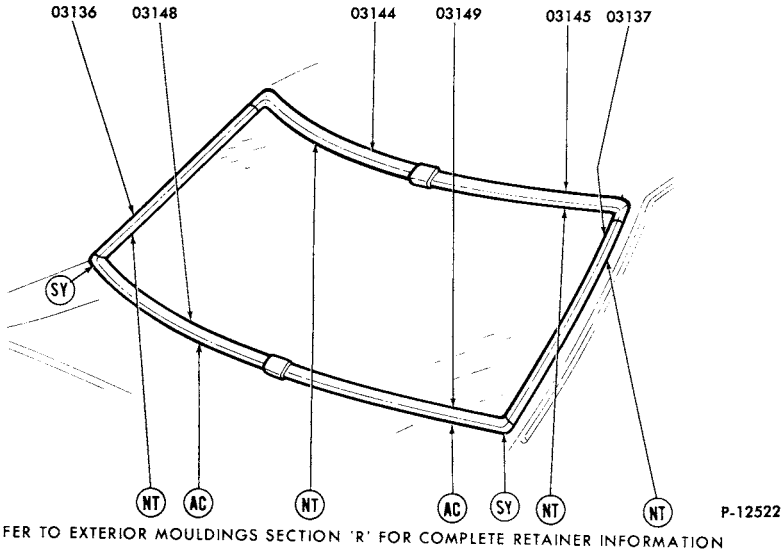

REFER TO EXTERIOR MOULDINGS SECTION 'R' FOR COMPLETE RETAINER INFORMATION

1977 BOBCAT - WINDSHIELD

GROUP NUMBER	PART NAME	DESCRIPTION	PART NUMBER		QTY.
03136-7	Moulding (windshield outside side)	Bright	(RH)♦D1FZ 6203136-A	(LH)♦D1FZ 6203137-A	1
		Black	(RH)♦D6FZ 6403136-A	(LH)♦D6FZ 6403137-A	1
03144-5	Moulding (windshield outside top)	Bright	(RH)♦D1FZ 6203144-A	(LH)♦D1FZ 6203145-A	1
		Black	(RH)★D6FZ 6403144-A	(LH)♦D6FZ 6403145-A	1
03148-9	Moulding (windshield outside belt)	Bright	(RH)♦D4FZ 6203148-A	(LH)♦D4FZ 6203149-A	1
		Black	(RH)♦D6FZ 6403148-A	(LH)♦D6FZ 6403149-A	1

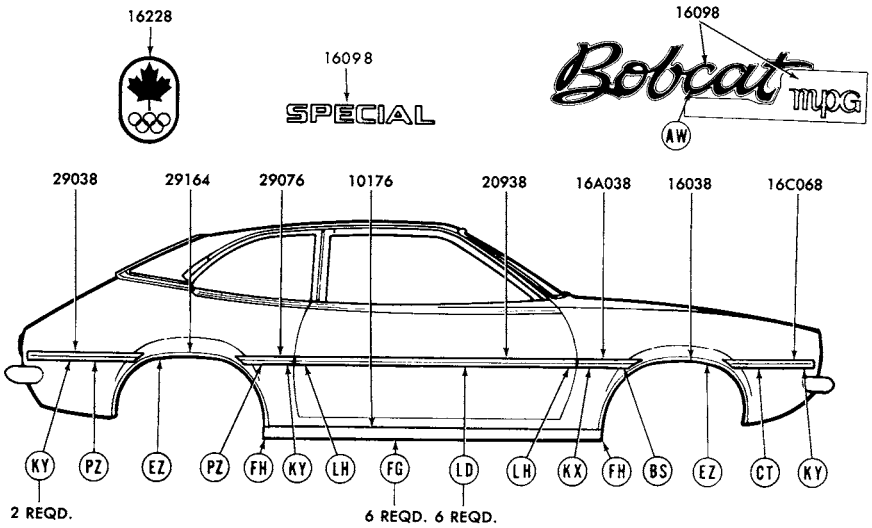

REFER TO EXTERIOR MOULDING SECTION "R" FOR COMPLETE RETAINER INFORMATION.

P-12314

1977 BOBCAT - BODY TYPES 62 and 64 - SIDE

♦ Includes attaching parts

COPYRIGHT © 1986 — FORD MOTOR COMPANY — DEARBORN, MICHIGAN

1977 BOECAT - BODY TYPES 62 and 64 - SIDE - cont'd.

GROUP NUMBER	PART NAME	DESCRIPTION	PART NUMBER		QTY.
10176-7	Moulding (body rocker panel)	W/wheel opening mouldings-63 1/2" long	(RH)♦D5FZ 6210176-B	(LH)♦D5FZ 6210177-B	1
		W/o wheel opening mouldings-64 29/32" long	♦D6FZ 6210176-A		1
16038-9	Moulding (front fender wheel opening)		(RH)♦D5FZ 16038-A	(LH)♦D5FZ 16039-A	1
16A038-9	Moulding (front fender lower rear)	Incl. vinyl insert			
		◊Black	(RH)♦D5FZ 16A038-AA	(LH)♦D5FZ 16A039-AA	1
		◊Blue	(RH)♦D7FZ 16A038-AB	(LH)♦D7FZ 16A039-AB	1
		◊Brown	(RH)♦D7FZ 16A038-AT	(LH)♦D7FZ 16A039-AT Not replaced (4/84)	1
		◊Green	(RH)★D7FZ 16A038-AG Not replaced (4/84)	(LH)★D7FZ 16A039-AG Not replaced (4/84)	1
		◊Red	(RH)♦D6FZ 16A038-AD	(LH)♦D6FZ 16A039-AD	1
		◊White	(RH)♦D7FZ 16A038-AW	(LH)♦D7FZ 16A039-AW	1
16C068-9	Moulding (front fender lower front)		Not used in 1977		
16098	Plate (name)	"Bobcat"	♦D5YY 16098-A	R.H. and L.H.	2
16098	Transfer (front fender)	"MPG"	Not used in 1977		
		"Special MPG"	Not used in 1977		
		"Special"	@D7YY 16098-A	R.H. and L.H.	2
16228	Transfer (front fender)	Olympic crest	Not used in 1977		
20938-9	Moulding (front door outside)	Incl. vinyl insert			
		◊Black	(RH)♦D5FZ 6220938-AA	(LH)♦D5FZ 6220939-AA	1
		◊Blue	(RH)♦D7FZ 6220938-AB	(LH)♦D7FZ 6220939-AB	1
		◊Brown	(RH)♦D7FZ 6220938-AT	(LH)♦D7FZ 6220939-AT	1
		◊Green	(RH)♦D7FZ 6220938-AG	(LH)★D7FZ 6220939-AG Not replaced (4/84)	1
		◊Red	(RH)♦D6FZ 6220938-AD	(LH)♦D6FZ 6220939-AD	1
		◊White	(RH)♦D7FZ 6220938-AW	(LH)♦D7FZ 6220939-AW	1
29038-9	Moulding (quarter outside lower rear)		Not used in 1977		
29076-7	Moulding (quarter outside lower front)	Incl. vinyl insert			
		◊Black	(RH)♦D5FZ 6229076-AA	(LH)♦D5FZ 6229077-AA	1
		◊Blue	(RH)♦D7FZ 6229076-AB	(LH)★D7FZ 6229077-AB	1
		◊Brown	(RH)♦D7FZ 6229076-AT	(LH)♦D7FZ 6229077-AT	1
		◊Green	(RH)♦D7FZ 6229076-AG	(LH)♦D7FZ 6229077-AG	1
		◊Red	(RH)♦D6FZ 6229076-AD	(LH)♦D6FZ 6229077-AD	1
		◊White	(RH)♦D7FZ 6229076-AW	(LH)♦D7FZ 6229077-AW	1
29164-5	Moulding (quarter wheel opening)		(RH)♦D5FZ 6229164-A	(LH)♦D5FZ 6229165-A	1

♦ Includes attaching parts @ Canada only

◊ For color verification, refer to the vinyl roof swatches in the 1977 Salesman's Color and Upholstery Selections Guide.

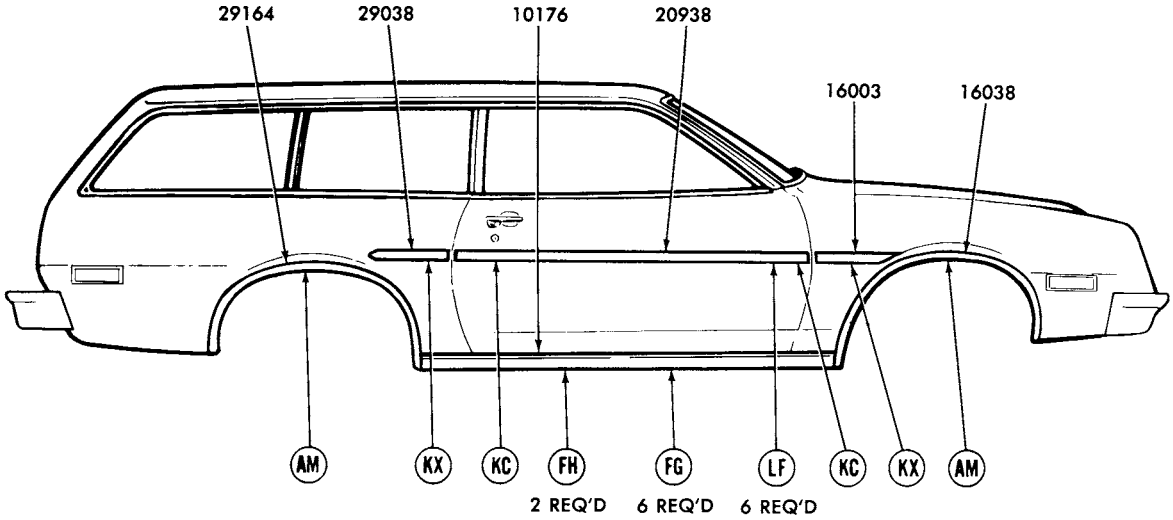

REFER TO EXTERIOR MOULDING SECTION "R" FOR COMPLETE RETAINER INFORMATION P-13195

1977 BOBCAT - BODY TYPE 73B - SIDE

GROUP NUMBER	PART NAME	DESCRIPTION	PART NUMBER		QTY.
10176-7	Moulding (body rocker panel)	W/wheel opening mouldings-63 1/2" long	(RH)♦D5FZ 6210176-B	(LH)♦D5FZ 6210177-B	1
		W/o wheel opening mouldings-64 29/32" long	♦D6FZ 6210176-A	R.H. and L.H.	2
16003	Moulding (front fender side)	Black vinyl insert-adhesive backed-cut to fit	D5DZ 5425532-D	R.H. and L.H.	2
16038-9	Moulding (front fender wheel opening)		(RH)♦D5FZ 16038-A	(LH)♦D5FZ 16039-A	1
20938	Moulding (front door outside)	Black vinyl insert-adhesive backed-cut to fit	D1OZ 6529038-B	R.H. and L.H.	2
29038	Moulding (quarter panel outside)	Black vinyl insert-adhesive backed-cut to fit	D5DZ 5425532-D	R.H. and L.H.	2
29164-5	Moulding (quarter wheel opening)		(RH)♦D5FZ 7329164-A	(LH)♦D5FZ 7329165-A	1

♦ Includes attaching parts

COPYRIGHT © 1986 — FORD MOTOR COMPANY — DEARBORN, MICHIGAN

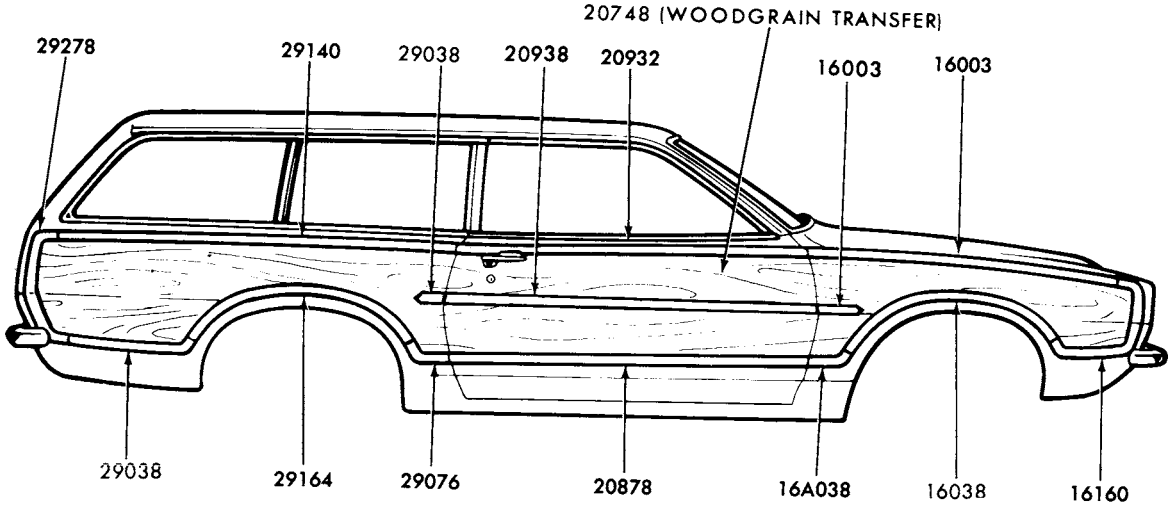

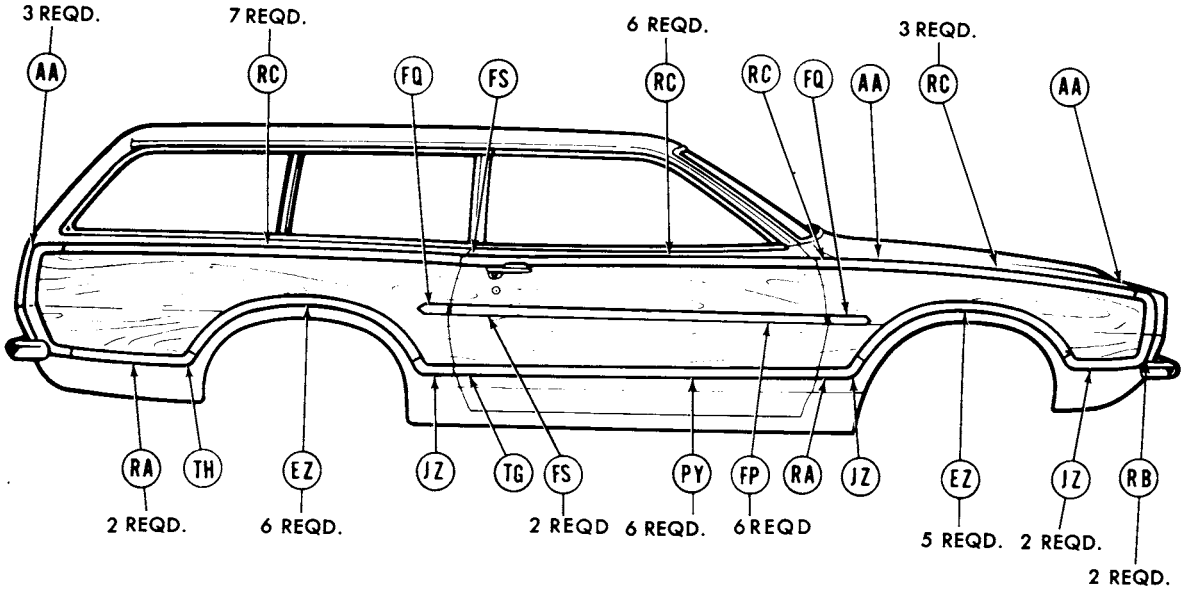

REFER TO EXTERIOR MOULDING SECTION "R" FOR COMPLETE RETAINER INFORMATION.

P-12315

1977 BOBCAT - BODY TYPE 73H - SIDE

1977 BOBCAT - BODY TYPE 73H - SIDE - cont'd.

GROUP NUMBER	PART NAME	DESCRIPTION	PART NUMBER		QTY.
16003-4	Moulding (front fender upper)	Bright finish	(RH)♦D5YY 16003-A	(LH)♦D5YY 16004-A	1
		Brown vinyl insert	♦D7FZ 16003-AT	R.H. and L.H.	2
16003	Moulding (front fender side)	Woodgrain vinyl insert	♦D4FZ 16003-B	R.H. and L.H.	2
16038-9	Moulding (front fender wheel opening)		(RH)♦D5YY 16038-A	(LH)♦D5YY 16039-A	1
16A038-9	Moulding (front lower rear)		(RH) D5YY 16A038-A	(LH) D5YY 16A039-A	1
16098	Plate (front fender name)	"BOBCAT"	Not used in 1977		
		"VILLAGER"	✶D2GY 16098-B	R.H. and L.H.	2
16098	Transfer (front fender)	"MPG"	Not used in 1977		
16160-1	Moulding (front fender front)		(RH)♦D5YY 16160-A	(LH)♦D5YY 16161-A	1
20748	Transfer (wood grain)	Rosewood	♦D6YY 7320748-A		AR
20878-9	Moulding (front door outside lower)	Bright finish	(RH)♦D5YY 7320878-A	(LH)♦D5YY 7320879-A	1
20932-3	Moulding (front door outside upper)	Bright finish	(RH)♦D5YY 7320932-A	(LH)♦D5YY 7320933-A	1
20938	Moulding (front door outside)	Brown vinyl insert	♦D7FZ 7320938-BT	R.H. and L.H.	2
		Woodgrain vinyl insert	♦D4FZ 7320938-A	R.H. and L.H.	2
29038-9	Moulding (quarter panel)	Bright finish-lower rear	(RH)♦D5YY 7329038-A	(LH)♦D5YY 7329039-A	1
		Brown vinyl insert	♦D7FZ 16003-AT	R.H. and L.H.	2
		Woodgrain vinyl insert	♦D4FZ 16003-B	R.H. and L.H.	2
29076-7	Moulding (quarter outside lower front)	Bright finish	(RH)♦D5YY 7329076-A	(LH)♦D5YY 7329077-A	1
29140-1	Moulding (quarter outside upper)	Bright finish	(RH)♦D5YY 7329140-A	(LH)♦D5YY 7329141-A	1
29164-5	Moulding (quarter wheel opening)	Bright finish	(RH)♦D5YY 7329164-A	(LH)♦D5YY 7329165-A	1
29278-9	Moulding (quarter outside rear)	Bright finish	(RH)♦D5YY 7329278-A	(LH)♦D5YY 7329279-A	1

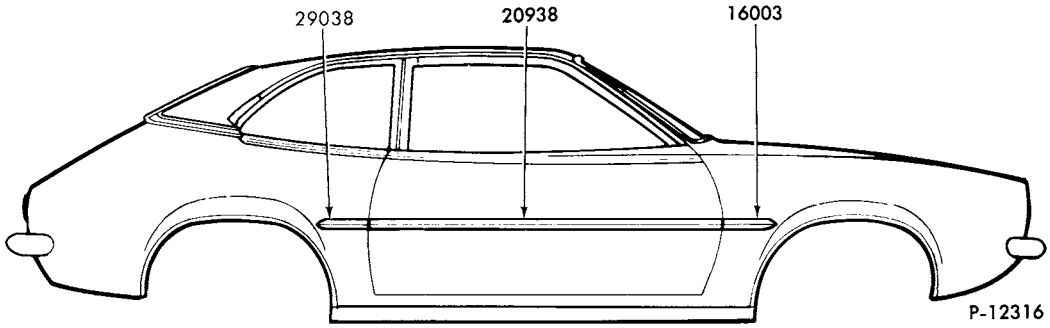

1977 BOBCAT - SIDE PROTECTION

COPYRIGHT © 1986 — FORD MOTOR COMPANY — DEARBORN, MICHIGAN

1977 BOBCAT - SIDE PROTECTION - cont'd.

GROUP NUMBER	PART NAME	DESCRIPTION	PART NUMBER	QTY.
16003	Moulding (front fender side)	Black vinyl insert-adhesive backed-cut to fit	D5DZ 5425532-D R.H. and L.H.	2
20938	Moulding (front door outside)	Black vinyl insert-adhesive backed-cut to fit	D1OZ 6529038-B R.H. and L.H.	2
29038	Moulding (quarter panel outside)	Black vinyl insert-adhesive backed-cut to fit	D5DZ 5425532-D R.H. and L.H.	2

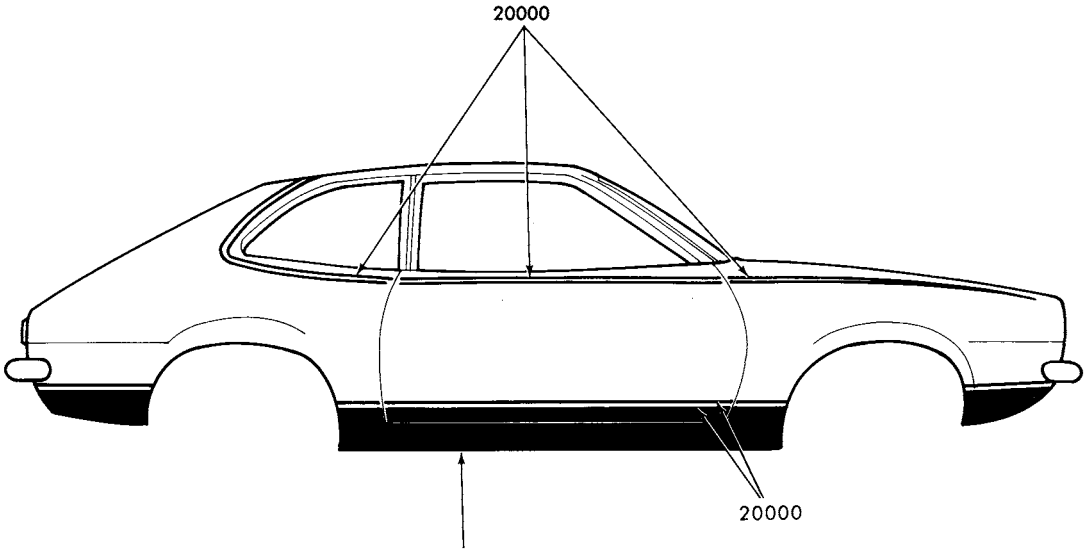

REFER TO PAGE 1 OF PAINT SECTION FOR ACRYLIC REPAIR MATERIAL

P-12779

1977 BOBCAT - BODY TYPES 62 and 64 - STRIPES

GROUP NUMBER	PART NAME	DESCRIPTION	PART NUMBER	QTY.
20000	Stripe kit	Blue-1 1/2" wide x 25' roll	D7YY 6220000-AB	1
		Brown	★ D7YY 6220000-AT Not replaced (6/82)	1
		Green	★ D7YY 6220000-AG Not replaced (7/81)	1
		Red	D6FZ 6220000-D	1
		White	★D4FZ 6220000-B	1
20000	Stripe kit (body side upper)	Blue-complete	D6FZ 6220000-A	1
		Jade	D8FZ 6220000-AA	1
		Orange	D6FZ 6220000-C	1
		Red	D6FZ 6220000-H	1
		White	D6FZ 6220000-E	1

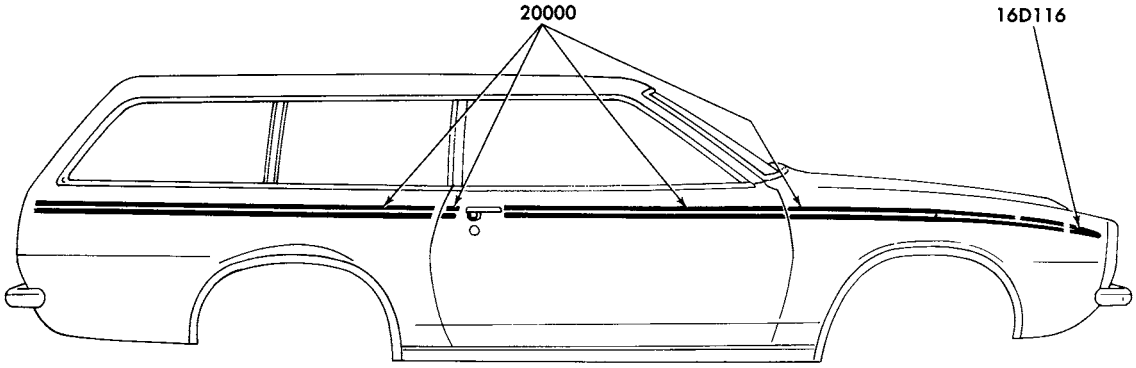

P12690

1977 BOBCAT - BODY TYPE 73 - STRIPES

GROUP NUMBER	PART NAME	DESCRIPTION	PART NUMBER	QTY.
16D116-7	Transfer (front fender front)	Gold	(RH)★D5YY 16D116-A (LH)★D5YY 16D117-A	1
20000	Stripe kit (body side)	Gold-1 1/2" wide x 25' roll	D5YY 7320000-A	1

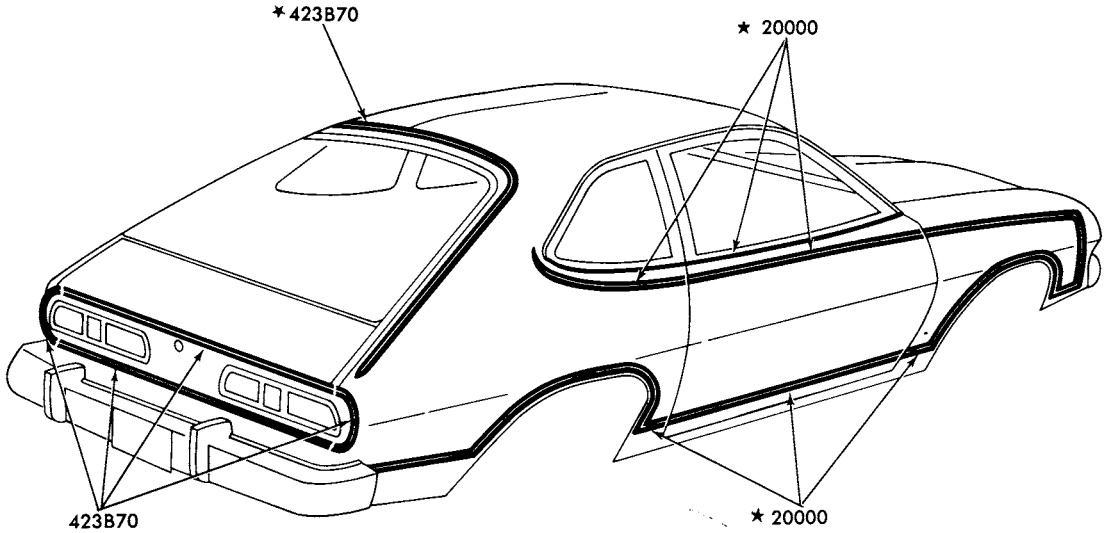

P-12993

1977 BOBCAT - BODY TYPE 64H - STRIPES

GROUP NUMBER	PART NAME	DESCRIPTION	PART NUMBER	QTY.
423B70	Stripe kit (lower back panel luggage compartment and quarter panel rear end)	Gold	★ D7YY 64423B70-A Not replaced (7/81)	1
423B70	Stripe kit (luggage compartment door opening)	Gold	D6YY 64423B70-B	1

COPYRIGHT © 1986 — FORD MOTOR COMPANY — DEARBORN, MICHIGAN

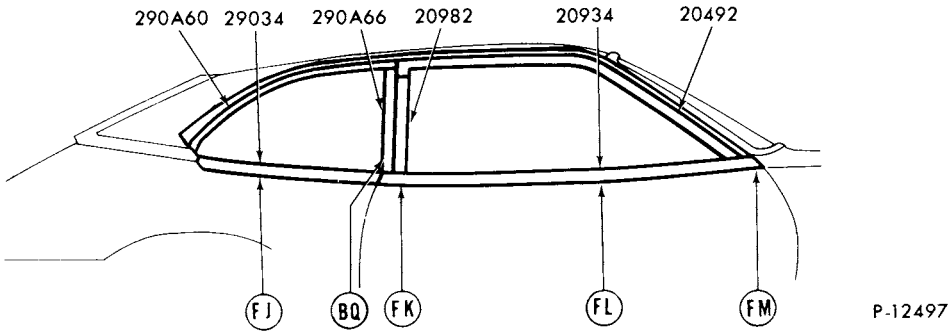

REFER TO EXTERIOR MOULDING SECTION 'R' FOR COMPLETE RETAINER INFORMATION

1977 BOBCAT - BODY TYPES 62 and 64 - DOOR and QUARTER WINDOW FRAME

GROUP NUMBER	PART NAME	DESCRIPTION	PART NUMBER		QTY.
20492-3	Moulding (front door window frame top)		(RH) ♦D1FZ 6220492-A	(LH) ♦D1FZ 6220493-A	1
20934-5	Moulding (front door outside belt)	R.H.-bright w/mirror	♦D4FZ 6220934-B		1
		R.H.-bright-w/o mirror	♦D4FZ 6220934-A		1
		L.H. -bright	♦D4FZ 6220935-A		1
20982-3	Moulding (front door window frame rear)		(RH) D2FZ 6220982-A	(LH) D2FZ 6220983-A	1
29034-5	Moulding (quarter outside belt)	Bright	(RH) ♦D2FZ 6229034-A	(LH) ♦D2FZ 6229035-A	1
290A60-1	Moulding (quarter window outside upper)	One piece design-w/stationary window	(RH) D2FZ 62290A60-B	(LH) D2FZ 62290A61-B	1
		Two piece design-w/stationary window	(RH) D2FZ 62290A60-C	(LH) D2FZ 62290A61-C	1
290A66-7	Moulding (quarter window outside front)	Two piece design-w/stationary window	(RH) D2FZ 62290A66-B	(LH) D2FZ 62290A67-B	1

♦ Includes attaching parts

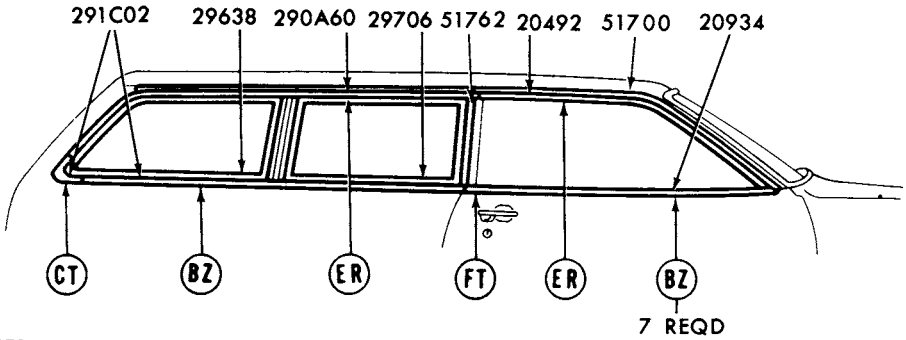

REFER TO EXTERIOR MOULDING SECTION 'R' FOR COMPLETE RETAINER INFORMATION

1977 BOBCAT - BODY TYPE 73 - DOOR and QUARTER WINDOW FRAME

GROUP NUMBER	PART NAME	DESCRIPTION	PART NUMBER	QTY.
20492-3	Moulding (front door window frame top)		(RH) D2FZ 7320492-B (LH) D2FZ 7320493-B	1
20934-5	Moulding (front door outside belt)	R.H.-w/mirror	♦D2FZ 7320934-D	1
		R.H.-w/o mirror	♦D2FZ 7320934-C	1
		L.H.	♦D2FZ 7320935-B	1
290A60-1	Moulding (quarter window outside upper)		(RH)♦D2FZ 73290A60-A (LH)♦D2FZ 73290A61-A	1
291C02-3	Moulding (quarter window outside lower rear		(RH)♦D2FZ 73291C02-A (LH)♦D2FZ 73291C03-A	1
29638-9	Moulding (rear quarter window outside front)		(RH) D4FZ 7329638-A (LH) D4FZ 7329639-A	1
29706-7	Moulding (front quarter window)	Serviced only in assy.-refer to group 29706-11 in text section		

♦ Includes attaching parts

COPYRIGHT © 1986 — FORD MOTOR COMPANY — DEARBORN, MICHIGAN

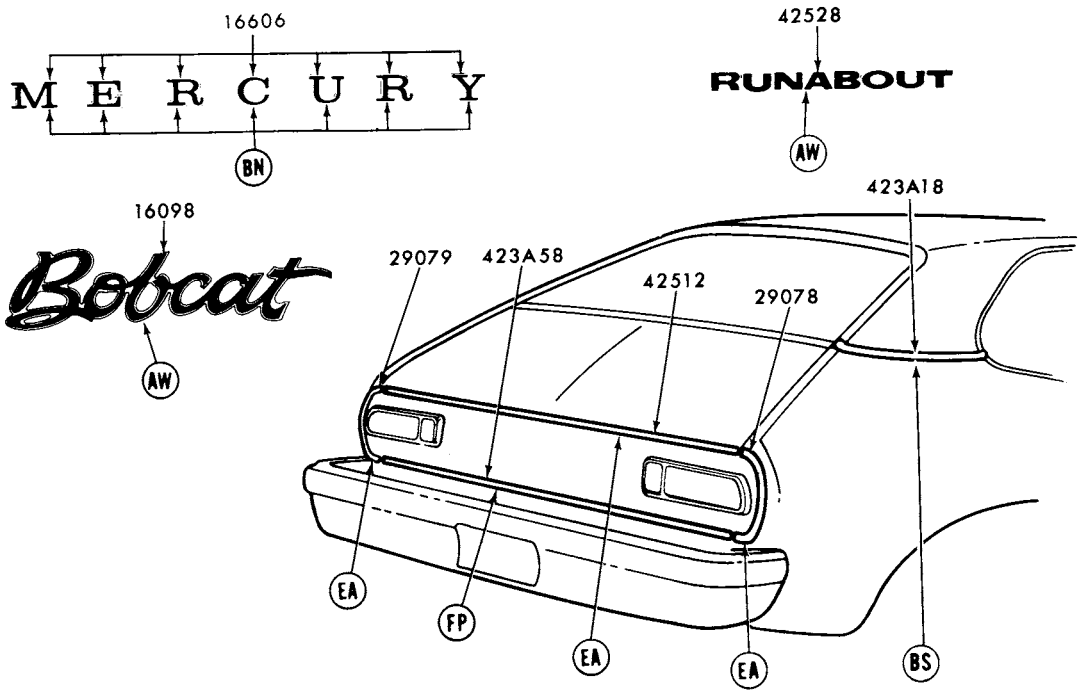

REFER TO EXTERIOR MOULDING SECTION "R" FOR COMPLETE RETAINER INFORMATION P-11415

1977 BOBCAT - BODY TYPES 62 and 64 - BACK END

GROUP NUMBER	PART NAME	DESCRIPTION	PART NUMBER	QTY.
16098	Plate (luggage compartment name)	"Bobcat"	D5YY 16098-A	
16606	Letter (luggage compartment door)	"M"	♦D54Y 16606-A	1
		"E"	♦D54Y 16606-B	1
		"R"	♦D54Y 16606-C	2
		"C"-body type 62	♦D5YY 6240282-A	1
		"C"-body type 64	♦D5YY 6440282-A	1
		"U"	♦D54Y 16606-E	1
		"Y"	♦D54Y 16606-F	1
29078-9	Moulding (quarter panel extension)		(RH)♦D4FZ 6229078-A (LH)♦D4FZ 6229079-A	1
423A18-9	Moulding (back belt outside side)		Not used in 1977	
423A58	Moulding (lower back panel)		♦D4FZ 62423A58-A	1
42512	Moulding (luggage compartment door)		♦D4FZ 6242512-A	1
42528	Plate (luggage compartment door name)	"RUNABOUT"	Not used in 1977	

♦ Includes attaching parts

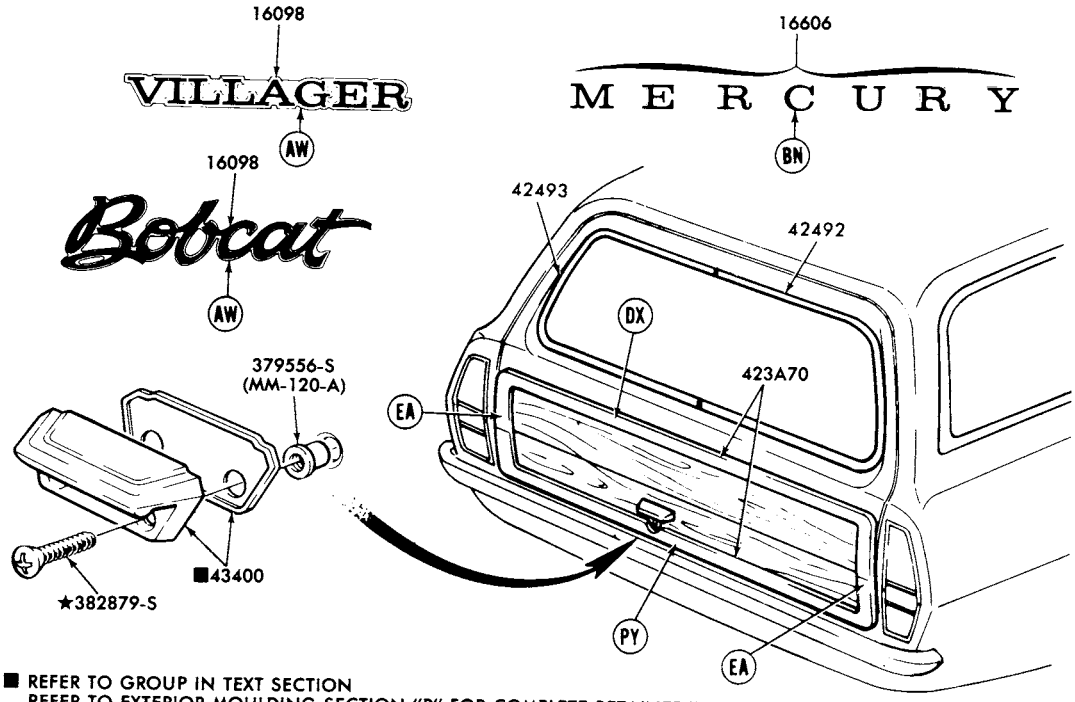

■ REFER TO GROUP IN TEXT SECTION
REFER TO EXTERIOR MOULDING SECTION "R" FOR COMPLETE RETAINER INFORMATION

P-12312

1977 BOBCAT - BODY TYPE 73 - BACK END

GROUP NUMBER	PART NAME	DESCRIPTION	PART NUMBER	QTY.
16098	Plate (liftgate name)	"Bobcat"	D5YY 16098-A	
		"Villager"	♦D2GY 16098-B	1
16606	Letter (liftgate door)	"M"	♦D54Y 16606-A	1
		"E"	♦D54Y 16606-B	1
		"R"	♦D54Y 16606-C	2
		"C"	♦D5YY 6440282-A	1
		"U"	♦D54Y 16606-E	1
		"Y"	♦D54Y 16606-F	1
423A70	Moulding (liftgate outside)		♦D5YY 73423A70-A	1
42492-3	Moulding (back window outside side)		(RH) D2FZ 7342492-A (LH) D2FZ 7342493-A	1

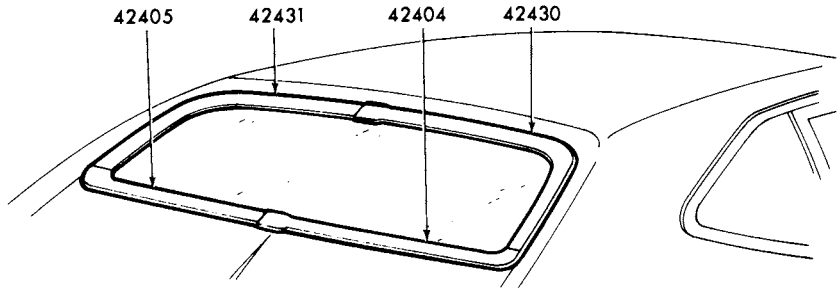

P-12464

1977 BOBCAT - BODY TYPE 62 - BACK WINDOW

♦ Includes attaching parts

COPYRIGHT © 1986 — FORD MOTOR COMPANY — DEARBORN, MICHIGAN

1977 BOBCAT - BODY TYPE 62 - BACK WINDOW - cont'd.

GROUP NUMBER	PART NAME	DESCRIPTION	PART NUMBER		QTY.
42404-5	Moulding (back window outside lower)		(RH) D1FZ 6242404-A	(LH) D1FZ 6242405-A	1
42430-1	Moulding (back window outside upper)		(RH) D1FZ 6242430-A	(LH) D1FZ 6242431-A	1

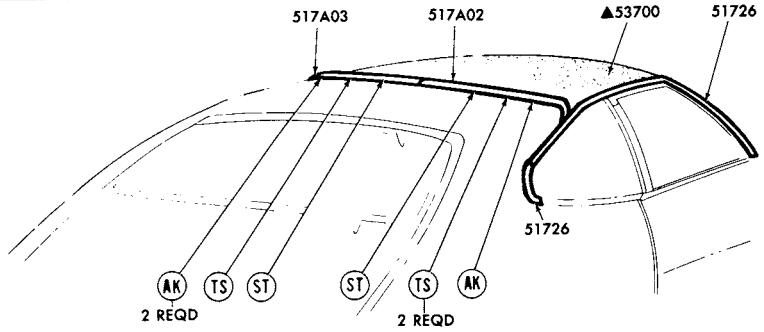

P-12811

▲REFER TO GROUP IN SOFT TRIM SECTION
REFER TO EXTERIOR MOULDING SECTION "R" FOR COMPLETE RETAINER INFORMATION

1977 BOBCAT - BODY TYPES 62 and 64 - ROOF DRIP SIDE and PARTIAL VINYL ROOF

GROUP NUMBER	PART NAME	DESCRIPTION	PART NUMBER		QTY.
517A02-3	Moulding (roof outside top)	Half vinyl roof	(RH)♦D6FZ 62517A02-A	(LH)♦D6FZ 62517A03-A	1
51726-7	Moulding (roof drip side finish)	Rear-w/vinyl roof	(RH) D4FZ 6251726-B	(LH) D4FZ 6251727-B	1
		Front-w/vinyl roof	(RH) D4FZ 6251726-D	(LH) D4FZ 6251727-D	1
		W/o vinyl roof	(RH) D7FZ 6251726-A	(LH) D7FZ 6251727-A	1

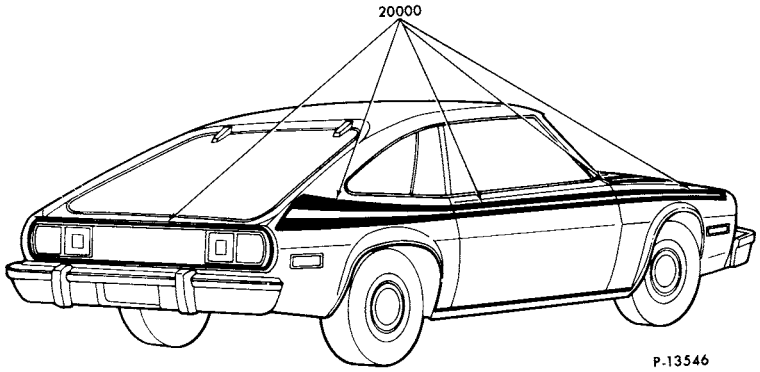

P-13546

1977 BOBCAT - BODY TYPE 64 - STRIPES

GROUP NUMBER	PART NAME	DESCRIPTION	PART NUMBER	QTY.
20000	Stripe kit - complete	Consists: hood cowl, fender door, gas cap, quarter panel, lower back panel and extension		
		Multi-color: red, orange and yellow	D8YY 6420000-BD	1
		Consists. door and quarter panel upper		
		Black	D6YY 6420000-B	1

♦ Includes attaching parts

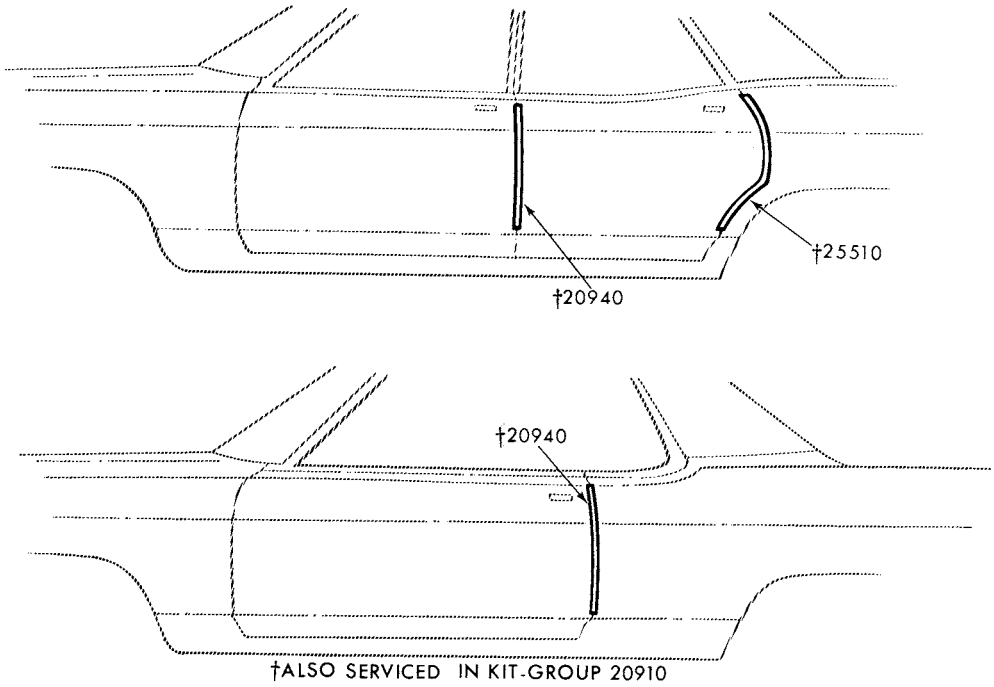

†ALSO SERVICED IN KIT-GROUP 20910

P-10061

1977 BOBCAT - DOOR EDGE GUARDS

GROUP NUMBER	PART NAME	DESCRIPTION	PART NUMBER		QTY.
20910	Moulding kit (door edge guard)	Bright	*D1FZ 6220910-A	Not replaced (6/83)	1
		Wood grain	D2FZ 7320910-A		1
20940-1	Moulding (door edge guard)	Bright	(RH) D7FZ 6220940-A	(LH) D7FZ 6220941-A	1
		Wood grain	(RH) D3FZ 7320940-A	(LH) D3FZ 7320941-A	1

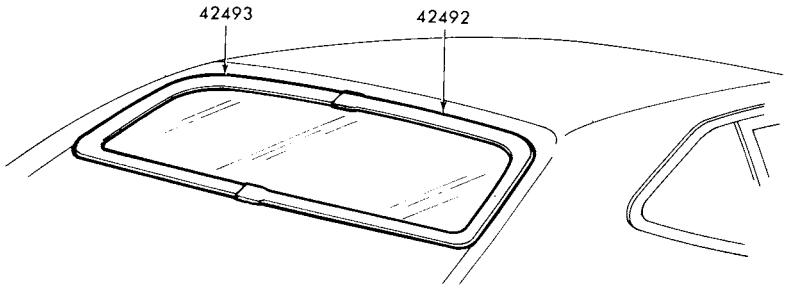

12465

1977 BOBCAT - BODY TYPE 64 - BACK WINDOW

GROUP NUMBER	PART NAME	DESCRIPTION	PART NUMBER		QTY.
42492-3	Moulding (back window outside side)		(RH) D2FZ 6442492-A	(LH) D2FZ 6442493-A	1

COPYRIGHT © 1986 — FORD MOTOR COMPANY — DEARBORN, MICHIGAN

New Issue

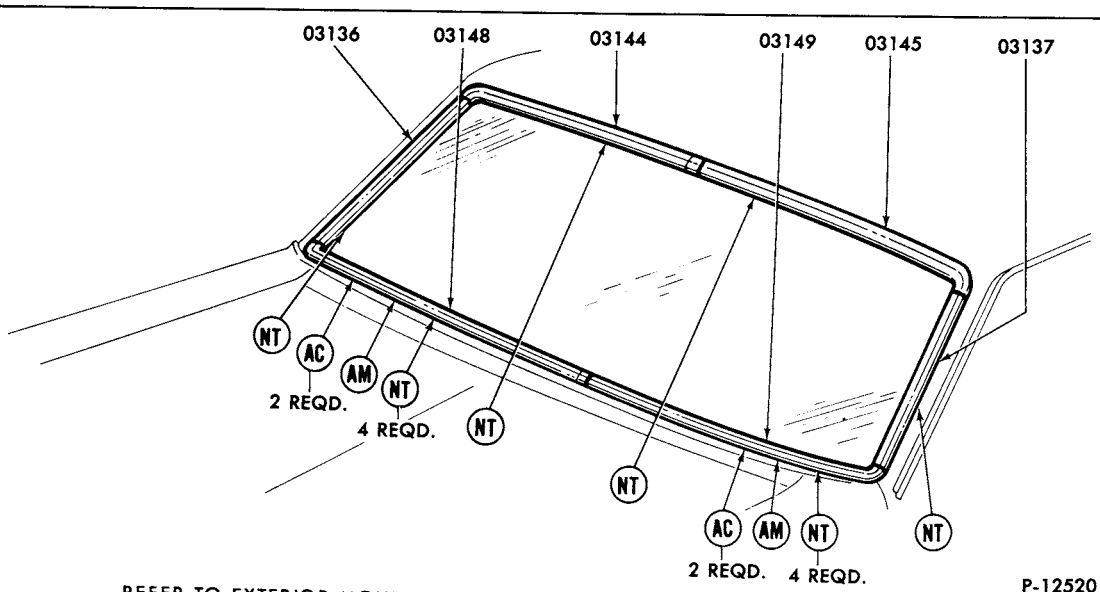

REFER TO EXTERIOR MOULDINGS SECTION 'R' FOR COMPLETE RETAINER INFORMATION

1977 COMET - WINDSHIELD

GROUP NUMBER	PART NAME	DESCRIPTION	PART NUMBER		QTY.
03136-7	Moulding (windshield outside side)	Bright	(RH)♦D0DZ 6203136-A	(LH)♦D0DZ 6203137-A	1
		Black	(RH)♦D6DZ 6203136-A	(LH)♦D6DZ 6203137-A	1
03144-5	Moulding (windshield outside top)	Bright	(RH)♦D0DZ 6203144-A	(LH)♦D0DZ 6203145-A	1
		Black	(RH)♦D6DZ 6203144-A	(LH)♦D6DZ 6203145-A	1
03148-9	Moulding (windshield outside belt)	Bright	(RH)♦D0DZ 6203148-A	(LH)♦D0DZ 6203149-A	1
		Black	(RH)♦D6DZ 6203148-A	(LH)♦D6DZ 6203149-A	1

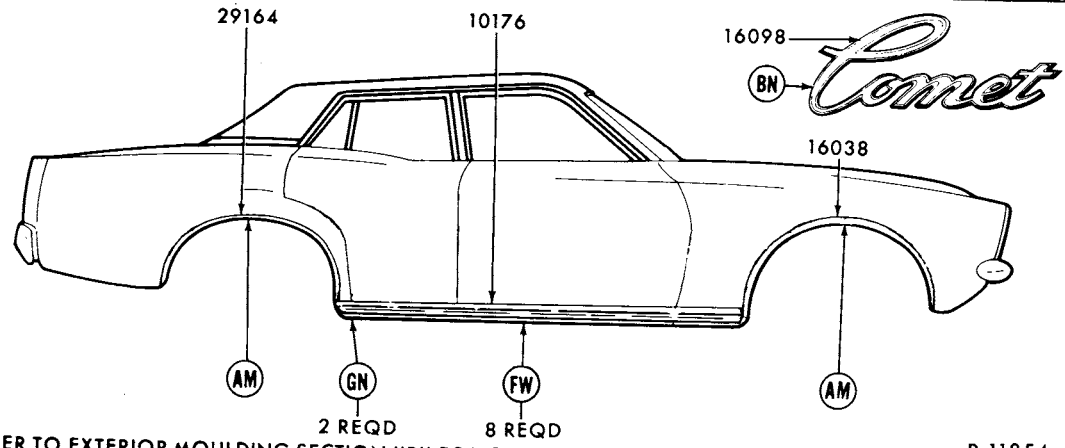

REFER TO EXTERIOR MOULDING SECTION "R" FOR COMPLETE RETAINER INFORMATION

1977 COMET - BODY TYPE 54 - SIDE - w/o LUXURY DECOR

GROUP NUMBER	PART NAME	DESCRIPTION	PART NUMBER		QTY.
10176	Moulding (body rocker panel)	78 3/4" long	♦D44Y 5410176-A	R.H. and L.H.	1
16038-9	Moulding (front fender wheel opening)		(RH)♦D4DZ 16038-A	(LH)♦D4DZ 16039-A	1
16098	Plate (name)	"Comet"	Not used in 1977		
29164-5	Moulding (quarter wheel opening)		(RH)♦D0DZ 6229164-A	(LH)♦D0DZ 6229165-A	2 1

♦ Includes attaching parts

COPYRIGHT © 1986 — FORD MOTOR COMPANY — DEARBORN, MICHIGAN

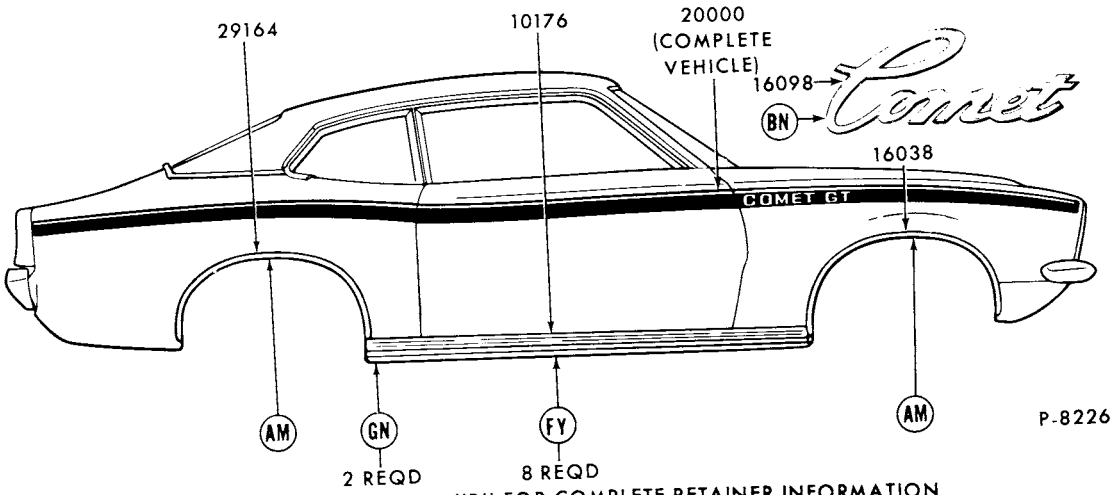

REFER TO EXTERIOR MOULDING SECTION "R" FOR COMPLETE RETAINER INFORMATION

1977 COMET - BODY TYPE 62 - SIDE - w/o LUXURY DECOR

GROUP NUMBER	PART NAME	DESCRIPTION	PART NUMBER		QTY.
10176	Moulding (body rocker panel)	71 55/64" long	♦D44Y 6210176-A	R.H. and L.H.	1
16038-9	Moulding (front fender wheel opening)		(RH)♦D4DZ 16038-A	(LH)♦D4DZ 16039-A	1
16098	Plate (name)	"Comet"	Not used in 1977		
20000	Stripe kit (fender door and quarter panel)		Not used in 1977		
29164-5	Moulding (quarter wheel opening)		(RH)♦D0DZ 6229164-A	(LH)♦D0DZ 6229165-A	1

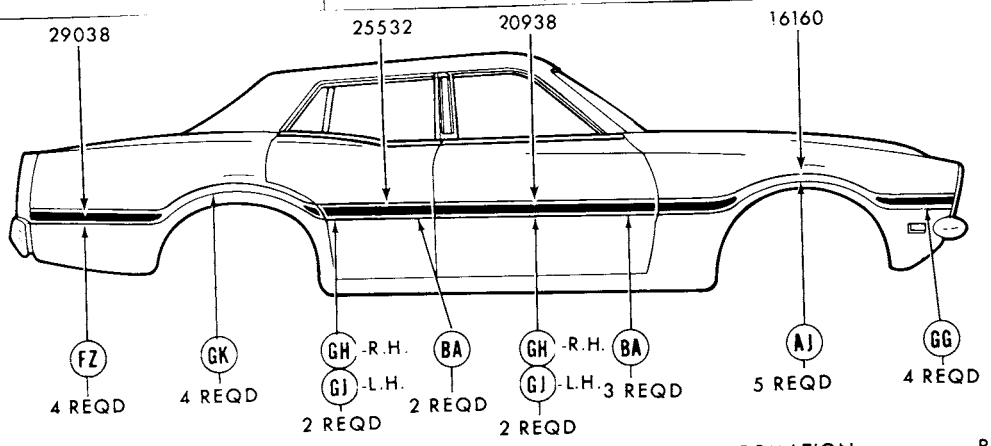

REFER TO EXTERIOR MOULDING SECTION "R" FOR COMPLETE RETAINER INFORMATION

1977 COMET - BODY TYPE 54 - SIDE - w/LUXURY DECOR

♦ Includes attaching parts

1977 COMET - BODY TYPE 54 - SIDE - w/LUXURY DECOR - cont'd.

GROUP NUMBER	PART NAME	DESCRIPTION	PART NUMBER		QTY.
16160-1	Moulding (front fender front)	Incl. vinyl insert			
		◊Blue	(RH)✱D7DZ 16160-BB	(LH) D7DZ 16161-BB	1
		◊Brown	(RH)★D7DZ 16160-BT	(LH)★D7DZ 16161-BT	1
		◊Green	(RH)★D7DZ 16160-BG Not replaced (4/84)	(LH)★D7DZ 16161-BG Not replaced (6/83)	1
		◊Red	(RH)★D74Y 16160-BD	(LH)★D74Y 16161-BD Not replaced (4/84)	1
		◊White	(RH)✱D7DZ 16160-BW	(LH)★D7DZ 16161-BW	1
20938-9	Moulding (front door outside)	Incl. vinyl insert			
		◊Blue	(RH)♦D7DZ 5420938-BB	(LH)♦D7DZ 5420939-BB	1
		◊Brown	(RH)♦D7DZ 5420938-BT	(LH)♦D7DZ 5420939-BT	1
		◊Green	(RH)♦D7DZ 5420938-BG	(LH)★D7DZ 5420939-BG Not replaced (7/81)	1
		◊White	(RH)♦D7DZ 5420938-BW	(LH)♦D7DZ 5420939-BW	1
25532-3	Moulding (rear door outside)	Incl. vinyl insert			
		◊Blue	(RH)♦D7DZ 5425532-AB	(LH)♦D7DZ 5425533-AB	1
		◊Brown	(RH)♦D7DZ 5425532-AT	(LH)♦D7DZ 5425533-AT	1
		◊Red	(RH)♦D74Y 5425532-AD	(LH)♦D74Y 5425533-AD	1
		◊White	(RH)♦D7DZ 5425532-AW	(LH)♦D7DZ 5425533-AW	1
29038-9	Moulding (quarter outside)	Incl. vinyl insert			
		◊Blue	(RH)♦D7DZ 5429038-CB	(LH)♦D7DZ 5429039-CB	1
		◊Brown	(RH)♦D7DZ 5429038-CT	(LH)♦D7DZ 5429039-CT	1
		◊Green	(RH)★D7DZ 5429038-CG Not replaced (6/82)	(LH)★D7DZ 5429039-CG Not replaced (6/82)	1
		◊Red	(RH)✱D74Y 5429038-AD Not replaced (6/82)	(LH)♦D74Y 5429039-AD	1
		◊White	(RH)★D7DZ 5429038-CW Not replaced (4/84)	(LH)♦D7DZ 5429039-CW	1

◊ For color verification, refer to the vinyl roof swatches in the 1977 Salesman's Color and Upholstery Selections Guide.
♦ Includes attaching parts

COPYRIGHT © 1986 — FORD MOTOR COMPANY — DEARBORN, MICHIGAN

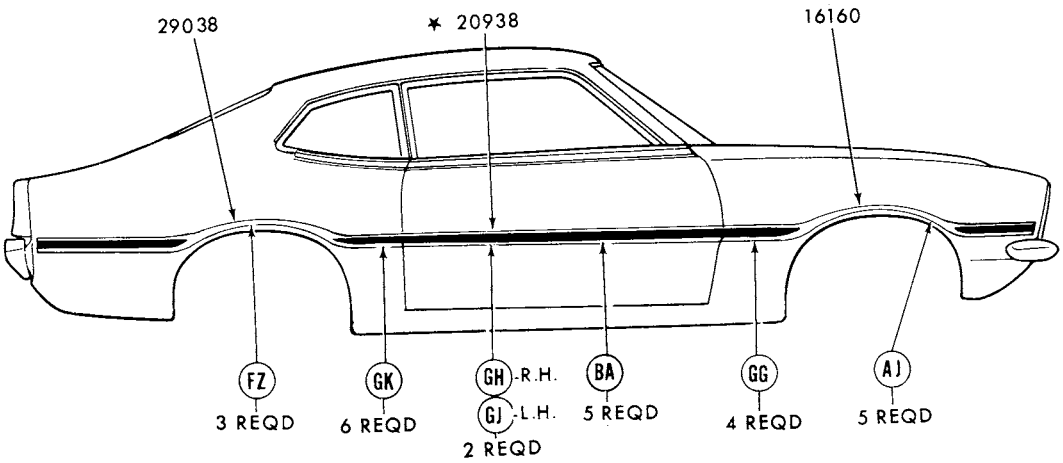

REFER TO EXTERIOR MOULDING SECTION "R" FOR COMPLETE RETAINER INFORMATION P-10012

1977 COMET - BODY TYPE 62 - SIDE - w/LUXURY DECOR

GROUP NUMBER	PART NAME	DESCRIPTION	PART NUMBER		QTY.
16160-1	Moulding (front fender front)	Incl. vinyl insert			
		◊Blue	(RH)★D7DZ 16160-BB	(LH)♦D7DZ 16161-BB	1
		◊Brown	(RH)★D7DZ 16160-BT	(LH)★D7DZ 16161-BT	1
		◊Green	(RH)★D7DZ 16160-BG Not replaced (4/84)	(LH)★D7DZ 16161-BG Not replaced (6/82)	1
		◊Red	(RH)★D74Y 16160-BD	(LH)★D74Y 16161-BD Not replaced (4/84)	1
		◊White	(RH)★D7DZ 16160-BW	(LH)★D7DZ 16161-BW	1
29038-9	Moulding (quarter outside)	Incl. vinyl insert			
		◊Blue	(RH)♦D7DZ 6229038-AB	(LH)♦D7DZ 6229039-AB	1
		◊White	(RH)♦D7DZ 6229038-AW	(LH)♦D7DZ 6229039-AW	1

◊ For color verification, refer to the vinyl roof swatches in the 1977 Salesman's Color and Upholstery Selections Guide.
♦ Includes attaching parts

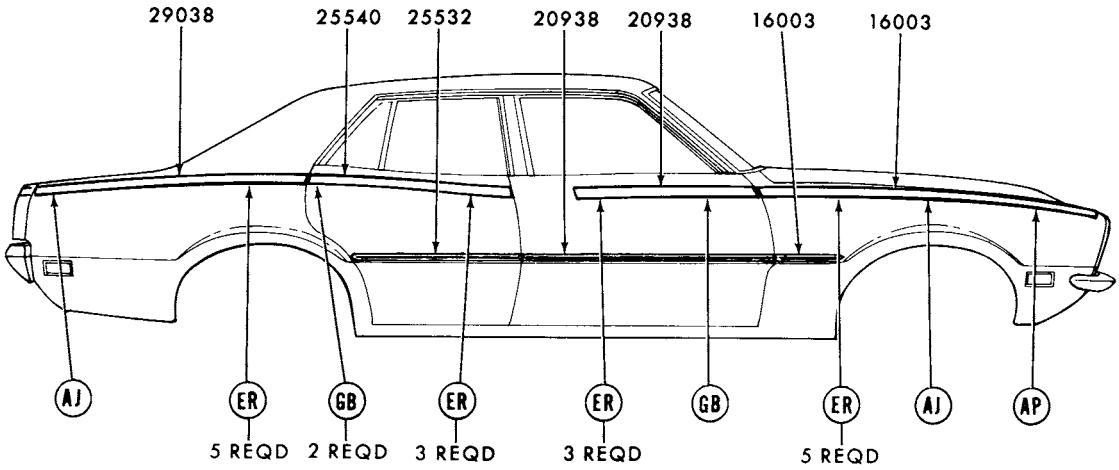

REFER TO EXTERIOR MOULDING SECTION "R" FOR COMPLETE RETAINER INFORMATION P-11855

1977 COMET - BODY TYPE 54 - SIDE PROTECTION

GROUP NUMBER	PART NAME	DESCRIPTION	PART NUMBER		QTY.
16003-4	Moulding (front fender)	Black vinyl insert-cut to fit-lower	♦D5DZ 5425532-D	R.H. and L.H.	2
		Bright finish-upper	(RH)♦D44Y 16003-A	(LH)♦D44Y 16004-A	1
20938-9	Moulding (front door outside)	Black vinyl insert-cut to fit-lower	♦D1OZ 6529038-B	R.H. and L.H.	AR
		Bright finish-upper	(RH)♦D44Y 5420938-A	(LH)♦D44Y 5420939-A	1
25532-3	Moulding (rear door outside)	Black vinyl insert-cut to fit-lower	D4GZ 16003-A	R.H. and L.H.	AR
25540-1	Moulding (rear door outside)	Bright finish	(RH)♦D44Y 5425540-A	(LH)★D44Y 5425541-A Not replaced (6/82)	1
29038-9	Moulding (quarter outside)	Bright finish	(RH)♦D44Y 5429038-A	(LH)♦D44Y 5429039-A	1

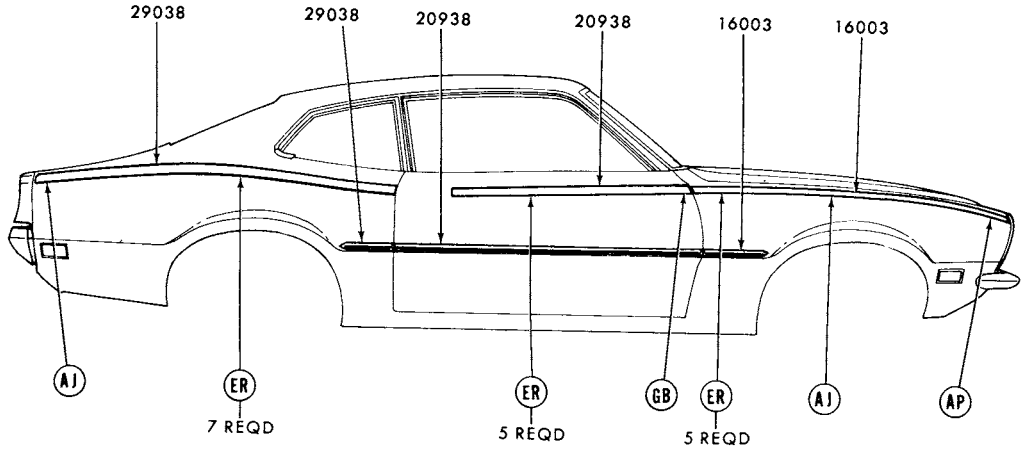

REFER TO EXTERIOR MOULDING SECTION "R" FOR COMPLETE RETAINER INFORMATION P-8186

1977 COMET - BODY TYPE 62 - SIDE PROTECTION

♦ Includes attaching parts

COPYRIGHT © 1986 — FORD MOTOR COMPANY — DEARBORN, MICHIGAN

1977 COMET - BODY TYPE 62 - SIDE PROTECTION - cont'd.

GROUP NUMBER	PART NAME	DESCRIPTION	PART NUMBER		QTY.
16003-4	Moulding (front fender)	Bright finish-upper	(RH)♦D44Y 16003-A	(LH)♦D44Y 16004-A	1
		Black vinyl insert-cut to fit-lower	D5DZ 5425532-D	R.H. and L.H.	2
20938-9	Moulding (front door outside)	Bright finish-upper	(RH)♦D44Y 6220938-A	(LH)♦D44Y 6220939-A	1
		Black vinyl insert-cut to fit-lower	D1OZ 6529038-B	R.H. and L.H.	2
29038-9	Moulding (quarter outside)	Bright finish-upper	(RH)♦D44Y 6229038-A	(LH)♦D44Y 6229039-A	1
		Black vinyl insert-cut to fit-lower	D5DZ 5425532-D	R.H. and L.H.	2

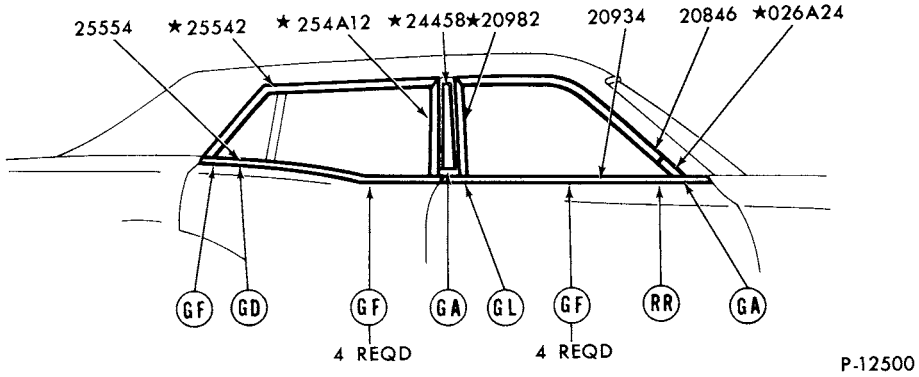

REFER TO EXTERIOR MOULDINGS SECTION 'R' FOR COMPLETE RETAINER INFORMATION

1977 COMET - BODY TYPE 54 - DOOR and QUARTER WINDOW FRAME

GROUP NUMBER	PART NAME	DESCRIPTION	PART NUMBER		QTY.
026A24-5	Moulding (front body pillar belt)	W/vinyl roof	(RH)★D0DZ 62026A24-A Not replaced (6/83)	(LH)★D0DZ 62026A25-A Not replaced (6/83)	1
20846-7	Moulding (front door window window frame top)		(RH)★D1DZ 5420846-A Not replaced (6/82)	(LH) D1DZ 5420847-A	1
20934-5	Moulding (front door belt)		(RH)♦D3DZ 5420934-A	(LH)♦D3DZ 5420935-A	1
25542-3	Moulding (rear door window frame top)		(RH) D1DZ 5425542-A	(LH)★D1DZ 5425543-A Not replaced (7/81)	1
25554-5	Moulding (rear door belt)		(RH)♦D3DZ 5425554-A	(LH)♦D3DZ 5425555-A	1

♦ Includes attaching parts

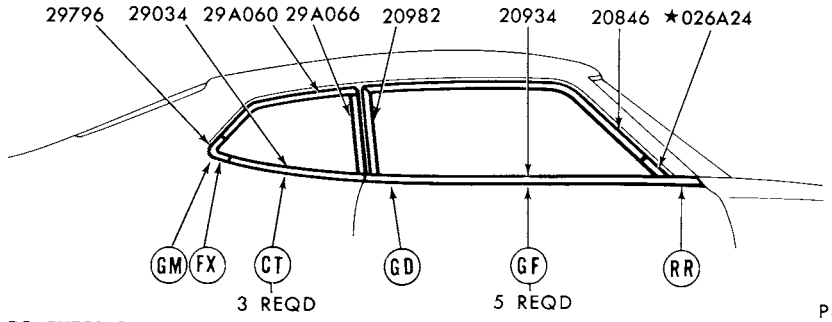

REFER TO EXTERIOR MOULDING SECTION 'R' FOR COMPLETE RETAINER INFORMATION

1977 COMET - BODY TYPE 62 - DOOR and QUARTER WINDOW FRAME

GROUP NUMBER	PART NAME	DESCRIPTION	PART NUMBER		QTY.
026A24-5	Moulding (front body pillar outside belt)	W/vinyl roof	(RH)✱D0DZ 62026A24-A Not replaced (6/82)	(LH)✱D0DZ 62026A25-A Not replaced (6/82)	1
20846-7	Moulding (front door window frame top)		(RH) D2DZ 6220846-A	(LH) D2DZ 6220847-A	1
20934-5	Moulding (front door outside belt)		(RH)♠D3DZ 6220934-A	(LH)♠D3DZ 6220935-A	1
20982-3	Moulding (front door window frame rear)		(RH) D2DZ 6220982-A	(LH) D2DZ 6220983-A	1
29034-5	Moulding (quarter outside belt)		(RH)♠D3DZ 6229034-A	(LH)♠D3DZ 6229035-A	1
290A60-1	Moulding (quarter window outside upper)		(RH)♠D0DZ 62290A60-A	(LH)♠D0DZ 62290A61-A	1
290A66-7	Moulding (quarter window outside front)		(RH)♠D0DZ 62290A66-A	(LH)♠D0DZ 62290A67-A	1
29796-7	Moulding (quarter window outside)		(RH) D1DZ 6229796-A	(LH) D1DZ 6229797-A	1

♠ Includes attaching parts

COPYRIGHT © 1986 — FORD MOTOR COMPANY — DEARBORN, MICHIGAN

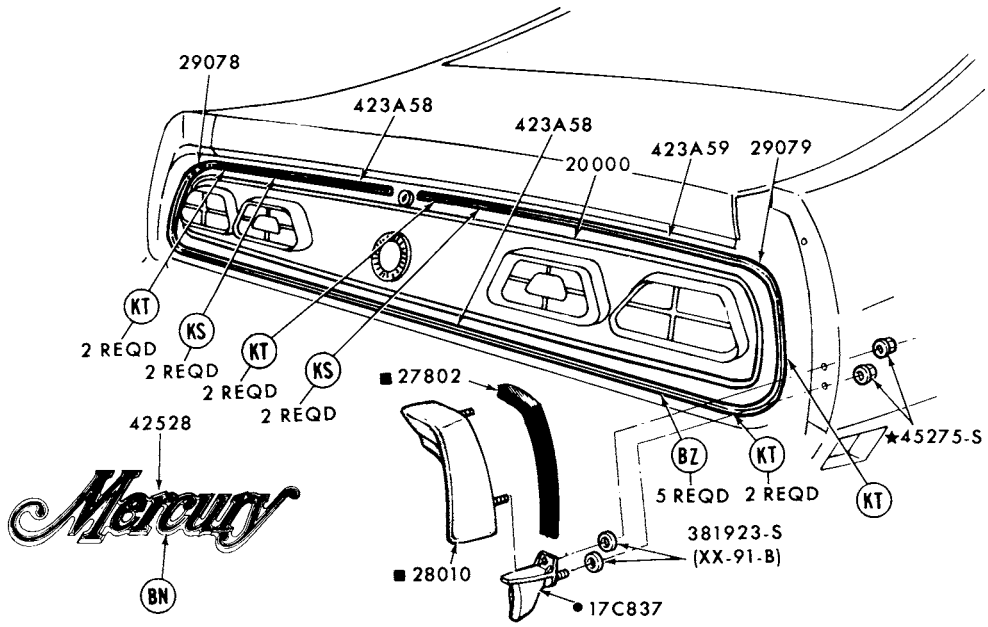

REFER TO EXTERIOR MOULDING SECTION "R" FOR COMPLETE RETAINER INFORMATION
■ REFER TO GROUP IN TEXT SECTION
● REFER TO GROUP IN CHASSIS SECTION

P-11076

1977 COMET - BACK END

GROUP NUMBER	PART NAME	DESCRIPTION	PART NUMBER	QTY.
20000	Transfer (back panel)		Not used in 1977	
29078-9	Moulding (quarter extension)		(RH)♦D44Y 6229078-A (LH)♦D44Y 6229079-A	1
423A58-9	Moulding (lower back panel)	Upper	(RH)♦D44Y 62423A58-A (LH)♦D44Y 62423A59-A	1
		Lower	♦D44Y 62423A58-B	1
42528	Plate (name)	"Mercury"	♦D44Y 6242528-A	1

♦ Includes attaching parts

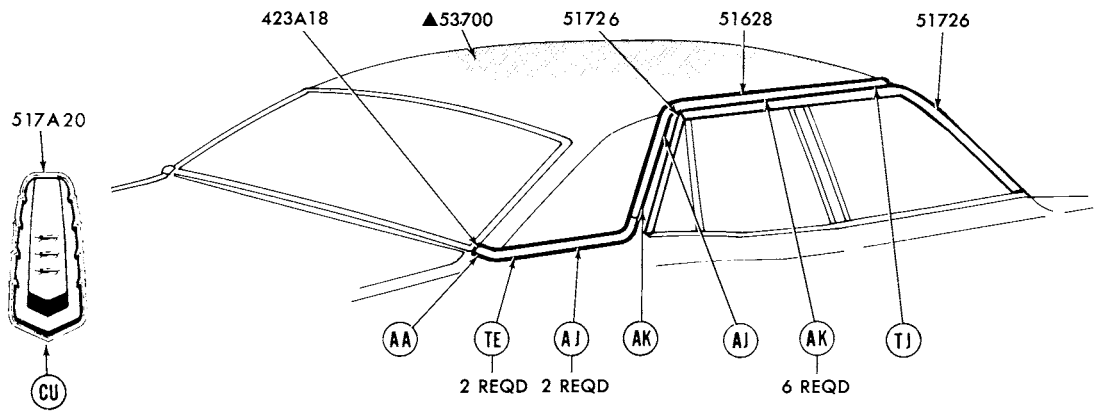

▲REFER TO GROUP IN SOFT TRIM SECTION
REFER TO EXTERIOR MOULDING SECTION "R" FOR COMPLETE RETAINER INFORMATION

P-12781

1977 COMET - BODY TYPE 54 - ROOF

GROUP NUMBER	PART NAME	DESCRIPTION	PART NUMBER		QTY.
423A18-9	Moulding (back belt outside side)		(RH)♦D6BZ 54423A18-A	(LH)♦D6BZ 54423A19-A	1
51628-9	Moulding (roof outside side)		(RH)★D6BZ 5451628-A Not replaced (6/82)	(LH)♦D6BZ 5451629-A	1
517A20	Ornament (roof side)		♦D6OZ 60517A20-A	R.H. and L.H.	2
51726-7	Moulding (roof drip side finish)	Front	(RH) D3DZ 5451726-A	(LH)★D3DZ 5451727-A Not replaced (6/83)	1
		Rear	(RH) D1DZ 5451726-C	(LH) D1DZ 5451727-C	1

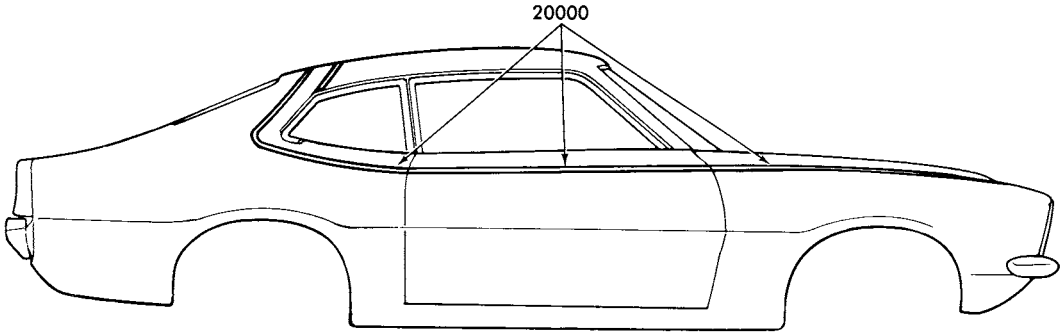

P-12973

1977 COMET - BODY TYPE 62 - STRIPES

GROUP NUMBER	PART NAME	DESCRIPTION	PART NUMBER	QTY.
20000	Stripe kit (body side complete)	Fender, door and quarter panel		
		Black	D6DZ 6220000-G	1
		Blue	D6DZ 6220000-A	1
		Gold	D6DZ 6220000-F	1
		White	D6DZ 6220000-D	1

♦ Includes attaching parts

COPYRIGHT © 1986 — FORD MOTOR COMPANY — DEARBORN, MICHIGAN

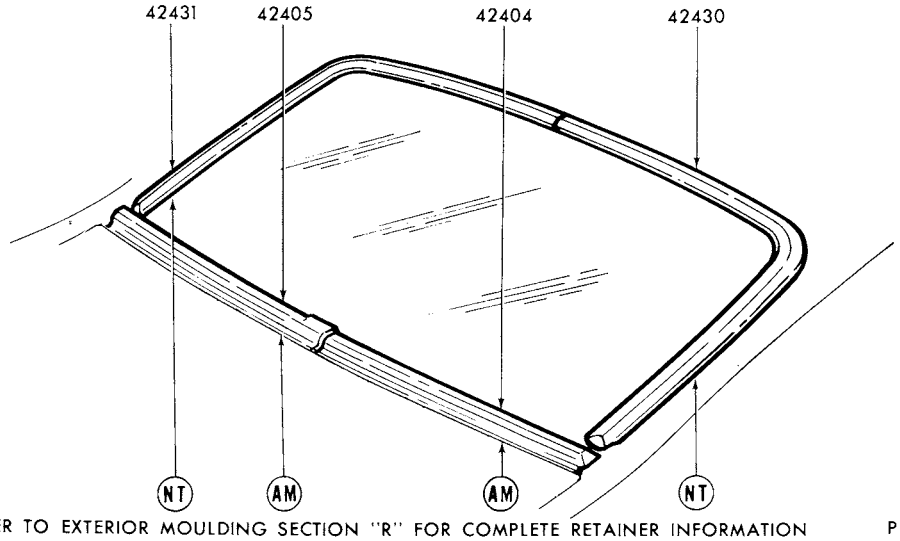

REFER TO EXTERIOR MOULDING SECTION "R" FOR COMPLETE RETAINER INFORMATION P-12468

1977 COMET - BODY TYPE 54 - BACK WINDOW

GROUP NUMBER	PART NAME	DESCRIPTION	PART NUMBER		QTY.
42404-5	Moulding (back window lower)		(RH)♦D1DZ 5442404-A	(LH)♦D1DZ 5442405-A	1
42430-1	Moulding (back window upper)		(RH)♦D1DZ 5442430-A	(LH)♦D1DZ 5442431-A	1

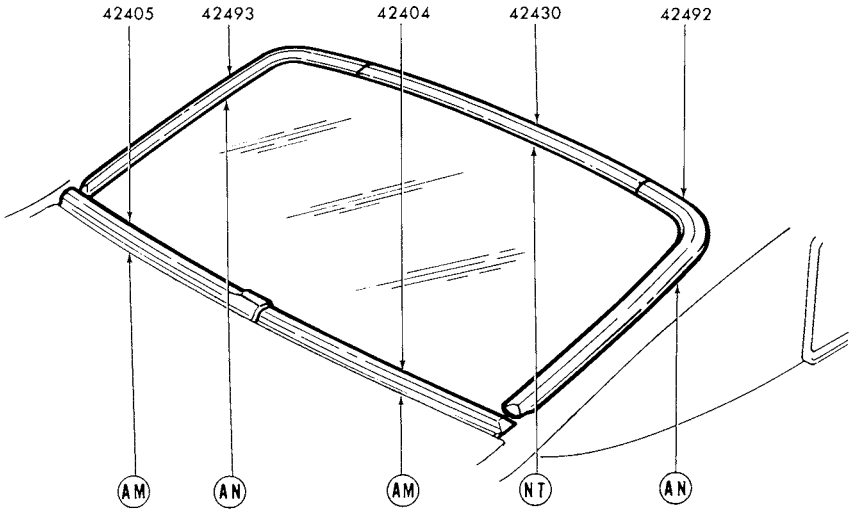

REFER TO EXTERIOR MOULDING SECTION "R" FOR COMPLETE RETAINER INFORMATION P-12467

1977 COMET - BODY TYPE 62 - BACK WINDOW

GROUP NUMBER	PART NAME	DESCRIPTION	PART NUMBER		QTY.
42404-5	Moulding (back window outside lower)	Bright	(RH)♦D1DZ 6242404-A	(LH)♦D1DZ 6242405-A	1
42430	Moulding (back window outside upper)	Bright	♦D2DZ 6242430-A		1
42492-3	Moulding (back window outside side)	Bright	(RH)♦D0DZ 6242492-A	(LH)♦D0DZ 6242493-A	1

♦ Includes attaching parts

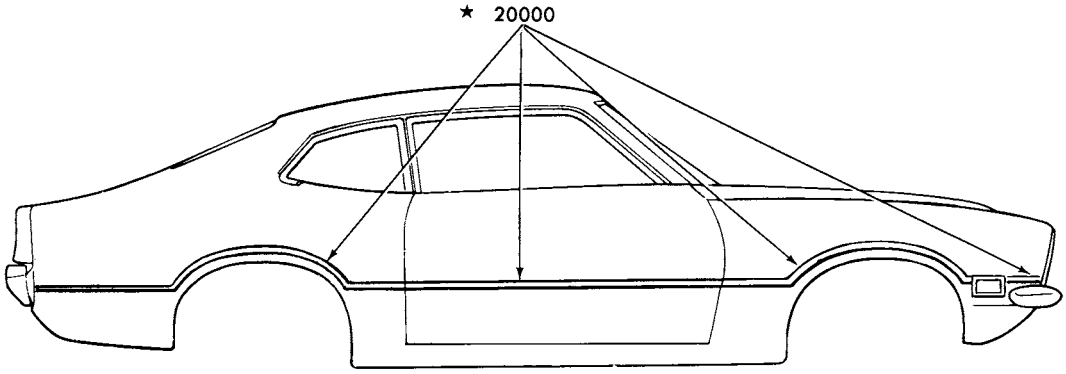

P-13430

1977 COMET - STRIPES

GROUP NUMBER	PART NAME	DESCRIPTION	PART NUMBER	QTY.

ITEMS INDICATED WITH A BLACK STAR (★) MUST BE IMPROVISED OR PROCURED LOCALLY

COPYRIGHT © 1986 — FORD MOTOR COMPANY — DEARBORN, MICHIGAN

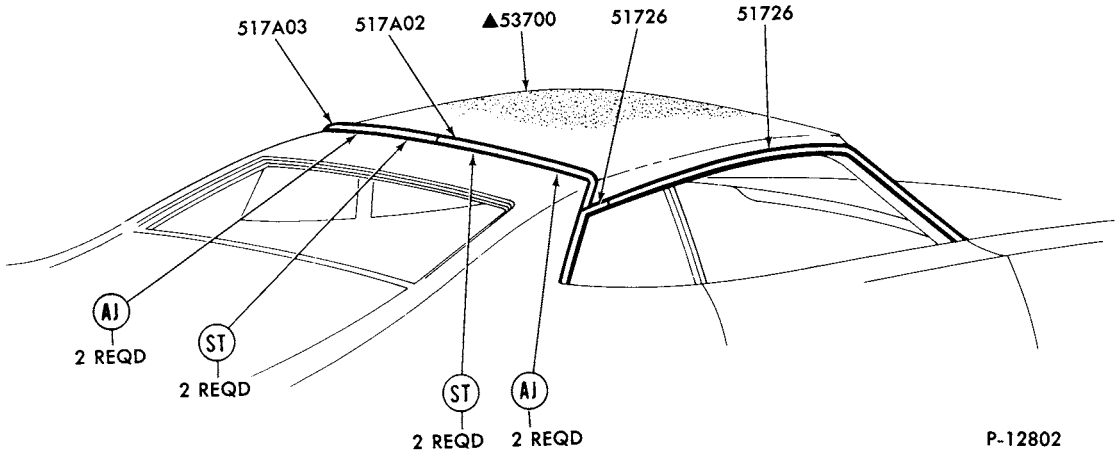

1977 COMET - BODY TYPE 62 - ROOF

GROUP NUMBER	PART NAME	DESCRIPTION	PART NUMBER		QTY.
517A02-3	Moulding (roof outside top)	W/partial vinyl roof	(RH)♦D6DZ 62517A02-A	(LH)♦D6DZ 62517A03-A	1
51726-7	Moulding (roof drip side finish)	Front-w/vinyl roof	(RH) D0DZ 6251726-B	(LH)★D0DZ 6251727-B Not replaced (4/84)	1
		Front-w/o vinyl roof	(RH) D0DZ 6251726-A	(LH) D0DZ 6251727-A	1
		Rear-w/o vinyl roof	(RH) D0DZ 6251726-C	(LH)★D0DZ 6251727-C Not replaced (6/83)	1

♦ Includes attaching parts

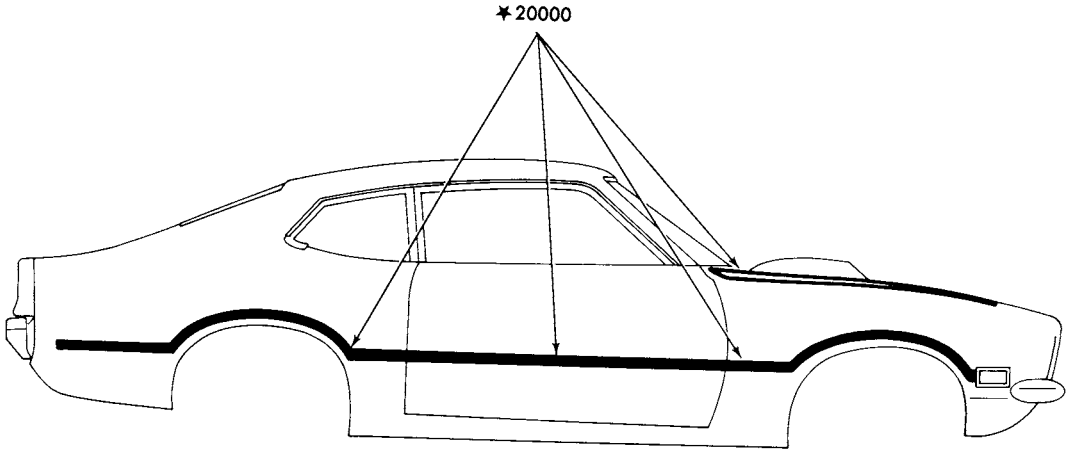

P-13511

1977 BOBCAT - BODY TYPE 62 - STRIPES

GROUP NUMBER	PART NAME	DESCRIPTION	PART NUMBER	QTY
20000	Stripe kit (complete)			

COPYRIGHT © 1986 — FORD MOTOR COMPANY — DEARBORN, MICHIGAN

New Issue

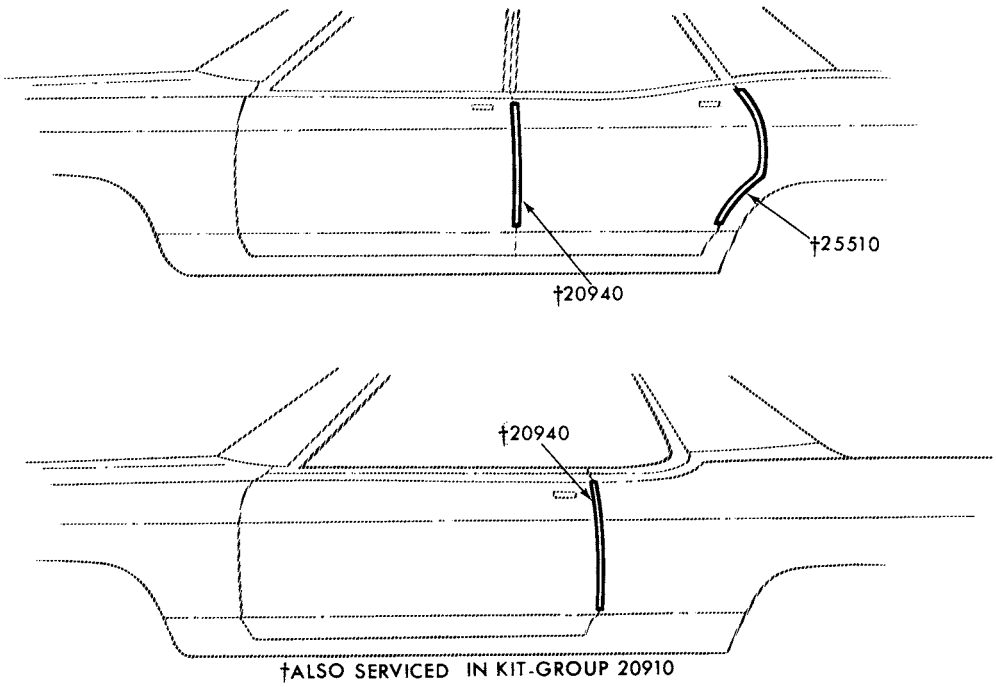

†ALSO SERVICED IN KIT-GROUP 20910

P-10061

1977 COMET - DOOR EDGE GUARDS

GROUP NUMBER	PART NAME	DESCRIPTION	PART NUMBER	QTY.
20910	Moulding kit (door edge guard)	Body type 54	D1DZ 5420910-A	1
		Body type 62	D0DZ 6220910-A	1
20940-1	Moulding (front door edge guard)	Body type 54	(RH) D2DZ 5420940-A (LH) D2DZ 5420941-A	1
		Body type 62	(RH) D2DZ 6220940-A (LH) D2DZ 6220941-A	1
25510-1	Moulding (rear door edge guard)	Body type 54	(RH) D2DZ 5425510-A (LH) D2DZ 5425511-A	1

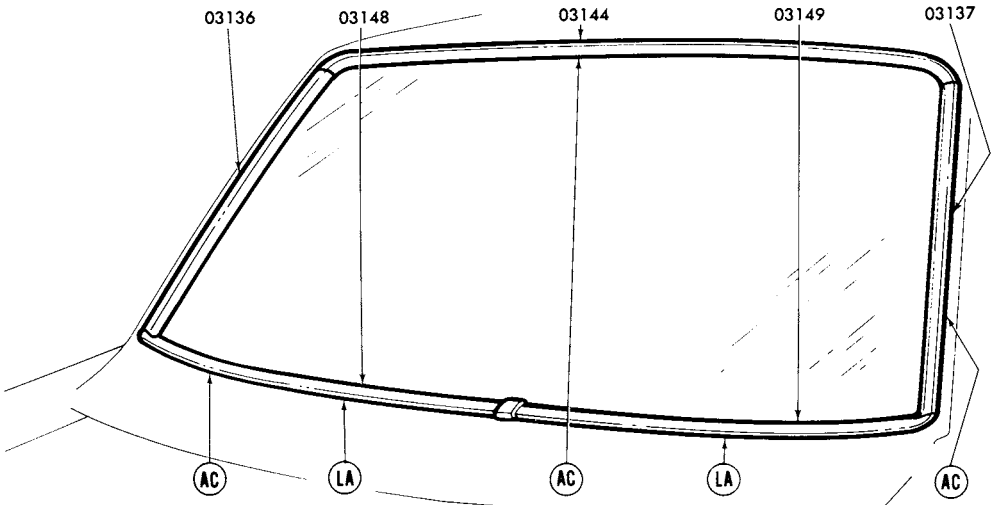

REFER TO EXTERIOR MOULDING SECTION 'R' FOR COMPLETE RETAINER INFORMATION P-12526

1977 VERSAILLES - WINDSHIELD

GROUP NUMBER	PART NAME	DESCRIPTION	PART NUMBER		QTY.
03136-7	Moulding (windshield outside side)		(RH)♦D5DZ 6603136-A	(LH)♦D5DZ 6603137-A	1
03144	Moulding (windshield outside top)		♦D5DZ 6603144-A		1
03148-9	Moulding (windshield outside belt)		(RH)♦D5DZ 6603148-A	(LH)♦D5DZ 6603149-A	1

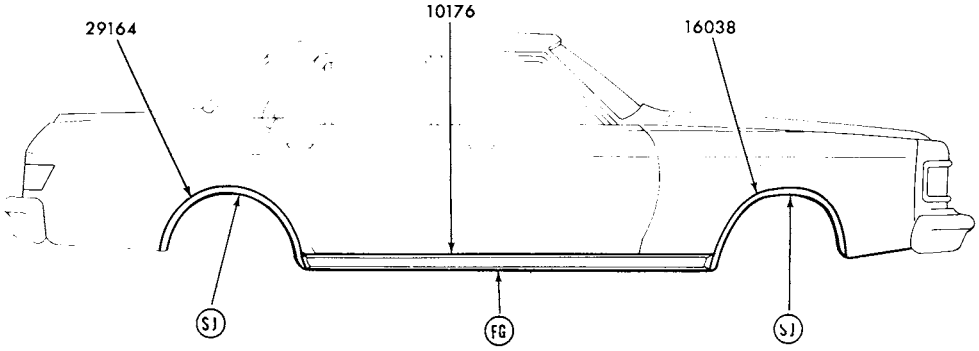

P-13343

REFER TO EXTERIOR MOULDING SECTION 'R' FOR COMPLETE RETAINER INFORMATION

1977 VERSAILLES - SIDE w/ROCKER PANEL and WHEEL LIP

GROUP NUMBER	PART NAME	DESCRIPTION	PART NUMBER		QTY.
10176-7	Moulding (body rocker panel)	W/wheel opening mouldings-78 3/4" long	♦D54Y 6610176-A	R.H. and L.H.	2
16038-9	Moulding (front fender wheel opening)		(RH)♦D5DZ 16038-A	(LH)♦D5DZ 16039-A	1
16098	Plate (name)	"VERSAILLES"	D74Y 5442528-A	R.H. and L.H.	2
29164-5	Moulding (quarter wheel opening)		(RH)♦D5DZ 6629164-A	(LH)♦D5DZ 6629165-A	1

♦ Includes attaching parts

COPYRIGHT © 1986 — FORD MOTOR COMPANY — DEARBORN, MICHIGAN

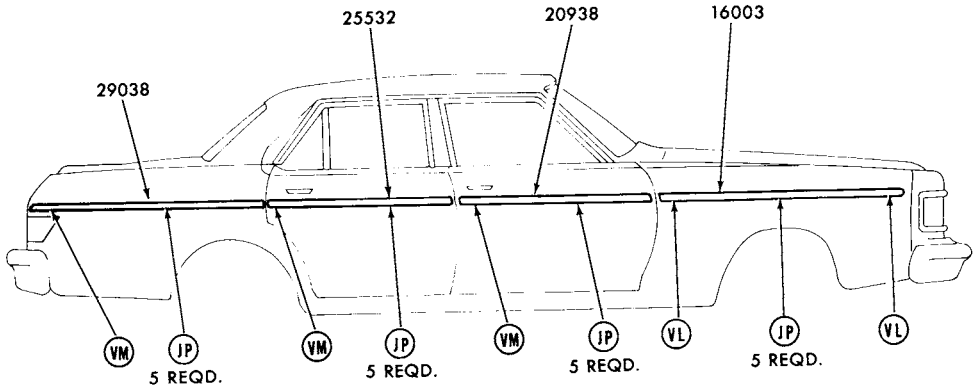

REFER TO EXTERIOR MOULDING SECTION 'R' FOR COMPLETE RETAINER INFORMATION P-13342

1977 VERSAILLES - w/SIDE PROTECTION

GROUP NUMBER	PART NAME	DESCRIPTION	PART NUMBER		QTY.
16003-4	Moulding (front fender side)	Incl. vinyl insert			
		◊Blue (medium)	(RH)♦D74Y 16003-BB	(LH)♦D74Y 16004-BB	1
		◊Blue (wedgewood)	(RH)♦D74Y 16003-CB	(LH)♦D74Y 16004-CB	1
		◊Chamois	(RH)♦D74Y 16003-BT	(LH)♦D74Y 16004-BT	1
		◊Cordovan	(RH)♦D74Y 16003-BF	(LH)♦D74Y 16004-BF	1
		◊Silver	(RH)♦D74Y 16003-BP	(LH)♦D74Y 16004-BP	1
		◊White	(RH)♦D74Y 16003-BW	(LH)♦D74Y 16004-BW	1
20938-9	Moulding (front door)	Incl. vinyl insert			
		◊Blue (medium)	(RH)★D74Y 5420938-BB	(LH)♦D74Y 5420939-BB	1
		◊Blue (wedgewood)	(RH)✶D74Y 5420938-CB Not replaced (6/82)	(LH)✶D74Y 5420939-CB Not replaced (4/84)	1
		◊Chamois	(RH)♦D74Y 5420938-BT	(LH)♦D74Y 5420939-BT	1
		◊Cordovan	(RH)♦D74Y 5420938-BF	(LH)♦D74Y 5420939-BF	1
		◊Silver	(RH)♦D74Y 5420938-BP	(LH)♦D74Y 5420939-BP	1
		◊White	(RH)♦D74Y 5420938-BW	(LH)♦D74Y 5420939-BW	1
25532-3	Moulding (rear door)	Incl. vinyl insert			
		◊Blue (medium)	(RH)♦D74Y 5425532-BB	(LH)♦D74Y 5425533-BB	1
		◊Blue (wedgewood)	(RH)♦D74Y 5425532-CB	(LH)✶D74Y 5425533-CB Not replaced (6/82)	1
		◊Chamois	(RH)♦D74Y 5425532-BT	(LH)✶D74Y 5425533-BT Not replaced (6/82)	1
		◊Cordovan	(RH)♦D74Y 5425532-BF	(LH)♦D74Y 5425533-BF	1
		◊Silver	(RH)♦D74Y 5425532-BP	(LH)♦D74Y 5425533-BP	1
		◊White	(RH)♦D74Y 5425532-BW	(LH)♦D74Y 5425533-BW	1
29038-9	Moulding (quarter panel)	Incl. vinyl insert			
		◊Blue (medium)	(RH)♦D74Y 5429038-BB	(LH)♦D74Y 5429039-BB	1
		◊Blue (wedgewood)	(RH)✶D74Y 5429038-CB Not replaced (6/82)	(LH)♦D74Y 5429039-CB	1
		◊Chamois	(RH)♦D74Y 5429038-BT	(LH)♦D74Y 5429039-BT	1
		◊Cordovan	(RH)♦D74Y 5429038-BF	(LH)♦D74Y 5429039-BF	1
		◊Silver	(RH)♦D74Y 5429038-BP	(LH)♦D74Y 5429039-BP	1
		◊White	(RH)♦D74Y 5429038-BW	(LH)♦D74Y 5429039-BW	1

♦ Includes attaching parts

◊ For color verification, refer to the vinyl roof swatches in the 1977 Salesman's Color and Upholstery Selections Guide.

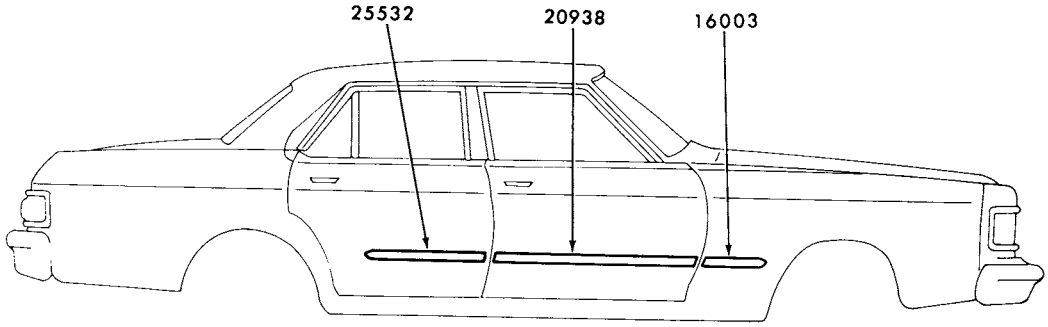

P-11943

1977 VERSAILLES - BODY TYPE 54 - SIDE PROTECTION

GROUP NUMBER	PART NAME	DESCRIPTION	PART NUMBER		QTY.
16003-4	Moulding (front fender side)	Black vinyl insert-adhesive backed-cut to fit	D5DZ 5425532-D	R.H. and L.H.	2
20938	Moulding (front door outside)	Black vinyl insert-adhesive backed-cut to fit	D1OZ 6529038-B	R.H. and L.H.	2
25532	Moulding (rear door outside)	Black vinyl insert-adhesive backed	D5DZ 5425532-D	R.H. and L.H.	2

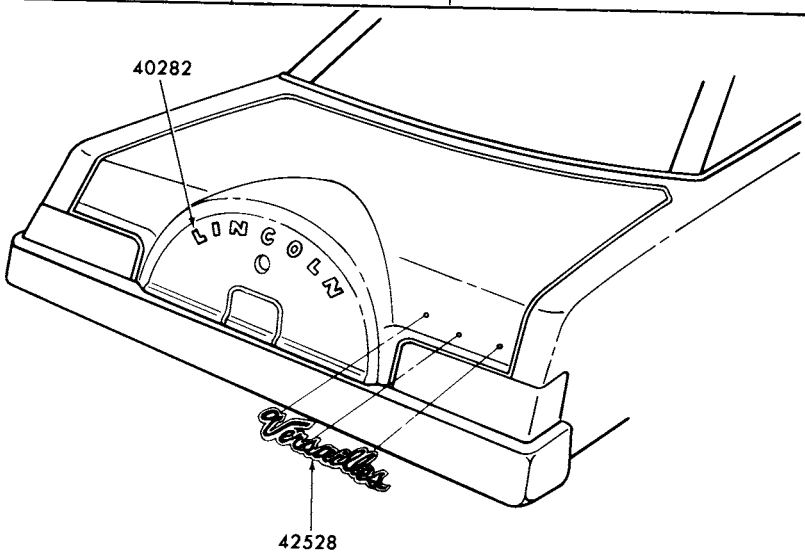

P-13340

1977 VERSAILLES - BODY TYPE 54 - BACK END

GROUP NUMBER	PART NAME	DESCRIPTION	PART NUMBER	QTY.
40282	Letters (name)	"L"	♦D7LY 6540282-J	2
		"I"	♦D7LY 6540282-E	2
		"N"	♦D7LY 6540282-C	2
		"C"	♦D7LY 6540282-A	1
		"O"	♦D7LY 6540282-B	1
42528	Plate (name)	"VERSAILLES"	D74Y 5442528-A	3

♦ Includes attaching parts

COPYRIGHT © 1986 — FORD MOTOR COMPANY — DEARBORN, MICHIGAN

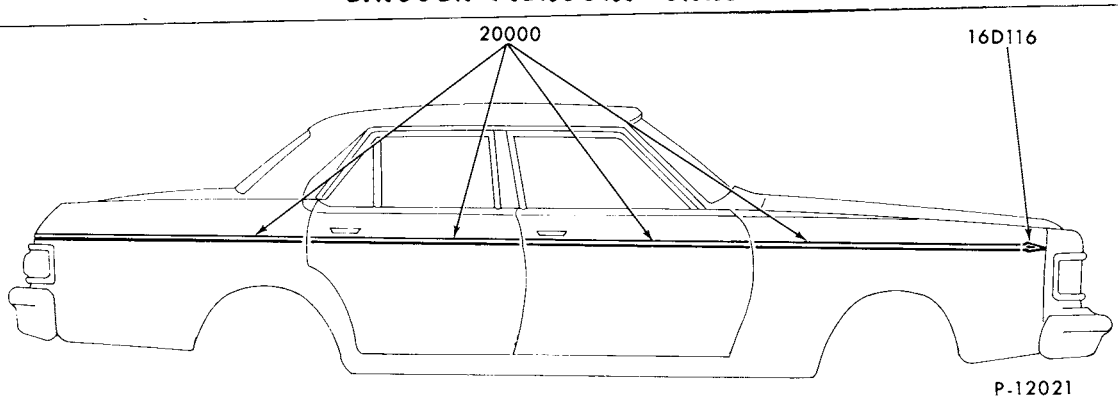

1977 VERSAILLES - STRIPES

GROUP NUMBER	PART NAME	DESCRIPTION	PART NUMBER		QTY.
16D116	Transfer (front fender)	"Before 5/2/77"			
		Blue (light)	D74Y 16D116-AB	Incl. R.H. and L.H.	1
		Blue (medium)	★D74Y 16D116-BB	Not replaced (6/82)	1
		Cordovan	D74Y 16D116-AF	Incl. R.H. and L.H.	1
		Chamois	D74Y 16D116-AT	Incl. R.H. and L.H.	1
		Gold	D74Y 16D116-AG	Incl. R.H. and L.H.	1
		Orange	★D74Y 16D116-AC	Not replaced (6/82)	1
		Red	★D74Y 16D116-AD	Not replaced (6/82)	1
		Silver	D74Y 16D116-AP	Incl. R.H. and L.H.	1
20000	Stripe kit (body side)	25' roll			
		Blue (light)	★ D74Y 5420000-AB	Not replaced (7/81)	AR
		Blue (medium)	D74Y 5420000-BB		AR
		Cordovan	D74Y 5420000-AF		AR
		Chamois	★ D74Y 5420000-AT	Not replaced (7/81)	AR
		Gold	D74Y 5420000-AG		AR
		Orange	★ D74Y 5420000-AC	Not replaced (7/81)	AR
		Red	★D74Y 5420000-AD		AR
		Silver	D74Y 5420000-AP		AR
		"From 5/2/77- Consists of- fender and quarter panel ends			
		Blue (light)	★ D74Y 5420000-DB	Not replaced (6/82)	1
		Blue (medium)	D74Y 5420000-EB		1
		Cordovan	D74Y 5420000-DF		1
		Gold	D74Y 5420000-DG		1
		Orange	★ D74Y 5420000-DC	Not replaced (6/82)	1
		Red	D74Y 5420000-DD		1
		Silver	D74Y 5420000-DP		1

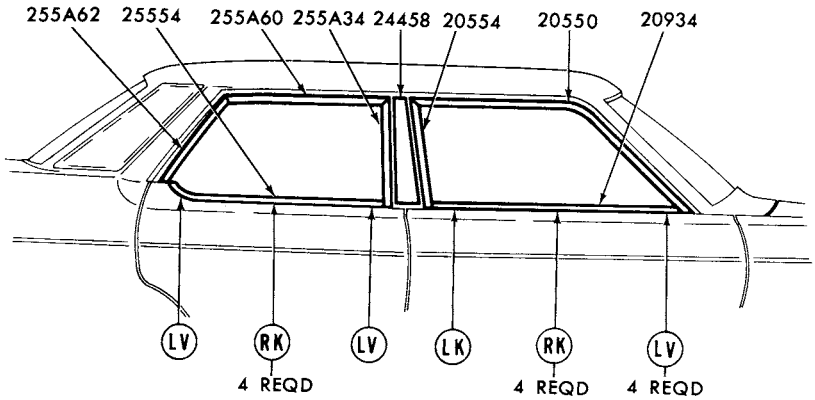

P-12494

REFER TO EXTERIOR MOULDING SECTION 'R' FOR COMPLETE RETAINER INFORMATION

1977 VERSAILLES - BODY TYPE 54 - DOOR WINDOW FRAME

GROUP NUMBER	PART NAME	DESCRIPTION	PART NUMBER		QTY.
20550-1	Moulding (front door window frame front)		(RH) D5DZ 5420550-A	(LH) D5DZ 5420551-A	1
20554-5	Moulding (front door window frame rear)		(RH) D5DZ 5420554-A	(LH) D5DZ 5420555-A	1
20934-5	Moulding (front door outside belt)		(RH)♦D5DZ 5420934-A	(LH)♦D5DZ 5420935-A	1
24458-9	Moulding (center body pillar outside upper)		Refer to roof and back belt		
255A34-5	Moulding (rear door window frame front)		(RH) D5DZ 54255A34-A	(LH) D5DZ 54255A35-A	1
25554-5	Moulding (rear door outside belt)		(RH)♦D5DZ 5425554-A	(LH)♦D5DZ 5425555-A	1
255A60-1	Moulding (rear door window frame upper)		(RH) D5DZ 54255A60-A	(LH) D5DZ 54255A61-A	1
255A62-3	Moulding (rear door window frame rear)		(RH) D5DZ 54255A62-A	(LH) D5DZ 54255A63-A	1

♦ Includes attaching parts

COPYRIGHT © 1986 — FORD MOTOR COMPANY — DEARBORN, MICHIGAN

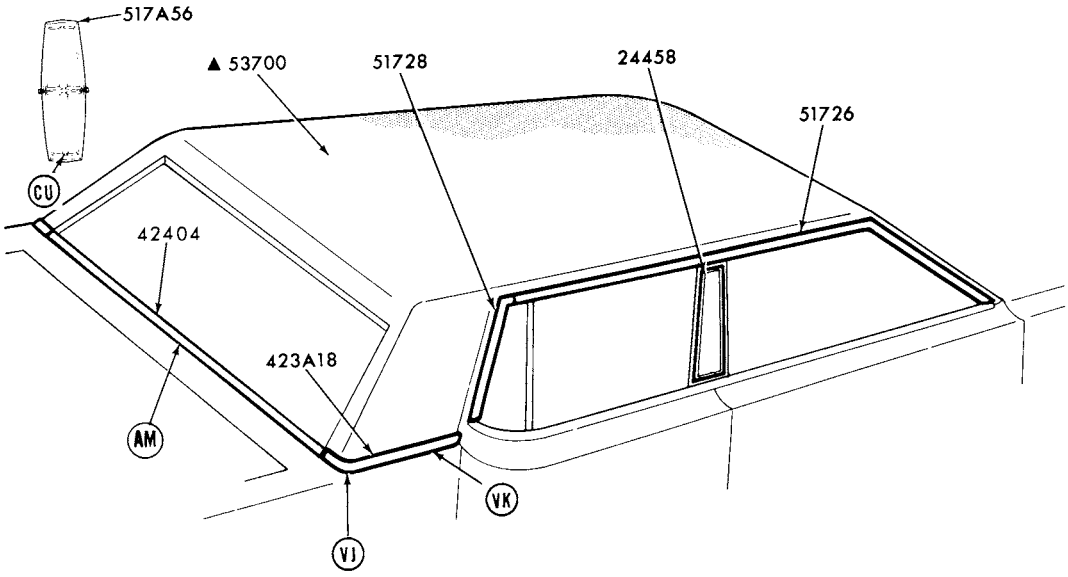

▲ REFER TO GROUP IN SOFT TRIM SECTION
REFER TO EXTERIOR MOULDING SECTION 'R' FOR COMPLETE RETAINER INFORMATION

P-13341

1977 VERSAILLES - BODY TYPE 54 - ROOF and BACK BELT

GROUP NUMBER	PART NAME	DESCRIPTION	PART NUMBER		QTY.
24458-9	Moulding (center body pillar outside upper)				
		Cordovan	(RH)♦D74Y 5424458-AF	(LH) D74Y 5424459-AF	1
		Silver	(RH)♦D74Y 5424458-AP	(LH)♦D74Y 5424459-AP	1
		White	(RH)♦D74Y 5424458-AW	(LH)♦D74Y 5424459-AW	1
423A18-9	Moulding (back belt outside side)	Prime-paint to match	(RH)♦D74Y 54423A18-A	(LH)♦D74Y 54423A19-A	1
42404	Moulding (back window outside lower)	Prime-paint to match	♦D74Y 5442404-A		1
517A20	Ornament (roof side)		♦D74Y 54517A20-A		2
51726-7	Moulding (roof drip side finish)	Front	(RH) D74Y 5451726-A	(LH) D74Y 5451727-A	1
51728-9	Moulding (roof drip side finish)	Rear	(RH) D7DZ 5451728-A	(LH) D7DZ 5451729-A	1

♦ Includes attaching parts

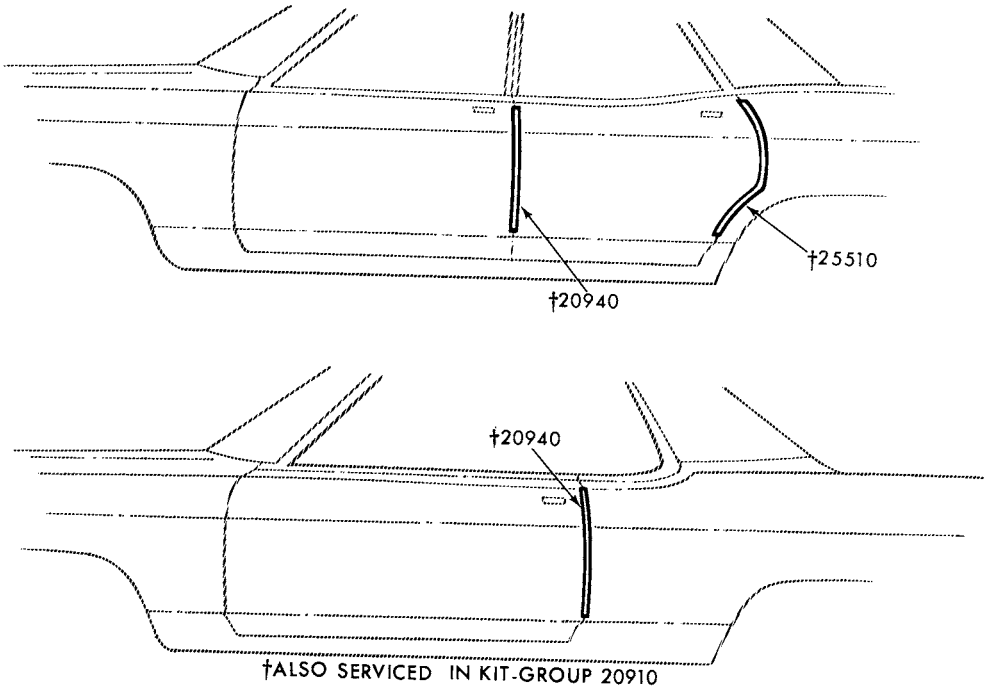

†ALSO SERVICED IN KIT-GROUP 20910

P-10061

1977 VERSAILLES - DOOR EDGE GUARDS

GROUP NUMBER	PART NAME	DESCRIPTION	PART NUMBER		QTY.
20910	Moulding kit (door edge guard)	Cut to fit	★D5DZ 5420910-A	Not replaced (6/83)	1
20940-1	Moulding (front door edge guard)		(RH) D74Y 5420940-A	(LH) D74Y 5420941-A	1
25510-1	Moulding (rear door edge guard)		(RH) D74Y 5425510-A	(LH) D74Y 5425511-A	1

COPYRIGHT © 1986 — FORD MOTOR COMPANY — DEARBORN, MICHIGAN

INDEX

TITLE	SECTION	PAGE	ILLUS. NO.
1978			
A (MERCURY)			
BACK END			
-body types 53 and 65	78A	21	P-11954
-body type 71	78A	22	P-11985
BACK WINDOW			
-body type 53	78A	23	P-12460
-body type 65	78A	23	P-12487
BELT and ROOF DRIP			
-body type 53	78A	26	P-13240
-body type 65	78A	26	P-13241
-body type 71	78A	20	P-13209
BODY SIDE			
-body type 53H-w/o wheel opening cover	78A	2	P-11967
-body type 53H-w/wheel opening cover	78A	3	P-11970
-body type 53K, L-w/o vinyl insert mouldings	78A	4,5	P-11971
-body type 53L-w/vinyl insert mouldings	78A	6,7,8	P-11966
-body type 65H,K-w/o wheel opening cover	78A	9	P-11968
-body type 65H,K-w/wheel opening cover	78A	10	P-11969
-body type 65K-w/o vinyl insert mouldings	78A	11,12	P-11972
-body type 65L-w/vinyl insert mouldings	78A	13,14, 15	P-11965
-body type 71 exc. "Colony Park"	78A	15	P-11973
-body type 71 "Colony Park"	78A	16,17	P-11974
BODY SIDE PROTECTION			
-body type 53	78A	18	P-11962
-body type 65	78A	18	P-11963
-body type 71	78A	19	P-11964
DOOR EDGE GUARDS	78A	27	P-10061
LUGGAGE COMPARTMENT - refer to BACK END			
ROOF and BACK BELT			
-body type 53	78A	24	P-13242
-body type 65-w/full vinyl roof	78A	24	P-13243
-body type 65-w/partial vinyl roof	78A	25	P-12761
ROOF DRIP and BELT			
-body type 53	78A	26	P-13240
-body type 65	78A	26	P-13241
-body type 71	78A	20	P-13209
STRIPES	78A	20	P-12929
TAILGATE - refer to BACK END			
WHEEL OPENING COVER PARTS			
-body types 53 and 65	78A	5	P-8181
WINDOW FRAME			
-body type 71	78A	20	P-13209
WINDSHIELD	78A	1	P-12521

COPYRIGHT © 1986 — FORD MOTOR COMPANY — DEARBORN, MICHIGAN

INDEX

1978

D (LINCOLN)

TITLE	SECTION	PAGE	ILLUS. NO.
BACK END			
-body types 53 and 60	78D	1	P-11896
BACK WINDOW			
-w/o vinyl roof and w/full vinyl roof	78D	10	P-12488
-w/half vinyl roof	78D	10	P-13189
BODY SIDE			
-body type 53-w/side mouldings	78D	2,3,4	P-12475
-body type 60-w/side mouldings	78D	5,6,7	P-12474
BODY SIDE PROTECTION			
-body types 53,60	78D	8,9	P-14273
DOOR BELT and WINDOW			
-body type 53	78D	11	P-13191
-body type 60	78D	12	P-13190
DOOR EDGE GUARDS	78D	19	P-10061
LUGGAGE COMPARTMENT - Refer to BACK END			
ROOF and BACK BELT			
-body type 53	78D	13,14, 15	P-13187
-body type 60	78D	16,17, 18	P-13188
ROOF DRIP - refer to ROOF and BACK BELT			
WHEEL OPENING COVER	78D	12	P-14276
WHEEL OPENING COVER MOULDING - Refer to Body Sides			
WINDOW FRAME - refer to Body Illustration Index 230			
WINDSHIELD	78D	1	P-12994

F (COUGAR)

BACK END			
-body types 53 and 65D	78F	9	P-13156
-body type 65L	78F	9,10	P-14249
BACK WINDOW			
-body types 53 and 65	78F	10	P-13039
BELT, DRIP RAIL and QUARTER WINDOW			
-body type 53	78F	8	P-13141
-body type 65	78F	8	P-13142
BODY SIDE			
-body type 53-w/narrow mouldings	78F	1,2	P-13144
-body type 53-w/wide mouldings	78F	2,3,4	P-13147
-body type 65-w/narrow mouldings	78F	5	P-13143
-body type 65-w/wide mouldings	78F	6,7	P-13148
DOOR EDGE GUARDS	78F	12	P-10061
LUGGAGE COMPARTMENT - refer to BACK END			
ROOF and BACK BELT			
-body types 53 and 65D	78F	11	P-13160
-body type 65L - w/o center panel	78F	11,12	P-13162
- w/center panel	78F	13	P-14307
ROOF DRIP - refer to BELT, DRIP RAIL and QUARTER WINDOW			
WINDSHIELD	78F	1	P-12521

INDEX

TITLE	SECTION	PAGE	ILLUS. NO.
1978			
G (MONARCH)			
BACK END	78G	10	P-11949
BACK WINDOW			
- body type 54	78G	11	P-12485
- body type 66	78G	11	P-12486
BELT			
Back-refer to ROOF and BACK BELT			
Front door, Rear door and Quarter-refer to BODY SIDE			
BODY SIDE			
- body type ALL	78G	3,4	P-11946
- body type 54 - w/luxury decor	78G	2,3	P-11945
- body type 66 - w/luxury decor	78G	4,5	P-11944
BODY SIDE PROTECTION			
- body type 54-black vinyl insert	78G	7	P-11943
- body type 54-bright finish	78G	6	P-11948
- body type 66-black vinyl insert	78G	7	P-11942
- body type 66-bright finish	78G	6	P-11941
- body types 54 and 66-sport	78G	8	P-14111
DOOR EDGE GUARDS	78G	14	P-10061
LUGGAGE COMPARTMENT-refer to BACK END			
ROOF and BACK BELT			
- body type 54	78G	12	P-11935
- body type 66	78G	13	P-11934
- body type 66-w/half vinyl roof	78G	13,14	P-12924
ROOF DRIP-refer to ROOF and BACK BELT			
STRIPES			
- body type 66	78G	8	P-12021
WINDOW FRAME			
- body type 54	78G	9	P-12494
- body type 66	78G	9,10	P-12496
WINDSHIELD	78G	1	P-12526
J (CAPRI)			
For 1978 model year-use 1976 Index			
K (MARK V)			
BACK END	78K	3	P-14107
BACK WINDOW	78K	4,5	P-12459
BELT			
Back - refer to ROOF and BACK BELT			
Front door and Quarter - refer to Drip Rail, Door Belt and Quarter Window			
BODY SIDE	78K	1,2	P-14106
DOOR EDGE GUARDS	78K	10	P-10061
DRIP RAIL, DOOR BELT and QUARTER WINDOW	78K	5	P-13179
LUGGAGE COMPARTMENT - refer to BACK END			

COPYRIGHT © 1986 — FORD MOTOR COMPANY — DEARBORN, MICHIGAN

INDEX

1978

TITLE	SECTION	PAGE	ILLUS. NO.
K (MARK V) - cont'd.			
ROOF and BACK BELT			
- w/full vinyl roof	78K	6	P-13181
- w/half vinyl roof	78K	7,8,9	P-13182
- Diamond Jubilee	78K	12	P-14411
- w/ carriage vinyl roof	78K	14	P-14466
STRIPES			
- customer initials - door side	78K	10	P-14109
- luggage compartment door-Designer Series Givenchy	78K	11	P-13502
- radiator grille opening panel-Designer Series Givenchy-refer to group 8C077 in Text Section			
- body side-Designer Series Pucci	78K	9	P-14108
WINDSHIELD			
- w/o carriage vinyl roof	78K	1	P-12994
- w/ carriage vinyl roof	78K	13	P-14467
L (BOBCAT)			
BACK END			
- body type 62 and 64	78L	9	P-11415
- body type 73	78L	11	P-11416
BACK WINDOW			
- body type 62	78L	10,11	P-12464
- body type 64	78L	13	P-12465
- body type 73	78L	11	P-11416
BELT			
Back - refer to ROOF and BACK BELT			
Front Door and Quarter - refer to Body Side			
BODY SIDE			
- body types 62 and 64-exc. Squire	78L	1,2	P-12314
- body type 73B	78L	3	P-13195
- body type 73H	78L	4,5	P-12315
- body type 73	78L	14	P-13512
BODY SIDE PROTECTION	78L	5,6	P-12316
DOOR EDGE GUARDS - refer to Body Illustration Index 230	78L	12	P-10061
LIFTGATE - refer to BACK END			
LUGGAGE COMPARTMENT - refer to BACK END			
ROOF and BACK BELT			
- body types 62 and 64 - roof drip side and partial roof	78L	11	P-12811
ROOF DRIP - refer to ROOF and BACK BELT			
STRIPES			
- body type 64	78L	11,12	P-13546
- body types 62 and 64	78L	6	P-12779
- body type 73	78L	7	P-12690
- body type 73	78L	13	P-14413
WINDOW FRAME			
- body types 62 and 64	78L	8	P-12497
- body type 73	78L	7	P-12498
WINDSHIELD	78L	1	P-12522

INDEX

TITLE	SECTION	PAGE	ILLUS. NO.
1978			
P (ZEPHYR)			
BACK END			
- body types 36, 54 and 66	78P	18	P-14084
- body type 74	78P	19	P-13994
BACK WINDOW			
- body types 36, 54 and 66	78P	20	P-13996
- body type 74	78P	19	P-13994
BELT			
- body type 36	78P	13	P-14078
- body type 54	78P	14	P-14076
- body type 66	78P	11,12	P-14064, P-14065
- body type 74	78P	15	P-14081
BODY SIDE			
- body types All - rocker panel and wheel opening	78P	3	P-14069
- body type 54 - with vinyl insert	78P	4	P-14072
- body type 66 - with vinyl insert	78P	5	P-14070
- body type 74 - with vinyl insert - exc. Villager	78P	6	P-14079
- body type 74 - "Villager"	78P	7,8	P-14082
- body type 36 - all vinyl	78P	9	P-14077
- body type 54 - all vinyl	78P	8	P-14075
- body type 66 - all vinyl	78P	9	P-14067
BODY SIDE PROTECTION			
- body types 54 and 74	78P	10	P-14073
- body type 66	78P	10	P-14071
- body type 74 - Villager	78P	7,8	P-14082
DOOR EDGE GUARDS	78P	2	P-10061
ROOF DRIP			
- body type 36	78P	17	P-14085
- body types 54 and 66	78P	16	P-14066
- body type 74	78P	15	P-14081
STRIPES			
- body type 36	78P	20	P-14256
WINDOW FRAME			
- body type 36	78P	13	P-14078
- body type 54	78P	14	P-14076
- body type 66 - without quarter window division bar	78P	11	P-14065
- body type 66 - with quarter window division bar - with and without louvers	78P	12	P-14064
- body type 74	78P	15	P-14081
WINDSHIELD	78P	1	P-13998

COPYRIGHT © 1986 — FORD MOTOR COMPANY — DEARBORN, MICHIGAN

INDEX

TITLE	SECTION	PAGE	ILLUS. NO.
1978			
V (VERSAILLES)			
BACK END	78V	3	P-13340
BELT	78V	5	P-12494
BODY SIDE			
- with rocker panel and wheel lip moulding	78V	1	P-13343
- with side protection moulding	78V	2	P-13342
BODY SIDE PROTECTION	78V	3	P-11943
DOOR EDGE GUARDS	78V	4	P-10061
LUGGAGE COMPARTMENT DOOR	78V	3	P-13340
ROOF and BACK BELT	78V	6	P-13341
ROOF DRIP	78V	6	P-13341
STRIPES	78V	4	P-12021
WINDOW FRAME	78V	5	P-12494
WINDSHIELD	78V	1	P-12526

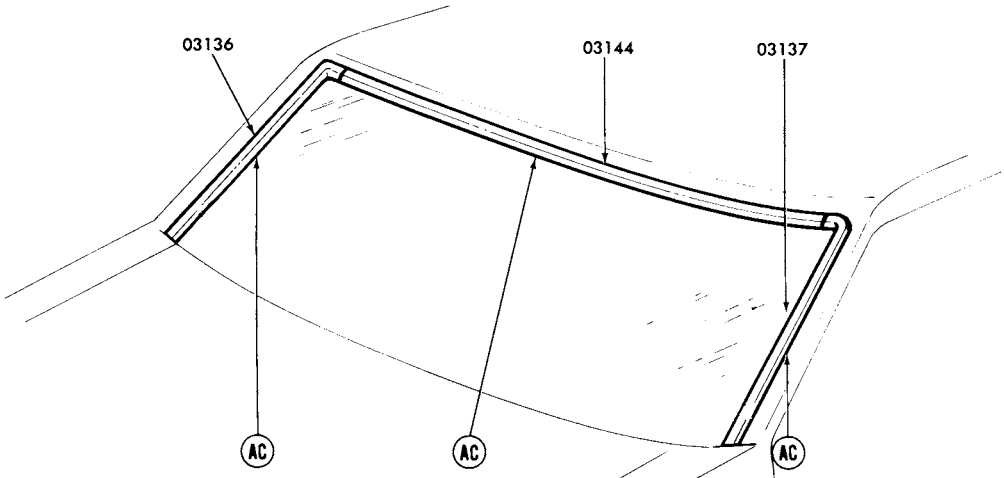

REFER TO EXTERIOR MOULDING SECTION 'R' FOR COMPLETE RETAINER INFORMATION

P-12521

1978 MERCURY - WINDSHIELD

GROUP NUMBER	PART NAME	DESCRIPTION	PART NUMBER		QTY.
03136-7	Moulding (windshield outside	Body types 53 and 71	(RH)♦D7AZ 5303136-A	(LH)♦D7AZ 5303137-A	1
		Body type 65	(RH)♦D7AZ 6003136-A	(LH) D7AZ 6003137-A	1
03144	Moulding (windshield outside	Body types 53 and 71	♦D7AZ 5303144-A		1
		Body type 65	♦D7AZ 6003144-A		1

♦ Includes attaching parts

COPYRIGHT © 1986 — FORD MOTOR COMPANY — DEARBORN, MICHIGAN

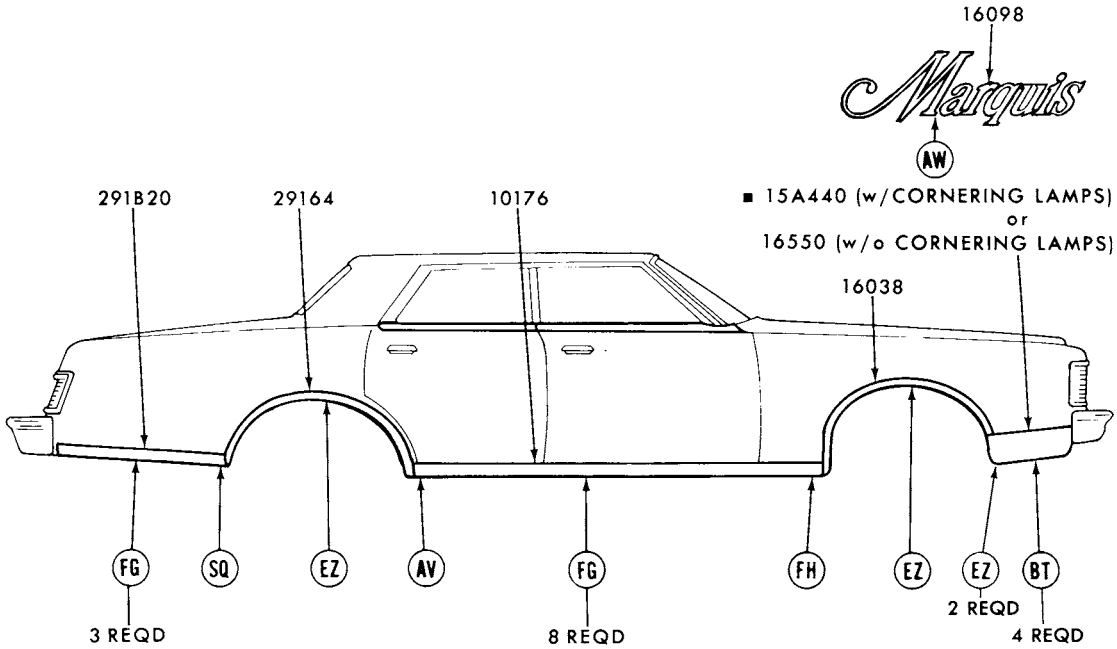

■ REFER TO GROUP IN CHASSIS SECTION
REFER TO EXTERIOR MOULDING SECTION "R" FOR COMPLETE RETAINER INFORMATION P-11967

1978 MERCURY - BODY TYPE 53H - SIDE - w/o WHEEL OPENING COVERS

GROUP NUMBER	PART NAME	DESCRIPTION	PART NUMBER		QTY.
10176-7	Moulding (body rocker panel)	90 7/32" long	(RH)♦D3MY 6510176-A	(LH)♦D3MY 6510177-A	1
16038-9	Moulding (front fender wheel opening)	W/rocker panel mouldings	(RH)♦D5MY 16038-A	(LH) 16039-A	1
		W/o rocker panel mouldings	(RH)♦D5MY 16038-C	(LH)♦D5MY 16039-C	1
16098	Plate (name)	"Marquis"	♦D3MY 16098-B	R.H. and L.H.	2
16550-1	Moulding (front fender lower front)		(RH)♦D5MY 16550-A	(LH)♦D5MY 16551-A	1
291B20-1	Moulding (quarter lower)	Not used in 1978			
29164-5	Moulding (quarter wheel opening)	W/rocker panel mouldings)	(RH)♦D3MY 6529164-A	(LH)♦D3MY 6529165-A	1
		W/o rocker panel mouldings	(RH)♦D4MY 6529164-A	(LH) D4MY 6529165-A	1

♦ Includes attaching parts

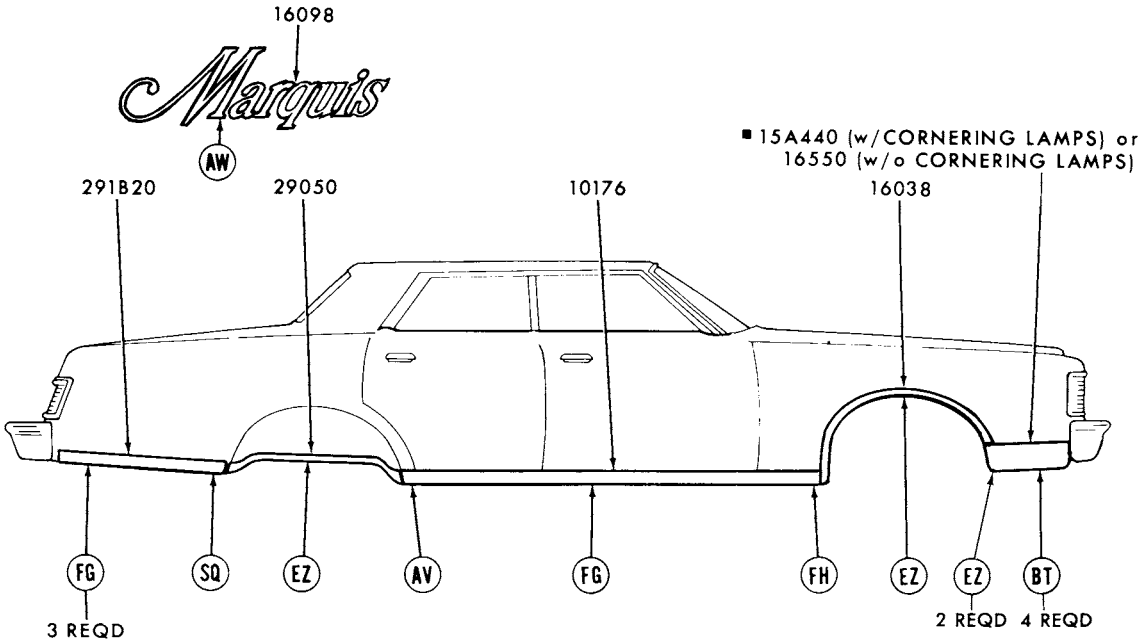

■ REFER TO GROUP IN TEXT SECTION
REFER TO EXTERIOR MOULDING SECTION "R" FOR COMPLETE RETAINER INFORMATION

P-11970

1978 MERCURY - BODY TYPE 53H - SIDE - w/WHEEL OPENING COVERS

GROUP NUMBER	PART NAME	DESCRIPTION	PART NUMBER		QTY.
10176-7	Moulding (body rocker panel)	90 7/32" long	(RH)♦D3MY 6510176-A	(LH)♦D3MY 6510177-A	1
16038-9	Moulding (front fender wheel opening)		(RH)♦D5MY 16038-A	(LH)♦D5MY 16039-A	1
16098	Plate (name)	"Marquis"	♦D3MY 16098-B	R.H. and L.H.	2
16550-1	Moulding (front fender lower front)		(RH)♦D5MY 16550-A	(LH)♦D5MY 16551-A	1
29050-1	Moulding (quarter wheel opening cover)		(RH)♦D3MY 6529050-B	(LH)♦D3MY 6529051-B	1
291B20-1	Moulding (quarter lower)		Not used in 1978		

♦ Includes attaching parts

COPYRIGHT © 1986 — FORD MOTOR COMPANY — DEARBORN, MICHIGAN

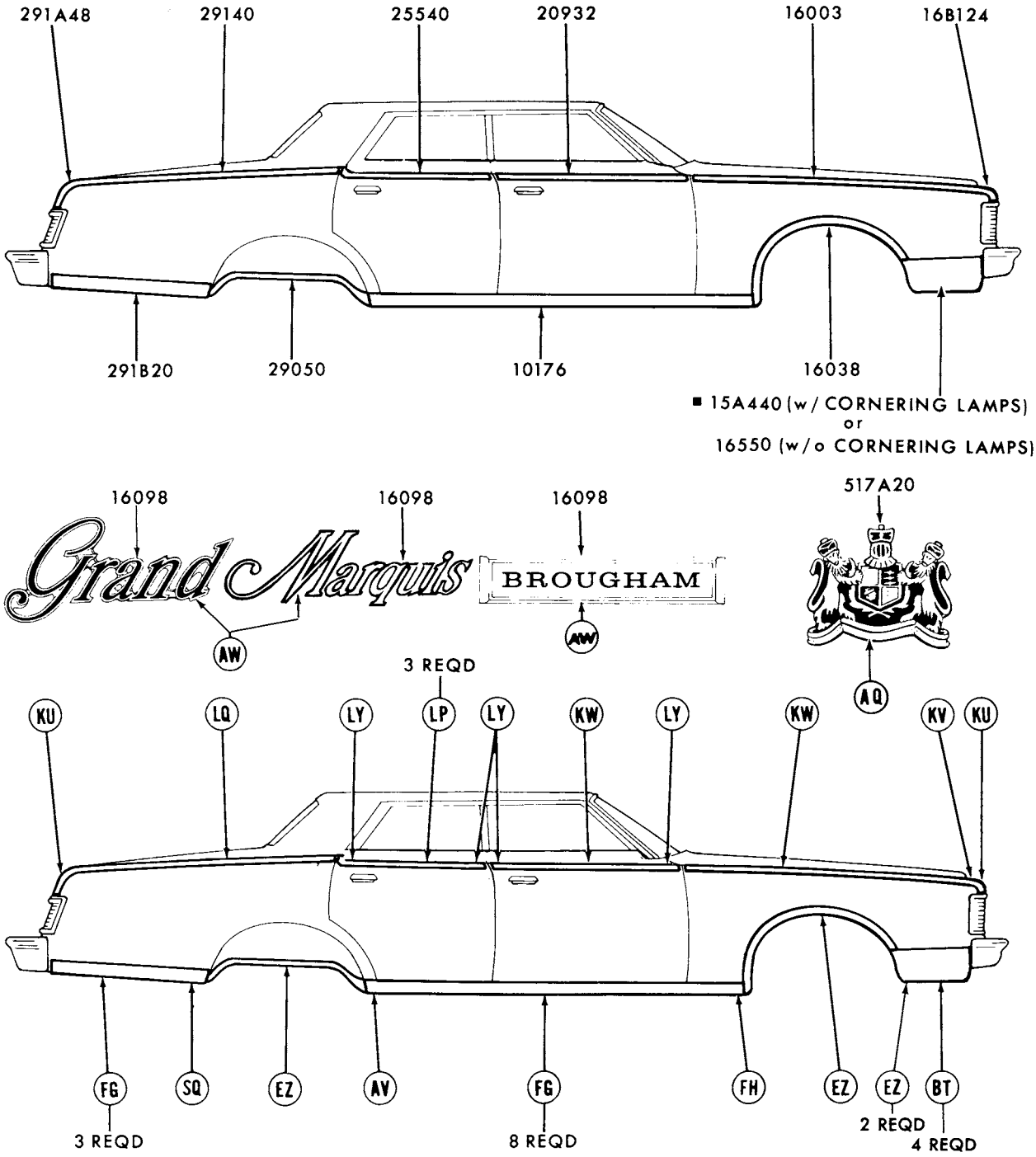

■ REFER TO GROUP IN CHASSIS SECTION
REFER TO EXTERIOR MOULDING SECTION "R" FOR COMPLETE RETAINER INFORMATION P-11971

1978 MERCURY - BODY TYPES 53K and L - SIDE - w/o VINYL INSERT MOULDINGS

1978 MERCURY - BODY TYPES 53K and L - SIDE - w/o VINYL INSERT MOULDINGS - cont'd.

GROUP NUMBER	PART NAME	DESCRIPTION	PART NUMBER		QTY.
10176-7	Moulding (body rocker panel)	90 7/32" long	(RH)♦D3MY 6510176-A	(LH)♦D3MY 6510177-A	1
16003-4	Moulding (front fender side)		(RH)♦D5MY 16003-A	(LH)♦D5MY 16004-A	1
16038-9	Moulding (front fender wheel opening)		(RH)♦D5MY 16038-A	(LH)♦D5MY 16039-A	1
16098	Plate (name)	"BROUGHAM"	♦D5MY 16098-A	R.H. and L.H.	2
		"Grand"	♦D5MY 16098-C	R.H. and L.H.	2
		"Marquis"	♦D3MY 16098-B	R.H. and L.H.	2
16B124-5	Moulding (front fender front extension)		(RH)♦D5MY 16B124-A	(LH)♦D5MY 16B125-A	1
16550-1	Moulding (front fender lower front)		(RH)♦D5MY 16550-A	(LH)♦D5MY 16551-A	1
20932-3	Moulding (front door upper)		(RH)♦D5MY 5320932-A	(LH)♦D5MY 5320933-A	1
25540-1	Moulding (rear door upper)		(RH)♦D5MY 5325540-A	(LH)♦D5MY 5325541-A	1
29050-1	Moulding (quarter wheel opening cover)		(RH)♦D3MY 6529050-B	(LH)♦D3MY 6529051-B	1
291B20-1	Moulding (quarter lower)		Not used in 1978		
29140-1	Moulding (quarter upper)		(RH)♦D5MY 5329140-A	(LH)♦D5MY 5329141-A	1
291A48-9	Moulding (quarter upper rear)		(RH)♦D5MY 65291A48-A	(LH)♦D5MY 65291A49-A	1
517A20	Ornament (roof side)	Gold	♦C9MY 65517A20-A	R.H. and L.H.	2
		Silver	♦D0MY 65517A20-A	R.H. and L.H.	2

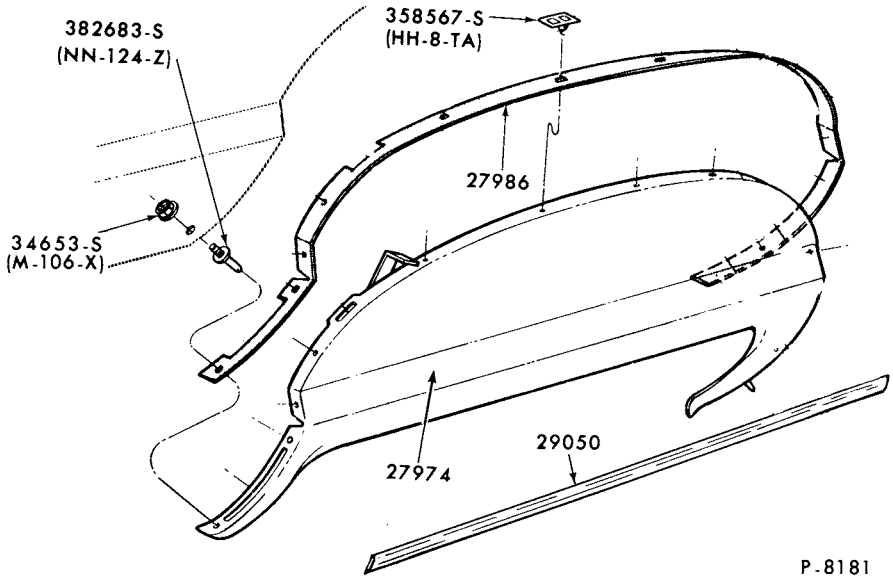

1978 MERCURY - BODY TYPES 53 and 65 - WHEEL OPENING COVER PARTS

GROUP NUMBER	PART NAME	DESCRIPTION	PART NUMBER		QTY.
27974-5	Panel (quarter wheel opening cover)		(RH)♦D3MY 6527974-A	(LH)♦D3MY 6527975-A	1
27986-7	Seal (quarter wheel opening cover)		(RH)♦D3MY 6527986-A	(LH)♦D3MY 6527987-A	1
29050-1	Moulding (quarter wheel opening cover)	Body types 53H,K and 65H,K	(RH)♦D3MY 6529050-B	(LH)♦D3MY 6529051-B	1

♦ Includes attaching parts

COPYRIGHT © 1986 — FORD MOTOR COMPANY — DEARBORN, MICHIGAN

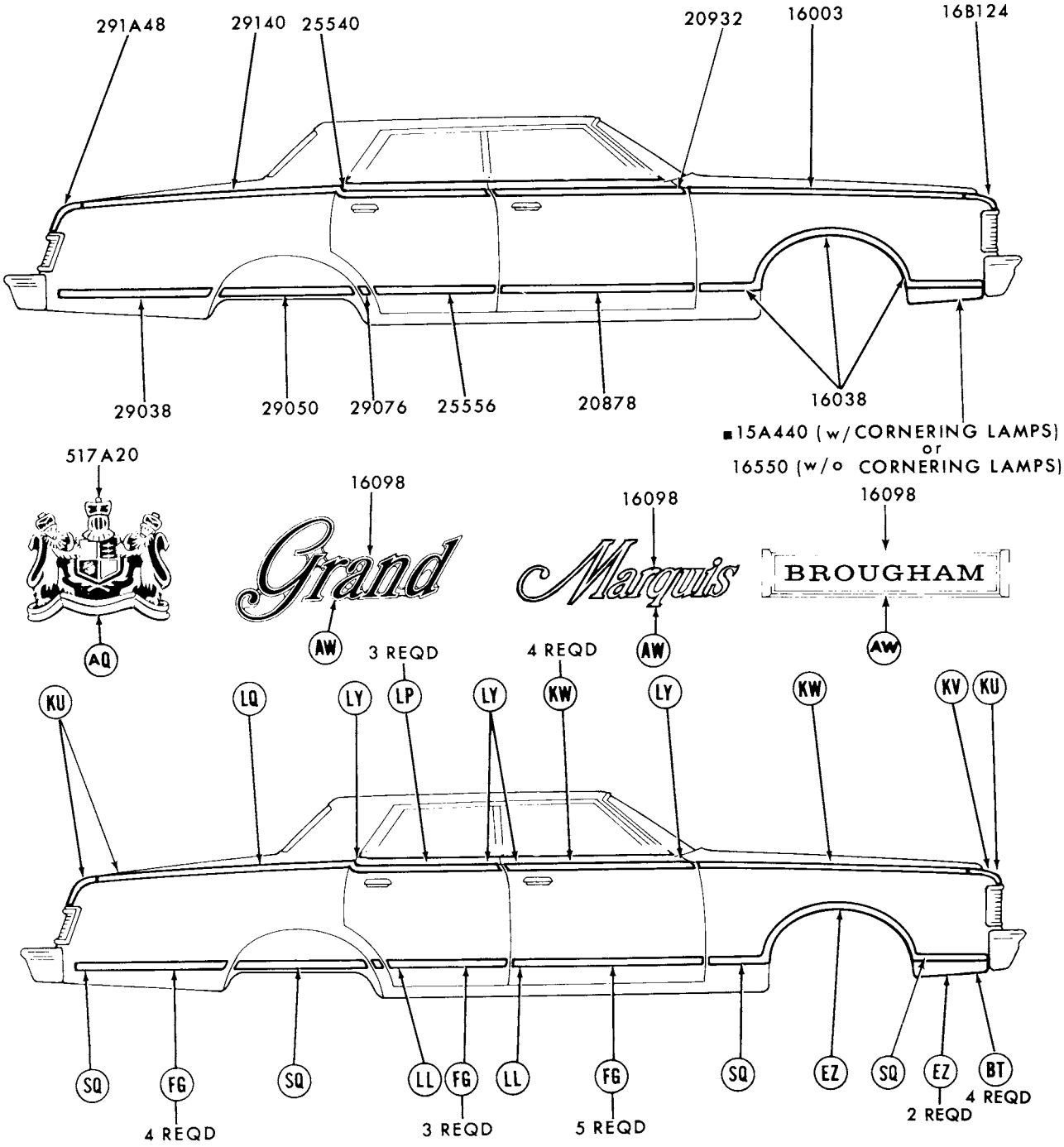

■ REFER TO GROUP IN CHASSIS SECTION
REFER TO EXTERIOR MOULDING SECTION "R" FOR COMPLETE RETAINER INFORMATION

P-11966

1978 MERCURY - BODY TYPE 53L - w/VINYL INSERT MOULDINGS

1978 MERCURY - BODY TYPE 53L - w/VINYL INSERT MOULDINGS - cont'd.

GROUP NUMBER	PART NAME	DESCRIPTION	PART NUMBER		QTY.
16003-4	Moulding (front fender side)		(RH)♠D5MY 16003-A	(LH)♠D5MY 16004-A	1
16038-9	Moulding (front fender wheel opening)	Incl. vinyl insert -			
		◊Black	(RH)♠D5MY 16038-CA	(LH)♠D5MY 16039-CA	1
		◊Blue (medium)	(RH)♠D8MY 16038-AB	(LH)♠D8MY 16039-AB	1
		◊Blue (midnight)	(RH)♠D8MY 16038-BB	(LH)♠D8MY 16039-BB	1
		◊Brown	(RH)♠D7MY 16038-AT	(LH)♠D7MY 16039-AT	1
		◊Camel	(RH)♠D8MY 16038-AV	(LH)♠D8MY 16039-AV	1
		◊Jade	(RH)♠D7MY 16038-AR	(LH)♠D7MY 16039-AR	1
		◊Red	(RH)♠D6MY 16038-AD	(LH)♠D6MY 16039-AD	1
		◊Silver	(RH)♠D6MY 16038-AP	(LH)♠D6MY 16039-AP	1
		◊White	(RH)♠D7MY 16038-AW	(LH)♠D7MY 16039-AW	1
16098	Plate (name)	"BROUGHAM"	♠D5MY 16098-A	R.H. and L.H.	2
		"Grand"	♠D5MY 16098-C	R.H. and L.H.	2
		"Marquis"	♠D3MY 16098-B	R.H. and L.H.	2
16B124-5	Moulding (front fender front extension)		(RH)♠D5MY 16B124-A	(LH)♠D5MY 16B125-A	1
16550-1	Moulding (front fender lower front)		(RH)♠D5MY 16550-A	(LH)♠D5MY 16551-A	1
20878-9	Moulding (front door)	Incl. vinyl insert-			
		◊Black	(RH)♠D5MY 5320878-CA	(LH)♠D5MY 5320879-CA	1
		◊Blue (medium)	(RH)✱D8MY 5320878-AB Not replaced (4/84)	(LH)♠D8MY 5320879-AB	1
		◊Blue (midnight)	(RH)♠D8MY 5320878-BB	(LH)♠D8MY 5320879-BB	1
		◊Brown	(RH)♠D7MY 5320878-AT	(LH)♠D7MY 5320879-AT	1
		◊Camel	(RH)♠D8MY 5320878-AV	(LH)♠D8MY 5320879-AV	1
		◊Jade	(RH)♠D7MY 5320878-AR	(LH)♠D7MY 5320879-AR	1
		◊Red	(RH)♠D6MY 5320878-AD	(LH)♠D6MY 5320879-AD	1
		◊Silver	(RH)♠D6MY 5320878-AP	(LH)♠D6MY 5320879-AP	1
		◊White	(RH)♠D7MY 5320878-AW	(LH)♠D7MY 5320879-AW	1
20932-3	Moulding (front door upper)		(RH)♠D5MY 5320932-A	(LH)♠D5MY 5320933-A	1
25540-1	Moulding (rear door upper)		(RH)♠D5MY 5325540-A	(LH)♠D5MY 5325541-A	1
25556-7	Moulding (rear door)	Incl. vinyl insert-			
		◊Black	(RH)♠D5MY 5325556-BA	(LH)♠D5MY 5325557-BA	1
		◊Blue (medium)	(RH)★D8MY 5325556-AB Not replaced (4/84)	(LH)♠D8MY 5325557-AB	1
		◊Blue (midnight)	(RH)♠D8MY 5325556-BB	(LH)♠D8MY 5325557-BB	1
		◊Brown	(RH)♠D7MY 5325556-AT	(LH)♠D7MY 5325557-AT	1
		◊Camel	(RH)♠D8MY 5325556-AV	(LH)♠D8MY 5325557-AV	1
		◊Jade	(RH)♠D7MY 5325556-AR	(LH)♠D7MY 5325557-AR	1
		◊Red	(RH)♠D6MY 5325556-AD	(LH)♠D6MY 5325557-AD	1
		◊Silver	(RH)♠D6MY 5325556-AP	(LH)♠D6MY 5325557-AP	1
		◊White	(RH)♠D7MY 5325556-AW	(LH)♠D7MY 5325557-AW	1

♠ Includes attaching parts
◊ For color verification, refer to the vinyl roof swatches in the 1978 Salesman's Color and Upholstery Selections Guide.

COPYRIGHT © 1986 — FORD MOTOR COMPANY — DEARBORN, MICHIGAN

1978 MERCURY - BODY TYPE 53L - SIDE - w/VINYL INSERT MOULDINGS - cont'd.

GROUP NUMBER	PART NAME	DESCRIPTION	PART NUMBER		QTY.
29038-9	Moulding (quarter)	Incl. vinyl insert-			
		◊Black	(RH)♦D5MY 6529038-AA	(LH)♦D5MY 6529039-AA	1
		◊Blue (medium)	(RH)♦D8MY 6529038-AB	(LH)♦D8MY 6529039-AB	1
		◊Blue (midnight)	(RH)♦D8MY 6529038-BB	(LH)♦D8MY 6529039-BB	1
		◊Brown	(RH)♦D7MY 6529038-AT	(LH)♦D7MY 6529039-AT	1
		◊Camel	(RH)♦D8MY 6529038-AV	(LH)♦D8MY 6529039-AV	1
		◊Jade	(RH)♦D7MY 6529038-AR	(LH)♦D7MY 6529039-AR	1
		◊Red	(RH)♦D6MY 6529038-AD	(LH)♦D6MY 6529039-AD	1
		◊Silver	(RH)♦D6MY 6529038-AP	(LH)♦D6MY 6529039-AP	1
		◊White	(RH)♦D7MY 6529038-AW	(LH)♦D7MY 6529039-AW	1
29050-1	Moulding (quarter wheel opening cover)	Incl. vinyl insert-			
		◊Black	(RH)♦D5MY 6529050-AA	(LH)♦D5MY 6529051-AA	1
		◊Blue (medium)	(RH)♦D8MY 6529050-AB	(LH)♦D8MY 6529051-AB	1
		◊Blue (midnight)	(RH)♦D8MY 6529050-BB	(LH)♦D8MY 6529051-BB	1
		◊Brown	(RH)♦D7MY 6529050-AT	(LH)♦D7MY 6529051-AT	1
		◊Camel	(RH)♦D8MY 6529050-AV	(LH)♦D8MY 6529051-AV	1
		◊Jade	(RH)♦D7MY 6529050-AR	(LH)♦D7MY 6529051-AR	1
		◊Red	(RH)♦D6MY 6529050-AD	(LH)♦D6MY 6529051-AD	1
		◊Silver	(RH)♦D6MY 6529050-AP	(LH)♦D6MY 6529051-AP	1
		◊White	(RH)♦D7MY 6529050-AW	(LH)♦D7MY 6529051-AW	1
29076-7	Moulding (quarter lower front)	Incl. vinyl insert-			
		◊Black	(RH)♦D5MY 5329076-BA	(LH)♦D5MY 5329077-BA	1
		◊Blue (medium)	(RH)✶D8MY 5329076-AB Not replaced (6/82)	(LH)♦D8MY 5329077-AB	1
		◊Blue (midnight)	(RH)♦D8MY 5329076-BB	(LH)✶D8MY 5329077-BB Not replaced (6/83)	1
		◊Brown	(RH)♦D7MY 5329076-AT	(LH)♦D7MY 5329077-AT	1
		◊Camel	(RH)♦D8MY 5329076-AV	(LH)♦D8MY 5329077-AV	1
		◊Jade	(RH)♦D7MY 5329076-AR	(LH)♦D7MY 5329077-AR	1
		◊Red	(RH)♦D6MY 5329076-BD	(LH)♦D6MY 5329077-BD	1
		◊Silver	(RH)♦D6MY 5329076-AP	(LH)♦D6MY 5329077-AP	1
		◊White	(RH)♦D7MY 5329076-AW	(LH)♦D7MY 5329077-AW	1
29140-1	Moulding (quarter upper)		(RH)♦D5MY 5329140-A	(LH)♦D5MY 5329141-A	1
291A48-9	Moulding (quarter upper rear)		(RH)♦D5MY 65291A48-A	(LH)♦D5MY 65291A49-A	1
517A20	Ornament (roof side)	Gold	♦C9MY 65517A20-A	R.H. and L.H.	2
		Silver	♦D0MY 65517A20-A	R.H. and L.H.	2

♦ Includes attaching parts

◊ For color verification, refer to the vinyl roof swatches in the 1978 Salesman's Color and Upholstery Selections Guide.

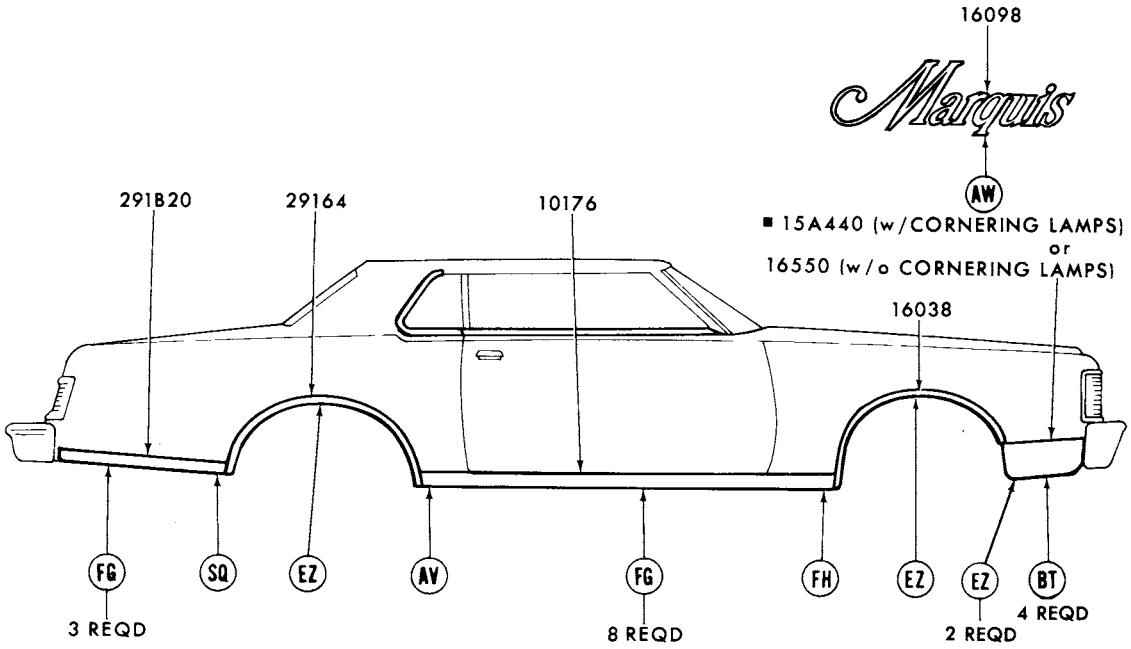

■ REFER TO GROUP IN CHASSIS SECTION
REFER TO EXTERIOR MOULDING SECTION "R" FOR COMPLETE RETAINER INFORMATION

P-11968

1978 MERCURY - BODY TYPES 65H and K - SIDE - w/o WHEEL OPENING COVER

GROUP NUMBER	PART NAME	DESCRIPTION	PART NUMBER		QTY.
10176-7	Moulding (body rocker panel)	90 7/32" long	(RH)♦D3MY 6510176-A	(LH)♦D3MY 6510177-A	1
16038-9	Moulding (front fender wheel opening)	W/rocker panel mouldings	(RH)♦D5MY 16038-A	(LH)♦D5MY 16039-A	1
		W/o rocker panel mouldings	(RH)♦D5MY 16038-C	(LH)♦D5MY 16039-C	1
16098	Plate (name)	"Marquis"	♦D3MY 16098-B	R.H. and L.H.	2
16550-1	Moulding (front fender lower front)		(RH)♦D5MY 16550-A	(LH)♦D5MY 16551-A	1
291B20-1	Moulding (quarter lower)		Not used in 1978		
29164-5	Moulding (quarter wheel opening)	W/rocker panel mouldings	(RH)♦D3MY 6529164-A	(LH)♦D3MY 6529165-A	1
		W/o rocker panel mouldings	(RH)♦D4MY 6529164-A	(LH)♦D4MY 6529165-A	1

♦ Includes attaching parts

COPYRIGHT © 1986 — FORD MOTOR COMPANY — DEARBORN, MICHIGAN

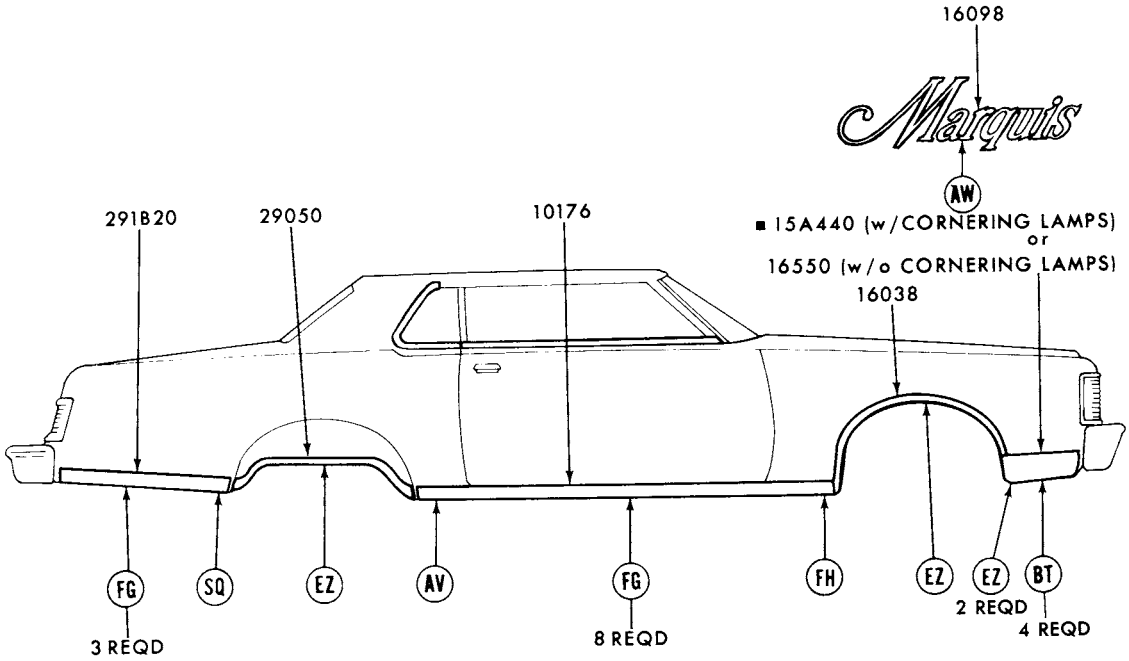

■ REFER TO GROUP IN CHASSIS SECTION
REFER TO EXTERIOR MOULDING SECTION "R" FOR COMPLETE RETAINER INFORMATION

P-11969

1978 MERCURY - BODY TYPES 65H and K - SIDE - w/WHEEL OPENING COVER

GROUP NUMBER	PART NAME	DESCRIPTION	PART NUMBER		QTY.
10176-7	Moulding (body rocker panel)	90 7/32" long	(RH)♦D3MY 6510176-A	(LH)♦D3MY 6510177-A	1
16038-9	Moulding (front fender wheel opening)		(RH)♦D5MY 16038-A	(LH)♦D5MY 16039-A	1
16098	Plate (name)	"Marquis"	♦D3MY 16098-B	R.H. and L.H.	2
16550-1	Moulding (front fender lower front)		(RH)♦D5MY 16550-A	(LH)♦D5MY 16551-A	1
29050-1	Moulding (quarter wheel opening cover)		(RH)♦D3MY 6529050-B	(LH)♦D3MY 6529051-B	1
291B20-1	Moulding (quarter lower)		Not used in 1978		

♦ Includes attaching parts

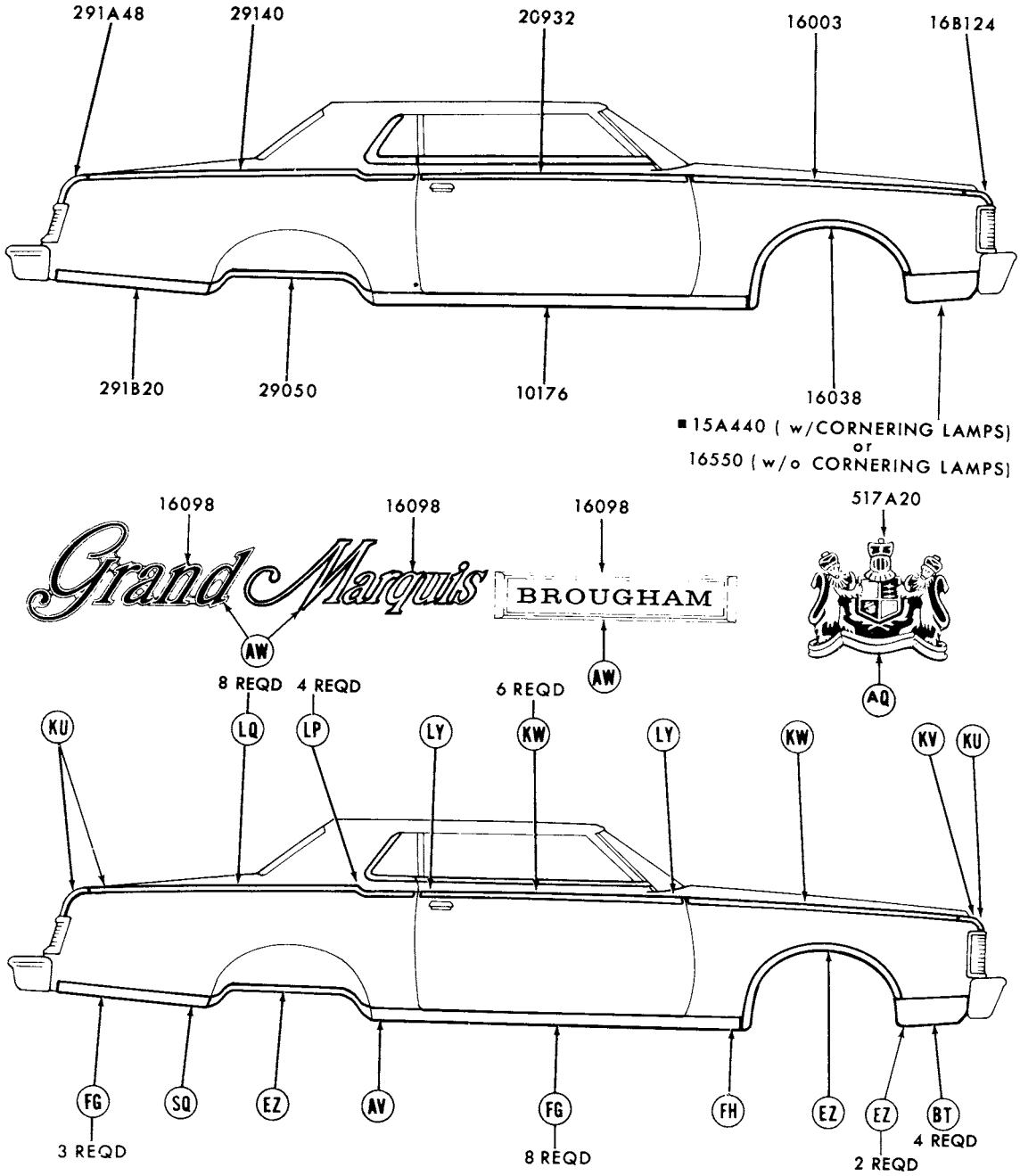

■REFER TO GROUP IN CHASSIS SECTION
REFER TO EXTERIOR MOULDING SECTION "R" FOR COMPLETE RETAINER INFORMATION

P-11972

1978 MERCURY - BODY TYPE 65K - SIDE - w/o VINYL INSERT MOULDINGS

COPYRIGHT © 1986 — FORD MOTOR COMPANY — DEARBORN, MICHIGAN

1978 MERCURY - BODY TYPE 65K - SIDE - w/o VINYL INSERT MOULDINGS - cont'd.

GROUP NUMBER	PART NAME	DESCRIPTION	PART NUMBER		QTY.
10176-7	Moulding (body rocker panel)	90 7/32" long	(RH)♦D3MY 6510176-A	(LH)♦D3MY 6510177-A	1
16003-4	Moulding (front fender side)		(RH)♦D5MY 16003-A	(LH)♦D5MY 16004-A	1
16038-9	Moulding (front fender wheel opening)		(RH)♦D5MY 16038-A	(LH)♦D5MY 16039-A	1
16098	Plate (name)	"BROUGHAM"	♦D5MY 16098-A	R.H. and L.H.	2
		"Grand"	♦D5MY 16098-C	R.H. and L.H.	2
		"Marquis"	♦D3MY 16098-B	R.H. and L.H.	2
16B124-5	Moulding (front fender front extension)		(RH)♦D5MY 16B124-A	(LH)♦D5MY 16B125-A	1
16550-1	Moulding (front fender lower front)		(RH)♦D5MY 16550-A	(LH)♦D5MY 16551-A	1
20932-3	Moulding (front door upper)		(RH)♦D5MY 6520932-A	(LH)♦D5MY 6520933-A	1
29050-1	Moulding (quarter wheel opening cover)		(RH)♦D3MY 6529050-B	(LH)♦D3MY 6529051-B	1
291B20-1	Moulding (quarter lower)		Not used in 1978		
29140-1	Moulding (quarter upper)		(RH)♦D5MY 6529140-A	(LH)♦D5MY 6529141-A	1
291A48-9	Moulding (quarter upper rear)		(RH)♦D5MY 65291A48-A	(LH)♦D5MY 65291A49-A	1
517A20	Ornament (roof side)	Gold	♦C9MY 65517A20-A	R.H. and L.H.	2
		Silver	♦D0MY 65517A20-A	R.H. and L.H.	2

♦ Includes attaching parts

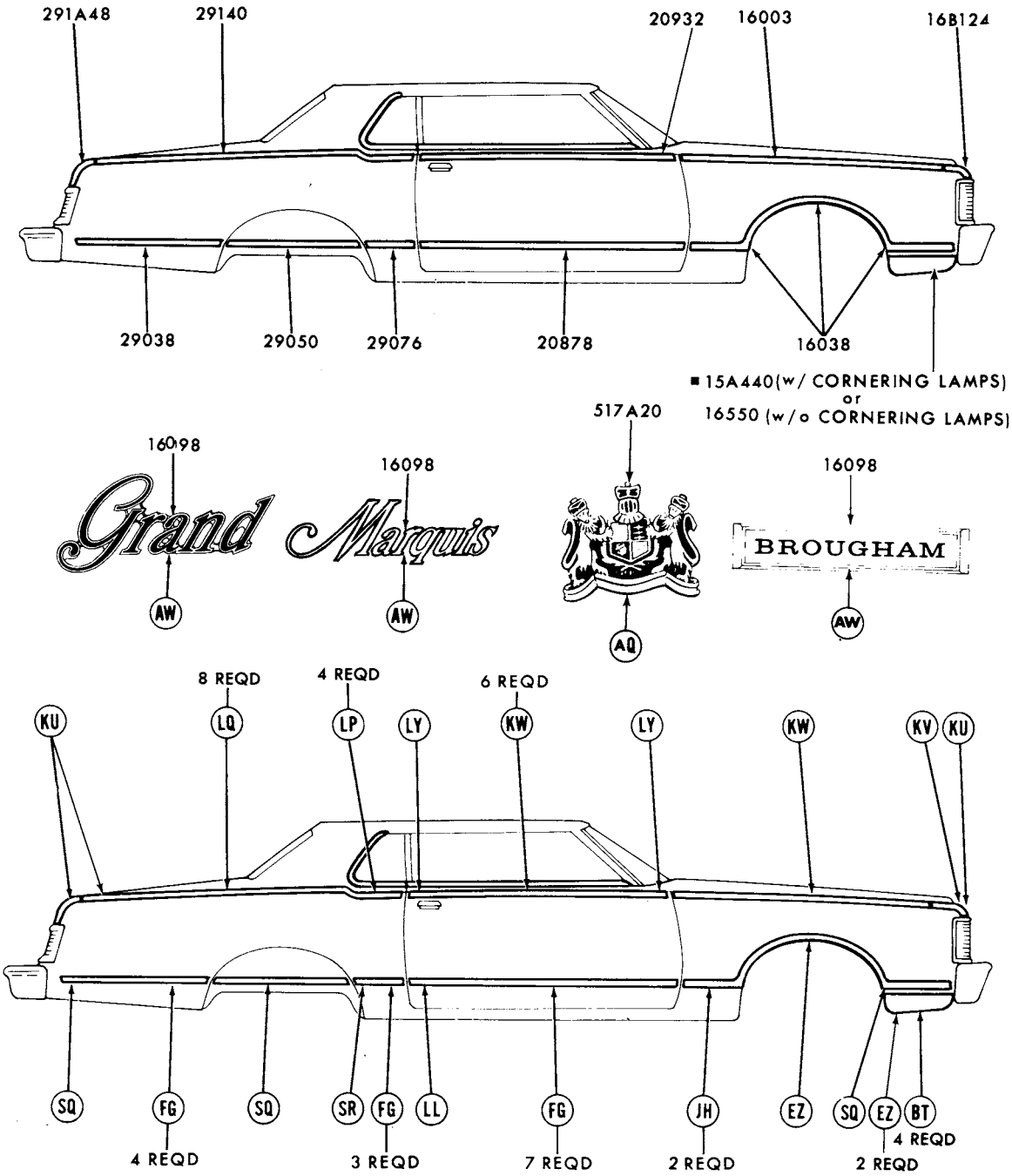

■ REFER TO GROUP IN CHASSIS SECTION
REFER TO EXTERIOR MOULDING SECTION "R" FOR COMPLETE RETAINER INFORMATION

P-11965

1978 MERCURY - BODY TYPE 65L - SIDE - w/VINYL INSERT MOULDINGS

COPYRIGHT © 1986 — FORD MOTOR COMPANY — DEARBORN, MICHIGAN

1978 MERCURY - BODY TYPE 65L - SIDE - w/VINYL INSERT MOULDINGS - cont'd.

GROUP NUMBER	PART NAME	DESCRIPTION	PART NUMBER		QTY.
16003-4	Moulding (front fender side)		(RH)♦D5MY 16003-A	(LH)♦D5MY 16004-A	1
16038-9	Moulding (front fender wheel opening)	Incl. vinyl insert-			
		◊Black	(RH)♦D5MY 16038-CA	(LH)♦D5MY 16039-CA	1
		◊Blue (medium)	(RH)♦D8MY 16038-AB	(LH)♦D8MY 16039-AB	1
		◊Blue (midnight)	(RH)♦D8MY 16038-BB	(LH)♦D8MY 16039-BB	1
		◊Brown	(RH)♦D7MY 16038-AT	(LH)♦D7MY 16039-AT	1
		◊Camel	(RH)♦D8MY 16038-AV	(LH)♦D8MY 16039-AV	1
		◊Jade	(RH)♦D7MY 16038-AR	(LH)♦D7MY 16039-AR	1
		◊Red	(RH)♦D6MY 16038-AD	(LH)♦D6MY 16039-AD	1
		◊Silver	(RH)♦D6MY 16038-AP	(LH)♦D6MY 16039-AP	1
		◊White	(RH)♦D7MY 16038-AW	(LH)♦D7MY 16039-AW	1
16098	Plate (name)	"BROUGHAM"	♦D5MY 16098-A	R.H. and L.H.	2
		"Grand"	♦D5MY 16098-C	R.H. and L.H.	2
		"Marquis"	♦D3MY 16098-B	R.H. and L.H.	2
16B124-5	Moulding (front fender front extension)		(RH)♦D5MY 16B124-A	(LH)♦D5MY 16B125-A	1
16550-1	Moulding (front fender lower front)		(RH)♦D5MY 16550-A	(LH)♦D5MY 16551-A	1
20878-9	Moulding (front door)	Incl. vinyl insert-			
		◊Black	(RH)♦D5MY 6520878-AA	(LH)♦D5MY 6520879-AA	1
		◊Blue (medium)	(RH)★D8MY 6520878-AB Not replaced (6/83)	(LH)♦D8MY 6520879-AB	1
		◊Blue (midnight)	(RH)★D8MY 6520878-BB Not replaced (4/84)	(LH)♦D8MY 6520879-BB	1
		◊Brown	(RH)♦D7MY 6520878-AT	(LH)♦D7MY 6520879-AT	1
		◊Camel	(RH)♦D8MY 6520878-AV	(LH)♦D8MY 6520879-AV	1
		◊Jade	(RH)♦D7MY 6520878-AR	(LH)♦D7MY 6520879-AR	1
		◊Red	(RH)♦D6MY 6520878-AD	(LH)♦D6MY 6520879-AD	1
		◊Silver	(RH)♦D6MY 6520878-AP	(LH)♦D6MY 6520879-AP	1
		◊White	(RH)♦D7MY 6520878-AW	(LH)♦D7MY 6520879-AW	1
20932-3	Moulding (front door upper)		(RH)♦D5MY 6520932-A	(LH)♦D5MY 6520933-A	1
29038-9	Moulding (quarter)	Incl. vinyl insert-			
		◊Black	(RH)♦D5MY 6529038-AA	(LH)♦D5MY 6529039-AA	1
		◊Blue (medium)	(RH)♦D8MY 6529038-AB	(LH)♦D8MY 6529039-AB	1
		◊Blue (midnight)	(RH)♦D8MY 6529038-BB	(LH)♦D8MY 6529039-BB	1
		◊Brown	(RH)♦D7MY 6529038-AT	(LH)♦D7MY 6529039-AT	1
		◊Camel	(RH)♦D8MY 6529038-AV	(LH)♦D8MY 6529039-AV	1
		◊Jade	(RH)♦D7MY 6529038-AR	(LH)♦D7MY 6529039-AR	1
		◊Red	(RH)♦D6MY 6529038-AD	(LH)♦D6MY 6529039-AD	1
		◊Silver	(RH)♦D6MY 6529038-AP	(LH)♦D6MY 6529039-AP	1
		◊White	(RH)♦D7MY 6529038-AW	(LH)♦D7MY 6529039-AW	1
29050-1	Moulding (quarter wheel opening cover)	Incl. vinyl insert-			
		◊Black	(RH)♦D5MY 6529050-AA	(LH)♦D5MY 6529051-AA	1
		◊Blue (medium)	(RH)♦D8MY 6529050-AB	(LH)♦D8MY 6529051-AB	1
		◊Blue (midnight)	(RH)♦D8MY 6529050-BB	(LH)♦D8MY 6529051-BB	1
		◊Brown	(RH)♦D7MY 6529050-AT	(LH)♦D7MY 6529051-AT	1
		◊Camel	(RH)♦D8MY 6529050-AV	(LH)♦D8MY 6529051-AV	1
		◊Jade	(RH)♦D7MY 6529050-AR	(LH)♦D7MY 6529051-AR	1
		◊Red	(RH)♦D6MY 6529050-AD	(LH)♦D6MY 6529051-AD	1
		◊Silver	(RH)♦D6MY 6529050-AP	(LH)♦D6MY 6529051-AP	1
		◊White	(RH)♦D7MY 6529050-AW	(LH)♦D7MY 6529051-AW	1

♦ Includes attaching parts
◊ For color verification, refer to the vinyl roof swatches in the 1978 Salesman's Color and Upholstery Selections Guide.

1978 MERCURY - BODY TYPE 65L - SIDE - w/VINYL INSERT MOULDINGS - cont'd.

GROUP NUMBER	PART NAME	DESCRIPTION	PART NUMBER		QTY.
29076-7	Moulding (quarter lower front)	Incl. vinyl insert-			
		◊Black	(RH)♦D5MY 6529076-AA	(LH)♦D5MY 6529077-AA	1
		◊Blue (medium)	(RH)♦D8MY 6529076-AB	(LH)♦D8MY 6529077-AB	1
		◊Blue (midnight)	(RH)♦D8MY 6529076-BB	(LH)♦D8MY 6529077-BB	1
		◊Brown	(RH)♦D7MY 6529076-AT	(LH)♦D7MY 6529077-AT	1
		◊Camel	(RH)♦D8MY 6529076-AV	(LH)♦D8MY 6529077-AV	1
		◊Jade	(RH) D7MY 6529076-AR	(LH) D7MY 6529077-AR	1
		◊Red	(RH)♦D6MY 6529076-AD	(LH)♦D6MY 6529077-AD	1
		◊Silver	(RH)♦D6MY 6529076-AP	(LH)♦D6MY 6529077-AP	1
		◊White	(RH)♦D7MY 6529076-AW	(LH)♦D7MY 6529077-AW	1
29140-1	Moulding (quarter upper)		(RH)♦D5MY 6529140-A	(LH)♦D5MY 6529141-A	1
291A48-9	Moulding (quarter upper rear)		(RH)♦D5MY 65291A48-A	(LH)♦D5MY 65291A49-A	1
517A20	Ornament (roof side)	Gold	♦C9MY 65517A20-A	R.H. and L.H.	2
		Silver	♦D0MY 65517A20-A	R.H. and L.H.	1

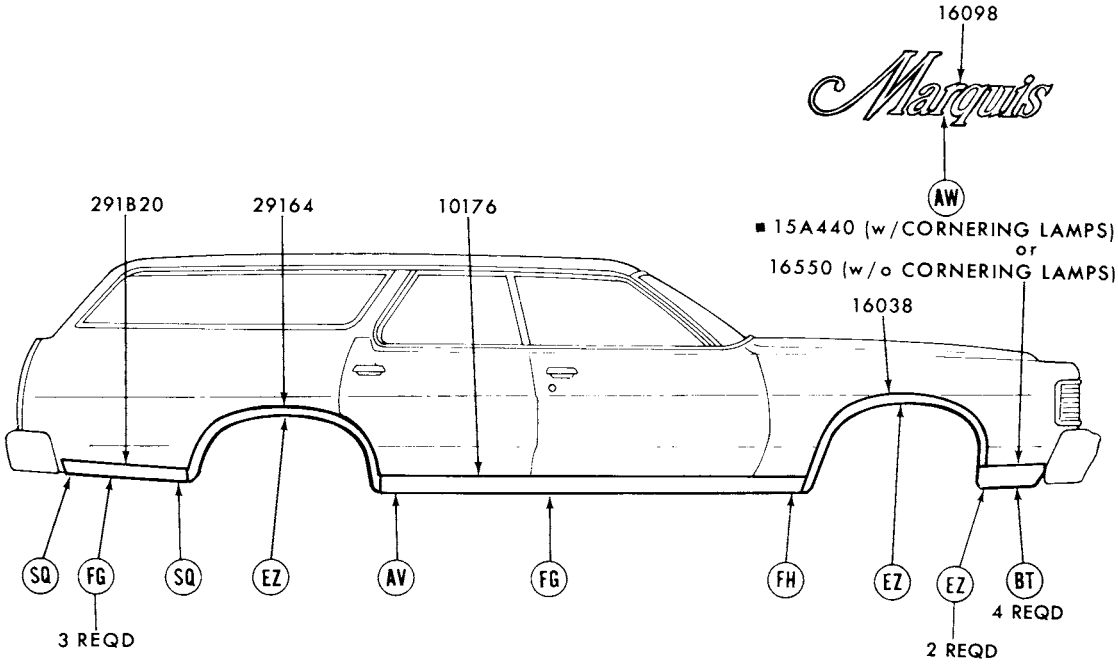

■ REFER TO GROUP IN TEXT SECTION
REFER TO EXTERIOR MOULDING SECTION "R" FOR COMPLETE RETAINER INFORMATION

P-11973

1978 MERCURY - BODY TYPE EXCEPT 71 "COLONY PARK" - SIDE

GROUP NUMBER	PART NAME	DESCRIPTION	PART NUMBER		QTY.
10176-7	Moulding (body rocker panel)	87 3/4" long	(RH)♦D3MY 7110176-A	(LH)♦D3MY 7110177-A	1
16038-9	Moulding (front fender wheel opening)		(RH)♦D5MY 16038-A	(LH)♦D5MY 16039-A	1
16098	Plate (name)	"Marquis"	♦D3MY 16098-B	R.H. and L.H.	2
16550-1	Moulding (front fender lower front)		(RH)♦D5MY 16550-A	(LH)♦D5MY 16551-A	1
291B20-1	Moulding (quarter outside lower)		Not used in 1978		
29164-5	Moulding (quarter wheel opening)		(RH)♦D5MY 7129164-C	(LH)♦D5MY 7129165-C	1

♦ Includes attaching parts
◊ For color verification, refer to the vinyl roof swatches in the 1978 Salesman's Color and Upholstery Selections Guide.

COPYRIGHT © 1986 — FORD MOTOR COMPANY — DEARBORN, MICHIGAN

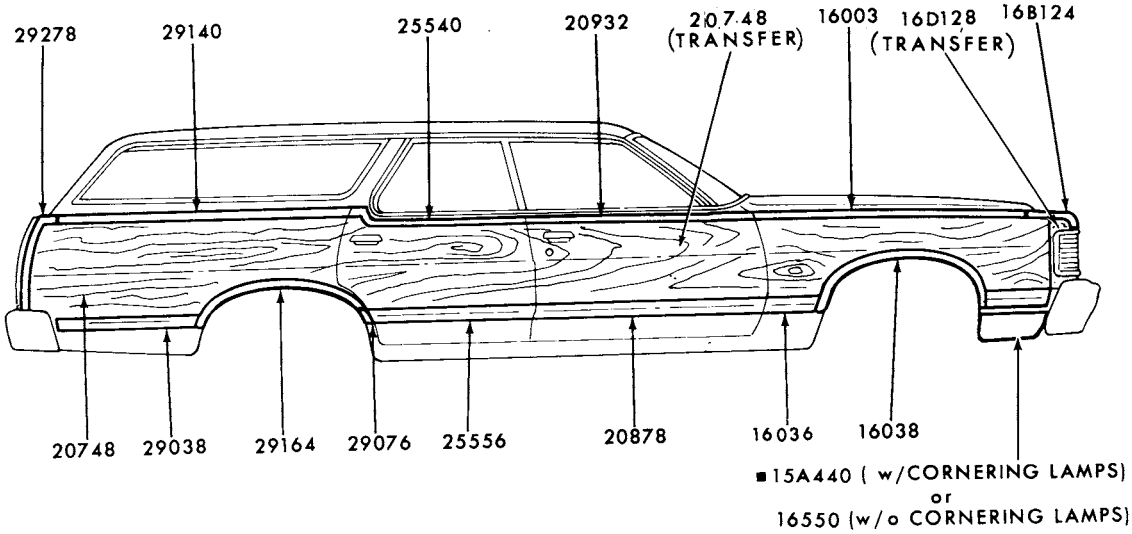

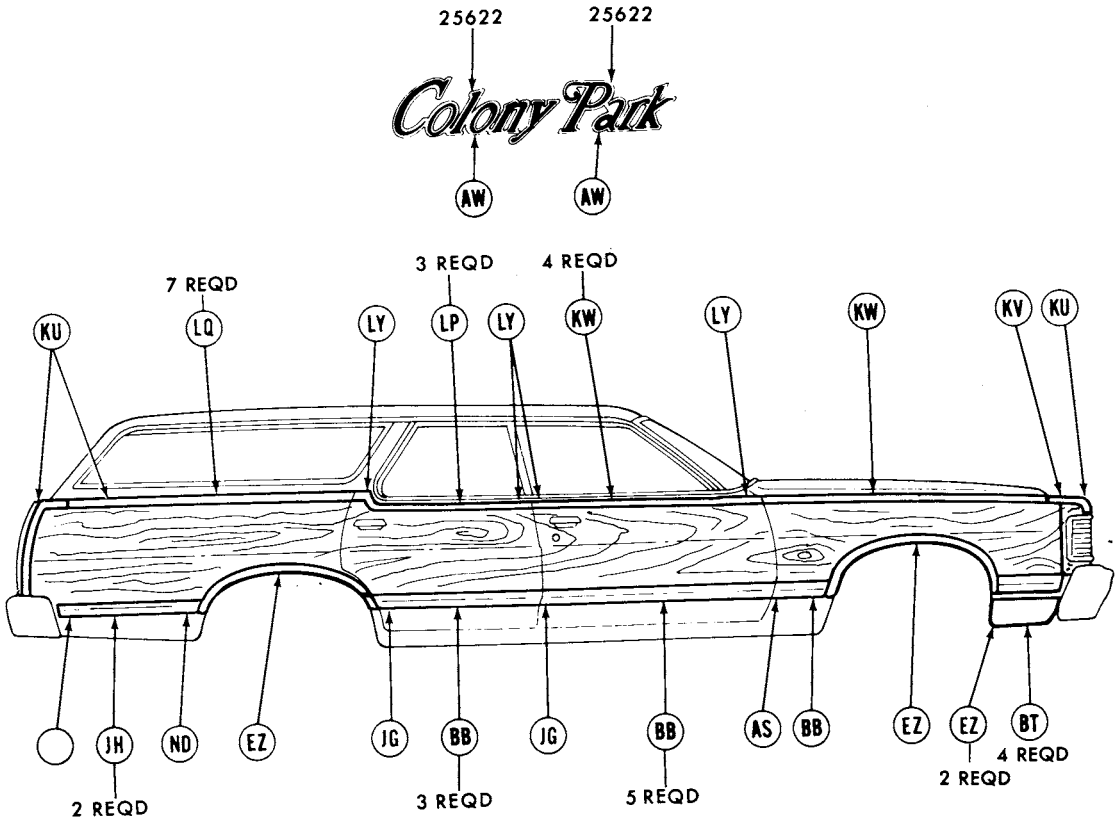

■REFER TO GROUP IN CHASSIS SECTION
REFER TO EXTERIOR MOULDING SECTION "R" FOR COMPLETE RETAINER INFORMATION

P-11974

1978 MERCURY - BODY TYPE 71 "COLONY PARK" - SIDE

1978 MERCURY - BODY TYPE 71 "COLONY PARK" - SIDE - cont'd.

GROUP NUMBER	PART NAME	DESCRIPTION	PART NUMBER		QTY.
16003-4	Moulding (front fender side)		(RH)♦D5MY 16003-A	(LH)♦D5MY 16004-A	1
16036-7	Moulding (front fender lower rear)		(RH)♦D3MY 16036-A	(LH)♦D3MY 16037-A	1
16038-9	Moulding (front fender wheel opening)		(RH)♦D5MY 16038-B	(LH)♦D5MY 16039-B	1
16B124-5	Moulding (front fender front extension)		(RH)♦D5MY 16B124-A	(LH)♦D5MY 16B125-A	1
16D128-9	Transfer (front fender front)	Rosewood-adhesive backed	(RH) D6MY 16D128-A	(LH) D6MY 16D129-A	1
16550-1	Moulding (front fender lower front)		(RH)♦D5MY 16550-A	(LH)♦D5MY 16551-A	1
20748	Transfer (wood grain)	Rosewood-adhesive backed-cut to fit	D6MY 7120748-A		1
20878-9	Moulding (front door)		(RH)♦D3MY 7120878-A	(LH)♦D3MY 7120879-A	1
20932-3	Moulding (front door upper)		(RH)♦D5MY 5320932-A	(LH)♦D5MY 5320933-A	1
25540-1	Moulding (rear door upper)		(RH)♦D5MY 5325540-A	(LH)♦D5MY 5325541-A	1
25556-7	Moulding (rear door)		(RH)♦D3MY 7125556-A	(LH)♦D3MY 7125557-A	1
25622	Plate (name)	"Colony"	♦D3MY 7125622-A	R.H. and L.H.	2
		"Park"	♦D3MY 7125622-B	R.H. and L.H.	2
29038-9	Moulding (quarter)		(RH)♦D3MY 7129038-C	(LH)♦D3MY 7129039-C	1
29076-7	Moulding (quarter lower front)		(RH)♦D3MY 7129076-A	(LH)♦D3MY 7129077-A	1
29140-1	Moulding (quarter upper)		(RH)♦D5MY 7129140-A	(LH)♦D5MY 7129141-A	1
29164-5	Moulding (quarter wheel opening)		(RH)♦D3MY 7129164-A	(LH)♦D3MY 7129165-A	1
29278-9	Moulding (quarter upper rear)		(RH)♦D5MY 7129278-A	(LH)♦D5MY 7129279-A	1

♦ Includes attaching parts

COPYRIGHT © 1986 — FORD MOTOR COMPANY — DEARBORN, MICHIGAN

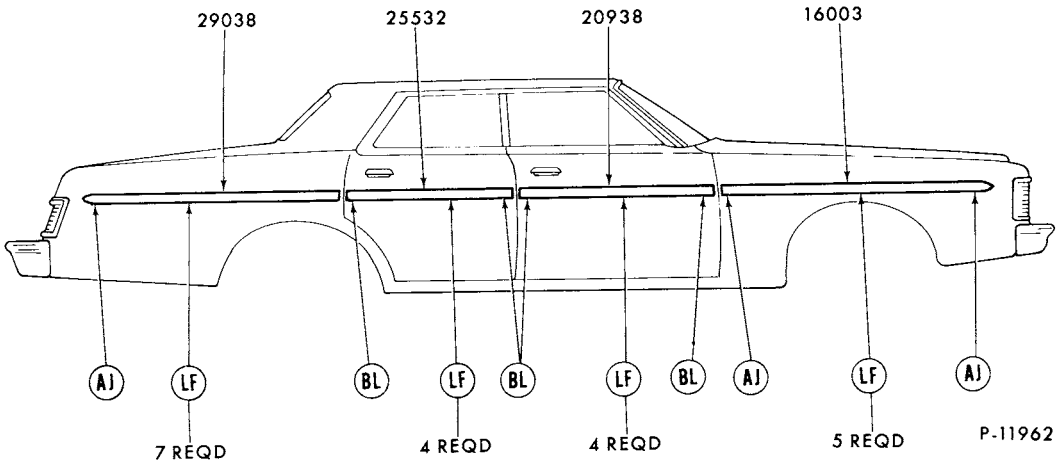

REFER TO EXTERIOR MOULDING SECTION "R" FOR COMPLETE RETAINER INFORMATION

1978 MERCURY - BODY TYPE 53 - SIDE PROTECTION

GROUP NUMBER	PART NAME	DESCRIPTION	PART NUMBER		QTY.
16003-4	Moulding (front fender side)	Black vinyl insert 15 3/4" long	♦D3AZ 16003-A	R.H. and L.H.	2
20938-9	Moulding (front door)	Black vinyl insert	(RH)♦D3MY 5320938-A	(LH)♦D3MY 5320939-A	1
25532-3	Moulding (rear door)	Black vinyl insert	(RH)♦D3AZ 5325532-A	(LH)♦D3AZ 5325533-A	1
29038-9	Moulding (quarter)	Black vinyl insert	(RH)♦D3AZ 5329038-A	(LH)♦D3AZ 5329039-A	1

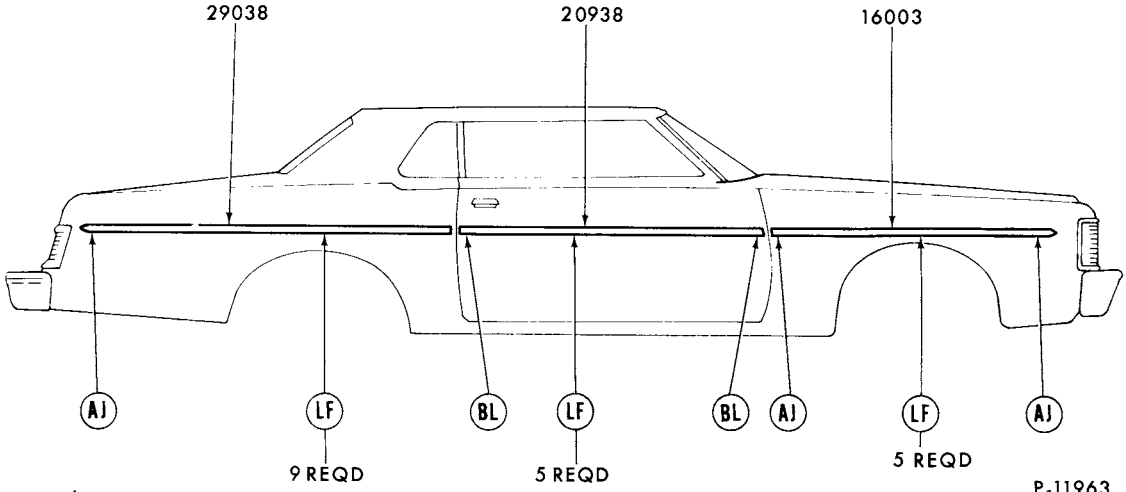

REFER TO EXTERIOR MOULDING SECTION "R" FOR COMPLETE RETAINER INFORMATION

1978 MERCURY - BODY TYPE 65 - SIDE PROTECTION

GROUP NUMBER	PART NAME	DESCRIPTION	PART NUMBER		QTY.
16003-4	Moulding (front fender side)	Black vinyl insert 15 3/4" long	D3AZ 16003-A	R.H. and L.H.	2
20938-9	Moulding (front door)	Black vinyl insert	(RH)♦D3AZ 6520938-A	(LH)♦D3MY 6520939-A	1
29038-9	Moulding (quarter)	Black vinyl insert	♦D3AZ 6529038-A	R.H. and L.H.	2

♦ Includes attaching parts

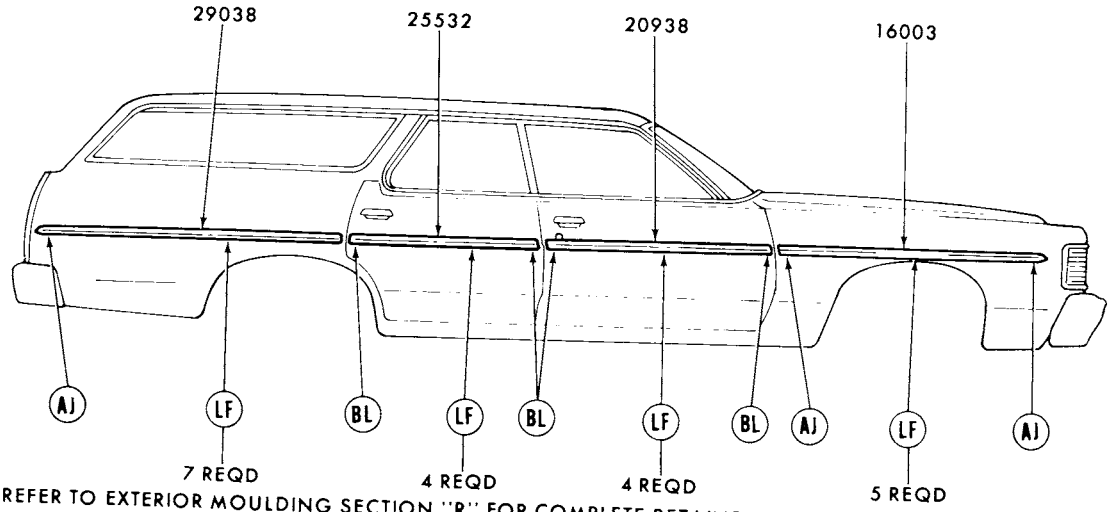

REFER TO EXTERIOR MOULDING SECTION "R" FOR COMPLETE RETAINER INFORMATION

P-11964

1978 MERCURY - BODY TYPE 71 - SIDE PROTECTION

GROUP NUMBER	PART NAME	DESCRIPTION	PART NUMBER		QTY.
16003-4	Moulding (front fender side)	Black vinyl insert	♦D3AZ 16003-A	R.H. and L.H.	2
		Bright-w/brown vinyl insert-15 11/16" long	D7MY 16003-A	R.H. and L.H.	2
20938-9	Moulding (front door)	Black vinyl insert	(RH)♦D3MY 5320938-A	(LH)♦D3MY 5320939-A	1
		Bright-w/brown vinyl insert	(RH)♦D3MY 7120938-A	(LH)♦D3MY 7120939-A	1
25532-3	Moulding (rear door)	Black vinyl insert	(RH)♦D3AZ 5325532-A	(LH)♦D3AZ 5325533-A	1
		Bright-w/brown vinyl insert	(RH)♦D3MY 7125532-A	(LH)♦D3MY 7125533-A	1
29038-9	Moulding (quarter)	Black vinyl insert	(RH)♦D3MY 7129038-A	(LH)♦D3MY 7129039-A	1
		Bright-w/brown vinyl insert	(RH)♦D3MY 7129038-B	(LH)♦D3MY 7129039-B	1

♦ Includes attaching parts

COPYRIGHT © 1986 — FORD MOTOR COMPANY — DEARBORN, MICHIGAN

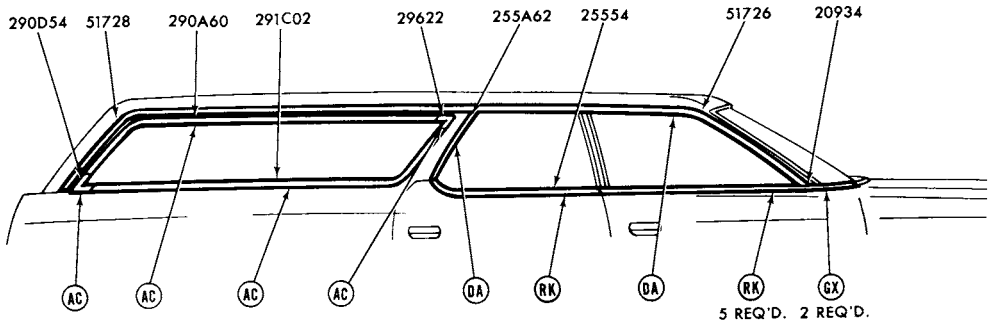

REFER TO EXTERIOR MOULDING SECTION 'R' FOR COMPLETE RETAINER INFORMATION

P-13209

1978 MERCURY - BODY TYPE 71 - DOOR, QUARTER WINDOW FRAME, ROOF and BELT

GROUP NUMBER	PART NAME	DESCRIPTION	PART NUMBER		QTY.
20934-5	Moulding (front door outside belt)	Incl. weatherstrip	(RH)♦D5AZ 5320934-B	(LH)♦D5AZ 5320935-B	1
25554-5	Moulding (rear door outside belt)	Incl. weatherstrip	(RH)♦D5AZ 5325554-A	(LH)♦D5AZ 5325555-A	1
255A62-3	Moulding (rear door window opening outside rear)		(RH)♦D5AZ 71255A62-A	(LH)♦D5AZ 71255A63-A	1
290D54-5	Moulding (quarter window outside lower rear corner)		(RH)♦D5AZ 71290D54-A	(LH)♦D5AZ 71290D55-A	1
290A60-1	Moulding (quarter window upper)		(RH)♦D5AZ 71290A60-A	(LH)♦D5AZ 71290A61-A	1
291C02-3	Moulding (quarter window lower rear)		(RH)♦D5AZ 71291C02-A	(LH)♦D5AZ 71291C03-A	1
29622-3	Moulding (quarter window front)		(RH)♦D5AZ 7129622-A	(LH)♦D5AZ 7129623-A	1
423A18-9	Moulding (back belt outside side)		(RH)♦D3AZ 71423A18-A	(LH)♦D3AZ 71423A19-A	1
51726-7	Moulding (roof drip finish)	Front	(RH)♦D5AZ 7151726-A	(LH)♦D5AZ 7151727-A	1
51728-9	Moulding (roof drip side finish)	Rear-w/bright flange	(RH)♦D3AZ 7151728-B	(LH)♦D3AZ 7151729-B	1

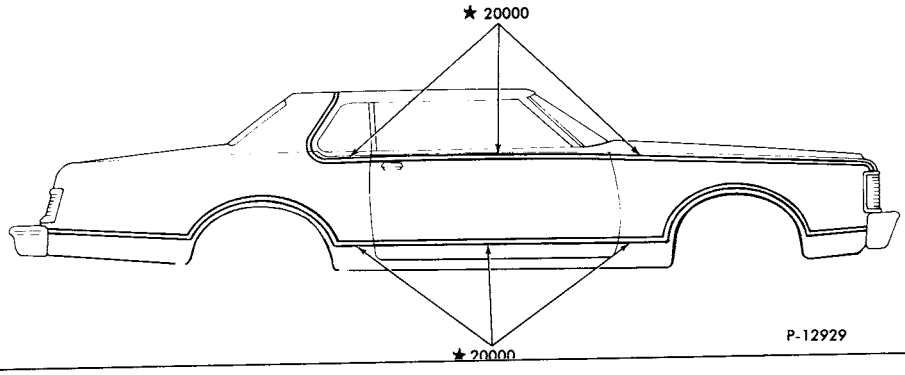

P-12929

1978 MERCURY - BODY TYPE 65K - STRIPES

GROUP NUMBER	PART NAME	DESCRIPTION	PART NUMBER	QTY.

ITEMS INDICATED WITH A BLACK STAR (★) MUST BE IMPROVISED OR PROCURED LOCALLY

♦ Includes attaching parts

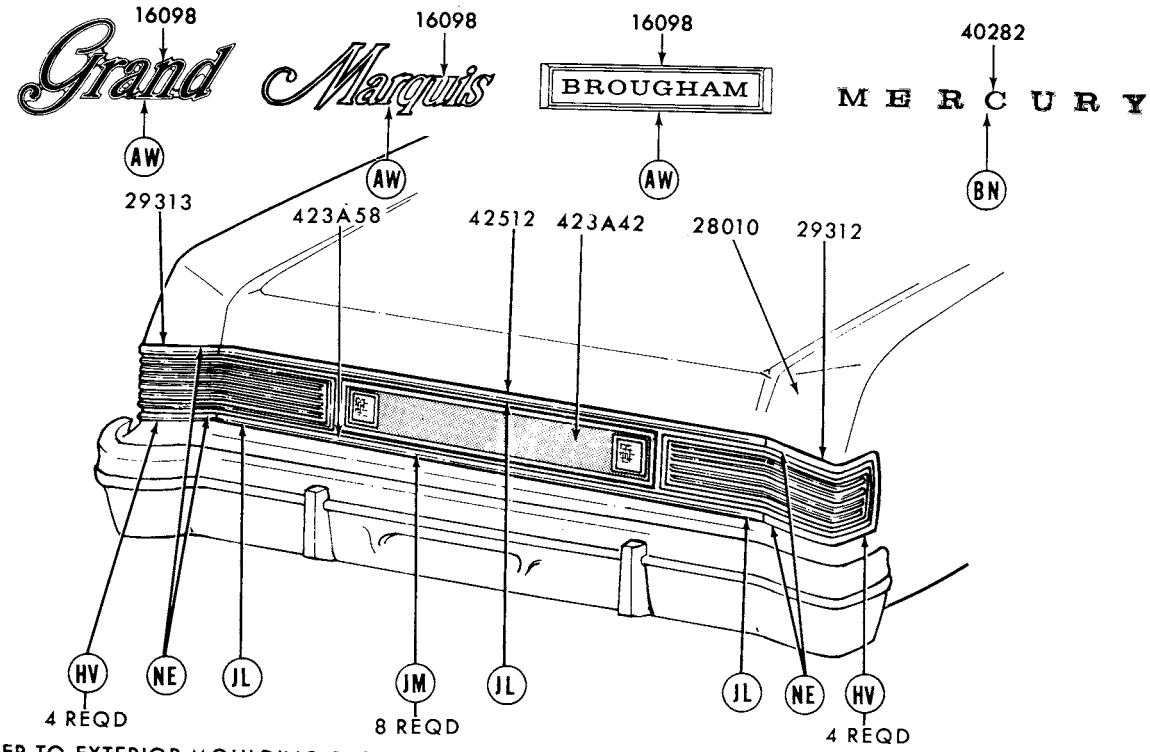

REFER TO EXTERIOR MOULDING SECTION "R" FOR COMPLETE RETAINER INFORMATION

P-11984

1978 MERCURY - BODY TYPES 53 and 65 - BACK END

GROUP NUMBER	PART NAME	DESCRIPTION	PART NUMBER	QTY.
16098	Plate (name)	"BROUGHAM"	♦D5MY 16098-A	1
		"Grand"	♦D5MY 16098-C	1
		"Marquis"	♦D3MY 16098-B	1
29312-3	Moulding (quarter rear extension)		(RH)♦D5MY 6529312-A (LH)♦D5MY 6529313-A	1
40282	Letter (name)	"M"	D3MY 7140282-A	1
		"E"	D3MY 7140282-B	1
		"R"	D3MY 7140282-C	2
		"C"	D3MY 7140282-D	1
		"U"	D3MY 7140282-E	1
		"Y"	D3MY 7140282-F	1
423A42	Panel (lower back finish)	Black	♦D5MY 65423A42-M	1
		Blue (medium)	♦D8MY 65423A42-CB	1
		Blue (midnight)	★D8MY 65423A42-DB Not replaced (6/82)	1
		Brown	♦D7MY 65423A42-AT	1
		Camel	♦D8MY 65423A42-BV	1
		Gray	♦D7MY 65423A42-BP	1
		Jade	♦D7MY 65423A42-AR	1
		Red	♦D6MY 65423A42-A	1
		Silver	♦D7MY 65423A42-AP	1
		White	♦D7MY 65423A42-AW	1
423A58	Moulding (lower back panel)		♦D5MY 65423A58-B	1
42512	Moulding (luggage compartment door)		♦D5MY 6542512-A	1

♦ Includes attaching parts

COPYRIGHT © 1986 — FORD MOTOR COMPANY — DEARBORN, MICHIGAN

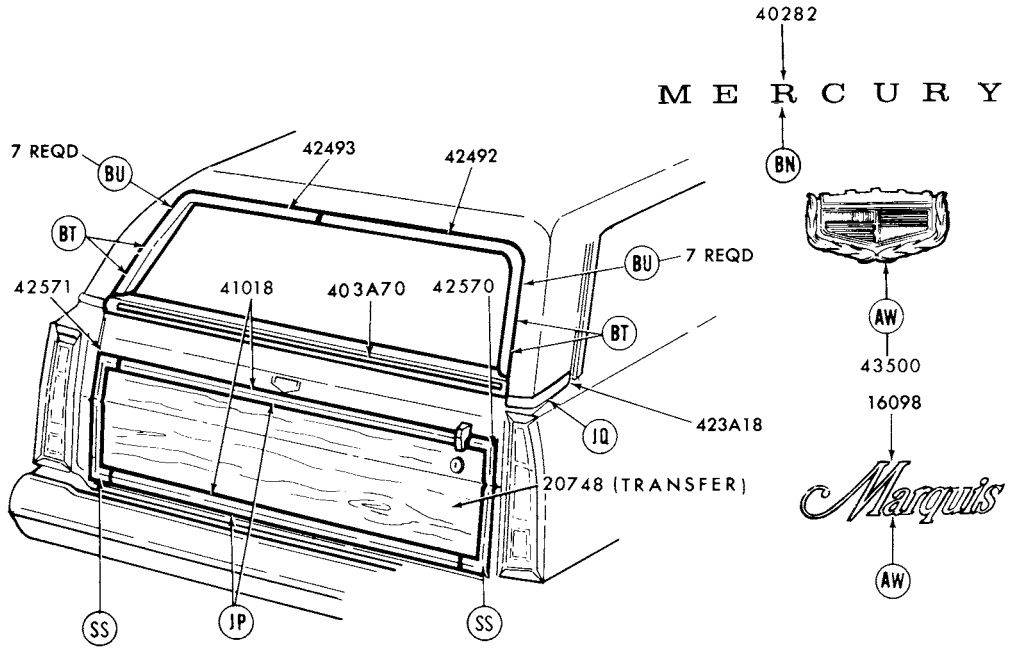

REFER TO EXTERIOR MOULDING SECTION "R" FOR COMPLETE RETAINER INFORMATION P-11985

1978 MERCURY - BODY TYPE 71 - BACK END

GROUP NUMBER	PART NAME	DESCRIPTION	PART NUMBER	QTY.
16098	Plate (name)	"Marquis"	♦D3MY 16098-B	1
20748	Transfer (wood grain)	Rosewood-adhesive backed-cut to fit	D6MY 7120748-A	1
40282	Letter (name)	"M"	♦D3MY 7140282-A	1
		"E"	♦D3MY 7140282-B	1
		"R"	♦D3MY 7140282-C	2
		"C"	♦D3MY 7140282-D	1
		"U"	♦D3MY 7140282-E	1
		"Y"	♦D3MY 7140282-F	1
403A70	Moulding (tailgate belt)		♦D4AZ 71403A70-E	1
41018	Moulding (tailgate)	Upper and lower	♦D5MY 7141018-A	2
423A18-9	Moulding (back belt side)		(RH)♦D3AZ 71423A18-A (LH)♦D3AZ 71423A19-A	1
42570-1	Moulding (tailgate side)		(RH)♦D5MY 7142570-A (LH)♦D5MY 7142571-A	1
42492-3	Moulding (back window side)		(RH)♦D3AZ 7142492-A (LH)♦D3AZ 7142493-A	1
43500	Ornament (tailgate)		Not used in 1978	

♦ Includes attaching parts

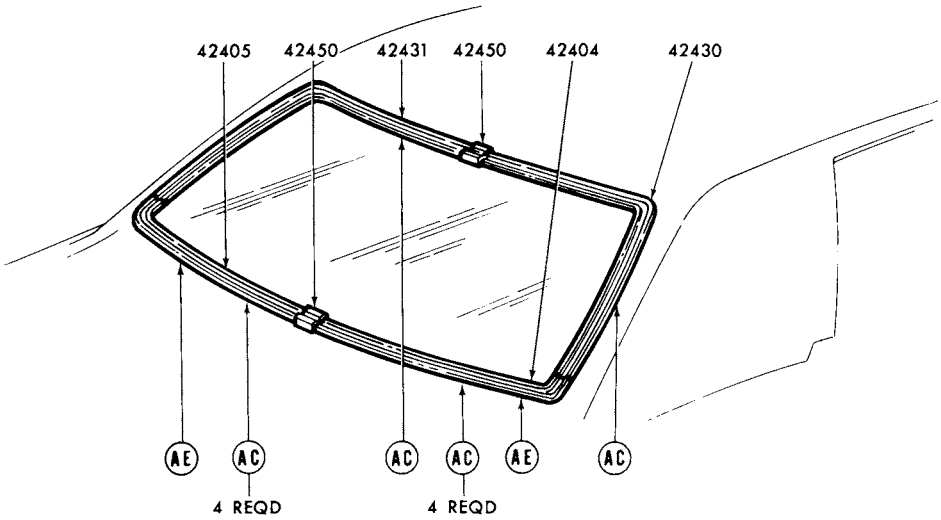

REFER TO EXTERIOR MOULDING SECTION "R" FOR COMPLETE RETAINER INFORMATION P-12460

1978 MERCURY - BODY TYPE 53 - BACK WINDOW

GROUP NUMBER	PART NAME	DESCRIPTION	PART NUMBER		QTY.
42404-5	Moulding (back window lower)		(RH)♦D3AZ 5342404-A	(LH)♦D3AZ 5342405-A	1
42430-1	Moulding (back window upper)		(RH)♦D7AZ 5342430-A	(LH)♦D7AZ 5342431-A	1
42450	Cover (back window moulding joint)	Lower	D5AZ 5342450-A		1
		Upper	D5AZ 5342450-B		1

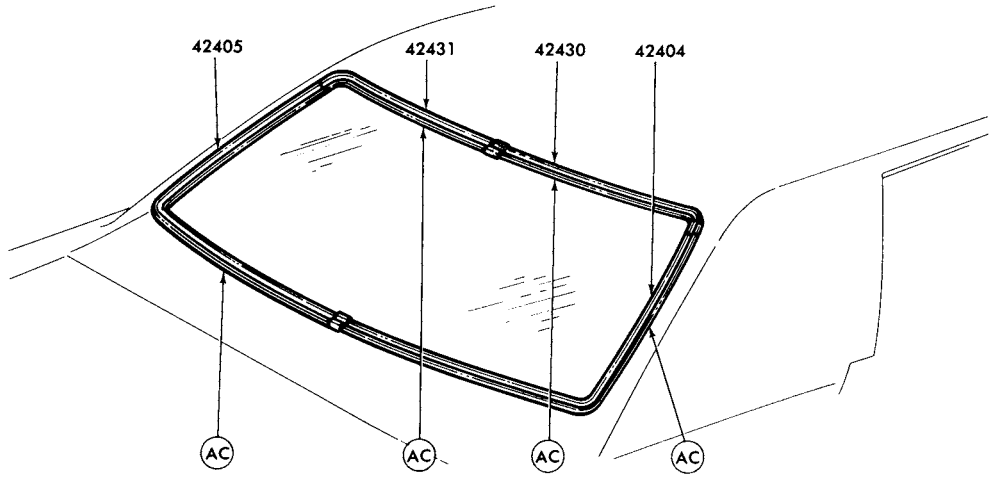

REFER TO EXTERIOR MOULDING SECTION "R" FOR COMPLETE RETAINER INFORMATION P-12487

1978 MERCURY - BODY TYPE 65 - BACK WINDOW

GROUP NUMBER	PART NAME	DESCRIPTION	PART NUMBER		QTY.
42404-5	Moulding (back window lower)		(RH)♦D5MY 6042404-A	(LH)♦D5MY 6042405-A	1
42430-1	Moulding (back window upper)		(RH)♦D7AZ 6042430-A	(LH)♦D7AZ 6042431-A	

♦ Includes attaching parts

COPYRIGHT © 1986 — FORD MOTOR COMPANY — DEARBORN, MICHIGAN

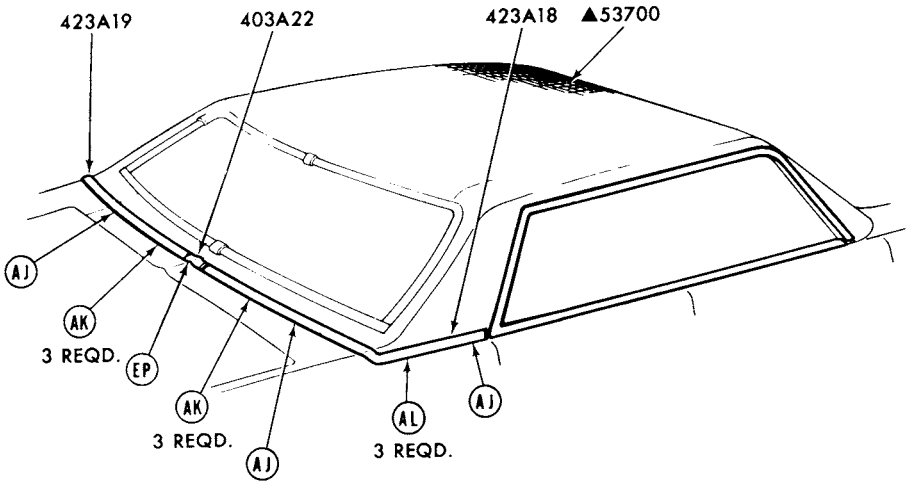

▲REFER TO GROUP IN SOFT TRIM SECTION

P-13242

REFER TO EXTERIOR MOULDING SECTION 'R' FOR COMPLETE RETAINER INFORMATION

1978 MERCURY - BODY TYPE 53 - ROOF and BACK BELT

GROUP NUMBER	PART NAME	DESCRIPTION	PART NUMBER	QTY.
403A22	Cover (back belt moulding)		D3MY 53403A22-B	1
423A18-9	Moulding (back belt)		(RH)♦D4MY 53423A18-A (LH)♦D4MY 53423A19-A	1

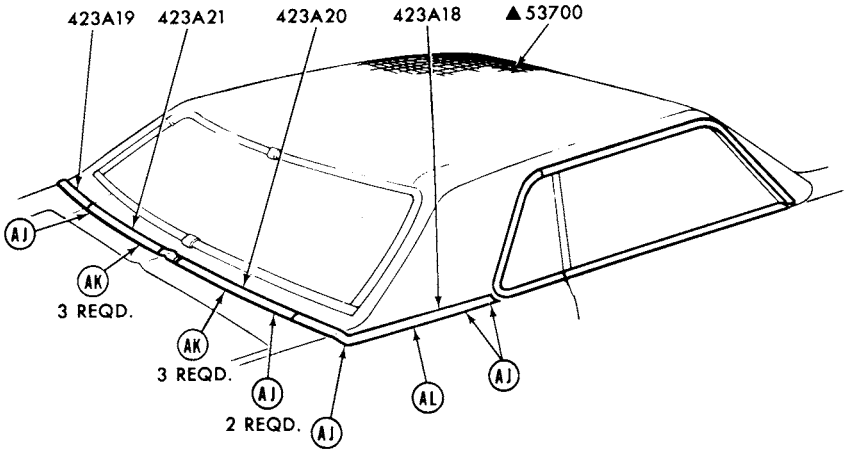

▲REFER TO GROUP IN SOFT TRIM SECTION

P-13243

REFER TO EXTERIOR MOULDING SECTION 'R' FOR COMPLETE RETAINER INFORMATION

1978 MERCURY - BODY TYPE 65 - ROOF and BACK BELT

GROUP NUMBER	PART NAME	DESCRIPTION	PART NUMBER	QTY.
423A18-9	Moulding (back belt side)	Full vinyl roof-Bright finish	(RH)♦D4MY 65423A18-A (LH)♦D4MY 65423A19-A	1
423A20-1	Moulding (back belt)	Full vinyl roof-Bright finish	(RH)♦D3MY 65423A20-C (LH)♦D3MY 65423A21-C	1

♦ Includes attaching parts

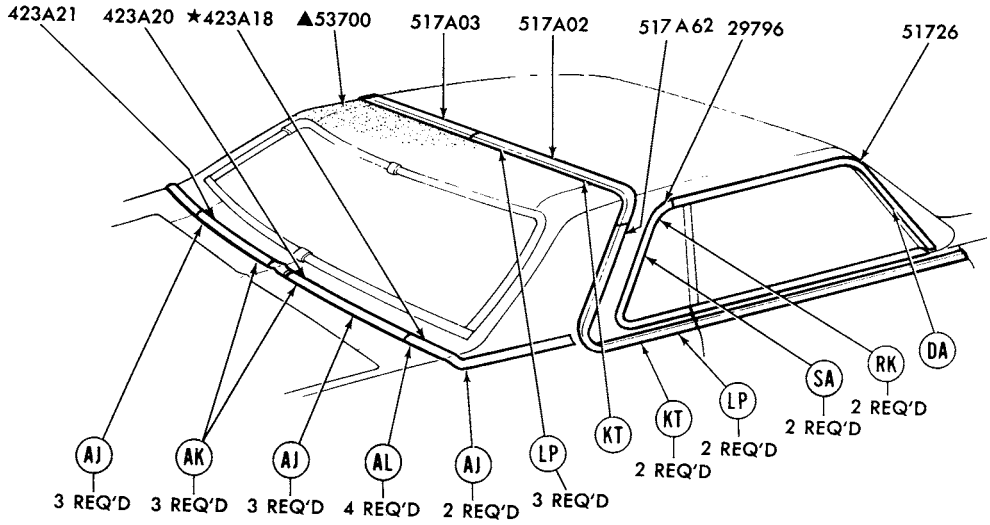

▲REFER TO GROUP IN SOFT TRIM SECTION
REFER TO EXTERIOR MOULDING SECTION "R" FOR COMPLETE RETAINER INFORMATION

P-12761

1978 MERCURY - BODY TYPES 65H,K,L - ROOF and BACK BELT - w/PARTIAL VINYL ROOF

GROUP NUMBER	PART NAME	DESCRIPTION	PART NUMBER		QTY.
29796-7	Moulding (quarter window rear)		(RH)♦D5MY 6529796-A	(LH)♦D5MY 6529797-A	1
423A18-9	Moulding (back belt side)		(RH)★D7MY 65423A18-A Not replaced (6/82)	(LH)★D7MY 65423A19-A Not replaced (6/83)	1
423A20-1	Moulding (back belt)		(RH)♦D3MY 65423A20-C	(LH)♦D3MY 65423A21-C	1
517A02-3	Moulding (roof top)		(RH)♦D6MY 65517A02-A	(LH)♦D6MY 65517A03-A	1
51726-7	Moulding (roof drip side finish)		(RH)♦D5MY 6551726-A	(LH)♦D5MY 6551727-A	1
517A62-3	Moulding (roof side)		(RH)♦D6MY 65517A62-A	(LH)♦D6MY 65517A63-A	1

♦ Includes attaching parts

COPYRIGHT © 1986 — FORD MOTOR COMPANY — DEARBORN, MICHIGAN

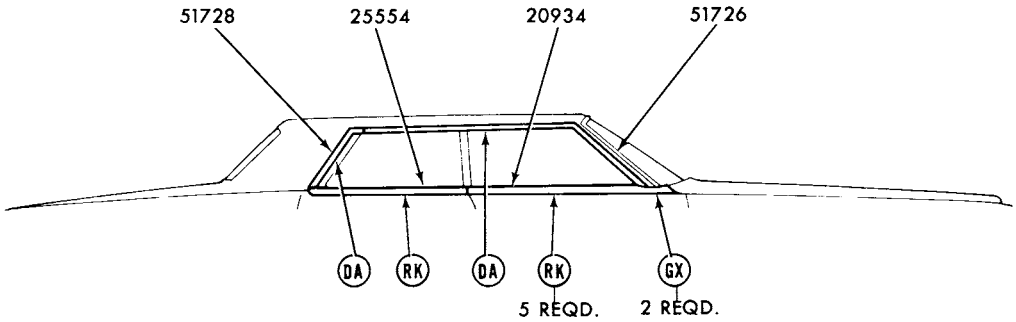

REFER TO EXTERIOR MOULDING SECTION "R" FOR COMPLETE RETAINER INFORMATION

P-13240

1978 MERCURY - BODY TYPE 53 - ROOF DRIP SIDE, FRONT and REAR DOOR BELT MOULDINGS

GROUP NUMBER	PART NAME	DESCRIPTION	PART NUMBER		QTY.
20934-5	Moulding (front door)	Incl. weatherstrip	(RH)♦D5AZ 5320934-B	(LH)♦D5AZ 5320935-B	1
25554-5	Moulding (rear door belt)	Incl. weatherstrip	(RH)♦D5AZ 5325554-A	(LH)♦D5AZ 5325555-A	1
51726-7	Moulding (roof drip side finish front)		(RH)♦D7AZ 5351726-B	(LH)♦D7AZ 5351727-B	1
51728-9	Moulding (roof drip side finish rear)		(RH)♦D5AZ 5351728-A	(LH)♦D5AZ 5351729-A	1

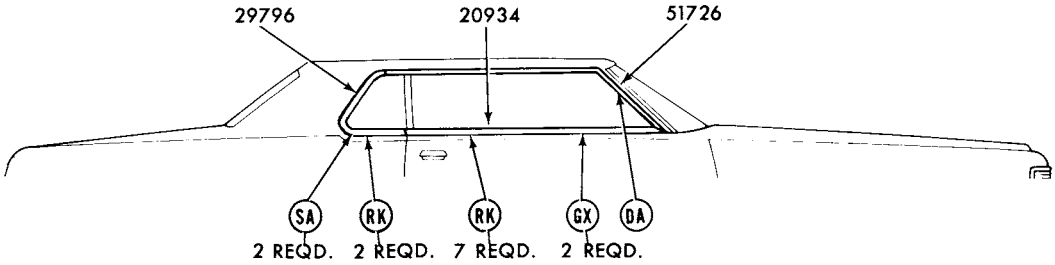

REFER TO EXTERIOR MOULDING SECTION "R" FOR COMPLETE RETAINER INFORMATION

P-13241

1978 MERCURY - BODY TYPE 65 - ROOF DRIP SIDE, FRONT and REAR DOOR BELT MOULDINGS

GROUP NUMBER	PART NAME	DESCRIPTION	PART NUMBER		QTY.
20934-5	Moulding (door belt)	Incl. weatherstrip	(RH)♦D5AZ 6020934-A	(LH)♦D5AZ 6020935-A	1
29796-7	Moulding (quarter window)		(RH)♦D5MY 6529796-A	(LH)♦D5MY 6529797-A	1
51726-7	Moulding (roof drip side)		(RH)♦D5MY 6551726-A	(LH)♦D5MY 6551727-A	1

♦ Includes attaching parts

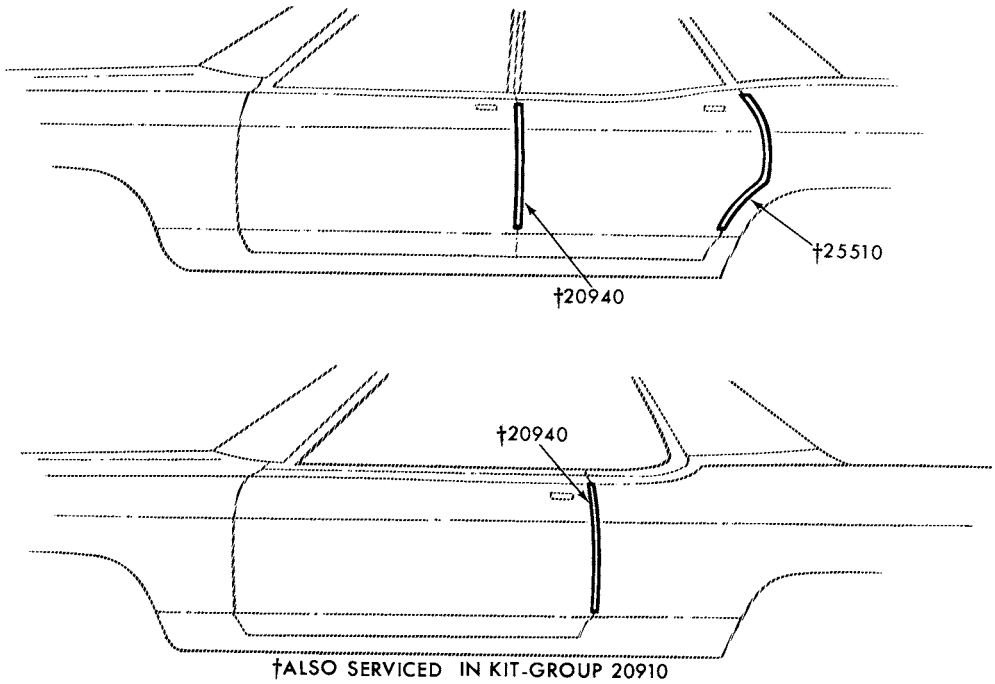

†ALSO SERVICED IN KIT-GROUP 20910

P-10061

1978 MERCURY - DOOR EDGE GUARD

GROUP NUMBER	PART NAME	DESCRIPTION	PART NUMBER		QTY.
20940-1	Moulding (front door edge guard)	Bright-body types 53 and 71H	(RH) D3MY 5320940-A	(LH) D3MY 5320941-A	1
		Body type 65	(RH) D3MY 6520940-A	(LH) D3MY 6520941-A	1
		Wood grain-body type 71K	(RH) D5MY 7120940-A	(LH) D5MY 7120941-A	1
25510-1	Moulding (rear door edge guard)	Bright-body types 53 and 71H	(RH) D3MY 5325510-A	(LH) D3MY 5325511-A	1
		Wood grain-body type 71K	(RH) D5MY 7125510-A	(LH) D5MY 7125511-A	1

COPYRIGHT © 1986 — FORD MOTOR COMPANY — DEARBORN, MICHIGAN

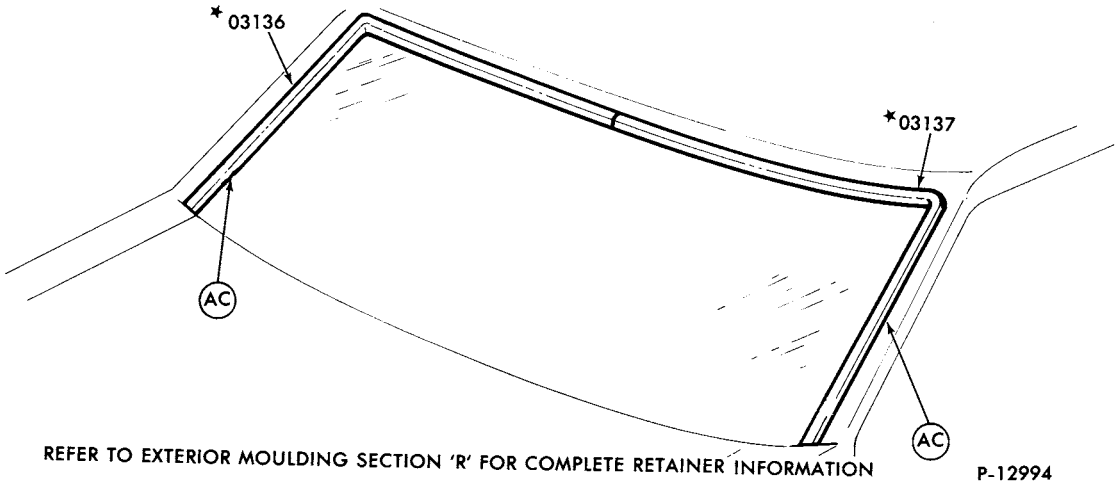

1978 LINCOLN - WINDSHIELD

GROUP NUMBER	PART NAME	DESCRIPTION	PART NUMBER		QTY.
03136-7	Moulding (windshield outside)		(RH)★D5VY 6003136-A	(LH)★D5VY 6003137-A	1

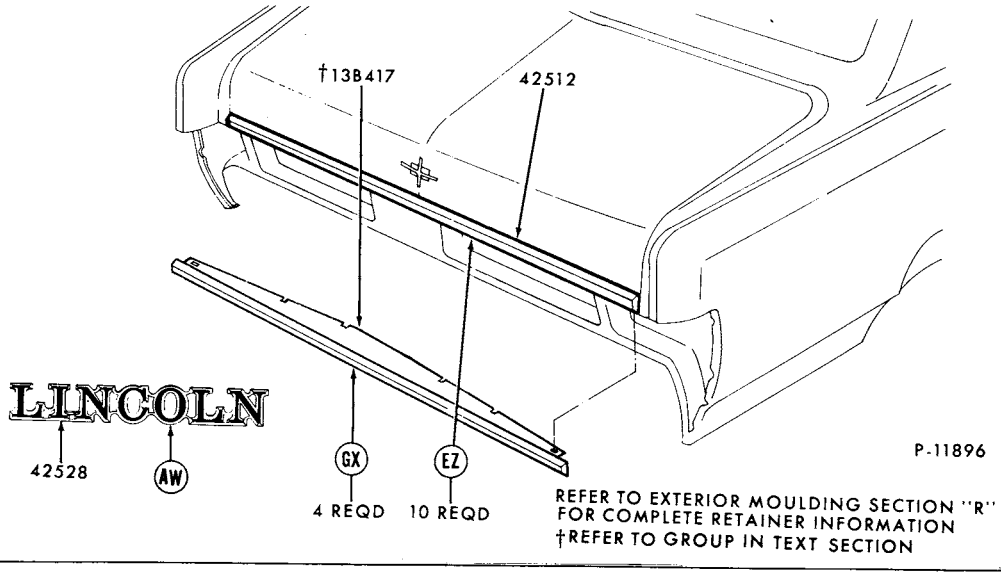

1978 LINCOLN - BACK END

GROUP NUMBER	PART NAME	DESCRIPTION	PART NUMBER	QTY.
42512	Moulding (luggage compartment door)		♦D5VY 6042512-A	1
42528	Plate (name)	"LINCOLN"	♦D4VY 6542528-A	1

♦ Includes attaching parts

COPYRIGHT © 1986 — FORD MOTOR COMPANY — DEARBORN, MICHIGAN

1973/79 LINCOLN-MERCURY CARS

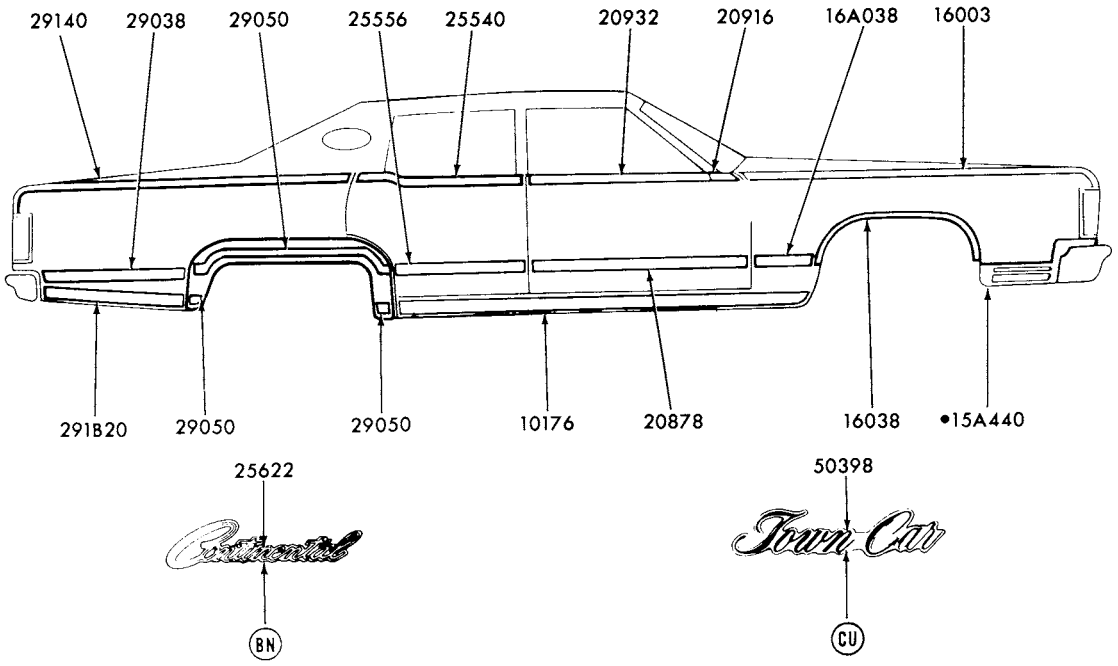

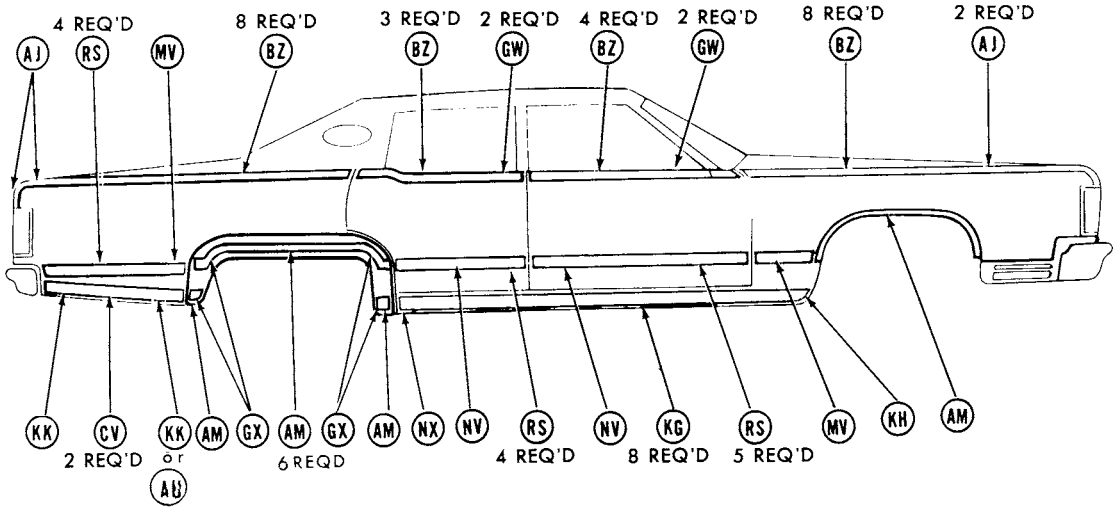

REFER TO EXTERIOR MOULDING SECTION "R" FOR COMPLETE RETAINER INFORMATION

• REFER TO GROUP IN CHASSIS SECTION

P-14275

1978 LINCOLN - BODY TYPE 53 - w/SIDE MOULDINGS

1978 LINCOLN - BODY TYPE 53 - w/SIDE MOULDINGS - cont'd.

GROUP NUMBER	PART NAME	DESCRIPTION	PART NUMBER		QTY.
10176-7	Moulding (body rocker panel)		(RH)♦D5VY 6010176-A	(LH)♦D5VY 6010177-A	1
16003-4	Moulding (front fender upper)		(RH)♦D5VY 16003-A	(LH)♦D5VY 16004-A	1
16038-9	Moulding (front fender wheel opening)		(RH)♦D5VY 16038-A	(LH)♦D5VY 16039-A	1
16A038-9	Moulding (front fender rear)	Incl. vinyl insert			
		◊Black	(RH)♦D7VY 16A038-AA	(LH)♦D7VY 16A039-AA	1
		◊Blue (dark)	(RH)♦D7VY 16A038-BB	(LH)♦D7VY 16A039-BB	1
		◊Blue (medium)	(RH)♦D8VY 16A038-AB	(LH)♦D8VY 16A039-AB	1
		◊Champagne (dark)	(RH)★D8VY 16A038-BU Not replaced (5/82)	(LH)✱D8VY 16A039-BU Not replaced (4/84)	1
		◊Champagne (light)	(RH)♦D8VY 16A038-AU	(LH)♦D8VY 16A039-AU	1
		◊Chamois	(RH)♦D8VY 16A038-BT	(LH)♦D8VY 16A039-BT	1
		◊Cordovan (dark)	(RH)♦D7VY 16A038-AF	(LH)♦D7VY 16A039-AF	1
		◊Cordovan (light)	(RH)♦D8VY 16A038-AF	(LH)♦D8VY 16A039-AF	1
		◊Cream	(RH)♦D7VY 16A038-AV	(LH)♦D7VY 16A039-AV	1
		◊Gray	(RH)♦D7VY 16A038-AP	(LH)♦D7VY 16A039-AP	1
		◊Jade (dark)	(RH)✱D8VY 16A038-AR Not replaced (4/84)	(LH)✱D8VY 16A039-AR Not replaced (4/84)	1
		◊Jade (light)	(RH)♦D7VY 16A038-AR	(LH)★D7VY 16A039-AR Not replaced (5/82)	1
		◊Red	(RH)★D7VY 16A038-AD Not replaced (4/84)	(LH)♦D7VY 16A039-AD	1
		◊Silver	(RH)♦D7VY 16A038-BP	(LH)♦D7VY 16A039-BP	1
		◊White	(RH)♦D7VY 16A038-AW	(LH)♦D7VY 16A039-AW	1
20878-9	Moulding (front door lower)	Incl. vinyl insert			
		◊Black	(RH)♦D7VY 5320878-AA	(LH)♦D7VY 5320879-AA	1
		◊Blue (dark)	(RH)♦D7VY 5320878-BB	(LH)♦D7VY 5320879-BB	1
		◊Blue (medium)	(RH)♦D8VY 5320878-AB	(LH)♦D8VY 5320879-AB	1
		◊Champagne (dark)	(RH)★D8VY 5320878-BU Not replaced (4/84)	(LH)★D8VY 5320879-BU	1
		◊Champagne (light)	(RH)♦D8VY 5320878-AU	(LH)♦D8VY 5320879-AU	1
		◊Chamois	(RH)♦D8VY 5320878-BT	(LH)♦D8VY 5320879-BT	1
		◊Cordovan (dark)	(RH)♦D7VY 5320878-AF	(LH)♦D7VY 5320879-AF	1
		◊Cordovan (light)	(RH)♦D8VY 5320878-AF	(LH)♦D8VY 5320879-AF	1
		◊Cream	(RH)♦D7VY 5320878-AV	(LH)♦D7VY 5320879-AV	1
		◊Gray	(RH)♦D7VY 5320878-AP	(LH)♦D7VY 5320879-AP	1
		◊Jade (dark)	(RH)★D8VY 5320878-AR	(LH)★D8VY 5320879-AR	1
		◊Jade (light)	(RH)♦D7VY 5320878-AR	(LH)♦D7VY 5320879-AR Not replaced (5/82)	1
		◊Red	(RH)♦D7VY 5320878-AD	(LH)♦D7VY 5320879-AD	1
		◊Silver	(RH)♦D7VY 5320878-BP	(LH)♦D7VY 5320879-BP	1
		◊White	(RH)♦D7VY 5320878-AW	(LH)♦D7VY 5320879-AW	1
20916-33	Moulding (front door upper)	R.H.-w/o mirror	♦D5VY 5320932-A		1
		R.H.-w/mirror-front	♦D5VY 6020916-A		1
		R.H.-w/mirror-rear	♦D5VY 5320932-B		1
		L.H.-front	♦D5VY 6020917-A		1
		L.H.-rear	♦D5VY 5320933-A		1
25540-1	Moulding (rear door upper)		(RH)♦D5VY 5325540-A	(LH)♦D5VY 5325541-A	1

◊ For color verification, refer to the vinyl roof swatches in the 1978 Salesman's Color and Upholstery Selection Guide
♦ Includes attaching parts

COPYRIGHT © 1986 — FORD MOTOR COMPANY — DEARBORN, MICHIGAN

1978 LINCOLN - BODY TYPE 53 - w/SIDE MOULDINGS - cont'd.

GROUP NUMBER	PART NAME	DESCRIPTION	PART NUMBER		QTY.
25556-7	Moulding (rear door lower)	Incl. vinyl insert			
		◊Black	(RH)♦D7VY 5325556-AA	(LH)♦D7VY 5325557-AA	1
		◊Blue (dark)	(RH)♦D7VY 5325556-BB	(LH)♦D7VY 5325557-BB	1
		◊Blue (medium)	(RH)♦D8VY 5325556-AB	(LH)♦D8VY 5325557-AB	1
		◊Champagne (dark)	(RH)♦D8VY 5325556-BU	(LH)★D8VY 5325557-BU	1
		◊Champagne (light)	(RH)♦D8VY 5325556-AU	(LH)♦D8VY 5325557-AU	1
		◊Chamois	(RH)♦D8VY 5325556-BT	(LH)✱D8VY 5325557-BT Not replaced (2/83)	1
		◊Cordovan (dark)	(RH)♦D7VY 5325556-AF	(LH)♦D7VY 5325557-AF	1
		◊Cordovan (light)	(RH)♦D8VY 5325556-AF	(LH)♦D8VY 5325557-AF	1
		◊Cream	(RH)♦D7VY 5325556-AV	(LH)♦D7VY 5325557-AV	1
		◊Gray	(RH)♦D7VY 5325556-AP	(LH)♦D7VY 5325557-AP	1
		◊Jade (dark)	(RH)♦D8VY 5325556-AR	(LH)♦D8VY 5325557-AR	1
		◊Jade (light)	(RH)♦D7VY 5325556-AR	(LH)✱D7VY 5325557-AR Not replaced (4/84)	1
		◊Red	(RH)♦D7VY 5325556-AD	(LH)♦D7VY 5325557-AD	1
		◊Silver	(RH)♦D7VY 5325556-BP	(LH)♦D7VY 5325557-BP	1
		◊White	(RH)♦D7VY 5325556-AW	(LH)♦D7VY 5325557-AW	1
29038-9	Moulding (quarter panel side)	Incl. vinyl insert			
		◊Black	(RH)♦D7VY 6029038-AA	(LH)♦D7VY 6029039-AA	1
		◊Blue (dark)	(RH)♦D7VY 6029038-BB	(LH)♦D7VY 6029039-BB	1
		◊Blue (medium)	(RH)♦D8VY 6029038-AB	(LH)♦D8VY 6029039-AB	1
		◊Champagne (dark)	(RH)♦D8VY 6029038-BU	(LH)♦D8VY 6029039-BU	1
		◊Champagne (light)	(RH)♦D8VY 6029038-AU	(LH)♦D8VY 6029039-AU	1
		◊Chamois	(RH)♦D8VY 6029038-BT	(LH)♦D8VY 6029039-BT	1
		◊Cordovan (dark)	(RH)♦D7VY 6029038-AF	(LH)♦D7VY 6029039-AF	1
		◊Cordovan (light)	(RH)♦D8VY 6029038-AF	(LH)♦D8VY 6029039-AF	1
		◊Cream	(RH)♦D7VY 6029038-AV	(LH)♦D7VY 6029039-AV	1
		◊Gray	(RH)♦D7VY 6029038-AP	(LH)♦D7VY 6029039-AP	1
		◊Jade (dark)	(RH)♦D8VY 6029038-AR	(LH)♦D8VY 6029039-AR	1
		◊Jade (light)	(RH)♦D7VY 6029038-AR	(LH)♦D7VY 6029039-AR	1
		◊Red	(RH)♦D7VY 6029038-AD	(LH)♦D7VY 6029039-AD	1
		◊Silver	(RH)♦D7VY 6029038-BP	(LH)♦D7VY 6029039-BP	1
		◊White	(RH)♦D7VY 6029038-AW	(LH)♦D7VY 6029039-AW	1
29050-1	Moulding (quarter wheel opening cover lower)	Front	(RH)♦D5VY 6029050-B	(LH)♦D5VY 6029051-B	1
		Rear	(RH)♦D8VY 6029050-A	(LH)♦D8VY 6029051-A	1
29050-1	Moulding (quarter wheel opening cover upper)	Incl. vinyl insert			
		◊Black	(RH)♦D8VY 6029050-AA	(LH)♦D8VY 6029051-AA	1
		◊Blue (dark)	(RH)♦D8VY 6029050-BB	(LH)♦D8VY 6029051-BB	1
		◊Blue (medium)	(RH)♦D8VY 6029050-AB	(LH)♦D8VY 6029051-AB	1
		◊Champagne (dark)	(RH)♦D8VY 6029050-BU	(LH)♦D8VY 6029051-BU	1
		◊Champagne (light)	(RH)♦D8VY 6029050-AU	(LH)♦D8VY 6029051-AU	1
		◊Chamois	(RH)♦D8VY 6029050-BT	(LH)♦D8VY 6029051-BT	1
		◊Cordovan (dark)	(RH)♦D8VY 6029050-BF	(LH)♦D8VY 6029051-BF	1
		◊Cordovan (light)	(RH)♦D8VY 6029050-AF	(LH)♦D8VY 6029051-AF	1
		◊Cream	(RH)♦D8VY 6029050-AV	(LH)♦D8VY 6029051-AV	1
		◊Gray	(RH)♦D8VY 6029050-BP	(LH)♦D8VY 6029051-BP	1
		◊Jade (dark)	(RH)♦D8VY 6029050-BR	(LH)♦D8VY 6029051-BR	1
		◊Jade (light)	(RH)♦D8VY 6029050-AR	(LH)✱D8VY 6029051-AR Not replaced (4/84)	1
		◊Red	(RH)♦D8VY 6029050-AD	(LH)♦D8VY 6029051-AD	1
		◊Silver	(RH)♦D8VY 6029050-AP	(LH)♦D8VY 6029051-AP	1
		◊White	(RH)♦D8VY 6029050-AW	(LH)♦D8VY 6029051-AW	1
291B20-1	Moulding (quarter panel lower)		(RH)♦D5VY 60291B20-A	(LH)♦D5VY 60291B21-A	1
29140-1	Moulding (quarter panel top)		(RH)♦D5VY 5329140-A	(LH)♦D5VY 5329141-A	1
50398	Plate (roof side)	"Town Car"	♦D3VY 5350398-A	R.H. and L.H.	2
517A20	Ornament (roof side)	W/o opera window	♦C9VY 53517A20-A	R.H. and L.H.	2

◊ For color verification, refer to the vinyl roof swatches in the 1978 Salesman's Color and Upholstery Selection Guide

♦ Includes attaching parts

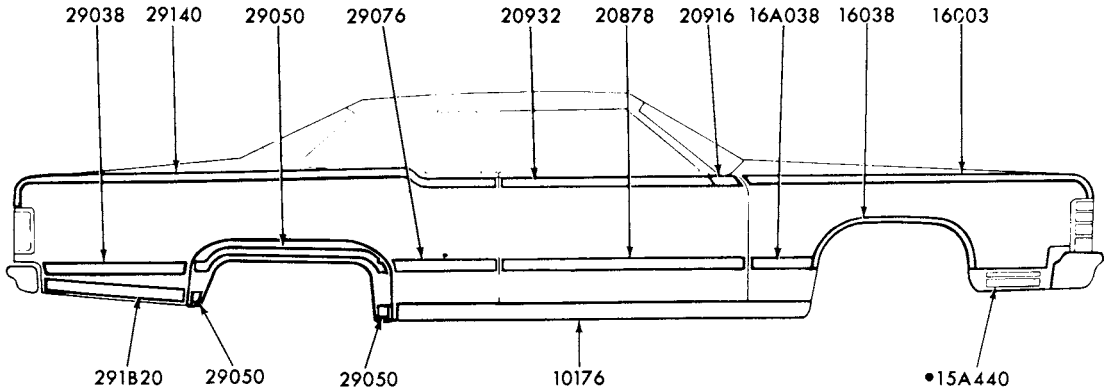

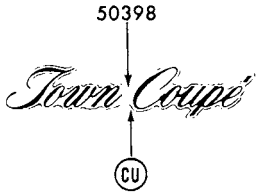

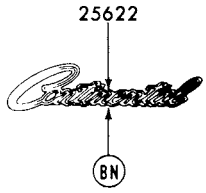

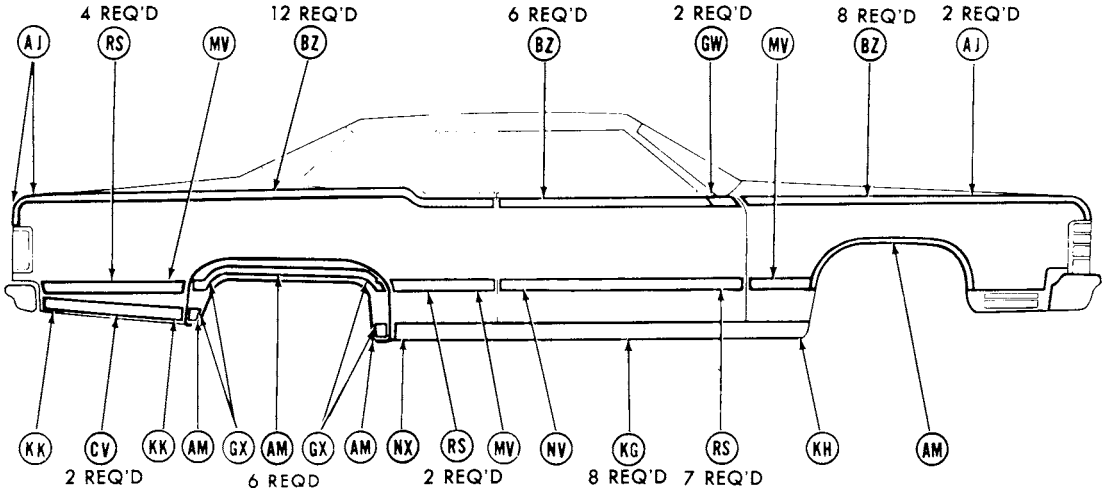

REFER TO EXTERIOR MOULDING SECTION "R" FOR COMPLETE RETAINER INFORMATION
• REFER TO GROUP IN CHASSIS SECTION

P-14274

1978 LINCOLN - BODY TYPE 60 - w/SIDE MOULDINGS

COPYRIGHT © 1986 — FORD MOTOR COMPANY — DEARBORN, MICHIGAN

1978 LINCOLN - BODY TYPE 60 - w/SIDE MOULDINGS - cont'd.

GROUP NUMBER	PART NAME	DESCRIPTION	PART NUMBER		QTY.
10176-7	Moulding (body rocker panel)		(RH)♦D5VY 6010176-A	(LH)♦D5VY 6010177-A	1
16003-4	Moulding (front fender top)		(RH)♦D5VY 16003-A	(LH)♦D5VY 16004-A	1
16038-9	Moulding (front fender wheel opening)		(RH)♦D5VY 16038-A	(LH)♦D5VY 16039-A	1
16A038-9	Moulding (front fender rear)	Incl. vinyl insert			
		◊Black	(RH)♦D7VY 16A038-AA	(LH)♦D7VY 16A039-AA	1
		◊Blue (dark)	(RH)♦D7VY 16A038-BB	(LH)♦D7VY 16A030-BB	1
		◊Blue (medium)	(RH)♦D8VY 16A038-AB	(LH)♦D8VY 16A039-AB	1
		◊Champagne (dark)	(RH)♦D8VY 16A038-BU	(LH)♦D8VY 16A039-BU	1
		◊Champagne (light)	(RH)♦D8VY 16A038-AU	(LH)♦D8VY 16A039-AU	1
		◊Chamois	(RH)♦D8VY 16A038-BT	(LH)♦D8VY 16A039-BT	1
		◊Cordovan (dark)	(RH)♦D7VY 16A038-AF	(LH)♦D7VY 16A039-AF	1
		◊Cordovan (light)	(RH)♦D8VY 16A038-AF	(LH)♦D8VY 16A039-AF	1
		◊Cream	(RH)♦D7VY 16A038-AV	(LH)♦D7VY 16A039-AV	1
		◊Gray	(RH)♦D7VY 16A038-AP	(LH)♦D7VY 16A039-AP	1
		◊Jade (dark)	(RH)♦D8VY 16A038-AR	(LH)♦D8VY 16A039-AR	1
		◊Jade (light)	(RH)♦D7VY 16A038-AR	(LH)♦D7VY 16A039-AR	1
		◊Red	(RH)♦D7VY 16A038-AD	(LH)♦D7VY 16A039-AD	1
		◊Silver	(RH)♦D7VY 16A038-BP	(LH)♦D7VY 16A039-BP	1
		◊White	(RH)♦D7VY 16A038-AW	(LH)♦D7VY 16A039-AW	1
20878-9	Moulding (front door lower)	Incl. vinyl insert			
		◊Black	(RH)♦D7VY 6020878-AA	(LH)♦D7VY 6020879-AA	1
		◊Blue (dark)	(RH)♦D7VY 6020878-BB	(LH)♦D7VY 6020879-BB	1
		◊Blue (medium)	(RH)♦D8VY 6020878-AB	(LH)♦D8VY 6020879-AB	1
		◊Champagne (dark)	(RH)✱D8VY 6020878-BU Not replaced (4/83)	(LH)♦D8VY 6020879-BU	1
		◊Champagne (light)	(RH)♦D8VY 6020878-AU	(LH)♦D8VY 6020879-AU	1
		◊Chamois	(RH)♦D8VY 6020878-BT	(LH)♦D8VY 6020879-BT	1
		◊Cordovan (dark)	(RH)♦D7VY 6020878-AF	(LH)♦D7VY 6020879-AF	1
		◊Cordovan (light)	(RH)♦D8VY 6020878-AF	(LH)✱D8VY 6020879-AF Not replaced (4/84)	1
		◊Cream	(RH)♦D7VY 6020878-AV	(LH)♦D7VY 6020879-AV	1
		◊Gray	(RH)♦D7VY 6020878-AP	(LH)♦D7VY 6020879-AP	1
		◊Jade (dark)	(RH)♦D8VY 6020878-AR	(LH)♦D8VY 6020879-AR	1
		◊Jade (light)	(RH)✱D7VY 6020878-AR Not replaced (4/83)	(LH)♦D7VY 6020879-AR Not replaced (4/84)	1
		◊Red	(RH)♦D7VY 6020878-AD	(LH)♦D7VY 6020879-AD	1
		◊Silver	(RH)✱D7VY 6020878-BP Not replaced (4/84)	(LH)✱D7VY 6020879-BP Not replaced (4/84)	1
		◊White	(RH)♦D7VY 6020878-AW	(LH)♦D7VY 6020879-AW	1
20916-33	Moulding (front door upper)	R.H.-w/o mirror	♦D5VY 6020932-A		1
		R.H.-w/mirror-front	♦D5VY 6020916-A		1
		R.H.-w/mirror-rear	♦D5VY 6020933-B		1
		L.H.-front	♦D5VY 6020917-A		1
		L.H.-rear	♦D5VY 6020933-B		1
25622	Plate (name)	"Continental"	Not required		

◊ For color verification, refer to the vinyl roof swatches in the 1978 Salesman's Color and Upholstery Selection Guide

♦ Includes attaching parts

1978 LINCOLN - BODY TYPE 60 - w/SIDE MOULDINGS - cont'd.

GROUP NUMBER	PART NAME	DESCRIPTION	PART NUMBER		QTY.
29038-9	Moulding (quarter panel side)	Incl. vinyl insert			
		◊Black	(RH)♦D7VY 6029038-AA	(LH)♦D7VY 6029039-AA	1
		◊Blue (dark)	(RH)♦D7VY 6029038-BB	(LH)♦D7VY 6029039-BB	1
		◊Blue (medium)	(RH)♦D8VY 6029038-AB	(LH)♦D8VY 6029039-AB	1
		◊Champagne (dark)	(RH)♦D8VY 6029038-BU	(LH)♦D8VY 6029039-BU	1
		◊Champagne (light)	(RH)♦D8VY 6029038-AU	(LH)♦D8VY 6029039-AU	1
		◊Chamois	(RH)♦D8VY 6029038-BT	(LH)♦D8VY 6029039-BT	1
		◊Cordovan (dark)	(RH)♦D7VY 6029038-AF	(LH)♦D7VY 6029039-AF	1
		◊Cordovan (light)	(RH)♦D8VY 6029038-AF	(LH)♦D8VY 6029039-AF	1
		◊Cream	(RH)♦D7VY 6029038-AV	(LH)♦D7VY 6029039-AV	1
		◊Gray	(RH)♦D7VY 6029038-AP	(LH)♦D7VY 6029039-AP	1
		◊Jade (dark)	(RH)♦D8VY 6029038-AR	(LH)♦D8VY 6029039-AR	1
		◊Jade (light)	(RH)♦D7VY 6029038-AR	(LH)♦D7VY 6029039-AR	1
		◊Red	(RH)♦D7VY 6029038-AD	(LH)♦D7VY 6029039-AD	1
		◊Silver	(RH)♦D7VY 6029038-BP	(LH)♦D7VY 6029039-BP	1
		◊White	(RH)♦D7VY 6029038-AW	(LH)♦D7VY 6029039-AW	1
29050-1	Moulding (quarter wheel opening cover lower)	Front	(RH)♦D5VY 6029050-B	(LH)♦D5VY 6029051-B	1
		Rear	(RH)♦D8VY 6029050-A	(LH)♦D8VY 6029051-A	1
29050-1	Moulding (quarter wheel opening cover upper)	Incl. vinyl insert			
		◊Black	(RH)♦D8VY 6029050-AA	(LH)♦D8VY 6029051-AA	1
		◊Blue (dark)	(RH)♦D8VY 6029050-BB	(LH)♦D8VY 6029051-BB	1
		◊Blue (medium)	(RH)♦D8VY 6029050-AB	(LH)♦D8VY 6029051-AB	1
		◊Champagne (dark)	(RH)♦D8VY 6029050-BU	(LH)♦D8VY 6029051-BU	1
		◊Champagne (light)	(RH)♦D8VY 6029050-AU	(LH)♦D8VY 6029051-AU	1
		◊Chamois	(RH)♦D8VY 6029050-BT	(LH)♦D8VY 6029051-BT	1
		◊Cordovan (dark)	(RH)♦D8VY 6029050-BF	(LH)♦D8VY 6029051-BF	1
		◊Cordovan (light)	(RH)♦D8VY 6029050-AF	(LH)♦D8VY 6029051-AF	1
		◊Cream	(RH)♦D8VY 6029050-AV	(LH)♦D8VY 6029051-AV	1
		◊Gray	(RH)♦D8VY 6029050-BP	(LH)♦D8VY 6029051-BP	1
		◊Jade (dark)	(RH)♦D8VY 6029050-BR	(LH)♦D8VY 6029051-BR	1
		◊Jade (light)	(RH)♦D8VY 6029050-AR	(LH)♦D8VY 6029051-AR	1
		◊Red	(RH)♦D8VY 6029050-AD	(LH)♦D8VY 6029051-AD	1
		◊Silver	(RH)♦D8VY 6029050-AP	(LH)♦D8VY 6029051-AP	1
		◊White	(RH)♦D8VY 6029050-AW	(LH)♦D8VY 6029051-AW	1
29076-7	Moulding (quarter lower front)	Incl. vinyl insert			
		◊Black	(RH)♦D7VY 6029076-AA	(LH)♦D7VY 6029077-AA	1
		◊Blue (dark)	(RH)♦D7VY 6029076-BB	(LH)♦D7VY 6029077-BB	1
		◊Blue (medium)	(RH)♦D8VY 6029076-AB	(LH)♦D8VY 6029077-AB	1
		◊Champagne (dark)	(RH)♦D8VY 6029076-BU	(LH)♦D8VY 6029077-BU	1
		◊Champagne (light)	(RH)♦D8VY 6029076-AU	(LH)♦D8VY 6029077-AU	1
		◊Chamois	(RH)♦D8VY 6029076-BT	(LH)♦D8VY 6029077-BT	1
		◊Cordovan (dark)	(RH)♦D7VY 6029076-AF	(LH)♦D7VY 6029077-AF	1
		◊Cordovan (light)	(RH)♦D8VY 6029076-AF	(LH)♦D8VY 6029077-AF	1
		◊Cream	(RH)♦D7VY 6029076-AV	(LH)♦D7VY 6029077-AV	1
		◊Gray	(RH)♦D7VY 6029076-AP	(LH)♦D7VY 6029077-AP	1
		◊Jade (dark)	(RH)♦D8VY 6029076-AR	(LH)♦D8VY 6029077-AR	1
		◊Jade (light)	(RH)♦D7VY 6029076-AR	(LH)♦D7VY 6029077-AR	1
		◊Red	(RH)♦D7VY 6029076-AD	(LH)♦D7VY 6029077-AD	1
		◊Silver	(RH)♦D7VY 6029076-BP	(LH)♦D7VY 6029077-BP	1
		◊White	(RH)♦D7VY 6029076-AW	(LH)♦D7VY 6029077-AW	1
291B20-1	Moulding (quarter panel lower)		(RH)♦D5VY 60291B20-A	(LH)♦D5VY 60291B21-A	1
29140-1	Moulding (quarter panel upper)		(RH)♦D5VY 6029140-A	(LH)♦D5VY 6029141-A	1
50398	Plate (front fender name)	"Town Coupe"	♦D3VY 6550398-A	R.H. and L.H.	2

◊ For color verification, refer to the vinyl roof swatches in the 1978 Salesman's Color and Upholstery Selection Guide
♦ Includes attaching parts

COPYRIGHT © 1986 — FORD MOTOR COMPANY — DEARBORN, MICHIGAN

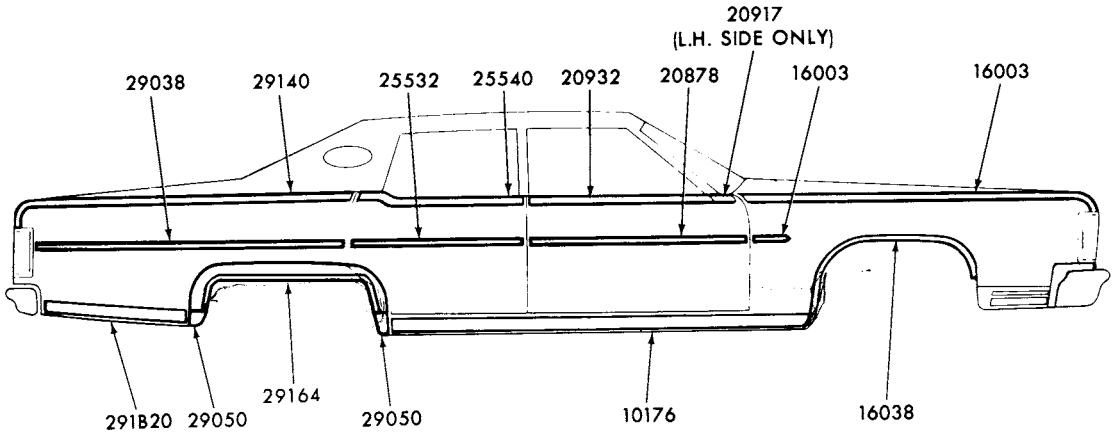

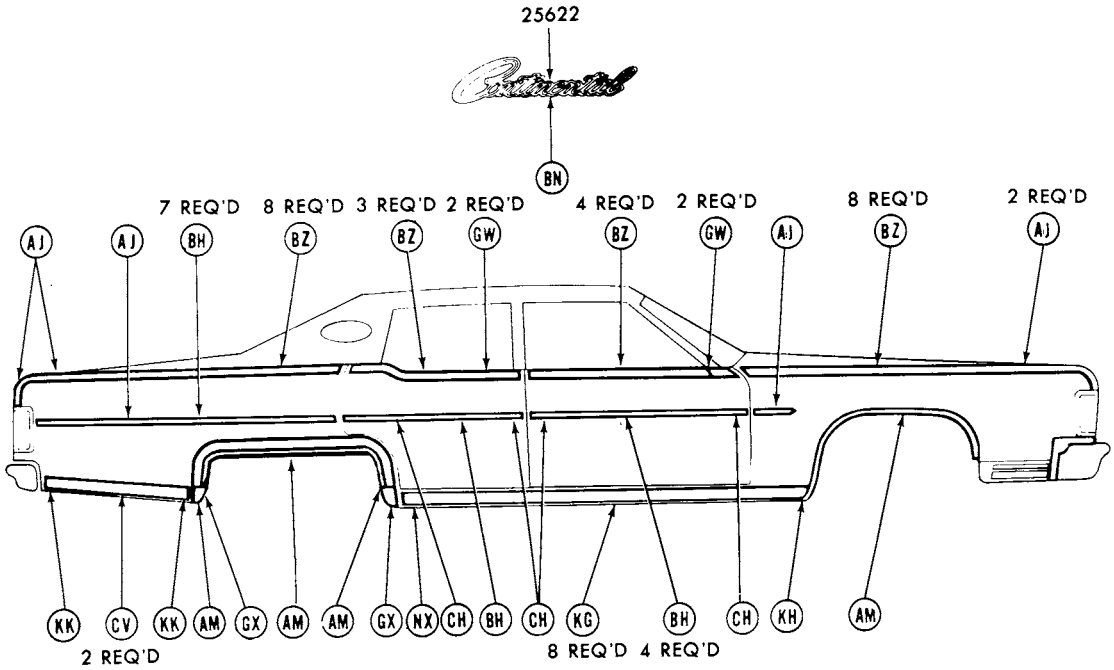

REFER TO EXTERIOR MOULDING SECTION "R" FOR COMPLETE RETAINER INFORMATION

P-14273

1978 LINCOLN - BODY TYPES 53 and 60 - w/BODY SIDE PROTECTION - cont'd.

GROUP NUMBER	PART NAME	DESCRIPTION	PART NUMBER		QTY.
10176-7	Moulding (body rocker panel)		(RH)♦D5VY 6010176-A	(LH)♦D5VY 6010177-A	1
16003	Moulding (front fender side)		♦D2LY 16003-B	R.H. and L.H.	2
16003-4	Moulding (front fender upper)		(RH)♦D5VY 16003-A	(LH)♦D5VY 16004-A	1
16038-9	Moulding (front fender wheel)		(RH)♦D5VY 16038-B	(LH)♦D5VY 16039-B	1
20878-9	Moulding (front door lower)	Body type 53	♦D2VY 5320878-B	R.H. and L.H.	2
		Body type 60	♦D2VY 6520878-B	R.H. and L.H.	2
20916-33	Moulding (front door upper)	Body type 53			
		R.H.	♦D5VY 5320932-A		1
		R.H.-w/mirror-front	♦D5VY 6020916-A		1
		R.H.-w/mirror-rear	♦D5VY 5320932-B		1
		L.H.-front	♦D5VY 6020917-A		1
		L.H.-rear	♦D5VY 5320933-A		1
		Body type 60			1
		R.H.	♦D5VY 6020932-A		1
		R.H.-w/mirror-front	♦D5VY 6020916-A		1
		R.H.-w/mirror-rear	♦D5VY 6020933-B		1
		L.H.-front	♦D5VY 6020917-A		1
		L.H.-rear	♦D5VY 6020933-B		1
25532-3	Moulding (rear door lower)		♦D2VY 5325532-B	R.H. and L.H.	2
25540-1	Moulding (rear door upper)		(RH)♦D5VY 5325540-A	(LH)♦D5VY 5325541-A	1
29038-9	Moulding (quarter panel side)	Body type 53	♦D2VY 5329038-B	R.H. and L.H.	2
		Body type 60	(RH)♦D6VY 6029038-A	R.H. and L.H.	2
29050-1	Moulding (quarter wheel opening cover)	Front	(RH)♦D5VY 6029050-B	(LH)♦D5VY 6029051-B	1
		Rear	(RH)♦D8VY 6029050-A	(LH)♦D8VY 6029051-A	1
291B20-1	Moulding (quarter panel lower)		(RH)♦D5VY 60291B20-A	(LH)♦D5VY 60291B21-A	1
29140-1	Moulding (quarter panel upper)	Body type 53	(RH)♦D5VY 5329140-A	(LH)♦D5VY 5329141-A	1
		Body type 60	(RH)♦D5VY 6029140-A	(LH)♦D5VY 6029141-A	1
29164	Moulding (wheel opening cover)		(RH)♦D8VY 6029164-A	(LH)♦D8VY 6029165-A	1

♦ Includes attaching parts

COPYRIGHT © 1986 — FORD MOTOR COMPANY — DEARBORN, MICHIGAN

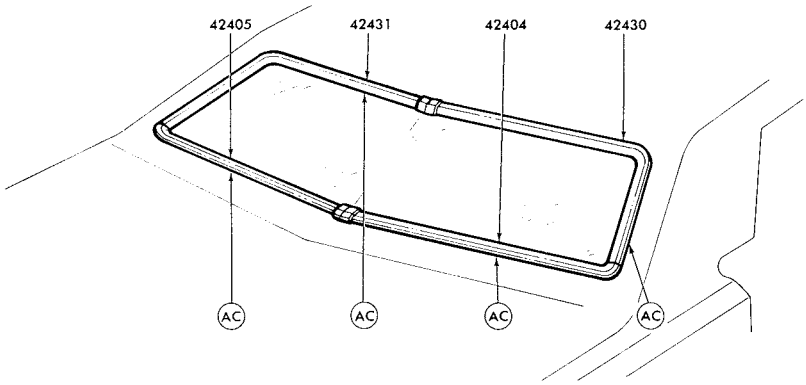

REFER TO EXTERIOR MOULDING SECTION "R" FOR COMPLETE RETAINER INFORMATION P-12488

1978 LINCOLN - BACK WINDOW - w/o VINYL ROOF and w/FULL VINYL ROOF

GROUP NUMBER	PART NAME	DESCRIPTION	PART NUMBER		QTY.
42404-5	Moulding (back window lower)	Body type 53	(RH)★D5VY 5342404-A	(LH)★D5VY 5342405-A Not replaced (4/84)	1
		Body type 60	(RH)★D5VY 6042404-A	(LH)★D5VY 6042405-A Not replaced (4/84)	1
42430-1	Moulding (back window upper)	Body type 53	(RH)♦D5VY 5342430-A	(LH)♦D5VY 5342431-A	1
		Body type 60	(RH)★D5VY 6042430-A	(LH)★D5VY 6042431-A	1

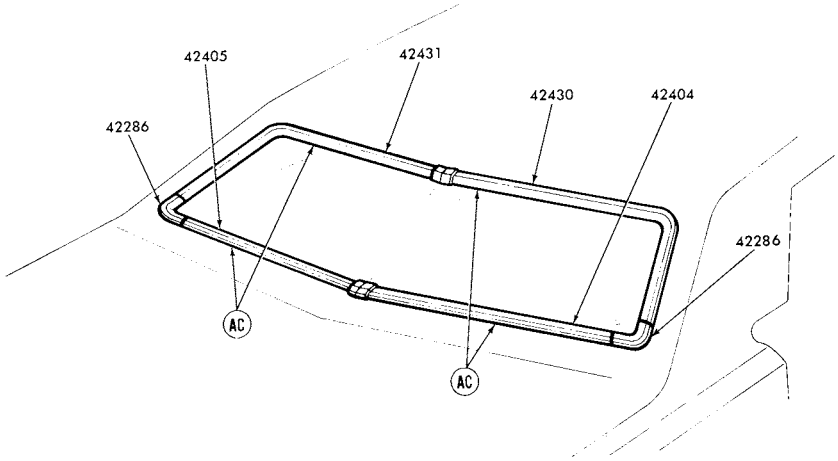

REFER TO EXTERIOR MOULDING SECTION "R" FOR COMPLETE RETAINER INFORMATION P-13189

1978 LINCOLN - BACK WINDOW - w/HALF VINYL ROOF

GROUP NUMBER	PART NAME	DESCRIPTION	PART NUMBER		QTY.
42286	Moulding (back window lower corner)		♦D7VY 6042286-A	R.H. and L.H.	2
42404-5	Moulding (back window lower)	Body type 53	(RH)♦D7VY 5342404-A	(LH)♦D7VY 5342405-A	1
		Body type 60	(RH)♦D7VY 6042404-A	(LH)♦D7VY 6042405-A	1
42430-1	Moulding (back window upper)	Body type 53	(RH)♦D7VY 5342430-A	(LH)♦D7VY 5342431-A	1
		Body type 60	(RH)♦D7VY 6042430-A	(LH)♦D7VY 6042431-A	1

♦ Includes attaching parts

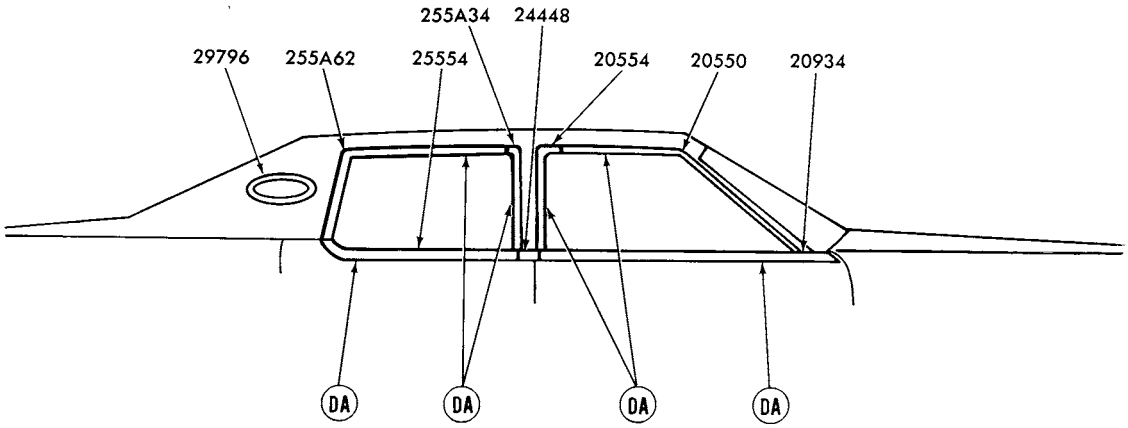

REFER TO EXTERIOR MOULDING SECTION "R" FOR COMPLETE RETAINER INFORMATION

P-13191

1978 LINCOLN - BODY TYPE 53 - DOOR BELT and WINDOW

GROUP NUMBER	PART NAME	DESCRIPTION	PART NUMBER		QTY.
20550-5	Moulding (front door window)	Front	(RH) D5VY 5320550-A	(LH) D5VY 5320551-A	1
		Rear	(RH) D5VY 5320554-A	(LH) D5VY 5320555-A	1
20934-5	Moulding (front door belt)		(RH)♦D5VY 5320934-A	(LH)♦D5VY 5320935-A	1
24448-9	Moulding (center body pillar)	W/half vinyl roof	(RH)♦D7VY 5324448-A	(LH)♦D7VY 5324449-A	1
		Standard	(RH)★D5VY 5324448-A	(LH)♦D5VY 5324449-A	1
255A34-5	Moulding (rear door window)	Front-w/o half vinyl roof	(RH) D5VY 53255A34-A	(LH) D5VY 53255A35-A	1
		Front-w/half vinyl roof	(RH)★D6VY 53255A34-A Not replaced (3/82)	(LH)★D6VY 53255A35-A Not replaced (3/82)	1
25554-5	Moulding (rear door belt)		(RH)♦D5VY 5325554-A	(LH)♦D5VY 5325555-A	1
255A62-3	Moulding (rear door window)	Rear-w/full vinyl roof	(RH) D5VY 53255A62-A	(LH) D5VY 53255A63-A	1
		Rear-w/half vinyl roof	(RH)★D6VY 53255A62-A Not replaced (3/82	(LH)★D6VY 53255A63-A Not replaced (3/82)	1
29796-7	Moulding (opera window)	Bright finish w/ vinyl tape			
		Black	D6LY 6529796-A	R.H. and L.H.	2

COPYRIGHT © 1986 — FORD MOTOR COMPANY — DEARBORN, MICHIGAN

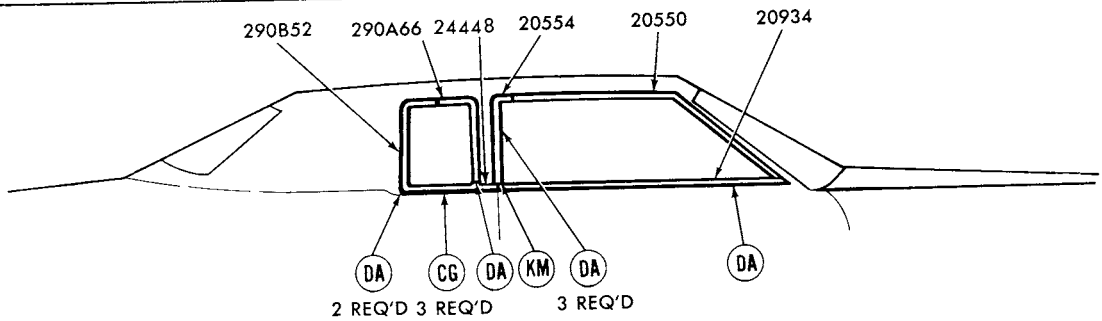

REFER TO EXTERIOR MOULDING SECTION "R" FOR COMPLETE RETAINER INFORMATION

P-13190

1978 LINCOLN - BODY TYPE 60 - DOOR BELT and WINDOW

GROUP NUMBER	PART NAME	DESCRIPTION	PART NUMBER		QTY.
20550-5	Moulding (front window opening)	Front	(RH) D5VY 6020550-A	(LH) D5VY 6020551-A	1
		Rear	(RH) D5VY 6020554-A	(LH) D5VY 6020555-A	1
20934-5	Moulding and weatherstrip-(front door belt)		(RH)♦D5VY 6020934-A	(LH)♦D5VY 6020935-A	1
24448-9	Moulding (center body pillar)		(RH) D7VY 6024448-A	(LH) D7VY 6024449-A	1
290B52-3	Moulding (quarter window rear)		(RH)♦D6VY 60290B52-A	(LH)♦D6VY 60290B53-A	1
290A66-7	Moulding (quarter window front)	W/vinyl roof	(RH)✱D6VY 60290A66-B Not replaced (4/84)	(LH)♦D6VY 60290A67-B	1
		W/o vinyl roof	(RH)♦D6VY 60290A66-A	(LH)♦D6VY 60290A67-A	1

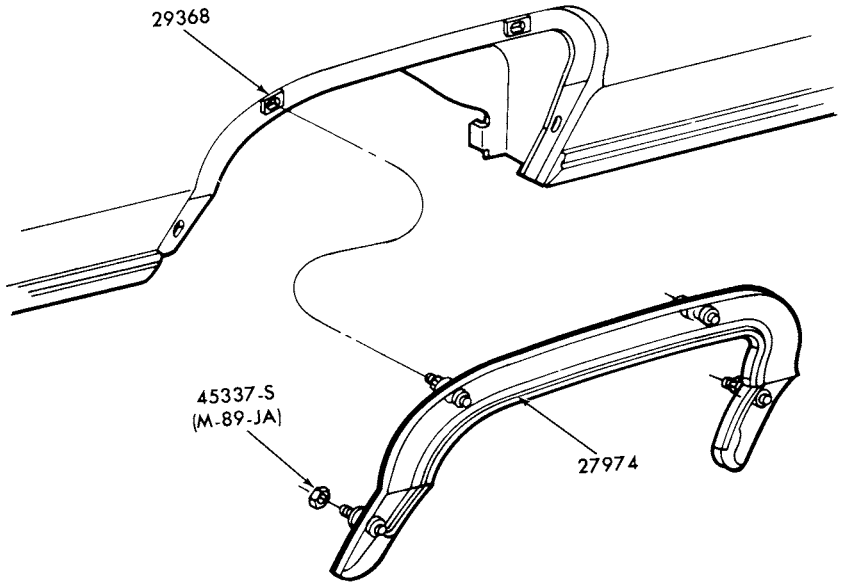

P-14276

1978 LINCOLN - WHEEL OPENING COVER PARTS

GROUP NUMBER	PART NAME	DESCRIPTION	PART NUMBER		QTY.
27974-5	Panel (quarter wheel opening cover)		(RH) D8VY 6027974-A	(LH) D8VY 6027975-A	1
29368	Insert (wheel opening cover)	Nylon	D5VY 6029368-A	R.H. and L.H.	4

♦ Includes attaching parts

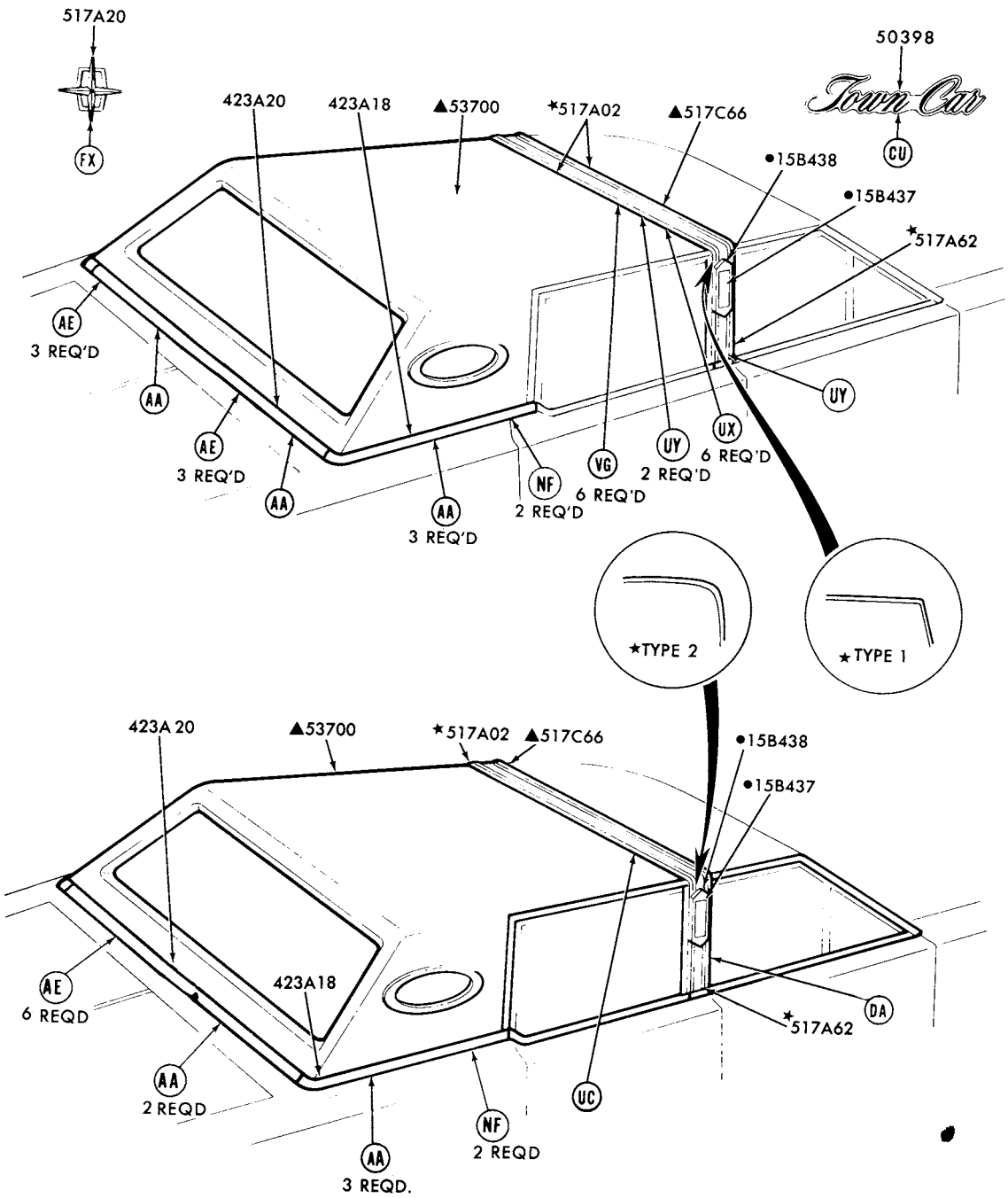

▲ REFER TO GROUP IN SOFT TRIM SECTION
● REFER TO GROUP IN CHASSIS SECTION
REFER TO EXTERIOR MOULDING SECTION "R" FOR COMPLETE RETAINER INFORMATION

P-13187

1978 LINCOLN - BODY TYPE 53 - ROOF and BACK BELT

COPYRIGHT © 1986 — FORD MOTOR COMPANY — DEARBORN, MICHIGAN

1978 LINCOLN - BODY TYPE 53 - ROOF and BACK BELT - cont'd.

GROUP NUMBER	PART NAME	DESCRIPTION	PART NUMBER	QTY.
423A18-9	Moulding (back belt side)	Paint to match	(RH)♦D7VY 53423A18-A (LH)♦D7VY 53423A19-A	1
423A20	Moulding (back belt rear)	Paint to match	♦D7VY 53423A20-A	1
50398	Plate (roof side)	"Town Car"	♦D3VY 5350398-A R.H. and L.H.	2
517A02	Moulding (roof top)	●Type 1 - incl. vinyl insert		
		◊Black	★D7VY 53517A02-AA	1
		◊Blue (dark)	★D7VY 53517A02-BB	1
		◊Blue (medium)	★D8VY 53517A02-AB	1
		◊Chamois	★D8VY 53517A02-BT	1
		◊Champagne (dark)	★D8VY 53517A02-BU	1
		◊Champagne (light)	★D8VY 53517A02-AU	1
		◊Cordovan (dark)	★D7VY 53517A02-AF	1
		◊Cordovan (light)	★D8VY 53517A02-AF	1
		◊Cream	★D7VY 53517A02-AV	1
		◊Gray	★D7VY 53517A02-AP	1
		◊Jade (dark)	★D8VY 53517A02-AR	1
		◊Jade (light)	★D7VY 53517A02-AR	1
		◊Red	★D7VY 53517A02-AD	1
		◊Silver	★D7VY 53517A02-BP	1
		◊White	★D7VY 53517A02-AW Not replaced (4/84)	1
		▲Type 2 - incl. vinyl insert		
		◊Black	★D7VY 53517A02-BA Not replaced (4/84)	1
		◊Blue (dark)	★D7VY 53517A02-DB Not replaced (4/84)	1
		◊Blue (medium)	★D8VY 53517A02-BB Not replaced (4/83)	1
		◊Chamois	★D8VY 53517A02-CT Not replaced (4/83)	1
		◊Champagne (dark)	★D8VY 53517A02-DU Not replaced (4/84)	1
		◊Champagne (light)	★D8VY 53517A02-CU Not replaced (4/84)	1
		◊Cordovan (dark)	★D7VY 53517A02-BF Not replaced (4/84)	1
		◊Cordovan (light)	★D8VY 53517A02-BF Not replaced (4/83)	1
		◊Cream	★D7VY 53517A02-BV Not replaced (4/84)	1
		◊Gray	★D7VY 53517A02-CP Not replaced (4/84)	1
		◊Jade (dark)	★D8VY 53517A02-BR Not replaced (4/83)	1
		◊Jade (light)	★D7VY 53517A02-CR Not replaced (4/84)	1
		◊Red	★D7VY 53517A02-BD Not replaced (4/84)	1
		◊Silver	★D7VY 53517A02-DP Not replaced (4/84)	1
		◊White	★D7VY 53517A02-BW Not replaced (4/84)	1
517A20	Ornament (roof side)	Body type 53- w/o opera window	♦C9VY 53517A20-A R.H. and L.H.	2

♦ Includes attaching parts
◊ For color verification, refer to the vinyl roof swatches in the 1978 Salesman's Color and Upholstery Selections Guide.
● Type 1 - Angled side corners, moulding has a channeled groove on the bottom for clip and nut type retainers.
▲ Type 2 - Rounded side corners, moulding has a flat bottom and includes 2 steel and 6 plastic push-in type studs.

1978 LINCOLN - BODY TYPE 53 - ROOF and BACK BELT - cont'd.

GROUP NUMBER	PART NAME	DESCRIPTION	PART NUMBER		QTY.
517A62	Moulding (roof side)	⊕Type 1 - incl. vinyl insert			
		◊Black	★D7VY 53517A62-AA		1
		◊Blue (dark)	★D7VY 53517A62-BB		1
		◊Blue (medium)	★D8VY 53517A62-AB		1
		◊Champagne (dark)	★D8VY 53517A62-BU		1
		◊Champagne (light)	♦D8VY 53517A62-AU		1
		◊Chamois	★D8VY 53517A62-BT		1
		◊Cordovan (dark)	★D7VY 53517A62-AF		1
		◊Cordovan (light)	★D8VY 53517A62-AF		1
		◊Cream	★D7VY 53517A62-AV		1
		◊Gray	★D7VY 53517A62-AP		1
		◊Jade (dark)	★D8VY 53517A62-AR		1
		◊Jade (light)	★D7VY 53517A62-AR		1
		◊Red	★D7VY 53517A62-AD		1
		◊Silver	★D7VY 53517A62-BP		1
		◊White	★D7VY 53517A62-AW		1
		‡Type 2 - incl. vinyl insert			
		◊Black	★D7VY 53517A62-BA	Not replaced (4/83)	1
		◊Blue (dark)	★D7VY 53517A62-DB	Not replaced (4/83)	1
		◊Blue (medium)	★D8VY 53517A62-BB	Not replaced (4/83)	1
		◊Champagne (dark)	★D8VY 53517A62-DU	Not replaced (4/84)	1
		◊Champagne (light)	★D8VY 53517A62-CU	Not replaced (4/83)	1
		◊Chamois	★D8VY 53517A62-CT	Not replaced (4/83)	1
		◊Cordovan (dark)	★D7VY 53517A62-BF	Not replaced (4/83)	1
		◊Cordovan (light)	★D8VY 53517A62-BF	Not replaced (4/83)	1
		◊Cream	★D7VY 53517A62-BV	Not replaced (4/83)	1
		◊Gray	★D7VY 53517A62-CP	Not replaced (4/84)	1
		◊Jade (dark)	★D8VY 53517A62-BR	Not replaced (4/83)	1
		◊Jade (light)	★D7VY 53517A62-CR	Not replaced (4/83)	1
		◊Red	★D7VY 53517A62-BD	Not replaced (4/83)	1
		◊Silver	★D7VY 53517A62-DP	Not replaced (4/83)	1
		◊White	★D7VY 53517A62-BW	Not replaced (4/83)	1

‡ Moulding has flat bottom - must be used with type 2 roof top moulding
⊕ Moulding has channeled groove on the bottom-must be used w/type 1 roof top moulding
◊ For color verification, refer to the vinyl roof swatches in the 1978 Salesman's Color and Upholstery Selection Guide
♦ Includes attaching parts

COPYRIGHT © 1986 — FORD MOTOR COMPANY — DEARBORN, MICHIGAN

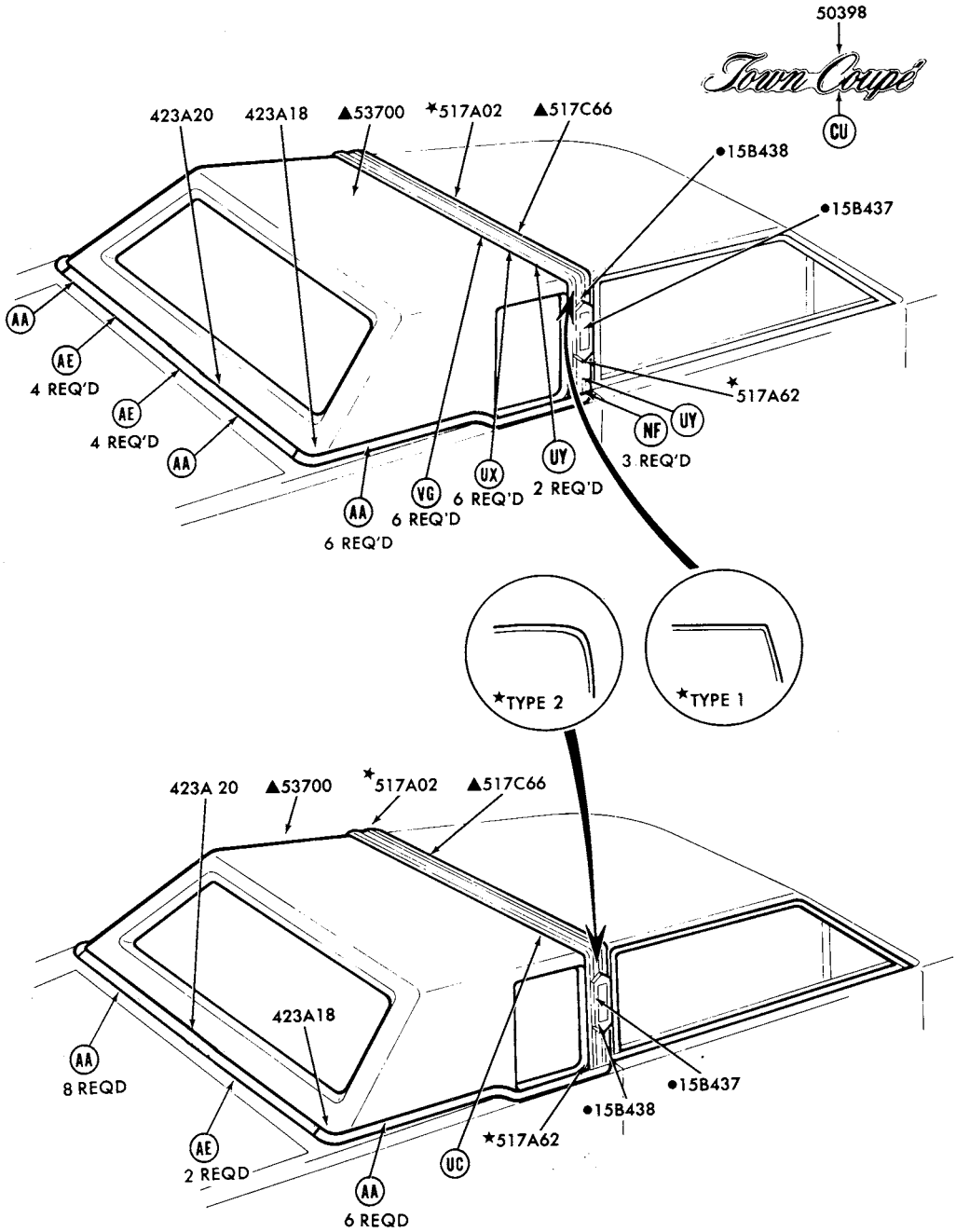

▲REFER TO GROUP IN SOFT TRIM SECTION
●REFER TO GROUP IN CHASSIS SECTION
REFER TO EXTERIOR MOULDING SECTION "R" FOR COMPLETE RETAINER INFORMATION

P-13188

1978 LINCOLN - BODY TYPE 60 - ROOF and BACK BELT

1978 LINCOLN - BODY TYPE 60 - ROOF and BACK BELT - cont'd.

GROUP NUMBER	PART NAME	DESCRIPTION	PART NUMBER		QTY.
423A18-9	Moulding (back belt side)	W/full vinyl roof	(RH)♦D7VY 60423A18-B	(LH)♦D7VY 60423A19-B	1
		W/half vinyl roof	(RH)♦D7VY 60423A18-A	(LH)♦D7VY 60423A19-A	1
423A20	Moulding (back belt rear)		♦D7VY 53423A20-A		1
50398	Plate (front fender name)	"Town Coupe"	♦D3VY 6550398-A R.H. and L.H.		2
517A02	Moulding (roof top)	●Type 1 - incl. vinyl insert			
		◊Black	★D7VY 60517A02-AA		1
		◊Blue (dark)	★D7VY 60517A02-BB		1
		◊Blue (medium)	★D8VY 60517A02-AB		1
		◊Champagne (dark)	★D8VY 60517A02-BU		1
		◊Champagne (light)	★D8VY 60517A02-AU		1
		◊Chamois	★D8VY 60517A02-BT		1
		◊Cordovan (dark)	★D7VY 60517A02-AF		1
		◊Cordovan (light)	★D8VY 60517A02-AF		1
		◊Cream	★D7VY 60517A02-AV		1
		◊Gray	★D7VY 60517A02-AP		1
		◊Jade (dark)	★D8VY 60517A02-AR		1
		◊Jade (light)	★D7VY 60517A02-AR		1
		◊Red	★D7VY 60517A02-AD		1
		◊Silver	★D7VY 60517A02-BP		1
		◊White	★D7VY 60517A02-AW		1
		▲Type 2 - incl. vinyl insert			
		◊Black	★D7VY 60517A02-BA	Not replaced (4/83)	1
		◊Blue (dark)	★D7VY 60517A02-DB	Not replaced (4/83)	1
		◊Blue (medium)	★D8VY 60517A02-BB		1
		◊Champagne (dark)	★D8VY 60517A02-DU	Not replaced (4/83)	1
		◊Champagne (light)	★D8VY 60517A02-CU	Not replaced (4/83)	1
		◊Chamois	★D8VY 60517A02-CT	Not replaced (4/83)	1
		◊Cordovan (dark)	★D7VY 60517A02-BF	Not replaced (4/83)	1
		◊Cordovan (light)	★D8VY 60517A02-BF	Not replaced (4/83)	1
		◊Cream	★D7VY 60517A02-BV	Not replaced (4/83)	1
		◊Gray	★D7VY 60517A02-CP	Not replaced (6/82)	1
		◊Jade (dark)	★D8VY 60517A02-BR	Not replaced (4/83)	1
		◊Jade (light)	★D7VY 60517A02-CR	Not replaced (4/83)	1
		◊Red	★D7VY 60517A02-BD	Not replaced (4/83)	1
		◊Silver	★D7VY 60517A02-DP	Not replaced (4/83)	1
		◊White	★D7VY 60517A02-BW	Not replaced (4/83)	1

● Type 1 - Angled side corners, moulding has a channeled groove on the bottom for clip and nut type retainers
▲ Type 2 - Rounded side corners, moulding has a flat bottom and includes 2 steel and 6 plastic push-in type studs
◊ For color verification, refer to the vinyl roof swatches in the 1978 Salesman's Color and Upholstery Selection Guide
♦ Includes attaching parts

COPYRIGHT © 1986 — FORD MOTOR COMPANY — DEARBORN, MICHIGAN

1978 LINCOLN - BODY TYPE 60 - ROOF and BACK BELT - cont'd.

GROUP NUMBER	PART NAME	DESCRIPTION	PART NUMBER	QTY.
517A62	Moulding (roof side)	⊕Type 1 - incl. vinyl insert		
		◊Black	★D7VY 60517A62-AA R.H. and L.H.	2
		◊Blue (dark)	★D7VY 60517A62-BB R.H. and L.H.	2
		◊Blue (medium)	★D8VY 60517A62-AB R.H. and L.H.	2
		◊Champagne (dark)	★D8VY 60517A62-BU R.H. and L.H.	2
		◊Champagne (light)	★D8VY 60517A62-AU R.H. and L.H.	2
		◊Chamois	★D8VY 60517A62-BT R.H. and L.H.	2
		◊Cordovan (dark)	★D7VY 60517A62-AF R.H. and L.H.	2
		◊Cordovan (light)	★D8VY 60517A62-AF R.H. and L.H.	2
		◊Cream	★D7VY 60517A62-AV R.H. and L.H.	2
		◊Gray	★D7VY 60517A62-AP R.H. and L.H.	2
		◊Jade (dark)	★D8VY 60517A62-AR R.H. and L.H.	2
		◊Jade (light)	★D7VY 60517A62-AR R.H. and L.H.	2
		◊Red	★D7VY 60517A62-AD R.H. and L.H.	2
		◊Silver	★D7VY 60517A62-BP R.H. and L.H.	2
		◊White	★D7VY 60517A62-AW R.H. and L.H.	2
		‡ Type 2 - incl. vinyl insert		
		◊Black	★D7VY 60517A62-BA R.H. and L.H. Not replaced (4/83)	2
		◊Blue (dark)	★D7VY 60517A62-DB R.H. and L.H. Not replaced (4/83)	2
		◊Blue (medium)	★D8VY 60517A62-BB R.H. and L.H. Not replaced (4/83)	2
		◊Champagne (dark)	★D8VY 60517A62-DU R.H. and L.H. Not replaced (4/83)	2
		◊Champagne (light)	★D8VY 60517A62-CU R.H. and L.H. Not replaced (4/83)	2
		◊Chamois	★D8VY 60517A62-CT R.H. and L.H. Not replaced (4/83)	2
		◊Cordovan (dark)	★D7VY 60517A62-BF R.H. and L.H. Not replaced (4/83)	2
		◊Cordovan (light)	★D8VY 60517A62-BF R.H. and L.H. Not replaced (4/83)	2
		◊Cream	★D7VY 60517A62-BV R.H. and L.H. Not replaced (4/83)	2
		◊Gray	★D7VY 60517A62-CP R.H. and L.H. Not replaced (4/83)	2
		◊Jade (dark)	★D8VY 60517A62 -BR R.H. and L.H. Not replaced (4/83)	2
		◊Jade (light)	★D7VY 60517A62-BR R.H. and L.H. Not replaced (4/83)	2
		◊Red	★D7VY 60517A62-BD R.H. and L.H. Not replaced (4/83)	2
		◊Silver	★D7VY 60517A62-DP R.H. and L.H. Not replaced (4/83)	2
		◊White	★D7VY 60517A62-BW R.H. and L.H. Not replaced (4/83)	2

♦ Includes attaching parts
⊕ Moulding has channeled groove on the bottom-must be used w/type 1 roof top moulding
‡ Moulding has flat bottom - must be used with type 2 roof top moulding
◊ For color verification, refer to the vinyl roof swatches in the 1978 Salesman's Color and Upholstery Selection Guide

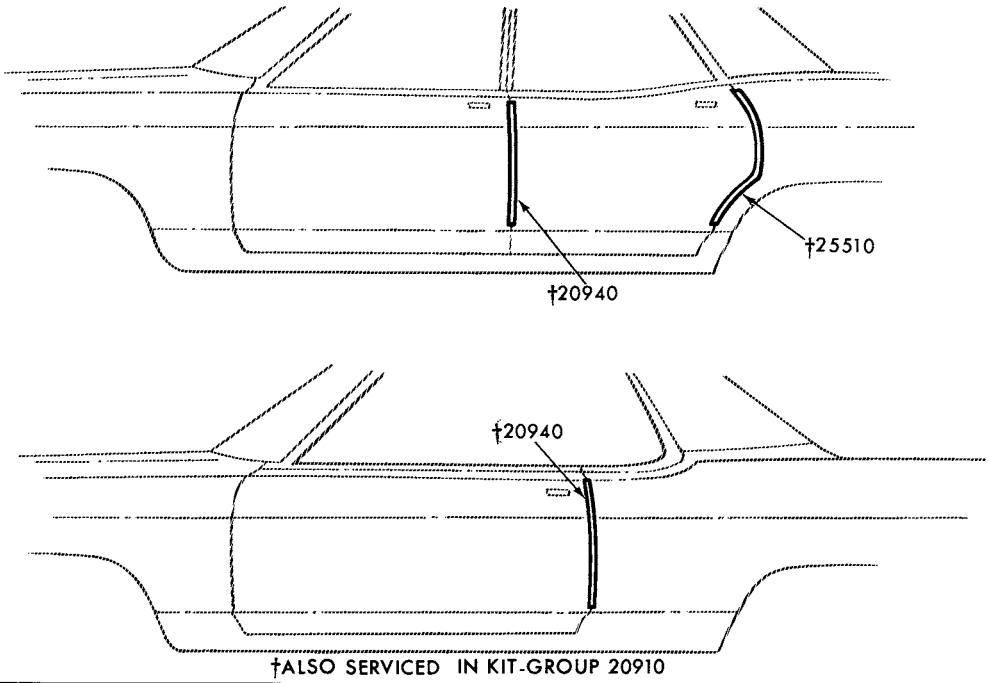

†ALSO SERVICED IN KIT-GROUP 20910

P-10061

1978 LINCOLN - DOOR EDGE GUARDS

GROUP NUMBER	PART NAME	DESCRIPTION	PART NUMBER		QTY.
20910	Moulding kit (door edge guard)	Body type 53	D5VY 5320910-A		1
		Body type 60	D5VY 6020910-A		1
20940-1	Moulding (front door edge guard)	Body type 53	(RH) D5VY 5320940-A	(LH)★D5VY 5320941-A R/B D5VY 5320940-A (11/81)	1
		Body type 60	(RH) D5VY 6020940-A	(LH)★D5VY 6020941-A R/B D5VY 6020940-A (11/81)	1
25510-1	Moulding (rear door edge guard)	Body type 53	(RH) D5VY 5325510-A	(LH) D5VY 5325511-A	1

COPYRIGHT © 1986 — FORD MOTOR COMPANY — DEARBORN, MICHIGAN

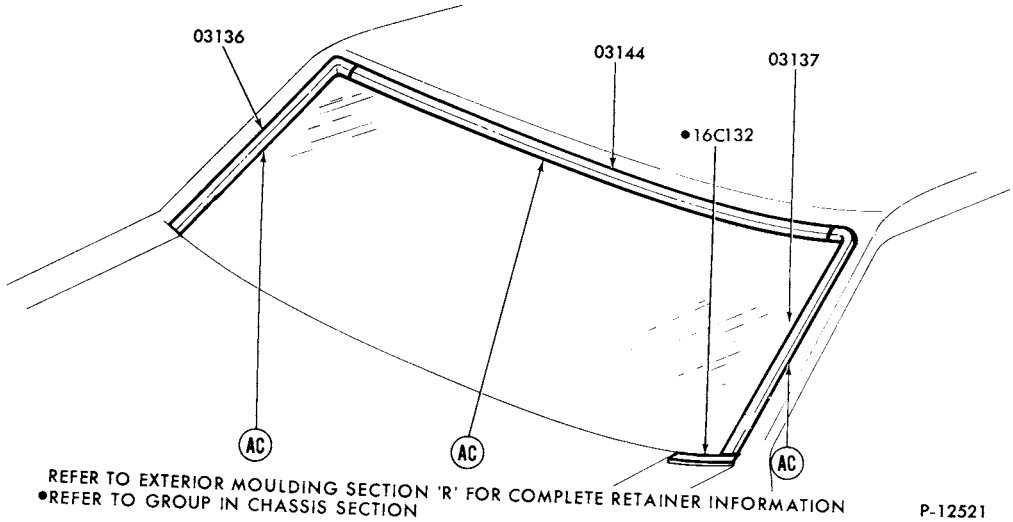

1978 COUGAR - WINDSHIELD

Δ Refer to Group in Chassis Section

GROUP NUMBER	PART NAME	DESCRIPTION	PART NUMBER	QTY.
03136-7	Moulding (windshield side)		(RH)♦D7OZ 6503136-A (LH)♦D7OZ 6503137-A	1
03144	Moulding (windshield top)		♦D7OZ 6503144-A	1

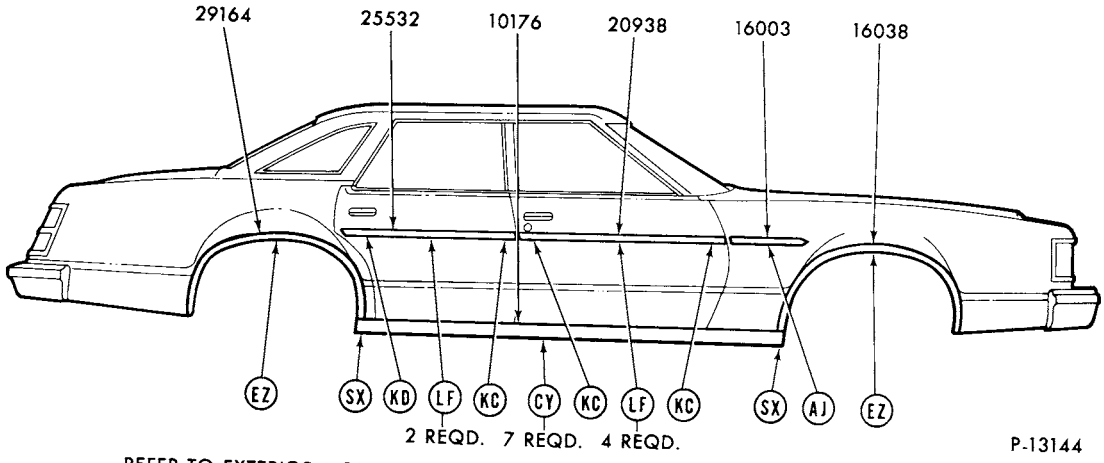

1978 COUGAR - BODY TYPE 53 - SIDE w/NARROW MOULDINGS

♦ Includes attaching parts

COPYRIGHT © 1986 — FORD MOTOR COMPANY — DEARBORN, MICHIGAN

New Issue

1978 COUGAR - BODY TYPE 53 - SIDE w/NARROW MOULDINGS - cont'd.

GROUP NUMBER	PART NAME	DESCRIPTION	PART NUMBER		QTY.
10176-7	Moulding (body rocker panel)	Body type 53	(RH)♦D7OZ 5310176-A	(LH)♦D7OZ 5310177-A	1
16003	Moulding (front fender side)	Bright finish	♦D4GY 16003-A	R.H. and L.H.	2
		Black vinyl insert-adhesive backed-27 1/2" long-cut to fit	D5DZ 5425532-D	R.H. and L.H.	AR
16038-9	Moulding (front fender wheel opening)		(RH)♦D7WY 16038-B	(LH)♦D7WY 16039-B	1
20938	Moulding (front door)	Bright finish	♦D4GY 5320938-A	R.H. and L.H.	2
		Black vinyl insert-adhesive backed-57" long-cut to fit	D4GZ 16003-A	R.H. and L.H.	AR
25532	Moulding (rear door)	Bright finish	♦D4GY 5325532-A	R.H. and L.H.	2
		Black vinyl insert-adhesive backed-27 1/2" long-cut to fit	D5DZ 5425532-D	R.H. and L.H.	AR
29164-5	Moulding (quarter wheel opening)		(RH)♦D7OZ 6529164-B	(LH)♦D7OZ 6529165-B	1

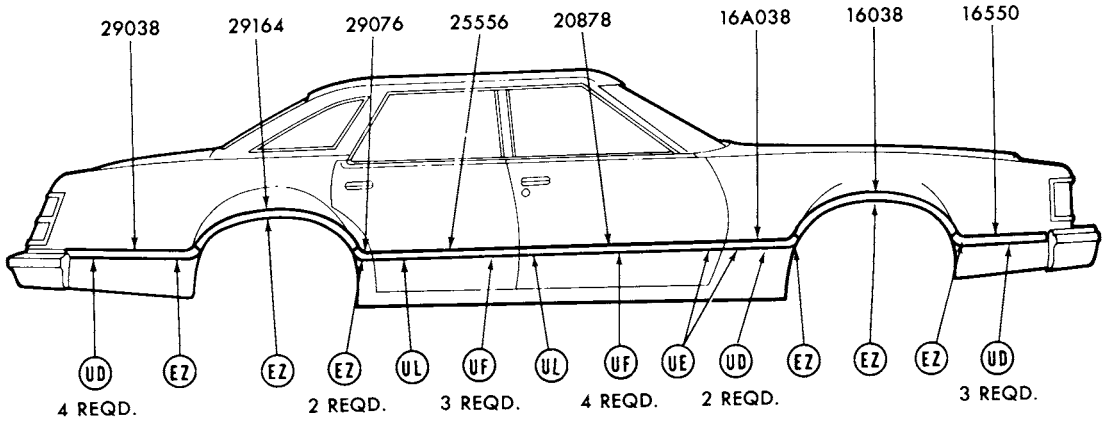

REFER TO EXTERIOR MOULDING SECTION "R" FOR COMPLETE RETAINER INFORMATION P-13147

1978 COUGAR - BODY TYPE 53 - SIDE w/WIDE MOULDINGS

♦ Includes attaching parts

1978 COUGAR - BODY TYPE 53 - SIDE w/WIDE MOULDINGS - cont'd.

GROUP NUMBER	PART NAME	DESCRIPTION	PART NUMBER		QTY.
16038-9	Moulding (front fender wheel opening)		(RH)♦D7OZ 16038-A	(LH)♦D7OZ 16039-A	1
16A038-9	Moulding (front fender side rear)	Bright with black paint in groove	(RH)♦D7OZ 16A038-A	(LH)♦D7OZ 16A039-A	1
		Bright incl. vinyl insert			
		◊Black	(RH)♦D7OZ 16A038-AA	(LH)♦D7OZ 16A039-AA	1
		◊Blue (dark)	(RH)♦D8OZ 16A038-BB	(LH)♦D8OZ 16A039-BB	1
		◊Blue (medium)	(RH)♦D8OZ 16A038-AB	(LH)♦D8OZ 16A039-AB	1
		◊Brown	(RH)♦D7OZ 16A038-AT	(LH)♦D7OZ 16A039-AT	1
		◊Chamois	(RH)♦D8OZ 16A038-BT	(LH)♦D8OZ 16A039-BT	1
		◊Gray	(RH)♦D7SZ 16A038-AP	(LH)♦D7SZ 16A039-AP	
		◊Jade	(RH)♦D7OZ 16A038-AR	(LH)♦D7OZ 16A039-AR	1
		◊Russet	(RH)♦D8OZ 16A038-AC	(LH)♦D8OZ 16A039-AC	1
		◊Silver	(RH)♦D7OZ 16A038-AP	(LH)♦D7OZ 16A039-AP	1
		◊White	(RH)♦D7OZ 16A038-AW	(LH)♦D7OZ 16A039-AW	1
16550-1	Moulding (front fender lower	Bright with black paint in groove	(RH)♦D7OZ 16550-A	(LH)♦D7OZ 16551-A	1
		Bright incl. vinyl insert			
		◊Black	(RH)♦D7OZ 16550-AA	(LH)♦D7OZ 16551-AA	1
		◊Blue (dark)	(RH)♦D8OZ 16550-BB	(LH)♦D8OZ 16551-BB	1
		◊Blue (medium)	(RH)♦D8OZ 16550-AB	(LH)♦D8OZ 16551-AB	1
		◊Brown	(RH)♦D7OZ 16550-AT	(LH)♦D7OZ 16551-AT	1
		◊Chamois	(RH)♦D8OZ 16550-BT	(LH)♦D8OZ 16551-BT	1
		◊Gray	(RH)♦D7SZ 16550-AP	(LH)♦D7SZ 16551-AP	1
		◊Jade	(RH)♦D7OZ 16550-AR	(LH)♦D7OZ 16551-AR	1
		◊Russet	(RH)♦D8OZ 16550-AC	(LH)♦D8OZ 16551-AC	1
		◊Silver	(RH)♦D7OZ 16550-AP	(LH)♦D7OZ 16551-AP	1
		◊White	(RH)♦D7OZ 16550-AW	(LH)♦D7OZ 16551-AW	1
20878-9	Moulding (front door lower)	Bright with black paint in groove	(RH)♦D7OZ 5320878-A	(LH)♦D7OZ 5320879-A	1
		Bright incl. vinyl insert			
		◊Black	(RH)♦D7OZ 5320878-AA	(LH)♦D7OZ 5320879-AA	1
		◊Blue (dark)	(RH)♦D8OZ 5320878-BB	(LH)★D8OZ 5320879-BB Not replaced (4/84)	1
		◊Blue (medium)	(RH)♦D8OZ 5320878-AB	(LH)♦D8OZ 5320879-AB	1
		◊Brown	(RH)♦D7OZ 5320878-AT	(LH)♦D7OZ 5320879-AT	1
		◊Chamois	(RH)♦D8OZ 5320878-BT	(LH)♦D8OZ 5320879-BT	1
		◊Gray	(RH)♦D8OZ 5320878-AP	(LH)♦D8OZ 5320879-AP	1
		◊Jade	(RH)♦D7OZ 5320878-AR	(LH)♦D7OZ 5320879-AR	1
		◊Russet	(RH)♦D8OZ 5320878-AC	(LH)♦D8OZ 5320879-AC	1
		◊Silver	(RH)★D7OZ 5320878-AP	(LH)★D7OZ 5320879-AP	1
		◊White	(RH)♦D7OZ 5320878-AW	(LH)♦D7OZ 5320879-AW	1

♦ Includes attaching parts

◊ For color verification, refer to the vinyl roof swatches in the 1978 Salesman's Color and Upholstery Selections Guide.

COPYRIGHT © 1986 — FORD MOTOR COMPANY — DEARBORN, MICHIGAN

1978 COUGAR - BODY TYPE 53 - SIDE w/WIDE MOULDINGS - cont'd.

GROUP NUMBER	PART NAME	DESCRIPTION	PART NUMBER		QTY.
25556-7	Moulding (rear door lower)	Bright with black paint in groove	(RH)♦D7OZ 5325556-A	(LH)♦D7OZ 5325557-A	1
		Bright incl. vinyl insert			
		◊Black	(RH)♦D7OZ 5325556-AA	(LH)♦D7OZ 5325557-AA	1
		◊Blue (dark)	(RH)★D8OZ 5325556-BB Not replaced (4/83)	(LH)★D8OZ 5325557-BB Not replaced (4/83)	1
		◊Blue (medium)	(RH)★D8OZ 5325556-AB Not replaced (4/83)	(LH)♦D8OZ 5325557-AB	1
		◊Brown	(RH)♦D7OZ 5325556-AT	(LH)♦D7OZ 5325557-AT	1
		◊Chamois	(RH)♦D8OZ 5325556-BT	(LH)♦D8OZ 5325557-BT	1
		◊Gray	(RH)♦D8OZ 5325556-AP	(LH)♦D8OZ 5325557-AP	1
		◊Jade	(RH)♦D7OZ 5325556-AR	(LH)♦D7OZ 5325557-AR	1
		◊Russet	(RH)♦D8OZ 5325556-AC	(LH)♦D8OZ 5325557-AC	1
		◊Silver	(RH)♦D7OZ 5325556-AP	(LH)♦D7OZ 5325557-AP	1
		◊White	(RH)♦D7OZ 5325556-AW	(LH)♦D7OZ 5325557-AW	1
29038-9	Moulding (quarter lower rear)	Bright with black paint in groove	(RH)♦D7OZ 6529038-A	(LH)♦D7OZ 6529039-A	1
		Bright incl. vinyl insert			
		◊Black	(RH)♦D7OZ 6529038-AA	(LH)♦D7OZ 6529039-AA	1
		◊Blue (dark)	(RH)♦D8OZ 6529038-BB	(LH)♦D8OZ 6529039-BB	1
		◊Blue (medium)	(RH)♦D8OZ 6529038-AB	(LH)★D8OZ 6529039-AB	1
		◊ Brown	(RH)♦D7OZ 6529038-AT	(LH)♦D7OZ 6529039-AT	1
		◊Chamois	(RH)♦D8OZ 6529038-BT	(LH)♦D8OZ 6529039-BT	1
		◊Gray	(RH)♦D7WY 6529038-AP	(LH)♦D7WY 6529039-AP	1
		◊Jade	(RH)♦D7OZ 6529038-AR	(LH)♦D7OZ 6529039-AR	1
		◊Russet	(RH)♦D8OZ 6529038-AC	(LH)♦D8OZ 6529039-AC	1
		◊Silver	(RH)♦D7OZ 6529038-AP	(LH)♦D7OZ 6529039-AP	1
		◊White	(RH)♦D7OZ 6529038-AW	(LH)♦D7OZ 6529039-AW	1
29076-7	Moulding (quarter lower front)		(RH)♦D7OZ 5329076-A	(LH)♦D7OZ 5329077-A	1
29164-5	Moulding (quarter wheel opening)		(RH)♦D7OZ 6529164-A	(LH)♦D7OZ 6529165-A	1

♦ Includes attaching parts
◊ For color verification, refer to the vinyl roof swatches in the 1978 Salesman's Color and Upholstery Selections Guide.

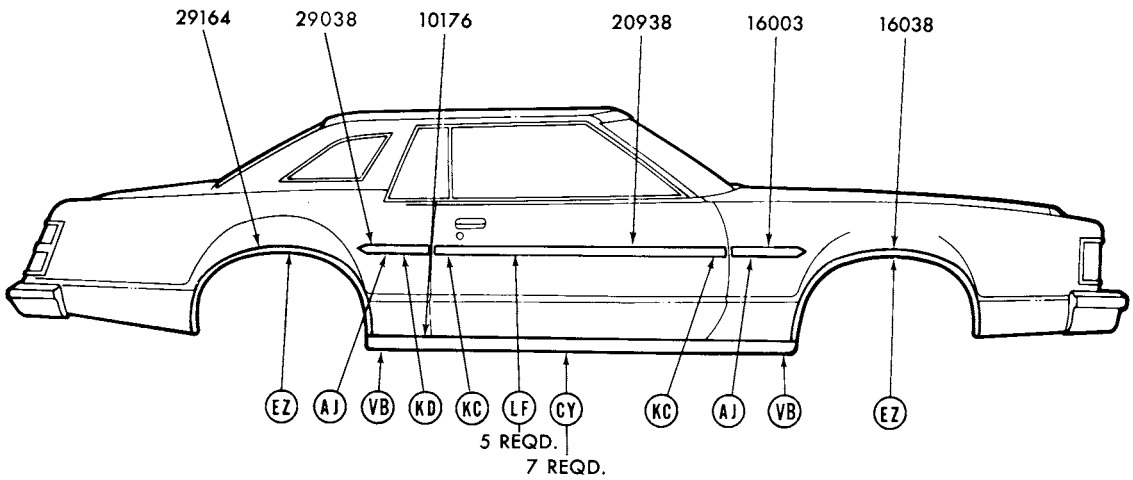

REFER TO EXTERIOR MOULDING SECTION "R" FOR COMPLETE RETAINER INFORMATION

P-13143

1978 COUGAR - BODY TYPE 65 - SIDE - w/NARROW MOULDINGS

GROUP NUMBER	PART NAME	DESCRIPTION	PART NUMBER		QTY.
10176-7	Moulding (body rocker panel)		♦D7OZ 6510176-A	R.H. and L.H.	2
16003-4	Moulding (front fender side)	Bright finish	♦D4GY 16003-A	R.H. and L.H.	2
		Black vinyl insert-adhesive backed-27 1/2" long-cut to fit	♦D5DZ 5425532-D	R.H. and L.H.	2
16038-9	Moulding (front fender wheel opening)		(RH)♦D7WY 16038-B	(LH)♦D7WY 16039-B	1
20938	Moulding (front door)	Bright finish	♦D4GY 6520938-A	R.H. and L.H.	2
		Black vinyl insert-adhesive backed-57" long-cut to fit	D4GZ 16003-A	R.H. and L.H.	AR
29038	Moulding (quarter)	Bright finish	♦D4GY 16003-A	R.H. and L.H.	2
		Black vinyl insert-adhesive backed-27 1/2" long-cut to fit	D5DZ 5425532-D	R.H. and L.H.	AR
29164-5	Moulding (quarter wheel opening)		(RH)♦D7OZ 6529164-B	(LH)♦D7OZ 6529165-B	1

♦ Includes attaching parts

COPYRIGHT © 1986 — FORD MOTOR COMPANY — DEARBORN, MICHIGAN

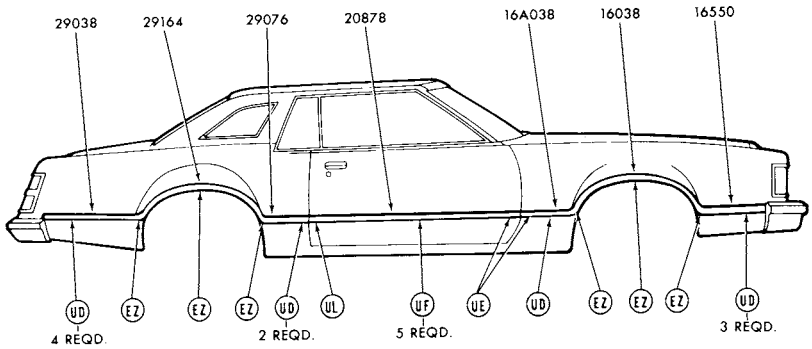

REFER TO EXTERIOR MOULDING SECTION "R" FOR COMPLETE RETAINER INFORMATION P-13148

1978 COUGAR - BODY TYPE 65 - SIDE w/WIDE MOULDINGS

GROUP NUMBER	PART NAME	DESCRIPTION	PART NUMBER		QTY.
16038-9	Moulding (front fender wheel opening)		(RH)♦D7OZ 16038-A	(LH)♦D7OZ 16039-A	1
16A038-9	Moulding (front fender side rear)	Bright with black paint in groove	(RH)♦D7OZ 16A038-A	(LH)♦D7OZ 16A039-A	1
		Bright incl. vinyl insert			
		√Black	(RH)/D7OZ 16A038-AA	(LH)♦D7OZ 16A039-AA	1
		◊Blue (dark)	(RH)♦D8OZ 16A038-BB	(LH)♦D8OZ 16A039-BB	1
		◊Blue (medium)	(RH)♦D8OZ 16A038-AB	(LH)♦D8OZ 16A039-AB	1
		◊Brown	(RH)♦D7OZ 16A038-AT	(LH)♦D7OZ 16A039-AT	1
		√Chamois	(RH)♦D8OZ 16A038-BT	(LH)♦D8OZ 16A039-BT	1
		◊Cream	(RH)♦D7OZ 16A038-AV	(LH)♦D7OZ 16A039-AV	1
		◊Gray	(RH)♦D7SZ 16A038-AP	(LH)♦D7SZ 16A039-AP	1
		√Jade	(RH)♦D7OZ 16A038-AR	(LH)♦D7OZ 16A039-AR	1
		◊Red	(RH)♦D7SZ 16A038-CD	(LH)♦D7SZ 16A039-CD	1
		◊Russet	(RH)♦D8OZ 16A038-AC	(LH)♦D8OZ 16A039-AC	1
		◊Silver	(RH)♦D7OZ 16A038-AP	(LH)♦D7OZ 16A039-AP	1
		√White	(RH)♦D7OZ 16A038-AW	(LH)♦D7OZ 16A039-AW	1
16550-1	Moulding (front fender side front)	Bright with black paint in groove	(RH)♦D7OZ 16550-A	(LH)♦D7OZ 16551-A	1
		Bright incl. vinyl insert			
		√Black	(RH)♦D7OZ 16550-AA	(LH)♦D7OZ 16551-AA	1
		◊Blue (dark)	(RH)♦D8OZ 16550-BB	(LH)♦D8OZ 16551-BB	1
		◊Blue (medium)	(RH)♦D8OZ 16550-AB	(LH)♦D8OZ 16551-AB	1
		◊Brown	(RH)♦D7OZ 16550-AT	(LH)♦D7OZ 16551-AT	1
		√Chamois	(RH)♦D8OZ 16550-BT	(LH)♦D8OZ 16551-BT	1
		√Cream	(RH)♦D7OZ 16550-AV	(LH)♦D7OZ 16551-AV	1
		◊Gray	(RH)♦D7SZ 16550-AP	(LH)♦D7SZ 16551-AP	1
		√Jade	(RH)♦D7OZ 16550-AR	(LH)♦D7OZ 16551-AR	1
		◊Red	(RH)♦D7SZ 16550-CD	(LH)♦D7SZ 16551-CD	1
		√Russet	(RH)♦D8OZ 16550-AC	(LH)♦D8OZ 16551-AC	1
		◊Silver	(RH)♦D7OZ 16550-AP	(LH)♦D7OZ 16551-AP	1
		√White	(RH)♦D7OZ 16550-AW	(LH)♦D7OZ 16551-AW	1

♦ Includes attaching parts

◊ For color verification, refer to the vinyl roof swatches in the 1978 Salesman's Color and Upholstery Selections Guide.

1978 COUGAR - BODY TYPE 65 - SIDE w/WIDE MOULDINGS - cont'd.

GROUP NUMBER	PART NAME	DESCRIPTION	PART NUMBER		QTY.
20878-9	Moulding (front door)	Bright with black paint in groove	(RH)♦D7OZ 6520878-A	(LH)♦D7OZ 6520879-A	1
		Bright incl. vinyl insert			
		◊Black	(RH)♦D7SZ 6520878-AA	(LH)♦D7SZ 6520879-AA	1
		◊Blue (dark)	(RH)♦D8OZ 6520878-BB	(LH)♦D8OZ 6520879-BB	1
		◊Blue (medium)	(RH)♦D8OZ 6520878-AB	(LH)♦D8OZ 6520879-AB	1
		◊Brown	(RH)♦D7SZ 6520878-AT	(LH)♦D7SZ 6520879-AT	1
		◊Chamois	(RH)♦D8OZ 6520878-BT	(LH)♦D8OZ 6520879-BT	1
		◊Cream	(RH)♦D7SZ 6520878-AV	(LH)♦D7SZ 6520879-AV	1
		◊Gray	(RH)♦D7SZ 6520878-BP	(LH)♦D7SZ 6520879-BP	1
		◊Jade	(RH)♦D7SZ 6520878-AR	(LH)♦D7SZ 6520879-AR	1
		◊Red	(RH)♦D7SZ 6520878-CD	(LH)♦D7SZ 6520879-CD	1
		◊Russet	(RH)♦D8OZ 6520878-AC	(LH)♦D8OZ 6520879-AC	1
		◊Silver	(RH)♦D7SZ 6520878-AP	(LH)♦D7SZ 6520879-AP	1
		◊White	(RH)♦D7SZ 6520878-AW	(LH)♦D7SZ 6520879-AW	1
29038-9	Moulding (quarter panel rear)	Bright with black paint in groove	(RH)♦D7OZ 6529038-A	(LH ♦D7OZ 6529039-A	1
		Bright incl. vinyl insert			
		◊Black	(RH)♦D7OZ 6529038-AA	(LH)♦D7OZ 6529039-AA	1
		◊Blue (dark)	(RH)♦D8OZ 6529038-BB	(LH)♦D8OZ 6529039-BB	1
		◊Blue (medium)	(RH)♦D8OZ 6529038-AB	(LH)★D8OZ 6529039-AB	1
		◊Brown	(RH)♦D7OZ 6529038-AT	(LH)♦D7OZ 6529039-AT	1
		◊Chamois	(RH)♦D8OZ 6529038-BT	(LH)♦D8OZ 6529039-BT	1
		◊Cream	(RH)♦D7OZ 6529038-AV	(LH)♦D7OZ 6529039-AV	1
		◊Gray	(RH)♦D7WY 6529038-AP	(LH)♦D7WY 6529039-AP	1
		◊Jade	(RH)♦D7OZ 6529038-AR	(LH)♦D7OZ 6529039-AR	1
		◊Red	(RH)♦D7WY 6529038-BD	(LH)♦D7WY 6529039-BD	1
		◊Russet	(RH)♦D8OZ 6529038-AC	(LH)♦D8OZ 6529039-AC	1
		◊Silver	(RH)♦D7OZ 6529038-AP	(LH)♦D7OZ 6529039-AP	1
		◊White	(RH)♦D7OZ 6529038-AW	(LH)♦D7OZ 6529039-AW	1
29076-7	Moulding (quarter panel front)	Bright with black paint in groove	(RH)♦D7OZ 6529076-A	(LH)♦D7OZ 6529077-A	1
		Bright incl. vinyl insert			
		◊Black	(RH)♦D7SZ 6029076-AA	(LH)♦D7SZ 6029077-AA	1
		◊Blue (dark)	(RH)♦D8SZ 6029076-BB	(LH)♦D8SZ 6029077-BB	1
		◊Blue (medium)	(RH)♦D8SZ 6029076-AB	(LH)♦D8SZ 6029077-AB	1
		◊Brown	(RH)♦D7SZ 6029076-AT	(LH)♦D7SZ 6029077-AT	1
		◊Chamois	(RH)♦D8SZ 6029076-BT	(LH)♦D8SZ 6029077-BT	1
		◊Cream	(RH)♦D7SZ 6029076-AV	(LH)♦D7SZ 6029077-AV	1
		◊Gray	(RH)♦D7SZ 6029076-BP	(LH)♦D7SZ 6029077-BP	1
		◊Jade	(RH)♦D7SZ 6029076-AR	(LH)♦D7SZ 6029077-AR	1
		◊Red	(RH)♦D7SZ 6029076-CD	(LH)♦D7SZ 6029077-CD	1
		◊Russet	(RH)♦D8SZ 6029076-AC	(LH)♦D8SZ 6029077-AC	1
		◊Silver	(RH)♦D7SZ 6029076-AP	(LH)♦D7SZ 6029077-AP	1
		◊White	(RH)♦D7SZ 6029076-AW	(LH)♦D7SZ 6029077-AW	1
29164-5	Moulding (quarter wheel opening)		(RH)♦D7OZ 6529164-A	(LH)♦D7OZ 6529165-A	1

♦ Includes attaching parts
◊ For color verification, refer to the vinyl roof swatches in the 1978 Salesman's Color and Upholstery Selections Guide.

COPYRIGHT © 1986 — FORD MOTOR COMPANY — DEARBORN, MICHIGAN

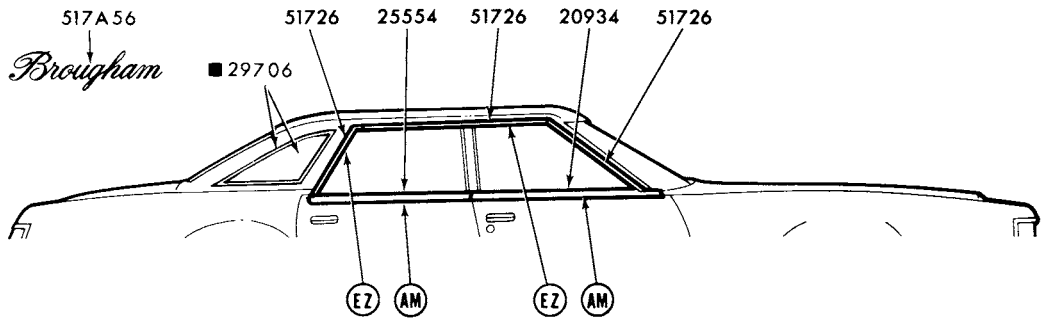

REFER TO EXTERIOR MOULDING SECTION "R" FOR COMPLETE RETAINER INFORMATION
■ REFER TO GROUP IN TEXT SECTION

P-13141

1978 COUGAR - BODY TYPE 53 - DOOR BELT, DRIP RAIL

GROUP NUMBER	PART NAME	DESCRIPTION	PART NUMBER		QTY.
20934-5	Moulding (front door belt)		(RH)♦D7OZ 5320934-A	(LH)♦D7OZ 5320935-A	1
25554-5	Moulding (rear door belt)		(RH)♦D7OZ 5325554-A	(LH)♦D7OZ 5325555-A	1
51726-7	Moulding (roof drip rail finish)	Front	(RH)♦D7OZ 5351726-A	(LH)♦D7OZ 5351727-A	1
		Rear	(RH)♦D7OZ 5351726-B	(LH)♦D7OZ 5351727-B	1
517A56	Ornament (roof side)	"Brougham"	D7OZ 53517A56-A	R.H. and L.H.	2

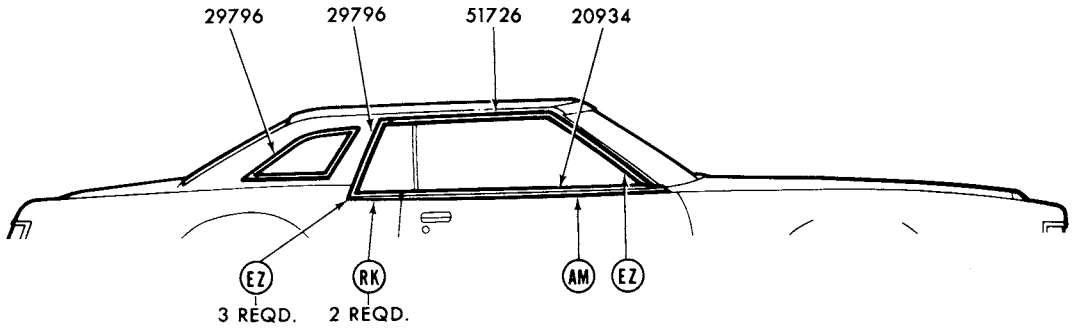

REFER TO EXTERIOR MOULDING SECTION "R" FOR COMPLETE RETAINER INFORMATION

P-13142

1978 COUGAR - BODY TYPE 65 - DOOR BELT, ROOF DRIP and QUARTER WINDOW

GROUP NUMBER	PART NAME	DESCRIPTION	PART NUMBER		QTY.
20934-5	Moulding (front door belt)	Body type 65	(RH)♦D7SZ 6020934-A	(LH)♦D7SZ 6020935-A	1
29796-7	Moulding (front quarter window)	Body type 65D	(RH)♦D7OZ 6529796-A	(LH)♦D7OZ 6529797-A	1
		Body type 65L	(RH)♦D7WY 6529796-A	(LH)♦D7WY 6529797-A	1
29796-7	Moulding (rear quarter window)	Body type 65D	(RH)♦D7OZ 6529796-C	(LH)♦D7OZ 6529797-C	1
		Body type 65L	Serviced in assy.-refer to Group 29706 in Text		
51726-7	Moulding (roof drip rail finish)	Body type 65D	(RH)♦D7OZ 6551726-A	(LH)♦D7OZ 6551727-A	1
		Body type 65L	(RH)♦D7WY 6551726-A	(LH)♦D7WY 6551727-A	1

♦ Includes attaching parts

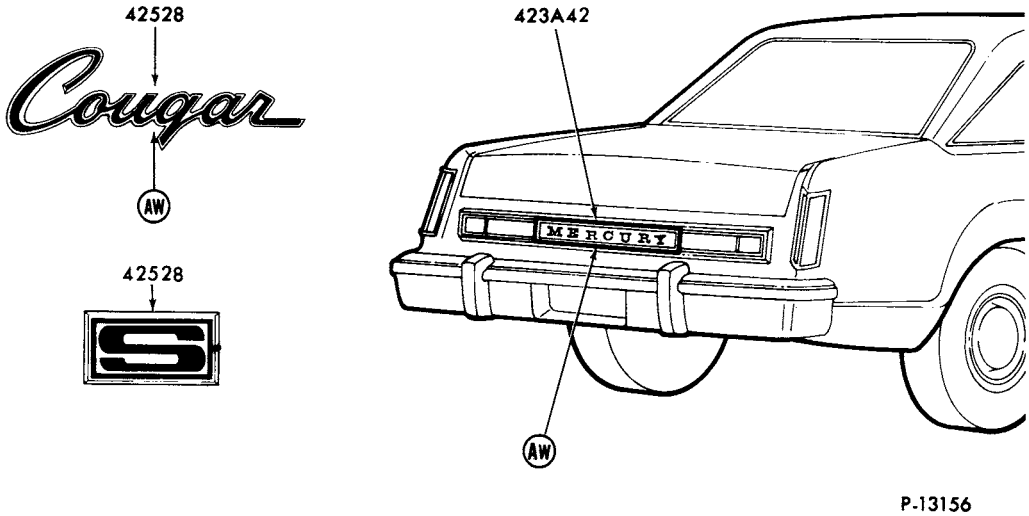

REFER TO EXTERIOR MOULDING SECTION "R" FOR COMPLETE RETAINER INFORMATION

1978 COUGAR - BODY TYPES 53 and 65D - BACK END

GROUP NUMBER	PART NAME	DESCRIPTION	PART NUMBER	QTY.
423A42	Panel (lower back finish)	Incl. "Mercury"	♦D7WY 65423A42-A	1
42528	Plate (name)	"Cougar"	♦D7WY 6542528-A	1
		"S"-adhesive backed	@D7OZ 6542528-B	1

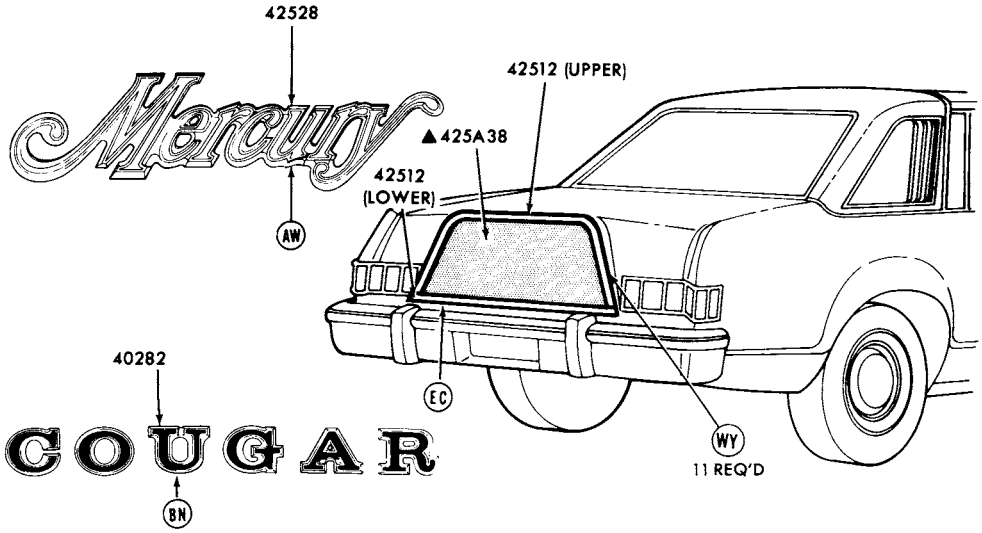

REFER TO EXTERIOR MOULDING SECTION 'R' FOR COMPLETE RETAINER INFORMATION
▲REFER TO GROUP IN SOFT TRIM SECTION

P-14249

1978 COUGAR - BODY TYPE 65L - BACK END

♦ Includes attaching parts @ Canada only

COPYRIGHT © 1986 — FORD MOTOR COMPANY — DEARBORN, MICHIGAN

1978 COUGAR - BODY TYPE 65L - BACK END - cont'd.

GROUP NUMBER	PART NAME	DESCRIPTION	PART NUMBER	QTY.
40262	Letter (name)	"C"	♦D7WY 6540282-A	1
		"O"	♦D7WY 6540282-B	1
		"U"	♦D7WY 6540282-C	1
		"G"	♦D7WY 6540282-D	1
		"A"	♦D7WY 6540282-E	1
		"R"	♦D7WY 6540282-F	1
42512	Moulding (luggage compartment door)	Lower	♦D7WY 6542512-A	1
		Upper (Macho only)	♦D8WY 6542512-A	1
42528	Plate (name)	"Mercury"	♦D54Y 6642528-A	1

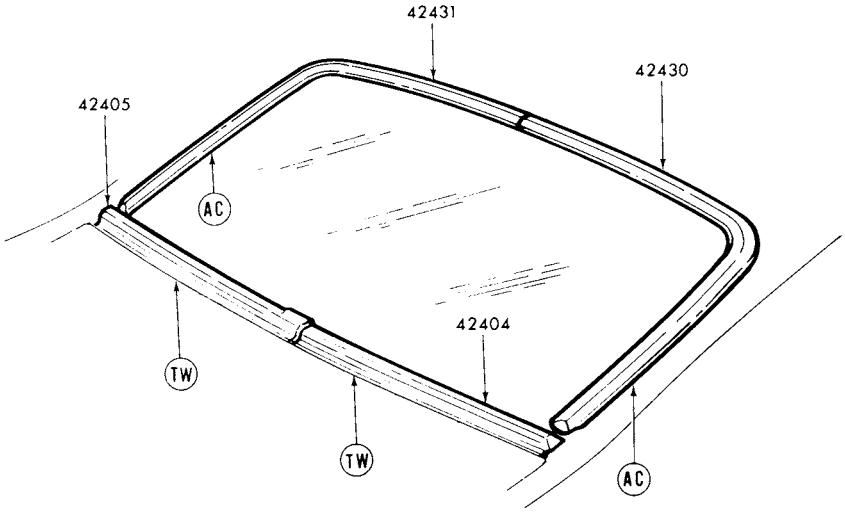

REFER TO EXTERIOR MOULDING SECTION "R" FOR COMPLETE RETAINER INFORMATION P-13039

1978 COUGAR - BODY TYPES 53 and 65 - BACK WINDOW

GROUP NUMBER	PART NAME	DESCRIPTION	PART NUMBER	QTY.
42404-5	Moulding (back window lower)	Bright-paint to match	(RH)♦D7OZ 6542404-A (LH)♦D7OZ 6542405-A	1
42430-1	Moulding (back window upper)	Bright-paint to match	(RH)♦D7OZ 6542430-A (LH)♦D7OZ 6542431-A	1

♦ Includes attaching parts

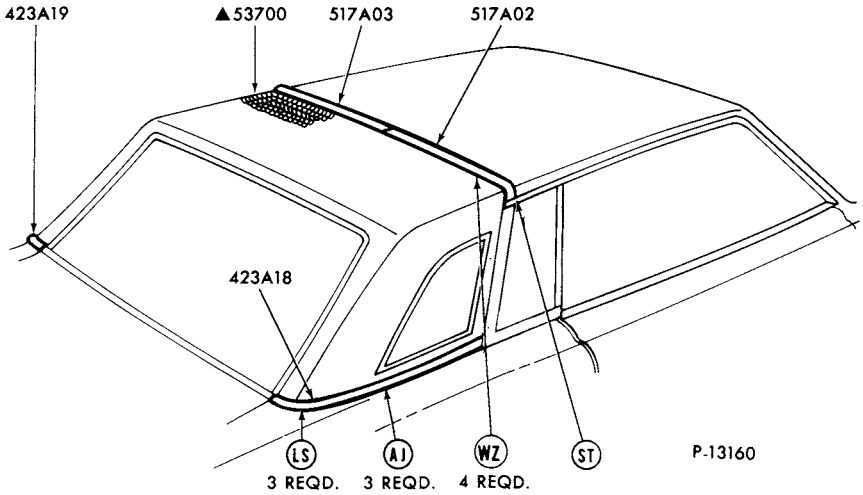

▲ REFER TO SOFT TRIM SECTION
REFER TO EXTERIOR MOULDING SECTION "R" FOR COMPLETE RETAINER INFORMATION

1978 COUGAR - BODY TYPES 53 and 65D - ROOF and BACK BELT

GROUP NUMBER	PART NAME	DESCRIPTION	PART NUMBER		QTY
423A18-9	Moulding (back belt side)	Body type 53-paint to match	(RH)♦D7OZ 53423A18-A	(LH)♦D7OZ 53423A19-A	1
		Body type 65D-paint to match	(RH)♦D7OZ 65423A18-A	(LH)♦D7OZ 65423A19-A	1
517A02-3	Moulding (roof top rear)	Body type 65D-bright	(RH)♦D7OZ 65517A02-A	(LH)♦D7OZ 65517A03-A	1

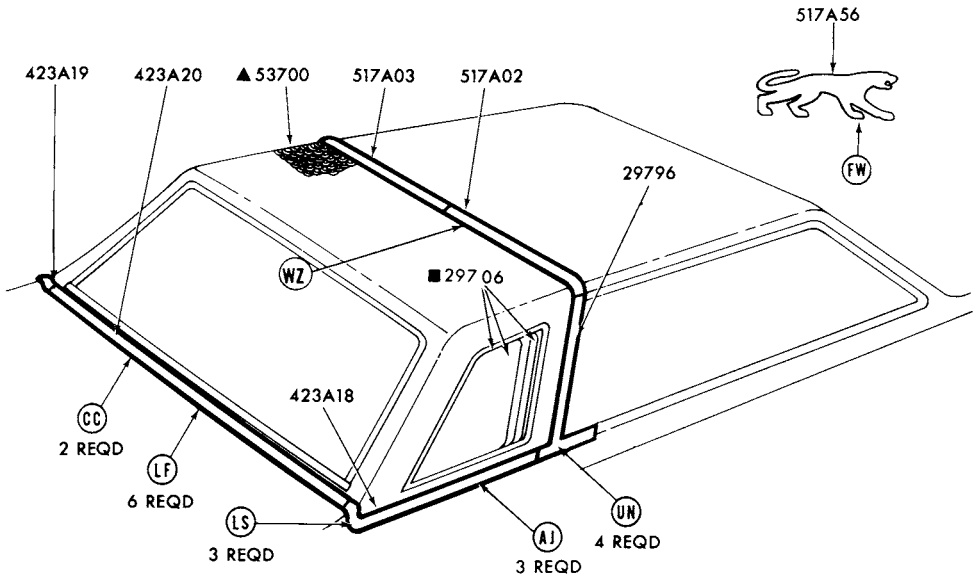

REFER TO EXTERIOR MOULDING SECTION "R" FOR COMPLETE RETAINER INFORMATION
▲ REFER TO GROUP IN SOFT TRIM SECTION
■ REFER TO GROUP IN TEXT SECTION

P-13162

1978 COUGAR - BODY TYPE 65L (w/o CENTER PANEL) - ROOF and BACK BELT

♦ Includes attaching parts

COPYRIGHT © 1986 — FORD MOTOR COMPANY — DEARBORN, MICHIGAN

1978 COUGAR - BODY TYPE 65L - ROOF and BACK BELT - cont'd.

GROUP NUMBER	PART NAME	DESCRIPTION	PART NUMBER		QTY.
29796-7	Moulding (front quarter window)		(RH)♦D7WY 6529796-A	(LH)♦D7WY 6529797-A	1
423A18-9	Moulding (back belt side)		(RH)♦D7WY 65423A18-A	(LH)♦D7WY 65423A19-A	1
423A20	Moulding (back belt)		♦D7WY 65423A20-A		1
517A02-3	Moulding (roof side)		(RH)♦D7WY 65517A02-A	(LH)♦D7WY 65517A03-A	1
517A56-7	Plate (roof side name)		(RH)♦D7WY 65517A56-A	(LH)♦D7WY 65517A57-A	1

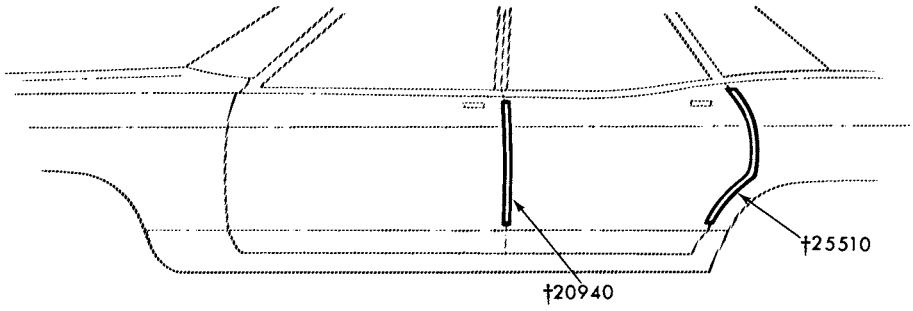

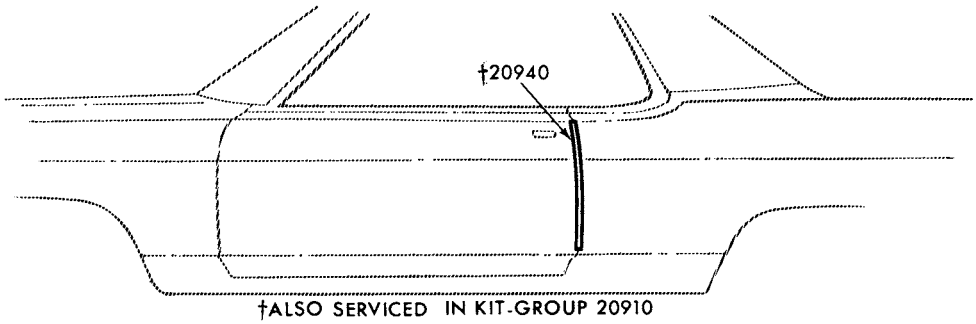

†ALSO SERVICED IN KIT-GROUP 20910

P-10061

1978 COUGAR - DOOR EDGE GUARD

GROUP NUMBER	PART NAME	DESCRIPTION	PART NUMBER		QTY.
20910	Moulding kit (door edge guard)	Body type 53	D7OZ 5320910-A		1
		Body type 65	D7OZ 6520910-A		1
20940-1	Moulding (front door edge guard)	Body type 53	(RH) D2GY 5320940-A	(LH) D2GY 5320941-A	1
		Body type 65	(RH) D7OZ 6520940-A	(LH) D7OZ 6520941-A	1
25510-1	Moulding (rear door edge guard)	Body type 53	(RH) D7OZ 5325510-A	(LH) D7OZ 5325511-A	1

♦ Includes attaching parts

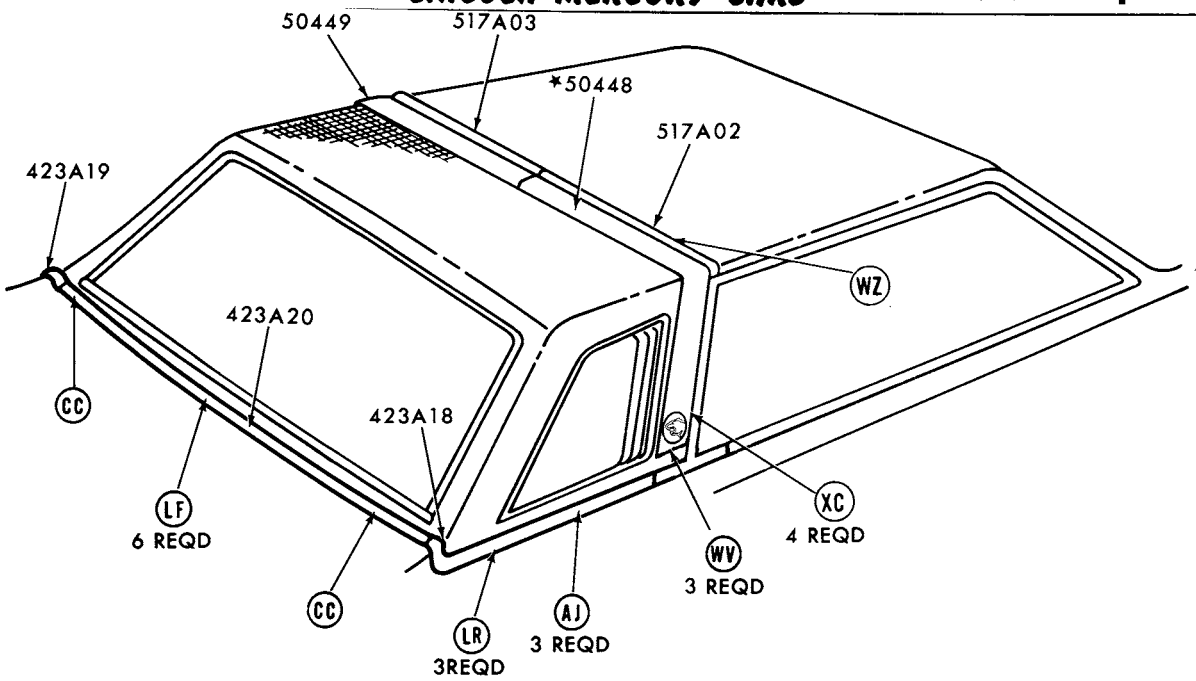

REFER TO EXTERIOR MOULDING SECTION 'R' FOR COMPLETE RETAINER INFORMATION

P-14307

1978 COUGAR - BODY TYPE 65L (w/CENTER PANEL) - ROOF and BACK BELT

GROUP NUMBER	PART NAME	DESCRIPTION	PART NUMBER		QTY.
423A18-9	Mou'ding (back belt side)		(RH)♦D7WY 65423A18-A	(LH)♦D7WY 65423A19-A	1
423A20	Moulding (back belt)		♦D7WY 65423A20-A		1
50448-9	Panel (roof outside center)	◊Dark blue	(RH)*D8WY 6550448-AB Not replaced (4/83)	(LH)*D8WY 6550449-AB Not replaced (4/83)	1
		◊Chamois	(RH)♦D8WY 6550448-BT	(LH)♦D8WY 6550449-BT	1
517A02-3	Moulding (roof side)		(RH)♦D7WY 65517A02-A	(LH)♦D7WY 65517A03-A	1

◊ For color verification, refer to the vinyl roof swatches in the 1978 Salesman's Color and Upholstery Selection Guide.
♦ Includes attaching parts

COPYRIGHT © 1986 — FORD MOTOR COMPANY — DEARBORN, MICHIGAN

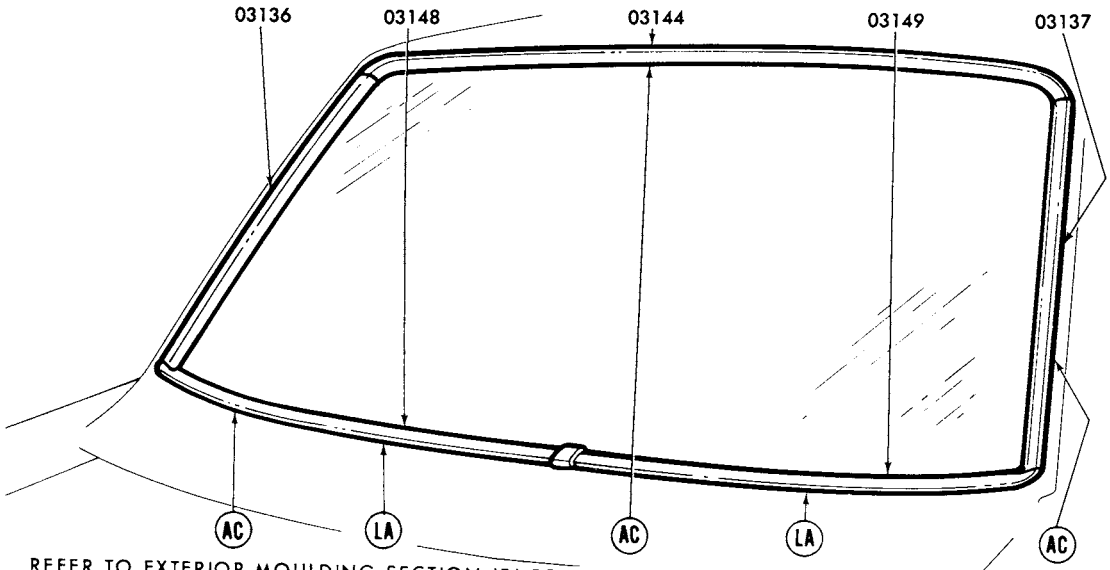

REFER TO EXTERIOR MOULDING SECTION 'R' FOR COMPLETE RETAINER INFORMATION

P-12526

1978 MONARCH - WINDSHIELD

GROUP NUMBER	PART NAME	DESCRIPTION	PART NUMBER		QTY.
03136-7	Moulding (windshield side)	Bright	(RH)♦D5DZ 6603136-A	(LH)♦D5DZ 6603137-A	1
03144	Moulding (windshield top)	Bright	♦D5DZ 6603144-A		1
03148-9	Moulding (windshield belt)	Bright	(RH)♦D5DZ 6603148-A	(LH)♦D5DZ 6603149-A	1

♦ Includes attaching parts

COPYRIGHT © 1986 — FORD MOTOR COMPANY — DEARBORN, MICHIGAN

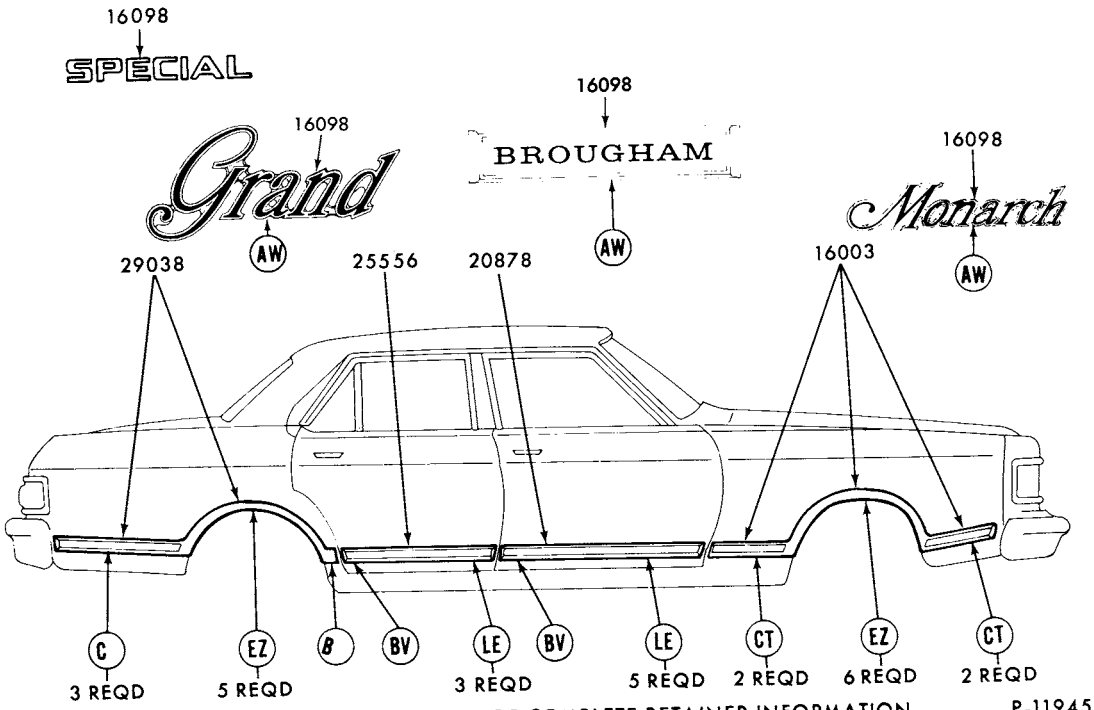

REFER TO EXTERIOR MOULDING SECTION "R" FOR COMPLETE RETAINER INFORMATION

P-11945

1978 MONARCH - BODY TYPE 54 - SIDE - w/LUXURY DECOR

GROUP NUMBER	PART NAME	DESCRIPTION	PART NUMBER		QTY.
16003-4	Moulding (front fender side)	Incl. vinyl insert			
		◊Black	(RH)♦D5DZ 16003-CA	(LH)♦D5DZ 16004-CA	1
		◊Blue (medium)	(RH)♦D8DZ 16003-DB	(LH)♦D8DZ 16004-DB	1
		◊Blue (dark)	(RH)♦D8DZ 16003-CB	(LH)♦D8DZ 16004-CB	1
		◊Camel	(RH)♦D8DZ 16003-CV	(LH)♦D8DZ 16004-CV	1
		◊Cordovan	(RH)♦D8DZ 16003-CF	(LH)♦D8DZ 16004-CF	1
		◊Gray	(RH)♦D6DZ 16003-AP	(LH)♦D6DZ 16004-AP	1
		◊Jade	(RH)♦D6DZ 16003-AR	(LH)♦D6DZ 16004-AR	1
		◊Red	(RH)♦D5DZ 16003-CD	(LH)♦D5DZ 16004-CD	1
		◊Silver	(RH)♦D5DZ 16003-CP	(LH)♦D5DZ 16004-CP	1
		◊White	(RH)♦D7DZ 16003-AW	(LH)♦D7DZ 16004-AW	1
16098	Plate (name)	"Brougham"	Not used in 1978		
		"Ghia"	D8DZ 16098-A	R.H. and L.H.	2
		"Grand"	Not used in 1978		
		"Monarch"	♦D54Y 16098-B	R.H. and L.H.	2
		"ESS"	D8DZ 16098-B	R.H. and L.H.	2
16098	Transfer (front fender name)	"SPECIAL"	Not used in 1978		
		"SPECIAL EDITION"	@D7DZ 16098-B	R.H. and L.H.	2
20878-9	Moulding (front door)	Incl. vinyl insert			
		◊Black	(RH)♦D5DZ 5420878-CA	(LH)♦D5DZ 5420879-CA	1
		◊Blue (medium)	(RH)♦D8DZ 5420878-DB	(LH)♦D8DZ 5420879-DB	1
		◊Blue (dark)	(RH)♦D8DZ 5420878-CB	(LH)♦D8DZ 5420879-CB	1
		◊Camel	(RH)♦D8DZ 5420878-CV	(LH)♦D8DZ 5420879-CV	1
		◊Cordovan	(RH)♦D8DZ 5420878-CF	(LH)♦D8DZ 5420879-CF	1
		◊Gray	(RH)♦D6DZ 5420878-AP	(LH)♦D6DZ 5420879-AP	1
		◊Jade	(RH)♦D6DZ 5420878-AR	(LH)♦D6DZ 5420879-AR	1
		◊Red	(RH)♦D5DZ 5420878-CD	(LH)♦D5DZ 5420879-CD	1
		◊Silver	(RH)♦D5DZ 5420878-DP	(LH)♦D5DZ 5420879-DP	1
		◊White	(RH)♦D7DZ 5420878-AW	(LH)♦D7DZ 5420879-AW	1

♦ Includes attaching parts

@ Canada only

◊ For color verification, refer to the vinyl roof swatches in the 1978 Salesman's Color and Upholstery selections Guide.

1978 MONARCH - BODY TYPE 54 - SIDE - w/LUXURY DECOR - cont'd.

GROUP NUMBER	PART NAME	DESCRIPTION	PART NUMBER		QTY.
25556-7	Moulding (rear door)	Incl. vinyl insert			
		◊Black	(RH)♦D5DZ 5425556-CA	(LH)♦D5DZ 5425557-CA	1
		◊Blue (medium)	(RH)♦D8DZ 5425556-DB	(LH)♦D8DZ 5425557-DB	1
		◊Blue (dark)	(RH)♦D8DZ 5425556-CB	(LH)♦D8DZ 5425557-CB	1
		◊Camel	(RH)♦D8DZ 5425556-CV	(LH)♦D8DZ 5425557-CV	1
		◊Cordovan	(RH)♦D8DZ 5425556-CF	(LH)♦D8DZ 5425557-CF	1
		◊Gray	(RH)♦D6DZ 5425556-AP	(LH)♦D6DZ 5425557-AP	1
		◊Jade	(RH)♦D6DZ 5425556-AR	(LH)♦D6DZ 5425557-AR	1
		◊Red	(RH)♦D5DZ 5425556-CD	(LH)♦D5DZ 5425557-CD	1
		◊Silver	(RH)♦D5DZ 5425556-CP	(LH)♦D5DZ 5425557-CP	1
		◊White	(RH)♦D7DZ 5425556-AW	(LH)♦D7DZ 5425557-AW	1
29038-9	Moulding (quarter)	Incl. vinyl insert			
		◊Black	(RH)♦D5DZ 5429038-CA	(LH)♦D5DZ 5429039-CA	1
		◊Blue (medium	(RH)♦D8DZ 5429038-DB	(LH)♦D8DZ 5429039-DB	1
		◊Blue (dark)	(RH)♦D8DZ 5429038-CB	(LH)♦D8DZ 5429039-CB	1
		◊Camel	(RH)♦D8DZ 5429038-CV	(LH)♦D8DZ 5429039-CV	1
		◊Cordovan	(RH)♦D8DZ 5429038-CF	(LH)♦D8DZ 5429039-CF	1
		◊Gray	(RH)♦D6DZ 5429038-AP	(LH)♦D6DZ 5429039-AP	1
		◊Jade	(RH)♦D6DZ 5429038-AR	(LH)♦D6DZ 5429039-AR	1
		◊Red	(RH)♦D5DZ 5429038-CD	(LH)♦D5DZ 5429039-CD	1
		◊Silver	(RH)♦D5DZ 5429038-CP	(LH)♦D5DZ 5429039-CP	1
		◊White	(RH)♦D7DZ 5429038-AW	(LH)♦D7DZ 5429039-AW	1

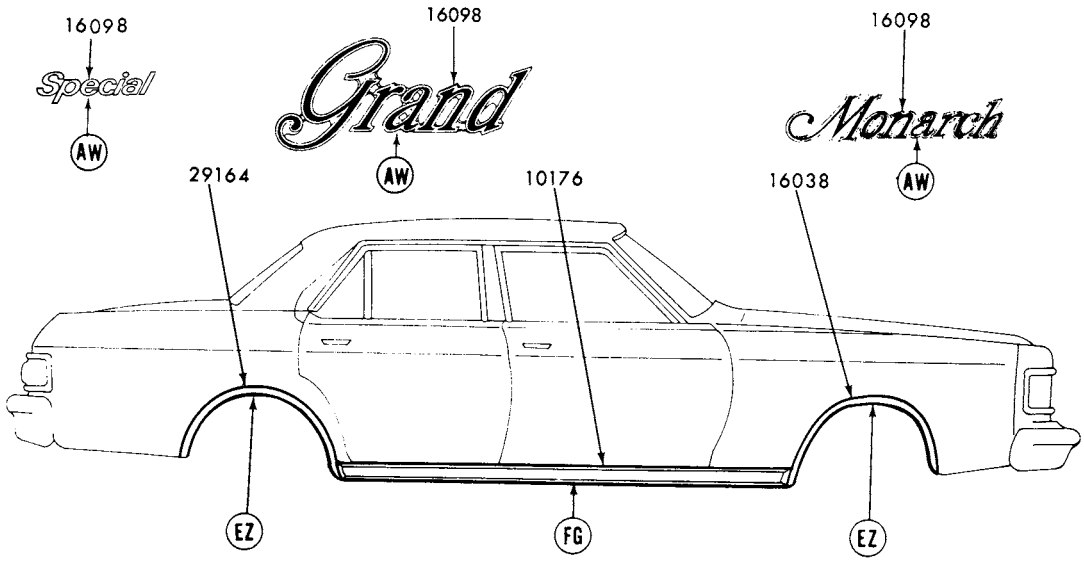

REFER TO EXTERIOR MOULDING SECTION "R" FOR COMPLETE RETAINER INFORMATION P-11946

1978 MONARCH - SIDE

♦ Includes attaching parts

COPYRIGHT © 1986 — FORD MOTOR COMPANY — DEARBORN, MICHIGAN

1978 MONARCH - SIDE - cont'd.

GROUP NUMBER	PART NAME	DESCRIPTION	PART NUMBER		QTY.
10176-7	Moulding (body rocker panel)	Use w/ 5/8" wide wheel opening mouldings - 78 3/4" long	♦D54Y 6610176-A	R.H. and L.H.	2
		Use w/ 1 3/4" wide wheel opening mouldings - 78 3/4" long	D8DZ 6610176-A	R.H. and L.H.	2
		W/o wheel opening mouldings - 78 3/4" long	(RH)♦D6DZ 6610176-A	(LH)♦D6DZ 6610177-A	1
16038-9	Moulding (front fender wheel opening)	5/8" wide	(RH)♦D5DZ 16038-A	(LH)♦D5DZ 16039-A	1
		1 3/4" wide	(RH)♦D8DZ 16038-A	(LH)♦D8DZ 16039-A	1
16098	Plate (name)	"Ghia"	D8DZ 16098-A	R.H. and L.H.	2
		"Grand"	Not used in 1978		
		"Monarch"	♦D54Y 16098-B	R.H. and L.H.	2
16098	Transfer (front fender name)	"SPECIAL EDITION"	D7DZ 16098-B	R.H. and L.H.	2
29164-5	Moulding (quarter wheel opening)	5/8" wide	(RH)♦D5DZ 6629164-A	(LH)♦D5DZ 6629165-A	1
		1 3/4" wide	(RH)♦D8DZ 6629164-A	(LH)♦D8DZ 6629165-A	1

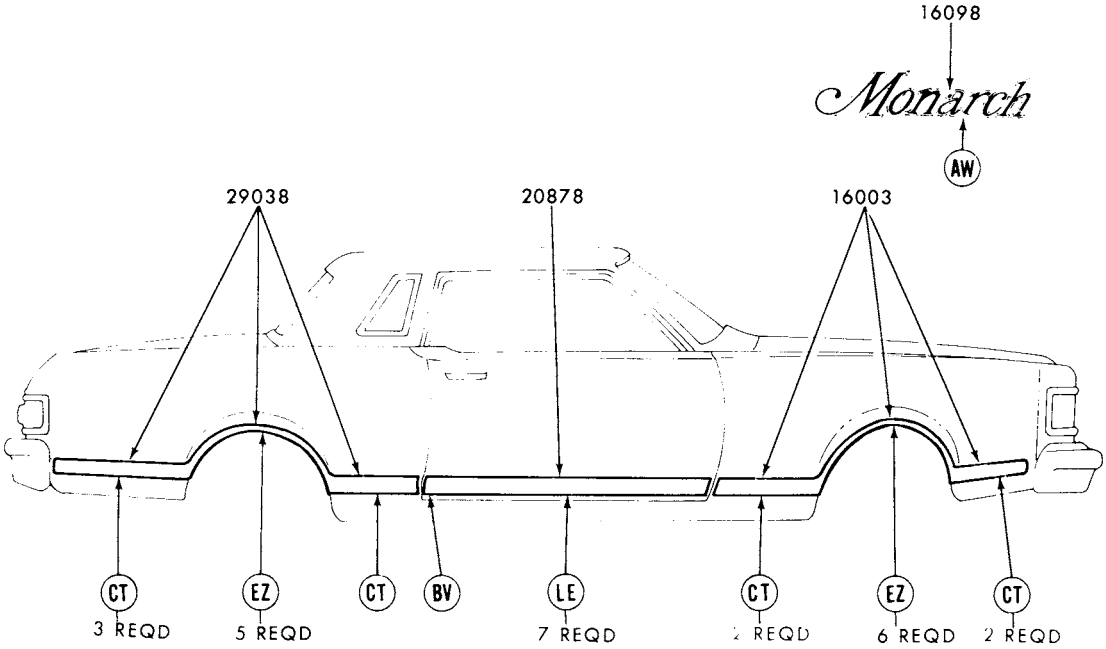

REFER TO EXTERIOR MOULDING SECTION "R" FOR COMPLETE RETAINER INFORMATION P-11944

1978 MONARCH - BODY TYPE 66 - SIDE - w/LUXURY DECOR

♦ Includes attaching parts

1978 MONARCH - BODY TYPE 66 - SIDE - w/LUXURY DECOR - cont'd.

GROUP NUMBER	PART NAME	DESCRIPTION	PART NUMBER		QTY.
16003-4	Moulding (front fender side)	Incl. vinyl insert			
		◊Black	(RH)♦D5DZ 16003-CA	(LH)♦D5DZ 16004-CA	1
		◊Blue (medium)	(RH)♦D8DZ 16003-DB	(LH)✶D8DZ 16004-DB	1
		◊Blue (dark)	(RH)♦D8DZ 16003-CB	(LH)♦D8DZ 16004-CB	1
		◊Camel	(RH)♦D8DZ 16003-CV	(LH)♦D8DZ 16004-CV	1
		◊Cordovan	(RH)♦D8DZ 16003-CF	(LH)♦D8DZ 16004-CF	1
		◊Gray	(RH)♦D6DZ 16003-AP	(LH)♦D6DZ 16004-AP	1
		◊Jade	(RH)♦D6DZ 16003-AR	(LH)♦D6DZ 16004-AR	1
		◊Red	(RH)♦D5DZ 16003-CD	(LH)♦D5DZ 16004-CD	1
		◊Silver	(RH)♦D5DZ 16003-CP	(LH)♦D5DZ 16004-CP	1
		◊White	(RH)♦D7DZ 16003-AW	(LH)♦D7DZ 16004-AW	1
16098	Plate (name)	"Monarch"	♦D54Y 16098-B	R.H. and L.H.	2
20878-9	Moulding (front door)	Incl. vinyl insert			
		◊Black	(RH)♦D5DZ 6620878-AA	(LH)♦D5DZ 6620879-AA	1
		◊Blue (medium)	(RH)♦D8DZ 6620878-DB	(LH)♦D8DZ 6620879-DB	1
		◊Blue (dark)	(RH)♦D8DZ 6620878-CB	(LH)♦D8DZ 6620879-CB	1
		◊Camel	(RH)♦D8DZ 6620878-CV	(LH)♦D8DZ 6620879-CV	1
		◊Cordovan	(RH)♦D8DZ 6620878-CF	(LH)♦D8DZ 6620879-CF	1
		◊Gray	(RH)♦D6DZ 6620878-AP	(LH)♦D6DZ 6620879-AP	1
		◊Jade	(RH)♦D6DZ 6620878-AR	(LH)♦D6DZ 6620879-AR	1
		◊Red	(RH)♦D5DZ 6620878-AD	(LH)♦D5DZ 6620879-AD	1
		◊Silver	(RH)♦D5DZ 6620878-AP	(LH)♦D5DZ 6620879-AP	1
		◊White	(RH)♦D7DZ 6620878-AW	(LH)♦D7DZ 6620879-AW	1
29038-9	Moulding (quarter)	Incl. vinyl insert			
		◊Black	(RH)♦D5DZ 6629038-CA	(LH)♦D5DZ 6629039-CA	1
		◊Blue (medium)	(RH)♦D8DZ 6629038-DB	(LH)♦D8DZ 6629039-DB	1
		◊Blue (dark)	(RH)♦D8DZ 6629038-CB	(LH)♦D8DZ 6629039-CB	1
		◊Camel	(RH)♦D8DZ 6629038-CV	(LH)♦D8DZ 6629039-CV	1
		◊Cordovan	(RH)♦D8DZ 6629038-CF	(LH)♦D8DZ 6629039-CF	1
		◊Gray	(RH)♦D6DZ 6629038-AP	(LH)♦D6DZ 6629039-AP	1
		◊Jade	(RH)♦D6DZ 6629038-AR	(LH)♦D6DZ 6629039-AR	1
		◊Red	(RH)♦D5DZ 6629038-CD	(LH)♦D5DZ 6629039-CD	1
		◊Silver	(RH)♦D5DZ 6629038-CP	(LH)♦D5DZ 6629039-CP	1
		◊White	(RH)♦D7DZ 6629038-AW	(LH)♦D7DZ 6629039-AW	1

♦ Includes attaching parts

◊ For color verification, refer to the vinyl roof swatches in the 1978 Salesman's Color and Upholstery Selections Guide.

COPYRIGHT © 1986 — FORD MOTOR COMPANY — DEARBORN, MICHIGAN

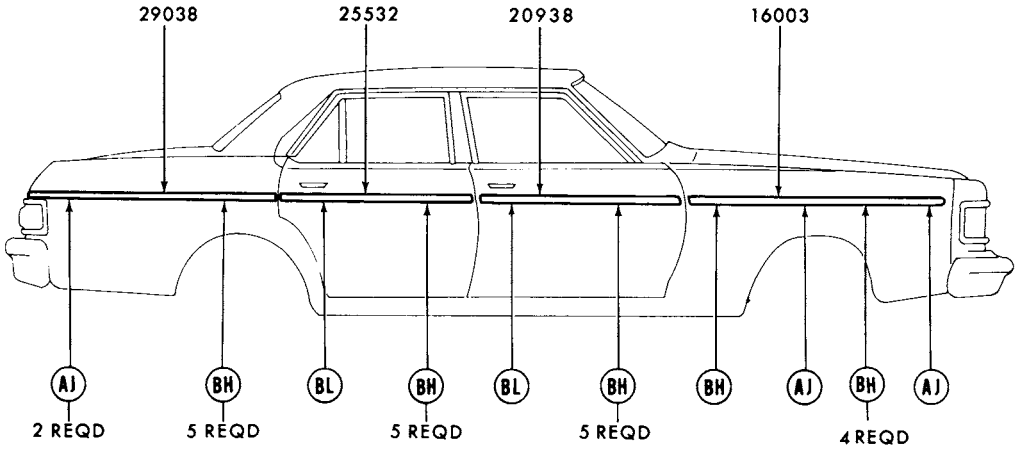

REFER TO EXTERIOR MOULDING SECTION "R" FOR COMPLETE RETAINER INFORMATION P-11948

1978 MONARCH - BODY TYPE 54 - SIDE PROTECTION

GROUP NUMBER	PART NAME	DESCRIPTION	PART NUMBER		QTY.
16003-4	Moulding (front fender side)	Bright finish	(RH)♦D5DZ 16003-A	(LH)♦D5DZ 16004-A	1
20938-9	Moulding (front door)	Bright finish	(RH)♦D5DZ 5420938-A	(LH)♦D5DZ 5420939-A	1
25532-3	Moulding (rear door)	Bright finish	(RH)♦D5DZ 5425532-A	(LH)♦D5DZ 5425533-A	1
29038-9	Moulding (quarter)	Bright finish	(RH)♦D5DZ 5429038-A	(LH)♦D5DZ 5429039-A	1

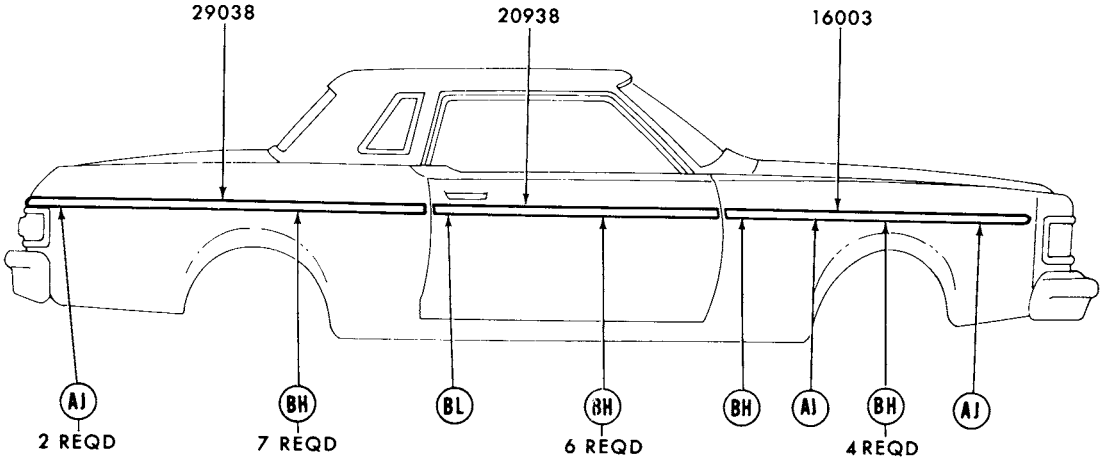

REFER TO EXTERIOR MOULDING SECTION "R" FOR COMPLETE RETAINER INFORMATION P-11941

1978 MONARCH - BODY TYPE 66 - SIDE PROTECTION

GROUP NUMBER	PART NAME	DESCRIPTION	PART NUMBER		QTY.
16003-4	Moulding (front fender side)	Bright finish	(RH)♦D5DZ 16003-A	(LH)♦D5DZ 16004-A	1
20938-9	Moulding (front door outside)	Bright finish	(RH)♦D5DZ 6620938-A	(LH)♦D5DZ 6620939-A	1
29038-9	Moulding (quarter)	Bright finish	(RH)♦D5DZ 6629038-A	(LH)♦D5DZ 6629039-A	1

♦ Includes attaching parts

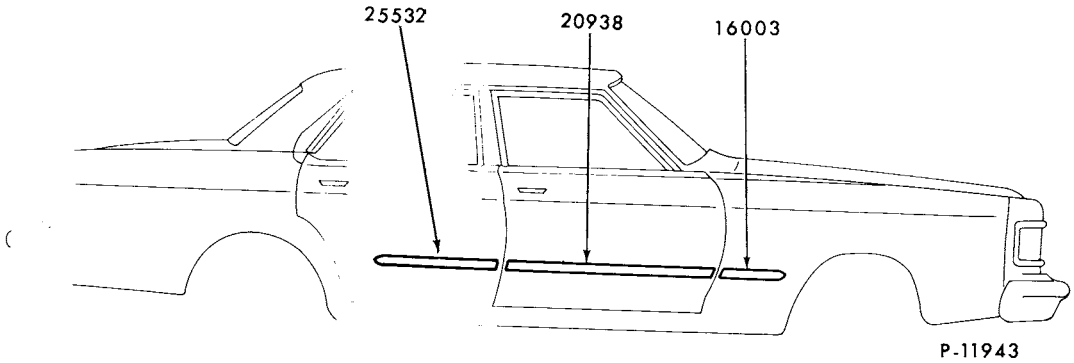

1978 MONARCH - BODY TYPE 54 - SIDE PROTECTION

GROUP NUMBER	PART NAME	DESCRIPTION	PART NUMBER		QTY.
16003-4	Moulding (front fender side)	Black vinyl insert-adhesive backed-cut to fit	D5DZ 5425532-D	R.H. and L.H.	2
20938	Moulding (front door)	Black vinyl insert-adhesive backed-cut to fit	D1OZ 6529038-B	R.H. and L.H.	2
25532	Moulding (rear door)	Black vinyl insert-adhesive backed	D5DZ 5425532-D	R.H. and L.H.	2

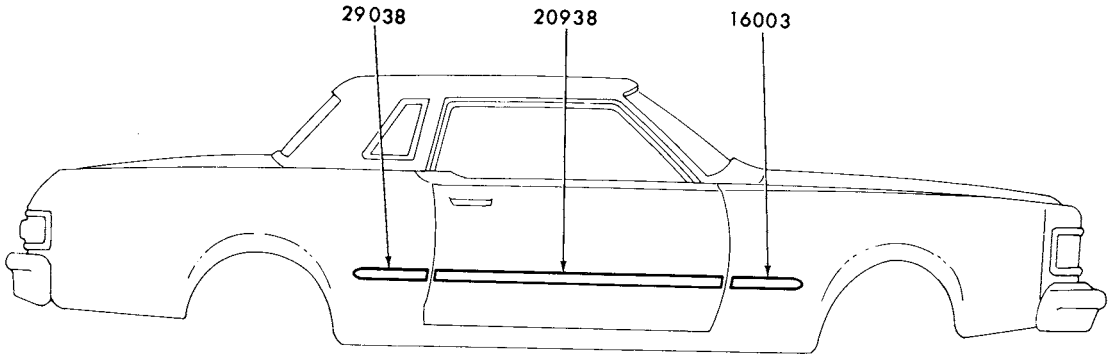

1978 MONARCH - BODY TYPE 66 - SIDE PROTECTION

GROUP NUMBER	PART NAME	DESCRIPTION	PART NUMBER		QTY.
16003-4	Moulding (front fender side)	Black vinyl insert-adhesive backed-cut to fit	D5DZ 5425532-D	R.H. and L.H.	2
20938	Moulding (front door)	Black vinyl insert-adhesive backed	D1OZ 6529038-B	R.H. and L.H.	2
29038	Moulding (quarter)	Black vinyl insert-adhesive backed-cut to fit	D5DZ 5425532-D	R.H. and L.H.	2

COPYRIGHT © 1986 — FORD MOTOR COMPANY — DEARBORN, MICHIGAN

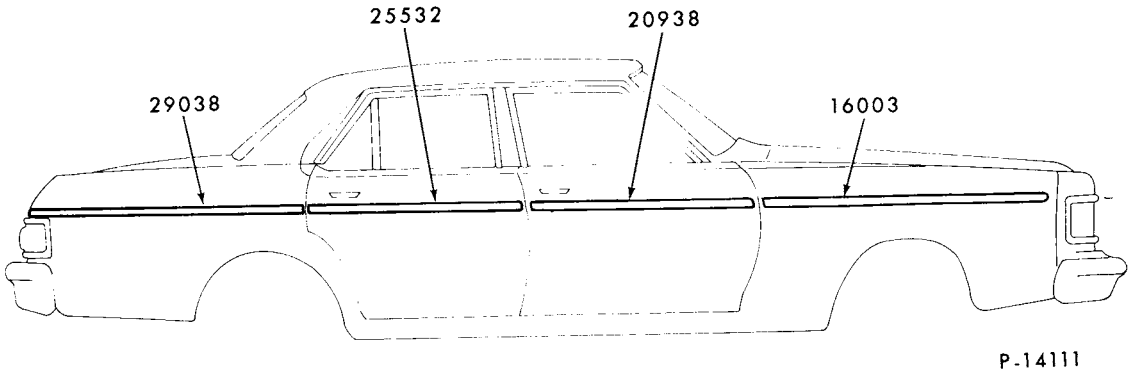

1978 MONARCH - BODY TYPES 54 and 66 - SPORT - SIDE PROTECTION

GROUP NUMBER	PART NAME	DESCRIPTION	PART NUMBER	QTY.
16003-4	Moulding (front fender side)	Black	(RH) D8DZ 16003-E (LH) D8DZ 16004-E	1
20938-9	Moulding (front door)	Black-cut to fit	(RH) EODZ 6629038-A (LH) EODZ 6629039-A	1
25532-3	Moulding (rear door)	Black-cut to fit	(RH) EODZ 6620938-A (LH) EODZ 6629039-A	1
29038-9	Moulding (quarter panel)	Black-cut to fit	(RH) D8DZ 6629038-A (LH) D8DZ 6629039-A	1

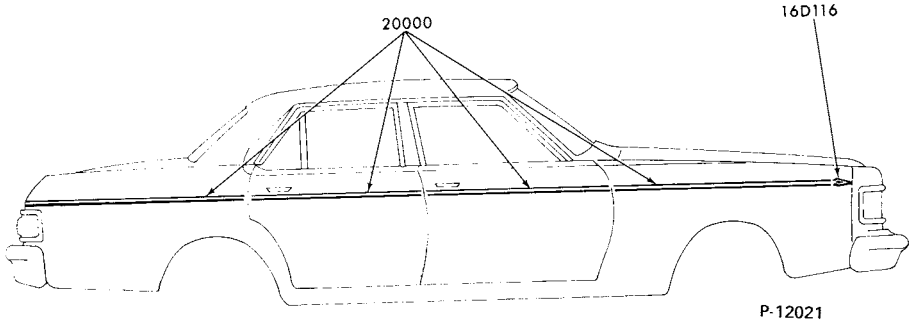

1978 MONARCH - BODY TYPE 66 - STRIPES

GROUP NUMBER	PART NAME	DESCRIPTION	PART NUMBER	QTY.
16D116-7	Transfer (front fender)		Not used in 1978	
20000	Stripe kit (body side)	Dual stripe-23 foot roll		
		Black	D5DZ 6620000-F	AR
		Blue (light)	★D7DZ 6620000-AB Not replaced (6/82)	AR
		Blue (medium)	D7DZ 6620000-BB	AR
		Cordovan	D8DZ 6620000-AF	AR
		Gold	D5DZ 6620000-H	AR
		Jade (light)	D7DZ 6620000-BR	AR
		Jade (medium)	D7DZ 6620000-AR	AR
		Orange	D8DZ 6620000-AC	AR
		Red	D7DZ 6620000-AD	AR
		Silver	D5DZ 6620000-D	AR
		White	D5DZ 6620000-B	AR
		Yellow	D7DZ 6620000-AV	AR

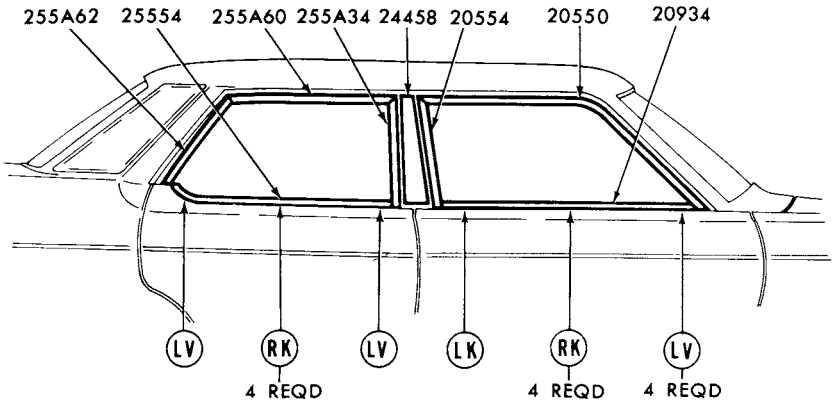

REFER TO EXTERIOR MOULDING SECTION 'R' FOR COMPLETE RETAINER INFORMATION

1978 MONARCH - BODY TYPE 54 - DOOR WINDOW FRAME

GROUP NUMBER	PART NAME	DESCRIPTION	PART NUMBER		QTY.
20550-1	Moulding (front door window frame front)		(RH) D5DZ 5420550-A	(LH) D5DZ 5420551-A	1
20554-5	Moulding (front door window frame rear)		(RH) D5DZ 5420554-A	(LH) D5DZ 5420555-A	1
20934-5	Moulding (front door belt)		(RH)♦D5DZ 5420934-A	(LH)♦D5DZ 5420935-A	1
24458-9	Moulding (center body pillar upper)		Refer to roof and back belt		
255A34-5	Moulding (rear door window frame upper)		(RH) D5DZ 54255A34-A	(LH) D5DZ 54255A35-A	1
25554-5	Moulding (rear door belt)		(RH)♦D5DZ 5425554-A	(LH)♦D5DZ 5425555-A	1
255A60-1	Moulding (rear door window frame upper)		(RH) D5DZ 54255A60-A	(LH) D5DZ 54255A61-A	1
255A62-3	Moulding (rear door window frame rear)		(RH) D5DZ 54255A62-A	(LH) D5DZ 54255A63-A	1

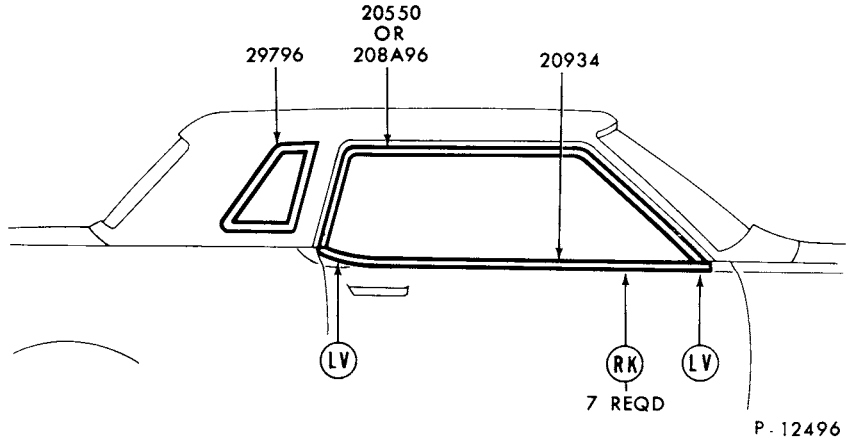

REFER TO EXTERIOR MOULDING SECTION 'R' FOR COMPLETE RETAINER INFORMATION

1978 MONARCH - BODY TYPE 66 - DOOR and QUARTER WINDOW FRAME

♦ Includes attaching parts

COPYRIGHT © 1986 — FORD MOTOR COMPANY — DEARBORN, MICHIGAN

1978 MONARCH - BODY TYPE 66 - DOOR and QUARTER WINDOW FRAME - cont'd.

GROUP NUMBER	PART NAME	DESCRIPTION	PART NUMBER		QTY.
20550-1	Moulding (front door window frame)	Black	(RH)★D7DZ 6620550-A Not replaced (6/82)	(LH)★D7DZ 6620551-A Not replaced (6/82)	1
		Bright	(RH) D5DZ 6620550-A	(LH) D5DZ 6620551-A	1
20934-5	Moulding (front door belt)	Black	(RH)★D7DZ 6620934-A Not replaced (6/82)	(LH)★D7DZ 6620935-A Not replaced (6/82)	1
		Bright	(RH) D5DZ 6620934-C	(LH) D5DZ 6620935-C	1
29796-7	Moulding (quarter window)	Non-louvered	(RH) D5DZ 6629796-A	(LH) D5DZ 6629797-A	1
		Louvered-non-ribbed			
		Silver/black	(RH) D7DZ 6629796-CP	† (LH) D7DZ 6629797-CW	1
		White/black	(RH) D7DZ 6629796-CW	(LH) D7DZ 6629797-CW	1
		For all other colors paint to match	(RH) D7DZ 6629796-CW	(LH) D7DZ 6629797-CW	1
		W/slant rib Black	(RH) D8DZ 6629796-BA	(LH) D8DZ 6629797-BA	1

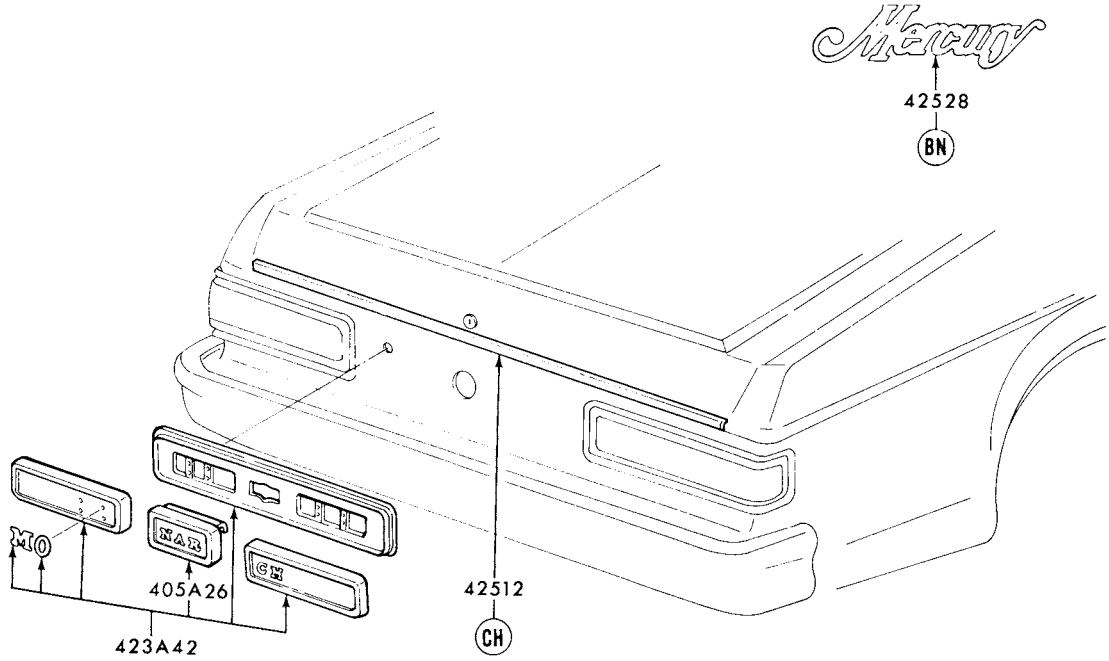

REFER TO EXTERIOR MOULDING SECTION "R" FOR COMPLETE RETAINER INFORMATION

P-11949

1978 MONARCH - BACK END

GROUP NUMBER	PART NAME	DESCRIPTION	PART NUMBER	QTY.
405A26	Door (fuel filler opening)		D84Y 66405A26-AA	1
423A42	Panel (lower back finish)		♦D84Y 66423A42-AA	1
42512	Moulding (luggage compartment door)		♦D5DZ 6642512-A	1
42528	Plate (name)	"Mercury"	♦D54Y 6642528-A	1

♦ Includes attaching parts † Paint to match

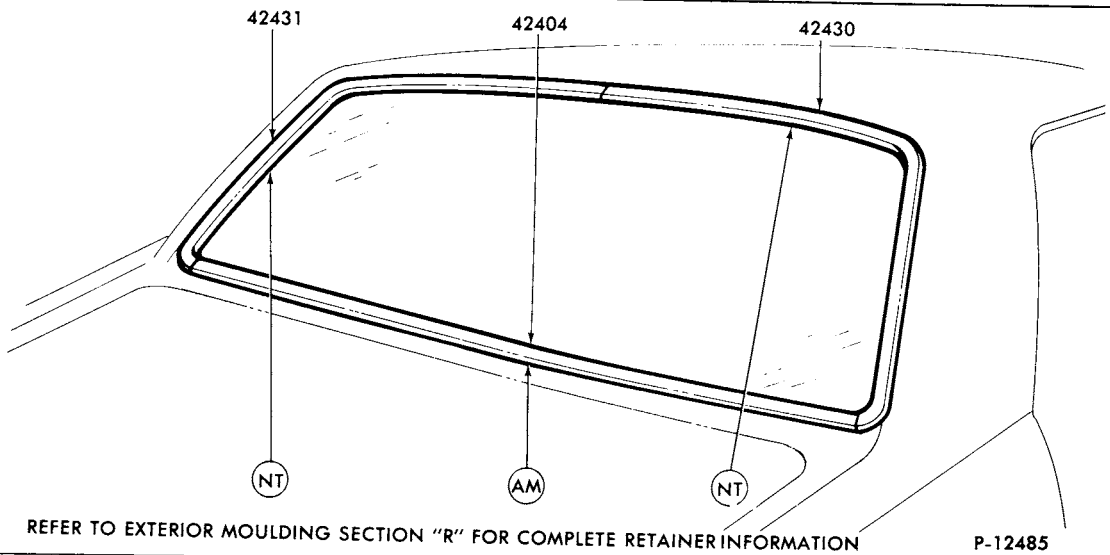

REFER TO EXTERIOR MOULDING SECTION "R" FOR COMPLETE RETAINER INFORMATION

P-12485

1978 MONARCH - BODY TYPE 54 - BACK WINDOW

GROUP NUMBER	PART NAME	DESCRIPTION	PART NUMBER	QTY.
42404	Moulding (back window lower)	Back window	♦D5DZ 5442404-A	1
42430-1	Moulding (back window upper)		(RH)♦D5DZ 5442430-A (LH)♦D5DZ 5442431-A	1

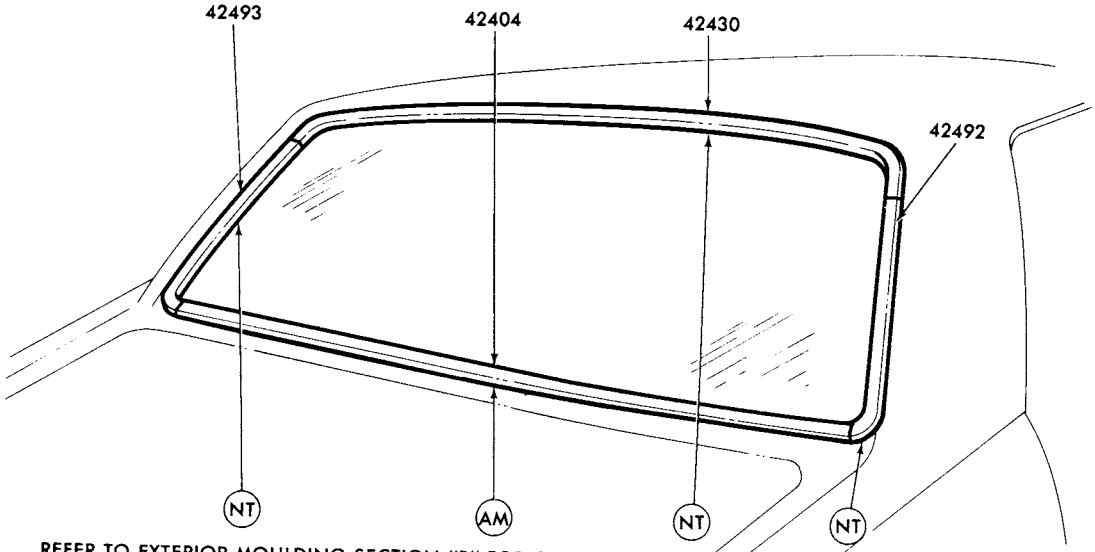

REFER TO EXTERIOR MOULDING SECTION "R" FOR COMPLETE RETAINER INFORMATION

P-12486

1978 MONARCH - BODY TYPE 66 - BACK WINDOW

GROUP NUMBER	PART NAME	DESCRIPTION	PART NUMBER	QTY.
42404	Moulding (back window lower)	Bright	♦D5DZ 6642404-A	1
42430	Moulding (back window upper)	Bright	♦D5DZ 6642430-A	1
42492-3	Moulding (back window side)	Bright	(RH)♦D5DZ 6642492-A (LH)♦D5DZ 6642493-A	1

♦ Includes attaching parts

COPYRIGHT © 1986 — FORD MOTOR COMPANY — DEARBORN, MICHIGAN

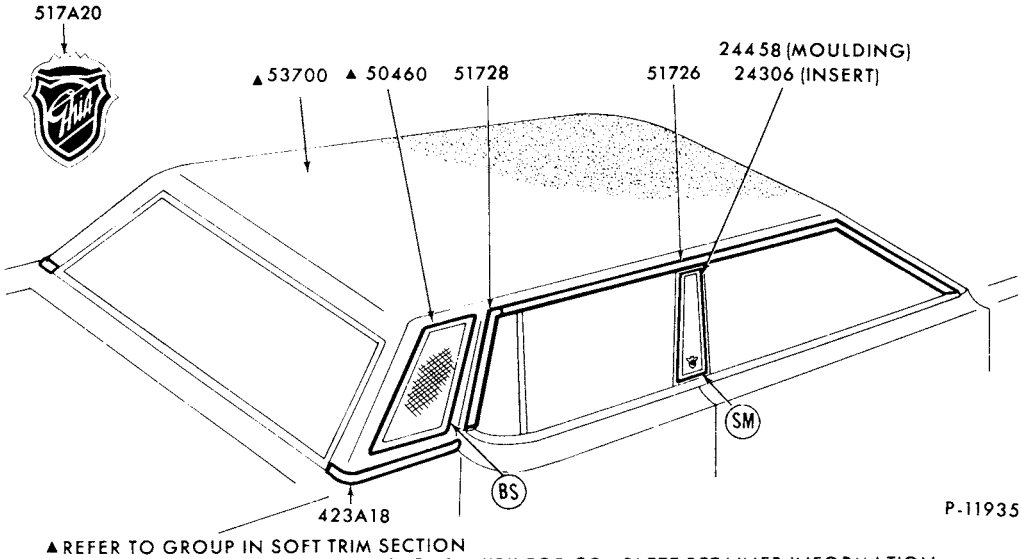

▲REFER TO GROUP IN SOFT TRIM SECTION
REFER TO EXTERIOR MOULDING SECTION "R" FOR COMPLETE RETAINER INFORMATION

1978 MONARCH - BODY TYPE 54 - ROOF and BACK BELT

GROUP NUMBER	PART NAME	DESCRIPTION	PART NUMBER		QTY.
24306-7	Moulding (center body pillar)				
		Black	(RH)♦D8DZ 5424306-AA	(LH)♦D8DZ 5424307-AA	1
		Blue (medium)	(RH)♦D8DZ 5424306-BB	(LH)♦D8DZ 5424307-BB	1
		Blue (dark)	(RH)♦D8DZ 5424306-AB	(LH)♦D8DZ 5424307-AB	1
		Camel	(RH)♦D8DZ 5424306-AV	(LH)♦D8DZ 5424307-AV	1
		Cordovan	(RH)♦D8DZ 5424306-AF	(LH)♦D8DZ 5424307-AF	1
		Gray	(RH)♦D8DZ 5424306-AP	(LH)♦D8DZ 5424307-AP	1
		Jade	(RH)♦D8DZ 5424306-AR	(LH)♦D8DZ 5424307-AR	1
		Red	(RH)♦D8DZ 5424306-AD	(LH)♦D8DZ 5424307-AD	1
		Silver	(RH)♦D8DZ 5424306-BP	(LH)♦D8DZ 5424307-BP	1
		White	(RH)♦D8DZ 5424306-AW	(LH)♦D8DZ 5424307-AW	1
24458-9	Moulding (center body pillar upper)		(RH)♦D5DZ 5424458-A	(LH)♦D5DZ 5424459-A	1
423A18-9	Moulding (back belt side)	Prime-paint to match	(RH)♦D7DZ 54423A18-A	(LH)♦D7DZ 54423A19-A	1
517A20	Ornament (roof side)	"Ghia"	♦D5ZZ 60517A20-A	R.H. and L.H.	2
51726-9	Moulding (roof drip side finish)	Front	(RH) D7DZ 5451726-A	(LH) D7DZ 5451727-A	1
		Rear	(RH) D7DZ 5451728-A	(LH) D7DZ 5451729-A	1

♦ Includes attaching parts

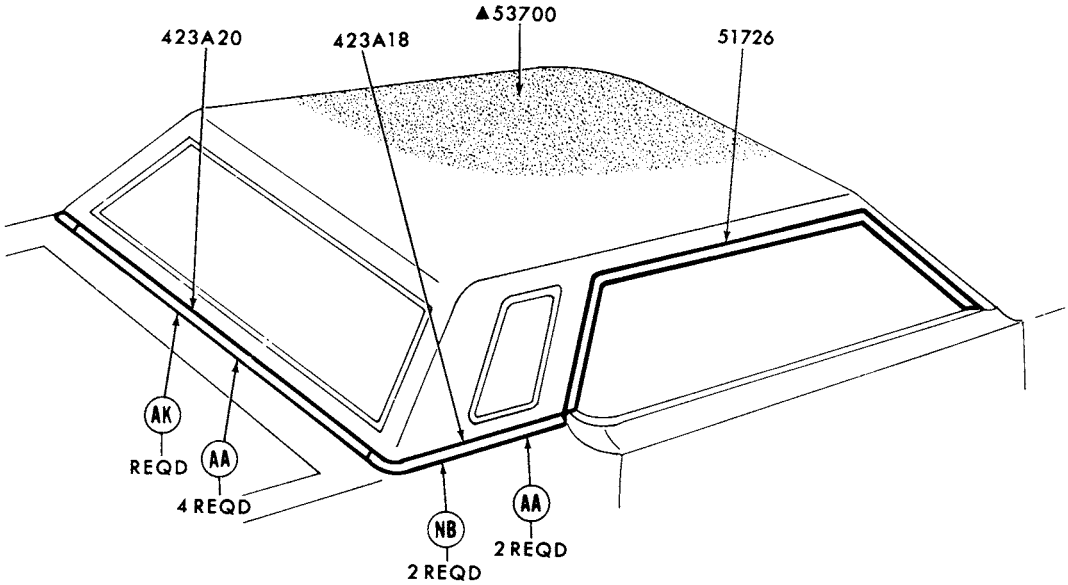

▲REFER TO GROUP IN SOFT TRIM SECTION
REFER TO EXTERIOR MOULDING SECTION "R" FOR COMPLETE RETAINER INFORMATION

P-11934

1978 MONARCH - BODY TYPE 66 - ROOF and BACK BELT

GROUP NUMBER	PART NAME	DESCRIPTION	PART NUMBER	QTY.
423A18-9	Moulding (back belt side)	Prime-paint to match	(RH) D7DZ 66423A18-A (LH) D7DZ 66423A19-A	1
423A20	Moulding (back belt)	Prime-paint to match	♦D7DZ 66423A20-A	1
51726-7	Moulding (roof drip side finish)	Bright	(RH) D7DZ 6651726-C (LH) D7DZ 6651727-C	1

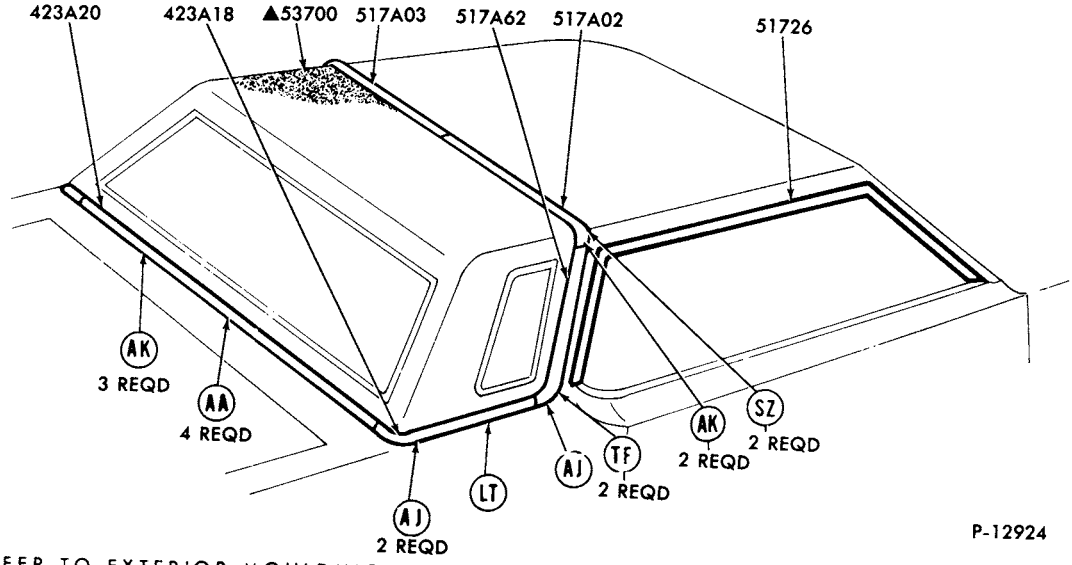

P-12924

REFER TO EXTERIOR MOULDING SECTION 'R' FOR COMPLETE RETAINER INFORMATION

1978 MONARCH - BODY TYPE 66 - ROOF and BACK BELT - w/HALF VINYL ROOF

♦ Includes attaching parts

COPYRIGHT © 1986 — FORD MOTOR COMPANY — DEARBORN, MICHIGAN

1978 MONARCH - BODY TYPE 66 - ROOF and BACK BELT - w/HALF VINYL ROOF - cont'd.

GROUP NUMBER	PART NAME	DESCRIPTION	PART NUMBER		QTY.
423A18-9	Moulding (back belt side)	Prime-paint to match	(RH)♦D6DZ 66423A18-D	(LH)♦D6DZ 66423A19-D	1
423A20	Moulding (back belt)	Prime-paint to match	♦D7DZ 66423A20-A		1
517A02-3	Moulding (roof top)	Prime-paint to match	(RH)♦D6DZ 66517A02-A	(LH)♦D6DZ 66517A03-A	1
51726-7	Moulding (roof drip side finish)		(RH)♦D5DZ 6651726-A	(LH)♦D5DZ 6651727-A	
517A62-3	Moulding (roof side)	Prime-paint to match	(RH)♦D6DZ 66517A62-A	(LH)♦D6DZ 66517A63-A	1

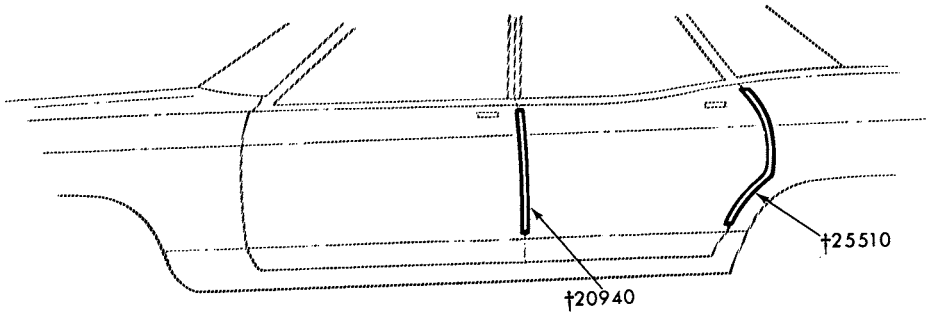

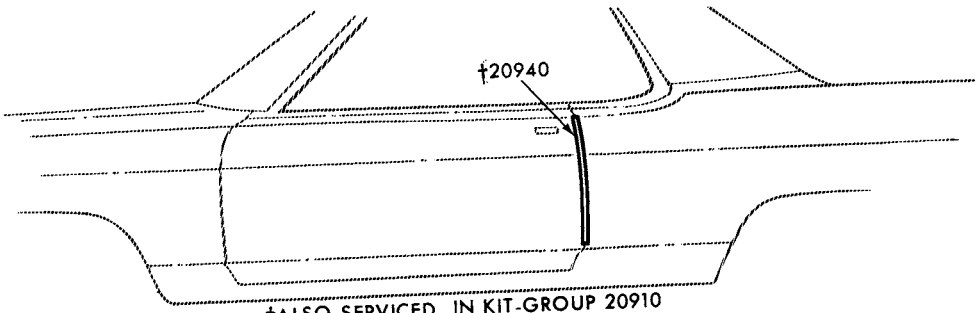

†ALSO SERVICED IN KIT-GROUP 20910

P-10061

1978 MONARCH - DOOR EDGE GUARDS

GROUP NUMBER	PART NAME	DESCRIPTION	PART NUMBER		QTY.
20910	Moulding kit (door edge guards)	Body type 54-cut to fit	✶D5DZ 5420910-A	Not replaced (6/83)	1
		Body type 66-cut to fit	✶D5DZ 6620910-A	Not replaced (6/83)	1
20940-1	Moulding (front door edge guard)	Body type 54-cut to fit	(RH) D5DZ 5420940-A	(LH) D5DZ 5420941-A	1
		Body type 66 -cut to fit	(RH) D5DZ 6620940-A	(LH) D5DZ 6620941-A	1
25510-1	Moulding (rear door edge guard)	Body type 54-cut to fit	(RH) D5DZ 5425510-A	(LH) D5DZ 5425511-A	1

♦ Includes attaching parts

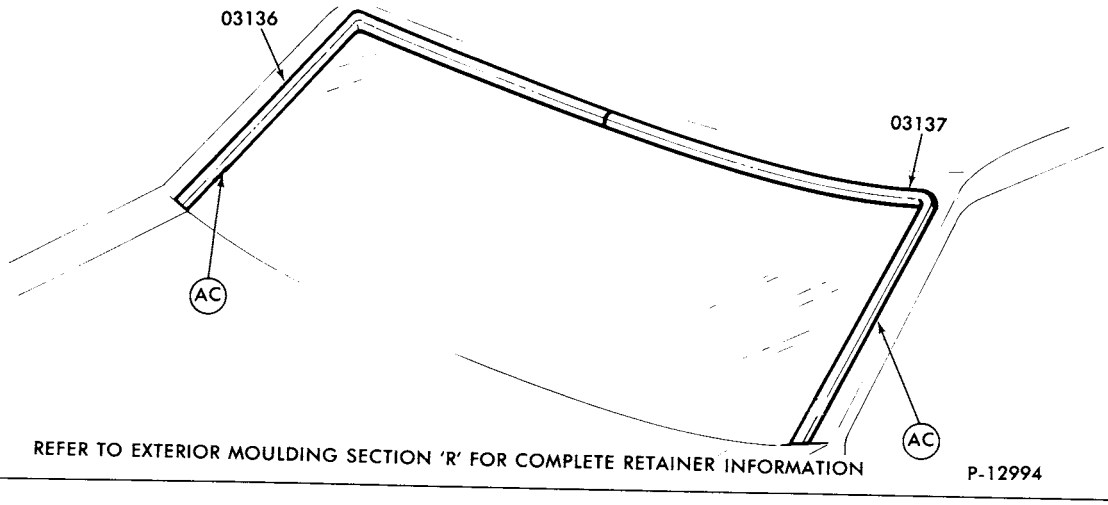

1978 MARK V - WINDSHIELD

GROUP NUMBER	PART NAME	DESCRIPTION	PART NUMBER	QTY.
03136-7	Moulding (windshield outside side)		(RH)♦D7LY 6503136-A (LH)♦D7LY 6503137-A	1

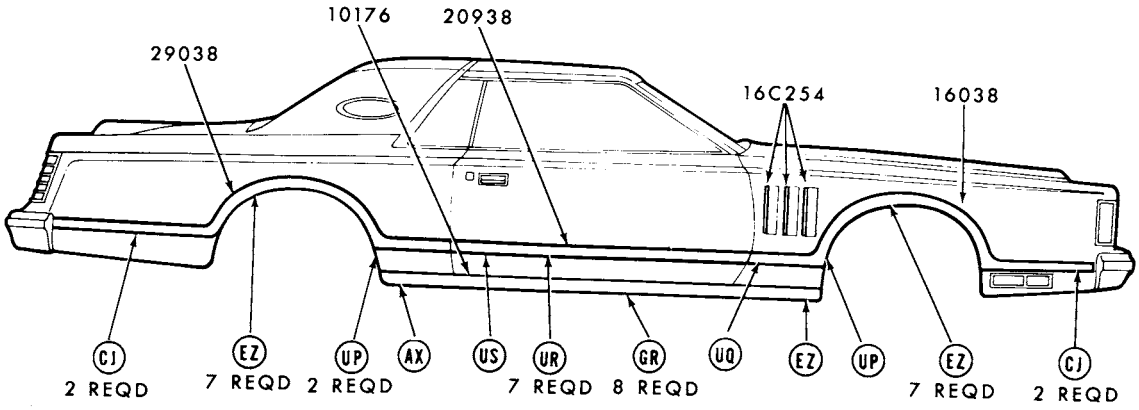

1978 MARK V - SIDE - w/ WIDE MOULDINGS

♦ Includes attaching parts

COPYRIGHT © 1986 — FORD MOTOR COMPANY — DEARBORN, MICHIGAN

1978 MARK V - SIDE - w/ WIDE MOULDINGS - cont'd.

GROUP NUMBER	PART NAME	DESCRIPTION	PART NUMBER		QTY.
10176-7	Moulding (body rocker panel)		(RH)♦D7LY 6510176-A	(LH)♦D7LY 6510177-A	1
16038-9	Moulding (front fender wheel opening)	Incl. vinyl insert			
		◊Black	(RH)♦D7LY 16038-AA	(LH)♦D7LY 16039-AA	1
		◊Blue (light/wedgewd.)	(RH)♦D8LY 16038-AB	(LH)♦D8LY 16039-AB	1
		◊Blue (diamond)	(RH)♦D8LY 16038-BB	(LH)♦D8LY 16039-BB	1
		◊Blue (dark/midnight)	(RH)♦D7LY 16038-AB	(LH)♦D7LY 16039-AB	1
		◊Champagne (dark)	(RH)★D8LY 16038-BU Not replaced (4/84)	(LH)★D8LY 16039-BU	1
		◊Champagne (light)	(RH)♦D8LY 16038-AU	(LH)♦D8LY 16039-AU	1
		◊Chamois	(RH)♦D7LY 16038-CT	(LH)♦D7LY 16039-CT	1
		◊Cordovan (dark)	(RH)♦D7LY 16038-AF	(LH)♦D7LY 16039-AF	1
		◊Cordovan (light)	(RH)♦D8LY 16038-AF	(LH)♦D8LY 16039-AF	1
		◊Cream	(RH)♦D7LY 16038-AV	(LH)♦D7LY 16039-AV	1
		◊Gold	(RH)♦D8LY 16038-AY	(LH)♦D8LY 16039-AY	1
		◊Gray	(RH)♦D7LY 16038-AP	(LH)♦D7LY 16039-AP	1
		◊Jade (dark)	(RH)★D8LY 16038-AR Not replaced (4/83)	(LH)♦D8LY 16039-AR	1
		◊Jade (light)	(RH)♦D7LY 16038-AR	(LH)♦D7LY 16039-AR	1
		◊Red	(RH)★D7LY 16038-AD Not replaced (4/83)	(LH)♦D7LY 16039-AD	1
		◊Silver	(RH)♦D7LY 16038-BP	(LH)♦D7LY 16039-BP	1
		◊White	(RH)♦D7LY 16038-AW	(LH)♦D7LY 16039-AW	1
16C254	Moulding (front fender louver edge guard)		D8LY 16C254-A	R.H. and L.H.	6
20938-9	Moulding (front door)	Incl. vinyl insert			
		◊Black	(RH)♦D7LY 6520938-AA	(LH)♦D7LY 6520939-AA	1
		◊Blue (light/wedgewd.)	(RH)♦D8LY 6520938-AB	(LH)♦D8LY 6520939-AB	1
		◊Blue (diamond)	(RH)♦D8LY 6520938-BB	(LH)♦D8LY 6520939-BB	1
		◊Blue (dark/midnight)	(RH)♦D7LY 6520938-AB	(LH)♦D7LY 6520939-AB	1
		◊Champagne (dark)	(RH)★D8LY 6520938-BU Not replaced (4/84)	(LH)★D8LY 6520939-BU Not replaced (4/83)	1
		◊Champagne (light)	(RH)♦D8LY 6520938-AU	(LH)♦D8LY 6520939-AU	1
		◊Chamois	(RH)♦D7LY 6520938-CT	(LH)♦D7LY 6520939-CT	1
		◊Cordovan (dark)	(RH)♦D7LY 6520938-AF	(LH)♦D7LY 6520939-AF	1
		◊Cordovan (light)	(RH)♦D8LY 6520938-AF	(LH)♦D8LY 6520939-AF	1
		◊Cream	(RH)♦D7LY 6520938-AV	(LH)♦D7LY 6520939-AV	1
		◊Gold	(RH)♦D8LY 6520938-AY	(LH)♦D8LY 6520939-AY	1
		◊Gray	(RH)♦D7LY 6520938-AP	(LH)♦D7LY 6520939-AP	1
		◊Jade (dark)	(RH)★D8LY 6520938-AR Not replaced (4/84)	(LH)★D8LY 6520939-AR	1
		◊Jade (light)	(RH)♦D7LY 6520938-AR	(LH)♦D7LY 6520939-AR	1
		◊Red	(RH)♦D7LY 6520938-AD	(LH)♦D7LY 6520939-AD	1
		◊Silver	(RH)♦D7LY 6520938-BP	(LH)♦D7LY 6520939-BP	1
		◊White	(RH)♦D7LY 6520938-AW	(LH)♦D7LY 6520939-AW	1
29038-9	Moulding (quarter panel)	Incl. vinyl insert			
		◊Black	(RH)♦D7LY 6529038-AA	(LH)♦D7LY 6529039-AA	1
		◊Blue (light/wedgewd.)	(RH)♦D8LY 6529038-AB	(LH)♦D8LY 6529039-AB	1
		◊Blue (diamond)	(RH)♦D8LY 6529038-BB	(LH)♦D8LY 6529039-BB	1
		◊Blue (dark/midnight)	(RH)♦D7LY 6529038-AB	(LH)♦D7LY 6529039-AB	1
		◊Champagne (dark)	(RH)♦D8LY 6529038-BU	(LH)♦D8LY 6529039-BU	1
		◊Champagne (light)	(RH)♦D8LY 6529038-AU	(LH)♦D8LY 6529039-AU	1
		◊Chamois	(RH)♦D7LY 6529038-CT	(LH)♦D7LY 6529039-CT	1
		◊Cordovan (dark)	(RH)♦D7LY 6529038-AF	(LH)♦D7LY 6529039-AF	1
		◊Cordovan (light)	(RH)♦D8LY 6529038-AF	(LH)♦D8LY 6529039-AF	1
		◊Cream	(RH)♦D7LY 6529038-AV	(LH)♦D7LY 6529039-AV	1
		◊Gold	(RH)♦D8LY 6529038-AY	(LH)♦D8LY 6529039-AY	1
		◊Gray	(RH)♦D7LY 6529038-AP	(LH)♦D7LY 6529039-AP	1
		◊Jade (dark)	(RH)♦D8LY 6529038-AR	(LH)♦D8LY 6529039-AR	1
		◊Jade (light)	(RH)♦D7LY 6529038-AR	(LH)♦D7LY 6529039-AR	1
		◊Red	(RH)♦D7LY 6529038-AD	(LH)♦D7LY 6529039-AD	1
		◊Silver	(RH)♦D7LY 6529038-BP	(LH) D7LY 6529039-BP	1
		◊White	(RH)♦D7LY 6529038-AW	(LH)♦D7LY 6529039-AW	1

♦ Includes attaching parts

◊ For color verification, refer to the vinyl roof swatches in the 1978 Salesman's Color and Upholstery Selections Guide.

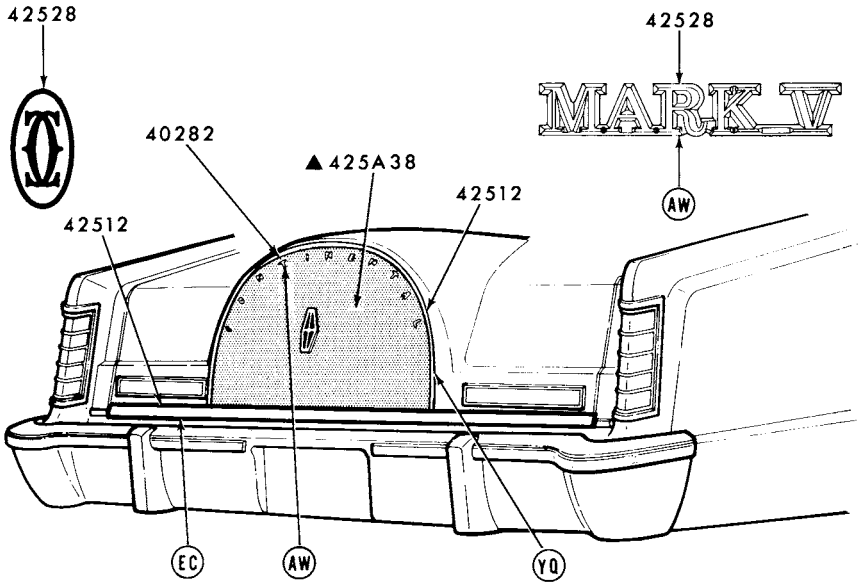

▲REFER TO GROUP IN SOFT TRIM SECTION
REFER TO EXTERIOR MOULDING SECTION 'R' FOR COMPLETE RETAINER INFORMATION

P-14107

1978 MARK V - BACK END

GROUP NUMBER	PART NAME	DESCRIPTION	PART NUMBER	QTY.
40282	Letter (name)	"C"	♦D7LY 6540282-A	1
		"O"	♦D7LY 6540282-B	1
		"N" - sides	♦D7LY 6540282-C	2
		"N" - top	♦D7LY 6540282-F	1
		"T"	♦D7LY 6540282-D	2
		"I"	♦D7LY 6540282-E	1
		"E"	♦D7LY 6540282-G	1
		"A"	♦D7LY 6540282-H	1
		"L"	♦D7LY 6540282-J	1
423B70	Transfer (luggage compartment door)		Not used in 1978	
42512	Moulding (luggage compartment door)	Lower	♦D7LY 6542512-A	1
		Upper (diamond jubilee)		1
		◊Blue (diamond)	♦D8LY 6542512-AB	1
		◊Gold	♦D8LY 6542512-AY	1
42528	Transfer (name)	"MARK V"	♦D7LY 6542528-A	1
		"ϽC" Red	D7LY 6542528-AD	1

♦ Includes attaching parts

COPYRIGHT © 1986 — FORD MOTOR COMPANY — DEARBORN, MICHIGAN

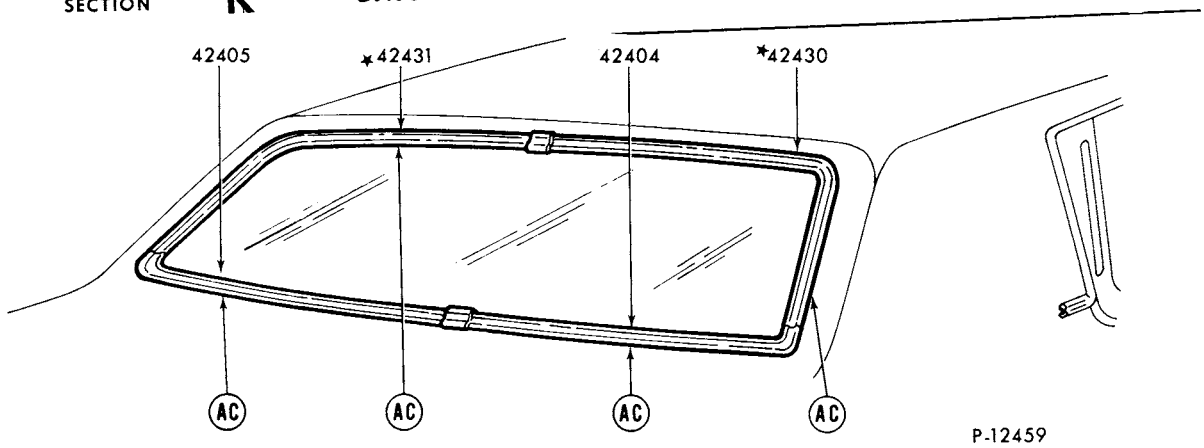

REFER TO EXTERIOR MOULDING SECTION "R" FOR COMPLETE RETAINER INFORMATION

1978 MARK V - BACK WINDOW

GROUP NUMBER	PART NAME	DESCRIPTION	PART NUMBER		QTY.
42404-5	Moulding (back window lower)	W/o vinyl roof	(RH)♦D7LY 6542404-A	(LH)♦D7LY 6542405-A	1
		W/ half vinyl roof	(RH)♦D7LY 6542404-B	(LH)♦D7LY 6542405-B	1
		W/ full vinyl roof			
		◊Black (high gloss)	(RH)*D8LY 6542404-BA	(LH)*D8LY 6542405-BA	1
		◊Black (low gloss)	(RH)*D7LY 6542404-AA	(LH)*D7LY 6542405-AA	1
		◊Blue (light/ wedgewood)	(RH)* D8LY 6542404-AB	(LH)*D8LY 6542405-AB	1
		◊Blue (dark/midnight)	(RH)*D7LY 6542404-BB	(LH)*D7LY 6542405-BB	1
		◊Champagne (dark)	(RH)* D8LY 6542404-BU	(LH)* D8LY 6542405-BU	1
		◊Champagne (light)	(RH)*D8LY 6542404-AU	(LH)*D8LY 6542405-AU	1
		◊Chamois	(RH)*D7LY 6542404-CT Not replaced (4/83)	(LH)*D7LY 6542405-CT Not replaced (4/83)	1
		◊Cordovan (dark)	(RH)*D7LY 6542404-AF Not replaced (4/84)	(LH)*D7LY 6542405-AF	1
		◊Cordovan (light)	(RH)*D8LY 6542404-AF	(LH)*D8LY 6542405-AF	1
		◊Cream	(RH)*D7LY 6542404-AV	(LH)*D7LY 6542405-AV	1
		◊Gray	(RH)*D7LY 6542404-AP	(LH)*D7LY 6542405-AP	1
		◊Jade (dark)	(RH)*D8LY 6542404-AR	(LH)*D8LY 6542405-AR	1
		◊Jade (light)	(RH)*D7LY 6542404-AR	(LH)*D7LY 6542405-AR	1
		◊Red	(RH)*D7LY 6542404-AD	(LH)*D7LY 6542405-AD	1
		◊Silve	(RH)*D7LY 6542404-BP	(LH)*D7LY 6542405-BP	1
		◊White	(RH)*D7LY 6542404-AW Not replaced (4/83)	(LH)*D7LY 6542405-AW	1

♦ Includes attaching parts

◊ For color verification, refer to the vinyl roof swatches in the 1978 Salesman's Color and Upholstery Selections Guide.

1978 MARK V - BACK WINDOW - cont'd.

GROUP NUMBER	PART NAME	DESCRIPTION	PART NUMBER		QTY.
42430-1	Moulding (back window upper)	W/o vinyl roof	(RH)♦D7LY 6542430-A	(LH)♦D7LY 6542431-A	1
		W/ half vinyl roof	(RH)★D7LY 6542430-B Not replaced (4/83)	(LH)★D7LY 6542431-B	1
		W/ full vinyl roof			
		◊Black (high gloss)	(RH)★D8LY 6542430-BA	(LH)★D8LY 6542431-BA	1
		◊Black (low gloss)	(RH)★D7LY 6542430-AA	(LH)★D7LY 6542431-AA	1
		◊Blue (light/ wedgewood)	(RH)★D8LY 6542430-AB	(LH)★D8LY 6542431-AB	1
		◊Blue (dark/midnight)	(RH)★D7LY 6542430-BB	(LH)★D7LY 6542431-BB	1
		◊Champagne (dark)	(RH)★D8LY 6542430-BU	(LH)★D8LY 6542431-BU	1
		◊Champagne (light)	(RH)★D8LY 6542430-AU	(LH)★D8LY 6542431-AU	1
		◊Chamois	(RH)★D7LY 6542430-CT	(LH)★D7LY 6542431-CT	1
		◊Cordovan (dark)	(RH)★D7LY 6542430-AF	(LH)★D7LY 6542431-AF	1
		◊Cordovan (light)	(RH)★D8LY 6542430-AF	(LH)★D8LY 6542431-AF	1
		◊Cream	(RH)★D7LY 6542430-AV	(LH)★D7LY 6542431-AV	1
		◊Gray	(RH)★D7LY 6542430-AP	(LH) D7LY 6542431-AP	1
		◊Jade (dark)	(RH)★D8LY 6542430-AR	(LH)★D8LY 6542431-AR	1
		◊Jade (light)	(RH)★D7LY 6542430-AR	(LH)★D7LY 6542431-AR	1
		◊Red	(RH)★D7LY 6542430-AD	(LH)★D7LY 6542431-AD	1
		◊Silver	(RH)★D7LY 6542430-BP	(LH)★D7LY 6542431-BP	1
		◊White	(RH)★D7LY 6542430-AW	(LH)★D7LY 6542431-AW	1

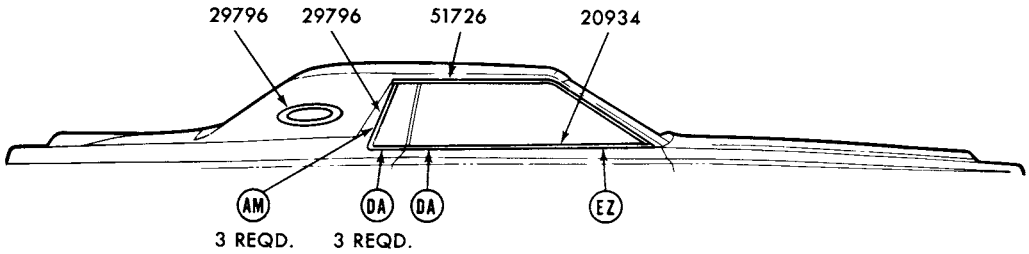

P-13179

REFER TO EXTERIOR MOULDING SECTION "R" FOR COMPLETE RETAINER INFORMATION

1978 MARK V - DRIP RAIL, DOOR BELT and QUARTER WINDOW

GROUP NUMBER	PART NAME	DESCRIPTION	PART NUMBER		QTY.
20934-5	Moulding and weatherstrip (front door belt)		(RH)♦D7LY 6520934-A	(LH)♦D7LY 6520935-A	1
29796-7	Moulding (front quarter window)		(RH)♦D7LY 6529796-A	(LH)♦D7LY 6529797-A	1
29796-7	Moulding (opera window)	W/ vinyl roof			
		Black	D7LY 6529796-BA	R.H. and L.H.	2
		Blue	D8LY 6529796-AB	R.H. and L.H.	2
		Gold	D8LY 6529796-AY	R.H. and L.H.	2
		W/o vinyl roof	D7LY 6529797-AA	R.H. and L.H.	2
51726-7	Moulding(roof drip rail side)	W/o full vinyl roof	(RH)♦D7LY 6551726-B	(LH)♦D7LY 6551727-B	1
		W/ full vinyl roof	(RH)♦D7LY 6551726-D	(LH)♦D7LY 6551727-D	1

♦ Includes attaching parts

COPYRIGHT © 1986 — FORD MOTOR COMPANY — DEARBORN, MICHIGAN

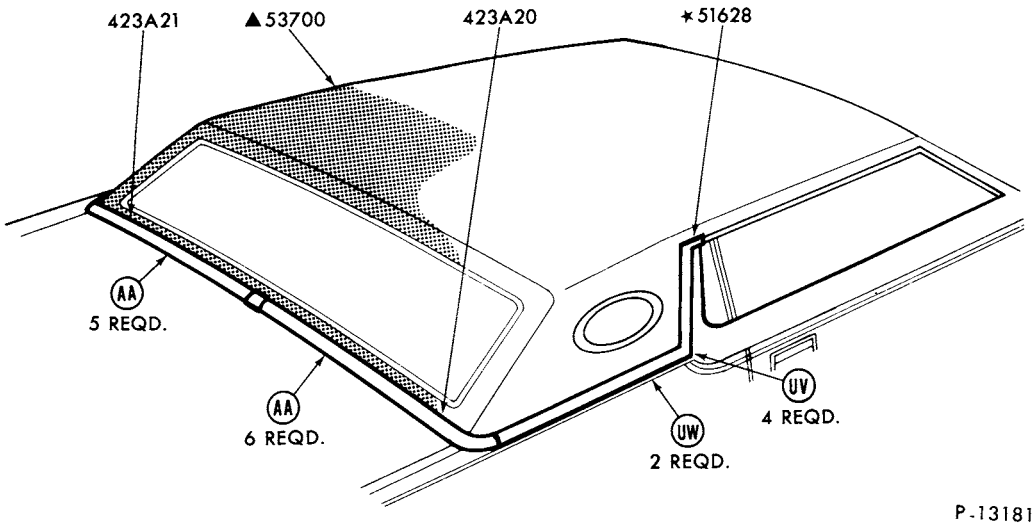

▲REFER TO GROUP IN SOFT TRIM SECTION
REFER TO EXTERIOR MOULD SECTION "R" FOR COMPLETE RETAINER INFORMATION

1978 MARK V - ROOF and BACK BELT - w/ FULL VINYL ROOF

GROUP NUMBER	PART NAME	DESCRIPTION	PART NUMBER		QTY.
423A20-1	Moulding (back belt rear)	◊Black	(RH)★D7LY 65423A20-AA	(LH)★D7LY 65423A21-AA	1
		◊Blue (light)	(RH)★D8LY 65423A20-AB	(LH)★D8LY 65423A21-AB	1
		◊Blue (dark)	(RH)★D7LY 65423A20-BB	(LH)★D7LY 65423A21-BB	1
		◊Champagne (dark)	(RH)★D8LY 65423A20-BU	(LH)★D8LY 65423A21-BU	1
		◊Champagne (light)	(RH)★D8LY 65423A20-AU	(LH)★D8LY 65423A21-AU	1
		◊Chamois	(RH)★D7LY 65423A20-CT Not replaced (4/84)	(LH)★D7LY 65423A21-CT	1
		◊Cordovan (dark)	(RH)★D7LY 65423A20-AF	(LH)★D7LY 65423A21-AF	1
		◊Cordovan (light)	(RH)★D8LY 65423A20-AE	(LH)★D8LY 65423A21-AE	1
		◊Cream	(RH)★D7LY 65423A20-AV	(LH)★D7LY 65423A21-AV	1
		◊Jade (dark)	(RH)★D8LY 65423A20-AR	(LH)★D8LY 65423A21-AR	1
		◊Jade (light)	(RH)★D7LY 65423A20-AR	(LH)★D7LY 65423A21-AR	1
		◊Red	(RH)★D7LY 65423A20-BD	(LH)★D7LY 65423A21-BD	1
		◊Silver	(RH)★D7LY 65423A20-BP	(LH)★D7LY 65423A21-BP	1
		◊White	(RH)♦D7LY 65423A20-AW	(LH)★D7LY 65423A21-AW	1
51628-9	Moulding (back belt side)	◊Black	(RH)★D7LY 6551628-AA	(LH)★D7LY 6551629-AA	1
		◊Blue (light)	(RH)★D8LY 6551628-AB	(LH)★D8LY 6551629-AB	1
		◊Blue (dark)	(RH)★D7LY 6551628-BB	(LH)★D7LY 6551629-BB	1
		◊Champagne (dark)	(RH)★D8LY 6551628-BU	(LH)★D8LY 6551629-BU	1
		◊Champagne (light)	(RH)★D8LY 6551628-AU	(LH)★D8LY 6551629-AU	1
		◊Chamois	(RH)★D7LY 6551628-CT	(LH)★D7LY 6551629-CT	1
		◊Cordovan (dark)	(RH)★D7LY 6551628-AF	(LH)★D7LY 6551629-AF	1
		◊Cordovan (light)	(RH)★D8LY 6551628-AF	(LH)★D8LY 6551629-AF	1
		◊Cream	(RH)★D7LY 6551628-AV	(LH)★D7LY 6551629-AV	1
		◊Jade (dark)	(RH)★D8LY 6551628-AR	(LH)★D8LY 6551629-AR	1
		◊Jade (light)	(RH)★D7LY 6551628-AR	(LH)★D7LY 6551629-AR	1
		◊Red	(RH)★D7LY 6551628-BD	(LH)★D7LY 6551629-BD	1
		◊Silver	(RH)★D7LY 6551628-BP	(LH)★D7LY 6551629-BP	1
		◊White	(RH)★D7LY 6551628-AW	(LH)★D7LY 6551629-AW	1

♦ Includes attaching parts
◊ For color verification, refer to the vinyl roof swatches in the 1978 Salesman's Color and Upholstery Selections Guide.

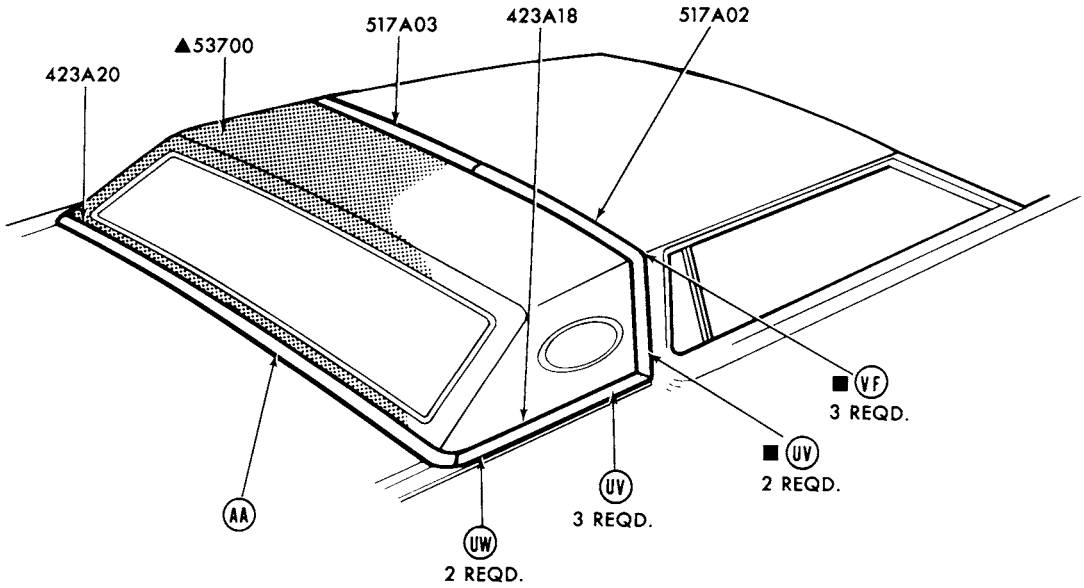

■ REFER TO GROUP 517A78 KIT FOR RETAINERS WITH SLIDING ROOF

REAR HALF VINYL ROOF

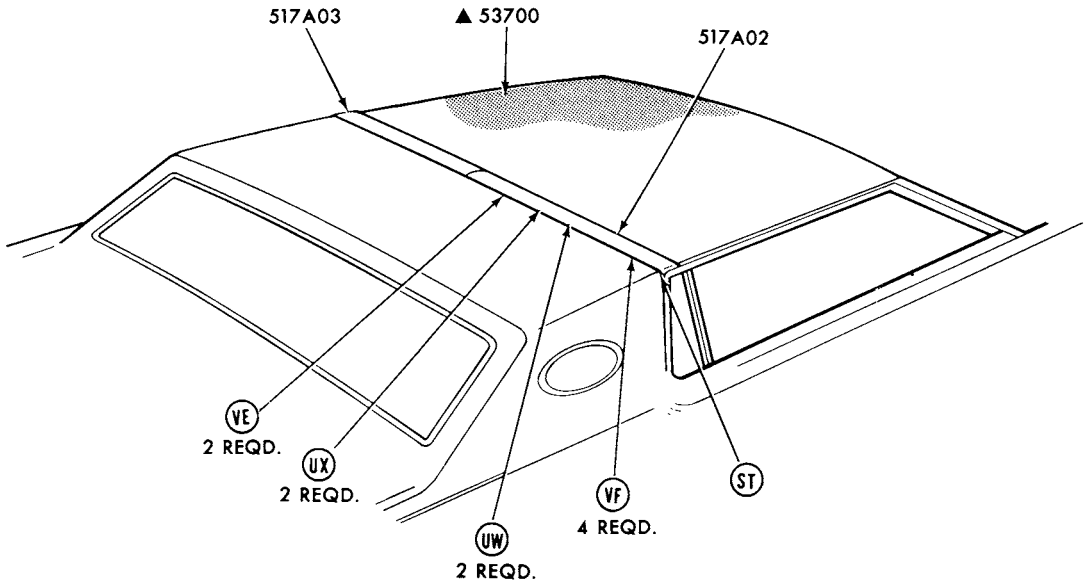

▲ REFER TO GROUP IN SOFT TRIM SECTION
REFER TO EXTERIOR MOULDING SECTION 'R' FOR COMPLETE RETAINER INFORMATION

FRONT HALF VINYL ROOF

P-13182

1978 MARK V - ROOF and BACK BELT - w/HALF VINYL ROOF - exc. DIAMOND JUBILEE

COPYRIGHT © 1986 — FORD MOTOR COMPANY — DEARBORN, MICHIGAN

1978 MARK V - ROOF and BACK BELT - w/ HALF VINYL ROOF - cont'd.

GROUP NUMBER	PART NAME	DESCRIPTION	PART NUMBER		QTY.
423A18-9	Moulding (back belt side)	◊Black (high gloss)	(RH)★D8LY 65423A18-BA	(LH)★D8LY 65423A19-BA	1
		◊Black (low gloss)	(RH)★D7LY 65423A18-AA	(LH)★D7LY 65423A19-AA	1
		◊Blue (light/ wedgewood)	(RH)★D8LY 65423A18-AB Not replaced (4/84)	(LH)★D8LY 65423A19-AB	1
		◊Blue (dark/midnight)	(RH)★D7LY 65423A18-BB Not replaced (4/84)	(LH)★D7LY 65423A19-BB Not replaced (4/83)	1
		◊Champagne (dark)	(RH)★D8LY 65423A19-BU	(LH)★D8LY 65423A19-BU	1
		◊Champagen (light)	(RH)★D8LY 65423A18-AU	(LH)★D8LY 65423A19-AU	1
		◊Chamois	(RH)★D7LY 65423A18-CT	(LH)★D7LY 65423A19-CT Not replaced (4/83)	1
		◊Cordovan (dark)	(RH)♦D7LY 65423A18-AF	(LH)★D7LY 65423A19-AF Not replaced (4/83)	1
		◊Cordovan (light)	(RH)★D8LY 65423A18-AF	(LH)★D8LY 65423A19-AF	1
		◊Cream	(RH)♦D7LY 65423A18-AV	(LH)♦D7LY 65423A19-AV	1
		◊Gray	(RH)★D7LY 65423A18-AP	(LH)★D7LY 65423A19-AP	1
		◊Jade (dark)	(RH)★D8LY 65423A18-AR	(LH)★D8LY 65423A19-AR	1
		◊Jade (light)	(RH)★D7LY 65423A18-AR Not replaced(4/84)	(LH)★D7LY 65423A19-AR Not replaced (4/83)	1
		◊Red	(RH)★D7LY 65423A18-BD	(LH)★D7LY 65423A19-BD	1
		◊Silver	(RH)★D7LY 65423A18-BP	(LH)★D7LY 65423A19-BP	1
		◊White	(RH)★D7LY 65423A18-AW	(LH)★D7LY 65423A19-AW	1
423A20-1	Moulding (back belt rear)	◊Black (high gloss)	(RH)★D8LY 65423A20-BA	(LH)★D8LY 65423A21-BA	1
		◊Black (low gloss)	(RH)★D7LY 65423A20-AA	(LH)★D7LY 65423A21-AA	1
		◊Blue (light/ wedgewood)	(RH)★D8LY 65423A20-AB	(LH)★D8LY 65423A21-AB	1
		◊Blue (dark/midnight	(RH)★D7LY 65423A20-BB	(LH)★D7LY 65423A21-BB	1
		◊Champagne (dark)	(RH)★D8LY 65423A20-BU Not replaced (4/83)	(LH)★D8LY 65423A21-BU	1
		◊Champagne (light)	(RH)★D8LY 65423A20-AU	(LH)★D8LY 65423A21-AU	1
		◊Chamois	(RH)★D7LY 65423A20-CT Not replaced (4/84)	(LH)★D7LY 65423A21-CT	1
		◊ Cordovan (dark)	(RH)★D7LY 65423A20-AF	(LH)★D7LY 65423A21-AF	1
		◊Cordovan (light)	(RH)★D8LY 65423A20-AE	(LH)★D8LY 65423A21-AE	1
		◊Cream	(RH)★D7LY 65423A20-AV	(LH)★D7LY 65423A21-AV	1
		◊Gray	(RH)★D7LY 65423A20-AP	(LH)★D7LY 65423A21-AP	1
		◊Jade (dark)	(RH)★D8LY 65423A20-AR	(LH)★D8LY 65423A21-AR	1
		◊ Jade (light)	(RH)★D7LY 65423A20-AR	(LH)★D7LY 65423A21-AR	1
		◊Red	(RH)★D7LY 65423A20-BD	(LH)★D7LY 65423A21-BD	1
		◊Silver	(RH)★D7LY 65423A20-BP	(LH)★D7LY 65423A21-BP	1
		◊White	(RH)★D7LY 65423A20-AW	(LH)★D7LY 65423A21-AW	1

♦ Includes attaching parts

◊ For color verification, refer to the vinyl roof swatches in the 1978 Salesman's Color and Upholstery Selections Guide.

1978 MARK V - ROOF and BACK BELT - w/ HALF VINYL ROOF - cont'd.

GROUP NUMBER	PART NAME	DESCRIPTION	PART NUMBER		QTY.
517A02-3	Moulding (roof top)	With rear half vinyl roof			
		◊Black (light gloss)	(RH)★D8LY 65517A02-BA	(LH)★D8LY 65517A03-BA	1
		◊Black (low gloss)	(RH)★D7LY 65517A02-AA	(LH)★D7LY 65517A03-AA	1
		◊Blue (light/	(RH)★D8LY 65517A02-AB	(LH)★D8LY 65517A03-AB	1
		◊Blue (dark/midnight)	(RH)★D7LY 65517A02-BB	(LH)★D7LY 65517A03-BB	1
		◊Champagne (dark)	(RH)★D8LY 65517A02-BU Not replaced (4/84)	(LH)★D8LY 65517A03-BU Not replaced (4/83)	1
		◊Champagne (light)	(RH)★D8LY 65517A02-AU	(LH)★D8LY 65517A03-AU	1
		◊Chamois	(RH)★D7LY 65517A02-CT Not replaced (4/84)	(LH)★D7LY 65517A03-CT	1
		◊Cordovan (dark)	(RH)★D7LY 65517A02-AF	(LH)★D7LY 65517A03-AF	1
		◊Cordovan (light)	(RH)★D8LY 65517A02-AF	(LH)★D8LY 65517A03-AF	1
		◊Cream	(RH)★D7LY 65517A02-AV	(LH)★D7LY 65517A03-AV Not replaced (4/84)	1
		◊Gray	(RH)♦D7LY 65517A02-AP	(LH)♦D7LY 65517A03-AP	1
		◊Jade (dark)	(RH)★D8LY 65517A02-AR	(LH)★D8LY 65517A03-AR Not replaced(4/84)	1
		◊Jade (light)	(RH)★D7LY 65517A02-AR	(LH)★D7LY 65517A03-AR Not replaced (4/84)	1
		◊Red	(RH)★D7LY 65517A02-AD	(LH)★D7LY 65517A03-AD	1
		◊Silver	(RH)★D7LY 65517A02-BP	(LH)★D7LY 65517A03-BP	1
		◊White	(RH)♦D7LY 65517A02-AW	(LH)♦D7LY 65517A03-AW	1
		With front half vinyl roof			
		◊Chamois	(RH)★D7LY 65517A02-ET	(LH)★D7LY 65517A03-ET	1
517A78	Retainer kit (roof top moulding)	W/sliding moon roof	D7LY 65517A78-A		1

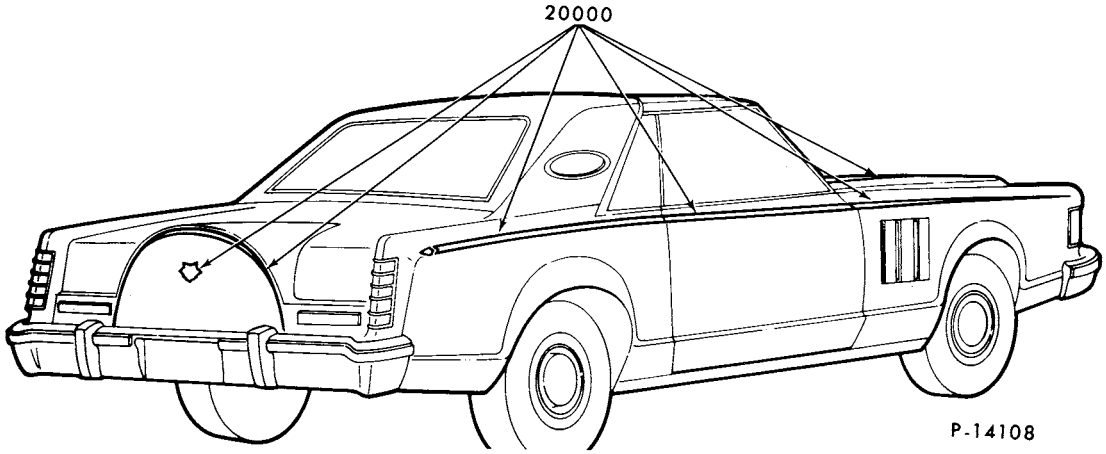

1978 MARK V - STRIPES - DESIGNER SERIES PUCCI

GROUP NUMBER	PART NAME	DESCRIPTION	PART NUMBER	QTY.
20000	Stripes (body side)	Incl.-front fender, door, quarter panel, hood, lugg.compt. door, logo, white, bright red & dark red	D8LY 6520000-AW	1

♦ Includes attaching parts, to be used w/o sliding moon roof. Retainer kit D7LY 65517A78-A must be used to attach moulding with sliding moon roof only

♦ Includes attaching parts

◊ For color verification, refer to the vinyl roof swatches in the 1978 Salesman's Color and Upholstery Selections Guide.

COPYRIGHT © 1986 — FORD MOTOR COMPANY — DEARBORN, MICHIGAN

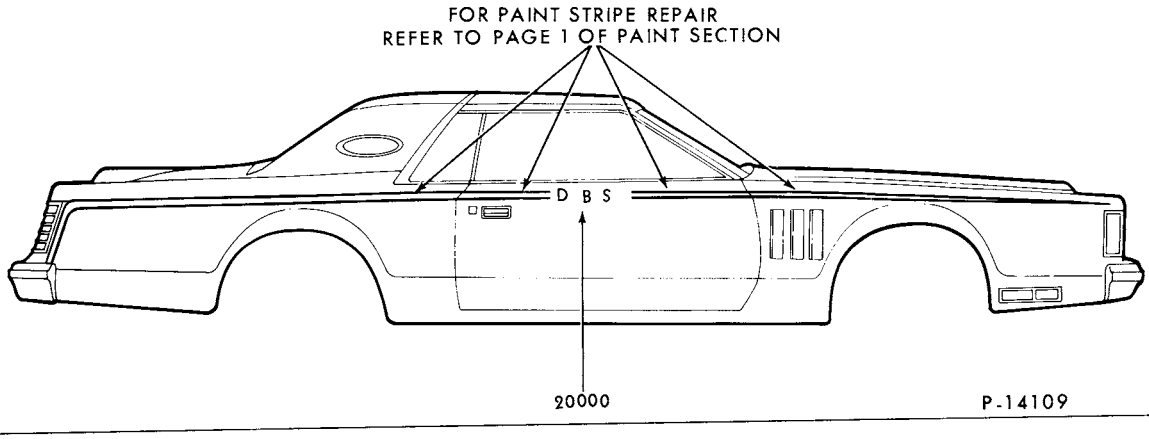

1978 MARK V - TRANSFER - CUSTOMER INITIALS

GROUP NUMBER	PART NAME	DESCRIPTION	PART NUMBER	QTY.
20000	Transfer (owner's monogram)	Incl. 6 sets of each, letters		
		Blue	D8LY 6520000-AB	1
		Gold	D8LY 6520000-AY	1

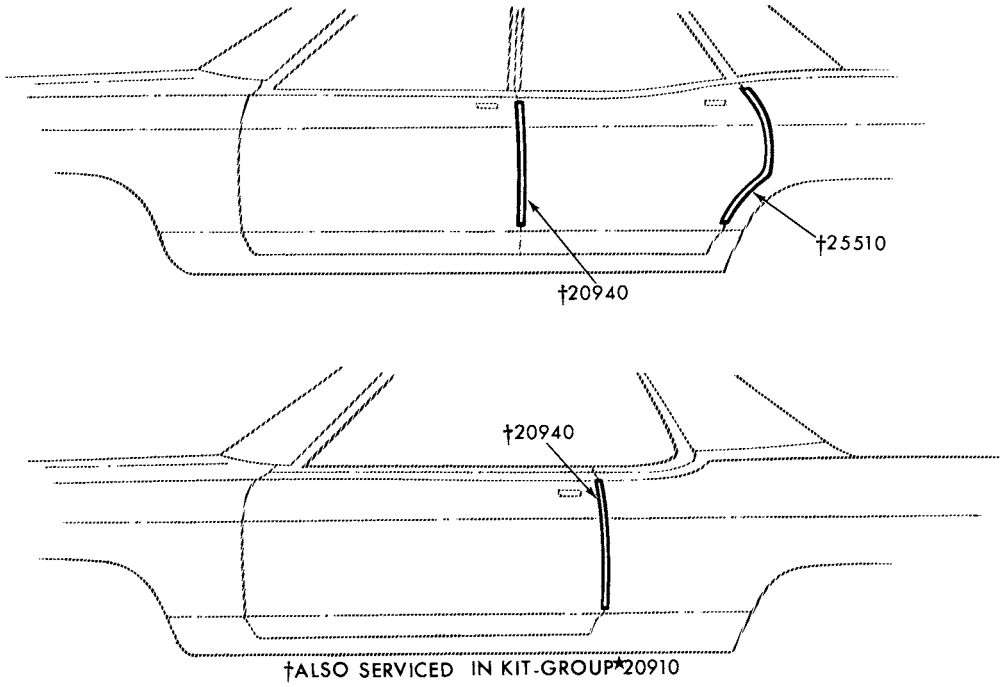

1978 MARK V - DOOR EDGE GUARD

GROUP NUMBER	PART NAME	DESCRIPTION	PART NUMBER	QTY.
20910	Moulding kit (door edge guard)		★ D7LY 6520910-A Not replaced (6/83)	1
20940-1	Moulding (front door edge guard)		(RH) D7LY 6520940-A (LH) D7LY 6520941-A	1

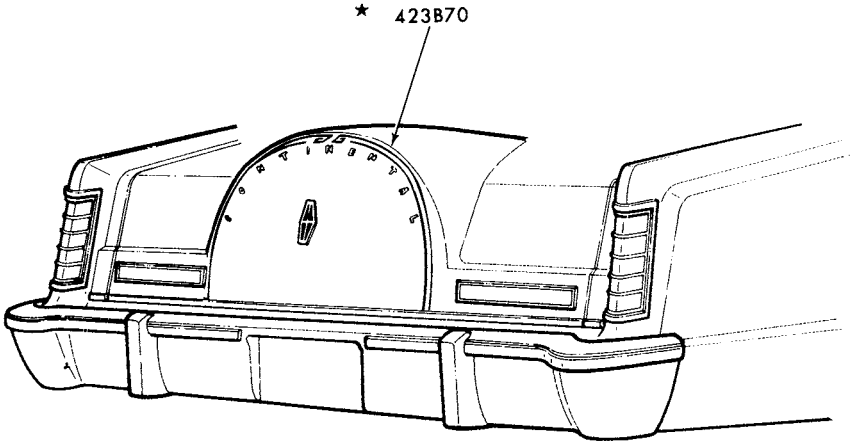

P-13502

1978 MARK V - STRIPE - LUGGAGE COMPARTMENT - DESIGNER SERIES GIVENCHY

GROUP NUMBER	PART NAME	DESCRIPTION	PART NUMBER	QTY.
423B70	Transfer (luggage compartment door)	◊Chamois	★ D7LY 65423B70-DC Not replaced (4/83)	1

◊ For color verification, refer to the vinyl roof swatches in the 1978 Salesman's Color and Upholstery Selections Guide.

COPYRIGHT © 1986 — FORD MOTOR COMPANY — DEARBORN, MICHIGAN

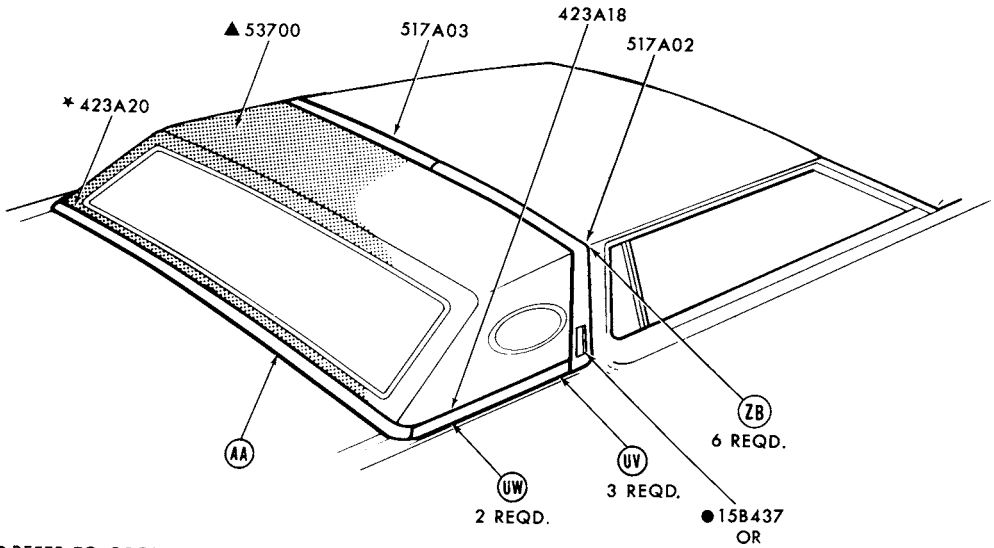

● REFER TO GROUP IN CHASSIS SECTION
▲ REFER TO GROUP IN SOFT TRIM SECTION
REFER TO EXTERIOR MOULDING SECTION 'R' FOR COMPLETE RETAINER INFORMATION

P-14411

1978 MARK V - ROOF and BACK BELT - DIAMOND JUBILEE

GROUP NUMBER	PART NAME	DESCRIPTION	PART NUMBER		QTY.
423A18-9	Moulding (back belt side)	◊Blue (diamond)	(RH)♦D8LY 65423A18-BB	(LH)♦D8LY 65423A19-BB	1
		◊Gold	(RH)♦D8LY 65423A18-AY	(LH)♦D8LY 65423A19-AY	1
423A20-1	Moulding (back belt rear)	◊Blue (diamond)	(RH)✶D8LY 65423A20-BB	(LH)✶D8LY 65423A21-BB Not replaced (4/84)	1
		◊Gold	(RH)✶D8LY 65423A20-AY	(LH)✶D8LY 65423A21-AY	1
517A02-3	Moulding (roof top)	◊Blue (diamond)	(RH)♦D8LY 65517A02-BB	(LH)♦D8LY 65517A03-BB	1
		◊Gold	(RH)✶D8LY 65517A02-AY Not replaced(4/84)	(LH)✶D8LY 65517A03-AY Not replaced (4/84)	1

◊ For color verification, refer to the vinyl roof swatches in the 1978 Salesman's Color and Upholstery Selections Guide.
♦ Includes attaching parts

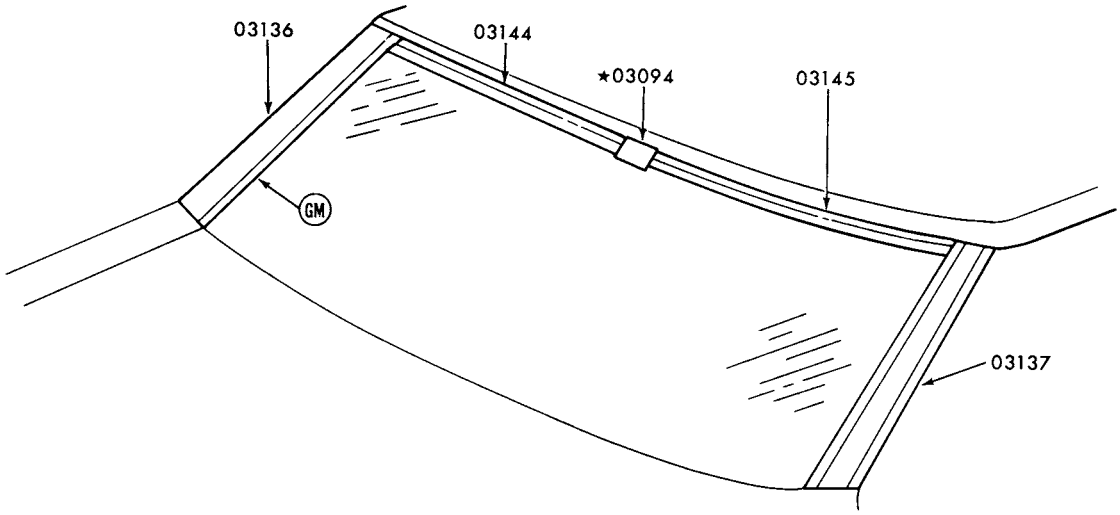

REFER TO EXTERIOR MOULDING SECTION "R" FOR COMPLETE RETAINER INFORMATION P-14467

1978 MARK V - WINDSHIELD - w/ CARRIAGE VINYL ROOF

GROUP NUMBER	PART NAME	DESCRIPTION	PART NUMBER	QTY.
03094	Cover (windshield outside top moulding joint)		★D8LY 6503094-A Not replaced (4/83)	1
03136-7	Moulding (windshield outside)		(RH)♠D8LY 6503136-A (LH)♠D8LY 6503137-A	1
03144-5	Moulding (windshield outside top)		(RH)♠D8LY 6503144-A (LH)♠D8LY 6503145-A	1

♠ Includes attaching parts

COPYRIGHT © 1986 — FORD MOTOR COMPANY — DEARBORN, MICHIGAN

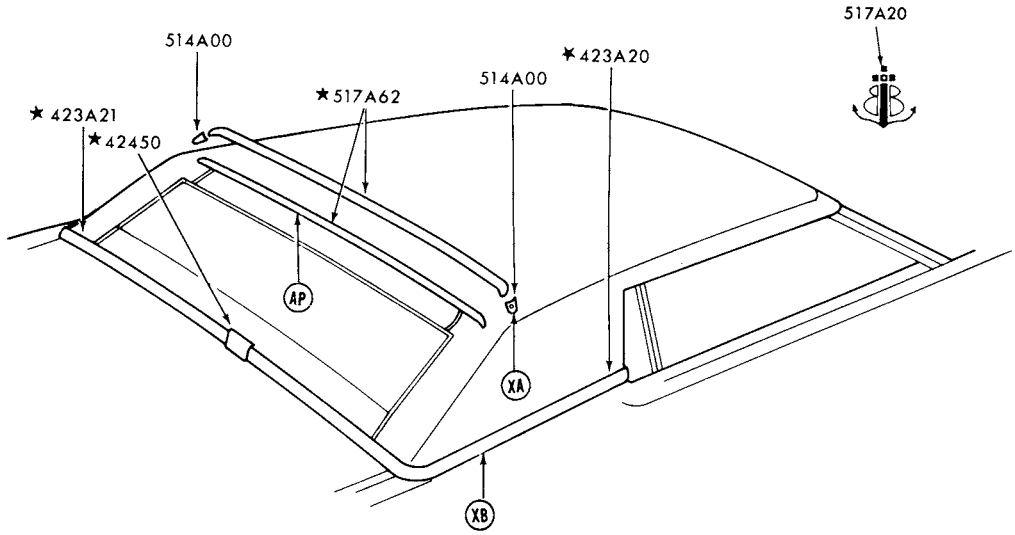

REFER TO EXTERIOR MOULDING SECTION "R" FOR COMPLETE RETAINER INFORMATION P-14466

1978 MARK V - ROOF and BACK BELT - w/ CARRIAGE VINYL ROOF

GROUP NUMBER	PART NAME	DESCRIPTION	PART NUMBER		QTY.
423A20-1	Moulding (back belt rear)		(RH)★D8LY 65423A20-C Not replaced (4/83)	(LH)★D8LY 65423A21-C Not replaced (4/83)	1
42450	Cover (back belt moulding joint)		★D8LY 6542450-A	Not replaced (4/83)	1
514A00	Tip (rear roof bow binding)		C3AZ 76514A00-B	R.H. and L.H.	2
517A62	Moulding (roof outside rear)		★D8LY 65517A62-A	Not replaced (4/83)	1

♦ Includes attaching parts

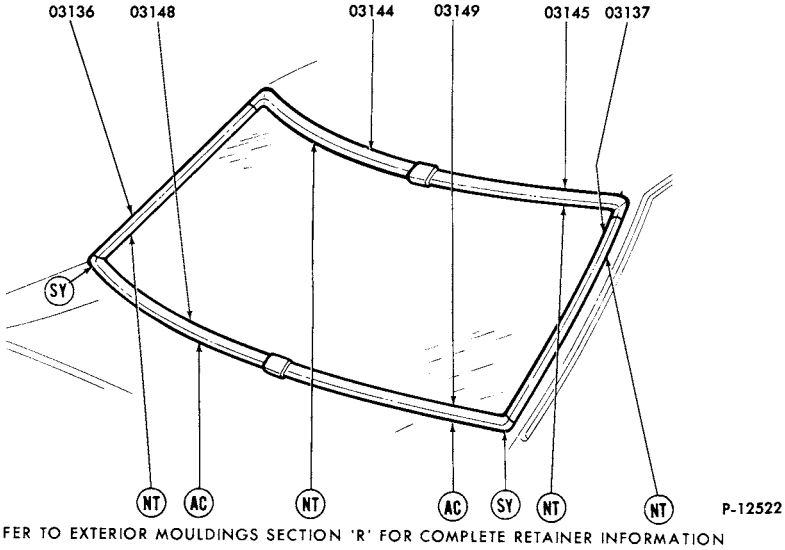

REFER TO EXTERIOR MOULDINGS SECTION 'R' FOR COMPLETE RETAINER INFORMATION

'ION L

1978 BOBCAT - WINDSHIELD

GROUP NUMBER	PART NAME	DESCRIPTION	PART NUMBER		QTY
03136-7	Moulding (windshield outside side)	Bright	(RH)♦D1FZ 6203136-A	(LH)♦D1FZ 6203137-A	1
		Black	(RH)♦D6FZ 6403136-A	(LH)♦D6FZ 6403137-A	1
03144-5	Moulding (windshield outside top)	Bright	(RH)♦D1FZ 6203144-A	(LH)♦D1FZ 6203145-A	1
		Black	(RH)★D6FZ 6403144-A	(LH) D6FZ 6403145-A	1
03148-9	Moulding (windshield outside belt)	Bright	(RH)♦D4FZ 6203148-A	(LH)♦D4FZ 6203149-A	1
		Black	(RH)♦D6FZ 6403148-A	(LH)♦D6FZ 6403149-A	1

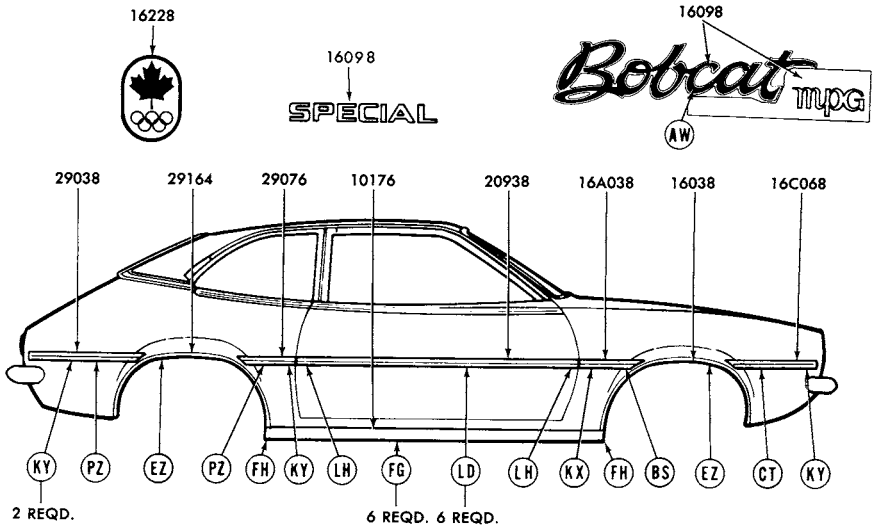

REFER TO EXTERIOR MOULDING SECTION "R" FOR COMPLETE RETAINER INFORMATION.

P-12314

1978 BOBCAT - BODY TYPES 62 and 64 - SIDE

♦ Includes attaching parts

COPYRIGHT © 1986 — FORD MOTOR COMPANY — DEARBORN, MICHIGAN

1978 BOBCAT - BODY TYPES 62 and 64 - SIDE - cont'd.

GROUP NUMBER	PART NAME	DESCRIPTION	PART NUMBER		QTY.
10176-7	Moulding (body rocker panel)	W/wheel opening mouldings - 63 1/2" long	(RH)♠D5FZ 6210176-B	(LH)♠D5FZ 6210177-B	1
		W/o wheel opening mouldings - 64 29/34" long	♠D6FZ 6210176-A		1
16038-9	Moulding (front fender wheel opening)		(RH)♠D5FZ 16038-A	(LH)♠D5FZ 16039-A	1
16A038-9	Moulding (front fender lower rear)	Incl. vinyl insert			
		◊Black	(RH)♠D5FZ 16A038-AA	(LH)♠D5FZ 16A039-AA	1
		◊Blue	(RH)♠D7FZ 16A038-AB	(LH)♠D7FZ 16A039-AB	1
		◊Chamois	(RH)*D8FZ 16A038-AT	(LH)*D8FZ 16A039-AT	1
		◊Jade	(RH)*D8FZ 16A038-AR	(LH)*D8FZ 16A039-AR	1
		◊Red	(RH)♠D6FZ 16A038-AD	(LH)♠D6FZ 16A039-AD	1
		◊White	(RH)♠D7FZ 16A038-AW	(LH)♠D7FZ 16A039-AW	1
16C068-9	Moulding (front fender lower front)		Not used in 1978		
16098	Plate (name)	"Bobcat"	♠D5YY 16098-A	R.H. and L.H.	2
16098	Transfer (front fender)	"MPG"	Not used in 1978		
		"Special MPG"	Not used in 1978		
		"Special"	@D7YY 16098-A	R.H. and L.H.	2
16228	Transfer (front fender)	Olympic crest	Not used in 1978		
20938-9	Moulding (front door outside)	Incl. vinyl insert			
		◊Black	(RH)♠D5FZ 6220938-AA	(LH)♠D5FZ 6220939-AA	1
		◊Blue	(RH)♠D7FZ 6220938-AB	(LH)♠D7FZ 6220939-AB	1
		◊Chamois	(RH)♠D8FZ 6220938-AT	(LH)♠D8FZ 6220939-AT	1
		◊Jade	(RH)♠D8FZ 6220938-AR	(LH)♠D8FZ 6220939-AR	1
		◊Red	(RH)♠D6FZ 6220938-AD	(LH)♠D6FZ 6220939-AD	1
		◊White	(RH)♠D7FZ 6220938-AW	(LH)♠D7FZ 6220939-AW	1
29038-9	Moulding (quarter outside lower rear)		Not used in 1978		
29076-7	Moulding (quarter outside lower front)	Incl. vinyl insert			
		◊Black	(RH)♠D5FZ 6229076-AA	(LH) D5FZ 6229077-AA	1
		◊Blue	(RH ♠D7FZ 6229076-AB	(LH)★D7FZ 6229077-AB	1
		◊Chamois	(RH)♠D8FZ 6229076-AT	(LH)♠D8FZ 6229077-AT	1
		◊Jade	(RH)♠D8FZ 6229076-AR	(LH)♠D8FZ 6229077-AR	1
		◊Red	(RH)♠D6FZ 6229076-AD	(LH)♠D6FZ 6229077-AD	1
		◊White	(RH)♠D7FZ 6229076-AW	(LH)♠D7FZ 6229077-AW	1
29164-5	Moulding (quarter wheel opening)		(RH)♠D5FZ 6229164-A	(LH) D5FZ 6229165-A	1

♠ Includes attaching parts @ Canada only

◊ For color verification, refer to the vinyl roof swatches in the 1978 Salesman's Color and Upholstery Selections Guide.

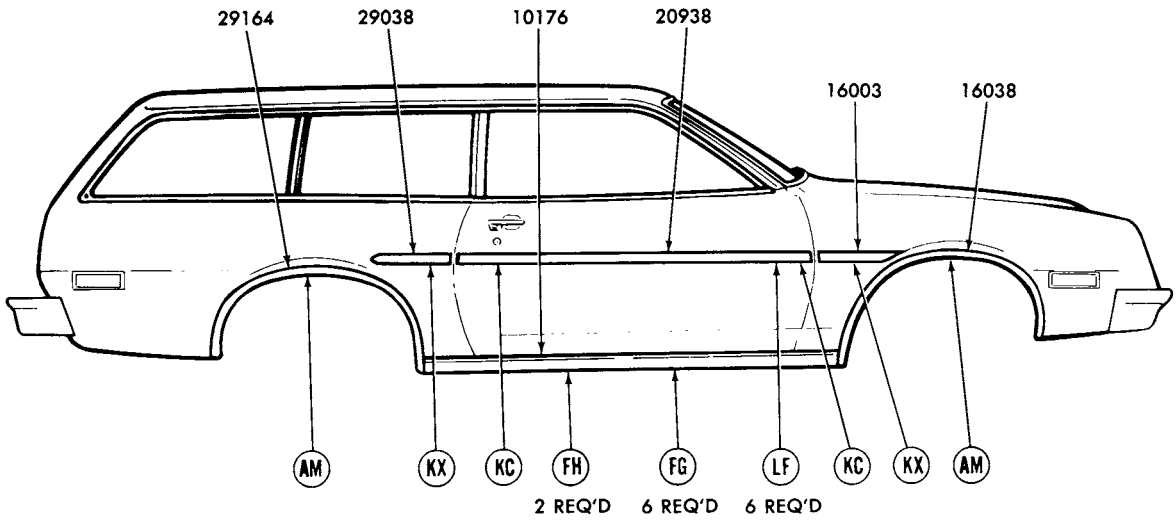

REFER TO EXTERIOR MOULDING SECTION "R" FOR COMPLETE RETAINER INFORMATION

P-13195

1978 BOBCAT - BODY TYPE 73B - SIDE

GROUP NUMBER	PART NAME	DESCRIPTION	PART NUMBER		QTY.
10176-7	Moulding (body rocker panel)	W/wheel opening mouldings	(RH)♦D5FZ 6210176-B	(LH)♦D5FZ 6210177-B	1
		W/o wheel opening mouldings	♦D6FZ 6210176-A	R.H. and L.H.	2
16003	Moulding (front fender side)	Black vinyl insert-adhesive backed-cut to fit	D5DZ 5425532-D	R.H. and L.H.	2
16038-9	Moulding (front fender wheel opening)		(RH)♦D5FZ 16038-A	(LH)♦D5FZ 16039-A	1
20938	Moulding (front door outside)	Black vinyl insert-adhesive backed-cut to fit	D1OZ 6529038-B	R.H. and L.H.	2
29038	Moulding (quarter panel outside)	Black vinyl insert-adhesive backed-cut to fit	D5DZ 5425532-D	R.H. and L.H.	2
29164-5	Moulding (quarter wheel opening)		(RH)♦D5FZ 7329164-A	(LH)♦D5FZ 7329165-A	1

♦ Includes attaching parts

COPYRIGHT © 1986 — FORD MOTOR COMPANY — DEARBORN, MICHIGAN

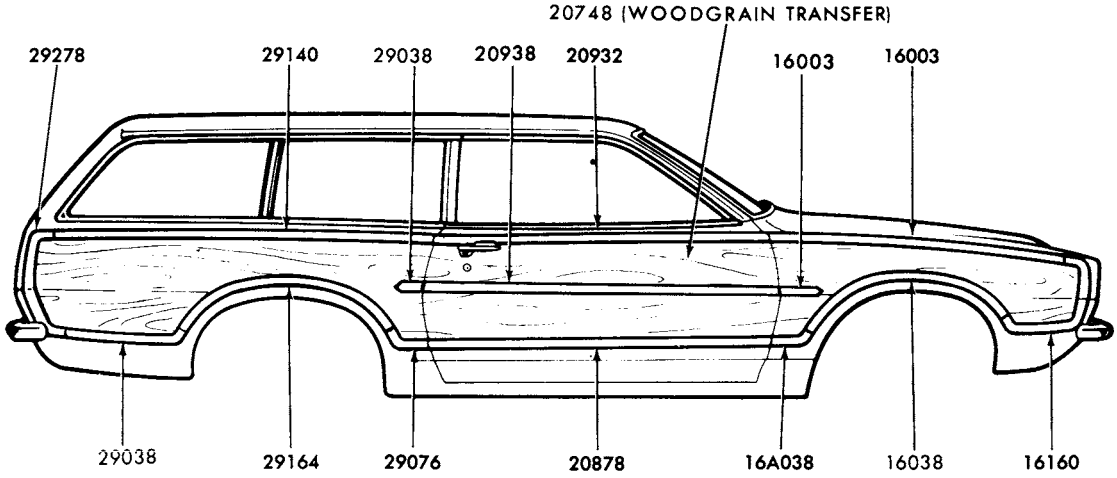

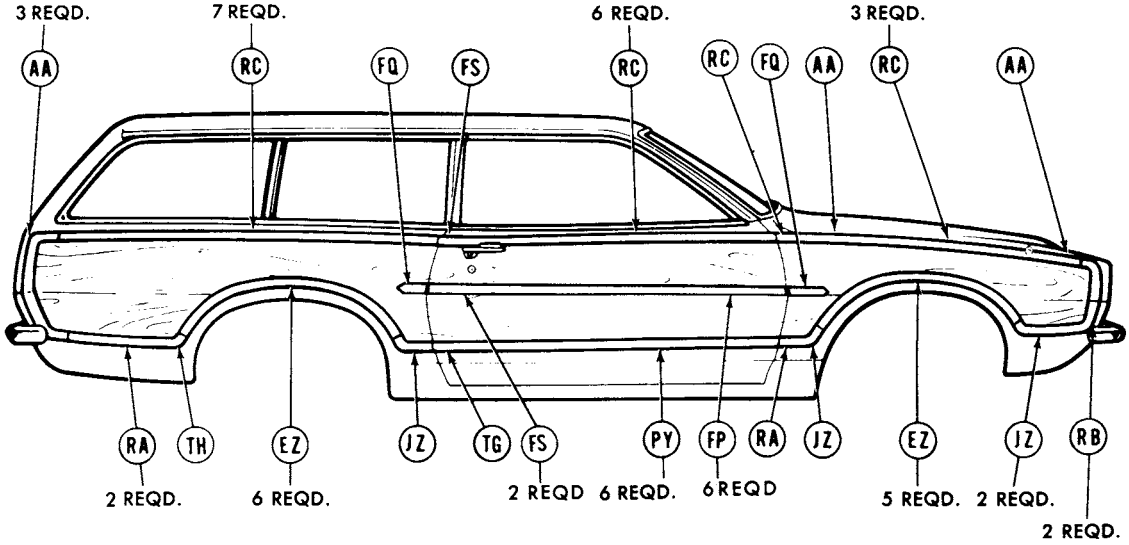

REFER TO EXTERIOR MOULDING SECTION "R" FOR COMPLETE RETAINER INFORMATION.

P-12315

1978 BOBCAT - BODY TYPE 73H - SIDE

1978 BOBCAT - BODY TYPE 73H - SIDE - cont'd.

GROUP NUMBER	PART NAME	DESCRIPTION	PART NUMBER		QTY.
16003-4	Moulding (front fender upper)	Bright finish	(RH)♦D5YY 16003-A	(LH)♦D5YY 16004-A	1
		Brown vinyl insert	♦D7FZ 16003-AT	R.H. and L.H.	2
16038-9	Moulding (front fender wheel opening)		(RH)♦D5YY 16038-A	(LH)♦D5YY 16039-A	1
16A038-9	Moulding (front lower rear)		(RH) D5YY 16A038-A	(LH) D5YY 16A039-A	1
16098	Plate (front fender name)	"BOBCAT"	Not used in 1978		
		"VILLAGER"	♦D2GY 16098-B	R.H. and L.H.	2
16098	Transfer (front fender)	"MPG"	Not used in 1978		
16160-1	Moulding (front fender front)		(RH)♦D5YY 16160-A	(LH)♦D5YY 16161-A	1
20748	Transfer (wood grain)	Rosewood	♦D6YY 7320748-A		AR
20878-9	Moulding (front door outside lower)	Bright finish	(RH)♦D5YY 7320878-A	(LH)♦D5YY 7320879-A	1
20932-3	Moulding (front door outside upper)	Bright finish	(RH)♦D5YY 7320932-A	(LH)♦D5YY 7320933-A	1
20938	Moulding (front door outside)	Brown vinyl insert	♦D7FZ 7320938-BT	R.H. and L.H.	2
29038-9	Moulding (quarter panel)	Bright finish-lower rear	(RH)♦D5YY 7329038-A	(LH)♦D5YY 7329039-A	1
		Brown vinyl insert	♦D7FZ 16003-AT	R.H. and L.H.	2
29076-7	Moulding (quarter outside lower front)	Bright finish	(RH)♦D5YY 7329076-A	(LH)♦D5YY 7329077-A	1
29140-1	Moulding (quarter outside upper)	Bright finish	(RH)♦D5YY 7329140-A	(LH)♦D5YY 7329141-A	1
29164-5	Moulding (quarter wheel opening)	Bright finish	(RH)♦D5YY 7329164-A	(LH)♦D5YY 7329165-A	1
29278-9	Moulding (quarter outside rear)	Bright finish	(RH)♦D5YY 7329278-A	(LH)♦D5YY 7329279-A	1

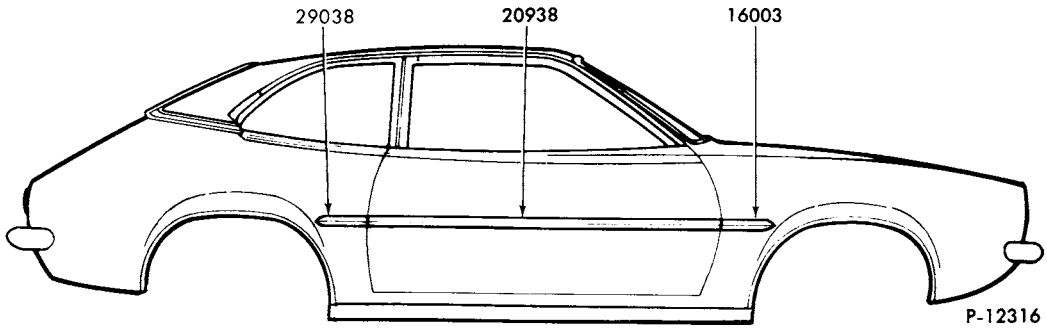

1978 BOBCAT - SIDE PROTECTION

♦ Includes attaching parts

COPYRIGHT © 1986 — FORD MOTOR COMPANY — DEARBORN, MICHIGAN

1978 BOBCAT - SIDE PROTECTION - cont'd.

GROUP NUMBER	PART NAME	DESCRIPTION	PART NUMBER	QTY.
16003	Moulding (front fender side)	Black vinyl insert-adhesive backed-cut to fit	D5DZ 5425532-D R.H. and L.H.	2
20938	Moulding (front door outside)	Black vinyl insert-adhesive backed-cut to fit	D1OZ 6529038-B R.H. and L.H.	2
29038	Moulding (quarter panel outside)	Black vinyl insert-adhesive backed-cut to fit	D5DZ 5425532-D R.H. and L.H.	2

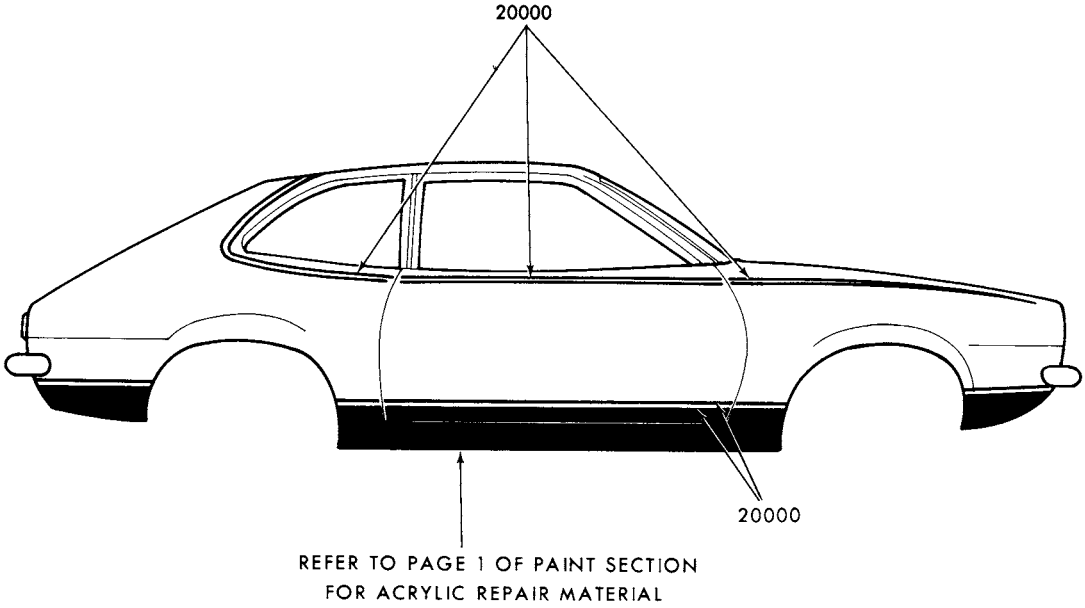

P-12779

1977 BOBCAT - BODY TYPES 62 and 64 - STRIPES

GROUP NUMBER	PART NAME	DESCRIPTION	PART NUMBER	QTY.
20000	Stripe kit	Blue-1 1/2" wide x 25' roll	D7YY 6220000-AB	1
		Brown	★D7YY 6220000-AT Not replaced (6/82)	1
		Jade	D8FZ 6220000-E	1
		Red	D6FZ 6220000-D	1
		White	D4FZ 6220000-B	1
20000	Stripe kit (body side upper)	Blue-complete	D6FZ 6220000-A	1
		Jade	★D8FZ 6220000-AA Not replaced (6/82)	1
		Orange	D6FZ 6220000-C	1
		Red	D6FZ 6220000-H	1
		White	★D6FZ 6220000-E Not replaced (6/82)	1

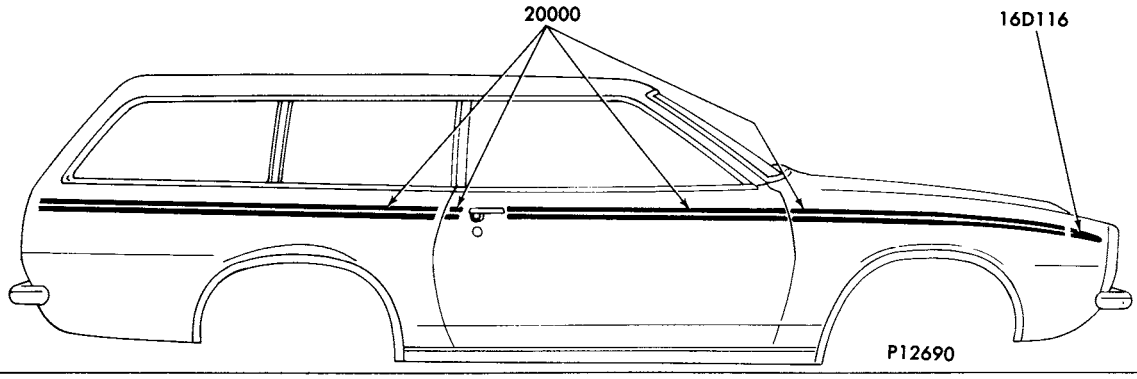

1978 BOBCAT - BODY TYPE 73 - STRIPES

GROUP NUMBER	PART NAME	DESCRIPTION	PART NUMBER	QTY.
16D116-7	Transfer (front fender front)	Gold	(RH) D5YY 16D116-A (LH) D5YY 16D117-A	1
20000	Stripe kit (body side)	Gold-1 1/2" wide x 25' roll	D5YY 7320000-A	1

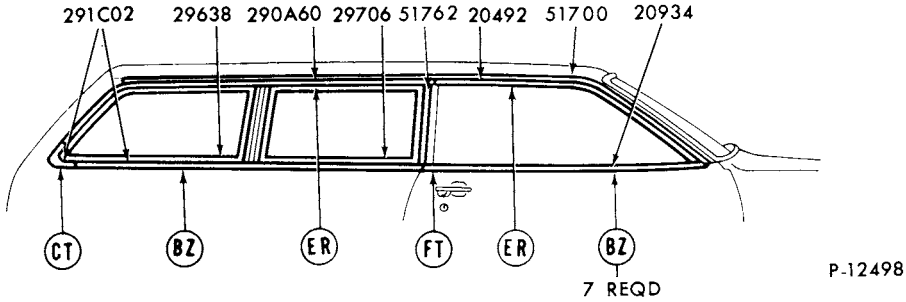

REFER TO EXTERIOR MOULDING SECTION 'R' FOR COMPLETE RETAINER INFORMATION

1978 BOBCAT - BODY TYPE 73 - DOOR and QUARTER WINDOW FRAME

GROUP NUMBER	PART NAME	DESCRIPTION	PART NUMBER	QTY.
20492-3	Moulding (front door window frame top)	Bright	(RH) D2FZ 7320492-B (LH) D2FZ 7320493-B	1
		Black	(RH)♦D8YY 7320492-A (LH)♦D8YY 7320493-A	1
20934-5	Moulding (front door outside belt)	R.H.-w/mirror	(RH)♦D2FZ 7320934-D (LH)♦D2FZ 7320935-B	1
		R.H.-w/o mirror-bright	(RH)♦D2FZ 7320934-C (LH)♦D2FZ 7320935-B	1
		Black	(RH)♦D8YY 7320934-A (LH)♦D8YY 7320935-A	1
290A60-1	Moulding (quarter window outside upper)	Bright	(RH)♦D2FZ 73290A60-A (LH)♦D2FZ 73290A61-A	1
		Black	(RH)♦D8YY 73290A60-A (LH)♦D8YY 73290A61-A	1
291C02-3	Moulding (quarter window outside lower rear)	Bright	(RH)♦D2FZ 73291C02-A (LH)♦D2FZ 73291C03-A	1
		Black	(RH)♦D8YY 73291C02-A (LH)♦D8YY 73291C03-A	1
29638-9	Moulding (rear quarter window outside front)	Bright	(RH) D4FZ 7329638-A (LH) D4FZ 7329639-A	1
		Black	(RH) D8YY 7329638-A (LH) D8YY 7329639-A	1
29706-7	Moulding (front quarter window)	Serviced only in assy.-refer to group 29706-11 in text section		

♦ Includes attaching parts

COPYRIGHT © 1986 — FORD MOTOR COMPANY — DEARBORN, MICHIGAN

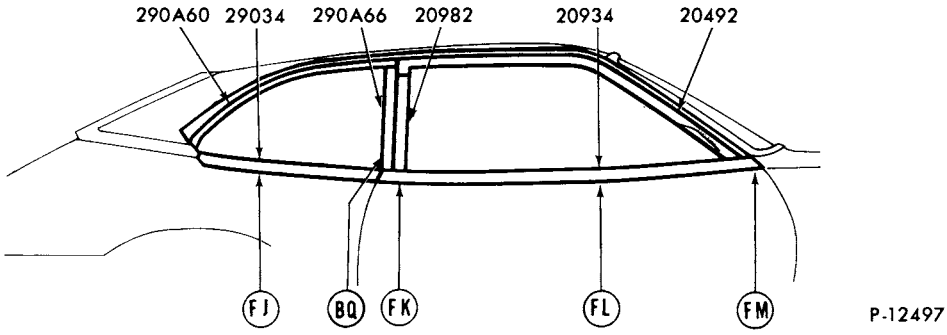

REFER TO EXTERIOR MOULDING SECTION 'R' FOR COMPLETE RETAINER INFORMATION

1978 BOBCAT - BODY TYPES 62 and 64 - DOOR and QUARTER WINDOW FRAME

GROUP NUMBER	PART NAME	DESCRIPTION	PART NUMBER		QTY
20492-3	Moulding (front door window frame top)		(RH)♦D1FZ 6220492-A	(LH)♦D1FZ 6220493-A	1
20934-5	Moulding (front door outside belt)	R.H.-bright-w/mirror	♦D4FZ 6220934-B		1
		R.H.-black	♦D7FZ 6220934-A		1
		R.H.-bright-w/o mirror	♦D4FZ 6220934-A		1
		L.H.-bright	♦D4FZ 6220935-A		1
		L.H.-black	♦D6FZ 6420935-A		1
20982-3	Moulding (front door window frame rear)		(RH) D2FZ 6220982-A	(LH) D2FZ 6220983-A	1
29034-5	Moulding (quarter outside belt)	Bright	(RH)♦D2FZ 6229034-A	(LH)♦D2FZ 6229035-A	1
		Black	(RH)♦D6FZ 6429034-A	(LH)♦D6FZ 6429035-A	1
290A60-1	Moulding (quarter window outside upper)	One piece design-w/stationary window	(RH) D2FZ 62290A60-B	(LH) D2FZ 62290A61-B	1
		Two piece design-w/stationary window	(RH) D2FZ 62290A60-C	(LH) D2FZ 62290A61-C	1
290A66-7	Moulding (quarter window outside front)	Two piece design-	(RH) D2FZ 62290A66-B	(LH) D2FZ 62290A67-B	1

♦ Includes attaching parts

1973/79
LINCOLN—MERCURY CARS

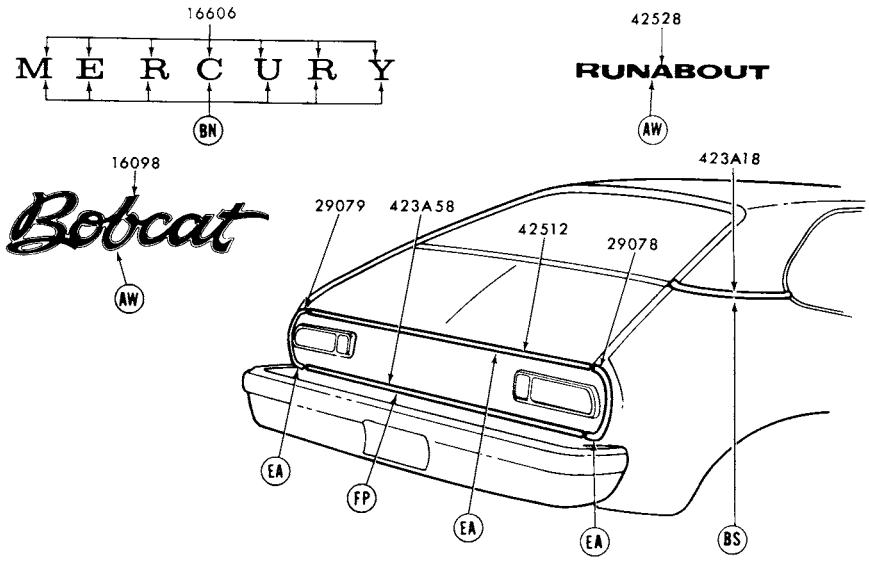

REFER TO EXTERIOR MOULDING SECTION "R" FOR COMPLETE RETAINER INFORMATION P-11415

1978 BOBCAT - BODY TYPES 62 and 64 - BACK END

GROUP NUMBER	PART NAME	DESCRIPTION	PART NUMBER	QTY.
16098	Plate (luggage compartment name)	"Bobcat"	D5YY 16098-A	1
16606	Letter (luggage compartment door)	"M"	♦D54Y 16606-A	1
		"E"	♦D54Y 16606-B	1
		"R"	♦D54Y 16606-C	2
		"C"-body type 62	♦D5YY 6240282-A	1
		"C"-body type 64	♦D5YY 6440282-A	1
		"U"	♦D54Y 16606-E	1
		"Y"	♦D54Y 16606-F	1
29078-9	Moulding (quarter panel extension)		(RH)♦D4FZ 6229078-A (LH)♦D4FZ 6229079-A	1
423A18-9	Moulding (back belt outside side)		Not used in 1978	
423A58	Moulding (lower back panel)		♦D4FZ 62423A58-A	1
42512	Moulding (luggage compartment door)		♦D4FZ 6242512-A	1
42528	Plate (luggage compartment door name)	"RUNABOUT"	Not used in 1978	

♦ Includes attaching parts

COPYRIGHT © 1986 — FORD MOTOR COMPANY — DEARBORN, MICHIGAN

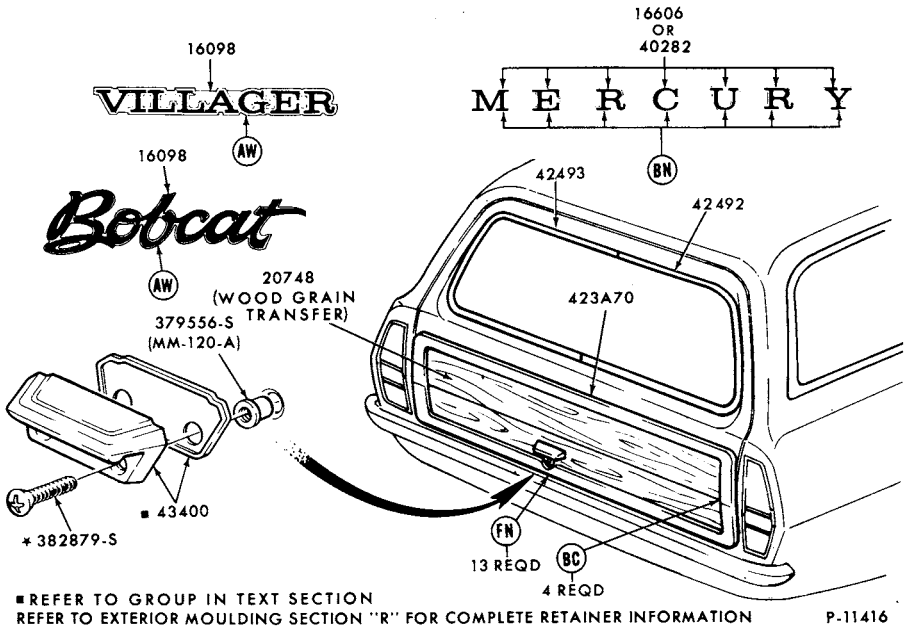

1978 BOBCAT - BODY TYPE 73 - BACK END

GROUP NUMBER	PART NAME	DESCRIPTION	PART NUMBER	QTY
16098	Plate (liftgate name)	"Bobcat"	D5YY 16098-A	1
		"Villager"	★D2GY 16098-B	1
16606	Letter (liftgate door)	"M"	♦D54Y 16606-A	1
		"E"	♦D54Y 16606-B	1
		"R"	♦D54Y 16606-C	2
		"C"	♦D5YY 6440282-A	1
		"U"	♦D54Y 16606-E	1
		"Y"	♦D54Y 16606-F	1
423A70	Moulding (liftgate outside)		♦D5YY 73423A70-A	1
42492-3	Moulding (back window outside side)	Bright	(RH) D2FZ 7342492-A (LH) D2FZ 7342493-A	1
		Black	(RH) D8YY 7342492-A (LH) D8YY 7342493-A	1

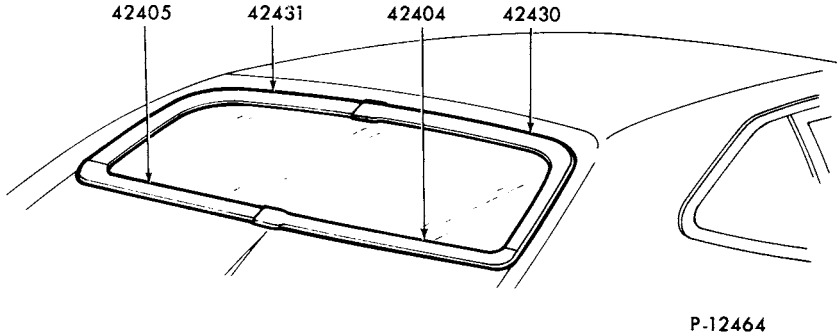

1978 BOBCAT - BODY TYPE 62 - BACK WINDOW

♦ Includes attaching parts

1978 BOBCAT - BODY TYPE 62 - BACK WINDOW - cont'd.

GROUP NUMBER	PART NAME	DESCRIPTION	PART NUMBER		QTY.
42434-5	Moulding (back window outside lower)		(RH) D1FZ 6242434-A	(LH) D1FZ 6242435-A	1
42430-1	Moulding (back window outside upper)		(RH) D1FZ 6242430-A	(LH) D1FZ 6242431-A	1

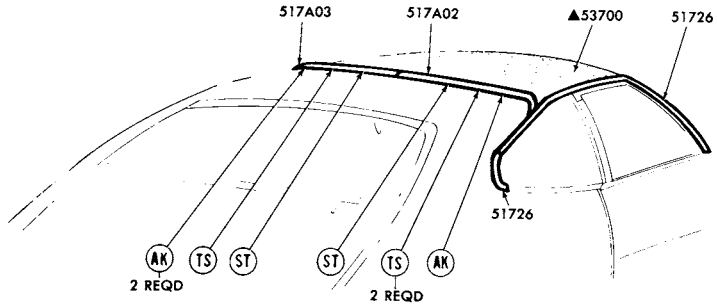

▲REFER TO GROUP IN SOFT TRIM SECTION
REFER TO EXTERIOR MOULDING SECTION "R" FOR COMPLETE RETAINER INFORMATION

P-12811

1978 BOBCAT - BODY TYPES 62 and 64 - ROOF DRIP SIDE and PARTIAL VINYL ROOF

GROUP NUMBER	PART NAME	DESCRIPTION	PART NUMBER		QTY
517A02-3	Moulding (roof outside top)	Half vinyl roof	(RH)♠ D6FZ 62517A02-A	(LH)♠ D6FZ 62517A03-A	1
51726-7	Moulding (roof drip side finish)	Rear-w/vinyl roof	(RH) D4FZ 6251726-B	(LH) D4FZ 6251727-B	1
		Front-w/vinyl roof	(RH) D4FZ 6251726-D	(LH) D4FZ 6251727-D	1
		W/o vinyl roof	(RH) D7FZ 6251726-A	(LH) D7FZ 6251727-A	1

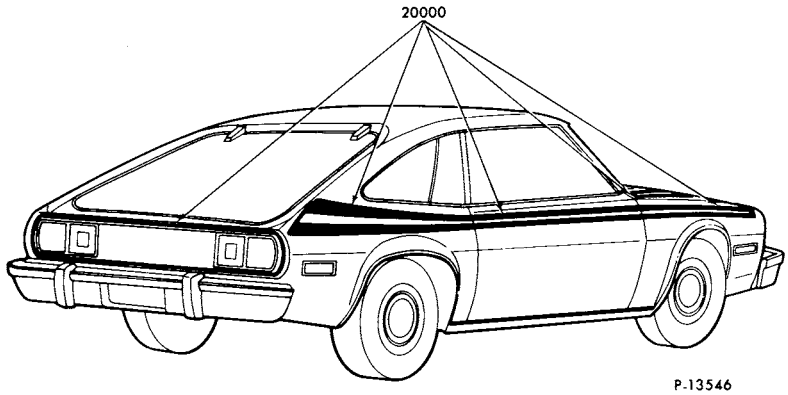

P-13546

1978 BOBCAT - BODY TYPE 64 - STRIPES

♠ Includes attaching parts

COPYRIGHT © 1986 — FORD MOTOR COMPANY — DEARBORN, MICHIGAN

1978 BOBCAT - BODY TYPE 64 - STRIPES - cont'd.

GROUP NUMBER	PART NAME	DESCRIPTION	PART NUMBER	QTY.
20000	Stripe kit - complete	Consists: hood cowl, fender door, gas cap, quarter panel, lower back panel and extension		
		Multi-color: red, orange and yellow	D8YY 6420000-BD	1
		Plum, blue-light and medium	D8YY 6420000-BB	1
		Yellow, white and orange	D8YY 6420000-BE	1
		Yellow-orange, orange-dark, and yellow-chrome	D8YY 6420000-BC	1
		Consists: door and quarter panel upper		
		Black	D6YY 6420000-B	1

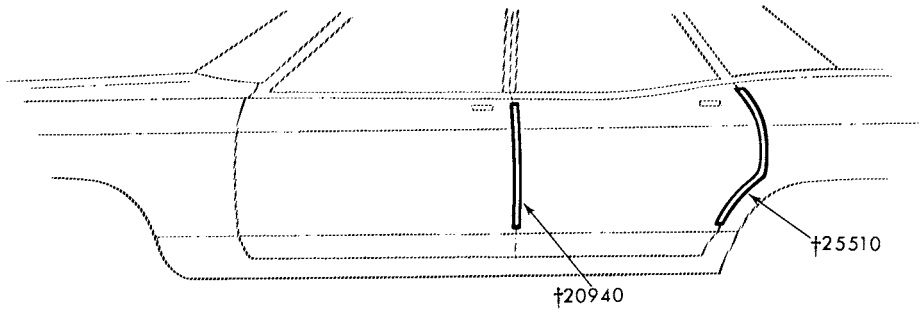

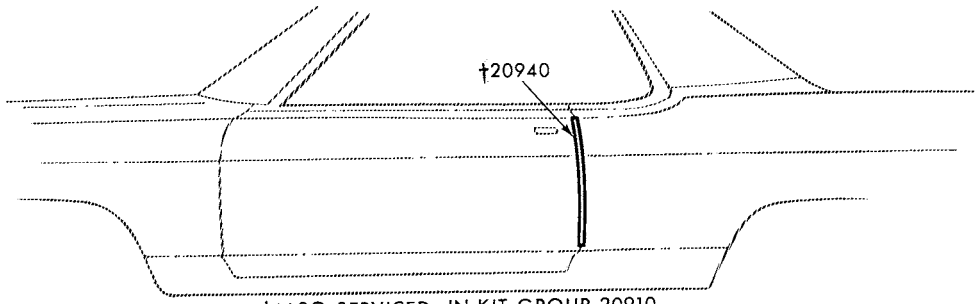

†ALSO SERVICED IN KIT-GROUP 20910

P-10061

1978 BOBCAT - DOOR EDGE GUARD

GROUP NUMBER	PART NAME	DESCRIPTION	PART NUMBER	QTY.
20910	Moulding kit (door edge guard)	Bright	★D1FZ 6220910-A Not replaced (6/83)	1
		Woodgrain	D2FZ 7320910-A	1
20940-1	Moulding (door edge guard)	Bright	(RH) D7FZ 6220940-A (LH) D7FZ 6220941-A	1
		Woodgrain	(RH) D3FZ 7320940-A (LH) D3FZ 7320941-A	1

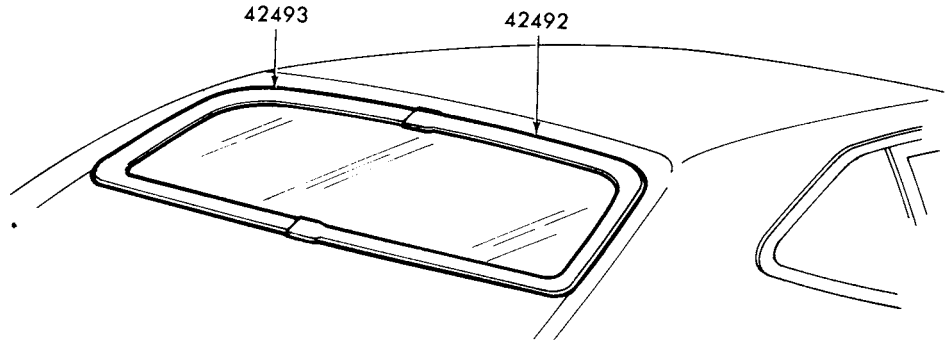

1978 BOBCAT - BODY TYPE 64 - BACK WINDOW

GROUP NUMBER	PART NAME	DESCRIPTION	PART NUMBER	QTY.
42492-3	Moulding (back window outside side)		(RH) D2FZ 6442492-A (LH) D2FZ 6442493-A	1

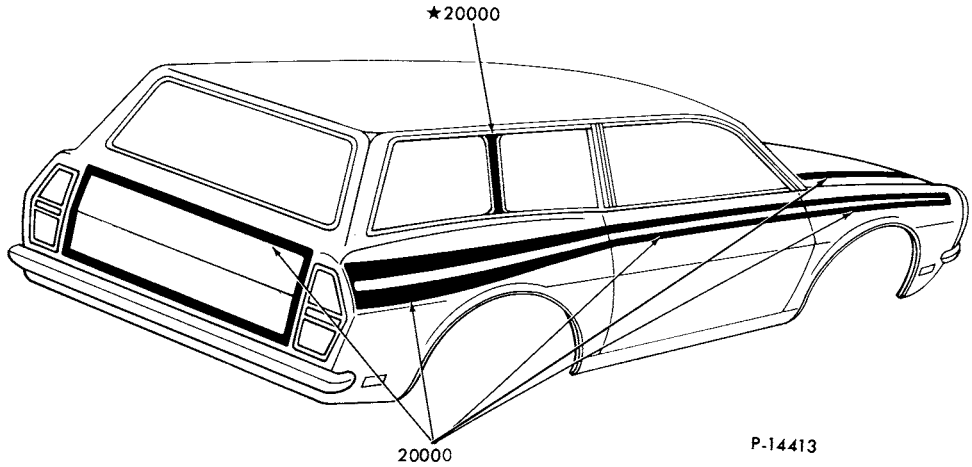

1978 BOBCAT - BODY TYPE 73 - STRIPES

GROUP NUMBER	PART NAME	DESCRIPTION	PART NUMBER	QTY.
20000	Stripe kit (body side)	Consist of hood, fender, door, quarter panel, fuel filler cap & tail gate		
		Blue (light and medium) and plum	D8YY 7320000-AB	1
		Orange/white/yellow light) and white	D8YY 7320000-AE	1
		Orange (dark and light) and yellow	D8YY 7320000-AC	1
		Red, orange and yellow	D8YY 7320000-AD	1

COPYRIGHT © 1986 — FORD MOTOR COMPANY — DEARBORN, MICHIGAN

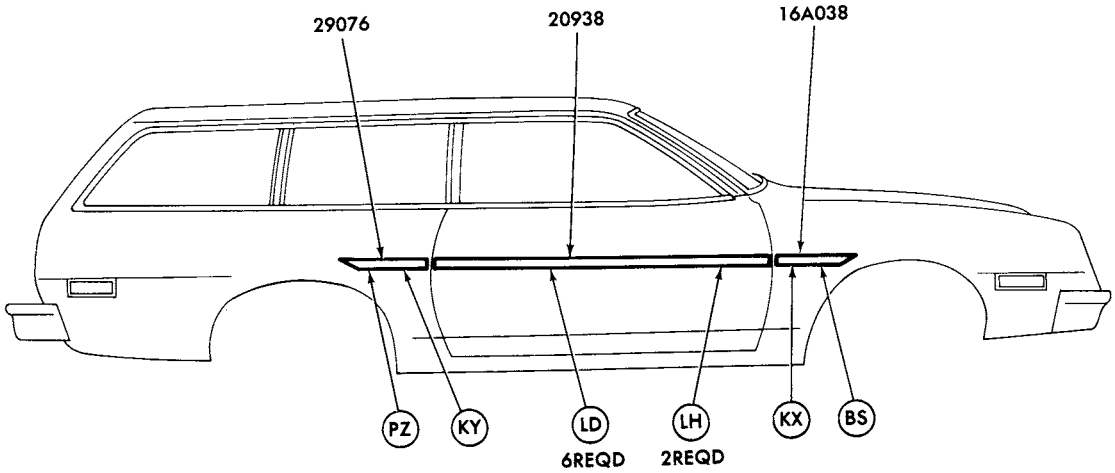

REFER TO EXTERIOR MOULDING SECTION "R" FOR COMPLETE RETAINER INFORMATION

P-13512

1978 BOBCAT - BODY TYPE 73 - SIDE

GROUP NUMBER	PART NAME	DESCRIPTION	PART NUMBER		QTY.
16A038-9	Moulding (front fender lower rear)	Incl. vinyl insert			
		◊Blue	(RH)♦D7FZ 16A038-AB	(LH)♦D7FZ 16A039-AB	1
		◊Chamois	(RH)★D8FZ 16A038-AT	(LH)★D8FZ 16A039-AT	1
		◊Jade	(RH)★D8FZ 16A038-AR	(LH)★D8FZ 16A039-AR	1
		◊Red	(RH)♦D6FZ 16A038-AD	(LH)♦D6FZ 16A039-AD	1
		◊White	(RH)♦D7FZ 16A038-AW	(LH)♦D7FZ 16A039-AW	1
20938-9	Moulding (front door outside)	Incl. vinyl insert			
		◊Blue	(RH)♦D7FZ 6220938-AB	(LH)♦D7FZ 6220939-AB	1
		◊Chamois	(RH)♦D8FZ 6220938-AT	(LH)♦D8FZ 6220939-AT	1
		◊Jade	(RH)♦D8FZ 6220938-AR	(LH)♦D8FZ 6220939-AR	1
		◊Red	(RH)♦D6FZ 6220938-AD	(LH)♦D6FZ 6220939-AD	1
		◊White	(RH)♦D7FZ 6220938-AW	(LH)♦D7FZ 6220939-AW	1
29076-7	Moulding (quarter outside lower front)	Incl. vinyl insert			
		◊Blue	(RH)♦D7FZ 6229076-AB	(LH)★D7FZ 6229077-AB	1
		◊Chamois	(RH)♦D8FZ 6229076-AT	(LH)♦D8FZ 6229077-AT	1
		◊Jade	(RH)♦D8FZ 6229076-AR	(LH)♦D8FZ 6229077-AR	1
		◊Red	(RH)♦D6FZ 6229076-AD	(LH)♦D6FZ 6229077-AD	1
		◊White	(RH)♦D7FZ 6229076-AW	(LH)♦D7FZ 6229077-AW	1

♦ Includes attaching parts

◊ For color verification, refer to the vinyl roof swatches in the 1978 Salesman's Color and Trim Selections Guide.

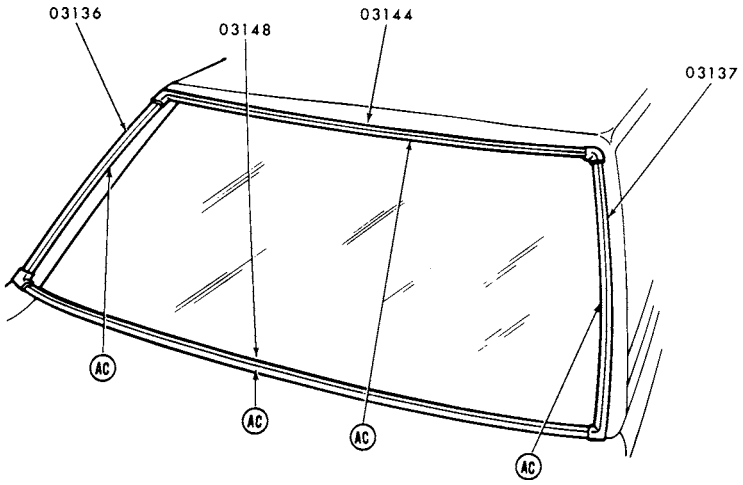

REFER TO EXTERIOR MOULDING SECTION 'R'
FOR COMPLETE RETAINER INFORMATION

P-13998

1978 ZEPHYR - WINDSHIELD

GROUP NUMBER	PART NAME	DESCRIPTION	PART NUMBER		QTY.
03136-7	Moulding (windshield side)	Body type 36R	(RH)♦D8BZ 3603136-A	(LH)♦D8BZ 3603137-A	1
		Body types 54,66,74	(RH)♦D8BZ 5403136-A	(LH)♦D8BZ 5403137-A	1
03144	Moulding (windshield top)	Body type 36R	♦D8BZ 3603144-A		1
		Body types 54,66,74	♦D8BZ 5403144-A		1
03148	Moulding (windshield belt)		♦D8BZ 5403148-A		1

♦ Includes attaching parts

COPYRIGHT © 1986 — FORD MOTOR COMPANY — DEARBORN, MICHIGAN

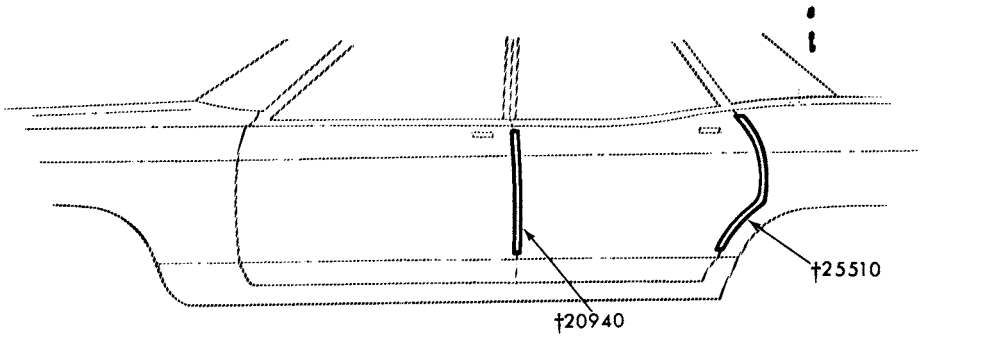

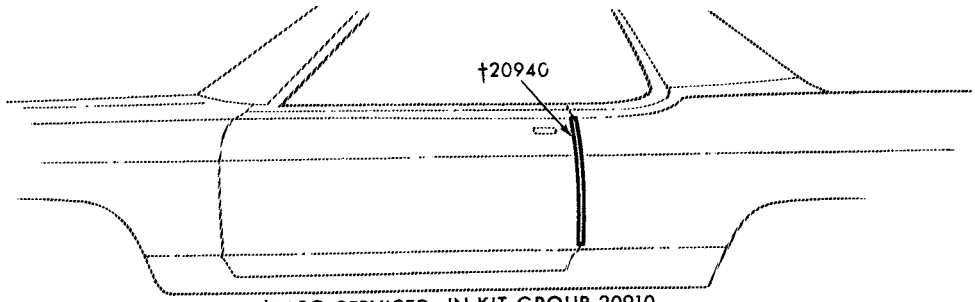

†ALSO SERVICED IN KIT-GROUP 20910

P-10061

1978 ZEPHYR - DOOR EDGE GUARDS

GROUP NUMBER	PART NAME	DESCRIPTION	PART NUMBER	QTY.
20910	Moulding kit (door edge guard)	Bright- Body types 54,74- cut to fit	D8BZ 5420910-A	1
		Body types 36,66- cut to fit	D8BZ 6620910-A	1
		Wood grain- Body type 74	D8BZ 7420910-A	1
20940-1	Moulding (front door edge guard)	Bright- Body types 54,74- cut to fit	(RH) D8BZ 5420940-A (LH) D8BZ 5420941-A	1
		Body types 36,66- cut to fit	(RH) D8BZ 6620940-A (LH) D8BZ 6620941-A	1
		Wood grain- Body type 74	(RH) D8BZ 7420940-A (LH) D8BZ 7420941-A	1
25510-1	Moulding (rear door edge guard)	Bright- Body types 54,74- cut to fit	(RH) D8BZ 5425510-A (LH) D8BZ 5425511-A	1
		Wood grain- Body type 74	(RH) D8BZ 7425510-A (LH) D8BZ 7425511-A	1

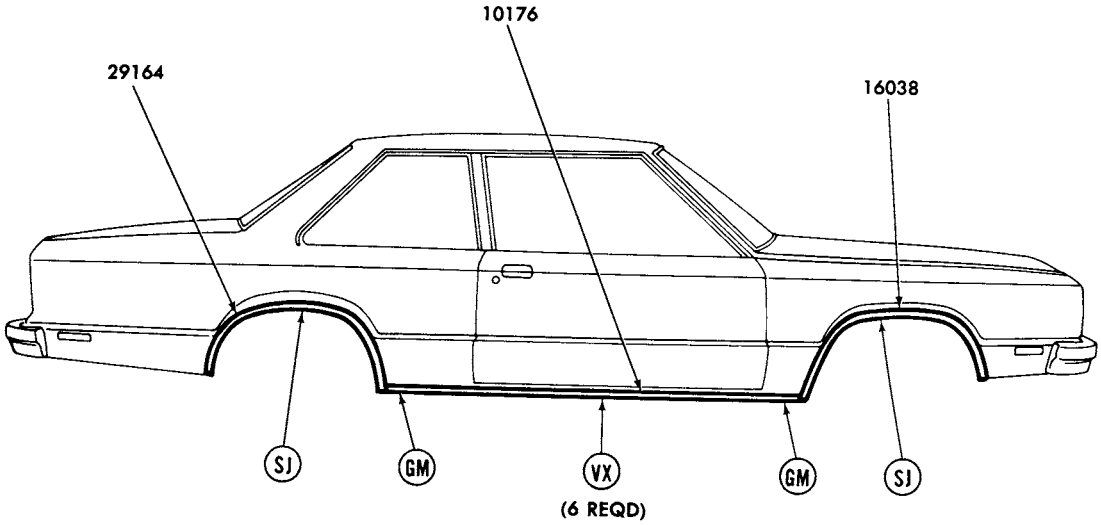

REFER TO EXTERIOR MOULDING SECTION 'R' FOR COMPLETE RETAINER INFORMATION

P-14069

1978 ZEPHYR - ROCKER PANEL and WHEEL OPENING - SIDE

GROUP NUMBER	PART NAME	DESCRIPTION	PART NUMBER	QTY.
10176-7	Moulding (body rocker panel)	72 3/4" long	♦D8BZ 5410176-A	2
16038-9	Moulding (front fender wheel opening)		(RH)♦D8BZ 16038-A (LH)♦D8BZ 16039-A	1
29164-5	Moulding (quarter wheel opening)		(RH)♦D8BZ 5429164-A (LH)♦D8BZ 5429165-A	1

♦ Includes attaching parts

COPYRIGHT © 1986 — FORD MOTOR COMPANY — DEARBORN, MICHIGAN

New Issue

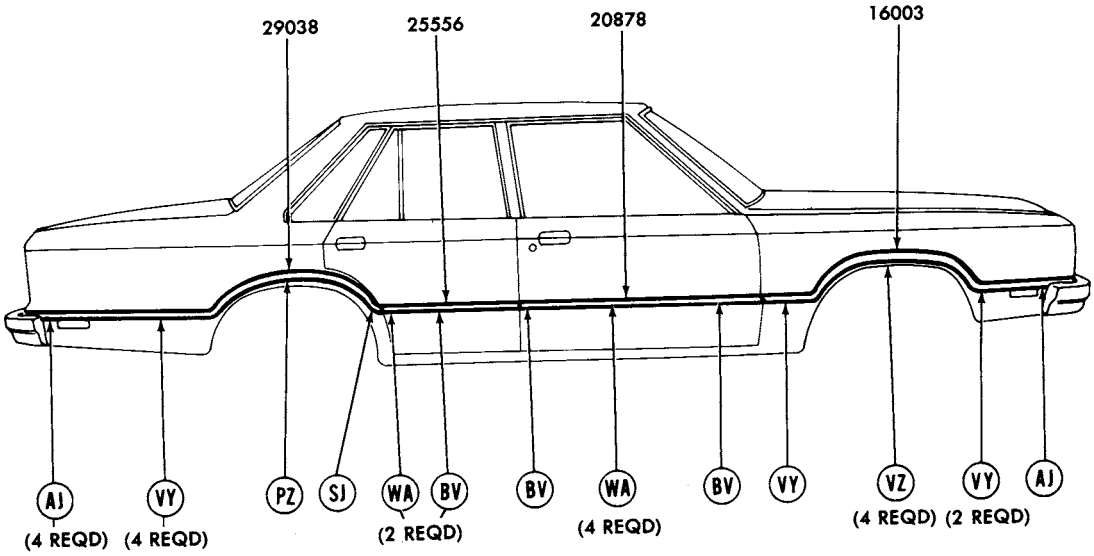

REFER TO EXTERIOR MOULDING SECTION 'R' FOR COMPLETE RETAINER INFORMATION P-14072

1978 ZEPHYR - BODY TYPE 54 - SIDE - w/VINYL INSERT

GROUP NUMBER	PART NAME	DESCRIPTION	PART NUMBER		QTY.
16003-4	Moulding (front fender)	Black vinyl insert	(RH)♦D8BZ 16003-BA	(LH)♦D8BZ 16004-BA	1
20878-9	Moulding (front door)	Black vinyl insert	(RH)♦D8BZ 5420878-BA	(LH)♦D8BZ 5420879-BA	1
25556-7	Moulding (rear door)	Black vinyl insert	(RH)♦D8BZ 5425556-BA	(LH)♦D8BZ 5425557-BA	1
29038-9	Moulding (quarter panel)	Black vinyl insert	(RH)♦D8BZ 5429038-BA	(LH)♦D8BZ 5429039-BA	1

♦ Includes attaching parts

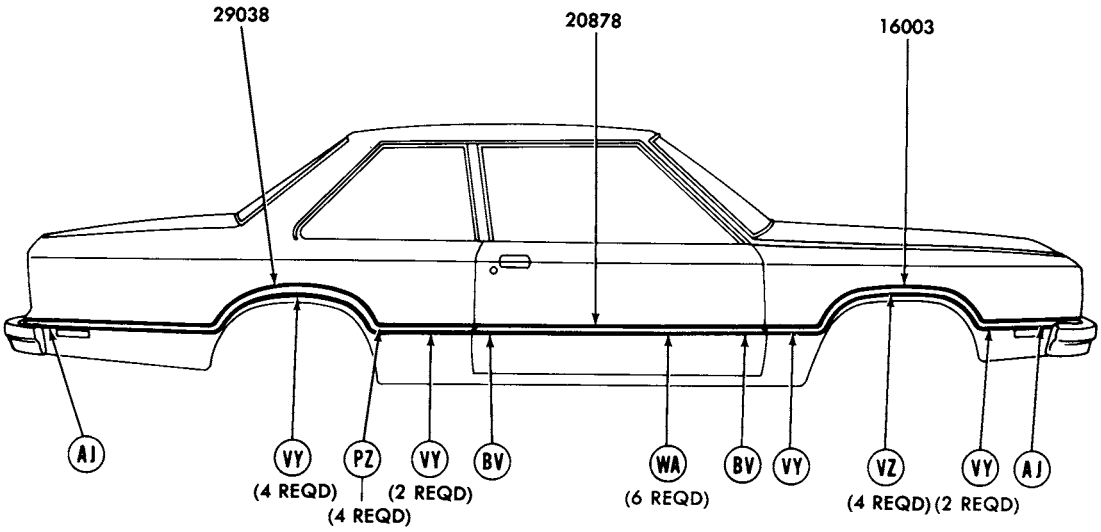

REFER TO EXTERIOR MOULDING SECTION 'R' FOR COMPLETE RETAINER INFORMATION

P-14070

1978 ZEPHYR - BODY TYPE 66 - SIDE - w/VINYL INSERT

GROUP NUMBER	PART NAME	DESCRIPTION	PART NUMBER		QTY
16003-4	Moulding (front fender)	Black vinyl insert	(RH)♦D8BZ 16003-BA	(LH)♦D8BZ 16004-BA	1
20878-9	Moulding (door)	Black vinyl insert	(RH)♦D8BZ 6620878-BA	(LH)♦D8BZ 6620879-BA	1
29038-9	Moulding (quarter panel)	Black vinyl insert	(RH)♦D8BZ 6629038-BA	(LH)♦D8BZ 6629039-BA	1

♦ Includes attaching parts

COPYRIGHT © 1986 — FORD MOTOR COMPANY — DEARBORN, MICHIGAN

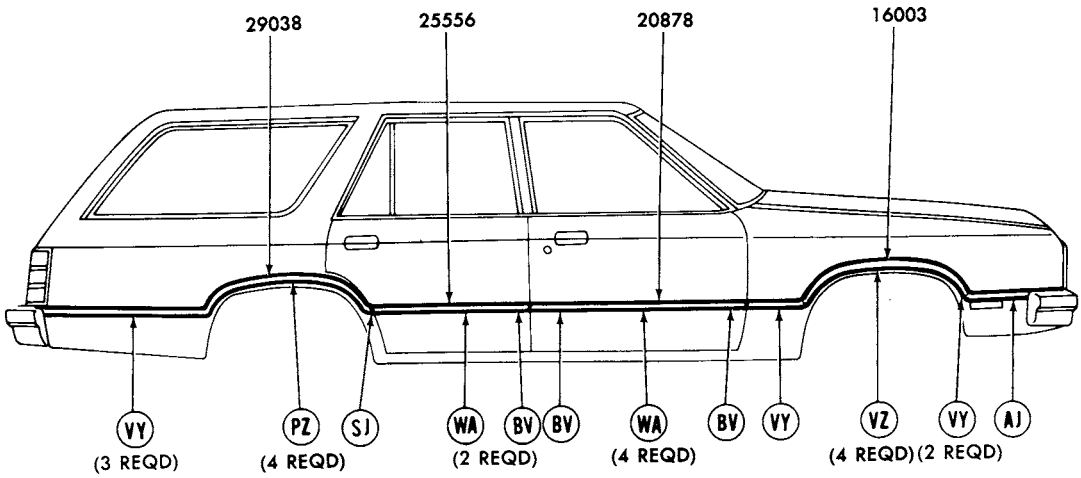

REFER TO EXTERIOR MOULDING SECTION 'R' FOR COMPLETE RETAINER INFORMATION

P-14079

1978 ZEPHYR - BODY TYPE 74 EXCEPT VILLAGER - SIDE

GROUP NUMBER	PART NAME	DESCRIPTION	PART NUMBER		QTY.
16003-4	Moulding (front fender)	Black vinyl insert	(RH)♦D8BZ 16003-BA	(LH)♦D8BZ 16004-BA	1
20878-9	Moulding (front door)	Black vinyl insert	(RH)♦D8BZ 5420878-BA	(LH)♦D8BZ 5420879-BA	1
25556-7	Moulding (rear door)	Black vinyl insert	(RH)♦D8BZ 5425556-BA	(LH)♦D8BZ 5425557-BA	1
29038-9	Moulding (quarter panel)	Black vinyl insert	(RH)♦D8BZ 7429038-BA	(LH)♦D8BZ 7429039-BA	1

♦ Includes attaching parts

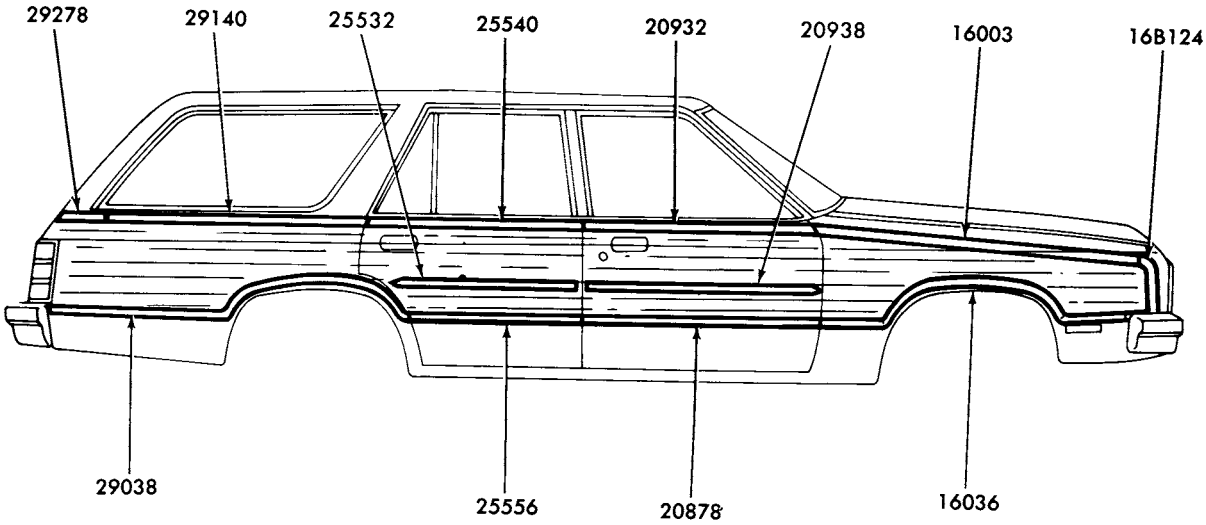

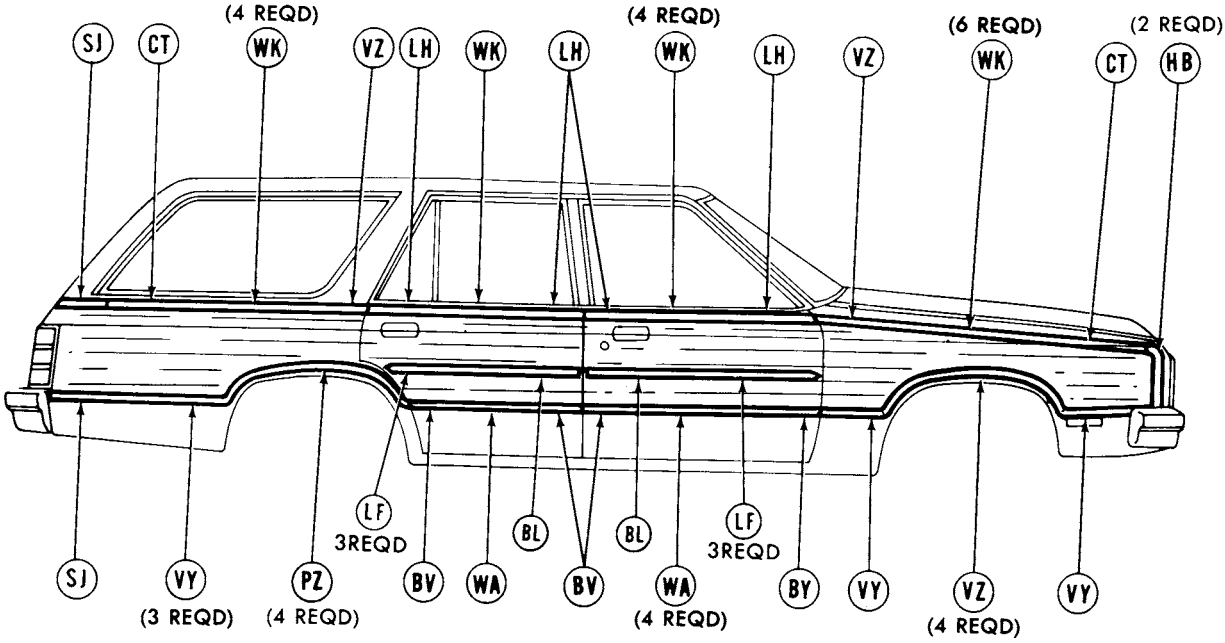

REFER TO EXTERIOR MOULDING SECTION 'R' FOR COMPLETE RETAINER INFORMATION

P-14082

1978 ZEPHYR - BODY TYPE 74 - VILLAGER - SIDE

COPYRIGHT © 1986 — FORD MOTOR COMPANY — DEARBORN, MICHIGAN

1978 ZEPHYR - BODY TYPE 74 - VILLAGER - SIDE - cont'd.

GROUP NUMBER	PART NAME	DESCRIPTION	PART NUMBER		QTY.
16003-4	Moulding (front fender upper)		(RH)♦D8KY 16003-A	(LH)♦D8KY 16004-A	1
16036-7	Moulding (front fender lower)		(RH)♦D8KY 16036-A	(LH) D8KY 16037-A	1
16B124-5	Moulding (front fender front)		(RH)♦D8KY 16B124-A	(LH)♦D8KY 16B125-A	1
20748	Transfer	Cherry wood grain 16"x 62 1/2"-cut to fit-for units built at Kansas City and Atlanta	D8BZ 7420748-A		AR
		20"x 80"-cut to fit-for units built at St. Thomas	D7OZ 7120748-B		AR
20878-9	Moulding (front door lower)		(RH)♦D8KY 7420878-A	(LH)♦D8KY 7420879-A	1
20932-3	Moulding (front door upper)		(RH)♦D8KY 7420932-A	(LH)♦D8KY 7420933-A	1
20938	Moulding (front door)	Brown	♦D8BZ 7420938-A	R.H. and L.H.	2
25532	Moulding (rear door)	Brown	♦D8BZ 7425532-A	R.H. and L.H.	2
25540-1	Moulding (rear door upper)		(RH) D8KY 7425540-A	(LH) D8KY 7425541-A	1
25556-7	Moulding (rear door lower)		(RH)♦D8KY 7425556-A	(LH)♦D8KY 7425557-A	1
29038-9	Moulding (quarter lower)		(RH)♦D8KY 7429038-A	(LH)♦D8KY 7429039-A	1
29140-1	Moulding (quarter upper front)		(RH)♦D8KY 7429140-A	(LH) D8KY 7429141-A	1
29278-9	Moulding (quarter upper rear)		(RH)♦D8KY 7429278-A	(LH)♦D8KY 7429279-A	1

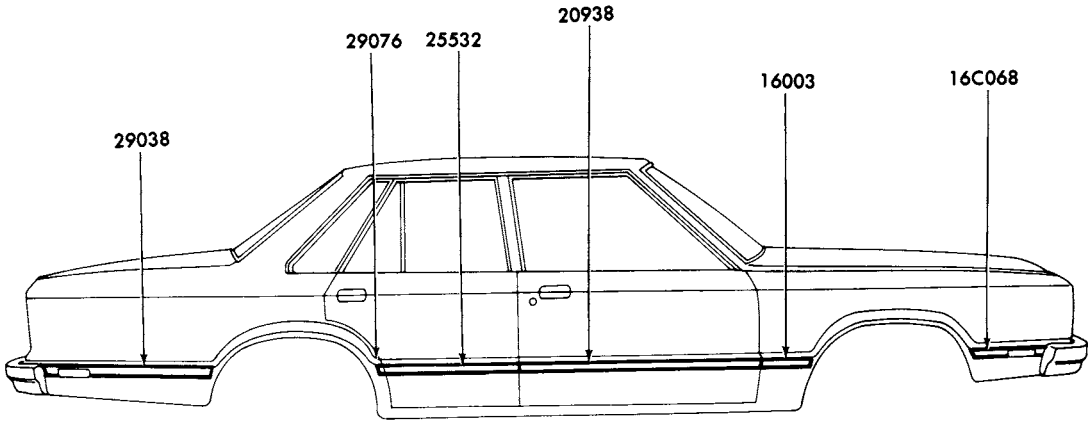

P-14075

1978 ZEPHYR - BODY TYPE 54 - SIDE - ALL VINYL

GROUP NUMBER	PART NAME	DESCRIPTION	PART NUMBER		QTY.
16003-4	Moulding (front fender rear)	Cut to fit	(RH) D8BZ 6629077-B	(LH) D8BZ 6629076-B	1
16C068-9	Moulding (front fender front)		(RH) D8BZ 16C068-A	(LH) D8BZ 16C069-A	1
20938-9	Moulding (front door)		(RH) D8KY 5420938-A	(LH) D8KY 5420939-A	1
25532-3	Moulding (rear door)		(RH) D8KY 5425532-A	(LH) D8KY 5425533-A	1
29038-9	Moulding (quarter panel rear)		(RH) D8BZ 5429038-CA	(LH) D8BZ 5429039-CA	1
29076-7	Moulding (quarter panel front)	Cut to fit	(RH) D8BZ 6629076-B	(LH) D8BZ 6629077-B	1

♦ Includes attaching parts

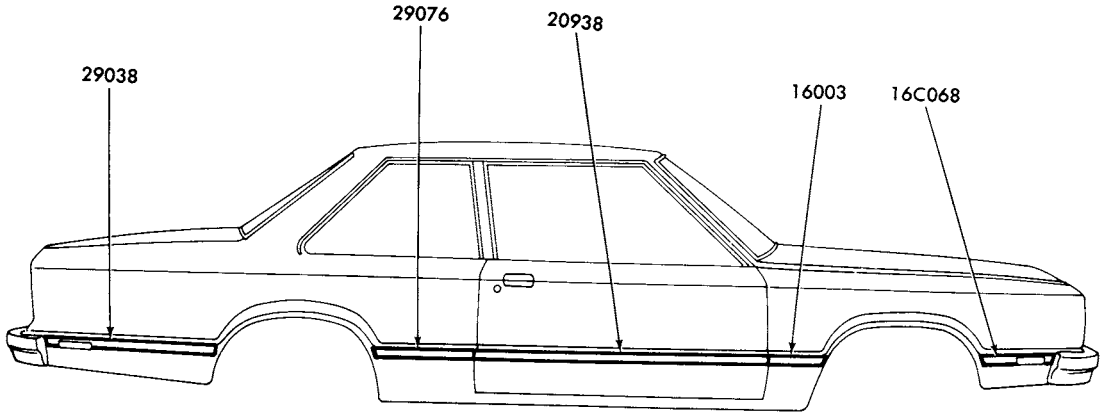

P-14067

1978 ZEPHYR - BODY TYPE 66 - SIDE - ALL VINYL

GROUP NUMBER	PART NAME	DESCRIPTION	PART NUMBER		QTY.
16003-4	Moulding (front fender rear)	Cut to fit	(RH) D8BZ 6629077-B	(LH) D8BZ 6629076-B	1
16C068-9	Moulding (front fender front)		(RH) D8BZ 16C068-A	(LH) D8BZ 16C069-A	1
20938-9	Moulding (front door)		(RH) D8KY 6620938-AA	(LH) D8KY 6620939-AA	1
29038-9	Moulding (quarter panel rear)		(RH) D8BZ 5429038-CA	(LH) D8BZ 5429039-CA	1
29076-7	Moulding (quarter panel front)		(RH) D8BZ 6629076-B	(LH) D8BZ 6629077-B	1

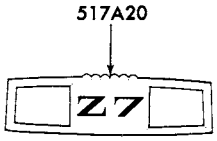

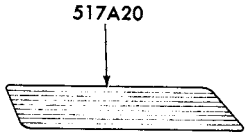

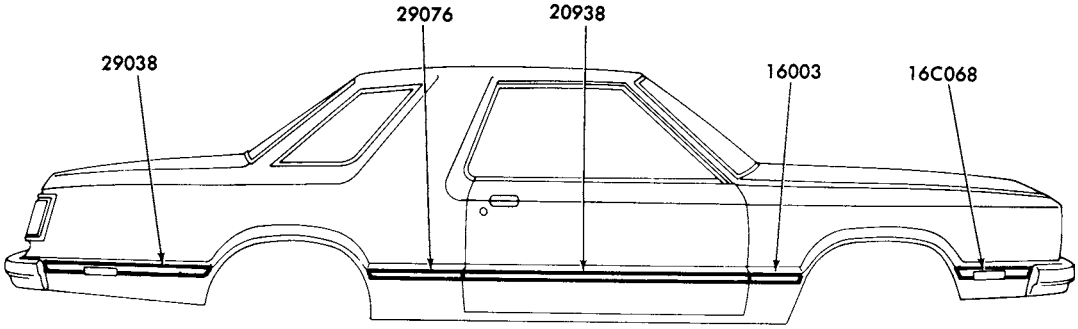

P-14077

1978 ZEPHYR - BODY TYPE 36 - SIDE - ALL VINYL

GROUP NUMBER	PART NAME	DESCRIPTION	PART NUMBER		QTY
16003-4	Moulding (front fender rear)	Cut to fit	(RH) D8BZ 6629077-B	(LH) D8BZ 6629076-B	1
16C068-9	Moulding (front fender front)		(RH) D8BZ 16C068-A	(LH) D8BZ 16C069-A	1
20938-9	Moulding (front door)		(RH) D8KY 6620938-AA	(LH) D8KY 6620939-AA	1
29038-9	Moulding (quarter panel rear)		(RH) D8BZ 3629038-A	(LH) D8BZ 3629039-A	1
29076-7	Moulding (quarter panel front)		(RH) D8BZ 6629076-B	(LH) D8BZ 6629077-B	1
517A20	Ornament (roof side)	"Z7"	D8KY 36517A20-A	R.H. and L.H.	2

COPYRIGHT © 1986 — FORD MOTOR COMPANY — DEARBORN, MICHIGAN

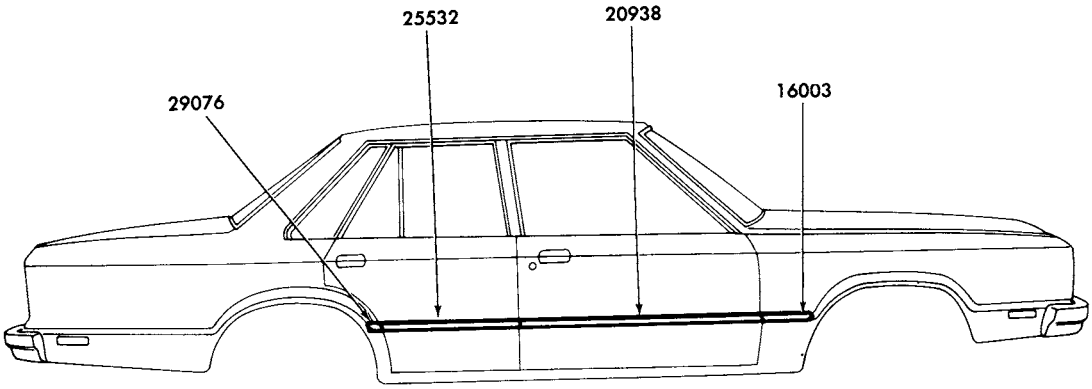

P-14073

1978 ZEPHYR - BODY TYPES 54 and 74 - SIDE PROTECTION

GROUP NUMBER	PART NAME	DESCRIPTION	PART NUMBER	QTY.
16003-4	Moulding (front fender)	@Black - cut to fit	(RH) D8BZ 6629077-B (LH) D8BZ 6629076-B	1
20938-9	Moulding (front door)	@Black - cut to fit	(RH) D8KY 6620938-AA (LH) D8KY 6620939-AA	1
25532-3	Moulding (rear door)	@Black - cut to fit	(RH) D8KY 6620938-AA (LH) D8KY 6620939-AA	1
29076-7	Moulding (quarter)	@Black - cut to fit	(RH) D8BZ 6629076-B (LH) D8BZ 6629077-B	1

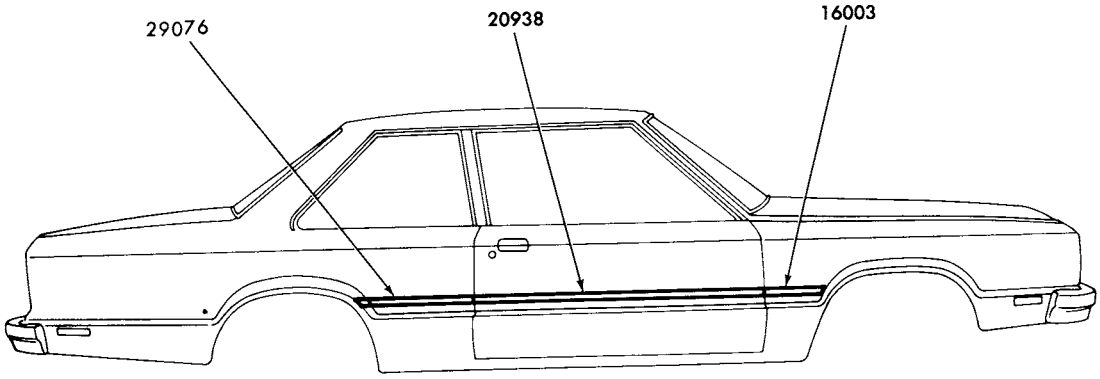

P-14071

1978 ZEPHYR - BODY TYPE 66 - SIDE PROTECTION

GROUP NUMBER	PART NAME	DESCRIPTION	PART NUMBER	QTY.
16003-4	Moulding (front fender)	@Black - cut to fit	(RH) D8BZ 6629077-B (LH) D8BZ 6629076-B	1
20938-9	Moulding (door)	@Black	(RH) D8KY 6620938-AA (LH) D8KY 6620939-AA	1
29076-7	Moulding (quarter)	@Black	(RH) D8BZ 6629076-B (LH) D8BZ 6629077-B	1

@ Adhesive backed

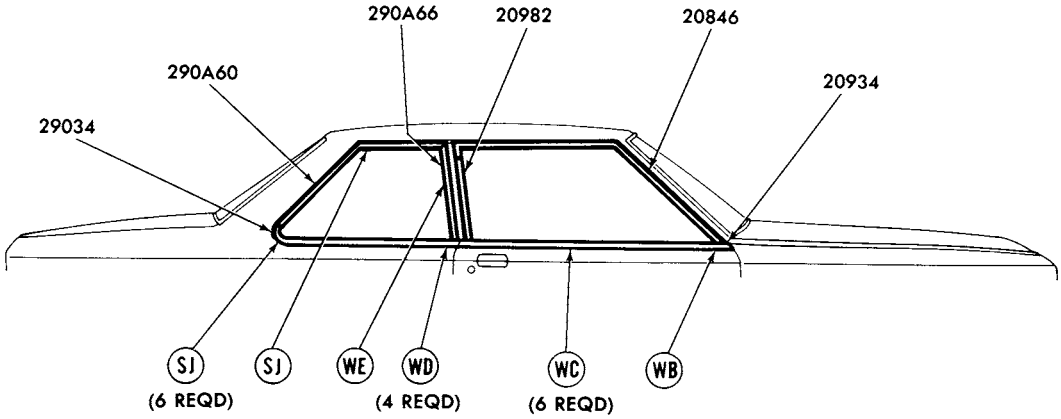

REFER TO EXTERIOR MOULDING SECTION 'R' FOR COMPLETE RETAINER INFORMATION P-14065

1978 ZEPHYR - BODY TYPE 66 - WINDOW w/o QUARTER WINDOW LOUVERS

GROUP NUMBER	PART NAME	DESCRIPTION	PART NUMBER		QTY.
20846-7	Moulding (door window front)	W/o R.H. mirror	(RH) D8BZ 6620846-A	(LH) D8BZ 6620847-A	1
		With R.H. mirror	(RH) D8BZ 6620846-B	(LH) D8BZ 6620847-A	1
20934-5	Moulding (door belt)	W/o R.H. mirror	(RH)♦D8BZ 6620934-A	(LH)♦D8BZ 6620935-A	1
		With R.H. mirror	(RH)♦D8BZ 6620934-B	(LH)♦D8BZ 6620935-A	1
20982-3	Moulding (door window rear)		(RH) D8BZ 6620982-A	(LH) D8BZ 6620983-A	1
29034-5	Moulding (quarter panel belt)		(RH) D8BZ 6629034-A	(LH) D8BZ 6629035-A	1
290A60-1	Moulding (quarter window rear)	Bright	(RH) D8BZ 66290A60-B	(LH) D8BZ 66290A61-B	1
		Paint to match	(RH) D8BZ 66290A60-A	(LH) D8BZ 66290A61-A	1
290A66-7	Moulding (quarter window front)	Bright	(RH)♦D8BZ 66290A66-B	(LH)♦D8BZ 66290A67-B	1
		Paint to match	(RH)♦D8BZ 66290A66-A	(LH)♦D8BZ 66290A67-A	1

♦ Includes attaching parts

COPYRIGHT © 1986 — FORD MOTOR COMPANY — DEARBORN, MICHIGAN

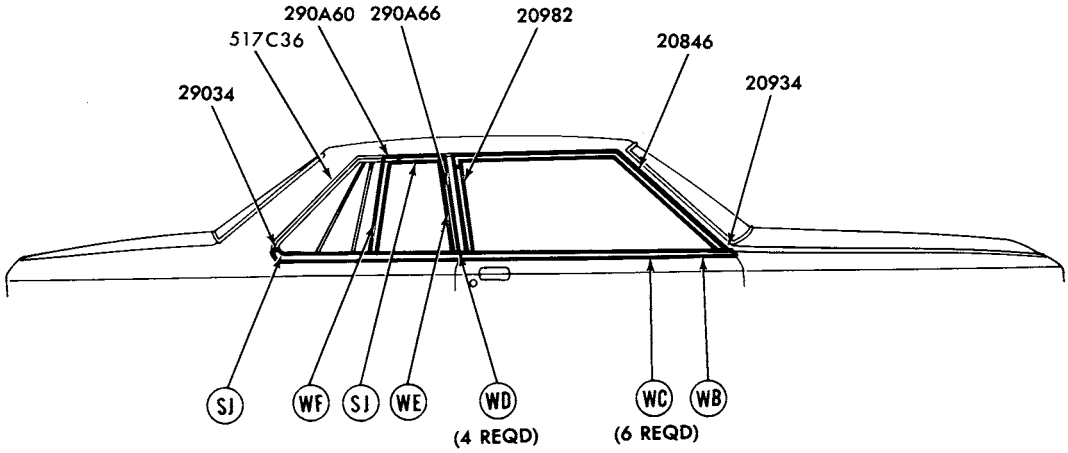

REFER TO EXTERIOR MOULDING SECTION 'R' FOR COMPLETE RETAINER INFORMATION P-14064

1978 ZEPHYR - BODY TYPE 66 - WINDOW w/QUARTER WINDOW LOUVERS

GROUP NUMBER	PART NAME	DESCRIPTION	PART NUMBER		QTY.
20846-7	Moulding (door window front)	W/o R.H. mirror	(RH) D8BZ 6620846-A	(LH) D8BZ 6620847-A	1
		With R.H. mirror	(RH) D8BZ 6620846-B	(LH) D8BZ 6620847-A	1
20934-5	Moulding (door belt)	W/o R.H. mirror	(RH)♦D8BZ 6620934-A	(LH)♦D8BZ 6620935-A	1
		With R.H. mirror	(RH)♦D8BZ 6620934-B	(LH)♦D8BZ 6620935-A	1
20982-3	Moulding (door window rear)		(RH) D8BZ 6620982-A	(LH) D8BZ 6620983-A	1
29034-5	Moulding (quarter panel belt)		(RH) D8BZ 6629034-A	(LH) D8BZ 6629035-A	1
290A60-1	Moulding (quarter window)	Bright-rear	(RH) D8BZ 66290A60-D	(LH) D8BZ 66290A61-D	1
		Upper-paint to match	(RH) D8KY 66290A60-A	(LH) D8KY 66290A61-A	1
		Bright	(RH) D8BZ 66290A60-C	(LH) D8BZ 66290A61-C	1
		Paint to match	(RH) D8KY 66290A60-B	(LH) D8KY 66290A61-B	1
290A66-7	Moulding (quarter window front)	Bright	(RH)♦D8BZ 66290A66-B	(LH)♦D8BZ 66290A67-B	1
		Paint to match	(RH)♦D8BZ 66290A66-A	(LH)♦D8BZ 66290A67-A	1
517C36-7	Spacer (door drip side rear)		(RH) D8KY 54517C36-A	(LH) D8KY 54517C37-A	1

♦ Includes attaching parts

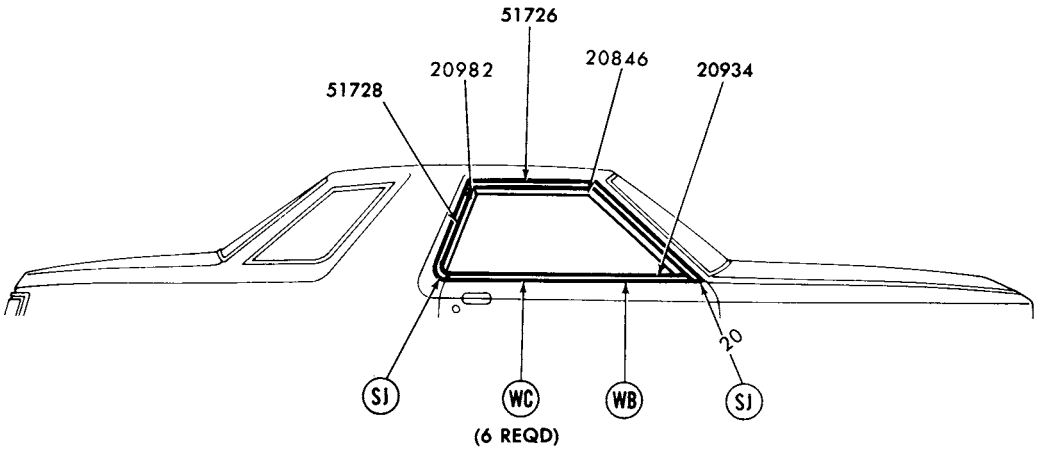

REFER TO EXTERIOR MOULDING SECTION 'R' FOR COMPLETE RETAINER INFORMATION

P-14078

1978 ZEPHYR - BODY TYPE 36 - WINDOW FRAME and BELT

GROUP NUMBER	PART NAME	DESCRIPTION	PART NUMBER		QTY.
20846-7	Moulding (door window front)	W/o R.H. mirror	(RH) D8BZ 3620846-A	(LH) D8BZ 3620847-A	1
		With R.H. mirror	(RH) D8BZ 3620846-B	(LH) D8BZ 3620847-A	1
20934-5	Moulding (door belt)		(RH)♦D8BZ 3620934-A	(LH)♦D8BZ 3620935-A	1
20982-3	Moulding (door window rear)		(RH) D8BZ 3620982-A	(LH) D8BZ 3620983-A	1
51726-7	Moulding (roof drip side front)		(RH) D8BZ 3651726-B	(LH) D8BZ 3651727-B	1
51728-9	Moulding (roof drip side rear)		(RH) D8BZ 3651728-A	(LH) D8BZ 3651729-A	1

♦ Includes attaching parts

COPYRIGHT © 1986 — FORD MOTOR COMPANY — DEARBORN, MICHIGAN

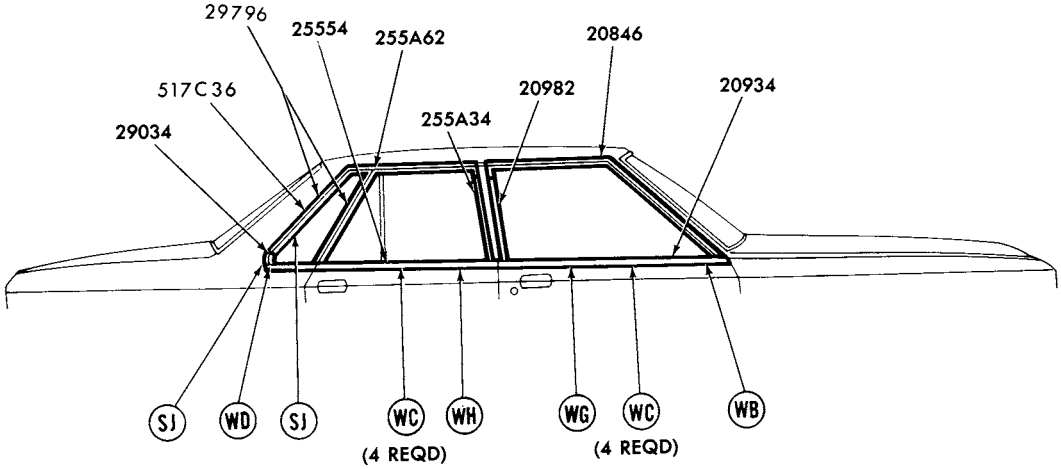

REFER TO EXTERIOR MOULDING SECTION 'R' FOR COMPLETE RETAINER INFORMATION

P-14076

1978 ZEPHYR - BODY TYPE 54 - WINDOW FRAME and BELT

GROUP NUMBER	PART NAME	DESCRIPTION	PART NUMBER		QTY.
20846-7	Moulding (front door window front)	W/o R.H. mirror	(RH) D8BZ 5420846-A	(LH) D8BZ 5420847-A	1
		With R.H. mirror	(RH) D8BZ 5420846-B	(LH) D8BZ 5420847-A	1
20934-5	Moulding (front door belt)	W/o R.H. mirror	(RH)♦D8BZ 5420934-A	(LH)♦D8BZ 5420935-A	1
		With R.H. mirror	(RH)♦D8BZ 5420934-B	(LH)♦D8BZ 5420935-A	1
20982-3	Moulding (front door window rear)		(RH) D8BZ 5420982-A	(LH) D8BZ 5420983-A	1
255A34-5	Moulding (rear door window front)		(RH) D8BZ 54255A34-A	(LH) D8BZ 54255A35-A	1
25554-5	Moulding (rear door belt)		(RH)♦D8BZ 5425554-A	(LH)♦D8BZ 5425555-A	1
255A62-3	Moulding (rear door window rear)		(RH) D8BZ 54255A62-A	(LH) D8BZ 54255A63-A	1
29034-5	Moulding (quarter belt)		(RH)♦D8BZ 5429034-A	(LH)♦D8BZ 5429035-A	1
29796-7	Moulding (quarter window)	W/o louvers-paint to match	(RH)♦D8KY 5429796-A	(LH)♦D8KY 5429797-A	1
		Bright	(RH)♦D8BZ 5429796-B	(LH)♦D8BZ 5429797-B	1
517C36-7	Spacer (roof drip side rear)	W/louvers	(RH) D8KY 54517C36-A	(LH) D8KY 54517C37-A	1

♦ Includes attaching parts

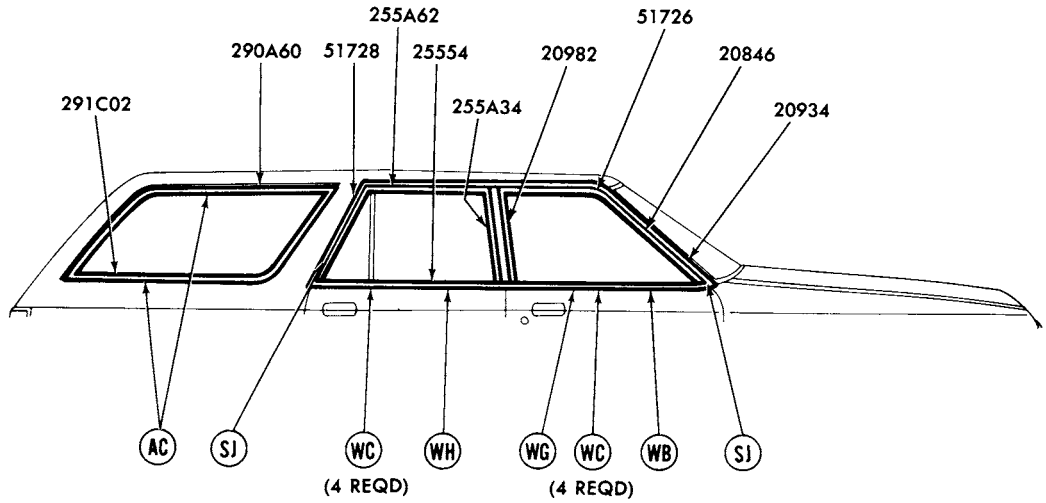

P-14081

REFER TO EXTERIOR MOULDING SECTION 'R' FOR COMPLETE RETAINER INFORMATION.

1978 ZEPHYR - BODY TYPE 74 - WINDOW FRAME and BELT

GROUP NUMBER	PART NAME	DESCRIPTION	PART NUMBER		QTY.
20846-7	Moulding (front door window front)	W/o R.H. mirror	(RH) D8BZ 5420846-A	(LH) D8BZ 5420847-A	1
		W/ R.H. mirror	(RH) D8BZ 5420846-B	(LH) D8BZ 5420847-A	1
20934-5	Moulding (front door belt)	W/o R.H. mirror	(RH)♦D8BZ 5420934-A	(LH)♦D8BZ 5420935-A	1
		W/ R.H. mirror	(RH)♦D8BZ 5420934-B	(LH)♦D8BZ 5420935-A	1
20982-3	Moulding (front door window rear)		(RH) D8BZ 5420982-A	(LH) D8BZ 5420983-A	1
255A34-5	Moulding (rear door window front)		(RH) D8BZ 54255A34-A	(LH) D8BZ 54255A35-A	1
25554-5	Moulding (rear door belt)		(RH)♦D8BZ 5425554-A	(LH)♦D8BZ 5425555-A	1
255A62-3	Moulding (rear door window rear)		(RH) D8BZ 74255A62-A	(LH) D8BZ 74255A63-A	1
290A60-1	Moulding (quarter window upper)		(RH)♦D8BZ 74290A60-A	(LH)♦D8BZ 74290A61-A	1
291C02-3	Moulding (quarter window lower)		(RH)♦D8BZ 74291C02-AA	(LH)♦D8BZ 74291C03-AA	1
51726-7	Moulding (roof drip side front)		(RH) D8BZ 7451726-A	(LH) D8BZ 7451727-A	1
51728-9	Moulding (roof drip side rear)		(RH) D8BZ 7451728-A	(LH) D8BZ 7451729-A	1

♦ Includes attaching parts

COPYRIGHT © 1986 — FORD MOTOR COMPANY — DEARBORN, MICHIGAN

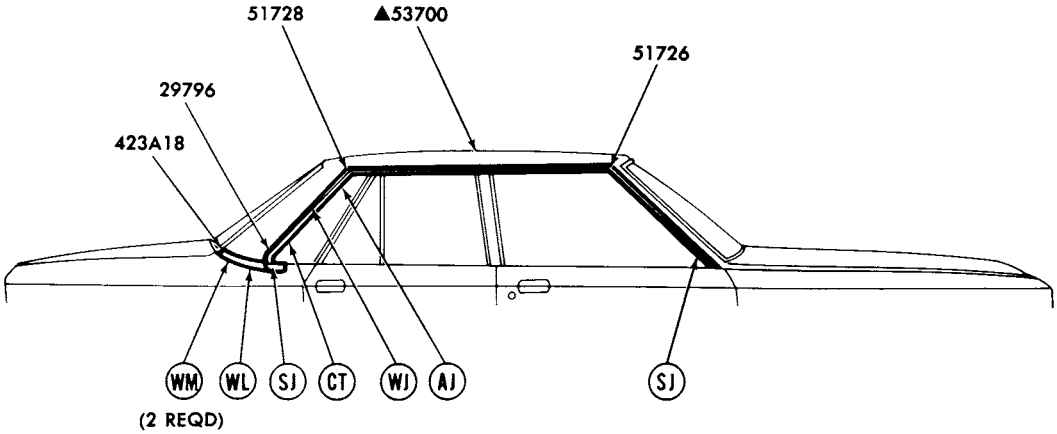

REFER TO EXTERIOR MOULDING SECTION 'R' FOR COMPLETE RETAINER INFORMATION
▲REFER TO GROUP IN SOFT TRIM SECTION

P-14066

1978 ZEPHYR - BODY TYPES 54 and 66 - ROOF DRIP SIDE

GROUP NUMBER	PART NAME	DESCRIPTION	PART NUMBER		QTY
29796-7	Moulding (quarter window lower)	Paint to match	(RH) D8BZ 5429796-D	(LH) D8BZ 5429797-D	1
423A18-9	Moulding (back belt side)		(RH)♦D8BZ 54423A18-A	(LH)♦D8BZ 54423A19-A	1
51726-7	Moulding (roof drip side front)	Body type 54	(RH) D8BZ 5451726-B	(LH) D8BZ 5451727-B	1
		Body type 66	(RH) D8BZ 6651726-B	(LH) D8BZ 6651727-B	1
51728-9	Moulding (roof drip side rear)		(RH)♦D8BZ 5451728-A	(LH)♦D8BZ 5451729-A	1

♦ Includes attaching parts

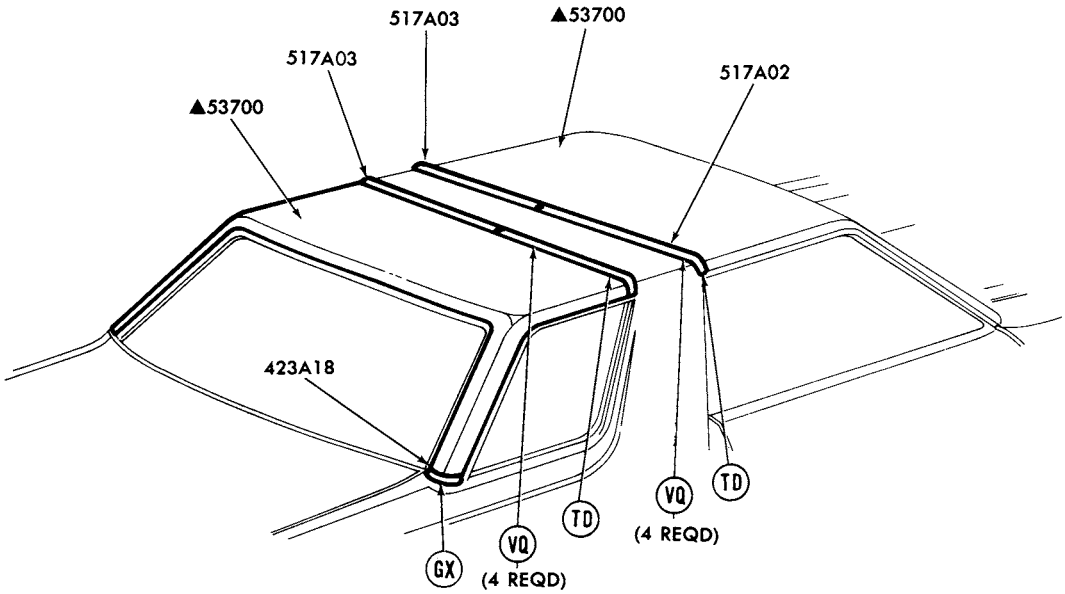

▲REFER TO GROUP IN SOFT TRIM SECTION
REFER TO EXTERIOR MOULDING SECTION 'R' FOR COMPLETE RETAINER INFORMAITON

P-14085

1978 ZEPHYR - BODY TYPE 36R - ROOF MOULDINGS

GROUP NUMBER	PART NAME	DESCRIPTION	PART NUMBER		QTY.
423A18-9	Moulding (back belt side)	Paint to match	(RH)♦D8BZ 36423A18-A	(LH)♦D8BZ 36423A19-A	1
517A02-3	Moulding (roof)	Front-paint to match	(RH)♦D8BZ 36517A02-A	(LH)♦D8BZ 36517A03-A	1
		Rear-paint to match	(RH)♦D8BZ 36517A02-B	(LH)♦D8BZ 36517A03-B	1

♦ Includes attaching parts

COPYRIGHT © 1986 — FORD MOTOR COMPANY — DEARBORN, MICHIGAN

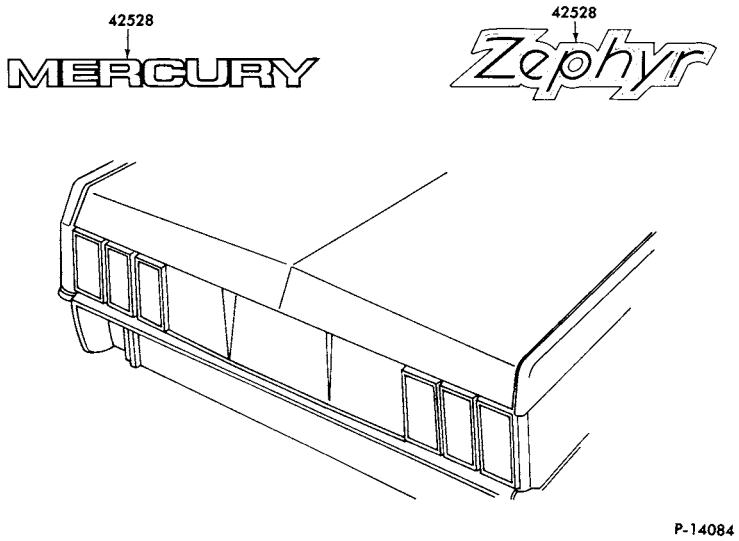

1978 ZEPHYR - BODY TYPES 36, 54 and 66 - BACK END

GROUP NUMBER	PART NAME	DESCRIPTION	PART NUMBER	QTY.
42528	Plate (name)	"MERCURY"	D9CY 6142528-B	1
		"Zephyr"	D8KY 5442528-B	1

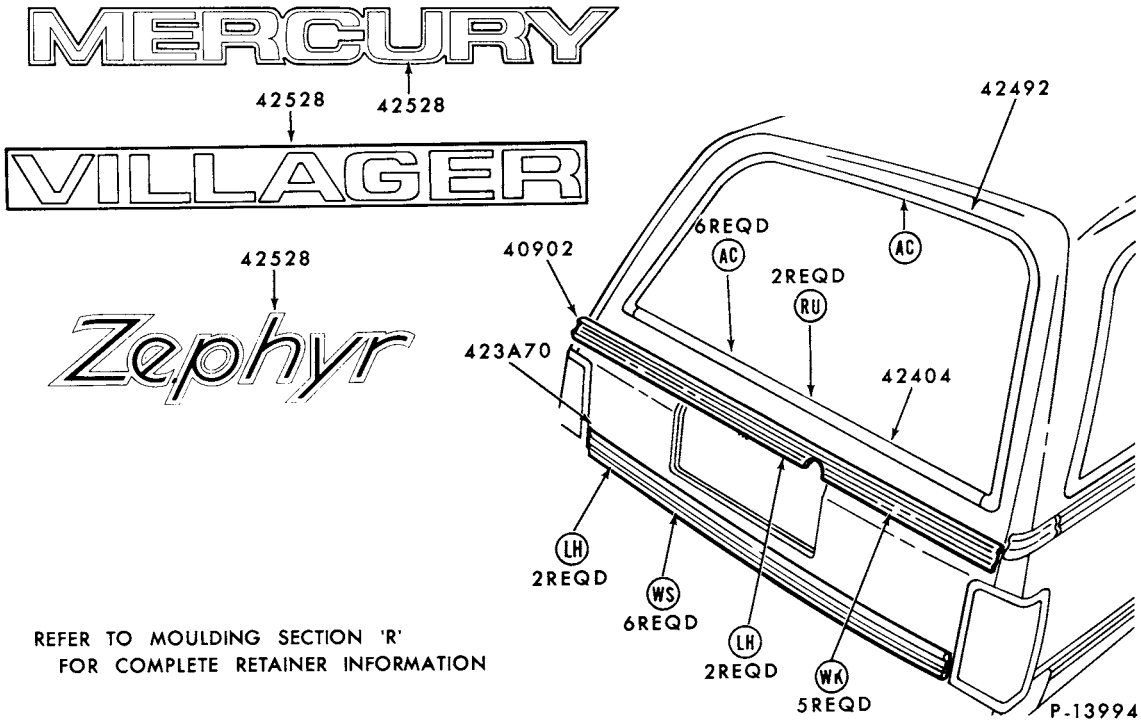

REFER TO MOULDING SECTION 'R' FOR COMPLETE RETAINER INFORMATION

1978 ZEPHYR - BODY TYPE 74 - BACK END

GROUP NUMBER	PART NAME	DESCRIPTION	PART NUMBER	QTY.
40902	Moulding (liftgate upper)	W/o washer and wiper	♦D8KY 7440902-A	1
		W/ washer and wiper	D8KY 7440902-B	1
423A70	Moulding (liftgate lower)		♦D8KY 74423A70-A	1
42404	Moulding (back window lower)		♦D8BZ 7442404-A	1
42492	Moulding (back window lower)		♦D8BZ 7442492-A	1
42528	Plate (name)	"MERCURY"	D8KY 7442528-C	1
		"VILLAGER"	D8KY 7442528-D	1
		"Zephyr"	E2KY 5442528-A	1

COPYRIGHT © 1986 — FORD MOTOR COMPANY — DEARBORN, MICHIGAN

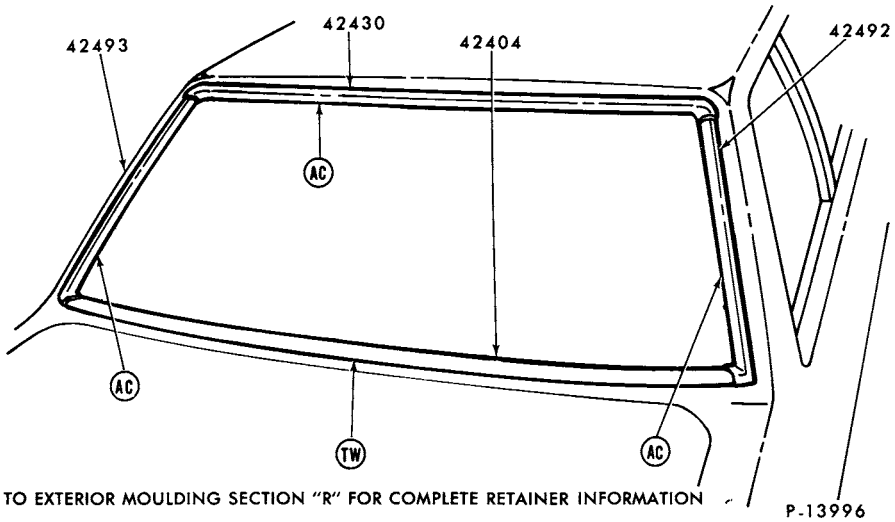

REFER TO EXTERIOR MOULDING SECTION "R" FOR COMPLETE RETAINER INFORMATION

1978 ZEPHYR - BODY TYPES 36, 54 and 66 - BACK WINDOW

GROUP NUMBER	PART NAME	DESCRIPTION	PART NUMBER	QTY.
42404	Moulding (back window lower		♦D8BZ 5442404-A	1
42430	Moulding (back window upper)	Body type 36R	♦D8BZ 3642430-A	1
		Body types 54 and 66	♦D8BZ 5442430-A	1
42492-3	Moulding (back window side)	Body type 36R	(RH)♦D8BZ 3642492-A (LH)♦D8BZ 3642493-A	1
		Body types 54 and 66	(RH)♦D8BZ 5442492-A (LH)♦D8BZ 5442493-A	1

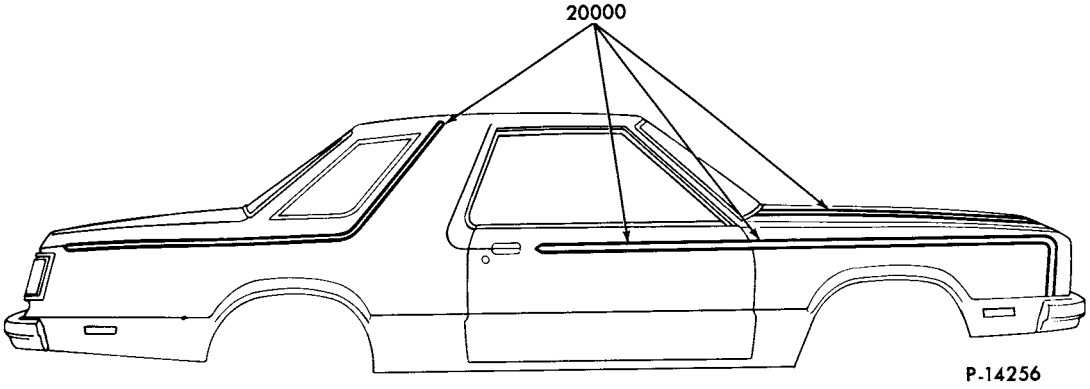

1978 ZEPHYR - BODY TYPE 36 - STRIPES

GROUP NUMBER	PART NAME	DESCRIPTION	PART NUMBER	QTY.
20000	Stripe kit (complete)			
		Blue (light)	D8KY 3620000-AB	1
		Blue (medium)	D8KY 3620000-BB	1
		Brown	★D8KY 3620000-AT	1
		Cham	D8KY 3620000-AC	1
		Gold	D8KY 3620000-AY	1
		Jade (dark)	D8KY 3620000-AR	1
		Jade (light)	★D8KY 3620000-BR Not replaced (6/82)	1
		Red	D8KY 3620000-AD	1
		White	D8KY 3620000-AW	1

♦ Includes attaching parts

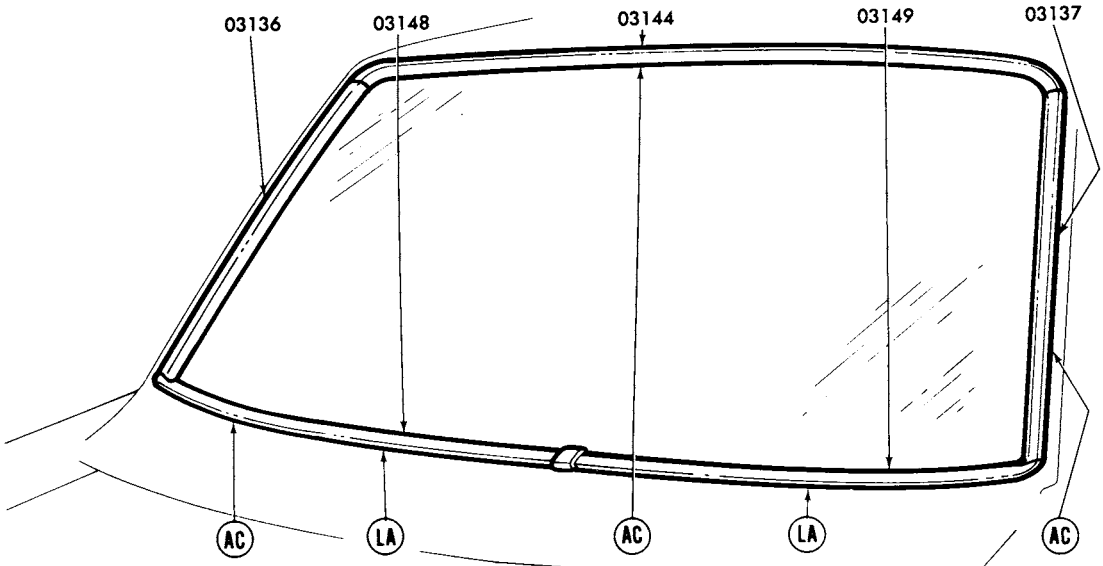

REFER TO EXTERIOR MOULDING SECTION 'R' FOR COMPLETE RETAINER INFORMATION P-12526

1978 VERSAILLES - WINDSHIELD

GROUP NUMBER	PART NAME	DESCRIPTION	PART NUMBER		QTY.
03136-7	Moulding (windshield side)		(RH)♦D5DZ 6603136-A	(LH)♦D5DZ 6603137-A	1
03144	Moulding (windshield top)		♦D5DZ 6603144-A		1
03148-9	Moulding (windshield belt)		(RH)♦D5DZ 6603148-A	(LH)♦D5DZ 6603149-A	1

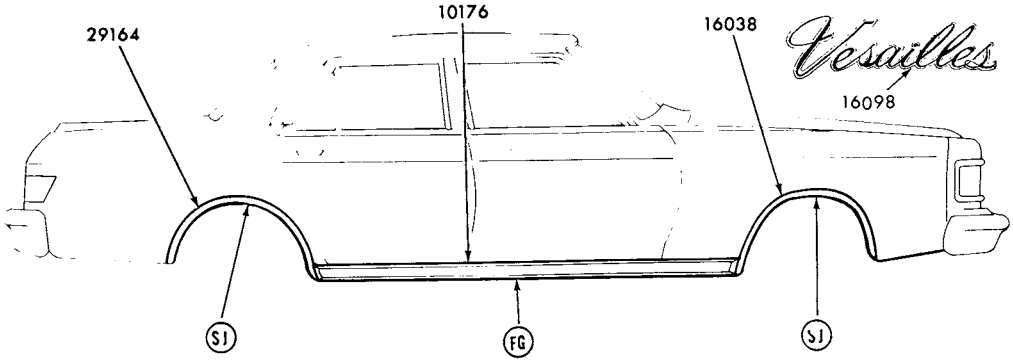

P-13343

REFER TO EXTERIOR MOULDING SECTION 'R' FOR COMPLETE RETAINER INFORMATION

1978 VERSAILLES - SIDE

GROUP NUMBER	PART NAME	DESCRIPTION	PART NUMBER		QTY.
10176-7	Moulding (body rocker panel)	W/wheel opening mouldings-78 3/4" long	♦D54Y 6610176-A	R.H. and L.H.	2
16038-9	Moulding (front fender wheel opening)		(RH)♦D5DZ 16038-A	(LH)♦D5DZ 16039-A	1
16098	Plate (name)	"VERSAILLES"	D74Y 5442528-A	R.H. and L.H.	2
29164-5	Moulding (quarter wheel opening)		(RH)♦D5DZ 6629164-A	(LH)♦D5DZ 6629165-A	1

♦ Includes attaching parts

COPYRIGHT © 1986 — FORD MOTOR COMPANY — DEARBORN, MICHIGAN

1978 EXTERIOR MOULDING SECTION V

1973/79 LINCOLN-MERCURY CARS

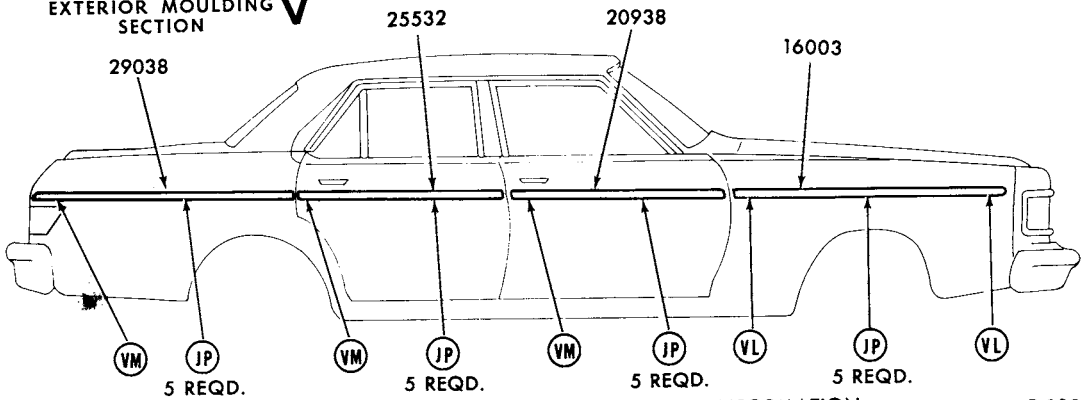

REFER TO EXTERIOR MOULDING SECTION 'R' FOR COMPLETE RETAINER INFORMATION P-13342

1978 VERSAILLES - BODYTYPE 54 - SIDE

GROUP NUMBER	PART NAME	DESCRIPTION	PART NUMBER		QTY.
16003-4	Moulding (front fender side)	Incl. vinyl insert			
		◊Black	(RH)♦D84Y 16003-AA	(LH)♦D84Y 16004-AA	1
		◊Blue/Diamond	(RH)♦D84Y 16003-AB	(LH)♦D84Y 16004-AB	1
		◊Blue (medium)	(RH)♦D74Y 16003-BB	(LH)♦D74Y 16004-BB	1
		◊Blue (wedgewood)	(RH)♦D74Y 16003-CB	(LH)♦D74Y 16004-CB	1
		◊Chamois	(RH)♦D74Y 16003-BT	(LH)♦D74Y 16004-BT	1
		◊Cordovan	(RH)♦D74Y 16003-BF	(LH)♦D74Y 16004-BF	1
		◊Grey	(RH)♦D84Y 16003-AP	(LH)♦D84Y 16004-AP	1
		◊Red	(RH)♦D84Y 16003-AD	(LH)♦D84Y 16004-AD	1
		◊Silver	(RH)♦D74Y 16003-BP	(LH)♦D74Y 16004-BP	1
		◊White	(RH)♦D74Y 16003-BW	(LH)♦D74Y 16004-BW	1
20938-9	Moulding (front door)	Incl. vinyl insert			
		◊Black	(RH)♦D84Y 5420938-AA	(LH)♦D84Y 5420939-AA	1
		Blue/Diamond	(RH)♦D84Y 5420938-AB	(LH)♦D84Y 5420939-AB	1
		◊Blue (medium)	(RH)*D74Y 5420938-BB	(LH)♦D74Y 5420939-BB	1
		◊Blue (wedgewood)	(RH)★D74Y 5420938-CB Not replaced (6/83)	(LH)★D74Y 5420939-CB Not replaced (4/84)	1
		◊Chamois	(RH)♦D74Y 5420938-BT	(LH)★D74Y 5420939-BT Not replaced (6/83)	1
		◊Cordovan	(RH)♦D74Y 5420938-BF	(LH)♦D74Y 5420939-BF	1
		◊Grey	(RH)♦D84Y 5420938-AP	(LH)♦D84Y 5420939-AP	1
		◊Red	(RH)♦D84Y 5420938-AD	(LH)♦D84Y 5420939-AD	1
		◊Silver	(RH)♦D74Y 5420938-BP	(LH)♦D74Y 5420939-BP	1
		◊White	(RH)♦D74Y 5420938-BW	(LH)♦D74Y 5420939-BW	1
25532-3	Moulding (rear door)	Incl. vinyl insert			
		◊Black	(RH)♦D84Y 5425532-AA	(LH)♦D84Y 5425533-AA	1
		◊Blue/Diamond	(RH)♦D84Y 5425532-AB	(LH)♦D84Y 5425533-AB	1
		◊Blue (medium)	(RH)♦D74Y 5425532-BB	(LH)♦D74Y 5425533-BB	1
		◊Blue (wedgewood)	(RH)♦D74Y 5425532-CB	(LH)★D74Y 5425533-CB Not replaced (6/83)	1
		◊Chamois	(RH)♦D74Y 5425532-BT	(LH)★D74Y 5425533-BT Not replaced (6/83)	1
		◊Cordovan	(RH)♦D74Y 5425532-BF	(LH)♦D74Y 5425533-BF	1
		◊Grey	(RH)♦D84Y 5425532-AP	(LH)♦D84Y 5425533-AP	1
		◊Red	(RH)♦D84Y 5425532-AD	(LH)♦D84Y 5425533-AD	1
		◊Silver	(RH)♦D74Y 5425532-BP	(LH)♦D74Y 5425533-BP	1
		◊White	(RH)♦D74Y 5425532-BW	(LH)♦D74Y 5425533-BW	1
29038-9	Moulding (quarter panel)	Incl. vinyl insert			
		◊Black	(RH)♦D84Y 5429038-AA	(LH)♦D84Y 5429039-AA	1
		◊Blue/Diamond	(RH)♦D84Y 5429038-AB	(LH)♦D84Y 5429039-AB	1
		◊Blue (medium)	(RH)♦D74Y 5429038-BB	(LH)♦D74Y 5429039-BB	1
		◊Blue (wedgewood)	(RH)★D74Y 5429038-CB Not replaced (6/83)	(LH)♦D74Y 5429039-CB	1
		◊Chamois	(RH)♦D74Y 5429038-BT	(LH)★D74Y 5429039-BT Not replaced (6/83)	1
		◊Cordovan	(RH)♦D74Y 5429038-BF	(LH)♦D74Y 5429039-BF	1
		◊Grey	(RH)♦D84Y 5429038-AP	(LH)♦D84Y 5429039-AP	1
		◊Red	(RH)♦D84Y 5429038-AD	(LH)♦D84Y 5429039-AD	1
		◊Silver	(RH)♦D74Y 5429038-BP	(LH)♦D74Y 5429039-BP	1
		◊White	(RH)♦D74Y 5429038-BW	(LH)♦D74Y 5429039-BW	1

◊ For color verification, refer to the vinyl roof swatches in the 1978 Salesman's Color and Upholstery Selections Guide.
♦ Includes attaching parts

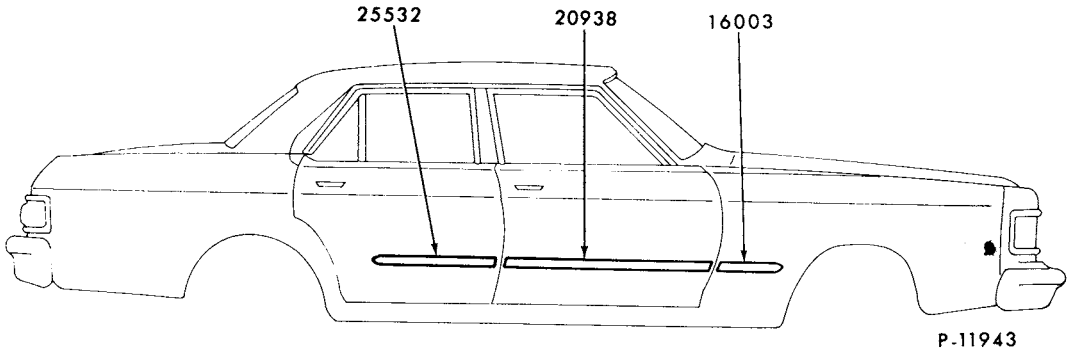

1978 VERSAILLES - BODY TYPE 54 - SIDE PROTECTION

GROUP NUMBER	PART NAME	DESCRIPTION	PART NUMBER		QTY.
16003	Moulding (front fender side)	Black vinyl insert-adhesive backed-cut to fit	D5DZ 5425532-D	R.H. and L.H.	2
20938	Moulding (front door)	Black vinyl insert-adhesive backed-cut to fit	D1OZ 6529038-B	R.H. and L.H.	2
25532	Moulding (rear door)	Black vinyl insert-adhesive backed	D5DZ 5425532-D	R.H. and L.H.	2

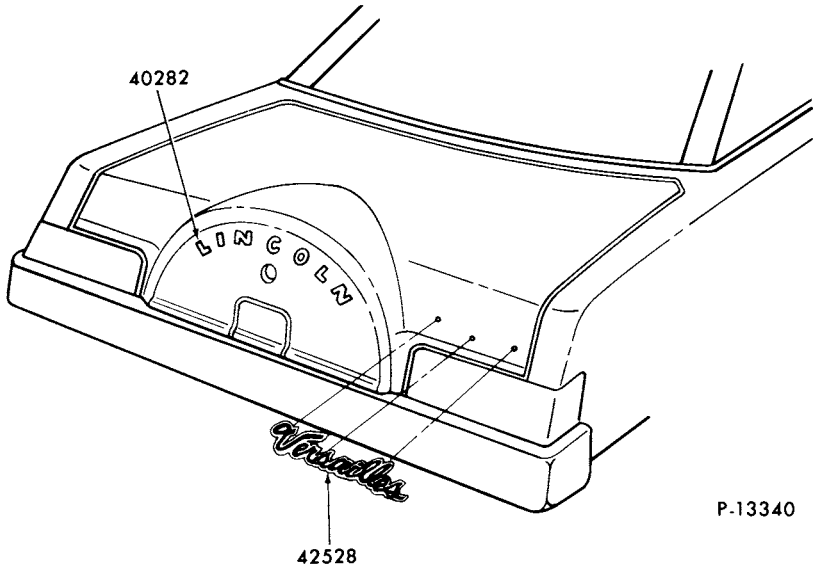

1978 VERSAILLES - BODY TYPE 54 - BACK END

GROUP NUMBER	PART NAME	DESCRIPTION	PART NUMBER	QTY.
40282	Letters (name)	"L"	♦D7LY 6540262-J	2
		"I"	♦D7LY 6540262-E	1
		"N"	♦D7LY 6540282-C	2
		"C"	♦D7LY 6540282-A	1
		"O"	♦D7LY 6540282-B	1
42528	Plate (name)	"VERSAILLES"	D74Y 5442528-A	3

♦ Includes attaching parts

COPYRIGHT © 1986 — FORD MOTOR COMPANY — DEARBORN, MICHIGAN

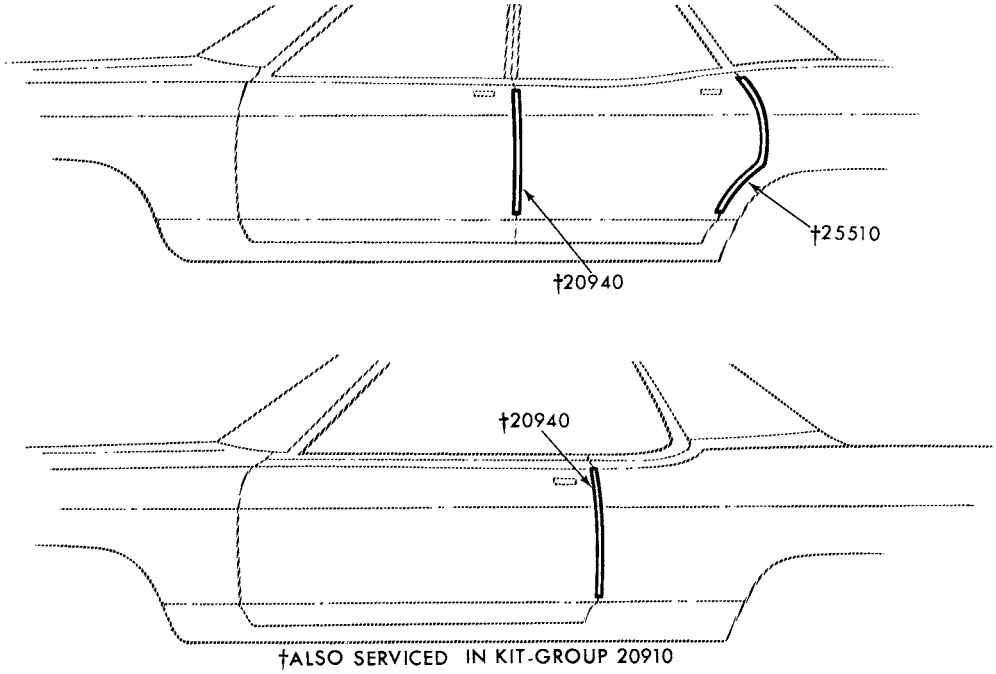

1978 VERSAILLES - DOOR EDGE GUARD

GROUP NUMBER	PART NAME	DESCRIPTION	PART NUMBER	QTY.
20910	Moulding kit (door edge guard)	Cut to fit	★D5DZ 5420910-A Not replaced (6/83)	1
20940-1	Moulding (front door edge guard)	18" long-cut to fit	(RH) D74Y 5420940-A (LH) D74Y 5420941-A	1
25510-1	Moulding (rear door edge guard)	18 3/4" long-cut to fit	(RH) D74Y 5425510-A (LH) D74Y 5425511-A	1

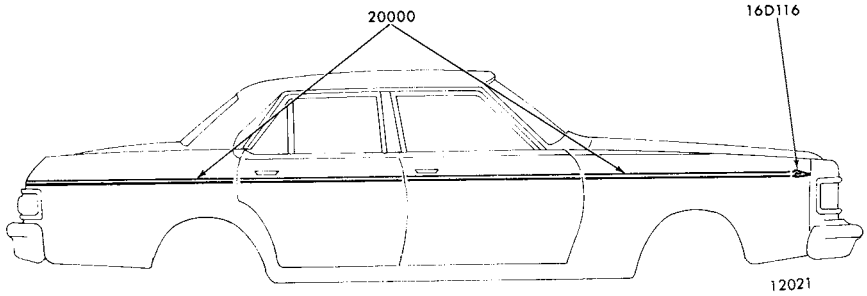

1978 VERSAILLES - STRIPES

1978 VERSAILLES - STRIPES - cont'd.

GROUP NUMBER	PART NAME	DESCRIPTION	PART NUMBER	QTY.
20000	Stripe kit (body side)	25' roll		
		Blue (medium)	D74Y 5420000-BB Not replaced (11/85)	AR
		Cordovan	D74Y 5420000-AF	AR
		Gold	D74Y 5420000-AG	AR
		Silver	D74Y 5420000-AP	AR
		Consists of fender and quarter panel		
		Blue (medium)	D74Y 5420000-EB	1
		Cordovan	D74Y 5420000-DF	1
		Gold	D74Y 5420000-DG	1
		Red (light)	D74Y 5420000-DD	1
		Silver	D74Y 5420000-DP Not replaced (11/85)	1

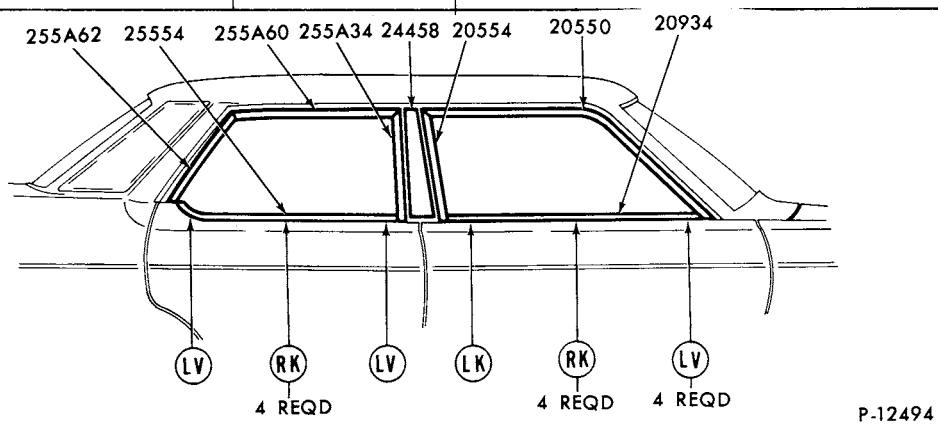

REFER TO EXTERIOR MOULDING SECTION 'R' FOR COMPLETE RETAINER INFORMATION

1978 VERSAILLES - BODY TYPE 54 - DOOR WINDOW FRAME

GROUP NUMBER	PART NAME	DESCRIPTION	PART NUMBER	QTY.
20550-1	Moulding (front door window frame front)		(RH) D5DZ 5420550-A (LH) D5DZ 5420551-A	1
20554-5	Moulding (front door window frame rear)		(RH) D5DZ 5420554-A (LH) D5DZ 5420555-A	1
20934-5	Moulding (front door belt)		(RH)♦D5DZ 5420934-A (LH)♦D5DZ 5420935-A	1
24458-9	Moulding (center body pillar upper)		Refer to roof and back belt	
255A34-5	Moulding (rear door window frame front)		(RH) D5DZ 54255A34-A (LH) D5DZ 54255A35-A	1
25554-5	Moulding (rear door belt)		(RH)♦D5DZ 5425554-A (LH)♦D5DZ 5425555-A	1
255A60-1	Moulding (rear door window frame upper)		(RH) D5DZ 54255A60-A (LH) D5DZ 54255A61-A	1
255A62-3	Moulding (rear door window frame rear)		(RH) D5DZ 54255A62-A (LH) D5DZ 54255A63-A	1

♦ Includes attaching parts

COPYRIGHT © 1986 — FORD MOTOR COMPANY — DEARBORN, MICHIGAN

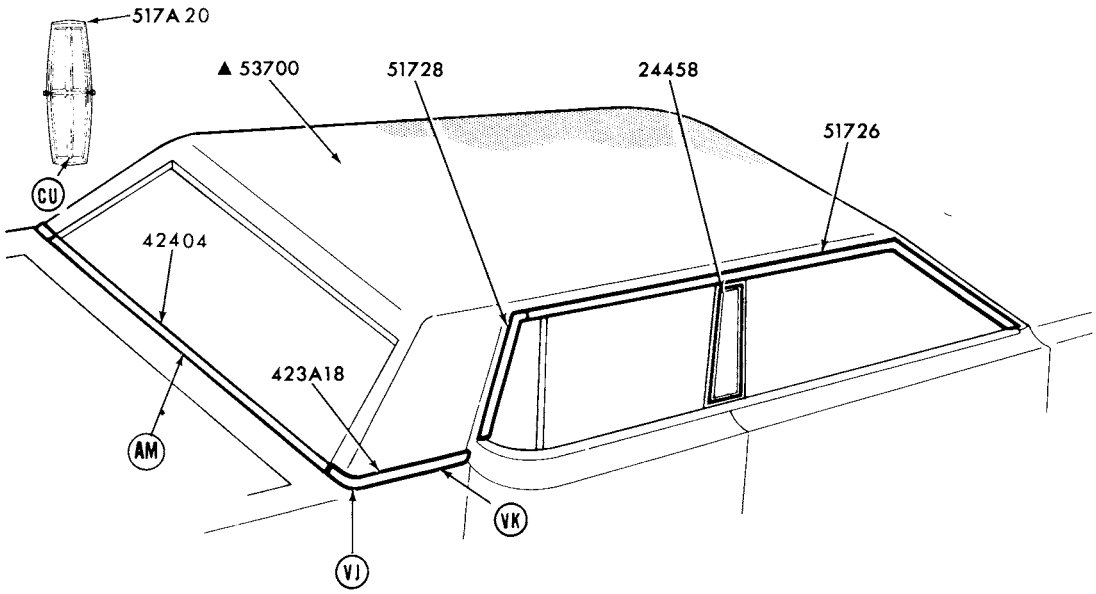

▲ REFER TO GROUP IN SOFT TRIM SECTION
REFER TO EXTERIOR MOULDING SECTION 'R' FOR COMPLETE RETAINER INFORMATION

P-13341

1978 VERSAILLES - BODY TYPE 54 - ROOF and BACK BELT

GROUP NUMBER	PART NAME	DESCRIPTION	PART NUMBER		QTY.
24458-9	Moulding (center body pillar upper)				
		Black	(RH)♦D84Y 5424458-AA	(LH)♦D84Y 5424459-AA	1
		Blue/Diamond	(RH)♦D84Y 5424458-AB	(LH)♦D84Y 5424459-AB	1
		Blue (light	(RH)★D74Y 5424458-AB Not replaced (6/82)	(LH)★D74Y 5424459-AB Not replaced (6/82)	1
		Blue (medium)	(RH)★D74Y 5424458-BB Not replaced (6/82)	(LH)★D74Y 5424459-BB Not replaced (6/82)	1
		Chamois	(RH)★D74Y 5424458-AT Not replaced (6/82)	(LH)★D74Y 5424459-AT Not replaced (6/82)	1
		Cordovan	(RH)♦D74Y 5424458-AF	(LH) D74Y 5424459-AF	1
		Grey	(RH)♦D84Y 5424458-AP	(LH)♦D84Y 5424459-AP	1
		Red	(RH)♦D84Y 5424458-AD	(LH)♦D84Y 5424459-AD	1
		Silver	(RH)♦D74Y 5424458-AP	(LH)♦D74Y 5424459-AP	1
		White	(RH)♦D74Y 5424458-AW	(LH)♦D74Y 5424459-AW	1
423A18-9	Moulding (back belt side)	Prime-paint to match	(RH)♦D74Y 54423A18-A	(LH)♦D74Y 54423A19-A	1
42404	Moulding (back window lower)	Prime-paint to match	♦D74Y 5442404-A		1
517A20	Ornament (roof side)		♦D74Y 54517A20-A	R.H. and L.H.	2
51726-7	Moulding (roof drip side finish)	Front	(RH) D74Y 5451726-A	(LH) D74Y 5451727-A	1
51728-9	Moulding (roof drip side finish)	Rear	(RH)★D7DZ 5451728-A	(LH) D7DZ 5451729-A	1

♦ Includes attaching parts

INDEX

TITLE	SECTION	PAGE	ILLUS. NO.
1979			
A (MERCURY)			
BACK END			
- body types 54 and 66	79A	14	P-14700
- body type 74	79A	15	P-14703
BACK WINDOW			
- body types 54 and 66	79A	14	P-14700
- body type 74	79A	15	P-14703
BELT and ROOF DRIP			
- body type 54	79A	11,12	P-14640
- body type 66	79A	12	P-14725
- body type 74	79A	14,15	P-14639
BODY SIDE			
- body type 54K	79A	3	P-14630
- body type 54L	79A	4	P-14709
- body type 66K	79A	3	P-14631
- body type 66L	79A	4	P-14710
- body type 74K - "Colony Park"	79A	8	P-14629
BODY SIDE PROTECTION			
- body type 54 - pressure sensitive	79A	5	P-14636
- body type 66 - pressure sensitive	79A	6	P-14637
- body type 74H - pressure sensitive	79A	7	P-14707
- body type 74K	79A	8,9	P-14629
DOOR EDGE GUARDS	79A	1,2	P-10061
LUGGAGE COMPARTMENT - refer to BACK END			
ROOF and BACK BELT			
- body type 66 - w/partial vinyl roof	79A	13	P-14712
ROOF DRIP and BELT			
- body type 54	79A	11,12	P-14640
- body type 66	79A	12	P-14725
- body type 74	79A	13,14	P-14639
STRIPES			
- body type 54	79A	16	P-14713
- body type 66	79A	16	P-14715
- body type 74	79A	17	P-14714
WHEEL OPENING COVER and ROCKER PANEL	79A	2	P-14634
WINDOW FRAME			
- body type 54	79A	10	P-14724
- body type 66	79A	10	P-14641
- body type 74	79A	11	P-14726
WINDSHIELD	79A	1	P-12521

COPYRIGHT © 1986 — FORD MOTOR COMPANY — DEARBORN, MICHIGAN

INDEX

TITLE	SECTION	PAGE	ILLUS. NO.
1979			
D (LINCOLN)			
BACK END			
- body types 53 and 60	79D	1	P-11896
BACK WINDOW			
- w/o vinyl roof and w/full vinyl roof	79D	12	P-12488
- w/half vinyl roof	79D	13	P-13189
BODY SIDE			
- body type 53 - w/side mouldings	79D	2,3,4, 5	P-14275
- body type 60 - w/side mouldings	79D	6,7,8 9	P-14274
BODY SIDE PROTECTION			
- body types 53 and 60	79D	10,11	P-14273
DOOR BELT and WINDOW			
- body type 53	79D	14	P-13191
- body type 60	79D	15	P-13190
DOOR EDGE GUARDS	79D	19	P-10061
LUGGAGE COMPARTMENT - Refer to BACK END			
ROOF and BACK BELT			
- body type 53	79D	16,17	P-16111
- body type 60	79D	18	P-16110
ROOF DRIP - refer to ROOF and BACK BELT			
WHEEL OPENING COVER	79D	15	P-14276
WHEEL OPENING COVER MOULDING - refer to Body Sides			
WINDOW FRAME - refer to Body Illustration Index 230			
WINDSHIELD	79D	1	P-12994
F (COUGAR)			
BACK END			
- body types 53 and 65D	79F	9	P-13156
- body type 65L	79F	9,10	P-14249
BACK WINDOW			
- body types 53 and 65	79F	10	P-13039
BELT, DRIP RAIL and QUARTER WINDOW			
- body type 53	79F	8	P-13141
- body type 65	79F	8	P-13142
BODY SIDE			
- body type 53 - w/narrow mouldings	79F	1,2	P-13144
- body type 53 - w/wide mouldings	79F	2,3,4	P-13147
- body type 65 - w/narrow mouldings	79F	5	P-13143
- body type 65 - w/wide mouldings	79F	6,7	P-13148
DOOR EDGE GUARDS	79F	13	P-10061
LUGGAGE COMPARTMENT - refer to BACK END			
ROOF and BACK BELT			
- body types 53 and 65D	79F	11	P-13160
- body type 65L - w/o center panel	79F	12	P-13162
- w/center panel	79F	14	P-14307
ROOF DRIP - refer to BELT, DRIP RAIL and QUARTER WINDOW			
WINDSHIELD	79F	1	P-12521

INDEX

TITLE	SECTION	PAGE	ILLUS. NO.
1979			
G (MONARCH)			
BACK END	79G	16	P-11949
BACK WINDOW			
- body type 54	79G	15	P-12485
- body type 66	79G	15	P-12486
BELT			
Back - refer to ROOF and BACK BELT			
Front door, Rear door and Quarter - refer to BODY SIDE			
BODY SIDE			
- body type ALL	79G	3	P-11946
- body type 54 - w/luxury decor	79G	4,5	P-11945
- body type 66 - w/luxury decor	79G	5,6	P-11944
BODY SIDE PROTECTION			
- body type 54 - bright w/black insert	79G	8	P-11943
- body type 54 - bright finish	79G	7	P-11948
- body type 66 - bright w/black insert	79G	8	P-11942
- body type 66 - bright finish	79G	7	P-11941
- body types 54 and 66 - sport - black w/bright insert	79G	9	P-14111
DOOR EDGE GUARDS	79G	2	P-10061
LUGGAGE COMPARTMENT - refer to BACK END			
ROOF and BACK BELT			
- body type 54	79G	14	P-11935
- body type 66	79G	12	P-11934
- body type 66 - w/half vinyl roof	79G	13	P-12924
ROOF DRIP - refer to ROOF and BACK BELT			
STRIPES			
- body type 66	79G	9	P-12021
- body types 54 and 66	79G	17	P-14801
WINDOW FRAME			
- body type 54	79G	11	P-12494
- body type 66	79G	10	P-12496
WINDSHIELD	79G	1	P-12526

COPYRIGHT © 1986 — FORD MOTOR COMPANY — DEARBORN, MICHIGAN

INDEX

TITLE	SECTION	PAGE	ILLUS. NO.
1979			
J (CAPRI)			
BACK END	79J	5	P-14793
BACK WINDOW	79J	5	P-14793
BELT	79J	4	P-14788
BODY SIDE			
- upper - pressure sensitive	79J	3,4	P-14785
- upper - pressure sensitive	79J	5	P-15034
- lower - rocker panel	79J	2,3	P-14781
DOOR EDGE GUARDS	79J	2	P-10061
ROOF DRIP	79J	4	P-14788
STRIPES	79J	6	P-14903
WINDOW FRAME	79J	4	P-14788
WINDSHIELD	79J	1	P-12525
K (MARK V)			
BACK END	79K	4	P-14107
BACK WINDOW	79K	5	P-12459
BELT			
Back - refer to ROOF and BACK BELT			
Front door and Quarter - refer to DRIP RAIL, DOOR BELT and QUARTER WINDOW			
BODY SIDE	79K	1,2,3	P-14106
DOOR EDGE GUARDS	79K	11	P-10061
DRIP RAIL, DOOR BELT and QUARTER WINDOW	79K	6	P-13179
LUGGAGE COMPARTMENT - refer to BACK END and STRIPES			
ROOF and BACK BELT			
- w/full vinyl roof	79K	6,7	P-13181
- w/half vinyl roof	79K	8,9	P-13182
- Diamond Jubilee	79K	13	P-14411
- w/carriage roof	79K	15	P-14466
STRIPES			
- customer initials (door side)-louvers	79K	10,11	P-14542
- luggage compartment door - Designer Series Givenchy	79K	12	P-13502
- radiator grille opening panel - Designer Series Givenchy - refer to group 8C077 in Text Section			
- body side - Designer Series Pucci	79K	10	P-14544
- Designer Series Blass	79K	12	P-14543
WINDSHIELD - w/o carriage roof	79K	1	P-12994
- w/carriage roof	79K	14	P-14467

INDEX

TITLE	SECTION	PAGE	ILLUS. NO.
1979			
L (BOBCAT)			
BACK END			
- body type 62 and 64	79L	8	P-11415
- body type 73	79L	9	P-14445
BACK WINDOW			
- body type 62	79L	10	P-12464
- body type 64	79L	13	P-12465
- body type 73	79L	9	P-14445
BELT			
Back - refer to ROOF and BACK BELT			
Front Door and Quarter - refer to Body Side			
BODY SIDE			
- body type 73H	79L	4	P-14795
BODY SIDE PROTECTION			
- body type 64	79L	2	P-14798
- body type 73	79L	3	P-13195
DOOR EDGE GUARDS	79L	12	P-10061
LIFTGATE - refer to BACK END			
LUGGAGE COMPARTMENT - refer to BACK END			
ROOF and BACK BELT			
- body types 62 and 64 - roof drip side and partial roof	79L	13	P-12811
ROOF DRIP - refer to ROOF and BACK BELT			
STRIPES			
- body type 64	79L	10,11	P-13546
- body types 62 and 64	79L	5	P-12779
- body type 73	79L	5	P-12690
- body type 73	79L	11,12	P-14413
WINDOW FRAME			
- body types 62 and 64	79L	7	P-12497
- body type 73	79L	6	P-12498
WINDSHIELD	79L	1	P-12522
P (ZEPHYR)			
BACK END			
- body types 36,54 and 66	79P	18	P-14084
- body type 74	79P	19	P-13994
BACK WINDOW			
- body types 36,54 and 66	79P	20	P-13996
- body type 74	79P	19	P-13994
BELT			
- body type 36	79P	13	P-14078
- body type 54	79P	14	P-14076
- body type 66	79P	11,12	P-14064,P-14065
- body type 74	79P	15	P-14081

COPYRIGHT © 1986 — FORD MOTOR COMPANY — DEARBORN, MICHIGAN

INDEX

1979

TITLE	SECTION	PAGE	ILLUS. NO.
P (ZEPHYR) - cont'd.			
BODY SIDE			
- body types ALL - rocker panel and wheel opening	79P	3	P-14069
- body type 54 - with vinyl insert	79P	4	P-14072
- body types 36 and 66 - with vinyl insert	79P	5	P-14070
- body type 74 - with vinyl insert	79P	6	P-14079
- body type 74 - "Villager"	79P	7,8	P-14082
- body type 36 - all vinyl	79P	9	P-14077
- body type 54 - all vinyl	79P	8	P-14075
- body type 66 - all vinyl	79P	9	P-14067
BODY SIDE PROTECTION			
- body types 54 and 74	79P	10	P-14073
- body type 66	79P	10	P-14071
- body type 74 - "Villager"	79P	7,8	P-14082
DOOR EDGE GUARDS	79P	2	P-10061
ROOF DRIP			
- body type 36	79P	17	P-14085
- body types 54 and 66	79P	16	P-14066
- body type 74	79P	15	P-14081
STRIPES			
- body type 36	79P	20,21	P-14256
- body type 36	79P	22	P-14810
- body type 54	79P	23	P-14808
- body type 66	79P	24	P-14809
WINDOW FRAME			
- body type 36	79P	13	P-14078
- body type 54	79P	14	P-14076
- body type 66 - without quarter window division bar	79P	11	P-14065
- body type 66 - with quarter window division bar - with and without louvers	79P	12	P-14064
- body type 74	79P	15	P-14081
WINDSHIELD	79P	1	P-13998
V (VERSAILLES)			
BACK END	79V	5	P-14660
BELT	79V	7	P-12494
BODY SIDE			
- with rocker panel and wheel lip moulding	79V	1	P-13343
- with side protection moulding	79V	2	P-13442
- with colored vinyl insert	79V	3,4	P-13342
BODY SIDE PROTECTION	79V	4	P-11943
DOOR EDGE GUARDS	79V	4	P-10061
LUGGAGE COMPARTMENT DOOR	79V	5	P-14660
ROOF and BACK BELT	79V	8,9	P-14838
ROOF DRIP	79V	8,9	P-14838
STRIPES	79V	6	P-12021
WINDOW FRAME	79V	7	P-12494
WINDSHIELD	79V	1	P-12526

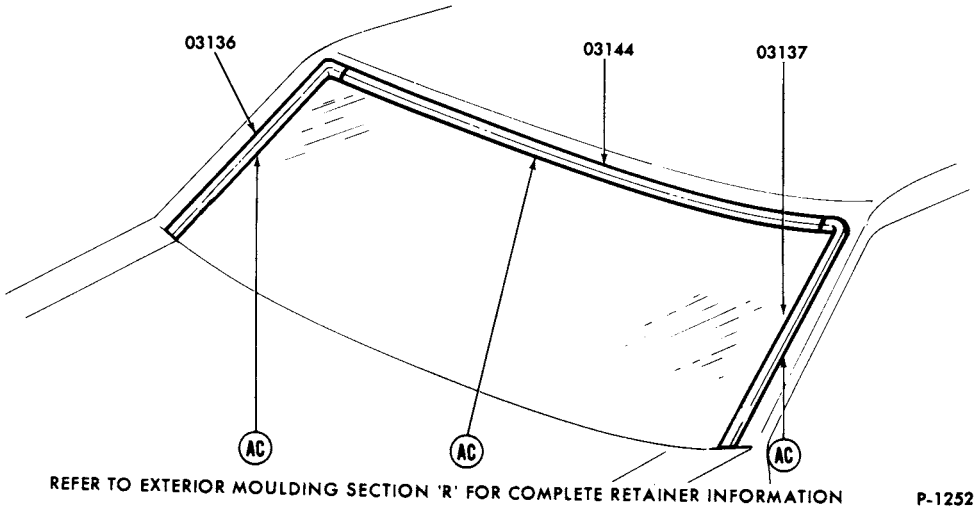

1979 MERCURY - WINDSHIELD

GROUP NUMBER	PART NAME	DESCRIPTION	PART NUMBER	QTY.
03136-7	Moulding (windshield side)		(RH)♦D9AZ 5403136-A (LH)♦D9AZ 5403137-A	1
03144-5	Moulding (windshield upper)	1 piece design	♦D9AZ 5403144-A	1

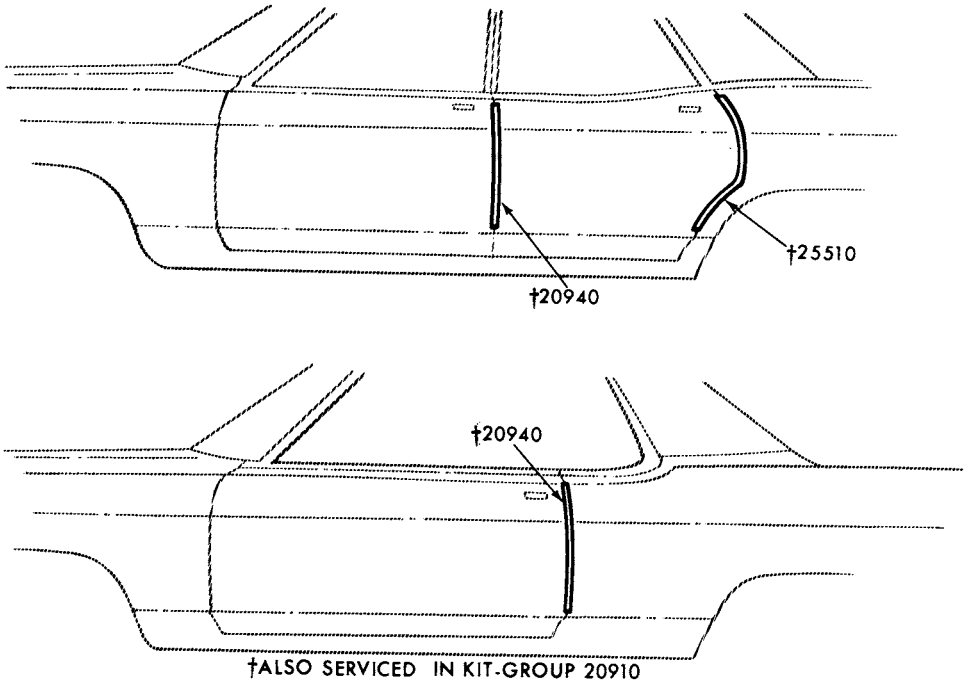

1979 MERCURY - DOOR EDGE GUARDS

♦ Includes attaching parts

COPYRIGHT © 1986 — FORD MOTOR COMPANY — DEARBORN, MICHIGAN

1979 MERCURY - DOOR EDGE GUARDS - cont'd.

GROUP NUMBER	PART NAME	DESCRIPTION	PART NUMBER	QTY.
20910	Moulding kit (door edge guard)	Bright -body types 54 and 74-cut to fit	★D9AZ 5420910-A R/B D9AZ 5420910-ASP	1
		Body type 66-cut to fit	★D9AZ 6620910-A R/B D9AZ 6620910-ASP	1
		Wood grain-body type 74	★D9AZ 7420910-A R/B D9AZ 7420910-ASP	1
20940-1	Moulding (front door edge guard)	Bright-body types 54 and 74-cut to fit	(RH) D9AZ 5420940-A (LH) D9AZ 5420941-A	1
		Body type 66-cut to fit	(RH) D9AZ 6620940-A (LH) D9AZ 6620941-A	1
		Wood grain-body type 74	(RH) D9AZ 7420940-A (LH) D9AZ 7420941-A	1
25510-1	Moulding (rear door edge guard)	Bright-body types 54 and 74-cut to fit	(RH) D9AZ 5425510-A (LH) D9AZ 5425511-A	1
		Wood grain-body type 74	(RH) D9AZ 7425510-A (LH) D9AZ 7425511-A	1

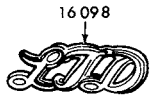

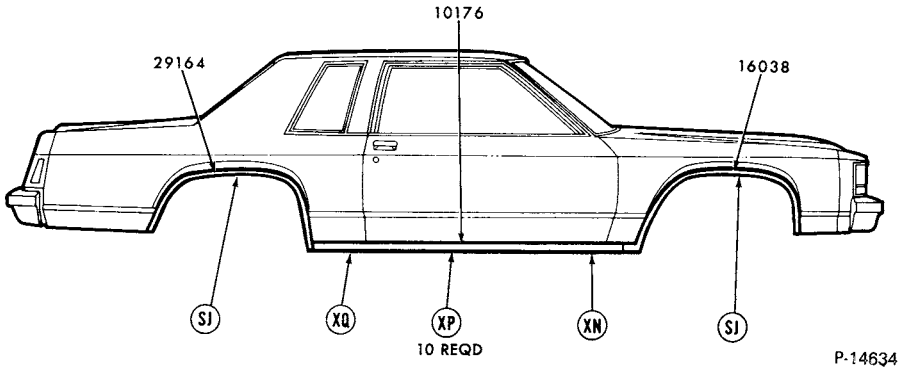

REFER TO EXTERIOR MOULDING SECTION 'R' FOR COMPLETE RETAINER INFORMATION

GROUP NUMBER	PART NAME	DESCRIPTION	PART NUMBER	QTY.

1979 MERCURY - BODY TYPES 54, 66 and 74 - BODY SIDE LOWER

10176	Moulding (rocker panel)	Black	♦D9MY 5410176-A	2
		Bright	♦D9AZ 5410176-A	2
16038-9	Moulding (fender wheel opening)		(RH)♦D9MY 16038-A (LH)♦D9MY 16039-A	1
29164-5	Moulding (quarter panel wheel opening)	Body type 54,66	(RH)♦D9MY 5429164-A (LH)♦D9MY 5429165-A	1
		Body type 74	(RH)♦D9MY 7429164-B (LH)♦D9MY 7429165-B	1

♦ Includes attaching parts

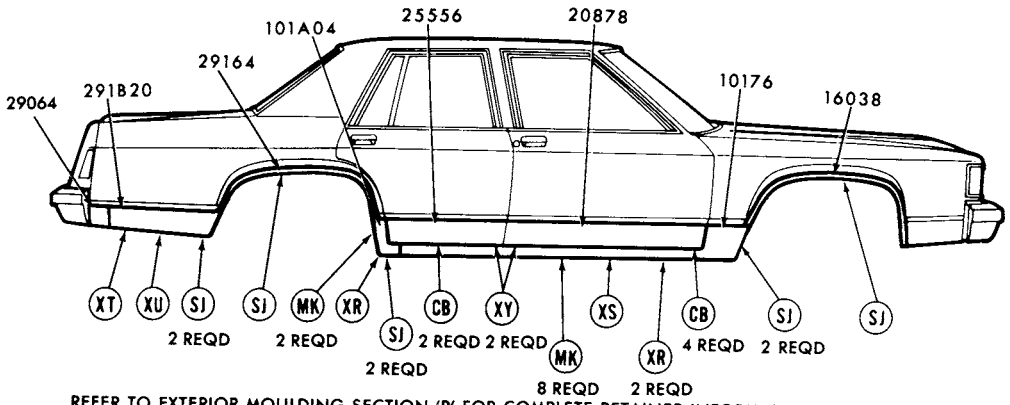

REFER TO EXTERIOR MOULDING SECTION 'R' FOR COMPLETE RETAINER INFORMATION P-14630

1979 MERCURY - BODY TYPE 54K - BODY SIDE

GROUP NUMBER	PART NAME	DESCRIPTION	PART NUMBER		QTY.
101A04-5	Moulding (rocker panel rear)		(RH)♦D9AZ 54101A04-A	(LH)♦D9AZ 54101A05-A	1
10176-7	Moulding (rocker panel front)		(RH)♦D9AZ 5410176-B	(LH)♦D9AZ 5410177-B	1
16038-9	Moulding (front fender wheel opening)		(RH)♦D9AZ 16038-A	(LH)♦D9AZ 16039-A	1
20878-9	Moulding (front door)		(RH)♦D9AZ 5420878-B	(LH)♦D9AZ 5420879-B	1
25556-7	Moulding (rear door)		(RH)♦D9AZ 5425556-B	(LH)♦D9AZ 5425557-B	1
29064-5	Moulding (quarter panel lower rear edge)		(RH) D9MY 5429064-A	(LH) D9MY 5429065-A	1
291B20-1	Moulding (quarter panel rear)		(RH)♦D9AZ 54291B20-B	(LH)♦D9AZ 54291B21-B	1
29164-5	Moulding (quarter panel wheel opening)		(RH)♦D9AZ 5429164-A	(LH)♦D9AZ 5429165-A	1

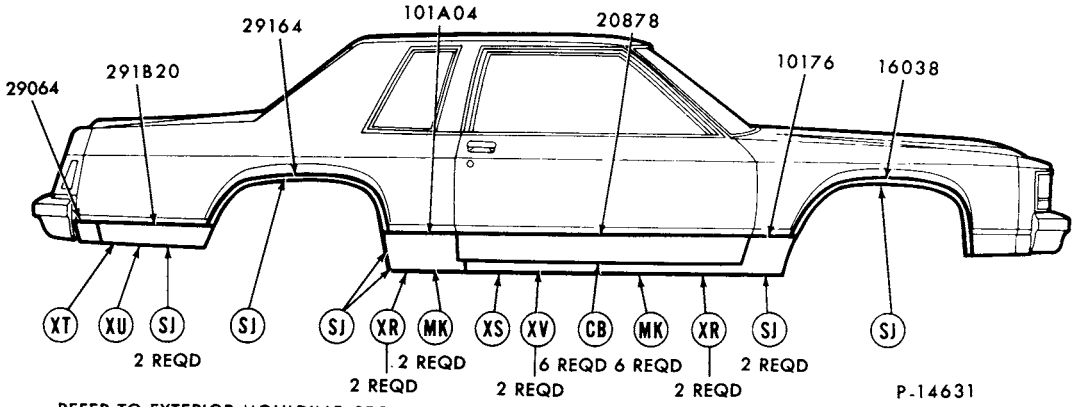

REFER TO EXTERIOR MOULDING SECTION 'R' FOR COMPLETE RETAINER INFORMATION

1979 MERCURY - BODY TYPE 66K - BODY SIDE

GROUP NUMBER	PART NAME	DESCRIPTION	PART NUMBER		QTY.
101A04-5	Moulding (rocker panel rear)		(RH)♦D9AZ 66101A04-A	(LH)♦D9AZ 66101A05-A	1
10176-7	Moulding (rocker panel front)		(RH)♦D9AZ 6610176-A	(LH)♦D9AZ 6610177-A	1
16038-9	Moulding (front fender wheel opening)		(RH)♦D9AZ 16038-A	(LH)♦D9AZ 16039-A	1
20878-9	Moulding (front door)		(RH)♦D9AZ 6620878-B	(LH)♦D9AZ 6620879-B	1
29064-5	Moulding (quarter panel lower rear edge)		(RH) D9MY 5429064-A	(LH) D9MY 5429065-A	1
291B20-1	Moulding (quarter panel rear)		(RH)♦D9AZ 54291B20-B	(LH)♦D9AZ 54291B21-B	1
29164-5	Moulding (quarter panel wheel opening)		(RH)♦D9AZ 5429164-A	(LH)♦D9AZ 5429165-A	1

♦ Includes attaching parts

COPYRIGHT © 1986 — FORD MOTOR COMPANY — DEARBORN, MICHIGAN

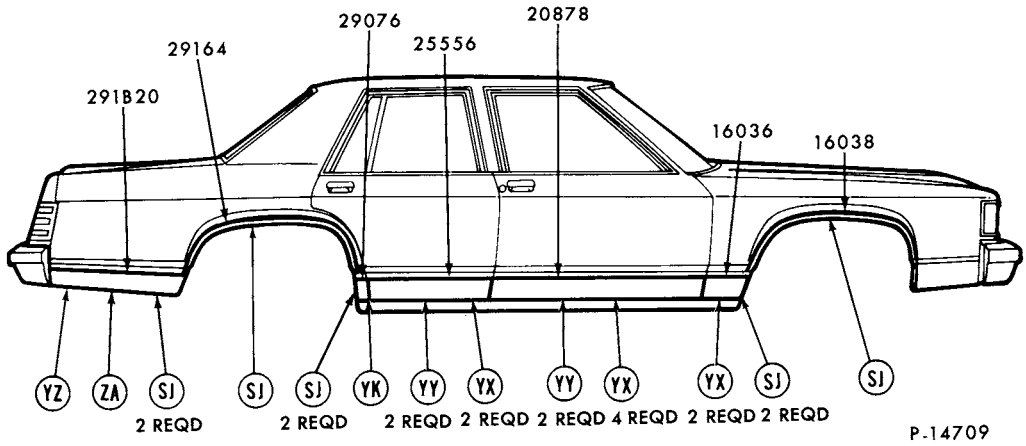

REFER TO EXTERIOR MOULDING SECTION 'R' FOR COMPLETE RETAINER INFORMATION

1979 MERCURY - BODY TYPE 54L - BODY SIDE

GROUP NUMBER	PART NAME	DESCRIPTION	PART NUMBER		QTY.
16036-7	Moulding (front fender)		(RH)♦D9MY 16036-B	(LH)♦D9MY 16037-B	1
16038-9	Moulding (front fender wheel opening)		(RH)♦D9MY 16038-B	(LH)♦D9MY 16039-B	1
20878-9	Moulding (front door)		(RH)♦D9MY 5420878-B	(LH)♦D9MY 5420879-B	1
25556-7	Moulding (rear door)		(RH)♦D9MY 5425556-B	(LH)♦D9MY 5425557-B	1
29076-7	Moulding (quarter panel front)		(RH)♦D9MY 5429076-B	(LH)♦D9MY 5429077-B	1
291B20-1	Moulding (quarter panel rear)		(RH)♦D9MY 54291B20-B	(LH)♦D9MY 54291B21-B	1
29164-5	Moulding (quarter wheel opening)		(RH)♦D9MY 5429164-C	(LH)♦D9MY 5429165-C	1

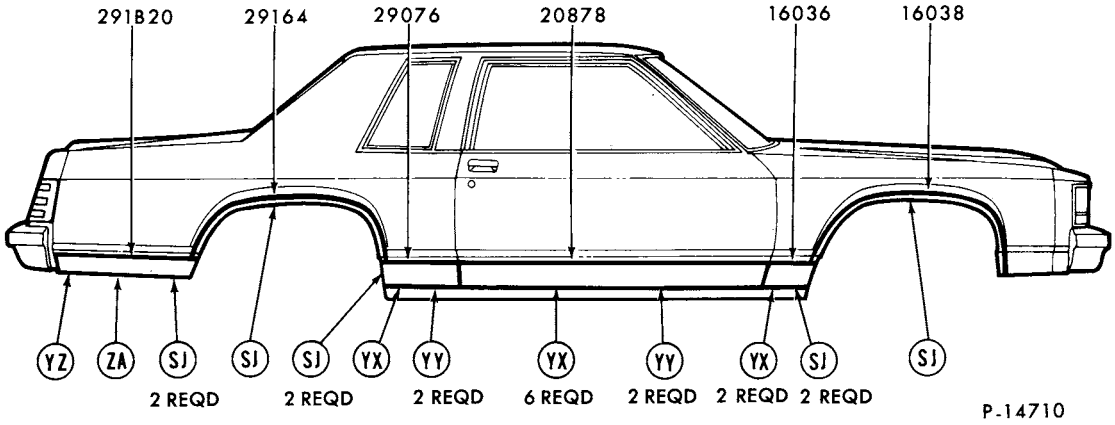

REFER TO EXTERIOR MOULDING SECTION 'R' FOR COMPLETE RETAINER INFORMATION

1979 MERCURY - BODY TYPE 66L - BODY SIDE

GROUP NUMBER	PART NAME	DESCRIPTION	PART NUMBER		QTY.
16036-7	Moulding (front fender)		(RH)♦D9MY 16036-B	(LH)♦D9MY 16037-B	1
16038-9	Moulding (front fender wheel opening)		(RH)♦D9MY 16038-B	(RH)♦D9MY 16039-B	1
20878-9	Moulding (door)		(RH)♦D9MY 6620878-B	(LH)♦D9MY 6620879-B	1
29076-7	Moulding (quarter panel front)		(RH)♦D9MY 6629076-B	(LH)♦D9MY 6629077-B	1
291B20-1	Moulding (quarter panel rear)		(RH)♦D9MY 54291B20-B	(LH)♦D9MY 54291B21-B	1
29164-5	Moulding (quarter wheel opening)		(RH)♦D9MY 5429164-C	(LH)♦D9MY 5429165-C	1

♦ Includes attaching parts

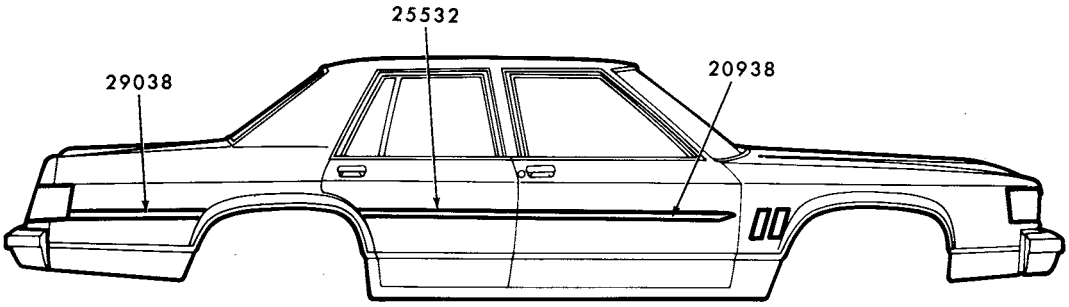

P-14636

1979 MERCURY - BODY TYPE 54 - BODY SIDE MOULDING - PRESSURE SENSITIVE

GROUP NUMBER	PART NAME	DESCRIPTION	⊕COLOR CODE	PART NUMBER	QTY.
20938	Moulding (front door)	◊ Black	84A	D9MY 5420938-AA R.H. and L.H.	2
		◊ Blue (dark)	R1B	D9MY 5420938-AB R.H. and L.H.	2
		◊ Blue (light)	R2B	D9MY 5420938-BB R.H. and L.H.	2
		◊ Camel	87V	D9MY 5420938-AV R.H. and L.H.	2
		◊ Cordovan	64F	D9MY 5420938-AF R.H. and L.H.	2
		◊ Gray	47P	D9MY 5420938-AP R.H. and L.H.	2
		◊ Pine (dark)	32M	D9MY 5420938-AM R.H. and L.H.	2
		◊ Red	G6D	D9MY 5420938-BD R.H. and L.H.	2
		◊ White	47W	D9MY 5420938-AW R.H. and L.H.	2
25532-3	Moulding (rear door)	◊ Black	84A	(RH) D9AZ 5425532-AA (LH) D9AZ 5425533-AA	1
		◊ Blue (dark)	R1B	(RH) D9AZ 5425532-AB (LH) D9AZ 5425533-AB	1
		◊ Blue (light)	R2B	(RH) D9AZ 5425532-BB (LH) D9AZ 5425533-BB	1
		◊ Camel	87V	(RH) D9AZ 5425532-AV (LH) D9AZ 5425533-AV	1
		◊ Cordovan	64F	(RH) D9AZ 5425532-AF (LH) D9AZ 5425533-AF	1
		◊ Gray	47P	(RH) D9AZ 5425532-AP (LH) D9AZ 5425533-AP	1
		◊ Pine (dark)	32M	(RH) D9AZ 5425532-AM (LH) D9AZ 5425533-AM	1
		◊ Red	G6D	(RH) D9AZ 5425532-BD (LH) D9AZ 5425533-BD	1
		◊ White	47W	(RH) D9AZ 5425532-AW (LH) D9AZ 5425533-AW	1
29038-9	Moulding (quarter panel)	◊ Black	84A	(RH) EOAZ 5429038-BA (LH) EOAZ 5429039-BA	1
		◊ Blue (dark)	R1B	(RH) D9AZ 5429038-AB (LH) D9AZ 5429039-AB	1
		◊ Blue (light)	R2B	(RH) D9AZ 5429038-BB (LH) D9AZ 5429039-BB	1
		◊ Camel	87V	(RH) D9AZ 5429038-AV (LH) D9AZ 5429039-AV	1
		◊ Cordovan	64F	(RH) D9AZ 5429038-AF (LH) D9AZ 5429039-AF	1
		◊ Gray	47P	(RH) D9AZ 5429038-AP (LH) D9AZ 5429039-AP	1
		◊ Pine (dark)	32M	(RH) D9AZ 5429038-AM (LH) D9AZ 5429039-AM	1
		◊ Red	G6D	(RH) EOAZ 5429038-BD (LH) EOAZ 5429039-BD	1
		◊ White	47W	(RH) EOAZ 5429038-BW (LH) EOAZ 5429039-BW	1

◊ For color verification, refer to the vinyl roof swatches in the 1979 Salesman's Color and Upholstery Selection Guide
⊕ As shown on Certification Label

COPYRIGHT © 1986 — FORD MOTOR COMPANY — DEARBORN, MICHIGAN

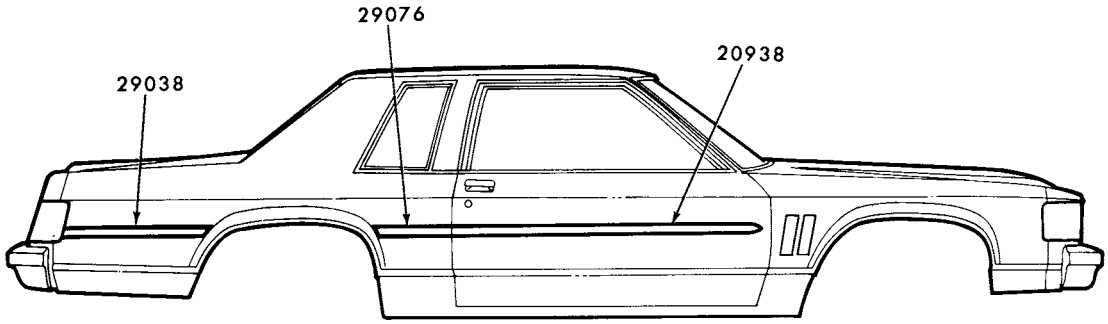

P-14637

1979 MERCURY - BODY TYPE 66 - BODY SIDE MOULDING - PRESSURE SENSITIVE

GROUP NUMBER	PART NAME	DESCRIPTION	⊕COLOR CODE	PART NUMBER		QTY.
20938	Moulding (front door)	◊ Black	84A	D9MY 6620938-AA	R.H. and L.H.	2
		◊ Blue (dark)	R1B	D9MY 6620938-AB	R.H. and L.H.	2
		◊ Blue (light)	R2B	D9MY 6620938-BB	R.H. and L.H.	2
		◊ Camel	87V	D9MY 6620938-AV	R.H. and L.H.	2
		◊ Cordovan	64F	D9MY 6620938-AF	R.H. and L.H.	2
		◊ Gray	47P	D9MY 6620938-AP	R.H. and L.H.	2
		◊ Pine (dark)	32M	D9MY 6620938-AM	R.H. and L.H.	2
		◊ Red	G6D	D9MY 6620938-BD	R.H. and L.H.	2
		◊ White	47W	D9MY 6620938-AW	R.H. and L.H.	2
29038-9	Moulding (quarter panel rear)	◊ Black	84A	(RH) EOAZ 5429038-BA	(LH) EOAZ 5429039-BA	1
		◊ Blue (dark)	R1B	(RH) D9AZ 5429038-AB	(LH) D9AZ 5429039-AB	1
R2B		◊ Blue (light)	R2B	(RH) D9AZ 5429038-BB	(LH) D9AZ 5429039-BB	1
		◊ Camel	87V	(RH) D9AZ 5429038-AV	(LH) D9AZ 5429039-AV	1
		◊ Cordovan	64F	(RH) D9AZ 5429038-AF	(LH) D9AZ 5429039-AF	1
		◊ Gray	47P	(RH) D9AZ 5429038-AP	(LH) D9AZ 5429039-AP	1
		◊ Pine (dark)	32M	(RH) D9AZ 5429038-AM	(LH) D9AZ 5429039-AM	1
		◊ Red	G6D	(RH) EOAZ 5429038-BD	(LH) EOAZ 5429039-BD	1
		◊ White	47W	(RH) EOAZ 5429038-BW	(LH) EOAZ 5429039-BW	1
29076-7	Moulding (quarter panel front)	◊ Black	84A	(RH) D9AZ 6629076-AA	(LH) D9AZ 6629077-AA	1
		◊ Blue (dark)	R1B	(RH) D9AZ 6629076-AB	(LH) D9AZ 6629077-AB	1
		◊ Blue (light)	R2B	(RH) D9AZ 6629076-BB	(LH) D9AZ 6629077-BB	1
		◊ Camel	87V	(RH) D9AZ 6629076-AV	(LH) D9AZ 6629077-AV	1
		◊ Cordovan	64F	(RH) D9AZ 6629076-AF	(LH) D9AZ 6629077-AF	1
		◊ Gray	47P	(RH) D9AZ 6629076-AP	(LH) D9AZ 6629077-AP	1
		◊ Pine (dark)	32M	(RH) D9AZ 6629076-AM	(LH) D9AZ 6629077-AM	1
		◊ Red	G6D	(RH) D9AZ 6629076-BD	(LH) D9AZ 6629077-BD	1
		◊ White	47W	(RH) D9AZ 6629076-AW	(LH) D9AZ 6629077-AW	1

◊ For color verification, refer to the vinyl roof swatches in the 1979 Salesman's Color and Upholstery Selection Guide

⊕ As Shown on Certification Label

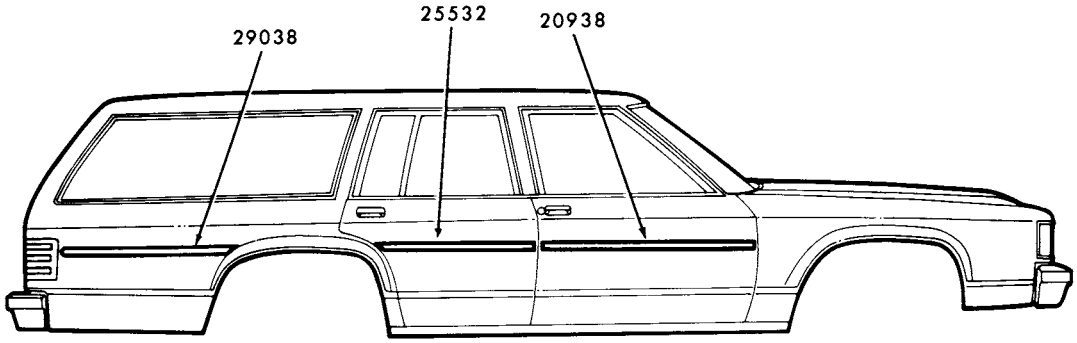

P-14707

1979 MERCURY - BODY TYPE 74H - BODY SIDE MOULDING - PRESSURE SENSITIVE

GROUP NUMBER	PART NAME	DESCRIPTION	⊕COLOR CODE	PART NUMBER	QTY.
20938	Moulding (front door)	◊ Black	84A	D9MY 5420938-AA R.H. and L.H.	2
		◊ Blue (dark)	R1B	D9MY 5420938-AB R.H. and L.H.	2
		◊ Blue (light)	R2B	D9MY 5420938-BB R.H. and L.H.	2
		◊ Camel	87V	D9MY 5420938-AV R.H. and L.H.	2
		◊ Cordovan	64F	D9MY 5420938-AF R.H. and L.H.	2
		◊ Gray	47P	D9MY 5420938-AP R.H. and L.H.	2
		◊ Pine (dark)	32M	D9MY 5420938-AM R.H. and L.H.	2
		◊ Red	G6D	D9MY 5420938-BD R.H. and L.H.	2
		◊ White	47W	D9MY 5420938-AW R.H. and L.H.	2
25532-3	Moulding (rear door)	◊ Black	84A	(RH) D9AZ 5425532-AA (LH) D9AZ 5425533-AA	1
		◊ Blue (dark)	R1B	(RH) D9AZ 5425532-AB (LH) D9AZ 5425533-AB	1
		◊ Blue (light)	R2B	(RH) D9AZ 5425532-BB (LH) D9AZ 5425533-BB	1
		◊ Camel	87V	(RH) D9AZ 5425532-AV (LH) D9AZ 5425533-AV	1
		◊ Cordovan	64F	(RH) D9AZ 5425532-AF (LH) D9AZ 5425533-AF	1
		◊ Gray	47P	(RH) D9AZ 5425532-AP (LH) D9AZ 5425533-AP	1
		◊ Pine (dark)	32M	(RH) D9AZ 5425532-AM (LH) D9AZ 5425533-AM	1
		◊ Red	G6D	(RH) D9AZ 5425532-BD (LH) D9AZ 5425533-BD	1
		◊ White	47W	(RH) D9AZ 5425532-AW (LH) D9AZ 5425533-AW	1
29038-9	Moulding (quarter panel)	◊ Black	84A	(RH) D9AZ 7429038-BA (LH) D9AZ 7429039-BA	1
		◊ Blue (dark)	R1B	(RH) D9AZ 7429038-BB (LH) D9AZ 7429039-BB	1
		◊ Blue (light)	R2B	(RH) D9AZ 7429038-CB (LH) D9AZ 7429039-CB	1
		◊ Camel	87V	(RH) D9AZ 7429038-BV (LH) D9AZ 7429039-BV	1
		◊ Cordovan	64F	(RH) D9AZ 7429038-BF (LH) D9AZ 7429039-BF	1
		◊ Gray	47P	(RH) D9AZ 7429038-BP (LH) D9AZ 7429039-BP	1
		◊ Pine (dark)	32M	(RH) D9AZ 7429038-BM (LH) D9AZ 7429039-BM	1
		◊ Red	G6D	(RH) D9AZ 7429038-BD (LH) D9AZ 7429039-BD	1
		◊ White	47W	(RH) D9AZ 7429038-BW (LH) D9AZ 7429039-BW	1

◊ For color verification, refer to the vinyl roof swatches in the 1979 Salesman's Color and Upholstery Selection Guide
⊕ As shown on Certification Label

COPYRIGHT © 1986 — FORD MOTOR COMPANY — DEARBORN, MICHIGAN

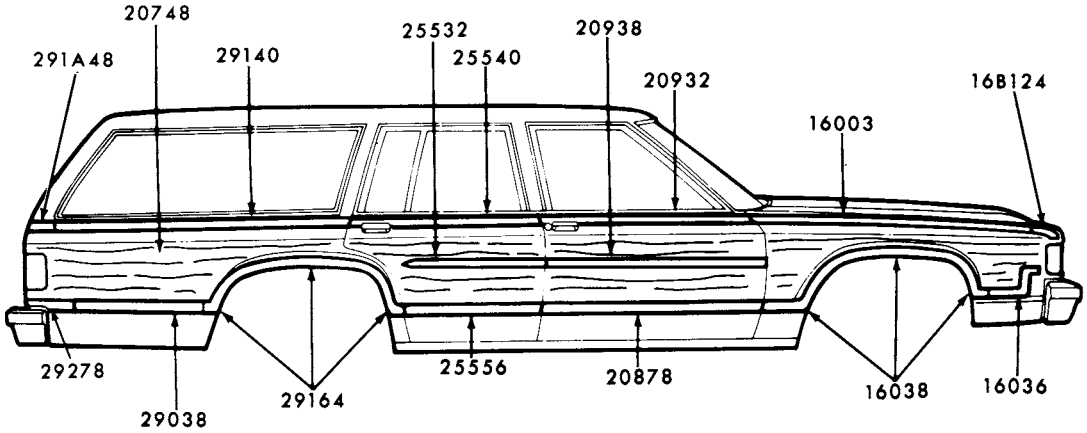

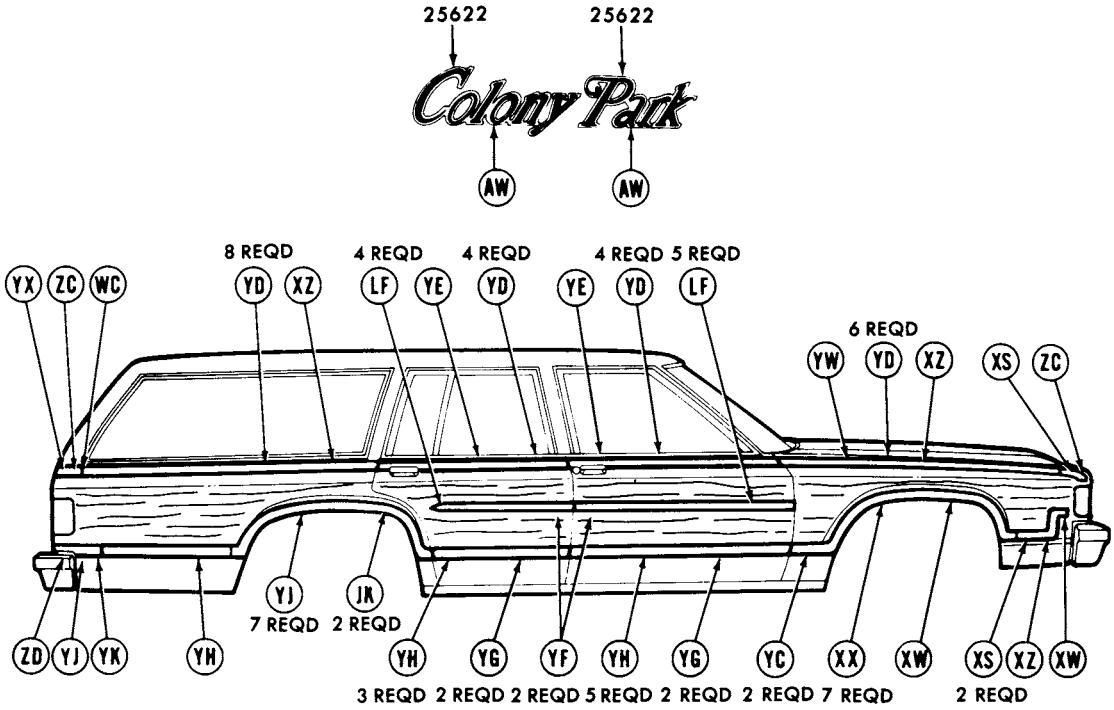

REFER TO EXTERIOR MOULDING SECTION 'R' FOR COMPLETE RETAINER INFORMATION

P-14629

1979 MERCURY - BODY TYPE 74K - BODY SIDE

1979 MERCURY - BODY TYPE 74K - BODY SIDE - cont'd.

GROUP NUMBER	PART NAME	DESCRIPTION	PART NUMBER		QTY.
16003-4	Moulding (front fender upper)	1 piece design	(RH)♦D9MY 16003-B	(LH)♦D9MY 16004-B	2
16036-7	Moulding (front fender lower front)		(RH)♦D9MY 16036-A	(LH)♦D9MY 16037-A	1
16038-9	Moulding (front fender wheel opening)		(RH)♦D9MY 16038-C	(LH)♦D9MY 16039-C	1
16B124-5	Moulding (front fender upper front extension)	1 piece design	(RH)♦D9MY 16003-B	(LH)♦D9MY 16004-B	1
20748	Transfer		D9MY 7420748-A		AR
20878-9	Moulding (front door lower)		(RH)♦D9MY 7420878-A	(LH)♦D9MY 7420879-A	1
20932-3	Moulding (front door upper)	w/sail mirror	(RH)♦D9MY 7420932-A	(LH)♦D9MY 7420933-A	1
		w/o sail mirror	(RH)♦D9MY 7420932-C	(LH)♦D9MY 7420933-C	1
20938	Moulding (front door)	Brown - "Before 1/29/79"	♦D9MY 7420938-B	R.H. and L.H.	2
		Brown - "From 1/29/79"	♦D9MY 7420938-C	R.H. and L.H.	2
25532	Moulding (rear door)	Brown - "Before 1/29/79"	♦D9AZ 7425532-A	R.H. and L.H.	2
		Brown - "From 1/29/79"	♦D9AZ 7425532-B	R.H. and L.H.	2
25540-1	Moulding (rear door upper)		(RH)♦D9MY 7425540-A	(LH)♦D9MY 7425541-A	1
25556-7	Moulding (rear door lower)		(RH)♦D9MY 7425556-A	(LH)♦D9MY 7425557-A	1
25622	Plate (name)	"Colony"	♦D3MY 7125622-A	R.H. and L.H.	2
		"Park"	♦D3MY 7125622-B	R.H. and L.H.	2
29038	Moulding (quarter panel lower front)		♦D9MY 7429038-A	R.H. and L.H.	2
29140-1	Moulding (quarter panel upper front)		(RH)♦D9MY 7429140-A	(LH)♦D9MY 7429141-A	1
291A48-9	Moulding (quarter panel upper rear)		(RH)♦D9MY 74291A48-A	(LH)♦D9MY 74291A49-A	1
29164-5	Moulding (quarter panel wheel opening)		(RH)♦D9MY 7429164-A	(LH)♦D9MY 7429165-A	1
29278-9	Moulding (quarter panel lower rear)		(RH)♦D9MY 7429278-A	(LH)♦D9MY 7429279-A	1

♦ Includes attaching parts

COPYRIGHT © 1986 — FORD MOTOR COMPANY — DEARBORN, MICHIGAN

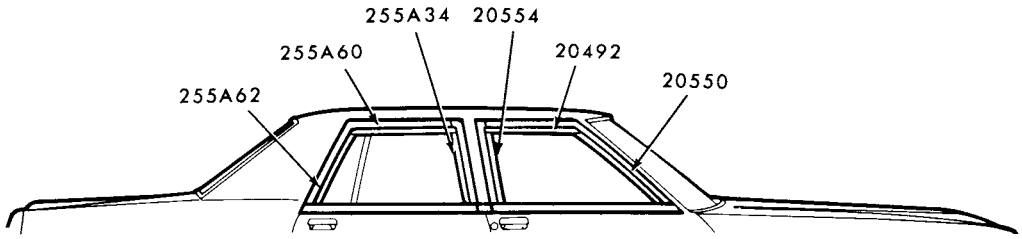

P-14724

1979 MERCURY - BODY TYPE 54 - WINDOW FRAMES

GROUP NUMBER	PART NAME	DESCRIPTION	PART NUMBER		QTY.
20492-3	Moulding (front door window upper)		(RH) D9AZ 5420492-A	(LH) D9AZ 5420493-A	1
20550-1	Moulding (front door window front)		(RH) D9AZ 5420550-A	(LH) D9AZ 5420551-A	1
20554-5	Moulding (front door window rear)		(RH) D9AZ 5420554-A	(LH) E0AZ 5420555-A	1
255A34-5	Moulding (rear door window front)		(RH) D9AZ 54255A34-A	(LH) D9AZ 54255A35-A	1
255A60-1	Moulding (rear door window upper)		(RH) D9AZ 54255A60-A	(LH) D9AZ 54255A61-A	1
255A62-3	Moulding (rear door window rear)		(RH) D9AZ 54255A62-A	(LH) D9AZ 54255A63-A	1

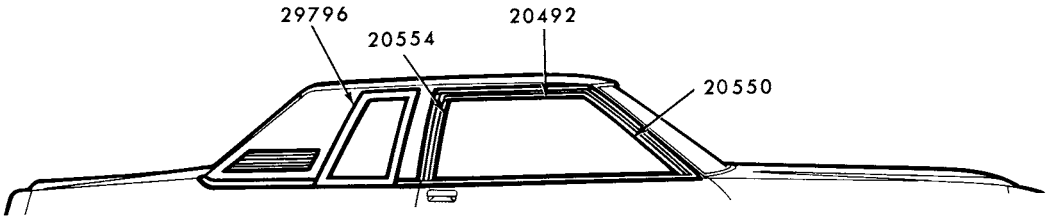

P-14641

1979 MERCURY - BODY TYPE 66 - WINDOW FRAME SIDE

GROUP NUMBER	PART NAME	DESCRIPTION	PART NUMBER		QTY.
20492-3	Moulding (door window upper)		(RH) D9AZ 6620492-A	(LH) D9AZ 6620493-A	1
20550-1	Moulding (door window front)		(RH) D9AZ 5420550-A	(LH) D9AZ 5420551-A	1
20554-5	Moulding (front door window rear)		(RH) D9AZ 6620554-A	(LH) D9AZ 6620555-A	1
29796-7	Moulding (quarter window opening)		(RH) D9MY 6629796-A	(LH) D9MY 6629797-A	1

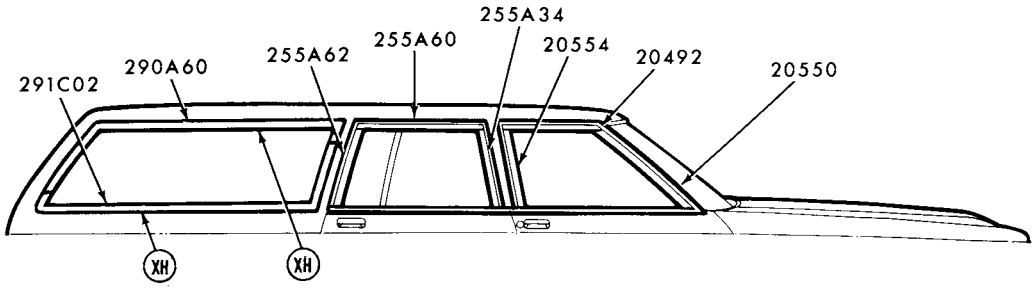

REFER TO EXTERIOR MOULDING SECTION "R" FOR COMPLETE RETAINER INFORMATION

P-14726

1979 MERCURY - BODY TYPE 74 - WINDOW SIDE

GROUP NUMBER	PART NAME	DESCRIPTION	PART NUMBER		QTY.
20492-3	Moulding (front door window upper)		(RH) D9AZ 5420492-A	(LH) D9AZ 5420493-A	1
20550-1	Moulding (front door window front)		(RH) D9AZ 5420550-A	(LH) D9AZ 5420551-A	1
20554-5	Moulding (front door window rear)		(RH) D9AZ 5420554-A	(LH) E0AZ 5420555-A	1
255A34-5	Moulding (rear door window front)		(RH) D9AZ 54255A34-A	(LH) D9AZ 54255A35-A	1
255A60-1	Moulding (rear door window upper)		(RH) D9AZ 74255A60-A	(LH) D9AZ 74255A61-A	1
255A62-3	Moulding (rear door window rear)		(RH) D9AZ 74255A62-A	(LH) D9AZ 74255A63-A	1
290A60-1	Moulding (quarter window upper)		(RH)♦D9AZ 74290A60-A	(LH)♦D9AZ 74290A61-A	1
291C02-3	Moulding (quarter window lower)		(RH)♦D9AZ 74291C02-A	(LH)♦D9AZ 74291C03-A	1

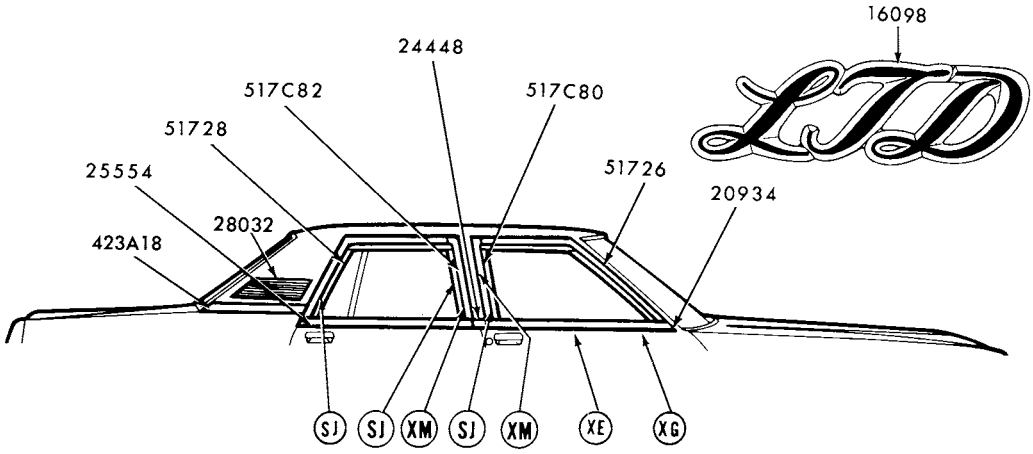

REFER TO EXTERIOR MOULDING SECTION "R" FOR COMPLETE RETAINER INFORMATION

P-14640

1979 MERCURY - BODY TYPE 54 - ROOF DRIP SIDE and BELT MOULDINGS

♦ Includes attaching parts

COPYRIGHT © 1986 — FORD MOTOR COMPANY — DEARBORN, MICHIGAN

1979 MERCURY - BODY TYPE 54 - ROOF DRIP SIDE and BELT MOULDINGS - cont'd.

GROUP NUMBER	PART NAME	DESCRIPTION	PART NUMBER		QTY.
16098	Plate (name)		Not used on Mercury		
20934-5	Moulding (front door belt)	W/o remote control mirror-w/o vent window	(RH)♦D9AZ 5420934-A	(LH)♦D9AZ 5420935-A	1
		W/remote control mirror-w/o vent window	(RH)♦D9AZ 5420934-C	(LH)♦D9AZ 5420935-C	1
		W/vent window	(RH)♦D9AZ 5420934-D	(LH)♦D9AZ 5420935-D	1
24448-9	Moulding (center body pillar belt)		(RH)♦D9AZ 5424448-A	(LH)♦D9AZ 5424449-A	1
25554-5	Moulding (rear door belt)		(RH)♦D9AZ 5425554-A	(LH)♦D9AZ 5425555-A	1
28032-3	Ornament (quarter panel)	Paint to match	(RH)♦D9MY 5428032-AW	(LH)*D9MY 5428033-AW	1
423A18-9	Moulding (back belt)	Paint to match	(RH)♦D9AZ 54423A18-A	(LH)♦D9AZ 54423A19-A	1
51726-7	Moulding (roof drip side front)		(RH) D9AZ 5451726-B	(LH) D9AZ 5451727-B	1
51728-9	Moulding (roof drip side finish rear)		(RH) EOAZ 5451728-B	(LH) EOAZ 5451729-B	1
517C80-1	Moulding (roof drip finish center front)		(RH)♦D9AZ 54517C80-A	(LH)♦EOAZ 54517C81-A	1
517C82-3	Moulding (roof drip side center finish rear)		(RH)♦D9AZ 54517C82-A	(LH)♦EOAZ 54517C83-A	1

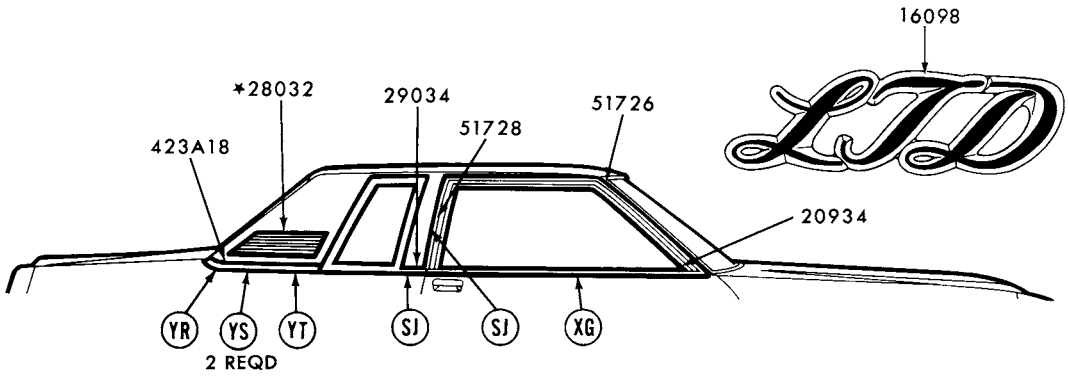

REFER TO EXTERIOR MOULDING SECTION 'R' FOR COMPLETE RETAINER INFORMATION

P-14725

1979 MERCURY - BODY TYPE 66 - ROOF DRIP SIDE and BELT MOULDINGS

GROUP NUMBER	PART NAME	DESCRIPTION	PART NUMBER		QTY.
16098	Plate (name)		Not used on Mercury		
20934-5	Moulding (door belt)	W/o remote control mirror-w/o vent window	(RH)♦D9AZ 6620934-A	(LH)♦D9AZ 6620935-A	1
		W/remote control mirror-w/o vent window	(RH)♦D9AZ 6620934-C	(LH)♦D9AZ 6620935-C	1
		W/vent window	(RH)♦D9AZ 6620934-D	(LH)♦D9AZ 6620935-D	1
28032-3	Ornament (quarter panel)	Paint to match	(RH)*D9MY 6628032-AW	(LH)*D9MY 6628033-AW	1
29034-5	Moulding (quarter panel belt)		(RH)♦D9AZ 6629034-A	(LH)♦D9AZ 6629035-A	1
423A18-9	Moulding (back belt)		(RH)♦D9AZ 66423A18-A	(LH)♦D9AZ 66423A19-A	1
51726-7	Moulding (roof drip side front)		(RH)♦D9AZ 6651726-B	(LH)♦D9AZ 6651727-B	1
51728-9	Moulding (roof drip side rear)		(RH)♦D9AZ 6651728-A	(LH)♦D9AZ 6651729-A	1

♦ Includes attaching parts

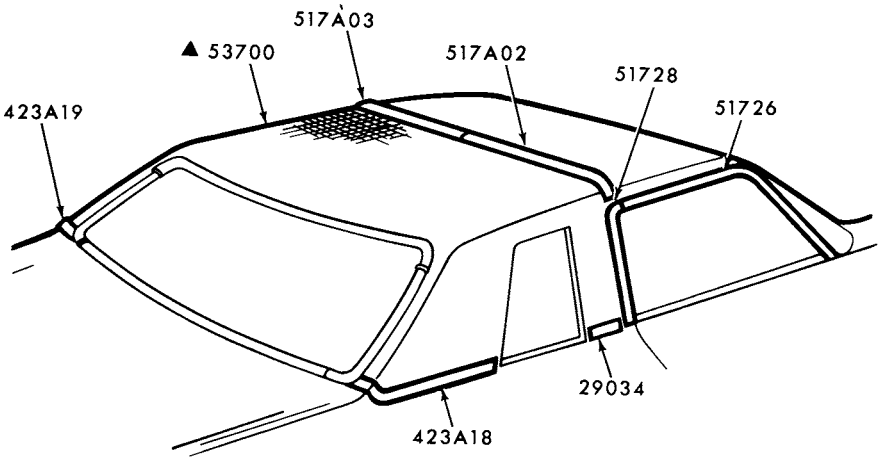

▲REFER TO GROUP IN SOFT TRIM SECTION
REFER TO EXTERIOR MOULDING SECTION "R" FOR COMPLETE RETAINER INFORMATION

P-14712

1979 MERCURY - BODY TYPE 66 - ROOF DRIP w/PARTIAL VINYL ROOF

GROUP NUMBER	PART NAME	DESCRIPTION	PART NUMBER		QTY.
29034-5	Moulding (quarter panel front)		(RH)♦D9AZ 6629034-A	(LH)♦D9AZ 6629035-A	1
423A18-9	Moulding (back belt side)	Paint to match	(RH)♦D9AZ 66423A18-A	(LH)♦D9AZ 66423A19-A	1
517A02-3	Moulding (roof top)	W/partial vinyl roof	(RH)♦E5AZ 66517A02-A	(LH)♦E5AZ 66517A03-A	1
51726-7	Moulding (roof drip side front)		(RH) D9AZ 6651726-B	(LH) D9AZ 6651727-B	1
51728-9	Moulding (roof drip side rear)		(RH)♦D9AZ 6651728-A	(LH)♦D9AZ 6651729-A	1

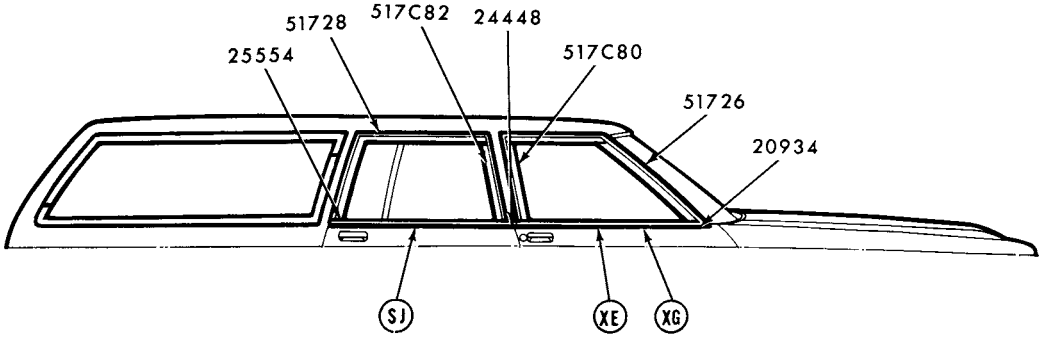

REFER TO EXTERIOR MOULDING SECTION "R" FOR COMPLETE RETAINER INFORMATION

P-14639

1979 MERCURY - BODY TYPE 74 - ROOF DRIP SIDE

♦ Includes attaching parts

COPYRIGHT © 1986 — FORD MOTOR COMPANY — DEARBORN, MICHIGAN

1979 MERCURY - BODY TYPE 74 - ROOF DRIP SIDE - cont'd.

GROUP NUMBER	PART NAME	DESCRIPTION	PART NUMBER		QTY.
20934-5	Moulding (front door belt)	W/o remote control mirror-w/o vent window	(RH)♦D9AZ 5420934-A	(LH)♦D9AZ 5420935-A	1
		W/remote control mirror-w/o vent window	(RH)♦D9AZ 5420934-C	(LH)♦D9AZ 5420935-C	1
		W/vent window	(RH)♦D9AZ 5420934-D	(LH)♦D9AZ 5420935-D	1
25554-5	Moulding (rear door belt)		(RH)♦D9AZ 5425554-A	(LH)♦D9AZ 5425555-A	1
51726-7	Moulding (roof drip side finish front)		(RH) D9AZ 5451726-B	(LH) D9AZ 5451727-B	1
51728-9	Moulding (rear drip side finish rear)		(RH)♦EOAZ 7451728-A	(LH)♦D9AZ 7451729-A	1
517C80-1	Moulding (roof drip side finish center front)		(RH)♦D9AZ 54517C80-A	(LH)♦EOAZ 54517C81-A	1
517C82-3	Moulding (roof drip side finish center rear)		(RH)♦D9AZ 54517C82-A	(LH)♦EOAZ 54517C83-A	1

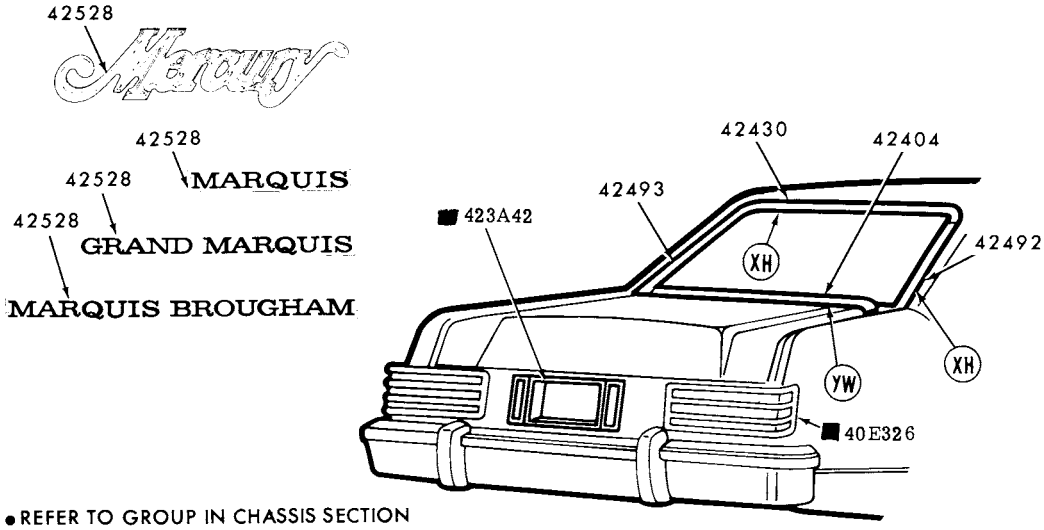

● REFER TO GROUP IN CHASSIS SECTION
REFER TO EXTERIOR MOULDING SECTION "R" FOR COMPLETE RETAINER INFORMATION
■ REFER TO BODY SECTION

P-14700

1979 MERCURY - BODY TYPES 54 and 66 - BACK WINDOW

GROUP NUMBER	PART NAME	DESCRIPTION	PART NUMBER		QTY.
42404	Moulding (back window lower)		♦D9MY 5442404-A		1
42430	Moulding (back window upper)		♦D9AZ 5442430-A		1
42492-3	Moulding (back window side)		(RH)♦D9AZ 5442492-A	(LH)♦D9AZ 5442493-A	1
42528	Plate (name)	"Grand Marquis"	D9MY 5442528-D		1
		"Marquis"	D9MY 5442528-C		1
		"Marquis Brougham"	D9MY 5442528-B		1
		"Mercury"	D9MY 5442528-A		1

♦ Includes attaching parts

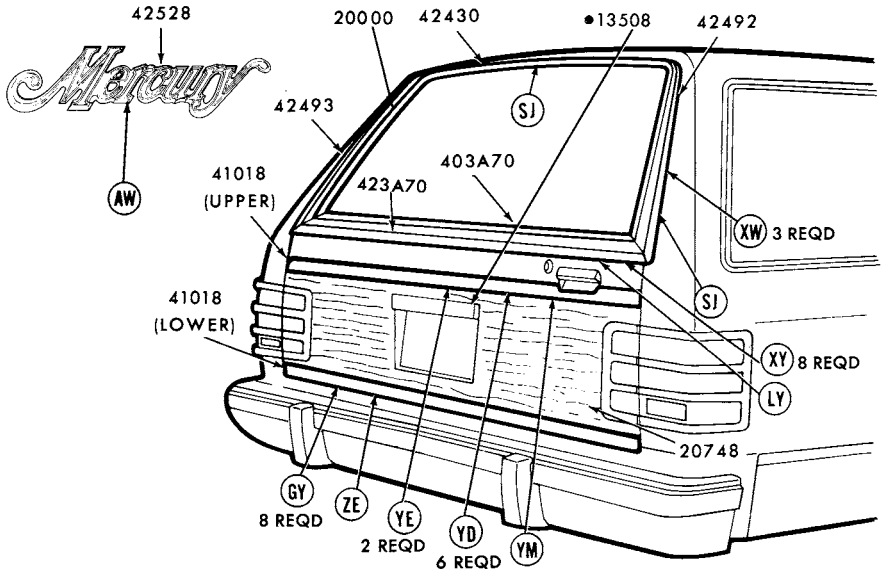

•REFER TO GROUP IN CHASSIS SECTION
REFER TO EXTERIOR MOULDING SECTION "R" FOR COMPLETE RETAINER INFORMATION

P-14703

1979 MERCURY - BODY TYPE 74 - BACK END

GROUP NUMBER	PART NAME	DESCRIPTION	PART NUMBER		QTY.
20000	Transfer	Black-25' roll	D9AZ 7420000-AA	R.H. and L.H.	AR
20748	Transfer	Wood grain	D9MY 7420748-A		AR
403A70	Moulding (tailgate belt)		♠D9AZ 74403A70-B		1
41018	Moulding (tailgate)	Lower	♠D9MY 7441018-B		1
		Upper	♠D9MY 7441018-A		1
423A70	Moulding (tailgate upper)		♠D9AZ 74423A70-A		1
42430	Moulding (back window upper)		♠D9AZ 7442430-A		1
42492-3	Moulding (back window side)	Black ♦1C	(RH)♠D9AZ 7442492-AA	(LH)♠D9AZ 7442493-AA	1
		Blue (dark) ♦3L	(RH)♠D9AZ 7442492-CB	(LH)♠D9AZ 7442493-CB	1
		Blue (light) ♦3F	(RH)♠D9AZ 7442492-BB	(LH)♠D9AZ 7442493-BB	1
		Blue (medium) ♦3H	(RH)♠D9AZ 7442492-AB	(LH)♠D9AZ 7442493-AB	1
		Chamois ♦5P	(RH)♠D9AZ 7442492-BF	(LH)♠D9AZ 7442493-BF	1
		Cordovan ♦8N	(RH)♠D9AZ 7442492-AF	(LH)♠D9AZ 7442493-AF	1
		Cream ♦62	(RH)♠D9AZ 7442492-AV	(LH)♠D9AZ 7442493-AV	1
		Gray ♦1N	(RH)♠D9AZ 7442492-AP	(LH)♠D9AZ 7442493-AP	1
		Maroon ♦2J	(RH)♠D9AZ 7442492-BD	(LH)♠D9AZ 7442493-BD	1
		Pine (dark) ♦4D	(RH)♠D9AZ 7442492-AM	(LH)♠D9AZ 7442493-AM	1
		Pine (light) ♦76	(RH)♠D9AZ 7442492-BM	(LH)♠D9AZ 7442493-BM	1
		Pine (medium) ♦75	(RH)♠D9AZ 7442492-CM	(LH)♠D9AZ 7442493-CM	1
		Red ♦2H	(RH)♠D9AZ 7442492-AD	(LH)♠D9AZ 7442493-AD	1
		Silver ♦1G	(RH)♠D9AZ 7442492-BP	(LH)♠D9AZ 7442493-BP	1
		Tan ♦8J	(RH)♠D9AZ 7442492-AU	(LH)♠D9AZ 7442493-AU	1
		White ♦9D	(RH)♠D9AZ 7442492-AW	(LH)♠D9AZ 7442493-AW	1
42528	Plate (name)	"Marquis"	D9MY 5442528-C		1
		"Mercury"	D4GY 6542528-A		1

♦ Exterior paint code as shown on Certification Label ♠ Includes attaching parts

COPYRIGHT © 1986 — FORD MOTOR COMPANY — DEARBORN, MICHIGAN

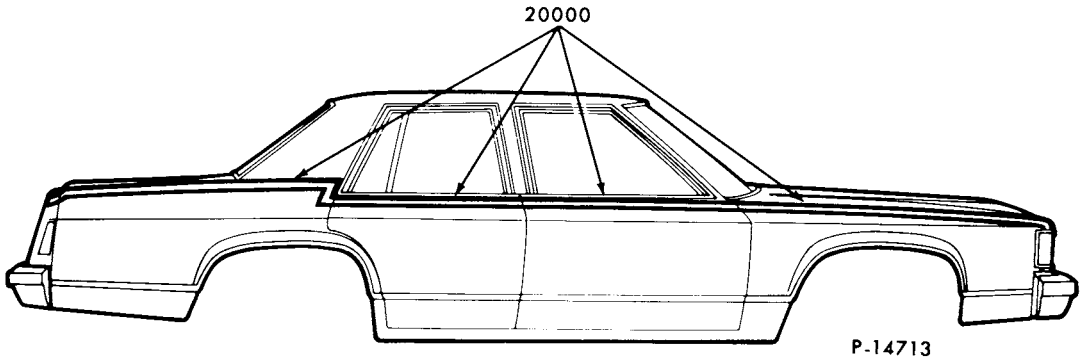

1979 MERCURY - BODY TYPES 54H,K,L - STRIPES

GROUP NUMBER	PART NAME	DESCRIPTION	PART NUMBER	QTY.
20000	Stripe kit (body side)	Consists of radiator grille opening, front and rear doors, quarter panel and luggage compt. door		
		Blue(medium, light and dark)	D9MY 5420000-AB	1
		Cream/tan/gold	D9MY 5420000-AV	1
		Pine(medium, light and dark)	D9MY 5420000-AM	1
		Red/maroon	D9MY 5420000-AD	1
		Silver/gray/red	D9MY 5420000-AP	1

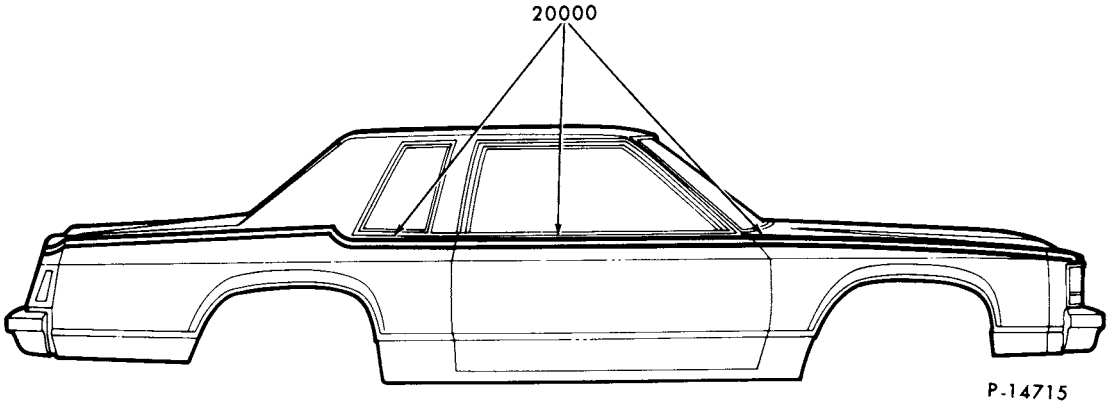

1979 MERCURY - BODY TYPES 66H,K,L - STRIPES

GROUP NUMBER	PART NAME	DESCRIPTION	PART NUMBER	QTY.
20000	Stripe kit (body side)	Consists of radiator grille opening, fenders, doors, quarter panel and deck lid		
		Blue(medium, light and dark)	D9MY 6620000-AB	1
		Cream/tan/gold	D9MY 6620000-AV	1
		Pine(medium, light and dark)	D9MY 6620000-AM	1
		Red/maroon	D9MY 6620000-AD	1
		Silver/gray/red	D9MY 6620000-AP	1

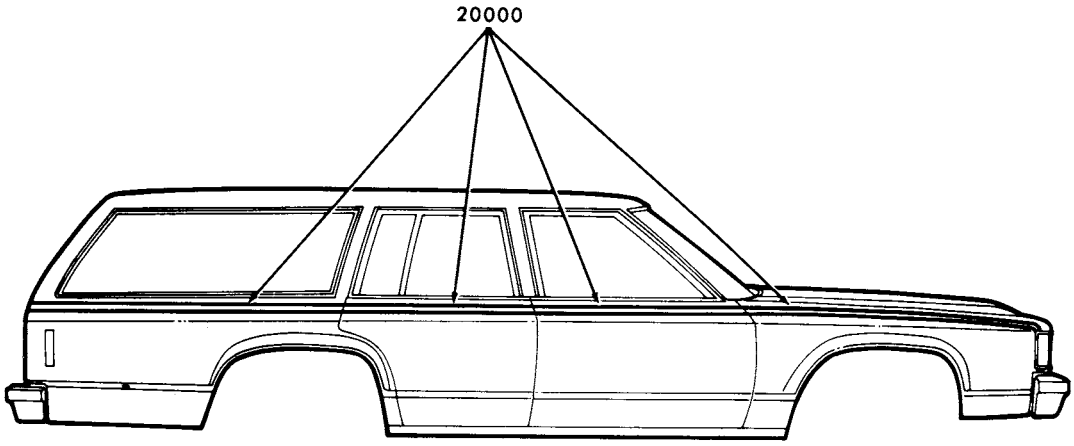

1979 MERCURY - BODY TYPE 74 - STRIPES

GROUP NUMBER	PART NAME	DESCRIPTION	PART NUMBER	QTY.
20000	Stripe kit (body side)	Consists of radiator grille opening, front fenders, front and rear doors, quarter panel and tailgate		
		Blue (medium, light and dark)	D9MY 7420000-AB	1
		Cream/tan/gold	D9MY 7420000-AV	1
		Pine (medium, light and dark)	D9MY 7420000-AM	1
		Red/maroon	D9MY 7420000-AD	1
		Silver/gray/red	D9MY 7420000-AP	1

COPYRIGHT © 1986 — FORD MOTOR COMPANY — DEARBORN, MICHIGAN

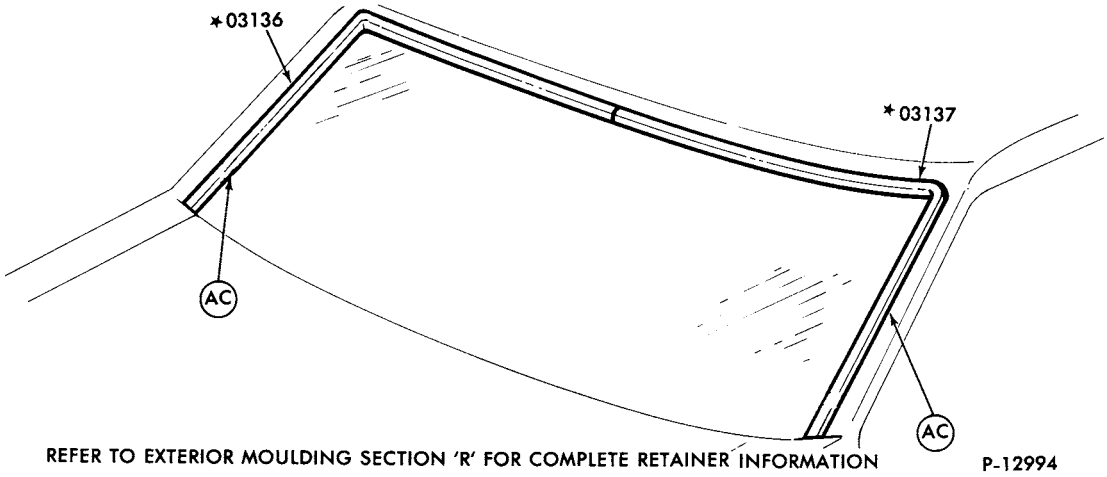

1979 LINCOLN - WINDSHIELD

GROUP NUMBER	PART NAME	DESCRIPTION	PART NUMBER	QTY.
03136-7	Moulding (windshield outside)		(RH)*D5VY 6003136-A (LH)*D5VY 6003137-A	1

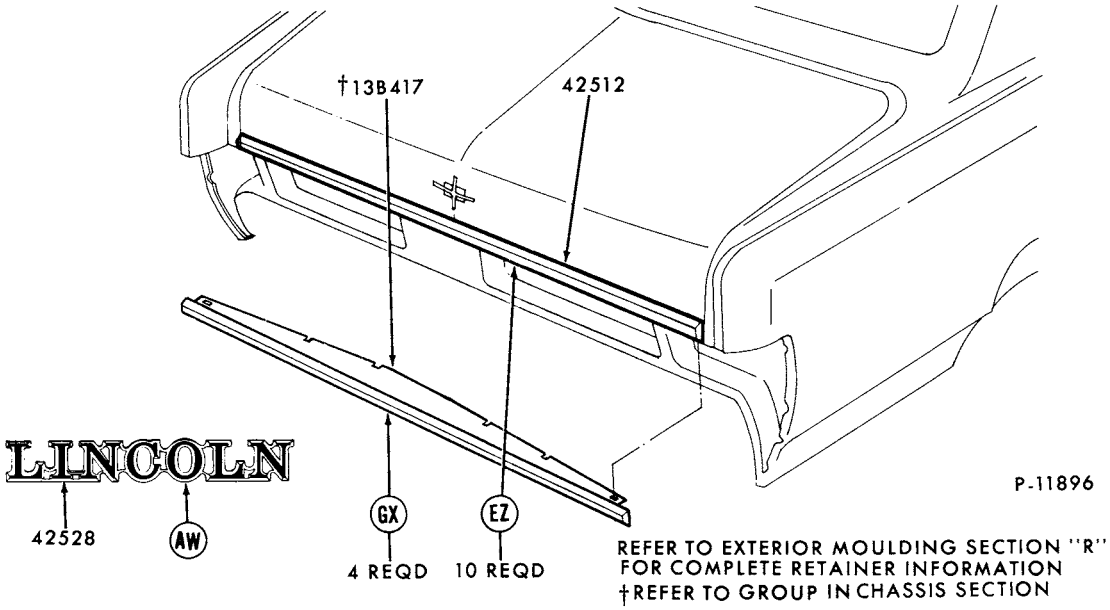

1979 LINCOLN - BACK END

GROUP NUMBER	PART NAME	DESCRIPTION	PART NUMBER	QTY.
42512	Moulding (luggage compartment door)		♦D5VY 6042512-A	1
42528	Plate (name)	"LINCOLN"	♦D4VY 6542528-A	1

♦ Includes attaching parts

COPYRIGHT © 1986 — FORD MOTOR COMPANY — DEARBORN, MICHIGAN

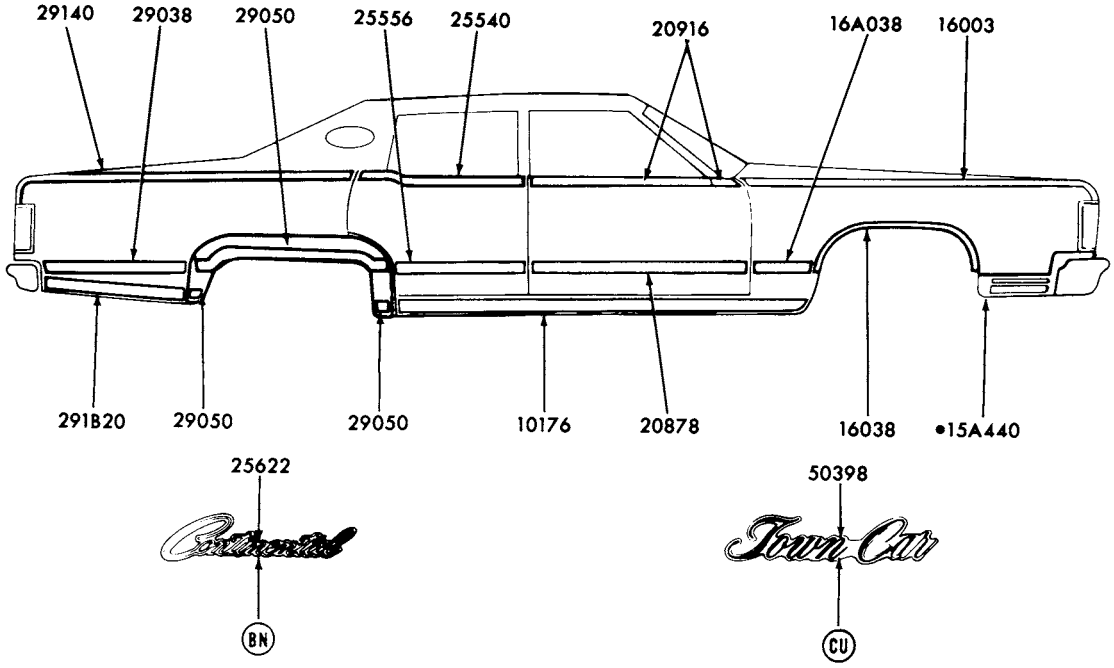

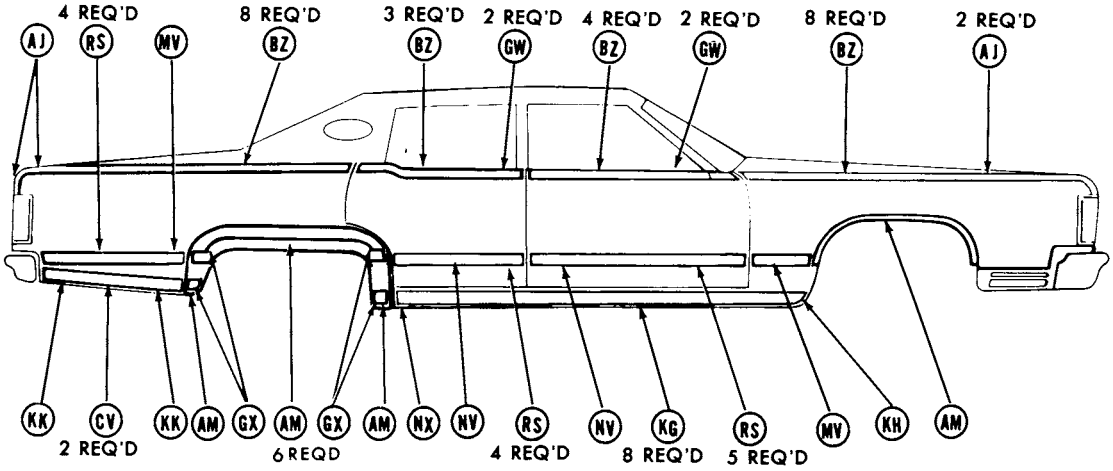

REFER TO EXTERIOR MOULDING SECTION "R" FOR COMPLETE RETAINER INFORMATION

•REFER TO GROUP IN CHASSIS SECTION

P-14275

1979 LINCOLN - BODY TYPE 53 - w/SIDE MOULDINGS - cont'd.

GROUP NUMBER	PART NAME	DESCRIPTION	⊕COLOR CODE	PART NUMBER		QTY.
10176-7	Moulding (body rocker panel)			(RH)♦D5VY 6010176-A	(LH)♦D5VY 6010177-A	1
16003-4	Moulding (front fender upper)			(RH)♦D5VY 16003-A	(LH)♦D5VY 16004-A	1
16038-9	Moulding (front fender wheel opening)			(RH)♦D5VY 16038-A	(LH)♦D5VY 16039-A	1
16A038-9	Moulding (front fender rear)	Incl. vinyl insert				
		◊Beryl(light)	28K	(RH)♦D9VY 16A038-AK	(LH)♦D9VY 16A039-AK	1
		◊Black	54A	(RH)♦D7VY 16A038-AA	(LH)♦D7VY 16A039-AA	1
		◊Blue - (diamond)	57B	(RH)♦D9VY 16A038-BB	(LH)♦D9VY 16A039-BB	1
		◊Blue - (midnight)	F1B	(RH)♦D9VY 16A038-AB	(LH)♦D9VY 16A039-AB	1
		◊Blue - (wedgewood)	H8B	(RH)♦D8VY 16A038-AB	(LH)♦D8VY 16A039-AB	1
		◊Champagne - (light)	37U	(RH)♦D8VY 16A038-AU	(LH)♦D8VY 16A039-AU	1
		◊ Cordovan- (dark)	33F	(RH)♦D7VY 16A038-AF	(LH)♦D7VY 16A039-AF	1
		◊ Cordovan- (light)	13C	(RH)♦D8VY 16A038-AF	(LH)♦D8VY 16A039-AF	
		◊Cream	64V	(RH)♦D7VY 16A038-AV	(LH)♦D7VY 16A039-AV	1
		◊Gold (jubilee)	14Y	(RH)♦D9VY 16A038-AY	(LH)♦D9VY 16A039-AY	1
		◊Gray	D1P	(RH)♦D7VY 16A038-AP	(LH)♦D7VY 16A039-AP	1
		◊Red(dark)	F6D	(RH)♦D7VY 16A038-AD	(LH)♦D7VY 16A039-AD	1
		◊White	55W	(RH)♦D7VY 16A038-AW	(LH)♦D7VY 16A039-AW	1
20878-9	Moulding (front door lower)	Incl. vinyl insert				
		◊Beryl(light)	28K	(RH)♦D9VY 5320878-AK	(LH)♦D9VY 5320879-AK	1
		◊Black	54A	(RH)♦D7VY 5320878-AA	(LH)♦D7VY 5320879-AA	1
		◊Blue - (diamond)	57B	(RH)♦D9VY 5320878-BB	(LH)♦D9VY 5320879-BB	1
		◊Blue - (midnight)	F1B	(RH)♦D9VY 5320878-AB	(LH)♦D9VY 5320879-AB	1
		◊Blue- (wedgewood)	H8B	(RH)♦D8VY 5320878-AB	(LH)♦D8VY 5320879-AB	1
		◊ Champagne- (light)	37U	(RH)♦D8VY 5320878-AU	(LH)♦D8VY 5320879-AU	1
		◊Cordovan- (dark)	33F	(RH)♦D7VY 5320878-AF	(LH)♦D7VY 5320879-AF	1
		◊Cordovan- (light)	13C	(RH)♦D8VY 5320878-AF	(LH)♦D8VY 5320879-AF	1
		◊Cream	64V	(RH)♦D7VY 5320878-AV	(LH)♦D7VY 5320879-AV	1
		◊Gold(jubilee)	14Y	RH)♦D9VY 5320878-AY	(LH)♦D9VY 5320879-AY	1
		◊Gray	D1P	(RH)♦D7VY 5320878-AP	(LH)♦D7VY 5320879-AP	1
		◊Red(dark)	F6D	(RH)♦D7VY 5320878-AD	(LH)♦D7VY 5320879-AD	1
		◊White	55W	(RH)♦D7VY 5320878-AW	(LH)♦D7VY 5320879-AW	1

◊ For color verification, refer to the vinyl roof swatches in the 1979 Salesman's Color and Upholstery Selection Guide
♦ Includes attaching parts ⊕ As shown on Certification Label

COPYRIGHT © 1986 — FORD MOTOR COMPANY — DEARBORN, MICHIGAN

1979 LINCOLN - BODY TYPE 53 - w/SIDE MOULDINGS - cont'd.

GROUP NUMBER	PART NAME	DESCRIPTION	⊕COLOR CODE	PART NUMBER		QTY.
20916-33	Moulding (front door upper)	R.H.-w/o mirror		♦D5VY 5320932-A		1
		R.H.-w/mirror-front		♦D5VY 6020916-A		1
		R.H.-w/mirror-rear		♦D5VY 5320932-B		1
		L.H.-front		♦D5VY 6020917-A		1
		L.H.-rear		♦D5VY 5320933-A		1
25540-1	Moulding (rear door upper)			(RH)♦D5VY 5325540-A	(LH)♦D5VY 5325541-A	1
25556-7	Moulding (rear door lower)	Incl. vinyl insert				
		◊Beryl(light)	28K	(RH)♦D9VY 5325556-AK	(LH)♦D9VY 5325557-AK	1
		◊Black	54A	(RH)♦D7VY 5325556-AA	(LH)♦D7VY 5325557-AA	1
		◊Blue-(diamond)	57B	(RH)♦D9VY 5325556-BB	(LH)♦D9VY 5325557-BB	1
		◊Blue-(midnight)	F1B	(RH)♦D9VY 5325556-AB	(LH)♦D9VY 5325557-AB	1
		◊Blue-(wedgewood)	H8B	(RH)♦D8VY 5325556-AB	(LH)♦D8VY 5325557-AB	1
		◊Champagne-(light)	37U	(RH)♦D8VY 5325556-AU	(LH)♦D8VY 5325557-AU	1
		◊Cordovan-(dark)	33F	(RH)♦D7VY 5325556-AF	(LH)♦D7VY 5325557-AF	1
		◊Cordovan-(light)	13C	(RH)♦D8VY 5325556-AF	(LH)♦D8VY 5325557-AF	1
		◊Cream	64V	(RH)♦D7VY 5325556-AV	(LH)♦D7VY 5325557-AV	1
		◊Gold(jubilee)	14Y	(RH)♦D9VY 5325556-AY	(LH)♦D9VY 5325557-AY	1
		◊Gray	D1P	(RH)♦D7VY 5325556-AP	(LH)♦D7VY 5325557-AP	1
		◊Red(dark)	F6D	(RH)♦D7VY 5325556-AD	(LH)♦D7VY 5325557-AD	1
		◊White	55W	(RH)♦D7VY 5325556-AW	(LH)♦D7VY 5325557-AW	1
29038-9	Moulding (quarter panel side)	Incl. vinyl insert				
		◊Beryl(light)	28K	(RH)♦D9VY 6029038-AK	(LH)♦D9VY 6029039-AK	1
		◊Black	54A	(RH)♦D9VY 6029038-AA	(LH)♦D9VY 6029039-AA	1
		◊Blue-(diamond)	57B	(RH)♦D9VY 6029038-BB	(LH)♦D9VY 6029039-BB	1
		◊Blue-(midnight)	F1B	(RH)♦D9VY 6029038-AB	(LH)♦D9VY 6029039-AB	1
		◊Blue-(wedgewood)	H8B	(RH)♦D9VY 6029038-CB	(LH)♦D9VY 6029039-CB	1
		◊Champagne-(light)	37U	(RH)♦D9VY 6029038-AU	(LH)♦D9VY 6029039-AU	1
		◊Cordovan-(dark)	33F	(RH)♦D9VY 6029038-AF	(LH)♦D9VY 6029039-AF	1
		◊Cordovan-(light)	13C	(RH)♦D9VY 6029038-AC	(LH)♦D9VY 6029039-AC	1
		◊Cream	64V	(RH)♦D9VY 6029038-AV	(LH)♦D9VY 6029039-AV	1
		◊Gold(jubilee)	14Y	(RH)✱D9VY 6029038-AY Not replaced (4/84)	(LH)♦D9VY 6029039-AY	1
		◊Gray	D1P	(RH)♦D9VY 6029038-AP	(LH)♦D9VY 6029039-AP	1
		◊Red(dark)	F6D	(RH)♦D9VY 6029038-AD	(LH)♦D9VY 6029039-AD	1
		◊White	55W	(RH)♦D9VY 6029038-AW	(LH)♦D9VY 6029039-AW	1

◊ For color verification, refer to the vinyl roof swatches in the 1979 Salesman's Color and Upholstery Selection Guide

♦ Includes attaching parts

⊕ As shown on Certification Label

1979 LINCOLN - BODY TYPE 53 - w/SIDE MOULDINGS - cont'd.

GROUP NUMBER	PART NAME	DESCRIPTION	⊕COLOR CODE	PART NUMBER		QTY.
29050-1	Moulding (quarter wheel opening cover lower)	Front		(RH)♦D5VY 6029050-B	(LH)♦D5VY 6029051-B	1
		Rear		(RH)♦D8VY 6029050-A	(LH)♦D8VY 6029051-A	1
29050-1	Moulding (quarter wheel opening cover upper)	Incl. vinyl insert				
		◊Beryl(light)	28K	(RH)♦D9VY 6029050-AK	(LH)♦D9VY 6029051-AK	1
		◊Black	54A	(RH)♦D8VY 6029050-AA	(LH)♦D8VY 6029051-AA	1
		◊Blue-(diamond)	57B	(RH)♦D9VY 6029050-BB	(LH)♦D9VY 6029051-BB	1
		◊Blue-(midnight)	F1B	(RH)♦D9VY 6029050-AB	(LH)♦D9VY 6029051-AB	1
		◊Blue-(wedgewood)	H8B	(RH)♦D8VY 6029050-AB	(LH)♦D8VY 6029051- AB	1
		◊Champagne-(light)	37U	(RH)♦D8VY 6029050-AU	(LH)♦D8VY 6029051-AU	1
		◊Cordovan-(dark)	33F	(RH)♦D8VY 6029050-BF	(LH)♦D8VY 6029051-BF	1
		◊Cordovan-(light)	13C	(RH)♦D8VY 6029050-AF	(LH)♦D8VY 6029051-AF	1
		◊Cream	64V	(RH)♦D8VY 6029050-AV	(LH)♦D8VY 6029051-AV	1
		◊Gold(jubilee)	14Y	(RH)♦D9VY 6029050-AY	(LH)♦D9VY 6029051-AY	1
		◊Gray	D1P	(RH)♦D8VY 6029050-BP	(LH)♦D8VY 6029051-BP	1
		◊Red(dark)	F6D	(RH)♦D8VY 6029050-AD	(LH)♦D8VY 6029051-AD	1
		◊White	55W	(RH)♦D8VY 6029050-AW	(LH)♦D8VY 6029051-AW	1
291B20-1	Moulding (quarter panel lower)			(RH)♦D5VY 60291B20-A	(LH)♦D5VY 60291B21-A	1
29140-1	Moulding (quarter panel top)			(RH)♦D5VY 5329140-A	(LH)♦D5VY 5329141-A	1
50398	Plate (front fender)	"Town Car"		♦D3VY 5350398-A	R.H. and L.H.	2
517A20	Ornament (roof side)	W/o opera window		♦C9VY 53517A20-A	R.H. and L.H.	2
517A56	Plate (roof side)	"Collector's Series"		♦D9LY 65517A56-B	R.H. and L.H.	2

♦ Includes attaching part

COPYRIGHT © 1986 — FORD MOTOR COMPANY — DEARBORN, MICHIGAN

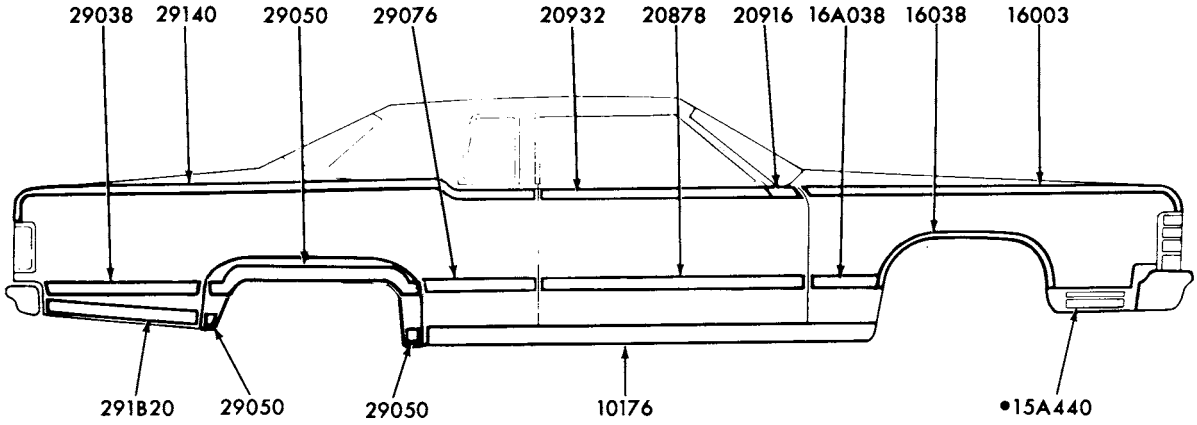

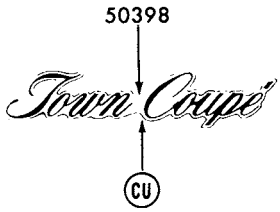

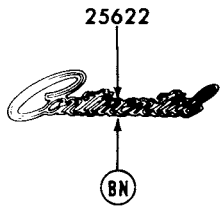

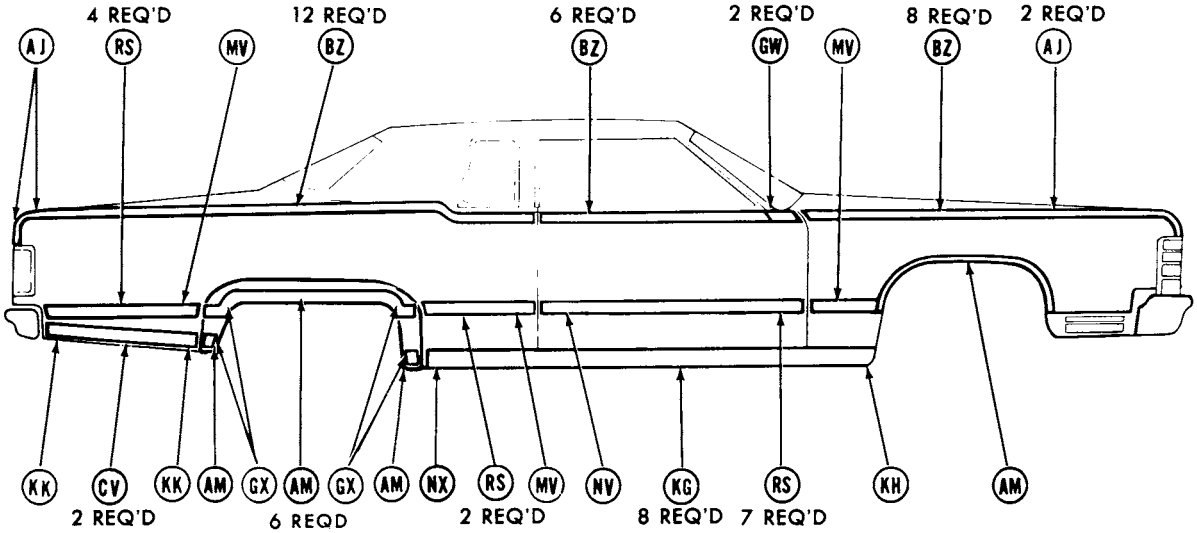

REFER TO EXTERIOR MOULDING SECTION "R" FOR COMPLETE RETAINER INFORMATION

•REFER TO GROUP IN CHASSIS SECTION

P-14274

1979 LINCOLN - BODY TYPE 60 - w/SIDE MOULDINGS

1979 LINCOLN - BODY TYPE 60 - w/SIDE MOULDINGS - cont'd.

GROUP NUMBER	PART NAME	DESCRIPTION	⊕COLOR CODE	PART NUMBER		QTY.
10176-7	Moulding (body rocker panel)			(RH)♠D5VY 6010176-A	(LH)♠D5VY 6010177-A	1
16003-4	Moulding (front fender top)			(RH)♠D5VY 16003-A	(LH)♠D5VY 16004-A	1
16038-9	Moulding (front fender wheel opening)			(RH)♠D5VY 16038-A	(LH)♠D5VY 16039-A	1
16A038-9	Moulding (front fender rear)	Incl. vinyl insert				
		◊Beryl(light)	28K	(RH)♠D9VY 16A038-AK	(LH)♠D9VY 16A039-AK	1
		◊Black	54A	(RH)♠D7VY 16A038-AA	(LH)♠D7VY 16A039-AA	1
		◊Blue-(diamond)	57B	(RH)♠D9VY 16A038-BB	(LH)♠D9VY 16A039-BB	1
		◊Blue-(midnight)	F1B	(RH)♠D9VY 16A038-AB	(LH)♠D9VY 16A039-AB	1
		◊Blue-(wedgewood)	H8B	(RH)♠D8VY 16A038-AB	(LH)♠D8VY 16A038-AB	1
		◊Champagne-(light)	37U	(RH)♠D8VY 16A038-AU	(LH)♠D8VY 16A039-AU	1
		◊Cordovan-(dark)	33F	(RH)♠D7VY 16A038-AF	(LH)♠D7VY 16A039-AF	1
		◊Cordovan-(light)	13C	(RH)♠D8VY 16A038-AF	(LH)♠D8VY 16A039-AF	1
		◊Cream	64V	(RH)♠D7VY 16A038-AV	(LH)♠D7VY 16A039-AV	1
		◊Gold(jubilee)	14Y	(RH)♠D9VY 16A038-AY	(LH)♠D9VY 16A039-AY	1
		◊Gray	D1P	(RH)♠D7VY 16A038-AP	(LH)♠D7VY 16A039-AP	1
		◊Red	F6D	(RH)♠D7VY 16A038-AD	(LH)♠D7VY 16A039-AD	1
		◊White	55W	(RH)♠D7VY 16A038-AW	(LH)♠D7VY 16A039-AW	1
20878-9	Moulding (front door lower)	Incl. vinyl insert				
		◊Beryl(light)	28K	(RH)♠D9VY 6020878-AK	(LH)♠D9VY 6020879-AK	1
		◊Black	54A	(RH)♠D7VY 6020878-AA	(LH)♠D7VY 6020879-AA	1
		◊Blue-(diamond)	57B	(RH)★D9VY 6020878-BB Not replaced (4/84)	(LH)★D9VY 6020879-BB	1
		◊Blue-(midnight)	F1B	(RH)★D9VY 6020878-AB	(LH)★D9VY 6020879-AB Not replaced (4/84)	1
		◊Blue-(wedgewood)	H8B	(RH)♠D8VY 6020878-AB	(LH)♠D8VY 6020879-AB	1
		◊Champagne-(light)	37U	(RH)♠D8VY 6020878-AU	(LH)♠D8VY 6020879-AU	1
		◊Cordovan-(dark)	33F	(RH)♠D7VY 6020878-AF	(LH)♠D7VY 6020879-AF	1
		◊Cordovan-(light)	13C	(RH)★D8VY 6020878-AF	(LH)★D8VY 6020879-AF Not replaced (4/84)	1
		◊Cream	64V	(RH)♠D7VY 6020878-AV	(LH)♠D7VY 6020879-AV	1
		◊Gold(jubilee)	14Y	(RH)★D9VY 6020878-AY Not replaced (4/84)	(LH)★D9VY 6020879-AY Not replaced (4/84)	1
		◊Gray	D1P	(RH)♠D7VY 6020878-AP	(LH)♠D7VY 6020879-AP	1
		◊Red	F6D	(RH)♠D7VY 6020878-AD	(LH)♠D7VY 6020879-AD	1
		◊White	55W	(RH)♠D7VY 6020878-AW	(LH)♠D7VY 6020879-AW	1

◊ For color verification, refer to the vinyl roof swatches in the 1979 Salesman's Color and Upholstery Selection Guide
♠ Includes attaching parts ⊕ As shown on Certification Label

COPYRIGHT © 1986 — FORD MOTOR COMPANY — DEARBORN, MICHIGAN

1979 LINCOLN - BODY TYPE 60 - w/SIDE MOULDINGS - cont'd.

GROUP NUMBER	PART NAME	DESCRIPTION	⊕COLOR CODE	PART NUMBER		QTY.
20916-33	Moulding (front door upper)	R.H.-w/o mirror		♦D5VY 6020932-A		1
		R.H.-w/mirror-front		♦D5VY 6020916-A		1
		R.H.-w/mirror-rear		♦D5VY 6020933-B		1
		L.H.-front		♦D5VY 6020917-A		1
		L.H.-rear		♦D5VY 6020933-B		1
25622	Plate (name)	"Continental"		Not required		
29038-9	Moulding (quarter panel side)	Incl. vinyl insert				
		◊Beryl(light)	28K	(RH)♦D9VY 6029038-AK	(LH)♦D9VY 6029039-AK	1
		◊Black	54A	(RH)♦D9VY 6029038-AA	(LH)♦D9VY 6029039-AA	1
		◊Blue-(diamond)	57B	(RH)♦D9VY 6029038-BB	(LH)♦D9VY 6029039-BB	1
		◊Blue-(midnight)	F1B	(RH)♦D9VY 6029038-AB	(LH)♦D9VY 6029039-AB	1
		◊Blue-(wedgewood)	H8B	(RH)♦D9VY 6029038-CB	(LH)♦D9VY 6029039-CB	1
		◊Champagne-(light)	37U	(RH)♦D9VY 6029038-AU	(LH)♦D9VY 6029039-AU	1
		◊Cordovan-(dark)	33F	(RH)♦D9VY 6029038-AF	(LH)♦D9VY 6029039-AF	1
		◊Cordovan-(light)	13C	(RH)♦D9VY 6029038-AC	(LH)♦D9VY 6029039-AC	1
		◊Cream	64V	(RH)♦D9VY 6029038-AV	(LH)♦D9VY 6029039-AV	1
		◊Gold(jubilee)	14Y	(RH)♦D9VY 6029038-AY	(LH)♦D9VY 6029039-AY	1
		◊Gray	D1P	(RH)♦D9VY 6029038-AP	(LH)♦D9VY 6029039-AP	1
		◊Red(dark)	F6D	(RH)♦D9VY 6029038-AD	(LH)♦D9VY 6029039-AD	1
		◊White	55W	(RH)♦D9VY 6029038-AW	(LH)♦D9VY 6029039-AW	1
29050-1	Moulding (quarter wheel opening cover lower)	Front		(RH)♦D5VY 6029050-B	(LH)♦D9VY 6029051-B	1
		Rear		(RH)♦D8VY 6029050-A	(LH)♦D8VY 6029051-A	1
29050-1	Moulding (quarter wheel opening cover upper)	Incl. vinyl insert				
		◊Beryl(light)	28K	(RH)♦D9VY 6029050-AK	(LH)♦D9VY 6029051-AK	1
		◊Black	54A	(RH)♦D8VY 6029050-AA	(LH)♦D8VY 6029051-AA	1
		◊Blue-(diamond)	57B	(RH)♦D9VY 6029050-BB	(LH)♦D9VY 6029051-BB	1
		◊Blue-(midnight)	F1B	(RH)♦D9VY 6029050-AB	(LH)♦D9VY 6029051-AB	1
		◊Blue-(wedgewood)	H8B	(RH)♦D8VY 6029050-AB	(LH)♦D8VY 6029051-AB	1
		◊Champagne-(light)	37U	(RH)♦D8VY 6029050-AU	(LH)♦D8VY 6029051-AU	1
		◊Cordovan-(dark)	33F	(RH)♦D8VY 6029050-BF	(LH)♦D8VY 6029051-BF	1
		◊Cordovan-(light)	13C	(RH)♦D8VY 6029050-AF	(LH)♦D8VY 6029051-AF	1
		◊Cream	64V	(RH)♦D8VY 6029050-AV	(LH)♦D8VY 6029051-AV	1
		◊Gold(jubilee)	14Y	(RH)♦D9VY 6029050-AY	(LH)♦D9VY 6029051-AY	1
		◊Gray	D1P	(RH)♦D8VY 6029050-BP	(LH)♦D8VY 6029051-BP	1
		◊Red(dark)	F6D	(RH)♦D8VY 6029050-AD	(LH)♦D8VY 6029051-AD	1
		◊White	55W	(RH)♦D8VY 6029050-AW	(LH)♦D8VY 6029051-AW	1

◊ For color verification, refer to the vinyl roof swatches in the 1979 Salesman's Color and Upholstery Selection Guide

♦ Includes attaching parts ⊕ As shown on Certification Label

1979 LINCOLN - BODY TYPE 60 - w/SIDE MOULDINGS - cont'd.

GROUP NUMBER	PART NAME	DESCRIPTION	⊕COLOR CODE	PART NUMBER		QTY.
29076-7	Moulding (quarter lower front)	Incl. vinyl (insert)				
		◊Beryl(light)	28K	(RH)♦D9VY 6029076-AK	(LH)♦D9VY 6029077-AK	1
		◊Black	54A	(RH)♦D7VY 6029076-AA	(LH)♦D7VY 6029077-AA	1
		◊Blue-(diamond)	57B	(RH)♦D9VY 6029076-BB	(LH)♦D9VY 6029077-BB	1
		◊Blue-(midnight)	F1B	(RH)♦D9VY 6029076-AB	(LH)♦D9VY 6029077-AB	1
		◊Blue-(wedgewood)	H8B	(RH)♦D8VY 6029076-AB	(LH)♦D8VY 6029077-AB	1
		◊Champagne-(light)	37U	(RH)♦D8VY 6029076-AU	(LH)♦D8VY 6029077-AU	1
		◊Cordovan-(dark)	33F	(RH)♦D7VY 6029076-AF	(LH)♦D7VY 6029077-AF	1
		◊Cordovan-(light)	13C	(RH)♦D8VY 6029076-AF	(LH)♦D8VY 6029077-AF	1
		◊Cream	64V	(RH)♦D7VY 6029076-AV	(LH)♦D7VY 6029077-AV	1
		◊Gold(jubilee)	14Y	(RH)♦D9VY 6029076-AY	(LH)♦D9VY 6029077-AY	1
		◊Gray	D1P	(RH)♦D7VY 6029076-AP	(LH)♦D7VY 6029077-AP	1
		◊Red(dark)	F6D	(RH)♦D7VY 6029076-AD	(LH)♦D7VY 6029077-AD	1
		◊White	55W	(RH)♦D7VY 6029076-AW	(LH)♦D7VY 6029077-AW	1
291B20-1	Moulding (quarter panel lower)			(RH)♦D5VY 60291B20-A	(LH)♦D5VY 60291B21-A	1
29140-1	Moulding (quarter panel upper)			(RH)♦D5VY 6029140-A	(LH)♦D5VY 6029141-A	1
50398	Plate (front fender name)	"Town Coupe"		♦D3VY 6550398-A	R.H. and L.H.	2

◊ For color verification, refer to the vinyl roof swatches in the 1979 Salesman's Color and Upholstery Selection Guide
♦ Includes attaching parts
⊕ As shown on Certification Label

COPYRIGHT © 1986 — FORD MOTOR COMPANY — DEARBORN, MICHIGAN

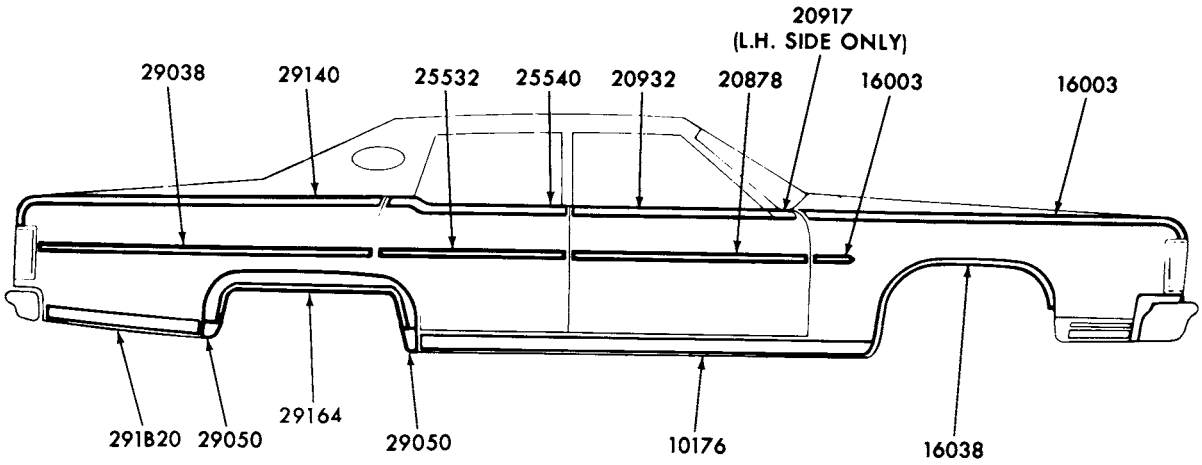

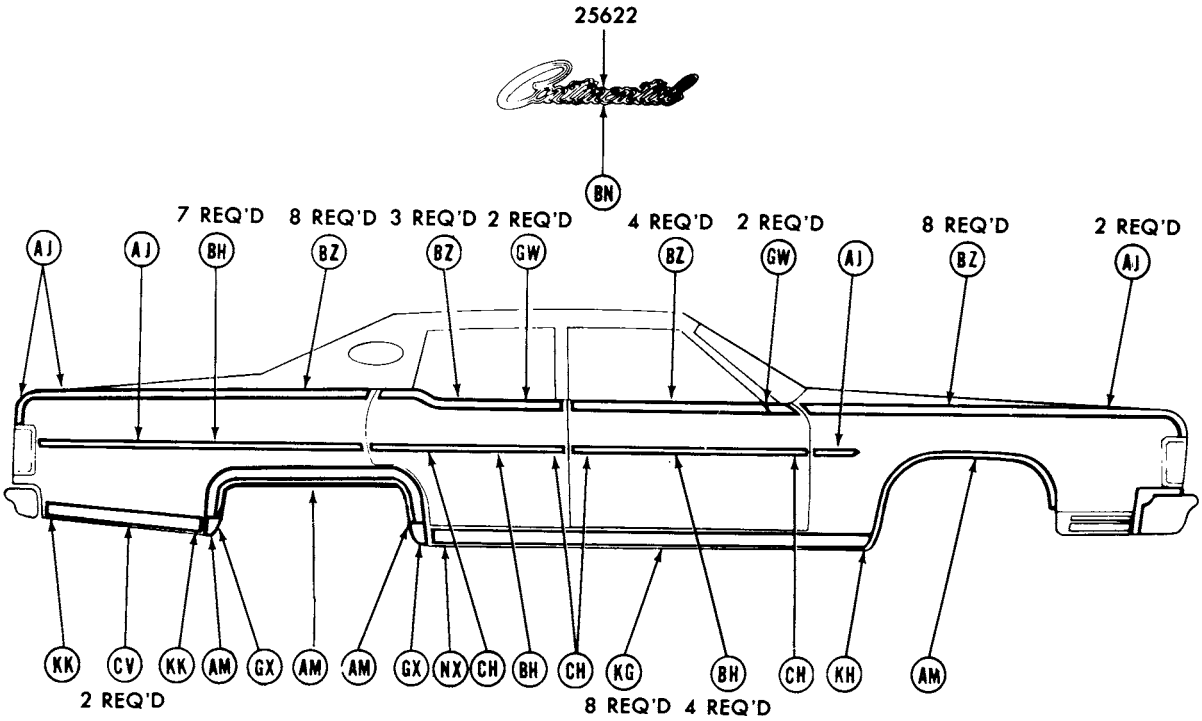

REFER TO EXTERIOR MOULDING SECTION "R" FOR COMPLETE RETAINER INFORMATION

P-14273

1979 LINCOLN - BODY TYPES 53 and 60 - w/BODY SIDE PROTECTION

1979 LINCOLN - BODY TYPES 53 and 60 - w/BODY SIDE PROTECTION - cont'd.

GROUP NUMBER	PART NAME	DESCRIPTION	PART NUMBER		QTY.
10176-7	Moulding (body rocker panel)		(RH)♦D5VY 6010176-A	(LH)♦D5VY 6010177-A	1
16003	Moulding (front fender side)		♦D2LY 16003-B	R.H. and L.H.	2
16003-4	Moulding (front fender upper)		(RH)♦D5VY 16003-A	(LH)♦D5VY 16004-A	1
16038-9	Moulding (front fender wheel)		(RH)♦D5VY 16038-B	(LH)♦D5VY 16039-B	1
20878-9	Moulding (front door lower)	Body type 53	♦D2VY 5320878-B	R.H. and L.H.	2
		Body type 60	♦D2VY 6520878-B	R.H. and L.H.	2
20916-33	Moulding (front door upper)	Body type 53			
		R.H.	♦D5VY 5320932-A		1
		R.H.-w/mirror-front	♦D5VY 6020916-A		1
		R.H.-w/mirror-rear	♦D5VY 5320932-B		1
		L.H.-front	♦D5VY 6020917-A		1
		L.H.-rear	♦D5VY 5320933-A		1
		Body type 60			
		R.H.	♦D5VY 6020932-A		1
		R.H.-w/mirror-front	♦D5VY 6020916-A		1
		R.H.-w/mirror-rear	♦D5VY 6020933-B		1
		L.H.-front	♦D5VY 6020917-A		1
		L.H.-rear	♦D5VY 6020933-B		1
25532-3	Moulding (rear door lower)		♦D2VY 5325532-B	R.H. and L.H.	2
25540-1	Moulding (rear door upper)		(RH)♦D5VY 5325540-A	(LH)♦D5VY 5325541-A	1
29038-9	Moulding (quarter panel side)	Body type 53	♦D2VY 5329038-B	R.H. and L.H.	2
		Body type 60	(RH)♦D6VY 6029038-A	R.H. and L.H.	2
29050-1	Moulding (quarter wheel opening cover)	Front	(RH)♦D5VY 6029050-B	(LH)♦D5VY 6029051-B	1
		Rear	(RH)♦D8VY 6029050-A	(LH)♦D8VY 6029051-A	1
291B20-1	Moulding (quarter panel lower)		(RH)♦D5VY 60291B20-A	(LH)♦D5VY 60291B21-A	1
29140-1	Moulding (quarter panel upper)	Body type 53	(RH)♦D5VY 5329140-A	(LH)♦D5VY 5329141-A	1
		Body type 60	(RH)♦D5VY 6029140-A	(LH)♦D5VY 6029141-A	1
29164-5	Moulding (wheel opening cover)		(RH)♦D8VY 6029164-A	(LH)♦D8VY 6029165-A	1

♦ Includes attaching parts

COPYRIGHT © 1986 — FORD MOTOR COMPANY — DEARBORN, MICHIGAN

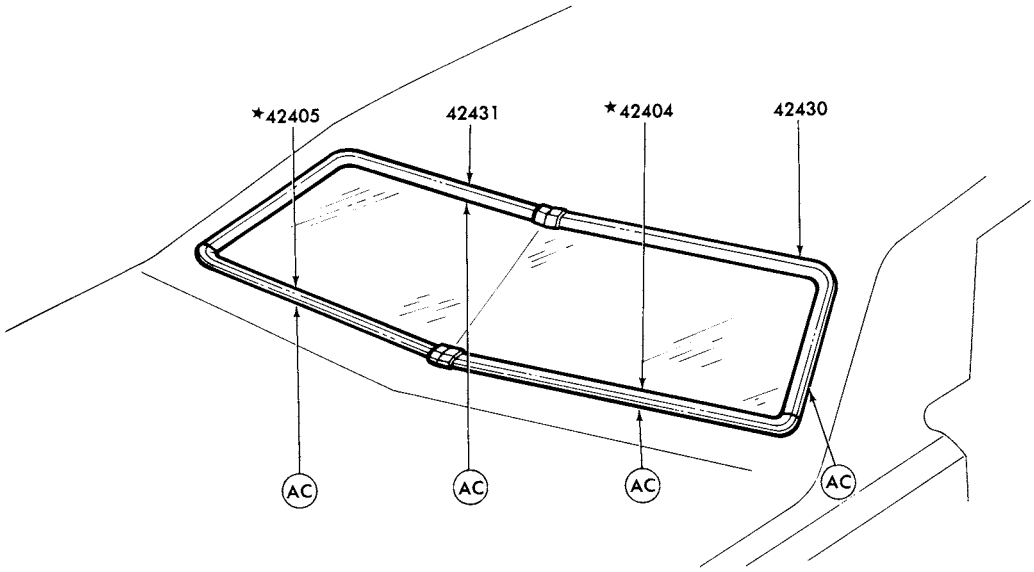

REFER TO EXTERIOR MOULDING SECTION "R" FOR COMPLETE RETAINER INFORMATION

P-12488

1979 LINCOLN - BACK WINDOW - w/o VINYL ROOF and w/FULL VINYL ROOF

GROUP NUMBER	PART NAME	DESCRIPTION	PART NUMBER		QTY.
42404-5	Moulding (back window lower)	Body type 53	(RH)★D5VY 5342404-A	(LH)★D5VY 5342405-A Not replaced (4/84)	1
		Body type 60	(RH)★D5VY 6042404-A	(LH)★D5VY 6042405-A Not replaced (4/84)	1
42430-1	Moulding (back window upper)	Body type 53	(RH)♦D5VY 5342430-A	(LH)♦D5VY 5342431-A	1
		Body type 60	(RH)★D5VY 6042430-A	(LH)★D5VY 6042431-A	1

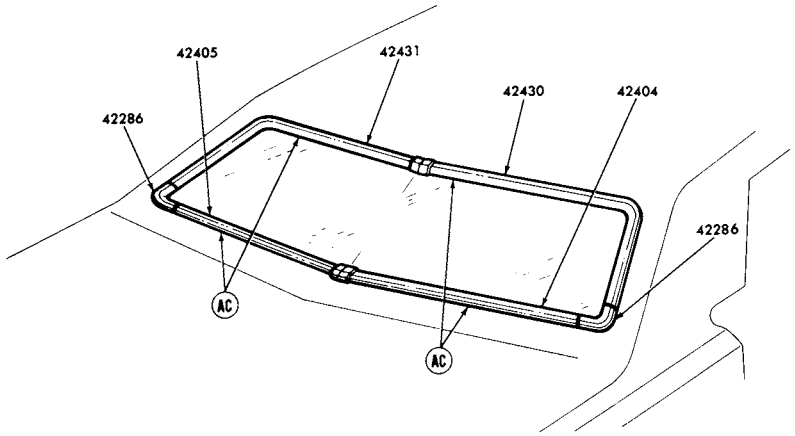

REFER TO EXTERIOR MOULDING SECTION "R" FOR COMPLETE RETAINER INFORMATION P-13189

1979 LINCOLN - BACK WINDOW - w/HALF VINYL ROOF

GROUP NUMBER	PART NAME	DESCRIPTION	PART NUMBER		QTY.
42286	Moulding (back window lower corner)		♦D7VY 6042286-A	R.H. and L.H.	2
42404-5	Moulding (back window lower)	Body type 53	(RH)♦D7VY 5342404-A	(LH)♦D7VY 5342405-A	1
		Body type 60	(RH)♦D7VY 6042404-A	(LH)♦D7VY 6042405-A	1
42430-1	Moulding (back window upper)	Body type 53	(RH)♦D7VY 5342430-A	(LH)♦D7VY 5342431-A	1
		Body type 60	(RH)♦D7VY 6042430-A	(LH)♦D7VY 6042431-A	1

♦ Includes attaching parts

COPYRIGHT © 1986 — FORD MOTOR COMPANY — DEARBORN, MICHIGAN

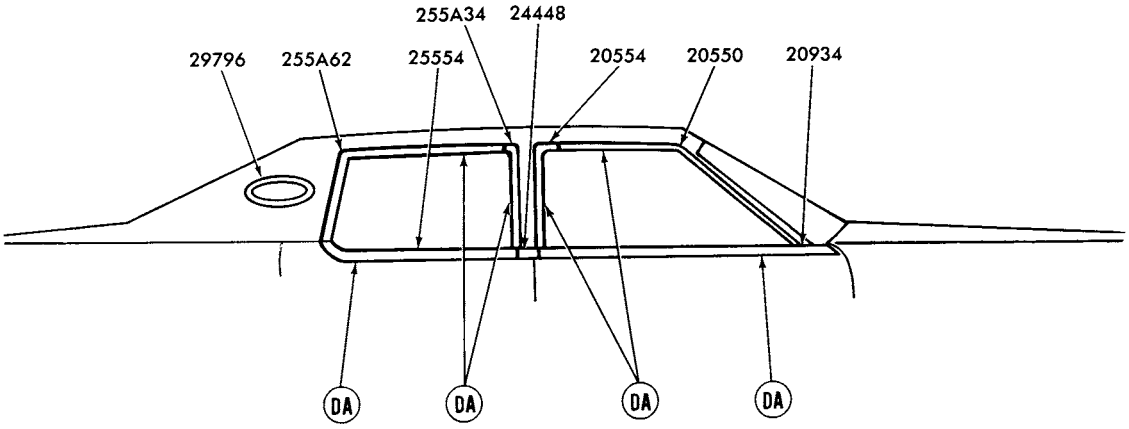

REFER TO EXTERIOR MOULDING SECTION "R" FOR COMPLETE RETAINER INFORMATION

P-13191

1979 LINCOLN - BODY TYPE 53 - DOOR BELT and WINDOW

GROUP NUMBER	PART NAME	DESCRIPTION	PART NUMBER		QTY.
20550-5	Moulding (front door window)	Front	(RH) D5VY 5320550-A	(LH) D5VY 5320551-A	1
		Rear	(RH) D5VY 5320554-A	(LH) D5VY 5320555-A	1
20934-5	Moulding (front door belt)		(RH)♦D5VY 5320934-A	(LH)♦D5VY 5320935-A	1
24448-9	Moulding (center body pillar)	W/half vinyl roof	(RH)♦D7VY 5324448-A	(LH)♦D7VY 5324449-A	1
		Standard	(RH)*D5VY 5324448-A	(LH)♦D5VY 5324449-A	1
255A34-5	Moulding (rear door window)	Front	(RH) D5VY 53255A34-A	(LH) D5VY 53255A35-A	1
25554-5	Moulding (rear door belt)		(RH)♦D5VY 5325554-A	(LH)♦D5VY 5325555-A	1
255A62-3	Moulding (rear door window)	Rear	(RH) D5VY 53255A62-A	(LH) D5VY 53255A63-A	1
29796-7	Moulding (opera window)	Bright finish w/ black vinyl tape	D6LY 6529796-A	R.H. and L.H.	2

♦ Includes attaching parts

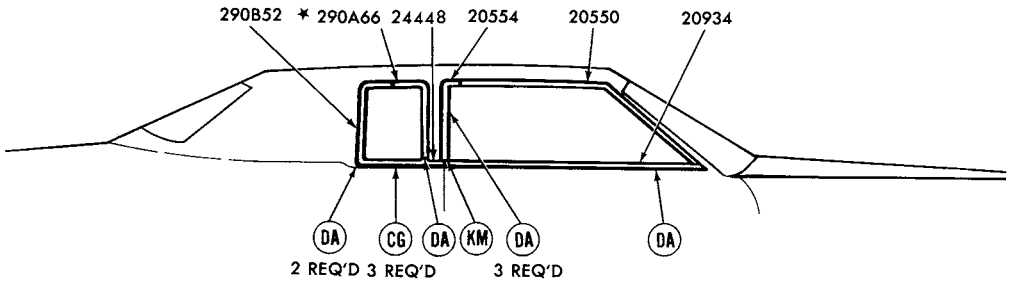

REFER TO EXTERIOR MOULDING SECTION "R" FOR COMPLETE RETAINER INFORMATION

P-13190

1979 LINCOLN - BODY TYPE 60 - DOOR BELT and WINDOW

GROUP NUMBER	PART NAME	DESCRIPTION	PART NUMBER		QTY.
20550-5	Moulding (front window opening)	Front	(RH) D5VY 6020550-A	(LH) D5VY6020551-A	1
		Rear	(RH) D5VY 6020554-A	(LG) D5VY 6020555-A	1
20934-5	Moulding and weatherstrip-(front door belt)		(RH)♦D5VY 6020934-A	(LH)♦D5VY 6020935-A	1
24448-9	Moulding (center body pillar)		(RH) D7VY 6024448-A	(LH) D7VY 6024449-A	1
290B52-3	Moulding (quarter window rear)		(RH)♦D6VY 60290B52-A	(LH)♦D6VY 60290B53-A	1
290A66-7	Moulding (quarter window front)	W/vinyl roof	(RH)★D6VY 60290A66-B Not replaced (4/84)	(LH)★D6VY 60290A67-B	1
		W/o vinyl roof	(RH)★D6VY 60290A66-A	(LH)★D6VY 60290A67-A	1

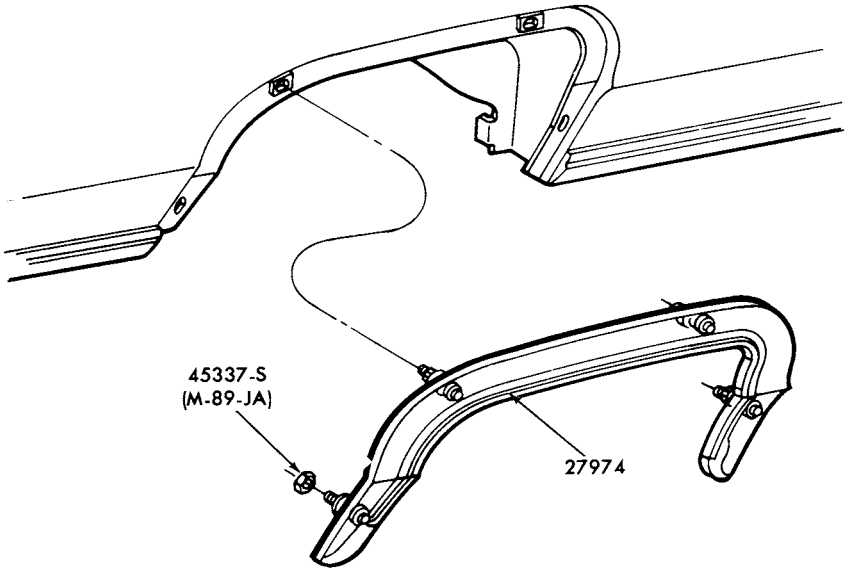

P-14276

1979 LINCOLN - WHEEL OPENING COVER PARTS

GROUP NUMBER	PART NAME	DESCRIPTION	PART NUMBER		QTY.
27974-5	Panel (quarter wheel opening cover)		(RH) D8VY 6027974-A	(LH) D8VY 6027975-A	1

♦ Includes attaching parts

COPYRIGHT © 1986 — FORD MOTOR COMPANY — DEARBORN, MICHIGAN

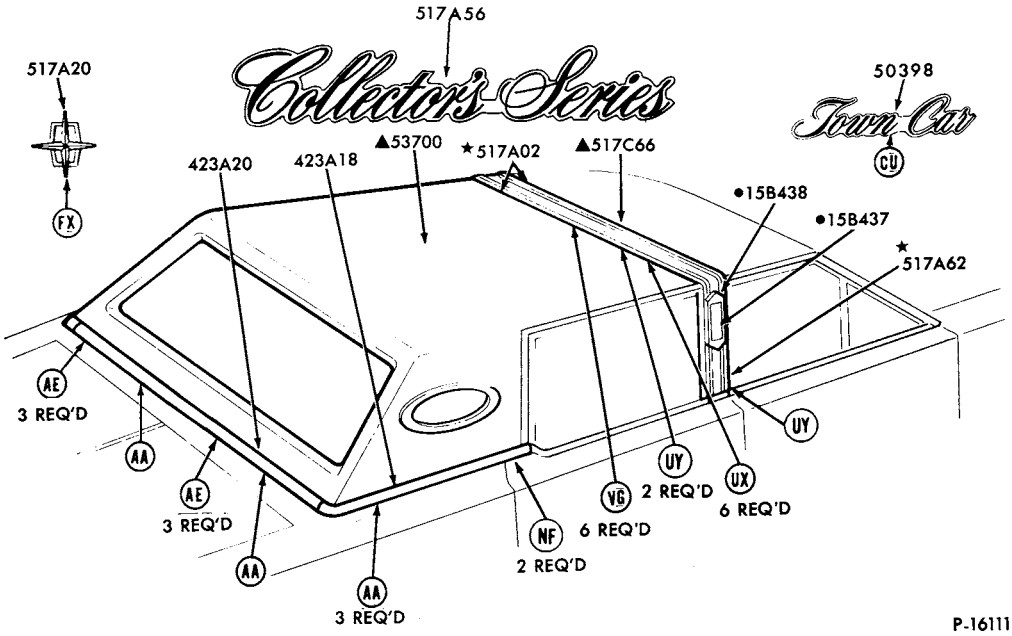

1979 LINCOLN - BODY TYPE 53 - ROOF and BACK BELT

GROUP NUMBER	PART NAME	DESCRIPTION	PART NUMBER	QTY.
423A18-9	Moulding (back belt side)	Paint to match	(RH)♦D7VY 53423A18-A (LH)♦D7VY 53423A19-A	1
423A20	Moulding (back belt rear)	Paint to match	♦D7VY 53423A20-A	1
50398	Plate (roof side)	"Town Car"	♦D3VY 5350398-A R.H. and L.H.	2
517A02	Moulding (roof top)	Incl. vinyl insert		
		◊Beryl (light)	★D9VY 53517A02-AK	1
		◊Black	★D7VY 53517A02-AA	1
		◊Blue (diamond)	★D9VY 53517A02-BB	1
		◊Blue (medium)	★D8VY 53517A02-AB	1
		◊Blue (midnight)	★D9VY 53517A02-AB	1
		◊Champagne (light)	★D8VY 53517A02-AU	1
		◊Cordovan (dark)	★D7VY 53517A02-AF	1
		◊Cordovan (light)	★D8VY 53517A02-AF	1
		◊Cream	★D7VY 53517A02-AV	1
		◊Gold (jubilee)	★D9VY 53517A02-AY	1
		◊Gray	★D7VY 53517A02-AP	1
		◊Red	★D7VY 53517A02-AD	1
		◊Silver	★D7VY 53517A02-BP	1
		◊White	★D7VY 53517A02-AW Not replaced (4/84)	1
517A20	Ornament (roof side)	Body type 53 - w/o opera window	♦C9VY 53517A20-A R.H. and L.H.	2
517A56	Ornament (roof side)	Body type 53	♦D9LY 65517A56-B R.H. and L.H.	2

◊ For color verification, refer to the vinyl roof swatches in the 1979 Salesman's Color and Upholstery Selection Guide

♦ Includes attaching parts

1979 LINCOLN - BODY TYPE 53 - ROOF and BACK BELT - cont'd.

GROUP NUMBER	PART NAME	DESCRIPTION	PART NUMBER	QTY.
517A62	Moulding (roof side)	Incl. vinyl insert		
		◊Beryl (light)	★D9VY 53517A62-AK	1
		◊Black	★D7VY 53517A62-AA	1
		◊Blue (diamond)	★D9VY 53517A62-BB	1
		◊Blue (medium)	★D8VY 53517A62-AB	1
		◊Blue (midnight)	★D9VY 53517A62-AB	1
		◊Champagne (light)	★D8VY 53517A62-AU	1
		◊Cordovan (dark)	★D7VY 53517A62-AF	1
		◊Cordovan (light)	★D8VY 53517A62-AF	1
		◊Cream	★D7VY 53517A62-AV	1
		◊Gold (jubilee)	★D9VY 53517A62-AY	1
		◊Gray	★D7VY 53517A62-AP	1
		◊Red (dark)	★D7VY 53517A62-AD	1
		◊Silver	★D7VY 53517A62-BP	1
		◊White	★D7VY 53517A62-AW	1

◊ For color verification, refer to the vinyl roof swatches in the 1979 Salesman's Color and Upholstery Selection Guide
♦ Includes attaching parts

COPYRIGHT © 1986 — FORD MOTOR COMPANY — DEARBORN, MICHIGAN

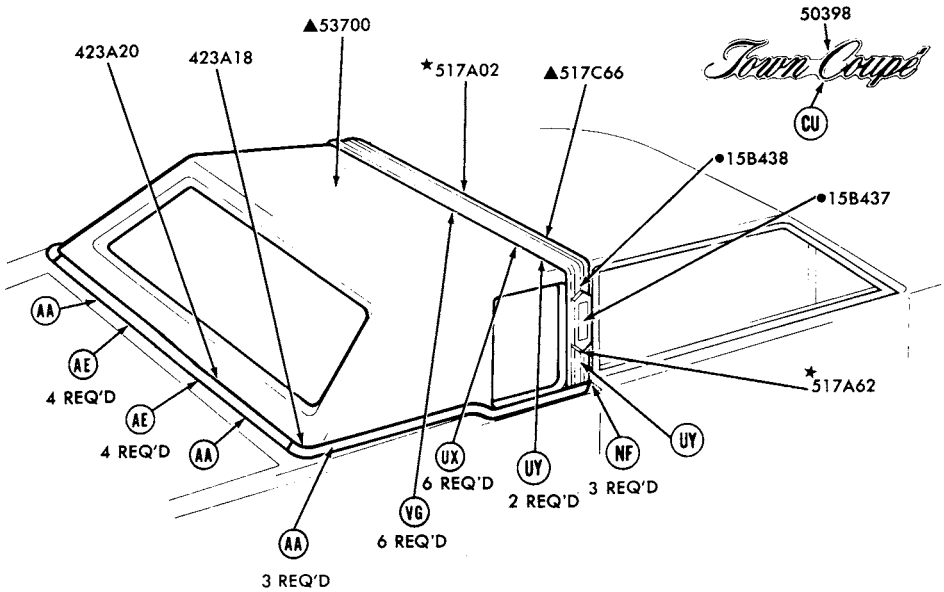

P-16110

1979 LINCOLN - BODY TYPE 60 - ROOF and BACK BELT

GROUP NUMBER	PART NAME	DESCRIPTION	PART NUMBER		QTY.
423A18-9	Moulding (back belt side)	W/full vinyl roof	(RH)♦D7VY 60423A18-B	(LH)♦D7VY 60423A19-B	1
		W/half vinyl roof	(RH)♦D7VY 60423A18-A	(LH)♦D7VY 60423A19-A	1
423A20	Moulding (back belt rear)		♦D7VY 53423A20-A		1
50398	Plate (front fender name)	"Town Coupe"	♦D3VY 6550398-A	R.H. and L.H.	2
517A02	Moulding (roof top)	Incl. vinyl insert			
		◊Beryl (light)	★D9VY 60517A02-AK		1
		◊Black	★D7VY 60517A02-AA		1
		◊Blue (diamond)	★D9VY 60517A02-BB		1
		◊Blue (medium)	★D8VY 60517A02-AB		1
		◊Blue (midnight)	★D9VY 60517A02-AB	Not replaced (4/84)	1
		◊Champagne (light)	★D8VY 60517A02-AU		1
		◊Cordovan (dark)	★D7VY 60517A02-AF		1
		◊Cordovan (light)	★D8VY 60517A02-AF		1
		◊Cream	★D7VY 60517A02-AV		1
		◊Gold (jubilee)	★D9VY 60517A02-AY		1
		◊Gray	★D7VY 60517A02-AP		1
		◊Red (dark)	★D7VY 60517A02-AD		1
		◊Silver	★D7VY 60517A02-BP		1
		◊White	★D7VY 60517A02-AW		1
517A62	Moulding (roof side)	Incl. vinyl insert			
		◊Beryl (light)	★D9VY 60517A62-AK	R.H. and L.H.	2
		◊Black	★D7VY 60517A62-AA	R.H. and L.H.	2
		◊Blue (diamond)	★D9VY 60517A62-BB	R.H. and L.H.	2
		◊Blue (medium)	★D8VY 60517A62-AB	R.H. and L.H.	2
		◊Blue (midnight)	★D9VY 60517A62-AB	R.H. and L.H.	2
		◊Champagne (light)	★D8VY 60517A62-AU	R.H. and L.H.	2
		◊Cordovan (dark)	★D7VY 60517A62-AF	R.H. and L.H.	2
		◊Cordovan (light)	★D8VY 60517A62-AF	R.H. and L.H.	2
		◊Cream	★D7VY 60517A62-AV	R.H. and L.H.	2
		◊Gold (jubilee)	★D9VY 60517A62-AY	R.H. and L.H.	2
		◊Gray	★D7VY 60517A62-AP	R.H. and L.H.	2
		◊Red (dark)	★D7VY 60518A62-AD	R.H. and L.H.	2
		◊Silver	★D7VY 60517A62-BP	R.H. and L.H.	2
		◊White	★D7VY 60517A62-AW	R.H. and L.H.	2

◊ For color verification, refer to the vinyl roof swatches in the 1979 Salesman's Color and Upholstery Selection Guide

♦ Includes attaching parts

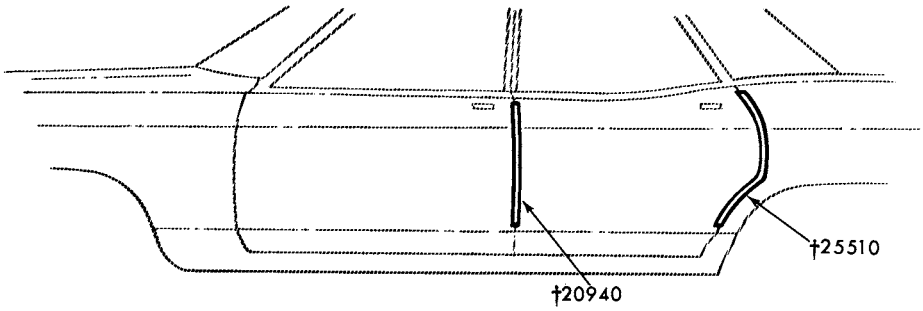

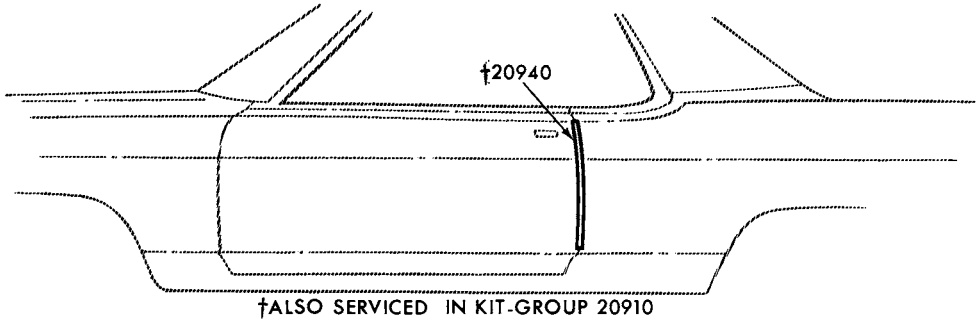

†ALSO SERVICED IN KIT-GROUP 20910

P-10061

1979 LINCOLN - DOOR EDGE GUARDS

GROUP NUMBER	PART NAME	DESCRIPTION	PART NUMBER		QTY.
20910	Moulding kit (door edge guard)	Body type 53	D5VY 5320910-A		1
		Body type 60	D5VY 6020910-A		1
20940-1	Moulding (front door edge guard)	Body type 53	(RH) D5VY 5320940-A	(LH)★D5VY 5320941-A R/B D5VY 5320940-A (11/81)	1
		Body type 60	(RH) D5VY 6020940-A	(LH)★D5VY 6020941-A D5VY 6020940-A (11/81)	1
25510-1	Moulding (rear door edge guard)	Body type 53	(RH) D5VY 5325510-A	(LH) D5VY 5325511-A	1

COPYRIGHT © 1986 — FORD MOTOR COMPANY — DEARBORN, MICHIGAN

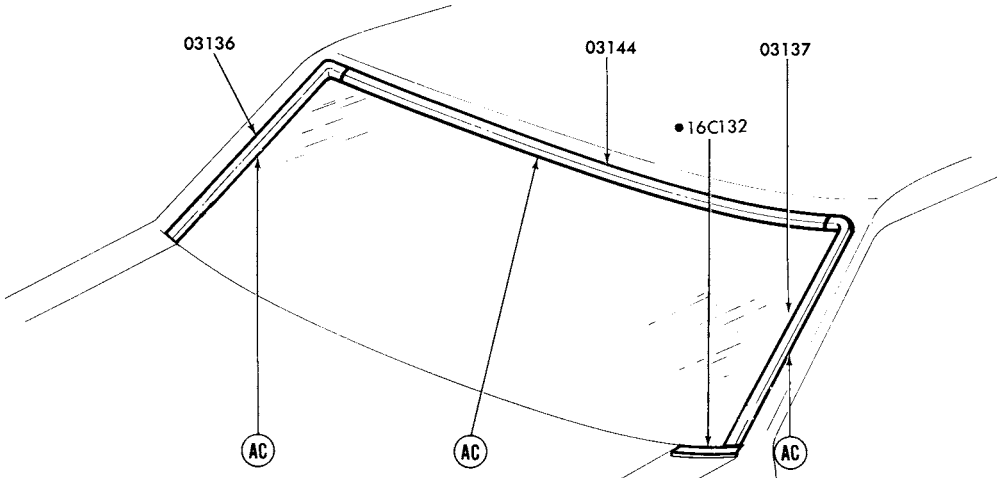

REFER TO EXTERIOR MOULDING SECTION 'R' FOR COMPLETE RETAINER INFORMATION
•REFER TO GROUP IN CHASSIS SECTION

P-12521

1979 COUGAR - WINDSHIELD

GROUP NUMBER	PART NAME	DESCRIPTION	PART NUMBER	QTY.
03136-7	Moulding (windshield side)		(RH)♠D7OZ 6503136-A (LH)♠D7OZ 6503137-A	1
03144	Moulding (windshield top)		♠D7OZ 6503144-A	1

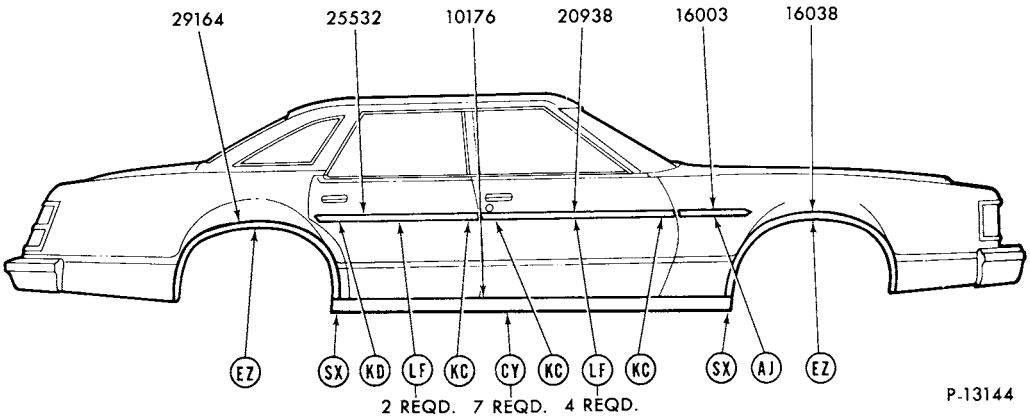

P-13144

REFER TO EXTERIOR MOULDING SECTION "R" FOR COMPLETE RETAINER INFORMATION

1979 COUGAR - BODY TYPE 53 - SIDE w/NARROW MOULDINGS

COPYRIGHT © 1986 — FORD MOTOR COMPANY — DEARBORN, MICHIGAN

1979 COUGAR - BODY TYPE 53 - SIDE w/NARROW MOULDINGS - cont'd

GROUP NUMBER	PART NAME	DESCRIPTION	PART NUMBER		QTY.
10176-7	Moulding (body rocker panel)	Body type 53	(RH)♦D7OZ 5310176-A	(LH)♦D7OZ 5310177-A	1
16003	Moulding (front fender side)	Bright finish	♦D4GY 16003-A	R.H. and L.H.	2
		Black vinyl insert-adhesive backed-27 1/2" long-cut to fit	D5DZ 5425532-D	R.H. and L.H.	AR
16038-9	Moulding (front fender wheel opening)		(RH)♦D7WY 16038-B	(LH)♦D7WY 16039-B	1
20938	Moulding (front door)	Bright finish	♦D4GY 5320938-A	R.H. and L.H.	2
		Black vinyl insert-adhesive backed-57" long-cut to fit	D4GZ 16003-A	R.H. and L.H.	AR
25532	Moulding (rear door)	Bright finish	♦D4GY 5325532-A	R.H. and L.H.	2
		Black vinyl insert-adhesive backed-27 1/2" long-cut to fit	D5DZ 5425532-D	R.H. and L.H.	AR
29164-5	Moulding (quarter wheel opening)		(RH)♦D7OZ 6529164-B	(LH)♦D7OZ 6529165-B	1

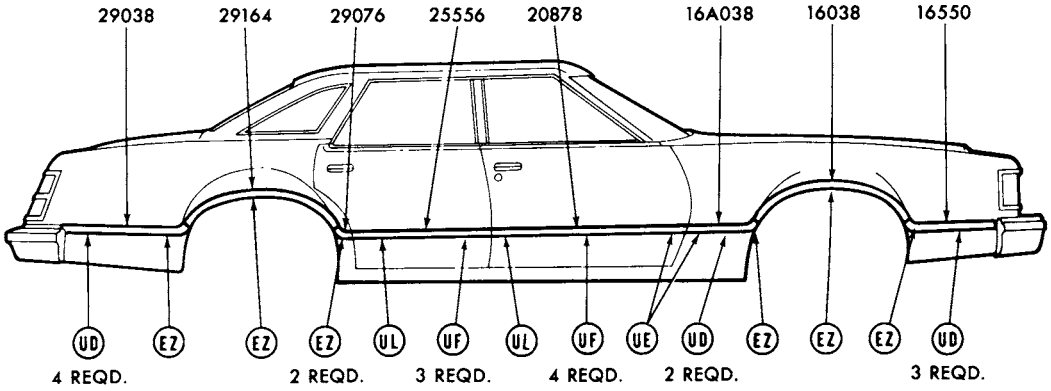

REFER TO EXTERIOR MOULDING SECTION "R" FOR COMPLETE RETAINER INFORMATION P-13147

1979 COUGAR - BODY TYPE 53 - SIDE w/WIDE MOULDINGS

♦ Includes attaching parts

1979 COUGAR - BODY TYPE 53 - SIDE w/WIDE MOULDINGS - cont'd.

GROUP NUMBER	PART NAME	DESCRIPTION	⊕ COLOR CODE	PART NUMBER		QTY.
16038-9	Moulding (front fender wheel opening)			(RH)♦D7OZ 16038-A	(LH)♦D7OZ 16039-A	1
16A038-9	Moulding (front fender side rear	Bright with black paint in groove		(RH)♦D7OZ 16A038-A	(LH)♦D7OZ 16A039-A	1
		Bright incl. vinyl insert				
		◊Black	57A	(RH)♦D7OZ 16A038-AA	(LH)♦D7OZ 16A039-AA	1
		◊Blue-(midnight)	M1B	(RH)♦D9OZ 16A038-BB	(LH)♦D9OZ 16A039-BB	1
		◊Chamois	58T	(RH)♦D8OZ 16A038-BT	(LH)♦D8OZ 16A039-BT	1
		◊Cordovan-(dark)	58F	(RH)♦D9OZ 16A038-BF	(LH)♦D9OZ 16A039-BF	1
		◊Gray	E9P	(RH)♦D7SZ 16A038-AP	(LH)♦D7SZ 16A039-AP	1
		◊Jade	77R	(RH)♦D7OZ 16A038-AR	(LH)♦D7OZ 16A039-AR	1
		◊Red	24D	(RH)♦D7SZ 16A038-AD	(LH)♦D7SZ 16A039-AD	1
		◊Silver	D7P	(RH)♦D7OZ 16A038-AP	(LH)♦D7OZ 16A039-AP	1
		◊White	D6W	(RH)♦D7OZ 16A038-AW	(LH)♦D7OZ 16A039-AW	1
16550-1	Moulding (front fender lower)	Bright with black paint in groove		(RH)♦D9OZ 16550-A	(LH)♦D9OZ 16551-A	1
		Bright incl. vinyl insert				
		◊ Black	57A	(RH)♦D9OZ 16550-BA	(LH)♦D9OZ 16551-BA	1
		◊ Blue-(midnight)	M1B	(RH)♦D9OZ 16550-BB	(LH)♦D9OZ 16551-BB	1
		◊ Chamois	58T	(RH)♦D9OZ 16550-BT	(LH)♦D9OZ 16551-BT	1
		◊ Cordovan-(dark)	58F	(RH)♦D9OZ 16550-BF	(LH)♦D9OZ 16551-BF	1
		◊ Gray	E9P	(RH)♦D9OZ 16550-CP	(LH)♦D9OZ 16551-CP	1
		◊ Jade	77R	(RH)♦D9OZ 16550-BR	(LH)♦D9OZ 16551-BR	1
		◊ Red	24D	(RH)♦D9OZ 16550-BD	(LH)♦D9OZ 16551-BD	1
		◊ Silver	D7P	(RH)♦D9OZ 16550-BP	(LH)♦D9OZ 16551-BP	1
		◊ White	D6W	(RH)♦D9OZ 16550-BW	(LH)♦D9OZ 16551-BW	1
20878-9	Moulding (front door lower)	Bright with black paint in groove		(RH)♦D7OZ 5320878-A	(LH)♦D7OZ 5320879-A	1
		Bright incl. vinyl insert				
		◊ Black	57A	(RH)♦D7OZ 5320878-AA	(LH)♦D7OZ 5320879-AA	1
		◊ Blue-(midnight)	M1B	(RH)♦D9OZ 5320878-BB	(LH)♦D9OZ 5320879-BB	1
		◊ Chamois	58T	(RH)♦D8OZ 5320878-BT	(LH)♦D8OZ 5320879-BT	1
		◊ Cordovan-(dark)	58F	(RH)♦D9OZ 5320878-BF	(LH)♦D9OZ 5320879-BF	1
		◊ Gray	E9P	(RH)♦D8OZ 5320878-AP	(LH)♦D8OZ 5320879-AP	1
		◊ Jade	77R	(RH)♦D7OZ 5320878-AR	(LH)♦D7OZ 5320879-AR	1
		◊ Red	24D	(RH)♦D9OZ 5320878-BD	(LH)♦D9OZ 5320879-BD	1
		◊ Silver	D7P	(RH)*D7OZ 5320878-AP	(LH)*D7OZ 5320879-AP	1
		◊ White	D6W	(RH)♦D7OZ 5320878-AW	(LH)♦D7OZ 5320879-AW	1

◊ For color verification, refer to the vinyl roof swatches in the 1979 Salesman's Color and Upholstery Selections Guide
♦ Includes attaching parts ⊕ As shown on Certification Label

COPYRIGHT © 1986 — FORD MOTOR COMPANY — DEARBORN, MICHIGAN

1979 COUGAR - BODY TYPE 53 - SIDE w/WIDE MOULDINGS - cont'd.

GROUP NUMBER	PART NAME	DESCRIPTION		PART NUMBER		QTY.
25556-7	Moulding (rear door lower)	Bright with black paint in groove		(RH)♦D7OZ 5325556-A	(LH)♦D7OZ 5325557-A	1
		Bright incl. vinyl insert				
		◊ Black	57A	(RH)♦D7OZ 5325556-AA	(LH)♦D7OZ 5325557-AA	1
		◊Blue-(midnight)	M1B	(RH)♦D9OZ 5325556-BB	(LH)♦D9OZ 5325557-BB	1
		◊Chamois	58T	(RH)♦D8OZ 5325556-BT	(LH)♦D8OZ 5325557-BT	1
		◊Cordovan-(dark)	58F	(RH)♦D9OZ 5325556-BF	(LH)♦D9OZ 5325557-BF	1
		◊Gray	E9P	(RH)♦D8OZ 5325556-AP	(LH)♦D8OZ 5325557-AP	1
		◊Jade	77R	(RH)♦D7OZ 5325556-AR	(LH)♦D7OZ 5325557-AR	1
		◊Red	24D	(RH)♦D9OZ 5325556-BD	(LH)♦D9OZ 5325557-BD	1
		◊Silver	D7P	(RH)♦D7OZ 5325556-AP	(LH)♦D7OZ 5325557-AP	1
		◊White	D6W	(RH)♦D7OZ 5325556-AW	(LH)♦D7OZ 5325557-AW	1
29038-9	Moulding (quarter lower rear)	Bright with black paint in groove		(RH)♦D9OZ 6529038-A	(LH)♦D9OZ 6529039-A	1
		Bright incl. vinyl insert				
		◊Black	57A	(RH)♦D9OZ 6529038-BA	(LH)♦D9OZ 6529039-BA	1
		◊Blue-(midnight)	M1B	(RH)♦D9OZ 6529038-BB	(LH)♦D9OZ 6529039-BB	1
		◊Chamois	58T	(RH)♦D9OZ 6529038-BT	(LH)♦D9OZ 6529039-BT	1
		◊Cordovan-(dark)	58F	(RH)♦D9OZ 6529038-BF	(LH)♦D9OZ 6529039-BF	1
		◊Gray	E9P	(RH)♦D9OZ 6529038-CP	(LH)♦D9OZ 6529039-CP	1
		◊Jade	77R	(RH)♦D9OZ 6529038-BR	(LH)♦D9OZ 6529039-BR	1
		◊Red	24D	(RH)♦D9OZ 6529038-BD	(LH)♦D9OZ 6529039-BD	1
		◊Silver	D7P	(RH)♦D9OZ 6529038-BP	(LH)♦D9OZ 6529039-BP	1
		◊White	D6W	(RH)♦D9OZ 6529038-BW	(LH)♦D9OZ 6529039-BW	1
29076-7	Moulding (quarter lower front)			(RH)♦D7OZ 5329076-A	(LH)♦D7OZ 5329077-A	1
29164-5	Moulding (quarter wheel opening)			(RH)♦D7OZ 6529164-A	(LH)♦D7OZ 6529165-A	1

◊ For color verification, refer to the vinyl roof swatches in the 1979 Salesman's Color and Upholstery Selections Guide

♦ Includes attaching parts ⊕ As shown on Certification Label

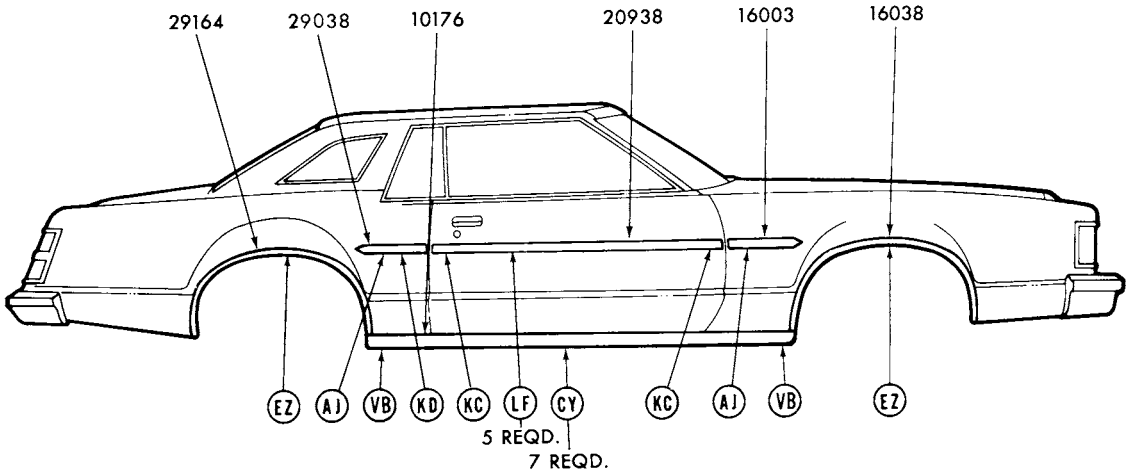

REFER TO EXTERIOR MOULDING SECTION "R" FOR COMPLETE RETAINER INFORMATION

P-13143

1979 COUGAR - BODY TYPE 65 - SIDE - w/NARROW MOULDINGS

GROUP NUMBER	PART NAME	DESCRIPTION	PART NUMBER		QTY.
10176-7	Moulding (body rocker panel)		♦D7OZ 6510176-A	R.H. and L.H.	2
16003-4	Moulding (front fender side)	Bright finish	♦D4GY 16003-A	R.H. and L.H.	2
		Black vinyl insert-adhesive backed-27 1/2" long-cut to fit	♦D5DZ 5425532-D	R.H. and L.H.	2
16038-9	Moulding (front fender wheel opening)		(RH)♦D7WY 16038-B	(LH)♦D7WY 16039-B	1
20938	Moulding (front door)	Bright finish	♦D4GY 6520938-A	R.H. and L.H.	2
		Black vinyl insert-adhesive backed-57" long-cut to fit	D4GZ 16003-A	R.H. and L.H.	AR
29038	Moulding (quarter)	Bright finish	♦D4GY 16003-A	R.H. and L.H.	2
		Black vinyl insert-adhesive backed-27 1/2" long-cut to fit	D5DZ 5425532-D	R.H. and L.H.	AR
29164-5	Moulding (quarter wheel opening)		(RH)♦D7OZ 6529164-B	(LH)♦D7OZ 6529165-B	1

COPYRIGHT © 1986 — FORD MOTOR COMPANY — DEARBORN, MICHIGAN

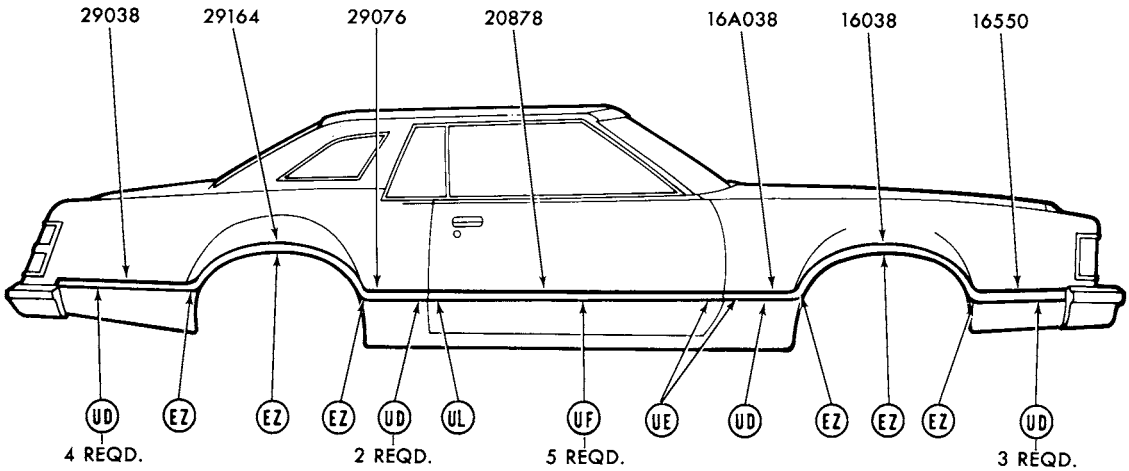

REFER TO EXTERIOR MOULDING SECTION "R" FOR COMPLETE RETAINER INFORMATION P-13148

1979 COUGAR - BODY TYPE 65 - SIDE w/WIDE MOULDINGS

GROUP NUMBER	PART NAME	DESCRIPTION	⊕COLOR CODE	PART NUMBER		QTY.
16038-9	Moulding (front fender wheel opening)			(RH)♦D7OZ 16038-A	(LH)♦D7OZ 16039-A	1
16A038-9	Moulding (front fender side rear)	Bright with black paint in groove		(RH)♦D7OZ 16A038-A	(LH)♦D7OZ 16A039-A	1
		Bright incl. vinyl insert				
		◊Black	57A	(RH)♦D7OZ 16A038-AA	(LH)♦D7OZ 16A039-AA	1
		◊Blue - (midnight)	M1B	(RH)♦D9OZ 16A038-BB	(LH)♦D9OZ 16A039-BB	1
		◊Chamois	58T	(RH)♦D8OZ 16A038-BT	(LH)♦D8OZ 16A039-BT	1
		◊Cordovan - (dark)	58F	(RH)♦D9OZ 16A038-BF	(LH)♦D9OZ 16A039-BF	1
		◊Gray	E9P	(RH)♦D7SZ 16A038-AP	(LH)♦D7SZ 16A039-AP	1
		◊Jade	77R	(RH)♦D7OZ 16A038-AR	(LH)♦D7OZ 16A039-AR	1
		◊Red	24D	(RH)♦D7SZ 16A038-AD	(LH)♦D7SZ 16A039-AD	1
		◊Silver	D7P	(RH)♦D7OZ 16A038-AP	(LH)♦D7OZ 16A039-AP	1
		◊White	D6W	(RH)♦D7OZ 16A038-AW	(LH)♦D7OZ 16A039-AW	1
16550-1	Moulding (front fender side front)	Bright with black paint in groove		(RH)♦D9OZ 16550-A	(LH)♦D9OZ 16551-A	1
		Bright incl. vinyl insert				
		◊Black	57A	(RH)♦D9OZ 16550-BA	(LH)♦D9OZ 16551-BA	1
		◊Blue- (midnight)	M1B	(RH)♦D9OZ 16550-BB	(LH)♦D9OZ 16551-BB	1
		◊Chamois	58T	(RH)♦D9OZ 16550-BT	(LH)♦D9OZ 16551-BT	1
		◊Cordovan- (dark)	58F	(RH)♦D9OZ 16550-BF	(LH)♦D9OZ 16551-BF	1
		◊Gray	E9P	(RH)♦D9OZ 16550-CP	(LH)♦D9OZ 16551-CP	1
		◊Jade	77R	(RH)♦D9OZ 16550-BR	(LH)♦D9OZ 16551-BR	1
		◊Red	24D	(RH)♦D9OZ 16550-BD	(LH)♦D9OZ 16551-BD	1
		◊Silver	D7P	(RH)♦D9OZ 16550-BP	(LH)♦D9OZ 16551-BP	1
		◊White	D6W	(RH)♦D9OZ 16550-BW	(LH)♦D9OZ 16551-BW	1

◊ For color verification, refer to the vinyl roof swatches in the 1979 Salesman's Color and Upholstery Selections Guide

♦ Includes attaching parts ⊕ As shown on Certification Label

1979 COUGAR - BODY TYPE 65 - SIDE w/WIDE MOULDINGS - cont'd.

GROUP NUMBER	PART NAME	DESCRIPTION	⊕ COLOR CODE	PART NUMBER		QTY.
20878-9	Moulding (front door)	Bright with black paint in groove		(RH)♦D7OZ 6520878-A	(LH)♦D7OZ 6520879-A	1
		Bright incl. vinyl insert				
		◊Black	57A	(RH)♦D7SZ 6520878-AA	(LH)♦D7SZ 6520879-AA	1
		◊Blue-(midnight)	M1B	(RH)♦D9OZ 6520878-BB	(LH)♦D9OZ 6520879-BB	1
		◊Chamois	58T	(RH)♦D8OZ 6520878-BT	(LH)♦D8OZ 6520879-BT	1
		◊Cordovan-(dark)	58F	(RH)♦D9OZ 6520878-BF	(LH)♦D9OZ 6520879-BF	1
		◊Gray	E9P	(RH)♦D7SZ 6520878-BP	(LH)♦D7SZ 6520879-BP	1
		◊Jade	77R	(RH)♦D7SZ 6520878-AR	(LH)♦D7SZ 6520879-AR	1
		◊Red	24D	(RH)♦D7SZ 6520878-AD	(LH)♦D7SZ 6520879-AD	1
		◊Silver	D7P	(RH)♦D7SZ 6520878-AP	(LH)♦D7SZ 6520879-AP	1
		◊White	D6W	(RH)♦D7SZ 6520878-AW	(LH)♦D7SZ 6520879-AW	1
29038-9	Moulding (quarter panel rear)	Bright with black paint in groove		(RH)♦D9OZ 6529038-A	(LH)♦D9OZ 6529039-A	1
		Bright incl. vinyl insert				
		◊Black	57A	(RH)♦D9OZ 6529038-BA	(LH)♦D9OZ 6529039-BA	1
		◊Blue - (midnight)	M1B	(RH)♦D9OZ 6529038-BB	(LH)♦D9OZ 6529039-BB	1
		◊Chamois	58T	(RH)♦D9OZ 6529038-BT	(LH)♦D9OZ 6529039-BT	1
		◊Cordovan - (dark)	58F	(RH)♦D9OZ 6529038-BF	(LH)♦D9OZ 6529039-BF	1
		◊Gray	E9P	(RH)♦D9OZ 6529038-CP	(LH)♦D9OZ 6529039-CP	1
		◊Jade	77R	(RH)♦D9OZ 6529038-BR	(LH)♦D9OZ 6529039-BR	1
		◊Red	24D	(RH)♦D9OZ 6529038-BD	(LH)♦D9OZ 6529039-BD	1
		◊Silver	D7P	(RH)♦D9OZ 6529038-BP	(LH)♦D9OZ 6529039-BP	1
		◊White	D6W	(RH)♦D9OZ 6529038-BW	(LH)♦D9OZ 6529039-BW	1
29076-7	Moulding (quarter panel front)	Bright with black paint in groove		(RH)♦D7OZ 6529076-A	(LH)♦D7OZ 6529077-A	1
		Bright incl. vinyl insert				
		◊Black	57A	(RH)♦D7SZ 6029076-AA	(LH)♦D7SZ 6029077-AA	1
		◊Blue - (midnight)	M1B	(RH)♦D9OZ 6529076-BB	(LH)♦D9OZ 6529077-BB	1
		◊Chamois	58T	(RH)♦D8SZ 6029076-BT	(LH)♦D8SZ 6029077-BT	1
		◊Cordovan - (dark)	58F	(RH)♦D9OZ 6529076-BF	(LH)♦D9OZ 6529077-BF	1
		◊Gray	E9P	(RH)♦D7SZ 6029076-BP	(LH)♦D7SZ 6029077-BP	1
		◊Jade	77R	(RH)♦D7SZ 6029076-AR	(LH)♦D7SZ 6029077-AR	1
		◊Red	24D	(RH)♦D7SZ 6029076-AD	(LH)♦D7SZ 6029077-AD	1
		◊Silver	D7P	(RH)♦D7SZ 6029076-AP	(LH)♦D7SZ 6029077-AP	1
		◊White	D6W	(RH)♦D7SZ 6029076-AW	(LH)♦D7SZ 6029077-AW	1
29164-5	Moulding (quarter wheel opening)			(RH)♦D7OZ 6529164-A	(LH)♦D7OZ 6529165-A	1

◊ For color verification, refer to the vinyl roof swatches in the 1979 Salesman's Color and Upholstery Selections Guide
♦ Includes attaching parts ⊕ As shown on Certification Label

COPYRIGHT © 1986 — FORD MOTOR COMPANY — DEARBORN, MICHIGAN

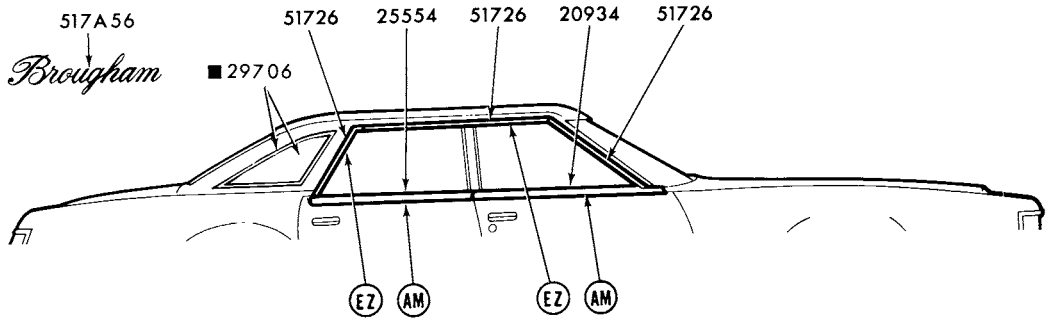

REFER TO EXTERIOR MOULDING SECTION "R" FOR COMPLETE RETAINER INFORMATION
■ REFER TO GROUP IN TEXT SECTION

P-13141

1979 COUGAR - BODY TYPE 53 - DOOR BELT, DRIP RAIL

GROUP NUMBER	PART NAME	DESCRIPTION	PART NUMBER		QTY.
20934-5	Moulding (front door belt)		(RH)♦D7OZ 5320934-A	(LH)♦D7OZ 5320935-A	1
25554-5	Moulding (rear door belt)		(RH)♦D7OZ 5325554-A	(LH)♦D7OZ 5325555-A	1
51726-7	Moulding (roof drip rail finish)	Front	(RH)♦D7OZ 5351726-A	(LH)♦D7OZ 5351727-A	1
		Rear	(RH)♦D7OZ 5351726-B	(LH)♦D7OZ 5351727-B	1
517A56	Ornament (roof side)	"Brougham"	D7OZ 53517A56-A	R.H. and L.H.	2

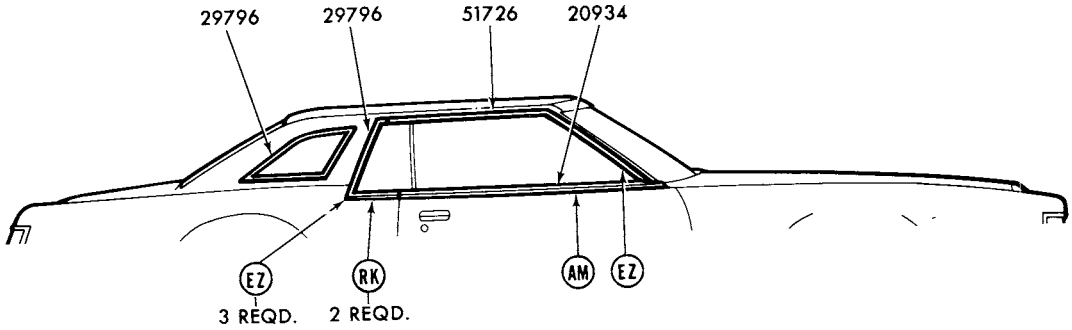

REFER TO EXTERIOR MOULDING SECTION "R" FOR COMPLETE RETAINER INFORMATION

P-13142

1979 COUGAR - BODY TYPE 65 - DOOR BELT, ROOF DRIP and QUARTER WINDOW

GROUP NUMBER	PART NAME	DESCRIPTION	PART NUMBER		QTY.
20934-5	Moulding (front door belt)	Body type 65	(RH)♦D7SZ 6020934-A	(LH)♦D7SZ 6020935-A	1
29796-7	Moulding (front quarter window)	Body type 65D	(RH)♦D7OZ 6529796-A	(LH)♦D7OZ 6529797-A	1
		Body type 65L	(RH)♦D7WY 6529796-A	(LH)♦D7WY 6529797-A	1
29796-7	Moulding (rear quarter window)	Body type 65D	(RH)♦D7OZ 6529796-C	(LH)♦D7OZ 6529797-C	1
		Body type 65L	Serviced in assy.-refer to Group 29706 in Text		
51726-7	Moulding (roof drip rail finish)	Body type 65D	(RH)♦D7OZ 6551726-A	(LH)♦D7OZ 6551727-A	1
		Body type 65L	(RH)♦D7WY 6551726-A	(LH)♦D7WY 6551727-A	1

♦ Includes attaching parts

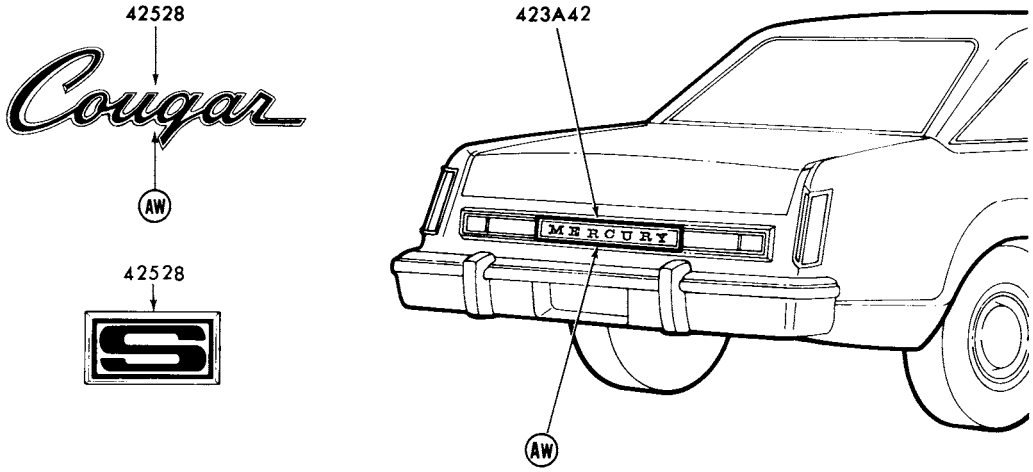

P-13156

REFER TO EXTERIOR MOULDING SECTION "R" FOR COMPLETE RETAINER INFORMATION

1979 COUGAR - BODY TYPES 53 and 65D - BACK END

GROUP NUMBER	PART NAME	DESCRIPTION	PART NUMBER	QTY.
423A42	Panel (lower back finish)	Incl. "Mercury"	♦D7WY 65423A42-A	1
42528	Plate (name)	"Cougar"	♦D7WY 6542528-A	1
		"S"-adhesive backed	@D7OZ 6542528-B	1

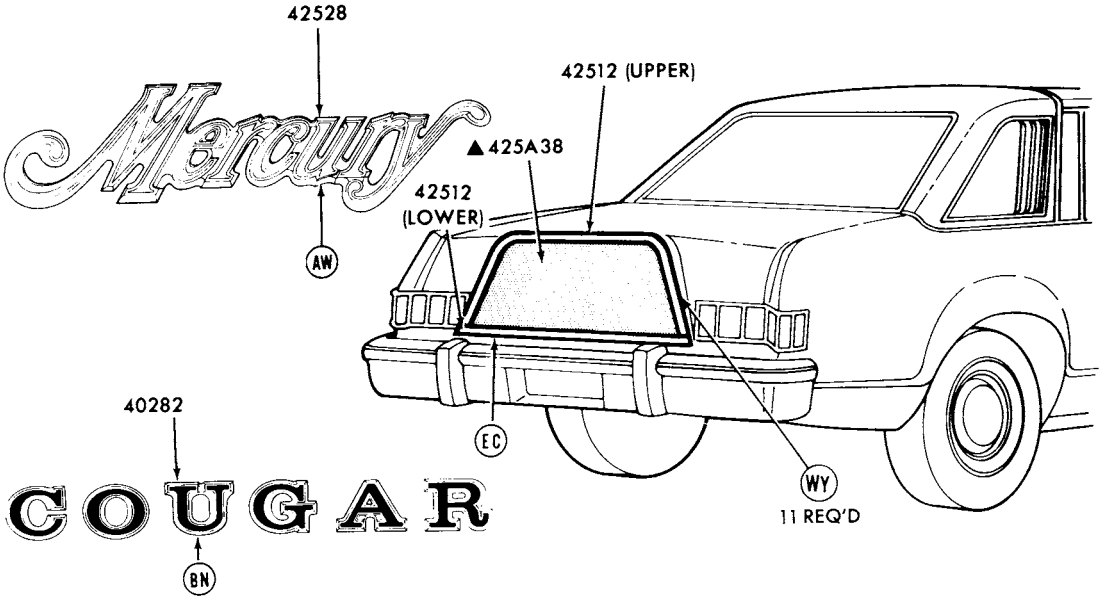

REFER TO EXTERIOR MOULDING SECTION 'R' FOR COMPLETE RETAINER INFORMATION
▲REFER TO GROUP IN SOFT TRIM SECTION

P-14249

1979 COUGAR - BODY TYPE 65L - BACK END

♦ Includes attaching parts @ Canada only

COPYRIGHT © 1986 — FORD MOTOR COMPANY — DEARBORN, MICHIGAN

1979 COUGAR - BODY TYPE 65L - BACK END - cont'd.

GROUP NUMBER	PART NAME	DESCRIPTION	PART NUMBER	QTY.
40262	Letter (name)	"C"	♦D7WY 6540282-A	1
		"O"	♦D7WY 6540282-B	1
		"U"	♦D7WY 6540282-C	1
		"G"	♦D7WY 6540282-D	1
		"A"	♦D7WY 6540282-E	1
		"R"	♦D7WY 6540282-F	1
42512	Moulding (luggage compartment door)	Lower	♦D9WY 6542512-A	1
		Upper (Macho only)	♦D8WY 6542512-A	1
42528	Plate (name)	"Mercury"	♦D54Y 6642528-A	1

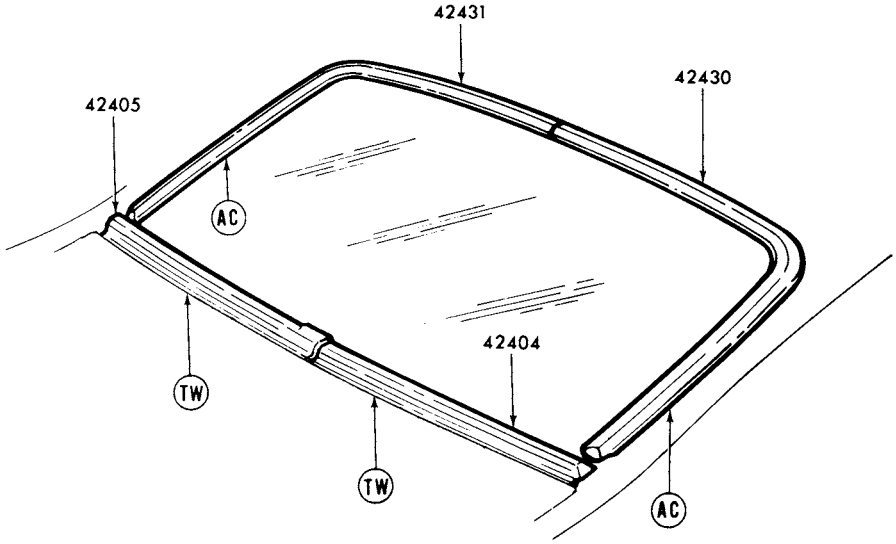

REFER TO EXTERIOR MOULDING SECTION "R" FOR COMPLETE RETAINER INFORMATION P-13039

1979 COUGAR - BODY TYPES 53 and 65 - BACK WINDOW

GROUP NUMBER	PART NAME	DESCRIPTION	PART NUMBER	QTY.
42404-5	Moulding (back window lower)		(RH)♦D7OZ 6542404-A (LH)♦D7OZ 6542405-A	1
42430-1	Moulding (back window upper)		(RH)♦D7OZ 6542430-A (LH)♦D7OZ 6542431-A	1

♦ Includes attaching parts

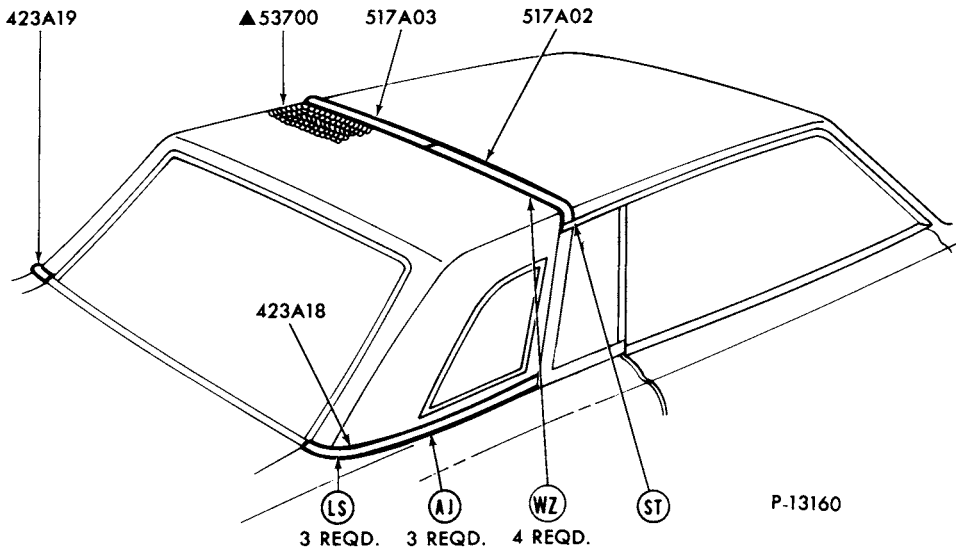

▲ REFER TO SOFT TRIM SECTION
REFER TO EXTERIOR MOULDING SECTION "R" FOR COMPLETE RETAINER INFORMATION

1979 COUGAR - BODY TYPES 53 and 65D - ROOF and BACK BELT

GROUP NUMBER	PART NAME	DESCRIPTION	PART NUMBER		QTY.
423A18-9	Moulding (back belt side)	Body type 53	(RH)♦D9OZ 53423A18-A	(LH)♦D9OZ 53423A19-A	1
		Body type 65D	(RH)♦D9OZ 65423A18-A	(LH)♦D9OZ 65423A19-A	1
517A02-3	Moulding (roof top rear)	Body type 65D-bright	(RH)♦D7OZ 65517A02-A	(LH)♦D7OZ 65517A03-A	1

♦ Includes attaching parts

COPYRIGHT © 1986 — FORD MOTOR COMPANY — DEARBORN, MICHIGAN

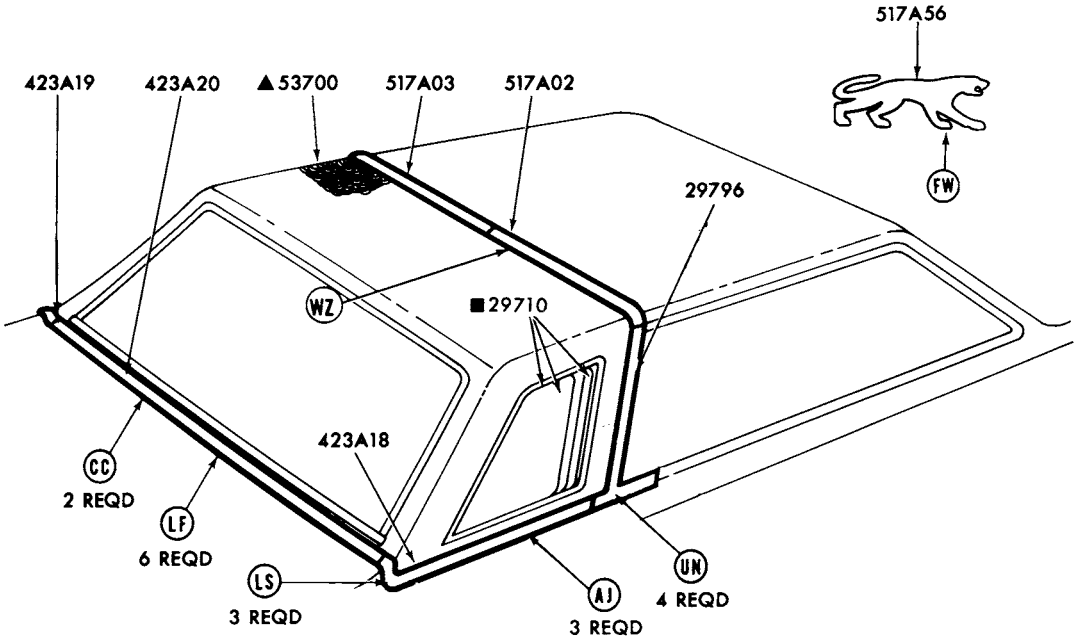

REFER TO EXTERIOR MOULDING SECTION "R" FOR COMPLETE RETAINER INFORMATION
▲ REFER TO GROUP IN SOFT TRIM SECTION
■ REFER TO GROUP IN BODY SECTION

P-13162

1979 COUGAR - BODY TYPE 65L (w/o CENTER PANEL) - ROOF and BACK BELT

GROUP NUMBER	PART NAME	DESCRIPTION	PART NUMBER		QTY.
29796-7	Moulding (front quarter window)		(RH)♦D7WY 6529796-A	(LH)♦D7WY 6529797-A	1
423A18-9	Moulding (back belt side)		(RH)♦D7WY 65423A18-A	(LH)♦D7WY 65423A19-A	1
423A20	Moulding (back belt)		♦D7WY 65423A20-A		1
517A02-3	Moulding (roof side)		(RH)♦D7WY 65517A02-A	(LH)♦D7WY 65517A03-A	1
517A56-7	Plate (roof side name)		(RH)♦D7WY 65517A56-A	(LH)♦D7WY 65517A57-A	1

♦ Includes attaching parts

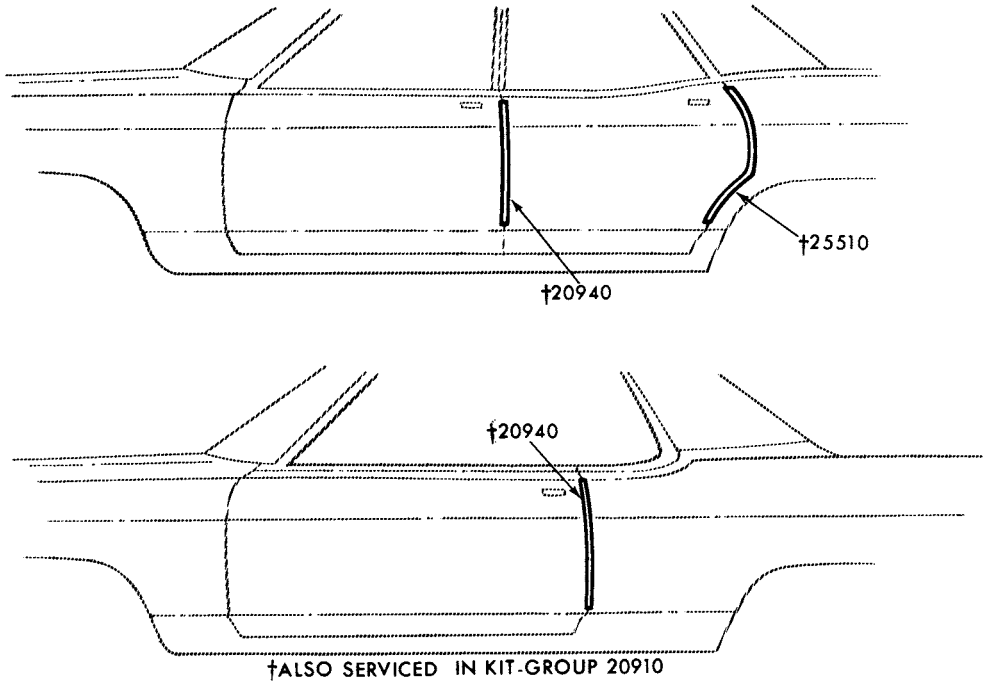

†ALSO SERVICED IN KIT-GROUP 20910

P-10061

1979 COUGAR - DOOR EDGE GUARD

GROUP NUMBER	PART NAME	DESCRIPTION	PART NUMBER	QTY.
20910	Moulding kit (door edge guard)	Body type 53	D7OZ 5320910-A	1
		Body type 65	D7OZ 6520910-A	1
20940-1	Moulding (front door edge guard)	Body type 53	(RH) D2GY 5320940-A (LH) D2GY 5320941-A	1
		Body type 65	(RH) D7OZ 6520940-A (LH) D7OZ 6520941-A	1
25510-1	Moulding (rear door edge guard)	Body type 53	(RH) D7OZ 5325510-A (LH) D7OZ 5325511-A	1

COPYRIGHT © 1986 — FORD MOTOR COMPANY — DEARBORN, MICHIGAN

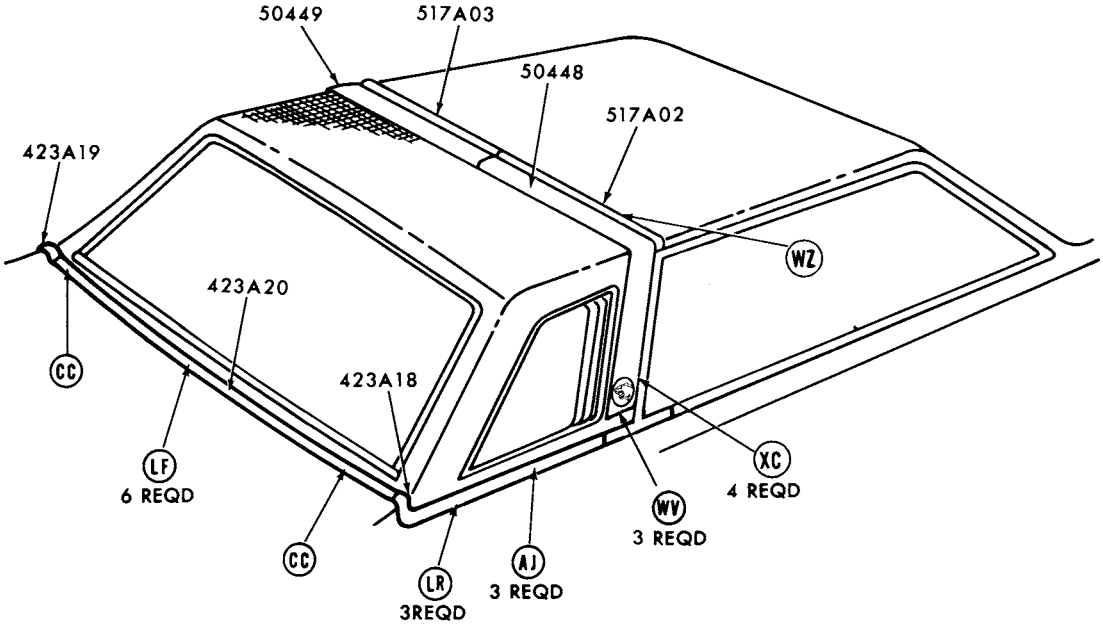

REFER TO EXTERIOR MOULDING SECTION 'R' FOR COMPLETE RETAINER INFORMATION

P-14307

1979 COUGAR - BODY TYPE 65L (w/CENTER PANEL) - ROOF and BACK BELT

GROUP NUMBER	PART NAME	DESCRIPTION	PART NUMBER		QTY.
423A18-9	Moulding (back belt side)		(RH)♦D7WY 65423A18-A	(LH)♦D7WY 65423A19-A	1
423A20	Moulding (back belt)		♦D7WY 65423A20-A		1
50448-9	Panel (roof outside center)	◊Blue (midnight)	(RH)♦D9WY 6550448-AC	(LH)♦D9WY 6550449-AC	1
		◊Chamois	(RH)♦D8WY 6550448-BT	(LH)♦D8WY 6550449-BT	1
517A02-3	Moulding (roof side)		(RH)♦D7WY 65517A02-A	(LH)♦D7WY 65517A03-A	1

◊ For color verification, refer to the vinyl roof swatches in the 1979 Salesman's Color and Upholstery Selection Guide
♦ Includes attaching parts

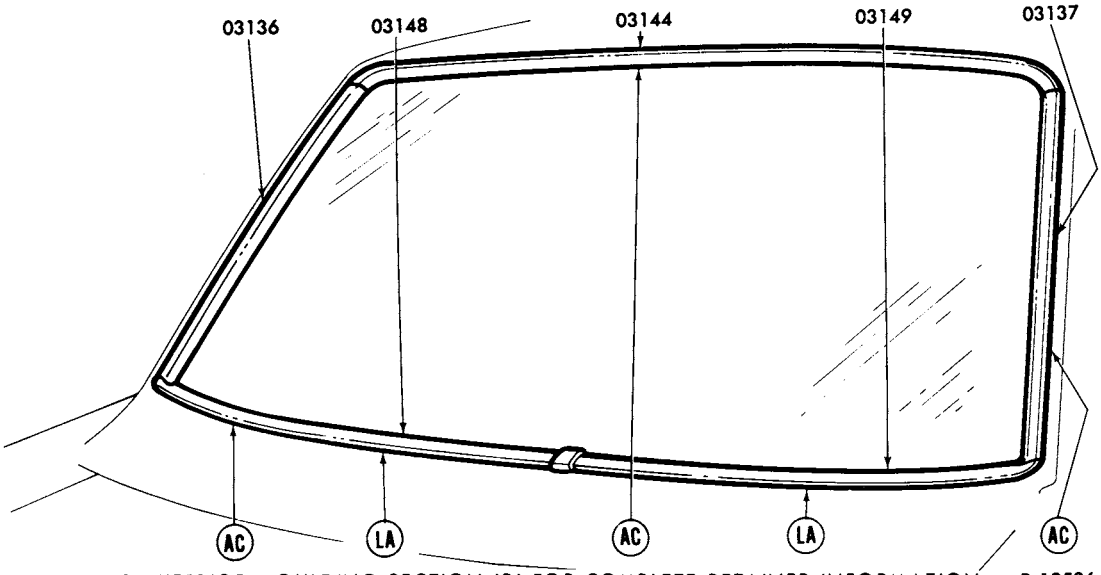

REFER TO EXTERIOR MOULDING SECTION 'R' FOR COMPLETE RETAINER INFORMATION P-12526

1979 MONARCH - WINDSHIELD

GROUP NUMBER	PART NAME	DESCRIPTION	PART NUMBER		QTY.
03136-7	Moulding (windshield side)	Bright	(RH)♦ D5DZ 6603136-A	(LH)♦ D5DZ 6603137-A	1
03144	Moulding (windshield top)	Bright	♦ D5DZ 6603144-A		1
03148-9	Moulding (windshield belt)	Bright	(RH)♦ D5DZ 6603148-A	(LH)♦ D5DZ 6603149-A	1

♦ Includes attaching parts

COPYRIGHT © 1986 — FORD MOTOR COMPANY — DEARBORN, MICHIGAN

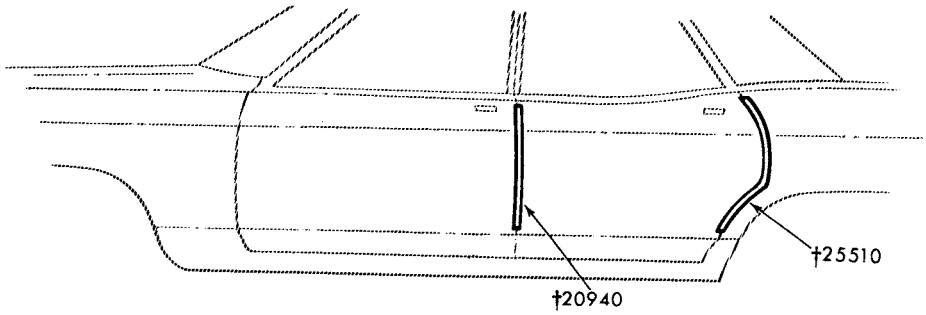

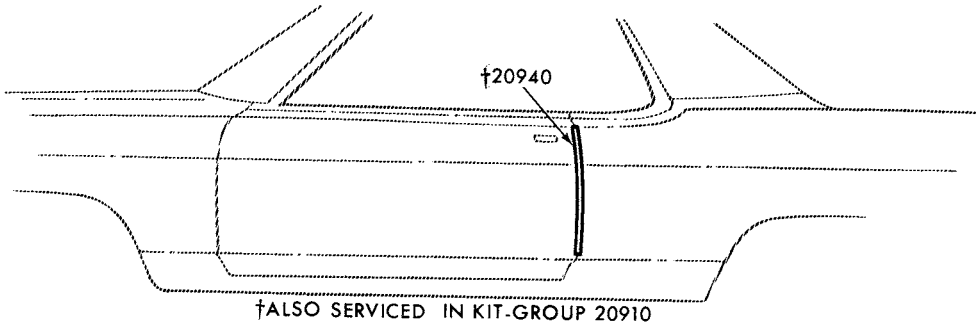

†ALSO SERVICED IN KIT-GROUP 20910

P-10061

1979 MONARCH - DOOR EDGE GUARDS

GROUP NUMBER	PART NAME	DESCRIPTION	PART NUMBER		QTY.
20910	Moulding kit (door edge guards)	Body type 54-cut to fit	★D5DZ 5420910-A	Not replaced (6/83)	1
		Body type 66-cut to fit	★D5DZ 6620910-A	Not replaced (6/83)	1
20940-1	Moulding (front door edge guard)	Body type 54-19 3/4" long-cut to fit	(RH) D5DZ 5420940-A	(LH) D5DZ 5420941-A	1
		Body type 66-19 3/4" long-cut to fit	(RH) D5DZ 6620940-A	(LH) D5DZ 6620941-A	1
25510-1	Moulding (rear door edge guard)	Body type 54-19 1/2" long-cut to fit	(RH) D5DZ 5425510-A	(LH) D5DZ 5425511-A	1

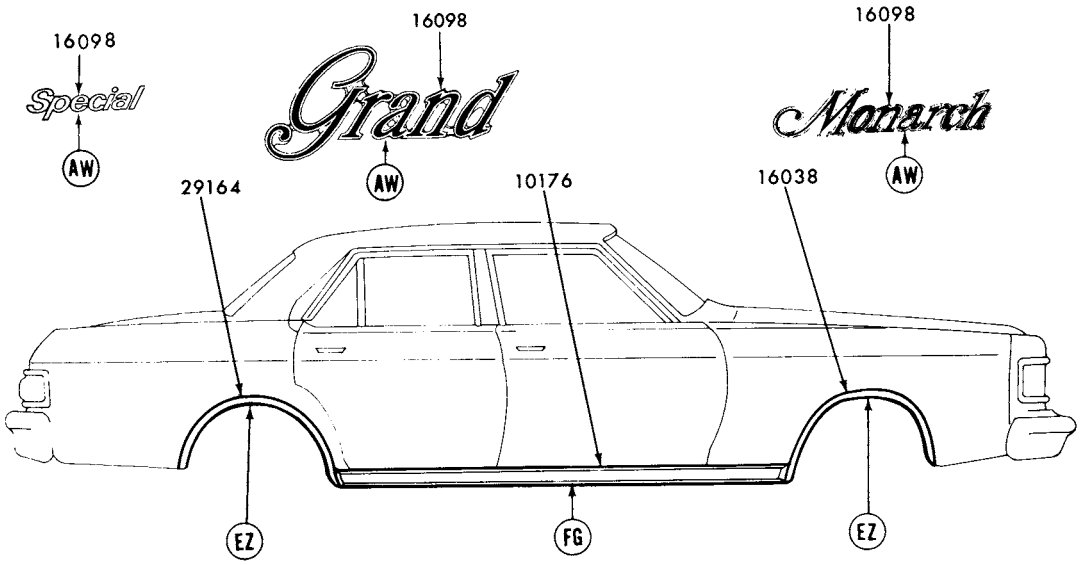

REFER TO EXTERIOR MOULDING SECTION "R" FOR COMPLETE RETAINER INFORMATION

P-11946

1979 MONARCH - SIDE

GROUP NUMBER	PART NAME	DESCRIPTION	PART NUMBER		QTY.
10176-7	Moulding (body rocker panel)	Use w/1 3/4" wide wheel opening mouldings- 78 3/4" long	D8DZ 6610176-A	R.H. and L.H.	2
		W/o wheel opening mouldings- 78 3/4" long	(RH)♦ D6DZ 6610176-A	(LH)♦ D6DZ 6610177-A	1
16038-9	Moulding (front fender wheel opening)	5/8" wide	(RH)♦ D5DZ 16038-A	(LH)♦ D5DZ 16039-A	1
		1 3/4" wide	(RH)♦ D8DZ 16038-A	(LH)♦ D8DZ 16039-A	1
16098	Plate (name)	"Ghia"	D8DZ 16098-A	R.H. and L.H.	2
		"Grand"	Not used in 1979		
		"Monarch"	♦ D54Y 16098-B	R.H. and L.H.	2
16098	Transfer (front fender name)	"SPECIAL EDITION"	Not used in 1979		
29164-5	Moulding (quarter wheel opening)	5/8" wide	(RH)♦ D5DZ 6629164-A	(LH)♦ D5DZ 6629165-A	1
		1 3/4" wide	(RH)♦ D8DZ 6629164-A	(LH)♦ D8DZ 6629165-A	1

♦ Includes attaching parts

COPYRIGHT © 1986 — FORD MOTOR COMPANY — DEARBORN, MICHIGAN

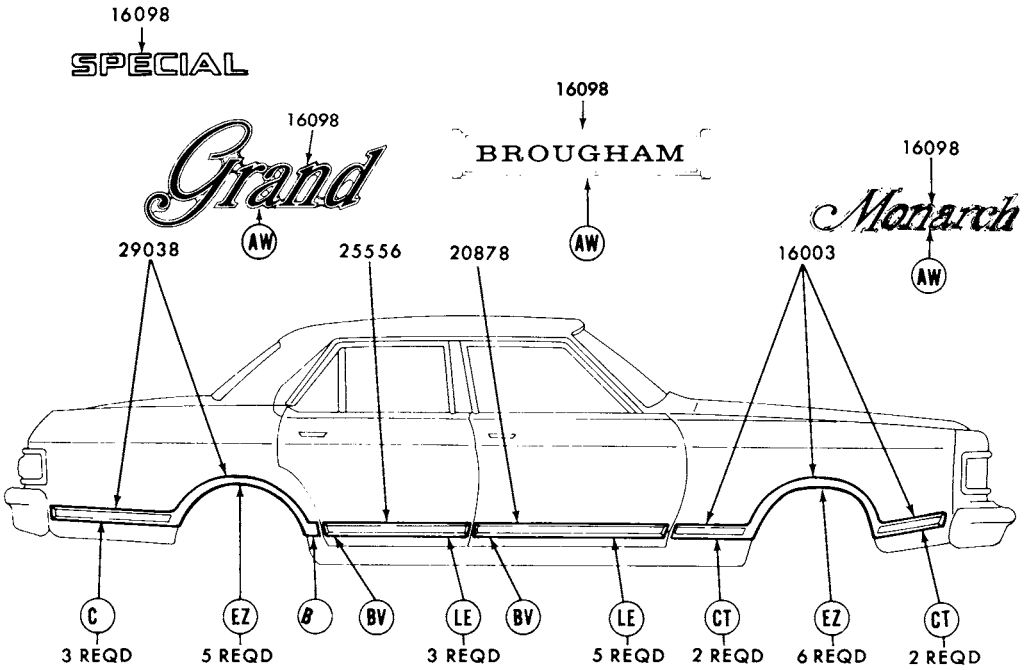

REFER TO EXTERIOR MOULDING SECTION "R" FOR COMPLETE RETAINER INFORMATION P-11945

1979 MONARCH - BODY TYPE 54 - SIDE - w/LUXURY DECOR

GROUP NUMBER	PART NAME	DESCRIPTION	⊕COLOR CODE	PART NUMBER		QTY.
16003-4	Moulding (front fender side)	Incl. vinyl insert				
		◊Black	36A	(RH)♦D9DZ 16003-AA	(LH)♦D9DZ 16004-AA	1
		◊Blue-(medium)	F8B	(RH) D9DZ 16003-AB	(LH)♦D9DZ 16004-AB	1
		◊Camel	17V	(RH)♦D9DZ 16003-AV	(LH)♦D9DZ 16004-AV	1
		◊Cordovan	06F	(RH)♦D9DZ 16003-AF	(LH)♦D9DZ 16004-AF	1
		◊Gray	B4P	(RH)♦D9DZ 16003-AP	(LH)♦D9DZ 16004-AP	1
		◊Jade	A1R	(RH)♦D9DZ 16003-AR	(LH)♦D9DZ 16004-AR	1
		◊Red	H6D	(RH)♦D9DZ 16003-AD	(LH)♦D9DZ 16004-AD	1
		◊Silver	D6P	(RH)♦D9DZ 16003-BP	(LH)♦D9DZ 16004-BP	1
		◊White	24W	(RH)♦D9DZ 16003-AW	(LH)♦D9DZ 16004-AW	1
16098	Plate (name)	"Brougham"		Not used in 1979		
		"Ghia"		D8DZ 16098-A	R.H. and L.H.	2
		"Grand"		Not used in 1979		
		"Monarch"		♦D54Y 16098-B	R.H. and L.H.	2
		"ESS"		D8DZ 16098-B	R.H. and L.H.	2
16098	Transfer (front fender name)	"SPECIAL"		Not used in 1979		
20878-9	Moulding (front door)	Incl. vinyl insert				
		◊Black	36A	(RH)♦D5DZ 5420878-CA	(LH)♦D5DZ 5420879-CA	1
		◊Blue-(medium)	F8B	(RH)♦D9DZ 5420878-CB	(LH)♦D9DZ 5420879-CB	1
		◊Camel	17V	(RH)♦D8DZ 5420878-CV	(LH)♦D8DZ 5420879-CV	1
		◊Cordovan	06F	(RH)♦D8DZ 5420878-CF	(LH)♦D8DZ 5420879-CF	1
		◊Gray	B4P	(RH)♦D6DZ 5420878-AP	(LH)♦D6DZ 5420879-AP	1
		◊Jade	A1R	(RH)♦D6DZ 5420878-AR	(LH)♦D6DZ 5420879-AR	1
		◊Red	H6D	(RH)♦D9DZ 5420878-AD	(LH)♦D9DZ 5420879-AD	1
		◊Silver	D6P	(RH) D5DZ 5420878-DP	(LH)♦D5DZ 5420879-DP	1
		◊White	24W	(RH)♦D7DZ 5420878-AW	(LH)♦D7DZ 5420879-AW	1

◊ For color verification, refer to the vinyl roof swatches in the 1979 Salesman's Color and Upholstery selections Guide

♦ Includes attaching parts ⊕ As shown on Certification Label

1979 MONARCH - BODY TYPE 54 - SIDE - w/LUXURY DECOR - cont'd.

GROUP NUMBER	PART NAME	DESCRIPTION	⊕COLOR CODE	PART NUMBER		QTY.
25556-7	Moulding (rear door)	Incl. vinyl insert				
		◊Black	36A	(RH)♦D5DZ 5425556-CA	(LH)♦D5DZ 5425557-CA	1
		◊Blue-(medium)	F8B	(RH)♦D8DZ 5425556-CB	(LH)♦D9DZ 5425557-CB	1
		◊Camel	17V	(RH)♦D8DZ 5425556-CV	(LH)♦D8DZ 5425557-CV	1
		◊Cordovan	06F	(RH)♦D8DZ 5425556-CF	(LH)♦D8DZ 5425557-CF	1
		◊Gray	B4P	(RH)♦D6DZ 5425556-AP	(LH)♦D6DZ 5425557-AP	1
		◊Jade	A1R	(RH)♦D6DZ 5425556-AR	(LH)♦D6DZ 5425557-AR	1
		◊Red	H6D	(RH)♦D9DZ 5425556-CD	(LH)♦D9DZ 5425557-CD	1
		◊Silver	D6P	(RH)♦D5DZ 5425556-CP	(LH)♦D5DZ 5425557-CP	1
		◊White	24W	(RH)♦D7DZ 5425556-AW	(LH)♦D7DZ 5425557-AW	1
29038-9	Moulding (quarter panel)	Incl. vinyl insert				
		◊Black	36A	(RH)♦D9DZ 5429038-AA	(LH)♦D9DZ 5429039-AA	1
		◊Blue-(medium)	F8B	(RH)♦D9DZ 5429038-AB	(LH)♦D9DZ 5429039-AB	1
		◊Camel	17V	(RH)♦D9DZ 5429038-AV	(LH)♦D9DZ 5429039-AV	1
		◊Cordovan	06F	(RH)♦D9DZ 5429038-AF	(LH)♦D9DZ 5429039-AF	1
		◊Gray	B4P	(RH)♦D9DZ 5429038-AP	(LH)♦D9DZ 5429039-AP	1
		◊Jade	A1R	(RH)♦D9DZ 5429038-AR	(LH)♦D9DZ 5429039-AR	1
		◊Red	H6D	(RH)♦D9DZ 5429038-AD	(LH)♦D9DZ 5429039-AD	1
		◊Silver	D6P	(RH)♦D9DZ 5429038-BP	(LH)♦D9DZ 5429039-BP	1
		◊White	24W	(RH)♦D9DZ 5429038-AW	(LH)♦D9DZ 5429039-AW	1

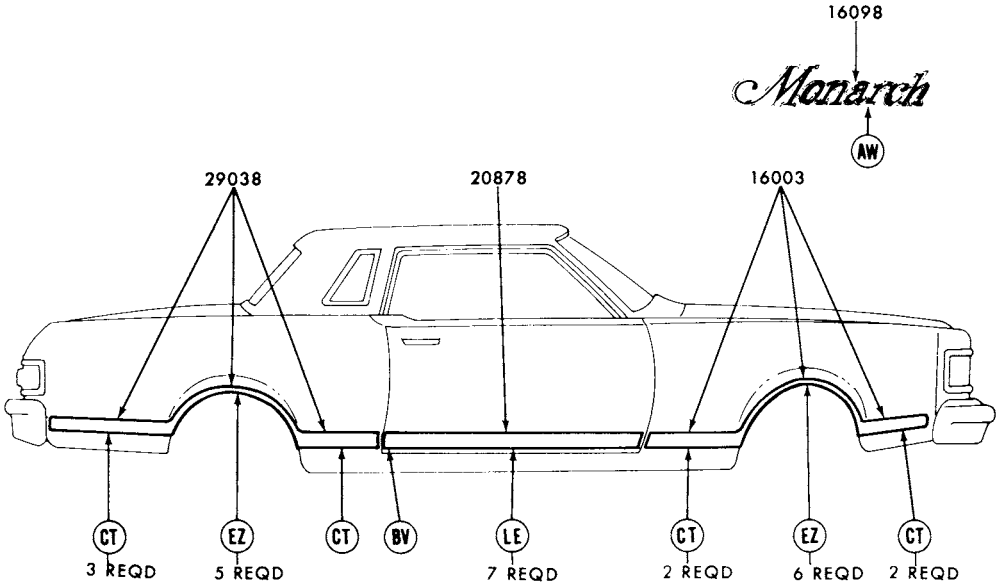

REFER TO EXTERIOR MOULDING SECTION "R" FOR COMPLETE RETAINER INFORMATION P-11944

1979 MONARCH - BODY TYPE 66 - SIDE - w/LUXURY DECOR

◊ For color verification, refer to the vinyl roof swatches in the 1979 Salesman's Color and Upholstery Selections Guide
♦ Includes attaching parts ⊕ As shown on Certification Label

COPYRIGHT © 1986 — FORD MOTOR COMPANY — DEARBORN, MICHIGAN

1979 MONARCH - BODY TYPE 66 - SIDE - w/LUXURY DECOR - cont'd.

GROUP NUMBER	PART NAME	DESCRIPTION	⊕COLOR CODE	PART NUMBER		QTY.
16003-4	Moulding (front fender side)	Incl. vinyl insert				
		◊Black	36A	(RH)♦D9DZ 16003-AA	(LH)♦D9DZ 16004-AA	1
		◊Blue-(medium)	F8B	(RH)♦D9DZ 16003-AB	(LH)♦D9DZ 16004-AB	1
		◊Camel	17V	(RH)♦D9DZ 16003-AV	(LH)♦D9DZ 16004-AV	1
		◊Cordovan	06F	(RH)♦D9DZ 16003-AF	(LH)♦D9DZ 16004-AF	1
		◊Gray	B4P	(RH)♦D9DZ 16003-AP	(LH)♦D9DZ 16004-AP	1
		◊Jade	A1R	(RH)♦D9DZ 16003-AR	(LH)♦D9DZ 16004-AR	1
		◊Red	H6D	(RH)♦D9DZ 16003-AD	(LH)♦D9DZ 16004-AD	1
		◊Silver	D6P	(RH)♦D9DZ 16003-BP	(LH)♦D9DZ 16004-BP	1
		◊White	24W	(RH)♦D9DZ 16003-AW	(LH)♦D9DZ 16004-AW	1
16098	Plate (name)	"Monarch"		♦D54Y 16098-B	R.H. and L.H.	2
20878-9	Moulding (front door)	Incl. vinyl insert				
		◊Black	36A	(RH)♦D5DZ 6620878-AA	(LH)♦D5DZ 6620879-AA	1
		◊Blue-(medium)	F8B	(RH)♦D9DZ 6620878-CB	(LH)♦D9DZ 6620879-CB	1
		◊Camel	17V	(RH)♦D8DZ 6620878-CV	(LH)♦D8DZ 6620879-CV	1
		◊Cordovan	06F	(RH)♦D8DZ 6620878-CF	(LH)♦D8DZ 6620879-CF	1
		◊Gray	B4P	(RH)♦D6DZ 6620878-AP	(LH)♦D6DZ 6620879-AP	1
		◊Jade	A1R	(RH)♦D6DZ 6620878-AR	(LH)♦D6DZ 6620879-AR	1
		◊Red	H6D	(RH)♦D9DZ 6620878-AD	(LH)♦D9DZ 6620879-AD	1
		◊Silver	D6P	(RH)♦D5DZ 6620878-AP	(LH)♦D5DZ 6620879-AP	1
		◊White	24W	(RH)♦D7DZ 6620878-AW	(LH)♦D7DZ 6620879-AW	1
29038-9	Moulding (quarter panel)	Incl. vinyl (insert)				
		◊Black	36A	(RH)♦D9DZ 6629038-AA	(LH)♦D9DZ 6629039-AA	1
		◊Blue-(medium)	F8B	(RH)♦D9DZ 6629038-AB	(LH)♦D9DZ 6629039-AB	1
		◊Camel	17V	(RH)♦D9DZ 6629038-AV	(LH)♦D9DZ 6629039-AV	1
		◊Cordovan	06F	(RH)♦D9DZ 6629038-AF	(LH)♦D9DZ 6629039-AF	1
		◊Gray	B4P	(RH)♦D9DZ 6629038-AP	(LH)♦D9DZ 6629039-AP	1
		◊Jade	A1R	(RH)♦D9DZ 6629038-AR	(LH)♦D9DZ 6629039-AR	1
		◊Red	H6D	(RH)♦D9DZ 6629038-AD	(LH)♦D9DZ 6629039-AD	1
		◊Silver	D6P	(RH)♦D9DZ 6629038-BP	(LH)♦D9DZ 6629039-BP	1
		◊White	24W	(RH)♦D9DZ 6629038-AW	(LH)♦D7DZ 6629039-AW	1

◊ For color verification, refer to the vinyl roof swatches in the 1979 Salesman's Color and Upholstery Selections Guide

♦ Includes attaching parts ⊕ As shown on Certification Label

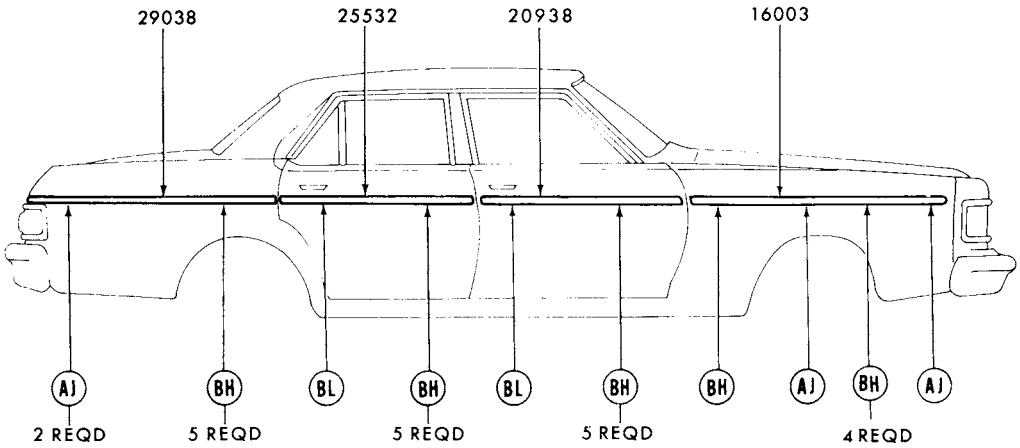

REFER TO EXTERIOR MOULDING SECTION "R" FOR COMPLETE RETAINER INFORMATION P-11948

1979 MONARCH - BODY TYPE 54 - SIDE PROTECTION

GROUP NUMBER	PART NAME	DESCRIPTION	PART NUMBER		QTY.
16003-4	Moulding (front fender side)	Bright finish	(RH)♦D5DZ 16003-A	(LH)♦D5DZ 16004-A	1
20938-9	Moulding (front door)	Bright finish	(RH)♦D5DZ 5420938-A	(LH)♦D5DZ 5420939-A	1
25532-3	Moulding (rear door)	Bright finish	(RH)♦D5DZ 5425532-A	(LH)♦D5DZ 5425533-A	1
29038-9	Moulding (quarter panel)	Bright finish	(RH)♦D5DZ 5429038-A	(LH)♦D5DZ 5429039-A	1

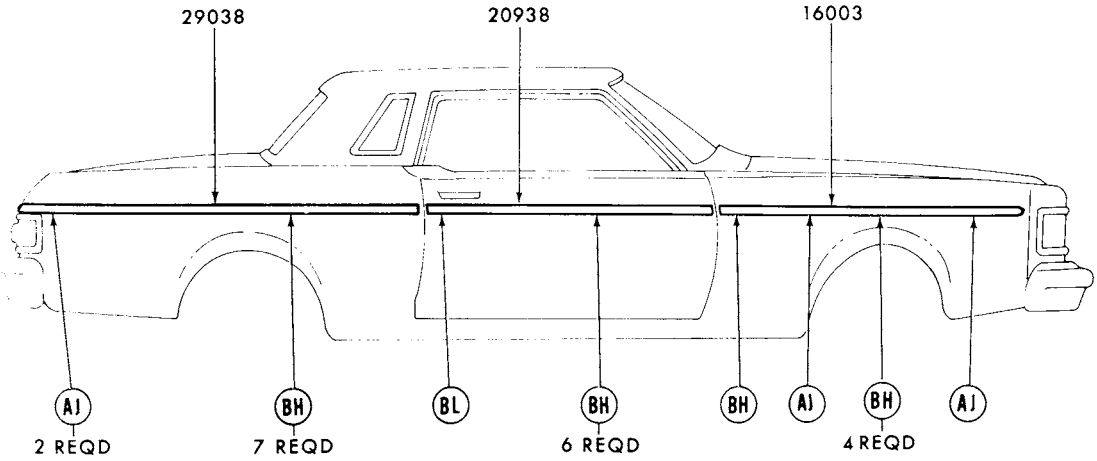

REFER TO EXTERIOR MOULDING SECTION "R" FOR COMPLETE RETAINER INFORMATION P-11941

1979 MONARCH - BODY TYPE 66 - SIDE PROTECTION

GROUP NUMBER	PART NAME	DESCRIPTION	PART NUMBER		QTY.
16003-4	Moulding (front fender side)	Bright finish	(RH)♦D5DZ 16003-A	(LH)♦D5DZ 16004-A	1
20938-9	Moulding (front door outside)	Bright finish	(RH)♦D5DZ 6620938-A	(LH)♦D5DZ 6620939-A	1
29038-9	Moulding (quarter panel)	Bright finish	(RH)♦D5DZ 6629038-A	(LH)♦D5DZ 6629039-A	1

♦ Includes attaching parts

COPYRIGHT © 1986 — FORD MOTOR COMPANY — DEARBORN, MICHIGAN

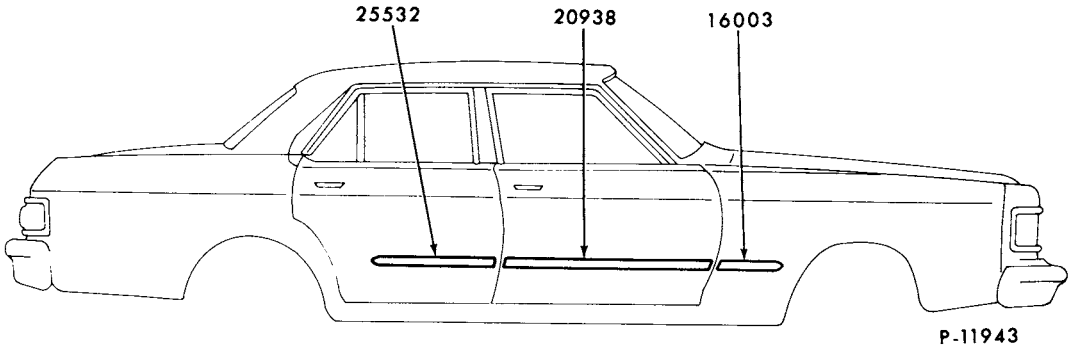

1978 MONARCH - BODY TYPE 54 - SIDE PROTECTION

GROUP NUMBER	PART NAME	DESCRIPTION	PART NUMBER		QTY.
16003-4	Moulding (front fender side)	Black vinyl insert-adhesive backed-cut to fit	D5DZ 5425532-D	R.H. and L.H.	2
20938	Moulding (front door)	Black vinyl insert-adhesive backed-cut to fit	D1OZ 6529038-B	R.H. and L.H.	2
25532	Moulding (rear door)	Black vinyl insert-adhesive backed	D5DZ 5425532-D	R.H. and L.H.	2

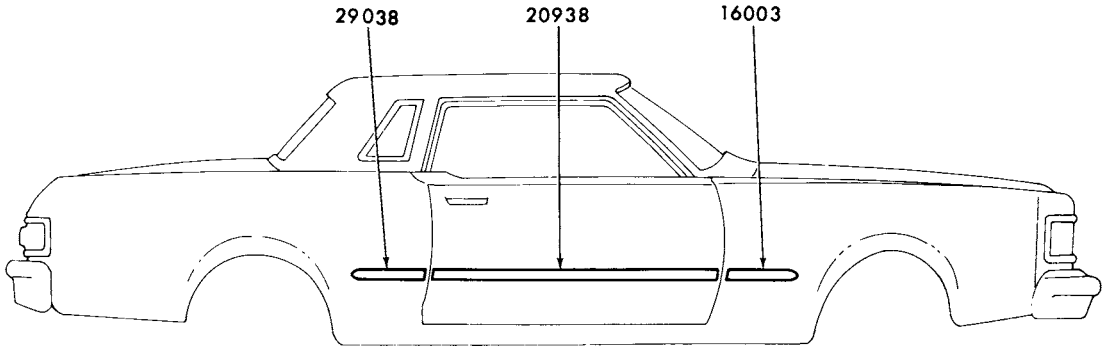

1979 MONARCH - BODY TYPE 66 - SIDE PROTECTION

GROUP NUMBER	PART NAME	DESCRIPTION	PART NUMBER		QTY.
16003-4	Moulding (front fender side)	Black vinyl insert-adhesive backed-cut to fit	D5DZ 5425532-D	R.H. and L.H.	2
20938	Moulding (front door)	Black vinyl insert-adhesive backed	D1OZ 6529038-B	R.H. and L.H.	2
29038	Moulding (quarter panel)	Black vinyl insert-adhesive backed-cut to fit	D5DZ 5425532-D	R.H. and L.H.	2

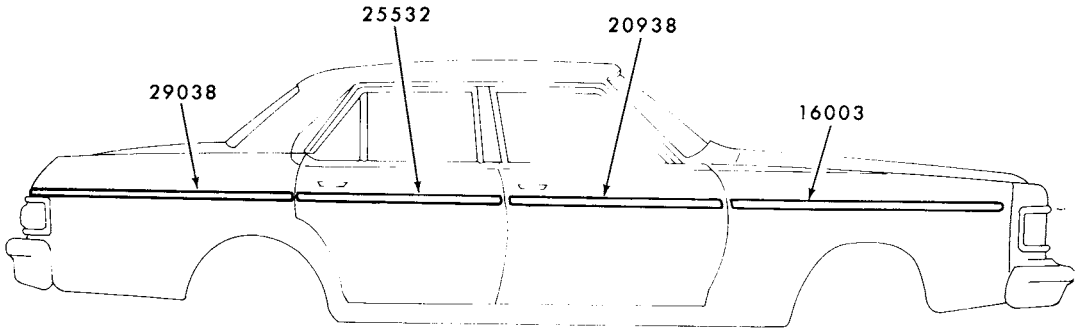

1979 MONARCH - BODY TYPES 54 and 66 - SPORT - SIDE PROTECTION

GROUP NUMBER	PART NAME	DESCRIPTION	PART NUMBER		QTY.
16003-4	Moulding (front fender side)	Black	(RH) D8DZ 16003-E	(LH) D8DZ 16004-E	1
20938-9	Moulding (front door)	Black-cut to fit	(RH) EODZ 6629038-A	(LH) EODZ 6629039-A	1
20938-9	Moulding (rear door)	Black-cut to fit	(RH) EODZ 6629038-A	(LH) EODZ 6629039-A	1
29038-9	Moulding (quarter panel)	Black-cut to fit	(RH) D8DZ 6629038-A	(LH) D8DZ 6629039-A	1

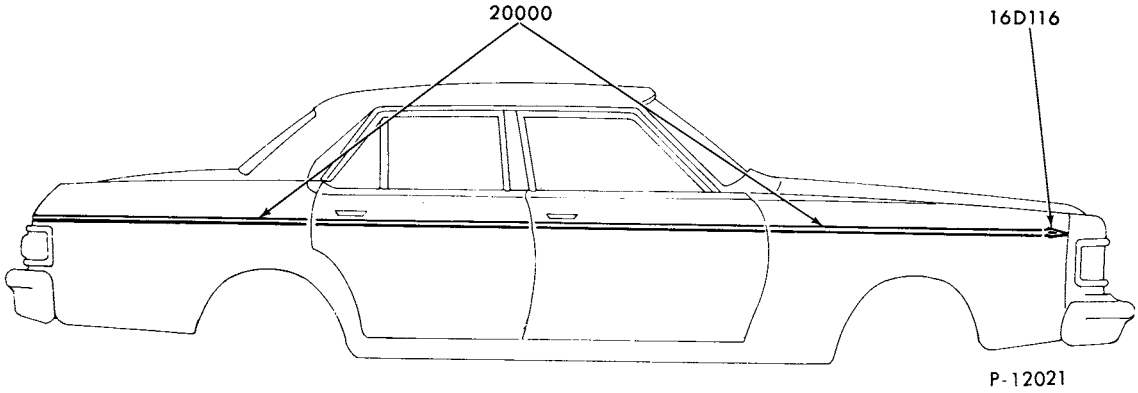

1979 MONARCH - BODY TYPE 66 - STRIPES

GROUP NUMBER	PART NAME	DESCRIPTION	PART NUMBER	QTY.
16D116-7	Transfer (front fender)		Not used in 1979	
20000	Stripe kit (body side)	Dual stripe-25 foot roll		
		Black	D5DZ 6620000-F	AR
		Blue (medium)	D7DZ 6620000-BB	AR
		Cordovan	D8DZ 6620000-AF	AR
		Gold	D5DZ 6620000-H	AR
		Jade (light)	D7DZ 6620000-BR	AR
		Jade (medium)	D7DZ 6620000-AR	AR
		Orange	D8DZ 6620000-AC	AR
		Red	D7DZ 6620000-AD	AR
		Silver	D5DZ 6620000-D	AR
		White	D5DZ 6620000-B	AR
		Yellow	D7DZ 6620000-AV	AR

COPYRIGHT © 1986 — FORD MOTOR COMPANY — DEARBORN, MICHIGAN

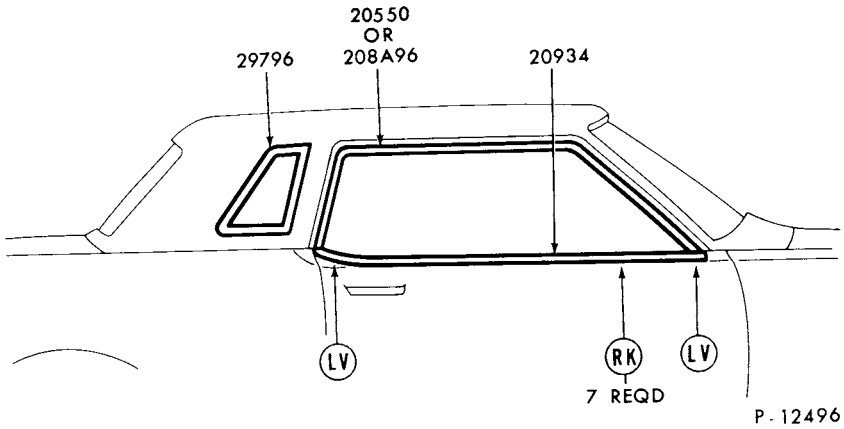

REFER TO EXTERIOR MOULDING SECTION 'R' FOR COMPLETE RETAINER INFORMATION

1979 MONARCH - BODY TYPE 66 - DOOR and QUARTER WINDOW FRAME

GROUP NUMBER	PART NAME	DESCRIPTION	PART NUMBER		QTY.
20550-1	Moulding (front door window frame)	Bright	(RH) D5DZ 6620550-A	(LH) D5DZ 6620551-A	1
20934-5	Moulding (front door belt)	Bright	(RH) D5DZ 6620934-C	(LH) D5DZ 6620935-C	1
29796-7	Moulding (quarter window)	Non-louvered	(RH) D5DZ 6629796-A	(LH) D5DZ 6629797-A	1
		Louvered			
		Paint to match	(RH) D7DZ 6629796-CW	(LH) D7DZ 6629797-CW	1
		W/slant rib			
		Black and bright	(RH) D8DZ 6629796-BA	(LH) D8DZ 6629797-BA	1

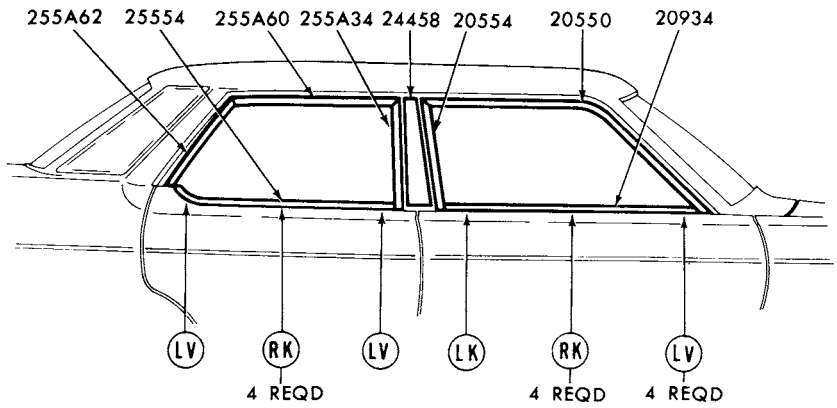

P-12494

REFER TO EXTERIOR MOULDING SECTION 'R' FOR COMPLETE RETAINER INFORMATION

1979 MONARCH - BODY TYPE 54 - DOOR WINDOW FRAME

GROUP NUMBER	PART NAME	DESCRIPTION	PART NUMBER		QTY
20550-1	Moulding (front door window frame front)		(RH) D5DZ 5420550-A	(LH) D5DZ 5420551-A	1
20554-5	Moulding (front door window frame rear)		(RH) D5DZ 5420554-A	(LH) D5DZ 5420555-A	1
20934-5	Moulding (front door belt)		(RH)♦D5DZ 5420934-A	(LH)♦D5DZ 5420935-A	1
24458-9	Moulding (center body pillar upper)		Refer to roof and back belt		
255A34-5	Moulding (rear door window frame upper)		(RH) D5DZ 54255A34-A	(LH) D5DZ 54255A35-A	1
25554-5	Moulding (rear door belt)		(RH)♦D5DZ 5425554-A	(LH)♦D5DZ 5425555-A	1
255A60-1	Moulding (rear door window frame upper)		(RH) D5DZ 54255A60-A	(LH) D5DZ 54255A61-A	1
255A62-3	Moulding (rear door window frame rear)		(RH) D5DZ 54255A62-A	(LH) D5DZ 54255A63-A	1

♦ Includes attaching parts

COPYRIGHT © 1986 — FORD MOTOR COMPANY — DEARBORN, MICHIGAN

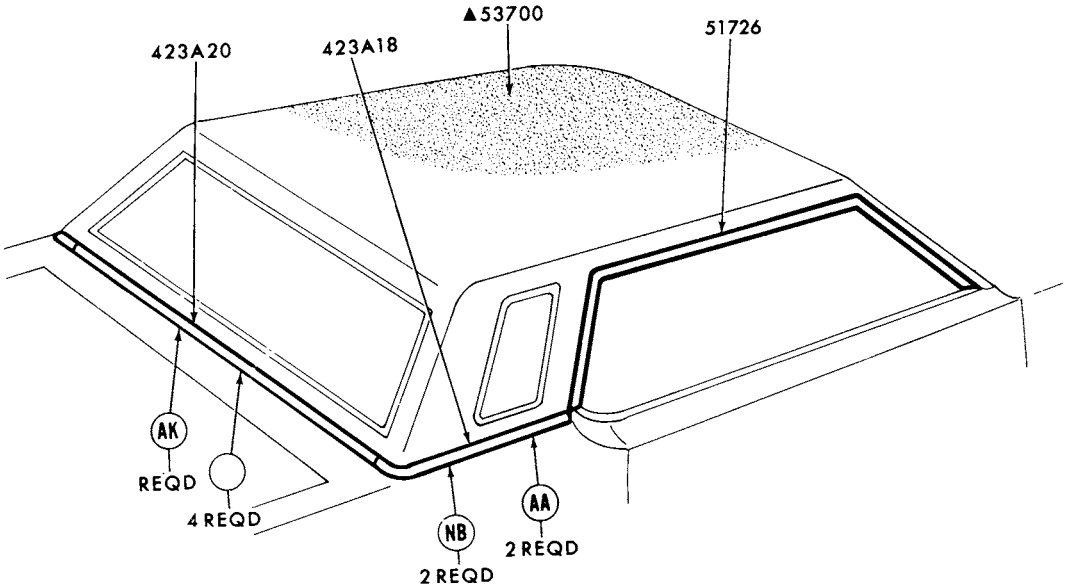

▲REFER TO GROUP IN SOFT TRIM SECTION
REFER TO EXTERIOR MOULDING SECTION "R" FOR COMPLETE RETAINER INFORMATION P-11934

1979 MONARCH - BODY TYPE 66 - ROOF and BACK BELT

GROUP NUMBER	PART NAME	DESCRIPTION	PART NUMBER	QTY.
423A18-9	Moulding (back belt side)	Prime-paint to match	(RH) D7DZ 66423A18-A (LH) D7DZ 66423A19-A	1
423A20	Moulding (back belt)	Prime-paint to match	♦D7DZ 66423A20-A	1
51726-7	Moulding (roof drip side finish)	Bright	(RH) D7DZ 6651726-C (LH) D7DZ 6651727-C	1

♦ Includes attaching parts

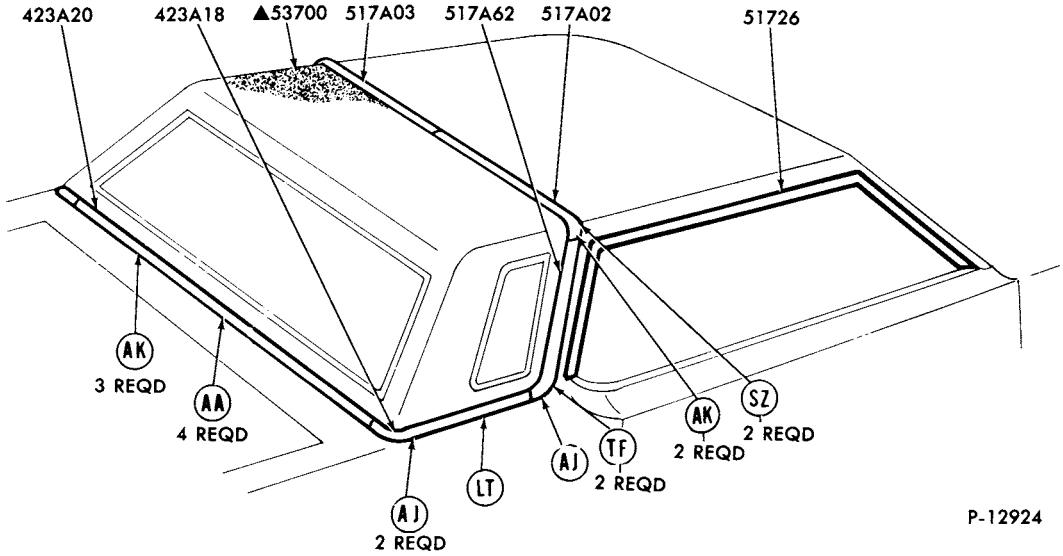

REFER TO EXTERIOR MOULDING SECTION 'R' FOR COMPLETE RETAINER INFORMATION

1979 MONARCH - BODY TYPE 66 - ROOF and BACK BELT - w/HALF VINYL ROOF

GROUP NUMBER	PART NAME	DESCRIPTION	PART NUMBER		QTY.
423A18-9	Moulding (back belt side)	Prime-paint to match	(RH)♦D6DZ 66423A18-D	(LH)♦D6DZ 66423A19-D	1
423A20	Moulding (back belt)	Prime-paint to match	♦D7DZ 66423A20-A		1
715A02-3	Moulding (roof top)	Prime-paint to match	(RH)♦D6DZ 66517A02-A	(LH)♦D6DZ 66517A03-A	1
51726-7	Moulding (roof drip side finish)		(RH)♦D7DZ 6551726-C	(LH)♦D7DZ 6651727-C	1
517A62-3	Moulding (roof side)	Prime-paint to match	(RH)♦D6DZ 66517A62-A	(LH)♦D6DZ 66517A63-A	1

♦ Includes attaching parts

COPYRIGHT © 1986 — FORD MOTOR COMPANY — DEARBORN, MICHIGAN

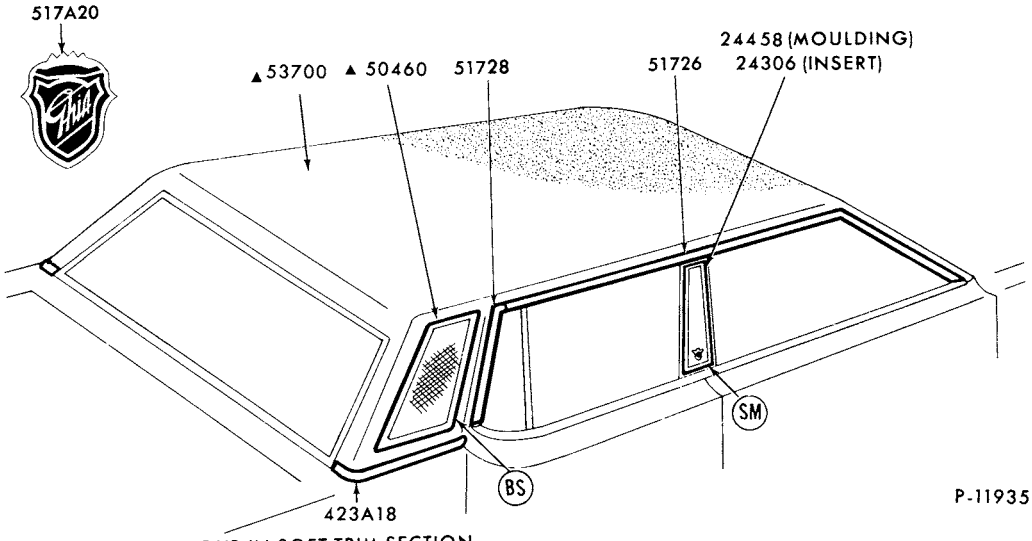

▲REFER TO GROUP IN SOFT TRIM SECTION
REFER TO EXTERIOR MOULDING SECTION "R" FOR COMPLETE RETAINER INFORMATION

1979 MONARCH - BODY TYPE 54 - ROOF and BACK BELT

GROUP NUMBER	PART NAME	DESCRIPTION	PART NUMBER		QTY.
24306-7	Moulding (center body pillar)				
		Black	(RH)♦D8DZ 5424306-AA	(LH)♦D8DZ 5424307-AA	1
		Blue	(RH)♦D9DZ 5424306-AB	(LH)♦D9DZ 5424307-AB	1
		Camel	(RH)♦D8DZ 5424306-AV	(LH)♦D8DZ 5424307-AV	1
		Cordovan	(RH)♦D8DZ 5424306-AF	(LH)♦D8DZ 5424307-AF	1
		Gray	(RH)♦D8DZ 5424306-AP	(LH)★D8DZ 5424307-AP Not replaced (4/84)	1
		Jade	(RH)♦D8DZ 5424306-AR	(LH)♦D8DZ 5424307-AR	1
		Red	(RH)♦D9DZ 5424306-AD	(LH)✱D9DZ 5424307-AD Not replaced (4/84)	1
		Silver	(RH)♦D8DZ 5424306-BP	(LH)♦D8DZ 5424307-BP	1
		White	(RH)♦D8DZ 5424306-AW	(LH)♦D8DZ 5424307-AW	1
24458-9	Moulding (center body pillar upper)		(RH)♦D5DZ 5424458-A	(LH)♦D5DZ 5424459-A	1
423A18-9	Moulding (back belt side)	Prime-paint to match	(RH)♦D7DZ 54423A18-A	(LH)♦D7DZ 54423A19-A	1
		Bright finish	(RH)♦D9DZ 54423A18-A	(LH)♦D9DZ 54423A19-A	1
517A20	Ornament (roof side)	"Ghia"	♦D5ZZ 60517A20-A	R.H. and L.H.	2
51726-9	Moulding (roof drip side finish)	Front	(RH) D7DZ 5451726-A	(LH) D7DZ 5451727-A	1
		Rear	(RH) D7DZ 5451728-A	(LH) D7DZ 5451729-A	1

♦ Includes attaching parts

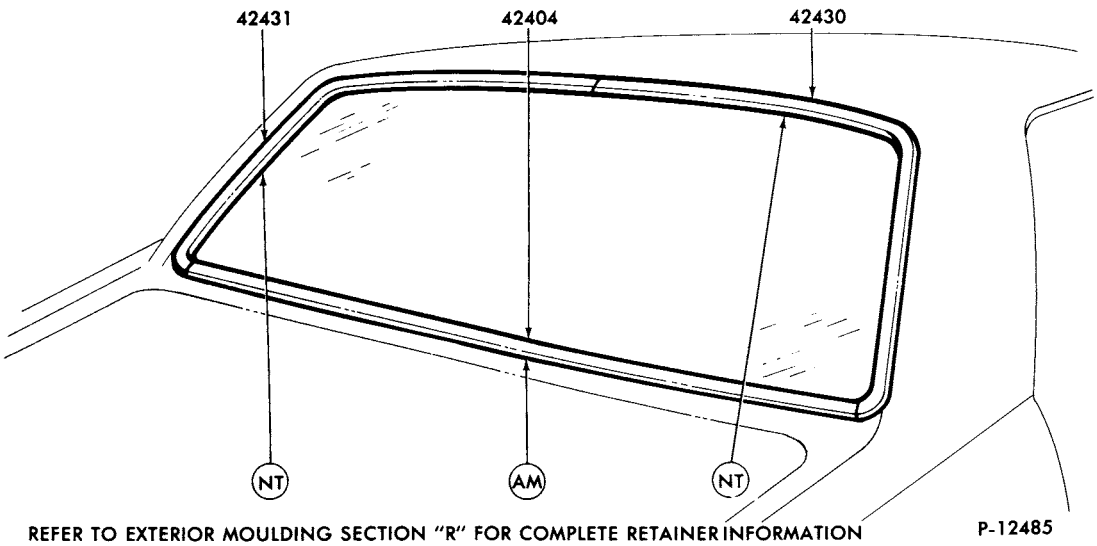

1979 MONARCH - BODY TYPE 54 - BACK WINDOW

GROUP NUMBER	PART NAME	DESCRIPTION	PART NUMBER	QTY.
42404	Moulding (back window lower)	Back window	♦D5DZ 5442404-A	1
42430-1	Moulding (back window upper)		(RH)♦D5DZ 5442430-A (LH)♦D5DZ 5442431-A	1

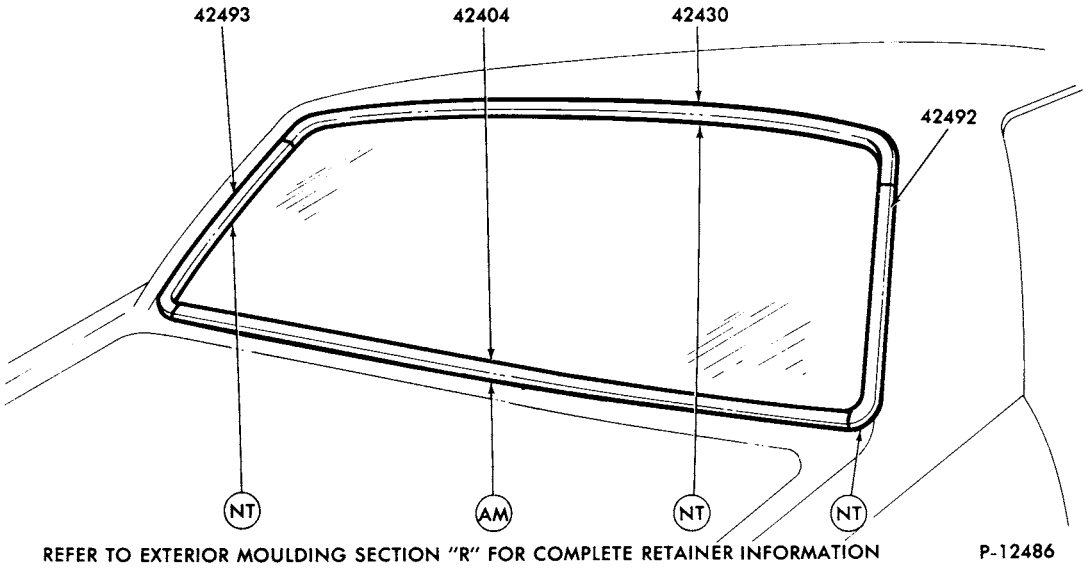

1979 MONARCH - BODY TYPE 66 - BACK WINDOW

GROUP NUMBER	PART NAME	DESCRIPTION	PART NUMBER	QTY.
42404	Moulding (back window lower)	Bright	♦D5DZ 6642404-A	1
42430	Moulding (back window upper)	Bright	♦D5DZ 6642430-A	1
42492-3	Moulding (back window side)	Bright	(RH)♦D5DZ 6642492-A (LH)♦D5DZ 6642493-A	1

♦ Includes attaching parts

COPYRIGHT © 1986 — FORD MOTOR COMPANY — DEARBORN, MICHIGAN

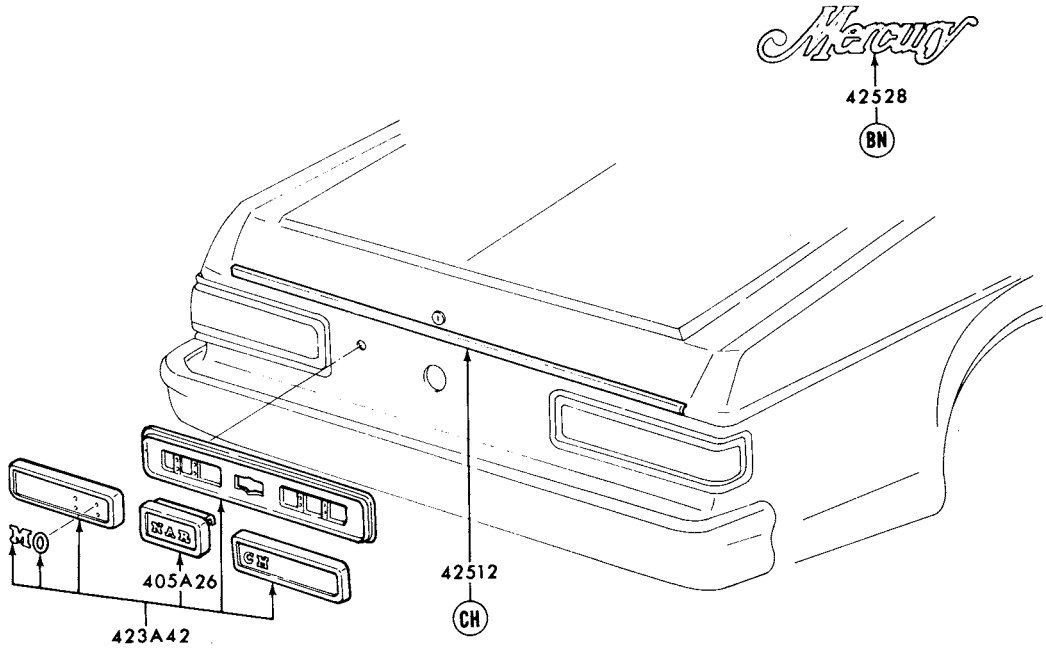

REFER TO EXTERIOR MOULDING SECTION "R" FOR COMPLETE RETAINER INFORMATION P-11949

1979 MONARCH - BACK END

GROUP NUMBER	PART NAME	DESCRIPTION	PART NUMBER	QTY.
405A26	Door (fuel filler opening)		D94Y 66405A26-AA	1
423A42	Panel (lower back finish)		♦D94Y 66423A42-AA	1
42512	Moulding (luggage compartment door)		♦D5DZ 6642512-A	1
42528	Plate (name)	"Mercury"	♦D54Y 6642528-A	1

♦ Includes attaching parts

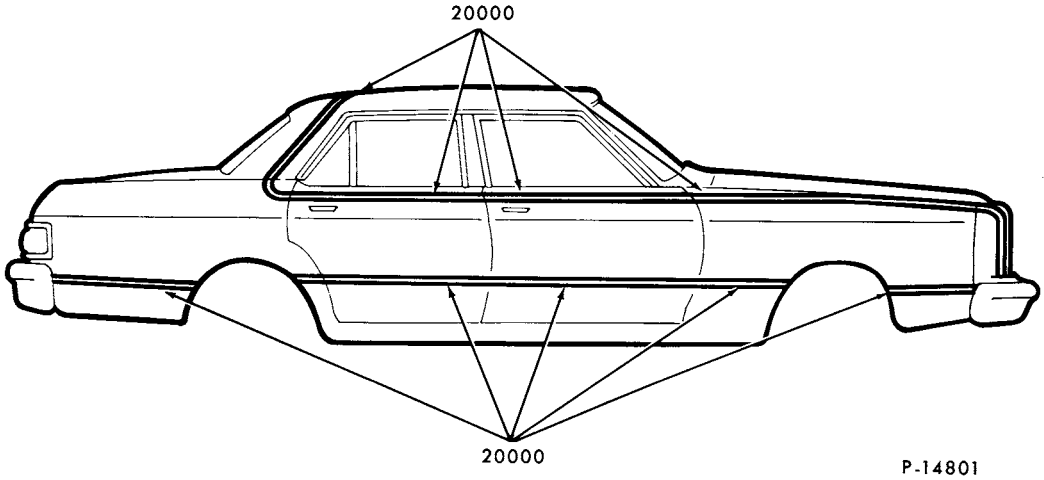

1979 MONARCH - BODY TYPES 54 and 66 - STRIPES

GROUP NUMBER	PART NAME	DESCRIPTION	PART NUMBER	QTY.
20000	Stripe kit (body side upper)	Body type 54- consists of-fender, doors and roof		
		Blue (light & dark)	D9DZ 5420000-AB	1
		Chamois/cordovan	D9DZ 5420000-BF	1
		Cream/tan	* D9DZ 5420000-AV	1
		Jade (light & dark)	* D9DZ 5420000-AR	1
		Silver/black	D9DZ 5420000-AP	1
		White/gray	D9DZ 5420000-AW	1
		Body type 66- consists of-fender, doors and roof		
		Blue (light & dark)	D9DZ 6620000-AB	1
		Chamois/cordovan	D9DZ 6620000-AF	1
		Cream/tan	D9DZ 6620000-AV	1
		Jade (light & dark)	D9DZ 6620000-AR	1
		Silver/black	D9DZ 6620000-AP	1
		White/gray	D9DZ 6620000-AW	1
20000	Stripe kit (body side lower)	Body type 54- consists of-fender, doors and quarter panel		
		Blue (light & dark)	D94Y 5420000-AB	1
		Chamois/cordovan	D94Y 5420000-AF	1
		Cream/tan	*D94Y 5420000-AV Not replaced (6/83)	1
		Silver/black	D94Y 5420000-AP	1
		Jade (light & dark)	D94Y 5420000-AR	1
		White/gray	D94Y 5420000-AW	1
		Body type 66- consists of-fender doors and quarter panel		
		Blue (light & dark)	D94Y 6620000-AB	1
		Chamois/cordovan	D94Y 6620000-AF	1
		Cream/tan	D94Y 6620000-AV	1
		Jade (light & dark)	D94Y 6620000-AR	1
		Silver/black	D94Y 6620000-AP	1
		White/gray	D94Y 6620000-AW	1

COPYRIGHT © 1986 — FORD MOTOR COMPANY — DEARBORN, MICHIGAN

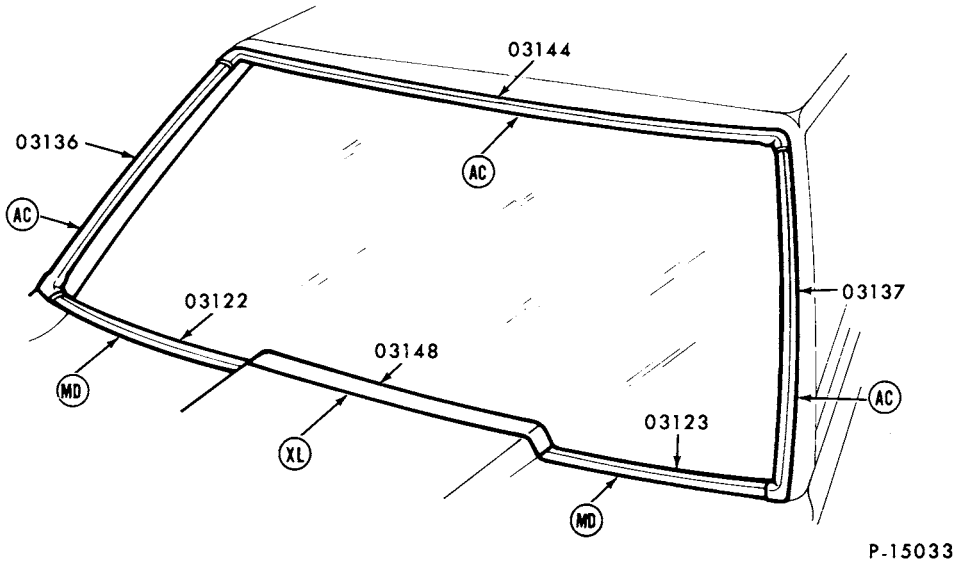

REFER TO EXTERIOR MOULDING SECTION "R" FOR COMPLETE RETAINER INFORMATION

1979 CAPRI - WINDSHIELD

GROUP NUMBER	PART NAME	DESCRIPTION	PART NUMBER		QTY.
03122	Moulding (windshield lower corner)	Black	(RH)♦D9ZZ 6603122-AA	(LH)♦D9ZZ 6603123-AA	1
03136-7	Moulding (windshield side)	Black	(RH)♦D9ZZ 6103136-AA	(LH)♦D9ZZ 6103137-AA	1
		Bright	(RH)♦D9ZZ 6603136-A	(LH)♦D9ZZ 6603137-A	1
03144	Moulding (windshield upper)	Black- "Before 8/11/78"	♦D9ZZ 6103144-AA		1
		Black- "From 8/11/78"	(RH)♦D9ZZ 6103144-BA	(LH)♦D9ZZ 6103145-BA	1
		Black- "From 2/12/79"	♦D9ZZ 6103144-CA		1
		Bright- "Before 2/12/79"	(RH)♦D9ZZ 6603144-B	(LH)♦D9ZZ 6603145-B	1
		Bright- "From 2/12/79"	♦D9ZZ 6603144-C		1
03148	Moulding (windshield belt)	Black	♦D9ZZ 6603148-AA		1

♦ Includes attaching parts

COPYRIGHT © 1986 — FORD MOTOR COMPANY — DEARBORN, MICHIGAN

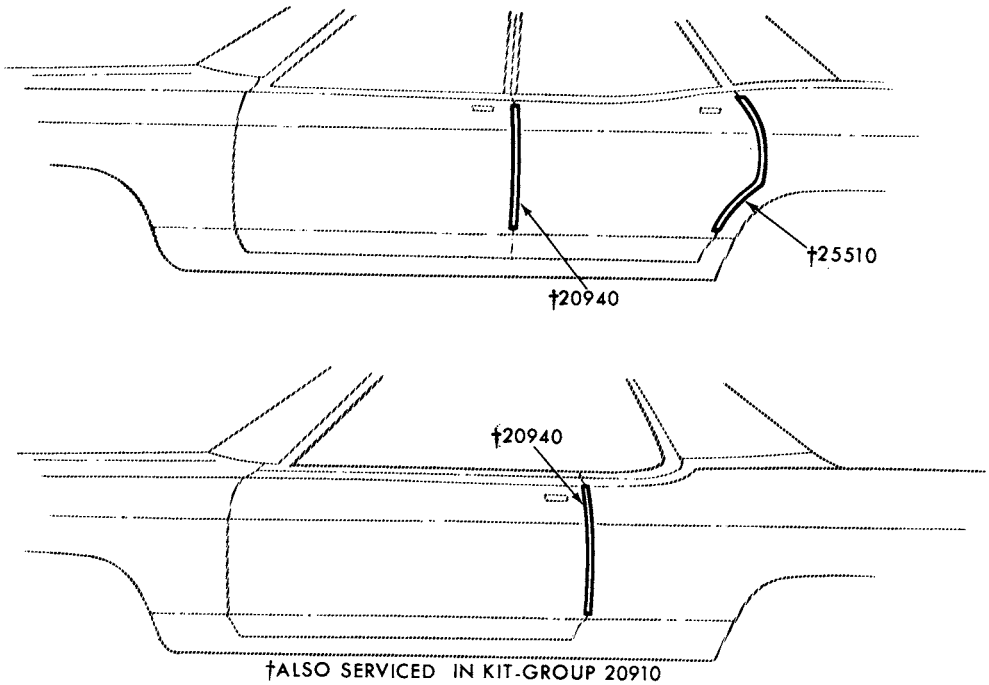

†ALSO SERVICED IN KIT-GROUP 20910

P-10061

1979 CAPRI - DOOR EDGE GUARD

GROUP NUMBER	PART NAME	DESCRIPTION	PART NUMBER	QTY.
20910	Moulding kit (door edge guard)		D9ZZ 6620910-A	1
20940-1	Moulding (door edge guard)		(RH) D9ZZ 6620940-A (LH) D9ZZ 6620941-A	1

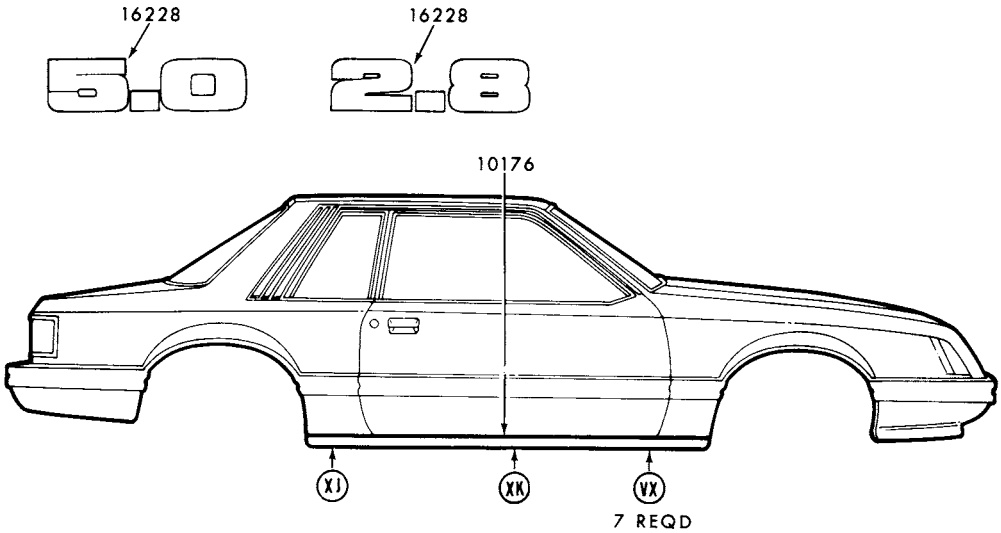

P-14781

REFER TO EXTERIOR MOULDING SECTION "R" FOR COMPLETE RETAINER INFORMATION

1979 CAPRI - BODY TYPE 61 - BODY SIDE LOWER

1979 CAPRI - BODY TYPE 61 - BODY SIDE LOWER - cont'd.

GROUP NUMBER	PART NAME	DESCRIPTION	PART NUMBER		QTY
10176	Moulding (rocker panel)	Black	♦D9ZZ 6610176-A	R.H. and L.H.	2
		Bright	♦D9ZZ 6610176-B	R.H. and L.H.	2
16228	Ornament (front fender side)	"2.8"	D9CY 16228-A	R.H. and L.H.	2
		"5.0"	D9ZZ 16228-A	R.H. and L.H.	2

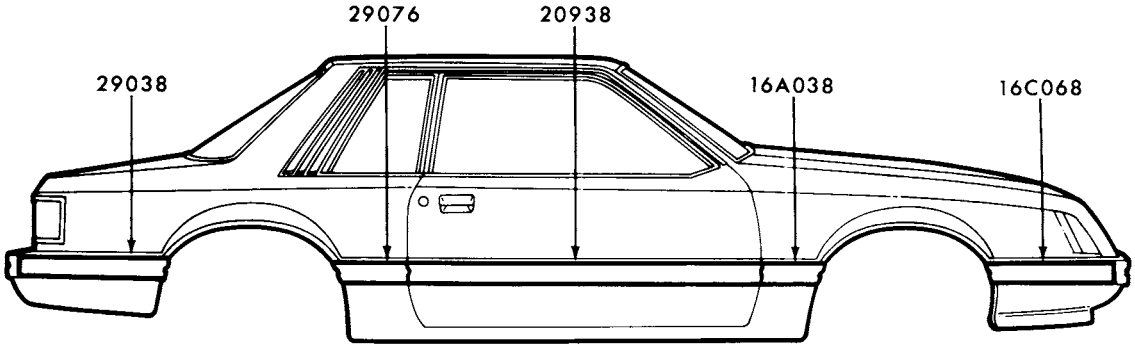

P-14785

1979 CAPRI - BODY TYPE ALL - BODY SIDE

GROUP NUMBER	PART NAME	DESCRIPTION	⊕ COLOR CODE	PART NUMBER		QTY.
16A038-9	Moulding (front fender rear)	◊ Black/argent	73P	(RH) D9ZZ 16A038-DZ	(LH) D9ZZ 16A039-DZ	1
		◊ Black/blue	D6B	(RH) D9ZZ 16A038-DB	(LH) D9ZZ 16A039-DB	1
		◊ Black/gold	38G	(RH) D9ZZ 16A038-DG	(LH) D9ZZ 16A039-DG	1
		◊ Black/green	B4R	(RH) D9ZZ 16A038-DR	(LH) D9ZZ 16A039-DR	1
		◊ Black/ orange (light)	10E	(RH) D9ZZ 16A038-DV	(LH) D9ZZ 16A039-DV	1
		◊ Black/ orange-(medium)	90V	(RH) D9ZZ 16A038-DE	(LH) D9ZZ 16A039-DE	1
		◊ Black/red	84D	(RH) D9ZZ 16A038-DD	(LH) D9ZZ 16A039-DD	1
16C068-9	Moulding (front fender front)			Refer to group 15A440 in Chassis section		
20938-9	Moulding (door outside lower)	◊ Black/argent	73P	(RH) D9ZZ 6120938-DZ	(LH) D9ZZ 6120939-DZ	1
		◊ Black/blue	D6B	(RH) D9ZZ 6120938-DB	(LH) D9ZZ 6120939-DB	1
		◊ Black/gold	38G	(RH) D9ZZ 6120938-DG	(LH) D9ZZ 6120939-DG	1
		◊ Black/green	B4R	(RH) D9ZZ 6120938-DR	(LH) D9ZZ 6120939-DR	1
		◊ Black/ orange (light)	10E	(RH) D9ZZ 6120938-DV	(LH) D9ZZ 6120939-DV	1
		◊ Black/ orange-(medium)	90V	(RH) D9ZZ 6120938-DE	(LH) D9ZZ 6120939-DE	1
		◊ Black/red	84B	(RH) D9ZZ 6120938-DD	(LH) D9ZZ 6120939-DD	1
29038-9	Moulding (quarter rear)	◊ Black/argent	73P	(RH) D9ZZ 6129038-DZ	(LH) D9ZZ 6129039-DZ	1
		◊ Black/blue	D6B	(RH) D9ZZ 6129038-DB	(LH) D9ZZ 6129039-DB	1
		◊ Black/gold	38G	(RH) D9ZZ 6129038-DG	(LH) D9ZZ 6129039-DG	1
		◊ Black/green	B4R	(RH) D9ZZ 6129038-DR	(LH) D9ZZ 6129039-DR	1
		◊ Black/ orange (light)	10E	(RH) D9ZZ 6129038-DV	(LH) D9ZZ 6129039-DV	1
		◊ Black/ orange-(medium)	90V	(RH) D9ZZ 6129038-DE	(LH) D9ZZ 6129039-DE	1
		◊ Black/red	84B	(RH) D9ZZ 6129038-DD	(LH) D9ZZ 6129039-DD	1

♦ Includes attaching parts
⊕ As shown on Certification Label
◊ For color verification, refer to the vinyl roof swatches in the 1979 Salesman's Color and Upholstery Selection guide

COPYRIGHT © 1986 — FORD MOTOR COMPANY — DEARBORN, MICHIGAN

1979 CAPRI - BODY TYPE ALL - BODY SIDE - cont'd.

GROUP NUMBER	PART NAME	DESCRIPTION	⊕COLOR CODE	PART NUMBER		QTY.
29076-7	Moulding (quarter panel front)	◊ Black/argent	73P	(RH) D9ZZ 6129076-DZ	(LH) D9ZZ 6129077-DZ	1
		◊ Black/blue	D6B	(RH) D9ZZ 6129076-DB	(LH) D9ZZ 6129077-DB	1
		◊ Black/gold	38G	(RH) D9ZZ 6129076-DG	(LH) D9ZZ 6129077-DG	1
		◊ Black/green	B4R	(RH) D9ZZ 6129076-DR	(LH) D9ZZ 6129077-DR	1
		◊ Black/ orange(light)	10E	(RH) D9ZZ 6129076-DV	(LH) D9ZZ 6129077-DV	1
		◊ Black/ orange- (medium)	90V	(RH) D9ZZ 6129076-DE	(LH) D9ZZ 6129077-DE	1
		◊ Black/red	84D	(RH) D9ZZ 6129076-DD	(LH) D9ZZ 6129077-DD	1

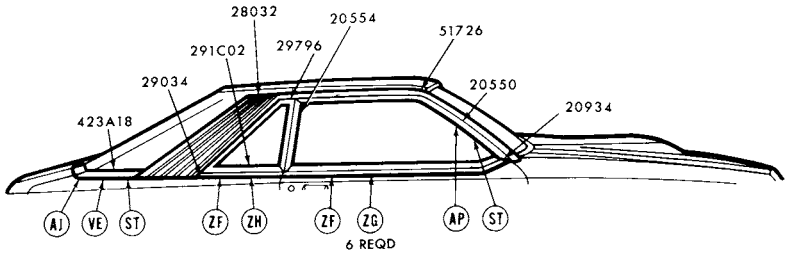

REFER TO EXTERIOR MOULDING SECTION 'R' FOR COMPLETE RETAINER INFORMATION

P-14788

1979 CAPRI - BODY TYPE ALL - WINDOW FRAME and BELT

GROUP NUMBER	PART NAME	DESCRIPTION	PART NUMBER		QTY.
20544-5	Moulding (door window lower)	Incl. weatherstrip			
		Black	(RH) D9ZZ 6120544-A	(LH) D9ZZ 6120545-A	1
		Bright	(RH) D9ZZ 6620544-A	(LH) D9ZZ 6620545-A	1
20550-1	Moulding (door window front)	Black	(RH) D9ZZ 6120550-A	(LH) D9ZZ 6120551-A	1
		Bright	(RH) E2ZZ 6620550-A	(LH) D9ZZ 6620551-A	1
20554-5	Moulding (door window rear)	Black	(RH) D9ZZ 6120554-A	(LH) D9ZZ 6120555-A	1
		Bright	(RH) D9ZZ 6620554-A	(LH) D9ZZ 6620555-A	1
20934-5	Moulding (door belt)	Black	(RH)♦D9ZZ 6620934-B	(LH)♦D9ZZ 6620935-B	1
		Bright	(RH)♦D9ZZ 6620934-A	(LH)♦D9ZZ 6620935-A	1
28032-3	Ornament (quarter panel upper)	Paint to match	(RH)♦D9CY 6128032-B	(LH)♦D9CY 6128033-B	1
29034-5	Moulding (quarter belt)	Black	(RH)♦D9ZZ 6129034-A	(LH)♦D9ZZ 6129035-A	1
		Bright	(RH)♦D9ZZ 6129034-B	(LH)♦D9ZZ 6129035-B	1
291C02-3	Moulding (quarter window lower)	Black	(RH) D9ZZ 61291C02-B	(LH)*D9ZZ 61291C03-B	1
		Bright	(RH)*D9ZZ 61291C02-A Not replaced (4/84)	(LH)*D9ZZ 61291C03-A Not replaced (4/84)	1
29796-7	Moulding (quarter window upper)	Black	(RH) E3ZZ 6129796-B	(LH) E3ZZ 6129797-B	1
		Bright	(RH) E3ZZ 6129796-A	(LH) E3ZZ 6129797-A	1
51726-7	Moulding (roof drip side)	Black	(RH) D9ZZ 6151726-B	(LH) D9ZZ 6151727-B	1
		Bright	(RH) D9ZZ 6151726-A	(LH) D9ZZ 6151727-A	1

♦ Includes attaching parts ⊕ As shown on Certification Label

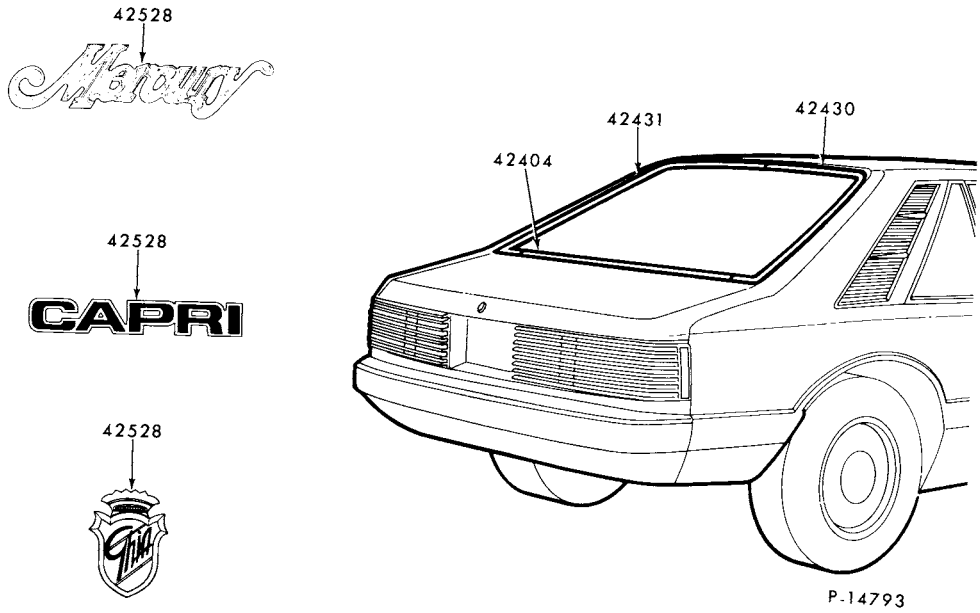

1979 CAPRI - BACK END

GROUP NUMBER	PART NAME	DESCRIPTION	PART NUMBER	QTY.
42404	Moulding (back window lower)	Black	♦D9ZZ 6142404-B	1
		Bright	♦D9ZZ 6142404-A	1
42430-1	Moulding (back window side)	Black	(RH)♦D9ZZ 6142430-B (LH)♦D9ZZ 6142431-B	1
		Bright	(RH)♦D9ZZ 6142430-A (LH)♦D9ZZ 6142431-A	1
42528	Plate (name)	"CAPRI"	D9CY 6142528-A	1
		"Ghia"	D9ZZ 6642528-C	1
		"Mercury"	D9CY 6142528-B	1

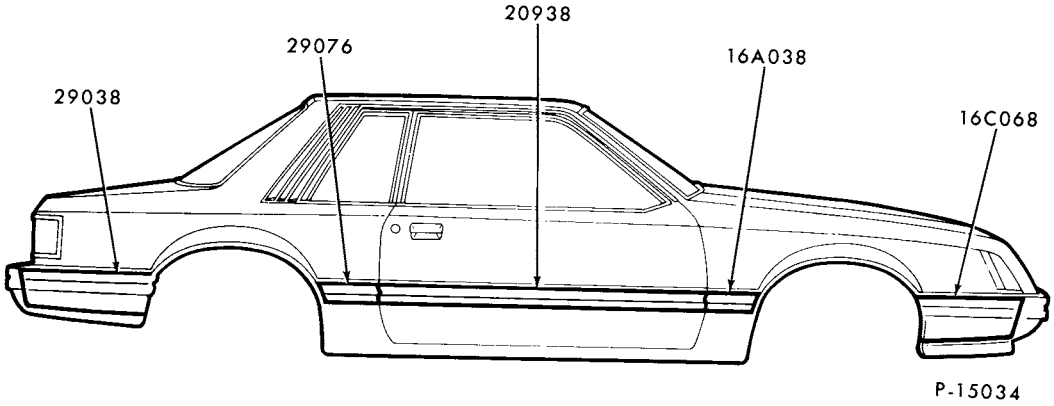

1979 CAPRI - BODY SIDE

GROUP NUMBER	PART NAME	DESCRIPTION	PART NUMBER	QTY.
16A038-9	Moulding (front fender rear)	Black	(RH) E0ZZ 16A038-BA (LH) D9ZZ 16A039-FA	1
16C068-9	Moulding (front fender front)		Refer to Group 15A440 in Chassis section	
20938-9	Moulding (front door)	Black	(RH) E0ZZ 6620938-BA (LH) D9ZZ 6620939-FA	1
29038-9	Moulding (quarter panel rear)	Black/argent	(RH) D9ZZ 6129038-DZ (LH) D9ZZ 6129039-DZ	1
29076-7	Moulding (quarter panel front)	Black	(RH) E0ZZ 6629076-BA (LH) E0ZZ 6629077-BA	1

♦ Includes attaching parts

COPYRIGHT © 1986 — FORD MOTOR COMPANY — DEARBORN, MICHIGAN

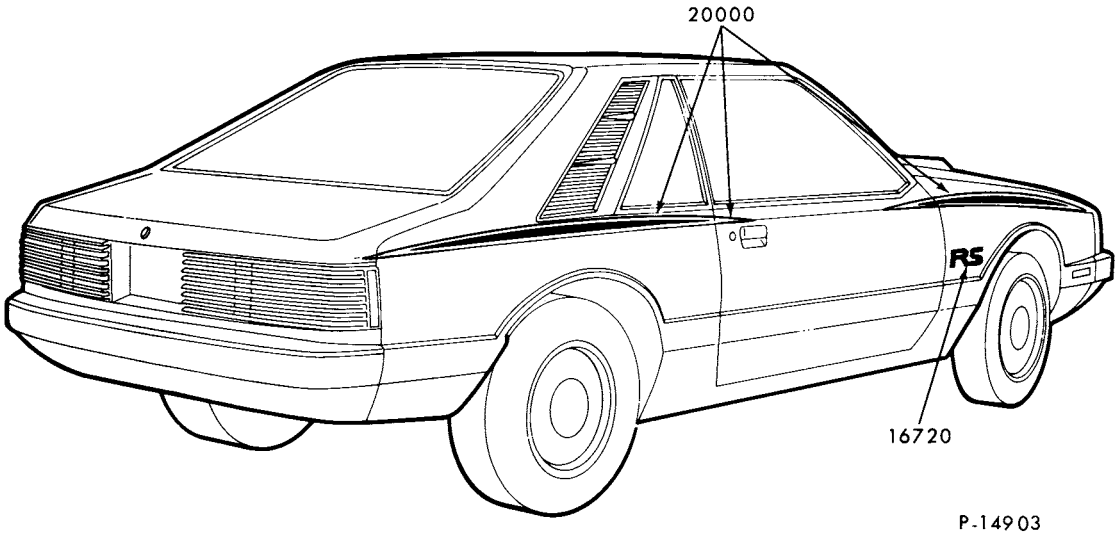

1979 CAPRI - STRIPES

GROUP NUMBER	PART NAME	DESCRIPTION	PART NUMBER		QTY.
20000	Stripe kit (body side)	Consists of fenders, doors and quarter panel			
		Blue (light and dark)	D9CY 6120000-AB		1
		Green/lime	D9CY 6120000-AR		1
		Orange/yellow "Before 3/19/79"- Yellow (outer) Orange (inner)	D9CY 6120000-AV		1
		Red/orange	D9CY 6120000-AD		1
		Yellow/orange "From 3/19/79"- Orange (outer) Yellow (inner)	D9CY 6120000-BV		1
16720-1	Transfer (model identification)	"RS"			
		Blue	(RH) D9CY 16720-AB	(LH) D9CY 16721-AB	1
		Green	(RH) D9CY 16720-AR	(LH) D9CY 16721-AR	1
		Orange	(RH) D9CY 16720-AV	(LH) D9CY 16721-AV	1
		Red	(RH) D9CY 16720-AD	(LH) D9CY 16721-AD	1
		"RS SPECIALE"			
		Blue (light and medium)	(RH) D9CY 16720-CB	(LH) D9CY 16721-CB	1
		Green/lime	(RH) D9CY 16720-CR	(LH) D9CY 16721-CR	1
		Orange/yellow	(RH) D9CY 16720-CV	(LH) D9CY 16721-CV	1
		Red/orange	(RH) D9CY 16720-CD	(LH) D9CY 16721-CD	1
		"TURBO RS"			
		Blue (light and dark)	(RH) D9CY 16720-DB	(LH) D9CY 16721-DB	1
		Green/lime	(RH) D9CY 16720-DR	(LH) D9CY 16721-DR	1
		Orange/yellow	(RH) D9CY 16720-DV	(LH) D9CY 16721-DV	1
		Red/orange	(RH) D9CY 16720-DD	(LH) D9CY 16721-DD	1

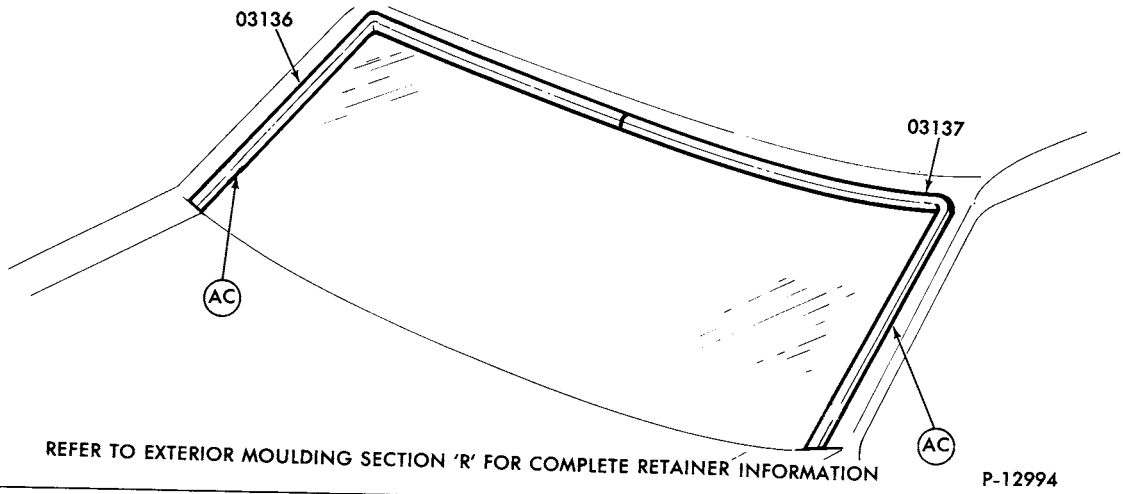

1979 MARK V - WINDSHIELD w/o CARRIAGE VINYL ROOF

GROUP NUMBER	PART NAME	DESCRIPTION	PART NUMBER	QTY.
03136-7	Moulding (windshield outside side)		(RH)♦D7LY 6503136-A (LH)♦D7LY 6503137-A	1

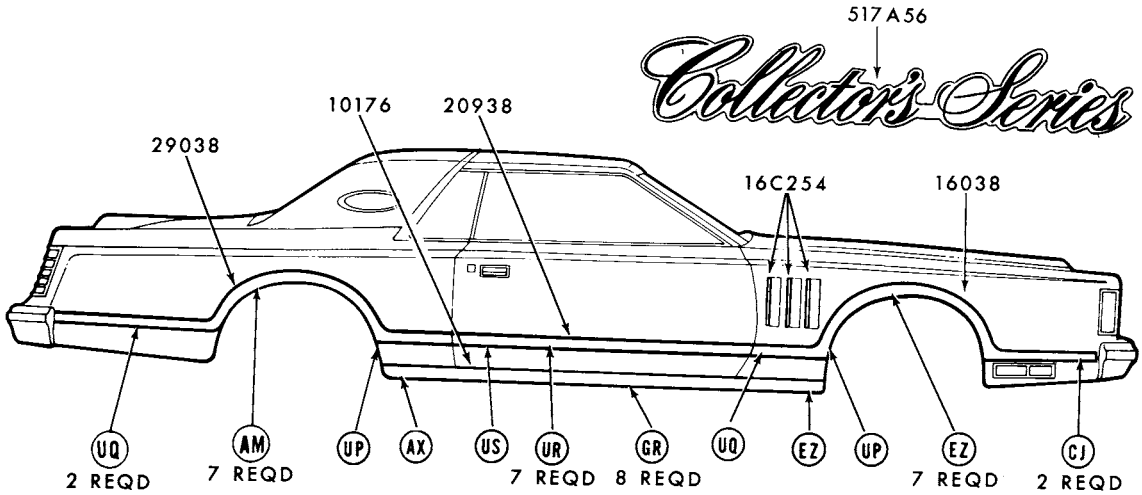

REFER TO EXTERIOR MOULDING SECTION 'R' FOR COMPLETE RETAINER INFORMATION

P-14106

1979 MARK V - SIDE - w/WIDE MOULDINGS

♦ Includes attaching parts

COPYRIGHT © 1986 — FORD MOTOR COMPANY — DEARBORN, MICHIGAN

1979 MARK V - SIDE - w/WIDE MOULDINGS - cont'd.

GROUP NUMBER	PART NAME	DESCRIPTION	⊕COLOR CODE	PART NUMBER		QTY.
10176-7	Moulding (body rocker panel)			(RH)♦D7LY 6510176-A	(LH)♦D7LY 6510177-A	1
16038-9	Moulding (front fender wheel opening)	Incl. vinyl insert				
		◊Amethyst / Crystal blue	26J	(RH)♦D9LY 16038-AJ	(LH)♦D9LY 16039-AJ	1
		◊Beryl / Turquoise	28K	(RH)♦D9LY 16038-AK	(LH)♦D9LY 16039-AK	1
		◊Black	54A	(RH)♦D7LY 16038-AA	(LH)♦D7LY 16039-AA	1
		◊Blue-(diamond)	57B	(RH)♦D8LY 16038-BB	(LH)♦D8LY 16039-BB	1
		◊Blue-(midnight)	F1B	(RH)♦D9LY 16038-AB	(LH)♦D9LY 16039-AB	1
		◊Blue-(wedgewood)	H8B	(RH)♦D8LY 16038-AB	(LH)♦D8LY 16039-AB	1
		◊Champagne-(light)	37U	(RH)♦D8LY 16038-AU	(LH)♦D8LY 16039-AU	1
		◊Cordovan-(dark)	33F	(RH)♦D7LY 16038-AF	(LH)♦D7LY 16039-AF	1
		◊Cordovan-(light)	13C	(RH)♦D8LY 16038-AF	(LH)♦D8LY 16039-AF	1
		◊Cream	64V	(RH)♦D7LY 16038-AV	(LH)♦D7LY 16039-AV	1
		◊Gold	14Y	(RH)♦D8LY 16038-AY	(LH)♦D8LY 16039-AY	1
		◊Gray	D1P	(RH)♦D7LY 16038-AP	(LH)♦D7LY 16039-AP	1
		◊Red	F6D	(RH)♦D7LY 16038-AD	(LH)♦D7LY 16039-AD	1
		◊White	55W	(RH)♦D7LY 16038-AW	(LH)♦D7LY 16039-AW	1
16C254	Moulding (front fender louver edge guard)			D8LY 16C254-A	R.H. and L.H.	6
20938-9	Moulding (front door)	Incl. vinyl insert				
		◊Amethyst / Crystal blue	26J	(RH)✱D9LY 6520938-AJ Not replaced (4/84)	(LH)✱D9LY 6520939-AJ Not replaced (4/83)	1
		◊Beryl / Turquoise	28K	(RH)♦D9LY 6520938-AK	(LH)♦D9LY 6520939-AK	1
		◊Black	54A	(RH)♦D7LY 6520938-AA	(LH)♦D7LY 6520939-AA	1
		◊Blue-(diamond)	57B	(RH)♦D8LY 6520938-BB	(LH)♦D8LY 6520939-BB	1
		◊Blue-(midnight)	F1B	(RH)♦D9LY 6520938-AB	(LH)♦D9LY 6520939-AB	1
		◊Blue-(wedgewood)	H8B	(RH)♦D8LY 6520938-AB	(LH)♦D8LY 6520939-AB	1
		◊Champagne-(light)	37U	(RH)♦D8LY 6520938-AU	(LH)♦D8LY 6520939-AU	1
		◊Cordovan-(dark)	33F	(RH)♦D7LY 6520938-AF	(LH)♦D7LY 6520939-AF	1
		◊Cordovan-(light)	13C	(RH)♦D8LY 6520938-AF	(LH)♦D8LY 6520939-AF	1
		◊Cream	64V	(RH)♦D7LY 6520938-AV	(LH)♦D7LY 6520939-AV	1
		◊Gold	14Y	(RH)♦D8LY 6520938-AY	(LH)♦D8LY 6520939-AY	1
		◊Gray	D1P	(RH)♦D7LY 6520938-AP	(LH)♦D7LY 6520939-AP	1
		◊Red	F6D	(RH)♦D7LY 6520938-AD	(LH)♦D7LY 6520939-AD	1
		◊White	55W	(RH)♦D7LY 6520938-AW	(LH)♦D7LY 6520939-AW	1

◊ For color verification, refer to the vinyl roof swatches in the 1979 Salesman's Color and Upholstery Selections Guide
♦ Includes attaching parts ⊕ As shown on Certification Label

1979 MARK V - SIDE - w/WIDE MOULDINGS - cont'd.

GROUP NUMBER	PART NAME	DESCRIPTION	⊕ COLOR CODE	PART NUMBER		QTY.
29038-9	Moulding (quarter panel)	Incl. vinyl insert				
		◊ Amethyst/ Crystal blue	26J	(RH)♦D9LY 6529038-AJ	(LH)♦D9LY 6529039-AJ	1
		◊ Beryl/ Turquoise	28K	(RH)♦D9LY 6529038-AK	(LH)♦D9LY 6529039-AK	1
		◊ Black	54A	(RH)♦D7LY 6529038-AA	(LH)♦D7LY 6529039-AA	1
		◊ Blue- (diamond)	57B	(RH)♦D8LY 6529038-BB	(LH)♦D8LY 6529039-BB	1
		◊ Blue- (midnight)	F1B	(RH)♦D9LY 6529038-AB	(LH)♦D9LY 6529039-AB	1
		◊ Blue- (wedgewood)	H8B	(RH)♦D8LY 6529038-AB	(LH)♦D8LY 6529039-AB	1
		◊ Champagne- (light)	37U	(RH)♦D8LY 6529038-AU	(LH)♦D8LY 6529039-AU	1
		◊ Cordovan- (dark)	33F	(RH)♦D7LY 6529038-AF	(LH)♦D7LY 6529039-AF	1
		◊ Cordovan- (light)	13C	(RH)♦D8LY 6529038-AF	(LH)♦D8LY 6529039-AF	1
		◊ Cream	64V	(RH)♦D7LY 6529038-AV	(LH)♦D7LY 6529039-AV	1
		◊ Gold	14Y	(RH)♦D8LY 6529038-AY	(LH)♦D8LY 6529039-AY	1
		◊ Gray	D1P	(RH)♦D7LY 6529038-AP	(LH)♦D7LY 6529039-AP	1
		◊ Red	F6D	(RH)♦D7LY 6529038-AD	(LH)♦D7LY 6529039-AD	1
		◊ White	55W	(RH)♦D7LY 6529038-AW	(LH)♦D7LY 6529039-AW	1
517A56	Plate (quarter panel name)	"Collector's Series"		♦D9LY 65517A56-B	R.H. and L.H.	2

◊ For color verification, refer to the vinyl roof swatches in the 1979 Salesman's Color and Upholstery Selections Guide
♦ Includes attaching parts ⊕ As shown on Certification Label

COPYRIGHT © 1986 — FORD MOTOR COMPANY — DEARBORN, MICHIGAN

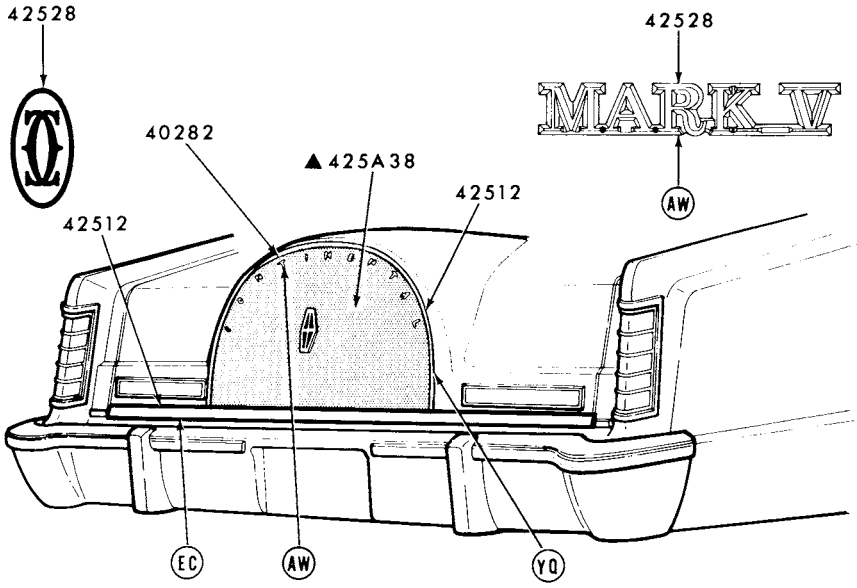

▲REFER TO GROUP IN SOFT TRIM SECTION
REFER TO EXTERIOR MOULDING SECTION 'R' FOR COMPLETE RETAINER INFORMATION

P-14107

1979 MARK V - BACK END

GROUP NUMBER	PART NAME	DESCRIPTION	PART NUMBER	QTY.
40282	Letter (name)	"C"	♦D7LY 6540282-A	
		"O"	♦D7LY 6540282-B	1
		"N" - sides	♦D7LY 6540282-C	2
		"N" - top	♦D7LY 6540282-F	1
		"T"	♦D7LY 6540282-D	2
		"I"	♦D7LY 6540282-E	1
		"E"	♦D7LY 6540282-G	1
		"A"	♦D7LY 6540282-H	1
		"L"	♦D7LY 6540282-J	1
42512	Moulding (luggage compartment door)	Lower	♦D7LY 6542512-A	1
		Upper (diamond jubilee)		
		◊Blue (midnight)	♦D9LY 6542512-AB	1
		◊ Gold	♦D9LY 6542512-AG	1
		◊White	♦D9LY 6542512-AW	1
42528	Transfer (name)	"MARK V"	♦D7LY 6542528-A	1
		"OC"- Red	D7LY 6542528-AD	1

◊ For color verification, refer to the vinyl roof swatches in the 1979 Salesman's Color and Upholstery Selections Guide
♦ Includes attaching parts

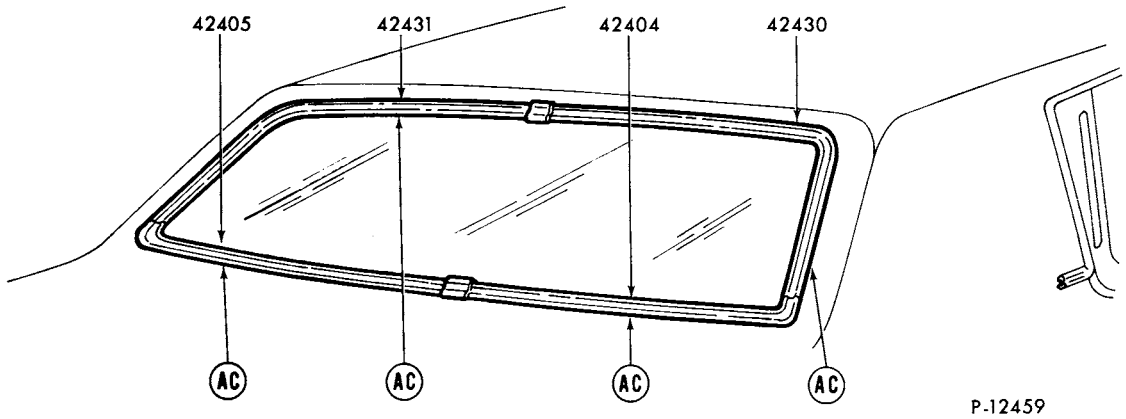

REFER TO EXTERIOR MOULDING SECTION "R" FOR COMPLETE RETAINER INFORMATION

1979 MARK V - BACK WINDOW

GROUP NUMBER	PART NAME	DESCRIPTION	PART NUMBER		QTY.
42404-5	Moulding (back window lower)	W/o vinyl roof	(RH)♦D7LY 6542404-A	(LH)♦D7LY 6542405-A	1
		W/half vinyl roof	(RH)♦D7LY 6542404-B	(LH)♦D7LY 6542405-B	1
		W/full vinyl roof			
		◊Beryl / Turquoise	(RH)★D9LY 6542404-AK	(LH)★D9LY 6542405-AK	1
		◊Black (low gloss)	(RH)★D7LY 6542404-AA	(LH)★D7LY 6542405-AA	1
		◊Blue (diamond)	(RH)★D9LY 6542404-BB	(LH)★D9LY 6542405-BB	1
		◊Blue (midnight)	(RH)★D9LY 6542404-AB	(LH)★D9LY 6542405-AB	1
		◊Blue (wedgewood)	(RH)★D8LY 6542404-AB	(LH)★D8LY 6542405-AB	1
		◊Champagne (light)	(RH)★D8LY 6542404-AU	(LH)★D8LY 6542405-AU	1
		◊Cordovan (dark)	(RH)★D7LY 6542404-AF Not replaced (4/84)	(LH)★D7LY 6542405-AF	1
		◊Cordovan (light)	(RH)★D8LY 6542404-AF	(LH)★D8LY 6542405-AF	1
		◊Cream	(RH)★D7LY 6542404-AV	(LH)★D7LY 6542405-AV	1
		◊Gold (jubilee)	(RH)★D9LY 6542404-AY	(LH)★D9LY 6542405-AY	1
		◊Gray	(RH)★D7LY 6542404-AP	(LH)★D7LY 6542405-AP	1
		◊Red	(RH)★D7LY 6542404-AD	(LH)★D7LY 6542405-AD	1
		◊Silver	(RH)★D7LY 6542404-BP	(LH)★D7LY 6542405-BP	1
		◊White	(RH)★D7LY 6542404-AW Not replaced (4/83)	(LH)★D7LY 6542405-AW	1
42430-1	Moulding (back window upper)	W/o vinyl roof	(RH)♦D7LY 6542430-A	(LH)♦D7LY 6542431-A	1
		W/half vinyl roof	(RH)★D7LY 6542430-B Not replaced (4/83)	(LH)★D7LY 6542431-B	1
		W/full vinyl roof			
		◊Beryl / Turquoise	(RH)★D9LY 6542430-AK	(LH)★D9LY 6542431-AK	1
		◊Black (low gloss)	(RH)★D7LY 6542430-AA	(LH)★D7LY 6542431-AA	1
		◊Blue (diamond)	(RH)★D9LY 6542430-BB	(LH)★D9LY 6542431-BB	1
		◊Blue (midnight)	(RH)★D9LY 6542430-AB	(LH)★D9LY 6542431-AB	1
		◊Blue (wedgewood)	(RH)★D8LY 6542430-AB	(LH)★D8LY 6542431-AB	1
		◊Champagne (light)	(RH)★D8LY 6542430-AU	(LH)★D8LY 6542431-AU	1
		◊Cordovan (dark)	(RH)★D7LY 6542430-AF	(LH)★D7LY 6542431-AF	1
		◊Cordovan (light)	(RH)★D8LY 6542430-AF	(LH)★D8LY 6542431-AF	1
		◊Cream	(RH)★D7LY 6542430-AV	(LH)★D7LY 6542431-AV Not replaced (4/84)	1
		◊Gold (jubilee)	(RH)★D9LY 6542430-AY	(LH)★D9LY 6542431-AY	1
		◊Gray	(RH)★D7LY 6542430-AP	(LH)★D7LY 6542431-AP	1
		◊Red	(RH)★D7LY 6542430-AD	(LH)★D7LY 6542431-AD	1
		◊Silver	(RH)★D7LY 6542430-BP	(LH)★D7LY 6542431-BP	1
		◊White	(RH)★D7LY 6542430-AW	(LH)★D7LY 6542431-AW	1

◊ For color verification, refer to the vinyl roof swatches in the 1979 Salesman's Color and Upholstery Selections Guide
♦ Includes attaching parts

COPYRIGHT © 1986 — FORD MOTOR COMPANY — DEARBORN, MICHIGAN

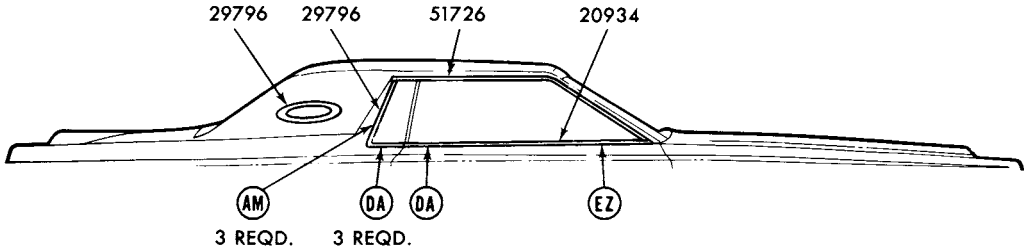

P-13179

REFER TO EXTERIOR MOULDING SECTION "R" FOR COMPLETE RETAINER INFORMATION

1979 MARK V - DRIP RAIL, DOOR BELT and QUARTER WINDOW

GROUP NUMBER	PART NAME	DESCRIPTION	PART NUMBER		QTY.
20934-5	Moulding and weatherstrip (front door belt)		(RH)♦D7LY 6520934-A	(LH)♦D7LY 6520935-A	1
29796-7	Moulding (front quarter window)		(RH)♦D7LY 6529796-A	(LH)♦D7LY 6529797-A	1
29796-7	Moulding (opera window)	W/vinyl roof			
		◊Black	D7LY 6529796-BA	R.H. and L.H.	2
		W/o vinyl roof	D7LY 6529796-AA	R.H. and L.H.	2
51726-7	Moulding (roof drip rail side)	W/o full vinyl roof	(RH)♦D7LY 6551726-B	(LH)♦D7LY 6551727-B	1
		W/full vinyl roof	(RH)♦D7LY 6551726-D	(LH)♦D7LY 6551727-D	1

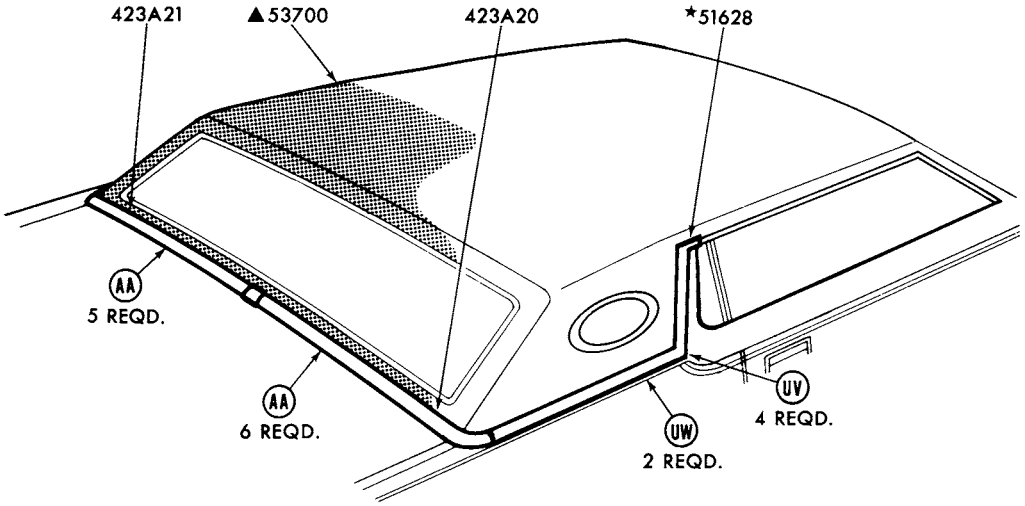

P-13181

▲REFER TO GROUP IN SOFT TRIM SECTION
REFER TO EXTERIOR MOULD SECTION "R" FOR COMPLETE RETAINER INFORMATION

1979 MARK V - ROOF and BACK BELT - w/FULL VINYL ROOF

◊ For color verification, refer to the vinyl roof swatches in the 1979 Salesman's Color and Upholstery Selections Guide
♦ Includes attaching parts

1979 MARK V - ROOF and BACK BELT - w/FULL VINYL ROOF - cont'd.

GROUP NUMBER	PART NAME	DESCRIPTION	PART NUMBER		QTY.
423A20-1	Moulding (back belt rear)	◊Beryl / Turquoise	(RH)★D9LY 65423A20-AK	(LH)★D9LY 65423A21-AK	1
		◊Black	(RH)★D7LY 65423A20-AA	(LH)★D7LY 65423A21-AA	1
		◊Blue (diamond)	(RH)★D8LY 65423A20-BB	(LH)★D8LY 65423A21-BB	1
		◊Blue (midnight)	(RH)★D9LY 65423A20-AB	(LH)★D9LY 65423A21-AB	1
		◊Blue (wedgewood)	(RH)★D8LY 65423A20-AB	(LH)★D8LY 65423A21-AB	1
		◊Champagne (light)	(RH)★D8LY 65423A20-AU	(LH)★D8LY 65423A21-AU	1
		◊Cordovan (dark)	(RH)★D7LY 65423A20-AF	(LH)★D7LY 65423A21-AF	1
		◊Cordovan (light)	(RH)★D8LY 65423A20-AE	(LH)★D8LY 65423A21-AE	1
		◊Cream	(RH)★D7LY 65423A20-AV	(LH)★D7LY 65423A21-AV	1
		◊Gold (jubilee)	(RH)★D8LY 65423A20-AY	(LH)★D8LY 65423A21-AY	1
		◊Gray	(RH)★D7LY 65423A20-AP	(LH)★D7LY 65423A21-AP	1
		◊Red	(RH)★D7LY 65423A20-BD	(LH)★D7LY 65423A21-BD	1
		◊Silver	(RH)★D7LY 65423A20-BP	(LH)★D7LY 65423A21-BP	1
		◊White	(RH)♦D7LY 65423A20-AW	(LH)♦D7LY 65423A21-AW	1
51628-9	Moulding (back belt side)	◊Beryl Turquoise	(RH)★D9LY 6551628-AK	(LH)★D9LY 6551629-AK	1
		◊Black	(RH)★D7LY 6551628-AA	(LH)★D7LY 6551629-AA	1
		◊Blue (diamond)	(RH)★D9LY 6551628-BB	(LH)★D9LY 6551629-BB	1
		◊Blue (midnight)	(RH)★D9LY 6551628-AB	(LH)★D9LY 6551629-AB	1
		◊Blue (wedgewood)	(RH)★D8LY 6551628-AB	(LH)★D8LY 6551629-AB	1
		◊Champagne (light)	(RH)★D8LY 6551628-AU	(LH)★D8LY 6551629-AU	1
		◊Cordovan (dark)	(RH)★D7LY 6551628-AF	(LH)★D7LY 6551629-AF	1
		◊Cordovan (light)	(RH)★D8LY 6551628-AF	(LH)★D8LY 6551629-AF	1
		◊Cream	(RH)★D7LY 6551628-AV	(LH)★D7LY 6551629-AV	1
		◊Gold (jubilee)	(RH)★D9LY 6551628-AY	(LH)★D9LY 6551629-AY	1
		◊Gray	(RH)★D7LY 6551628-AP	(LH)★D7LY 6551629-AP	1
		◊Red	(RH)★D7LY 6551628-AD	(LH)★D7LY 6551629-AD	1
		◊Silver	(RH)★D7LY 6551628-BP	(LH)★D7LY 6551629-BP	1
		◊White	(RH)★D7LY 6551628-AW	(LH)★D7LY 6551629-AW	1

◊ For color verification, refer to the vinyl roof swatches in the 1979 Salesman's Color and Upholstery Selections Guide
♦ Includes attaching parts

COPYRIGHT © 1986 — FORD MOTOR COMPANY — DEARBORN, MICHIGAN

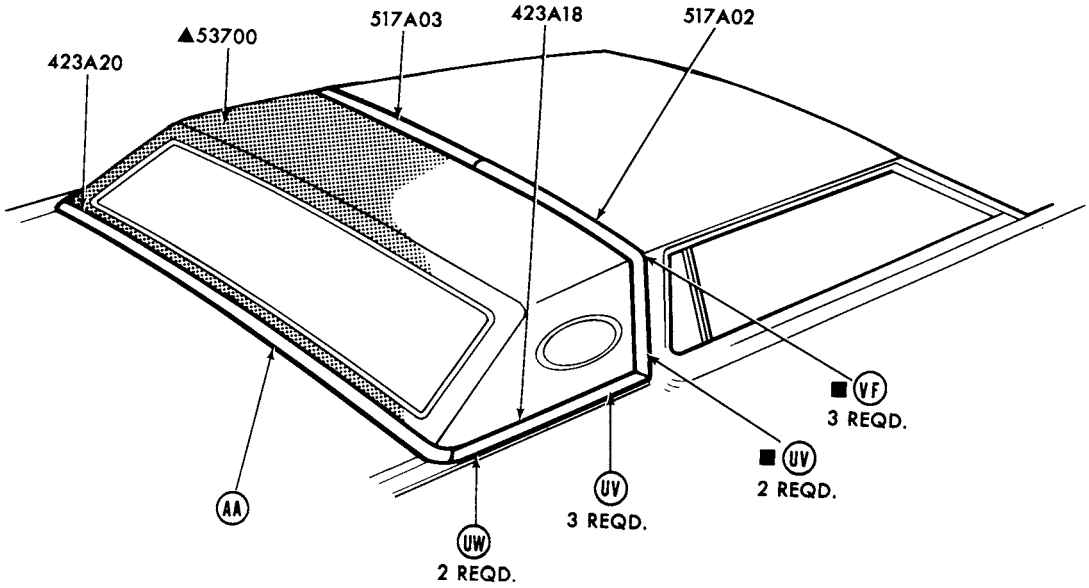

■ REFER TO GROUP 517A78 KIT FOR RETAINERS W/SLIDING ROOF

REAR HALF VINYL ROOF

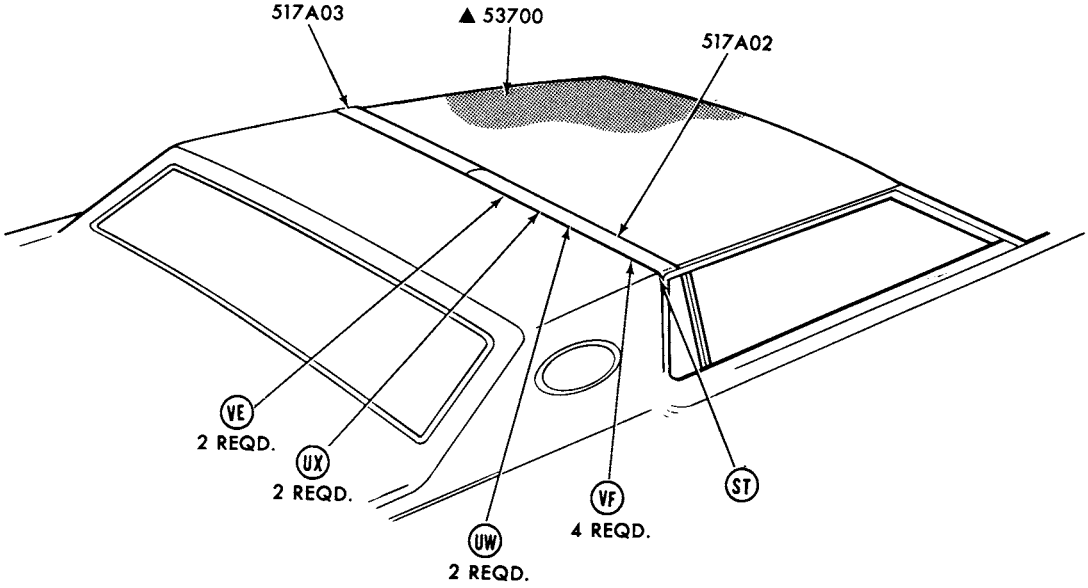

▲ REFER TO GROUP IN SOFT TRIM SECTION
REFER TO EXTERIOR MOULDING SECTION 'R' FOR COMPLETE RETAINER INFORMATION

FRONT HALF VINYL ROOF

P-13182

1979 MARK V - ROOF and BACK BELT - w/HALF VINYL ROOF - exc. DIAMOND JUBILEE

1979 MARK V - ROOF and BACK BELT - w/HALF VINYL ROOF - cont'd.

GROUP NUMBER	PART NAME	DESCRIPTION	PART NUMBER		QTY.
423A18-9	Moulding (back belt side)	◊Beryl / Turquoise	(RH)★D9LY 65423A18-AK	(LH)★ D9LY 65423A19-AK	1
		◊Black	(RH)★ D7LY 65423A18-AA	(LH)★D7LY 65423A19-AA	1
		◊Blue (diamond)	(RH)♦D9LY 65423A18-BB	(LH)♦D9LY 65423A19-BB	1
		◊Blue (midnight)	(RH)♦D9LY 65423A18-AB	(LH)♦D9LY 65423A19-AB	1
		◊Blue (wedgewood)	(RH)★D8LY 65423A18-AB	(LH)★D8LY 65423A19-AB	1
		◊Champagne (light)	(RH)★ D8LY 65423A18-AU	(LH)★D8LY 65423A19-AU	1
		◊Cordovan (dark)	(RH)★ D7LY 65423A18-AF	(LH)★D7LY 65423A19-AF Not replaced (4/83)	1
		◊Cordovan (light)	(RH)★D8LY 65423A18-AF	(LH)★D8LY 65423A19-AF	1
		◊Cream	(RH)♦D7LY 65423A18-AV	(LH)★D7LY 65423A19-AV	1
		◊Gold (jubilee)	(RH)★D9LY 65423A18-AY	(LH)★D9LY 65423A19-AY	1
		◊Gray	(RH)★D7LY 65423A18-AP	(LH)★ D7LY 65423A19-AP	1
		◊Red	(RH)★D7LY 65423A18-BD	(LH)★D7LY 65423A19-BD	1
		◊Silver	(RH)★D7LY 65423A18-BP	(LH)★D7LY 65423A19-BP	1
		◊White	(RH)♦D7LY 65423A18-AW	(LH)♦D7LY 65423A19-AW	1
423A20-1	Moulding (back belt rear)	◊Beryl / Turquoise	(RH)★D9LY 65423A20-AK	(LH)★D9LY 65423A21-AK	1
		◊Black (low gloss)	(RH)★D7LY 65423A20-AA	(LH)★D7LY 65423A21-AA	1
		◊Blue (diamond)	(RH)★ D8LY 65423A20-BB	(LH)★D8LY 65423A21-BB	1
		◊Blue (midnight)	(RH)★D9LY 65423A20-AB	(LH)★D9LY 65423A21-AB	1
		◊Blue (wedgewood)	(RH)★D8LY 65423A20-AB	(LH)★D8LY 65423A21-AB	1
		◊Champagne (light)	(RH)★D8LY 65423A20-AU	(LH)★D8LY 65423A21-AU	1
		◊Cordovan (dark)	(RH)★D7LY 65423A20-AF	(LH)★D7LY 65423A21-AF	1
		◊Cordovan (light)	(RH)★D8LY 65423A20-AE	(LH)★D8LY 65423A21-AE	1
		◊Cream	(RH)★D7LY 65423A20-AV	(LH)★D7LY 65423A21-AV	1
		◊Gold (jubilee)	(RH)★D8LY 65423A20-AY	(LH)★D8LY 65423A21-AY	1
		◊Gray	(RH)★ D7LY 65423A20-AP	(LH)★D7LY 65423A21-AP	1
		◊Red	(RH)★D7LY 65423A20-AD	(LH)★D7LY 65423A21-AD	1
		◊Silver	(RH)★D7LY 65423A20-BP	(LH)★D7LY 65423A21-BP	1
		◊White	(RH)♦D7LY 65423A20-AW	(LH)♦D7LY 65423A21-AW	1
517A02-3	Moulding (roof top)	W/rear half vinyl roof			
		◊Beryl/ Turquoise	(RH)★D9LY 65517A02-AK	(LH)★D9LY 65517A03-AK	1
		◊Black	(RH)★D7LY 65517A02-AA	(LH)★D7LY 65517A03-AA	1
		◊Blue (diamond)	(RH)★D9LY 65517A02-BB	(LH)★D9LY 65517A03-BB	1
		◊Blue (midnight)	(RH)★ D9LY 65517A02-AB	(LH)★D9LY 65517A03-AB	1
		◊Blue (wedgewood)	(RH)★D8LY 65517A02-AB	(LH)★D8LY 65517A03-AB	1
		◊Champagne (light)	(RH)★ D8LY 65517A02-AU	(LH)★D8LY 65517A03-AU	1
		◊Cordovan (dark)	(RH)★D7LY 65517A02-AF	(LH)★D7LY 65517A03-AF	1
		◊Cordovan (light)	(RH)★D8LY 65517A02-AF	(LH)★D8LY 65517A03-AF	1
		◊Cream	(RH)★D7LY 65517A02-AV	(LH)★D7LY 65517A03-AV Not replaced (4/84)	1
		◊Gold (jubilee)	(RH)★D9LY 65517A02-AY	(LH)★D9LY 65517A03-AY	1
		◊Gray	(RH)★D7LY 65517A02-AP	(LH)★D7LY 65517A03-AP	1
		◊Red	(RH)★D7LY 65517A02-AD	(LH)★D7LY 65517A03-AD	1
		◊Silver	(RH)★D7LY 65517A02-BP	(LH)★D7LY 65517A03-BP	1
		◊White	(RH)♦D7LY 65517A02-AW	(LH)♦D7LY 65517A03-AW	1
		W/front half vinyl roof			
		◊Amethyst/ Crystal blue	(RH)★D9LY 65517A02-BJ	(LH)★D9LY 65517A03-BJ	1
517A78	Retainer kit (roof top moulding)	W/sliding moon roof	D7LY 65517A78-A		1

◊ For color verification, refer to the vinyl roof swatches in the 1978 Salesman's Color and Upholstery Selections Guide
♦ Includes attaching parts
♦ Includes attaching parts, to be used w/o sliding moon roof. Retainer kit D7LY 65517A78-A must be used to attach moulding with sliding moon roof only

COPYRIGHT © 1986 — FORD MOTOR COMPANY — DEARBORN, MICHIGAN

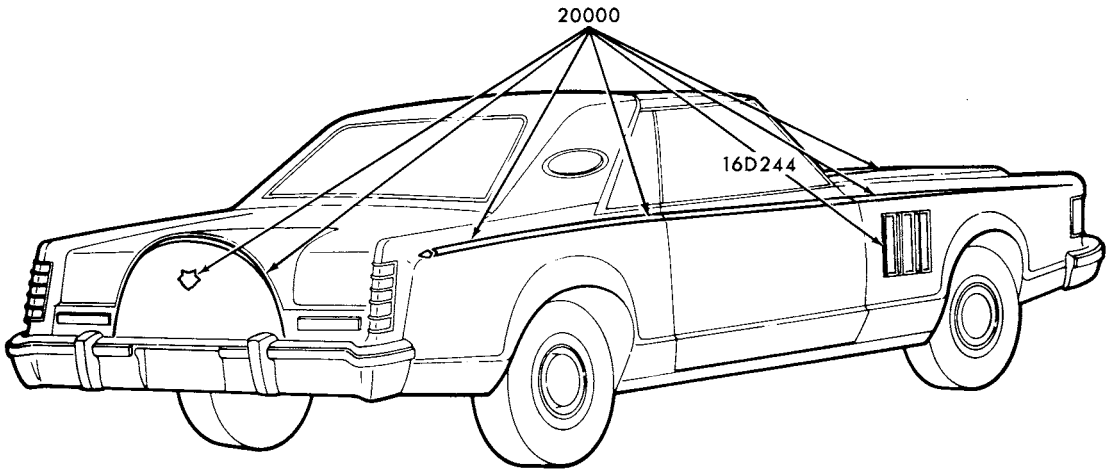

P-14544

1979 MARK V - STRIPES - DESIGNER SERIES PUCCI

GROUP NUMBER	PART NAME	DESCRIPTION	PART NUMBER	QTY.
16D244	Stripes (louver)	White/midnight blue	D9LY 16D244-BW	2
20000	Stripes (body side)	Incl.-front fender, door, quarter panel, hood, lugg.compt. door, logo, white, and midnight blue	D9LY 6520000-BW	1

FOR PAINT STRIPE REPAIR
REFER TO PAGE 1 OF PAINT SECTION

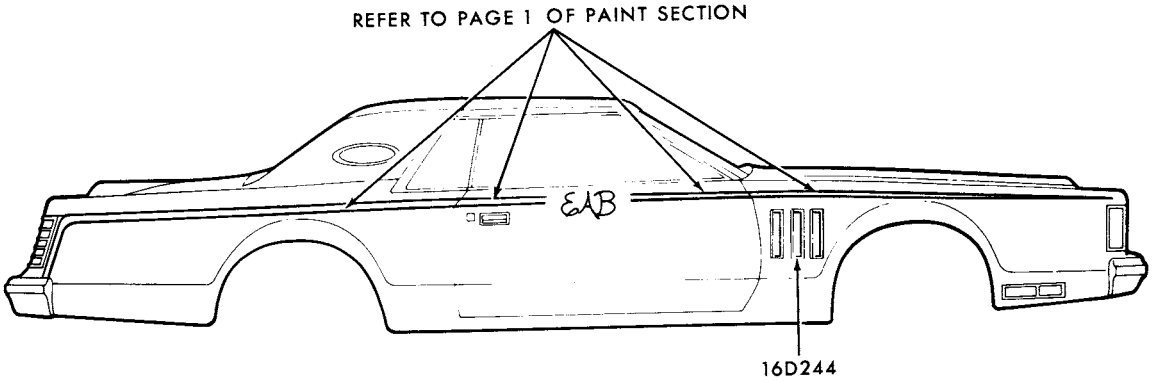

P-14542

1979 MARK V - TRANSFER - CUSTOMER INITIALS

1979 MARK V - TRANSFER - CUSTOMER INITIALS - cont'd.

GROUP NUMBER	PART NAME	DESCRIPTION	PART NUMBER	QTY.
16D244	Stripes (louver)	Incl. 3 stripes		
		Cartier-red	D9LY 16D244-AD R.H. and L.H.	2
		Givenchy-amethyst	D9LY 16D244-BJ R.H. and L.H.	2
20000	Transfer (owner's monogram)	Incl. 6 sets of each, letters		
		Gold	D8LY 6520000-AY	1

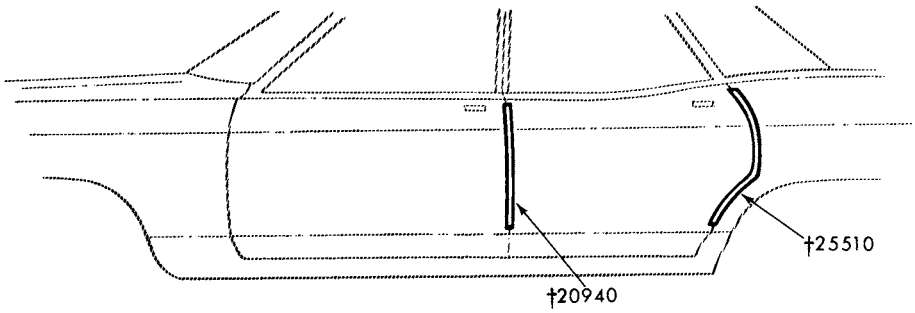

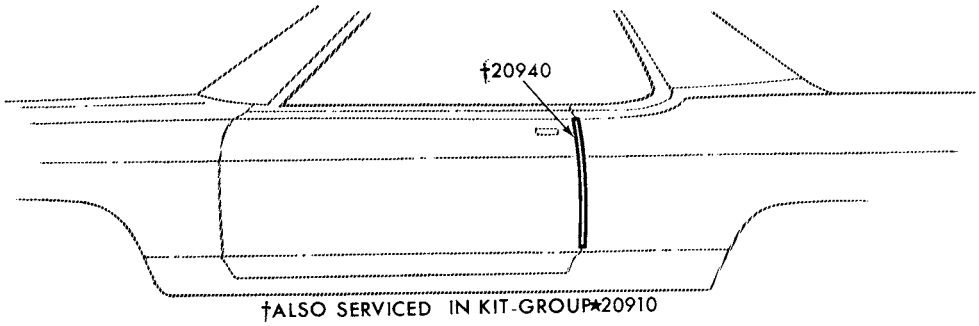

†ALSO SERVICED IN KIT-GROUP★20910

P-10061

1979 MARK V - DOOR EDGE GUARD

GROUP NUMBER	PART NAME	DESCRIPTION	PART NUMBER	QTY
20910	Moulding kit (door edge guard)		★D7LY 6520910-A Not replaced (4/83)	1
20940-1	Moulding (front door edge guard)		(RH) D7LY 6520940-A (LH) D7LY 6520941-A	1

COPYRIGHT © 1986 — FORD MOTOR COMPANY — DEARBORN, MICHIGAN

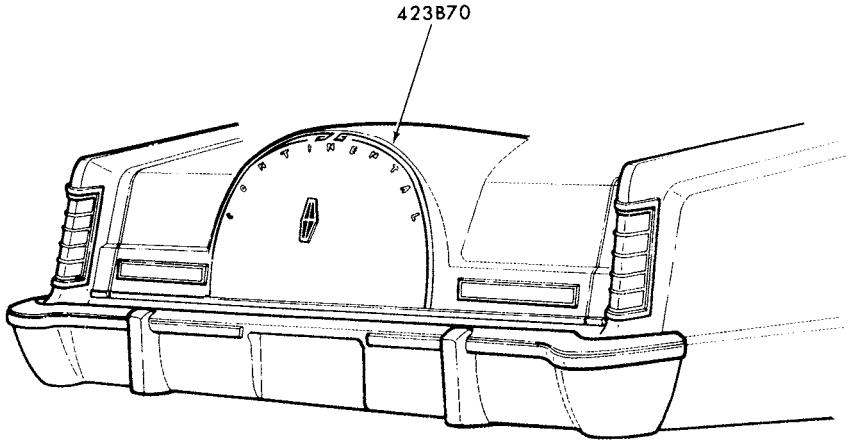

1979 MARK V - STRIPE - LUGGAGE COMPARTMENT - DESIGNER SERIES GIVENCHY

GROUP NUMBER	PART NAME	DESCRIPTION	PART NUMBER	QTY.
423B70	Transfer (luggage compartment)	◊Amethyst	D9LY 65423B70-BJ	1

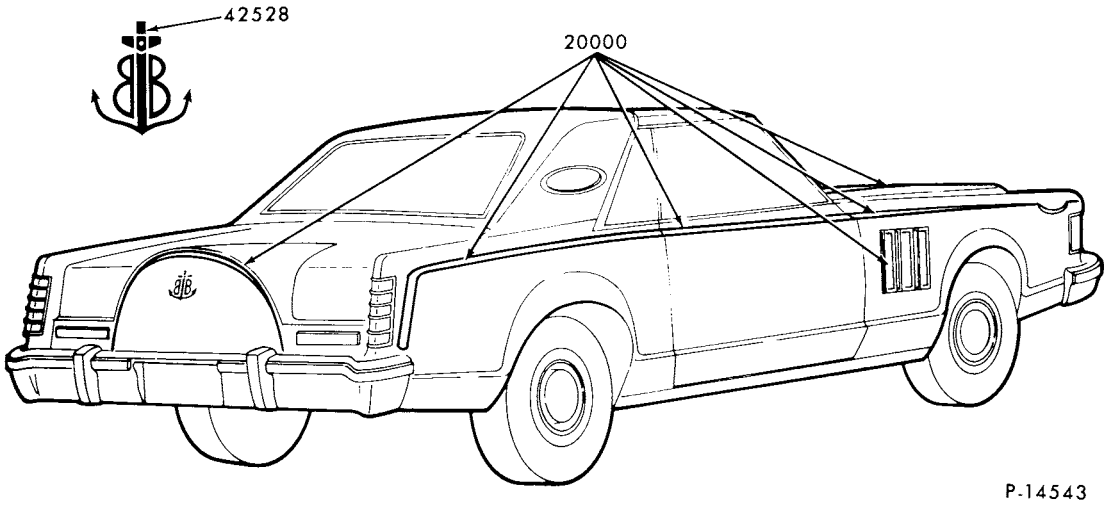

1979 MARK V - STRIPES - DESIGNER SERIES BLASS

GROUP NUMBER	PART NAME	DESCRIPTION	PART NUMBER	QTY.
16D244	Stripes (louver)	Midnight blue/gold	D9LY 16D244-AB	2
20000	Stripes (body side)	Incl. front fender, door, quarter panel, and lugg.compt. door medium blue and gold	D9LY 6520000-AB	1
42528	Transfer (name)		D9LY 6542528-AB	1

◊ For color verification, refer to the vinyl roof swatches in the 1979 Salesman's Color and Upholstery Selections Guide

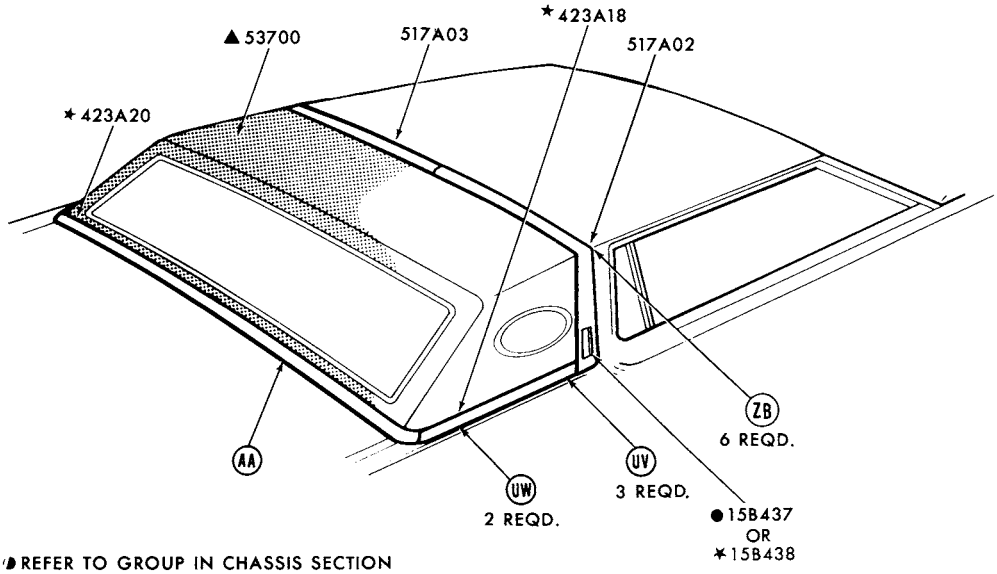

◑ REFER TO GROUP IN CHASSIS SECTION
▲ REFER TO GROUP IN SOFT TRIM SECTION
REFER TO EXTERIOR MOULDING SECTION'R' FOR COMPLETE RETAINER INFORMATION

P-14411

1979 MARK V - ROOF and BACK BELT - DESIGNERS SERIES CARTIER

GROUP NUMBER	PART NAME	DESCRIPTION	PART NUMBER		QTY.
423A18-9	Moulding (back belt side)	◊Blue (midnight)	(RH)★D9LY 65423A18-CB	(LH)★D9LY 65423A19-CB	1
		◊Champagne (light)	(RH)★D9LY 65423A18-CG	(LH)★D9LY 65423A19-CG	1
		◊White	(RH)★D9LY 65423A18-CW Not replaced (4/84)	(LH)★D9LY 65423A19-CW	1
423A20-1	Moulding (back belt rear)	◊Blue (midnight)	(RH)★D9LY 65423A20-AB	(LH)★D9LY 65423A21-AB	1
		◊Champagne (light)	(RH)★D8LY 65423A20-AU	(LH)★D8LY 65423A21-AU	1
		◊White	(RH)★D7LY 65423A20-AW	(LH)★D7LY 65423A21-AW	1
517A02-3	Moulding (roof top)	◊Blue (midnight)	(RH)★D9LY 65517A02-CB	(LH)★D9LY 65517A03-CB Not replaced (4/84)	1
		◊Red	(RH)★D9LY 65517A02-CD Not replaced (4/84)	(LH)♦D9LY 65517A03-CD	1
		◊White	(RH)♦D9LY 65517A02-CW	(LH)♦D9LY 65517A03-CW	1

◊ For color verification, refer to the vinyl roof swatches in the 1979 Salesman's Color and Upholstery Selections Guide
♦ Includes attaching parts

COPYRIGHT © 1986 — FORD MOTOR COMPANY — DEARBORN, MICHIGAN

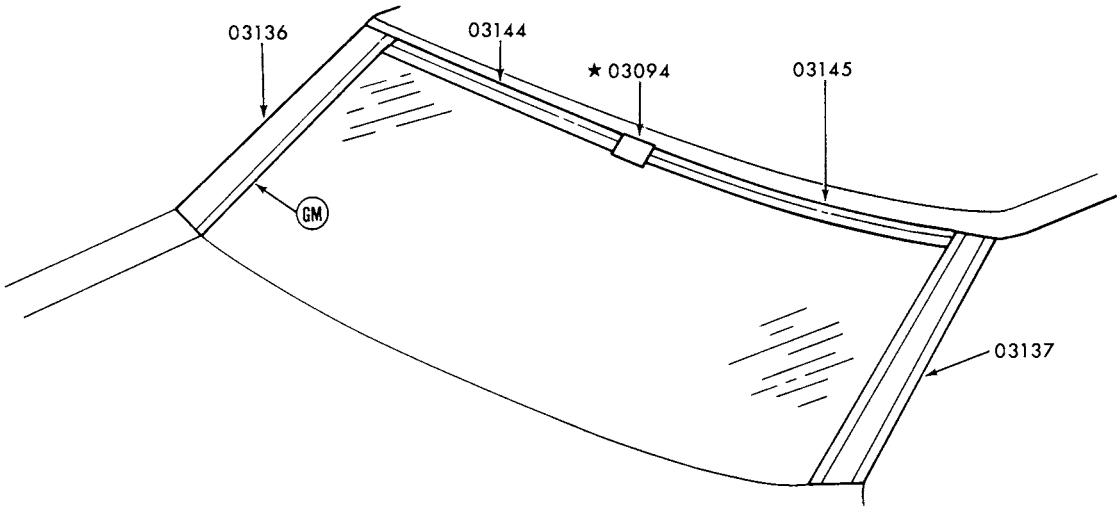

REFER TO EXTERIOR MOULDING SECTION "R" FOR COMPLETE RETAINER INFORMATION P-14467

1979 MARK V - WINDSHIELD - w/CARRIAGE VINYL ROOF

GROUP NUMBER	PART NAME	DESCRIPTION	PART NUMBER	QTY.
03094	Cover (windshield outside top		★ D8LY 6503094-A Not replaced (3/82)	1
03136-7	Moulding (windshield outside)		(RH)♦ D8LY 6503136-A (LH)♦ D8LY 6503137-A	1
03144-5	Moulding (windshield outside top)		(RH)♦ D8LY 6503144-A (LH)♦ D8LY 6503145-A	1

♦ Includes attaching parts

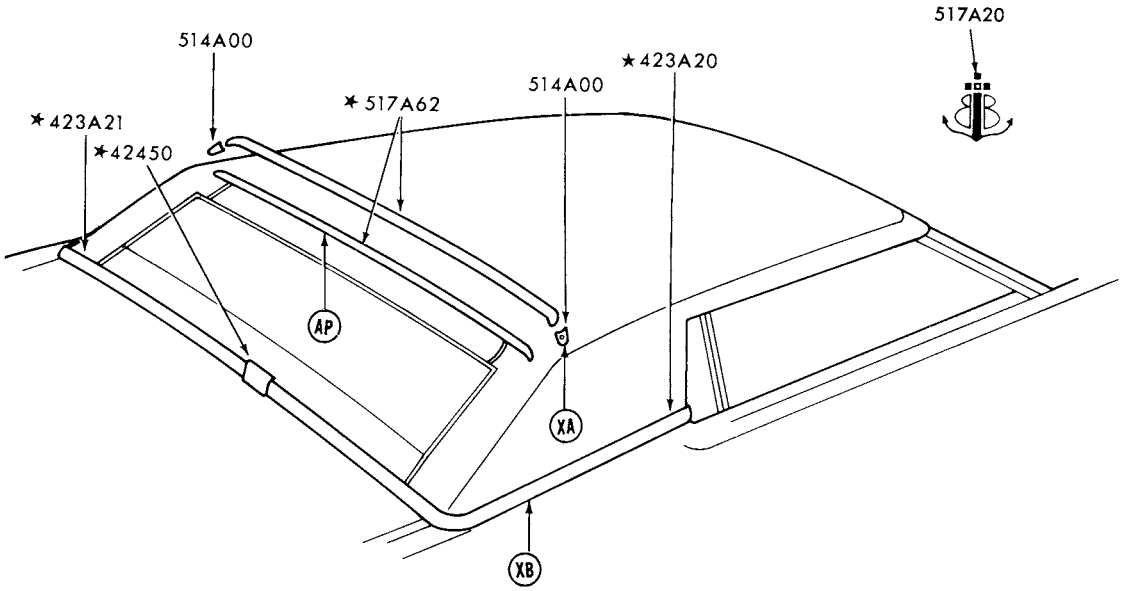

REFER TO EXTERIOR MOULDING SECTION "R" FOR COMPLETE RETAINER INFORMATION P-14466

1979 MARK V - ROOF and BACK BELT - w/CARRIAGE VINYL ROOF

GROUP NUMBER	PART NAME	DESCRIPTION	PART NUMBER	QTY.
423A20-1	Moulding (back belt rear)		(RH)★D8LY 65423A20-C Not replaced (4/83) (LH)★D8LY 65423A21-C Not replaced (4/83)	1
42450	Cover (back belt moulding joint)		★D8LY 6542450-A Not replaced (4/83)	1
514A00	Tip (rear roof bow binding)		C3AZ 76514A00-B R.H. and L.H.	2
517A20	Ornament (roof side)		D9LY 65517A20-A R.H. and L.H.	2
517A62	Moulding (roof outside rear)		★D8LY 65517A62-A Not replaced (4/83)	1

COPYRIGHT © 1986 — FORD MOTOR COMPANY — DEARBORN, MICHIGAN

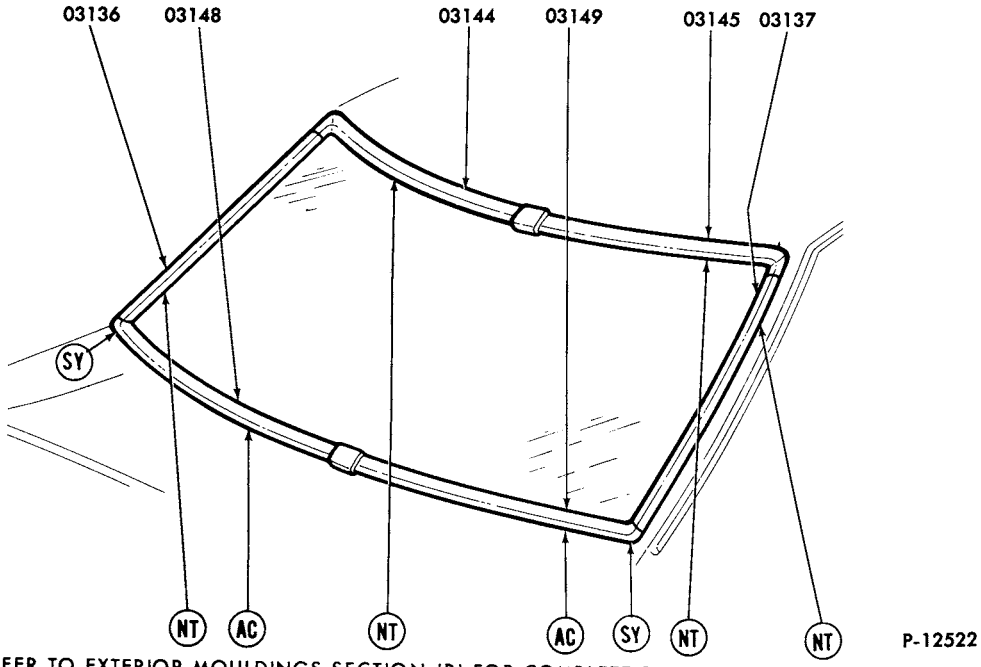

REFER TO EXTERIOR MOULDINGS SECTION 'R' FOR COMPLETE RETAINER INFORMATION

1979 BOBCAT - WINDSHIELD

GROUP NUMBER	PART NAME	DESCRIPTION	PART NUMBER		QTY.
03136-7	Moulding (windshield outside side)	Bright	(RH)♦D1FZ 6203136-A	(LH)♦D1FZ 6203137-A	1
		Black	(RH)♦D6FZ 6403136-A	(LH)♦D6FZ 6403137-A	1
03144-5	Moulding (windshield outside top)	Bright	(RH)♦D1FZ 6203144-A	(LH)♦D1FZ 6203145-A	1
		Black	(RH)★D6FZ 6403144-A	(LH)♦D6FZ 6403145-A	1
03148-9	Moulding (windshield outside belt)	Bright	(RH)♦D4FZ 6203148-A	(LH)♦D4FZ 6203149-A	1
		Black	(RH)♦D6FZ 6403148-A	(LH)♦D6FZ 6403149-A	1

♦ Includes attaching parts

COPYRIGHT © 1986 — FORD MOTOR COMPANY — DEARBORN, MICHIGAN

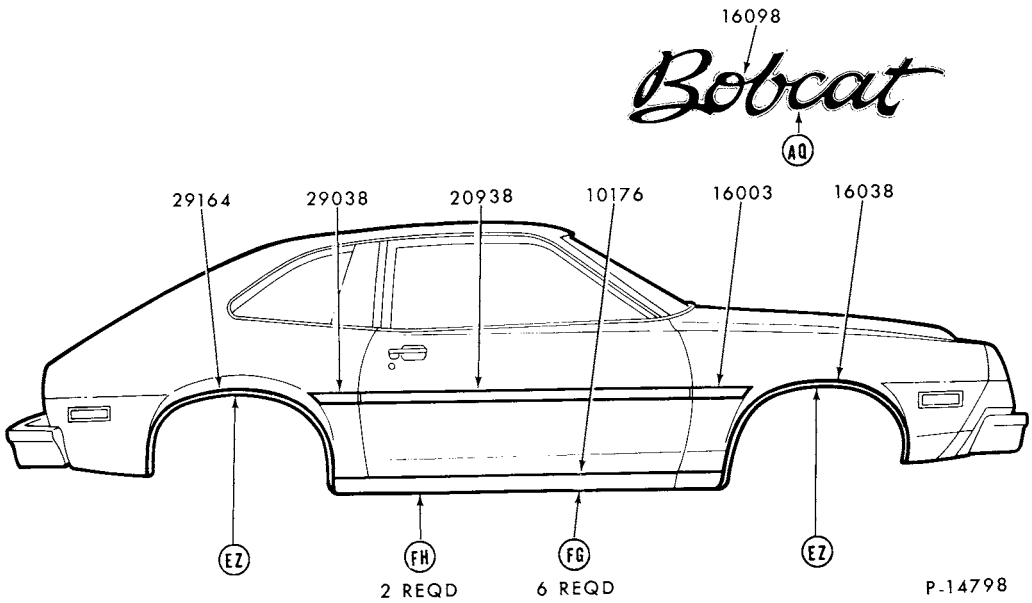

REFER TO EXTERIOR MOULDING SECTION "R" FOR COMPLETE RETAINER INFORMATION

1979 BOBCAT - BODY TYPE 64 - BODY SIDE PROTECTION

GROUP NUMBER	PART NAME	DESCRIPTION	PART NUMBER		QTY.
10176-7	Moulding (body rocker panel)	W/wheel opening moulding	(RH) D5FZ 6210176-B	(LH) D5FZ 6210177-B	1
		W/o wheel opening moulding	♦D6FZ 6210176-A	R.H. and L.H.	2
16003	Moulding (front fender side)	Bright w/black vinyl insert-adhesive backed-cut to fit	D5DZ 5425532-D	R.H. and L.H.	2
16003-4	Moulding (front fender)	Black w/bright insert	(RH) D9FZ 6229039-B	(LH) D9FZ 6229038-B	1
16038-9	Moulding (front fender wheel opening)		(RH)♦D9FZ 16038-A	(LH)♦D9FZ 16039-A	1
16098	Plate (name)	"Bobcat"	♦D5YY 16098-A	R.H. and L.H.	1
		Special	@D7YY 16098-A	R.H. and L.H.	1
20938	Moulding (front door outside)	Bright w/black vinyl insert-adhesive backed-cut to fit	D1OZ 6529038-B	R.H. and L.H.	2
20938-9	Moulding (front door)	Black w/bright insert	(RH) D9FZ 6420938-B	(LH) D9FZ 6420939-B	1
29038	Moulding (quarter panel outside)	Bright w/black vinyl insert-adhesive backed-cut to fit	D5DZ 5425532-D	R.H. and L.H.	2
29038-9	Moulding (quarter panel)	Black w/bright insert	(RH) D9FZ 6229038-B	(LH) D9FZ 6229039-B	1
29164-5	Moulding (quarter panel wheel opening)		(RH)♦D5FZ 6229164-A	(LH)♦D5FZ 6229165-A	1

♦ Includes attaching parts @ Canada only

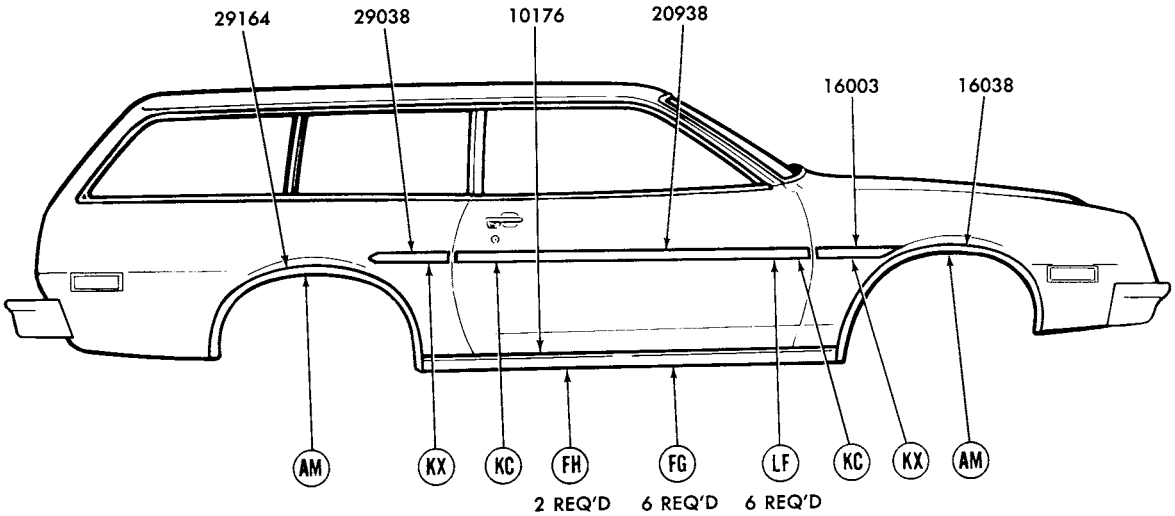

REFER TO EXTERIOR MOULDING SECTION "R" FOR COMPLETE RETAINER INFORMATION

P-13195

1979 BOBCAT - BODY TYPE 73 - BODY SIDE PROTECTION

GROUP NUMBER	PART NAME	DESCRIPTION	PART NUMBER		QTY.
10176-7	Moulding (body rocker panel)	W/wheel opening mouldings-63 1/2" long	(RH)♦D5FZ 6210176-B	(LH)♦D5FZ 6210177-B	1
		W/o wheel opening mouldings-64 29/32" long	D6FZ 6210176-A	R.H. and L.H.	2
16003	Moulding (front fender side)	Bright w/black insert-adhesive backed-cut to fit	D5DZ 5425532-D	R.H. and L.H.	2
		Black w/bright insert-pressure sensitive	(RH) D9FZ 6229039-B	(LH) D9FZ 6229038-B	1
		Brown vinyl insert	♦D7FZ 16003-AT	R.H. and L.H.	2
16038-9	Moulding (front fender wheel opening)	1 1/2" wide	(RH)♦D9FZ 16038-A	(LH)♦D9FZ 16039-A	1
20938-9	Moulding (front door outside)	Bright w/black insert adhesive backed-cut to fit	D1OZ 6529038-B	R.H. and L.H.	2
		Black w/bright-pressure sensitive	(RH) D9FZ 6420938-B	(LH) D9FZ 6420939-B	1
		Brown vinyl insert	♦D7FZ 7320938-BT	R.H. and L.H.	2
29038-9	Moulding (quarter outside)	Bright w/black insert-adhesive backed-cut to fit	D5DZ 5425532-D	R.H. and L.H.	2
		Black w/bright insert-pressure sensitive	(RH) D9FZ 6229038-B	(LH) D9FZ 6229039-B	1
		Brown vinyl insert	♦D7FZ 16003-AT	R.H. and L.H.	2
29164-5	Moulding (quarter wheel opening)	1 1/2" wide	(RH)♦D5FZ 7329164-A	(LH)♦D5FZ 7329165-A	1

♦ Includes attaching parts

COPYRIGHT © 1986 — FORD MOTOR COMPANY — DEARBORN, MICHIGAN

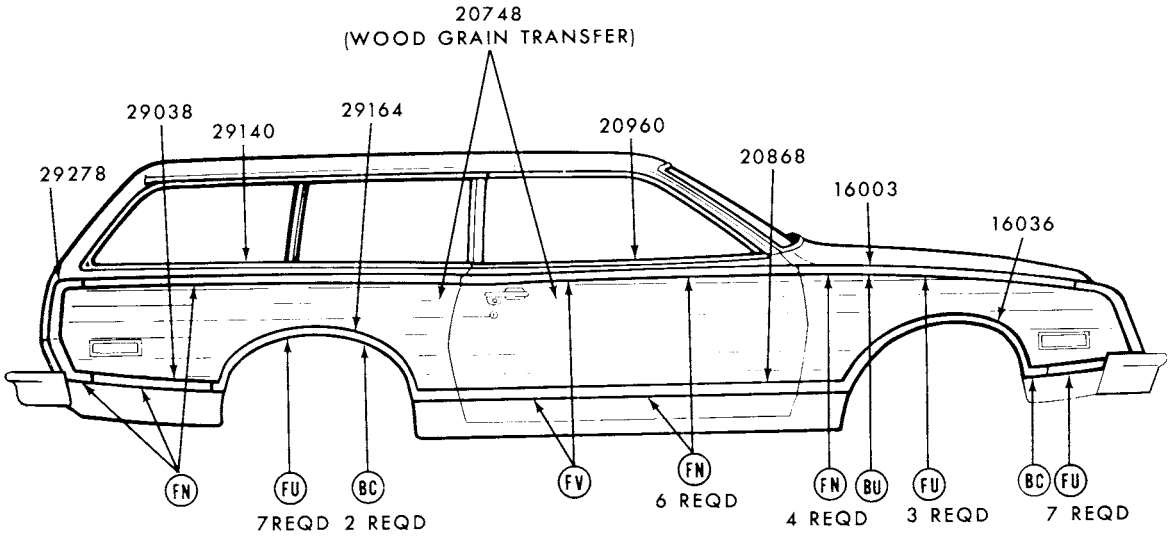

REFER TO EXTERIOR MOULDING SECTION "R" FOR COMPLETE RETAINER INFORMATION

P-14795

1979 BOBCAT - BODY TYPE 73 - SIDE

GROUP NUMBER	PART NAME	DESCRIPTION	PART NUMBER		QTY.
16003-4	Moulding (front fender side upper)		(RH)♦D9FZ 16003-A	(LH)♦D9FZ 16004-A	1
16036-7	Moulding (front fender lower)		(RH)♦D9FZ 16036-A	(LH)♦D9FZ 16037-A	1
16098	Plate (front fender name)	"Bobcat"	♦D5YY 16098-A	R.H. and L.H.	2
20748	Transfer (wood grain)	Cherry wood grain-17" x 60"-cut to fit-for units built at St. Thomas and San Jose	D4FZ 7320748-A		AR
		20" x 80"-cut to fit-for units built at Metuchen	D7OZ 7120748-B		AR
20868-9	Rail (front door outside finish lower)		(RH)♦D7FZ 7320868-A	(LH)♦D7FZ 7320869-A	1
20960-1	Rail (front door outside finish upper)		(RH)♦D7FZ 7320960-A	(LH)♦D7FZ 7320961-A	1
29038-9	Moulding (quarter panel lower)		♦D8FZ 7329038-A	R.H. and L.H.	2
29140-1	Moulding (quarter panel upper)		(RH)♦D8FZ 7329140-A	(LH)♦D8FZ 7329141-A	1
29164-5	Moulding (quarter panel wheel opening)		(RH)♦D8FZ 7329164-A	(LH)♦D8FZ 7329165-A	1
29278-9	Moulding (quarter panel rear)		(RH)♦D8FZ 7329278-A	(LH)♦D8FZ 7329279-A	1

♦ Includes attaching parts

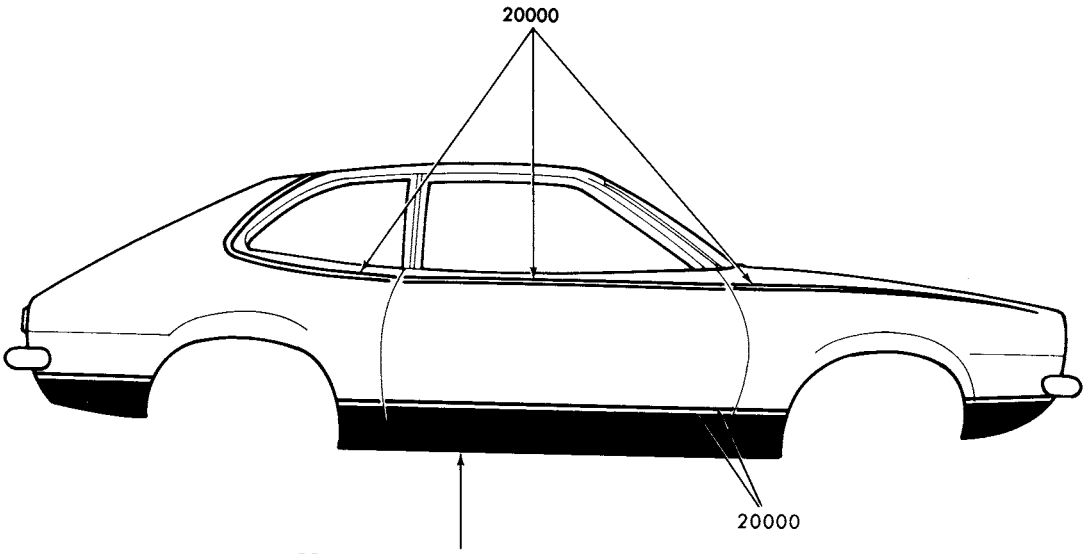

REFER TO PAGE 1 OF PAINT SECTION
FOR ACRYLIC REPAIR MATERIAL

P-12779

1979 BOBCAT - BODY TYPES 62 and 64 - STRIPES

GROUP NUMBER	PART NAME	DESCRIPTION	PART NUMBER	QTY.
20000	Strip kit	1 1/2" wide x 25' roll		
		Blue	D9YY 6220000-AB	1
		Chestnut	D9FZ 6220000-AF	1
		Red	D6FZ 6220000-D	1
		Tangerine	D9YY 6220000-AE	1
		White	D4FZ 6220000-B	1
20000	Stripe kit (body side upper)		Not used in 1979	

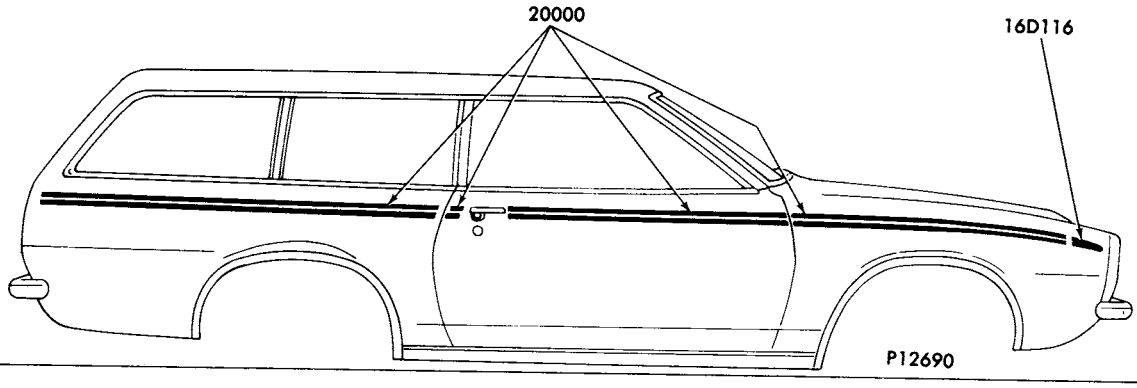

1979 BOBCAT - BODY TYPE 73 - STRIPES

GROUP NUMBER	PART NAME	DESCRIPTION	PART NUMBER	QTY.
16D116-7	Transfer (front fender front)	Gold	(RH) D5YY 16D116-A (LH) D5YY 16D117-A	1
20000	Stripe kit (body side)	Gold-1 1/2" wide x 25' roll	D5YY 7320000-A	1

COPYRIGHT © 1986 — FORD MOTOR COMPANY — DEARBORN, MICHIGAN

New Issue

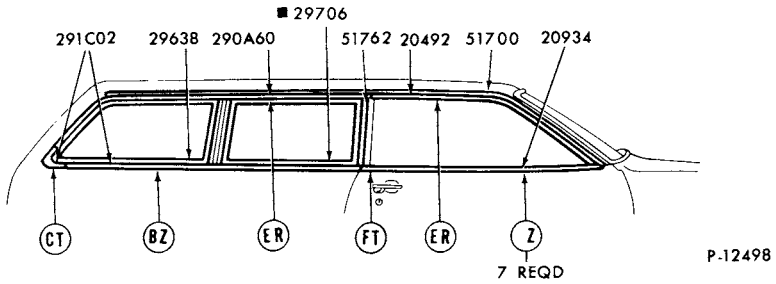

REFER TO EXTERIOR MOULDING SECTION 'R' FOR COMPLETE RETAINER INFORMATION
■ REFER TO GROUP IN TEXT SECTION

1979 BOBCAT - BODY TYPE 73 - DOOR and QUARTER WINDOW FRAME

GROUP NUMBER	PART NAME	DESCRIPTION	PART NUMBER		QTY.
20492-3	Moulding (front door window frame top)	Bright	(RH) D2FZ 7320492-B	(LH) D2FZ 7320943-B	1
		Black	(RH)♦D8YY 7320492-A	(LH)♦D8YY 7320493-A	1
20934-5	Moulding (front door outside belt)	R.H.-w/mirror	(RH)♦D2FZ 7320934-D	(LH)♦D2FZ 7320935-B	1
		R.H.-w/o mirror-bright	(RH)♦D2FZ 7320934-C	(LH)♦D2FZ 7320935-B	1
		Black	(RH)♦D8YY 7320934-A	(LH)♦D8YY 7320935-A	1
290A60-1	Moulding (quarter window outside upper)	Bright	(RH)♦D2FZ 73290A60-A	(LH)♦D2FZ 73290A61-A	1
		Black	(RH)♦D8YY 73290A60-A	(LH)♦D8YY 73290A61-A	1
291C02-3	Moulding (quarter outside belt)	Bright	(RH)♦D2FZ 73291C02-A	(LH)♦D2FZ 73291C03-A	1
		Black	(RH)♦D8YY 73291C02-A	(LH)♦D8YY 73291C03-A	1
29638-9	Moulding (rear quarter window outside front)	Bright	(RH) D4FZ 7329638-A	(LH) D4FZ 7329639-A	1
		Black	(RH) D8YY 7329638-A	(LH) D8YY 7329639-A	1
29706-7	Moulding (front quarter window)	Serviced only in assy.-refer to group 29706-11 in text section			

♦ Includes attaching parts

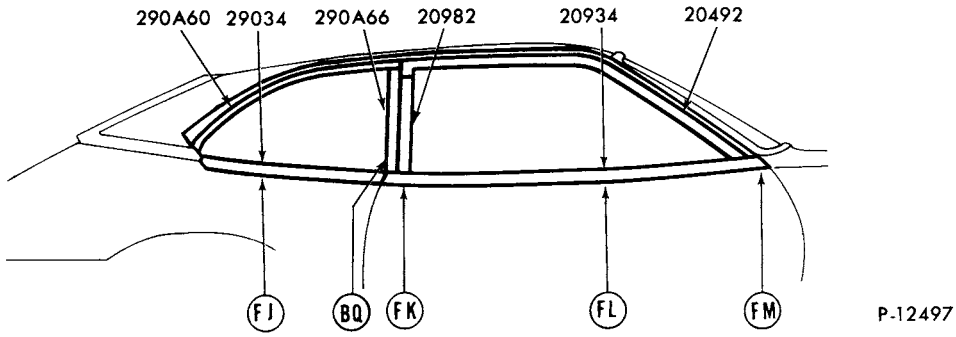

REFER TO EXTERIOR MOULDING SECTION 'R' FOR COMPLETE RETAINER INFORMATION

1979 BOBCAT - BODY TYPES 62 and 64 - DOOR and QUARTER WINDOW FRAME

GROUP NUMBER	PART NAME	DESCRIPTION	PART NUMBER		QTY.
20492-3	Moulding (front door window frame top)		(RH)♦D1FZ 6220492-A	(LH)♦D1FZ 6220493-A	1
20934-5	Moulding (front door outside belt)	R.H.-bright-w/mirror	♦D4FZ 6220934-B		1
		R.H.-black	♦D7FZ 6220934-A		1
		R.H.-bright-w/o mirror	♦D4FZ 6220934-A		1
		L.H.-bright	♦D4FZ 6220935-A		1
		L.H.-black	♦D6FZ 6420935-A		1
20982-3	Moulding (front door window frame rear)		(RH) D2FZ 6220982-A	(LH D2FZ 6220983-A	1
29034-5	Moulding (quarter outside belt)	Bright	(RH)♦D2FZ 6229034-A	(LH)♦D2FZ 6229035-A	1
		Black	(RH)♦D6FZ 6429034-A	(LH)♦D6FZ 6429035-A	1
290A60-1	Moulding (quarter window outside upper)	One piece design-w/stationary window	(RH) D2FZ 66290A60-B	(LH) D2FZ 66290A61-B	1
		Two piece design-w/stationary window	(RH) D2FZ 62290A60-C	(LH) D2FZ 62290A61-C	1
290A66-7	Moulding (quarter window outside front)	Two piece design-w/stationary window	(RH) D2FZ 62290A66-B	(LH) D2FZ 62290A67-B	1

♦ Includes attaching parts

COPYRIGHT © 1986 — FORD MOTOR COMPANY — DEARBORN, MICHIGAN

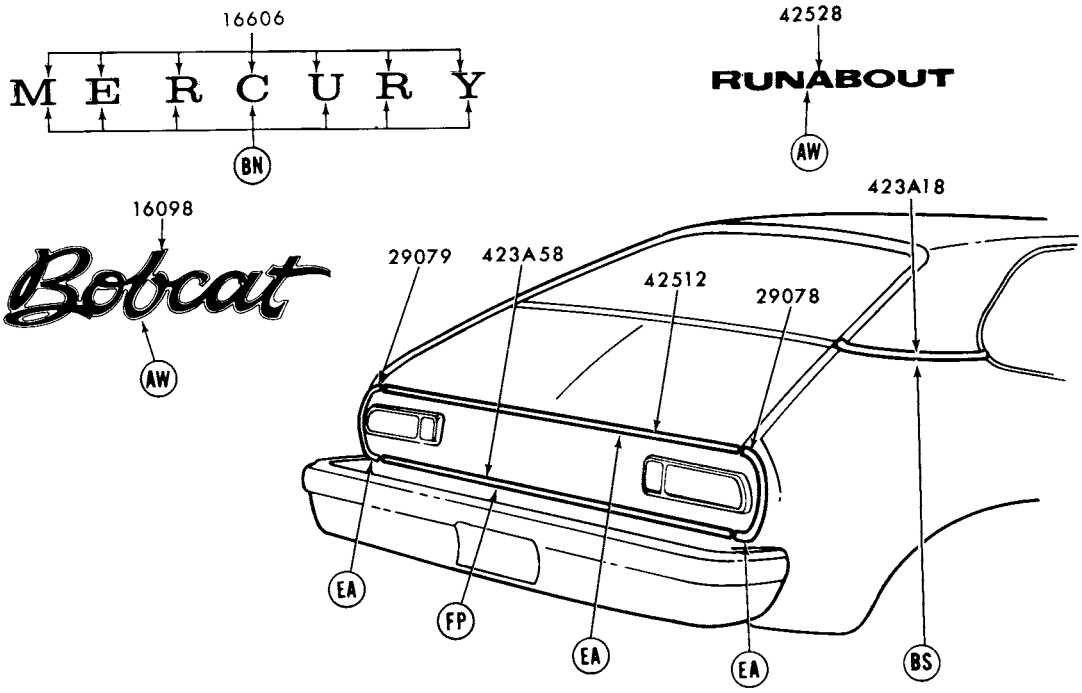

REFER TO EXTERIOR MOULDING SECTION "R" FOR COMPLETE RETAINER INFORMATION

P-11415

1979 BOBCAT - BODY TYPES 62 and 64 - BACK END

GROUP NUMBER	PART NAME	DESCRIPTION	PART NUMBER	QTY
16098	Plate (luggage compartment name)	"Bobcat"	D5YY 16098-A	1
16606	Letter (luggage compartment door)	"M"	♦D54Y 16606-A	1
		"E"	♦D54Y 16606-B	1
		"R"	♦D54Y 16606-C	2
		"C"-body type 62	♦D5YY 6240282-A	1
		"C"-body type 64	♦D5YY 6440282-A	1
		"U"	♦D54Y 16606-E	1
		"Y"	♦D54Y 16606-F	1
29078-9	Moulding (quarter panel extension)		Not used in 1979	
423A18-9	Moulding (back belt outside side)		Not used in 1978	
423A58	Moulding (lower back panel)		Not used in 1979	
42512	Moulding (luggage compartment door)		Not used in 1979	
42528	Plate (luggage compartment door name)	"RUNABOUT"	Not used in 1978	

♦ Includes attaching parts

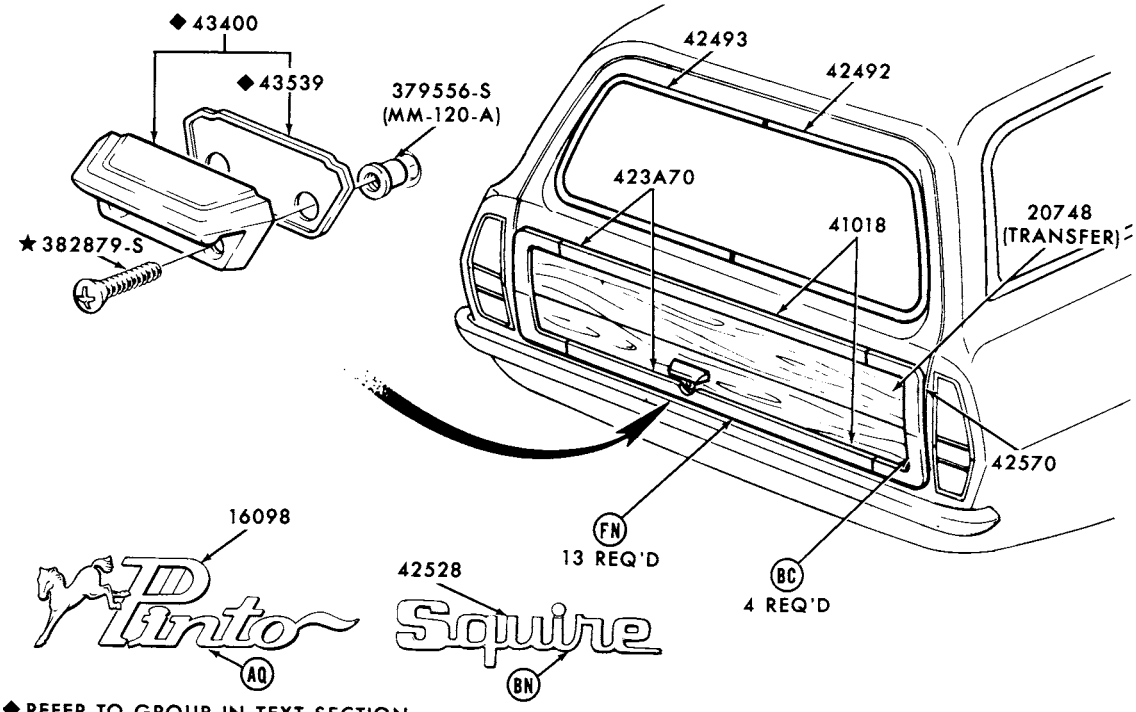

◆ REFER TO GROUP IN TEXT SECTION
REFER TO EXTERIOR MOULDING SECTION "R" FOR COMPLETE RETAINER INFORMATION

P-14445

1979 BOBCAT - BODY TYPE 73 - BACK END

GROUP NUMBER	PART NAME	DESCRIPTION	PART NUMBER	QTY
16098	Plate (liftgate name)	"Bobcat"	D5YY 16098-A	1
		"Villager"	★♦D2GY 16098-B	1
16606	Letter (liftgate door)	"M"	♦D54Y 16606-A	1
		"E"	♦D54Y 16606-B	1
		"R"	♦D54Y 16606-C	2
		"C"	♦D5YY 6440282-A	1
		"U"	♦D54Y 16606-E	1
		"Y"	♦D54Y 16606-F	1
41018	Moulding (liftgate)	Upper	♦D8FZ 7341018-A	1
		Lower	♦D8FZ 7341018-B	1
42492-3	Moulding (back window outside side)	Bright	(RH) D2FZ 7342492-A (LH) D2FZ 7342493-A	1
		Black	(RH) D8YY 7342492-A (LH) D8YY 7342493-A	1
42570-1	Moulding (tailgate side)		(RH)♦D8FZ 7342570-A (LH)♦D8FZ 7342571-A	1

♦ Includes attaching parts

COPYRIGHT © 1986 — FORD MOTOR COMPANY — DEARBORN, MICHIGAN

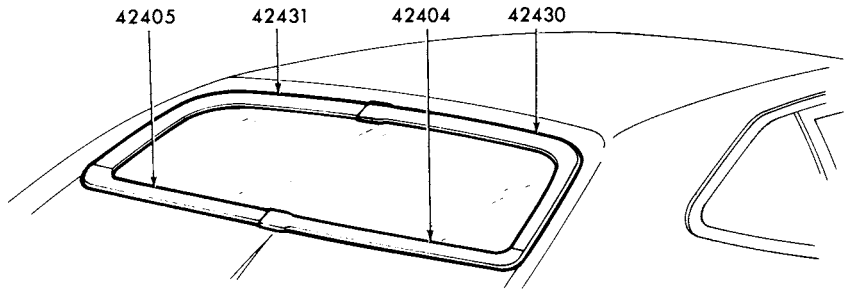

P-12464

1979 BOBCAT - BODY TYPE 62 - BACK WINDOW

GROUP NUMBER	PART NAME	DESCRIPTION	PART NUMBER	QTY
42404-5	Moulding (back window outside lower)		(RH) D1FZ 6242404-A (LH) D1FZ 6242405-A	1
42430-1	Moulding (back window outside upper)		(RH) D1FZ 6242430-A (LH) D1FZ 6242431-A	1

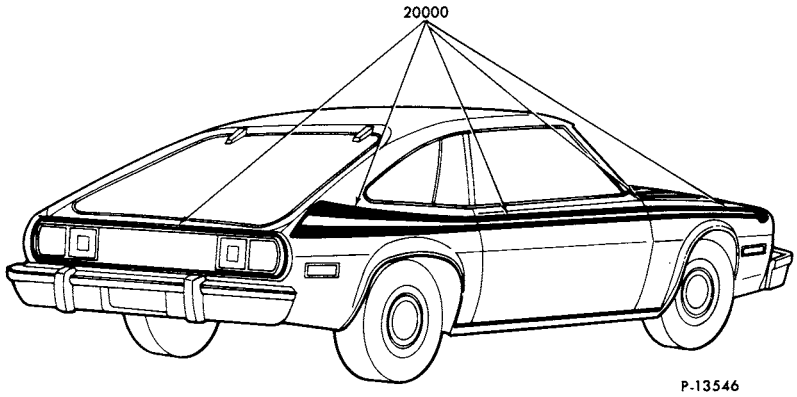

P-13546

1979 BOBCAT - BODY TYPE 64 - STRIPES

♦ Includes attaching parts

1979 BOBCAT - BODY TYPE 64 - STRIPES - cont'd.

GROUP NUMBER	PART NAME	DESCRIPTION	PART NUMBER	QTY.
20000	Stripe kit - complete	Consists of hood cowl, fender, Bobcat head, door, fuel filler cap, quarter panel, lower back panel and extension		
		Multi-color, red, orange and yellow - "Before 12/1/78"	D8YY 6420000-BD	1
		Red, orange and yellow - "From 12/1/78"	D9YY 6420000-AD	1
		Plum, blue-light and medium - "Before 8/10/79"	D8YY 6420000-BB	1
		Plum, blue-light and medium - "From 8/10/79"	D9YY 6420000-AB	1
		Yellow, white and orange - "Before 8/10/79"	D8YY 6420000-BE	1
		Yellow, white and orange - "From 8/10/79"	D9YY 6420000-AE	1
		Yellow, orange, (dark and light) and yellow-chrome - "Before 4/1/79"	D8YY 6420000-BC	1
		Yellow, yellow-orange, dark orange "From 4/1/79"	D9YY 6420000-AC	1
		Consists of door and quarter panel upper		
		Black	D6YY 6420000-B	1

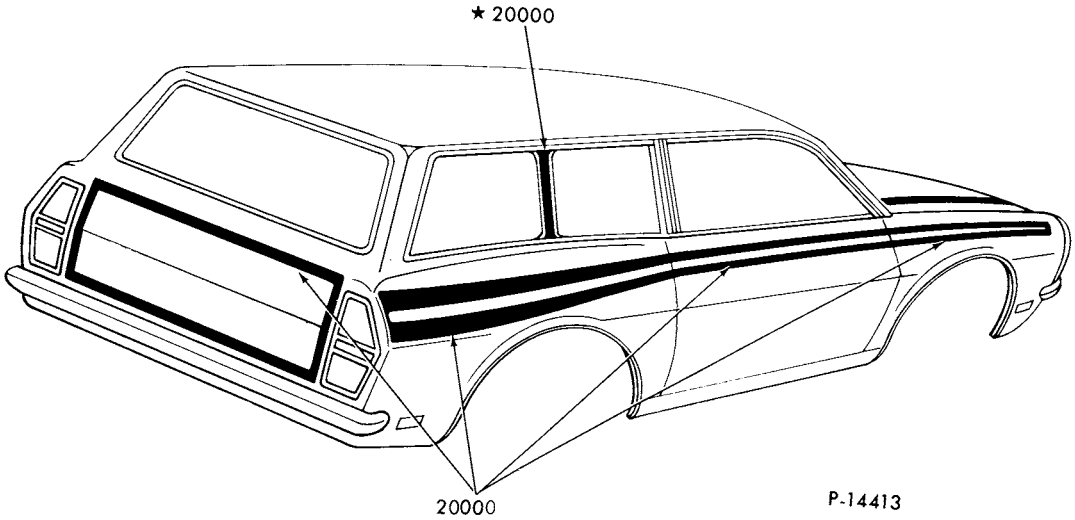

1979 BOBCAT - BODY TYPE 73 - STRIPES

COPYRIGHT © 1986 — FORD MOTOR COMPANY — DEARBORN, MICHIGAN

1979 BOBCAT - BODY TYPE 73 - STRIPES - cont'd.

GROUP NUMBER	PART NAME	DESCRIPTION	PART NUMBER	QTY.
20000	Stripe kit (body side)	Consists of hood, fender, door, quarter panel, fuel filler cap and tailgate		
		Blue (light and medium) and plum	D8YY 7320000-AB	1
		Orange/white/yellow	D8YY 7320000-AE	1
		Orange (dark and light) and yellow	D8YY 7320000-AC	1
		Red, orange and yellow	D8YY 7320000-AD	1

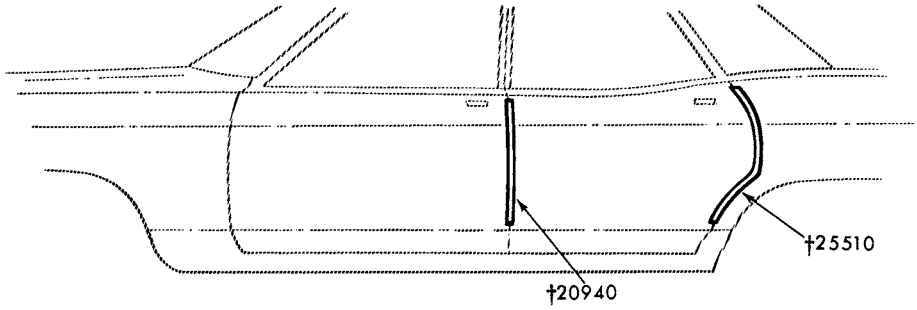

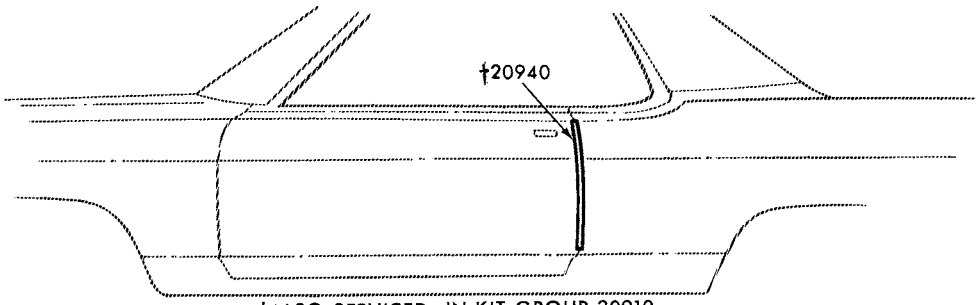

†ALSO SERVICED IN KIT-GROUP 20910

P-10061

1979 BOBCAT - DOOR EDGE GUARD

GROUP NUMBER	PART NAME	DESCRIPTION	PART NUMBER	QTY.
20910	Moulding kit (door edge guard)	Bright	★D1FZ 6220910-A **Not** replaced (6/83)	1
		Woodgrain	D2FZ 7320910-A	1
20940-1	Moulding (door edge guard)	Bright	(RH) D7FZ 6220940-A (LH) D7FZ 6220941-A	1
		Woodgrain	(RH) D3FZ 7320940-A (LH) D3FZ 7320941-A	1

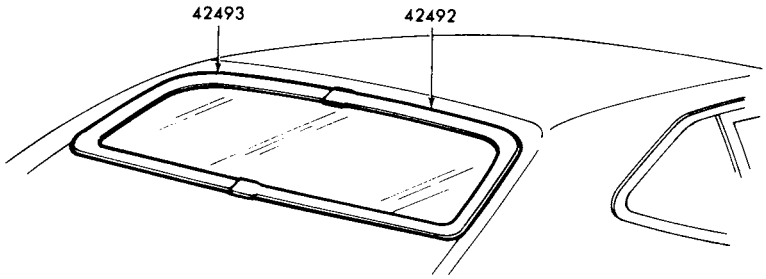

P-12465

1979 BOBCAT - BODY TYPE 64 - BACK WINDOW

GROUP NUMBER	PART NAME	DESCRIPTION	PART NUMBER	QTY.
42492-3	Moulding (back window outside side)		(RH) D2FZ 6442492-A (LH) D2FZ 6442493-A	1

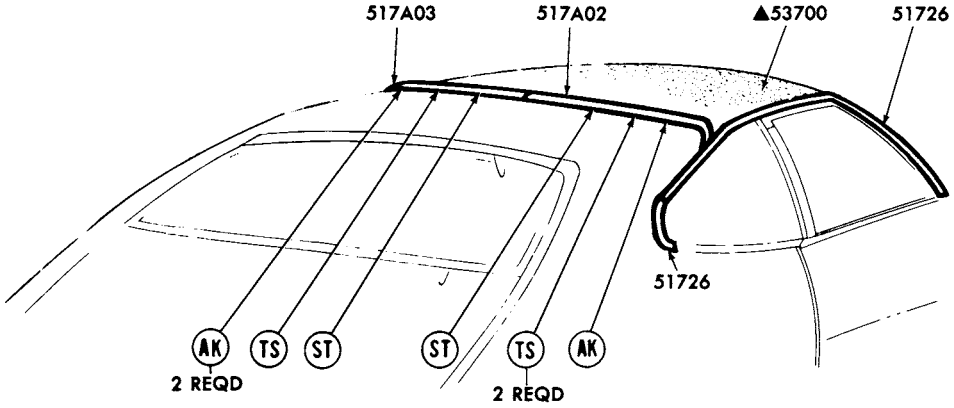

▲REFER TO GROUP IN SOFT TRIM SECTION
REFER TO EXTERIOR MOULDING SECTION "R" FOR COMPLETE RETAINER INFORMATION

P-12811

1979 BOBCAT - BODY TYPES 62 and 64 - ROOF, DRIP SIDE and PARTIAL VINYL ROOF

GROUP NUMBER	PART NAME	DESCRIPTION	PART NUMBER	QTY
517A02-3	Moulding (roof outside top)		Not used for 1979	
51726-7	Moulding (roof drip side finish)	W/o vinyl roof	(RH) D7FZ 6251726-A (LH) D7FZ 6251727-A	1

COPYRIGHT © 1986 — FORD MOTOR COMPANY — DEARBORN, MICHIGAN

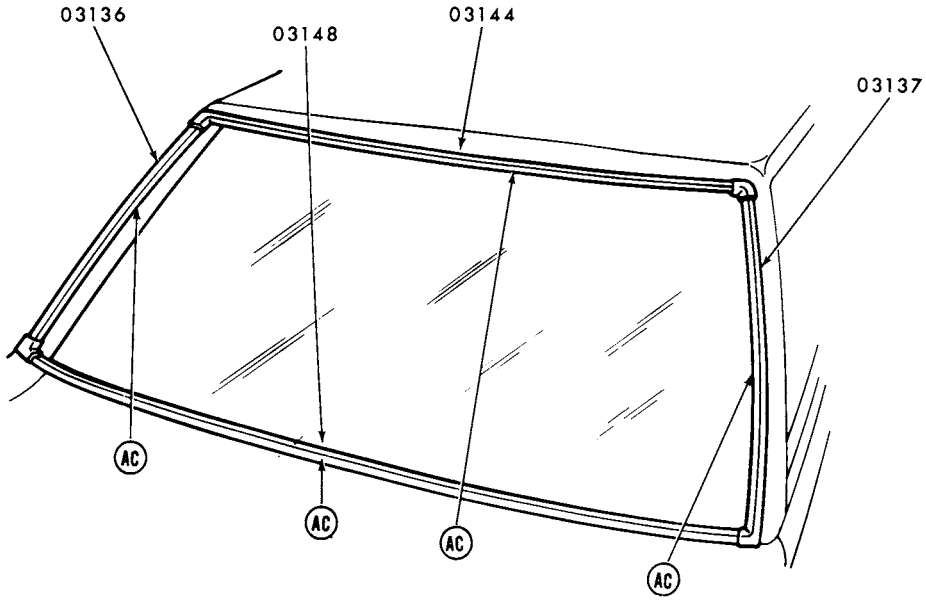

REFER TO EXTERIOR MOULDING SECTION 'R'
FOR COMPLETE RETAINER INFORMATION

P-13998

1979 ZEPHYR - WINDSHIELD

GROUP NUMBER	PART NAME	DESCRIPTION	PART NUMBER		QTY.
03136-7	Moulding (windshield side)	Body type 36R	(RH)♦D8BZ 3603136-A	(LH)♦D8BZ 3603137-A	1
		Body types 54,66,74	(RH)♦D8BZ 5403136-A	(LH)♦D8BZ 5403137-A	1
03144	Moulding (windshield top)	Body type 36R	♦D8BZ 3603144-A		1
		Body types 54,66,74	♦D8BZ 5403144-A		1
03148	Moulding (windshield belt)		♦D8BZ 5403148-A		1

♦ Includes attaching parts

COPYRIGHT © 1986 — FORD MOTOR COMPANY — DEARBORN, MICHIGAN

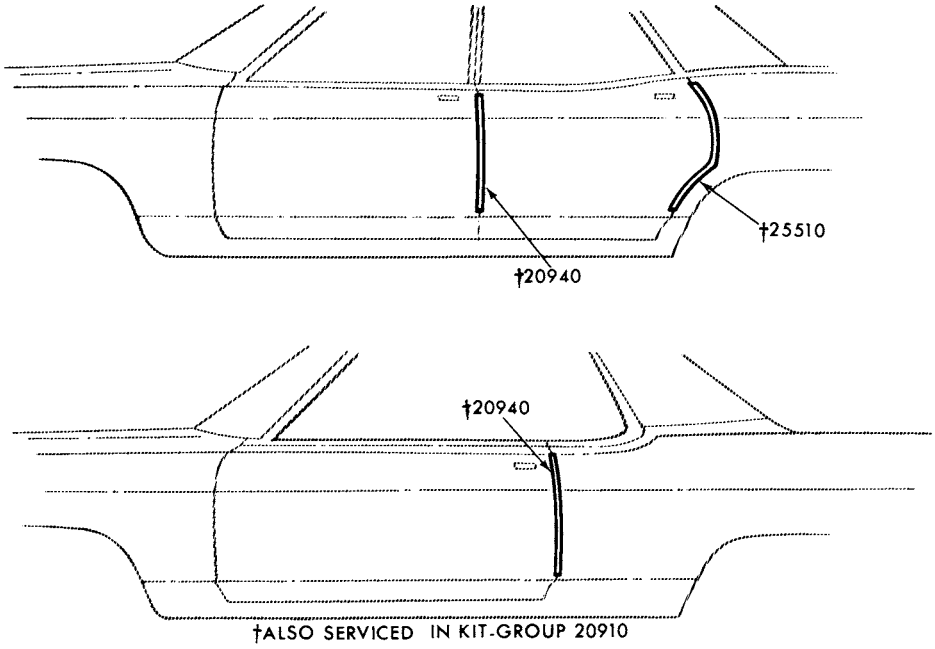

†ALSO SERVICED IN KIT-GROUP 20910

P-10061

1979 ZEPHYR - DOOR EDGE GUARDS

GROUP NUMBER	PART NAME	DESCRIPTION	PART NUMBER	QTY.
20910	Moulding kit (door edge guard)	Bright- Body types 54, 74	D8BZ 5420910-A	1
		Body types 36, 66	D8BZ 6620910-A	1
		Wood grain- Body type 74	D8BZ 7420910-A	1
20940-1	Moulding (front door edge guard)	Bright- Body types 54, 74	(RH) D8BZ 5420940-A (LH) D8BZ 5420941-A	1
		Body types 36, 66	(RH) D8BZ 6620940-A (LH) D8BZ 6620941-A	1
		Wood grain- Body type 74	(RH) D8BZ 7420940-A (LH) D8BZ 7420941-A	1
25510-1	Moulding (rear door edge guard)	Bright- Body types 54, 74	(RH) D8BZ 5425510-A (LH) D8BZ 5425511-A	1
		Wood grain- Body type 74	(RH) D8BZ 7425510-A (LH) D8BZ 7425511-A	1

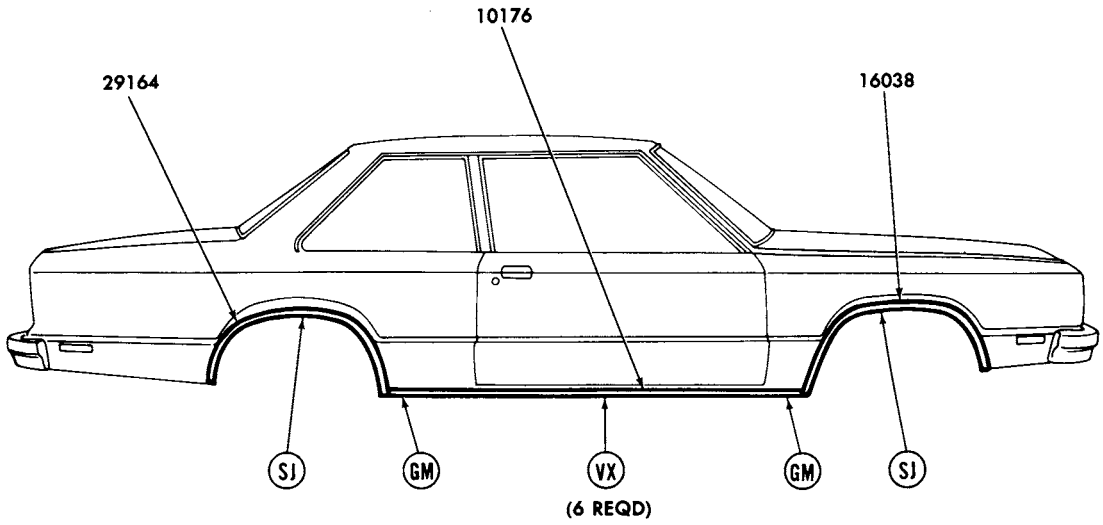

REFER TO EXTERIOR MOULDING SECTION 'R' FOR COMPLETE RETAINER INFORMATION

P-14069

1979 ZEPHYR - ROCKER PANEL and WHEEL OPENING - SIDE

GROUP NUMBER	PART NAME	DESCRIPTION	PART NUMBER		QTY
10176-7	Moulding (body rocker panel)	72 3/4" long	♦D8BZ 5410176-A		2
16038-9	Moulding (front fender wheel opening)		(RH)♦D8BZ 16038-A	(LH)♦D8BZ 16039-A	1
29164-5	Moulding (quarter wheel opening)		(RH)♦D8BZ 5429164-A	(LH)♦D8BZ 5429165-A	1

♦ Includes attaching parts

COPYRIGHT © 1986 — FORD MOTOR COMPANY — DEARBORN, MICHIGAN

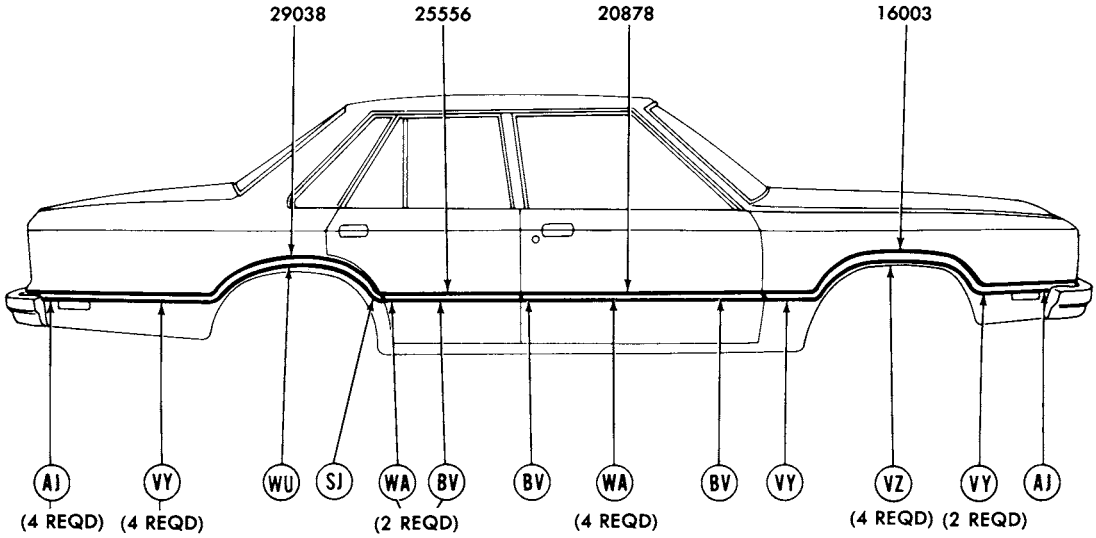

REFER TO EXTERIOR MOULDING SECTION 'R' FOR COMPLETE RETAINER INFORMATION

P-14072

1979 ZEPHYR - BODY TYPE 54 - SIDE - w/VINYL INSERT

GROUP NUMBER	PART NAME	DESCRIPTION	PART NUMBER		QTY.
16003-4	Moulding (front fender)	Black vinyl insert	(RH)♦D8BZ 16003-BA	(LH)♦D8BZ 16004-BA	1
20878-9	Moulding (front door)	Black vinyl insert	(RH)♦D8BZ 5420878-BA	(LH)♦D8BZ 5420879-BA	1
25556-7	Moulding (rear door)	Black vinyl insert	(RH)♦D8BZ 5425556-BA	(LH)♦D8BZ 5425557-BA	1
29038-9	Moulding (quarter panel)	Black vinyl insert	(RH)♦D8BZ 5429038-BA	(LH)♦D8BZ 5429039-BA	1

♦ Includes attaching parts

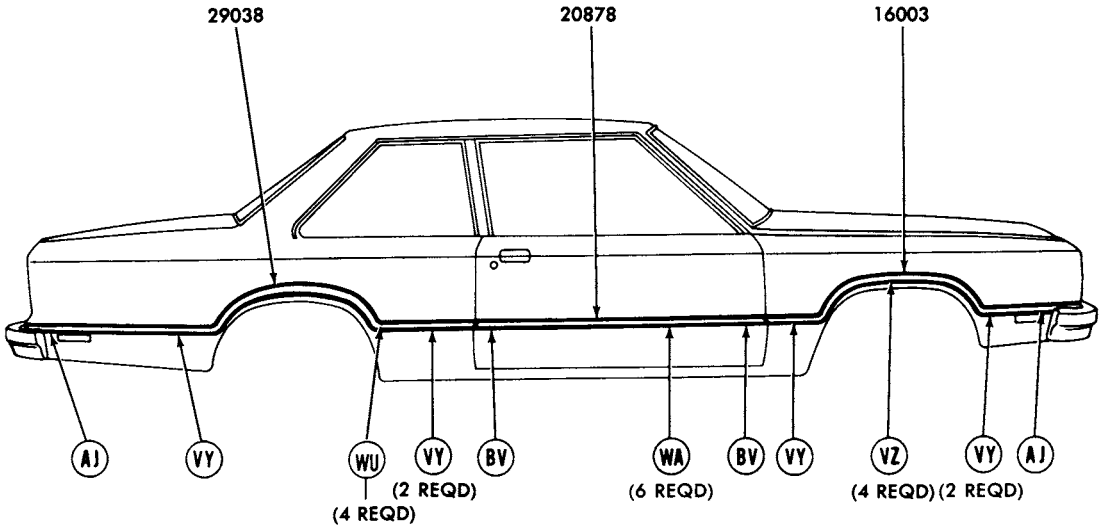

REFER TO EXTERIOR MOULDING SECTION 'R' FOR COMPLETE RETAINER INFORMATION

P-14070

1979 ZEPHYR - BODY TYPES 36 and 66 - SIDE - w/VINYL INSERT

GROUP NUMBER	PART NAME	DESCRIPTION	PART NUMBER		QTY.
16003-4	Moulding (front fender)	Black vinyl insert	(RH)♦D8BZ 16003-BA	(LH)♦D8BZ 16004-BA	1
20878-9	Moulding (door)	Black vinyl insert	(RH)♦D8BZ 6620878-BA	(LH)♦D8BZ 6620879-BA	1
29038-9	Moulding (quarter panel)	Black vinyl insert-body type 36	(RH)♦D9BZ 3629038-AA	(LH)♦D9BZ 3629039-AA	1
		Black vinyl insert-body type 66	(RH)♦D8BZ 6629038-BA	(LH)♦D8BZ 6629039-BA	1

♦ Includes attaching parts

COPYRIGHT © 1986 — FORD MOTOR COMPANY — DEARBORN, MICHIGAN

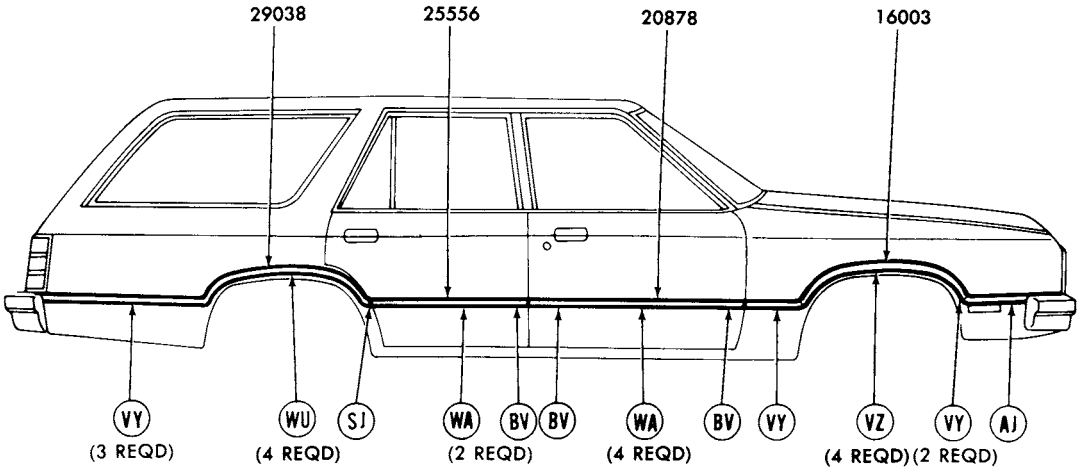

REFER TO EXTERIOR MOULDING SECTION 'R' FOR COMPLETE RETAINER INFORMATION

P-14079

1979 ZEPHYR - BODY TYPE 74 EXCEPT VILLAGER - SIDE

GROUP NUMBER	PART NAME	DESCRIPTION	PART NUMBER		QTY.
16003-4	Moulding (front fender)	Black vinyl insert	(RH)♦D8BZ 16003-BA	(LH)♦D8BZ 16004-BA	1
20878-9	Moulding (front door)	Black vinyl insert	(RH)♦D8BZ 5420878-BA	(LH)♦D8BZ 5420879-BA	1
25556-7	Moulding (rear door)	Black vinyl insert	(RH)♦D8BZ 5425556-BA	(LH)♦D8BZ 5425557-BA	1
29038-9	Moulding (quarter panel)	Black vinyl insert	(RH)♦D8BZ 7429038-BA	(LH)♦D8BZ 7429039-BA	1

♦ Includes attaching parts

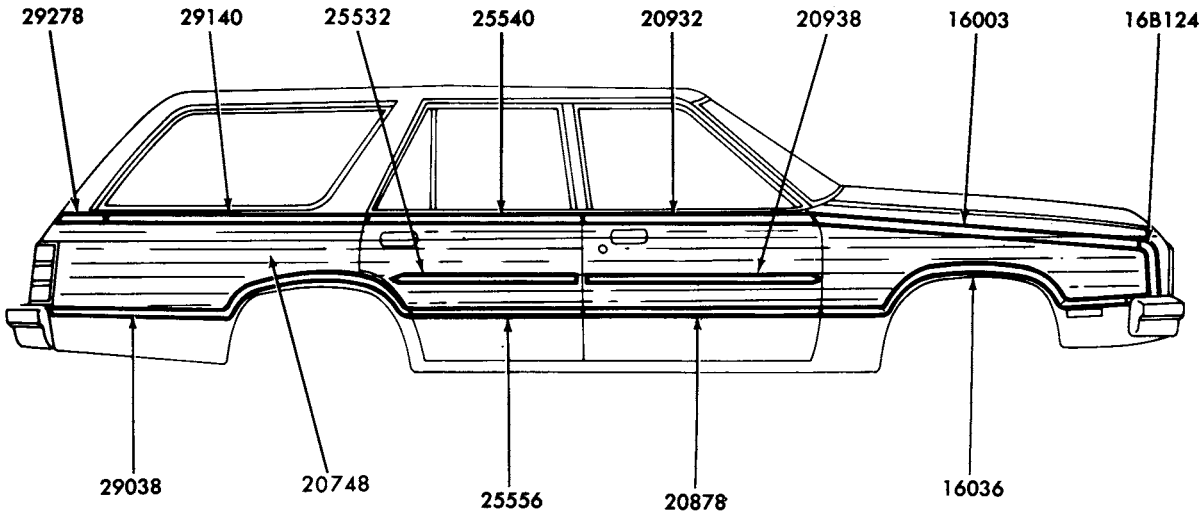

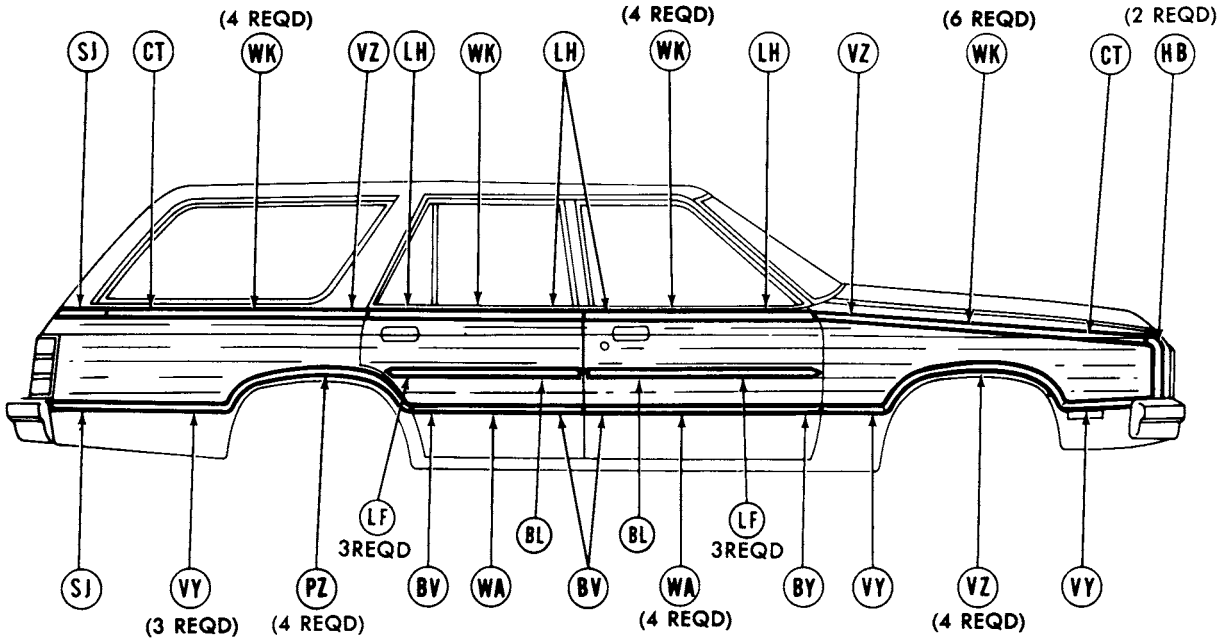

REFER TO EXTERIOR MOULDING SECTION 'R' FOR COMPLETE RETAINER INFORMATION

P-14082

1979 ZEPHYR - BODY TYPE 74 - VILLAGER - SIDE

COPYRIGHT © 1986 — FORD MOTOR COMPANY — DEARBORN, MICHIGAN

1979 ZEPHYR - BODY TYPE 74 - VILLAGER - SIDE - cont'd.

GROUP NUMBER	PART NAME	DESCRIPTION	PART NUMBER		QTY.
16003-4	Moulding (front fender upper)		(RH)♦D8KY 16003-A	(LH)♦D8KY 16004-A	1
16036-7	Moulding (front fender lower)		(RH)♦D8KY 16036-A	(LH)♦D8KY 16037-A	1
16B124-5	Moulding (front fender front)		(RH)♦D8KY 16B124-A	(LH)♦D8KY 16B125-A	1
20748	Transfer	Cherry wood grain			
		16" x 62 1/2"-cut to fit-for units built at Kansas City-"Before 6/1/79"	D8BZ 7420748-A		AR
		17 x 62 1/2-"From 6/1/79" cut to fit-for units built at St. Thomas-from Job 1	D9BZ 7420748-A		AR
20878-9	Moulding (front door lower)		(RH)♦D8KY 7420878-A	(LH)♦D8KY 7420879-A	1
20932-3	Moulding (front door upper)		(RH)♦D8KY 7420932-A	(LH)♦D8KY 7420933-A	1
20938	Moulding (front door)	Brown	♦D8BZ 7420938-A	R.H. and L.H.	2
25532	Moulding (rear door)	Brown	♦D8BZ 7425532-A	R.H. and L.H.	2
25540-1	Moulding (rear door upper)		(RH) D8KY 7425540-A	(LH) D8KY 7425541-A	1
25556-7	Moulding (rear door lower)		(RH)♦D8KY 7425556-A	(LH)♦D8KY 7425557-A	1
29038-9	Moulding (quarter lower)		(RH)♦D8KY 7429038-A	(LH)♦D8KY 7429039-A	1
29140-1	Moulding (quarter upper front)		(RH)♦D8KY 7429140-A	(LH)♦D8KY 7429141-A	1
29278-9	Moulding (quarter upper rear)		(RH)♦D8KY 7429278-A	(LH)♦D8KY 7429279-A	1

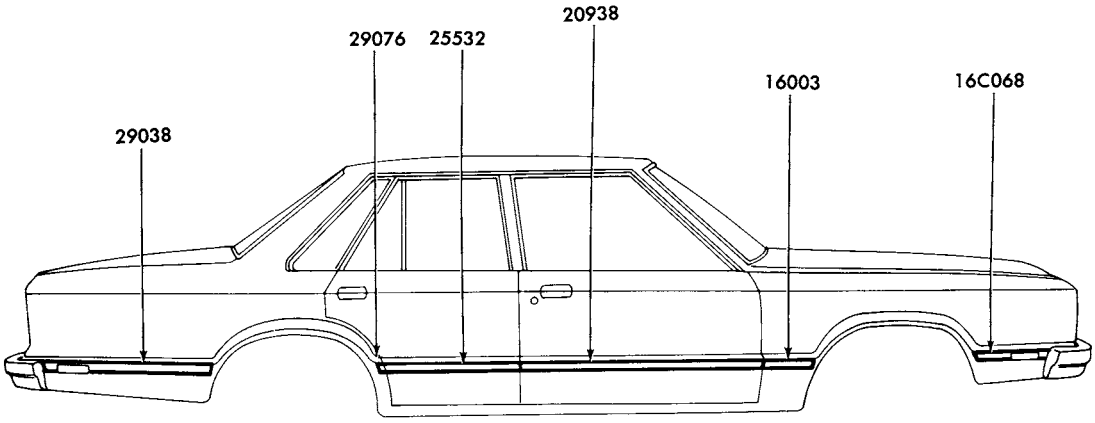

P-14075

1979 ZEPHYR - BODY TYPE 54 - SIDE - ALL VINYL

GROUP NUMBER	PART NAME	DESCRIPTION	PART NUMBER		QTY.
16003-4	Moulding (front fender rear)	Cut to fit	(RH) D8BZ 6629077-B	(LH) D8BZ 6629076-B	1
16C068-9	Moulding (front fender front)		(RH) D8BZ 16C068-A	(LH) D8BZ 16C069-A	1
20938-9	Moulding (front door)		(RH) D8KY 5420938-A	(LH) D8KY 5420939-A	1
25532-3	Moulding (rear door)		(RH) D8KY 5425532-A	(LH) D8KY 5425533-A	1
29038-9	Moulding (quarter panel rear)		(RH) D8BZ 5429038-CA	(LH) D8BZ 5429039-CA	1
29076-7	Moulding (quarter panel front)	Cut to fit	(RH) D8BZ 6629076-B	(LH) D8BZ 6629077-B	1

♦ Includes attaching parts

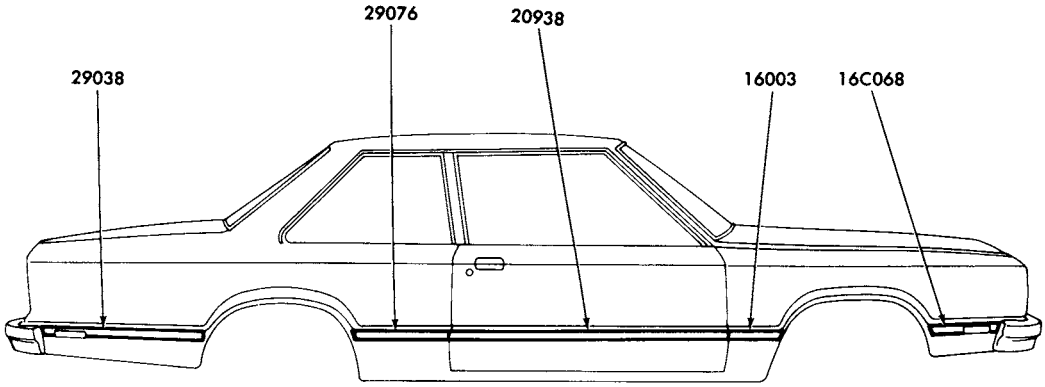

P-14067

1979 ZEPHYR - BODY TYPE 66 - SIDE - ALL VINYL

GROUP NUMBER	PART NAME	DESCRIPTION	PART NUMBER		QTY.
16003-4	Moulding (front fender rear)	Cut to fit	(RH) D8BZ 6629077-B	(LH) D8BZ 6629076-B	1
16C068-9	Moulding (front fender front)		(RH) D8BZ 16C068-A	(LH) D8BZ 16C069-A	1
20938-9	Moulding (front door)		(RH) D8KY 6620938-AA	(LH) D8KY 6620939-AA	1
29038-9	Moulding (quarter panel rear)		(RH) D8BZ 5429038-CA	(LH) D8BZ 5429039-CA	1
29076-7	Moulding (quarter panel front)		(RH) D8BZ 6629076-B	(LH) D8BZ 6629077-B	1

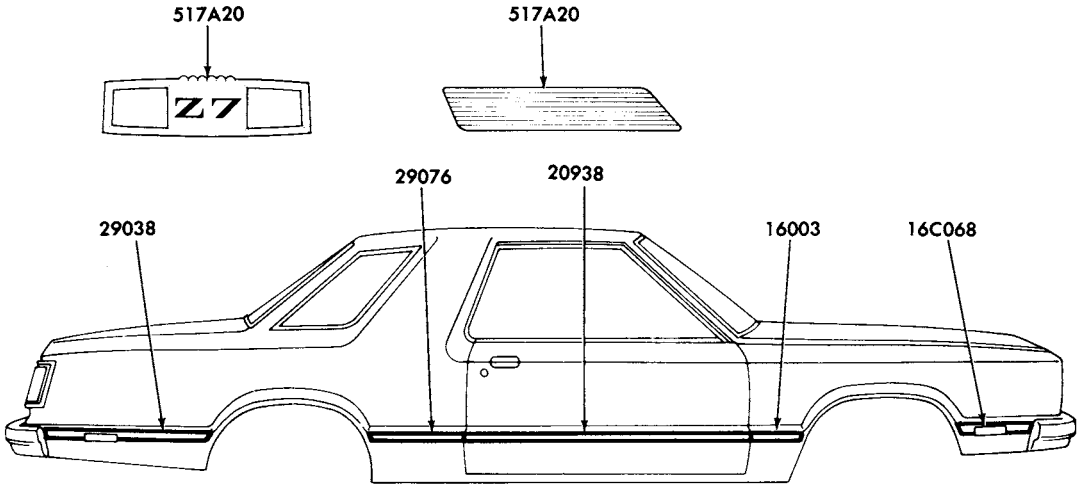

P-14077

1979 ZEPHYR - BODY TYPE 36 - SIDE - ALL VINYL

GROUP NUMBER	PART NAME	DESCRIPTION	PART NUMBER		QTY.
16003-4	Moulding (front fender rear)	Cut to fit	(RH) D8BZ 6629077-B	(LH) D8BZ 6629076-B	
16C068-9	Moulding (front fender front)		(RH) D8BZ 16C068-A	(LH) D8BZ 16C069-A	1
20938-9	Moulding (front door)		(RH) D8KY 6620938-AA	(LH) D8KY 6620939-AA	1
29038-9	Moulding (quarter panel rear)		(RH) D8BZ 3629038-A	(LH) D8BZ 3629039-A	1
29076-7	Moulding (quarter panel front)		(RH) D8BZ 6629076-B	(LH) D8BZ 6629077-B	1
517A20	Ornament (roof side)	"Z7"	D8KY 36517A20-A	R.H. and L.H.	2

COPYRIGHT © 1986 — FORD MOTOR COMPANY — DEARBORN, MICHIGAN

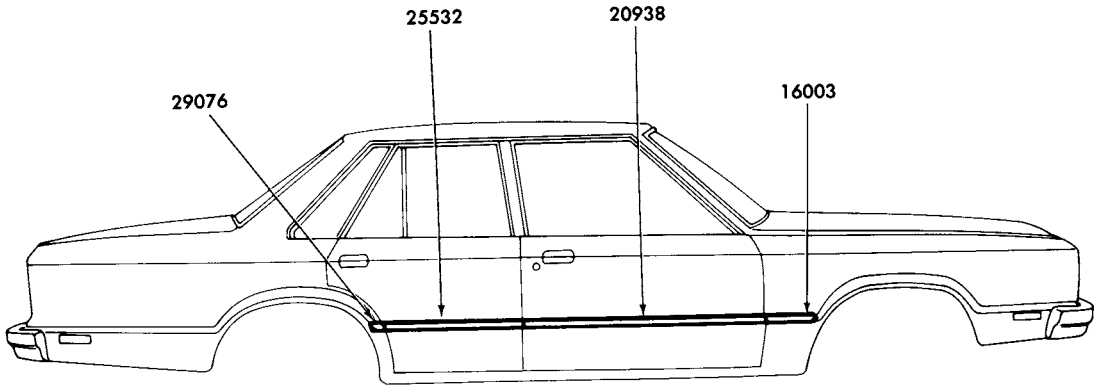

P-14073

1979 ZEPHYR - BODY TYPES 54 and 74 - SIDE PROTECTION

GROUP NUMBER	PART NAME	DESCRIPTION	PART NUMBER	QTY.
16003-4	Moulding (front fender)	@Black - cut to fit	(RH) D8BZ 6629077-B (LH) D8BZ 6629076-B	1
20938-9	Moulding (front door)	@Black - cut to fit	(RH) D8KY 6620938-AA (LH) D8KY 6620939-AA	1
25532-3	Moulding (rear door)	@Black	(RH) D8KY 5425532-A (LH) D8KY 5425533-A	1
29076-7	Moulding (quarter)	@Black - cut to fit	(RH) D8BZ 6629076-B (LH) D8BZ 6629077-B	1

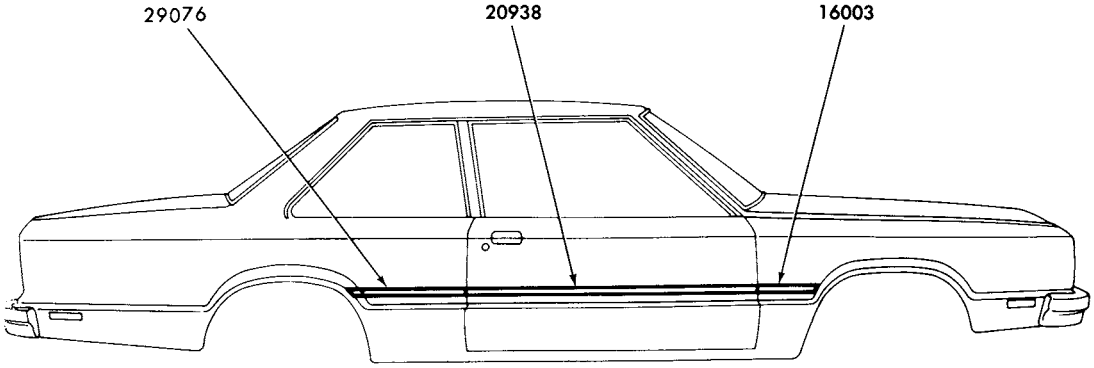

P-14071

1979 ZEPHYR - BODY TYPE 66 - SIDE PROTECTION

GROUP NUMBER	PART NAME	DESCRIPTION	PART NUMBER	QTY.
16003-4	Moulding (front fender)	@Black - cut to fit	(RH) D8BZ 6629077-B (LH) D8BZ 6629076-B	1
20938-9	Moulding (door)	@Black	(RH) D8KY 6620938-AA (LH) D8KY 6620939-AA	1
29076-7	Moulding (quarter)	@Black	(RH) D8BZ 6629076-B (LH) D8BZ 6629077-B	1

@ Adhesive backed

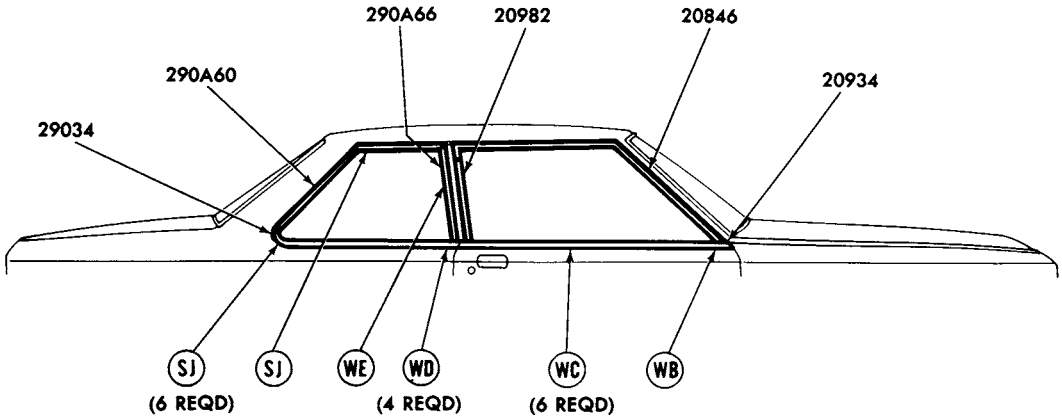

REFER TO EXTERIOR MOULDING SECTION 'R' FOR COMPLETE RETAINER INFORMATION P-14065

1979 ZEPHYR - BODY TYPE 66 - WINDOW w/o QUARTER WINDOW LOUVERS

GROUP NUMBER	PART NAME	DESCRIPTION	PART NUMBER		QTY.
20846-7	Moulding (door window front)	W/o R.H. mirror	(RH) D8BZ 6620846-A	(LH) D8BZ 6620847-A	1
		With R.H. mirror	(RH) D8BZ 6620846-B	(LH) D8BZ 6620847-A	1
20934-5	Moulding (door belt)	W/o R.H. mirror	(RH)♦D8BZ 6620934-A	(LH)♦D8BZ 6620935-A	1
		With R.H. mirror	(RH)♦D8BZ 6620934-B	(LH)♦D8BZ 6620935-A	1
20982-3	Moulding (door window rear)		(RH) D8BZ 6620982-A	(LH) D8BZ 6620983-A	1
29034-5	Moulding (quarter panel belt)		(RH) D8BZ 6629034-A	(LH) D8BZ 6629035-A	1
290A60-1	Moulding (quarter window rear)	Bright	(RH) D8BZ 66290A60-B	(LH) D8BZ 66290A61-B	1
		Paint to match	(RH) D8BZ 66290A60-A	(LH) D8BZ 66290A61-A	1
290A66-7	Moulding (quarter window front)	Bright	(RH)♦D8BZ 66290A66-B	(LH)♦D8BZ 66290A67-B	1
		Paint to match	(RH)♦D8BZ 66290A66-A	(LH)♦D8BZ 66290A67-A	1

♦ Includes attaching parts

COPYRIGHT © 1986 — FORD MOTOR COMPANY — DEARBORN, MICHIGAN

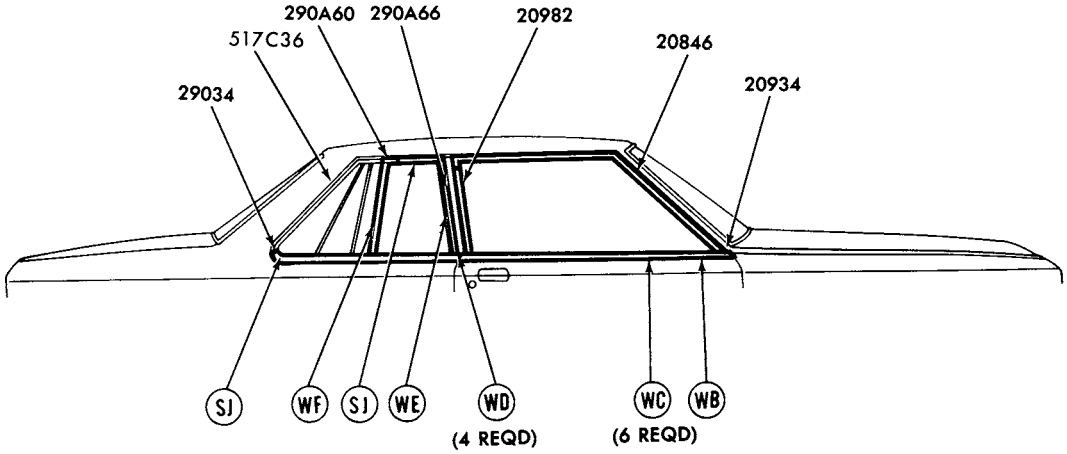

REFER TO EXTERIOR MOULDING SECTION 'R' FOR COMPLETE RETAINER INFORMATION P-14064

1979 ZEPHYR - BODY TYPE 66 - WINDOW w/QUARTER WINDOW LOUVERS

GROUP NUMBER	PART NAME	DESCRIPTION	PART NUMBER		QTY.
20846-7	Moulding (door window front)	W/o R.H. mirror	(RH) D8BZ 6620846-A	(LH) D8BZ 6620847-A	1
		With R.H. mirror	(RH) D8BZ 6620846-B	(LH) D8BZ 6620847-A	1
20934-5	Moulding (door belt)	W/o R.H. mirror	(RH)♦D8BZ 6620934-A	(LH)♦D8BZ 6620935-A	1
		With R.H. mirror	(RH)♦D8BZ 6620934-B	(LH)♦D8BZ 6620935-A	1
20982-3	Moulding (door window rear)		(RH) D8BZ 6620982-A	(LH) D8BZ 6620983-A	1
29034-5	Moulding (quarter panel belt)		(RH) D8BZ 6629034-A	(LH) D8BZ 6629035-A	1
290A60-1	Moulding (quarter window)	Bright-rear	(RH) D8BZ 66290A60-D	(LH) D8BZ 66290A61-D	1
		Paint to match	(RH) D8KY 66290A60-A	(LH) D8KY 66290A61-A	1
		Upper			
		Bright	(RH) D8BZ 66290A60-C	(LH) D8BZ 66290A61-C	1
		Paint to match	(RH) D8KY 66290A60-B	(LH) D8KY 66290A61-B	1
290A66-7	Moulding (quarter window front)	Bright	(RH)♦D8BZ 66290A66-B	(LH)♦D8BZ 66290A67-B	1
		Paint to match	(RH)♦D8BZ 66290A66-A	(LH)♦D8BZ 66290A67-A	1
517C36-7	Spacer (door drip side rear)		(RH) D8KY 54517C36-A	(LH) D8KY 54517C37-A	1

♦ Includes attaching parts

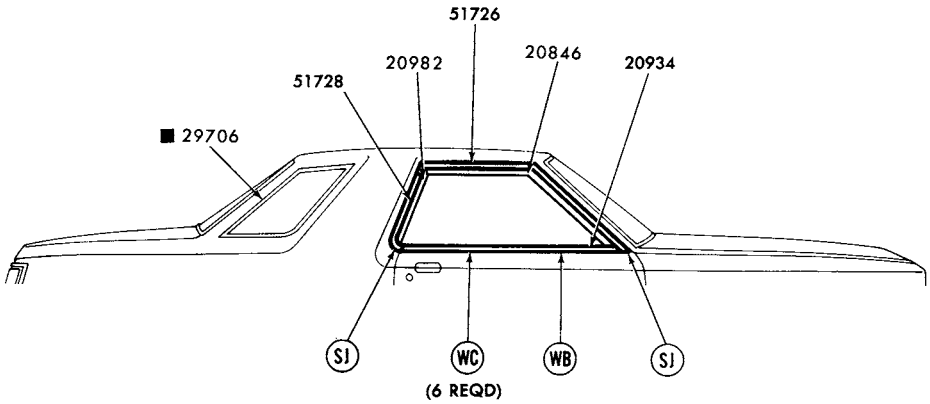

P-14078

REFER TO EXTERIOR MOULDING SECTION 'R' FOR COMPLETE RETAINER INFORMATION
■ REFER TO GROUP IN TEXT SECTION

1979 ZEPHYR - BODY TYPE 36 - WINDOW FRAME and BELT

GROUP NUMBER	PART NAME	DESCRIPTION	PART NUMBER		QTY.
20846-7	Moulding (door window front)	W/o R.H. mirror	(RH) D8BZ 3620846-A	(LH) D8BZ 3620847-A	1
		With R.H. mirror	(RH) D8BZ 3620846-B	(LH) D8BZ 3620847-A	1
20934-5	Moulding (door belt)	With R.H. mirror	(RH)♦D8BZ 3620934-A	(LH)♦D8BZ 3620935-A	1
		W/o R.H. mirror	(RH)♦D8BZ 6620934-A	(LH)♦D8BZ 3620935-A	1
20982-3	Moulding (door window rear)		(RH) D8BZ 3620982-A	(LH) D8BZ 3620983-A	1
51726-7	Moulding (roof drip side front)		(RH) D8BZ 3651726-B	(LH) D8BZ 3651727-B	1
51728-9	Moulding (roof drip side rear)		(RH) D8BZ 3651728-A	(LH) D8BZ 3651729-A	1

♦ Includes attaching parts

COPYRIGHT © 1986 — FORD MOTOR COMPANY — DEARBORN, MICHIGAN

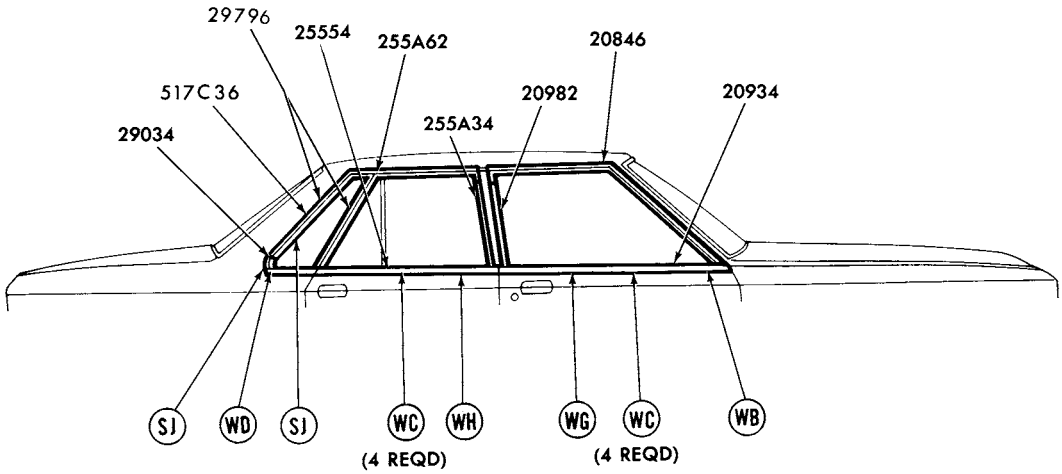

REFER TO EXTERIOR MOULDING SECTION 'R' FOR COMPLETE RETAINER INFORMATION

P-14076

1979 ZEPHYR - BODY TYPE 54 - WINDOW FRAME and BELT

GROUP NUMBER	PART NAME	DESCRIPTION	PART NUMBER		QTY.
20846-7	Moulding (front door window front)	W/o R.H. mirror	(RH) D8BZ 5420846-A	(LH) D8BZ 5420847-A	1
		With R.H. mirror	(RH) D8BZ 5420846-B	(LH) D8BZ 5420847-A	1
20934-5	Moulding (front door belt)	W/o R.H. mirror	(RH)♦D8BZ 5420934-A	(LH)♦D8BZ 5420935-A	1
		With R.H. mirror	(RH)♦D8BZ 5420934-B	(LH)♦D8BZ 5420935-A	1
20982-3	Moulding (front door window rear)		(RH) D8BZ 5420982-A	(LH) D8BZ 5420983-A	1
255A34-5	Moulding (rear door window front)		(RH) D8BZ 54255A34-A	(LH) D8BZ 54255A35-A	1
25554-5	Moulding (rear door belt)		(RH)♦D8BZ 5425554-A	(LH)♦D8BZ 5425555-A	1
255A62-3	Moulding (rear door window rear)		(RH) D8BZ 54255A62-A	(LH) D8BZ 54255A63-A	1
29034-5	Moulding (quarter belt)		(RH)♦D8BZ 5429034-A	(LH)♦D8BZ 5429035-A	1
29796-7	Moulding (quarter window)	W/o louvers-paint to match	(RH)♦D8KY 5429796-A	(LH)♦D8KY 5429797-A	1
		Bright	(RH)♦D8BZ 5429796-B	(LH)♦D8BZ 5429797-B	1
517C36-7	Spacer (rod drip side rear)	W/louvers	(RH) D8KY 54517C36-A	(LH) D8KY 54517C37-A	1

♦ Includes attaching parts

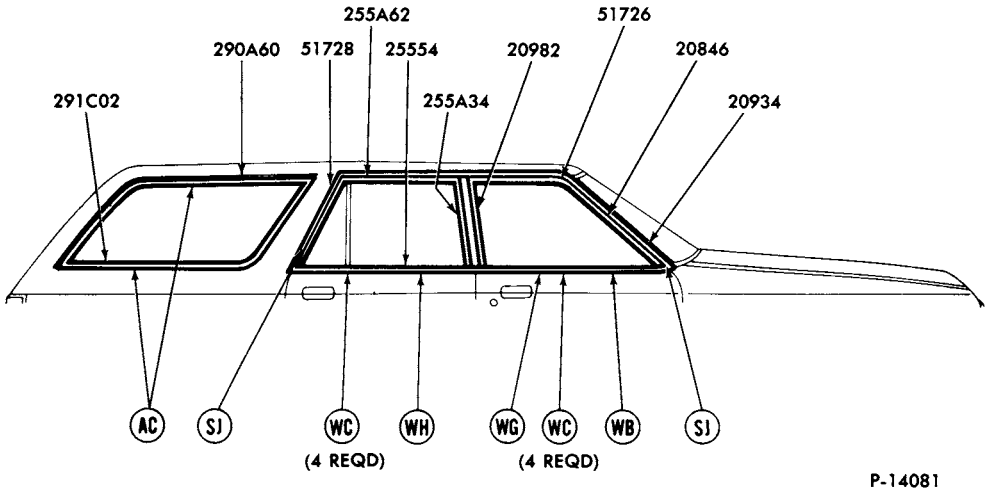

P-14081

REFER TO EXTERIOR MOULDING SECTION 'R' FOR COMPLETE RETAINER INFORMATION.

1979 ZEPHYR - BODY TYPE 74 - WINDOW FRAME and BELT

GROUP NUMBER	PART NAME	DESCRIPTION	PART NUMBER		QTY.
20846-7	Moulding (front door window front)	W/o R.H. mirror	(RH) D8BZ 5420846-A	(LH) D8BZ 5420847-A	1
		W/R.H. mirror	(RH) D8BZ 5420846-B	(LH) D8BZ 5420847-A	1
20934-5	Moulding (front door belt)	W/o R.H. mirror	(RH)♦D8BZ 5420934-A	(LH)♦D8BZ 5420935-A	1
		W/ R.H. mirror	(RH)♦D8BZ 5420934-B	(LH)♦D8BZ 5420935-A	1
20982-3	Moulding (front door window rear)		(RH) D8BZ 5420982-A	(LH) D8BZ 5420983-A	1
255A34-5	Moulding (rear door window front)		(RH) D8BZ 54255A34-A	(LH) D8BZ 54255A35-A	1
25554-5	Moulding (rear door belt)		(RH)♦D8BZ 5425554-A	(LH)♦D8BZ 5425555-A	1
255A62-3	Moulding (rear door window rear)		(RH) D8BZ 74255A62-A	(LH) D8BZ 74255A63-A	1
290A60-1	Moulding (quarter window upper)	Black/bright	(RH)♦D8BZ 74290A60-A	(LH)♦D8BZ 74290A61-A	1
		Bright	(RH)♦D9BZ 74290A60-A	(LH)♦D9BZ 74290A61-A	1
291C02-3	Moulding (quarter window lower)	Black/bright	(RH)♦D8BZ 74291C02-AA	(LH)♦D8BZ 74291C03-AA	1
		Bright	(RH)♦D9BZ 74291C02-A	(LH)♦D9BZ 74291C03-A	1
51726-7	Moulding (roof drip side front)		(RH) D8BZ 7451726-A	(LH) D8BZ 7451727-A	1
51728-9	Moulding (roof drip side rear)		(RH) D8BZ 7451728-A	(LH) D8BZ 7451729-A	1

♦ Includes attaching parts

COPYRIGHT © 1986 — FORD MOTOR COMPANY — DEARBORN, MICHIGAN

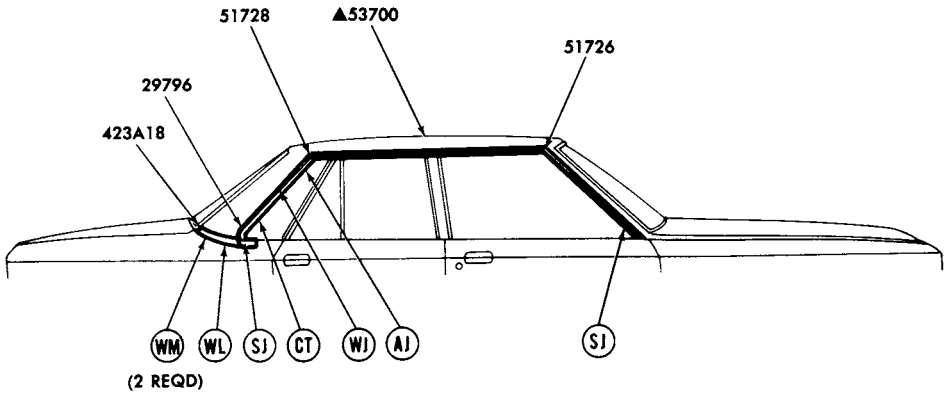

REFER TO EXTERIOR MOULDING SECTION 'R' FOR COMPLETE RETAINER INFORMATION P-14066
▲REFER TO GROUP IN SOFT TRIM SECTION

1979 ZEPHYR - BODY TYPES 54 and 66 - ROOF DRIP SIDE

GROUP NUMBER	PART NAME	DESCRIPTION	PART NUMBER		QTY.
29796-7	Moulding (quarter window lower)	Paint to match	(RH) D8BZ 5429796-D	(LH) D8BZ 5429797-D	1
423A18-9	Moulding (back belt side)		(RH)♦D8BZ 54423A18-A	(LH)♦D8BZ 54423A19-A	1
51726-7	Moulding (roof drip side front)	Body type 54-incl. weatherstrip	(RH) D8BZ 5451726-B	(LH) D8BZ 5451727-B	1
		Body type 66-incl. weatherstrip	(RH) D8BZ 6651726-B	(LH) D8BZ 6651727-B	1
51728-9	Moulding (roof drip side rear)		(RH)♦D8BZ 5451728-A	(LH)♦D8BZ 5451729-A	1

♦ Includes attaching parts

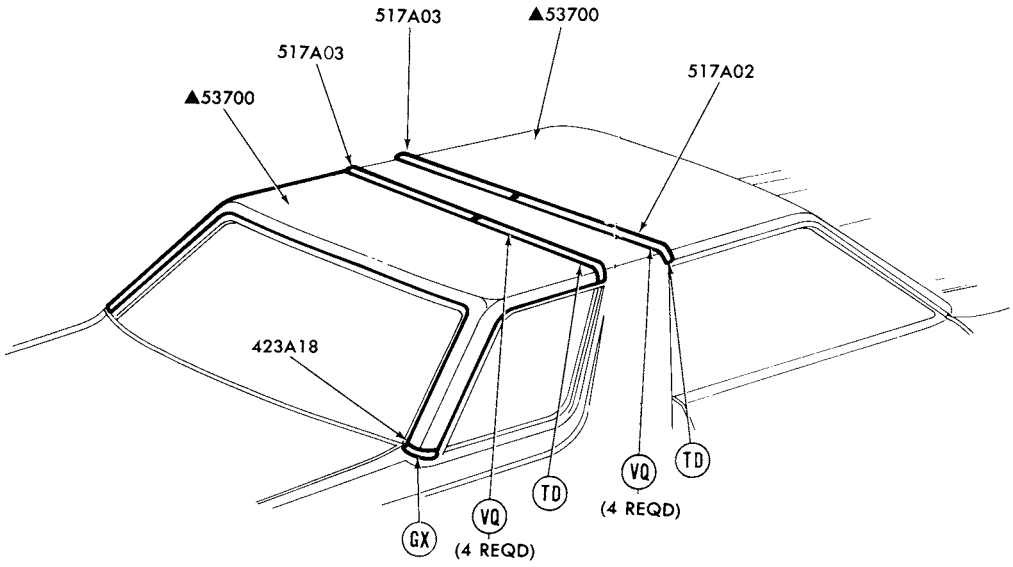

▲REFER TO GROUP IN SOFT TRIM SECTION
REFER TO EXTERIOR MOULDING SECTION 'R' FOR COMPLETE RETAINER INFORMAITON

P-14085

1979 ZEPHYR - BODY TYPE 36R - ROOF MOULDINGS

GROUP NUMBER	PART NAME	DESCRIPTION	PART NUMBER		QTY.
423A18-9	Moulding (back belt side)	Paint to match	(RH)♦D8BZ 36423A18-A	(LH)♦D8BZ 36423A19-A	1
517A02-3	Moulding (roof)	Front-paint to match	(RH)♦D8BZ 36517A02-A	(LH)♦D8BZ 36517A03-A	1
		Front-bright finish	(RH) D9BZ 36517A02-B	(LH) D9BZ 36517A03-A	1
		Rear-paint to match	(RH)♦D8BZ 36517A02-B	(LH)♦D8BZ 36517A03-B	1
		Rear-bright finish	(RH) D9BZ 36517A02-A	(LH) D9BZ 36517A03-B	1

♦ Includes attaching parts

COPYRIGHT © 1986 — FORD MOTOR COMPANY — DEARBORN, MICHIGAN

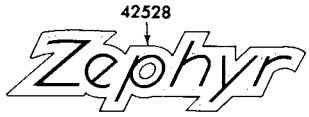

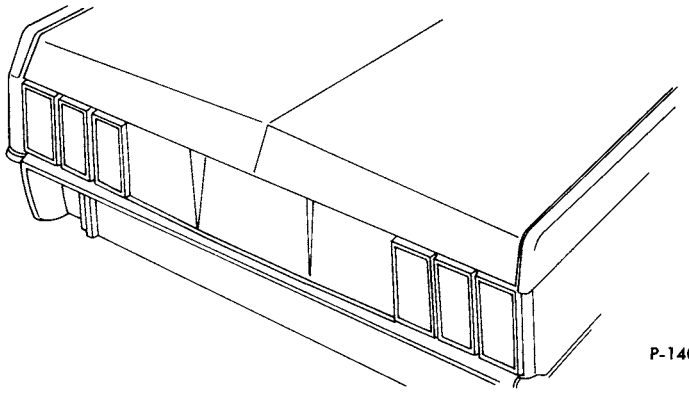

1979 ZEPHYR - BODY TYPES 36, 54 and 66 - BACK END

GROUP NUMBER	PART NAME	DESCRIPTION	PART NUMBER	QTY.
42528	Plate (name)	"GHIA"	D9ZZ 6642528-C	1
		"MERCURY"	D9CY 6142528-B	1
		"Zephyr"	D8KY 5442528-B	1

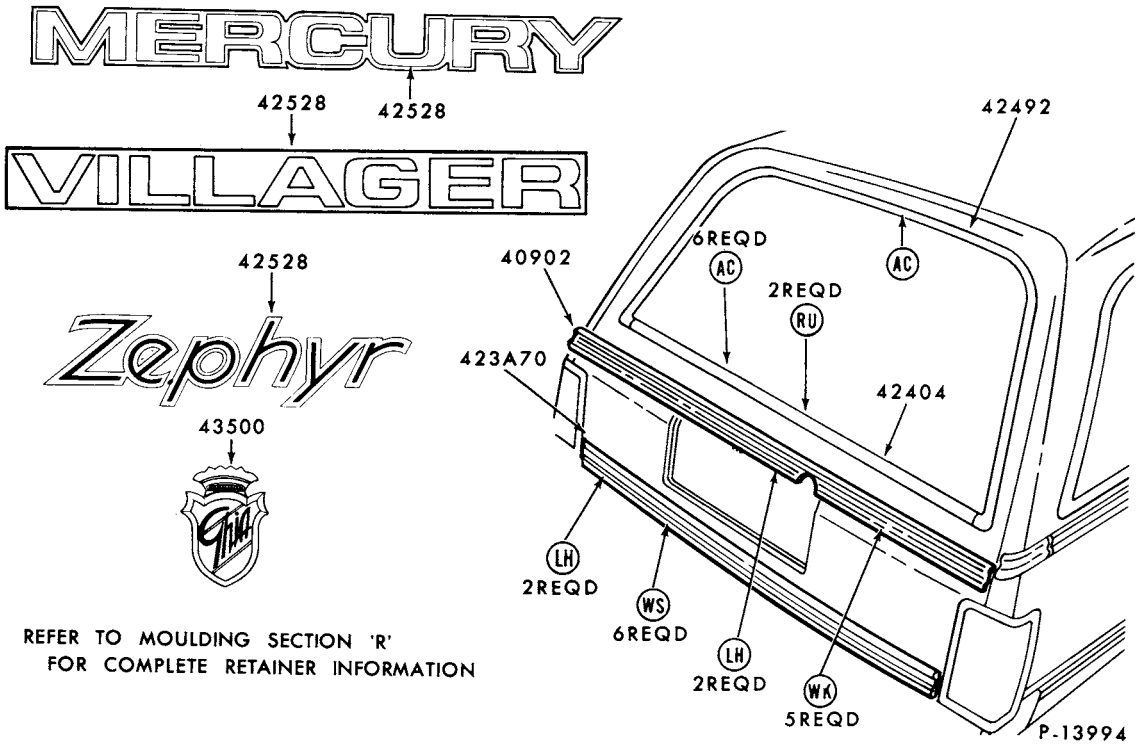

1979 ZEPHYR - BODY TYPE 74 - BACK END

GROUP NUMBER	PART NAME	DESCRIPTION	PART NUMBER	QTY.
40902	Moulding (liftgate upper)	W/o washer and wiper	♦D8KY 7440902-A	1
		W/ washer and wiper	D8KY 7440902-B	1
423A70	Moulding (liftgate lower)		♦D8KY 74423A70-A	1
42404	Moulding (back window lower)		♦D8BZ 7442404-A	1
42492	Moulding (back window lower)		♦D8BZ 7442492-A	1
42528	Plate (name)	"MERCURY"	D8KY 7442528-C	1
		"VILLAGER"	D8KY 7442528-D	1
		"Zephyr"	E2KY 5442528-A	1
43500	Ornament (liftgate)	"GHIA"	D9KY 7443500-A	1

♦ Includes attaching parts

COPYRIGHT © 1986 — FORD MOTOR COMPANY — DEARBORN, MICHIGAN

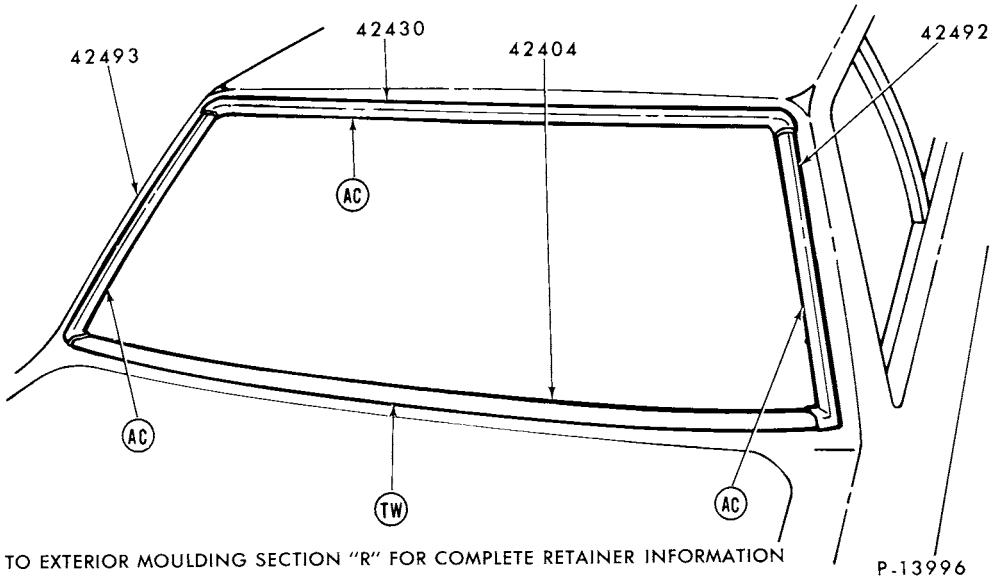

REFER TO EXTERIOR MOULDING SECTION "R" FOR COMPLETE RETAINER INFORMATION

1979 ZEPHYR - BODY TYPES 36, 54 and 66 - BACK WINDOW

GROUP NUMBER	PART NAME	DESCRIPTION	PART NUMBER		QTY.
42404	Moulding (back window lower)		♦D8BZ 5442404-A		1
42430	Moulding (back window upper)	Body type 36R	♦D8BZ 3642430-A		1
		Body types 54 and 66	♦D8BZ 5442430-A		1
42492-3	Moulding (back window side)	Body type 36R	(RH)♦D8BZ 3642492-A	(LH)♦D8BZ 3642493-A	1
		Body types 54 and 66	(RH)♦D8BZ 5442492-A	(LH)♦D8BZ 5442493-A	1

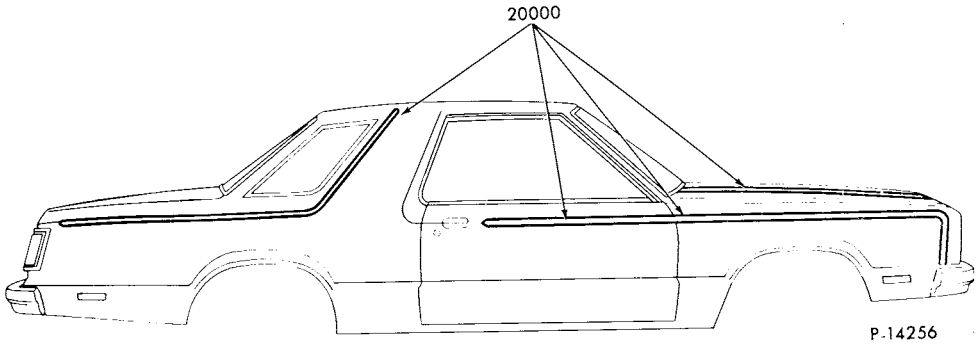

1979 ZEPHYR - BODY TYPE 36 - STRIPES

♦ Includes attaching parts

P-14256 1979 ZEPHYR - BODY TYPE 36 - STRIPES - cont'd.

GROUP NUMBER	PART NAME	DESCRIPTION	PART NUMBER	QTY.
20000	Stripe kit (complete)	Consists of: hood, fender, door and quarter panel		
		Black	D8KY 3620000-AA	1
		Blue- "Before 2/1/79"	D8KY 3620000-BB	1
		Brown - "Before 2/1/79"	D8KY 3620000-AT	1
		Chamois- "Before 2/1/79"	D8KY 3620000-AC	1
		Red	D8KY 3620000-AD	
		Gold - "Before 7/29/79"	D8KY 3620000-AY	1
		Gold- "From 7/29/79"	★D8KY 3620000-AG	1
		Silver- "From 2/1/79"	D8KY 3620000-AP	1
		White- "Before 8/1/79"	D8KY 3620000-AW	1
		Consists of: fender, door , quarter panel & roof		
		Black - "From 8/1/79"	D9KY 3620000-CA	1
		Blue- "From 2/1/79"	D9KY 3620000-CB	1
		Brown- "From 2/1/79"	D9KY 3620000-CT	
		Chamois- "From 2/1/79"	D9KY 3620000-CC	1
		Gold - "From 5/1/79"	D9KY 3620000-CG	1
		Red	E1KY 3620000-BD	1
		Silver- "From 8/1/79"	D9KY 3620000-CP	1
		White- "From 8/1/79"	D9KY 3620000-CW	1
		Yellow	D9KY 3620000-CV	

COPYRIGHT © 1986 — FORD MOTOR COMPANY — DEARBORN, MICHIGAN

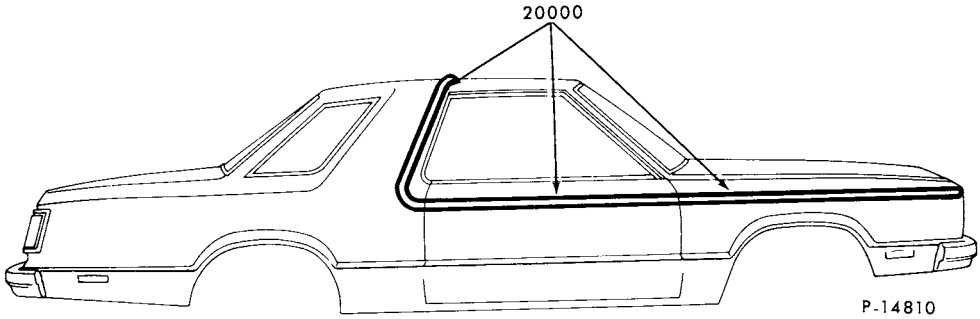

1979 ZEPHYR - BODY TYPE 36 - STRIPES

GROUP NUMBER	PART NAME	DESCRIPTION	PART NUMBER	QTY.
20000	Stripe kit (complete)	Consists of: fender, door and quarter panel over the roof		
		"Before 4/2/79"		
		Blue (light, medium and dark)	D9KY 3620000-BB	1
		Chamois (light, dark) and brown	D9KY 3620000-BF	1
		Cream and gold (light and dark)	D9KY 3620000-BV	1
		Red (bright and medium) and black	D9KY 3620000-BD	1
		Silver, black and gray	D9KY 3620000-BP	1
		"From 4/2/79"		
		Blue (light, medium and dark)	D9KY 3620000-DB	1
		Chamois/brown/chamois	★D9KY 3620000-DT Not replaced (4/84)	1
		Cream/gold (light and medium)	★D9KY 3620000-DV	1
		Red/black/red	★D9KY 3620000-DD	1
		Silver/black/gray	★D9KY 3620000-DP	1

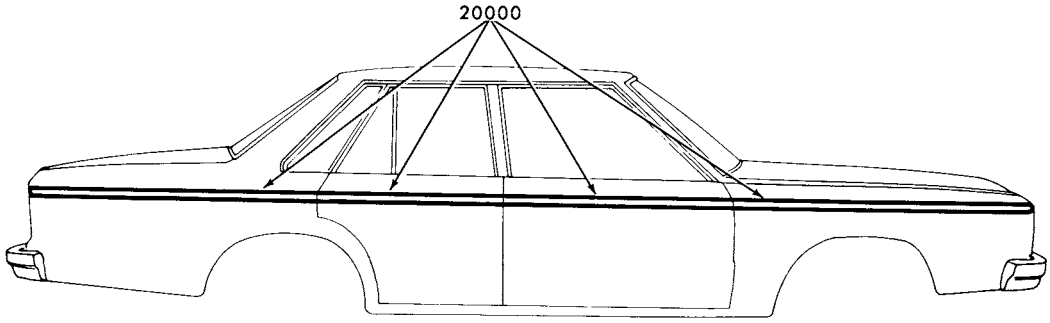

1979 ZEPHYR - BODY TYPE 54 - STRIPES

GROUP NUMBER	PART NAME	DESCRIPTION	PART NUMBER		QTY.
20000	Stripe kit (complete)	Consists of: fender, door and quarter panel			
		"Before 4/2/79"			
		Blue (light, medium and dark	D9KY 5420000-BB		1
		Chamois (light and medium) and brown	★D9KY 5420000-BT	Not replaced (4/84)	1
		Gray, black and silver	D9KY 5420000-BP		1
		Red (bright and medium) and black	D9KY 5420000-BD		1
		"From 4/2/79"			
		Blue (light, dark and dark)	★D9KY 5420000-CB	Not replaced (4/84)	1
		Chamois/brown/chamois	★D9KY 5420000-CF	Not replaced (4/84)	1
		Gray/black/silver	★D9KY 5420000-CP		1
		Red/black/red	D9KY 5420000-CD		1

COPYRIGHT © 1986 — FORD MOTOR COMPANY — DEARBORN, MICHIGAN

New Issue

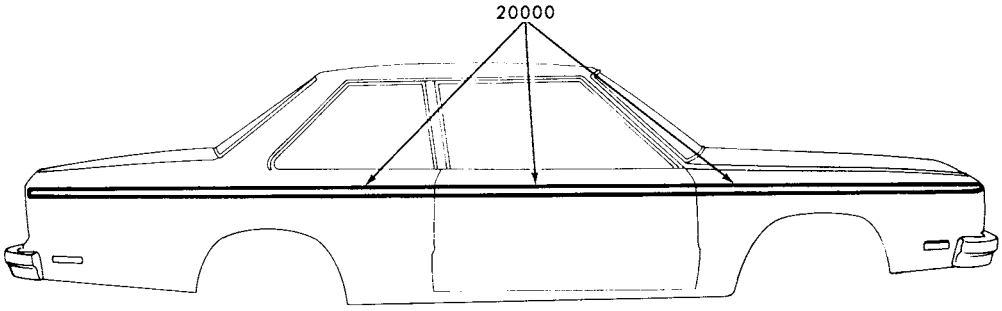

1979 ZEPHYR - BODY TYPE 66 - STRIPES

GROUP NUMBER	PART NAME	DESCRIPTION	PART NUMBER	QTY.
20000	Stripe kit (complete)	Consists of: fender, door and quarter		
		"Before 4/2/79"		
		Blue (light, medium and dark)	★D9KY 6620000-BB Not replaced (4/84)	1
		Chamois (light and medium) and brown	D9KY 6620000-BT	1
		Gray, black and silver	D9KY 6620000-BP	1
		Red (bright and medium) and black	D9KY 6620000-BD	1
		"From 4/2/79"		
		Blue (light, medium and dark)	D9KY 6620000-CB	1
		Chamois/brown/chamois	D9KY 6620000-CF	1
		Gray/black/silver	D9KY 6620000-CP	1
		Red/black/red	D9KY 6620000-CD	1

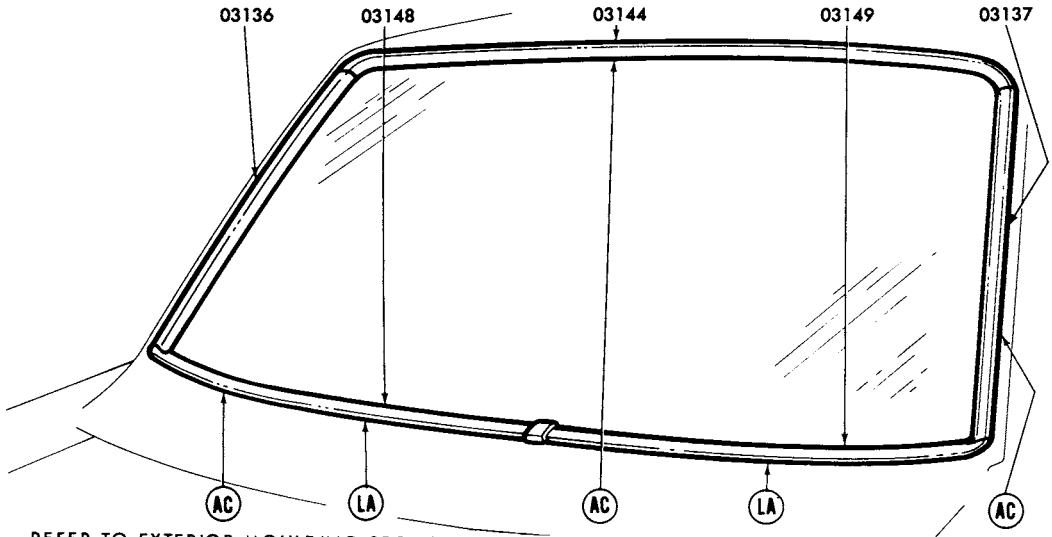

REFER TO EXTERIOR MOULDING SECTION 'R' FOR COMPLETE RETAINER INFORMATION P-12526

1979 VERSAILLES - WINDSHIELD

GROUP NUMBER	PART NAME	DESCRIPTION	PART NUMBER	QTY.
03136-7	Moulding (windshield side)		(RH)♦D5DZ 6603136-A (LH)♦D5DZ 6603137-A	1
03144	Moulding (windshield top)		♦D5DZ 6603144-A	1
03148-9	Moulding (windshield belt)		(RH)♦D5DZ 6603148-A (LH)♦D5DZ 6603149-A	1

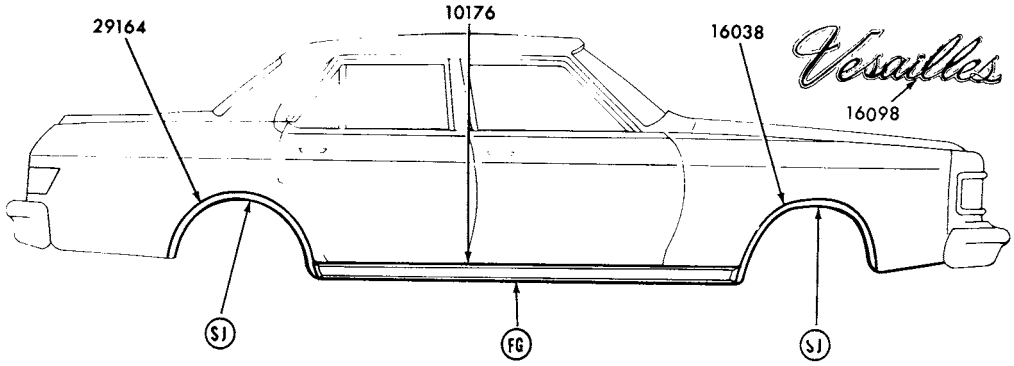

P-13343

REFER TO EXTERIOR MOULDING SECTION 'R' FOR COMPLETE RETAINER INFORMATION

1979 VERSAILLES - SIDE

♦ Includes attaching parts

COPYRIGHT © 1986 — FORD MOTOR COMPANY — DEARBORN, MICHIGAN

1979 VERSAILLES - SIDE - cont'd.

GROUP NUMBER	PART NAME	DESCRIPTION	PART NUMBER		QTY.
10176-7	Moulding (body rocker panel)	W/wheel opening mouldings-78 3/4" long	♦D54Y 6610176-A	R.H. and L.H.	2
16038-9	Moulding (front fender wheel opening)		(RH)♦D5DZ 16038-A	(LH)♦D5DZ 16039-A	1
16098	Plate (name)	"VERSAILLES"	Not used in 1979		
29164-5	Moulding (quarter wheel opening)		(RH)♦D5DZ 6629164-A	(LH)♦D5DZ 6629165-A	1

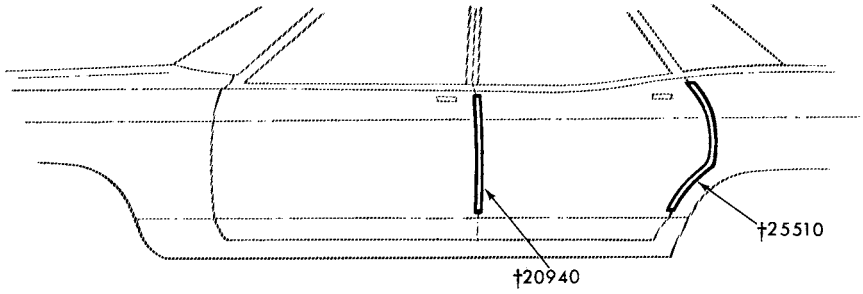

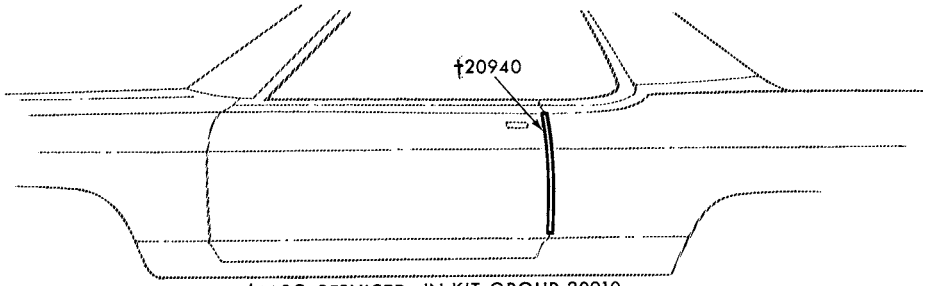

†ALSO SERVICED IN KIT-GROUP 20910

P-10061

1979 VERSAILLES · DOOR EDGE GUARD

GROUP NUMBER	PART NAME	DESCRIPTION	PART NUMBER		QTY
20910	Moulding kit (door edge guard)	Cut to fit	✱D5DZ 5420910-A	Not replaced (6/83)	1
20940-1	Moulding (front door edge guard)	18" long-cut to fit	(RH) D74Y 5420940-A	(LH) D74Y 5420941-A	1
25510-1	Moulding (rear door edge guard)	18 3/4" long-cut to fit	(RH) D74Y 5425510-A	(LH) D74Y 5425511-A	1

♦ Includes attaching parts

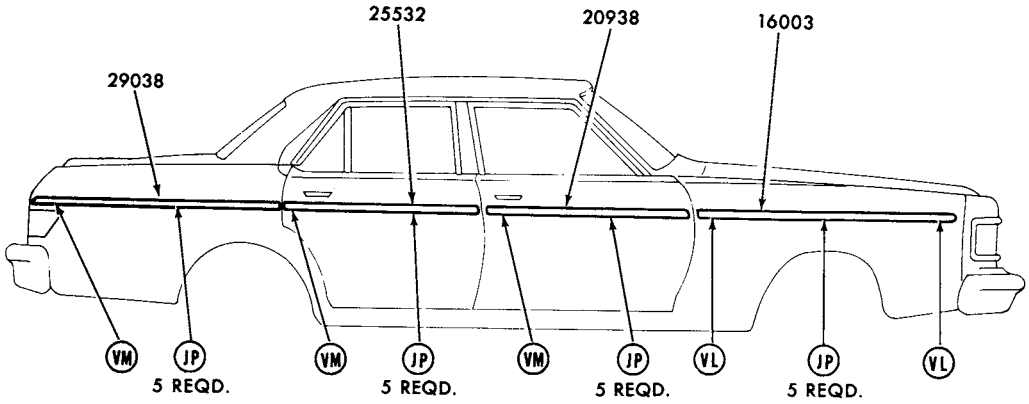

REFER TO EXTERIOR MOULDING SECTION 'R' FOR COMPLETE RETAINER INFORMATION

P-13342

1979 VERSAILLES - BODY TYPE 54 - SIDE

GROUP NUMBER	PART NAME	DESCRIPTION	⊕COLOR CODE	PART NUMBER		QTY
16003-4	Moulding (front fender side)	Incl. vinyl insert				
		◊ Black	54A	(RH)♦D84Y 16003-AA	(LH)♦D84Y 16004-AA	1
		◊ Beryl	28K	(RH)♦D94Y 16003-AK	(LH)♦D94Y 16004-AK	1
		◊ Blue	57B	(RH)♦D84Y 16003-AB	(LH)♦D84Y 16004-AB	1
		◊ Champagne-(dark)	38U	(RH)★D94Y 16003-BU	(LH)♦D94Y 16004-BU	1
		◊ Champagne-(light)	37U	(RH)♦D94Y 16003-AU	(LH)♦D94Y 16004-AU	1
		◊ Cordovan	33F	(RH)♦D74Y 16003-BF	(LH)♦D74Y 16004-BF	1
		◊ Gray	D1P	(RH)♦D84Y 16003-AP	(LH)♦D84Y 16004-AP	1
		◊ Red	F6D	(RH)♦D84Y 16003-AD	(LH)♦D84Y 16004-AD	1
		◊ Silver	C9P	(RH)♦D74Y 16003-BP	(LH)♦D74Y 16004-BP	1
		◊ White	55W	(RH)♦D74Y 16003-BW	(LH)♦D74Y 16004-BW	1
20938-9	Moulding (front door)	Incl. vinyl insert				
		◊ Black	54A	(RH)♦D84Y 5420938-AA	(LH)♦D84Y 5420939-AA	1
		◊ Beryl	28K	(RH)♦D94Y 5420938-AK	(LH)♦D94Y 5420939-AK	1
		◊ Blue	57B	(RH)♦D84Y 5420938-AB	(LH)♦D84Y 5420939-AB	1
		◊ Champagne-(dark)	38U	(RH)♦D94Y 5420938-BU	(LH)★D94Y 5420939-BU Not replaced (4/84)	1
		◊ Champagne-(light)	37U	(RH)♦D94Y 5420938-AU	(LH)♦D94Y 5420939-AU	1
		◊ Cordovan	33F	(RH)♦D74Y 5420938-BF	(LH)♦D74Y 5420939-BF	1
		◊ Gray	D1P	(RH)♦D84Y 5420938-AP	(LH)♦D84Y 5420939-AP	1
		◊ Red	F6D	(RH)♦D84Y 5420938-AD	(LH)♦D84Y 5420939-AD	1
		◊ Silver	C9P	(RH)♦D74Y 5420938-BP	(LH)♦D74Y 5420939-BP	1
		◊ White	55W	(RH)♦D74Y 5420938-BW	(LH)♦D74Y 5420939-BW	1

♦ Includes attaching parts ⊕ As shown on Certification Label

◊ For color verification, refer to the vinyl roof swatches in the 1979 Salesman's Color and Upholstery Selections Guide.

COPYRIGHT © 1986 — FORD MOTOR COMPANY — DEARBORN, MICHIGAN

1979 VERSAILLES - BODY TYPE 54 - SIDE - cont'd.

GROUP NUMBER	PART NAME	DESCRIPTION	⊕COLOR CODE	PART NUMBER		QTY.
25532-3	Moulding (rear door)	Incl. vinyl insert				
		◊Black	54A	(RH)★D84Y 5425532-AA	(LH)♦D84Y 5425533-AA	1
		◊Beryl	28K	(RH)♦D94Y 5425532-AK	(LH)♦D94Y 5425533-AK	1
		◊Blue	57B	(RH)♦D84Y 5425532-AB	(LH)♦D84Y 5425533-AB	1
		◊Champagne-(dark)	38U	(RH)♦D94Y 5425532-BU	(LH)♦D94Y 5425533-BU	1
		◊Champagne-(light)	37U	(RH)♦D94Y 5425532-AU	(LH)♦D94Y 5425533-AU	1
		◊Cordovan	33F	(RH)♦D74Y 5425532-BF	(LH)♦D74Y 5425533-BF	1
		◊Gray	D1P	(RH)♦D84Y 5425532-AP	(LH)♦D84Y 5425533-AP	1
		◊Red	F6D	(RH)♦D84Y 5425532-AD	(LH)♦D84Y 5425533-AD	1
		◊Silver	C9P	(RH)♦D74Y 5425532-BP	(LH)♦D74Y 5425533-BP	1
		◊White	55W	(RH)♦D74Y 5425532-BW	(LH)♦D74Y 5425533-BW	1
29038-9	Moulding (quarter panel)	Incl. vinyl insert				
		◊Black	54A	(RH)♦D84Y 5429038-AA	(LH)♦D84Y 5429039-AA	1
		◊Beryl	28K	(RH)♦D94Y 5429038-AK	(LH)♦D94Y 5429039-AK	1
		◊Blue	57B	(RH)♦D84Y 5429038-AB	(LH)♦D84Y 5429039-AB	1
		◊Champagne-(dark)	38U	(RH)♦D94Y 5429038-BU	(LH)♦D94Y 5429039-BU	1
		◊Champagne-(light)	37U	(RH)♦D94Y 5429038-AU	(LH)♦D94Y 5429039-AU	1
		◊Cordovan	33F	(RH)♦D74Y 5429038-BF	(LH)♦D74Y 5429039-BF	1
		◊Gray	D1P	(RH)♦D84Y 5429038-AP	(LH)♦D84Y 5429039-AP	1
		◊Red	F6D	(RH)♦D84Y 5429038-AD	(LH)♦D84Y 5429039-AD	1
		◊Silver	C9P	(RH)♦D74Y 5429038-BP	(LH)♦D74Y 5429039-BP	1
		◊White	55W	(RH)♦D74Y 5429038-BW	(LH)♦D74Y 5429039-BW	1

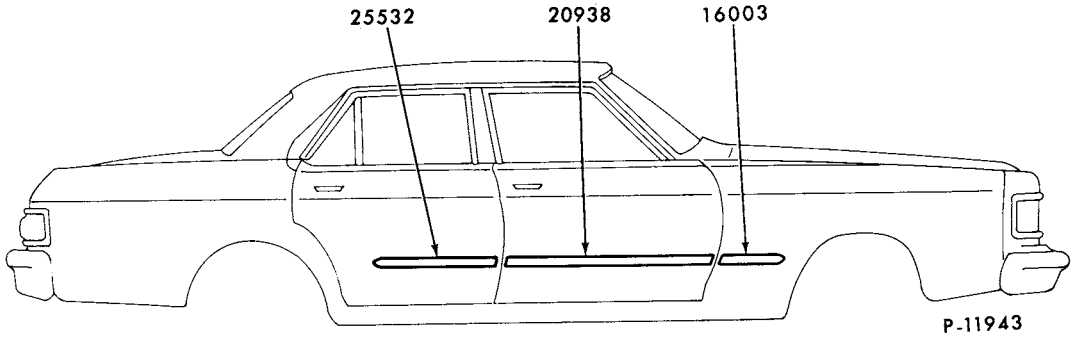

1979 VERSAILLES - BODY TYPE 54 - SIDE PROTECTION

GROUP NUMBER	PART NAME	DESCRIPTION	PART NUMBER		QTY
16003	Moulding (front fender side)	Black vinyl insert-adhesive backed-cut to fit	D5DZ 5425532-D	R.H. and L.H.	2
20938	Moulding (front door)	Black vinyl insert-adhesive backed-cut to fit	D1OZ 6529038-B	R.H. and L.H.	2
25532	Moulding (rear door)	Black vinyl insert-adhesive backed	D5DZ 5425532-D	R.H. and L.H.	2

♦ Includes attaching parts
◊ For color verification, refer to the vinyl roof swatches in the 1979 Salesman's Color and Upholstery Selections Guide
⊕ As shown on Certification Label

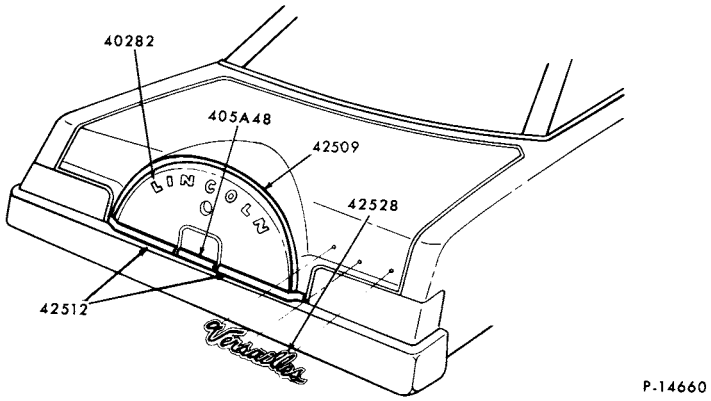

1979 VERSAILLES - BACK END

GROUP NUMBER	PART NAME	DESCRIPTION	PART NUMBER	QTY.
40282	Letters (name)	"L"	♦D7LY 6540282-J	2
		"I"	♦D7LY 6540282-E	1
		"N"	♦D7LY 6540282-C	2
		"C"	♦D7LY 6540282-A	1
		"O"	♦D7LY 6540282-B	1
405A48	Moulding (fuel filler door)		♦D94Y 54405A48-A	1
42509	Moulding (luggage compartment door upper)	Calvery twill		
		Beryl	D94Y 5442509-AK	1
		Black	D94Y 5442509-AA	1
		Blue	D94Y 5442509-AB	1
		Champagne (dark)	D94Y 5442509-BU	1
		Champagne (light)	D94Y 5442509-AU	1
		Cordovan	D94Y 5442509-AF	1
		Gray	D94Y 5442509-BP	1
		Red	D94Y 5442509-AD	1
		Silver	D94Y 5442509-AP	1
		White	D94Y 5442509-AW	1
		Valino grain		
		Beryl	D94Y 5442509-CK	1
		Black	D94Y 5442509-CA	1
		Blue	D94Y 5442509-CB	1
		Champagne (dark)	D94Y 5442509-DU	1
		Champagne (light)	D94Y 5442509-CU	1
		Cordovan	D94Y 5442509-CF	1
		Gray	D94Y 5442509-DP	1
		Red	D94Y 5442509-CD	1
		Silver	D94Y 5442509-CP	1
		White	D94Y 5442509-CW	1
42512	Moulding (luggage compartment door)		(RH)♦D94Y 5442512-A (LH)♦D94Y 5442512-B	1
42528	Plate (name)	"VERSAILLES"	D74Y 5442528-A	3

♦ Includes attaching parts

COPYRIGHT © 1986 — FORD MOTOR COMPANY — DEARBORN, MICHIGAN

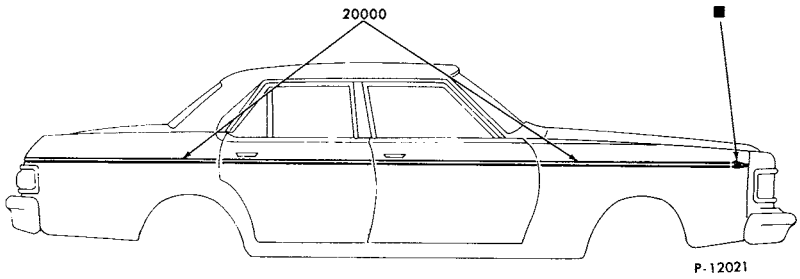

■ REFER TO GROUP IN PAINT SECTION

1979 VERSAILLES - STRIPES

GROUP NUMBER	PART NAME	DESCRIPTION	PART NUMBER	QTY.
20000	Stripe kit (body side)	25' roll		
		Beryl	D94Y 5420000-DK	AR
		Champagne (light)	D94Y 5420000-EU	AR
		Cordovan (dark)	D74Y 5420000-AF	AR
		Cordovan (light)	D94Y 5420000-DC	AR
		Gold	D74Y 5420000-AG	AR
		Silver	D74Y 5420000-AP	AR
		Consists of fender and quarter panel		
		Beryl	D94Y 5420000-BK	1
		Blue	D74Y 5420000-EB	1
		Champagne (dark)	D94Y 5420000-BU	1
		Champagne (light)	D94Y 5420000-CU	1
		Cordovan (dark)	D74Y 5420000-DF	1
		Cordovan (light)	D94Y 5420000-BC	1
		Gold	D74Y 5420000-DG	1
		Red	D74Y 5420000-DD	1

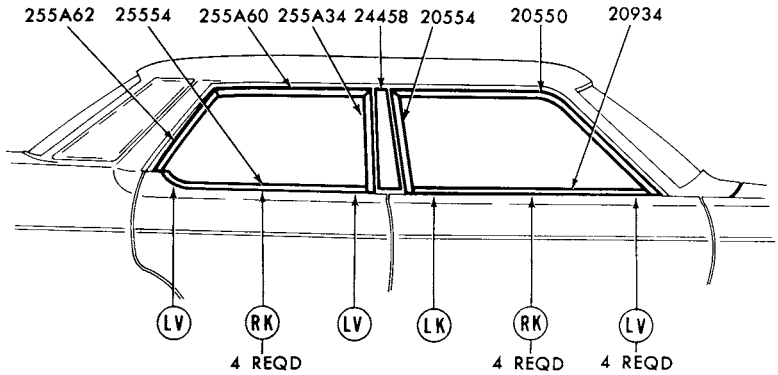

P-12494

REFER TO EXTERIOR MOULDING SECTION 'R' FOR COMPLETE RETAINER INFORMATION

1979 VERSAILLES - BODY TYPE 54 - DOOR WINDOW FRAME

GROUP NUMBER	PART NAME	DESCRIPTION	PART NUMBER	QTY.
20550-1	Moulding (front door window frame front		(RH) D5DZ 5420550-A (LH) D5DZ 5420551-A	1
20554-5	Moulding (front door window frame rear)		(RH) D5DZ 5420554-A (LH) D5DZ 5420555-A	1
20934-5	Moulding (front door belt)		(RH)♦D5DZ 5420934-A (LH)♦D5DZ 5420935-A	1
24458-9	Moulding (center body pillar upper)		Refer to roof and back belt	
255A34-5	Moulding (rear door window frame front)		(RH) D5DZ 54255A34-A (LH) D5DZ 54255A35-A	1
25554-5	Moulding (rear door belt)		(RH)♦D5DZ 5425554-A (LH)♦D5DZ 5425555-A	1
255A60-1	Moulding (rear door window frame upper)		(RH) D94Y 54255A60-A (LH) D94Y 54255A61-A	1
255A62-3	Moulding (rear door window frame rear)		(RH)D94Y 54255A62-A (LH) D94Y 54255A63-A	1

♦ Includes attaching parts

COPYRIGHT © 1986 — FORD MOTOR COMPANY — DEARBORN, MICHIGAN

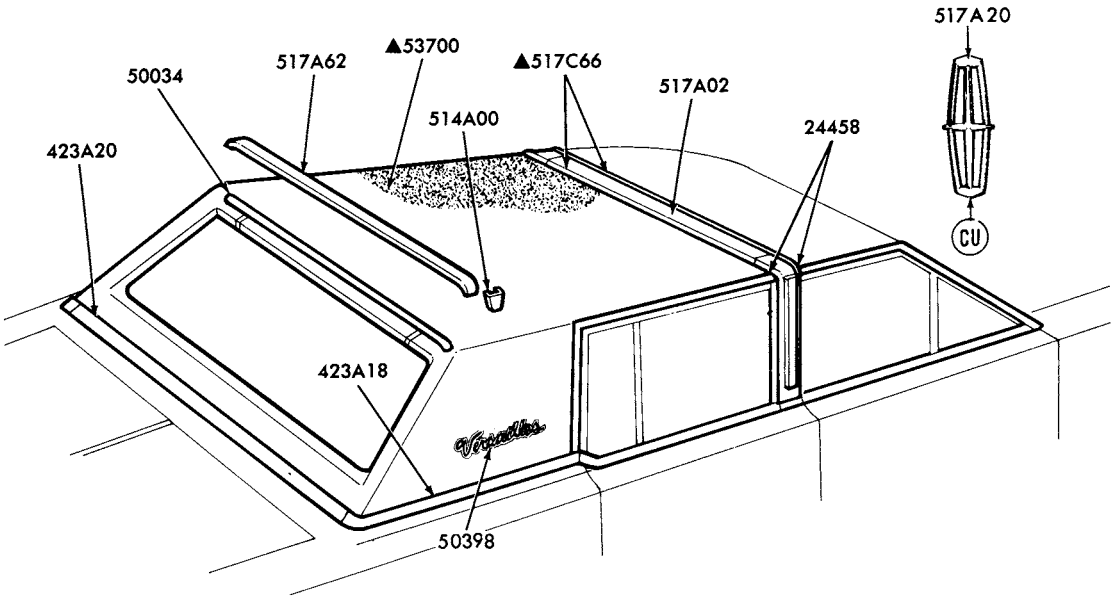

▲REFER TO GROUP IN SOFT TRIM SECTION

P-14838

1979 VERSAILLES - BODY TYPE 54 - ROOF and BACK BELT

GROUP NUMBER	PART NAME	DESCRIPTION	PART NUMBER		QTY.
24458-9	Moulding (center body pillar upper)		(RH)♦D94Y 5424458-A	(LH)♦D94Y 5424459-A	1
423A18-9	Moulding (back belt side)	Cavalry twill			
		Beryl	(RH)♦D94Y 54423A18-AK	(LH)♦D94Y 54423A19-AK	1
		Black	(RH)♦D94Y 54423A18-AA	(LH)♦D94Y 54423A19-AA	1
		Blue	(RH)♦D94Y 54423A18-AB	(LH)♦D94Y 54423A19-AB	1
		Champagne (dark)	(RH)♦D94Y 54423A18-BU	(LH)♦D94Y 54423A19-BU	1
		Champagne (light)	(RH)♦D94Y 54423A18-AU	(LH)♦D94Y 54423A19-AU	1
		Cordovan	(RH)♦D94Y 54423A18-AF	(LH)♦D94Y 54423A19-AF	1
		Gray	(RH)♦D94Y 54423A18-BP	(LH)♦D94Y 54423A19-BP	1
		Red	(RH)♦D94Y 54423A18-AD	(LH)♦D94Y 54423A19-AD	1
		Silver	(RH)♦D94Y 54423A18-AP	(LH)♦D94Y 54423A19-AP	1
		White	(RH)♦D94Y 54423A18-AW	(LH)♦D94Y 54423A19-AW	1
		Valino grain			
		Beryl	(RH)♦D94Y 54423A18-CK	(LH)♦D94Y 54423A19-CK	1
		Black	(RH)♦D94Y 54423A18-CA	(LH)♦D94Y 54423A19-CA	1
		Blue	(RH)♦D94Y 54423A18-CB	(LH)♦D94Y 54423A19-CB	1
		Champagne (dark)	(RH)♦D94Y 54423A18-DU	(LH)♦D94Y 54423A19-DU	1
		Champagne (light)	(RH)♦D94Y 54423A18-CU	(LH)♦D94Y 54423A19-CU	1
		Cordovan	(RH)♦D94Y 54423A18-CF	(LH)♦D94Y 54423A19-CF	1
		Gray	(RH)♦D94Y 54423A18-DP	(LH)♦D94Y 54423A19-DP	1
		Red	(RH)♦D94Y 54423A18-CD	(LH)♦D94Y 54423A19-CD	1
		Silver	(RH)♦D94Y 54423A18-CP	(LH)♦D94Y 54423A19-CP	1
		White	(RH)♦D94Y 54423A18-CW	(LH)♦D94Y 54423A19-CW	1

♦ Includes attaching parts

1979 VERSAILLES - BODY TYPE 54 - ROOF and BACK BELT - cont

GROUP NUMBER	PART NAME	DESCRIPTION	PART NUMBER	QTY
423A20	Moulding (back belt)	Cavalry twill		
		Beryl Black	♦D94Y 54423A20-AK D94Y 54423A20-AA	1
		Blue	♦D94Y 54423A20-AB	1
		Champagne (dark)	♦D94Y 54423A20-BU	1
		Champagne (light)	♦D94Y 54423A20-AU	1
		Cordovan	♦D94Y 54423A20-AF	1
		Gray	♦D94Y 54423A20-BP	1
		Red	✱D94Y 54423A20-AD Not replaced (4/84)	1
		Silver	♦D94Y 54423A20-AP	1
		White	♦D94Y 54423A20-AW	1
		Valino grain		
		Beryl	♦D94Y 54423A20-CK	1
		Black	♦D94Y 54423A20-CA	1
		Blue	♦D94Y 54423A20-CB	1
		Champagne (dark)	♦D94Y 54423A20-DU	1
		Champagne (light)	♦D94Y 54423A20-CU	1
		Cordovan	♦D94Y 54423A20-CF	1
		Gray	♦D94Y 54423A20-DP	1
		Red	♦D94Y 54423A20-CD	1
		Silver	♦D94Y 54423A20-CP	1
		White	♦D94Y 54423A20-CW	1
50034	Retainer (rear moulding top rear)		D94Y 5450034-B	1
50398	Plate (roof name)	Versailles	♦D94Y 5450398-A R.H. and L.H.	2
514A00	Tip (rear roof bow bending)		D94Y 54514A00-A R.H. and L.H.	2
517A02	Moulding (roof outside)		♦D94Y 54517A02-B	1
517A20	Ornament (center body pillar)		D74Y 54517A20-A R.H. and L.H.	2
51726-7	Moulding (roof drip side finish)	Front	(RH) D94Y 5451726-A (LH) D94Y 5451727-A	1
51728-9	Moulding (roof drip side finish)	Rear	(RH) D94Y 5451728-A (LH) D94Y 5451729-A	1
517A62	Moulding (roof top rear)	Beryl	D94Y 54517A62-CK	1
		Black	D94Y 54517A62-CA	1
		Blue	D94Y 54517A62-CB	1
		Champagne (dark)	D94Y 54517A62-CU	1
		Champagne (light)	D94Y 54517A62-DU	1
		Cordovan	D94Y 54517A62-CF	1
		Gray	D94Y 54517A62-DP	1
		Red	D94Y 54517A62-CD	1
		Silver	D94Y 54517A62-CP	1
		White	D94Y 54517A62-CW	1

♦ Includes attaching parts

COPYRIGHT © 1986 — FORD MOTOR COMPANY — DEARBORN, MICHIGAN

AA 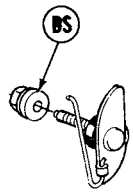 C8MY 71407A12-A	AB 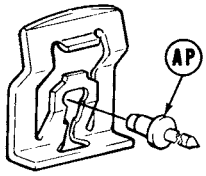 ★ D1AZ 6542413-A R/B D1AZ 6542413-B	AC 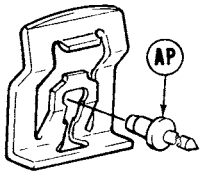 D1AZ 6542413-B	AD 370494-S (XX-86)
AE 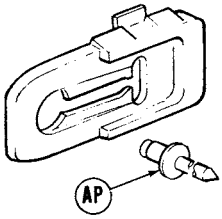 C8AZ 63423B06-A	AF 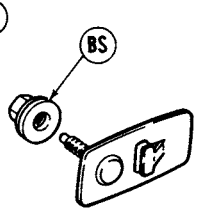 D3AZ 65517B76-A	AG 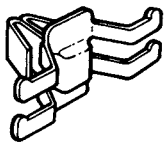 D3MY 6529033-A	AH 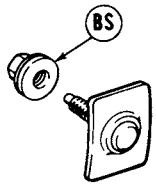 D3AZ 53424B02-A
AJ 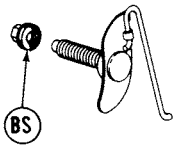 D0GY 16A076-A	AK 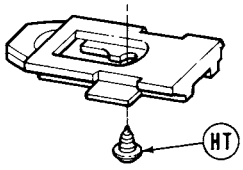 D1MY 6540248-B	AL 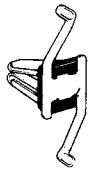 D3MY 65424B02-A	AM 384439-S (UU-89-CB)
AN 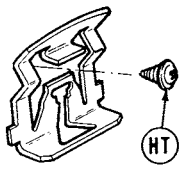 ★ C8AZ 6342413-A R/B D1AZ 6542413-B	AP 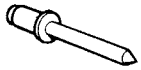 383229-S (SS-44-E)	AQ 375890-S (MM-222-A)	AR 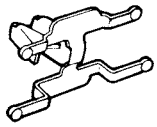 D2OZ 53423B06-A

P-11677

1973/ MOULDING RETAINERS

COPYRIGHT © 1986 — FORD MOTOR COMPANY — DEARBORN, MICHIGAN

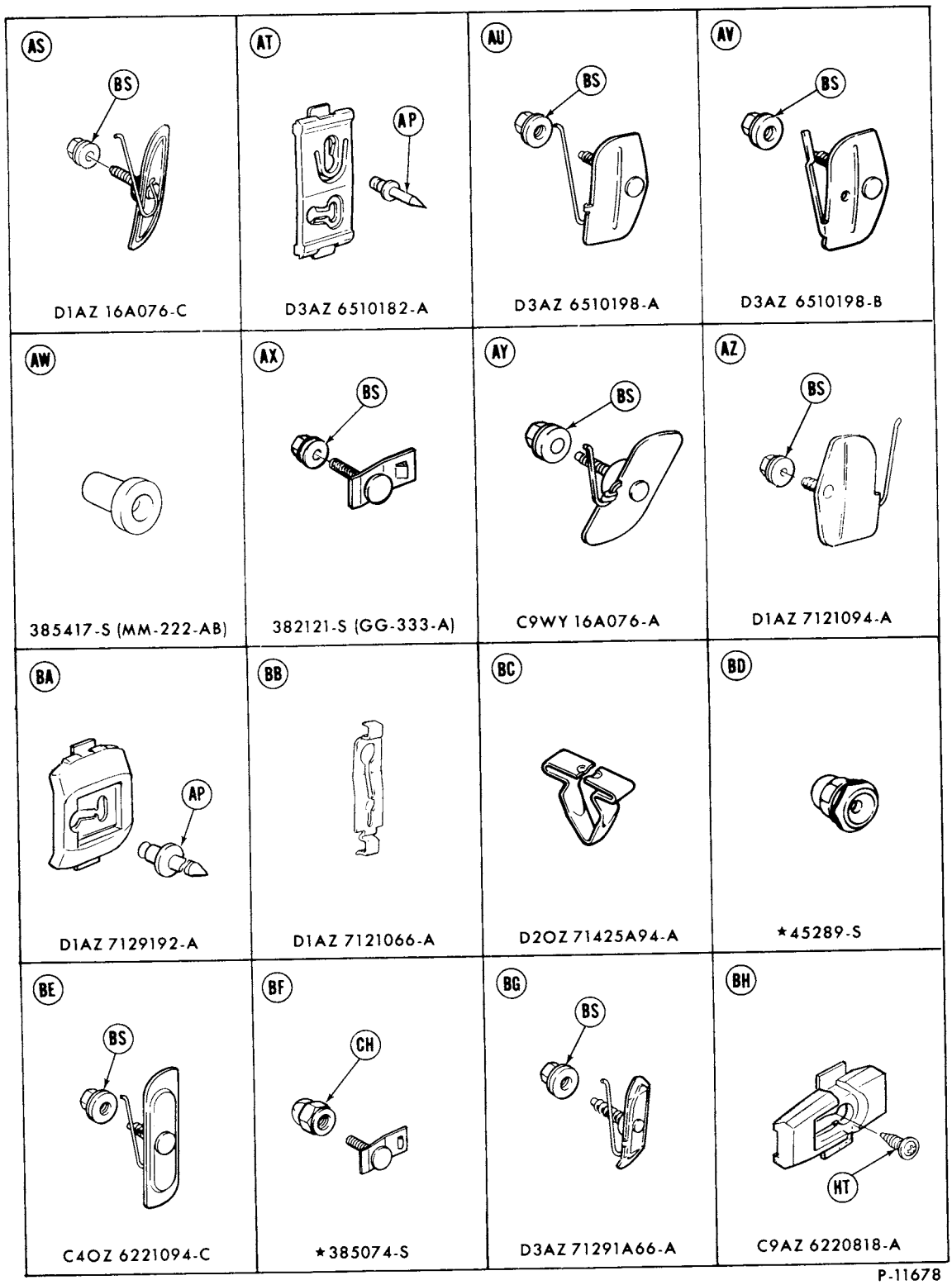

P-11678

1973/ MOULDING RETAINERS

BJ 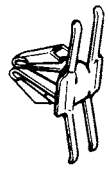 ★ D2FZ 16A076-B r/b D40Z 65423B06-A	BK D3AZ 7120884-A	BL 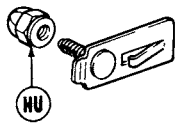 ★ D2FZ 6220884-A D4FZ 7320884-A	BM 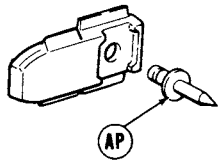 D3AZ 7129144-A
BN 378362-S (MM-228)	BP 373556-S (MM-291-F)	BQ 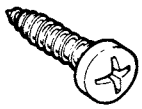 ★55926-S	BR 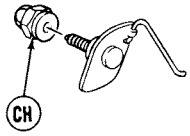 D3AZ 6542533-A
BS 45271-S (M-180)	BT ★45273-S	BU 376389-S (UU-82-D)	BV 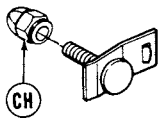 ★382946-S
BW 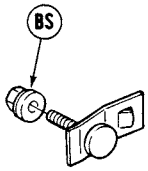 ★382861-S	BX 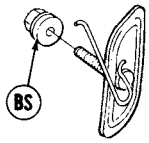 C9OZ 16A076-A	BY 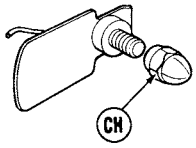 ★D2OZ 6520884-A r/b D2AZ 6520884-A	BZ 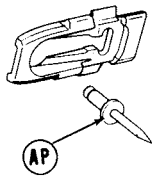 D2OZ 6520818-A

P-11679

COPYRIGHT © 1986 — FORD MOTOR COMPANY — DEARBORN, MICHIGAN

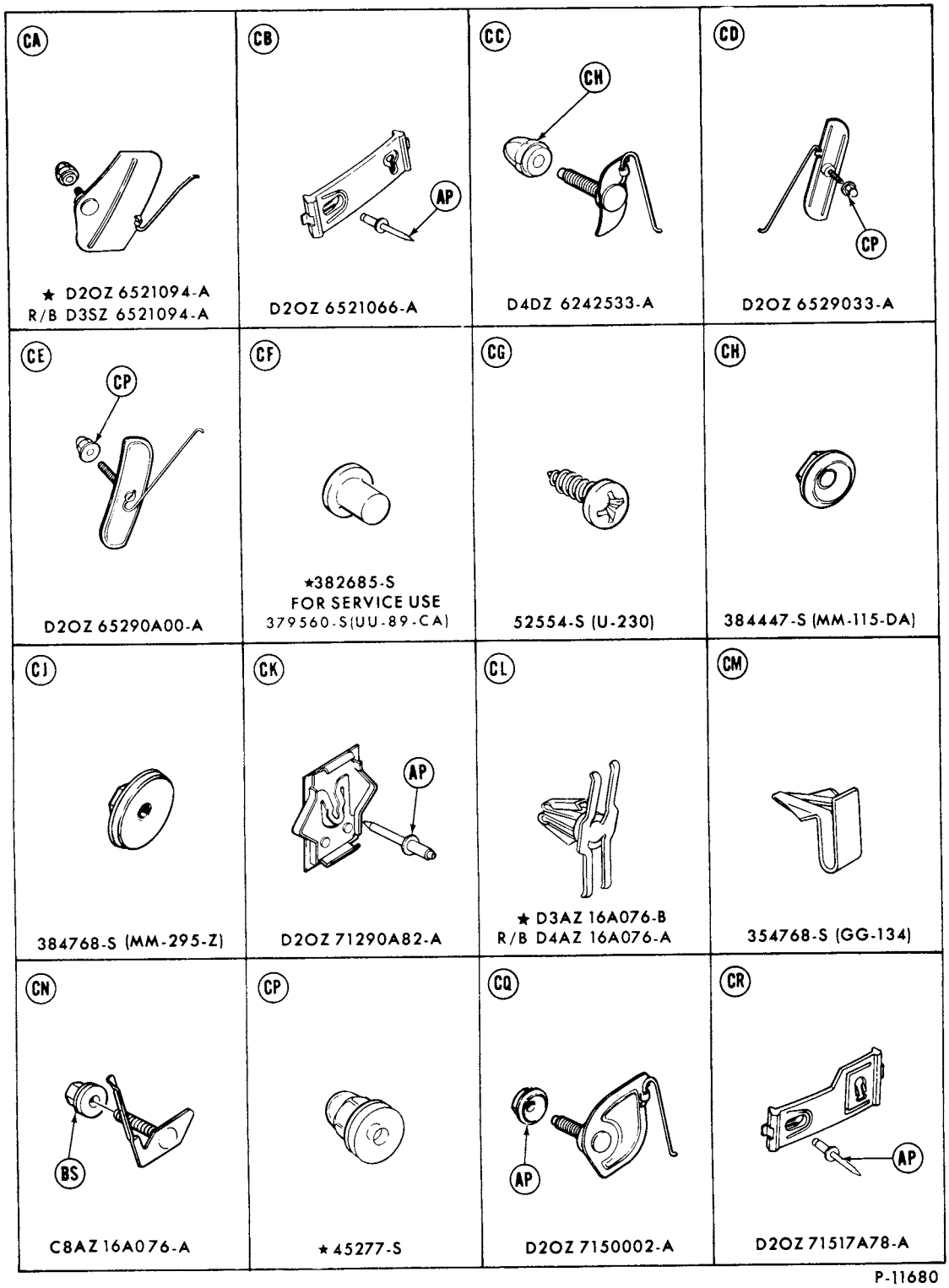
CA
★ D2OZ 6521094-A
R/B D3SZ 6521094-A
CB
AP
D2OZ 6521066-A
CC
CH
D4DZ 6242533-A
CD
CP
D2OZ 6529033-A
CE
CP
D2OZ 65290A00-A
CF
★382685-S
FOR SERVICE USE
379560-S(UU-89-CA)
CG
52554-S (U-230)
CH
384447-S (MM-115-DA)
CJ
384768-S (MM-295-Z)
CK
AP
D2OZ 71290A82-A
CL
★ D3AZ 16A076-B
R/B D4AZ 16A076-A
CM
354768-S (GG-134)
CN
BS
C8AZ 16A076-A
CP
★45277-S
CQ
AP
D2OZ 7150002-A
CR
AP
D2OZ 71517A78-A

P-11680

CS 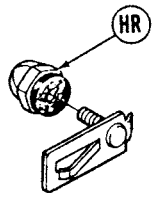 D2OZ 9740222-A	CT 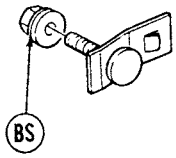 381955-S (GG-333)	CU 370713-S (MM-292)	CV 381896-S (GG-139-L)
CW 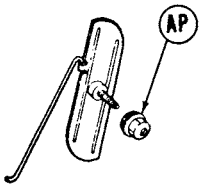 D2LY 16A076-A	CX 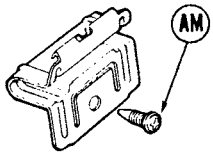 D2OZ 9729128-A	CY 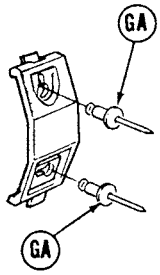 C9WY 6510182-A	CZ 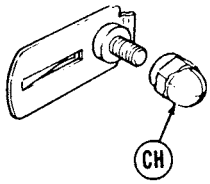 D2AZ 6520884-A
DA 375452-S (BB-630-D)	DB 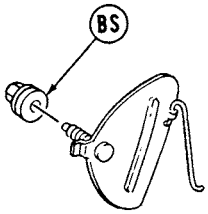 D4OZ 6510198-C	DC 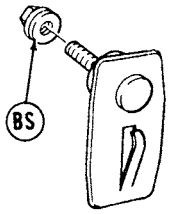 D2OZ 65517B76-A	DD 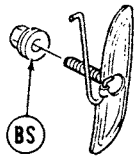 ★ C8AZ 5410198-A R/B E4LY 16C702-A (4/86)
DE 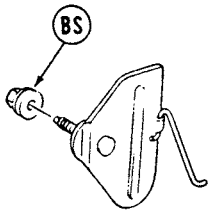 D4OZ 7129120-F	DF 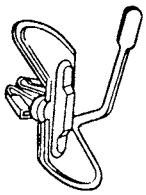 D4OZ 7129120-E	DG 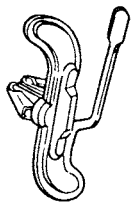 ★ D4OZ 7129120-G R/B D3MY 7129033-B	DH 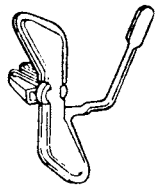 D4OZ 16A076-D

P-11681

COPYRIGHT © 1986 — FORD MOTOR COMPANY — DEARBORN, MICHIGAN

DJ 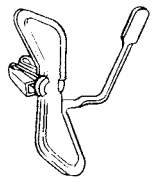 D4OZ 16A076-B	DK 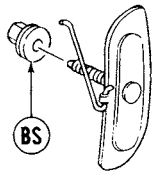 ★ D4OZ 16A076-C R/B D4OZ 16A076-E	DL 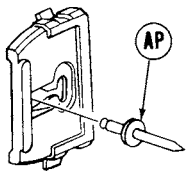 D4OZ 7120828-B	DM 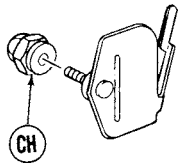 D4OZ 7129120-D
DN 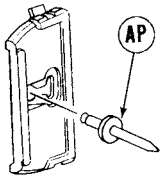 D4OZ 7120828-A	DP 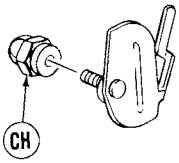 D4OZ 7120828-C	DQ 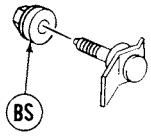 383665-S (GG-333-C)	DR 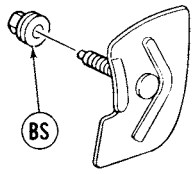 D4OZ 7129120-C
DS 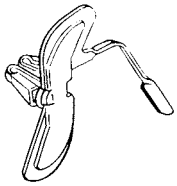 D4OZ 71291B66-B	DT 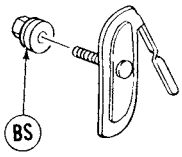 ★ D4OZ 7129120-B R/B D2VY 6529144-A	DU 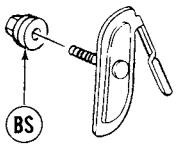 ★ D4OZ 7129120-A R/B D2VY 6529144-A	DV 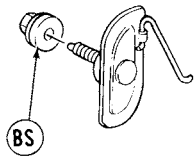 D4OZ 16A076-A
DW 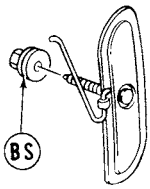 C8AZ 5410198-A	DX 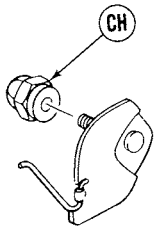 D4OZ 6520884-A	DY 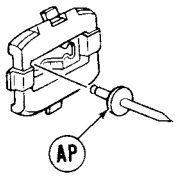 D4OZ 6520818-A	DZ 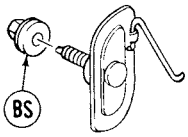 D4OZ 6529120-A

P-11682

EA 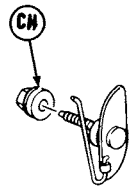 D2OZ 53254A46-A	EB 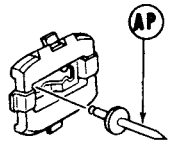 D4OZ 6520818-A	EC 384441-S (MM-118-K'E)	ED D4OZ 6540368-A
EE 355230-S (MM-353-E)	EF 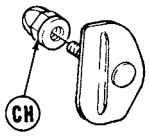 D1MY 7125562-A	EG 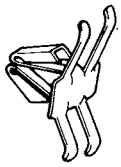 D4OZ 65423B06-A	EH ★385038-S
EJ 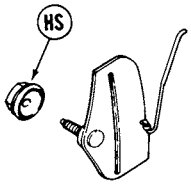 D2LY 6529033-A	EK 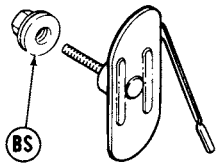 D4OZ 71425A94-B	EL 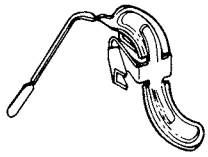 D4OZ 71425A94-A	EM 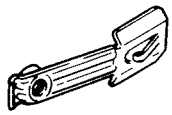 D3MY 53517B76-A
EN 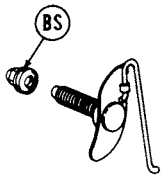 D3OZ 6550030-A	EP 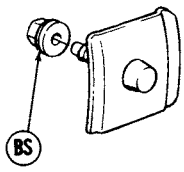 D1AZ 57424B02-A	EQ 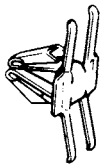 D2LY 6529120-A	ER 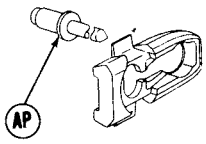 D0OZ 6620818-A

P-11683

1973/ MOULDING RETAINERS

COPYRIGHT © 1986 — FORD MOTOR COMPANY — DEARBORN, MICHIGAN

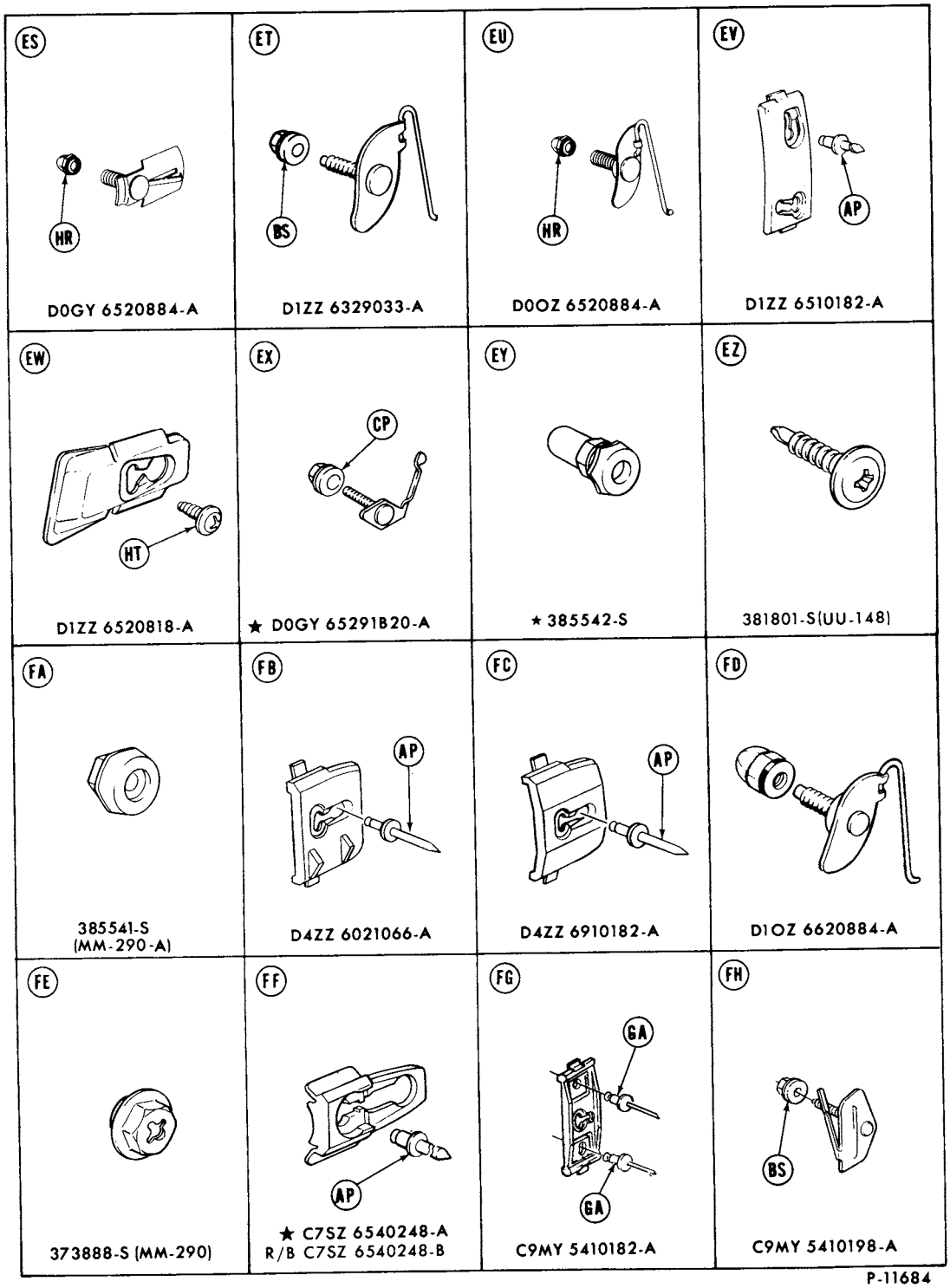
ES
HR
D0GY 6520884-A
ET
BS
D1ZZ 6329033-A
EU
HR
D0OZ 6520884-A
EV
AP
D1ZZ 6510182-A
EW
HT
D1ZZ 6520818-A
EX
CP
★ D0GY 65291B20-A
EY
★ 385542-S
EZ
381801-S(UU-148)
FA
385541-S
(MM-290-A)
FB
AP
D4ZZ 6021066-A
FC
AP
D4ZZ 6910182-A
FD
D1OZ 6620884-A
FE
373888-S (MM-290)
FF
AP
★ C7SZ 6540248-A
R/B C7SZ 6540248-B
FG
GA
GA
C9MY 5410182-A
FH
BS
C9MY 5410198-A

P-11684

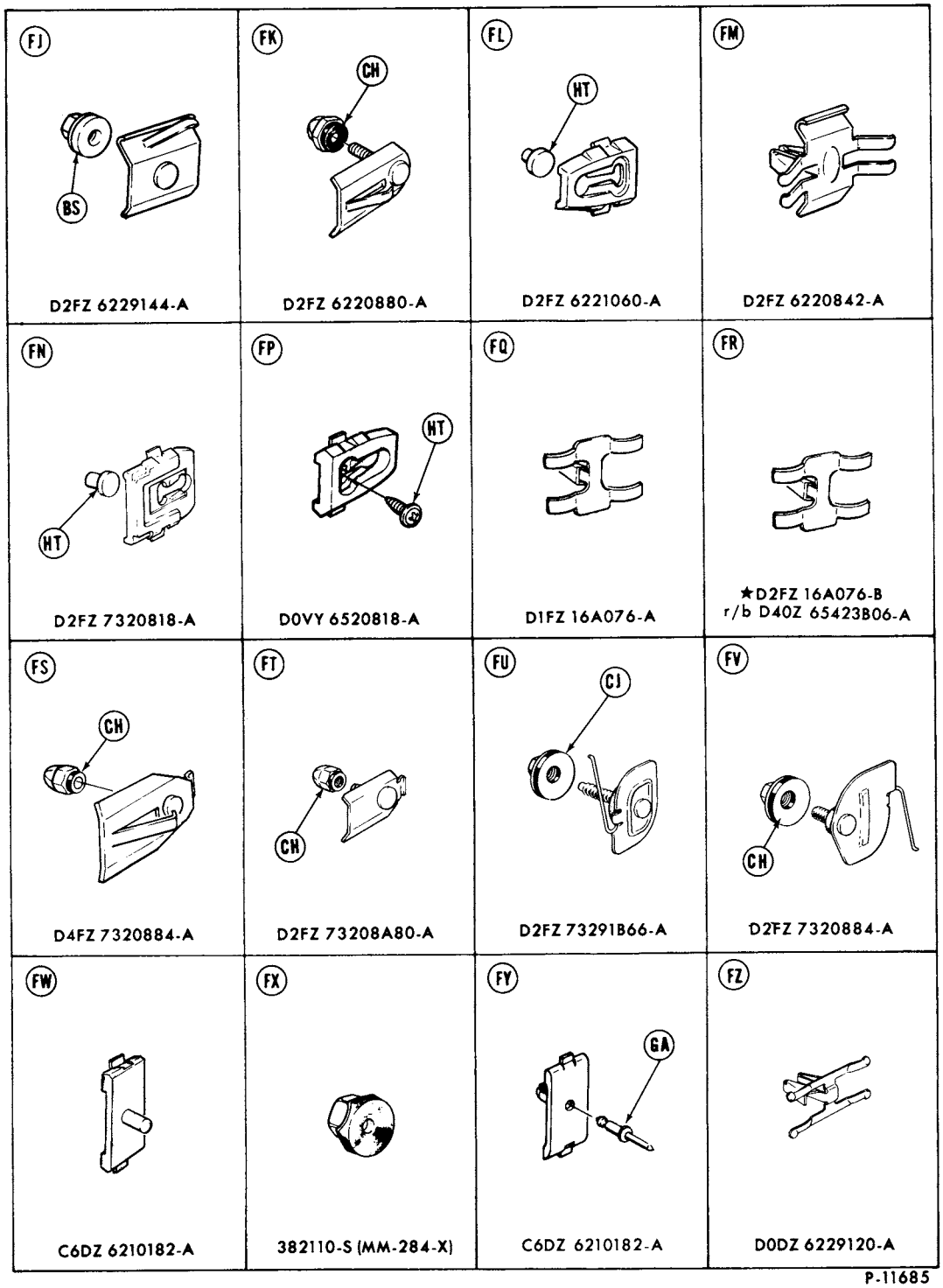

P-11685

1973/ MOULDING RETAINERS

COPYRIGHT © 1986 — FORD MOTOR COMPANY — DEARBORN, MICHIGAN

GA 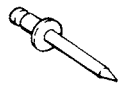 375203-S (SS-44)	GB 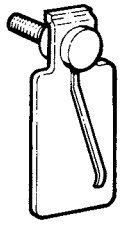 D0OZ 5425562-A	GC 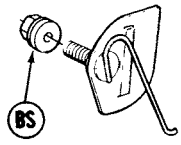 D0DZ 6210182-A	GD 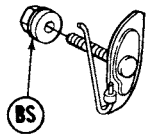 C9AZ 71423B10-B
GE 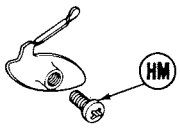 D2DZ 6220884-A	GF 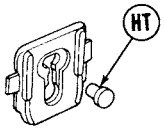 D2DZ 6220818-A	GG 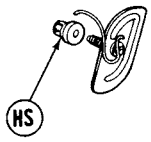 ★ C9AZ 7142318-A R/B C9AZ 7142318-B	GH 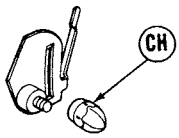 D2DZ 6220884-B
GJ 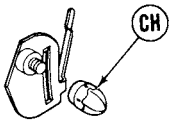 ★D2DZ 6220885-B	GK 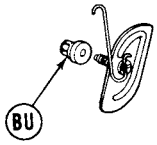 D2DZ 6229120-A	GL 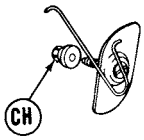 D2DZ 5420884-A	GM 55974-S (U-316-D)
GN 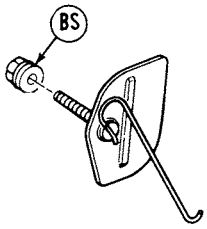 D0DZ 6210182-A	GP 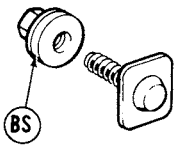 D3DZ 6250002-A	GQ 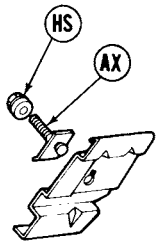 ★D2SB 6510214-AB	GR 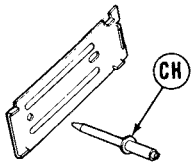 D2VY 6510182-A

P-11686

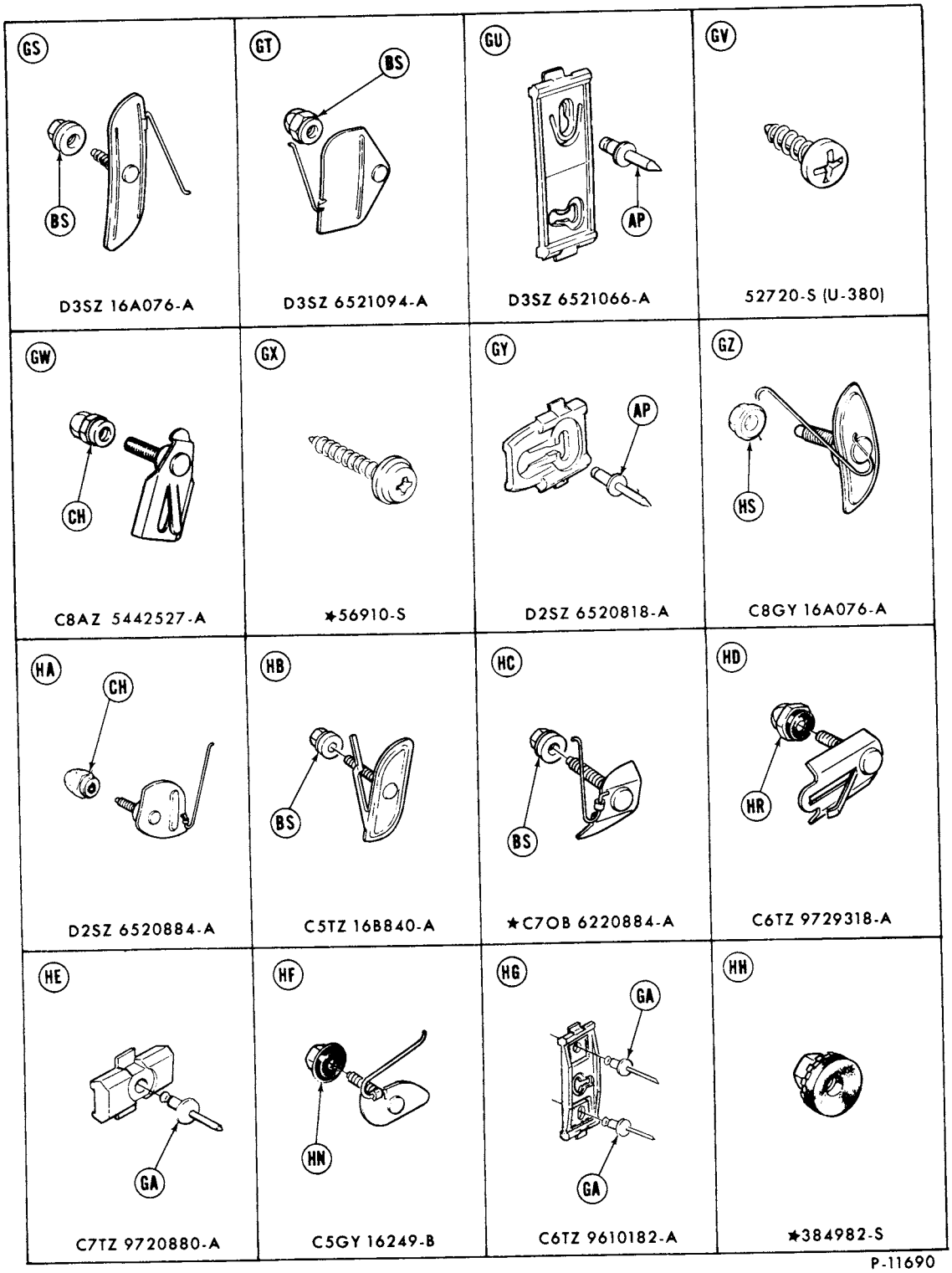

P-11690

1973/ MOULDING RETAINERS

COPYRIGHT © 1986 — FORD MOTOR COMPANY — DEARBORN, MICHIGAN

HJ 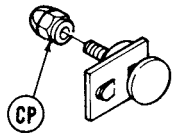 ★384946-S	HK 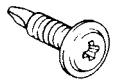 382413-S (UU-148-A)	HL ★45270-S	HM ★57561-S
HN 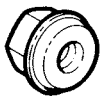 353911-S (MM-191-E)	HP 350002-S (BB-529)	HQ 376378-S (UU-97)	HR 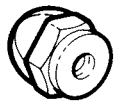 377522-S (MM-115-D)
HS 377523-S (MM-291-C)	HT 379560-S (UU-89-CA)	HU 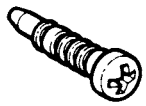 383224-S (UU-72-F)	HV ★384273-S
HW 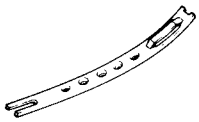 D3AZ 6553716-A	HX ★372220-S	HY 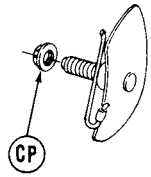 C9AZ 63423B06-A	HZ 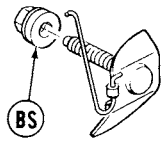 D1MY 16A076-A

P-11691

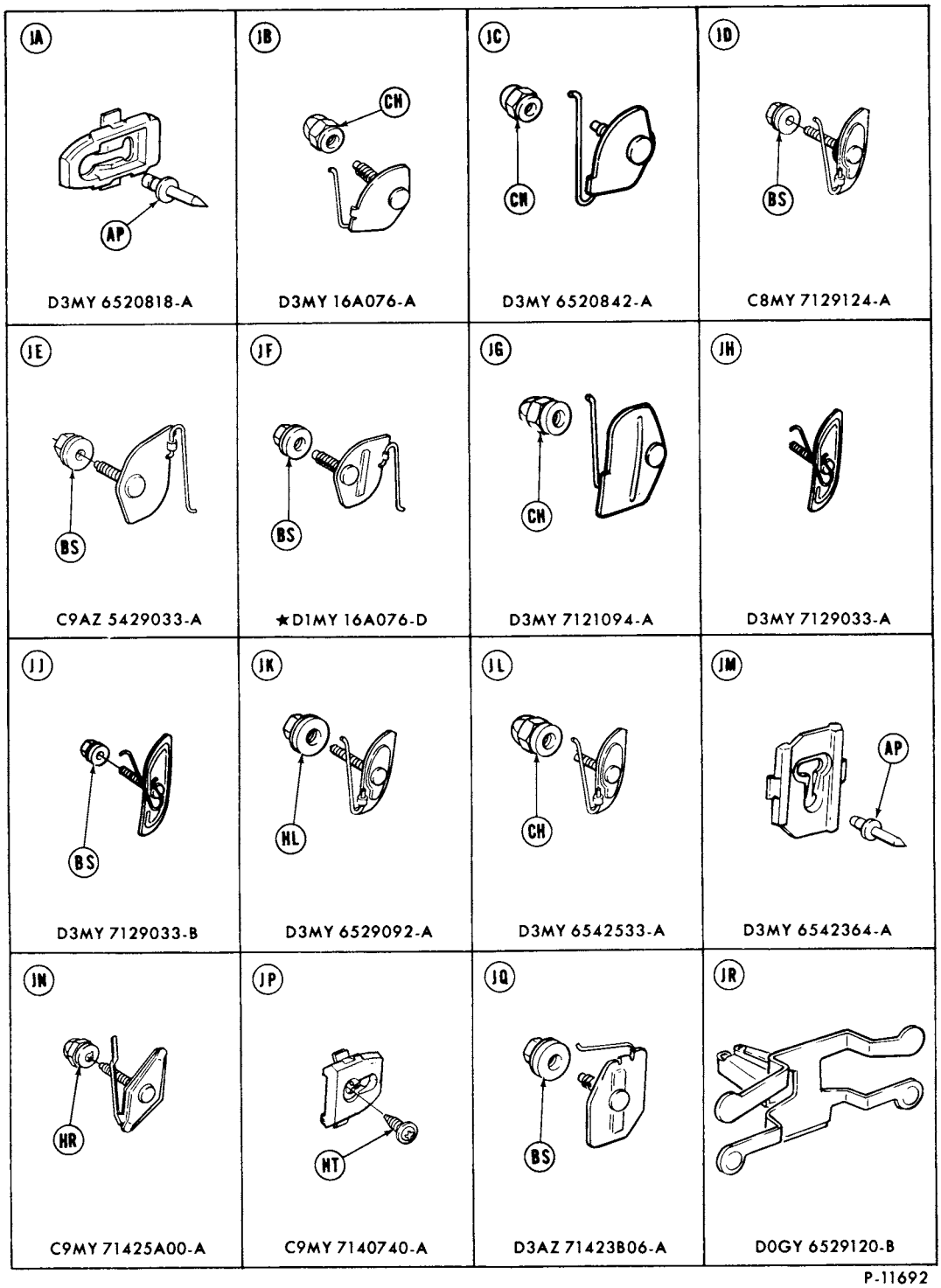

P-11692

COPYRIGHT © 1986 — FORD MOTOR COMPANY — DEARBORN, MICHIGAN

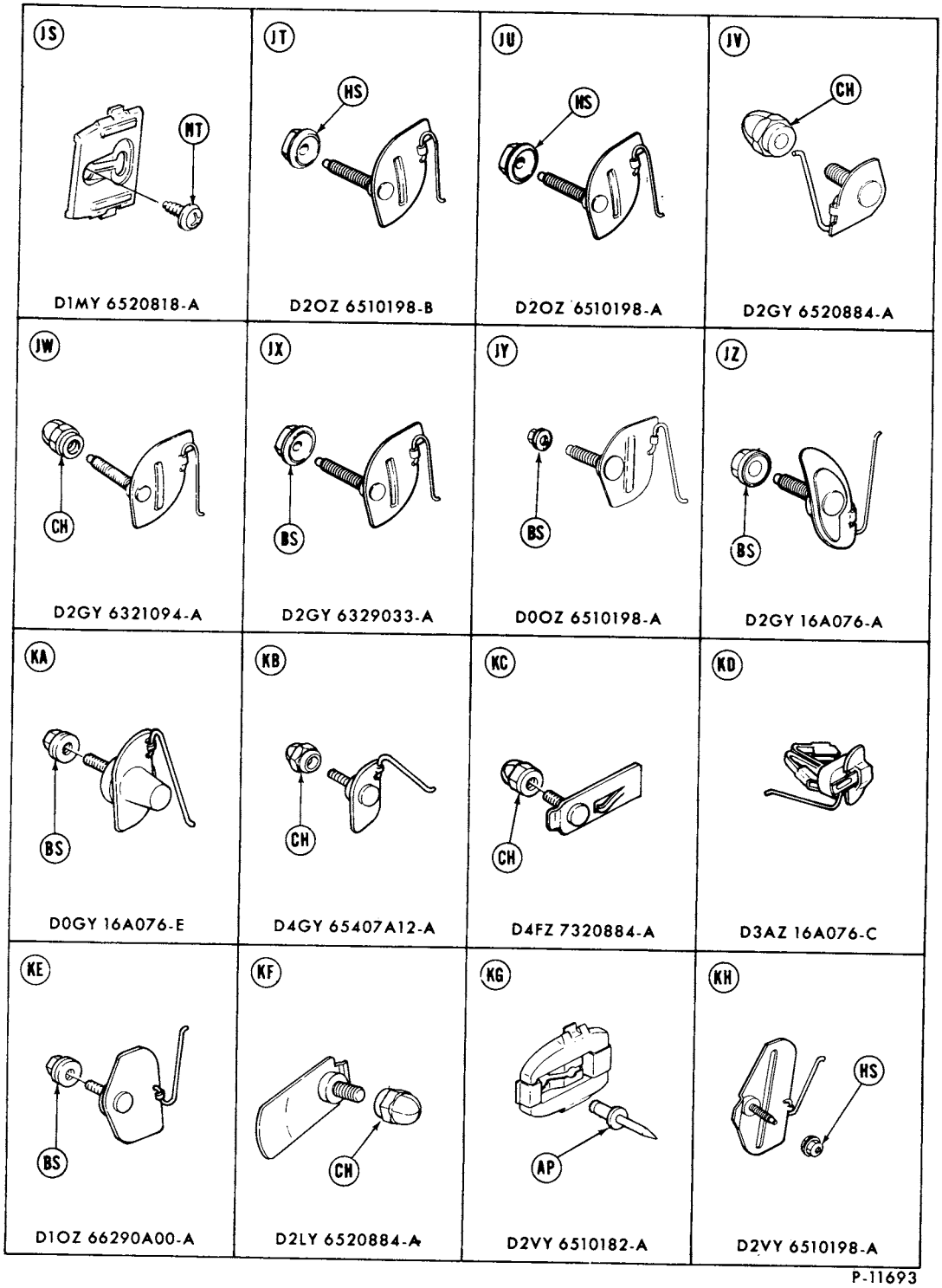
JS
MT
D1MY 6520818-A
JT
HS
D2OZ 6510198-B
JU
HS
D2OZ 6510198-A
JV
CH
D2GY 6520884-A
JW
CH
D2GY 6321094-A
JX
BS
D2GY 6329033-A
JY
BS
D0OZ 6510198-A
JZ
BS
D2GY 16A076-A
KA
BS
D0GY 16A076-E
KB
CH
D4GY 65407A12-A
KC
CH
D4FZ 7320884-A
KD
D3AZ 16A076-C
KE
BS
D1OZ 66290A00-A
KF
CH
D2LY 6520884-A
KG
AP
D2VY 6510182-A
KH
HS
D2VY 6510198-A

P-11693

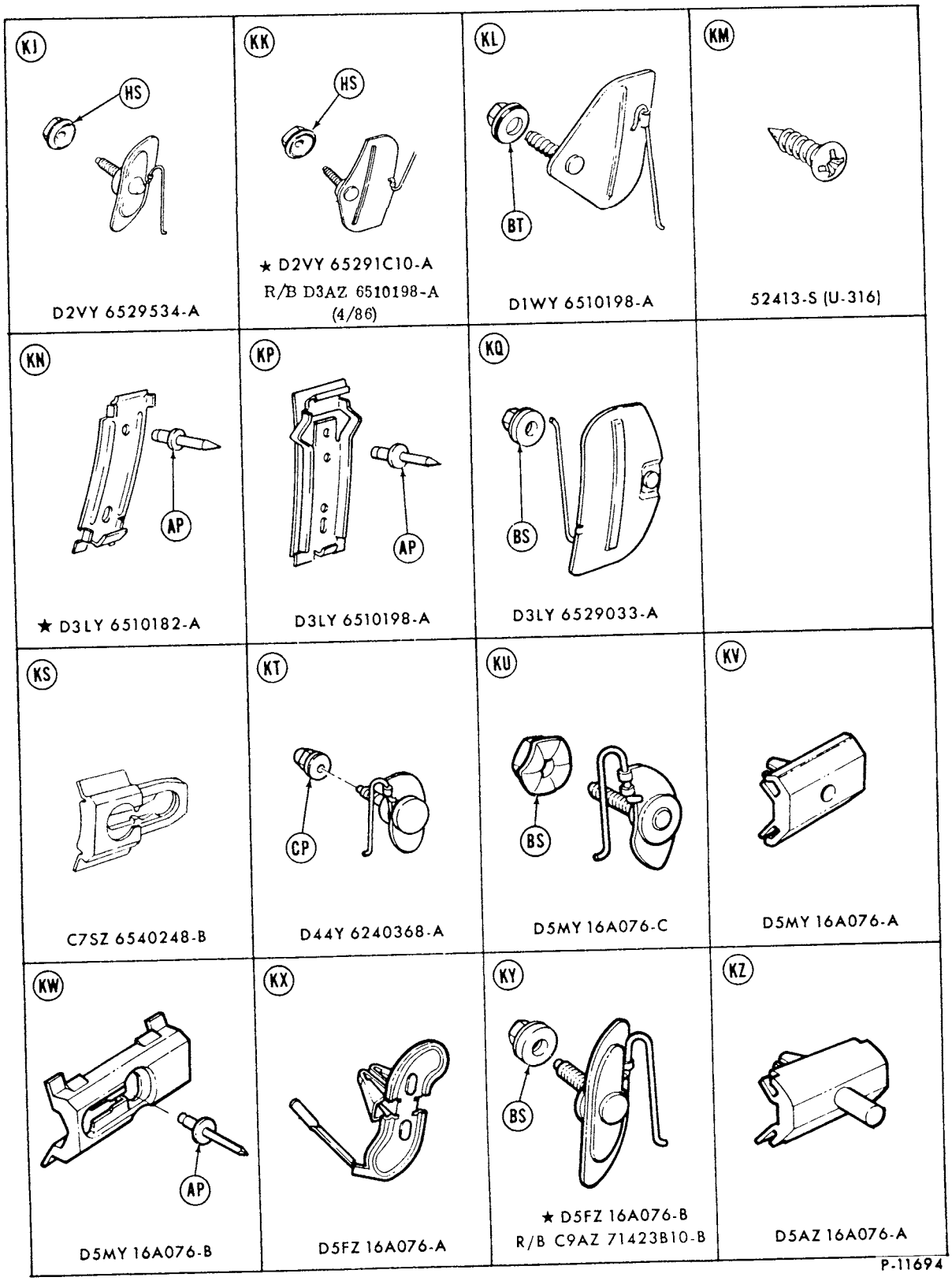

COPYRIGHT © 1986 — FORD MOTOR COMPANY — DEARBORN, MICHIGAN

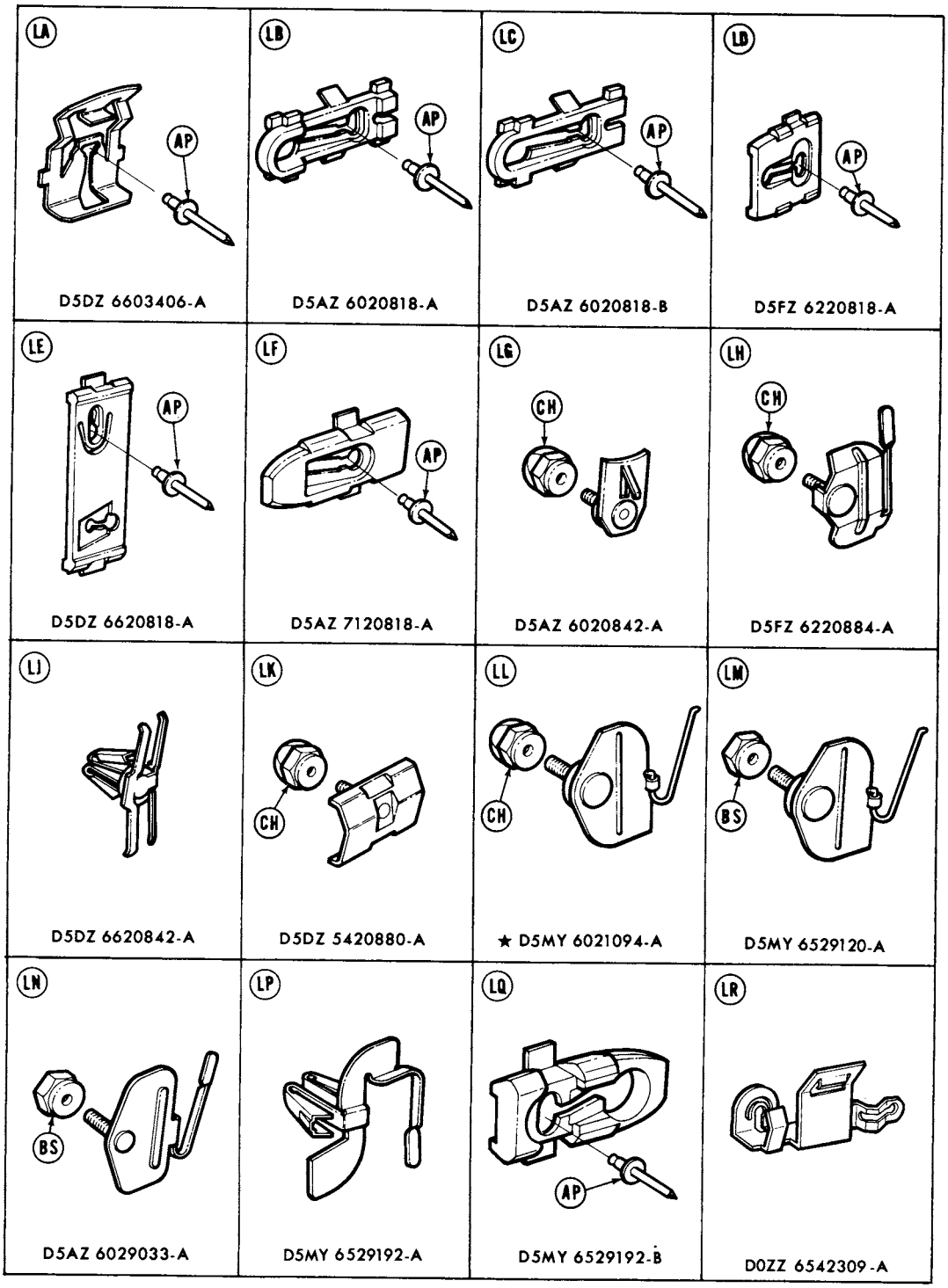
LA
AP
D5DZ 6603406-A
LB
AP
D5AZ 6020818-A
LC
AP
D5AZ 6020818-B
LD
AP
D5FZ 6220818-A
LE
AP
D5DZ 6620818-A
LF
AP
D5AZ 7120818-A
LG
CH
D5AZ 6020842-A
LH
CH
D5FZ 6220884-A
LJ
D5DZ 6620842-A
LK
CH
D5DZ 5420880-A
LL
CH
★ D5MY 6021094-A
LM
BS
D5MY 6529120-A
LN
BS
D5AZ 6029033-A
LP
D5MY 6529192-A
LQ
AP
D5MY 6529192-B
LR
D0ZZ 6542309-A

P-11695

LS 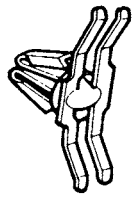 D5AZ 60423B06-A	LT 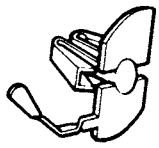 D5DZ 66423B06-A	LU 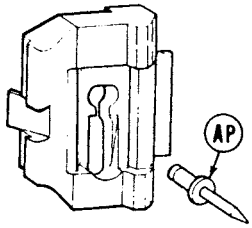 D5AZ 6042533-A	LV 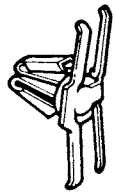 D5DZ 5420842-A
LW 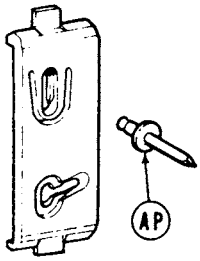 D5AZ 6021066-A	LX 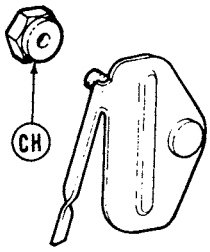 ★ D5AZ 6021094-A NOT REPLACED	LY 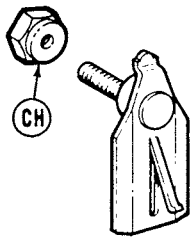 D5MY 6021094-B	LZ 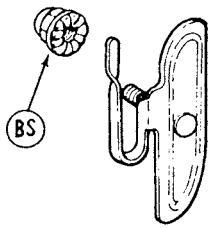 D5AZ 16A076-B
MA 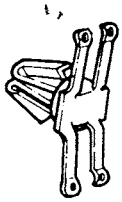 D1AZ 65423B06-A	MB 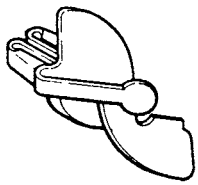 D3AZ 65423BO6-A R/B D1AZ 65423B06-A	MC 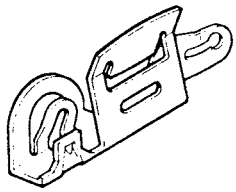 D5AZ 60290B94-A	MD 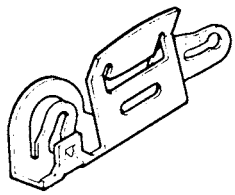 D5AZ-6029100-A
ME ✱45270-S	MF 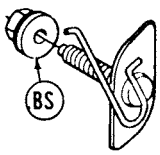 C80Z 5440248-A	MG 382371-S (UU-81-L)	MH 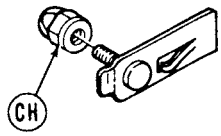 D3AZ 5320884-A

P-11696

COPYRIGHT © 1986 — FORD MOTOR COMPANY — DEARBORN, MICHIGAN

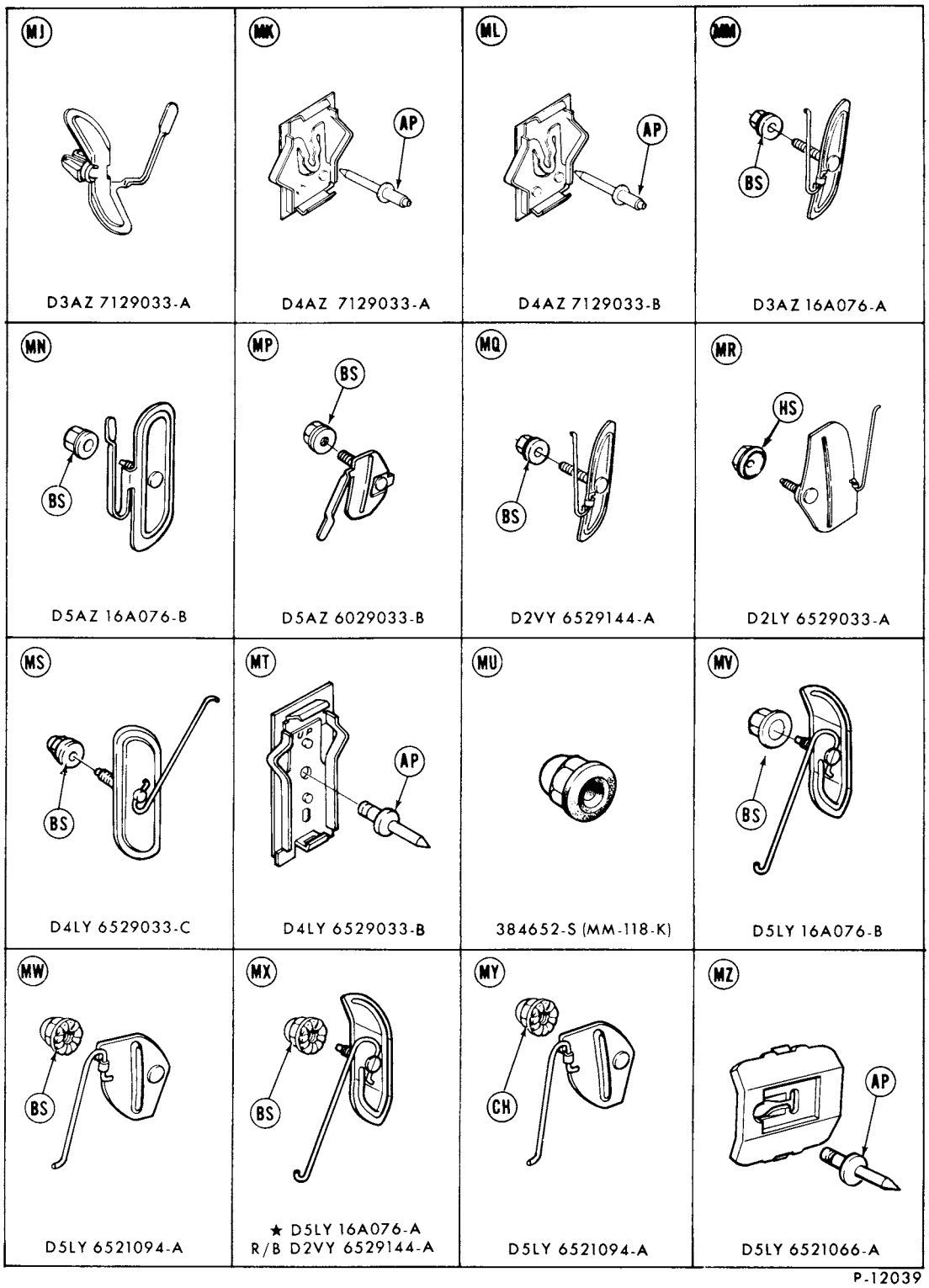
MJ
D3AZ 7129033-A
MK
AP
D4AZ 7129033-A
ML
AP
D4AZ 7129033-B
MM
BS
D3AZ 16A076-A
MN
BS
D5AZ 16A076-B
MP
BS
D5AZ 6029033-B
MQ
BS
D2VY 6529144-A
MR
HS
D2LY 6529033-A
MS
BS
D4LY 6529033-C
MT
AP
D4LY 6529033-B
MU
384652-S (MM-118-K)
MV
BS
D5LY 16A076-B
MW
BS
D5LY 6521094-A
MX
BS
★ D5LY 16A076-A
R/B D2VY 6529144-A
MY
CH
D5LY 6521094-A
MZ
AP
D5LY 6521066-A

P-12039

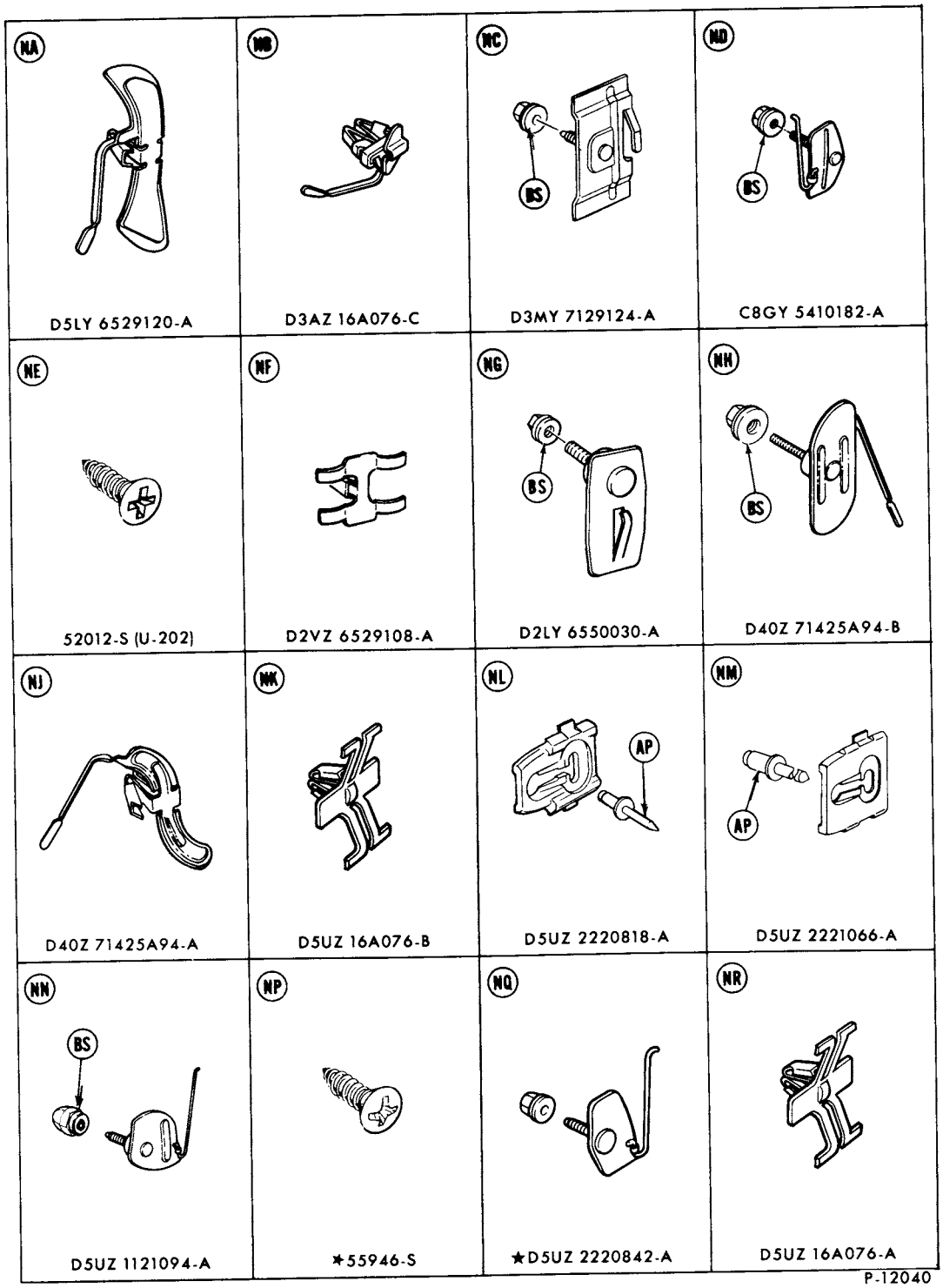

P-12040

COPYRIGHT © 1986 — FORD MOTOR COMPANY — DEARBORN, MICHIGAN

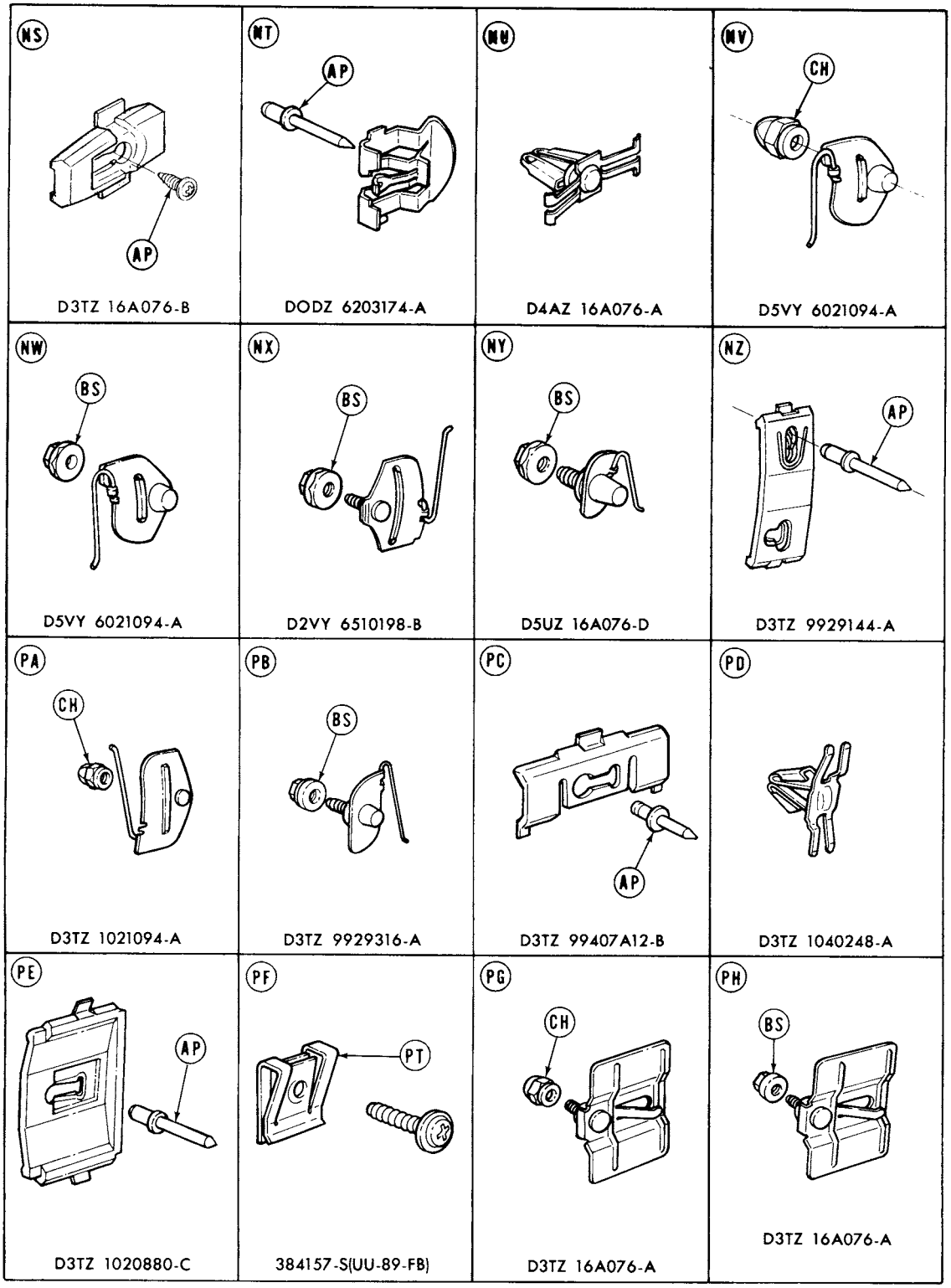
NS
AP
D3TZ 16A076-B
NT
AP
DODZ 6203174-A
NU
D4AZ 16A076-A
NV
CH
D5VY 6021094-A
NW
BS
D5VY 6021094-A
NX
BS
D2VY 6510198-B
NY
BS
D5UZ 16A076-D
NZ
AP
D3TZ 9929144-A
PA
CH
D3TZ 1021094-A
PB
BS
D3TZ 9929316-A
PC
AP
D3TZ 99407A12-B
PD
D3TZ 1040248-A
PE
AP
D3TZ 1020880-C
PF
PT
384157-S(UU-89-FB)
PG
CH
D3TZ 16A076-A
PH
BS
D3TZ 16A076-A

P-12041

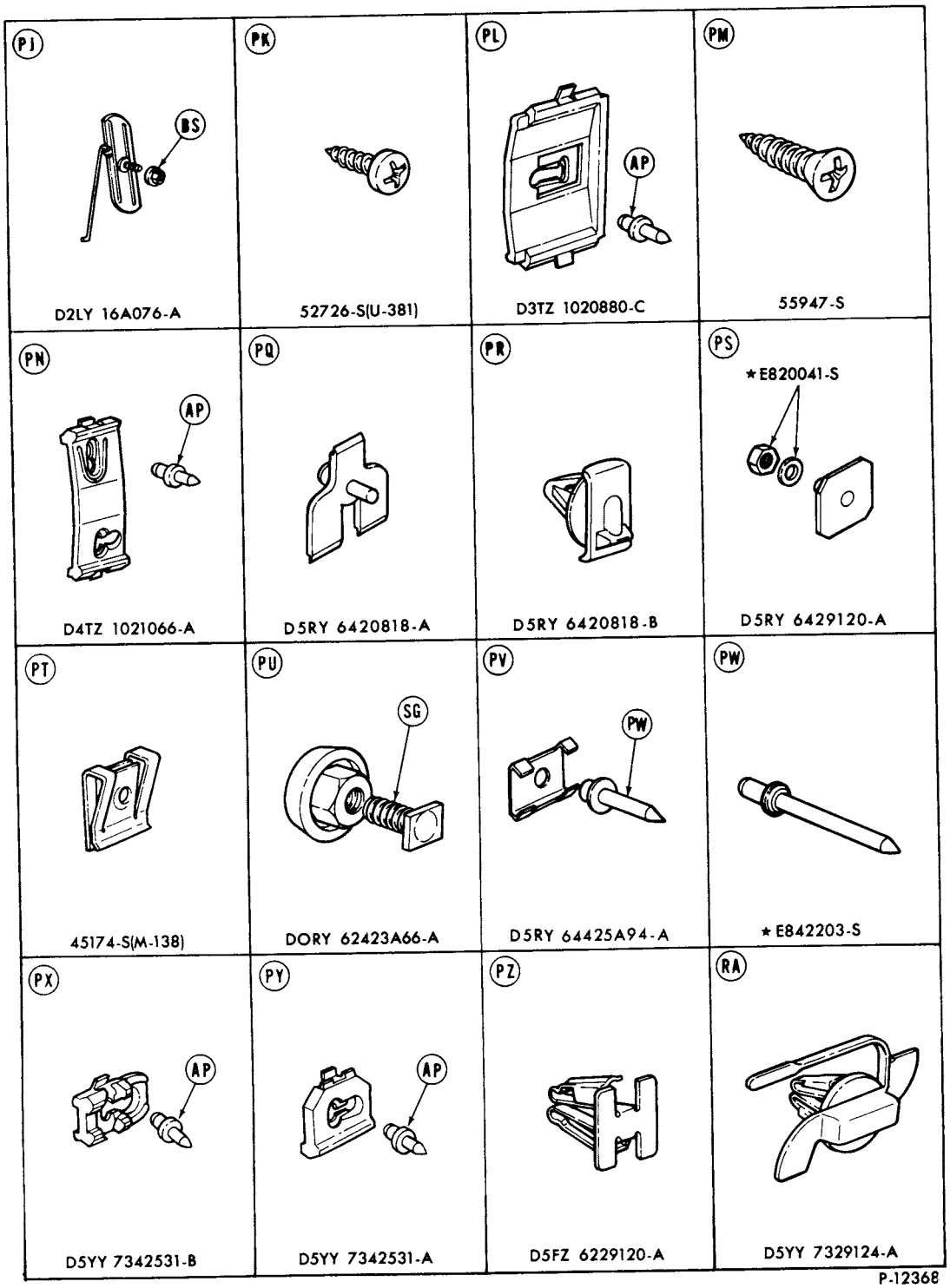

P-12368

1973/ MOULDING RETAINERS

COPYRIGHT © 1986 — FORD MOTOR COMPANY — DEARBORN, MICHIGAN

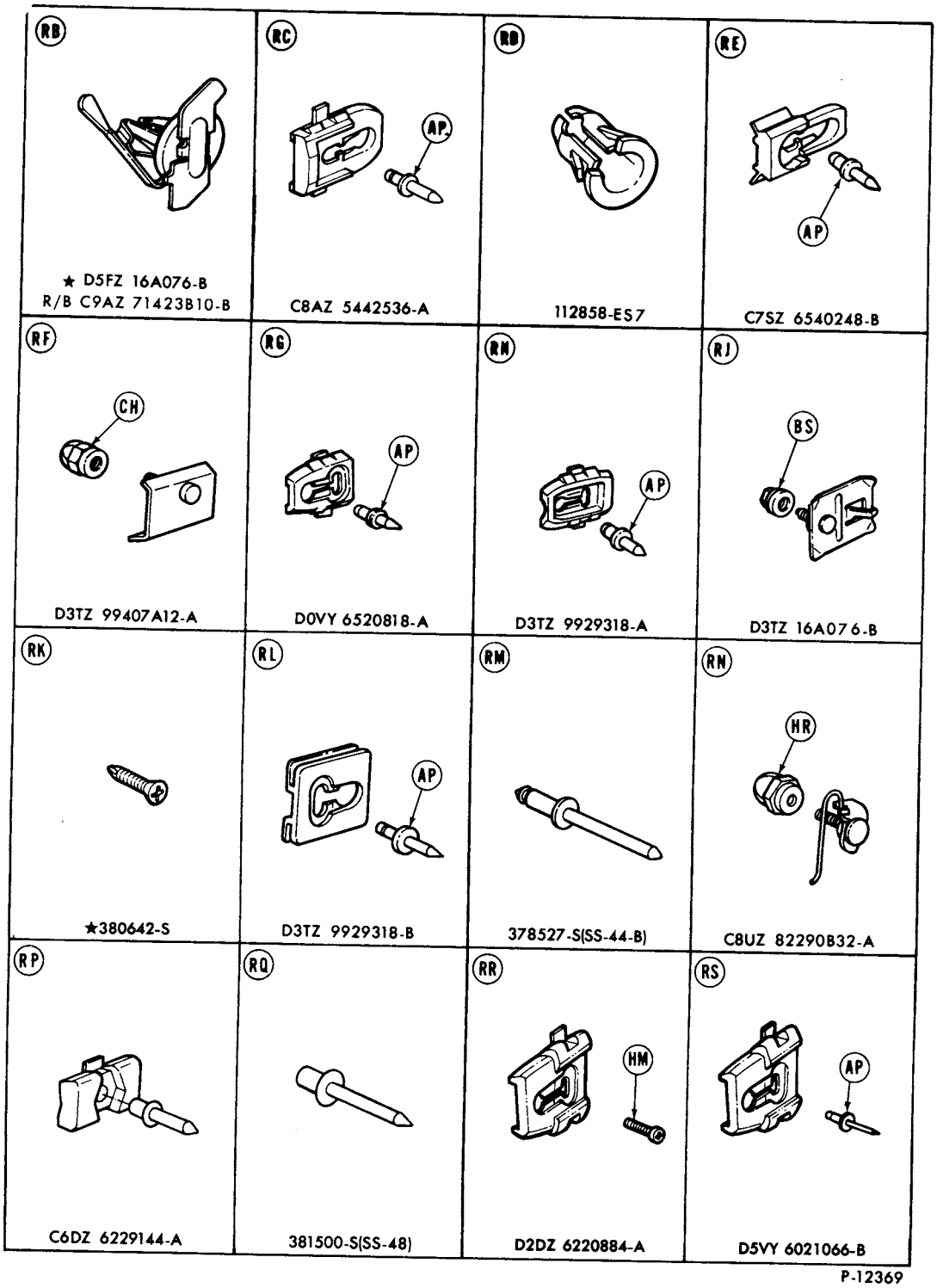
RB
★ D5FZ 16A076-B
R/B C9AZ 71423B10-B
RC
AP
C8AZ 5442536-A
RD
112858-ES7
RE
AP
C7SZ 6540248-B
RF
CH
D3TZ 99407A12-A
RG
AP
D0VY 6520818-A
RH
AP
D3TZ 9929318-A
RJ
BS
D3TZ 16A076-B
RK
★380642-S
RL
AP
D3TZ 9929318-B
RM
378527-S(SS-44-B)
RN
HR
C8UZ 82290B32-A
RP
C6DZ 6229144-A
RQ
381500-S(SS-48)
RR
HM
D2DZ 6220884-A
RS
AP
D5VY 6021066-B

P-12369

1973/79 LINCOLN—MERCURY CARS

RT DORY 16A076-A	RU 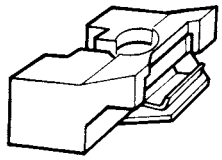 ★ D4ZZ 69420A22-B R/B D4ZZ 69420A22-C AND D1AZ 6542413-B	RV RW 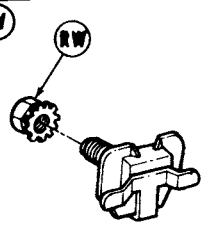 DORY 16A076-B	RW 372308-S (MM-170)
RX 33795-S (M-49)	RZ 353379-S (UU-87-P)	SA ★ 384474-S	SB 120377-ES
SC ★ E810027-S	SD 120312-ES	SE SG 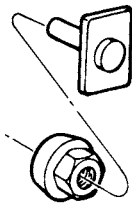 DORY 62423A66-A	SF 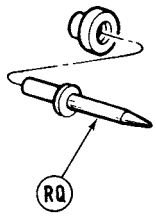 RQ D5WY 6550074-A
SG E804270-S (AB-123-H)	SH CH 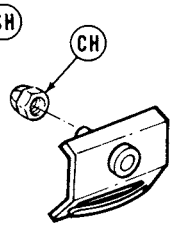 D4ZZ 6920880-A	SJ 381801-S (UU-148)	SK 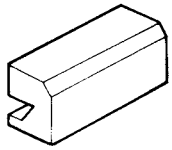 ★ D0AB 62420A24-C

P-12986

COPYRIGHT © 1986 — FORD MOTOR COMPANY — DEARBORN, MICHIGAN

1973/79 LINCOLN—MERCURY CARS

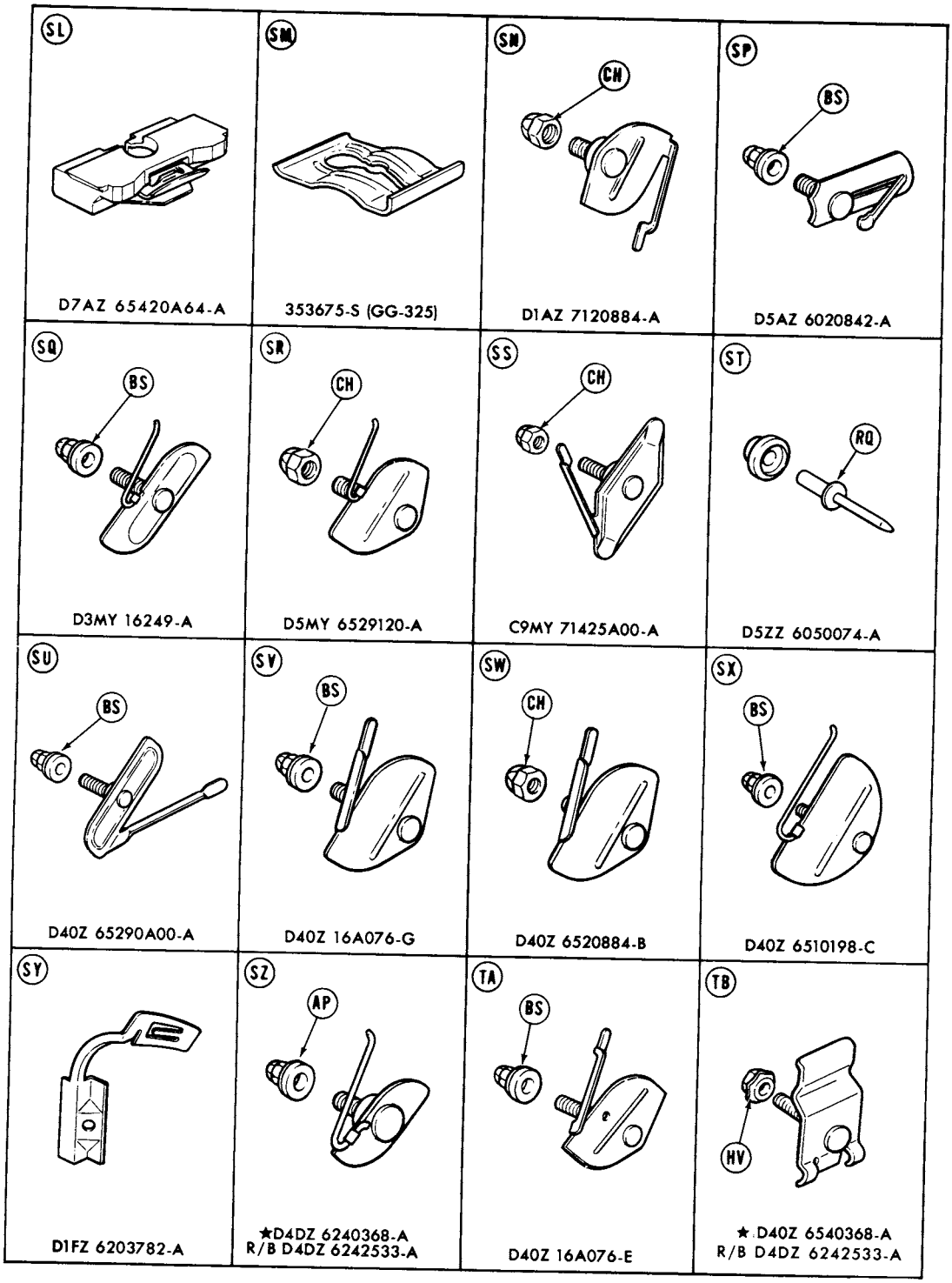

P-12987

1973/79 LINCOLN—MERCURY CARS

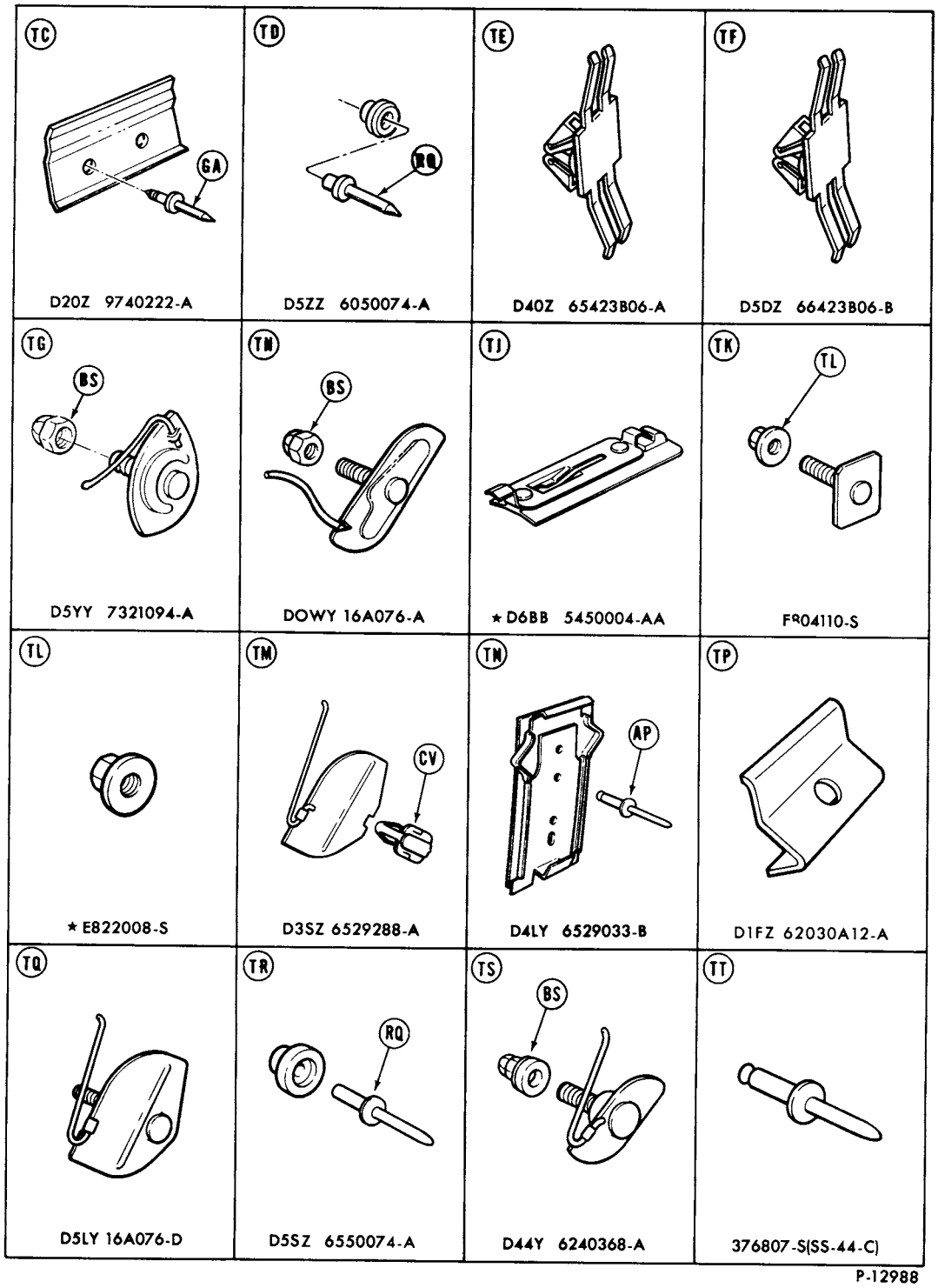

P-12988

1973/ MOULDING RETAINERS

COPYRIGHT © 1986 — FORD MOTOR COMPANY — DEARBORN, MICHIGAN

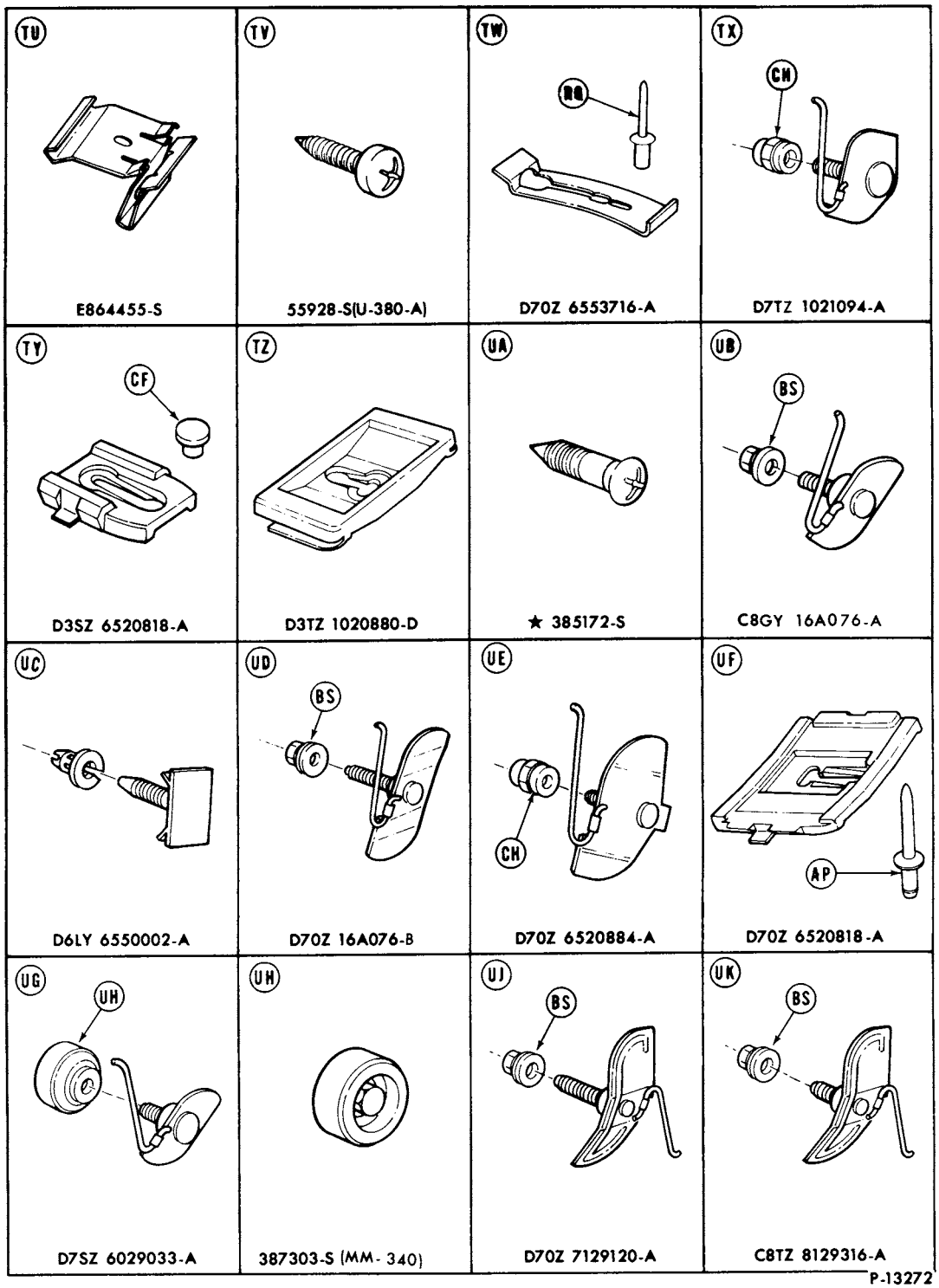
TU
E864455-S
TV
55928-S(U-380-A)
TW
RQ
D70Z 6553716-A
TX
CM
D7TZ 1021094-A
TY
CF
D3SZ 6520818-A
TZ
D3TZ 1020880-D
UA
★ 385172-S
UB
BS
C8GY 16A076-A
UC
D6LY 6550002-A
UD
BS
D70Z 16A076-B
UE
CH
D70Z 6520884-A
UF
AP
D70Z 6520818-A
UG
UH
D7SZ 6029033-A
UH
387303-S (MM-340)
UJ
BS
D70Z 7129120-A
UK
BS
C8TZ 8129316-A
P-13272

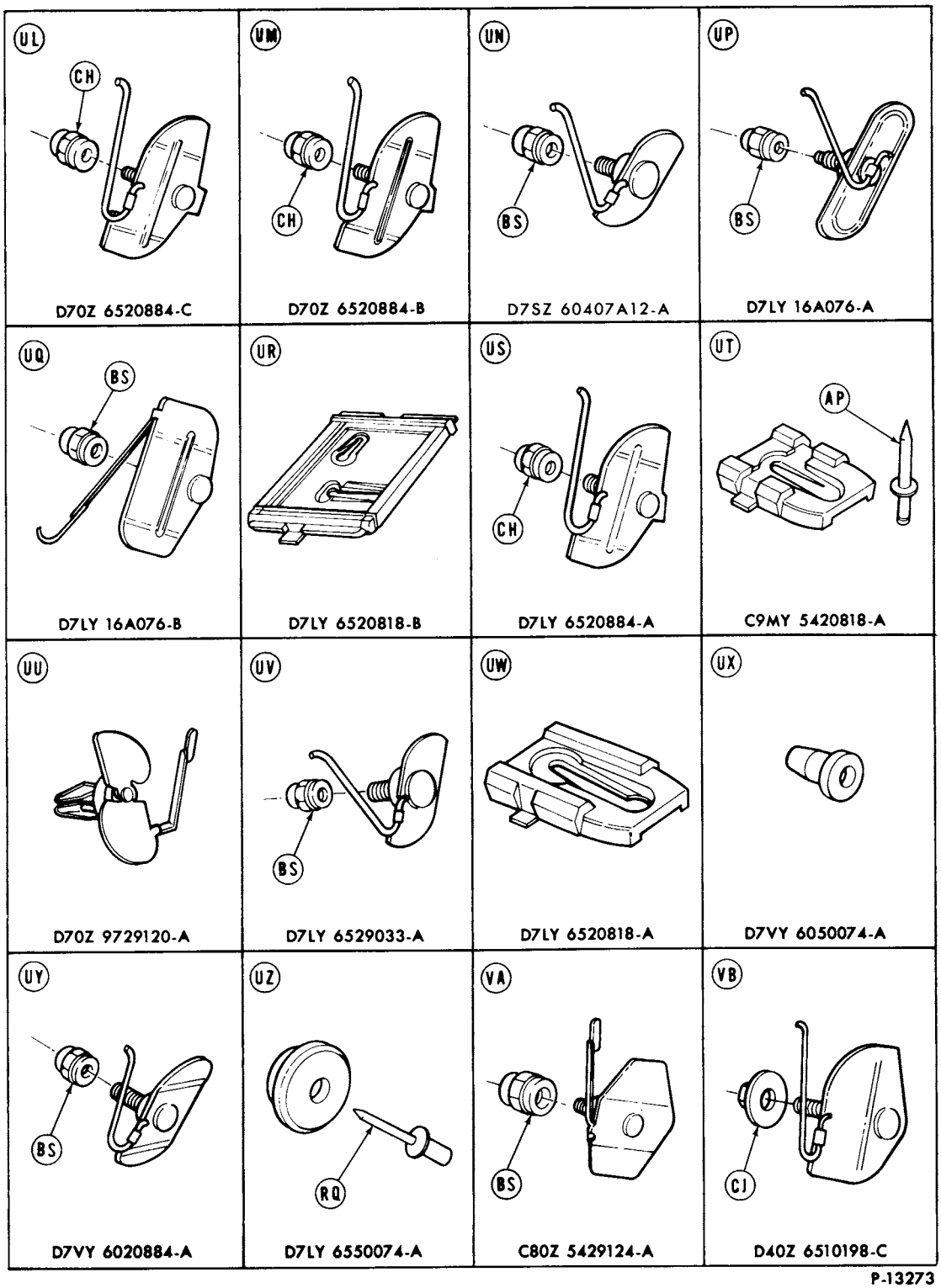

P-13273

COPYRIGHT © 1986 — FORD MOTOR COMPANY — DEARBORN, MICHIGAN

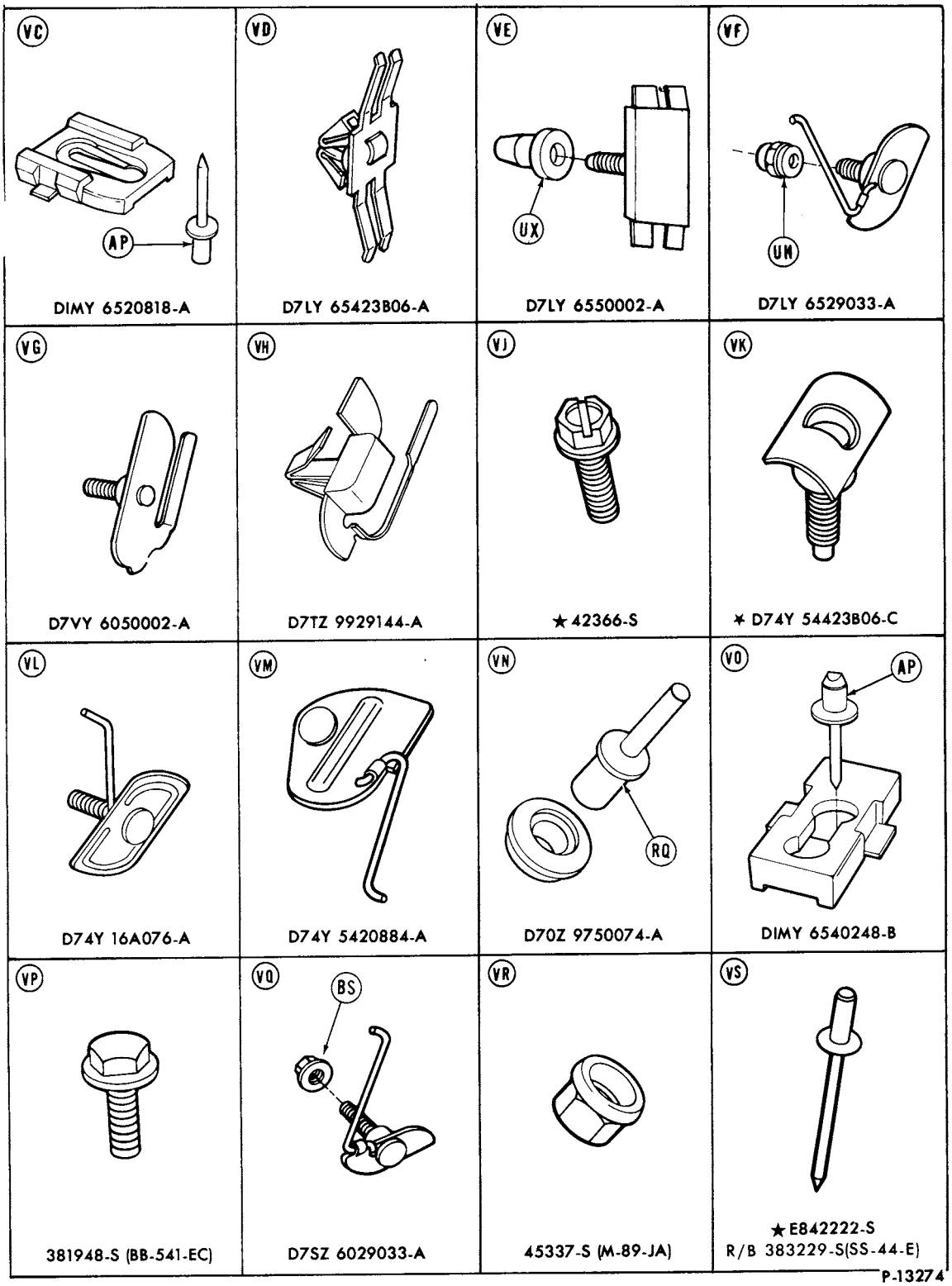
VC
AP
DIMY 6520818-A
VD
D7LY 65423B06-A
VE
UX
D7LY 6550002-A
VF
UM
D7LY 6529033-A
VG
D7VY 6050002-A
VH
D7TZ 9929144-A
VJ
★42366-S
VK
✶ D74Y 54423B06-C
VL
D74Y 16A076-A
VM
D74Y 5420884-A
VN
RQ
D70Z 9750074-A
VO
AP
DIMY 6540248-B
VP
381948-S (BB-541-EC)
VQ
BS
D7SZ 6029033-A
VR
45337-S (M-89-JA)
VS
★E842222-S
R/B 383229-S(SS-44-E)
P-13274

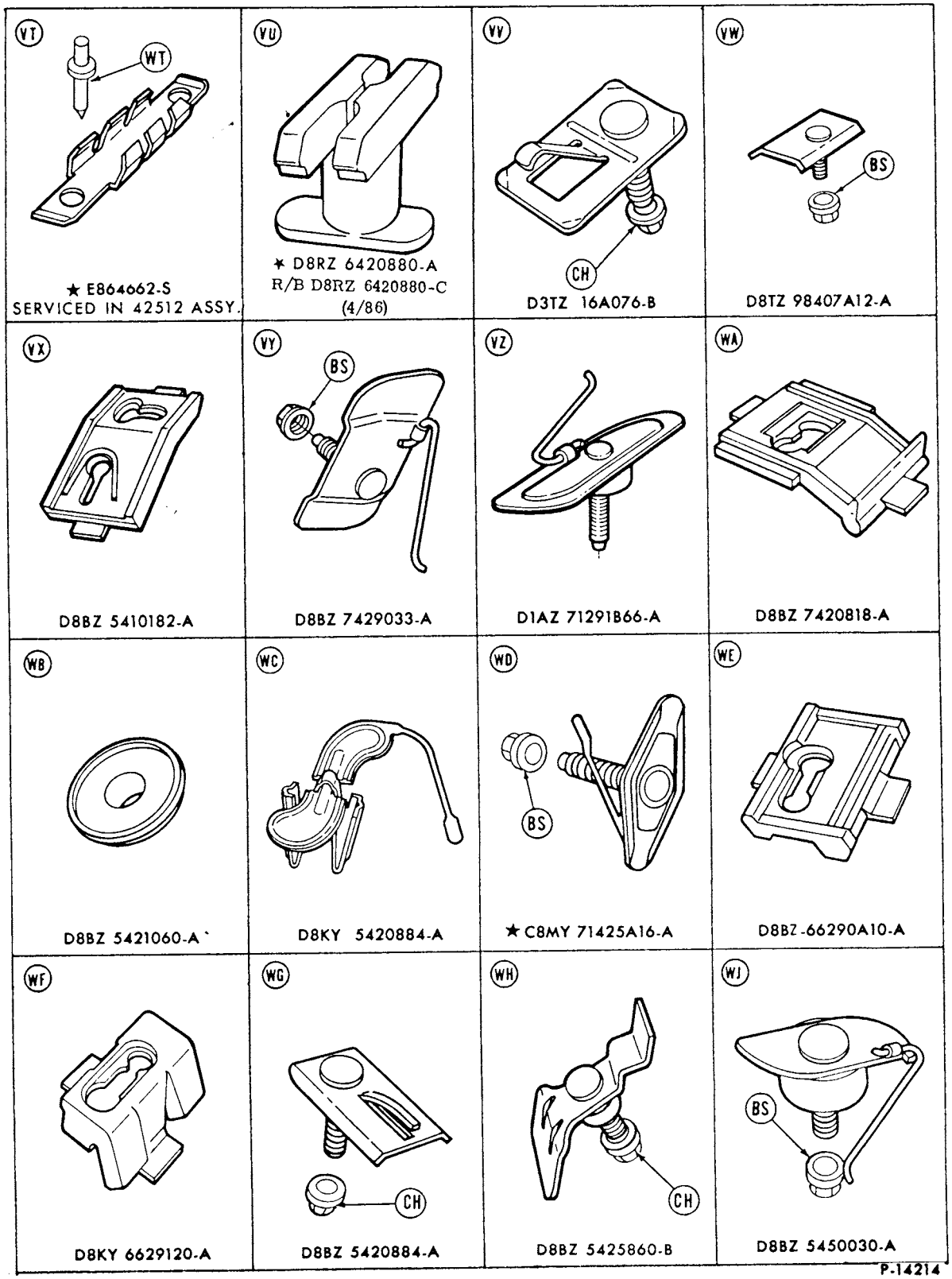

1973/ MOULDING RETAINERS

COPYRIGHT © 1986 — FORD MOTOR COMPANY — DEARBORN, MICHIGAN

1973/79 LINCOLN-MERCURY CARS

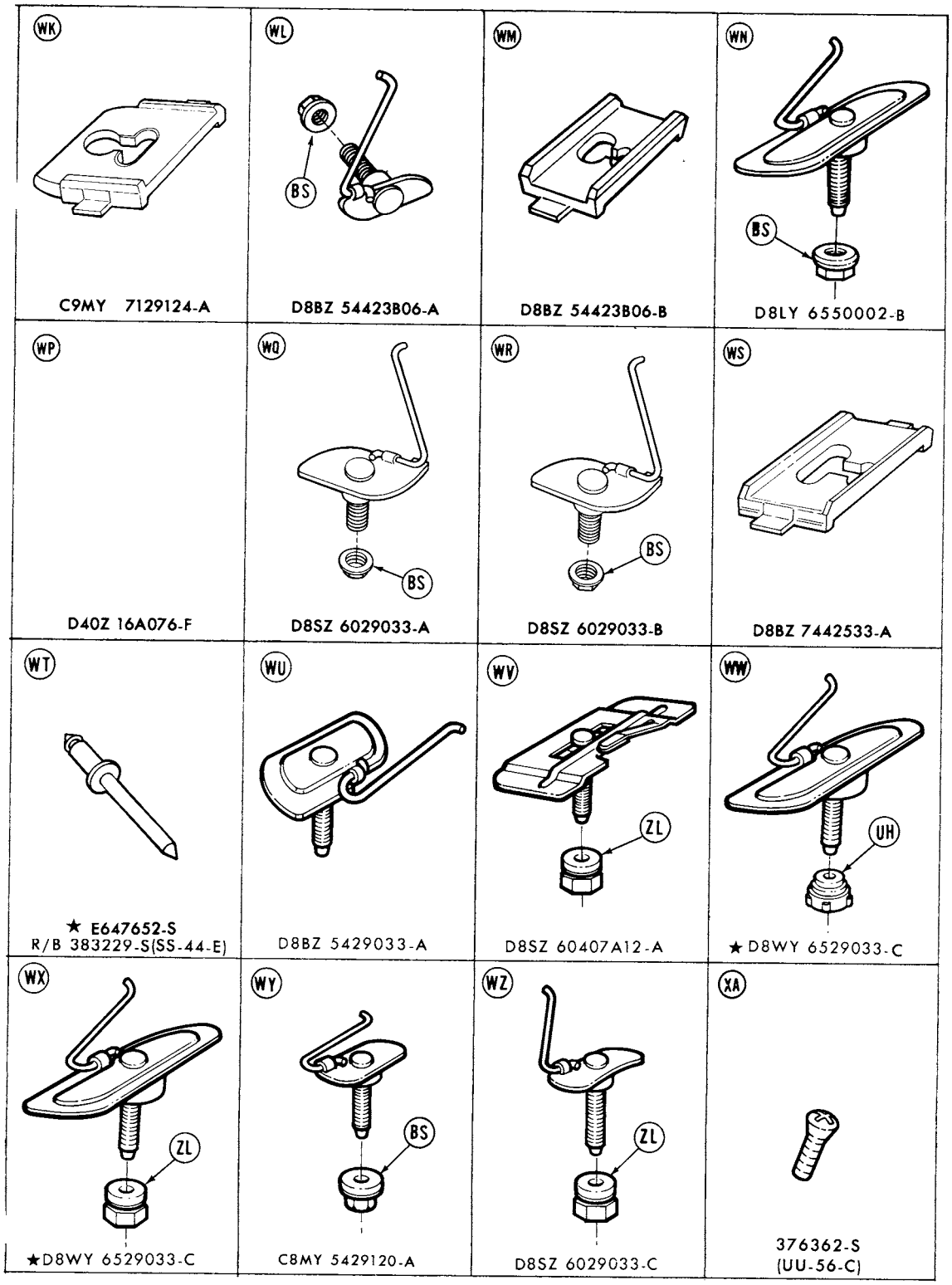

P-14215

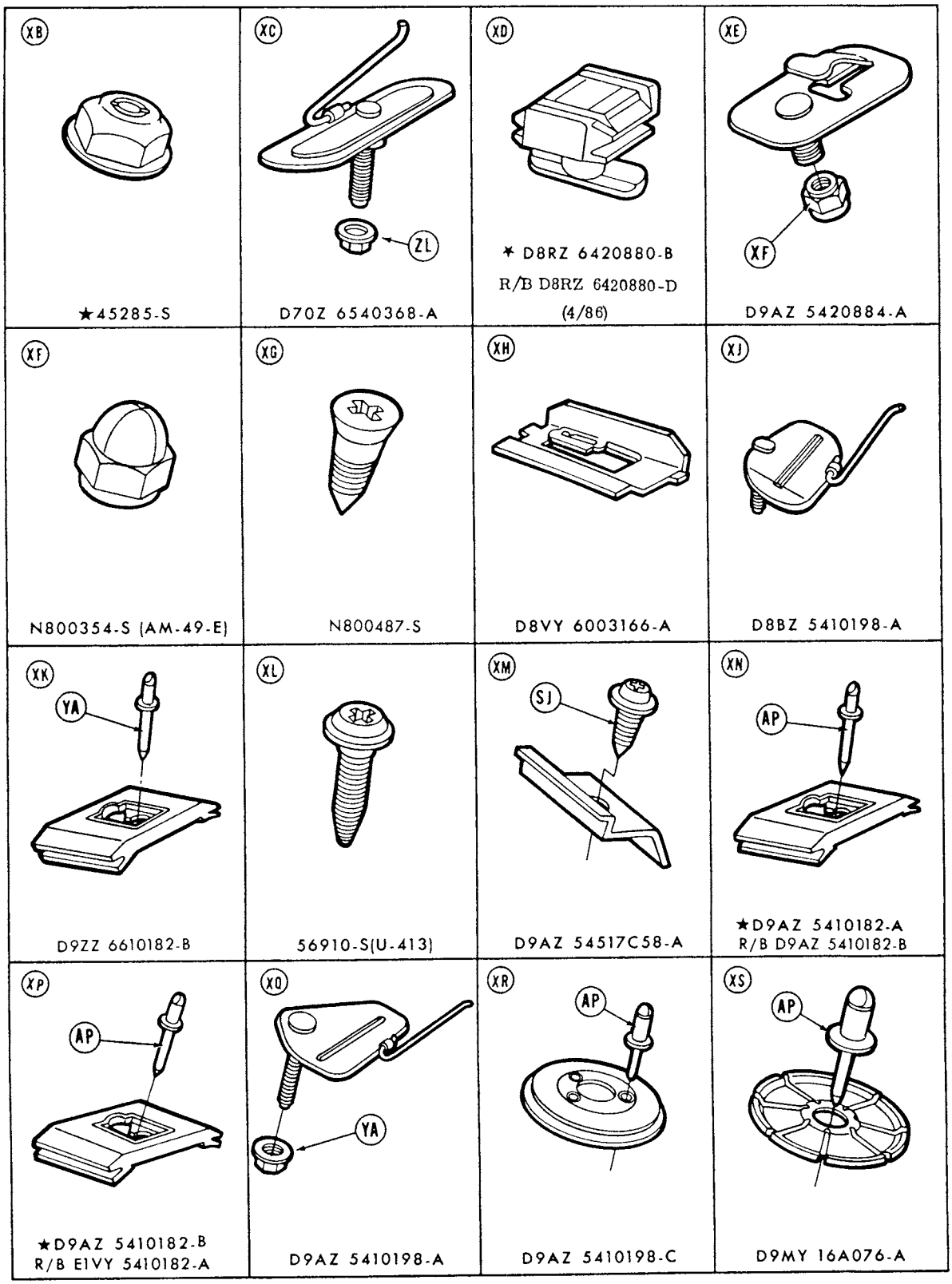

P-15052

1973/ MOULDING RETAINERS

COPYRIGHT © 1986 — FORD MOTOR COMPANY — DEARBORN, MICHIGAN

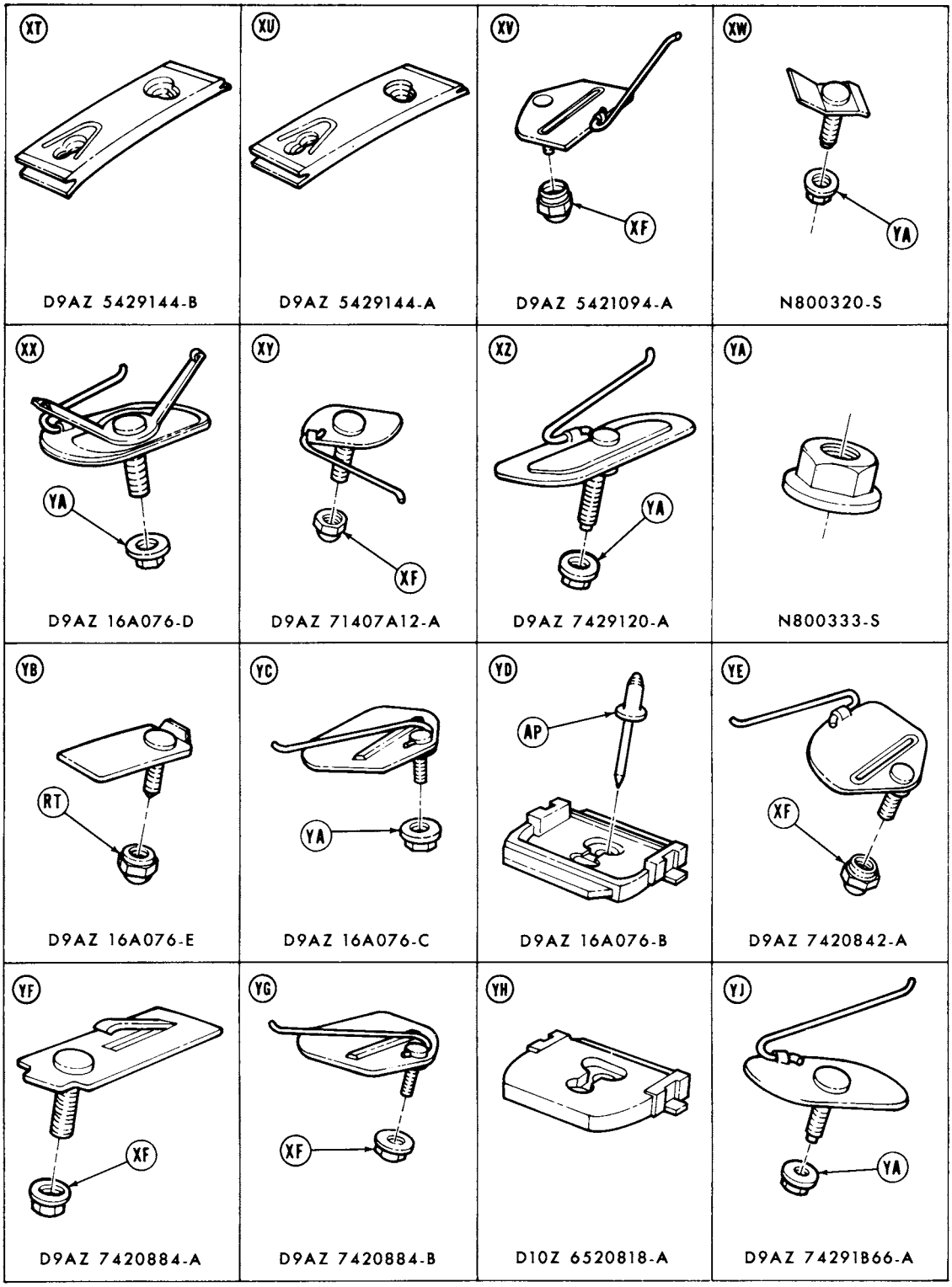
XT
D9AZ 5429144-B
XU
D9AZ 5429144-A
XV
XF
D9AZ 5421094-A
XW
YA
N800320-S
XX
YA
D9AZ 16A076-D
XY
XF
D9AZ 71407A12-A
XZ
YA
D9AZ 7429120-A
YA
N800333-S
YB
RT
D9AZ 16A076-E
YC
YA
D9AZ 16A076-C
YD
AP
D9AZ 16A076-B
YE
XF
D9AZ 7420842-A
YF
XF
D9AZ 7420884-A
YG
XF
D9AZ 7420884-B
YH
D10Z 6520818-A
YJ
YA
D9AZ 74291B66-A

P-15053

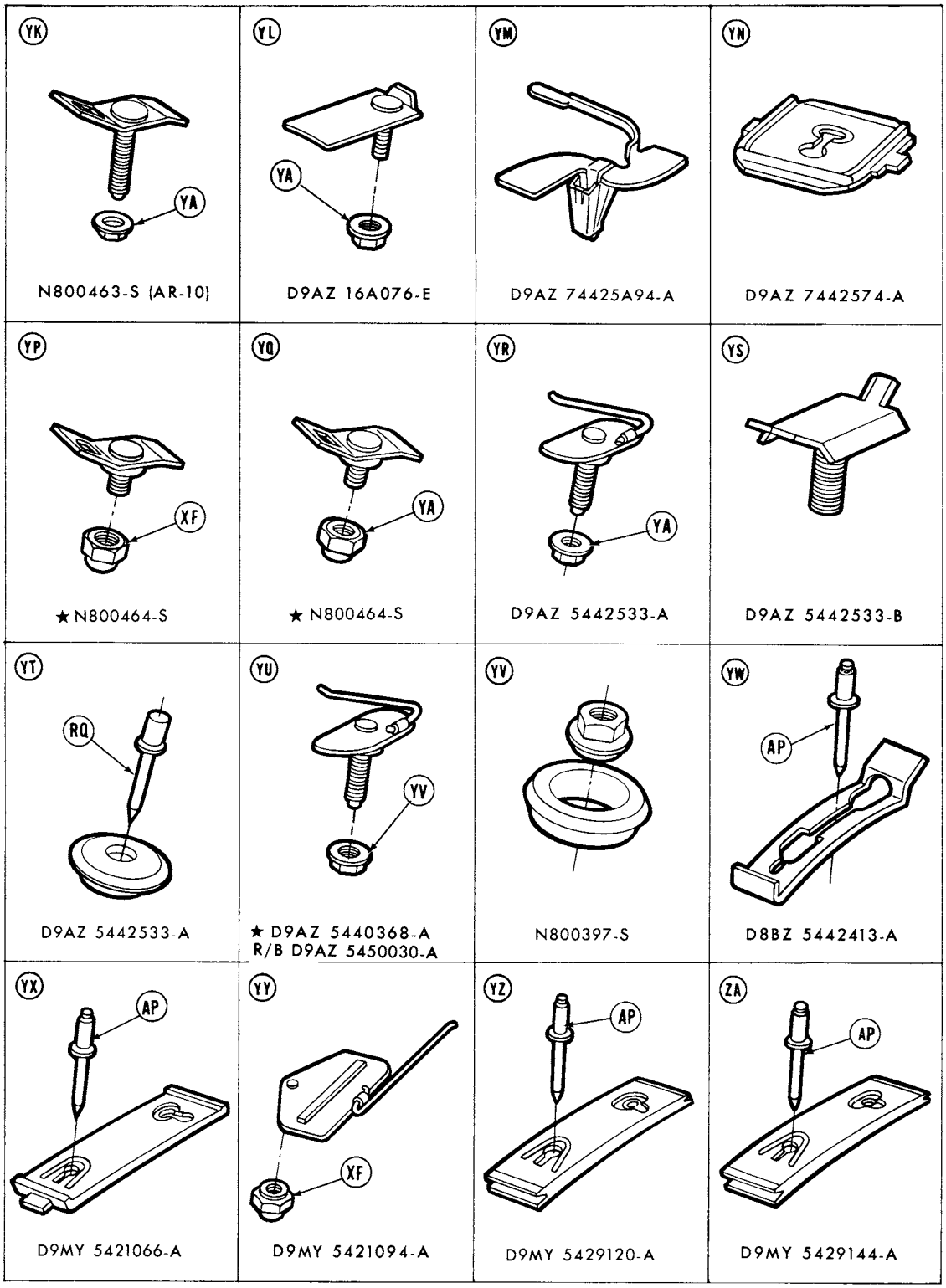

P-15054

1973/ MOULDING RETAINERS

COPYRIGHT © 1986 — FORD MOTOR COMPANY — DEARBORN, MICHIGAN

ZB 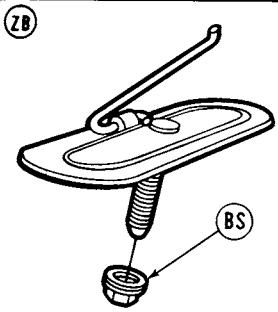 D9LY 6550002-A	ZC 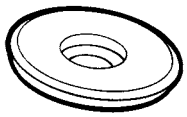 D9MY 7429177-A	ZD 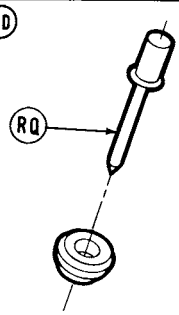 D9MY 7429120-A	ZE 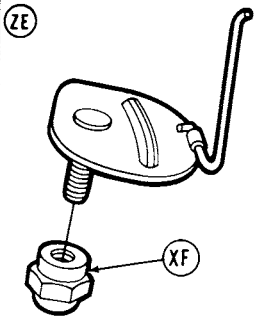 D9MY 74425A00-A
ZF 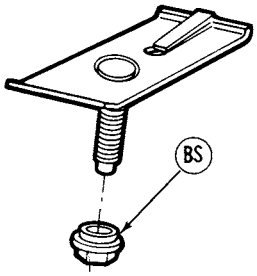 D9ZZ 6120818-A	ZG 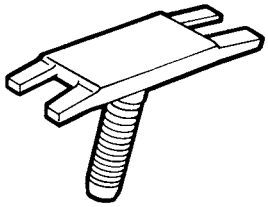 D9ZZ 6621060-A	ZH 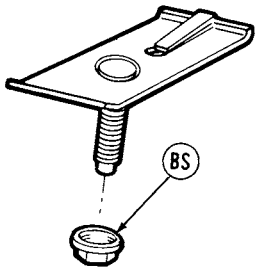 D9ZZ 61290B46-A	ZJ 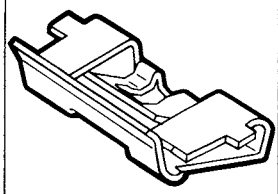 ★D9ZZ 6142413-A R/B D2ZZ 6142413-A
ZK D9AZ 5429033-A	ZL 383693-S(MM-291-AA)	ZM D9AZ 5403178-A	ZN D8BZ 5450030-B

P-15055

MEMO

MEMO

MEMO

MEMO