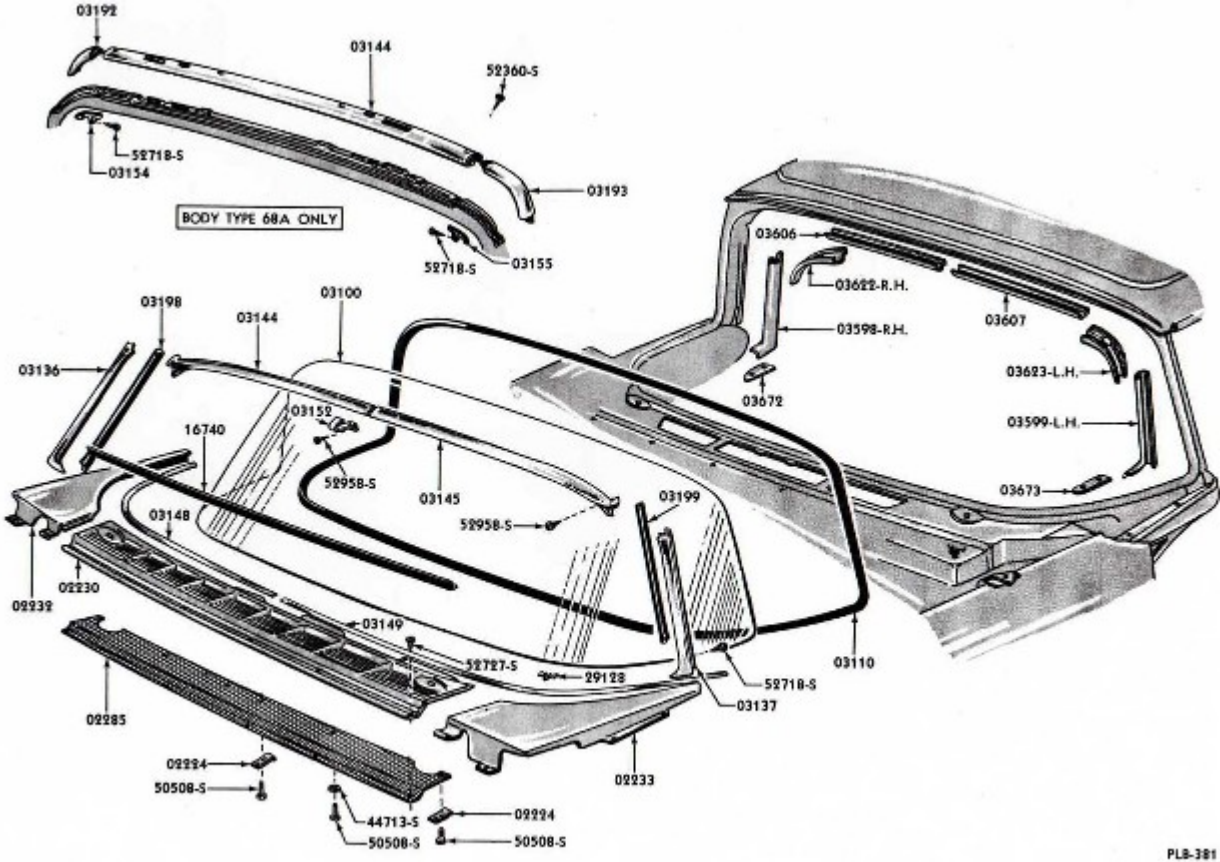

The Lincoln/Mercury Old Parts Store

WINDSHIELD and RELATED PARTS